# NISSAN 240SX

## MODEL S13 SERIES

## QUICK REFERENCE INDEX


| | |
|---|---|
| GENERAL INFORMATION | GI |
| MAINTENANCE | MA |
| ENGINE MECHANICAL | EM |
| ENGINE LUBRICATION & COOLING SYSTEMS | LC |
| ENGINE FUEL & EMISSION CONTROL SYSTEM | EF & EC |
| ACCELERATOR CONTROL, FUEL & EXHAUST SYSTEMS | FE |
| CLUTCH | CL |
| MANUAL TRANSMISSION | MT |
| AUTOMATIC TRANSMISSION | AT |
| PROPELLER SHAFT & DIFFERENTIAL CARRIER | PD |
| FRONT AXLE & FRONT SUSPENSION | FA |
| REAR AXLE & REAR SUSPENSION | RA |
| BRAKE SYSTEM | BR |
| STEERING SYSTEM | ST |
| BODY | BF |
| HEATER & AIR CONDITIONER | HA |
| ELECTRICAL SYSTEM | EL |


© 1992 NISSAN MOTOR CO., LTD. Printed in Japan

Not to be reproduced in whole or in part without the prior written permission of Nissan Motor Company Ltd., Tokyo, Japan.

# FOREWORD

This manual contains maintenance and repair procedures for the 1993 Nissan 240SX.

In order to assure your safety and the efficient functioning of the vehicle, this manual should be read thoroughly. It is especially important that the PRECAUTIONS in the GI section be completely understood before starting any repair task.

All information in this manual is based on the latest product information at the time of publication. The right is reserved to make changes in specifications and methods at any time without notice.

# IMPORTANT SAFETY NOTICE

The proper performance of service is essential for both the safety of the technician and the efficient functioning of the vehicle.
The service methods in this Service Manual are described in such a manner that the service may be performed safely and accurately.
Service varies with the procedures used, the skills of the technician and the tools and parts available. Accordingly, anyone using service procedures, tools or parts which are not specifically recommended by NISSAN must first completely satisfy himself that neither his safety nor the vehicle's safety will be jeopardized by the service method selected.

NISSAN MOTOR CO., LTD.
Overseas Service Department
Tokyo, Japan

# GENERAL INFORMATION

# SECTION GI



## CONTENTS

**PRECAUTIONS** ..... 2
General Precautions ..... 2
Precautions for Multiport Fuel Injection System or E.C.C.S. Engine ..... 3
Precautions for Three Way Catalyst ..... 4
Precautions for Fuel ..... 4
**HOW TO USE THIS MANUAL** ..... 5
**HOW TO READ WIRING DIAGRAMS** ..... 7
**HOW TO FOLLOW FLOW CHART IN TROUBLE DIAGNOSES** ..... 10
**CONSULT CHECKING SYSTEM** ..... 13
Function and System Application ..... 13
Checking Equipment ..... 13
**IDENTIFICATION INFORMATION** ..... 14
Model Variation ..... 14
Identification Number ..... 15
Dimensions ..... 17
Wheels and Tires ..... 17
**LIFTING POINTS AND TOW TRUCK TOWING** ..... 18
Garage Jack and Safety Stand ..... 18
2-pole Lift ..... 18
Tow Truck Towing ..... 19
**TIGHTENING TORQUE OF STANDARD BOLTS** ..... 20

**Observe the following precautions to ensure safe and proper servicing. These precautions are not described in each individual section.**

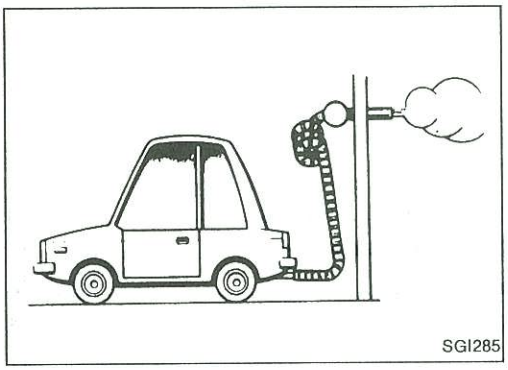
SGI285

## General Precautions

1. Do not operate the engine for an extended period of time without proper exhaust ventilation.
   Keep the work area well ventilated and free of any inflammable materials. Special care should be taken when handling any inflammable or poisonous materials, such as gasoline, refrigerant gas, etc. When working in a pit or other enclosed area, be sure to properly ventilate the area before working with hazardous materials.
   Do not smoke while working on the vehicle.

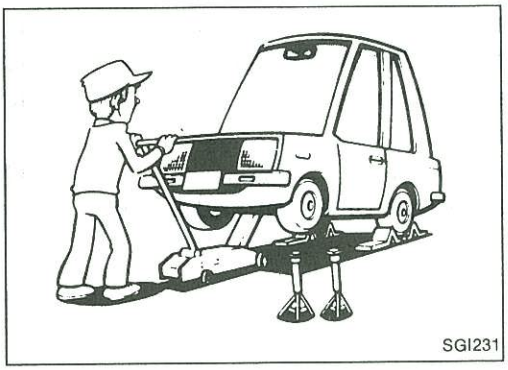
SGI231

2. Before jacking up the vehicle, apply wheel chocks or other tire blocks to the wheels to prevent the vehicle from moving. After jacking up the vehicle, support the vehicle weight with safety stands at the points designated for proper lifting and towing before working on the vehicle.
   These operations should be done on a level surface.
3. When removing a heavy component such as the engine or transaxle/transmission, be careful not to lose your balance and drop them. Also, do not allow them to strike adjacent parts, especially the brake tubes and master cylinder.

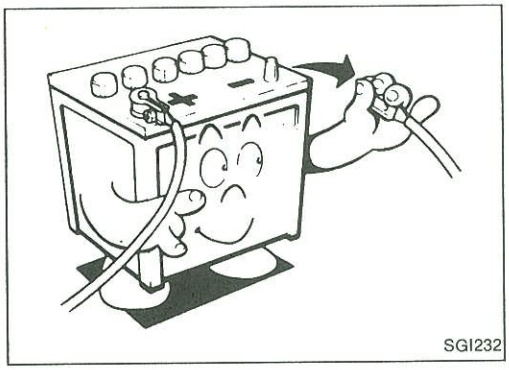
SGI232

4. Before starting repairs which do not require battery power, always turn off the ignition switch, then disconnect the ground cable from the battery to prevent accidental short circuit.

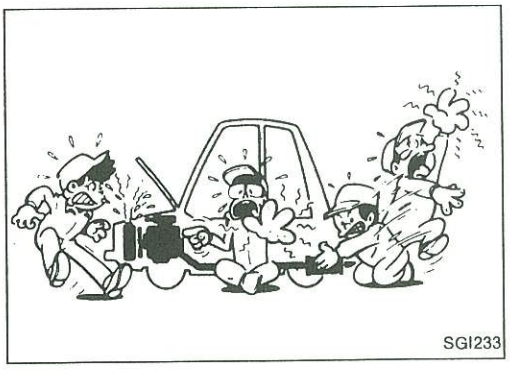
SGI233

5. To prevent serious burns, avoid contact with hot metal parts such as the radiator, exhaust manifold, tail pipe and muffler. Do not remove the radiator cap when the engine is hot.

## General Precautions (Cont'd)

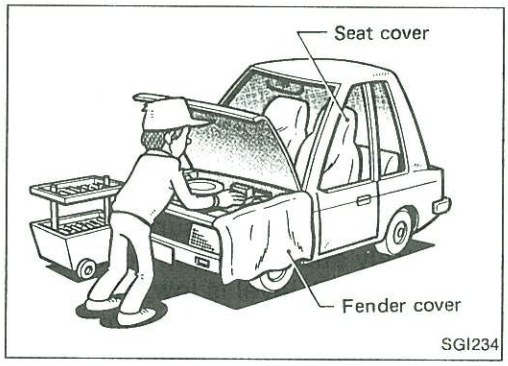


6. Before servicing the vehicle, protect fenders, upholstery and carpeting with appropriate covers.
   Take caution that keys, buckles or buttons on your person do not scratch the paint.
7. Clean all disassembled parts in the designated liquid or solvent prior to inspection or assembly.
8. Replace oil seals, gaskets, packings, O-rings, locking washers, cotter pins, self-locking nuts, etc. with new ones.
9. Replace inner and outer races of tapered roller bearings and needle bearings as a set.
10. Arrange the disassembled parts in accordance with their assembled locations and sequence.
11. Do not touch the terminals of electrical components which use microcomputers (such as ECMs).
    Static electricity may damage internal electronic components.
12. After disconnecting vacuum or air hoses, attach a tag to indicate the proper connection.
13. Use only the lubricants specified in MA section.
14. Use approved bonding agent, sealants or their equivalents when required.
15. Use tools and recommended special tools where specified for safe and efficient service repairs.
16. When repairing the fuel, oil, water, vacuum or exhaust systems, check all affected lines for leaks.
17. Dispose of drained oil or the solvent used for cleaning parts in an appropriate manner.

## Precautions for Multiport Fuel Injection System or E.C.C.S. Engine

1. Before connecting or disconnecting multiport fuel injection system or E.C.C.S. harness connector to or from any multiport fuel injection system or ECM (ECCS control module), be sure to turn the ignition switch to the "OFF" position and disconnect the negative battery terminal.
   Otherwise, there may be damage to ECM.
2. Before disconnecting pressurized fuel line from fuel pump to injectors, be sure to release fuel pressure to eliminate danger.
3. Be careful not to jar components such as ECM and mass air flow sensor.

## Precautions for Three Way Catalyst

If a large amount of unburned fuel flows into the converter, the converter temperature will be excessively high. To prevent this, follow the procedure below:

1. Use unleaded gasoline only. Leaded gasoline will seriously damage the catalytic converter.
2. When checking for ignition spark or measuring engine compression, make tests quickly and only when necessary.
3. Do not run engine when the fuel tank level is low, otherwise the engine may misfire causing damage to the converter.
4. Do not place the vehicle on inflammable material. Keep inflammable material off the exhaust pipe.

## Precautions for Fuel

Use unleaded premium gasoline with an octane rating of at least 91 AKI (Anti-Knock Index) number (research octane number 96).

If unleaded premium gasoline is not available, unleaded regular gasoline with an octane rating of at least 87 AKI (research octane number 91) can be used.

However, for maximum vehicle performance, the use of unleaded premium gasoline is recommended.

**CAUTION:**

**Do not use leaded gasoline. Using leaded gasoline will damage the catalytic converter.**

1. **A QUICK REFERENCE INDEX,** a black tab (e.g. BR ) is provided on the first page. You can quickly find the first page of each section by mating it to the section's black tab.
2. **THE CONTENTS** are listed on the first page of each section.
3. **THE TITLE** is indicated on the upper portion of each page and shows the part or system.
4. **THE PAGE NUMBER** of each section consists of two letters which designate the particular section and a number (e.g. "BR-5").
5. **THE LARGE ILLUSTRATIONS** are exploded views (See below) and contain tightening torques, lubrication points and other information necessary to perform repairs.
   The illustrations should be used in reference to service matters only. When ordering parts, refer to the appropriate **PARTS CATALOG**.

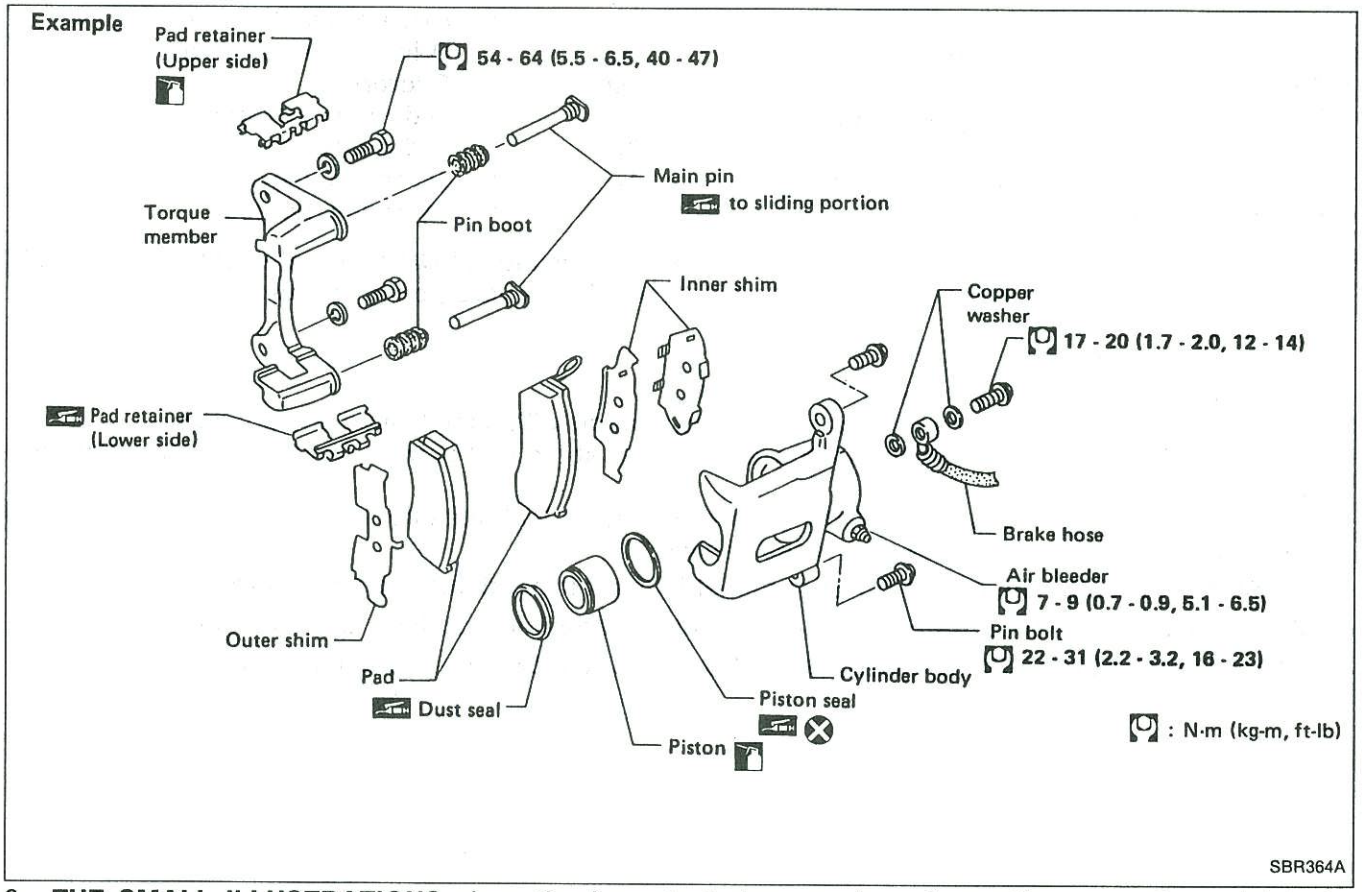


6. **THE SMALL ILLUSTRATIONS** show the important steps such as inspection, use of special tools, knacks of work and hidden or tricky steps which are not shown in the previous large illustrations.
   Assembly, inspection and adjustment procedures for the complicated units such as the automatic transaxle or transmission, etc. are presented in a step-by-step format where necessary.

7. The following **SYMBOLS AND ABBREVIATIONS** are used:

| | | | | | |
|---|---|---|---|---|---|
| | : | Tightening torque | M/T | : | Manual Transaxle/Transmission |
| | : | Should be lubricated with grease. Unless otherwise indicated, use recommended multi-purpose grease. | A/T | : | Automatic Transaxle/ Transmission |
| | | | Tool | : | Special Service Tools |
| | | | L.H.D. | : | Left-Hand Drive |
| | : | Should be lubricated with oil. | R.H.D. | : | Right-Hand Drive |
| | : | Sealing point | A.T.F. | : | Automatic Transmission Fluid |
| | : | Checking point | $D_1$ | : | Drive range 1st gear |
| | : | Always replace after every disassembly. | $D_2$ | : | Drive range 2nd gear |
| | | | $D_3$ | : | Drive range 3rd gear |
| | : | Apply petroleum jelly. | $D_4$ | : | Drive range 4th gear |
| | : | Apply A.T.F. | O.D. | : | Overdrive |
| ★ | : | Select with proper thickness. | $2_2$ | : | 2nd range 2nd gear |
| ☆ | : | Adjustment is required. | $2_1$ | : | 2nd range 1st gear |
| S.D.S. | : | Service Data and Specifications | $1_2$ | : | 1st range 2nd gear |
| L.H., R.H. | : | Left-Hand, Right-Hand | $1_1$ | : | 1st range 1st gear |

8. The **UNITS** given in this manual are primarily expressed as the SI UNIT (International System of Unit), and alternatively expressed in the metric system and in the yard/pound system.
   **"Example"**
   **Tightening torque:**
   **59 - 78 N·m (6.0 - 8.0 kg-m, 43 - 58 ft-lb)**
9. **TROUBLE DIAGNOSES** are included in sections dealing with complicated components.
10. **SERVICE DATA AND SPECIFICATIONS** are contained at the end of each section for quick reference of data.
11. The captions **WARNING** and **CAUTION** warn you of steps that must be followed to prevent personal injury and/or damage to some part of the vehicle.

- **WARNING** indicates the possibility of personal injury if instructions are not followed.
- **CAUTION** indicates the possibility of component damage if instructions are not followed.
- **BOLD TYPED STATEMENTS** except **WARNING** and **CAUTION** give you helpful information.

## WIRING DIAGRAM

Symbols used in WIRING DIAGRAM are shown below:

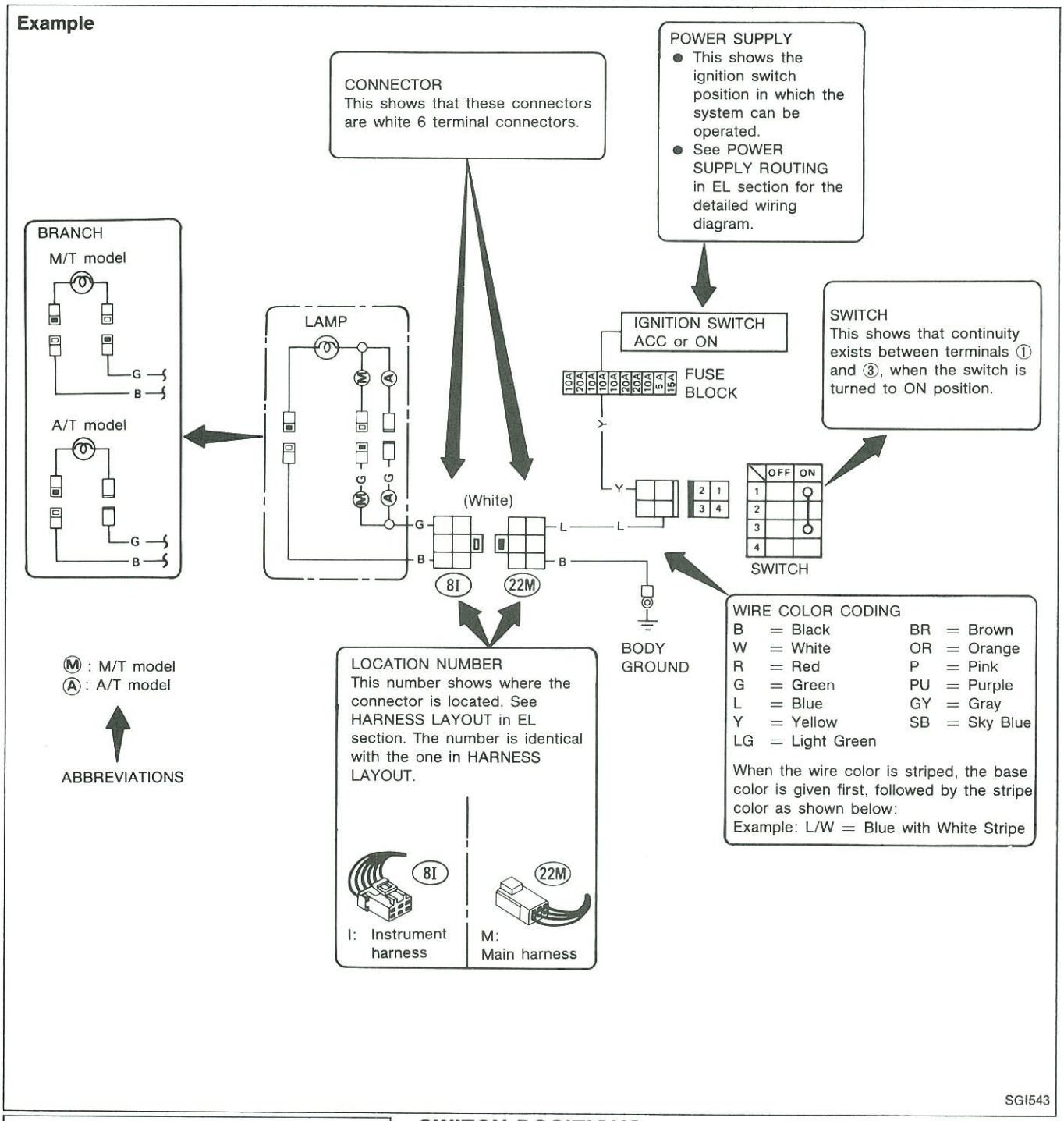


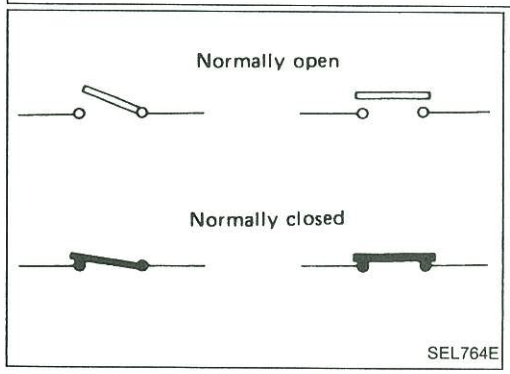


## SWITCH POSITIONS

Wiring diagram switches are shown with the vehicle in the following condition.

- Ignition switch "OFF".
- Doors, hood and trunk lid/back door closed.
- Pedals are not depressed and parking brake is released.

Example

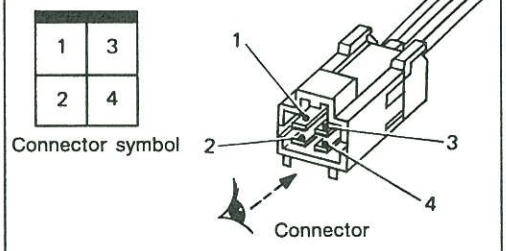


SGI362

## CONNECTOR SYMBOLS

- All connector symbols in wiring diagrams are shown from the terminal side.

Example

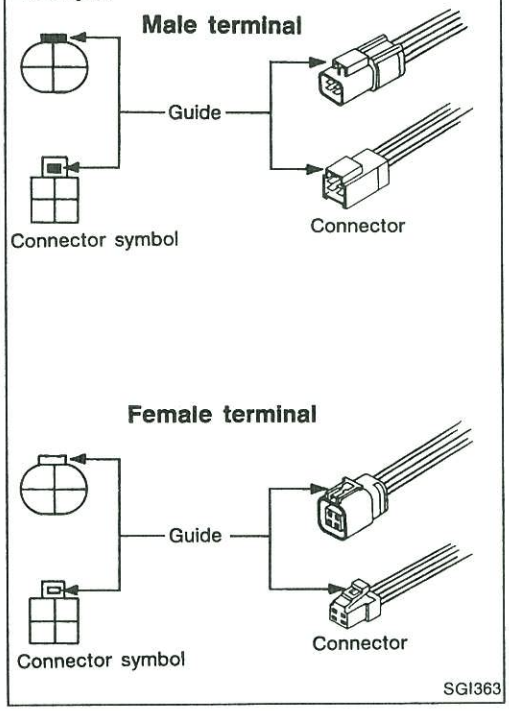


SGI363

- Male and female terminals
  Connector guides for male terminals are shown in black and female terminals in white in wiring diagrams.

## MULTIPLE SWITCH

The continuity of the multiple switch is identified in the switch chart in wiring diagrams.

Example

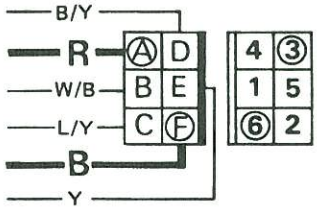


WIPER SWITCH

| | OFF | INT | LO | HI | WASH |
|---|---|---|---|---|---|
| 1 | | | | | ○ |
| 2 | | | | ○ | |
| ③ | ○ | ○ | ● | | |
| 4 | ○ | ○ | | | |
| 5 | | ○ | | | |
| ⑥ | | ○ | ● | ○ | ○ |

Continuity circuit of wiper switch

| SWITCH POSITION | CONTINUITY CIRCUIT |
|---|---|
| OFF | 3 - 4 |
| INT | 3 - 4, 5 - 6 |
| LO | 3 - 6 |
| HI | 2 - 6 |
| WASH | 1 - 6 |

Example: Wiper switch in LO position
Continuity circuit: Red wire – Ⓐ terminal – ③ terminal – Wiper switch (● – ●: LO) – ⑥ terminal – Ⓕ terminal – Black wire

SGI365

## SUPER MULTIPLE JUNCTION (S.M.J.)

- The "S.M.J." indicated in wiring diagrams is shown in a simplified form. The terminal arrangement should therefore be referred to in the foldout at the end of the Service Manual.
- The foldout should be spread to read the entire wiring diagram.

**Example**

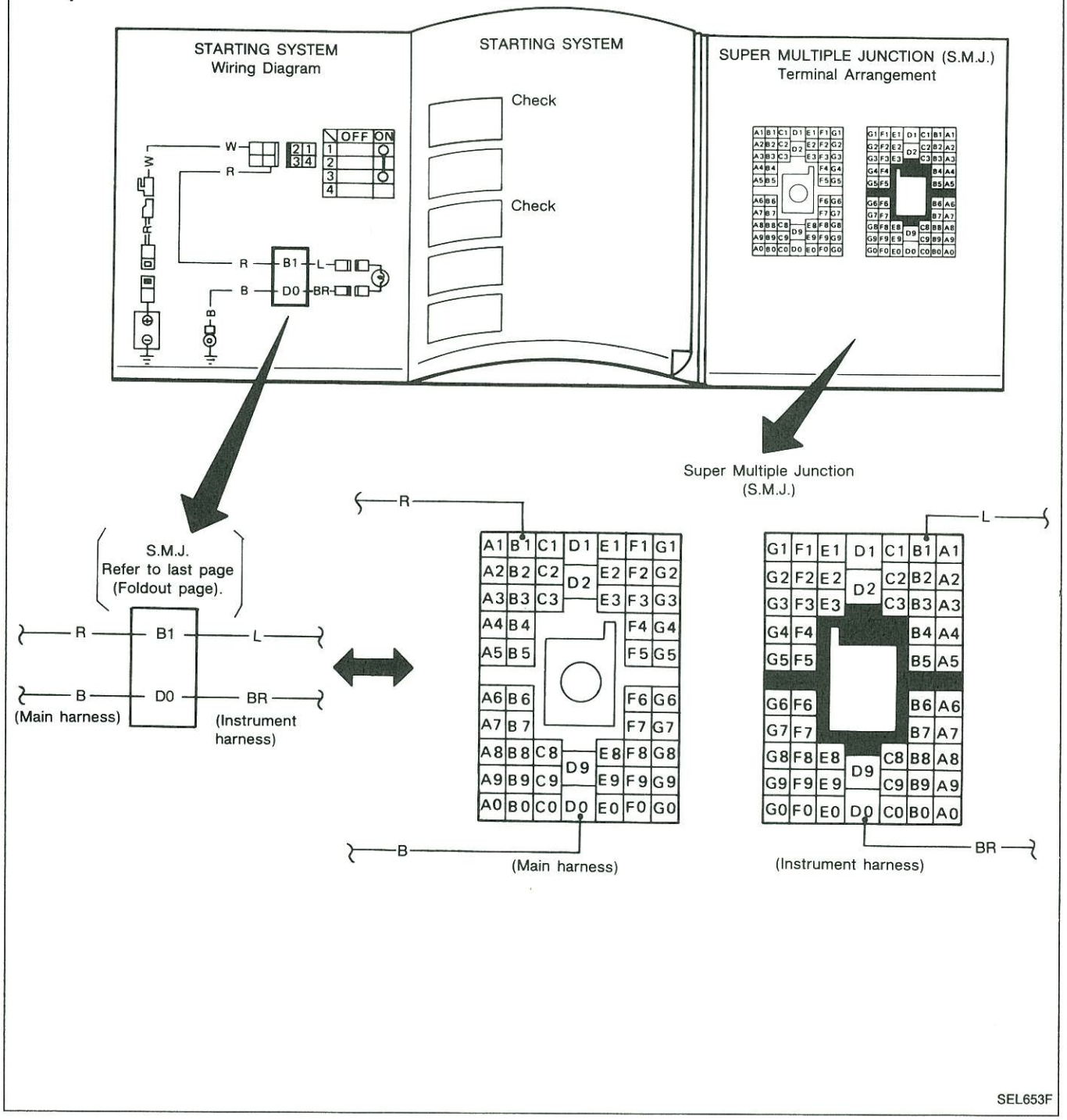

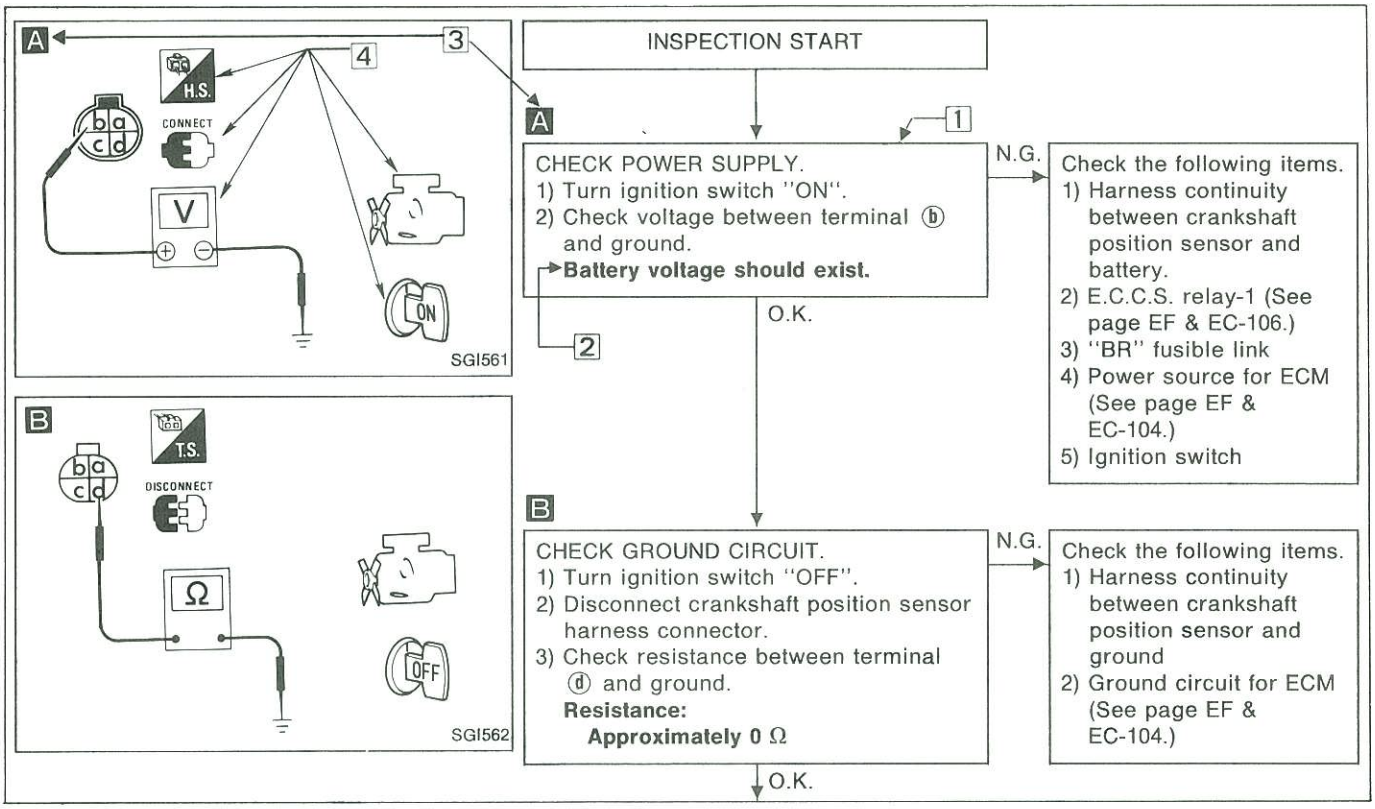


## NOTICE

The flow chart indicates work procedures required to diagnose problems effectively. Observe the following instructions before diagnosing.

1) **Use the flow chart after locating probable causes of a problem following the "Preliminary Check" or the "Symptom Chart".**
2) **After repairs, re-check that the problem has been completely eliminated.**
3) **Refer to Component Parts Location and Harness Layout for the Systems described in each section for identification/ location of components and harness connectors.**
4) **Refer to the Circuit Diagram for Quick Pinpoint Check. If you must check circuit continuity between harness connectors in more detail, such as when a sub-harness is used, refer to Wiring Diagram and Harness Layout in EL section for identification of harness connectors.**
5) **When checking circuit continuity, ignition switch should be "OFF".**
6) **Before checking voltage at connectors, check battery voltage.**
7) **After accomplishing the Diagnostic Procedures and Electrical Components Inspection, make sure that all harness connectors are reconnected as they were.**

## HOW TO FOLLOW THIS FLOW CHART

### 1 Work and diagnostic procedure

Start to diagnose a problem using procedures indicated in enclosed blocks, as shown in the following example.

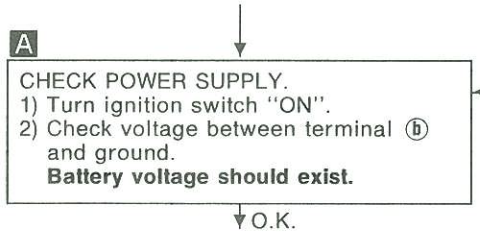


### 2 Measurement results

Required results are indicated in bold type in the corresponding block, as shown below.
These have the following meanings:

**Battery voltage → 11 - 14V or approximately 12V**
**Voltage: Approximately 0V → Less than 1V**

### 3 Cross reference of work symbols in the text and illustrations

Illustrations are provided as visual aids for work procedures. For example, symbol A indicated in the left upper portion of each illustration corresponds with the symbol in the flowchart for easy identification. More precisely, the procedure under the "CHECK POWER SUPPLY" outlined previously is indicated by an illustration A .

### 4 Symbols used in illustrations

Symbols included in illustrations refer to measurements or procedures. Before diagnosing a problem, familiarize yourself with each symbol.

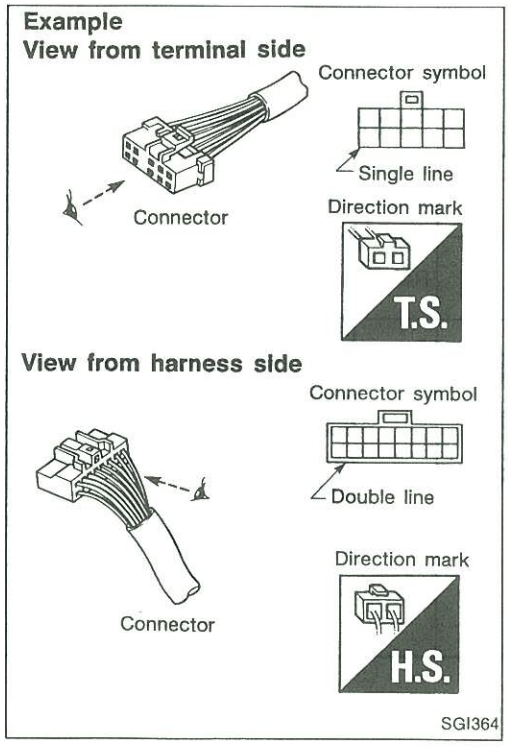


**Direction mark**

A direction mark is shown to clarify the side of connector (terminal side or harness side).
Direction marks are mainly used in the illustrations indicating terminal inspection.

T.S. : **View from terminal side ... T.S.**

- **All connector symbols shown from the terminal side are enclosed by a single line.**

H.S. : **View from harness side ... H.S.**

- **All connector symbols shown from the harness side are enclosed by a double line.**

## Key to symbols signifying measurements or procedures

| Symbol | Symbol explanation | Symbol | Symbol explanation |
|---|---|---|---|
| | Check after disconnecting the connector to be measured. | | Procedure without CONSULT |
| | Check after connecting the connector to be measured. | | A/C switch is "OFF". |
| | Insert key into ignition switch. | | A/C switch is "ON". |
| | Turn ignition switch to "OFF" position. | | REC switch is "ON". |
| | Turn ignition switch to "ON" position. | | REC switch is "OFF". |
| | Turn ignition switch to "START" position. | | DEF switch is "ON". |
| | Turn ignition switch from "OFF" to "ACC" position. | | VENT switch is "ON". |
| | Turn ignition switch from "ACC" to "OFF" position. | 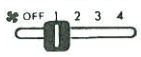  | Fan switch is "ON". (At any position except for "OFF" position) |
| | Turn ignition switch from "OFF" to "ON" position. | 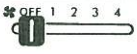  | Fan switch is "OFF". |
| | Turn ignition switch from "ON" to "OFF" position. | | Apply battery voltage directly to components. |
| | Do not start engine, or check with engine stopped. | | Drive vehicle. |
| | Start engine, or check with engine running. | | Disconnect battery negative cable. |
| | Apply parking brake. | | Depress brake pedal. |
| | Release parking brake. | | Release brake pedal. |
| | Check after engine is warmed up sufficiently. | | Depress accelerator pedal. |
| | Voltage should be measured with a voltmeter. | | Release accelerator pedal. |
| 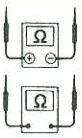  | Circuit resistance should be measured with an ohmmeter. | 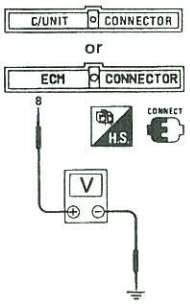  | Pin terminal check for S.M.J. type ECM and A/T control unit connectors. **For details regarding the terminal arrangement, refer to the foldout page.** 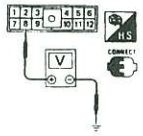  |
| | Current should be measured with an ammeter. | | |
| | Procedure with CONSULT | | |

## Function and System Application

| Diagnostic test mode | Function | E.C.C.S. | A/T | HICAS |
|---|---|---|---|---|
| Work support | This mode enables a technician to adjust some devices faster and more accurately by following the indications on CONSULT. | X | — | — |
| Self-diagnostic results | Self-diagnostic results can be read and erased quickly. | X | X | X |
| Data monitor | Input/Output data in the ECM can be read. | X | X | X |
| Active test | Diagnostic Test Mode in which CONSULT drives some actuators apart from the ECMs and also shifts some parameters in a specified range. | X | — | X |
| ECM part number | ECM part number can be read. | X | X | X |
| Function test | E.C.C.S. faults can be isolated to a general area, semi-automatically and in a short time, by following the directions on the screen. | X | — | — |

X: Applicable

## Checking Equipment

**When ordering the below equipment, contact your NISSAN distributor.**

| Tool name | Description |
|---|---|
| **NISSAN CONSULT kit**<br>① CONSULT unit and accessories<br>② Program card (UE920)<br>③ Operation manuals<br>④ Binder<br>⑤ Carrying case<br>⑥ Thermal paper (Rolls) | 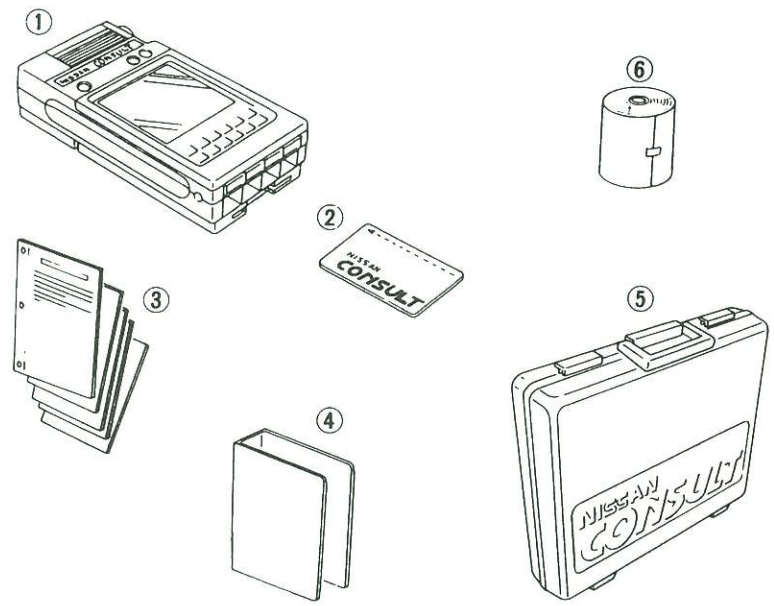 |

## Model Variation

| Destination | | | Body | Engine | Transmission | |
|---|---|---|---|---|---|---|
| | | | | | 5-speed manual | 4-speed automatic |
| | | | | | FS5W71C | RE4R01A |
| U.S.A. | Non-California | L.H.D. | Coupe | KA24DE | ML-FU | ML-AU |
| | | | Fastback | | RML-FU | RML-AU |
| | | | | | RMLK-FU | RMLK-AU |
| | California | | Coupe | | ML-FV | ML-AV |
| | | | Fastback | | RML-FV | RML-AV |
| | | | | | RMLK-FV | RMLK-AV |
| Canada | | | Coupe | | ML-FN | ML-AN |
| | | | Fastback | | RML-FN | RML-AN |
| | | | | | RMLK-FN | RMLK-AN |

**Prefix and suffix designations:**

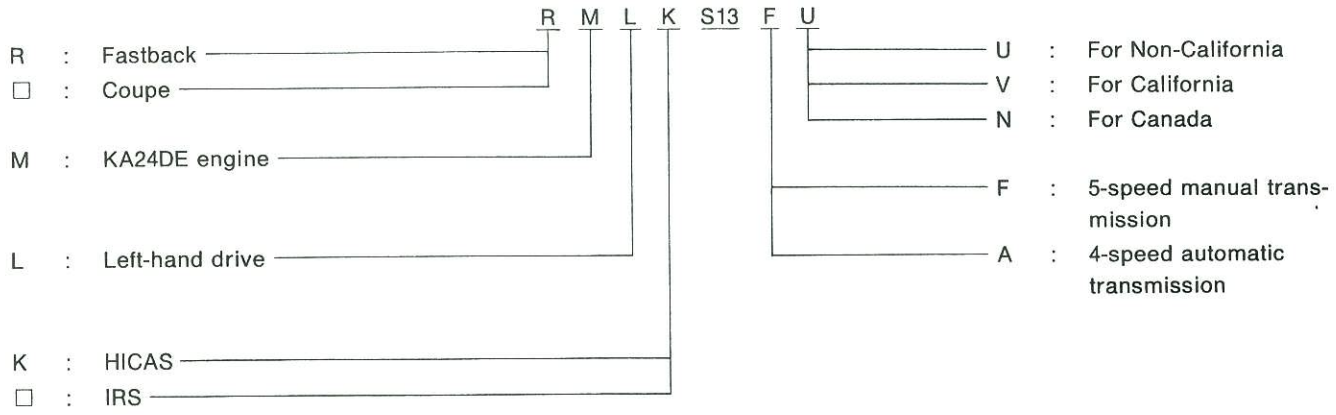


□ : means no indication.

## Identification Number

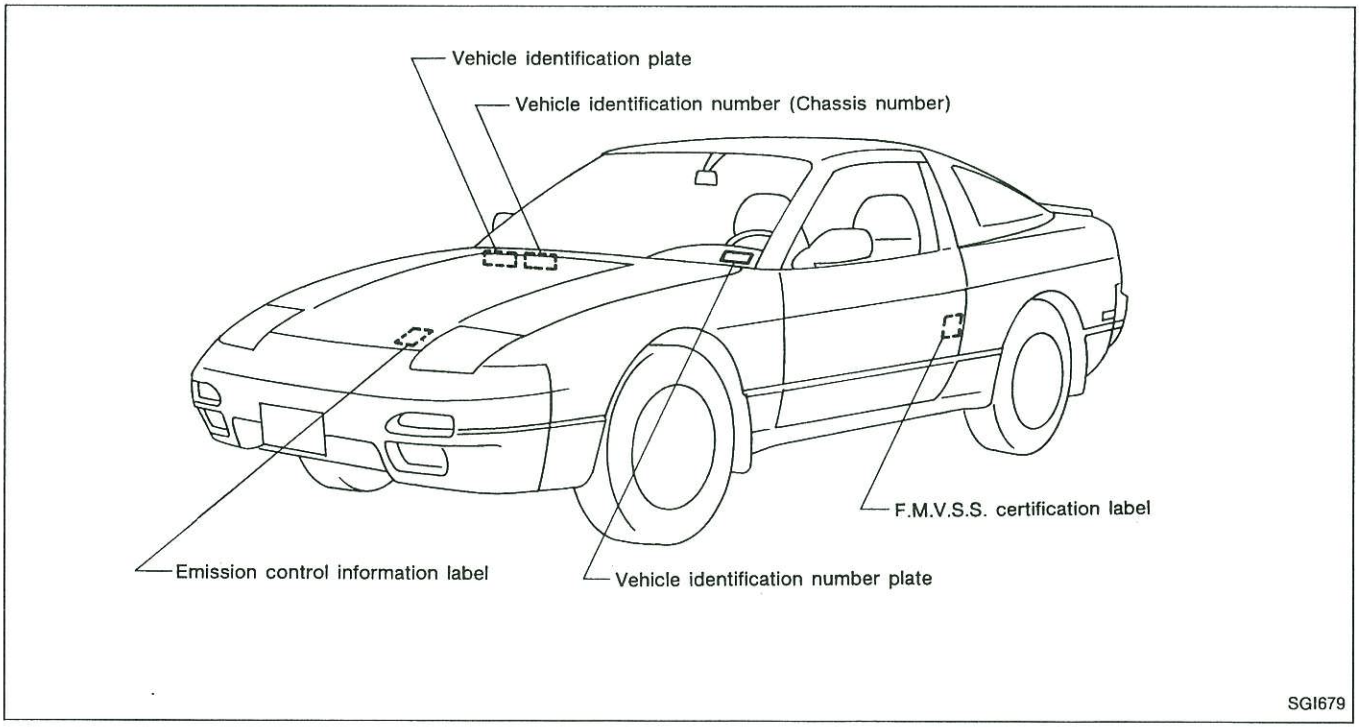


### VEHICLE IDENTIFICATION NUMBER ARRANGEMENT

JN1 H S 3 6 P X P W 000051

Manufacturer
JN1 : Nissan, Passenger vehicle

Engine type
H : KA24DE

Vehicle line
S : NISSAN 240SX

Model change

Body type
4 : Coupe
6 : Fastback

Restraint system
S : Standard
P : Automatic

Check digit (0 to 9 or X)
The code for the check digit is determined by mathematical computation.

Model year
P : 1993 year model

Manufacturing plant
W : Kyushu

Vehicle serial number

## Identification Number (Cont'd)

### IDENTIFICATION PLATE

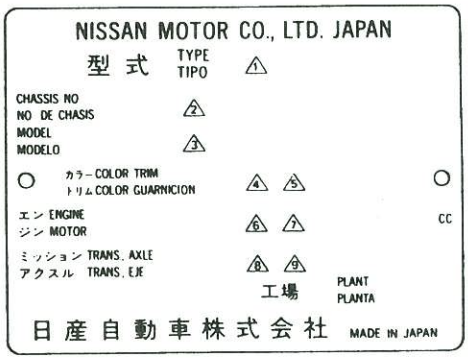


1 Type
2 Vehicle identification number (Chassis number)
3 Model
4 Body color code
5 Trim color code
6 Engine model
7 Engine displacement
8 Transmission model
9 Axle model

SGI315

### ENGINE SERIAL NUMBER

KA24DE engine

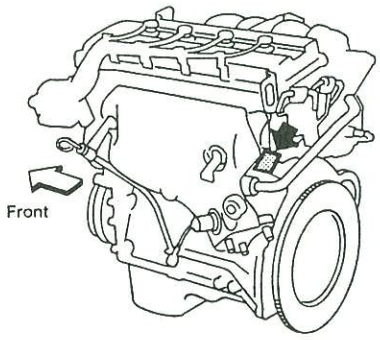


TI1067M

### MANUAL TRANSMISSION NUMBER

FS5W71C

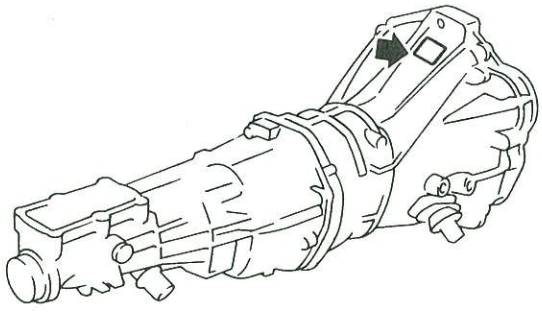

MGI032A

### AUTOMATIC TRANSMISSION NUMBER

RE4R01A

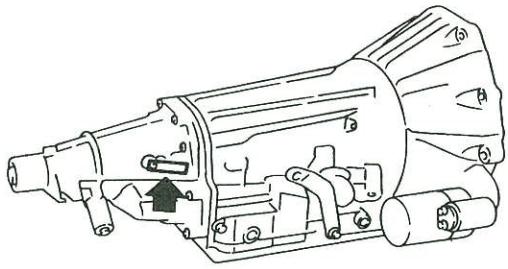

MGI033A

## Dimensions

Unit: mm (in)

| | Coupe | Fastback |
|---|---|---|
| Overall length | 4,520 (178.0) | 4,520 (178.0) |
| Overall width | 1,690 (66.5) | 1,690 (66.5) |
| Overall height | 1,290 (50.8) | 1,290 (50.8) |
| Front tread | 1,465 (57.7) | 1,465 (57.7) |
| Rear tread | 1,460 (57.5) | 1,460 (57.5) |
| Wheelbase | 2,475 (97.4) | 2,475 (97.4) |

## Wheels and Tires

| | | | |
|---|---|---|---|
| Road wheel | Steel | | 15x6-JJ<br>15x4T*1, 16x4T*1 |
| | Aluminum | | 15x6-JJ |
| | Offset | mm (in) | 40 (1.57)<br>35 (1.38)*3 |
| Tire size | Conventional | | P195/60R15 86H<br>P205/60R15 89H*2 |
| | Spare | | T125/70D15<br>T135/70D16 |

*1: For spare tire
*2: Option
*3: Offset for 4Tx16

## Garage Jack and Safety Stand

**WARNING:**

- **Never get under the vehicle while it is supported only by the jack. Always use safety stands to support the frame when you have to get under the vehicle.**
- **Place wheel chocks at the front wheels when the rear wheels are raised and place wheel chocks at the rear wheels when the front wheels are raised.**

**CAUTION:**

**Place a wooden or rubber block between safety stand and vehicle body when the supporting body is flat.**

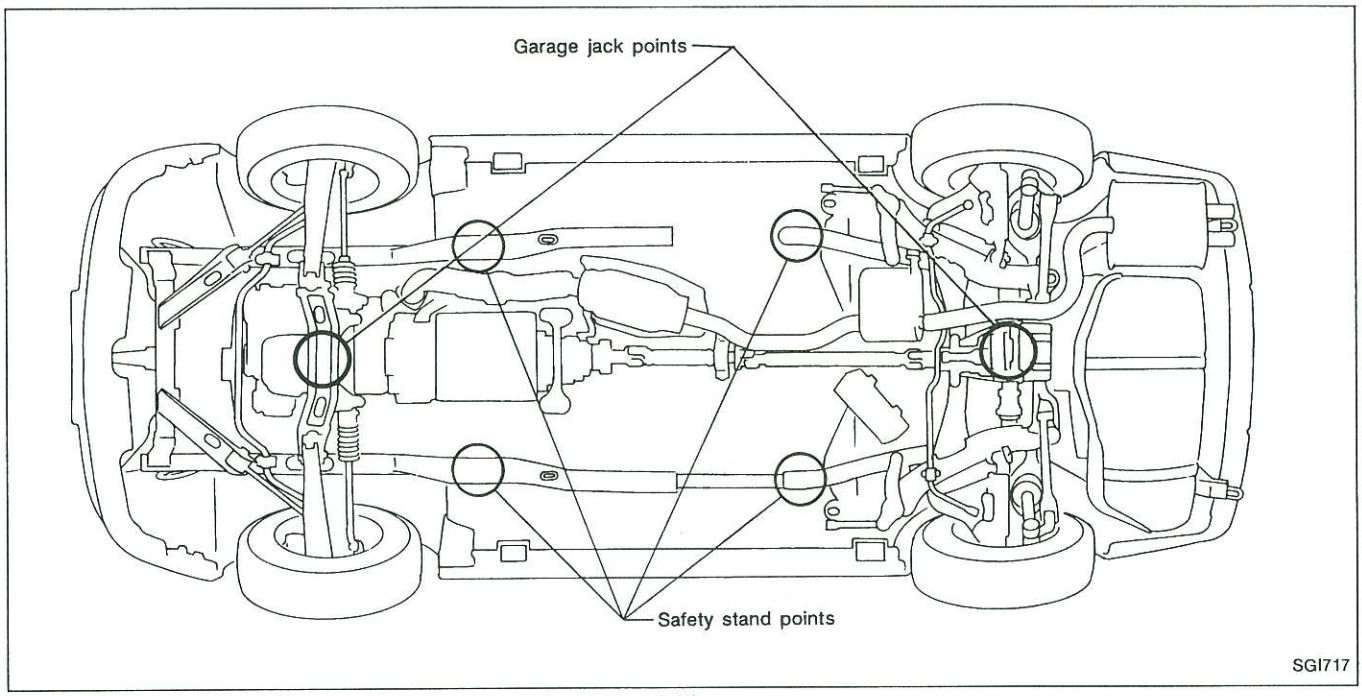


## 2-pole Lift

**WARNING:**

**When lifting the vehicle, open the lift arms as wide as possible and ensure that the front and rear of the vehicle are well balanced.**

**When setting the lift arm, do not allow the arm to contact the brake tubes and fuel lines.**

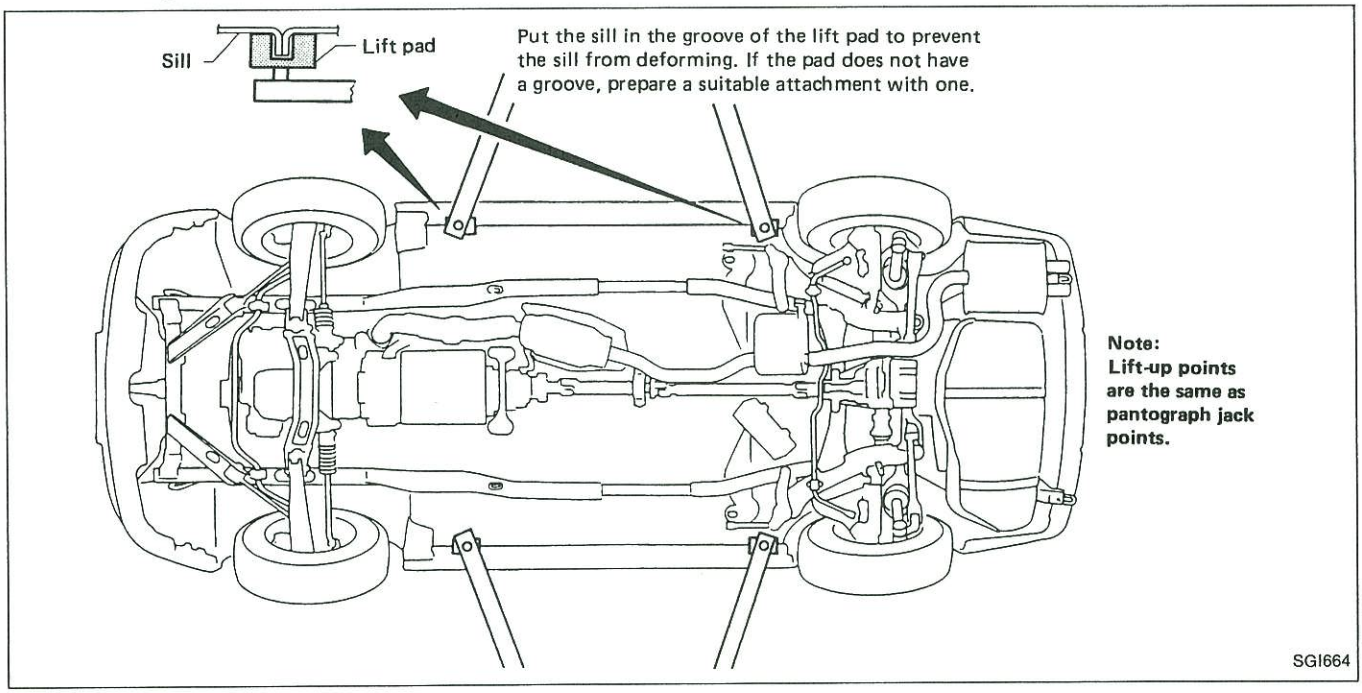

## Tow Truck Towing

**CAUTION:**

- **All applicable state or Provincial (in Canada) laws and local laws regarding the towing operation must be obeyed.**
- **It is necessary to use proper towing equipment to avoid possible damage to the vehicle during towing operation. Towing is in accordance with Towing Procedure Manual at dealer.**
- **When towing with the rear wheels on the ground, release the parking brake and move the gearshift lever to neutral position ("N" position).**

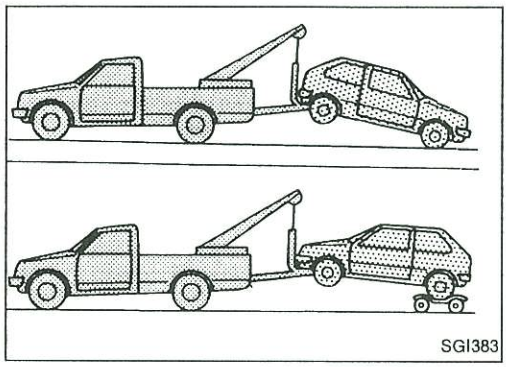
SGI383

NISSAN recommends that vehicle be towed with the driving (rear) wheels off the ground as illustrated.

### TOWING AN AUTOMATIC TRANSMISSION MODEL WITH FOUR WHEELS ON GROUND OR TOWING WITH FRONT WHEELS RAISED (With rear wheels on ground)

Observe the following restricted towing speeds and distances.

**Speed:**
**Below 50 km/h (30 MPH)**
**Distance:**
**Less than 65 km (40 miles)**

If the speed or distance must necessarily be greater, remove the propeller shaft beforehand to prevent damage to the transmission.

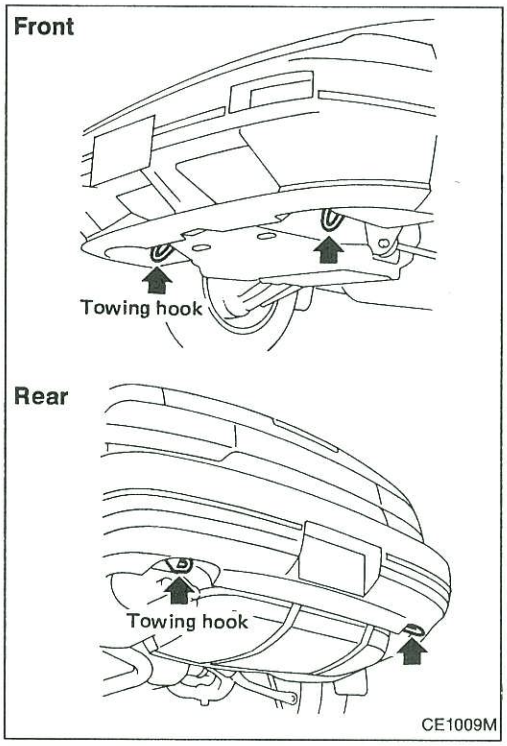


### TOWING POINT

**Always pull the cable straight out from the vehicle. Never pull on the hook at a sideways angle.**

# TIGHTENING TORQUE OF STANDARD BOLTS

| Grade | Bolt size | Bolt diameter* mm | Pitch mm | Tightening torque (Without lubricant) | | | | | |
|---|---|---|---|---|---|---|---|---|---|
| | | | | Hexagon head bolt | | | Hexagon flange bolt | | |
| | | | | N·m | kg-m | ft-lb | N·m | kg-m | ft-lb |
| 4T | M6 | 6.0 | 1.0 | 5.1 | 0.52 | 3.8 | 6.1 | 0.62 | 4.5 |
| | M8 | 8.0 | 1.25 | 13 | 1.3 | 9 | 15 | 1.5 | 11 |
| | | | 1.0 | 13 | 1.3 | 9 | 16 | 1.6 | 12 |
| | M10 | 10.0 | 1.5 | 25 | 2.5 | 18 | 29 | 3.0 | 22 |
| | | | 1.25 | 25 | 2.6 | 19 | 30 | 3.1 | 22 |
| | M12 | 12.0 | 1.75 | 42 | 4.3 | 31 | 51 | 5.2 | 38 |
| | | | 1.25 | 46 | 4.7 | 34 | 56 | 5.7 | 41 |
| | M14 | 14.0 | 1.5 | 74 | 7.5 | 54 | 88 | 9.0 | 65 |
| 7T | M6 | 6.0 | 1.0 | 8.4 | 0.86 | 6.2 | 10 | 1.0 | 7 |
| | M8 | 8.0 | 1.25 | 21 | 2.1 | 15 | 25 | 2.5 | 18 |
| | | | 1.0 | 22 | 2.2 | 16 | 26 | 2.7 | 20 |
| | M10 | 10.0 | 1.5 | 41 | 4.2 | 30 | 48 | 4.9 | 35 |
| | | | 1.25 | 43 | 4.4 | 32 | 51 | 5.2 | 38 |
| | M12 | 12.0 | 1.75 | 71 | 7.2 | 52 | 84 | 8.6 | 62 |
| | | | 1.25 | 77 | 7.9 | 57 | 92 | 9.4 | 68 |
| | M14 | 14.0 | 1.5 | 127 | 13.0 | 94 | 147 | 15.0 | 108 |
| 9T | M6 | 6.0 | 1.0 | 12 | 1.2 | 9 | 15 | 1.5 | 11 |
| | M8 | 8.0 | 1.25 | 29 | 3.0 | 22 | 35 | 3.6 | 26 |
| | | | 1.0 | 31 | 3.2 | 23 | 37 | 3.8 | 27 |
| | M10 | 10.0 | 1.5 | 59 | 6.0 | 43 | 70 | 7.1 | 51 |
| | | | 1.25 | 62 | 6.3 | 46 | 74 | 7.5 | 54 |
| | M12 | 12.0 | 1.75 | 98 | 10.0 | 72 | 118 | 12.0 | 87 |
| | | | 1.25 | 108 | 11.0 | 80 | 137 | 14.0 | 101 |
| | M14 | 14.0 | 1.5 | 177 | 18.0 | 130 | 206 | 21.0 | 152 |

1. **Special parts are excluded.**
2. **This standard is applicable to bolts having the following marks embossed on the bolt head.**

*: Nominal diameter

| Grade | Mark |
|---|---|
| 4T | 4 |
| 7T | 7 |
| 9T | 9 |

M 6
- 6 — Nominal diameter of bolt threads (Unit: mm)
- M — Metric screw threads

SECTION MA



# CONTENTS

**GENERAL MAINTENANCE** ..... 2
**PERIODIC MAINTENANCE** ..... 4
Schedule 1 ..... 5
Schedule 2 ..... 6
**RECOMMENDED LUBRICANTS AND FLUIDS** ..... 7
Lubricants and Fluids ..... 7
SAE Viscosity Number ..... 7
**ENGINE MAINTENANCE** ..... 8
Checking Drive Belts ..... 8
Changing Engine Coolant ..... 9
Checking Fuel Lines ..... 10
Changing Fuel Filter ..... 10
Changing Air Cleaner Filter ..... 11
Changing Engine Oil ..... 11
Changing Oil Filter ..... 12
Changing Spark Plugs ..... 12
Checking Vapor Lines ..... 12
**CHASSIS AND BODY MAINTENANCE** ..... 13
Checking Exhaust System ..... 13
Checking Clutch Fluid Level and Leaks ..... 13
Checking M/T Oil ..... 13
Changing M/T Oil ..... 13
Checking A/T Fluid ..... 13
Changing A/T Fluid ..... 14
Checking Differential Gear Oil ..... 14
Changing Differential Gear Oil ..... 14
Balancing Wheels ..... 14
Tire Rotation ..... 14
Checking Brake Fluid Level and Leaks ..... 15
Checking Brake Lines and Cables ..... 15
Checking Disc Brake ..... 15
Checking Steering Gear and Linkage ..... 15
Checking Power Steering Fluid and Lines ..... 16
Checking SUPER HICAS Linkage (With SUPER HICAS system) ..... 16
Lubricating Locks, Higes and Hood Latches ..... 17
Checking Ssat Belts, Buckles, Retractors, Anchors and Adjusters ..... 17
**SERVICE DATA AND SPECIFICATIONS (S.D.S.)** ..... 18
Engine Maintenance ..... 18
Chassis and Body Maintenance ..... 18

General maintenance includes those items which should be checked during the normal day-to-day operation of the vehicle. They are essential if the vehicle is to continue operating properly. The owners can perform the checks and inspections themselves or they can have their NISSAN dealers do them.

| Item | Reference page |
|---|---|
| **OUTSIDE THE VEHICLE**<br>The maintenance items listed here should be performed from time to time, unless otherwise specified. | |
| **Tires** Check the pressure with a gauge periodically when at a service station, including the spare, and adjust to the specified pressure if necessary. Check carefully for damage, cuts or excessive wear. | — |
| **Wheel nuts** When checking the tires, make sure no nuts are missing, and check for any loose nuts. Tighten if necessary. | — |
| **Tire rotation** Tires should be rotated every 12,000 km (7,500 miles). | MA-14 |
| **Wheel alignment and balance** If the vehicle should pull to either side while driving on a straight and level road, or if you detect uneven or abnormal tire wear, there may be a need for wheel alignment. If the steering wheel or seat vibrates at normal highway speeds, wheel balancing may be needed. | MA-14<br>FA-5 |
| **Windshield wiper blades** Check for cracks or wear if they do not wipe properly. | — |
| **Doors and engine hood** Check that all doors and the engine hood operate smoothly as well as the trunk lid and back hatch. Also ensure, that all latches lock securely. Lubricate hinges, latches, rollers and links if necessary. Make sure that the secondary latch keeps the hood from opening when the primary latch is released.<br>When driving in areas using road salt or other corrosive materials, check lubrication frequently. | MA-17 |
| **INSIDE THE VEHICLE**<br>The maintenance items listed here should be checked on a regular basis, such as when performing periodic maintenance, cleaning the vehicle, etc. | |
| **Lights** Make sure that the headlights, stop lights, tail lights, turn signal lights, and other lights are all operating properly and installed securely. Also check headlight aim. | — |
| **Warning lights and buzzers/chimes** Make sure that all warning lights and buzzers/chimes are operating properly. | — |
| **Windshield wiper and washer** Check that the wipers and washer operate properly and that the wipers do not streak. | — |
| **Windshield defroster** Check that the air comes out of the defroster outlets properly and in sufficient quantity when operating the heater or air conditioner. | — |
| **Steering wheel** Check that it has the specified free play. Be sure to check for changes in the steering condition, such as excessive free play, hard steering or strange noises.<br>**Free play: Less than 35 mm (1.38 in)** | — |
| **Seats** Check seat position controls such as seat adjusters, seatback recliner, etc. to ensure they operate smoothly and that all latches lock securely in every position. Check that the head restrains move up and down smoothly and that the locks (if so equipped) hold securely in all latched positions. Check that the latches lock securely for folding-down rear seatbacks. | — |
| **Seat belts** Check that all parts of the seat belt system (e.g. buckles, anchors, adjusters and retractors) operate properly and smoothly, and are installed securely. Check the belt webbing for cuts, fraying, wear or damage. | MA-17 |

| Item | Reference page |
|---|---|
| **Clutch pedal** Make sure the pedal operates smoothly and check that it has the proper free travel. | CL-4 |
| **Brakes** Check that the brake does not pull the vehicle to one side when applied. | — |
| **Brake pedal** Check the pedal for smooth operation and make sure it has the proper distance under it when depressed fully. Check the brake booster function. Be certain to keep floor mats away from the pedal. | BR-7, 8 |
| **Parking brake** Check that the lever has the proper travel and confirm that your vehicle is held securely on a fairly steep hill with only the parking brake applied. | BR-19 |
| **Automatic transmission "Park position" mechanism** Check that the lock release button on the selector lever operates properly and smoothly. On a fairly steep hill check that your vehicle is held securely with the selector lever in the "P" position without applying any brakes. | — |
| **UNDER THE HOOD AND VEHICLE**<br>The maintenance items listed here should be checked periodically (e.g. each time you check the engine oil or refuel). | |
| **Windshield washer fluid** Check that there is adequate fluid in the tank. | — |
| **Engine coolant level** Check the coolant level when the engine is cold. | MA-10 |
| **Radiator and hoses** Check the front of the radiator and clean off any dirt, insects, leaves, etc., that may have accumulated. Make sure the hoses have no cracks, deformation, rot or loose connections. | — |
| **Brake and clutch fluid levels** Make sure that the brake and clutch fluid levels are between the "MAX" and "MIN" lines on the reservoir. | MA-13, 15 |
| **Battery** Check the fluid level in each cell. It should be between the "MAX" and "MIN" lines. | — |
| **Engine drive belts** Make sure that no belt is frayed, worn, cracked or oily. | MA-8 |
| **Engine oil level** Check the level on the dipstick after parking the vehicle on a level spot and turning off the engine. | MA-11 |
| **Power steering fluid level and lines** Check the level when the fluid is cold and the engine is turned off. Check the lines for proper attachment, leaks, cracks, etc. | MA-16 |
| **Automatic transmission fluid level** Check the level on the dipstick after putting the selector lever in "P" with the engine idling. | MA-13 |
| **Exhaust system** Make sure there are no loose supports, cracks or holes. If the sound of the exhaust seems unusual or there is a smell of exhaust fumes, immediately locate the trouble and correct it. | MA-13 |
| **Underbody** The underbody is frequently exposed to corrosive substances such as those used on icy roads or to control dust. It is very important to remove these substances, otherwise rust will form on the floor pan, frame, fuel lines and around the exhaust system. At the end of winter, the underbody should be thoroughly flushed with plain water, being careful to clean those areas where mud and dirt can easily accumulate. | — |
| **Fluid leaks** Check under the vehicle for fuel, oil, water or other fluid leaks after the vehicle has been parked for a while. Water dripping from the air conditioner after use is normal. If you should notice any leaks or gasoline fumes are evident, check for the cause and correct it immediately. | — |

Two different maintenance schedules are provided, and should be used, depending upon the conditions in which the vehicle is mainly operated. **After 60,000 miles (96,000 km) or 48 months, continue the periodic maintenance at the same mileage/time intervals.**

## SCHEDULE 1

Follow Periodic Maintenance Schedule 1 if your driving habits frequently includes one or more of the following driving conditions:

- Repeated short trips of less than 5 miles (8 km).
- Repeated short trips of less than 10 miles (16 km) with outside temperatures remaining below freezing.
- Operating in hot weather in stop-and-go "rush hour" traffic.
- Extensive idling and/or low speed driving for long distances, such as police, taxi or door-to-door delivery use.
- Driving in dusty conditions.
- Driving on rough, muddy, or salt spread roads.
- Towing a trailer, using a camper or a car-top carrier.

## SCHEDULE 2

Follow Periodic Maintenance Schedule 2 if none of the driving conditions shown in Schedule 1 apply to your driving habits.

Abbreviations: R = Replace I = Inspect. Correct or replace if necessary. [ ]: At the mileage intervals only

| MAINTENANCE OPERATION<br>Perform at number of miles, kilometers or months, whichever comes first. | Miles x 1,000<br>(km x 1,000)<br>Months | MAINTENANCE INTERVAL<br>3.75 (6) 3 | 7.5 (12) 6 | 11.25 (18) 9 | 15 (24) 12 | 18.75 (30) 15 | 22.5 (36) 18 | 26.25 (42) 21 | 30 (48) 24 | 33.75 (54) 27 | 37.5 (60) 30 | 41.25 (66) 33 | 45 (72) 36 | 48.75 (78) 39 | 52.5 (84) 42 | 56.25 (90) 45 | 60 (96) 48 | Reference page |
|---|---|---|---|---|---|---|---|---|---|---|---|---|---|---|---|---|---|---|
| **Emission control system maintenance** | | | | | | | | | | | | | | | | | | |
| Drive belts | See NOTE (1) | | | | | | | | | | | | | | | | I* | MA-8 |
| Air cleaner filter | See NOTE (2) | | | | | | | | [R] | | | | | | | | [R] | MA-11 |
| Vapor lines | | | | | | | | | I* | | | | | | | | I* | MA-12 |
| Fuel lines | | | | | | | | | I* | | | | | | | | I* | MA-10 |
| Fuel filter | See NOTE (3)* | | | | | | | | | | | | | | | | | MA-10 |
| Engine coolant | See NOTE (4) | | | | | | | | | | | | | | | | R* | MA-9 |
| Engine oil | | R | R | R | R | R | R | R | R | R | R | R | R | R | R | R | R | MA-11 |
| Engine oil filter (Use Nissan PREMIUM type or equivalent.) | | R | R | R | R | R | R | R | R | R | R | R | R | R | R | R | R | MA-12 |
| Spark plugs | | | | | | | | | [R] | | | | | | | | [R] | MA-13 |
| Intake & exhaust valve clearances | See NOTE (5)* | | | | | | | | | | | | | | | | | EM-28 |
| **Chassis and body maintenance** | | | | | | | | | | | | | | | | | | |
| Brake lines & cables | | | | | I | | | | I | | | | I | | | | I | MA-15 |
| Brake pads & discs | | | I | | I | | I | | I | | I | | I | | I | | I | MA-15 |
| Manual and automatic transmission oil, & differential gear oil | See NOTE (6) | | | | I | | | | I | | | | I | | | | I | MA-13, 14 |
| Steering gear & linkage, axle & suspension parts | | | I | | I | | I | | I | | I | | I | | I | | I | MA-15, FA-5, RA-4 |
| Steering linkage ball joints & front suspension ball joints | | | I | | I | | I | | I | | I | | I | | I | | I | MA-15, FA-5 |
| SUPER HICAS linkage | | | I | | I | | I | | I | | I | | I | | I | | I | MA-16 |
| Exhaust system | | | I | | I | | I | | I | | I | | I | | I | | I | MA-13 |

**NOTE: (1) After 60,000 miles (96,000 km) or 48 months, inspect every 15,000 miles (24,000 km) or 12 months.**
**(2) If operating mainly in dusty conditions, more frequent maintenance may be required.**
**(3) If vehicle is operated under extremely adverse weather conditions or in areas where ambient temperatures are either extremely low or extremely high, the filters might become clogged. In such an event, replace them immediately.**
**(4) After 60,000 miles (96,000 km) or 48 months, replace every 30,000 miles (48,000 km) or 24 months.**
**(5) If valve noise increases, inspect valve clearances.**
**(6) If towing a trailer, using a camper or a car-top carrier, or driving on rough or muddy roads, change (not just inspect) oil at every 30,000 miles (48,000 km) or 24 months.**
**(7) Maintenance items and intervals with "*" are recommended by NISSAN for reliable vehicle operation. The owner need not perform such maintenance in order to maintain the emission warranty or manufacturer recall liability. Other maintenance items and intervals are required.**

Abbreviations: R = Replace I = Inspect. Correct or replace if necessary. [ ]: At the mileage intervals only

| MAINTENANCE OPERATION | | MAINTENANCE INTERVAL | | | | | | | | |
|---|---|---|---|---|---|---|---|---|---|---|
| Perform at number of miles, kilometers or months, whichever comes first. | Miles x 1,000 | 7.5 | 15 | 22.5 | 30 | 37.5 | 45 | 52.5 | 60 | Reference page |
| | (km x 1,000) | (12) | (24) | (36) | (48) | (60) | (72) | (84) | (96) | |
| | Months | 6 | 12 | 18 | 24 | 30 | 36 | 42 | 48 | |
| **Emission control system maintenance** | | | | | | | | | | |
| Drive belts | See NOTE (1) | | | | | | | | I* | MA-8 |
| Air cleaner filter | | | | | [R] | | | | [R] | MA-11 |
| Vapor lines | | | | | I* | | | | I* | MA-12 |
| Fuel lines | | | | | I* | | | | I* | MA-10 |
| Fuel filter | See NOTE (2)* | | | | | | | | | MA-10 |
| Engine coolant | See NOTE (3) | | | | | | | | R* | MA-9 |
| Engine oil | | R | R | R | R | R | R | R | R | MA-11 |
| Engine oil filter (Use Nissan PREMIUM type or equivalent.) | | | R | | R | | R | | R | MA-12 |
| Spark plugs | | | | | [R] | | | | [R] | MA-13 |
| Intake & exhaust valve clearances | See NOTE (4)* | | | | | | | | | EM-28 |
| **Chassis and body maintenance** | | | | | | | | | | |
| Brake lines & cables | | | I | | I | | I | | I | MA-15 |
| Brake pads & discs | | | I | | I | | I | | I | MA-15 |
| Manual and automatic transmission oil, & differential gear oil | | | I | | I | | I | | I | MA-13, 14 |
| Steering gear linkage, axle & suspension parts | | | | | I | | | | I | MA-15, FA-5, RA-4 |
| SUPER HICAS linkage | | | | | I | | | | I | MA-16 |
| Exhaust system | | | | | I | | | | I | MA-13 |

**NOTE: (1) After 60,000 miles (96,000 km) or 48 months, inspect every 15,000 miles (24,000 km) or 12 months.**

**(2) If vehicle is operated under extremely adverse weather conditions or in areas where ambient temperatures are either extremely low or extremely high, the filters might become clogged. In such an event, replace them immediately.**

**(3) After 60,000 miles (96,000 km) or 48 months, replace every 30,000 miles (48,000 km) or 24 months.**

**(4) If valve noise increases, inspect valve clearances.**

**(5) Maintenance items and intervals with "*" are recommended by NISSAN for reliable vehicle operation. The owner need not perform such maintenance in order to maintain the emission warranty or manufacturer recall liability. Other maintenance items and intervals are required.**

## Lubricants and Fluids

| | Capacity (Approximate) | | | Recommended lubricants and fluids |
|---|---|---|---|---|
| | US measure | Imp measure | Liter | |
| Engine oil (Refill) | | | | |
| With oil filter | 4 qt | 3-3/8 qt | 3.8 | Energy Conserving Oils of API SG*2, *3 |
| Without oil filter | 3-3/4 qt | 3-1/8 qt | 3.5 | |
| Cooling system (with reservoir tank) | 7-1/8 qt | 5-7/8 qt | 6.7 | Anti-freeze coolant (Ethylene glycol base) |
| Manual transmission oil | 5-1/8 pt | 4-1/4 pt | 2.4 | API GL-4*2 |
| Differential gear oil | | | | |
| R200 | 2-3/4 pt | 2-1/4 pt | 1.3 | API GL-5*2 |
| R200V | 3-1/8 pt | 2-5/8 pt | 1.5 | |
| Automatic transmission fluid | 8-3/4 qt | 7-1/4 qt | 8.3 | Genuine Nissan ATF*1 or equivalent Type DEXRON II™ |
| Power steering fluid | — | — | — | Type DEXRON II™or equivalent |
| Brake fluid | — | — | — | Genuine Nissan Brake Fluid*1 or equivalent DOT 3 (US FMVSS No. 116) |
| Multi-purpose grease | — | — | — | NLGI No. 2 (Lithium soap base) |

*1: Available in mainland U.S.A. through your Nissan dealer.
*2: For further details, see "SAE Viscosity Number".
*3: Energy Conserving Oils
These oils can be identified by such labels as EC-I, EC-II, energy conserving, energy saving, improved fuel economy, etc.

## SAE Viscosity Number

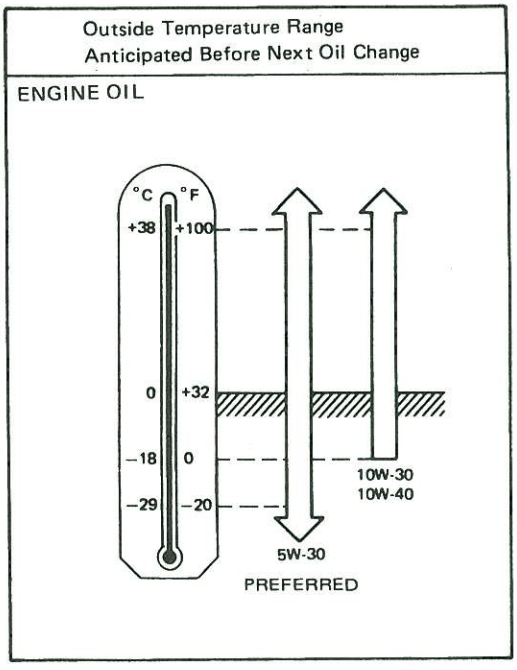


**5W-30 is preferable for all ambient temperatures. 20W-40 and 20W-50 are usable if the ambient temperature is above 10°C (50°F) for all seasons.**

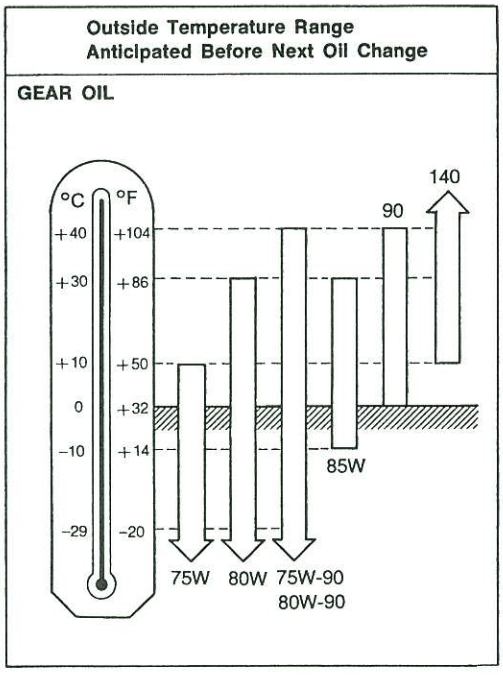


**75W-90 for the transmission and 80W-90 for the differential are preferable if the ambient temperature is below 40°C (104°F).**

## Checking Drive Belts

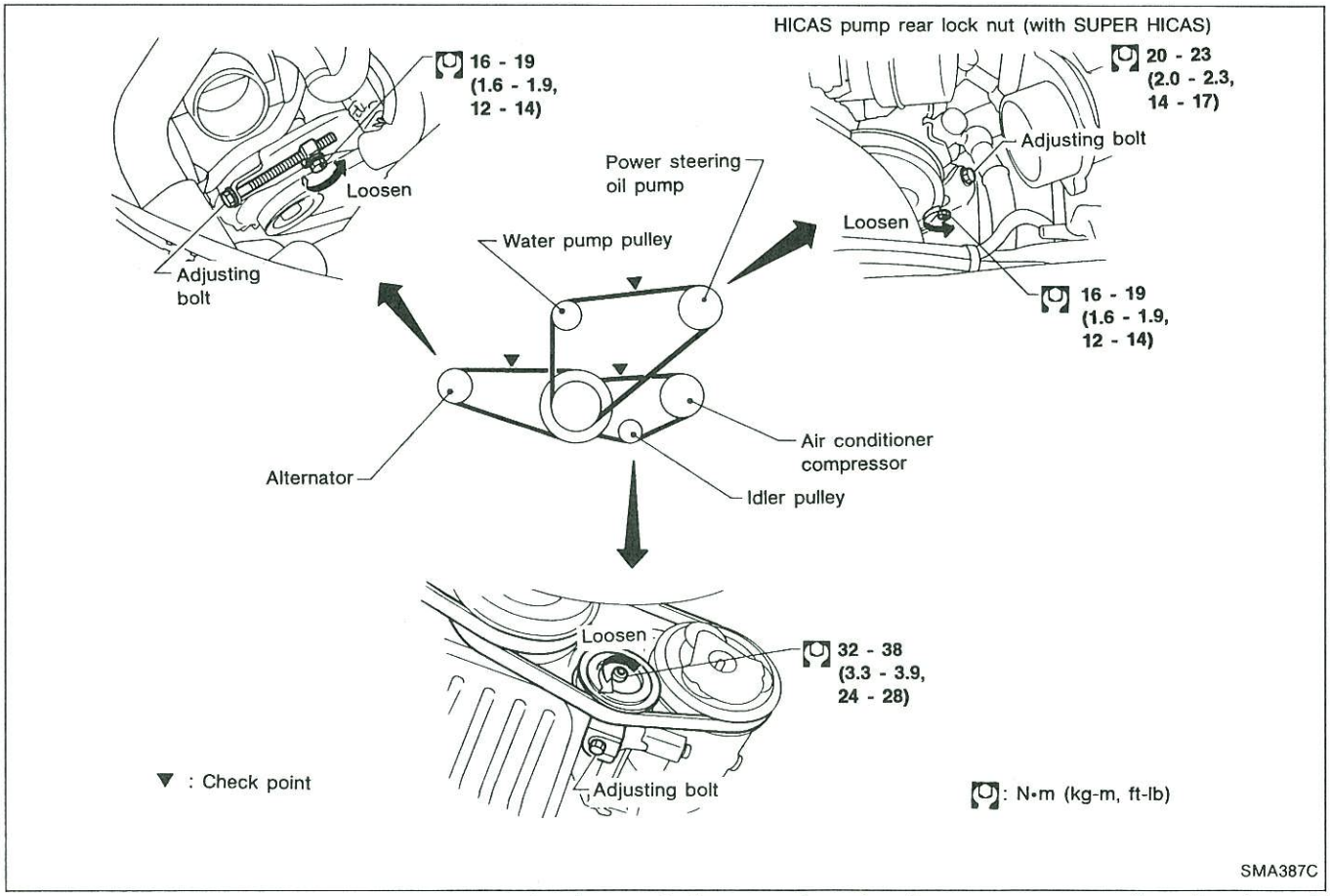


1. Inspect for cracks, fraying, wear or oil adhesion. If necessary, replace with a new one.
2. Inspect drive belt deflections by pushing on the belt midway between pulleys.

**Adjust if belt deflections exceed the limit.**

**Belt deflection:**

**Inspect drive belt deflections when engine is cold.**

Unit: mm (in)

| | Used belt deflection | | Deflection of new belt |
|---|---|---|---|
| | Limit | Deflection after adjustment | |
| Alternator | 11 (0.43) | 7 - 8 (0.28 - 0.31) | 6 - 7 (0.24 - 0.28) |
| Air conditioner compressor | 12 (0.47) | 7.5 - 8.5 (0.295 - 0.335) | 6.5 - 7.5 (0.256 - 0.295) |
| Power steering oil pump | | | |
| Without SUPER HICAS | 13 (0.51) | 7.5 - 8.5 (0.295 - 0.335) | 6.5 - 7.5 (0.256 - 0.295) |
| With SUPER HICAS | 9 (0.35) | 6.5 - 7.5 (0.256 - 0.295) | 5.5 - 6.5 (0.217 - 0.256) |
| Applied pushing force | 98 N (10 kg, 22 lb) | | |

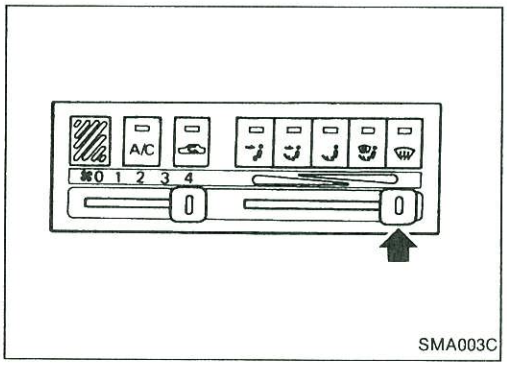

SMA003C

## Changing Engine Coolant

**WARNING:**

**To avoid being scalded, never change the coolant when the engine is hot.**

1. Move heater "TEMP" control lever all the way to "HOT" position.
2. Remove undercover.

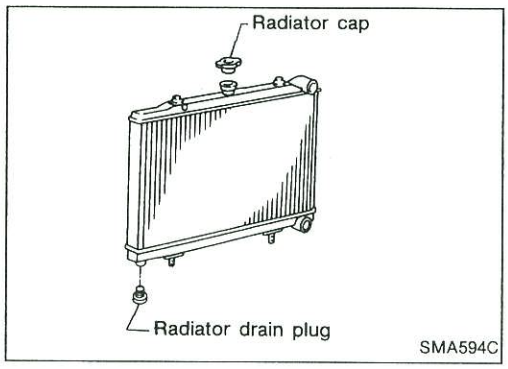

SMA594C

3. Open drain plug at the bottom of radiator, and remove radiator cap.

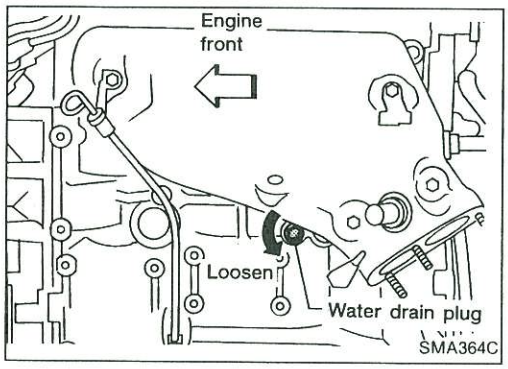

SMA364C

4. Remove drain plug on cylinder block.
5. Close drain plug and tighten drain plug securely.

- **Apply sealant to the thread of drain plug.**

**: 34 - 44 N·m**
**(3.5 - 4.5 kg-m, 25 - 33 ft-lb)**

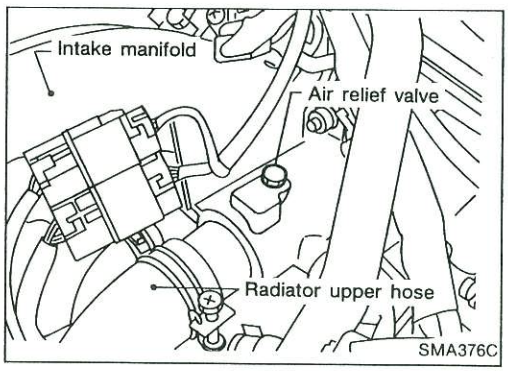

SMA376C

6. Open air relief plug.
7. Fill radiator with water and close air relief plug and radiator cap.
8. Run engine and warm it up sufficiently.
9. Race engine 2 or 3 times under no-load.
10. Stop engine and wait until it cools down.
11. Repeat step 2 through step 9 until clear water begins to drain from radiator.
12. Drain water.

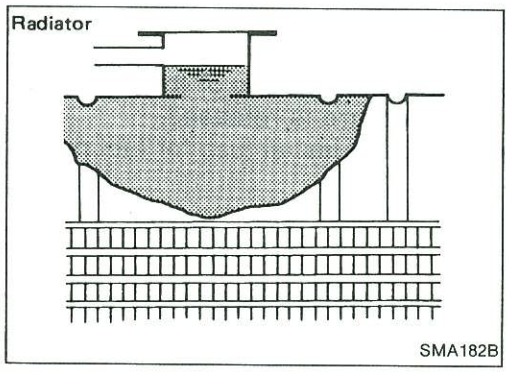

SMA182B

13. Open radiator cap and air relief plug.
14. Fill radiator with coolant up to specified level.
    Follow instructions attached to anti-freeze container for mixing ratio of anti-freeze to water.

**Coolant capacity (With reservoir tank):**
**6.7 ℓ (7-1/8 US qt, 5-7/8 Imp qt)**

**Pour coolant through coolant filler neck slowly to allow air in system to escape.**

## Changing Engine Coolant (Cont'd)

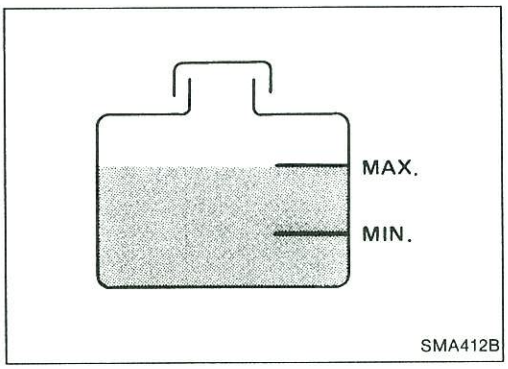


15. Close air relief plug.
16. Remove reservoir tank, drain coolant, then clean reservoir tank.
17. Install reservoir tank and fill it with coolant up to "MAX" level and then install radiator cap.
18. Run engine and warm it up sufficiently.
19. Race engine 2 or 3 times under no-load.
20. Stop engine and cool it down, then add coolant as necessary.

## Checking Fuel Lines

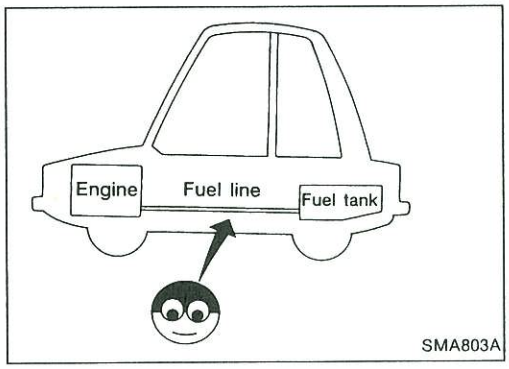


Inspect fuel lines and tank for improper attachment and for leaks, cracks, damage, loose connections, chafing and deterioration.
If necessary, repair or replace faulty parts.

## Changing Fuel Filter

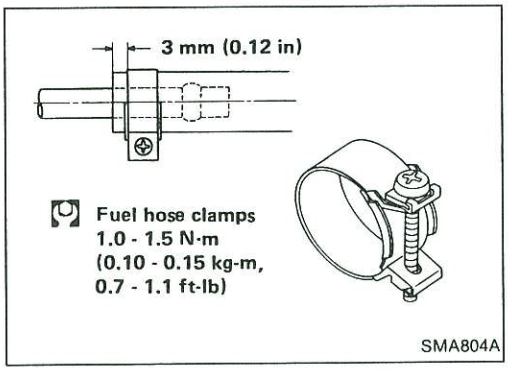


**CAUTION:**
**Tighten high-pressure rubber hose clamp so that clamp end is 3 mm (0.12 in) from hose end.**
**Ensure that screw does not contact adjacent parts.**

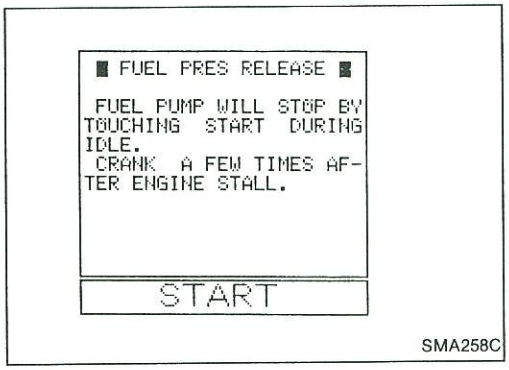


**WARNING:**
**Before removing fuel filter, release fuel pressure from fuel line.**

1. Start engine.
2. Perform "FUEL PRESSURE RELEASE" in "WORK SUPPORT" mode to release fuel pressure to zero.
3. After engine stalls, crank engine two or three times to make sure that fuel pressure is released.
4. Turn ignition switch off.

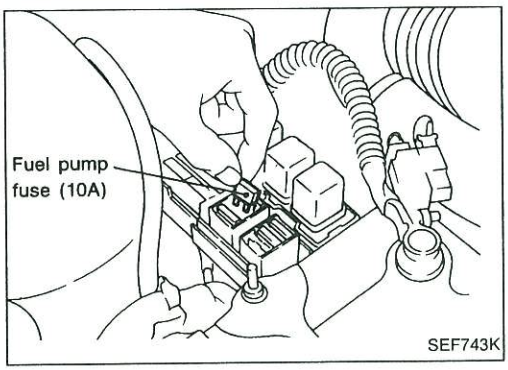


1. Remove fuse for fuel pump.
2. Start engine.
3. After engine stalls, crank engine two or three times to make sure that fuel pressure is released.
4. Turn ignition switch off and install fuse for fuel pump.

## Changing Fuel Filter (Cont'd)

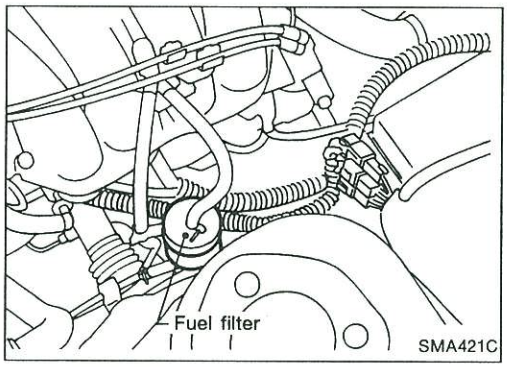


5. Loosen fuel hose clamps.
6. Replace fuel filter.

- **Be careful not to spill fuel over engine compartment. Place a shop towel to absorb fuel.**
- **Use a high-pressure type fuel filter. Do not use a synthetic resinous fuel filter.**
- **When tightening fuel hose clamps, refer to "Checking Fuel Lines".**

## Changing Air Cleaner Filter

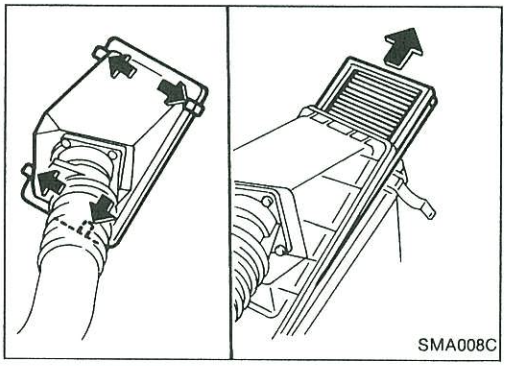


**The viscous paper type filter does not need cleaning between renewals.**

## Changing Engine Oil

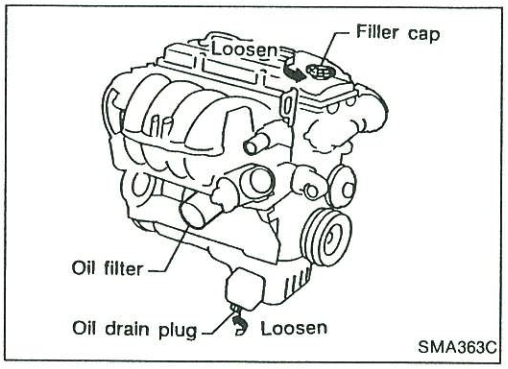


**WARNING:**

**Be careful not to burn yourself, as the engine oil is hot.**

1. Warm up engine, and check for oil leakage from engine components.
2. Remove drain plug and oil filler cap.
3. Drain oil and refill with new engine oil.

**Oil grade: API SG**

**Viscosity: See MA-7.**

**Refill oil capacity (Approximately):**

**With oil filter change**

**3.8 ℓ (4 US qt, 3-3/8 Imp qt)**

**Without oil filter change**

**3.5 ℓ (3-3/4 US qt, 3-1/8 Imp qt)**

**CAUTION:**

- **Be sure to clean drain plug and install with new washer.**

  **Drain plug:**

  **[O]: 29 - 39 N·m**

  **(3.0 - 4.0 kg-m, 22 - 29 ft-lb)**
- **The refill capacity changes depending on the oil temperature and drain time; use these values as a reference and be certain to check with the dipstick when changing the oil.**

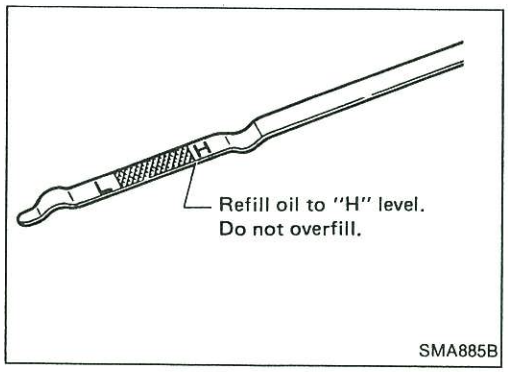


4. Check oil level.
5. Start engine and check area around drain plug and oil filter for oil leakage.
6. Run engine for a few minutes, then turn it off. After several minutes, check oil level.

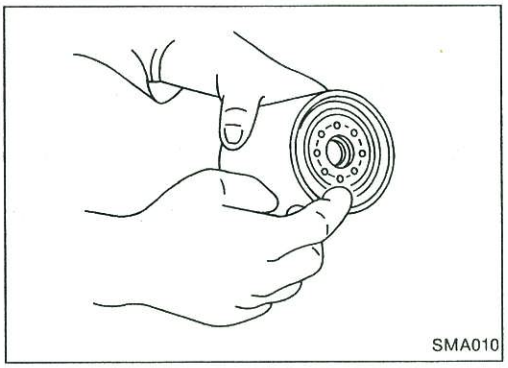


## Changing Oil Filter

1. Remove oil filter with a suitable tool.

**WARNING:**

**Be careful not to burn yourself, as the engine and the engine oil are hot.**

2. Before installing new oil filter, clean the oil filter mounting surface on cylinder block, and coat the rubber seal of oil filter with a little engine oil.

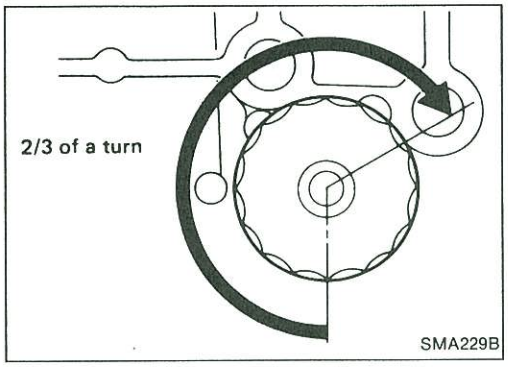


3. Screw in the oil filter until a slight resistance is felt, then tighten additionally more than 2/3 turn.
4. Add engine oil.

**Refer to Changing Engine Oil.**

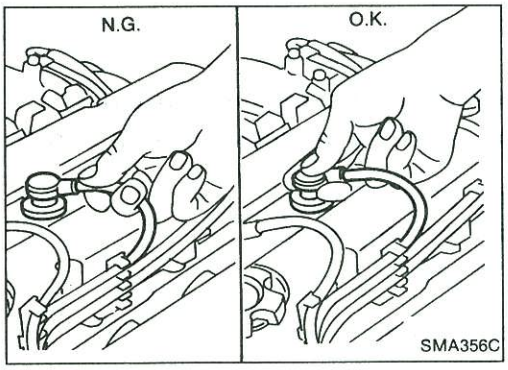


## Changing Spark Plugs

1. Disconnect ignition wires from spark plugs at boot. Do not pull on the wire.
2. Remove spark plugs with 16 mm (0.63 in) spark plug wrench.

**Spark plug:**

**Standard type**

**BKR5E-11**

**Cold type**

**BKR6E-11**

**BKR7E-11**

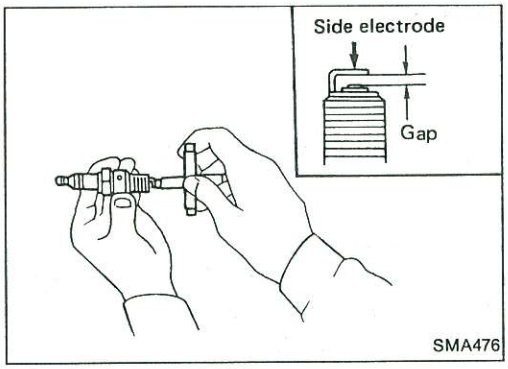


3. Check plug gap of each new spark plug.

**Gap: 1.0 - 1.1 mm (0.039 - 0.043 in)**

4. Install spark plugs. Reconnect ignition wires according to Nos. indicated on them.

**Spark plug:**

**[O]: 20 - 29 N·m**

**(2.0 - 3.0 kg-m, 14 - 22 ft-lb)**

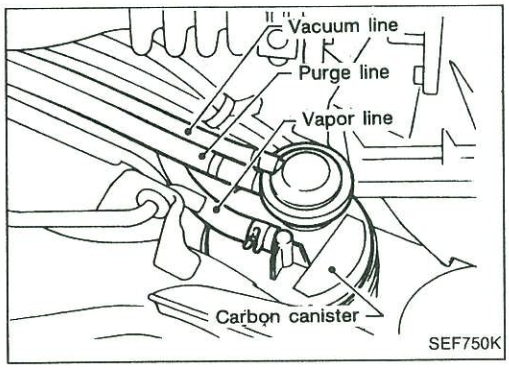


## Checking Vapor Lines

1. Visually inspect vapor lines for improper attachment and for cracks, damage, loose connections, chafing and deterioration.
2. Inspect vacuum relief valve of fuel tank filler cap for clogging, sticking, etc.

**Refer to EVAPORATIVE EMISSION SYSTEM in section "EF & EC".**

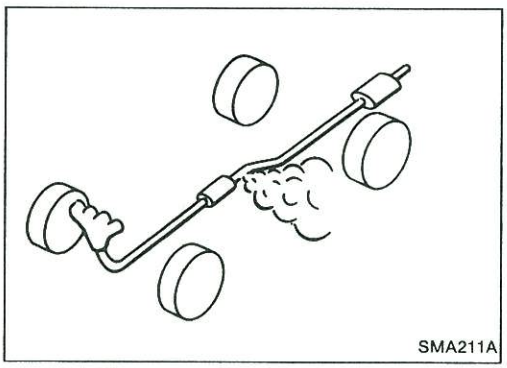
SMA211A

## Checking Exhaust System

- Check exhaust pipes, muffler and mounting for improper attachment, leaks, cracks, damage, loose connections, chafing and deterioration.

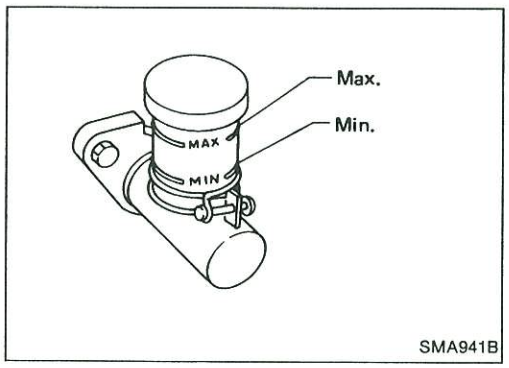

SMA941B

## Checking Clutch Fluid Level and Leaks

- If fluid level is extremely low, check clutch system for leaks.

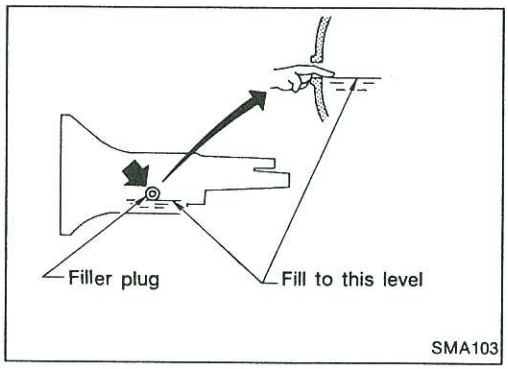

SMA103

## Checking M/T Oil

- Check for oil leakage and oil level.

**Never start engine while checking oil level.**

**[O]: Filler plug 25 - 34 N·m (2.5 - 3.5 kg-m, 18 - 25 ft-lb)**

## Changing M/T Oil

1. Drain oil from drain plug and refill with new gear oil.
2. Check oil level.

**Oil capacity: 2.4 ℓ (5-1/8 US pt, 4-1/4 Imp pt)**

**[O]: Drain plug 25 - 34 N·m (2.5 - 3.5 kg-m, 18 - 25 ft-lb)**

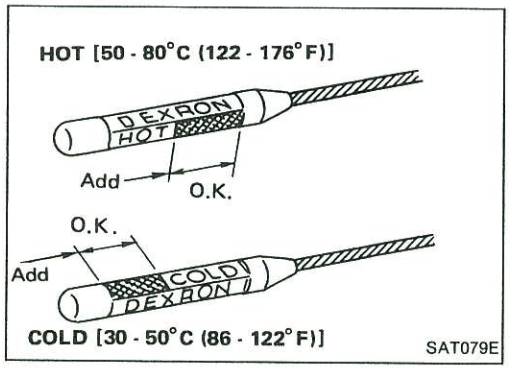

SAT079E

## Checking A/T Fluid

1. Check for fluid leakage and fluid level.
   Fluid level should be checked using "HOT" range on dipstick at fluid temperatures of 50 to 80°C (122 to 176°F) after vehicle has been driven approximately 5 minutes in urban areas after engine is warmed up. But it can be checked at fluid temperatures of 30 to 50°C (86 to 122°F) using "COLD" range on dipstick for reference after engine is warmed up and before driving. However, fluid level must be rechecked using "HOT" range.
   1) Park vehicle on level surface and set parking brake.
   2) Start engine and then move selector lever through each gear range, ending in "P".
   3) Check fluid level with engine idling.
   4) Remove dipstick and wipe it clean with lint-free paper.
   5) Reinsert dipstick into charging pipe as far as it will go.
   6) Remove dipstick and note reading. If level is at low side of either range, add fluid to the charging pipe.

**Do not overfill.**

## Checking A/T Fluid (Cont'd)

Check fluid for contamination.
SMA853B

2. Check fluid for contamination. If fluid is very dark or smells burned, or contains frictional material (clutches, band, etc.), check operation of A/T.
   Refer to section AT for checking operation of A/T.

## Changing A/T Fluid

1. Drain fluid by removing oil pan.
2. Replace gasket with new one.
3. Refill with fluid and then check fluid level.
   **Oil capacity (With torque converter):**
   **8.3 ℓ (8-3/4 US qt, 7-1/4 Imp qt)**

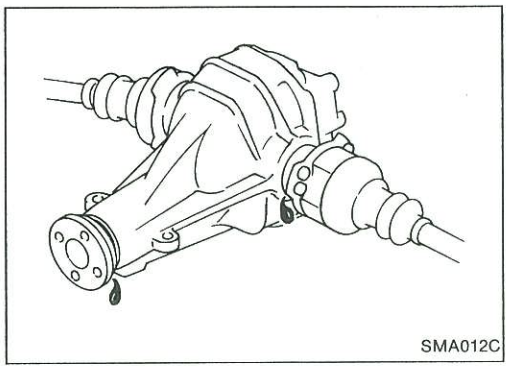
SMA012C

## Checking Differential Gear Oil

- Check for oil leakage and oil level.
  **Filler plug:**
  **[O]: 39 - 59 N·m (4 - 6 kg-m, 29 - 43 ft-lb)**

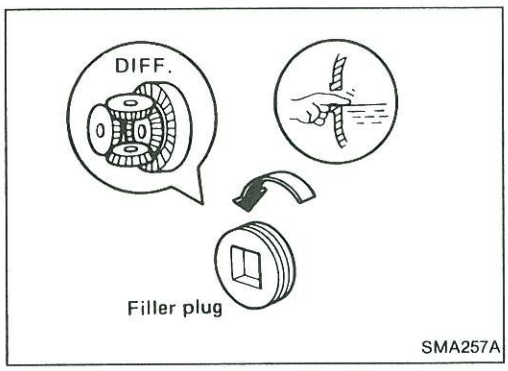

SMA257A

## Changing Differential Gear Oil

1. Drain oil from drain plug and refill with new gear oil.
2. Check oil level.
   **Oil capacity:**
   **R200**
   **1.3 ℓ (2-3/4 US pt, 2-1/4 Imp pt)**
   **R200V**
   **1.5 ℓ (3-1/8 US pt, 2-5/8 Imp pt)**
   **Drain plug:**
   **[O]: 39 - 59 N·m (4 - 6 kg-m, 29 - 43 ft-lb)**

## Balancing Wheels

- Adjust wheel balance using road wheel center.
  **Wheel balance (Maximum allowable unbalance):**
  **Refer to S.D.S.**

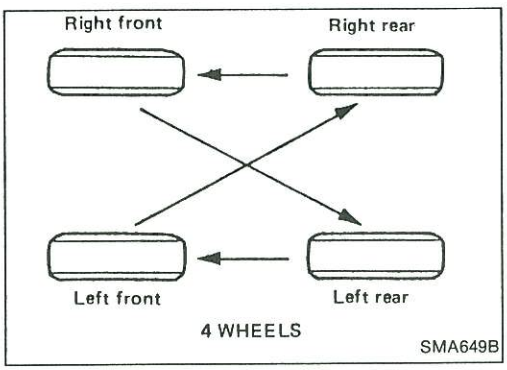

SMA649B

## Tire Rotation

- **Do not include the T-type spare tire when rotating the tires.**
  **Wheel nuts:**
  **[O]: 98 - 118 N·m**
  **(10.0 - 12.0 kg-m, 72 - 87 ft-lb)**

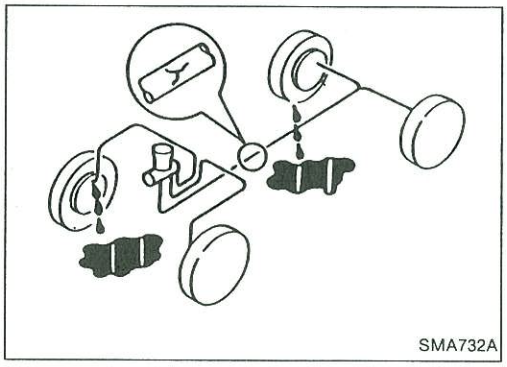
SMA732A

## Checking Brake Fluid Level and Leaks

- If fluid level is extremely low, check brake system for leaks.

## Checking Brake Lines and Cables

- Check brake fluid lines and parking brake cables for improper attachment and for leaks, chafing, abrasions, deterioration, etc.

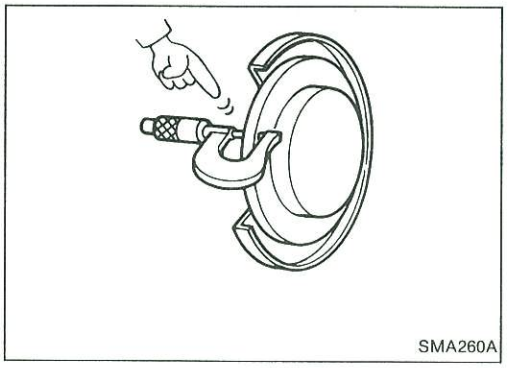
SMA260A

## Checking Disc Brake

### ROTOR

- Check condition and thickness.

Unit: mm (in)

| | Front | | Rear |
|---|---|---|---|
| Disc brake type | CL22VB | CL25VA* | CL9H |
| Standard thickness | 20.0 (0.787) | 22.0 (0.866) | 9.0 (0.354) |
| Minimum thickness | 18.0 (0.709) | 20.0 (0.787) | 8.0 (0.315) |

*: With ABS

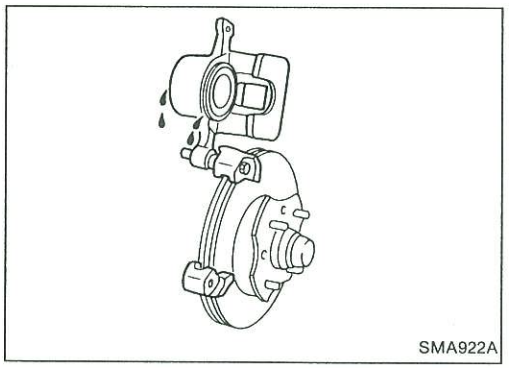
SMA922A

### CALIPER

- Check operation and for leakage.

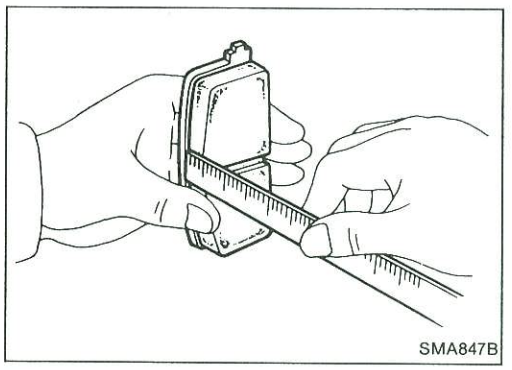
SMA847B

### PAD

- Check for wear or damage.

Unit: mm (in)

| | Front | | Rear |
|---|---|---|---|
| Disc brake type | CL22VB | CL25VA* | CL9H |
| Standard thickness | 10.0 (0.394) | 11.0 (0.433) | 9.5 (0.374) |
| Minimum thickness | 2.0 (0.079) | | |

*: With ABS

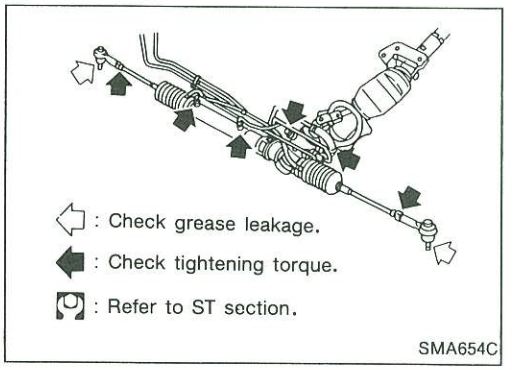

SMA654C

## Checking Steering Gear and Linkage

### STEERING GEAR

- Check gear housing and boots for looseness, damage or grease leakage.
- Check connection with steering column for looseness.

### STEERING LINKAGE

- Check ball joint, dust cover and other component parts for looseness, wear, damage or grease leakage.

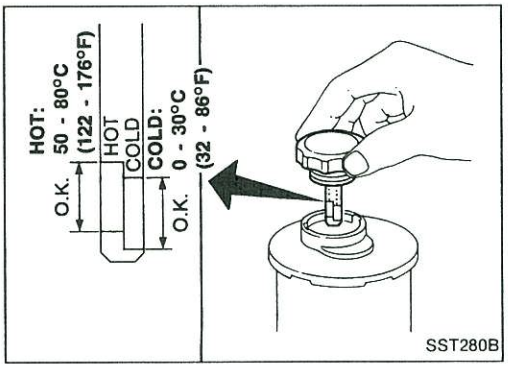


## Checking Power Steering Fluid and Lines

### CHECKING FLUID LEVEL (WITHOUT SUPER HICAS SYSTEM)

Fluid level should be checked using "HOT" range on dipstick at fluid temperatures of 50 to 80°C (122 to 176°F) or using "COLD" range on dipstick at fluid temperatures of 0 to 30°C (32 to 86°F).

**CAUTION:**
**Do not overfill.**

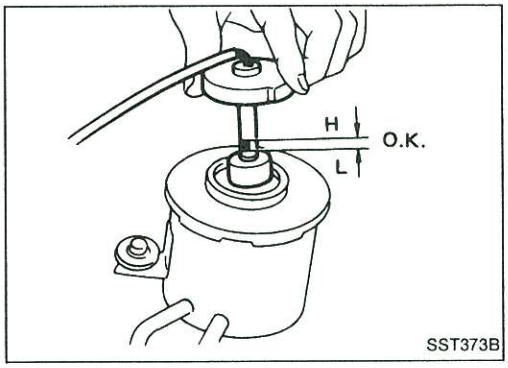


### CHECKING FLUID LEVEL (WITH SUPER HICAS SYSTEM)

Maintain the fluid level so that the lower surface of the float is maintained between the "L" and "H" marks on the gauge rod. The fluid level should be checked when the engine is stopped and the fluid temperature is normal.

**CAUTION:**
**Do not overfill.**

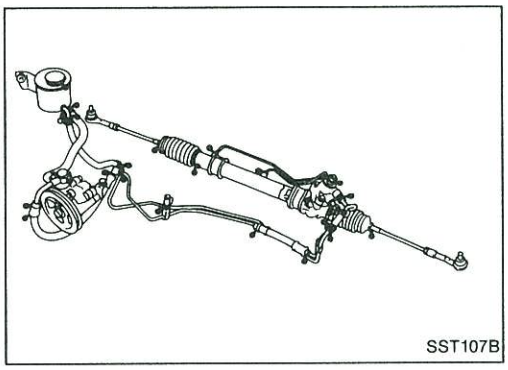


### CHECKING LINES

Check lines for improper attachment, leaks, cracks, damage, loose connections, chafing and deterioration.

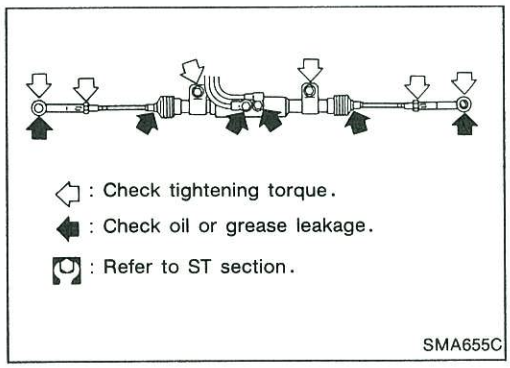


## Checking SUPER HICAS Linkage (With SUPER HICAS system)

- Check power cylinder and linkage for damage, looseness and leakage of oil or grease.

## Lubricating Locks, Higes and Hood Latches

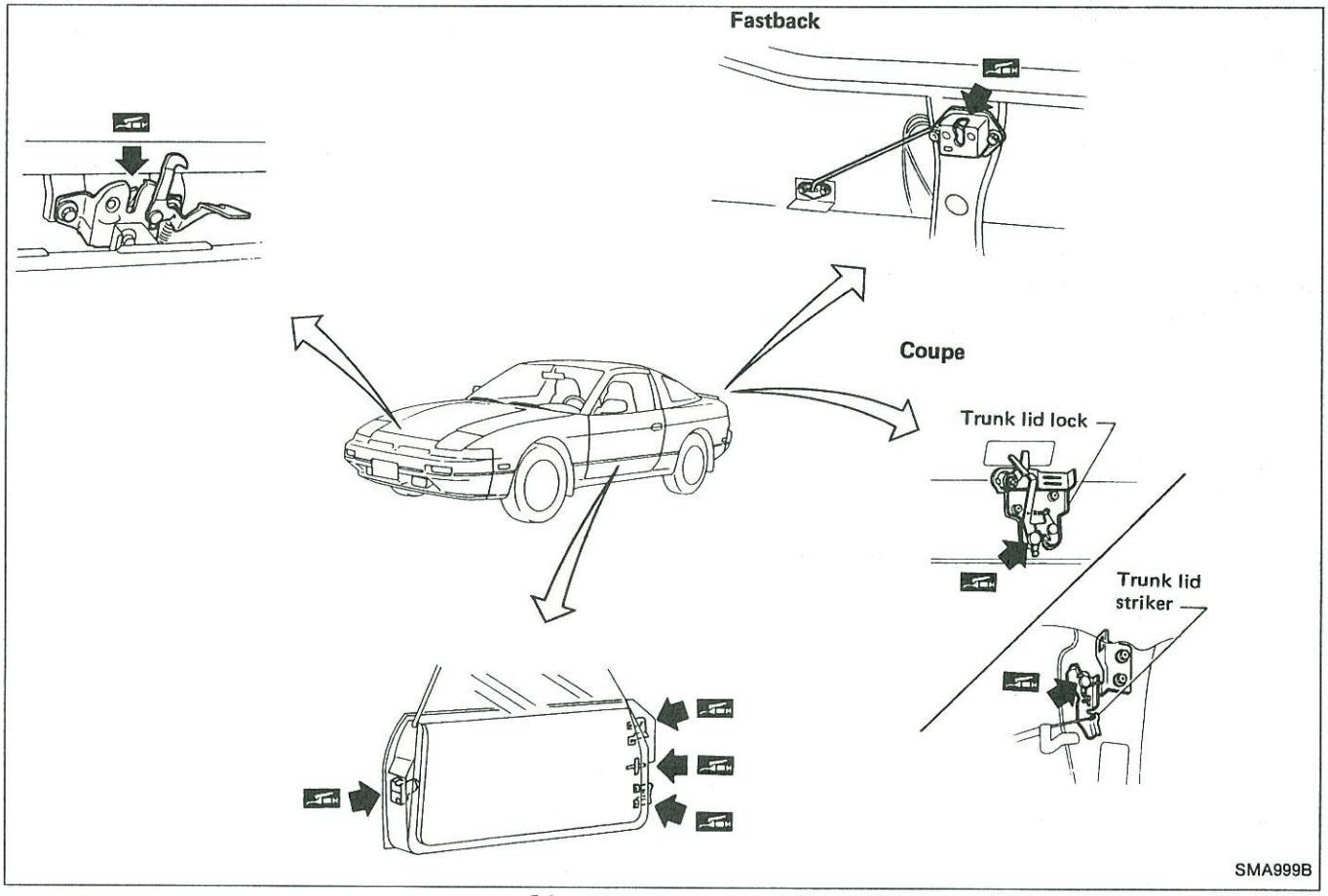


## Checking Ssat Belts, Buckles, Retractors, Anchors and Adjusters

**CAUTION:**

1. All seat belt assemblies, including retractors and attaching hardwares such as guide rail set, etc., should be inspected after any collision. Nissan recommends that all seat belt assemblies in use during a collision be replaced unless the collision was minor and the belts show no damage and continue to operate properly. Seat belt assemblies not in use during a collision should also be inspected and replaced if either damage or improper operation is noted.
2. If the condition of any component of a seat belt is questionable, do not have seat belt repaired, but replaced as a belt assembly.
3. If webbing is cut, frayed, or damaged, replace belt assembly.
4. Do not spill drinks, oil, etc. on inner lap belt buckle. Never oil tongue and buckle.
5. Use a NISSAN genuine seat belt assembly.

For automatic seat belt details, refer to BF section.

Anchor bolt
24 - 31 N·m
(2.4 - 3.2 kg-m, 17 - 23 ft-lb)
For automatic seat belt, refer to BF section.

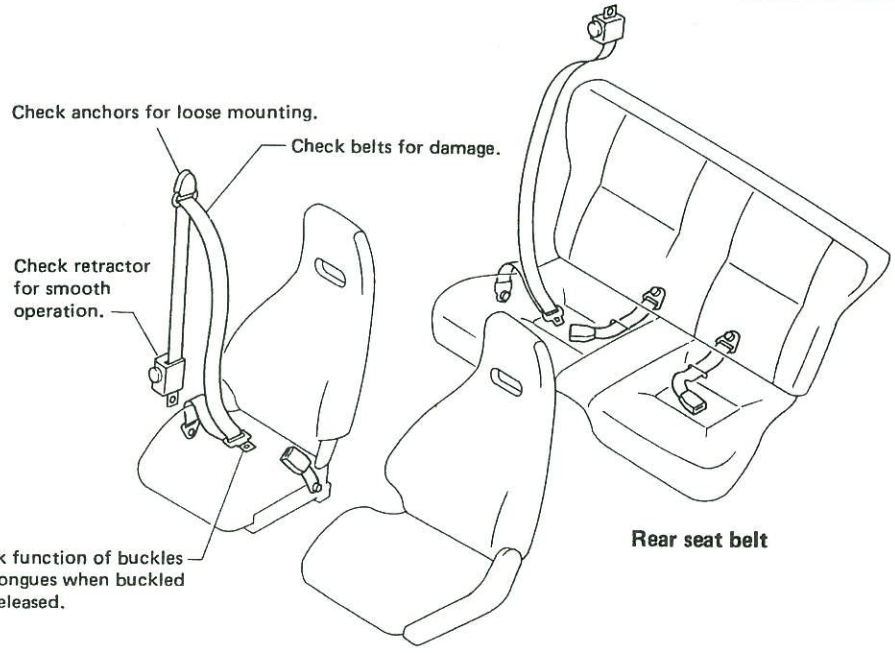

# Engine Maintenance

## INSPECTION AND ADJUSTMENT

### Drive belt deflection

Unit: mm (in)

| | Used belt deflection | | Deflection of new belt |
|---|---|---|---|
| | Limit | Deflection after adjustment | |
| Alternator | 11 (0.43) | 7 - 8 (0.28 - 0.31) | 6 - 7 (0.24 - 0.28) |
| Air conditioner compressor | 12 (0.47) | 7.5 - 8.5 (0.295 - 0.335) | 6.5 - 7.5 (0.256 - 0.295) |
| Power steering oil pump | | | |
| Without SUPER HICAS | 13 (0.51) | 7.5 - 8.5 (0.295 - 0.335) | 6.5 - 7.5 (0.256 - 0.295) |
| With SUPER HICAS | 9 (0.35) | 6.5 - 7.5 (0.256 - 0.295) | 5.5 - 6.5 (0.217 - 0.256) |
| Applied pushing force | 98 N (10 kg, 22 lb) | | |

### Spark plug

| | |
|---|---|
| Standard type | BKR5E-11 |
| Cold type | BKR6E-11 |
| | BKR7E-11 |
| Plug gap | 1.0 - 1.1 mm (0.039 - 0.043 in) |

### Ignition wire

| | |
|---|---|
| Resistance kΩ | Less than 30 |

# Chassis and Body Maintenance

## INSPECTION AND ADJUSTMENT

### Wheel balance

| | | |
|---|---|---|
| Maximum allowable unbalance | Dynamic (at rim flange) g (oz) | 10 (0.35) (One side) |
| | Static g (oz) | 20 (0.71) |

### Brake

Unit: mm (in)

| | |
|---|---|
| Disc brake | |
| Pad | |
| Standard thickness | |
| CL22VB | 10.0 (0.394) |
| CL25VA | 11.0 (0.433) |
| CL9H | 9.5 (0.374) |
| Minimum thickness | |
| All | 2.0 (0.079) |
| Rotor | |
| Standard thickness | |
| CL22VB | 20.0 (0.787) |
| CL25VA | 22.0 (0.866) |
| CL9H | 9.0 (0.354) |
| Minimum thickness | |
| CL22VB | 18.0 (0.709) |
| CL25VA | 20.0 (0.787) |
| CL9H | 8.0 (0.315) |

# ENGINE MECHANICAL

## SECTION EM



# CONTENTS

**PRECAUTIONS** ..... 2
Parts Requiring Angular Tightening ..... 2
Liquid Gasket Application Procedure ..... 2
**PREPARATION** ..... 3
Special Service Tools ..... 3
Commercial Service Tools ..... 5
**OUTER COMPONENT PARTS** ..... 6
**COMPRESSION PRESSURE** ..... 8
Measurement of Compression Pressure ..... 8
**OIL PAN** ..... 9
Removal ..... 9
Installation ..... 10
**TIMING CHAIN** ..... 11
Removal ..... 13
Inspection ..... 15
Installation ..... 16
**OIL SEAL REPLACEMENT** ..... 19
**CYLINDER HEAD** ..... 21
Removal and Installation ..... 22
Disassembly ..... 22
Inspection ..... 22
Assembly ..... 27
Valve Clearance ..... 28
**ENGINE REMOVAL** ..... 30
Removal ..... 31
**CYLINDER BLOCK** ..... 32
Disassembly ..... 33
Inspection ..... 34
Assembly ..... 40
**SERVICE DATA AND SPECIFICATIONS (S.D.S.)** ..... 43
General Specifications ..... 43
Inspection and Adjustment ..... 43

## Parts Requiring Angular Tightening

- Some important engine parts are tightened using an angular-tightening method rather than a torque setting method.
- If these parts are tightened using a torque setting method, dispersal of the tightening force (axial bolt force) will be two or three times that of the dispersal produced by using the correct angular tightening method.
- Although the torque setting values (described in this manual) are equivalent to those used when bolts and nuts are tightened with an angular-tightening method, they should be used for reference only.
- To assure the satisfactory maintenance of the engine, bolts and nuts must be tightened using an angular tightening method.
- Before tightening the bolts and nuts, ensure that the thread and seating surfaces are clean and then coated with engine oil.
- The bolts and nuts which require the angular-tightening method are as follows:
  (1) Cylinder head bolts
  (2) Connecting rod cap nuts.

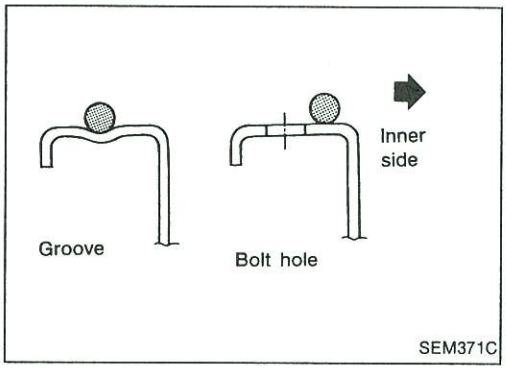


## Liquid Gasket Application Procedure

**a. Before applying liquid gasket, use a scraper to remove all traces of old liquid gasket from mating surfaces and grooves, and then completely clean any oil stains from these portions.**

**b. Apply a continuous bead of liquid gasket to mating surfaces. (Use Genuine Liquid Gasket or equivalent.)**
- **Be sure liquid gasket is 3.5 to 4.5 mm (0.138 to 0.177 in) wide (for oil pan).**
- **Be sure liquid gasket is 2.0 to 3.0 mm (0.079 to 0.118 in) wide (in areas except oil pan).**

**c. Apply liquid gasket to inner surface around hole perimeter area.**
**(Assembly should be done within 5 minutes after coating.)**

**d. Wait at least 30 minutes before refilling engine oil and engine coolant.**

## Special Service Tools

| Tool number<br>(Kent-Moore No.)<br>Tool name | Description | |
|---|---|---|
| ST0501S000<br>( — )<br>Engine stand assembly<br>① ST05011000<br>( — )<br>Engine stand<br>② ST05012000<br>( — )<br>Base | 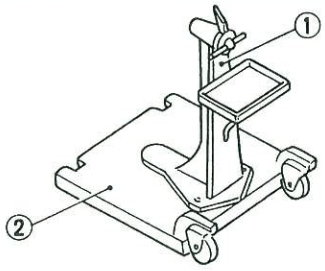 | Disassembling and assembling |
| KV10105001<br>( — )<br>Engine attachment | | |
| KV101092S0<br>( — )<br>Valve spring compressor<br>① KV10109210<br>( — )<br>Compressor<br>② KV10109220<br>( — )<br>Adapter | 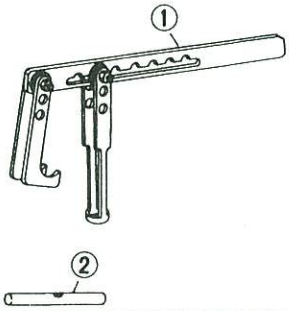 | Disassembling and assembling valve components |
| KV10116300<br>(J-38955)<br>Valve oil seal drift | 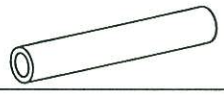 | Installing valve oil seal |
| KV10110300<br>( — )<br>Piston pin press stand assembly<br>① KV10110310<br>( — )<br>Cap<br>② KV10110330<br>( — )<br>Spacer<br>③ ST13030020<br>( — )<br>Press stand<br>④ ST13030030<br>( — )<br>Spring<br>⑤ KV10110340<br>( — )<br>Drift<br>⑥ KV10110320<br>( — )<br>Center shaft | 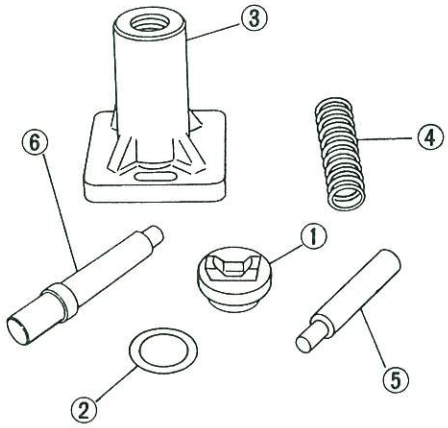 | Disassembling and assembling piston with connecting rod |

## Special Service Tools (Cont'd)

| Tool number (Kent-Moore No.) Tool name | Description | |
|---|---|---|
| EM03470000 (J8037) Piston ring compressor | 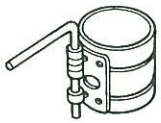 | Installing piston assembly into cylinder bore |
| (J36467) Valve oil seal remover | 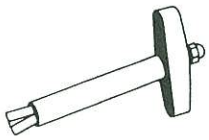 | Displacement valve oil seal |
| KV10111100 (J37228) Seal cutter | 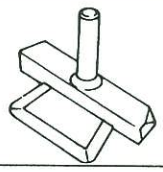 | Removing oil pan |
| WS39930000 ( — ) Tube presser | 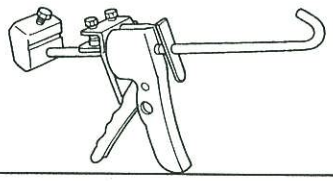 | Pressing the tube of liquid gasket |
| ST16610001 (J23907) Pilot bushing puller | 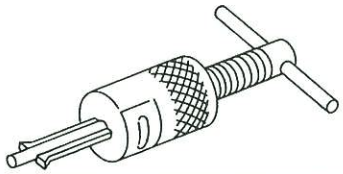 | |
| ST10120000 (J-24239-01) Cylinder head bolt wrench | 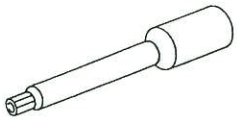 | Loosening and tightening cylinder head bolt |
| KV101151S0 (J38972) Lifter stopper set<br>① KV10115110 (J38972-1) Camshaft pliers<br>② KV10115120 (J38972-2) Lifter stopper | 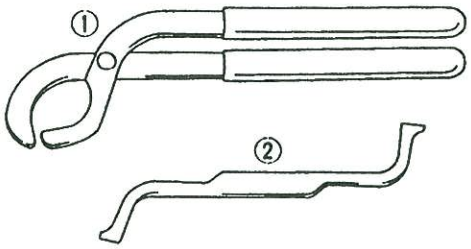 | Changing shims |
| KV10112100 Angle wrench | 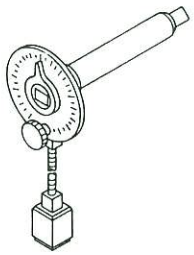 | Tightening bolts for bearing cap, cylinder head, etc. |

## Commercial Service Tools

| Tool name | Description |
|---|---|
| Spark plug wrench | 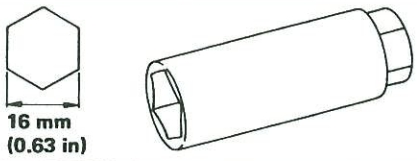  Removing and installing spark plug |
| Pulley holder | Holding camshaft pulley while tightening or loosening camshaft bolt |
| Valve seat cutter set | Finishing valve seat dimensions |
| Piston ring expander | 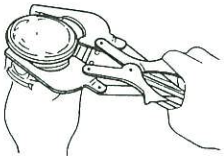 Removing and installing piston ring |
| Valve guide drift | 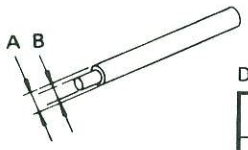  Removing and installing valve guide<br>Diameter: mm (in) |

| | Intake | Exhaust |
|---|---|---|
| A | 10.5 (0.413) | 10.5 (0.413) |
| B | 6.6 (0.260) | 6.6 (0.260) |

| Valve guide reamer | 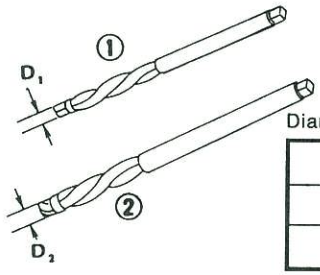  Reaming valve guide (①) or hole for oversize valve guide (②)<br>Diameter: mm (in) |
|---|---|

| | Intake | Exhaust |
|---|---|---|
| $D_1$ | 7 (0.28) | 7 (0.28) |
| $D_2$ | 11.175 (0.4400) | 11.175 (0.4400) |

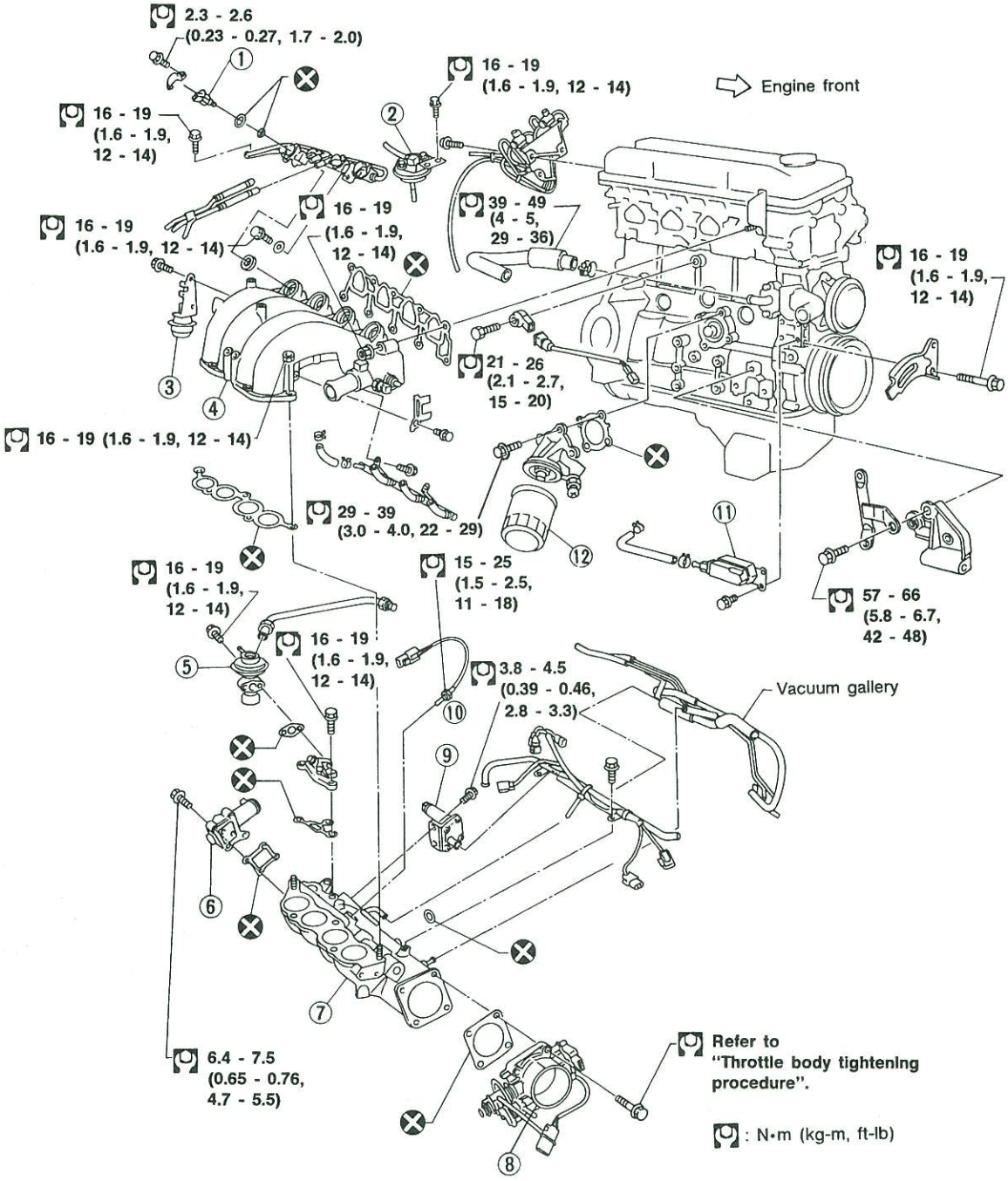


SEM481E

① Fuel injector
② EGRC-BPT valve
③ Swirl control valve
④ Intake manifold
⑤ EGR valve
⑥ I.A.A. unit
⑦ Intake manifold collector
⑧ Throttle body
⑨ IACV-air regulator
⑩ EGR temperature sensor
⑪ Breather separator
⑫ Oil filter

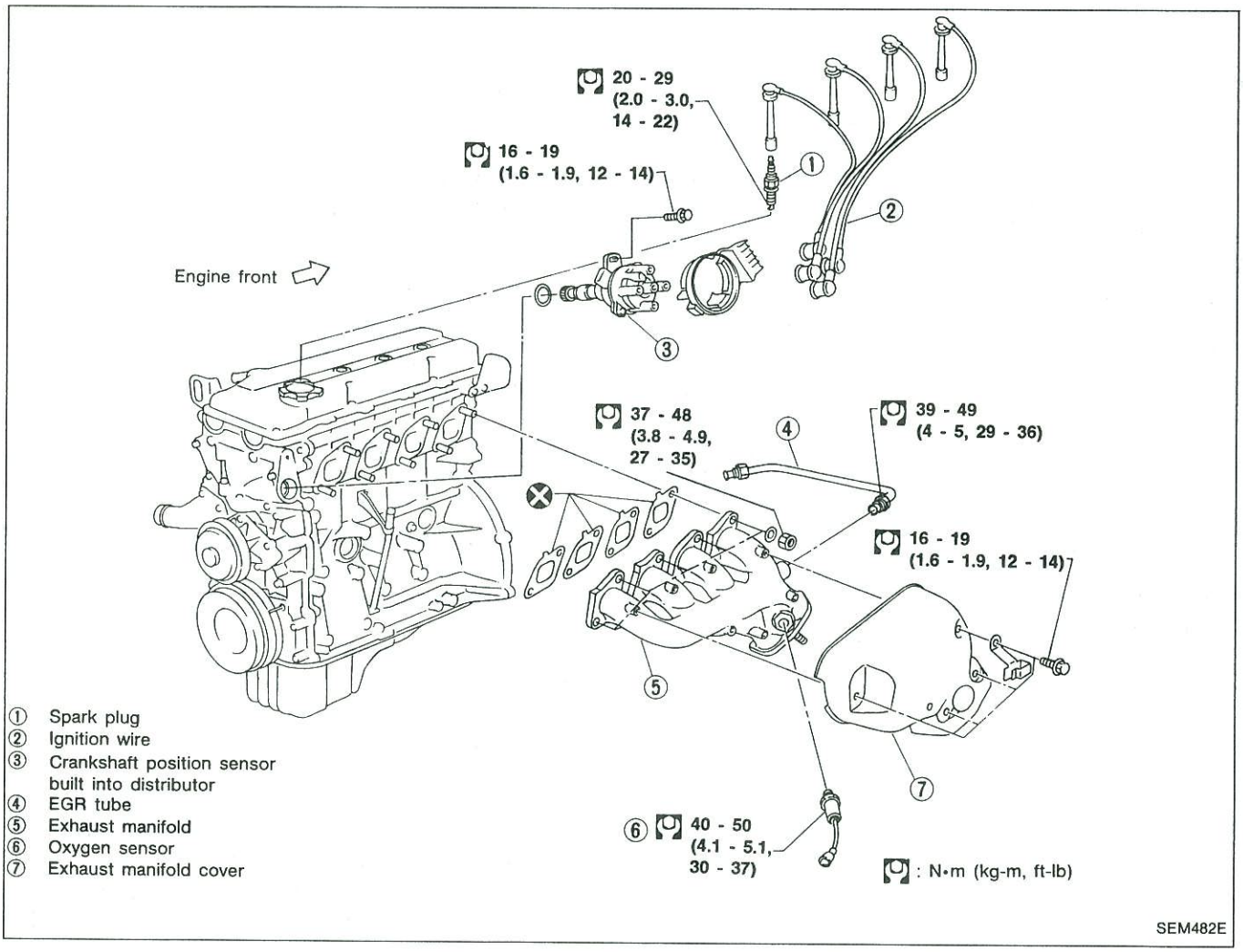


### Intake manifold tightening procedure

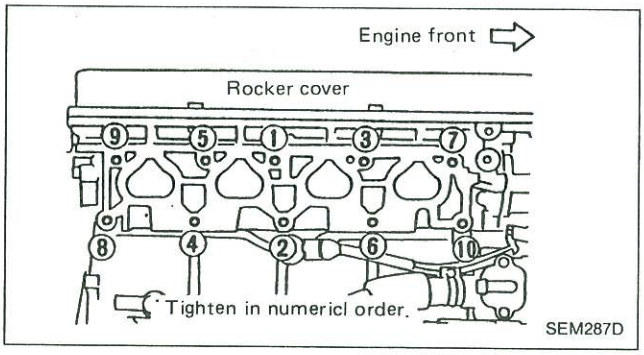


### Exhaust manifold tightening procedure

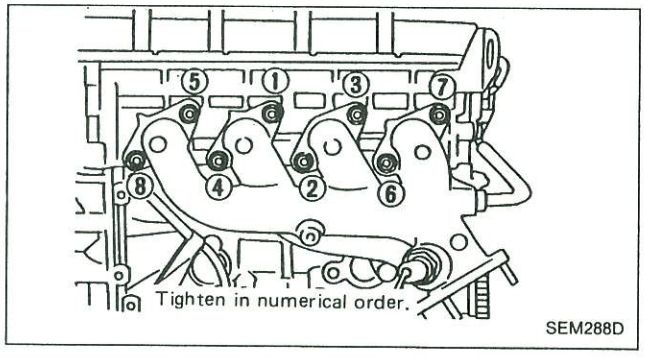


### Intake manifold collector tightening procedure

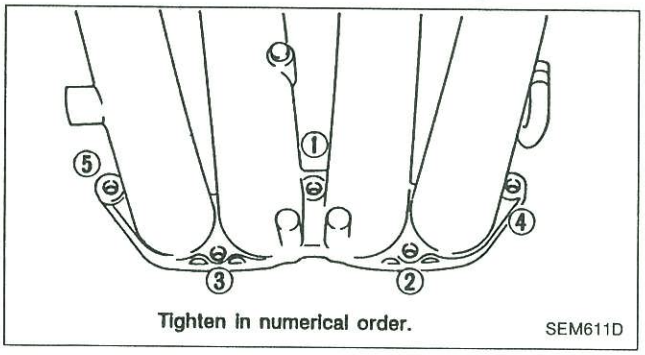


### Throttle body tightening procedure

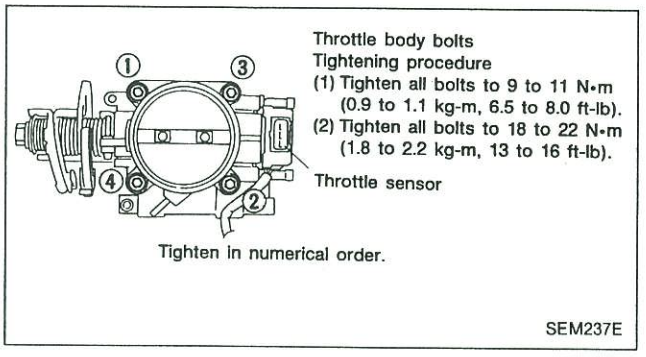

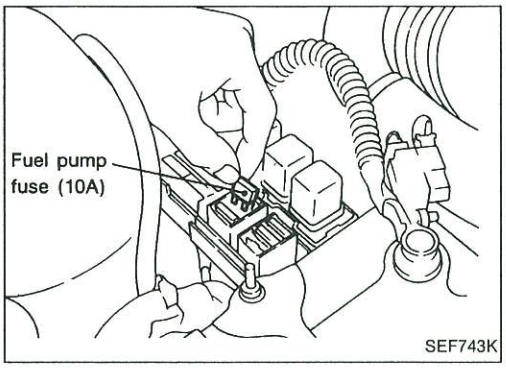


## Measurement of Compression Pressure

1. Warm up engine.
2. Turn ignition switch off.
3. Release fuel pressure.
   Refer to "Releasing Fuel Pressure" in section EF & EC.
4. Remove all spark plugs.
5. Disconnect distributor center cable.

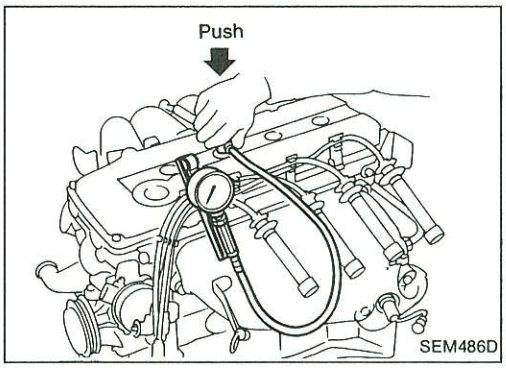


6. Attach a compression tester to No. 1 cylinder.
7. Depress accelerator pedal fully to keep throttle valve wide open.
8. Crank engine and record highest gauge indication.
9. Repeat the measurement on each cylinder as shown above.

- **Always use a fully-charged battery to obtain specified engine speed.**

**Compression pressure: kPa (kg/cm$^2$, psi)/rpm**

**Standard**

**1,236 (12.6, 179)/300**

**Minimum**

**1,040 (10.6, 151)/300**

**Difference limit between cylinders**

**98 (1.0, 14)/300**

10. If cylinder compression in one or more cylinders is low, pour a small amount of engine oil into cylinders through spark plug holes and retest compression.

- **If adding oil helps compression, piston rings may be worn or damaged. If so, replace piston rings after checking piston.**
- **If pressure stays low, a valve may be sticking or seating improperly. Inspect and repair valve and valve seat. (Refer to S.D.S.) If valve or valve seat is damaged excessively, replace them.**
- **If compression in any two adjacent cylinders is low and if adding oil does not help compression, there is leakage past the gasket surface. If so, replace cylinder head gasket.**

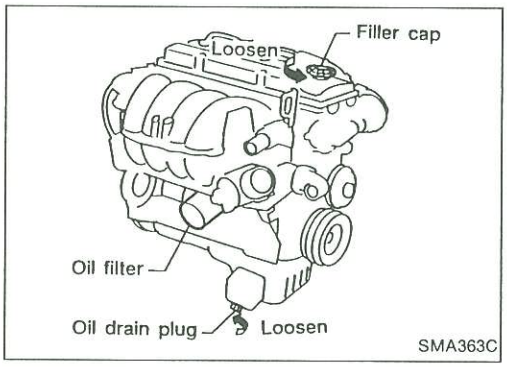


## Removal

1. Raise vehicle and support it with safety stands.
2. Drain engine oil.

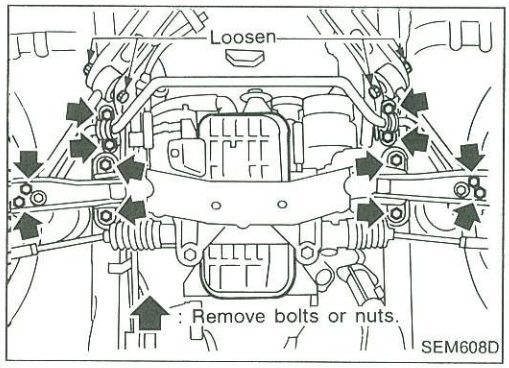


3. Remove the following parts.
- Power steering tube
- Front stabilizer bar securing bolts and nuts from side member.
- Both left and right side engine mounting bolts. Refer to "ENGINE REMOVAL".
- Gussets
4. Disconnect lower steering joint.
5. Remove front suspension member.

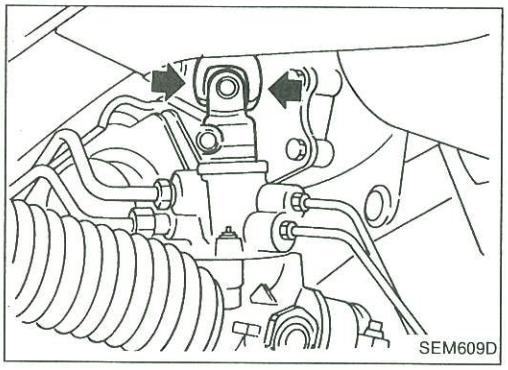


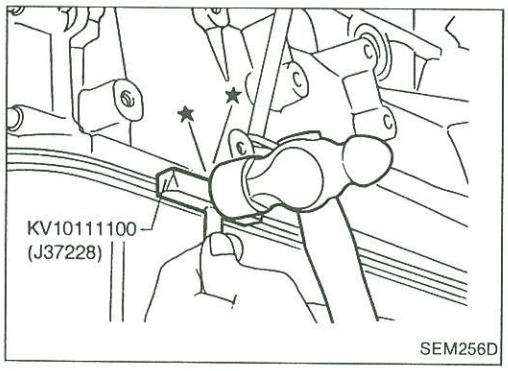


6. Remove oil pan.
(1) Insert Tool between cylinder block and oil pan.
- **Do not drive seal cutter into oil pump or rear oil seal retainer portion, or aluminum mating face will be damaged.**
- **Do not insert screwdriver, or oil pan flange will be deformed.**

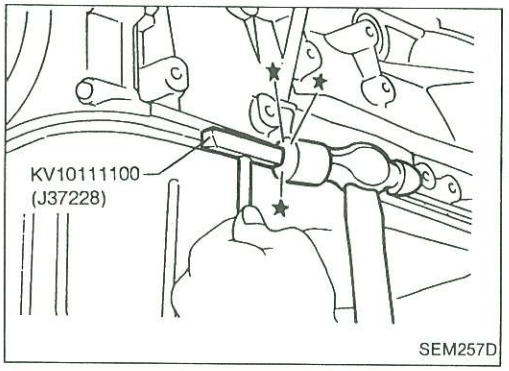


(2) Slide Tool by tapping its side with a hammer, and remove oil pan.

## Removal (Cont'd)

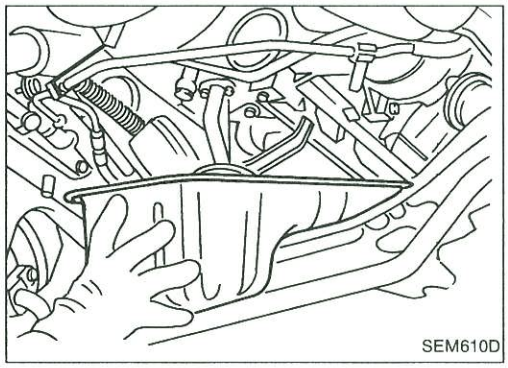
SEM610D

7. Pull out oil pan from the front.

## Installation

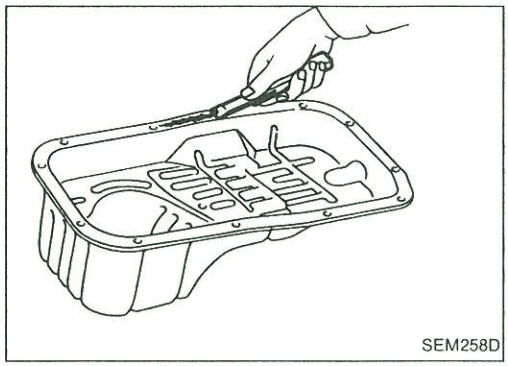
SEM258D

1. Before installing oil pan, remove all traces of liquid gasket from mating surface using a scraper.
- Also remove traces of liquid gasket from mating surface of cylinder block.

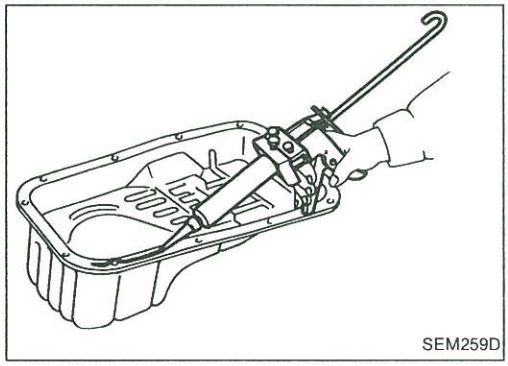
SEM259D

2. Apply a continuous bead of liquid gasket to mating surface of oil pan.
- **Use Genuine Liquid Gasket or equivalent.**

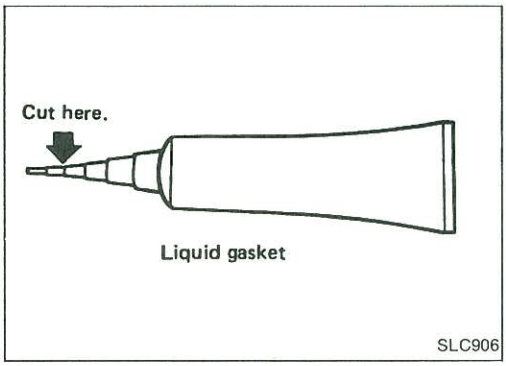

SLC906

- Be sure liquid gasket bead is 3.5 to 4.5 mm (0.138 to 0.177 in) wide.

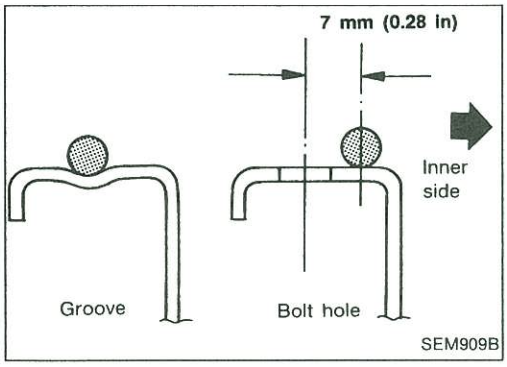

SEM909B

3. Apply liquid gasket to inner sealing surface as shown in figure.
- **Attaching should be done within 5 minutes after coating.**
4. Install oil pan.
- **Wait at least 30 minutes before refilling engine oil.**

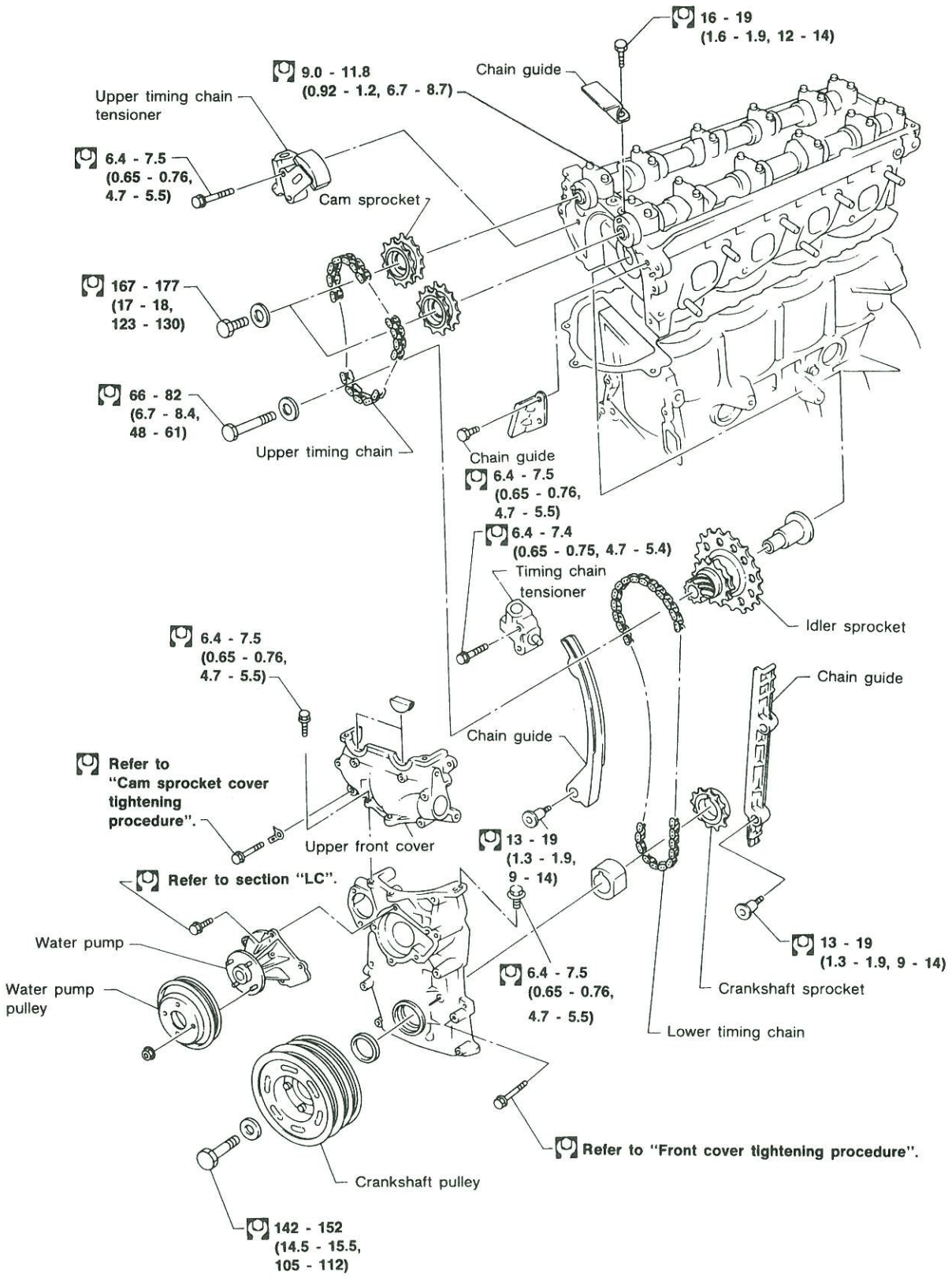


: N•m (kg-m, ft-lb)

SEM260D

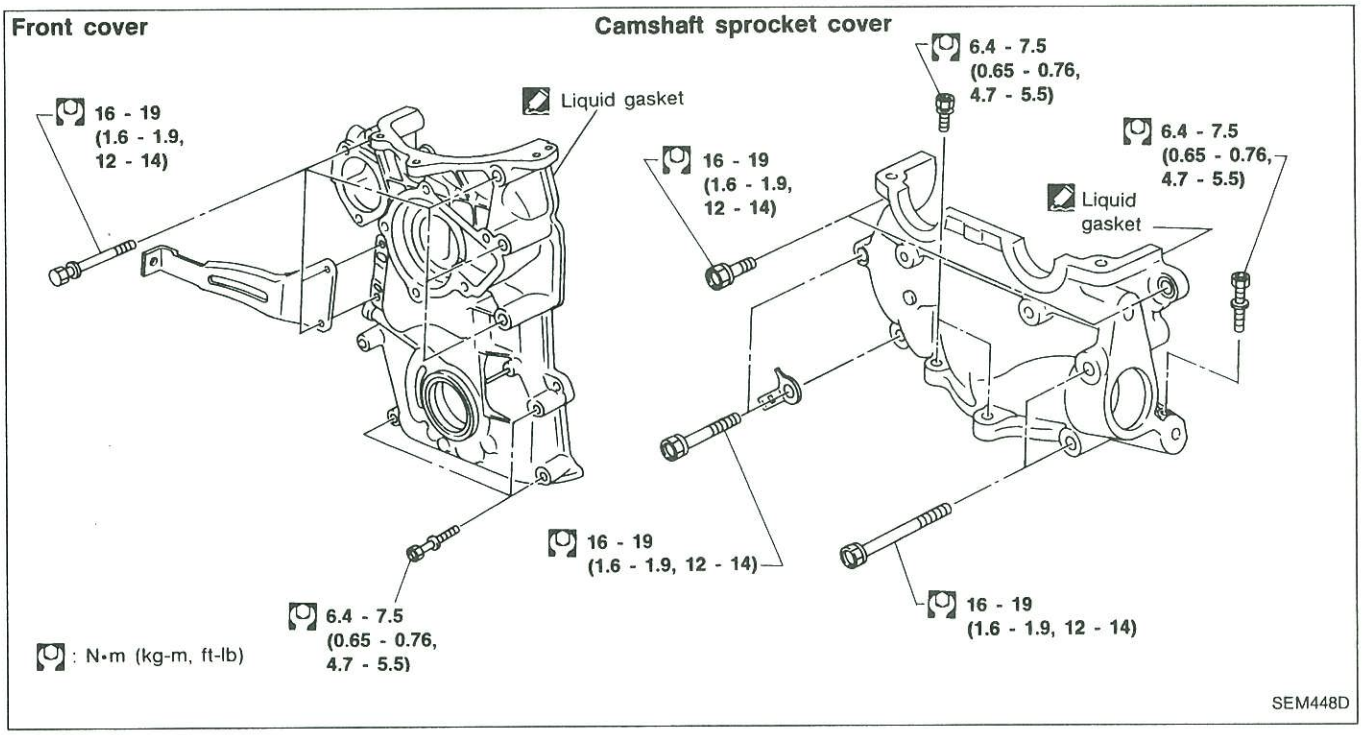


## Liquid gasket application places

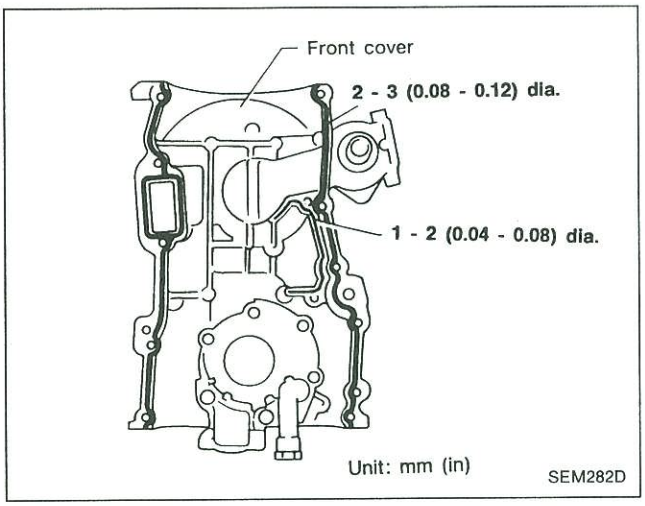


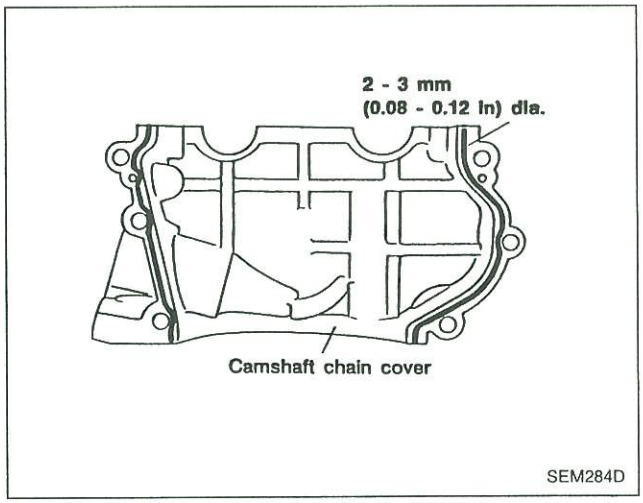


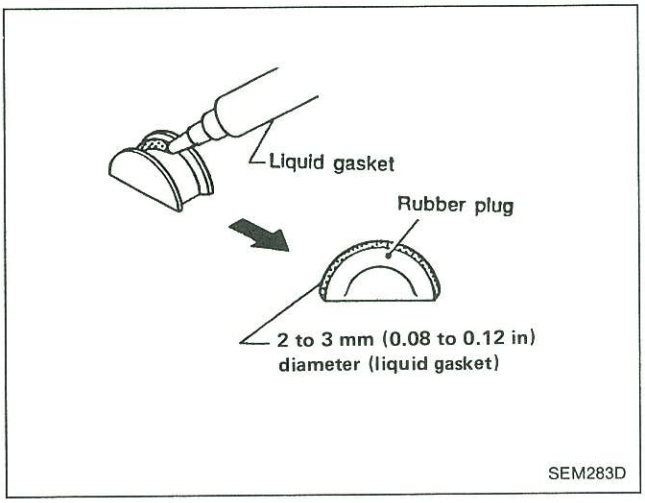

**CAUTION:**

- **After removing timing chain, do not turn crankshaft and camshaft separately, or valves will strike piston heads.**

## Removal

### UPPER TIMING CHAIN

1. Drain coolant from both cylinder block drain plug and radiator drain cock. Refer to MA section.
2. Drain engine oil from drain plug of oil pan.
3. Remove vacuum hoses, fuel tubes, wires, harness and connectors and so on.

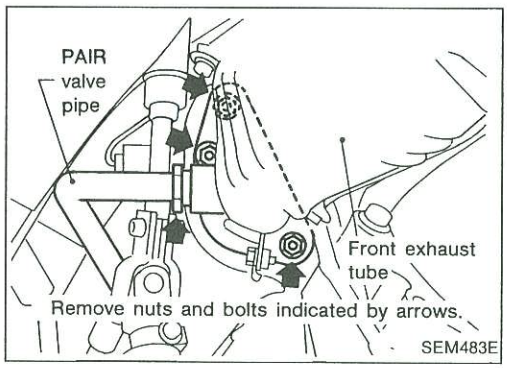


4. Remove front exhaust tube and PAIR valve pipe.
5. Remove the following parts.
   - Air duct
   - Cooling fan with coupling
   - Radiator shroud
6. Disconnect injector harness connector and remove injector tube assembly with injectors.
7. Remove all spark plugs with high-tension cords.

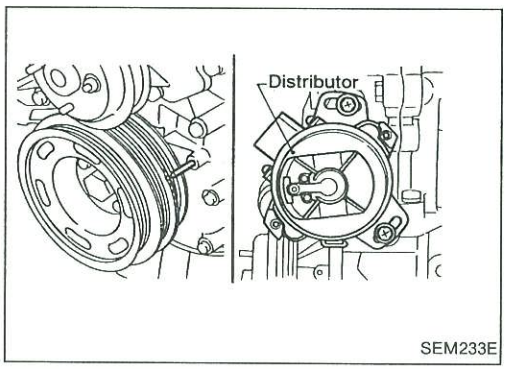


8. Set No. 1 piston at T.D.C. on its compression stroke.

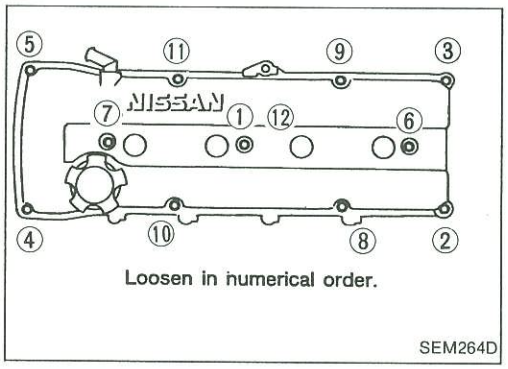


9. Remove rocker cover.
10. Remove distributor.

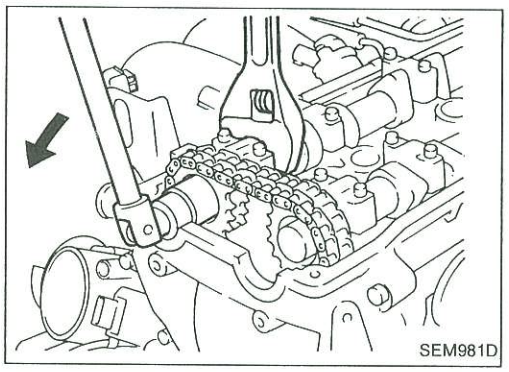


11. Remove cam sprocket.

## Removal (Cont'd)

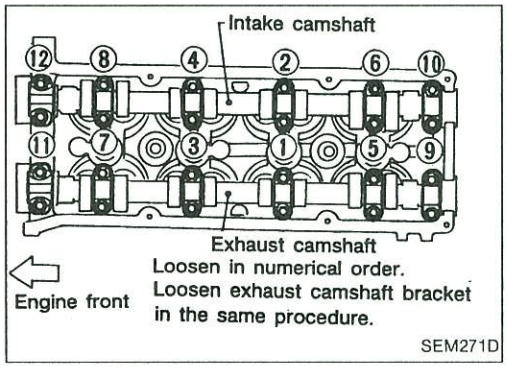


12. Remove cam brackets and camshafts.
- These parts should be reassembled in their original positions.

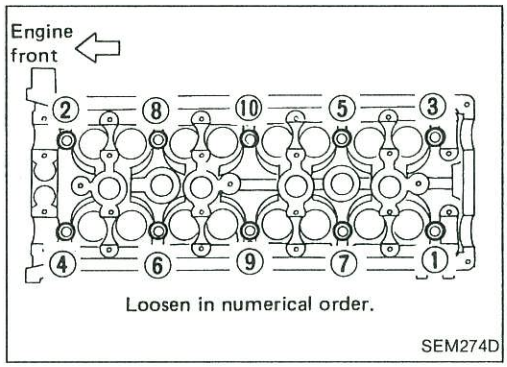


13. Loosen cylinder head bolts.
- Head warpage or cracking could result from removing in incorrect order.
- Cylinder head bolts should be loosened in two or three steps.

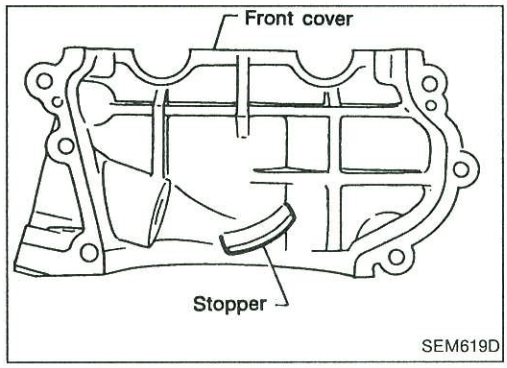


14. Remove cam sprocket cover
- Upper timing chain will not be disengaged from idler sprocket. For this reason, a stopper need not be used.

**Cast portion of cam sprocket cover is located on lower side of idler sprocket so upper timing chain need not be disengaged from idler sprocket.**

15. Remove upper chain tensioner and upper chain guides.

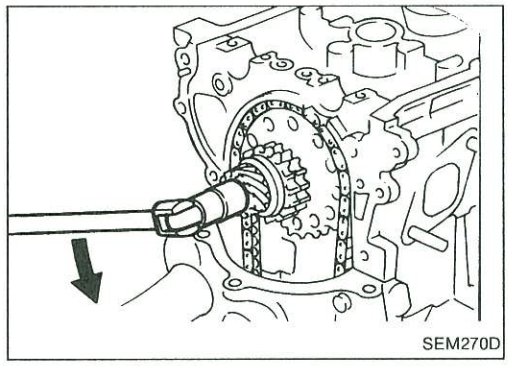


16. Remove upper timing chain.
17. Remove idler sprocket bolt.

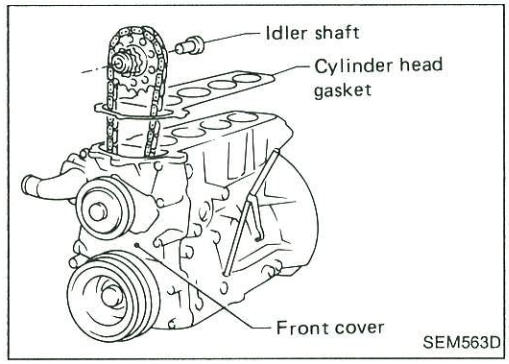


18. Remove cylinder head with intake manifold, intake manifold collector and exhaust manifold assembly.
19. Remove cylinder head gasket.

## Removal (Cont'd)

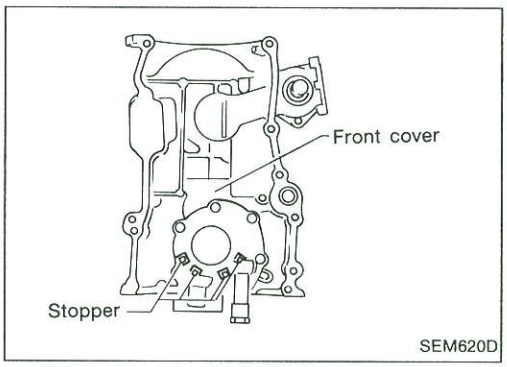


- Lower timing chain will not be disengaged from crankshaft sprocket. For this reason, a stopper need not be used.

**Cast portion of front cover is located on lower side of crankshaft sprocket so lower timing chain need not be disengaged from idler sprocket.**

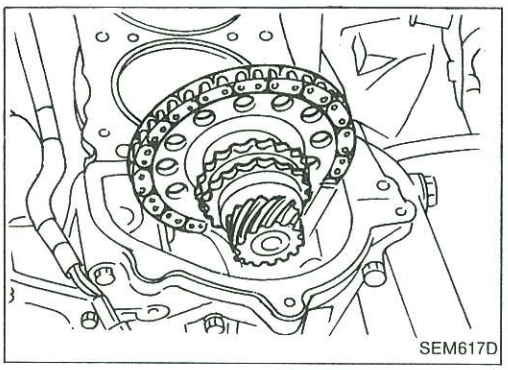


### LOWER TIMING CHAIN

1. Remove upper timing chain.

**Refer to "UPPER TIMING CHAIN" in "Removal".**

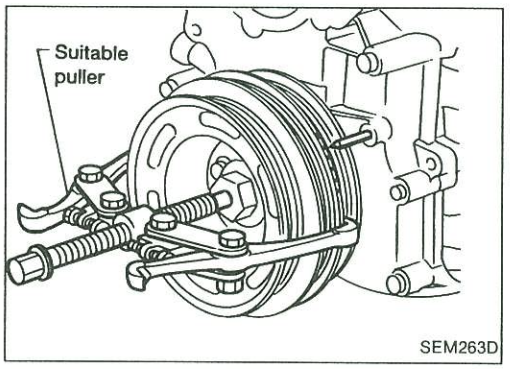


2. Remove oil pan.

**Refer to "Removal" in "OIL PAN".**

3. Remove oil strainer.
4. Remove the following parts.
- Power steering drive belt
- Alternator drive belt
- Air compressor drive belt
- Air compressor idler pulley

5. Remove crankshaft pulley.
6. Remove front cover.

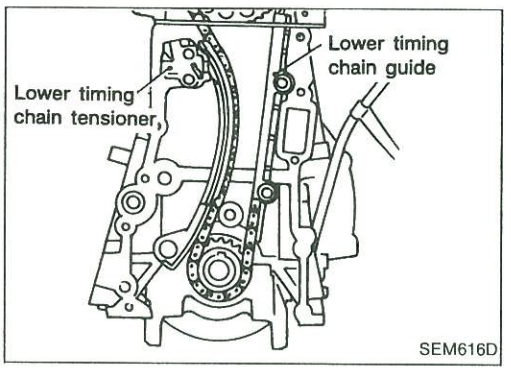


7. Remove the following parts.
- Lower timing chain tensioner
- Tension arm
- Lower timing chain guide

8. Remove lower timing chain and idler sprocket.

## Inspection

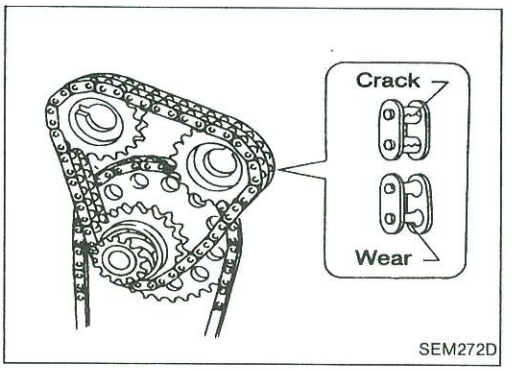


**Check for cracks and excessive wear at roller links. Replace chain if necessary.**

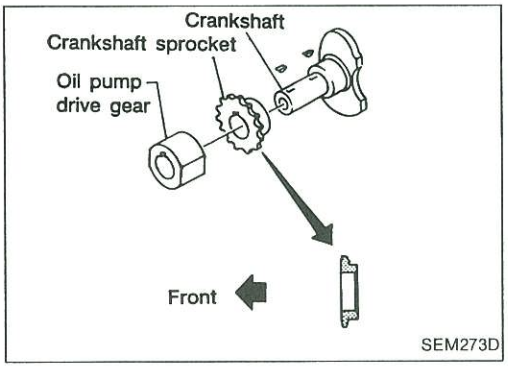


## Installation

### LOWER TIMING CHAIN

1. Install crankshaft sprocket.

- **Make sure that mating marks of crankshaft sprocket face front of engine.**

2. Position crankshaft so that No. 1 piston is set at T.D.C.

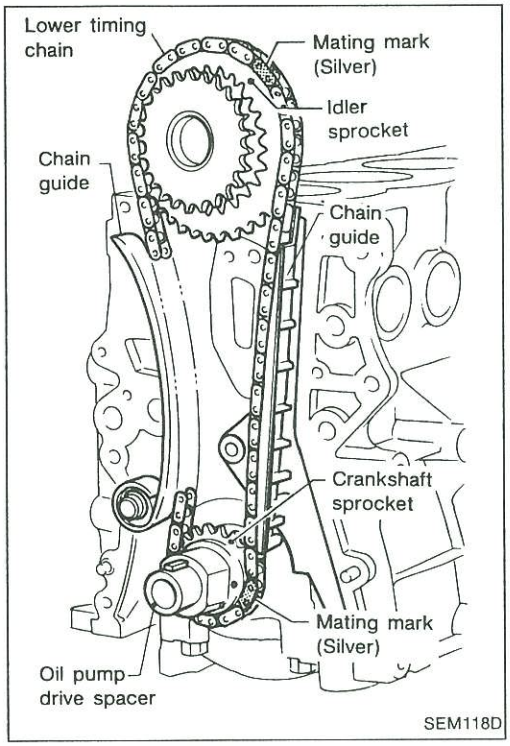


3. Install idler sprocket and lower timing chain.

- **Set lower timing chain on the sprockets, aligning mating marks.**
- **Be careful not to damage cylinder head gasket when installing lower timing chain.**

4. Install chain tension arm and chain guide.
5. Install lower timing chain tensioner.

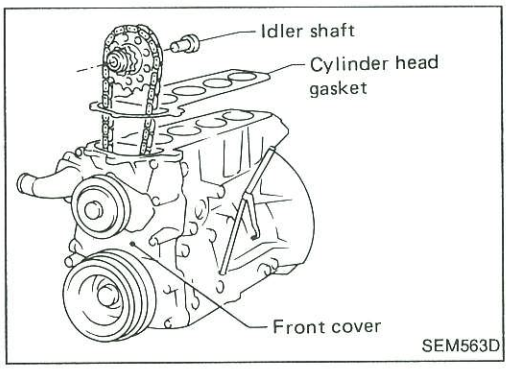


6. Install front cover.

- **Apply a continuous bead of liquid gasket to front cover.**
- **Be careful not to damage cylinder head gasket.**
- **Be sure to install oil seal.**

7. Install the following parts:

- Crankshaft pulley
- Oil strainer and oil pan
- Component parts below the engine
- Air compressor idler pulley
- New cylinder head gasket
- Idler shaft

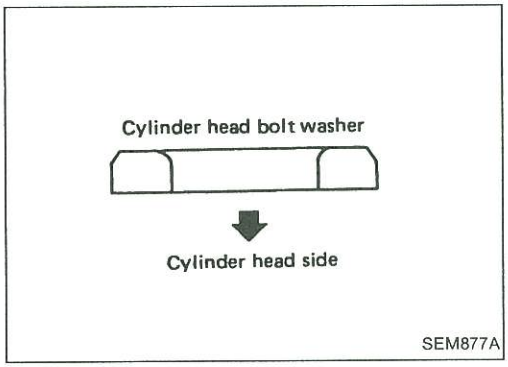


8. Install cylinder head and temporarily tighten cylinder head bolts when installing front cover.

- **Temporarily tighten cylinder head bolts. This is necessary to avoid damaging cylinder head gasket.**
- **Be sure to install washers between bolts and cylinder head.**

## Installation (Cont'd)

### UPPER TIMING CHAIN

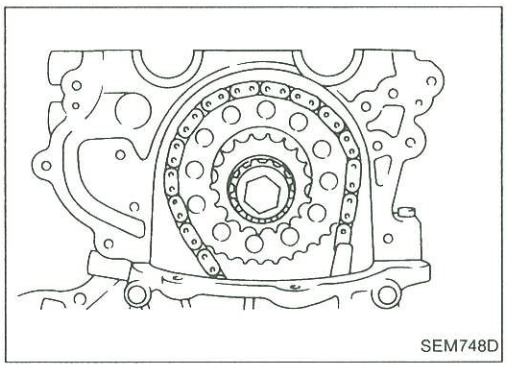
SEM748D

1. Install lower timing chain.
   Refer to "LOWER TIMING CHAIN" in "Installation".

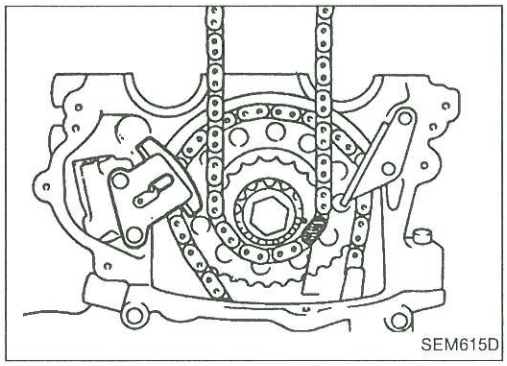
SEM615D

2. Install upper timing chain, chain tensioner and chain guide.
- **Set upper timing chain on the idler sprockets, aligning mating marks.**

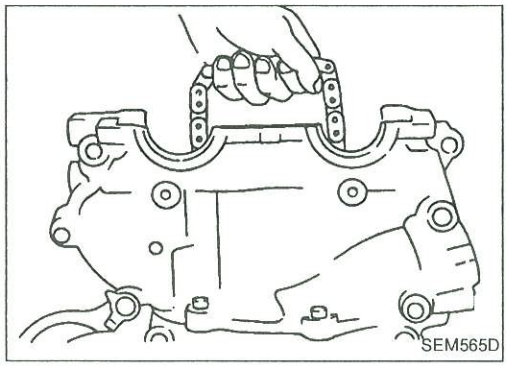
SEM565D

3. Install cam sprocket cover.
- **Apply a continuous bead of liquid gasket to front cover.**
- **Be careful not to damage cylinder head gasket.**
- **Be careful upper timing chain does not slip or jump when installing cam sprocket cover.**

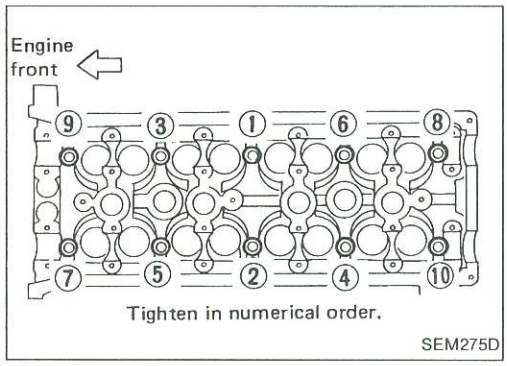

Tighten in numerical order.
SEM275D

4. Tighten cylinder head bolts.
- **Tightening procedure**

ⓐ **Tighten all bolts to 29 N·m (3.0 kg-m, 22 ft-lb).**
ⓑ **Tighten all bolts to 79 N·m (8.1 kg-m, 59 ft-lb).**
ⓒ **Loosen all bolts completely**
ⓓ **Tighten all bolts to 25 to 34 N·m (2.5 to 3.5 kg-m, 18 to 25 ft-lb).**
ⓔ **Turn all bolts 86 to 91 degrees clockwise, or if an angle wrench is not available, tighten bolts to 75 to 84 N·m (7.6 to 8.6 kg-m, 55 to 62 ft-lb).**

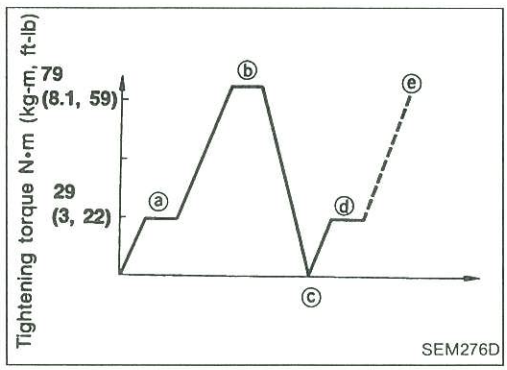

SEM276D

## Installation (Cont'd)

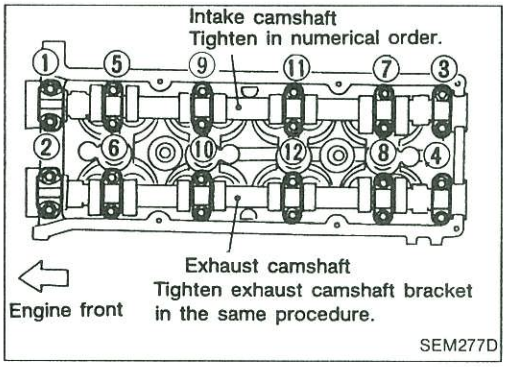


5. Install camshafts and camshaft brackets.

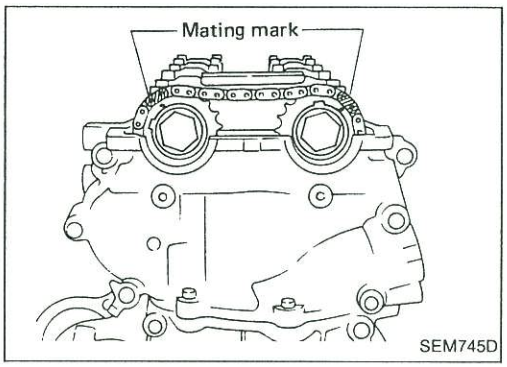


6. Install camshaft sprockets.
7. Install chain guide between both camshaft sprockets.

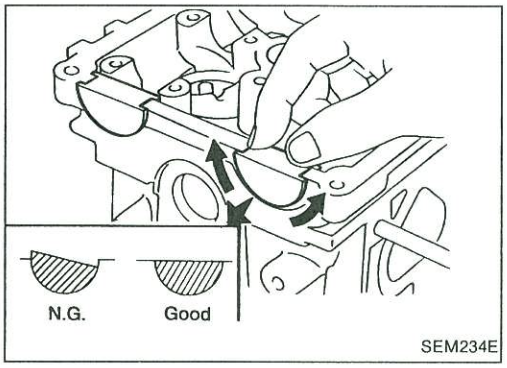


8. Install rubber plugs as follows.
(1) Apply liquid gasket to rubber plugs.
(2) Install rubber plugs, then move them by hand to uniformly spread the gasket on cam sprocket cover surface.
- Rubber plugs should be installed flush with the cylinder head surface.

9. Install chain guide between both camshaft sprockets.

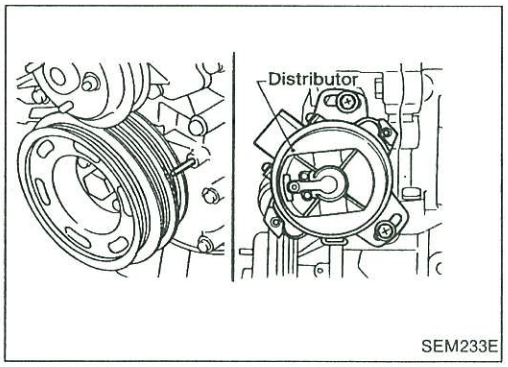


10. Install distributor.
- Make sure that No. 1 piston is set at T.D.C. and that distributor rotor is set at No. 1 cylinder spark position.

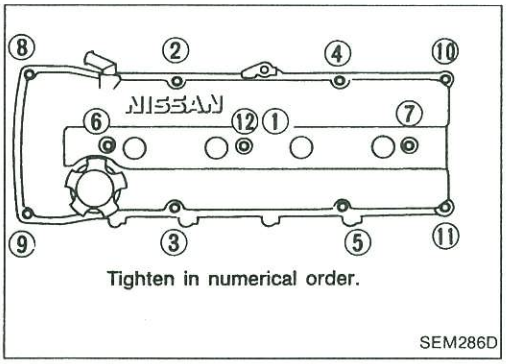


11. Install rocker cover.
12. Install all spark plugs with high-tension cords.
13. Connect injector harness connector and replace injector tube assembly with injectors.
14. Install the following parts.
- Radiator shroud
- Cooling fan with coupling
- Air duct

15. Install vacuum hoses, fuel tubes, wires, harness and connectors and so on.

### VALVE OIL SEAL

1. Remove rocker cover.
2. Remove camshaft. Refer to "TIMING CHAIN".
3. Remove valve spring and valve oil seal with Tool or a suitable tool.

**Piston concerned should be set at T.D.C. to prevent valve from falling.**

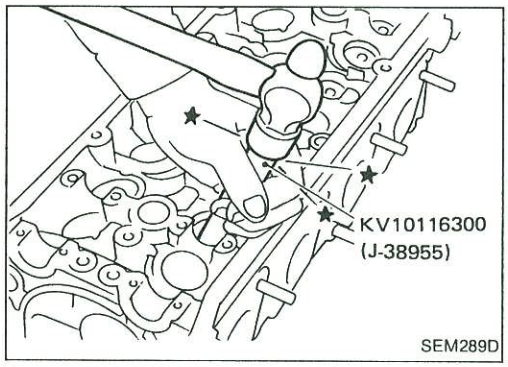

SEM289D

4. Apply engine oil to new valve oil seal and install it with Tool.

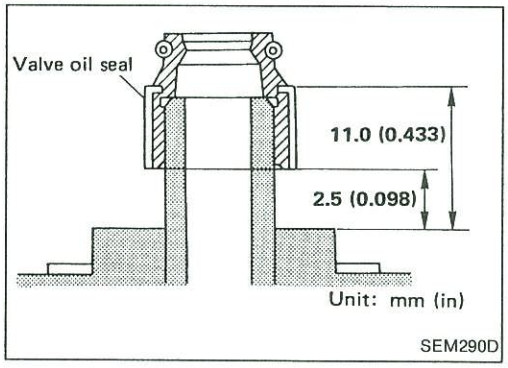

SEM290D

### OIL SEAL INSTALLING DIRECTION

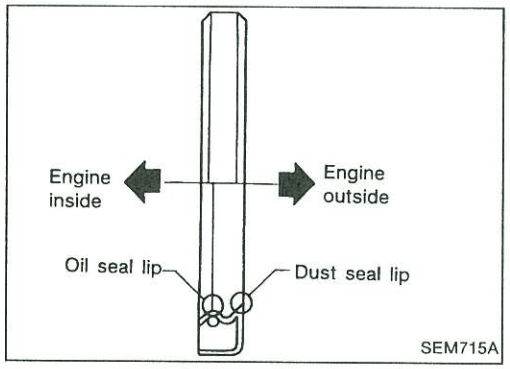

SEM715A

### FRONT OIL SEAL

1. Remove radiator shroud and crankshaft pulley.
2. Remove front oil seal

- **Be careful not to damage crankshaft.**

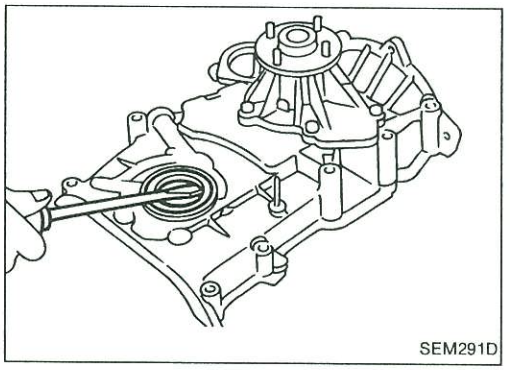
SEM291D

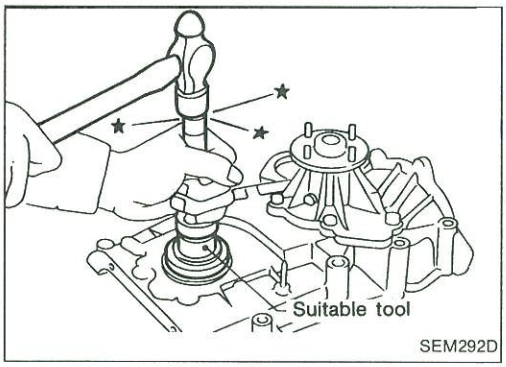


3. Apply engine oil to new oil seal and install it using a suitable tool.

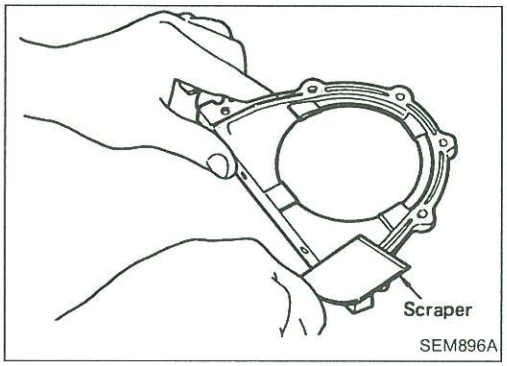


## REAR OIL SEAL

1. Remove drive plate or flywheel.
2. Remove rear oil seal retainer.
3. Remove traces of liquid gasket using scraper.

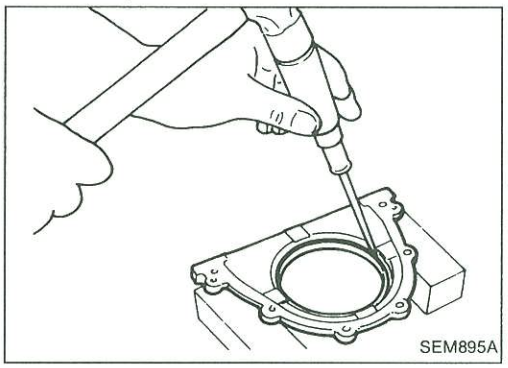


4. Remove rear oil seal from rear oil seal retainer.

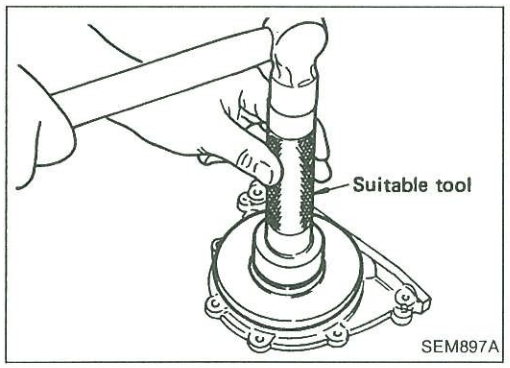


5. Apply engine oil to new oil seal and install it using a suitable tool.

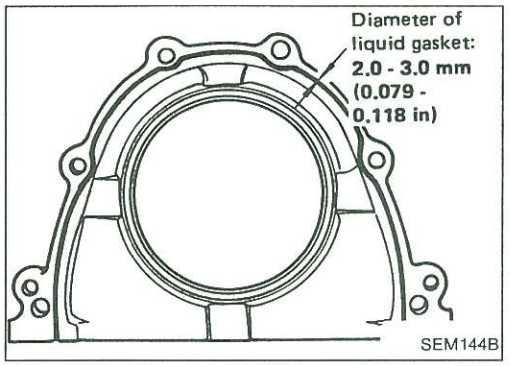


6. Apply a continuous bead of liquid gasket to rear oil seal retainer.

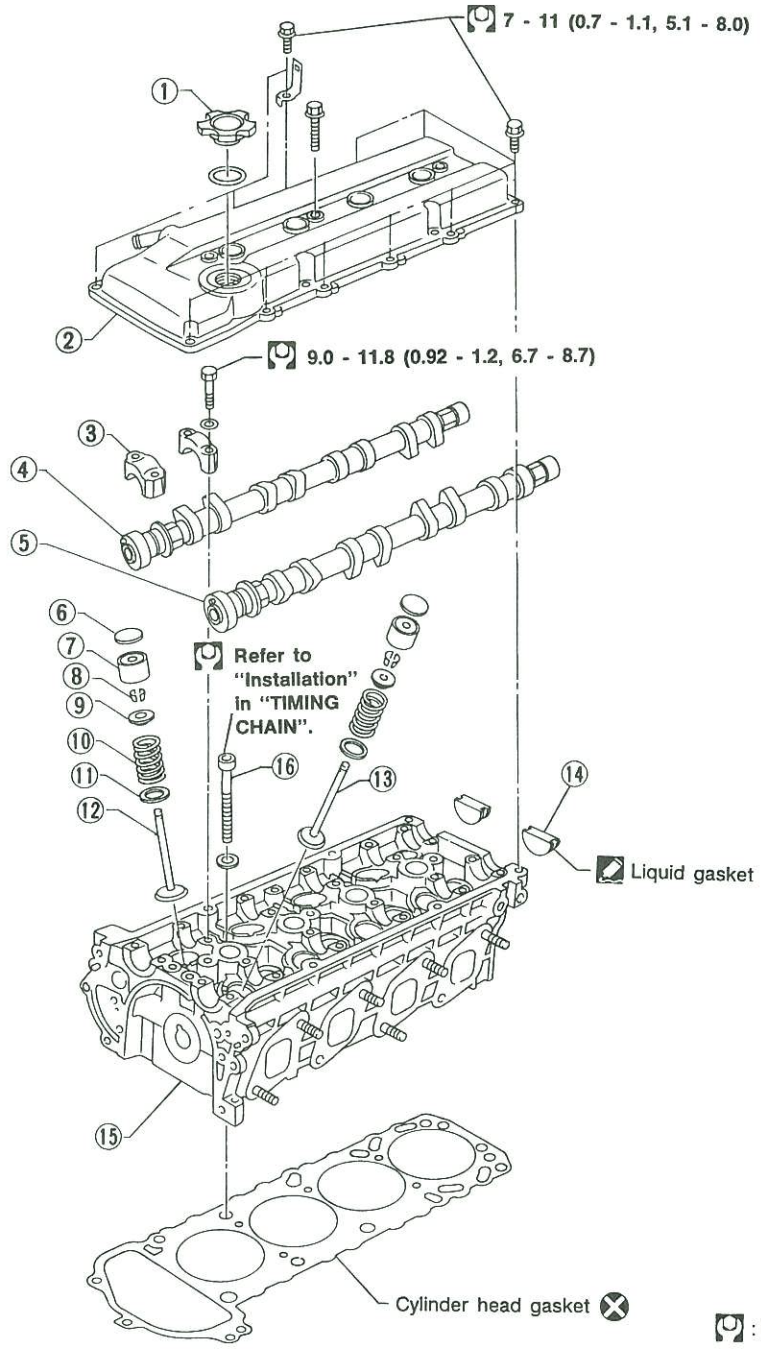


① Oil filler cap
② Rocker cover
③ Camshaft bracket
④ Intake camshaft
⑤ Exhaust camshaft
⑥ Shim
⑦ Valve lifter
⑧ Valve cotter
⑨ Spring retainer
⑩ Valve spring
⑪ Spring seat
⑫ Intake valve
⑬ Exhaust valve
⑭ Rubber plug
⑮ Cylinder head
⑯ Cylinder head bolt

CAUTION:

- **When installing sliding parts such as rocker arms, camshaft and oil seal, be sure to apply new engine oil on their sliding surfaces.**
- **When tightening cylinder head bolts, intake camshaft sprocket bolts and camshaft bracket bolts, apply new engine oil to thread portions and seat surfaces of bolts.**
- **Attach tags to valve lifters so as not to mix them up.**

## Removal and Installation

- Removal and installation procedures are the same as those for timing chain. Refer to "Removal" and "Installation" in "TIMING CHAIN".

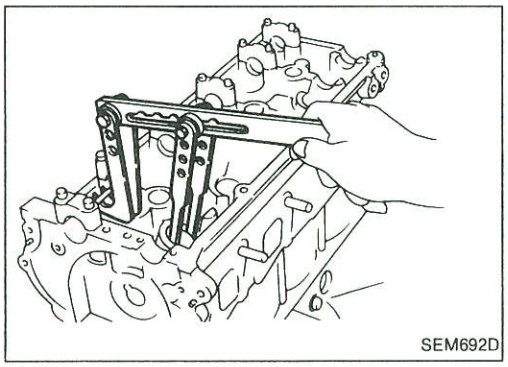
SEM692D

## Disassembly

1. Remove intake manifold, collector assembly and exhaust manifold. Refer to "Outer Component Parts".
2. Remove valve components with Tool.
3. Remove valve oil seal with a suitable tool.

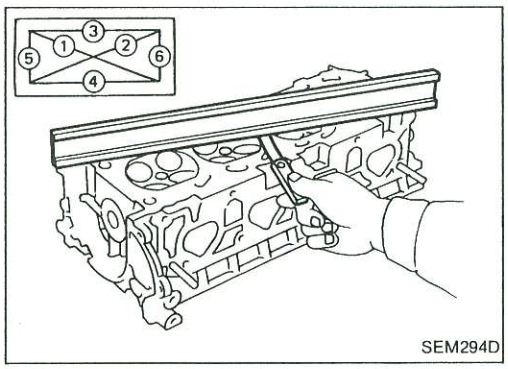

SEM294D

## Inspection

### CYLINDER HEAD DISTORTION

**Head surface flatness:**

**Standard Less than 0.03 mm (0.0012 in)**

**Limit 0.1 mm (0.004 in)**

If beyond the specified limit, replace it or resurface it.

**Resurfacing limit:**

**The resurfacing limit of cylinder head is determined by the cylinder block resurfacing in an engine.**

**Amount of cylinder head resurfacing is "A".**

**Amount of cylinder block resurfacing is "B".**

**The maximum limit is as follows:**

**A + B = 0.2 mm (0.008 in)**

After resurfacing cylinder head, check that camshaft rotates freely by hand. If resistance is felt, cylinder head must be replaced.

**Nominal cylinder head height:**

**126.3 - 126.5 mm (4.972 - 4.980 in)**

### CAMSHAFT VISUAL CHECK

Check camshaft for scratches, seizure and wear.

## Inspection (Cont'd)

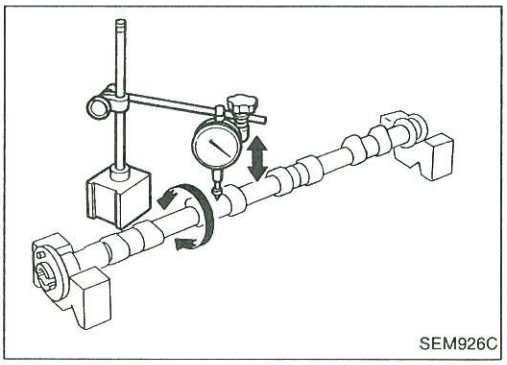
SEM926C

### CAMSHAFT RUNOUT

1. Measure camshaft runout at the center journal.
   **Runout (Total indicator reading):**
   **Standard:**
   **Less than 0.02 mm (0.0008 in)**
   **Limit:**
   **0.04 mm (0.0016 in)**
2. If it exceeds the limit, replace camshaft.

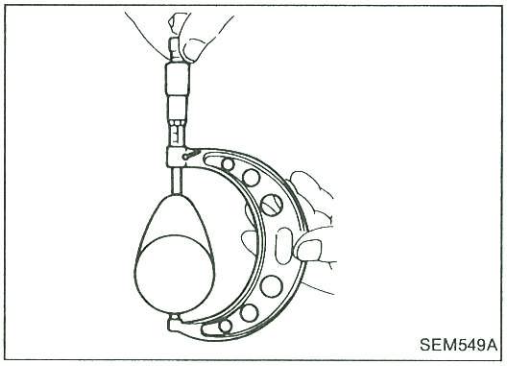
SEM549A

### CAMSHAFT CAM HEIGHT

1. Measure camshaft cam height.
   **Standard cam height:**
   **Intake**
   **42.415 - 42.605 mm (1.6699 - 1.6774 in)**
   **Exhaust**
   **42.415 - 43.005 mm (1.6699 - 1.6931 in)**
   **Cam wear limit:**
   **Intake & Exhaust**
   **0.2 mm (0.008 in)**
2. If wear is beyond the limit, replace camshaft.

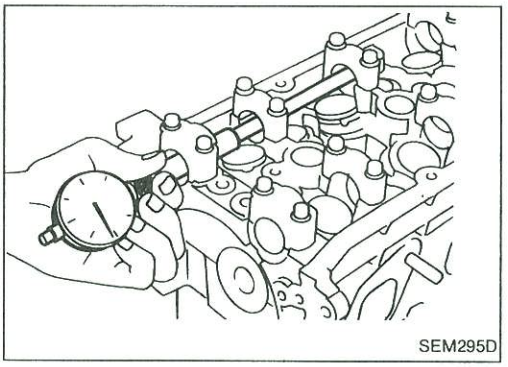
SEM295D

### CAMSHAFT JOURNAL CLEARANCE

1. Install camshaft bracket and tighten bolts to the specified torque.
2. Measure inner diameter of camshaft bearing.
   **Standard inner diameter:**
   **#1 journal**
   **28.000 - 28.025 mm (1.1024 - 1.1033 in)**
   **#2 to #5 journals**
   **24.000 - 24.025 mm (0.9449 - 0.9459 in)**

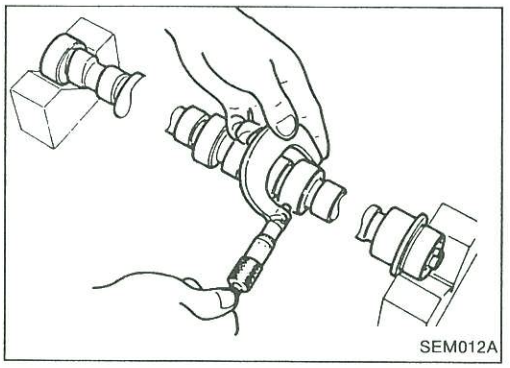
SEM012A

3. Measure outer diameter of camshaft journal.
   **Standard outer diameter:**
   **#1 journal**
   **27.935 - 27.955 mm (1.0998 - 1.1006 in)**
   **#2 to #5 journals**
   **23.935 - 23.955 mm (0.9423 - 0.9431 in)**
4. If clearance exceeds the limit, replace camshaft and/or cylinder head.
   **Camshaft journal clearance:**
   **Standard 0.045 - 0.090 mm (0.0018 - 0.0035 in)**
   **Limit 0.12 mm (0.0047 in)**

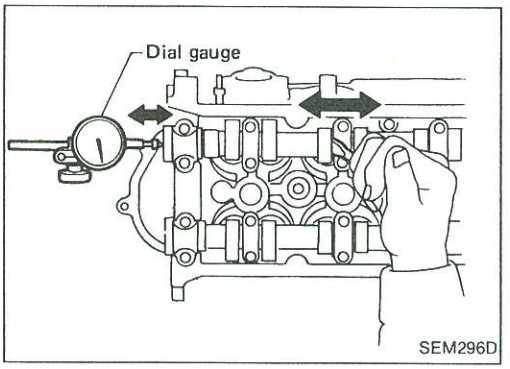

SEM296D

### CAMSHAFT END PLAY

1. Install camshaft and thermostat housing in cylinder head.
2. Measure camshaft end play.
   **Camshaft end play:**
   **Standard**
   **0.07 - 0.15 mm (0.0028 - 0.0059 in)**
   **Limit**
   **0.20 mm (0.0079 in)**

## Inspection (Cont'd)

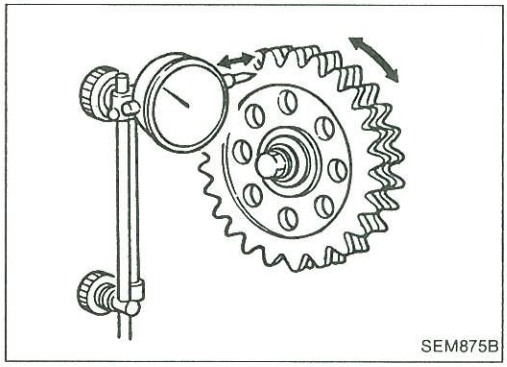
SEM875B

### CAMSHAFT SPROCKET RUNOUT

1. Install sprocket on camshaft.
2. Measure camshaft sprocket runout.
   **Runout (Total indicator reading):**
   **Limit 0.12 mm (0.0047 in)**
3. If it exceeds the limit, replace camshaft sprocket.

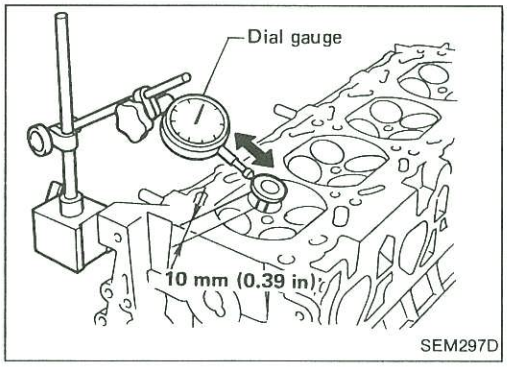

SEM297D

### VALVE GUIDE CLEARANCE

1. Measure valve deflection in a parallel direction with rocker arm. (Valve and valve guide mostly wear in this direction.)
   **Valve deflection limit (Dial gauge reading):**
   **Intake & Exhaust**
   **0.2 mm (0.008 in)**

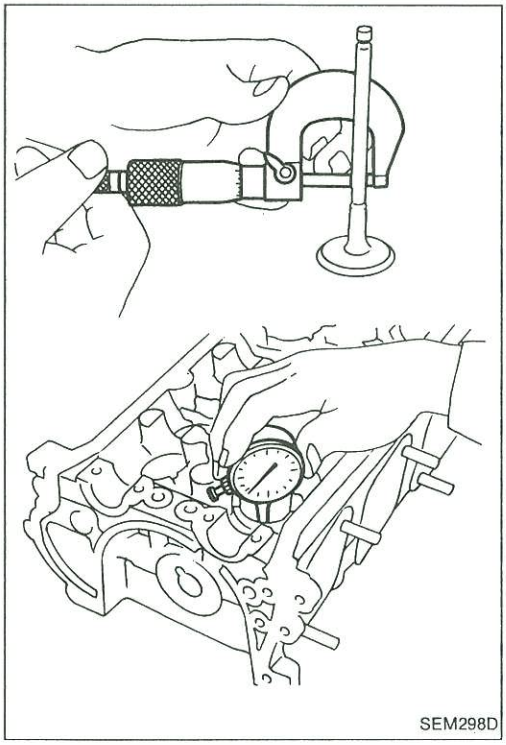
SEM298D

2. If it exceeds the limit, check valve to valve guide clearance.
a. Measure valve stem diameter and valve guide inner diameter.
b. Check that clearance is within specification.

**Valve to valve guide clearance:**

Unit: mm (in)

| | Standard | Limit |
|---|---|---|
| Intake | 0.020 - 0.053 (0.0008 - 0.0021) | 0.08 (0.0031) |
| Exhaust | 0.040 - 0.073 (0.0016 - 0.0029) | 0.1 (0.004) |

c. If it exceeds the limit, replace valve or valve guide.

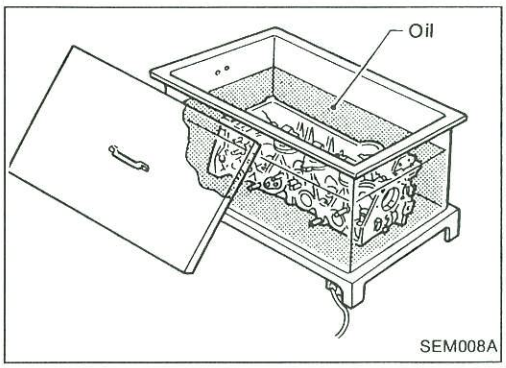

SEM008A

### VALVE GUIDE REPLACEMENT

1. To remove valve guide, heat cylinder head to 120 to 140°C (248 to 284°F).

## Inspection (Cont'd)

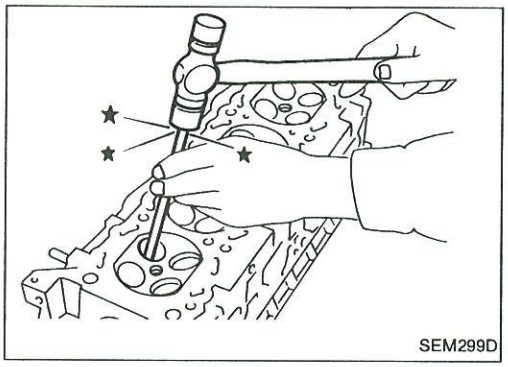
SEM299D

2. Drive out valve guide with a press [under a 20 kN (2 ton, 2.2 US ton, 2.0 Imp ton) pressure] or hammer and suitable tool.

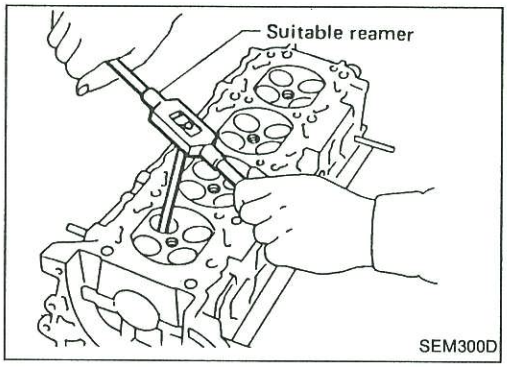

SEM300D

3. Ream cylinder head valve guide hole.
   **Valve guide hole diameter**
   **(for service parts):**
   **Intake**
   **11.175 - 11.196 mm (0.4400 - 0.4408 in)**
   **Exhaust**
   **11.175 - 11.196 mm (0.4400 - 0.4408 in)**

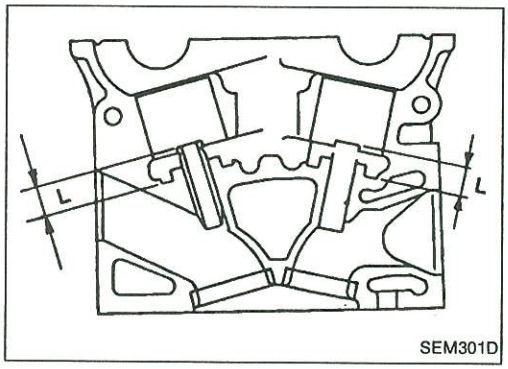

SEM301D

4. Heat cylinder head to 120 to 140°C (230 to 266°F) and press service valve guide onto cylinder head.
   **Projection "L":**
   **13.3 - 13.9 mm (0.524 - 0.547 in)**

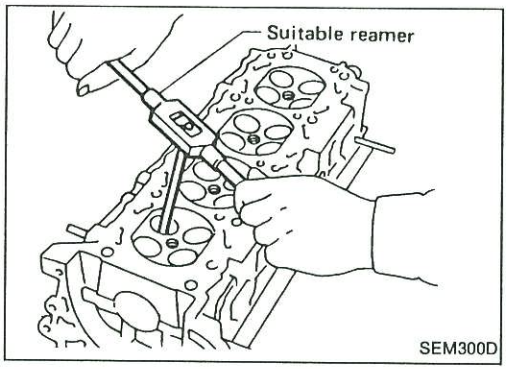

SEM300D

5. Ream valve guide.
   **Finished size:**
   **Intake & Exhaust**
   **7.000 - 7.018 mm (0.2756 - 0.2763 in)**

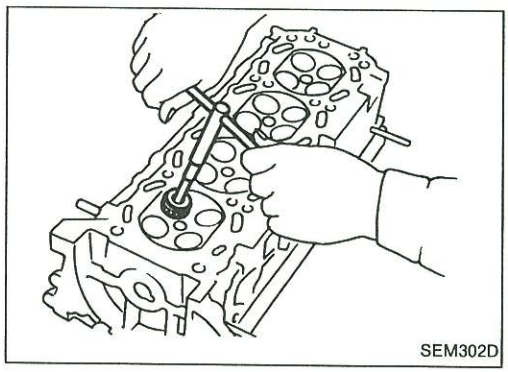
SEM302D

### VALVE SEATS

Check valve seats for any evidence of pitting at valve contact surface, and reset or replace if it has worn out excessively.

- **Before repairing valve seats, check valve and valve guide for wear. If they have worn, replace them. Then correct valve seat.**
- **Cut with both hands to uniform the cutting surface.**

## Inspection (Cont'd)

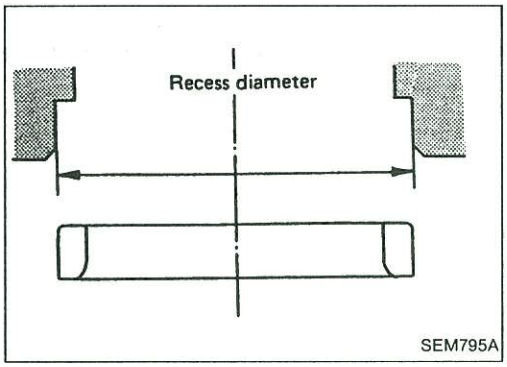


### REPLACING VALVE SEAT FOR SERVICE PARTS

1. Bore out old seat until it collapses. The machine depth stop should be set so that boring cannot continue beyond the bottom face of the seat recess in cylinder head.
2. Ream cylinder head recess.
   **Reaming bore for service valve seat**
   **Oversize [0.5 mm (0.020 in)]:**
   **Intake 38.000 - 38.016 mm (1.4961 - 1.4967 in)**
   **Exhaust 32.700 - 32.716 mm (1.2874 - 1.2880 in)**

**Reaming should be done in circles concentric to the valve guide center so that valve seat will have the correct fit.**

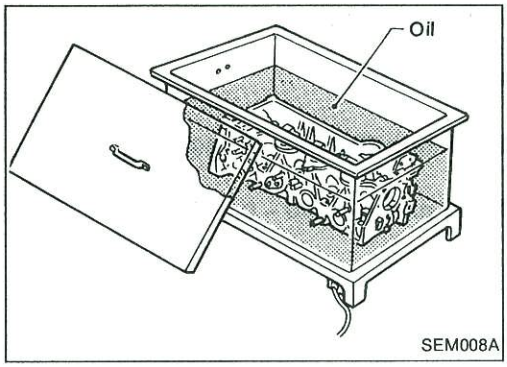


3. Heat cylinder head to 120 to 140°C (248 to 284°F).
4. Press fit valve seat until it seats on the bottom.

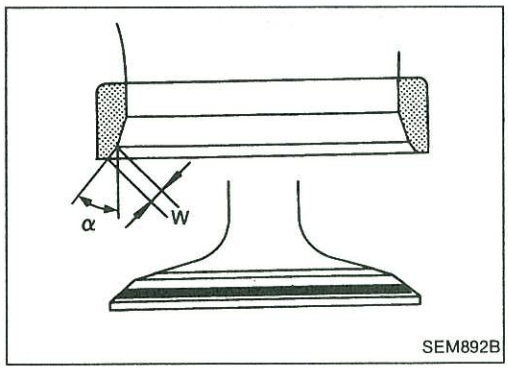


5. Cut or grind valve seat using suitable tool at the specified dimensions as shown in S.D.S.
6. After cutting, lap valve seat with abrasive compound.
7. Check valve seating condition.
   **Seat face angle "α":**
   **44°53′ - 45°07′ deg.**
   **Contacting width "W":**
   **Intake**
   **1.48 - 1.63 mm (0.0583 - 0.0642 in)**
   **Exhaust**
   **1.8 - 2.0 mm (0.071 - 0.079 in)**

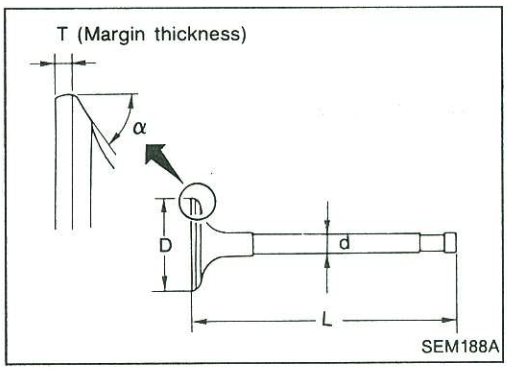


### VALVE DIMENSIONS

Check dimensions in each valve. For dimensions, refer to S.D.S.

When valve head has been worn down to 0.5 mm (0.020 in) in margin thickness, replace valve.

**Grinding allowance for valve stem tip is 0.2 mm (0.008 in) or less.**

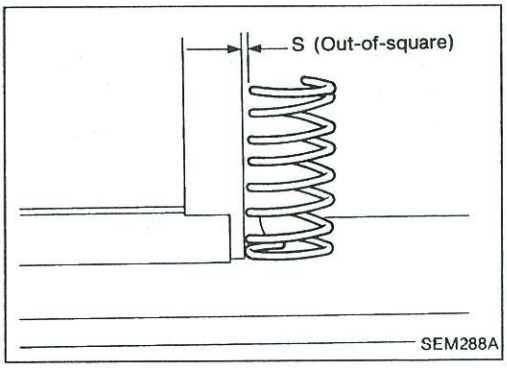


### VALVE SPRING

#### Squareness

1. Measure "S" dimension.
   **Out-of-square:**
   **Less than 1.9 mm (0.075 in)**
2. If it exceeds the limit, replace spring.

## Inspection (Cont'd)

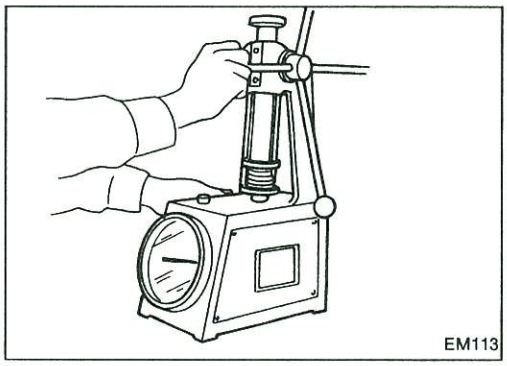
EM113

### Pressure

Check valve spring pressure.

**Pressure: N (kg, lb) at height mm (in)**

**Standard**

**548.70 (55.95, 123.37) at 26.0 (1.024)**

**Limit**

**More than 489.4 (49.9, 110.0) at 26.0 (1.024)**

If it exceeds the limit, replace spring.

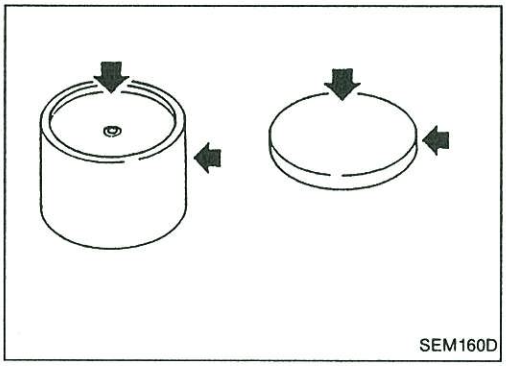
SEM160D

### VALVE LIFTER AND VALVE SHIM

1. Visually check contact and sliding surfaces for wear or scratches.

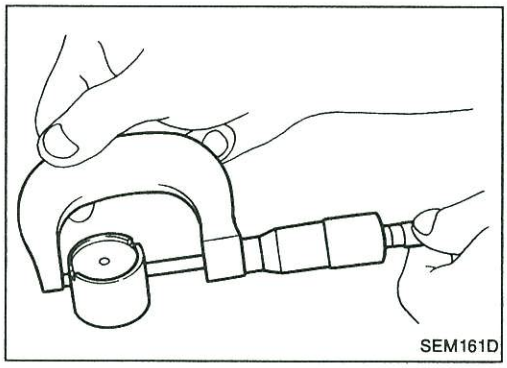
SEM161D

2. Check diameter of valve lifter and valve lifter guide bore.

**Valve lifter diameter:**

**33.960 - 33.975 mm (1.3370 - 1.3376 in)**

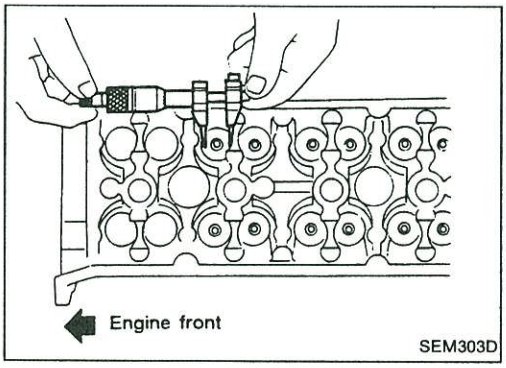

SEM303D

**Lifter guide bore diameter:**

**34.000 - 34.021 mm (1.3386 - 1.3394 in)**

**Valve lifter to valve lifter guide clearance:**

**0.025 - 0.061 mm (0.0010 - 0.0024 in)**

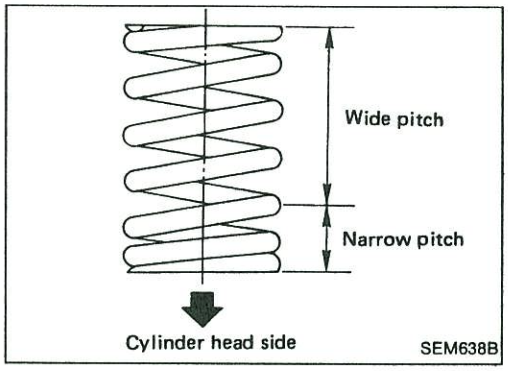

SEM638B

## Assembly

1. Install valve component parts.

- **Always use new valve oil seal. Refer to OIL SEAL REPLACEMENT.**
- **Before installing valve oil seal, install valve spring seat.**
- **Install outer valve spring (uneven pitch type) with its narrow pitch side toward cylinder head side.**
- **After installing valve component parts, use plastic hammer to lightly tap valve stem tip to assure a proper fit.**

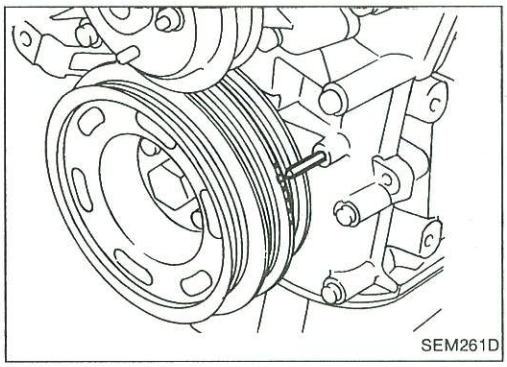
SEM261D

## Valve Clearance

### CHECKING

**Check valve clearance while engine is warm but not running.**

1. Remove rocker cover and all spark plugs.
2. Set No. 1 cylinder at T.D.C. on its compression stroke.
- Align pointer with T.D.C. mark on crankshaft pulley.
- Check that valve lifters on No. 1 cylinder are loose and valve lifters on No. 4 are tight.
  If not, turn crankshaft one revolution (360°) and align as above.

3. Check only those valves shown in the figure.

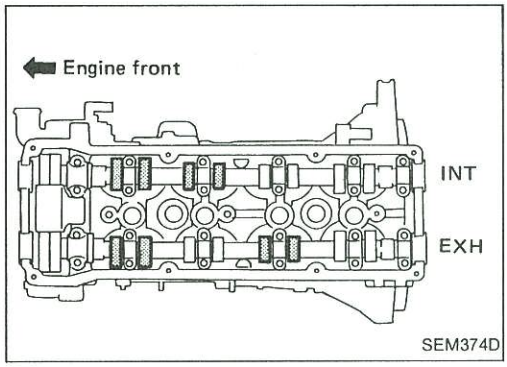

SEM374D

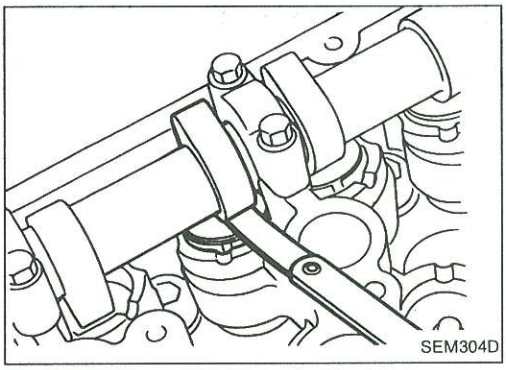
SEM304D

- Using a feeler gauge, measure clearance between valve lifter and camshaft.
- Record any valve clearance measurements which are out of specification. They will be used later to determine the required replacement adjusting shim.

**Valve clearance (Hot):**

**Intake**

**0.31 - 0.39 mm (0.012 - 0.015 in)**

**Exhaust**

**0.33 - 0.41 mm (0.013 - 0.016 in)**

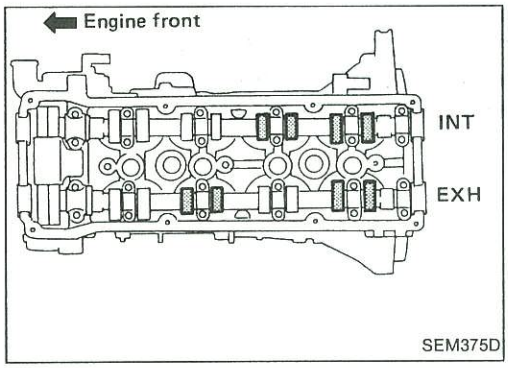

SEM375D

4. Turn crankshaft one revolution (360°) and align mark on crankshaft pulley with pointer.
5. Check those valves shown in the figure.
- Use the same procedure as mentioned in step 4.
6. If all valve clearances are within specification, install the following parts.
- Rocker cover
- All spark plugs

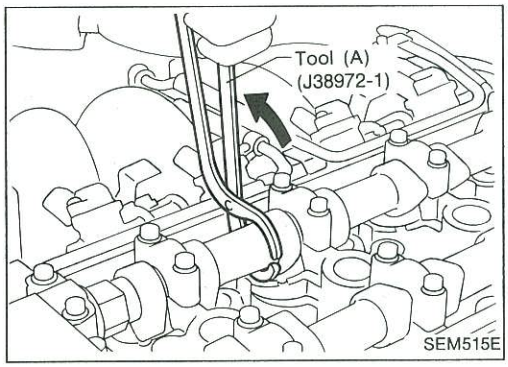

SEM515E

### ADJUSTING

**Adjust valve clearance while engine is cold.**

1. Turn crankshaft, to position cam lobe on camshaft of valve that must be adjusted upward.
2. Place Tool (A) around camshaft as shown in figure.
3. Rotate Tool (A) so that lifter is pushed down.

**Before placing Tool (A), rotate notch toward center of cylinder head (See figure.), to simplify shim removal later.**

**CAUTION:**

**Be careful not to damage cam surface with Tool (A).**

## Valve Clearance (Cont'd)

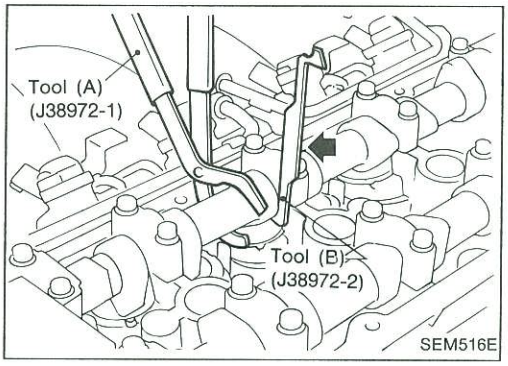


4. Place Tool (B) between camshaft and valve lifter to retain valve lifter.

**CAUTION:**

- **Tool (B) must be placed as close to camshaft bracket as possible.**
- **Be careful not to damage cam surface with Tool (B).**

5. Remove Tool (A).

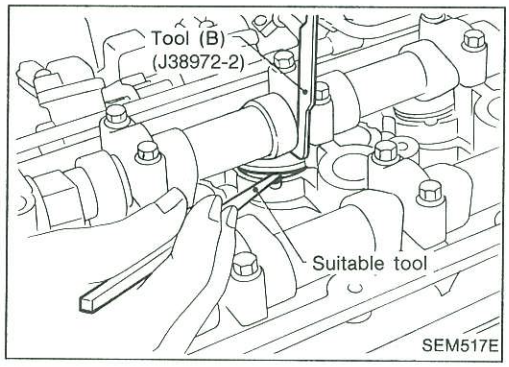


6. Remove adjusting shim using a small screwdriver and a magnetic finger.

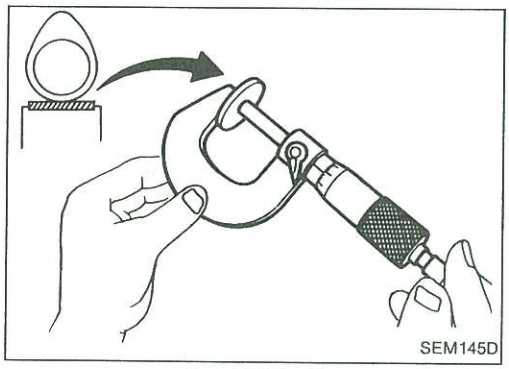


7. Determine replacement adjusting shim size following formula.

- Using a micrometer determine thickness of removed shim.
- Calculate thickness of new adjusting shim so valve clearance comes within specified values.

R = Thickness of removed shim
N = Thickness of new shim
M = Measured valve clearance

**Intake: N = R + [M – 0.35 mm (0.0138 in)]**
**Exhaust: N = R + [M – 0.37 mm (0.0146 in)]**

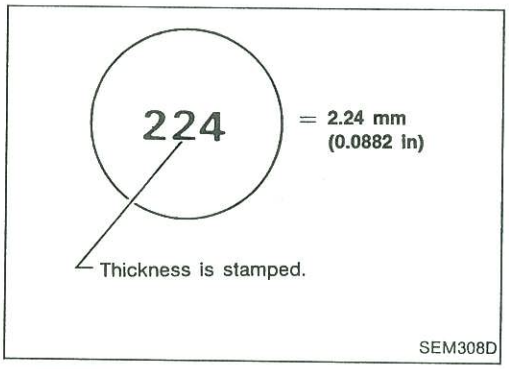


**Shims are available in 37 sizes from 1.96 mm (0.0772 in) to 2.68 mm (0.1055 in), in steps of 0.02 mm (0.0008 in).**

- Select new shim with thickness as close as possible to calculated value.

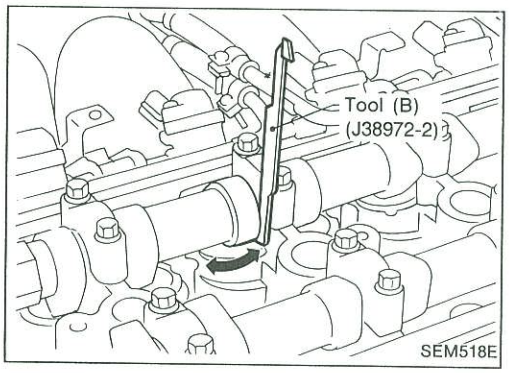


8. Install new shim using a suitable tool.
- **Install with the surface on which the thickness is stamped facing down.**
9. Place Tool (A) as mentioned in steps 2 and 3.
10. Remove Tool (B).
11. Remove Tool (A).
12. Recheck valve clearance.
Refer to "CHECKING".

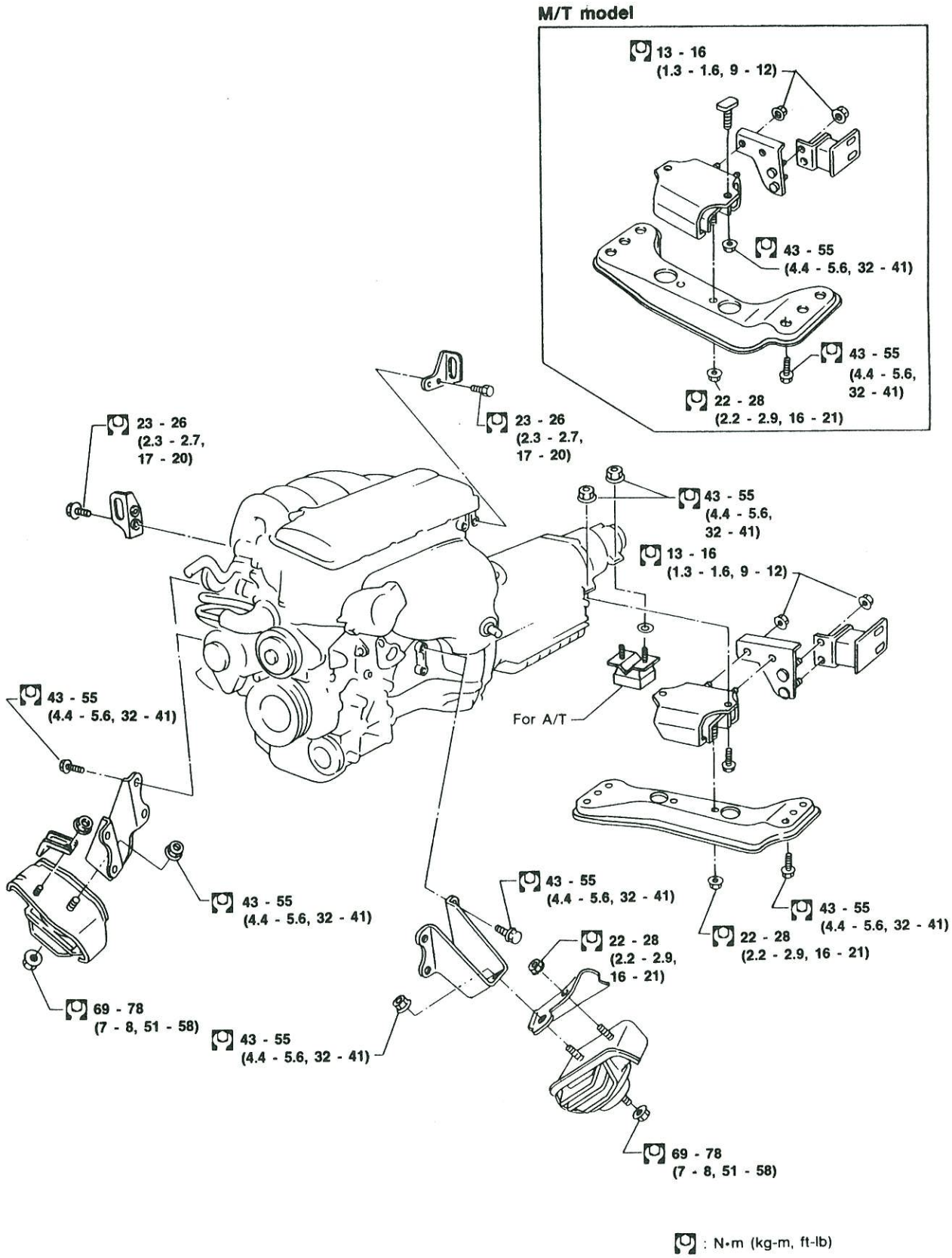
M/T model
13 - 16
(1.3 - 1.6, 9 - 12)
43 - 55
(4.4 - 5.6, 32 - 41)
43 - 55
(4.4 - 5.6,
32 - 41)
22 - 28
(2.2 - 2.9, 16 - 21)
23 - 26
(2.3 - 2.7,
17 - 20)
23 - 26
(2.3 - 2.7,
17 - 20)
43 - 55
(4.4 - 5.6,
32 - 41)
13 - 16
(1.3 - 1.6, 9 - 12)
For A/T
43 - 55
(4.4 - 5.6, 32 - 41)
43 - 55
(4.4 - 5.6, 32 - 41)
69 - 78
(7 - 8, 51 - 58)
43 - 55
(4.4 - 5.6, 32 - 41)
43 - 55
(4.4 - 5.6, 32 - 41)
22 - 28
(2.2 - 2.9,
16 - 21)
43 - 55
(4.4 - 5.6, 32 - 41)
22 - 28
(2.2 - 2.9, 16 - 21)
69 - 78
(7 - 8, 51 - 58)
: N•m (kg-m, ft-lb)

SEM612D

**WARNING:**

**a. Situate vehicle on a flat and solid surface.**
**b. Place chocks at front and back of rear wheels.**
**c. Do not remove engine until exhaust system has completely cooled off.**
**Otherwise, you may burn yourself and/or fire may break out in fuel line.**
**d. For safety during subsequent steps, the tension of wires should be slackened against the engine.**
**e. Before disconnecting fuel hose, release fuel pressure from fuel line.**
**Refer to "Releasing Fuel Pressure" in section EF & EC.**
**f. Be sure to hoist engine and transmission in a safe manner.**
**g. For engines not equipped with engine slingers, attach proper slingers and bolts described in PARTS CATALOG.**

**CAUTION:**

- **When lifting engine, be careful not to strike adjacent parts, especially accelerator wire casing, brake lines, and brake master cylinder.**
- **In hoisting the engine, always use engine slingers in a safe manner.**

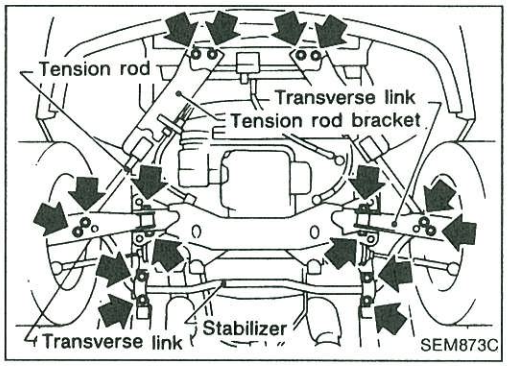


## Removal

1. Remove transmission.

**Refer to section AT or MT.**

2. Remove engine under cover and hood.
3. Drain coolant from both cylinder block drain plug, and radiator drain cock.
4. Drain engine oil from drain plug of oil pan.
5. Remove vacuum hoses, fuel tubes, wires, harness and connectors and so on.
6. Remove front exhaust tubes.
7. Remove radiator and shroud.
8. Remove drive belts.
9. Remove A/C pump and power steering oil pump from engine.
10. Install engine slingers to cylinder head.
11. Set a suitable hoist on engine slinger.
12. Remove engine mounting bolts from both sides and then slowly raise engine.

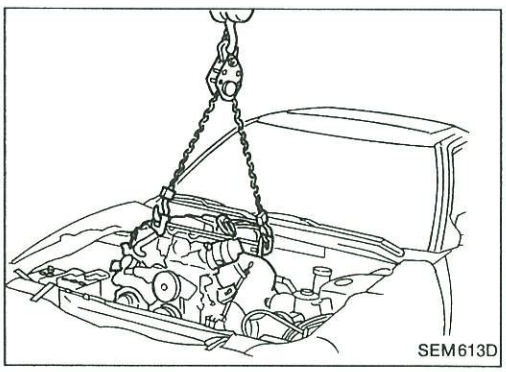


13. Remove engine as shown.

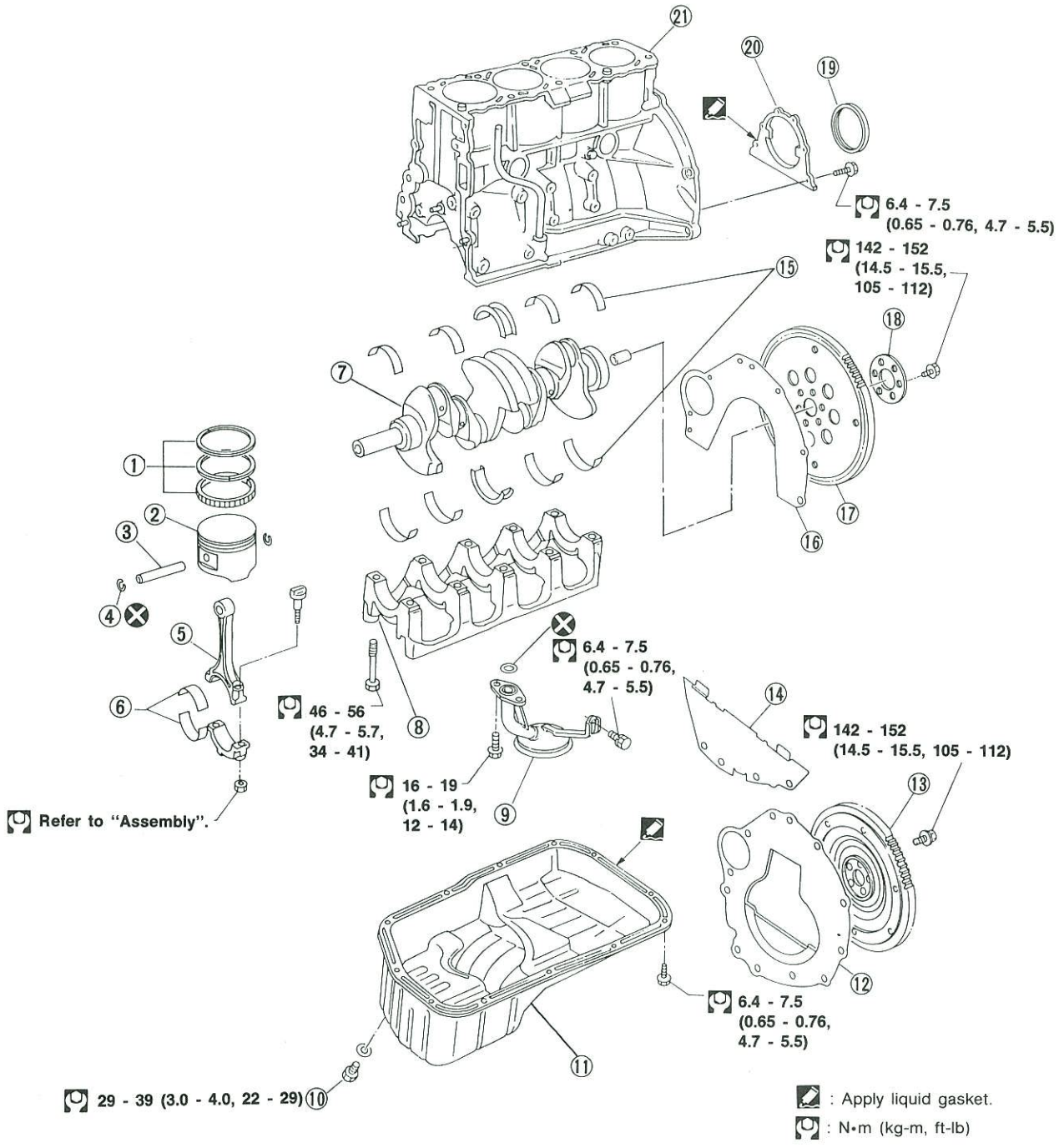


SEM310D

① Piston rings
② Piston
③ Piston pin
④ Snap ring
⑤ Connecting rod
⑥ Connecting rod bearing
⑦ Crankshaft
⑧ Main bearing cap
⑨ Oil strainer
⑩ Drain plug
⑪ Oil pan
⑫ Rear plate (M/T)
⑬ Flywheel (M/T)
⑭ Dust cover (A/T)
⑮ Main bearing
⑯ Rear plate (A/T)
⑰ Drive plate (A/T)
⑱ Drive plate reinforcement
⑲ Rear oil seal
⑳ Rear oil seal retainer
㉑ Cylinder block

**CAUTION:**

- **When installing sliding parts such as bearings and pistons, be sure to apply engine oil on the sliding surfaces.**
- **Place removed parts such as bearings and bearing caps in their proper order and direction.**
- **When tightening connecting rod bolts and main bearing cap bolts, apply engine oil to thread portion of bolts and seating surface of nuts.**



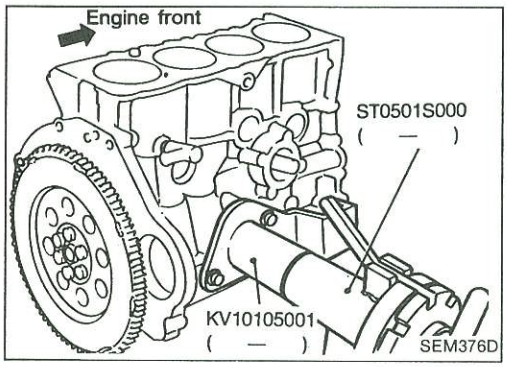


## Disassembly

### PISTON AND CRANKSHAFT

1. Place engine on a work stand.
2. Remove timing chain.
   Refer to "Removal" in "TIMING CHAIN".

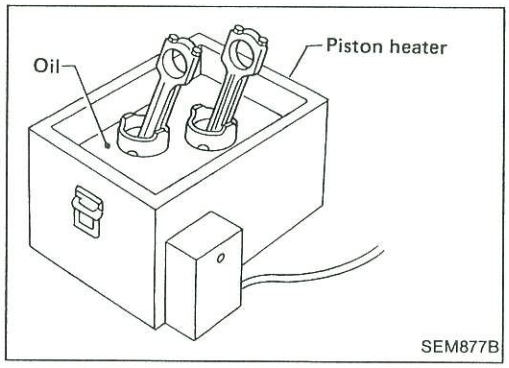


3. Remove pistons with connecting rods.
   - When disassembling piston and connecting rod, remove snap rings, then heat piston to 60 to 70°C (140 to 158°F) or use piston pin press stand at room temperature.

**CAUTION:**

- **When piston rings are not replaced, make sure that piston rings are mounted in their original positions.**
- **When piston rings are being replaced and no punchmark is present, piston rings can be mounted with either side up.**

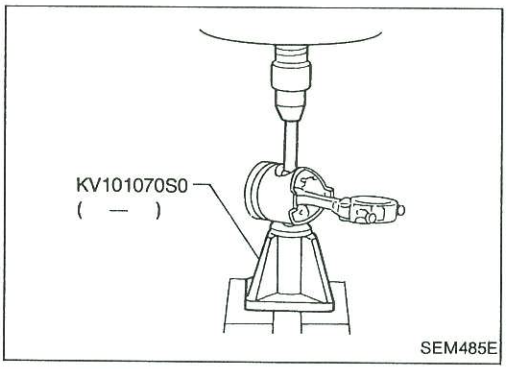


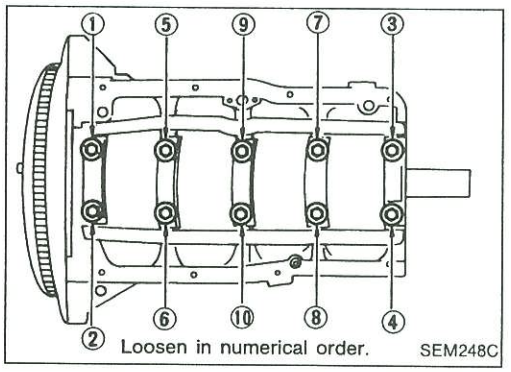


4. Remove main bearing beam and crankshaft.
   - **Before removing main bearing beam, measure crankshaft end play.**
   - **Bolts should be loosened in two or three steps.**

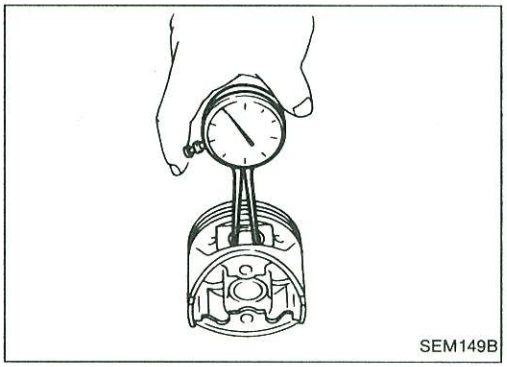
SEM149B

## Inspection

### PISTON AND PISTON PIN CLEARANCE

1. Measure inner diameter of piston pin hole "dp".
   **Standard diameter "dp":**
   **20.987 - 20.999 mm (0.8263 - 0.8267 in)**

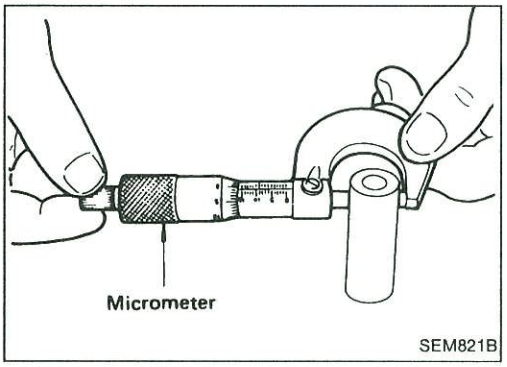

SEM821B

2. Measure outer diameter of piston pin "Dp".
   **Standard diameter "Dp":**
   **20.989 - 21.001 mm (0.8263 - 0.8268 in)**
3. Calculate interference fit of piston pin to piston.
   **dp – Dp = 0 - 0.004 mm (0 - 0.0002 in)**
   If it exceeds the above value, replace piston assembly with pin.

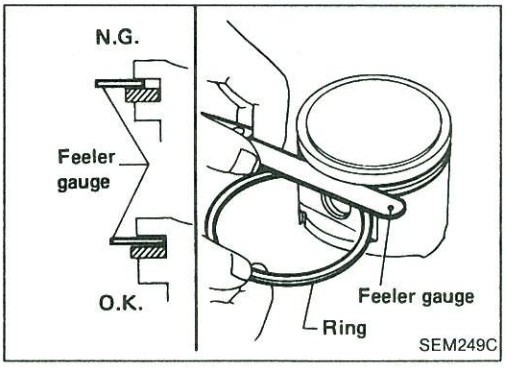

SEM249C

### PISTON RING SIDE CLEARANCE

**Side clearance:**
**Top ring**
**0.040 - 0.080 mm (0.0016 - 0.0031 in)**
**2nd ring**
**0.030 - 0.070 mm (0.0012 - 0.0028 in)**
**Max. limit of side clearance:**
**0.1 mm (0.004 in)**

If out of specification, replace piston and/or piston ring assembly.

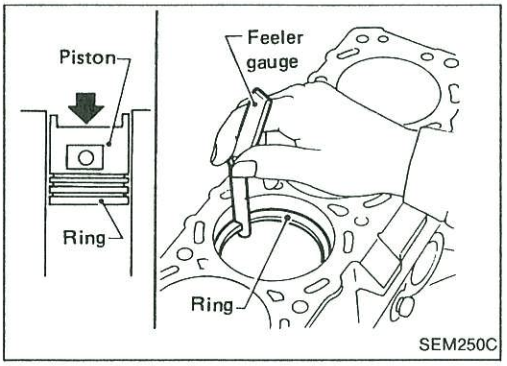

SEM250C

### PISTON RING END GAP

**End gap:**
**Top ring**
**0.28 - 0.52 mm (0.0110 - 0.0205 in)**
**2nd ring**
**0.45 - 0.69 mm (0.0177 - 0.0272 in)**
**Oil ring**
**0.20 - 0.69 mm (0.0079 - 0.0272 in)**
**Max. limit of ring gap:**
**1.0 mm (0.039 in)**

If out of specification, replace piston ring. If gap still exceeds the limit even with a new ring, rebore cylinder and use oversized piston and piston rings.

**Refer to S.D.S.**

## Inspection (Cont'd)

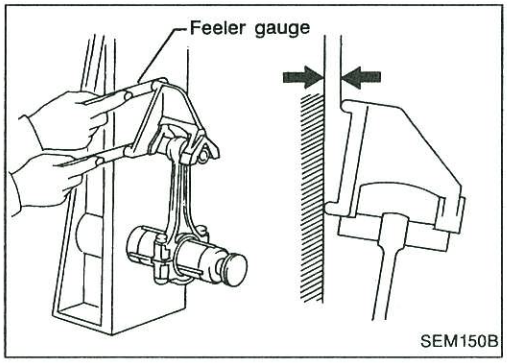


### CONNECTING ROD BEND AND TORSION

**Bend:**
**Limit 0.15 mm (0.0059 in)**
**per 100 mm (3.94 in) length**

**Torsion:**
**Limit 0.30 mm (0.0118 in)**
**per 100 mm (3.94 in) length**

If it exceeds the limit, replace connecting rod assembly.

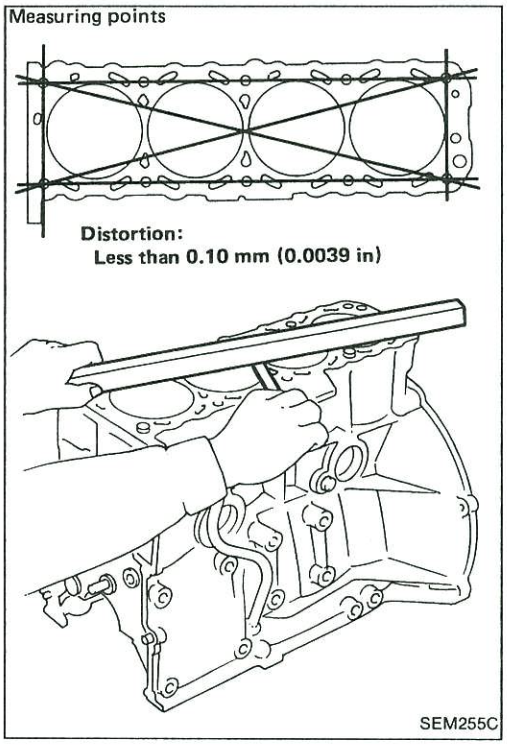


### CYLINDER BLOCK DISTORTION AND WEAR

1. Clean upper face of cylinder block and measure the distortion.
   **Limit:**
   **0.10 mm (0.0039 in)**
2. If out of specification, resurface it.
   The resurfacing limit is determined by cylinder head resurfacing in engine.

**Amount of cylinder head resurfacing is "A"**

**Amount of cylinder block resurfacing is "B"**
**The maximum limit is as follows:**
**A + B = 0.2 mm (0.008 in)**
**Nominal cylinder block height from crankshaft center:**
**246.95 - 247.05 mm (9.7224 - 9.7264 in)**

3. If necessary, replace cylinder block.

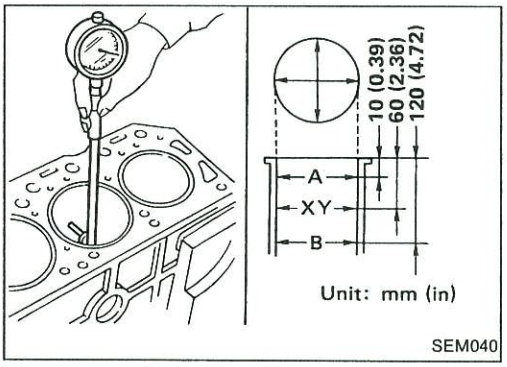


### PISTON-TO-BORE CLEARANCE

1. Using a bore gauge, measure cylinder bore for wear, out-of-round and taper.
   **Standard inner diameter:**
   **89.000 - 89.030 mm (3.5039 - 3.5051 in)**
   **Wear limit:**
   **0.2 mm (0.008 in)**
   **Out-of-round (X – Y) limit:**
   **0.015 mm (0.0006 in)**
   **Taper (A – B) limit:**
   **0.01 mm (0.0004 in)**
   If it exceeds the limit, rebore all cylinders. Replace cylinder block if necessary.
2. Check for scratches and seizure. If seizure is found, hone it.

## Inspection (Cont'd)

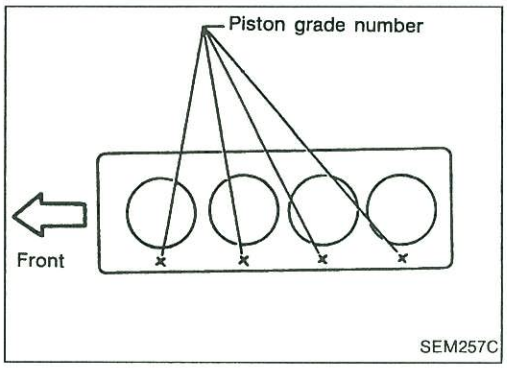


- **If both cylinder block and piston are replaced with new ones, select piston of the same grade number punched on cylinder block upper surface.**

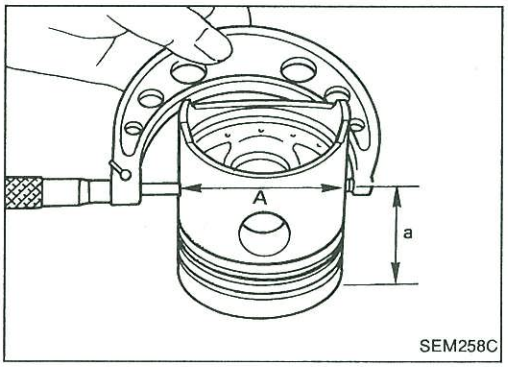


3. Measure piston skirt diameter.
   **Piston diameter "A":**
   **Refer to S.D.S.**
   **Measuring point "a" (Distance from the top):**
   **52 mm (2.05 in)**
4. Check that piston-to-bore clearance is within specification.
   **Piston-to-bore clearance "B":**
   **0.020 - 0.040 mm (0.0008 - 0.0016 in)**
5. Determine piston oversize according to amount of cylinder wear.

**Oversize pistons are available for service. Refer to S.D.S.**

6. Cylinder bore size is determined by adding piston-to-bore clearance to piston diameter "A".
   **Rebored size calculation: D = A + B – C where,**
   **D: Bored diameter**
   **A: Piston diameter as measured**
   **B: Piston-to-bore clearance**
   **C: Honing allowance 0.02 mm (0.0008 in)**
7. Install main bearing caps, and tighten to the specified torque to prevent distortion of cylinder bores in final assembly.
8. Cut cylinder bores.

- **When any cylinder needs boring, all other cylinders must also be bored.**
- **Do not cut too much out of cylinder bore at a time. Cut only 0.05 mm (0.0020 in) or so in diameter at a time.**

9. Hone cylinders to obtain specified piston-to-bore clearance.
10. Measure finished cylinder bore for out-of-round and taper.

- **Measurement should be done after cylinder bore cools down.**

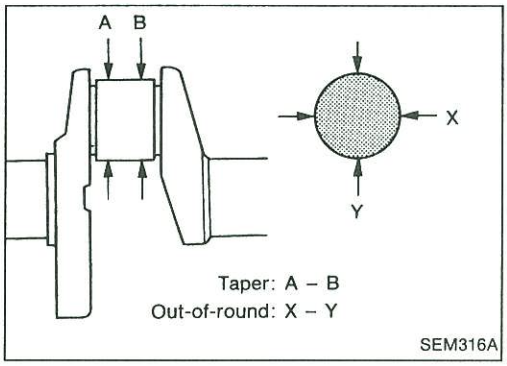


### CRANKSHAFT

1. Check crankshaft main and pin journals for score, wear or cracks.
2. With a micrometer, measure journals for taper and out-of-round.
   **Out-of-round (X – Y):**
   **Less than 0.005 mm (0.0002 in)**
   **Taper (A – B):**
   **Less than 0.002 mm (0.0001 in)**

## Inspection (Cont'd)

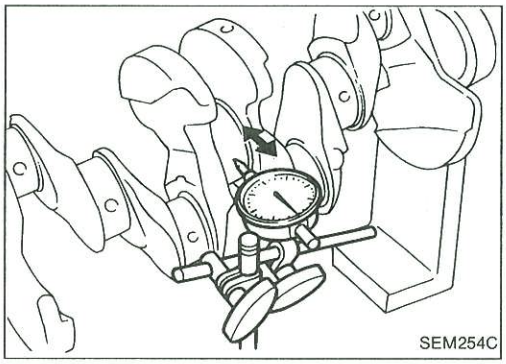


3. Measure crankshaft runout.
   **Runout (Total indicator reading):**
   **Less than 0.04 mm (0.0016 in)**

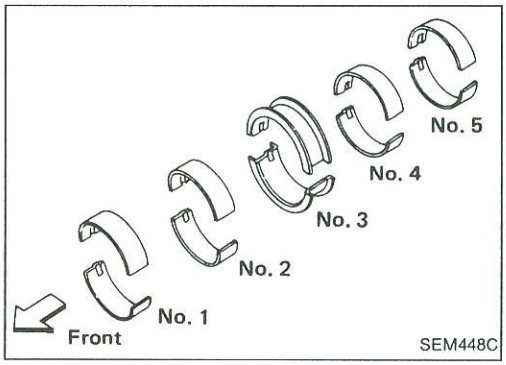


### BEARING CLEARANCE

- Either of the following two methods may be used, however, method "A" gives more reliable results and is preferable.

**Method A (Using bore gauge & micrometer)**

**Main bearing**

1. Set main bearings in their proper positions on cylinder block and main bearing cap.

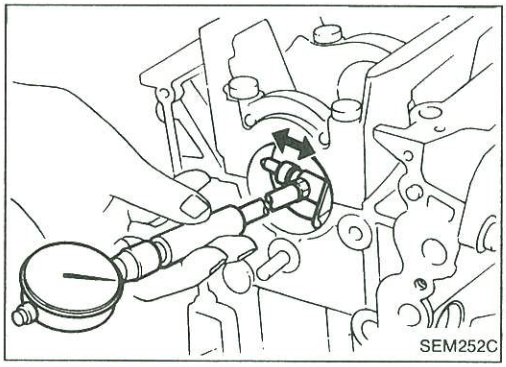


2. Install main bearing cap to cylinder block.

**Tighten all bolts in correct order in two or three stages. Refer to "Assembly".**

3. Measure inner diameter "A" of each main bearing.

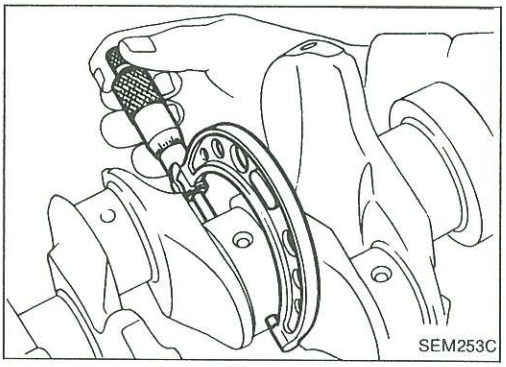


4. Measure outer diameter "Dm" of each crankshaft main journal.
5. Calculate main bearing clearance.
   Main bearing clearance = A – Dm
   **Standard:**
   **0.020 - 0.047 mm (0.0008 - 0.0019 in)**
   **Limit: 0.1 mm (0.004 in)**
6. If it exceeds the limit, replace bearing.
7. If clearance cannot be adjusted within the standard of any bearing, grind crankshaft journal and use undersized bearing.

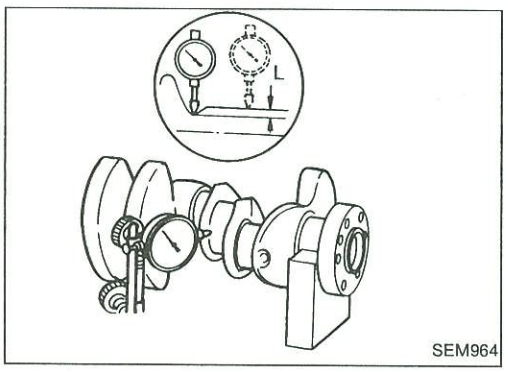


**a. When grinding crankshaft journal, confirm that "L" dimension in fillet roll is more than the specified limit.**
   **"L": 0.1 mm (0.004 in)**
**b. Refer to S.D.S. for grinding crankshaft and available service parts.**

## Inspection (Cont'd)

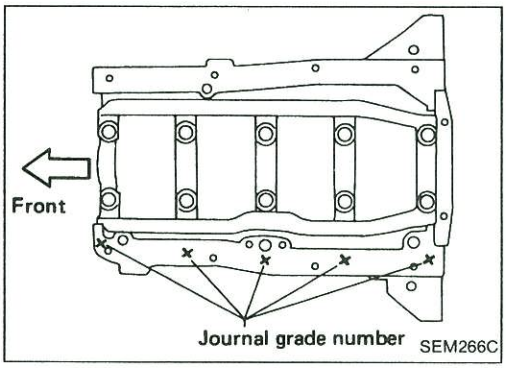


8. If crankshaft is reused, measure main bearing clearance and select thickness of main bearing.
   If crankshaft is replaced with a new one, it is necessary to select thickness of main bearings as follows:

a. Grade number of each cylinder block main journal is punched on the respective cylinder block. These numbers are punched in either Arabic or Roman numerals.

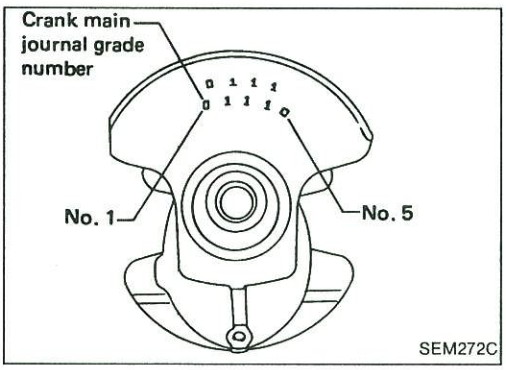


b. Grade number of each crankshaft main journal is punched on crankshaft. These numbers are punched in either Arabic or Roman numerals.

c. Select main bearing with suitable thickness according to the following table.

**Main bearing grade number:**

| Crankshaft journal grade number | Main journal grade number | | |
|---|---|---|---|
| | 0 | 1 | 2 |
| 0 | 0 | 1 | 2 |
| 1 | 1 | 2 | 3 |
| 2 | 2 | 3 | 4 |

For example:
Main journal grade number: 1
Crankshaft journal grade number: 2
Main bearing grade number = 1 + 2 = 3

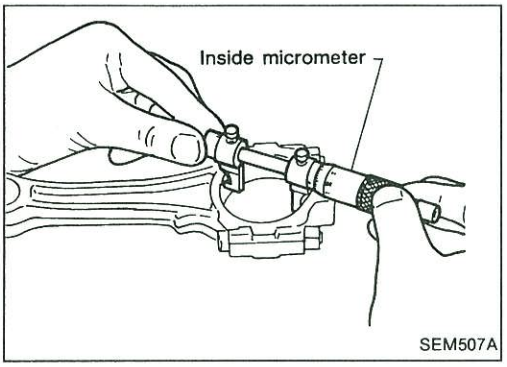


### Connecting rod bearing (Big end)

1. Install connecting rod bearing to connecting rod and cap.
2. Install connecting rod cap to connecting rod.

**Tighten bolts to the specified torque.**

3. Measure inner diameter "C" of each bearing.

## Inspection (Cont'd)

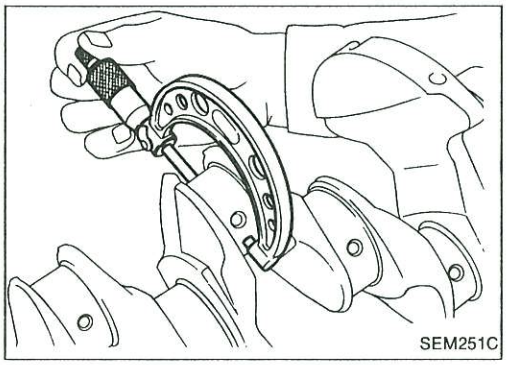
SEM251C

4. Measure outer diameter "Dp" of each crankshaft pin journal.
5. Calculate connecting rod bearing clearance.
   **Connecting rod bearing clearance = C – Dp**
   **Standard: 0.010 - 0.035 mm (0.0004 - 0.0014 in)**
   **Limit: 0.09 mm (0.0035 in)**
6. If it exceeds the limit, replace bearing.
7. If clearance cannot be adjusted within the standard of any bearing, grind crankshaft journal and use undersized bearing. Refer to step 7 of "BEARING CLEARANCE — Main bearing".

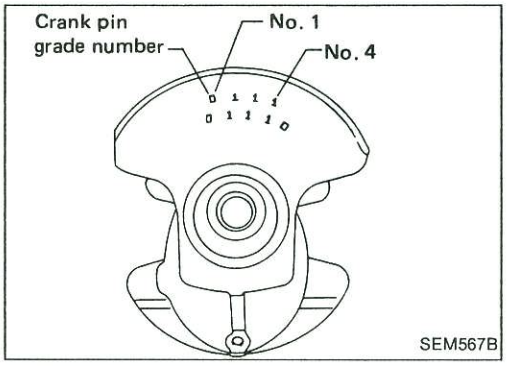

SEM567B

8. If crankshaft is replaced with a new one, select connecting rod bearing according to the following table.

**Connecting rod bearing grade number:**

These numbers are punched in either Arabic or Roman numerals.

| Crank pin grade number | Connecting rod bearing grade number |
|---|---|
| 0 | 0 |
| 1 | 1 |
| 2 | 2 |

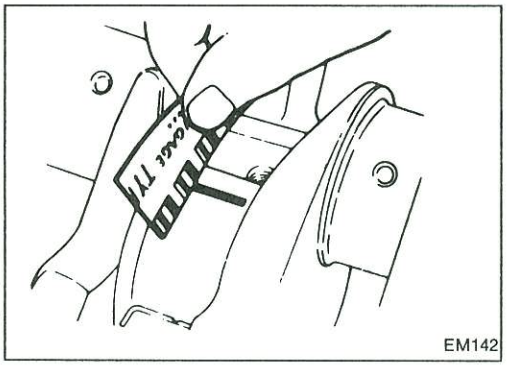
EM142

### Method B (Using plastigage)

**CAUTION:**

- **Do not turn crankshaft or connecting rod while plastigage is being inserted.**
- **When bearing clearance exceeds the specified limit, ensure that the proper bearing has been installed. Then if excessive bearing clearance exists, use a thicker main bearing or undersized bearing so that the specified bearing clearance is obtained.**

### CONNECTING ROD BUSHING CLEARANCE (Small end)

1. Measure inner diameter "C" of bushing.

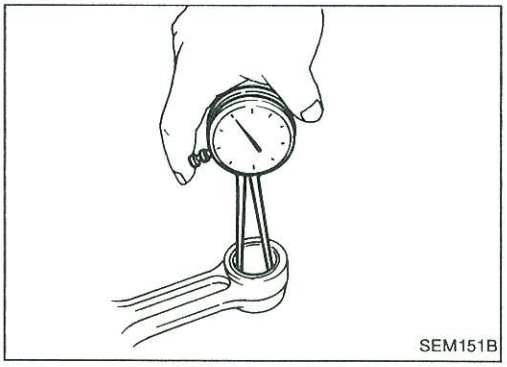
SEM151B

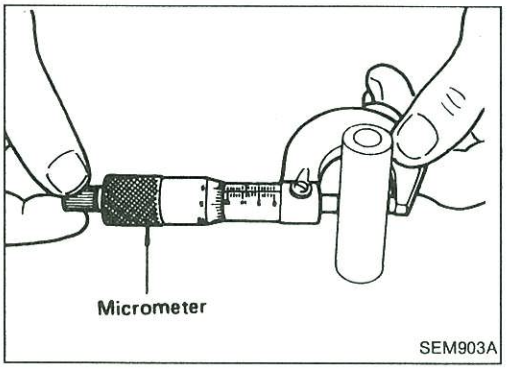

SEM903A

2. Measure outer diameter "Dp" of piston pin.
3. Calculate connecting rod bushing clearance.
   **C – Dp =**
   **0.005 - 0.017 mm (0.0002 - 0.0007 in) (Standard)**
   **0.023 mm (0.0009 in) (Limit)**
   If it exceeds the limit, replace connecting rod assembly and/or piston set with pin.

## Inspection (Cont'd)

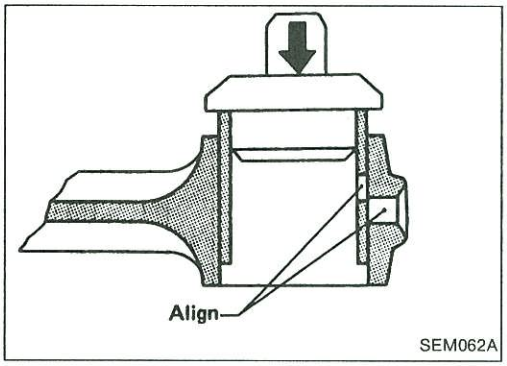


### REPLACEMENT OF CONNECTING ROD BUSHING (Small end)

1. Drive in small end bushing until it is flush with end surface of rod.

**Be sure to align the oil holes.**

2. After driving in small end bushing, ream the bushing so that clearance between small end bushing and piston pin is specified valve.

**Clearance between small end bushing and piston pin:**
**0.005 - 0.017 mm (0.0002 - 0.0007 in)**

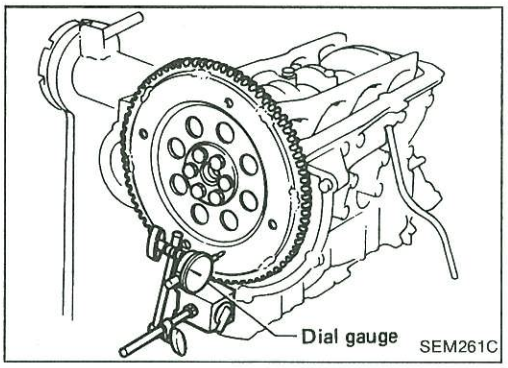


### FLYWHEEL/DRIVE PLATE RUNOUT

**Runout (Total indicator reading):**
**Flywheel (M/T model)**
**Less than 0.15 mm (0.0059 in)**
**Drive plate (A/T model)**
**Less than 0.5 mm (0.020 in)**

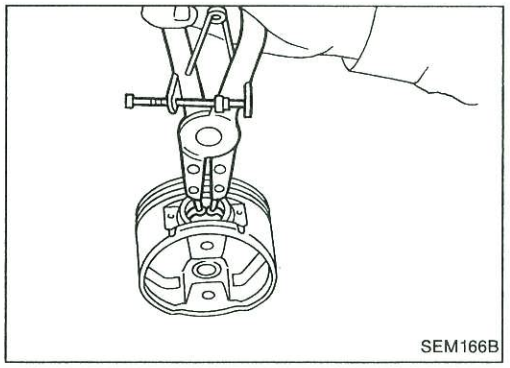


## Assembly

### PISTON

1. Install new snap ring on one side of piston pin hole.

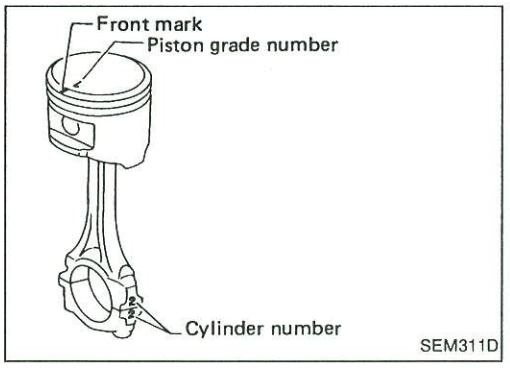


2. Heat piston to 60 to 70°C (140 to 158°F) and assemble piston, piston pin, connecting rod and new snap ring.

- **Align the direction of piston and connecting rod.**
- **Numbers stamped on connecting rod and cap correspond to each cylinder.**
- **After assembly, make sure connecting rod swings smoothly.**

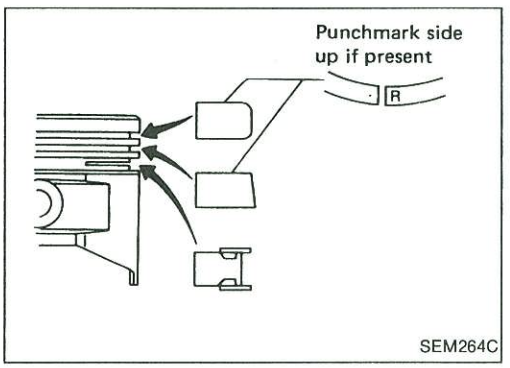


3. Set piston rings as shown.

**CAUTION:**

- **When piston rings are not being replaced, make sure that piston rings are mounted in their original positions.**
- **When piston rings are being replaced and no punchmark is present, piston rings can be mounted with either side up.**

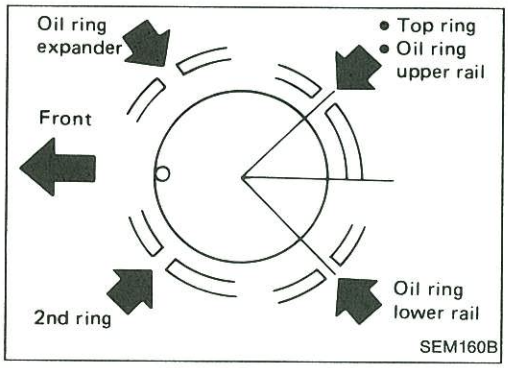


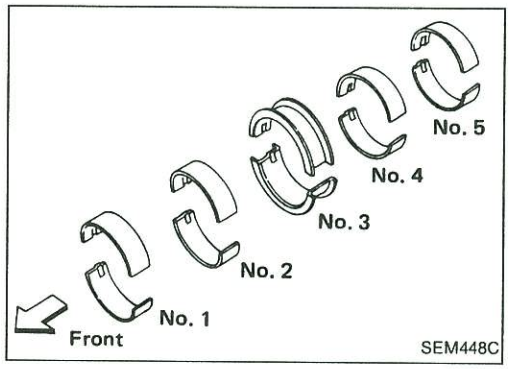


## CRANKSHAFT

1. Set main bearings in their proper positions on cylinder block and main bearing beam.

- **Confirm that correct main bearings are used. Refer to "Inspection" of this section.**

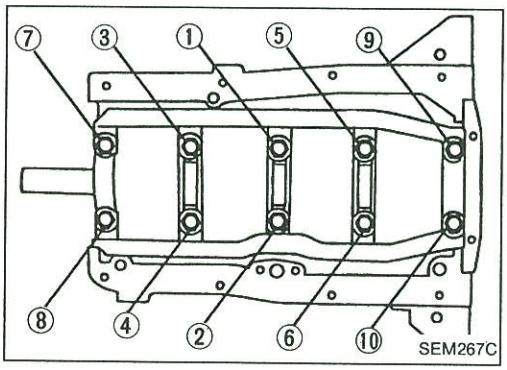


2. Install crankshaft and main bearing beam and tighten bolts to the specified torque.

- **Prior to tightening bearing cap bolts, place bearing cap in its proper position by shifting crankshaft in the axial direction.**
- **Tighten bearing cap bolts gradually in two or three stages. Start with center bearing and move outward sequentially.**
- **After securing bearing cap bolts, make sure crankshaft turns smoothly by hand.**

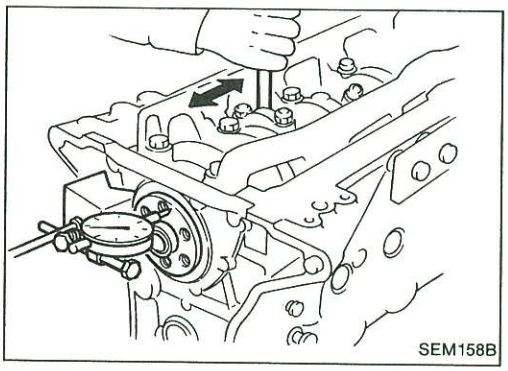


3. Measure crankshaft end play.

**Crankshaft end play:**
**Standard**
**0.05 - 0.18 mm (0.0020 - 0.0071 in)**
**Limit**
**0.3 mm (0.012 in)**

If beyond the limit, replace bearing with a new one.

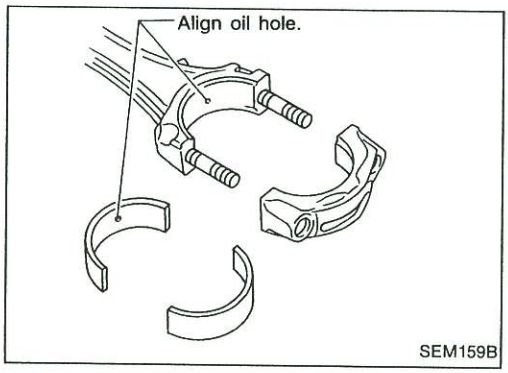


4. Install connecting rod bearings in connecting rods and connecting rod caps.

- Confirm that correct bearings are used. Refer to "Inspection".
- Install bearings so that oil hole in connecting rod aligns with oil hole of bearing.

## Assembly (Cont'd)

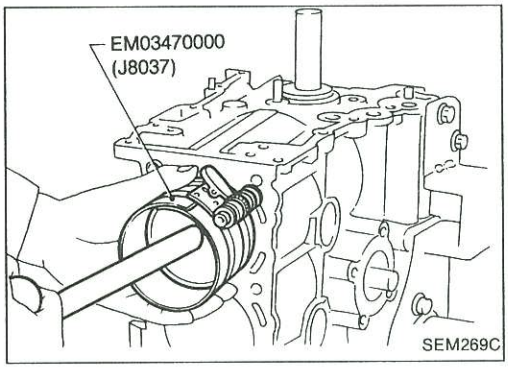


5. Install pistons with connecting rods.
a. Install them into corresponding cylinders with Tool.

- **Be careful not to scratch cylinder wall by connecting rod.**
- **Arrange so that front mark on piston head faces toward front of engine.**

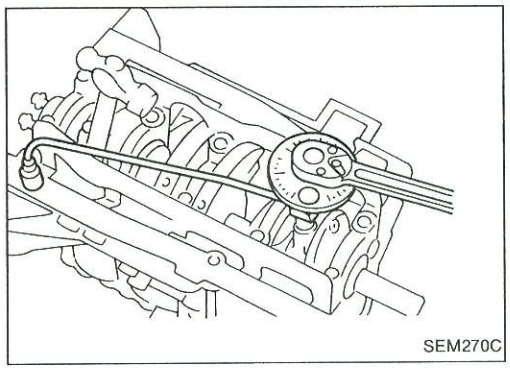


b. Install connecting rod bearing caps.
Tighten connecting rod bearing cap nuts to the specified torque.

**Connecting rod bearing nut:**

**(1) Tighten to 14 to 16 N·m (1.4 to 1.6 kg-m, 10 to 12 ft-lb).**

**(2) Tighten bolts 60 to 65 degrees clockwise with an angle wrench, or if an angle wrench is not available, tighten them to 38 to 44 N·m (3.9 to 4.5 kg-m, 28 to 33 ft-lb).**

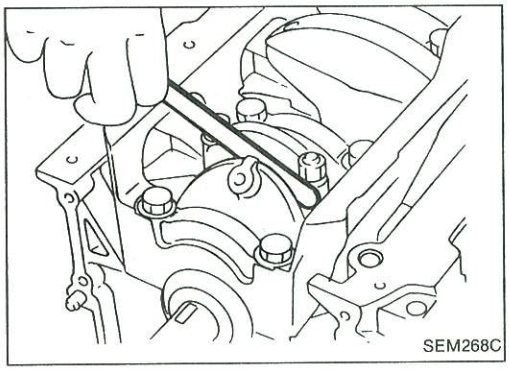


6. Measure connecting rod side clearance.

**Connecting rod side clearance:**

**Standard**

**0.2 - 0.4 mm (0.008 - 0.016 in)**

**Limit**

**0.6 mm (0.024 in)**

If beyond the limit, replace connecting rod and/or crankshaft.

### REPLACING PILOT BUSHING

1. Remove pilot bushing (M/T) or pilot converter (A/T).

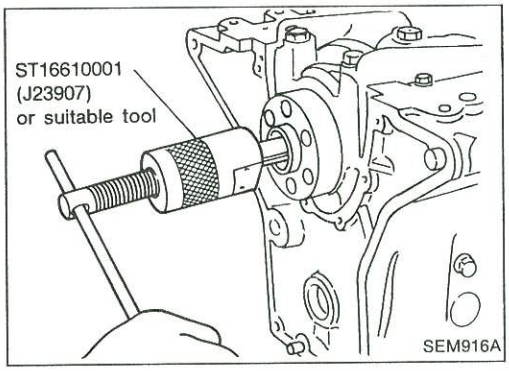


2. Install pilot bushing (M/T) or pilot converter (A/T).

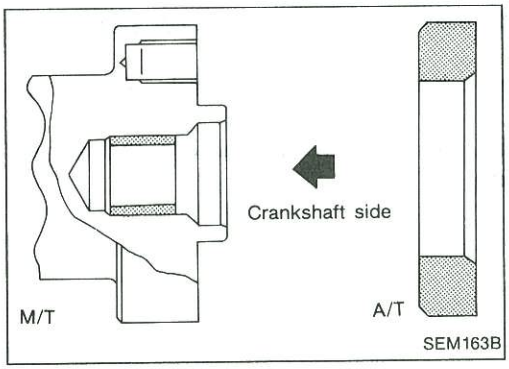

## General Specifications

| | | |
|---|---|---|
| Cylinder arrangement | | In-line 4 |
| Displacement | $cm^3$ (cu in) | 2,389 (145.78) |
| Bore and stroke | mm (in) | 89 x 96 (3.50 x 3.78) |
| Valve arrangement | | D.O.H.C. |
| Firing order | | 1-3-4-2 |
| Number of piston rings | | |
| Compression | | 2 |
| Oil | | 1 |
| Number of main bearings | | 5 |
| Compression ratio | | 9.5 |

### COMPRESSION PRESSURE

Unit: kPa (kg/$cm^2$, psi)/300 rpm

| | |
|---|---|
| Compression pressure | |
| Standard | 1,236 (12.6, 179) |
| Minimum | 1,040 (10.6, 151) |
| Differential limit between cylinders | 98 (1.0, 14) |

## Inspection and Adjustment

### CYLINDER HEAD

Unit: mm (in)

| | Standard | Limit |
|---|---|---|
| Head surface distortion | Less than 0.03 (0.0012) | 0.1 (0.004) |

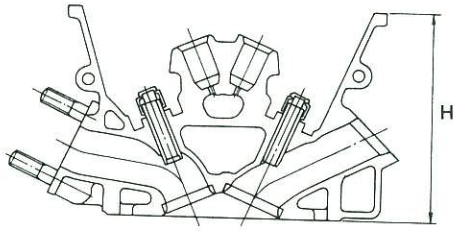


Nominal cylinder head height:
H = 126.3 - 126.5 (4.972 - 4.980)

SEM519E

### VALVE

Unit: mm (in)

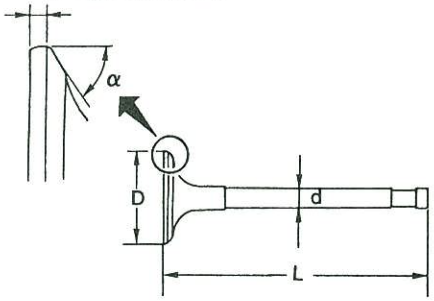


SEM188

| | |
|---|---|
| Valve head diameter "D" | |
| Intake | 36.5 - 36.7 (1.437 - 1.445) |
| Exhaust | 31.2 - 31.4 (1.228 - 1.236) |
| Valve length "L" | |
| Intake | 101.02 - 101.62 (3.9772 - 4.0008) |
| Exhaust | 98.52 - 99.72 (3.8787 - 3.9260) |
| Valve stem diameter "d" | |
| Intake | 6.965 - 6.980 (0.2742 - 0.2748) |
| Exhaust | 6.945 - 6.960 (0.2734 - 0.2740) |
| Valve seat angle "α" | |
| Intake | 45°15' - 45°45' |
| Exhaust | |
| Valve margin "T" | |
| Intake | 0.95 - 1.25 (0.0374 - 0.0492) |
| Exhaust | 1.15 - 1.45 (0.0453 - 0.0571) |
| Valve margin "T" limit | More than 0.5 (0.020) |
| Valve stem end surface grinding limit | Less than 0.2 (0.008) |

## Inspection and Adjustment (Cont'd)

### Valve spring

| | | |
|---|---|---|
| Free height | mm (in) | 44.6 (1.756) |
| Pressure N (kg, lb) at height mm (in) | | |
| Standard | | 548.70 (55.95, 123.37) at 26.0 (1.024) |
| Limit | | 489.4 (49.9, 110.0) at 26.0 (1.024)0 |
| Out-of-square | mm (in) | Less than 1.9 (0.075) |

### Valve guide

Unit: mm (in)

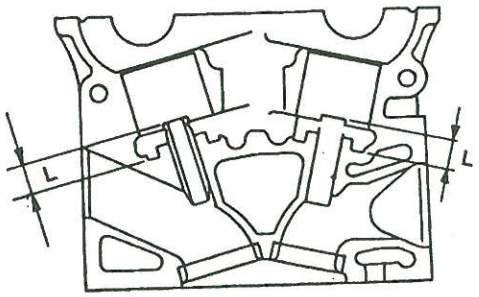


SEM301D

| | | Standard | Service |
|---|---|---|---|
| Valve guide Outer diameter | Intake | 11.023 - 11.034 (0.4340 - 0.4344) | 11.223 - 11.234 (0.4418 - 0.4423) |
| | Exhaust | 11.023 - 11.034 (0.4340 - 0.4344) | 11.223 - 11.234 (0.4418 - 0.4423) |
| Valve guide Inner diameter (Finished size) | Intake | 7.000 - 7.018 (0.2756 - 0.2763) | |
| | Exhaust | 7.000 - 7.018 (0.2756 - 0.2763) | |
| Cylinder head valve guide hole diameter | Intake | 10.975 - 10.996 (0.4321 - 0.4329) | 11.175 - 11.196 (0.4400 - 0.4408) |
| | Exhaust | 10.975 - 10.996 (0.4321 - 0.4329) | 11.175 - 11.196 (0.4400 - 0.4408) |
| Interference fit of valve guide | | 0.027 - 0.059 (0.0011 - 0.0023) | |
| | | Standard | Limit |
| Stem to guide clearance | Intake | 0.020 - 0.053 (0.0008 - 0.0021) | 0.08 (0.0031) |
| | Exhaust | 0.040 - 0.073 (0.0016 - 0.0029) | 0.1 (0.004) |
| Valve deflection limit | | 0.2 (0.008) | |
| Projection length "L" | | 13.3 - 13.9 (0.524 - 0.547) | |

### Valve lifter

Unit: mm (in)

| | |
|---|---|
| Valve lifter outer diameter | 33.960 - 33.975 (1.3370 - 1.3376) |
| Lifter guide inner diameter | 34.000 - 34.021 (1.3386 - 1.3394) |
| Clearance between lifter and filter guide | 0.025 - 0.061 (0.0010 - 0.0024) |

### Valve clearance adjustment

Unit: mm (in)

| | |
|---|---|
| Valve clearance | |
| Intake | 0.31 - 0.39 (0.012 - 0.015) |
| Exhaust | 0.33 - 0.41 (0.013 - 0.016) |

### Available shims

| Thickness mm (in) | Identification mark |
|---|---|
| 1.96 (0.0772) | 196 |
| 1.98 (0.0780) | 198 |
| 2.00 (0.0787) | 200 |
| 2.02 (0.0795) | 202 |
| 2.04 (0.0803) | 204 |
| 2.06 (0.0811) | 206 |
| 2.08 (0.0819) | 208 |
| 2.10 (0.0827) | 210 |
| 2.12 (0.0835) | 212 |
| 2.14 (0.0843) | 214 |
| 2.16 (0.0850) | 216 |
| 2.18 (0.0858) | 218 |
| 2.20 (0.0866) | 220 |
| 2.22 (0.0874) | 222 |
| 2.24 (0.0882) | 224 |
| 2.26 (0.0890) | 226 |
| 2.28 (0.0898) | 228 |
| 2.30 (0.0906) | 230 |
| 2.32 (0.0913) | 232 |
| 2.34 (0.0921) | 234 |
| 2.36 (0.0929) | 236 |
| 2.38 (0.0937) | 238 |
| 2.40 (0.0945) | 240 |
| 2.42 (0.0953) | 242 |
| 2.44 (0.0961) | 244 |
| 2.46 (0.0969) | 246 |
| 2.48 (0.0976) | 248 |
| 2.50 (0.0984) | 250 |
| 2.52 (0.0992) | 252 |
| 2.54 (0.1000) | 254 |
| 2.56 (0.1008) | 256 |
| 2.58 (0.1016) | 258 |
| 2.60 (0.1024) | 260 |
| 2.62 (0.1031) | 262 |
| 2.64 (0.1039) | 264 |
| 2.66 (0.1047) | 266 |
| 2.68 (0.1055) | 268 |

## Inspection and Adjustment (Cont'd)

### Valve seat

Unit: mm (in)

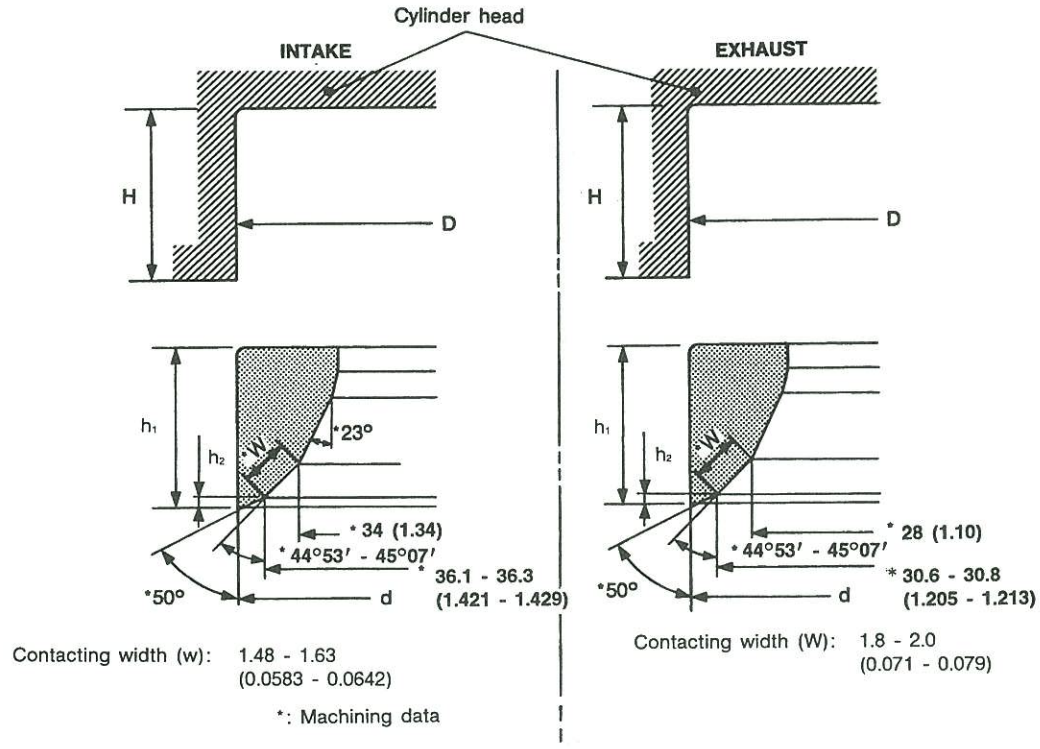


| | | Standard | Service |
|---|---|---|---|
| Cylinder head seat recess diameter (D) | In. | 37.500 - 37.516 (1.4764 - 1.4770) | 38.000 - 38.016 (1.4961 - 1.4967) |
| | Ex. | 32.200 - 32.216 (1.2677 - 1.2683) | 32.700 - 32.716 (1.2874 - 1.2880) |
| Valve seat interference fit | In. | 0.064 - 0.096 (0.0025 - 0.0038) | |
| | Ex. | 0.064 - 0.096 (0.0025 - 0.0038) | |
| Valve seat outer diameter (d) | In. | 37.580 - 37.596 (1.4795 - 1.4802) | 38.080 - 38.096 (1.4992 - 1.4998) |
| | Ex. | 32.280 - 32.296 (1.2709 - 1.2715) | 32.780 - 32.796 (1.2905 - 1.2912) |
| Depth (H) | In. | 6.19 - 6.21 (0.2437 - 0.2445) | |
| | Ex. | 6.1 - 6.3 (0.240 - 0.248) | |
| Height ($h_1$) | | 5.9 - 6.0 (0.232 - 0.236) | |
| Height ($h_2$) | In. | 0.44 - 0.64 (0.0173 - 0.0252) | |
| | Ex. | 0.53 - 0.73 (0.0209 - 0.0287) | |

## CYLINDER BLOCK

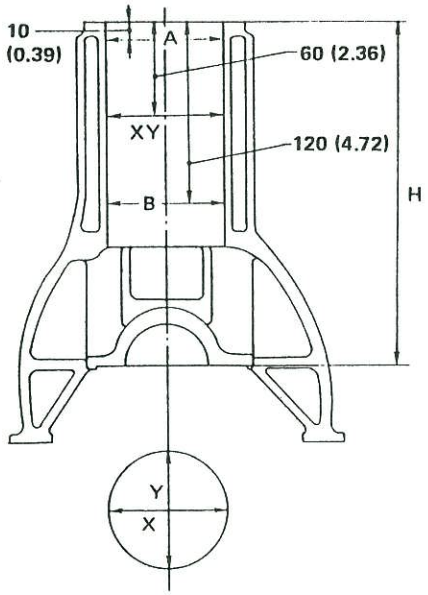


SEM447C

Unit: mm (in)

| | | | Standard | Limit |
|---|---|---|---|---|
| Distortion | | | Less than 0.03 (0.0012) | 0.1 (0.004) |
| Cylinder bore | Inner diameter | Grade 1 | 89.000 - 89.010 (3.5039 - 3.5043) | 0.2 (0.008) |
| | | Grade 2 | 89.010 - 89.020 (3.5043 - 3.5047) | |
| | | Grade 3 | 89.020 - 89.030 (3.5047 - 3.5051) | |
| | Out-of-round (X – Y) | | Less than 0.015 (0.0006) | — |
| | Taper (A – B) | | Less than 0.010 (0.0004) | — |
| Difference in inner diameter between cylinders | | | Less than 0.03 (0.0012) | 0.2 (0.008) |
| Cylinder block height (From crankshaft center) | | | 246.95 - 247.05 (9.7224 - 9.7264) | 0.2 (0.008)* |

* Total amount of cylinder head resurfacing and cylinder block resurfacing

## Inspection and Adjustment (Cont'd)

### CAMSHAFT AND CAMSHAFT BEARING

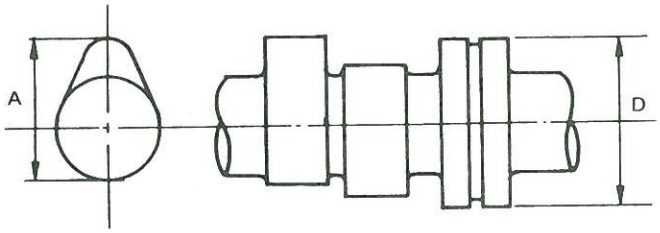


SEM568A

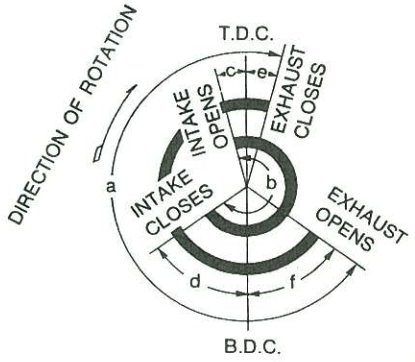


EM120

Unit: mm (in)

| | | Standard | Limit |
|---|---|---|---|
| Cam height (A) | Intake | 42.415 - 42.605 (1.6699 - 1.6774) | — |
| | Exhaust | 42.415 - 43.005 (1.6699 - 1.6931) | — |
| Wear limit of cam height | | — | 0.2 (0.008) |
| Camshaft journal to bearing clearance | | 0.045 - 0.090 (0.0018 - 0.0035) | 0.12 (0.0047) |
| Inner diameter of camshaft bearing | #1 journal | 28.000 - 28.025 (1.1024 - 1.1033) | — |
| | #2 to #5 journal | 24.000 - 24.025 (0.9449 - 0.9459) | |
| Outer diameter of camshaft journal (D) | #1 journal | 27.935 - 27.955 (1.0998 - 1.1006) | — |
| | #1 to #5 journal | 23.935 - 23.955 (0.9423 - 0.9431) | |
| Camshaft runout* | | — | 0.04 (0.0016) |
| Camshaft end play | | 0.07 - 0.15 (0.0028 - 0.0059) | 0.2 (0.008) |
| Valve timing (Degree on crankshaft) | a | 240 | — |
| | b | 248 | — |
| | c | –1 | — |
| | d | 61 | — |
| | e | 8 | — |
| | f | 60 | — |

* Total indicator reading

## Inspection and Adjustment (Cont'd)

## PISTON, PISTON RING AND PISTON PIN

### Piston

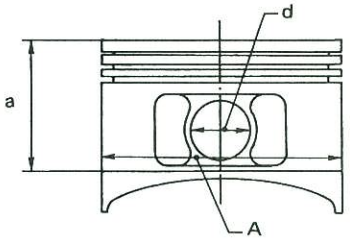


SEM444C

Unit: mm (in)

| | | | |
|---|---|---|---|
| Piston skirt diameter (A) | Standard | Grade No. 1 | 88.970 - 88.980 (3.5027 - 3.5031) |
| | | Grade No. 2 | 88.980 - 88.990 (3.5031 - 3.5035) |
| | | Grade No. 3 | 88.990 - 89.000 (3.5035 - 3.5039) |
| | Service (Oversize) | 0.5 (0.020) | 89.470 - 89.500 (3.5224 - 3.5236) |
| | | 1.0 (0.039) | 89.970 - 90.000 (3.5421 - 3.5433) |
| Dimension (a) | | Approximately 52 (2.05) | |
| Piston pin hole diameter (d) | | 20.987 - 20.999 (0.8263 - 0.8267) | |
| Piston-to-cylinder bore clearance | | 0.020 - 0.040 (0.0008 - 0.0016) | |

### Piston pin

Unit: mm (in)

| | Standard | Limit |
|---|---|---|
| Piston pin outer diameter | 20.989 - 21.001 (0.8263 - 0.8268) | — |
| Interference fit of piston pin to piston pin hole | 0 - 0.004 (0 - 0.0002) | — |
| Piston pin to connecting rod bearing clearance | 0.005 - 0.017 (0.0002 - 0.0007) | 0.023 (0.0009) |

### Piston ring

Unit: mm (in)

| | | Standard | Limit |
|---|---|---|---|
| Side clearance | Top | 0.040 - 0.080 (0.0016 - 0.0031) | 0.1 (0.004) |
| | 2nd | 0.030 - 0.070 (0.0012 - 0.0028) | 0.1 (0.004) |
| Ring gap | Top | 0.28 - 0.52 (0.0110 - 0.0205) | 1.0 (0.039) |
| | 2nd | 0.45 - 0.69 (0.0177 - 0.0272) | 1.0 (0.039) |
| | Oil (rail ring) | 0.20 - 0.69 (0.0079 - 0.0272) | 1.0 (0.039) |

## CONNECTING ROD

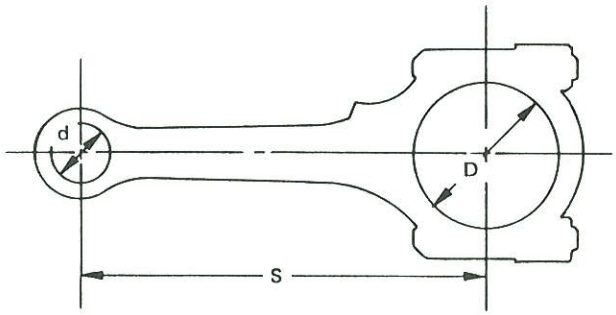


SEM570A

Unit: mm (in)

| | Standard | Limit |
|---|---|---|
| Center distance (S) | 164.95 - 165.05 (6.4941 - 6.4980) | — |
| Bend [per 100 mm (3.94 in)] | — | 0.15 (0.0059) |
| Torsion [per 100 mm (3.94 in)] | — | 0.30 (0.0118) |
| Piston pin bushing inner diameter (d)* | 21.000 - 21.012 (0.8268 - 0.8272) | — |
| Connecting rod big end inner diameter (D)* | 53.000 - 53.013 (2.0866 - 2.0871) | — |
| Side clearance | 0.2 - 0.4 (0.008 - 0.016) | 0.6 (0.024) |

* Without bearing

## Inspection and Adjustment (Cont'd)

### CRANKSHAFT

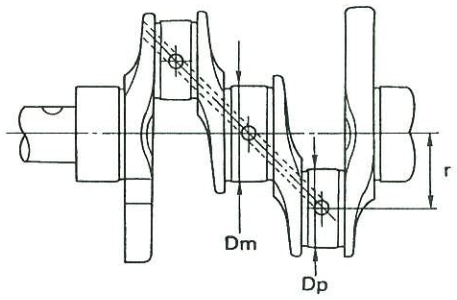


SEM394

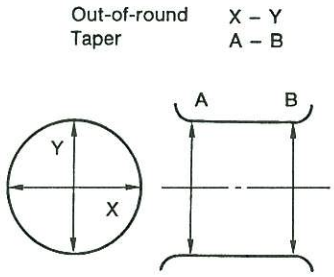


EM715

Unit: mm (in)

| | | | |
|---|---|---|---|
| Main journal diameter (Dm) | Grade | No. 0 | 59.967 - 59.975 (2.3609 - 2.3612) |
| | | No. 1 | 59.959 - 59.967 (2.3606 - 2.3609) |
| | | No. 2 | 59.951 - 59.959 (2.3603 - 2.3606) |
| Pin journal diameter (Dp) | Grade | No. 0 | 49.968 - 49.974 (1.9672 - 1.9675) |
| | | No. 1 | 49.962 - 49.968 (1.9670 - 1.9672) |
| | | No. 2 | 49.956 - 49.962 (1.9668 - 1.9670) |
| Center distance (r) | | | 47.97 - 48.05 (1.8886 - 1.8917) |

| | Standard | Limit |
|---|---|---|
| Taper of journal and pin [Ⓐ – Ⓑ] | — | 0.002 (0.0001) |
| Out-of-round of journal and pin [Ⓧ – Ⓨ] | — | 0.005 (0.0002) |
| Runout [T.I.R.]* | — | 0.04 (0.0016) |
| Free end play | 0.05 - 0.18 (0.0020 - 0.0071) | 0.3 (0.012) |
| Fillet roil | More than 0.1 (0.004) | |

* Total indicator reading

### BEARING CLEARANCE

Unit: mm (in)

| | Standard | Limit |
|---|---|---|
| Main bearing clearance | 0.020 - 0.047 (0.0008 - 0.0019) | 0.1 (0.004) |
| Connecting rod bearing clearance | 0.010 - 0.035 (0.0004 - 0.0014) | 0.09 (0.0035) |

### AVAILABLE MAIN BEARING

#### Standard

| Grade number | Thickness mm (in) | Identification color |
|---|---|---|
| 0 | 1.821 - 1.825 (0.0717 - 0.0719) | Black |
| 1 | 1.825 - 1.829 (0.0719 - 0.0720) | Brown |
| 2 | 1.829 - 1.833 (0.0720 - 0.0722) | Green |
| 3 | 1.833 - 1.837 (0.0722 - 0.0723) | Yellow |
| 4 | 1.837 - 1.841 (0.0723 - 0.0725) | Blue |

## Inspection and Adjustment (Cont'd)

### Undersize (service)

Unit: mm (in)

| | Thickness | Main journal diameter "Dm" |
|---|---|---|
| 0.25 (0.0098) | 1.952 - 1.960 (0.0769 - 0.0772) | Grind so that bearing clearance is the specified value. |

### AVAILABLE CONNECTING ROD BEARING

### Standard

| Grade number | Thickness mm (in) | Identification color |
|---|---|---|
| 0 | 1.505 - 1.508 (0.0593 - 0.0594) | — |
| 1 | 1.508 - 1.511 (0.0594 - 0.0595) | Brown |
| 2 | 1.511 - 1.514 (0.0595 - 0.0596) | Green |

### Undersize (service)

Unit: mm (in)

| | Thickness | Crank pin journal diameter "Dp" |
|---|---|---|
| 0.08 (0.0031) | 1.540 - 1.548 (0.0606 - 0.0609) | Grind so that bearing clearance is the specified value. |
| 0.12 (0.0047) | 1.560 - 1.568 (0.0614 - 0.0617) | |
| 0.25 (0.0098) | 1.625 - 1.633 (0.0640 - 0.0643) | |

### MISCELLANEOUS COMPONENTS

Unit: mm (in)

| | | |
|---|---|---|
| Camshaft sprocket runout | [T.I.R.]* | Less than 0.12 (0.0047) |
| Flywheel runout | [T.I.R.]* | Less than 0.15 (0.0059) |
| Drive plate runout | [T.I.R.]* | Less than 0.5 (0.020) |

* Total indicator reading

# ENGINE LUBRICATION & COOLING SYSTEMS

SECTION LC



## CONTENTS

**PREPARATION** ..... 2
Special Service Tools ..... 2
**ENGINE LUBRICATION SYSTEM** ..... 3
Lubrication Circuit ..... 3
Oil Pressure Check ..... 3
Oil Pump ..... 4
**ENGINE COOLING SYSTEM** ..... 6
Cooling Circuit ..... 6
System Check ..... 6
Water Pump ..... 7
Thermostat ..... 8
Radiator ..... 9
Cooling Fan ..... 9
**SERVICE DATA AND SPECIFICATIONS (S.D.S.)** ..... 10
Engine Lubrication System ..... 10
Engine Cooling System ..... 10

## Special Service Tools

| Tool number<br>(Kent-Moore No.)<br>Tool name | Description | |
|---|---|---|
| ST25051001<br>(J25695-1)<br>Oil pressure gauge | 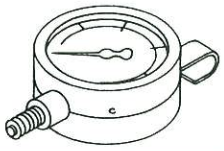 | |
| ST25052000<br>(J25695-2)<br>Hose | 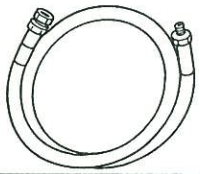 | Adapting oil pressure gauge to cylinder block |
| EG17650301<br>( — )<br>Radiator cap tester adapter | 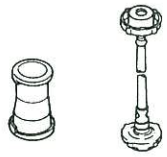 | Adapting radiator cap tester to radiator filler neck |
| WS39930000<br>( — )<br>Tube presser | 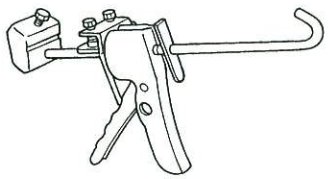 | Pressing the tube of liquid gasket |

## Lubrication Circuit

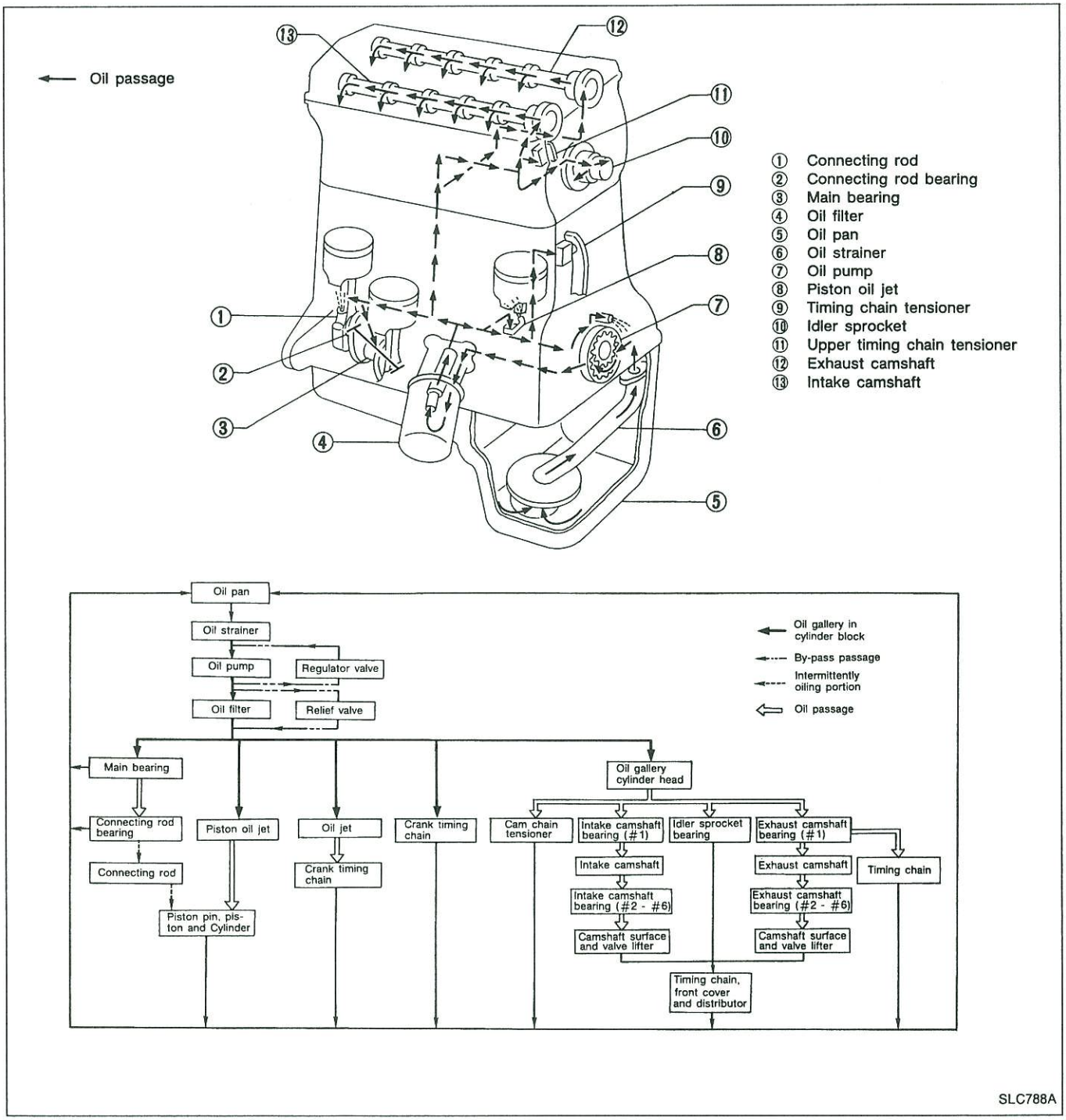


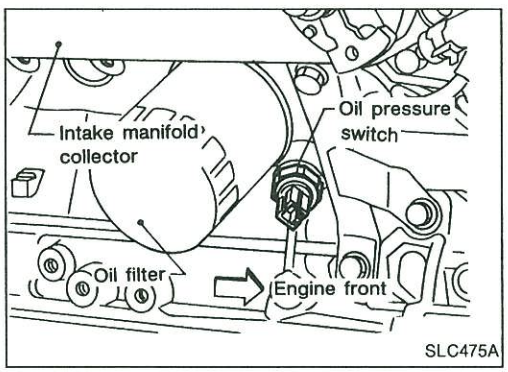


## Oil Pressure Check

**WARNING:**

- **Be careful not to burn yourself, as the engine and oil may hot.**
- **Oil pressure check should be done in "Neutral position".**

1. Check oil level.
2. Remove oil pressure switch.

## Oil Pressure Check (Cont'd)

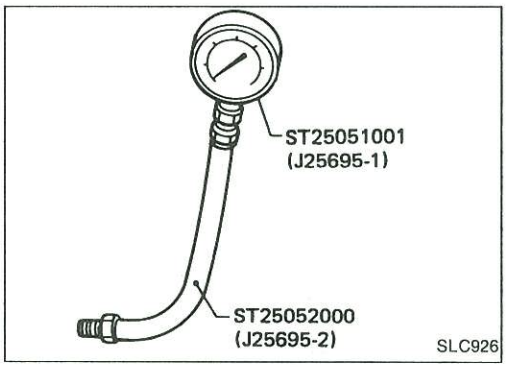


3. Install pressure gauge.
4. Start engine and warm it up to normal operating temperature.
5. Check oil pressure with engine running under no-load.

**Approximate discharge pressure: kPa (kg/cm$^2$, psi)**
**Engine speed at idle**
**More than 78 (0.8, 11)**
**Engine speed at 3,000 rpm**
**412 - 481 (4.2 - 4.9, 60 - 70)**

**If difference is extreme, check oil passage and oil pump for oil leaks.**

6. Install oil pressure switch with sealant.

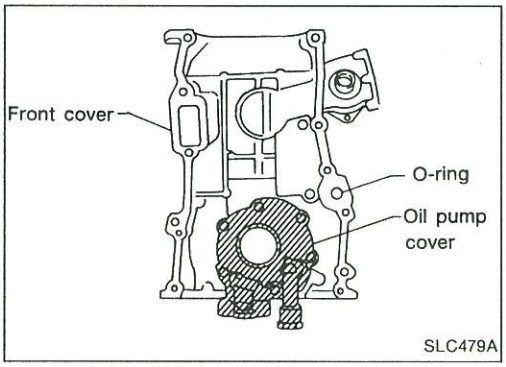


## Oil Pump

### REMOVAL

1. Remove front cover.

**Refer to "TIMING CHAIN" in section EM.**

2. Remove oil pump cover.

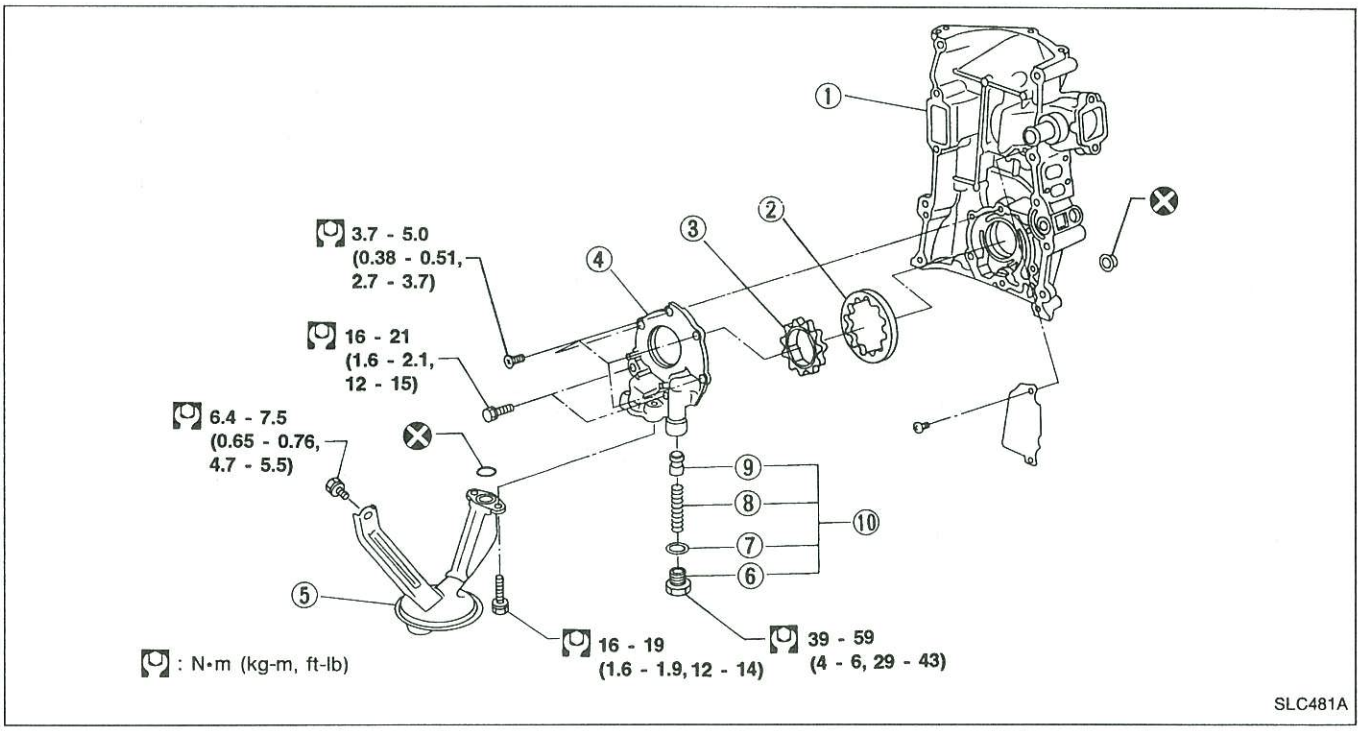


① Front cover
② Outer gear
③ Inner gear
④ Oil pump cover
⑤ Oil strainer
⑥ Cap
⑦ Washer
⑧ Spring
⑨ Regulator valve
⑩ Regulator valve assembly

- **Always replace oil seals and gaskets with new ones.**
- **When installing oil pump, apply engine oil to inner and outer gears.**

## Oil Pump (Cont'd)

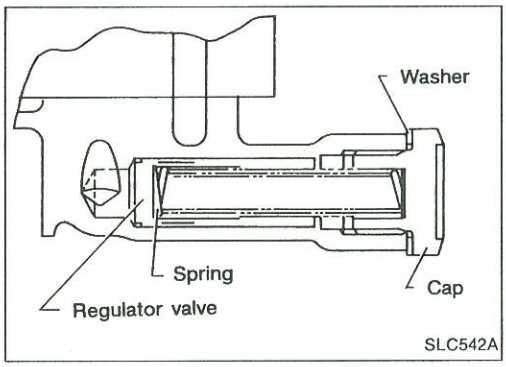


### REGULATOR VALVE INSPECTION

1. Visually inspect components for wear and damage.
2. Check oil pressure regulator valve sliding surface and valve spring.
3. Coat regulator valve with engine oil and check that it falls smoothly into the valve hole by its own weight.

If damaged, replace regulator valve set or oil pump assembly.

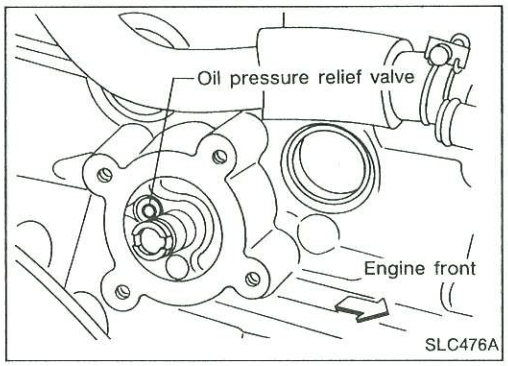


### OIL PRESSURE RELIEF VALVE INSPECTION

Inspect oil pressure relief valve for movement, cracks and breaks by pushing the ball. If replacement is necessary, remove valve by prying it out with a suitable tool.
Install a new valve in place by tapping it.

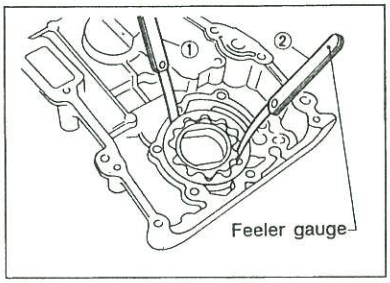


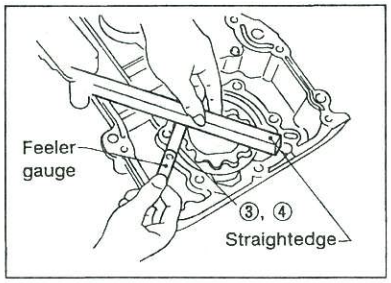


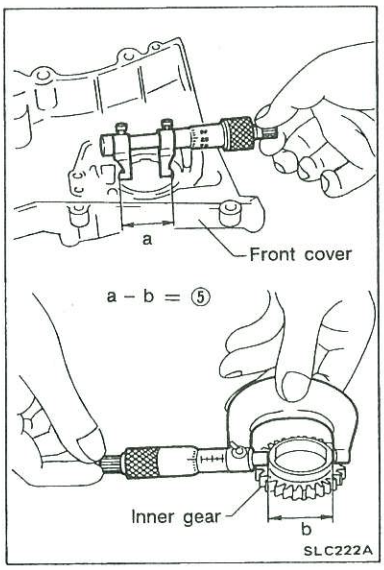


SLC834A

### OIL PUMP INSPECTION

Using a feeler gauge, check the following clearances.

**Standard clearance:** Unit: mm (in)

| | |
|---|---|
| Body to outer gear clearance ① | 0.114 - 0.20 (0.0045 - 0.0079) |
| Inner gear to outer gear tip clearance ② | 0.04 - 0.18 (0.0016 - 0.0071) |
| Cover to inner gear clearance ③ | 0.05 - 0.09 (0.0020 - 0.0035) |
| Cover to outer gear clearance ④ | 0.05 - 0.11 (0.0020 - 0.0043) |
| Inner gear to brazed portion clearance ⑤ | 0.045 - 0.091 (0.0018 - 0.0036) |

- **If the tip clearance (②) exceeds the limit, replace gear set.**
- **If body to gear clearances (①, ③, ④, ⑤) exceed the limit, replace front cover assembly.**

## Cooling Circuit

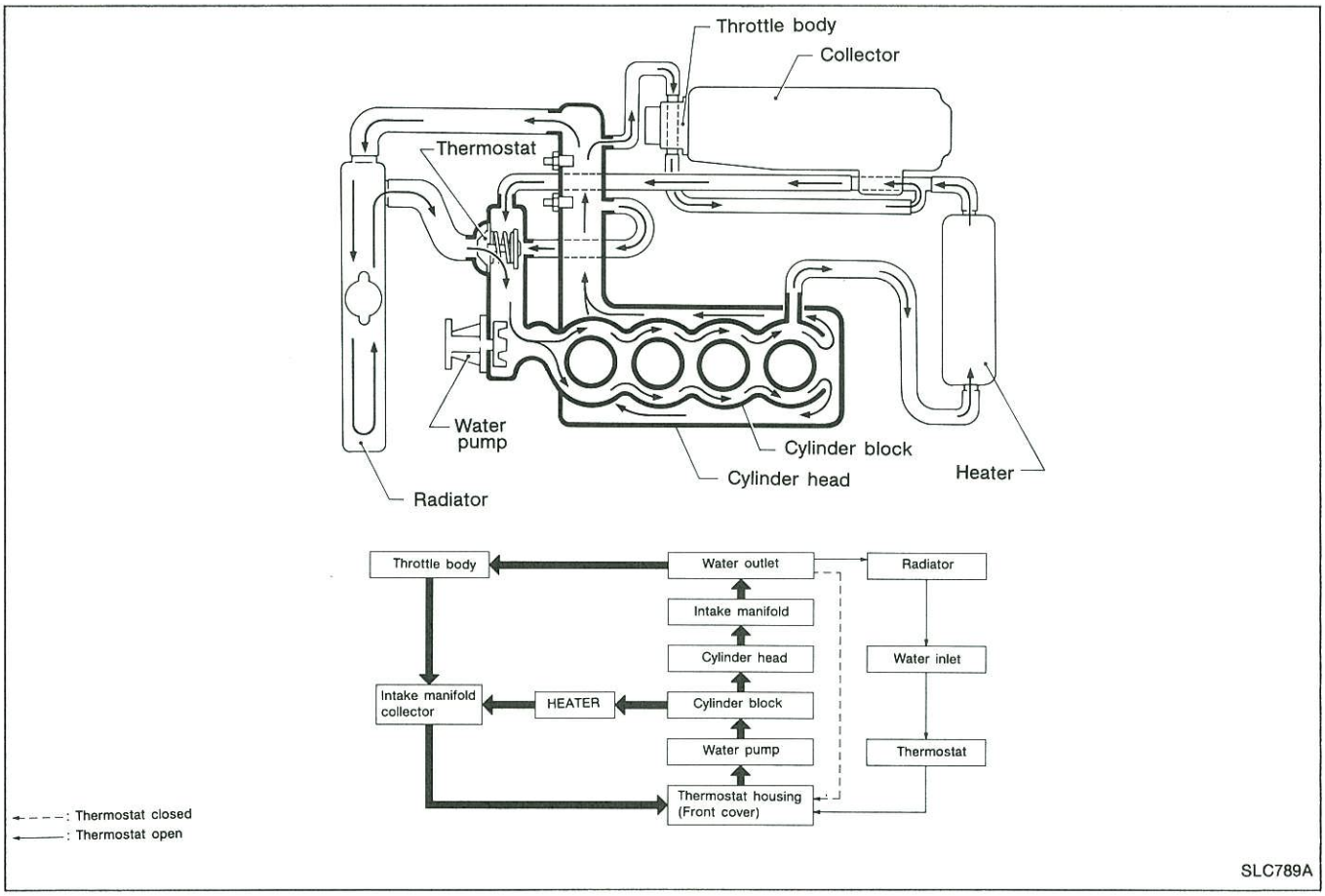


## System Check

**WARNING:**

**Never remove the radiator cap when the engine is hot; serious burns could be caused by high pressure fluid escaping from the radiator.**

**Wrap a thick cloth around cap and carefully remove the cap by turning it a quarter turn to allow built-up pressure to escape and then turn the cap all the way off.**

### CHECKING COOLING SYSTEM HOSES

Check hoses for improper attachment, leaks, cracks, damage, loose connections, chafing and deterioration.

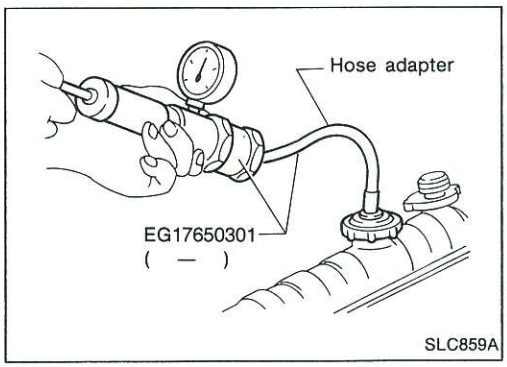


### CHECKING COOLING SYSTEM FOR LEAKS

To check for leakage, apply pressure to the cooling system with a tester.

**Testing pressure:**

**157 kPa (1.6 kg/cm$^2$, 23 psi)**

**CAUTION:**

**Higher than the specified pressure may cause radiator damage.**

## System Check (Cont'd)

### CHECKING RADIATOR CAP

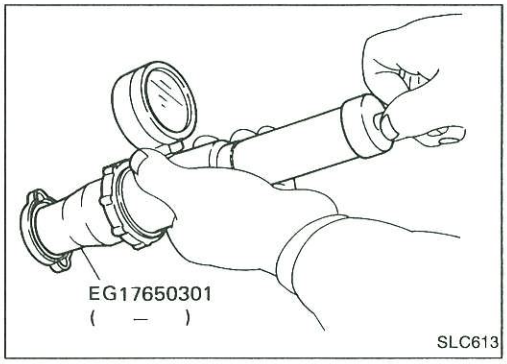


To check radiator cap, apply pressure to cap with a tester.

**Radiator cap relief pressure:**
**78 - 98 kPa (0.8 - 1.0 kg/cm², 11 - 14 psi)**

## Water Pump

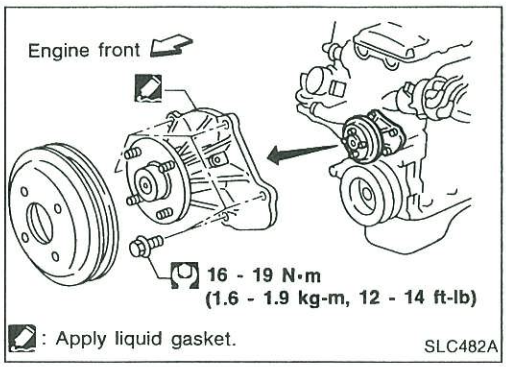


**CAUTION:**

- **When removing water pump assembly, be careful not to get coolant on drive belt.**
- **Water pump cannot be disassembled and should be replaced as a unit.**
- **After installing water pump, connect hose and clamp securely, then check for leaks using radiator cap tester.**

### REMOVAL

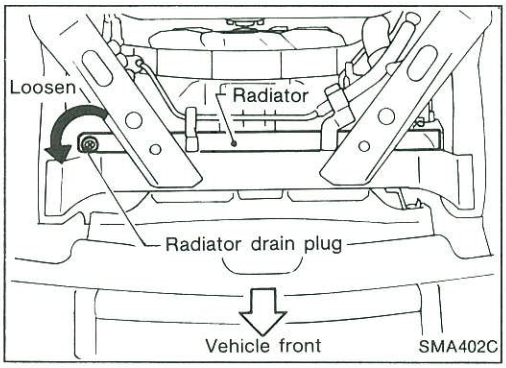


1. Drain coolant from cylinder block and radiator.
2. Remove fan coupling with fan.
3. Remove power steering pump drive belt, alternator drive belt and air compressor drive belt.
4. Remove water pump.

### INSPECTION

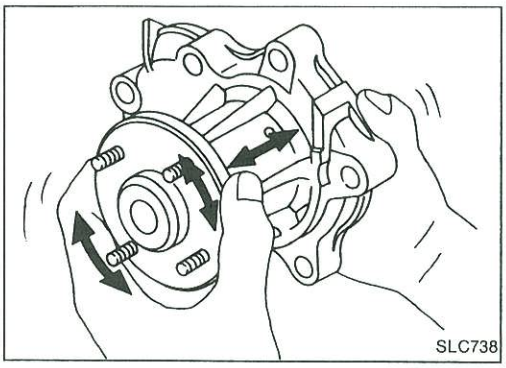


1. Check for badly rusted or corroded vanes and body assembly.
2. Check for rough operation due to excessive end play.

### INSTALLATION

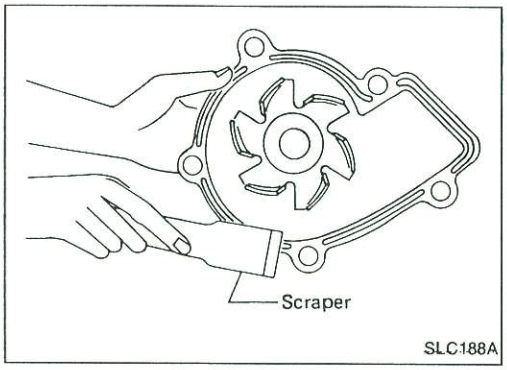


1. Before installing water pump, remove all traces of liquid gasket from mating surface using a scraper.
- Also remove traces of liquid gasket from mating surface of cylinder block.

## Water Pump (Cont'd)

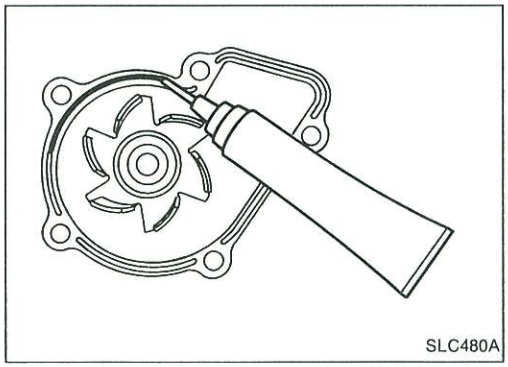


2. Apply a continuous bead of liquid gasket to mating surface of water pump.
- Use genuine liquid gasket or equivalent.

## Thermostat

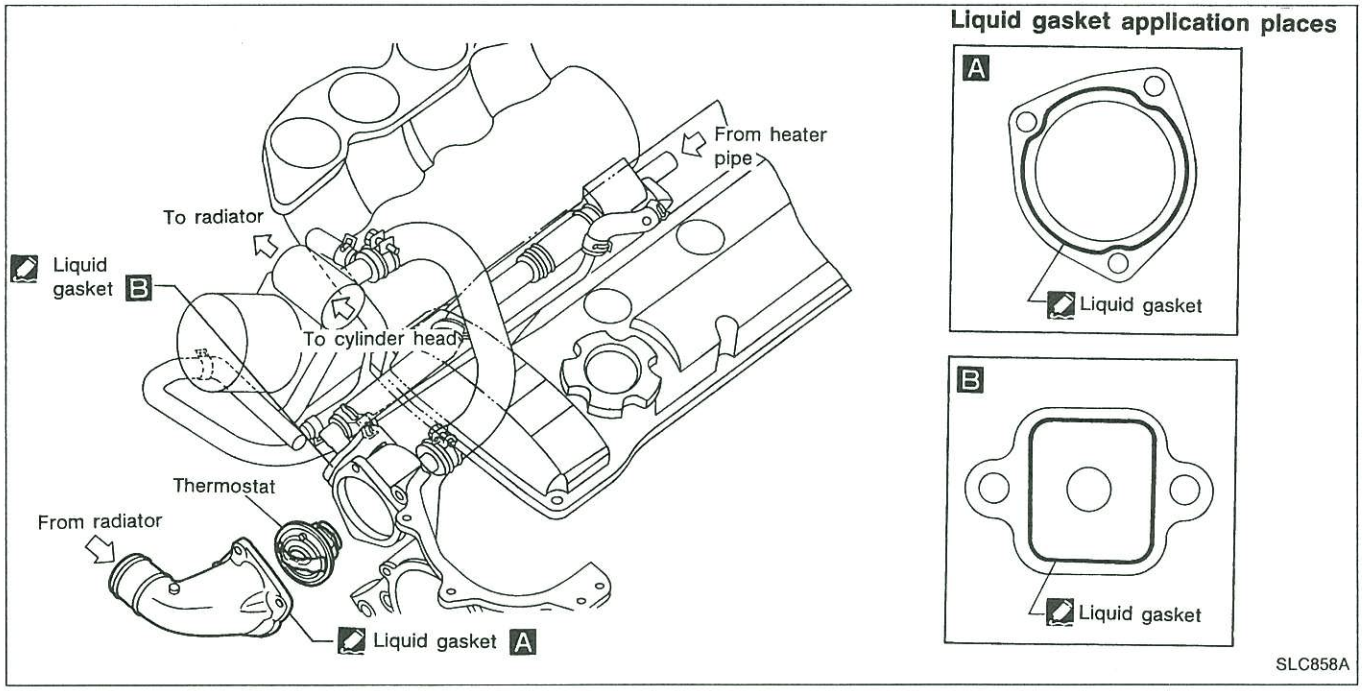


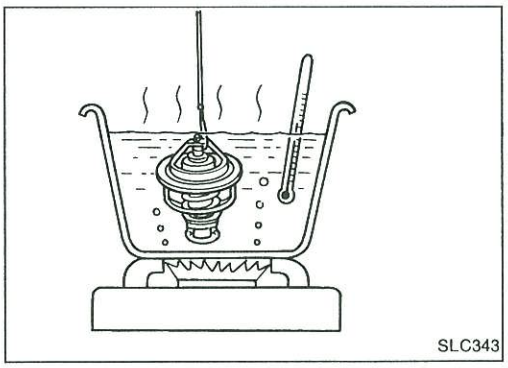


### INSPECTION

1. Check valve seating condition at ordinary room temperatures. It should seat tightly.
2. Check valve opening temperature and maximum valve lift.

| | | |
|---|---|---|
| Valve opening temperature | °C (°F) | 76.5 (170) |
| Maximum valve lift | mm/°C (in/°F) | More than 8/90 (0.31/194) |

3. Then check if valve is closed at 5°C (9°F) below valve opening temperature.

- **Apply a continuous bead of liquid gasket to mating surface of water inlet. Refer to "Water Pump".**
- **After installation, run engine for a few minutes, and check for leaks.**
- **Be careful not to spill coolant over engine compartment. Use a rag to absorb coolant.**

## Radiator

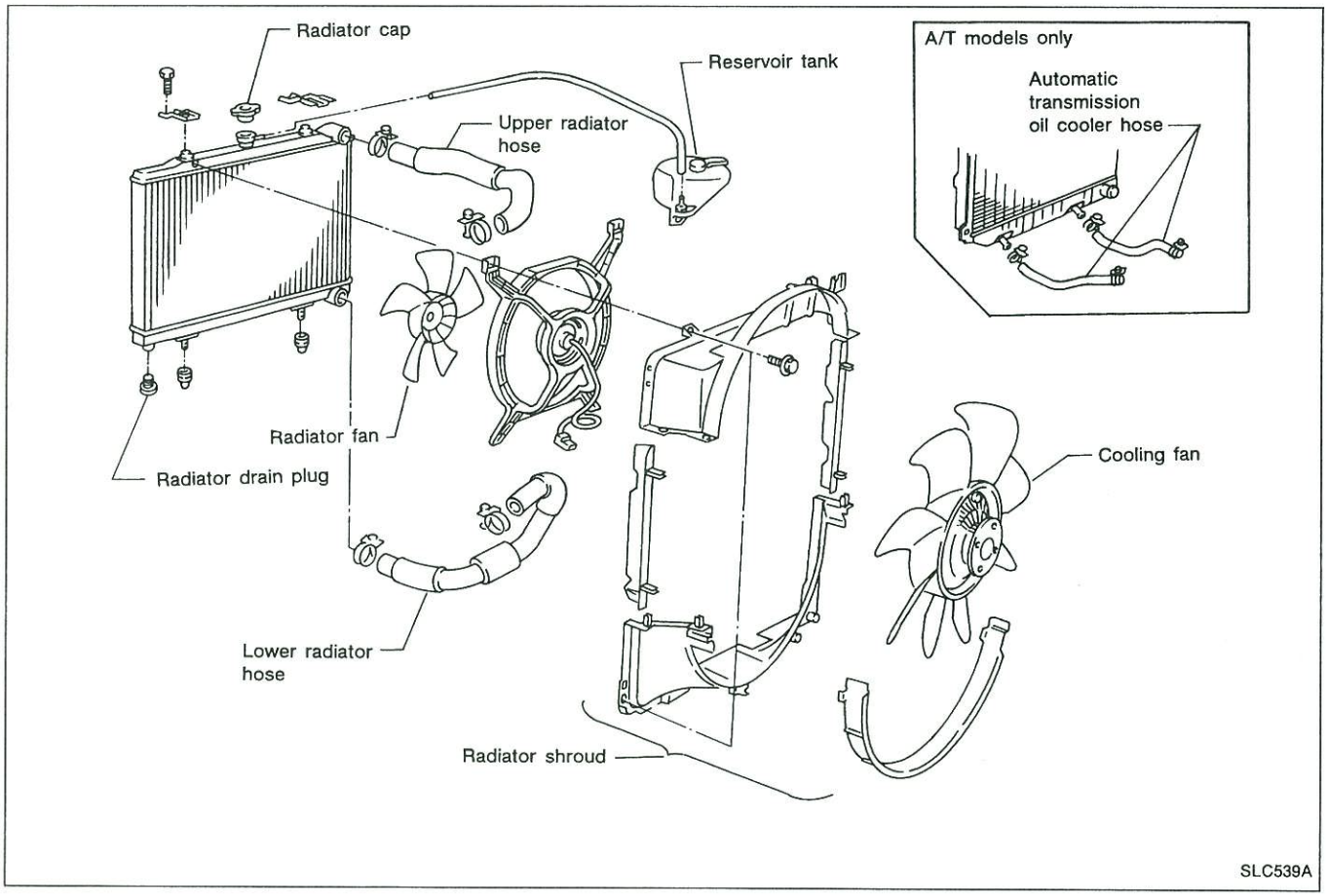


**CAUTION:**
**When filling radiator with coolant, refer to MA section.**

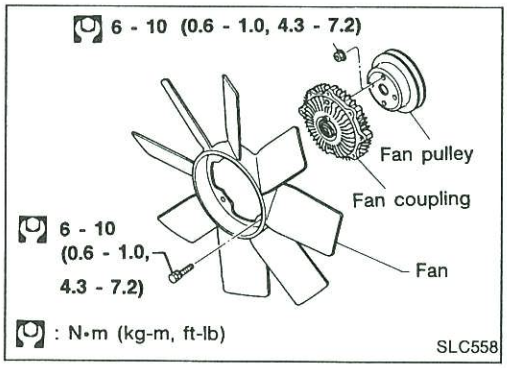


## Cooling Fan

### DISASSEMBLY AND ASSEMBLY

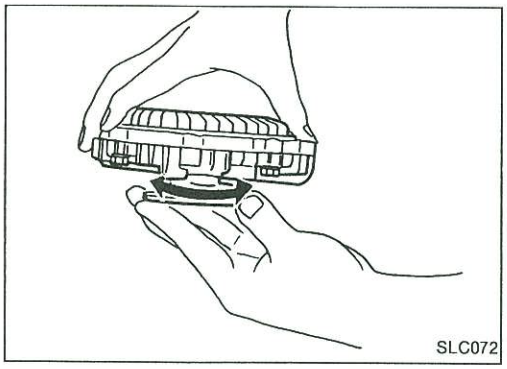


### INSPECTION

Check fan coupling for rough operation, oil leakage or bent bimetal.

# Engine Lubrication System

## Oil pressure check

| Engine speed rpm | Approximate discharge pressure kPa (kg/cm$^2$, psi) |
|---|---|
| Idle speed | More than 78 (0.8, 11) |
| 3,000 | 412 - 481 (4.2 - 4.9, 60 - 70) |

## Oil pump

Unit: mm (in)

| | | |
|---|---|---|
| Body to outer gear clearance | ..... | 0.114 - 0.20 (0.0045 - 0.0079) |
| Inner gear to outer gear tip clearance | ..... | 0.04 - 0.18 (0.0016 - 0.0071) |
| Cover to inner gear clearance | ..... | 0.05 - 0.09 (0.0020 - 0.0035) |
| Cover to outer gear clearance | ..... | 0.05 - 0.11 (0.0020 - 0.0043) |
| Inner gear to brazed portion clearance | ..... | 0.045 - 0.091 (0.0018 - 0.0036) |

# Engine Cooling System

## Thermostat

| | | |
|---|---|---|
| Valve opening temperature | °C (°F) | 76.5 (170) |
| Max. valve lift | mm/°C (in/°F) | More than 8/90 (0.31/194) |

## Radiator

Unit: kPa (kg/cm$^2$, psi)

| | |
|---|---|
| Cap relief pressure | 78 - 98 (0.8 - 1.0, 11 - 14) |
| Leakage test pressure | 157 (1.6, 23) |

# ENGINE FUEL & EMISSION CONTROL SYSTEM

## SECTION EF & EC

GI MA EM LC EF & EC FE CL MT AT PD FA RA BR ST BF HA EL

# CONTENTS


**PREPARATION AND PRECAUTIONS** ..... 3
Special Service Tool ..... 3
Precautions ..... 4
**ENGINE AND EMISSION CONTROL OVERALL SYSTEM** ..... 5
ECCS Component Parts Location ..... 5
System Diagram ..... 6
System Chart ..... 7
Vacuum Hose Drawing ..... 8
Circuit Diagram ..... 9
**ENGINE AND EMISSION CONTROL PARTS DESCRIPTION** ..... 10
Engine Control Module (ECM)-ECCS Control Module ..... 10
Crankshaft Position Sensor (CKPS) ..... 10
Mass Air Flow Sensor (MAFS) ..... 10
Engine Coolant Temperature Sensor (ECTS) ..... 11
Throttle Position Sensor (TP) & Soft/Hard Closed Throttle Position (CTP) Switch ..... 11
Fuel Injector ..... 12
Pressure Regulator ..... 12
Oxygen Sensor (O2S) ..... 12
Fuel Pump ..... 12
Ignition Coil with Power Transistor ..... 13
Idle Air Control Valve (IACV)-Air Regulator ..... 13
Idle Air Adjusting (I.A.A.) Unit ..... 13
Idle Air Control Valve (IACV)-Auxiliary Air Control (AAC) Valve ..... 13
Power Steering Oil Pressure Switch ..... 13
Vehicle Speed Sensor (VSS) ..... 14
Knock Sensor (KS) ..... 14
Fuel Filter ..... 14
Data Link Connector for CONSULT ..... 14
Exhaust Gas Recirculation (EGR) Valve ..... 14
EGR Control (EGRC)-BPT Valve ..... 15
Pulsed Secondary Air Injection (PAIR) Valve (PAIR valve) ..... 15
Pulsed Secondary Air Injection (PAIRC) Solenoid Valve ..... 15
EGR and Canister Control Solenoid Valve ..... 15
S.C.V. Control Solenoid Valve ..... 15
Carbon Canister ..... 15
EGR Temperature Sensor (For California models) ..... 16
**ENGINE AND EMISSION CONTROL SYSTEM DESCRIPTION** ..... 17
Multiport Fuel Injection (MFI) System ..... 17
Distributor Ignition (DI) System ..... 20
Idle Air Control (IACV) System ..... 22
Pulsed Secondary Air Injection (PAIR) Valve (PAIR valve) Control ..... 23
Exhaust Gas Recirculation (EGR) System ..... 23
Fuel Pump Control ..... 24
Idle Air Control Valve (IACV)-Air Regulator Control ..... 24
Acceleration Cut Control ..... 25
Swirl Control Valve (S.C.V.) Control ..... 25
Condenser Fan Control ..... 26
Fail-safe System ..... 26
**IDLE SPEED/IGNITION TIMING/IDLE MIXTURE RATIO INSPECTION** ..... 28
**TROUBLE DIAGNOSES** ..... 33
Contents ..... 33
**TROUBLE DIAGNOSES** ..... 35
**MULTIPORT FUEL INJECTION SYSTEM INSPECTION** ..... 169
Releasing Fuel Pressure ..... 169
Fuel Pressure Check ..... 169
Injector Removal and Installation ..... 170
**EVAPORATIVE EMISSION SYSTEM** ..... 171
Description ..... 171
Inspection ..... 171
**CRANKCASE EMISSION CONTROL SYSTEM** ..... 173
Description ..... 173
Inspection ..... 173

# CONTENTS (Cont'd.)

**SERVICE DATA AND SPECIFICATIONS (S.D.S.)**.....175
General Specifications.....175
Inspection and Adjustment.....175

**Note: Refer to Foldout page for "ECCS WIRING DIAGRAM".**

**When you read wiring diagrams:**
- **Read GI section, "HOW TO READ WIRING DIAGRAMS".**
- **See EL section, "POWER SUPPLY ROUTING" for power distribution circuit.**

**When you perform trouble diagnoses, read GI section, "HOW TO FOLLOW FLOW CHART IN TROUBLE DIAGNOSES".**

## Special Service Tool

| Tool number<br>(Kent-Moore No.)<br>Tool name | Description |
|---|---|
| EG11160000<br>( — )<br>Ignition coil adapter harness | 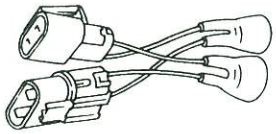 Measuring engine speed |

# Precautions

**ECM**
- Do not disassemble ECM (ECCS control module).
- Do not turn diagnosis mode selector forcibly.
- If a battery terminal is disconnected, the memory will return to the ECM value. The ECM will now start to self-control at its initial value. Engine operation can vary slightly when the terminal is disconnected. However, this is not an indication of a problem. Do not replace parts because of a slight variation.
- Do not apply undue force to mounting bracket.
- Before connecting or disconnecting ECM connector, make sure red and green LEDs are off after turning ignition key off.
- Always install the properly specified ECM on car; otherwise, erroneous engine operation may result.
- Disconnect connector by pulling it (not the harness) straight out.
- Before connecting connector, make sure all pins are straight.

**WIRELESS EQUIPMENT**
- When installing a C.B. ham radio or a mobile phone, be sure to observe the following, as installation location may affect the electronic control systems.

1) Keep antenna as far as possible away from electronic control units.
2) Keep antenna feeder line more than 20 cm (7.9 in) away from harness of electronic controls.
   Do not let them run parallel for a long distance.
3) Adjust antenna and feeder line so that standing-wave ratio can be kept smaller.
4) Be sure to ground radio to vehicle body.

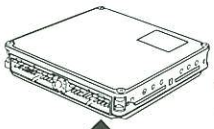

**INJECTOR**
- Do not disconnect injector harness connectors with engine running.
- Do not apply battery power directly to injectors; otherwise injectors will be damaged.

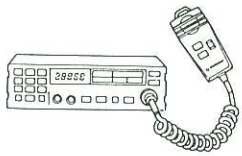

**BATTERY**
- Always use a 12 volt battery as a power source.
- Do not disconnect battery cables while the engine is running.
- Do not reverse polarity of battery when connecting it. Otherwise, ECM and/or injectors may be burned.

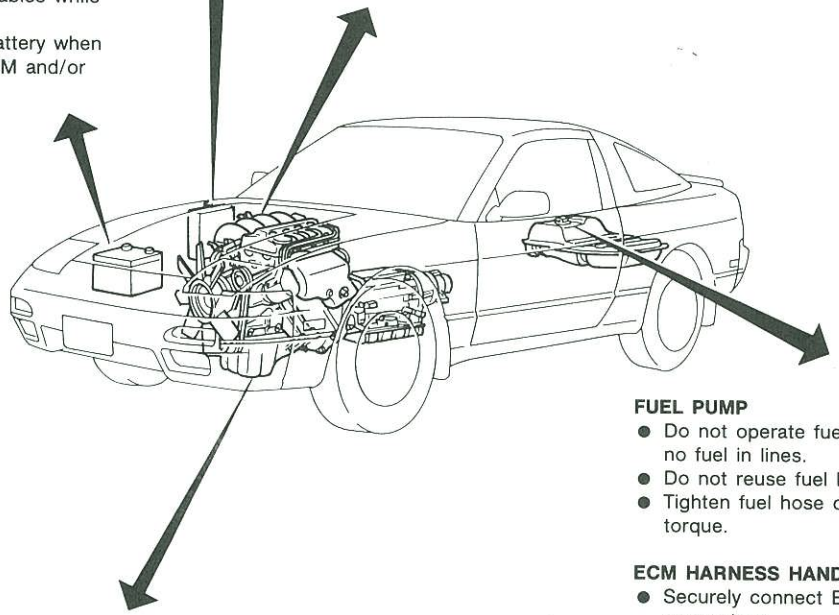

**FUEL PUMP**
- Do not operate fuel pump when there is no fuel in lines.
- Do not reuse fuel hose clamps.
- Tighten fuel hose clamps to the specified torque.

**ECM HARNESS HANDLING**
- Securely connect ECM harness connectors.
  A poor connection can cause extremely high voltage to develop in the coil and condenser, resulting in damage to ICs.
- Keep ECM harness at least 10 cm (3.9 in) away from adjacent harnesses, to prevent an ECM system malfunction due to receiving external noise, degraded operation of ICs, etc.
- Keep ECM parts and harnesses dry.
- Before removing parts, turn off ignition switch and then disconnect battery ground cable.

**ECCS PARTS HANDLING**
- Handle mass air flow sensor carefully to avoid damage.
- Do not disassemble mass air flow sensor.
- Do not clean mass air flow sensor with detergent.
- Do not jolt or jar the crankshaft position sensor.

**WHEN STARTING**
- Do not depress accelerator pedal when starting.
- Immediately after starting, do not rev up engine unnecessarily.
- Do not rev up engine just prior to shutdown.

MEF858C

## ECCS Component Parts Location

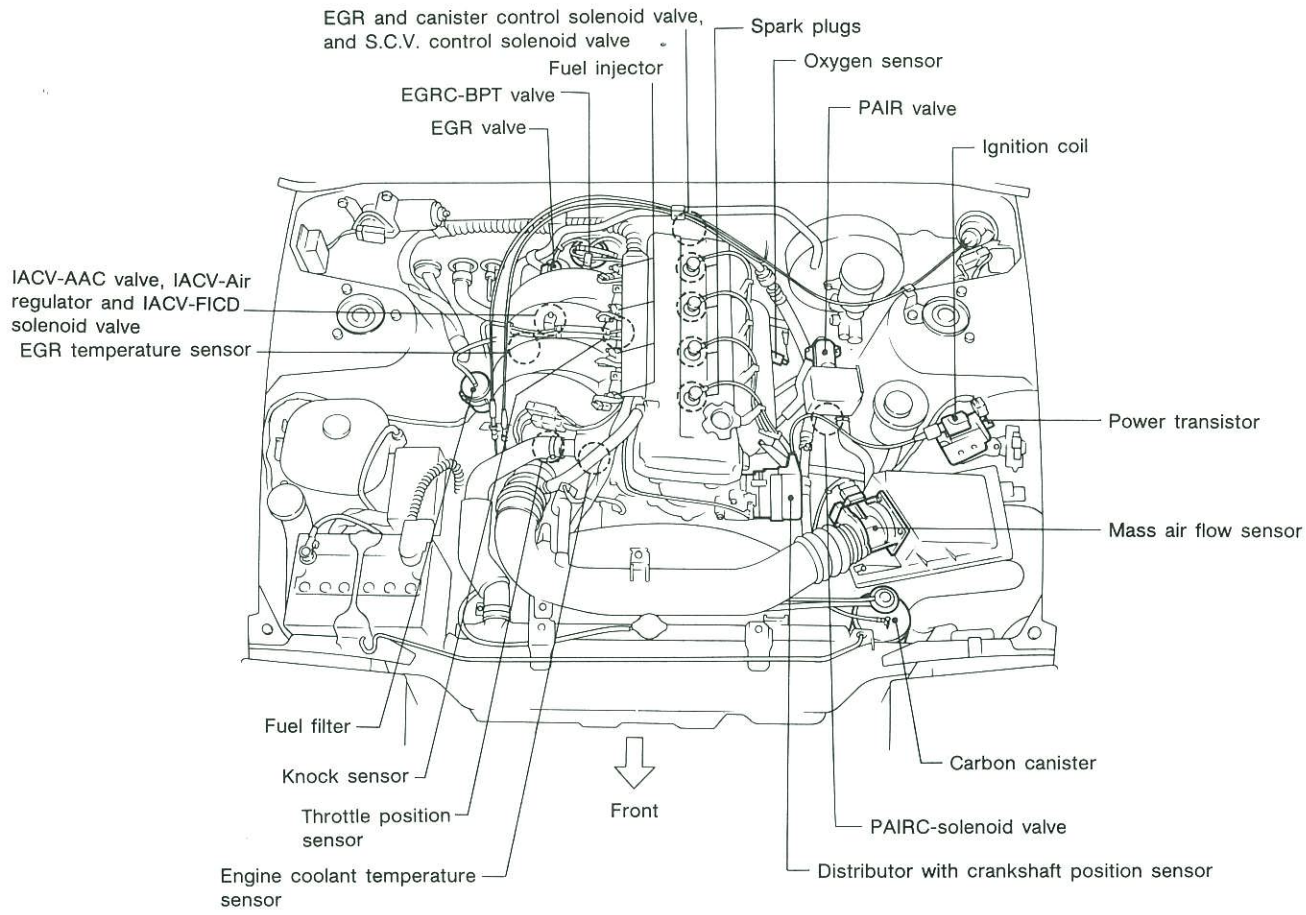


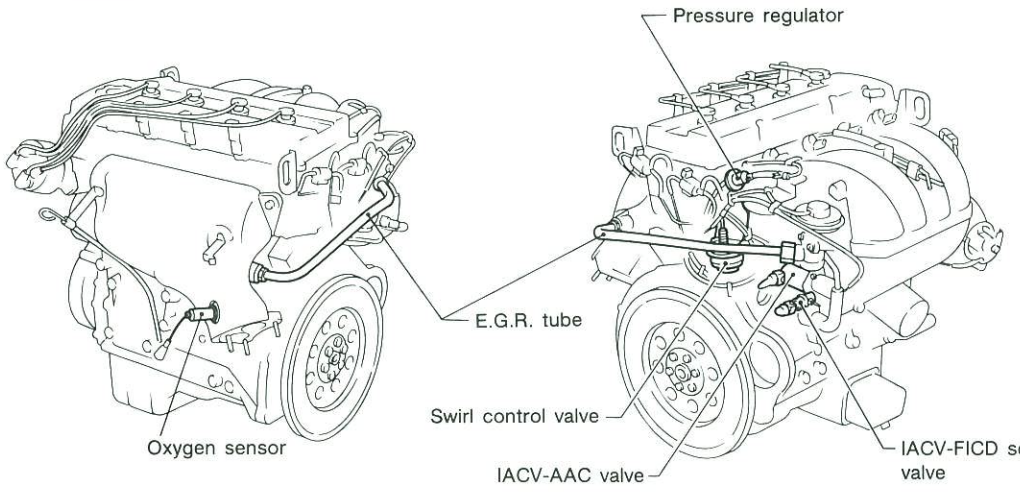


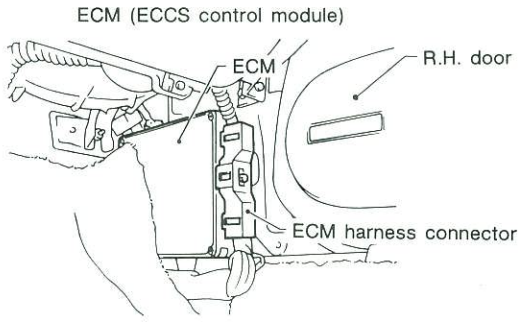


SEF650M

## System Diagram

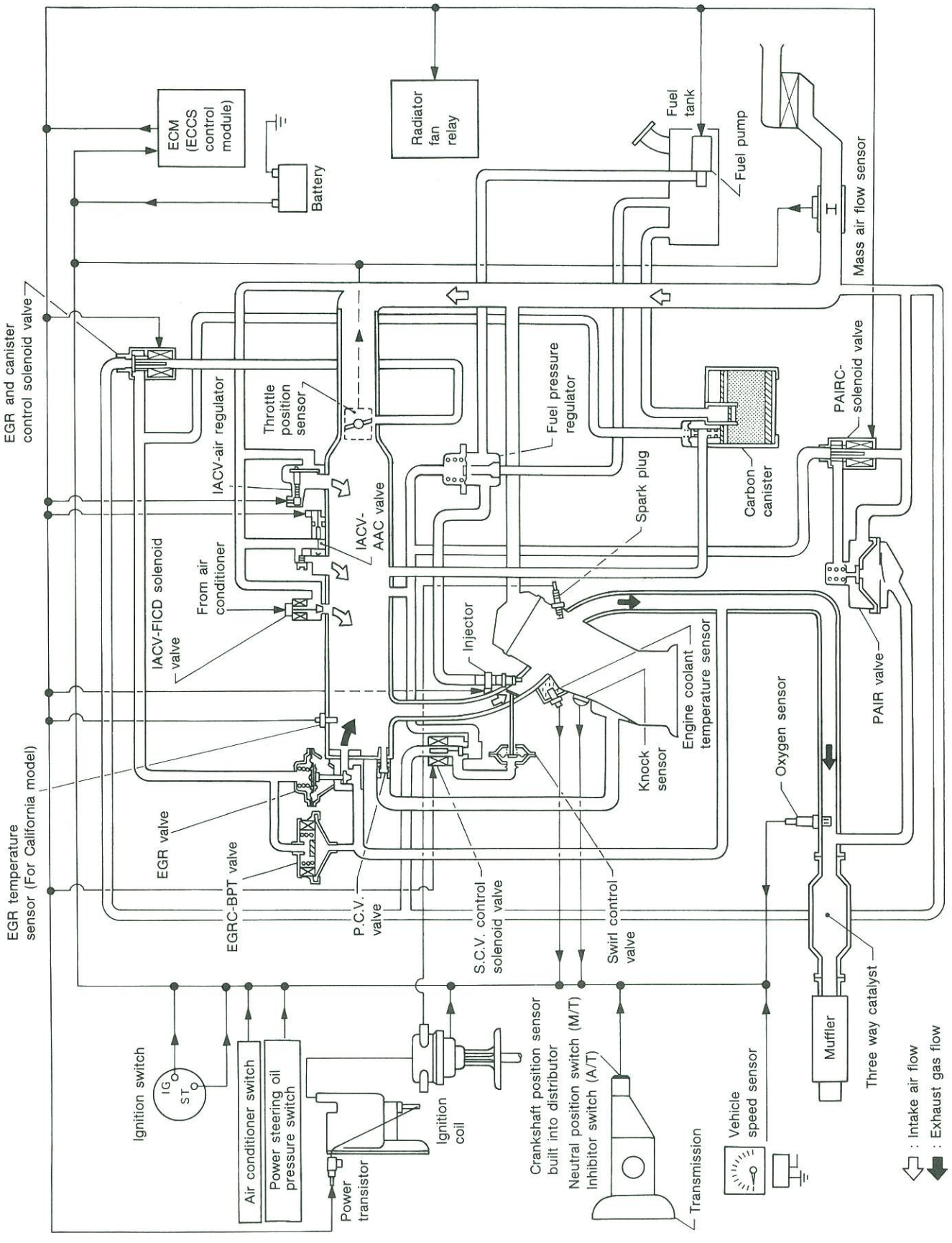


MEF861C

## System Chart

### ECCS CONTROL SYSTEM

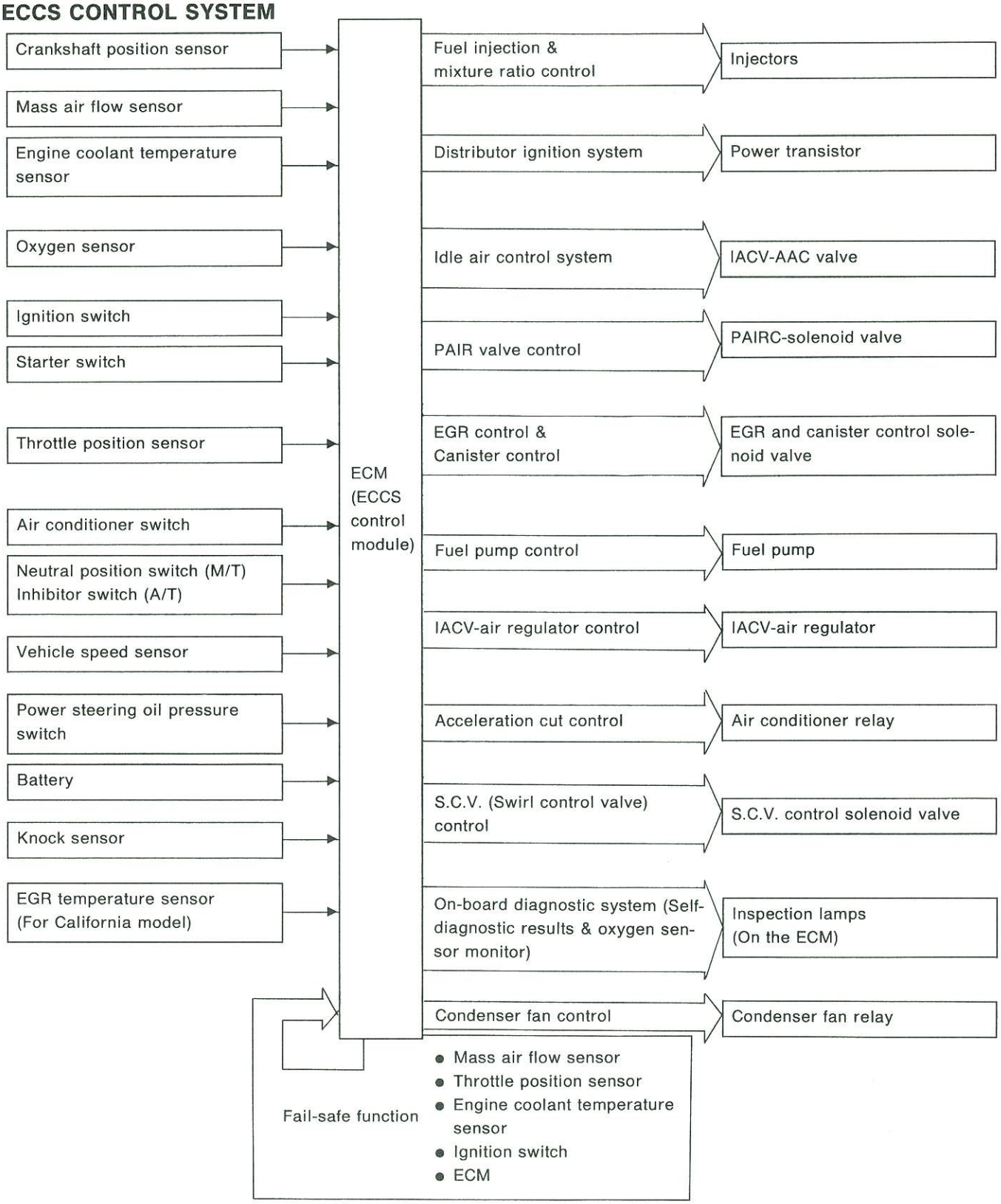

## Vacuum Hose Drawing

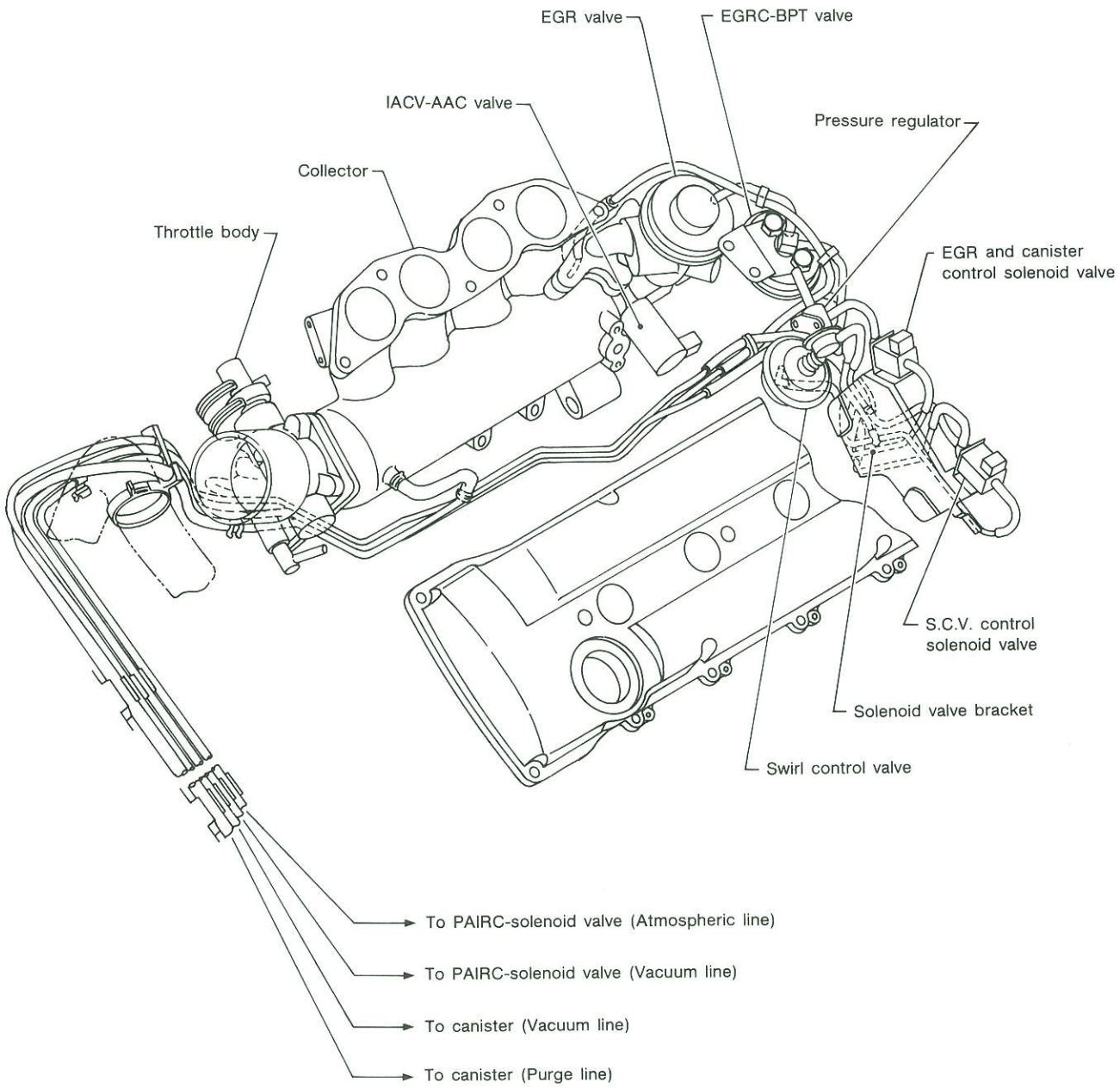


MEF862C

## Circuit Diagram

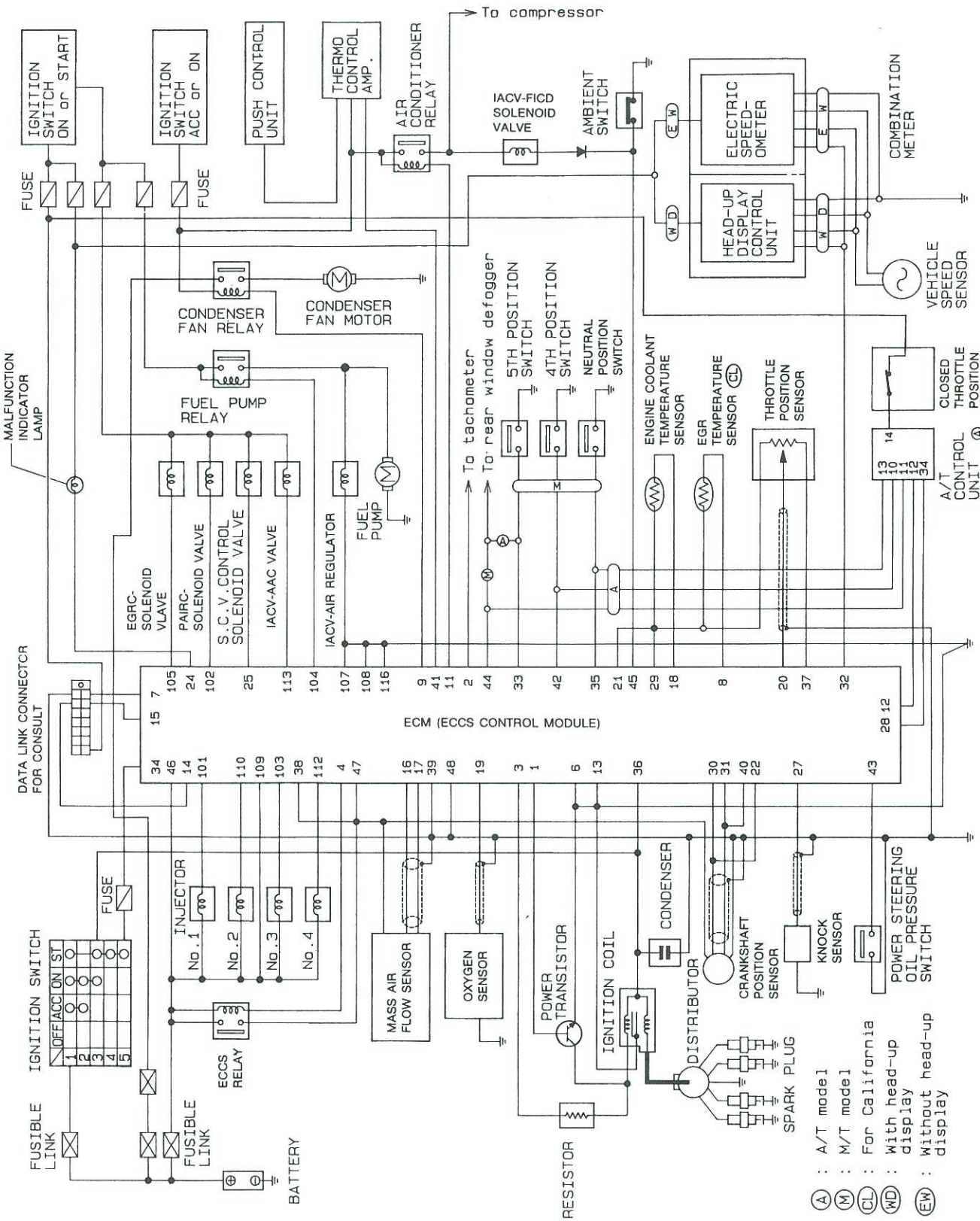


MEF973C

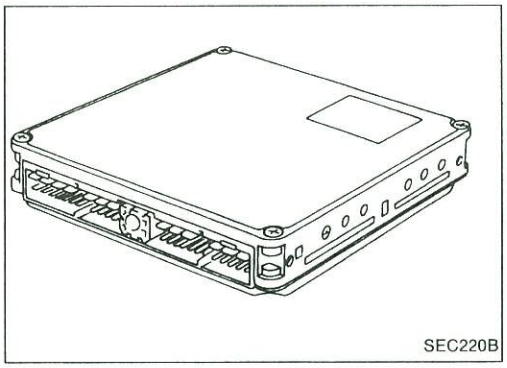
SEC220B

## Engine Control Module (ECM)-ECCS Control Module

The ECM consists of a microcomputer, inspection lamps, a diagnostic test mode selector, and connectors for signal input and output and for power supply. The unit controls the engine.

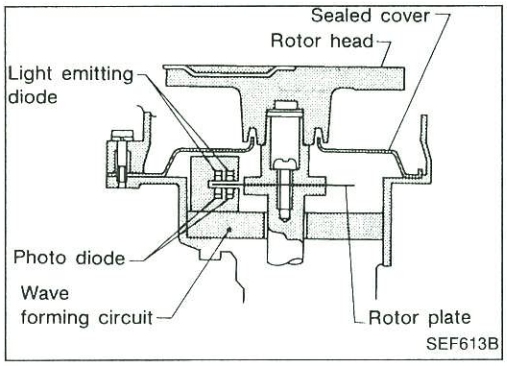

SEF613B

## Crankshaft Position Sensor (CKPS)

The crankshaft position sensor is a basic component of the entire ECCS. It monitors engine speed and piston position, and sends signals to the ECM to control fuel injection, ignition timing and other functions.

The crankshaft position sensor has a rotor plate and a wave-forming circuit. The rotor plate has 360 slits for 1° signal and 4 slits for 180° signal. Light Emitting Diodes (L.E.D.) and photo diodes are built in the wave-forming circuit.

When the rotor plate passes between the L.E.D. and the photo diode, the slits in the rotor plate continually cut the light being transmitted to the photo diode from the L.E.D. This generates rough-shaped pulses which are converted into on-off signals by the wave-forming circuit, which are then sent to the ECM.

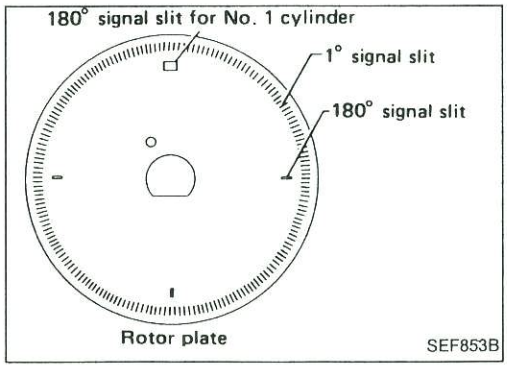

SEF853B

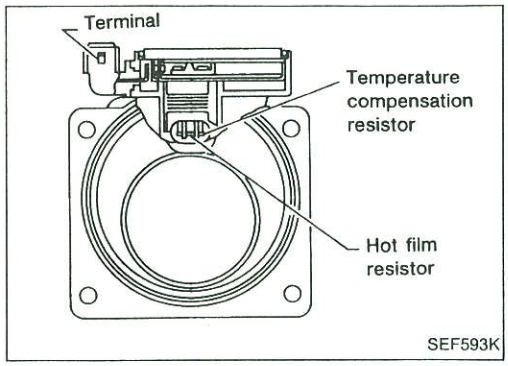

SEF593K

## Mass Air Flow Sensor (MAFS)

The mass air flow sensor measures the intake air flow rate by measuring a part of the entire flow. Measurements are made in such a way that the ECM receives electrical output signals varied by the amount of heat emitting from the hot film placed in the stream of the intake air.

When intake air flows into the intake manifold through a route around the hot film, the heat generated from the hot film is taken away by the air. The amount of heat reduction depends on the air flow. The temperature of the hot film is automatically controlled to a certain number of degrees.

Therefore, it is necessary to supply the hot film with more electric current in order to maintain the temperature of the hot film. The ECM detects the air flow by means of this current change.

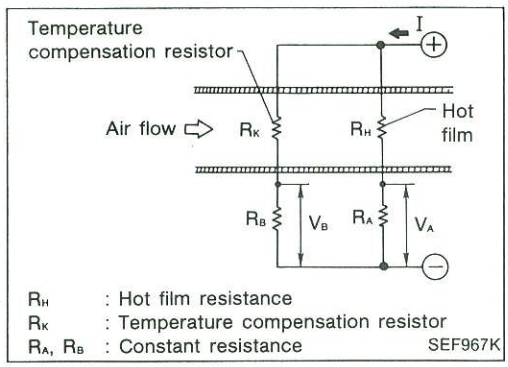

SEF967K

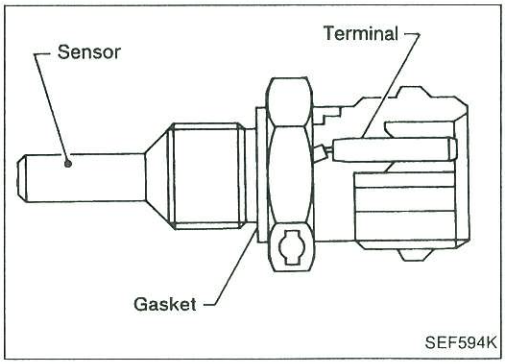


## Engine Coolant Temperature Sensor (ECTS)

The engine coolant temperature sensor detects the engine coolant temperature, which is dependent on engine coolant temperature, and transmits a signal to the ECM.

The temperature sensing unit employs a thermistor which is sensitive to the change in temperature. Electrical resistance of the thermistor decreases in response to the temperature rise.

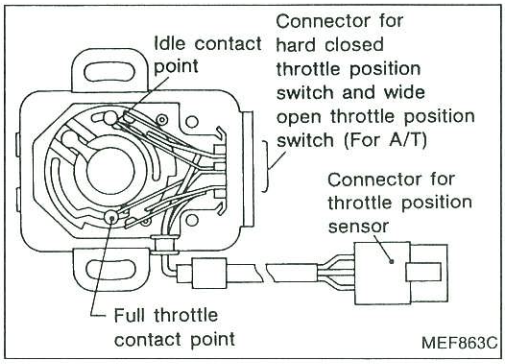


## Throttle Position Sensor (TP) & Soft/Hard Closed Throttle Position (CTP) Switch

The throttle position sensor responds to the accelerator pedal movement. This sensor is a kind of potentiometer which transforms the throttle position into output voltage, and emits the voltage signal to the ECM. In addition, the sensor detects the opening and closing speed of the throttle valve and feeds the voltage signal to the ECM.

Closed throttle position of the throttle valve is determined by the ECM receiving the signal from the throttle position sensor. This system is called "soft closed throttle position switch" and controls engine operation such as fuel cut. On the other hand, "hard closed throttle position switch", which is built into the throttle position sensor unit on A/T equipped models, is used not for engine control.

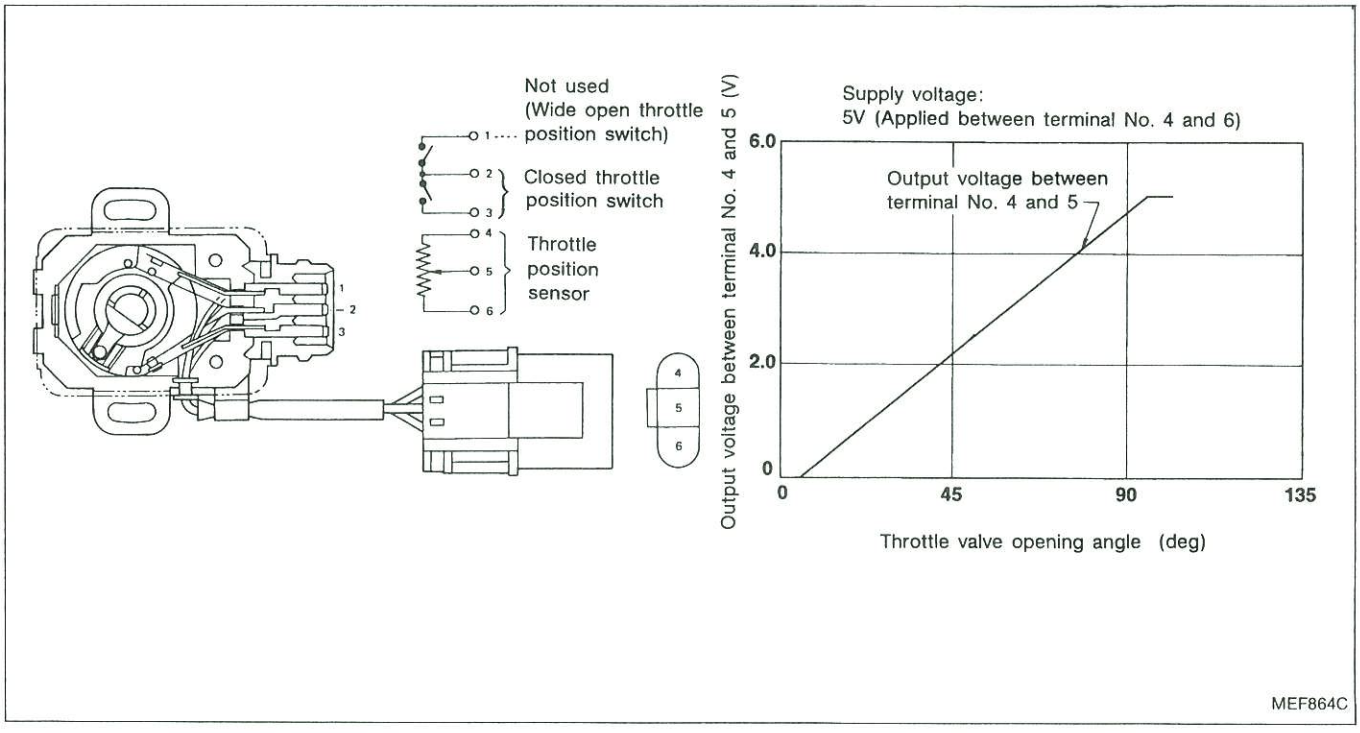

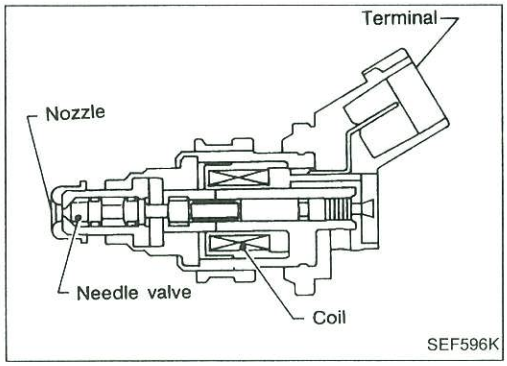


## Fuel Injector

The fuel injector is a small, elaborate solenoid valve. As the ECM sends injection signals to the injector, the coil in the injector pulls the needle valve back and fuel is released into the intake manifold through the nozzle. The injected fuel is controlled by the ECM in terms of injection pulse duration.

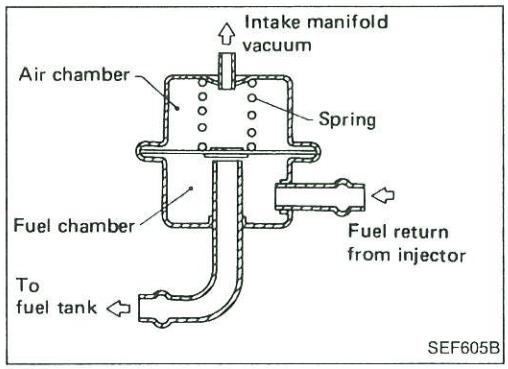


## Pressure Regulator

The pressure regulator maintains the fuel pressure at 299.1 kPa (3.05 kg/cm$^2$, 43.4 psi). Since the injected fuel amount depends on injection pulse duration, it is necessary to maintain the pressure at the above value.

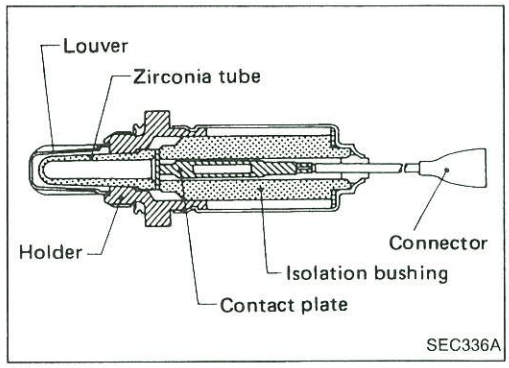


## Oxygen Sensor (O2S)

The oxygen sensor, which is placed into the exhaust manifold, monitors the amount of oxygen in the exhaust gas.
The sensor has a closed-end tube made of ceramic zirconia. The outer surface of the tube is exposed to exhaust gas, and the inner surface to atmosphere. The zirconia of the tube compares the oxygen density of exhaust gas with that of atmosphere, and generates electricity. In order to improve the generating power of the zirconia, its tube is coated with platinum. The voltage is approximately 1V in a richer condition of the mixture ratio than the ideal air-fuel ratio, while approximately 0V in leaner conditions. The radical change from 1V to 0V occurs at around the ideal mixture ratio. In this way, the oxygen sensor detects the amount of oxygen in the exhaust gas and sends the signal of approximately 1V or 0V to the ECM.

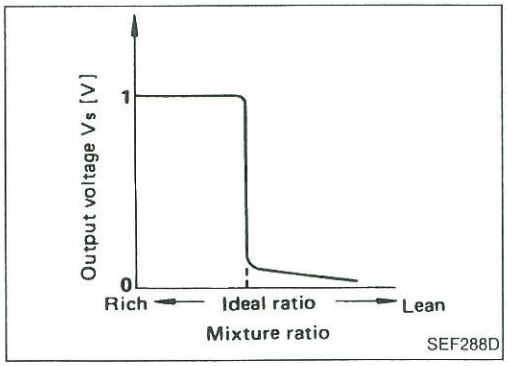


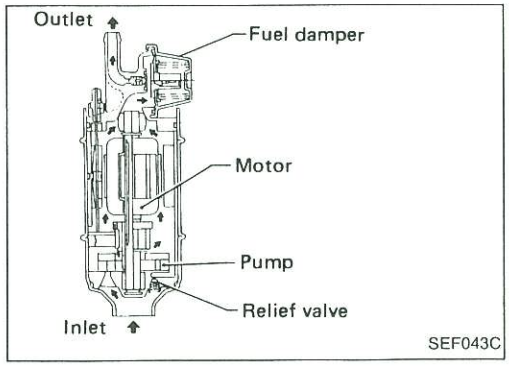


## Fuel Pump

The fuel pump with a fuel damper is a submergible type, and are located in the fuel tank.

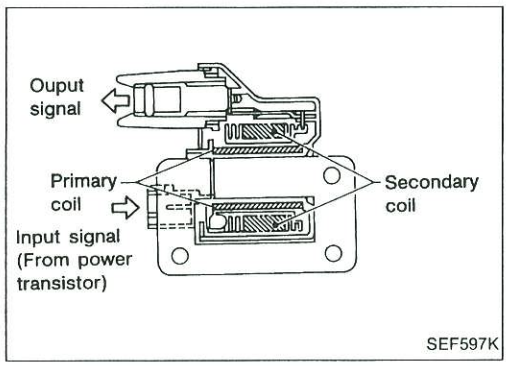


## Ignition Coil with Power Transistor

The ignition signal from the ECM is amplified by the power transistor, which turns the ignition coil primary circuit on and off, inducing the proper high voltage in the secondary circuit. The ignition coil is a small, molded type.

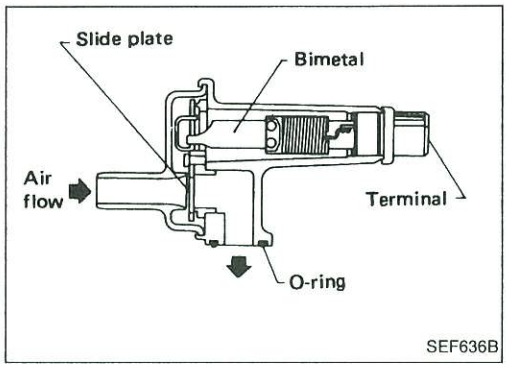


## Idle Air Control Valve (IACV)-Air Regulator

The IACV-air regulator provides an air by-pass when the engine is cold for a fast idle during warm-up.
A bimetal, heater and rotary shutter are built into the IACV-air regulator. When the bimetal temperature is low, the air by-pass port opens. As the engine starts and electric current flows through a heater, the bimetal begins to turn the shutter to close the by-pass port. The air passage remains closed until the engine stops and the bimetal temperature drops.

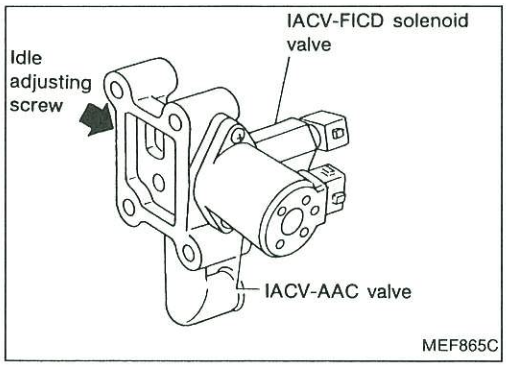


## Idle Air Adjusting (I.A.A.) Unit

The I.A.A. unit is made up of the IACV-AAC valve, IACV-FICD solenoid valve and idle adjust screw. It receives the signal from the ECM and controls the idle speed at the preset value.
The IACV-FICD solenoid valve compensates for changes in idle speed caused by the operation of the air compressor. A vacuum control valve is also installed in this unit to prevent an abnormal rise in intake manifold vacuum pressure during deceleration.

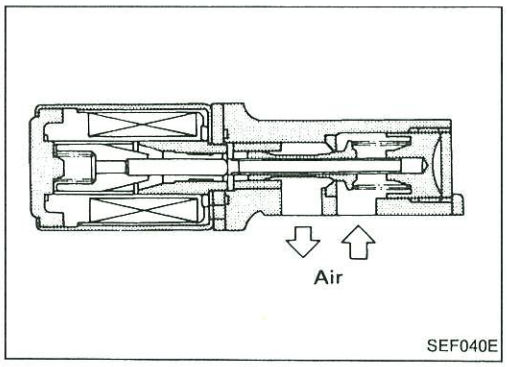


## Idle Air Control Valve (IACV)-Auxiliary Air Control (AAC) Valve

The ECM actuates the IACV-AAC valve by an ON/OFF pulse. The longer that ON pulse is received, the larger the amount of air that will flow through the IACV-AAC valve.

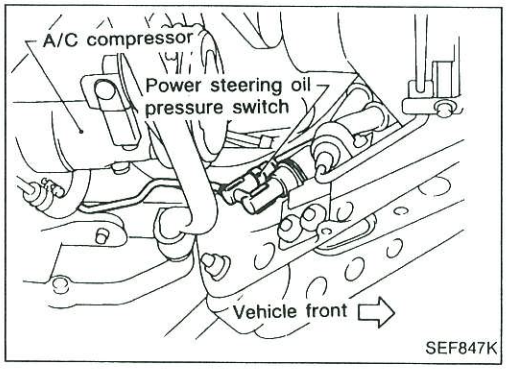


## Power Steering Oil Pressure Switch

The power steering oil pressure switch is attached to the power steering high-pressure tube and detects the power steering load, sending the load signal to the ECM. The ECM then sends the idle-up signal to the I.S.C. valve.

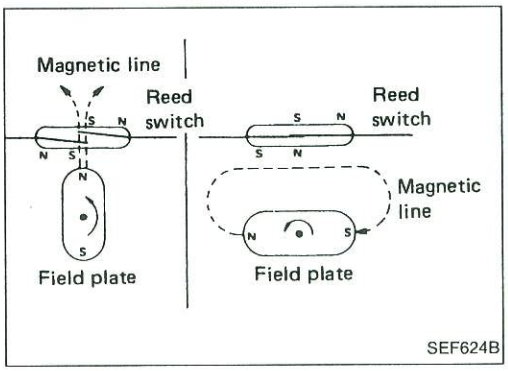


## Vehicle Speed Sensor (VSS)

The vehicle speed sensor provides a vehicle speed signal to the ECM.
The speed sensor consists of a reed switch, which is installed on the transmission unit and transforms vehicle speed into a pulse signal.

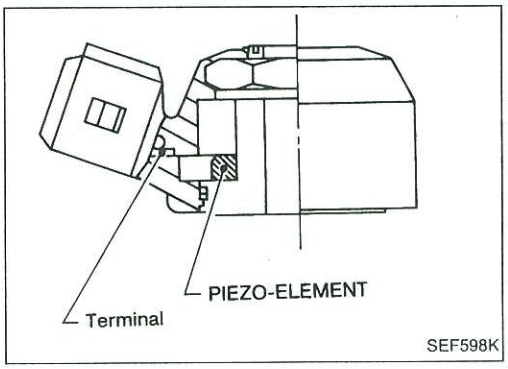


## Knock Sensor (KS)

The knock sensor is attached to the cylinder block and senses engine knocking conditions.
A knocking vibration from the cylinder block is applied as pressure to the piezoelectric element. This vibrational pressure is then converted into a voltage signal which is sent to the ECM.

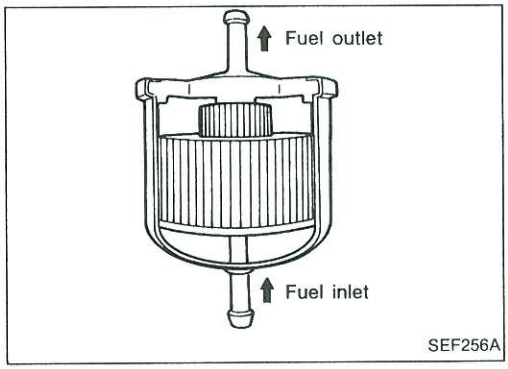


## Fuel Filter

The specially designed fuel filter has a metal case in order to withstand high fuel pressure.

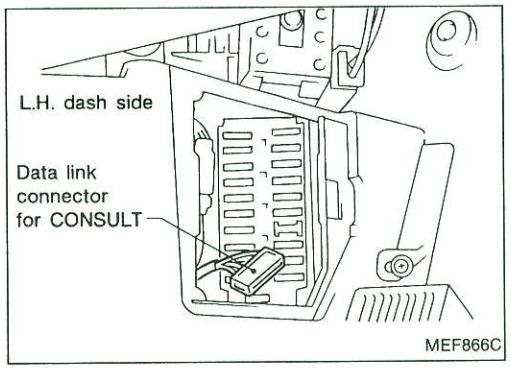


## Data Link Connector for CONSULT

The data link connector for CONSULT is located beside the fuse lid.

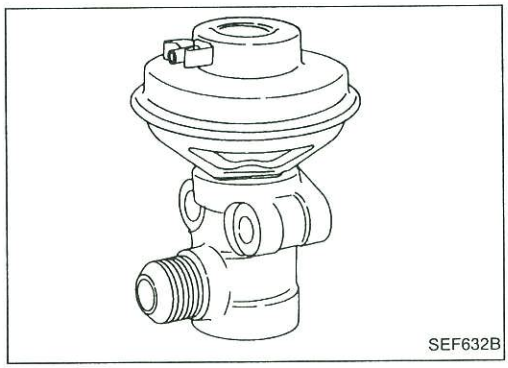


## Exhaust Gas Recirculation (EGR) Valve

The EGR valve controls the quantity of exhaust gas to be led to the intake manifold through vertical movement of the taper valve connected to the diaphragm, to which vacuum is applied in response to the opening of the throttle valve.

HA

EL

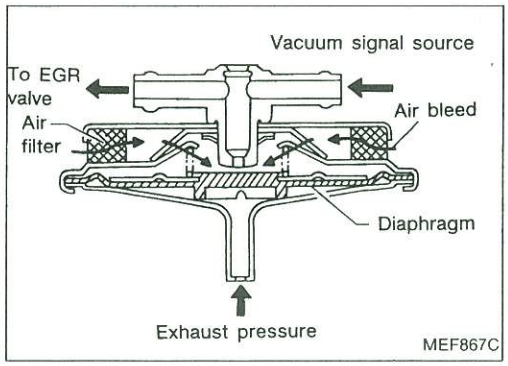


## EGR Control (EGRC)-BPT Valve

The EGRC-BPT valve monitors exhaust pressure to activate the diaphragm, controlling throttle body vacuum applied to the EGR valve. In other words, recirculated exhaust gas is controlled in response to positioning of the EGR valve or to engine operation.

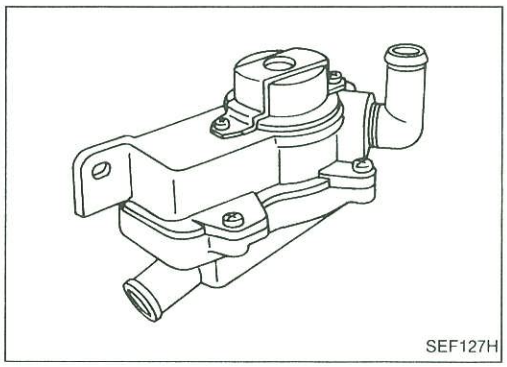


## Pulsed Secondary Air Injection (PAIR) Valve (PAIR valve)

The PAIR valve sends secondary air to the exhaust manifold, using a vacuum created by exhaust pulsation in the exhaust manifold. When the exhaust pressure is below atmospheric pressure (negative pressure), secondary air is sent to the exhaust manifold. When the exhaust pressure is above atmospheric pressure, the reed valves prevent secondary air from being sent back to the air cleaner.

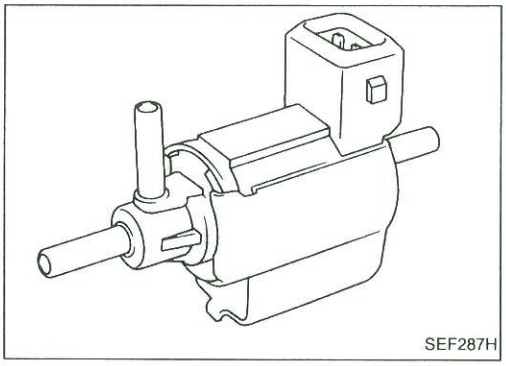


## Pulsed Secondary Air Injection (PAIRC) Solenoid Valve

The PAIRC-solenoid valve cuts the intake manifold vacuum signal for PAIR valve control. It responses to the ON/OFF signal from the ECM. When the solenoid is off, the vacuum signal from the intake manifold is cut. When the ECM sends an ON signal, the coil pulls the plunger downward and feeds the vacuum signal to the PAIR valve control valve.

## EGR and Canister Control Solenoid Valve

The solenoid valve responds to the ON/OFF signal from the ECM. When it is off, a vacuum signal from the throttle body is fed into the EGR valve. When the ECM sends an ON signal, the coil pulls the plunger downward and cuts the vacuum signal.

## S.C.V. Control Solenoid Valve

The S.C.V. control solenoid valve cuts the intake manifold vacuum signal for swirl control valve. It responds to the ON/OFF signal from the ECM. When the solenoid is off, the vacuum signal from the intake manifold is cut. When the ECM sends an ON signal the coil pulls the plunger and feeds the vacuum signal to the swirl control valve actuator.

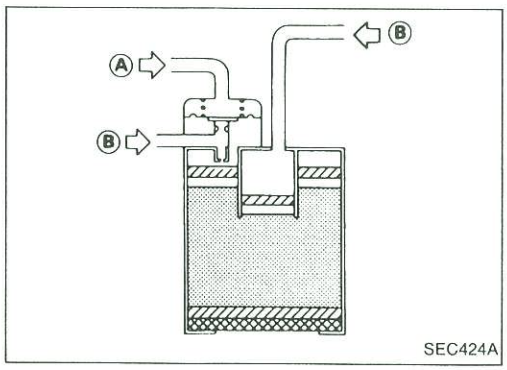


## Carbon Canister

The carbon canister is filled with active charcoal to absorb evaporative gases produced in the fuel tank. These absorbed gases are then delivered to the intake manifold by manifold vacuum for combustion purposes.

The vacuum in the intake passage upstream of the throttle valve increases in response to the amount of the intake air.

When the vacuum of the intake passage is higher than a preset value, the 2nd purge control valve opens and the absorbed gases are sucked into the intake passage for combustion purposes.

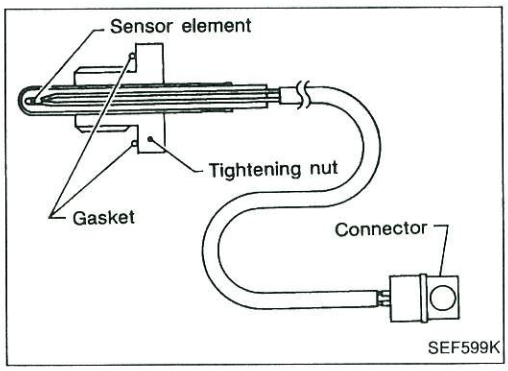


## EGR Temperature Sensor (For California models)

The EGR temperature sensor monitors in exhaust gas temperature and transmits a signal to the ECM. The temperature sensing unit employs a thermistor which is sensitive to the change in temperature. Electric resistance of the thermistor decreases in response to the temperature rise.

## Multiport Fuel Injection (MFI) System

### INPUT/OUTPUT SIGNAL LINE

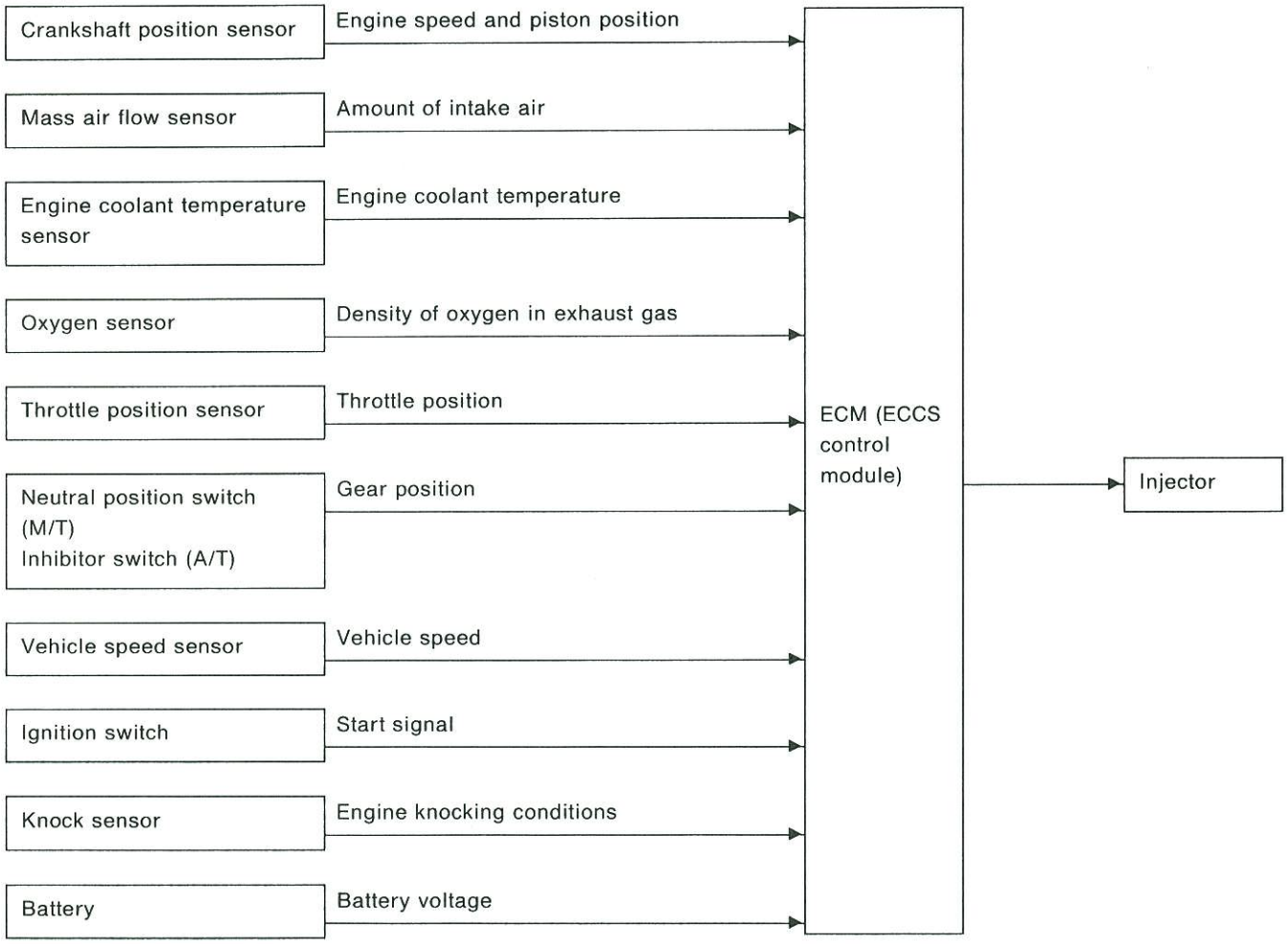


### BASIC MULTIPORT FUEL INJECTION SYSTEM

The amount of fuel injected from the fuel injector, or the length of time the valve remains open, is determined by the ECM. The amount of fuel injected is a program value mapped in the ECM memory. In other words, the program value is preset by engine operating conditions determined by input signals (for engine speed and air intake) from both the crankshaft position sensor and the mass air flow sensor.

### VARIOUS FUEL INJECTION INCREASE/DECREASE COMPENSATION

In addition, the amount of fuel injection is compensated for to improve engine performance under various operating conditions as listed below.

<Fuel increase>

1) During warm-up
2) When starting the engine
3) During acceleration
4) Hot-engine operation

<Fuel decrease>

1) During deceleration

## Multiport Fuel Injection (MFI) System (Cont'd)

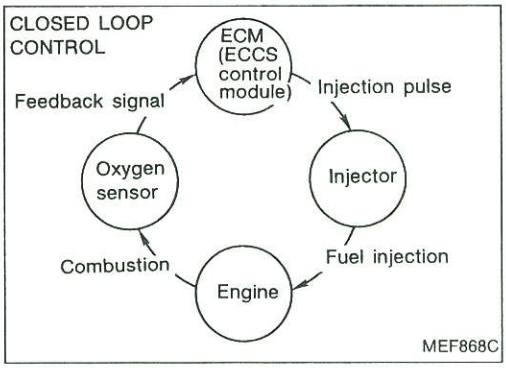


### MIXTURE RATIO FEEDBACK CONTROL

The mixture ratio feedback system is used for precise control of the mixture ratio to the stoichiometric point, so that the three way catalyst can reduce CO, HC and NOx emissions. This system uses an oxygen sensor in the exhaust manifold to check the air-fuel ratio. The ECM adjusts the injection pulse width according to the sensor voltage so the mixture ratio will be within the range of the stoichiometric air-fuel ratio.

This stage refers to the closed loop control condition. The open loop control condition refers to that under which the ECM detects any of the following conditions and feedback control stops in order to maintain stabilized fuel combustion.

1) Deceleration and acceleration
2) High-load, high-speed operation
3) Engine idling
4) Malfunction of oxygen sensor or its circuit
5) Insufficient activation of oxygen sensor at low engine coolant temperature
6) Engine starting
7) High-engine coolant temperature
8) After shifting from "N" position to "D" position

### MIXTURE RATIO SELF-LEARNING CONTROL

The mixture ratio feedback control system monitors the mixture ratio signal transmitted from the oxygen sensor. This feedback signal is then sent to the ECM to control the amount of fuel injection to provide a basic mixture ratio as close to the theoretical mixture ratio as possible. However, the basic mixture ratio is not necessarily controlled as originally designed. This is due to manufacturing differences (e.g., mass air flow sensor hot film) and changes to the ECCS parts during operation (injector clogging, etc.) which directly affect the mixture ratio.

Accordingly, the difference between the basic and theoretical mixture ratios is monitored in this system. This is then computed in terms of "fuel injection duration" to automatically compensate for the difference between the two ratios.

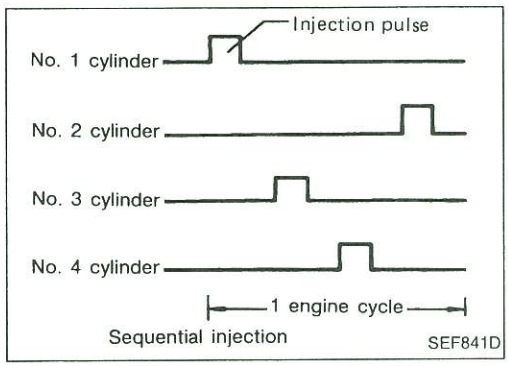


### FUEL INJECTION TIMING

Two types of fuel injection systems are used — sequential multiport fuel injection system and simultaneous multiport fuel injection system. In the former, fuel is injected into each cylinder during each engine cycle according to the firing order.

## Multiport Fuel Injection (MFI) System (Cont'd)

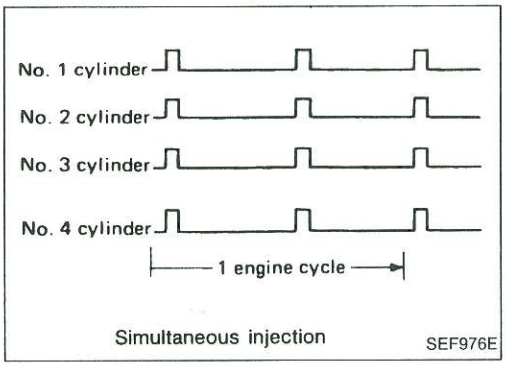

Simultaneous injection SEF976E

In the simultaneous multiport fuel injection system, fuel is injected into all four cylinders simultaneously twice each engine cycle. In other words, pulse signals of the same width are simultaneously transmitted from the ECM to the four injectors two times for each engine cycle.

When the engine is being started and/or if the fail-safe system (C.P.U., crankshaft position sensor) is operating, simultaneous multiport fuel injection system is used. When the engine is running sequential multiport fuel injection system is used.

### FUEL SHUT-OFF

Fuel to each cylinder is cut off during deceleration, operation of the engine at excessively high speeds or at high exhaust temperatures.

## Distributor Ignition (DI) System

### INPUT/OUTPUT SIGNAL LINE

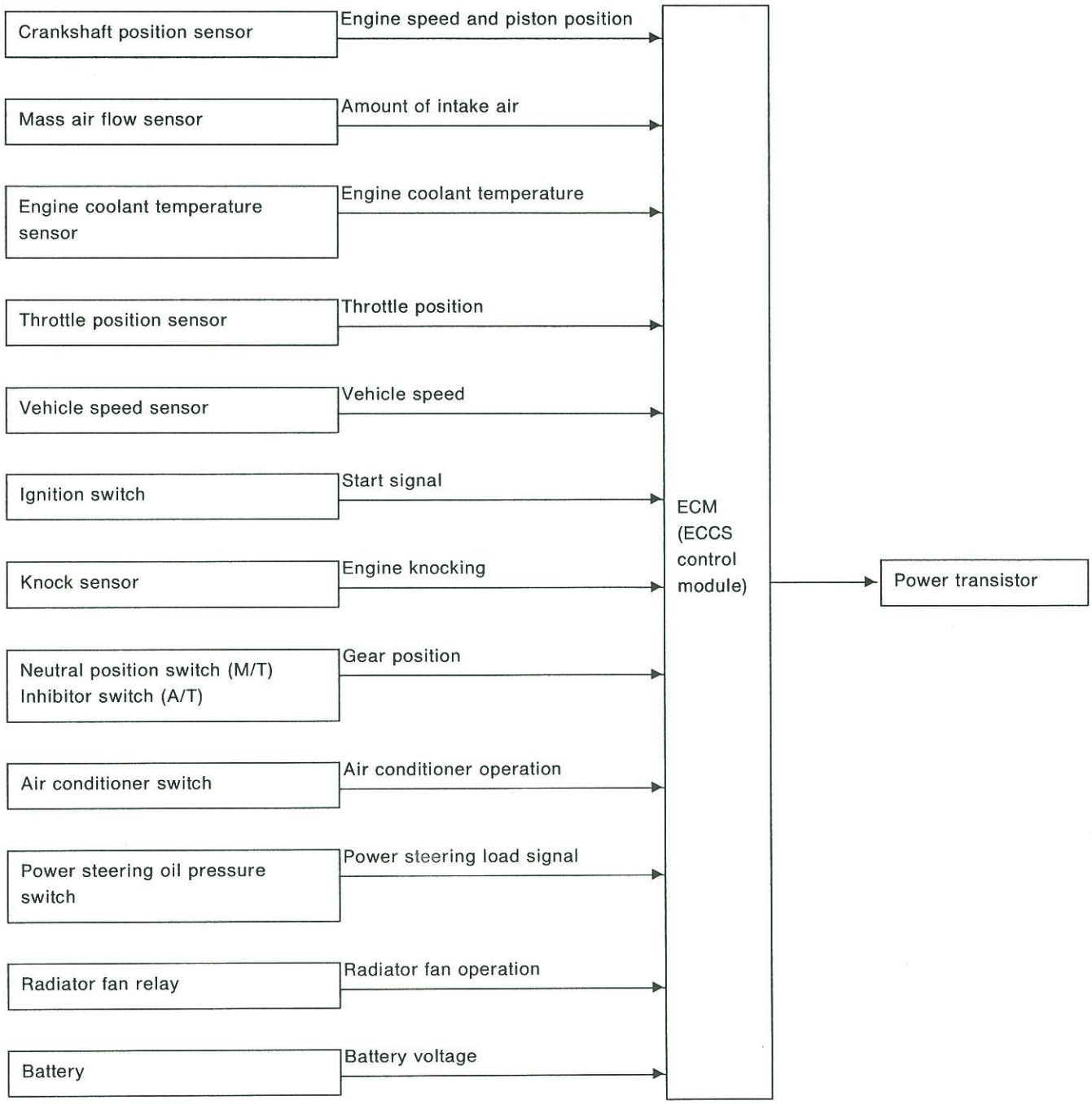

## Distributor Ignition (DI) System (Cont'd)

### SYSTEM DESCRIPTION

The ignition timing is controlled by the ECM in order to maintain the best air-fuel ratio for every running condition of the engine.

The ignition timing data is stored in the ECM located in the ECM. This data forms the map shown below.

The ECM detects information such as the injection pulse width and crankshaft position sensor signal which varies every moment. Then responding to this information, ignition signals are transmitted to the power transistor.

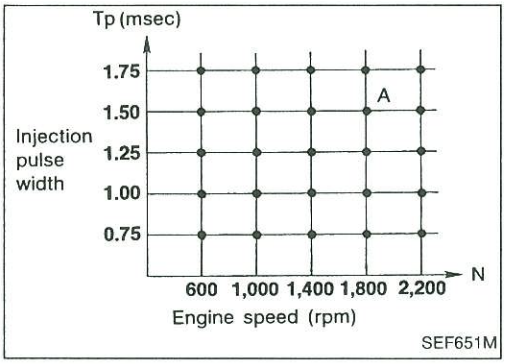


e.g. N: 1,800 rpm, Tp: 1.50 msec
A °B.T.D.C.

In addition to this,

1 At starting
2 During warm-up
3 At idle
4 During swirl control valve operates
5 Hot engine operation
6 At acceleration

the ignition timing is revised by the ECM according to the other data stored in the ECM.

The retard system, actuated by the knock sensor, is designed only for emergencies. The basic ignition timing is pre-programmed within the anti-knocking zone, if recommended fuel is used under dry conditions. Consequently, the retard system does not operate under normal driving conditions.

However, if engine knocking occurs, the knock sensor monitors the condition and the signal is transmitted to the ECM (ECCS control module). After receiving it, the ECM retards the ignition timing to eliminate the knocking condition.

## Idle Air Control (IACV) System

### INPUT/OUTPUT SIGNAL LINE

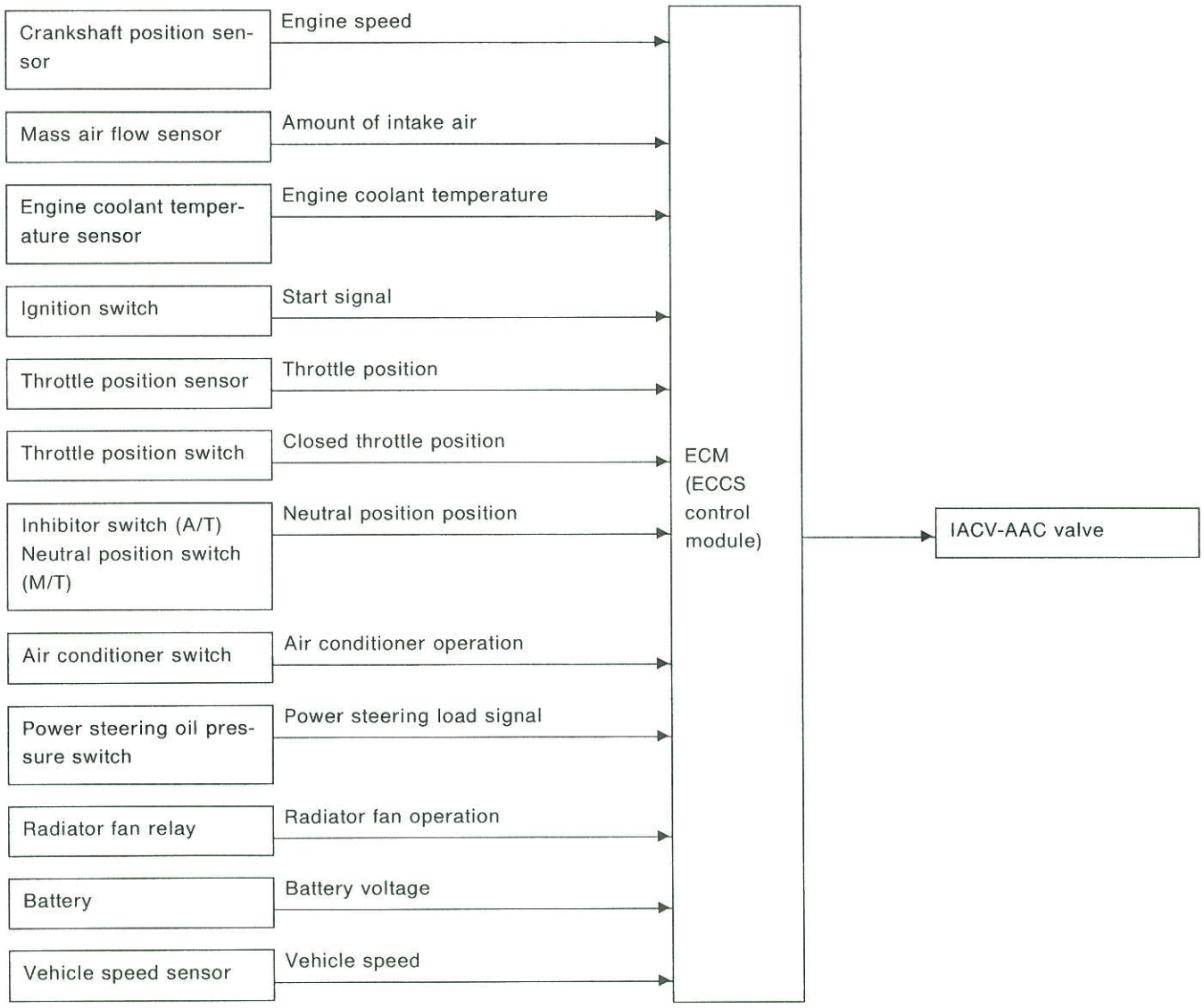


### SYSTEM DESCRIPTION

This system automatically controls engine idle speed to a specified level. Idle speed is controlled through fine adjustment of the amount of air which by-passes the throttle valve via the IACV-AAC valve. The IACV-AAC valve repeats ON/OFF operation according to the signal sent from the ECM. The crankshaft position sensor detects the actual engine speed and sends a signal to the ECM.

The ECM then controls the ON/OFF time of the IACV-AAC valve so that engine speed coincides with the target value memorized in the ECM. The target engine speed is the lowest speed at which the engine can operate steadily. The optimum value stored in the ECM is determined by taking into consideration various engine conditions, such as noise and vibration transmitted to the vehicle interior, fuel consumption, and engine load.

## Pulsed Secondary Air Injection (PAIR) Valve (PAIR valve) Control

### INPUT/OUTPUT SIGNAL LINE

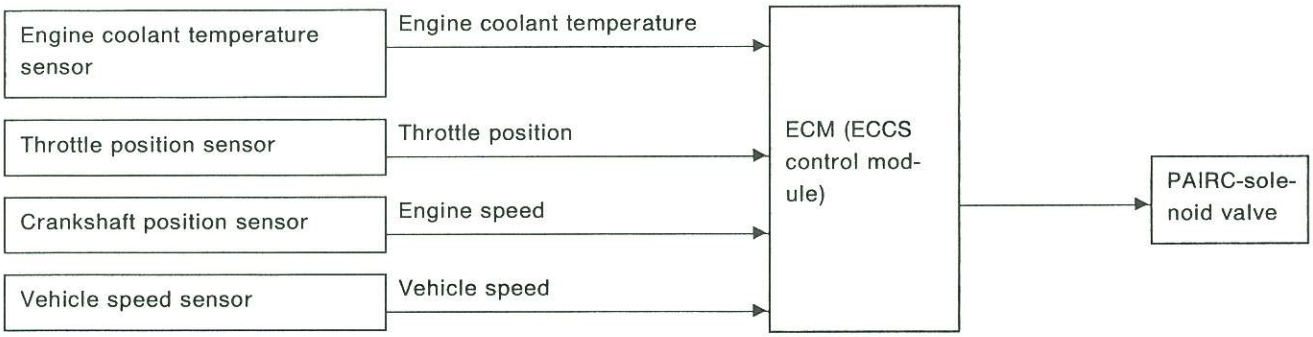


### SYSTEM DESCRIPTION

The PAIR system is designed to send secondary air to the exhaust manifold, utilizing the vacuum caused by exhaust pulsation in the exhaust manifold.

The exhaust pressure in the exhaust manifold usually pulsates in response to the opening and closing of the exhaust valve and decreases below atmospheric pressure periodically.

If a secondary air intake pipe is opened to the atmosphere under vacuum conditions, secondary air can be drawn into the exhaust manifold in proportion to the vacuum.

The PAIR valve is controlled by the ECM, corresponding to the engine coolant temperature. When the engine is cold, the PAIR valve control system operates to reduce HC and CO.

In extremely cold conditions, PAIR valve control system does not operate to reduce after-burning.

This system also operates during deceleration for the purpose of blowing off water around the PAIR valve.

## Exhaust Gas Recirculation (EGR) System

### INPUT/OUTPUT SIGNAL LINE

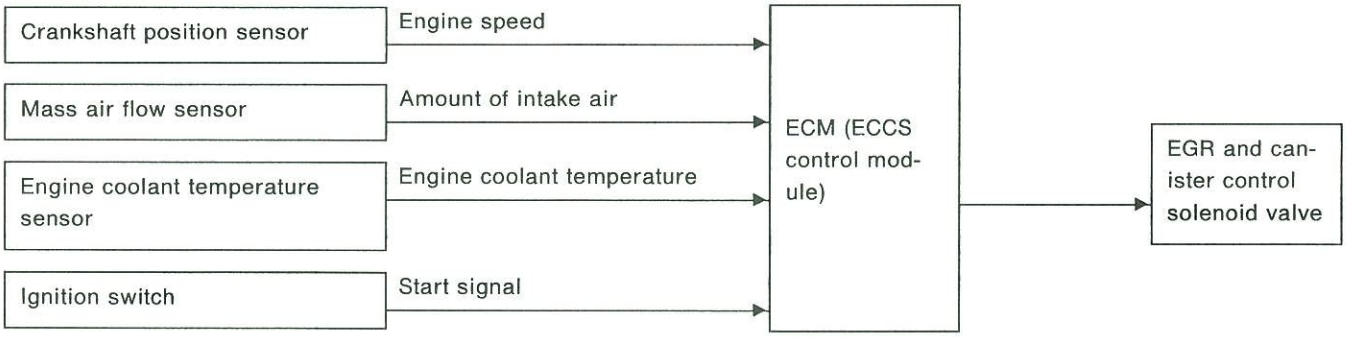


### SYSTEM DESCRIPTION

In addition, a system is provided which precisely cuts and controls port vacuum applied to the EGR valve to suit engine operating conditions. This cut-and-control operation is accomplished through the ECM. When the ECM detects any of the following conditions, current flows through the solenoid valve in the EGR control vacuum line. This causes the port vacuum to be discharged into the atmosphere so that the EGR valve remains closed.

1) Low engine coolant temperature
2) Engine starting
3) High-speed engine operation
4) Engine idling
5) Excessively high engine coolant temperature

## Fuel Pump Control

### INPUT/OUTPUT SIGNAL LINE

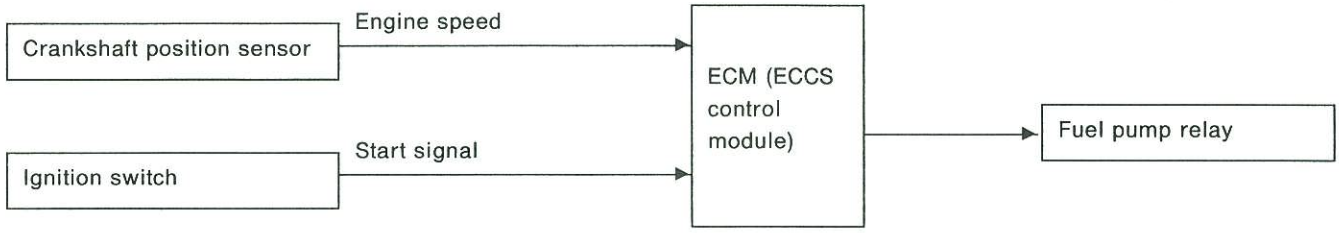


### SYSTEM DESCRIPTION

The ECM activates the fuel pump for several seconds after the ignition switch is turned on to improve engine start-up. If the ECM receives a 1° signal from the crankshaft position sensor, it knows that the engine is rotating, and causes the pump to activate. If the 1° signal is not received when the ignition switch is on, the engine stalls. The ECM stops pump operation and prevents the battery from discharging, thereby improving safety. The ECM does not directly drive the fuel pump. It controls the ON/OFF fuel pump relay, which in turn controls the fuel pump.

| Condition | Fuel pump operation |
|---|---|
| Ignition switch is turned to ON. | Operates for 5 seconds |
| Engine running and cranking | Operates |
| When engine is stopped | Stops in 1 second |
| Except as shown above | Stops |

## Idle Air Control Valve (IACV)-Air Regulator Control

### INPUT/OUTPUT SIGNAL LINE

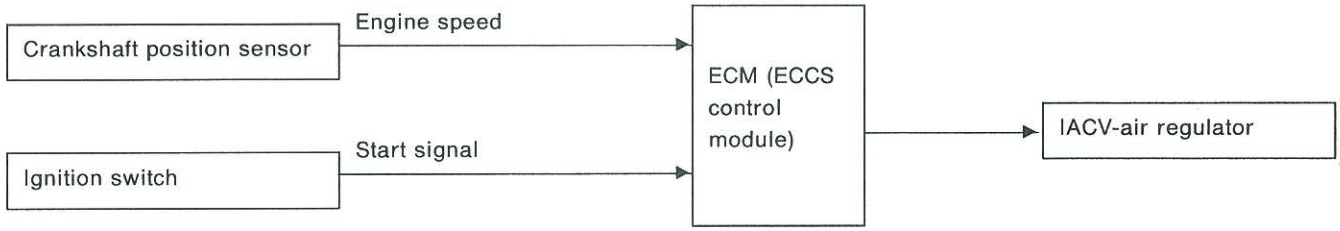


### SYSTEM DESCRIPTION

The IACV-air regulator is controlled by the ECM at the same time as fuel pump ON-OFF control.

| Condition | IACV-air regulator operation |
|---|---|
| Ignition switch is turned to ON | Operates for 5 seconds |
| While engine is running and cranking | Operates |
| When engine is stopped | OFF in 1 second |
| Except as shown above | OFF |

## Acceleration Cut Control

### INPUT/OUTPUT SIGNAL LINE

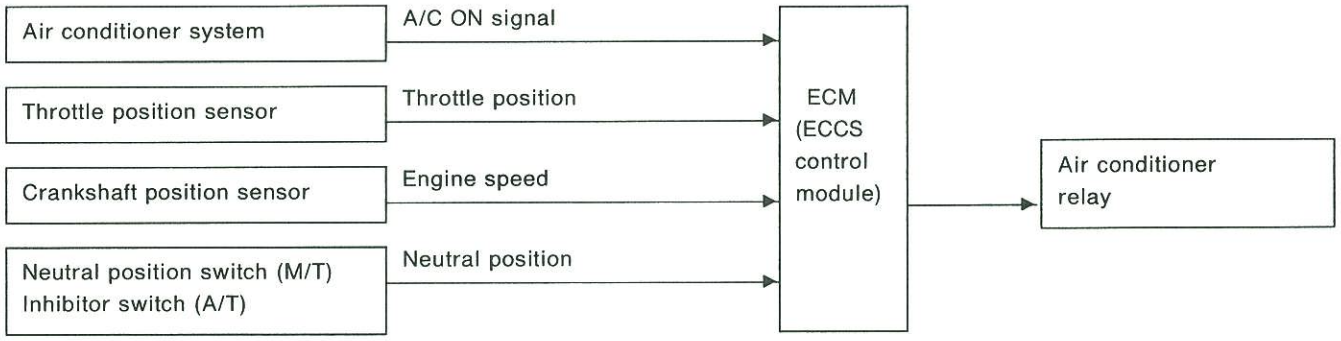


### SYSTEM DESCRIPTION

When the accelerator pedal is fully depressed or the engine is running at high speed, the air conditioner is turned off for a few seconds.

This system improves acceleration when the air conditioner is used.

## Swirl Control Valve (S.C.V.) Control

### INPUT/OUTPUT SIGNAL LINE

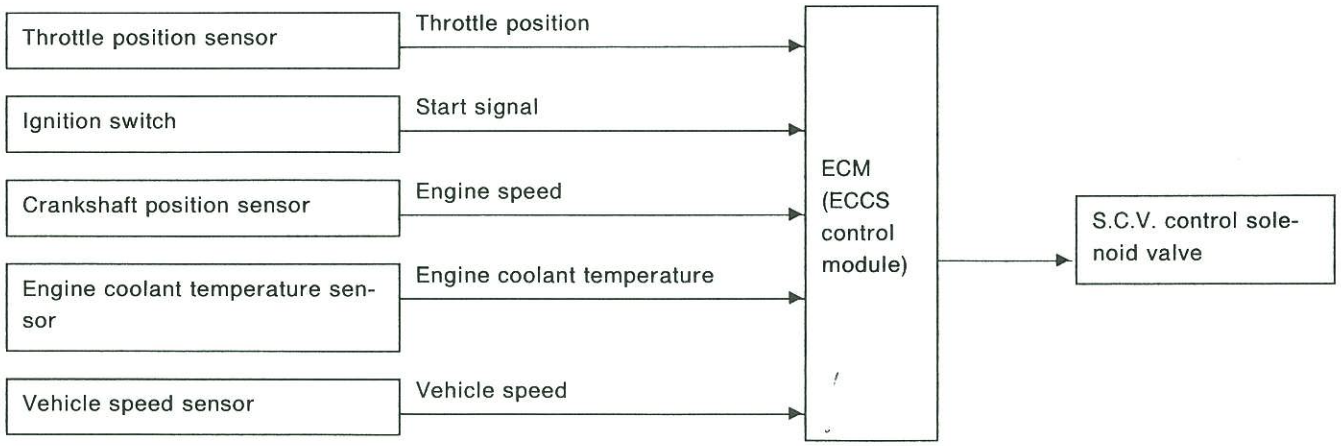


### SYSTEM DESCRIPTION

This system has a swirl control valve (S.C.V.) in the intake passage of each cylinder.
While idling the S.C.V. closes. Thus the velocity of the air in the intake passage increases, promoting the vaporization of the fuel and producing a swirl in the combustion chamber.
Because of this operation, this system tends to increase the burning speed of the gas mixture, improve fuel consumption, and increase the stability in running conditions.
Also, except when idling, this system opens the S.C.V. In this condition, this system tends to increase power by improving intake efficiency via reduction of intake flow resistance, intake flow.
The solenoid valve controls S.C.V.'s shut/open condition. This solenoid valve is operated by the ECM.

## Condenser Fan Control

### INPUT/OUTPUT SIGNAL LINE

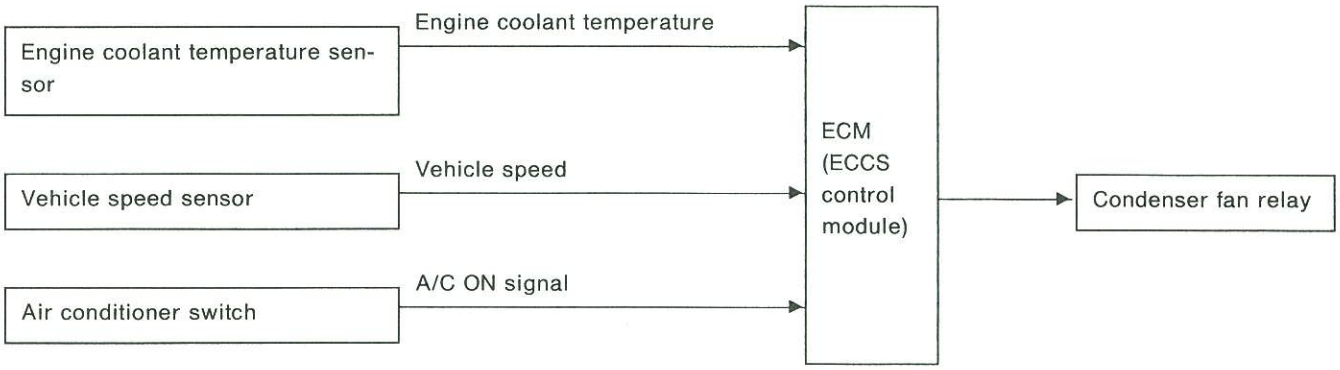


### SYSTEM DESCRIPTION

The ECM performs ON and OFF control of the radiator fan relay, corresponding to the engine coolant temperature sensor, vehicle speed sensor and air conditioner switch operations.

| Vehicle speed km/h (MPH) | Engine coolant temperature °C (°F) | A/C OFF | A/C ON |
|---|---|---|---|
| Below 20 (12) | Below 100 (212) | FAN OFF | FAN ON |
| | 100 (212) or more | FAN ON | |
| Between 20 (12) and 79 (49) | Below 100 (212) | FAN OFF | |
| | 100 (212) or more | FAN ON | |
| 80 (50) or more | Below 100 (212) | FAN OFF | |
| | 100 (212) or more | FAN ON | |

## Fail-safe System

### C.P.U. MALFUNCTION

#### Input/output signal line

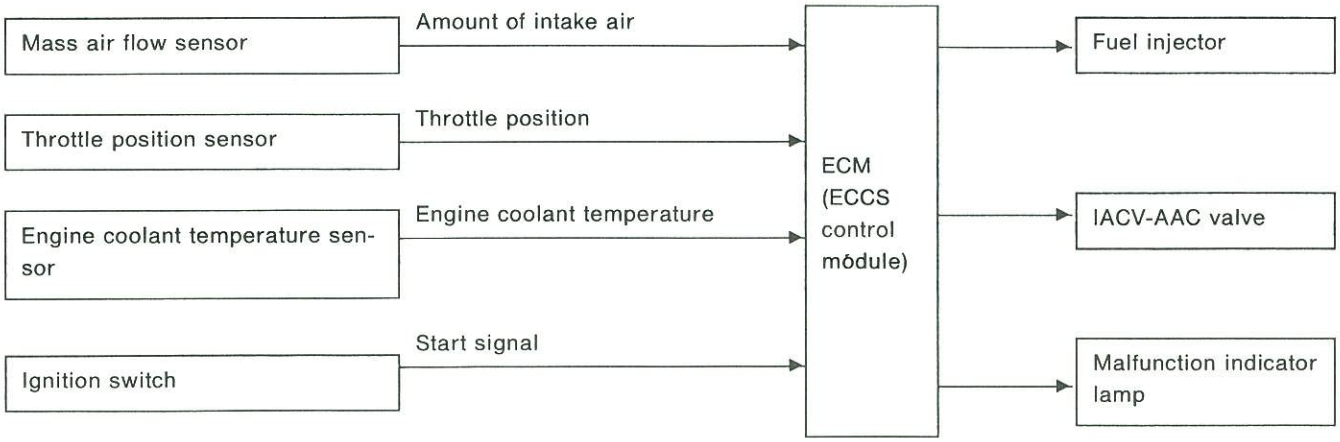

## Fail-safe System (Cont'd)

### Outline

The fail-safe system makes engine starting possible if there is something malfunctioning in the ECM's C.P.U. circuit.
In former models, engine starting was difficult under the previously mentioned conditions. But with the provisions in this fail-safe system, it is possible to start the engine.

### Fail-safe system activating condition when ECM is malfunctioning

The fail-safe mode operates when the computing function of the ECM is judged to be malfunctioning.
When the fail-safe system activates, i.e. if a malfunction condition is detected in the C.P.U. of the ECM, the MALFUNCTION INDICATOR LAMP on the instrument panel lights to warn the driver.

### Engine control with fail-safe system, operates when ECM is malfunctioning

When the fail-safe system is operating, fuel injection, ignition timing, and so on are controlled under certain limitations.

### Cancellation of fail-safe system when ECM is malfunctioning

Activation of the fail-safe system is canceled each time the ignition switch is turned OFF. The system is reactivated if all of the activating conditions are satisfied after turning the ignition switch from OFF to ON.

### MASS AIR FLOW SENSOR MALFUNCTION

If the mass air flow sensor output voltage is below the specified value when the starter switch is being turned OFF, the ECM senses an mass air flow sensor malfunction. In the case of a malfunction, the fuel injection operates without the mass air flow sensor signal.
Although the mass air flow sensor is malfunctioning, it is possible to start the engine and drive the vehicle. But engine speed will not rise more than 2,400 rpm in order to inform the driver of fail-safe system operation while driving.

### Operation (Mass air flow sensor malfunction)

| Engine condition | Starter switch | Fail-safe system | Fail-safe functioning |
|---|---|---|---|
| Stopped | ANY | Does not operate | — |
| Cranking | ON | | |
| Running | OFF | Operates | Engine speed will not rise above 2,400 rpm |

### ENGINE COOLANT TEMPERATURE SENSOR MALFUNCTION

When the engine coolant temperature sensor output voltage is below or above the specified value, engine coolant temperature is fixed at the preset value as follows:

| Engine condition | Engine coolant temperature preset value °C (°F) |
|---|---|
| Start | 40 (104) |
| Running | 80 (176) |

### THROTTLE POSITION SENSOR MALFUNCTION

When the throttle position sensor output voltage is below or above the specified value, the throttle position is fixed at a specified value. In this condition the ECM does not use the throttle position sensor output. The closed throttle position is decided by the mass air flow sensor, crankshaft position sensor output signals.

| Operation | Driving condition |
|---|---|
| While idling | Low engine speed |
| While accelerating | Poor acceleration |

### START SIGNAL FOR MISOPERATION

Once the engine speed exceeds 1,000 rpm, no ill effect will be caused in the engine control during engine operation even if the ignition switch is set by mistake to the START position.

## PREPARATION

1. Make sure that the following parts are in good order.

- Battery
- Ignition system
- Engine oil and coolant levels
- Fuses
- ECM harness connector
- Vacuum hoses
- Air intake system
  (Oil filler cap, oil level gauge, etc.)
- Fuel pressure
- Engine compression
- EGR valve operation
- Throttle valve

2. On air conditioner equipped models, checks should be carried out while the air conditioner is "OFF".
3. On automatic transmission equipped models, when checking idle rpm, ignition timing and mixture ratio, checks should be carried out while shift lever is in "N" position.
4. When measuring "CO" percentage, insert probe more than 40 cm (15.7 in) into tail pipe.
5. Turn off headlamps, heater blower, rear defogger.
6. Keep front wheels pointed straight ahead.
7. Make the check after the radiator fan has stopped.

## Overall inspection sequence

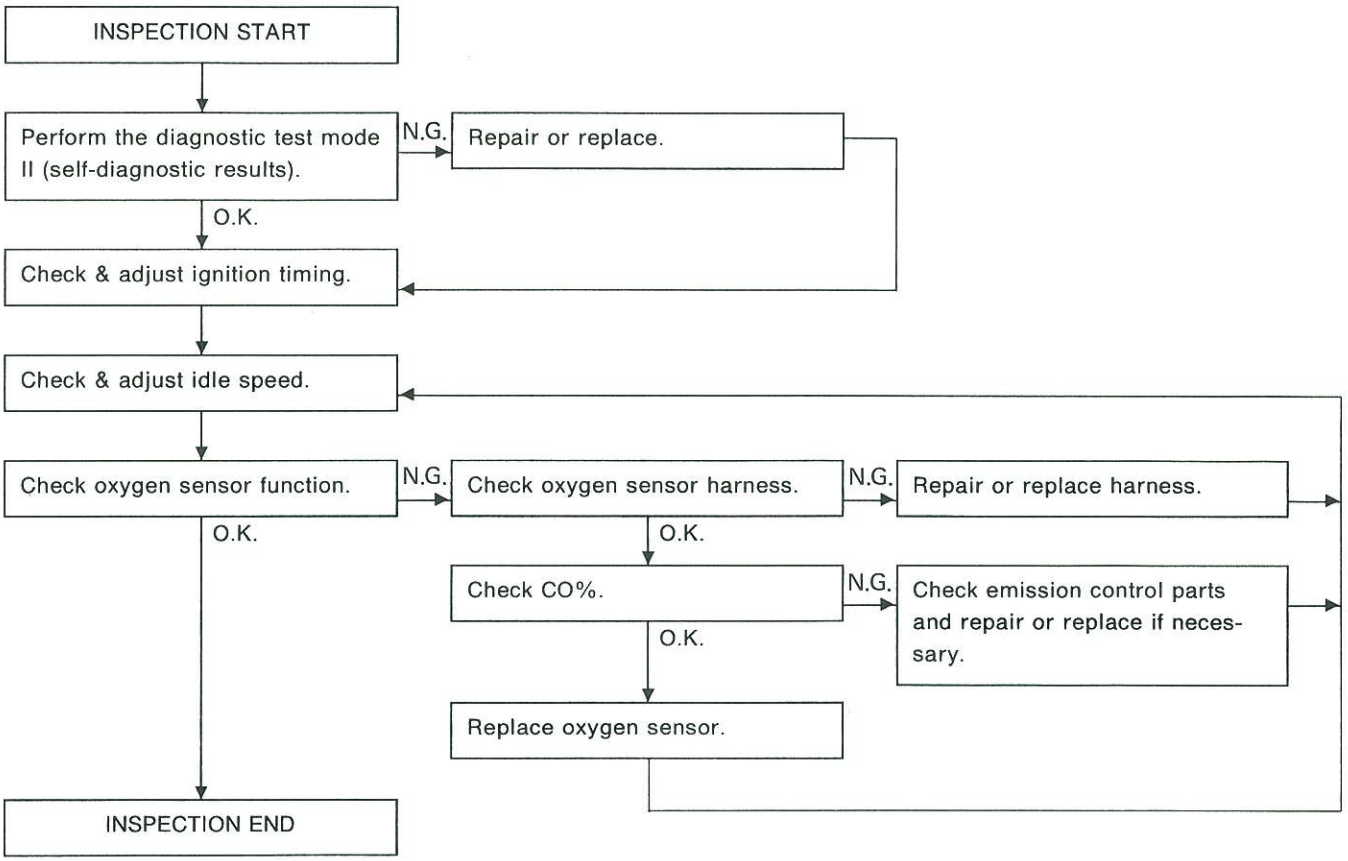

START

Visually check the following:
- Air cleaner clogging
- Hoses and ducts for leaks
- EGR valve operation
- Electrical connectors
- Gaskets
- Throttle valve and throttle position sensor operations

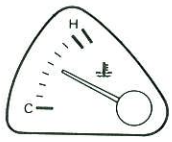

SEF810K

Start engine and warm it up until water temperature indicator points to the middle of gauge and ensure that engine speed is below 1,000 rpm.

SEF247F

Open engine hood and run engine at about 2,000 rpm for about 2 minutes under no-load.

Perform the diagnostic test mode II (Self-diagnostic results).

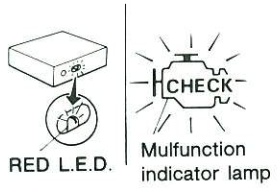

SEF621K

O.K. / N.G.

Repair or replace components as necessary.

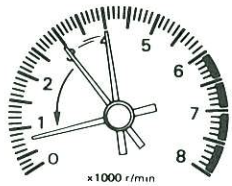

SEF248F

Run engine at about 2,000 rpm for about 2 minutes under no-load.
Race engine two or three times under no-load, then run engine for about 1 minute at idle speed.

1) Select "IGNITION TIMING ADJ" in WORK SUPPORT mode.
2) Touch "START".

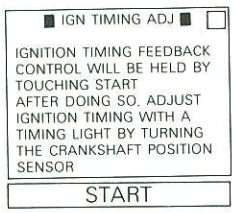

MEF869C

1) Stop engine and disconnect throttle position sensor harness connector.
2) Start engine.

Race engine (2,000 - 3,000 rpm) 2 or 3 times under no-load and run engine at idle speed.

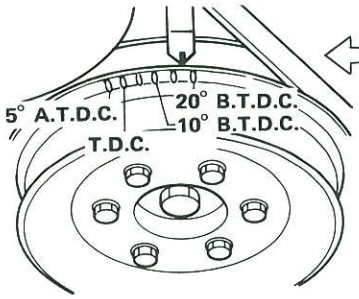

SMA189A

Check ignition timing with a timing light.

O.K. **20° ± 2° B.T.D.C. (A/T in "N" position)**

N.G.

Adjust ignition timing to the specified value by turning distributor after loosening bolts which secure distributor.

**20° ± 2° B.T.D.C. (A/T in "N" position)**

Ⓐ

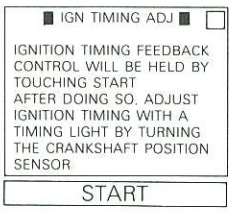


MEF869C

Ⓐ

Check idle speed.

Read idle speed in "IGN TIMING ADJ" mode with CONSULT.

Check idle speed.

**650 ± 50 rpm (A/T in "N" position)**

O.K.

N.G.

Ⓓ

1) Select "IGNITION TIMING ADJ" in WORK SUPPORT mode.
2) Touch "START".

1) Stop engine and disconnect throttle position sensor harness connector.
2) Start engine.

Race engine (2,000 - 3,000 rpm) 2 or 3 times under no-load and run engine at idle speed.

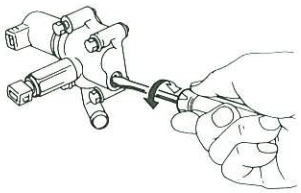

SEF601K

Adjust idle speed by turning idle speed adjusting screw.

**650 ± 50 rpm (A/T in "N" position)**

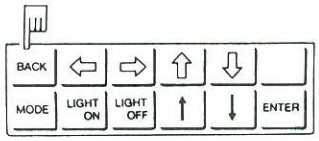


SEF913J

Touch "Back".

1) Stop engine and connect throttle position sensor harness connector.
2) Start engine.

SEF602K

Race engine (2,000 - 3,000 rpm) 2 or 3 times under no-load and run engine at idle speed.

Check idle speed.

O.K.

Read idle speed in "DATA MONITOR" mode with CONSULT.

OR

Check idle speed.

**700 ± 50 rpm (A/T in "N" position)**

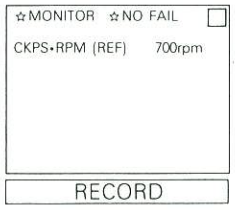


MEF870C

N.G.

Check IACV-AAC valve and replace if necessary.

Check IACV-AAC valve harness and repair if necessary.

Check ECM function* by substituting another known good ECM

* ECM may be the cause of a problem, but this is rarely the case.

Ⓑ

Ⓑ

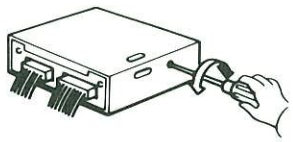
SEF957D

Set the diagnostic test mode II (oxygen sensor monitor).

Run engine at about 2,000 rpm for about 2 minutes under no-load.

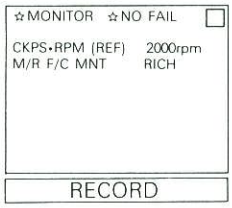

MEF871C

Check oxygen sensor signal.

1) See "M/R F/C MNT" in "DATA MONITOR" mode.
2) Maintaining engine at 2,000 rpm under no-load (engine is warmed up sufficiently.), check that the monitor fluctuates between "LEAN" and "RICH" more than 5 times during 10 seconds.
   **RICH → LEAN → RICH →** (1 time) **→ LEAN → RICH .....** (2 times)

OR

Make sure that inspection lamp goes on and off more than 5 times during 10 seconds at 2,000 rpm.

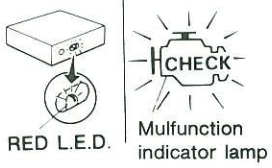

SEF621K

O.K. → INSPECTION END

N.G. →

Check oxygen sensor harness:

1) Turn off engine and disconnect battery ground cable.
2) Disconnect ECM harness connector from ECM
3) Disconnect oxygen sensor harness connector and connect terminal for oxygen sensor to ground with a jumper wire.
4) Check for continuity between terminal No. 19 of ECM harness connector and ground metal on vehicle body.

Continuity exists ... O.K.
Continuity does not exist ... N.G.

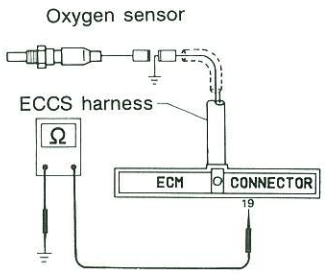

MEF872C

O.K. → Connect ECM harness connector to ECM

N.G. → Repair harness. → Ⓓ

1) Select "ENG COOLANT TEMP" in "ACTIVE TEST" mode.
2) Set "COOLANT TEMP" at 20°C (68°F).

- Disconnect engine coolant temperature sensor harness connector.
- Connect a resistor (2.5 kΩ) between terminals of engine coolant temperature sensor harness connector.

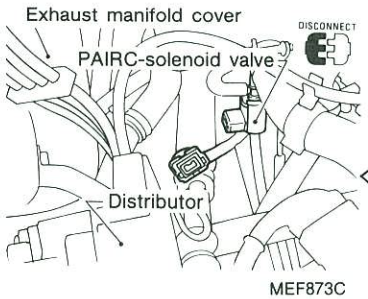

MEF873C

Disconnect PAIRC-solenoid valve harness connector.

Ⓒ

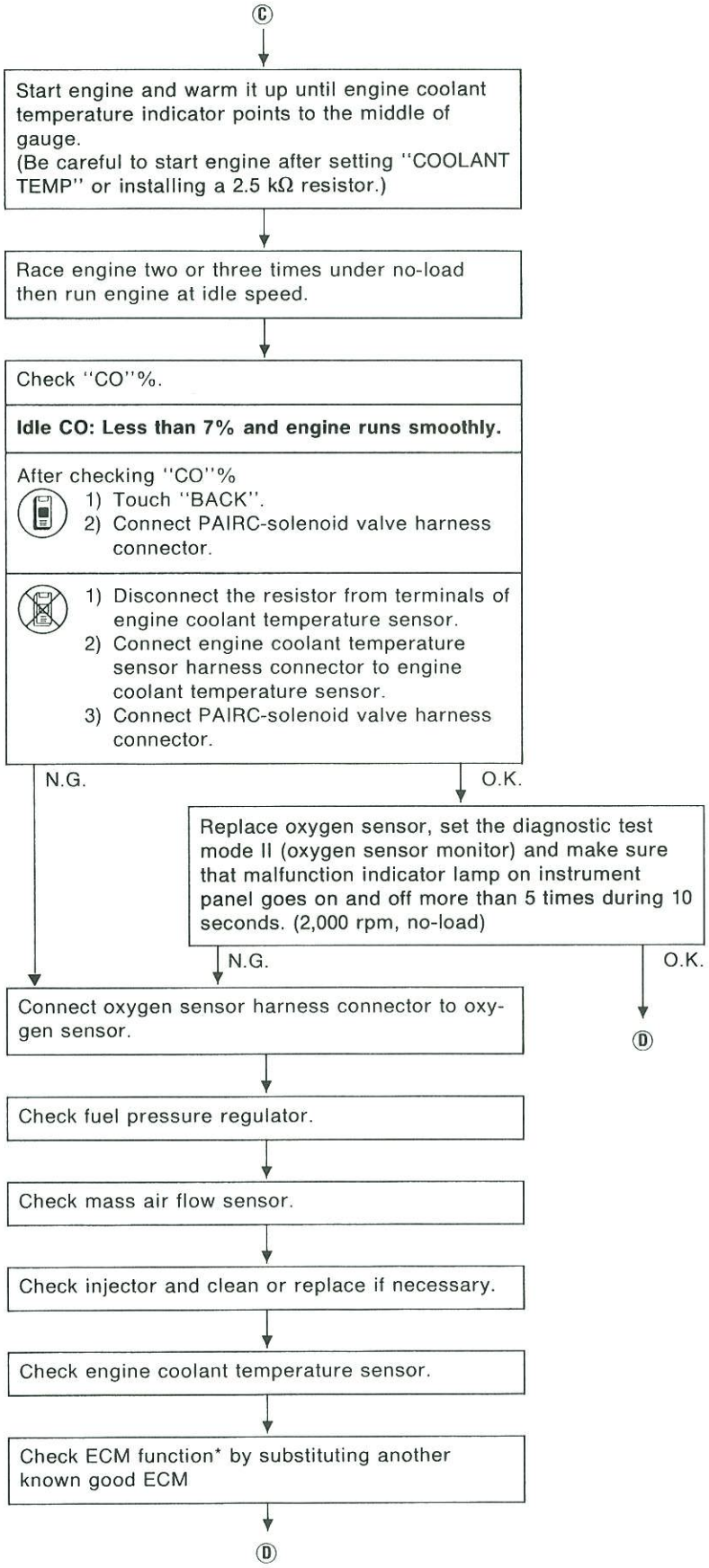


* ECM may be the cause of a problem, but this is rarely the case.

## Contents


**How to Perform Trouble Diagnoses for Quick and Accurate Repair** ..... EF & EC- 35
**On-board Diagnostic System** ..... EF & EC- 39
**On-board Diagnostic System — Diagnostic Test Mode I** ..... EF & EC- 41
**On-board Diagnostic System — Diagnostic Test Mode II (Self-diagnostic results)** ..... EF & EC- 42
**On-board Diagnostic System — Diagnostic Test Mode II (Oxygen sensor monitor)** ..... EF & EC- 44
**Consult** ..... EF & EC- 45
**Diagnostic Procedure** ..... EF & EC- 54
**Basic Inspection** ..... EF & EC- 56
**Diagnostic Procedure 1 — High Idling after Warm-up** ..... EF & EC- 59
**Diagnostic Procedure 2 — Hunting** ..... EF & EC- 59
**Diagnostic Procedure 3 — Unstable Idle** ..... EF & EC- 61
**Diagnostic Procedure 4 — Hard to Start or Impossible to Start when the Engine is Cold** ..... EF & EC- 64
**Diagnostic Procedure 5 — Hard to Start or Impossible to Start when the Engine is Hot** ..... EF & EC- 66
**Diagnostic Procedure 6 — Hard to Start or Impossible to Start under Normal Conditions** ..... EF & EC- 67
**Diagnostic Procedure 7 — Hesitation when the Engine is Hot** ..... EF & EC- 68
**Diagnostic Procedure 8 — Hesitation when the Engine is Cold** ..... EF & EC- 69
**Diagnostic Procedure 9 — Hesitation under Normal Conditions** ..... EF & EC- 70
**Diagnostic Procedure 10 — Engine Stalls when turning** ..... EF & EC- 71
**Diagnostic Procedure 11 — Engine Stalls when the Engine is Hot** ..... EF & EC- 73
**Diagnostic Procedure 12 — Engine Stalls when the Engine is Cold** ..... EF & EC- 75
**Diagnostic Procedure 13 — Engine Stalls when Stepping on the Accelerator Momentarily** ..... EF & EC- 77
**Diagnostic Procedure 14 — Engine Stalls after Decelerating** ..... EF & EC- 79
**Diagnostic Procedure 15 — Engine Stalls when Accelerating or when Driving at Constant Speed** ..... EF & EC- 82
**Diagnostic Procedure 16 — Engine Stalls when the Electrical Load is Heavy** ..... EF & EC- 84
**Diagnostic Procedure 17 — Lack of Power and Stumble** ..... EF & EC- 86
**Diagnostic Procedure 18 — Knock** ..... EF & EC- 86
**Diagnostic Procedure 19 — Surge** ..... EF & EC- 88
**Diagnostic Procedure 20 — Backfire through the Intake** ..... EF & EC- 89
**Diagnostic Procedure 21 — Backfire through the Exhaust** ..... EF & EC- 89
**Diagnostic Procedure 22**
MAIN POWER SUPPLY AND GROUND CIRCUIT ..... EF & EC- 90
**Diagnostic Procedure 23**
CRANKSHAFT POSITION SENSOR ..... EF & EC- 93
**Diagnostic Procedure 24**
MASS AIR FLOW SENSOR ..... EF & EC- 96
**Diagnostic Procedure 25**
ENGINE COOLANT TEMPERATURE SENSOR ..... EF & EC-99
**Diagnostic Procedure 26**
VEHICLE SPEED SENSOR ..... EF & EC-102
**Diagnostic Procedure 27**
IGNITION SIGNAL ..... EF & EC-104
**Diagnostic Procedure 28**
ECM (ECCS CONTROL MODULE) ..... EF & EC-106
**Diagnostic Procedure 29**
EGR FUNCTION, EGR CONTROL ..... EF & EC-107
**Diagnostic Procedure 30**
OXYGEN SENSOR ..... EF & EC-113
**Diagnostic Procedure 31**
KNOCK SENSOR ..... EF & EC-116

## Contents (Cont'd)

**Diagnostic Procedure 32**
EGR TEMPERATURE SENSOR ..... EF & EC-118
**Diagnostic Procedure 33**
THROTTLE POSITION SENSOR ..... EF & EC-121
**Diagnostic Procedure 34**
INJECTOR LEAK ..... EF & EC-123
**Diagnostic Procedure 35**
A/C CONTROL ..... EF & EC-126
**Diagnostic Procedure 36**
START SIGNAL ..... EF & EC-128
**Diagnostic Procedure 37**
PAIR valve CONTROL ..... EF & EC-130
**Diagnostic Procedure 38**
INJECTOR ..... EF & EC-133
**Diagnostic Procedure 39**
FUEL PUMP ..... EF & EC-135
**Diagnostic Procedure 40**
S.C.V. CONTROL ..... EF & EC-138
**Diagnostic Procedure 41**
IACV-AIR REGULATOR ..... EF & EC-141
**Diagnostic Procedure 42**
IACV-AAC VALVE ..... EF & EC-143
**Diagnostic Procedure 43**
CONDENSER FAN CONTROL ..... EF & EC-146
**Diagnostic Procedure 44**
POWER STEERING OIL PRESSURE SWITCH ..... EF & EC-149
**Diagnostic Procedure 45**
NEUTRAL POSITION SWITCH/A/T CONTROL UNIT ..... EF & EC-151
**Electrical Components Inspection** ..... EF & EC-155

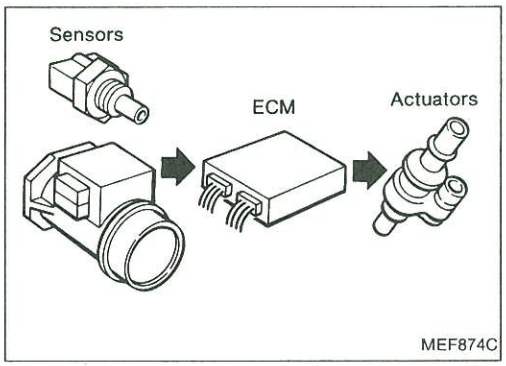

MEF874C

SEF233G

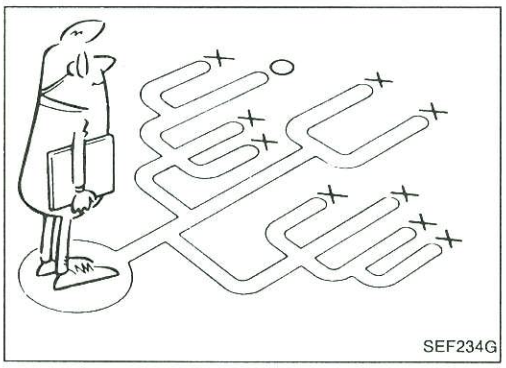
SEF234G

## How to Perform Trouble Diagnoses for Quick and Accurate Repair

### INTRODUCTION

The engine has an ECM to control major systems such as fuel control, ignition control, idle air control system, etc. The ECM accepts input signals from sensors and instantly drives actuators. It is essential that both kinds of signals are proper and stable. At the same time, it is important that there are no conventional problems such as vacuum leaks, fouled spark plugs, or other problems with the engine.

It is much more difficult to diagnose a problem that occurs intermittently rather than continuously. Most intermittent problems are caused by poor electric connections or improper wiring. In this case, careful checking of suspected circuits may help prevent the replacement of good parts.

A visual check only may not find the cause of the problems, so a road test with a circuit tester connected to a suspected circuit should be performed.

Before undertaking actual checks, take just a few minutes to talk with a customer who approaches with a driveability complaint. The customer is a very good supplier of information on such problems, especially intermittent ones. Through interaction with the customer, find out what symptoms are present and under what conditions they occur.

Start your diagnosis by looking for "conventional" problems first. This is one of the best ways to troubleshoot driveability problems on an electronically controlled engine vehicle.

## How to Perform Trouble Diagnoses for Quick and Accurate Repair (Cont'd)

### WORK FLOW

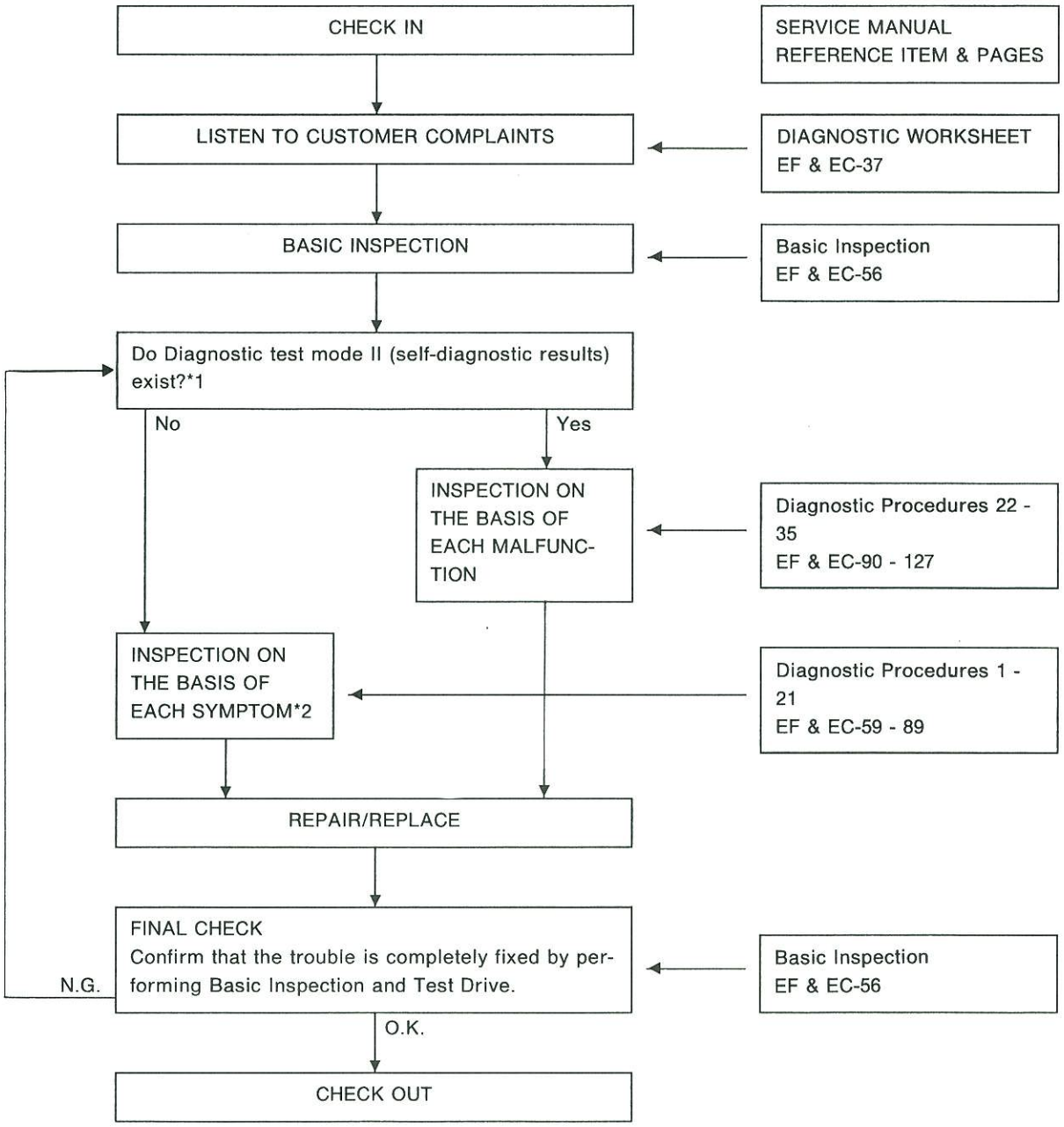


***1: If the Diagnostic test mode II (self-diagnosis) cannot be performed, check main power supply and ground circuit. (See Diagnostic Procedure 22.)**

***2: If the trouble is not duplicated, see INTERMITTENT PROBLEM SIMULATION (EF & EC-38).**

## How to Perform Trouble Diagnoses for Quick and Accurate Repair (Cont'd)

**KEY POINTS**

**WHAT** ..... Vehicle & engine model
**WHEN** ..... Date, Frequencies
**WHERE**..... Road conditions
**HOW** ..... Operating conditions, Weather conditions, Symptoms

SEF907L

### DIAGNOSTIC WORKSHEET

There are many kinds of operating conditions that lead to malfunctions on engine components.
A good grasp of such conditions can make trouble-shooting faster and more accurate.
In general, feelings for a problem depend on each customer. It is important to fully understand the symptoms or under what conditions a customer complains.
Make good use of a diagnostic worksheet such as the one shown below in order to utilize all the complaints for trouble-shooting.

### Worksheet sample

| | | | |
|---|---|---|---|
| Customer name MR/MS | | Model & Year | VIN |
| Engine # | | Trans. | Mileage |
| Incident Date | | Manuf. Date | In Service Date |
| Symptoms | ☐ Startability | ☐ Impossible to start ☐ No combustion ☐ Partial combustion<br>☐ Partial combustion affected by throttle position<br>☐ Partial combustion NOT affected by throttle position<br>☐ Possible but hard to start ☐ Others [ ] | |
| | ☐ Idling | ☐ No fast idle ☐ Unstable ☐ High idle ☐ Low idle<br>☐ Others [ ] | |
| | ☐ Driveability | ☐ Stumble ☐ Surge ☐ Knock ☐ Lack of power<br>☐ Intake backfire ☐ Exhaust backfire<br>☐ Others [ ] | |
| | ☐ Engine stall | ☐ At the time of start ☐ While idling<br>☐ While accelerating ☐ While decelerating<br>☐ Just after stopping ☐ While loading | |
| Incident occurrence | | ☐ Just after delivery ☐ Recently<br>☐ In the morning ☐ At night ☐ In the daytime | |
| Frequency | | ☐ All the time ☐ Under certain conditions ☐ Sometimes | |
| Weather conditions | | ☐ Not affected | |
| | Weather | ☐ Fine ☐ Raining ☐ Snowing ☐ Others [ ] | |
| | Temperature | ☐ Hot ☐ Warm ☐ Cool ☐ Cold ☐ Humid °F | |
| Engine conditions | | ☐ Cold ☐ During warm-up ☐ After warm-up<br>Engine speed 0 2,000 4,000 6,000 8,000 rpm | |
| Road conditions | | ☐ In town ☐ In suburbs ☐ Highway ☐ Off road (up/down) | |
| Driving conditions | | ☐ Not affected<br>☐ At starting ☐ While idling ☐ At racing<br>☐ While accelerating ☐ While cruising<br>☐ While decelerating ☐ While turning (RH/LH)<br>Vehicle speed 0 10 20 30 40 50 60 MPH | |
| Malfunction indicator lamp | | ☐ Turned on ☐ Not turned on | |

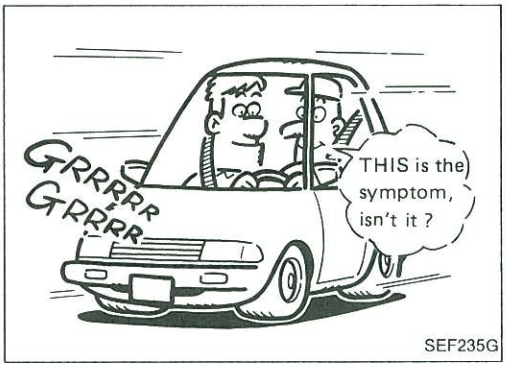


## How to Perform Trouble Diagnoses for Quick and Accurate Repair (Cont'd)

### INTERMITTENT PROBLEM SIMULATION

In order to duplicate an intermittent problem, it is effective to create similar conditions for component parts, under which the problem might occur.
Perform the activity listed under
**Service procedure and note the result.**

| | Variable factor | Influential part | Target condition | Service procedure |
|---|---|---|---|---|
| 1 | Mixture ratio | Pressure regulator | Made lean | Remove vacuum hose and apply vacuum. |
| | | | Made rich | Remove vacuum hose and apply pressure. |
| 2 | Ignition timing | Crankshaft position sensor | Advanced | Rotate distributor clockwise. |
| | | | Retarded | Rotate distributor counterclockwise. |
| 3 | Mixture ratio feedback control | Oxygen sensor | Suspended | Disconnect oxygen sensor harness connector. |
| | | ECM | Operation check | Perform Diagnostic test mode II (oxygen sensor monitor) at 2,000 rpm. |
| 4 | Idle speed | IACV-AAC valve | Raised | Turn idle adjusting screw counterclockwise. |
| | | | Lowered | Turn idle adjusting screw clockwise. |
| 5 | Electrical connection (Electric continuity) | Harness connectors and wires | Poor electrical connection or improper wiring | Tap or wiggle. |
| | | | | Race engine rapidly. See if the torque reaction of the engine unit causes electric breaks. |
| 6 | Temperature | ECM | Cooled | Cool with an icing spray or similar device. |
| | | | Warmed | Heat with a hair drier.<br>**[WARNING: Do not overheat the unit.]** |
| 7 | Moisture | Electric parts | Damp | Wet.<br>**[WARNING: Do not directly pour water on components. Use a mist sprayer.]** |
| 8 | Electric loads | Load switches | Loaded | Turn on headlamps, air conditioner, rear defogger, etc. |
| 9 | Closed throttle position switch condition | ECM | ON-OFF switching | Rotate throttle position sensor body. |
| 10 | Ignition spark | Timing light | Spark power check | Try to flash timing light for each cylinder using ignition coil adapter (S.S.T.). |

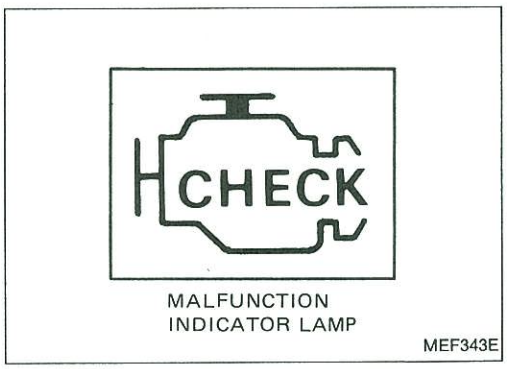


MALFUNCTION
INDICATOR LAMP
MEF343E

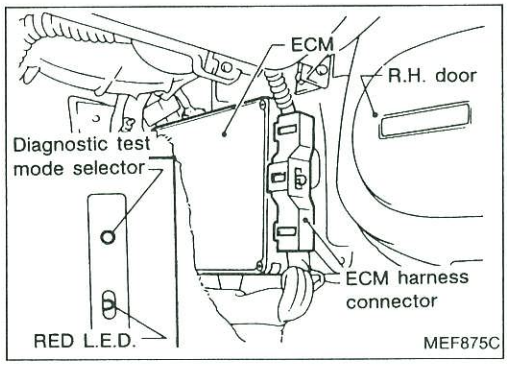


MEF875C

## On-board Diagnostic System

### MALFUNCTION INDICATOR LAMP

A malfunction indicator lamp has been adopted on all models. This light blinks simultaneously with the RED L.E.D. on the ECM.

### ECM L.E.D.

The ECM has only one RED L.E.D.

### SELF-DIAGNOSTIC FUNCTION

| Condition | | Diagnostic Test Mode | |
|---|---|---|---|
| | | Diagnostic Test Mode I | Diagnostic Test Mode II |
| Ignition switch in "ON" position | Engine stopped | BULB CHECK | SELF-DIAGNOSTIC RESULTS |
| | Engine running | MALFUNCTION WARNING | OXYGEN SENSOR MONITOR |

## On-board Diagnostic System (Cont'd)

### HOW TO SWITCH MODES

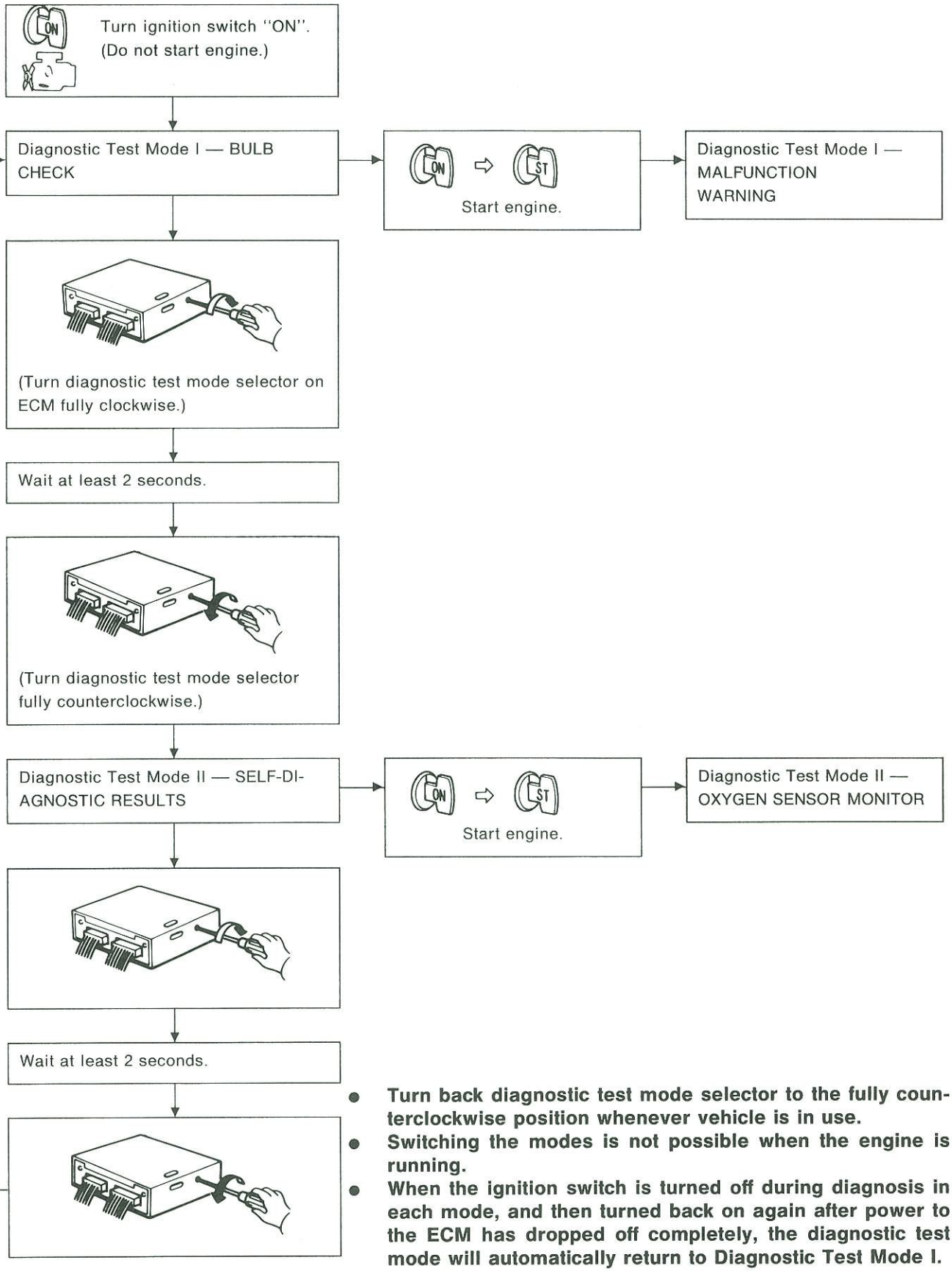


- **Turn back diagnostic test mode selector to the fully counterclockwise position whenever vehicle is in use.**
- **Switching the modes is not possible when the engine is running.**
- **When the ignition switch is turned off during diagnosis in each mode, and then turned back on again after power to the ECM has dropped off completely, the diagnostic test mode will automatically return to Diagnostic Test Mode I.**

## On-board Diagnostic System — Diagnostic Test Mode I

### DIAGNOSTIC TEST MODE I — BULB CHECK

In this mode, the RED L.E.D. in the ECM and the MALFUNCTION INDICATOR LAMP in the instrument panel stay "ON".
If either remain "OFF", check the bulb in the MALFUNCTION INDICATOR LAMP or the RED L.E.D.

### DIAGNOSTIC TEST MODE I — MALFUNCTION WARNING

**FOR CALIFORNIA MODELS**

| MALFUNCTION INDICATOR LAMP and RED L.E.D. | Condition |
|---|---|
| ON | When the following malfunctions (malfunction indicator lamp item) are detected or the ECM's C.P.U. or crankshaft position sensor is malfunctioning. |
| OFF | O.K. |

| Diagnostic trouble code No. | Malfunction |
|---|---|
| 12 | Mass air flow sensor circuit |
| 13 | Engine coolant temperature sensor circuit |
| 14 | Vehicle speed sensor circuit |
| 31 | ECM (ECCS control module) |
| 32 | EGR function |
| 33 | Oxygen sensor circuit |
| 35 | EGR temperature sensor circuit |
| 43 | Throttle position sensor circuit |
| 45 | Injector leak |

- **These Diagnostic Trouble Code Numbers are clarified in Diagnostic Test Mode II — SELF-DIAGNOSTIC RESULTS.**
- **The RED L.E.D. and the MALFUNCTION INDICATOR LAMP will turn off when normal condition is detected. At this time, the Diagnostic Test Mode II — SELF-DIAGNOSTIC RESULTS memory must be cleared as the contents remain stored.**

**FOR NON-CALIFORNIA MODELS**

| MALFUNCTION INDICATOR LAMP and RED L.E.D. | Condition |
|---|---|
| ON | When the ECM's C.P.U. or crankshaft position sensor is malfunctioning. |
| OFF | O.K. |

## On-board Diagnostic System — Diagnostic Test Mode II (Self-diagnostic results)

**CAUTION:**
**The diagnostic test mode selector on the ECM must be returned to the fully counterclockwise position, except when switching the modes.**

### DESCRIPTION

In this mode, a diagnostic trouble code is indicated by the number of flashes from the RED L.E.D. or the MALFUNCTION INDICATOR LAMP as shown below:

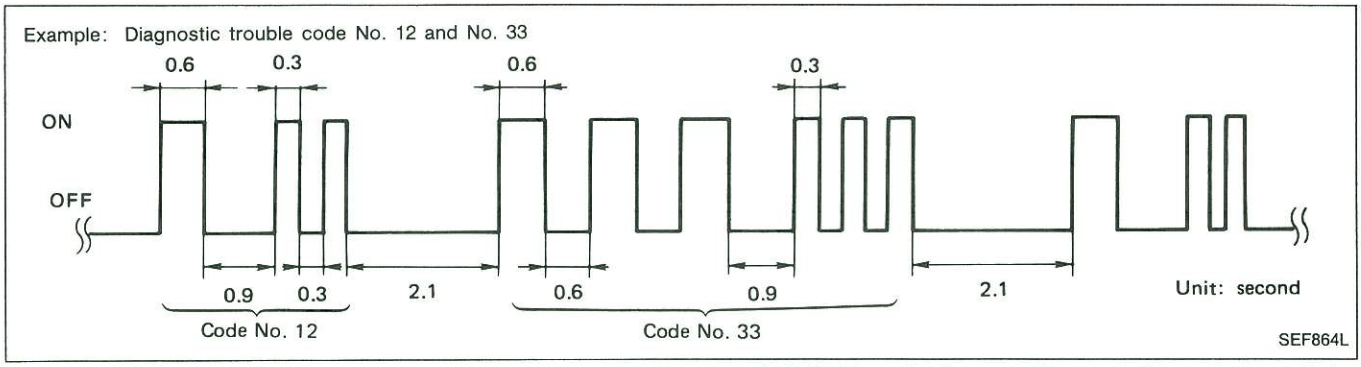


Long (0.6 second) blinking indicates the number of ten digits and short (0.3 second) blinking indicates the number of single digits.
For example, the red L.E.D. flashes once for 0.6 seconds and then it flashes twice for 0.3 seconds. This indicates the number "12" and refers to a malfunction in the mass air flow sensor. In this way, all the problems are classified by their diagnostic trouble code numbers.
The diagnostic results will remain in ECM memory.

**Display diagnostic trouble code table**

| Diagnostic trouble code No. | Detected items | California models | Non-California models |
|---|---|---|---|
| 11* | Crankshaft position sensor circuit | X | X |
| 12 CHECK | Mass air flow sensor circuit | X | X |
| 13 CHECK | Engine coolant temperature sensor circuit | X | X |
| 14 CHECK | Vehicle speed sensor circuit | X | X |
| 21* | Ignition signal circuit | X | X |
| 31 CHECK | ECM | X | X |
| 32 CHECK | EGR function | X | — |
| 33 CHECK | Oxygen sensor circuit | X | X |
| 34 | Knock sensor circuit | X | X |
| 35 CHECK | EGR temperature sensor circuit | X | — |
| 43 CHECK | Throttle position sensor circuit | X | X |
| 45 CHECK | Injector leak | X | — |
| 54 | Signal circuit from A/T control unit to ECM (A/T only) | X | X |
| 55 | No malfunction in the above circuits | X | X |

X: Available
—: Not available
CHECK: Malfunction indicator lamp item
*: Check items causing a malfunction of crankshaft position sensor circuit first, if both diagnostic trouble code No. 11 and 21 are displayed at the same time.

## On-board Diagnostic System — Diagnostic Test Mode II (Self-diagnostic results) (Cont'd)

| Diagnostic trouble code No. | Detected items | Malfunction is detected when ... | Check item (remedy) |
|---|---|---|---|
| 11* | Crankshaft position sensor circuit | • Either 1° or 90° signal is not entered for the first few seconds during engine cranking.<br>• Either 1° or 90° signal is not input often enough while the engine speed is higher than the specified rpm. | • Harness and connector (If harness and connector are normal, replace crankshaft position sensor.) |
| 12 | Mass air flow sensor circuit | • The mass air flow sensor circuit is open or shorted. (An abnormally high or low voltage is entered.) | • Harness and connector (If harness and connector are normal, replace mass air flow sensor.) |
| 13 | Engine coolant temperature sensor circuit | • The engine coolant temperature sensor circuit is open or shorted. (An abnormally high or low output voltage is entered.) | • Harness and connector<br>• Engine coolant temperature sensor |
| 14 | Vehicle speed sensor circuit | • The vehicle speed sensor circuit is open or shorted. | • Harness and connector<br>• Vehicle speed sensor (reed switch) |
| 21* | Ignition signal circuit | • The ignition signal in the primary circuit is not entered during engine cranking or running. | • Harness and connector<br>• Power transistor unit |
| 31 | ECM | • ECM calculation function is malfunctioning. | (Replace ECM (ECCS control module).) |
| 32 | EGR function | • EGR valve does not operate. (EGR valve spring does not lift.) | • EGR valve<br>• EGR and canister control solenoid valve |
| 33 | Oxygen sensor circuit | • The oxygen sensor circuit is open or shorted. (An abnormally high or low output voltage is entered.) | • Harness and connector<br>• Oxygen sensor<br>• Fuel pressure<br>• Injectors<br>• Intake air leaks |
| 34 | Knock sensor circuit | • The knock sensor circuit is open or shorted. (An abnormally high or low voltage is entered.) | • Harness and connector<br>• Knock sensor |
| 35 | EGR temperature sensor circuit | • The EGR temperature sensor circuit is open or shorted. (An abnormally high or low voltage is entered.) | • Harness and connector<br>• EGR temperature sensor |
| 43 | Throttle position sensor circuit | • The throttle position sensor circuit is open or shorted. (An abnormally high or low voltage is entered.) | • Harness and connector<br>• Throttle position sensor |
| 45 | Injector leak | • Fuel leaks from injector. | • Injector |
| 54 | Signal circuit from A/T control unit to ECM (A/T only) | • The A/T communication line is open or shorted. | • Harness and connector |

*: Check items causing a malfunction of crankshaft position sensor circuit first, if both "CRANKSHAFT POSITION SENSOR (No. 11)" and "IGN SIGNAL-PRIMARY (No. 21)" are displayed one after the other.

### HOW TO ERASE SELF-DIAGNOSTIC RESULTS

The diagnostic trouble code is erased from the backup memory on the ECM when the diagnostic test mode is changed from Diagnostic Test Mode II to Diagnostic Test Mode I. (Refer to "HOW TO SWITCH DIAGNOSTIC TEST MODES".)

- **When the battery terminal is disconnected, the diagnostic trouble code will be lost from the backup memory within 24 hours.**
- **Before starting diagnostic test mode II (Self-diagnostic results), do not erase the stored memory before beginning diagnostic test mode II (Self-diagnostic results).**

## On-board Diagnostic System — Diagnostic Test Mode II (Oxygen sensor monitor)

### DESCRIPTION

In this mode, the MALFUNCTION INDICATOR LAMP and RED L.E.D. display the condition of the fuel mixture (lean or rich) which is monitored by the oxygen sensor.

| MALFUNCTION INDICATOR LAMP and RED L.E.D. | Fuel mixture condition in the exhaust gas | Air fuel ratio feedback control condition |
|---|---|---|
| ON | Lean | Closed loop system |
| OFF | Rich | |
| *Remains ON or OFF | Any condition | Open loop system |

*: Maintains conditions just before switching to open loop.

### HOW TO CHECK OXYGEN SENSOR

1. Set Diagnostic Test Mode II. (Refer to "HOW TO SWITCH DIAGNOSTIC TEST MODES".)
2. Start engine and warm it up until engine coolant temperature indicator points to the middle of the gauge.
3. Run engine at about 2,000 rpm for about 2 minutes under no-load conditions.
4. Make sure RED L.E.D. or MALFUNCTION INDICATOR LAMP goes ON and OFF more than 5 times every 10 seconds; measured at 2,000 rpm under no-load.

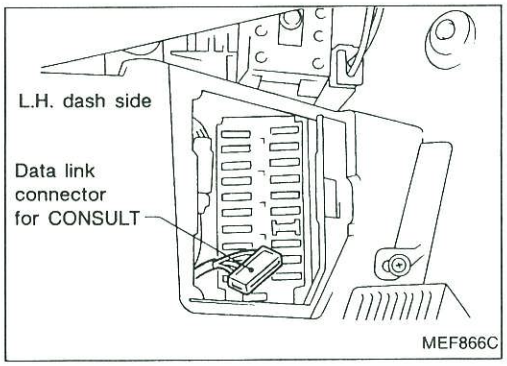


## Consult

### CONSULT INSPECTION PROCEDURE

1. Turn off ignition switch.
2. Connect "CONSULT" to data link connector for CONSULT. (Data link connector for CONSULT is located in lower side instrument panel.)

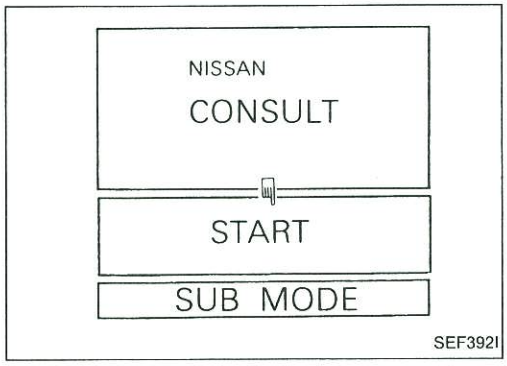


3. Turn on ignition switch.
4. Touch "START".

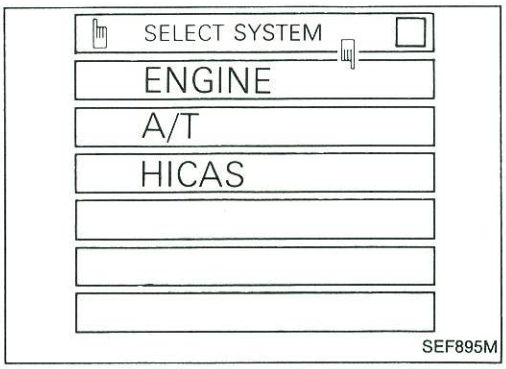


5. Touch "ENGINE".

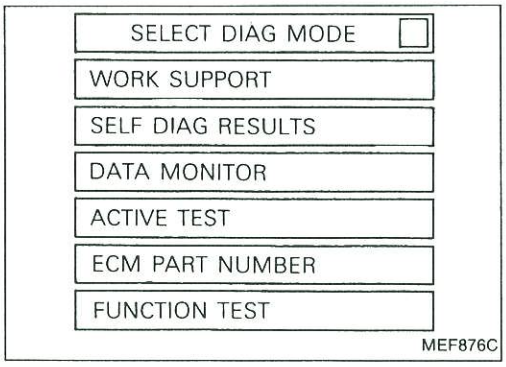


6. Perform each diagnostic test mode according to the inspection sheet as follows:

**For further information, see the CONSULT Operation Manual.**

## Consult (Cont'd)

### ECCS COMPONENT PARTS APPLICATION

| ECCS COMPONENT PARTS | | DIAGNOSTIC TEST MODE | | | | |
|---|---|---|---|---|---|---|
| | | WORK SUPPORT | SELF-DIAGNOSTIC RESULTS | DATA MONITOR | ACTIVE TEST | FUNCTION TEST |
| INPUT | Crankshaft position sensor (REF) | | X | X | | |
| | Mass air flow sensor | | X | X | | |
| | Engine coolant temperature sensor | | X | X | X | |
| | Oxygen sensor | | X | X | | X |
| | Vehicle speed sensor | | X | X | | X |
| | Throttle position sensor | X | X | X | | X |
| | EGR temperature sensor* | | X | X | | |
| | Knock sensor | | X | | | |
| | Ignition switch (start signal) | | | X | | X |
| | Air conditioner switch | | | X | | |
| | Neutral position switch | | | X | | X |
| | Power steering oil pressure switch | | | X | | X |
| | Closed throttle position switch | | | X | | |
| | Battery | | | X | | |
| OUTPUT | Injectors | | X | X | X | X |
| | Power transistor (ignition timing) | X | X (Ignition signal) | X | X | X |
| | IACV-AAC valve | X | | X | X | X |
| | EGR and canister control solenoid valve | | X | X | X | X |
| | Air conditioner relay | | | X | | |
| | Fuel pump relay | X | | X | X | X |
| | PAIRC-solenoid valve | | | X | X | |
| | Swirl control solenoid valve | | | X | X | X |
| | Radiator fan relay | | | X | X | X |

*: The ECCS component part marked "*" is applicable to vehicles for California only.

X: Applicable

## Consult (Cont'd)

### FUNCTION

| Diagnostic test mode | Function |
|---|---|
| Work support | This mode enables a technician to adjust some devices faster and more accurately by following the indications on the CONSULT unit. |
| Self-diagnostic results | Self-diagnostic results can be read and erased quickly. |
| Data monitor | Input/Output data in the ECM can be read. |
| Active test | Diagnostic Test Mode in which CONSULT drives some actuators apart from the ECMs and also shifts some parameters in a specified range. |
| ECM part number | ECM part number can be read. |
| Function test | Conducted by CONSULT instead of a technician to determine whether each system is "OK" or "NG". |

### WORK SUPPORT DIAGNOSTIC TEST MODE

| WORK ITEM | CONDITION | USAGE |
|---|---|---|
| THRTL POS SEN ADJ | CHECK THE THROTTLE POSITION SENSOR SIGNAL. ADJUST IT TO THE SPECIFIED VALUE BY ROTATING THE SENSOR BODY UNDER THE FOLLOWING CONDITIONS.<br>• IGN SW "ON"<br>• ENG NOT RUNNING<br>• ACC PEDAL NOT PRESSED | When adjusting throttle position sensor initial position |
| IGNITION TIMING ADJ* | • IGNITION TIMING FEEDBACK CONTROL WILL BE HELD BY TOUCHING "START".<br>AFTER DOING SO, ADJUST IGNITION TIMING WITH A TIMING LIGHT BY TURNING THE CRANKSHAFT POSITION SENSOR. | When adjusting initial ignition timing |
| IACV-AAC/V ADJ | SET ENGINE SPEED AT THE SPECIFIED VALUE UNDER THE FOLLOWING CONDITIONS.<br>• ENGINE WARMED UP<br>• NO-LOAD | When adjusting idle speed |
| FUEL PRESSURE RELEASE | • FUEL PUMP WILL STOP BY TOUCHING "START" WHEN IDLING.<br>CRANK A FEW TIMES AFTER ENGINE STALLS. | When releasing fuel pressure from fuel line |

## Consult (Cont'd)

### SELF-DIAGNOSTIC RESULTS DIAGNOSTIC TEST MODE

| DIAGNOSTIC ITEM | DIAGNOSTIC ITEM IS DETECTED WHEN ... | CHECK ITEM (REMEDY) |
|---|---|---|
| CRANK POSITION SEN* | • Either 1° or 120° signal is not entered for the first few seconds during engine cranking.<br>• Either 1° or 120° signal is not input often enough while the engine speed is higher than the specified rpm. | • Harness and connector (If harness and connector are normal, replace crankshaft position sensor.) |
| MASS AIR FLOW SEN | • The mass air flow sensor circuit is open or shorted. (An abnormally high or low voltage is entered.) | • Harness and connector (If harness and connector are normal, replace mass air flow sensor.) |
| COOLANT TEMP SEN | • The engine coolant temperature sensor circuit is open or shorted. (An abnormally high or low output voltage is entered.) | • Harness and connector<br>• Engine coolant temperature sensor |
| VEHICLE SPEED SEN | • The vehicle speed sensor circuit is open or shorted. | • Harness and connector<br>• Vehicle speed sensor (reed switch) |
| IGN SIGNAL-PRIMARY* | • The ignition signal in primary circuit is not entered during engine cranking or running. | • Harness and connector<br>• Power transistor unit |
| ECM | • ECM calculation function is malfunctioning. | (Replace ECM (ECCS control module).) |
| EGRC SOLENOID/V** | • EGR valve does not operate. (EGR valve spring does not lift.) | • EGR valve<br>• EGR and canister control solenoid valve |
| OXYGEN SEN | • The oxygen sensor circuit is open or shorted. (An abnormally high or low output voltage is entered.) | • Harness and connector<br>• Oxygen sensor<br>• Fuel pressure<br>• Injectors<br>• Intake air leaks |
| KNOCK SENSOR | • The knock sensor circuit is open or shorted. (An abnormally high or low voltage is entered.) | • Harness and connector<br>• Knock sensor |
| EGR TEMP SENSOR** | • The EGR temperature sensor circuit is open or shorted. (An abnormally high or low voltage is entered.) | • Harness and connector<br>• EGR temperature sensor |
| THROTTLE POSI SEN | • The throttle position sensor circuit is open or shorted. (An abnormally high or low voltage is entered.) | • Harness and connector<br>• Throttle position sensor |
| INJECTOR LEAK** | • Fuel leaks from injector. | • Injector |

*: Check items causing a malfunction of crankshaft position sensor circuit first, if both "CRANK POSITION SEN" and "IGN SIGNAL-PRIMARY" come out at the same time.

**:The diagnostic item marked "**" is applicable to vehicles for California only.

## Consult (Cont'd)

### DATA MONITOR DIAGNOSTIC TEST MODE

| MONITOR ITEM | CONDITION | | SPECIFICATION | CHECK ITEM WHEN OUTSIDE SPEC. |
|---|---|---|---|---|
| CKPS·RPM (REF) | • Tachometer: Connect<br>• Run engine and compare tachometer indication with the CONSULT value. | | Almost the same speed as the CONSULT value. | • Harness and connector<br>• Crankshaft position sensor |
| MAS AIR/FL SE | • Engine: After warming up, idle the engine<br>• A/C switch "OFF"<br>• Shift lever "N" position | Idle | 1.0 - 1.5V | • Harness and connector<br>• Mass air flow sensor |
| | | 2,000 rpm | 1.4 - 1.9V | |
| COOLANT TEMP/S | • Engine: After warming up | | More than 70°C (158°F) | • Harness and connector<br>• Engine coolant temperature sensor |
| O2 SEN | • Engine: After warming up | Maintaining engine speed at 2,000 rpm | 0 ↔ Approx. 1.5V | • Harness and connector<br>• Oxygen sensor<br>• Intake air leaks<br>• Injectors |
| M/R F/C MNT | | | LEAN ↔ RICH<br>Changes more than 5 times during 10 seconds. | |
| VHCL SPEED SE | • Turn drive wheels and compare speedometer indication with the CONSULT value | | Almost the same speed as the CONSULT value | • Harness and connector<br>• Vehicle speed sensor |
| BATTERY VOLT | • Ignition switch: ON (Engine stopped) | | 11 - 14V | • Battery<br>• ECM power supply circuit |
| THRTL POS SEN | • Ignition switch: ON (Engine stopped) | Throttle valve fully closed | 0.5 ± 0.2V | • Harness and connector<br>• Throttle position sensor<br>• Throttle position sensor adjustment |
| | | Throttle valve fully opened | Approx. 4.0V | |
| EGR TEMP SEN* | • Engine: After warming up | | Less than 4.5V | • Harness and connector<br>• EGR temperature sensor |
| START SIGNAL | • Ignition switch: ON → START | | OFF → ON | • Harness and connector<br>• Starter switch |
| CLOSED THL/SW | • Ignition switch: ON (Engine stopped) | Throttle valve: Closed throttle position | ON | • Harness and connector<br>• Throttle position sensor<br>• Throttle position sensor adjustment |
| | | Throttle valve: Slightly open | OFF | |
| AIR COND SIG | • Engine: After warming up, idle the engine | A/C switch "OFF" | OFF | • Harness and connector<br>• Air conditioner switch |
| | | A/C switch "ON" | ON | |
| NEUT POSI SW | • Ignition switch: ON | Shift lever "P" or "N" | ON | • Harness and connector<br>• Neutral position switch |
| | | Except above | OFF | |

Remarks: The monitor item marked "*" is applicable to vehicles for California only.
Specifications are reference values.

## Consult (Cont'd)

| MONITOR ITEM | CONDITION | | SPECIFICATION | CHECK ITEM WHEN OUTSIDE SPEC. |
|---|---|---|---|---|
| INJ PULSE | • Engine: After warming up<br>• A/C switch "OFF"<br>• Shift lever "N"<br>• No-load | Idle | 2.3 - 3.0 msec. | • Harness and connector<br>• Injector<br>• Mass air flow sensor<br>• Intake air system |
| | | 2,000 rpm | 2.1 - 2.8 msec. | |
| IGN TIMING | ditto | Idle | 20° B.T.D.C. | • Harness and connector<br>• Crankshaft position sensor |
| | | 2,000 rpm | More than 25° B.T.D.C. | |
| IACV-AAC/V | ditto | Idle | 15 - 40% | • Harness and connector<br>• IACV-AAC valve |
| | | 2,000 rpm | — | |
| AIR COND RLY | • Air conditioner switch OFF → ON | | OFF → ON | • Harness and connector<br>• Air conditioner switch<br>• Air conditioner relay |
| SWRL CONT S/V | • Fuel temperature is above 35°C (95°F) | Idle | ON | • Harness and connector<br>• Pressure regulator control solenoid valve<br>• Fuel temperature sensor |
| | | 2,000 rpm | OFF | |
| EGRC SOL/V | • Engine: After warming up<br>• A/C switch "OFF"<br>• Shift lever "N" position<br>• No-load | Idle | ON | • Harness and connector<br>• EGR and canister control solenoid valve |
| | | Race engine (2,000 - 3,000 rpm) | OFF | |
| PW/ST SIGNAL | • Engine: After warming up, idle the engine | Steering wheel in neutral position (forward direction) | OFF | • Harness and connector<br>• Power steering oil pressure switch |
| | | The steering wheel is turned. | ON | |
| LOAD SIGNAL | • Ignition switch: ON | Rear window defogger is operating. | ON | • Harness and connector<br>• Rear window defogger system (Refer to section EL.) |
| | | Rear window defogger is not operating. | OFF | |
| AMB TEMP SW | • Ignition switch: ON<br>• Compare ambient temperature with the following: | Below 19°C (66°F) | OFF | • Harness and connector<br>• Ambient switch |
| | | 19 - 25°C (66 - 77°F) | — | |
| | | Above 25°C (77°F) | ON | |

Remarks: Specifications are reference values.

## Consult (Cont'd)

### ACTIVE TEST DIAGNOSTIC TEST MODE

| TEST ITEM | CONDITION | JUDGMENT | CHECK ITEM (REMEDY) |
|---|---|---|---|
| FUEL INJECTION | • Engine: Return to the original trouble condition<br>• Change the amount of fuel injection with the CONSULT. | If trouble symptom disappears, see CHECK ITEM. | • Harness and connector<br>• Fuel injectors<br>• Oxygen sensors |
| IACV-AAC/V OPENING | • Engine: After warming up, idle the engine.<br>• Change the IACV-AAC valve opening percent with the CONSULT. | Engine speed changes according to the opening percent. | • Harness and connector<br>• IACV-AAC valve |
| ENG COOLANT TEMP | • Engine: Return to the original trouble condition<br>• Change the engine coolant temperature with the CONSULT. | If trouble symptom disappears, see CHECK ITEM. | • Harness and connector<br>• Engine coolant temperature sensor<br>• Fuel injectors |
| IGN TIMING TEST | • Engine: Return to the original trouble condition<br>• Timing light: Set<br>• Retard the ignition timing with the CONSULT. | If trouble symptom disappears, see CHECK ITEM. | • Adjust initial ignition timing |
| POWER BALANCE | • Engine: After warming up, idle the engine.<br>• A/C switch "OFF"<br>• Shift lever "N" position<br>• Cut off each injector signal one at a time with the CONSULT. | Engine runs rough or dies. | • Harness and connector<br>• Compression<br>• Injectors<br>• Power transistor<br>• Spark plugs<br>• Ignition coils |
| RADIATOR FAN | • Ignition switch: ON<br>• Turn the radiator fan "ON" and "OFF" with the CONSULT. | Radiator fan moves and stops. | • Harness and connector<br>• Radiator fan motor |
| FUEL PUMP RELAY | • Ignition switch: ON (Engine stopped)<br>• Turn the fuel pump relay "ON" and "OFF" with the CONSULT and listen to operating sound. | Fuel pump relay makes the operating sound. | • Harness and connector<br>• Fuel pump relay |
| EGRC SOLENOID VALVE<br>PAIRC-SOLENOID/V<br>SWIRL CONT SOL VALVE | • Ignition switch: ON<br>• Turn solenoid valve "ON" and "OFF" with the CONSULT and listen to operating sound. | Each solenoid valve makes an operating sound. | • Harness and connector<br>• Solenoid valve |
| SELF-LEARN CONT | • In this test, the coefficient of self-learning control mixture ratio returns to the original coefficient by touching "CLEAR" on the screen. | | |

## Consult (Cont'd)

### FUNCTION TEST DIAGNOSTIC TEST MODE

| FUNCTION TEST ITEM | CONDITION | JUDGEMENT | | CHECK ITEM (REMEDY) |
|---|---|---|---|---|
| SELF-DIAG RESULTS | • Ignition switch: ON (Engine stopped)<br>• Displays the results of on-board diagnostic system. | — | | Objective system |
| CLOSED THROTTLE POSI (CLOSED THROTTLE POSITION SWITCH CIRCUIT) | • Ignition switch: ON (Engine stopped)<br>• Closed throttle position switch circuit is tested when throttle is opened and closed fully. ("CLOSED THROTTLE POSI" is the test item name for the vehicles in which idle is selected by throttle position sensor.) | Throttle valve: opened | OFF | • Harness and connector<br>• Throttle position sensor (Closed throttle position switch)<br>• Throttle position sensor (Closed throttle position switch) adjustment<br>• Throttle linkage<br>• Verify operation in DATA MONITOR mode. |
| | | Throttle valve: closed | ON | |
| THROTTL POSI SEN CKT | • Ignition switch: ON (Engine stopped)<br>• Throttle position sensor circuit is tested when throttle is opened and closed fully. | Range (Throttle valve fully opened — Throttle valve fully closed) | More than 3.0V | • Harness and connector<br>• Throttle position sensor<br>• Throttle position sensor adjustment<br>• Throttle linkage<br>• Verify operation in DATA MONITOR mode. |
| NEUTRAL POSI SW CKT | • Ignition switch: ON (Engine stopped)<br>• Neutral position switch circuit is tested when shift lever is manipulated. | OUT OF N/P POSITION | OFF | • Harness and connector<br>• Neutral position switch/Inhibitor switch<br>• Linkage + Inhibitor switch adjustment |
| | | IN N-RANGE | ON | |
| FUEL PUMP CIRCUIT | • Ignition switch: ON (Engine stopped)<br>• Fuel pump circuit is tested by checking the pulsation in fuel pressure when fuel tube is pinched. | There is pressure pulsation on the fuel feed hose. | | • Harness and connector<br>• Fuel pump<br>• Fuel pump relay<br>• Fuel filter clogging<br>• Fuel level |
| EGRC SOL/V CIRCUIT | • Ignition switch: ON (Engine stopped)<br>• EGRC S/V circuit is tested by checking solenoid valve operating noise. | The solenoid valve makes an operating sound every 3 seconds. | | • Harness and connector<br>• EGRC-solenoid valve |
| RADIATOR FAN CIRCUIT | • Ignition switch: ON (Engine stopped)<br>• Radiator fan circuit is tested by checking radiator fan operation. | • The radiator fan rotates and stops every 3 seconds | | • Harness and connector<br>• Radiator fan motor<br>• Radiator fan relay |

## Consult (Cont'd)

| FUNCTION TEST ITEM | CONDITION | JUDGEMENT | | CHECK ITEM (REMEDY) |
|---|---|---|---|---|
| START SIGNAL CIRCUIT | • Ignition switch: ON → START<br>• Start signal circuit is tested when engine is started by operating the starter. Battery voltage and water temperature before cranking, and average battery voltage, mass air flow sensor output voltage and cranking speed during cranking are displayed. | Start signal: OFF → ON | | • Harness and connector<br>• Ignition switch |
| PW/ST SIGNAL CIRCUIT | • Ignition switch: ON (Engine running)<br>• Power steering circuit is tested when steering wheel is rotated fully and then set to a straight line running position. | Locked position | ON | • Harness and connector<br>• Power steering oil pressure switch<br>• Power steering oil pump |
| | | Neutral position | OFF | |
| SWIRL CONTROL S/V CIRCUIT | • Ignition switch: ON (Engine running)<br>• Swirl control S/V circuit is tested by checking swirl control actuator operation. | • The swirl control actuator moves every 3 seconds | | • Harness and connector<br>• Swirl control solenoid valve<br>• Swirl control actuator<br>• Vacuum hose |
| VEHICLE SPEED SEN CIRCUIT | • Vehicle speed sensor circuit is tested when vehicle is running at a speed of 10 km/h (6 mph) or higher. | Vehicle speed sensor input signal is greater than 4 km/h (2 MPH) | | • Harness and connector<br>• Vehicle speed sensor<br>• Electric speedometer |
| IGN TIMING ADJ | • After warming up, idle the engine.<br>• Ignition timing adjustment is checked by reading ignition timing with a timing light and checking whether it agrees with specifications. | The timing light indicates the same value on the screen. | | • Adjust ignition timing (by moving crankshaft position sensor or distributor)<br>• Crankshaft position sensor drive mechanism |
| MIXTURE RATIO TEST | • Air-fuel ratio feedback circuit (injection system, ignition system, vacuum system, etc.) is tested by examining the $O_2$ sensor output at 2,000 rpm under non-loaded state. | • $O_2$ SEN COUNT: More than 5 times during 10 seconds ($O_2$ SEN-R COUNT: More than 5 times during 10 seconds) | | • INJECTION SYS (Injector, fuel pressure regulator, harness or connector)<br>• IGNITION SYS (Spark plug, power transistor, ignition coil, harness or connector)<br>• VACUUM SYS (Intake air leaks)<br>• Oxygen sensor circuit<br>• Oxygen sensor operation<br>• Fuel pressure high or low<br>• Mass air flow sensor |

## Consult (Cont'd)

| FUNCTION TEST ITEM | CONDITION | JUDGEMENT | CHECK ITEM (REMEDY) |
|---|---|---|---|
| POWER BALANCE | • After warming up, idle the engine.<br>• Injector operation of each cylinder is stopped one after another, and resultant change in engine rotation is examined to evaluate combustion of each cylinder. (This is only displayed for models where a sequential multiport fuel injection system system is used.) | Difference in engine speed is greater than 25 rpm before and after cutting off the injector of each cylinder. | • Injector circuit (Injector, harness or connector)<br>• Ignition circuit (Spark plug, power transistor, ignition coil, harness or connector)<br>• Compression<br>• Valve timing |
| IACV-AAC/V SYSTEM | • After warming up, idle the engine.<br>• IACV-AAC valve system is tested by detecting change in engine speed when IACV-AAC valve opening is changed to 0%, 20% and 80%. | Difference in engine speed is greater than 150 rpm between when valve opening is at 80% (102 steps) and at 20% (25 steps). | • Harness and connector<br>• IACV-AAC valve<br>• Air passage restriction between air inlet and IACV-AAC valve<br>• IAS (Idle adjusting screw) adjustment |

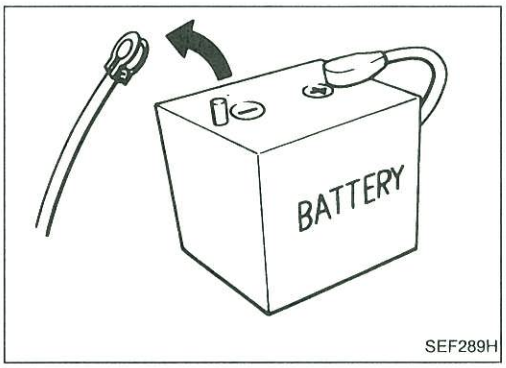

SEF289H

## Diagnostic Procedure

**CAUTION:**

1. **Before connecting or disconnecting the ECM harness connector to or from any ECM, be sure to turn the ignition switch to the "OFF" position and disconnect the negative battery terminal in order not to damage ECM as battery voltage is applied to ECM even if ignition switch is turned off. Failure to do so may damage the ECM.**

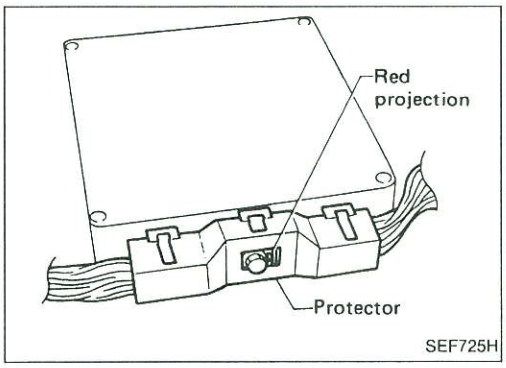

SEF725H

2. **When connecting ECM harness connector, tighten securing bolt until red projection is in line with connector face.**

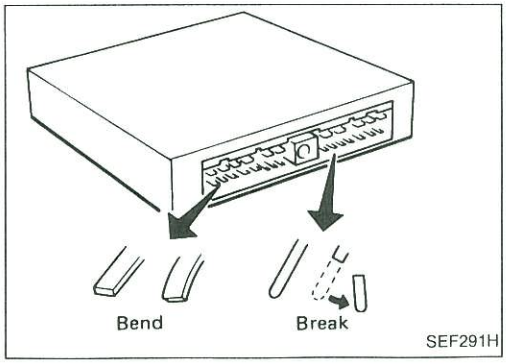

SEF291H

3. **When connecting or disconnecting pin connectors into or from ECM, take care not to damage pin terminals (bend or break).**
4. **Make sure that there are not any bends or breaks on ECM pin terminal, when connecting pin connectors.**

## Diagnostic Procedure (Cont'd)

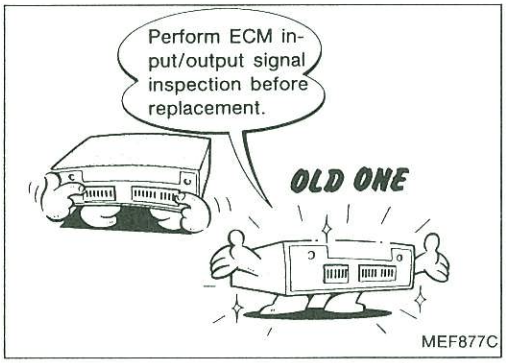


5. **Before replacing ECM, perform ECM input/output signal inspection and make sure whether ECM functions properly or not. (See page EF & EC-155.)**

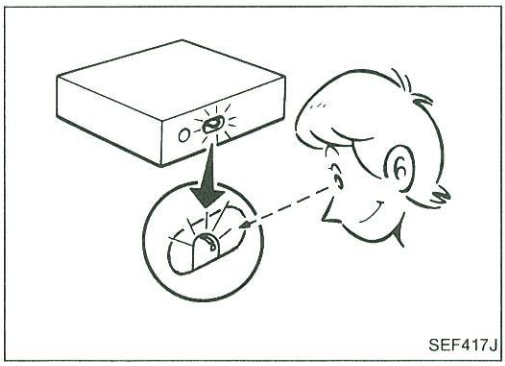


6. **After performing this "Diagnostic Procedure", perform diagnostic test mode II (Self-diagnostic results) and driving test.**

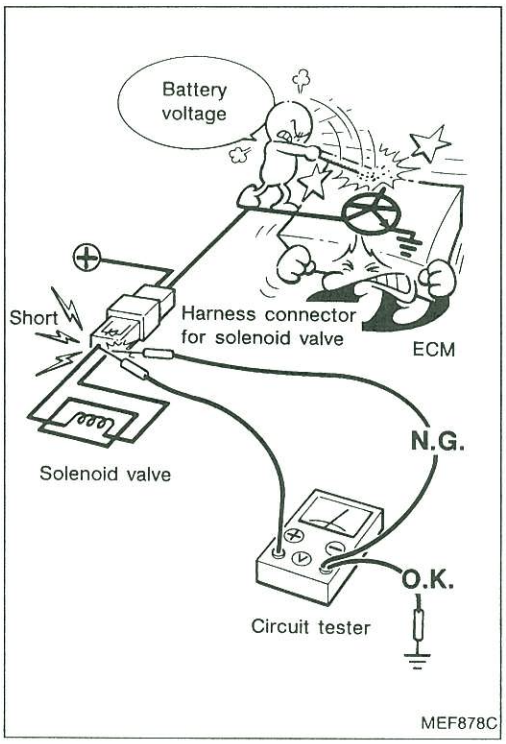


7. **When measuring ECM controlled components supply voltage with a circuit tester, separate one tester probe from the other.**
   **If the two tester probes accidentally make contact with each other during measurement, the circuit will be shorted, resulting in damage to the ECM power transistor.**

## Basic Inspection

1

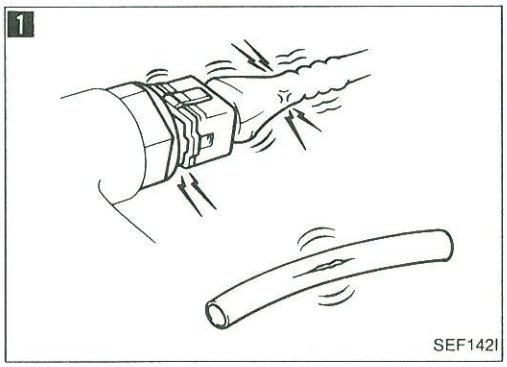
SEF142I

2

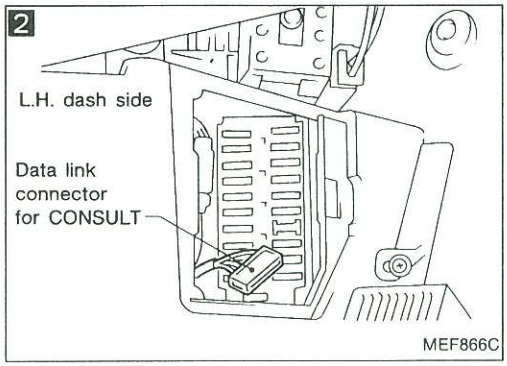

MEF866C

3

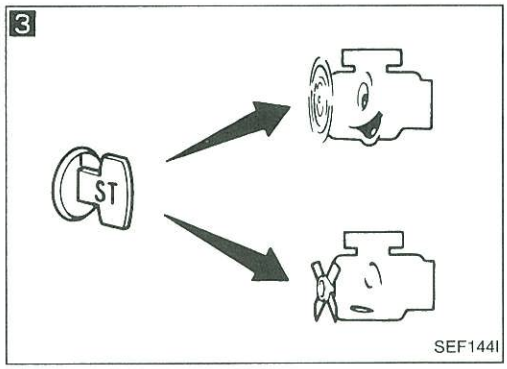

SEF144I

4

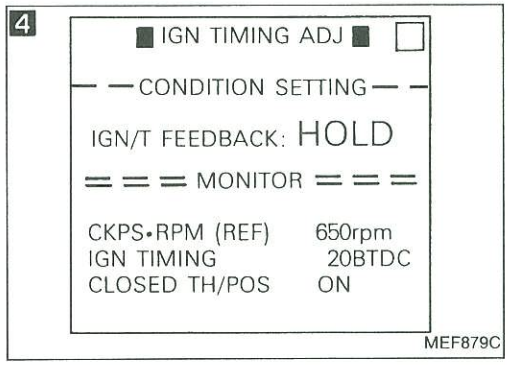

MEF879C

4

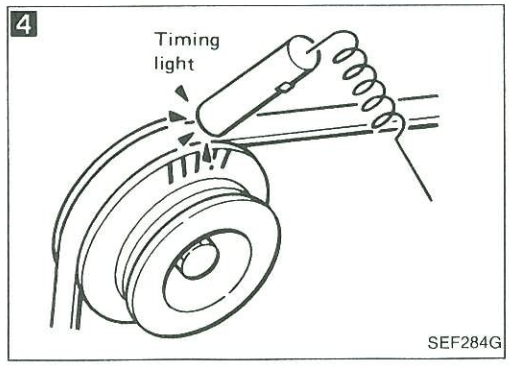

SEF284G

1

**BEFORE STARTING**

1. Check service records for any recent repairs that may indicate a related problem, or the current need for scheduled maintenance.
2. Open engine hood and check the following:
   - Harness connectors for proper connections
   - Vacuum hoses for splits, kinks, and proper connections
   - Wiring for proper connections, pinches, and cuts

2

**CONNECT CONSULT TO THE VEHICLE.**

Connect "CONSULT" to the data link connector for CONSULT and select "ENGINE" from the menu. (Refer to page EF & EC-45.)

3

**DOES ENGINE START?**

No → Go to 6

Yes

4

**CHECK IGNITION TIMING.**

N.G. → Adjust ignition timing by turning crankshaft position sensor. Refer to page EF & EC-28.

1. Warm up engine sufficiently.
2. Select "IGN TIMING ADJ" in "WORK SUPPORT" mode.
3. Touch "START".
4. Check ignition timing at idle using timing light.

**Ignition timing:**
**20° ± 2° B.T.D.C.**

1. Warm up engine sufficiently.
2. Stop engine and disconnect throttle position sensor harness connector.
3. Start engine.
4. Check ignition timing at idle using timing light.

**Ignition timing:**
**20° ± 2° B.T.D.C.**

O.K.

(Go to Ⓐ on next page.)

## Basic Inspection (Cont'd)

5

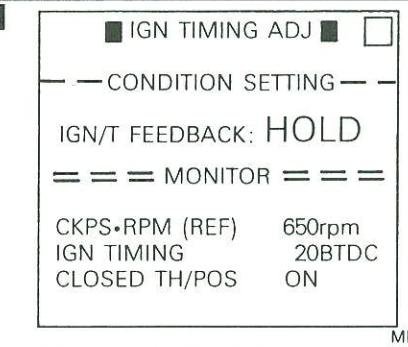


MEF879C

5

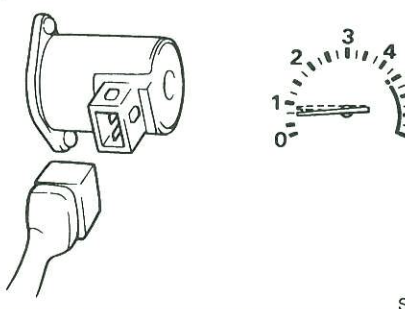


SEF146I

6

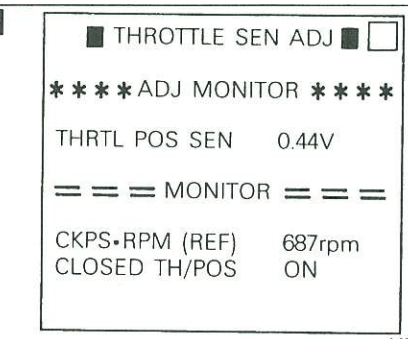


MEF880C

6

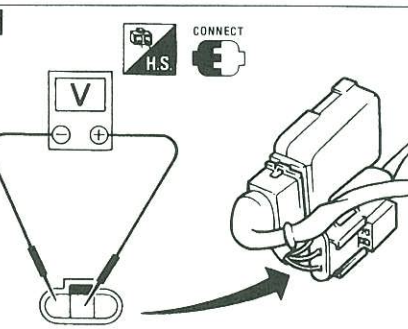


SEF148I

Ⓐ

5

**CHECK IDLE ADJ. SCREW INITIAL SET RPM.**

1. Select "IGN TIMING ADJ" in "WORK SUPPORT" mode.
2. When touching "START", does engine speed fall to 650 ± 50 rpm (A/T in "N" position)?

N.G. → Adjust engine speed by turning idle adjusting screw.

OR

Does engine run at 650 ± 50 rpm (A/T in "N" position)?

O.K.

6

**CHECK THROTTLE POSITION SENSOR CLOSED THROTTLE POSITION.**

1. Perform "THROTL POS SEN. ADJ." in "WORK SUPPORT" mode.
2. Check that output voltage of throttle position sensor is approx. 0.5 ± 0.2V. (Throttle valve fully closes.) and "CLOSED TH/POS" stays "ON".

N.G. →
1. Adjust output voltage by rotating throttle position sensor body.
2. Disconnect throttle position sensor harness connector for a few seconds and then reconnect it.
3. Confirm that "CLOSED TH/POS" stays "ON".

OR

Measure output voltage of throttle position sensor using voltmeter, and check that it is approx. 0.4 to 0.5V. (Throttle valve fully closed.)

O.K.

(Go to Ⓑ on next page.)

## Basic Inspection (Cont'd)

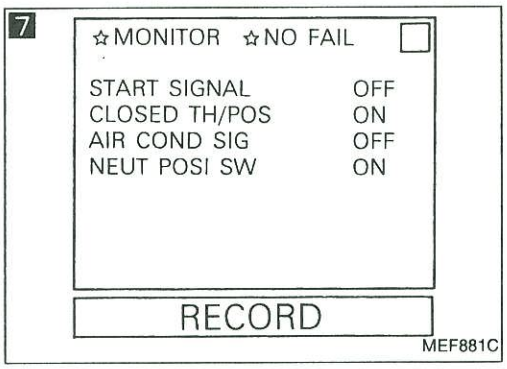


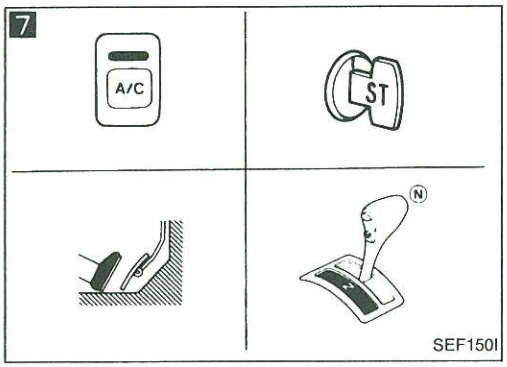


Ⓑ

**7**

**CHECK SWITCH INPUT SIGNAL.**

Select the following switches in "DATA MONITOR" mode,
a) Start signal,
b) Idle position,
c) Air conditioner signal,
d) Neutral position (Parking) switch, and check the switches' ON-OFF operation.

N.G. → Repair or replace the malfunctioning switch or its circuit.

OR

Remove ECM from front floor panel and check the above switches' ON-OFF operation using voltmeter at each ECM terminal.

| Switch | Condition | Voltage (V) |
|---|---|---|
| Start signal | IGN ON → IGN START | 0 → Battery voltage |
| Closed throttle position | Engine warmed up sufficiently closed throttle position → Depress the accelerator pedal. | Battery voltage → 0V |
| A/C signal | A/C OFF (Engine running) → A/C ON | 7.0 - 10.0 → 0.5 - 0.7 |
| Neutral position switch | Shift lever is "N" or "P" position → Except "N" and "P" position | 0 → 8.0 - 10.0 |

O.K.

**8**

**READ SELF-DIAGNOSTIC RESULTS.**

1. Perform "SELF-DIAG RESULTS" mode.
2. Read out self-diagnostic results.
3. Is a failure detected?

Yes → Go to the relevant inspection procedure.

OR

1. Set diagnostic test mode II (self-diagnostic results) (Refer to page EF & EC-41.)
2. Count the number of RED L.E.D. or malfunction indicator lamp flashes and read out the diagnostic trouble codes.
3. Are the diagnostic trouble codes being output?

No → INSPECTION END

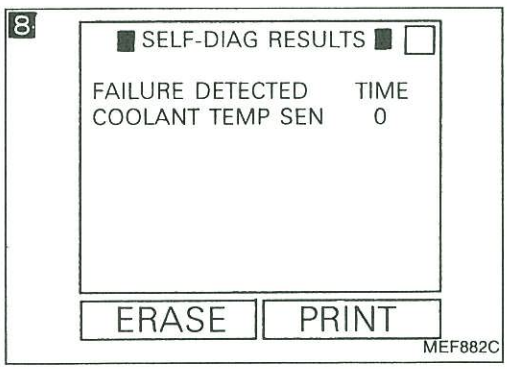


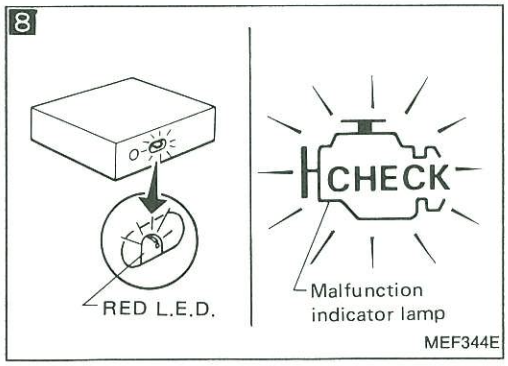

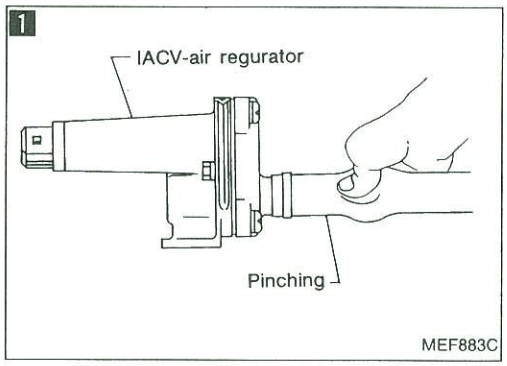


## Diagnostic Procedure 1 — High Idling after Warm-up

**1**

**CHECK IACV-AIR REGULATOR.**
When pinching the IACV-air regulator hose, does the engine speed drop?

Yes → Check IACV-air regulator. (See page EF & EC-141.)

No ↓

**2**

**CHECK INTAKE AIR LEAK.**

1. Select "SELF-LEARNING CONT" in "ACTIVE TEST" mode.
2. Clear the self-learning control coefficient by touching "CLEAR".
3. Does the engine speed drop?

Yes → Discover air leak location and repair.

OR

1. Disconnect oxygen sensor harness connectors.
2. After racing engine at 2,000 rpm under no load for about 30 seconds, does the engine speed drop?

No ↓

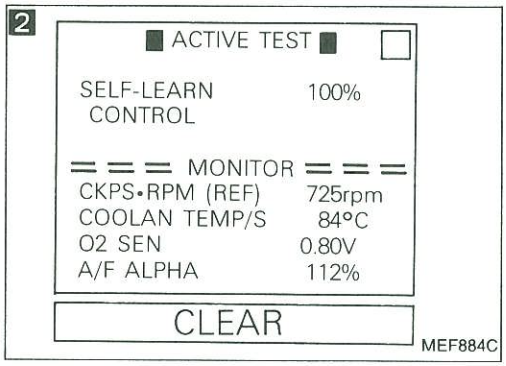


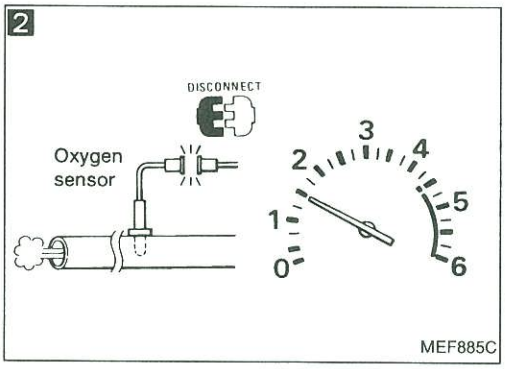


**3**

**CHECK THROTTLE LINKAGE.**

1. Check that throttle linkage moves smoothly.
2. Confirm that throttle valve both fully opens and fully closes.

N.G. → Repair throttle linkage or sticking of throttle valve.

O.K. ↓

INSPECTION END

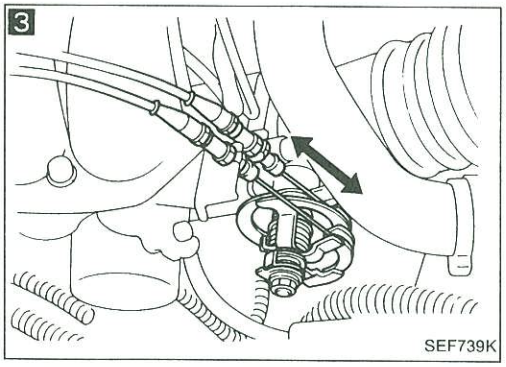


## Diagnostic Procedure 2 — Hunting

**1**

**CHECK OXYGEN SENSOR.**
When disconnecting oxygen sensor harness connector, is the hunting fixed?

Yes → Check oxygen sensor. (See page EF & EC-113.)

No ↓

(Go to Ⓐ on next page.)

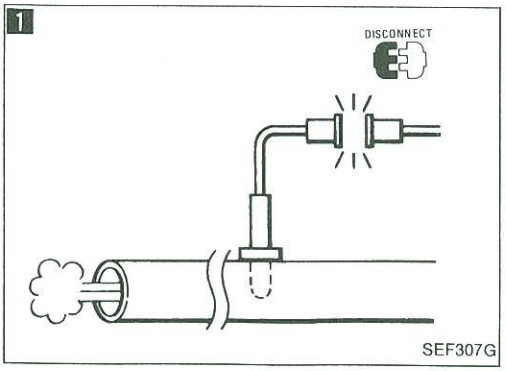

## Diagnostic Procedure 2 — Hunting (Cont'd)

2

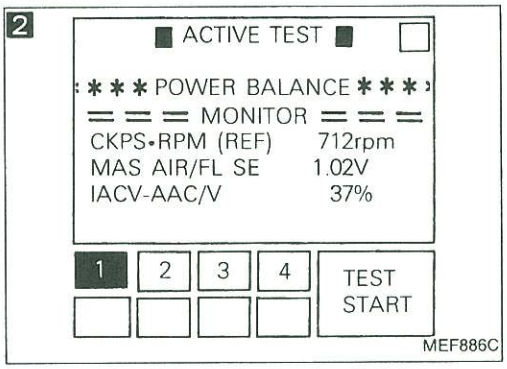


2

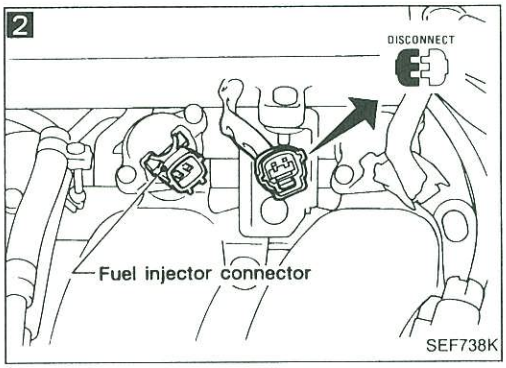


3

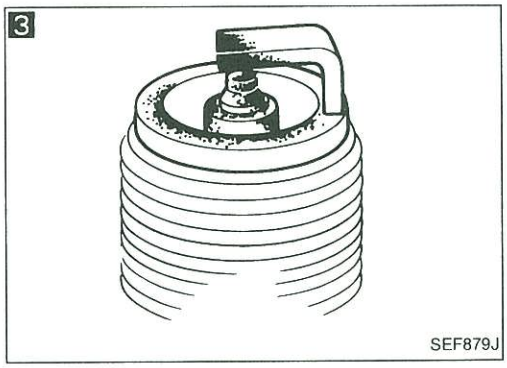


4

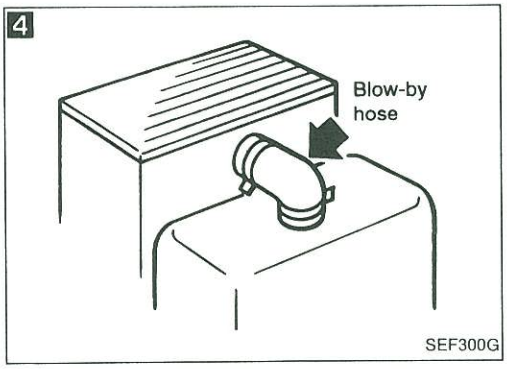


5

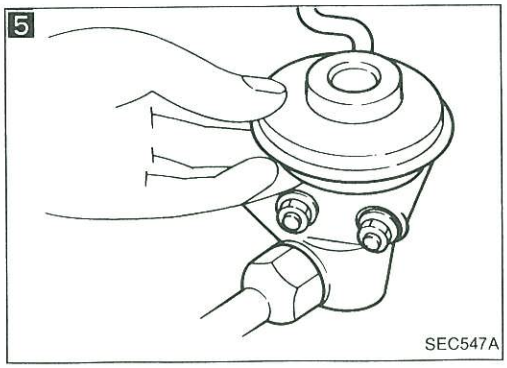


Ⓐ

2

**PERFORM POWER BALANCE TEST.**

1. Perform "POWER BALANCE" in "ACTIVE TEST" mode.
2. Is there any cylinder which does not produce a momentary engine speed drop?

No → Go to 4 .

OR

When disconnecting each injector harness connector one at a time, is there any cylinder which does not produce a momentary engine speed drop?

Yes

3

**CHECK SPARK PLUGS.**
Remove the spark plugs and check for fouling, etc.

N.G. → Repair or replace spark plug(s).

O.K.

4

**CHECK FOR INTAKE AIR LEAK.**
When pinching blow-by hose (lowering the blow-by air supply), does the engine speed rise?

Yes → Discover air leak location and repair.

No

5

**CHECK EGR VALVE.**
Check EGR valve for sticking.

N.G. → Repair or replace.

O.K.

INSPECTION END

## Diagnostic Procedure 3 — Unstable Idle

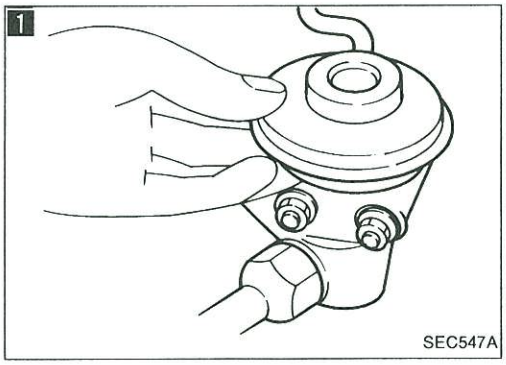
SEC547A

**1**

**CHECK EGR VALVE.**
Check EGR valve for sticking.

N.G. → Repair or replace.

O.K. ↓

**2**

**PERFORM POWER BALANCE TEST.**
1. Perform "POWER BALANCE" in "ACTIVE TEST" mode.
2. Is there any cylinder which does not produce a momentary engine speed drop?

— OR —

When disconnecting each injector harness connector one at a time, is there any cylinder which does not produce a momentary engine speed drop?

No → Go to **6** .

Yes ↓

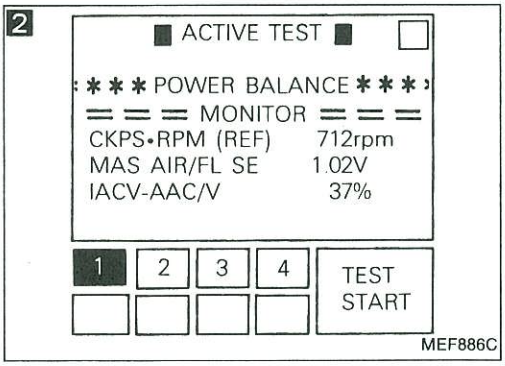

MEF886C

**3**

**CHECK INJECTOR.**
1. Remove distributor assembly from engine. (Crankshaft position sensor harness connector should remain connected.)
2. Disconnect ignition coil harness connector.
3. Turn ignition switch ON. (Do not start engine.)
4. When rotating crankshaft position sensor shaft, does each injector make an operating sound?

No → Check injector(s) and circuit(s).

Yes ↓

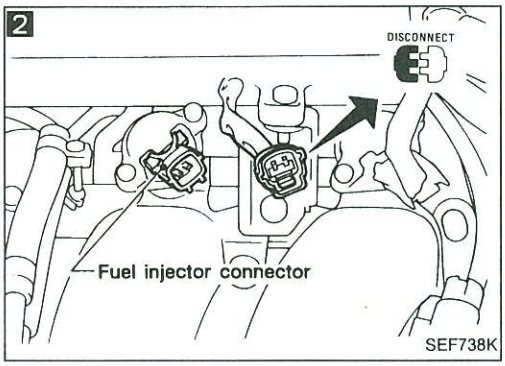

SEF738K

**4**

**CHECK IGNITION SPARK.**
1. Disconnect ignition wire from rocker cover.
2. Connect a known good spark plug to the ignition wire.
3. Place end of spark plug against a suitable ground and crank engine.
4. Check for spark.

N.G. → Check ignition coil, power transistor unit and their circuits. (See page EF & EC-104.)

O.K. ↓

(Go to Ⓐ on next page.)

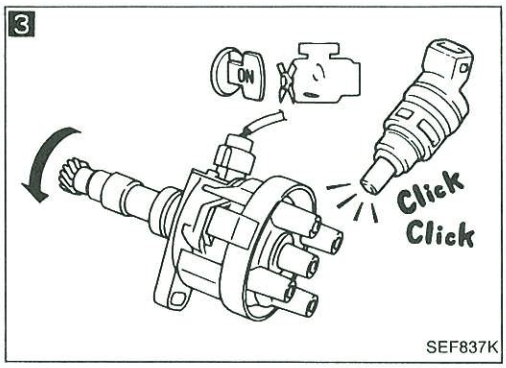

SEF837K

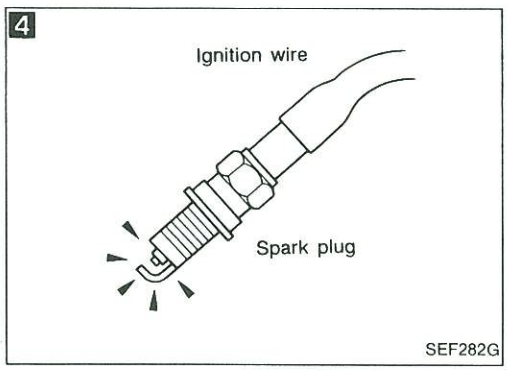

SEF282G

## Diagnostic Procedure 3 — Unstable Idle (Cont'd)

5

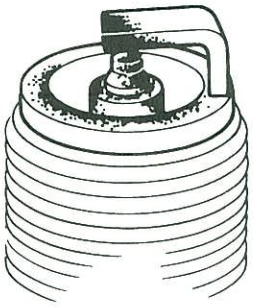

SEF879J

6

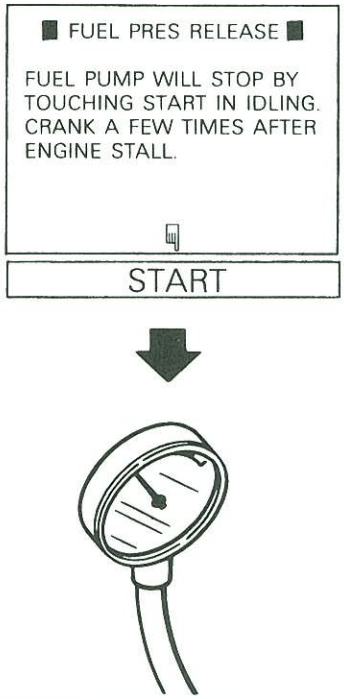


SEF379I

7

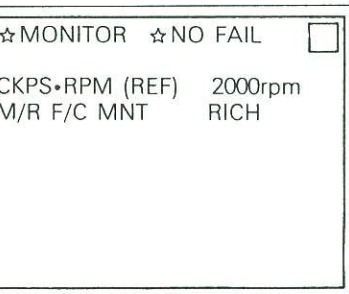


MEF871C

7

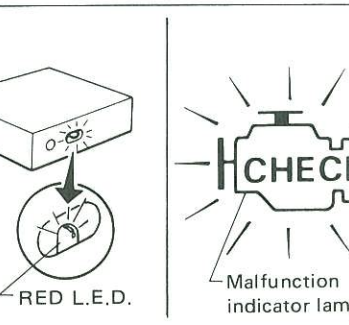


MEF345E

Ⓐ

5

**CHECK SPARK PLUGS.**
Remove the spark plugs and check for fouling, etc.

N.G. → Repair or replace spark plug(s).

O.K.

6

**CHECK FUEL PRESSURE.**

1. Perform "FUEL PRESSURE RELEASE" in "WORK SUPPORT" mode in order to release fuel pressure to zero.
2. Install fuel pressure gauge and check fuel pressure.
   **At idle:**
   **Approx. 235 kPa (2.4 kg/cm², 34 psi)**

N.G. → Check fuel pressure regulator, fuel pump and circuit.

OR

1. Release fuel pressure to zero. (Refer to page EF & EC-169.)
2. Install fuel pressure gauge and check fuel pressure.

O.K.

7

**CHECK OXYGEN SENSOR.**

1. See "M/R F/C MNT" in "Data monitor" mode.
2. Maintaining engine at 2,000 rpm under no-load (engine is warmed up sufficiently.), check that the monitor fluctuates between "LEAN" and "RICH" more than 5 times during 10 seconds.
   **RICH→LEAN→RICH→**
   **1 time 2 times**
   **LEAN→RICH.....**

N.G. → Replace oxygen sensor.

OR

1. Set diagnostic test model II (oxygen sensor monitor). (See page EF & EC-44.)
2. Maintaining engine at 2,000 rpm under no-load, check to make sure that malfunction indicator lamp or RED LED on the ECM goes ON and OFF more than 5 times during 10 seconds.

O.K.

(Go to Ⓑ on next page.)

## Diagnostic Procedure 3 — Unstable Idle (Cont'd)

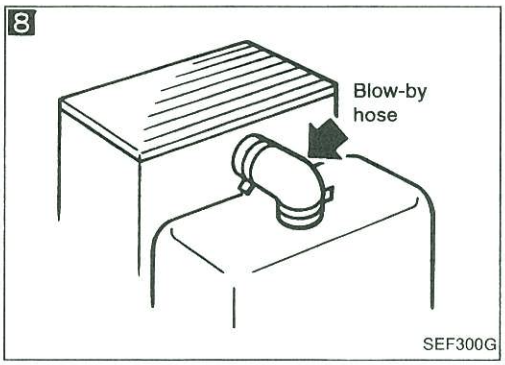


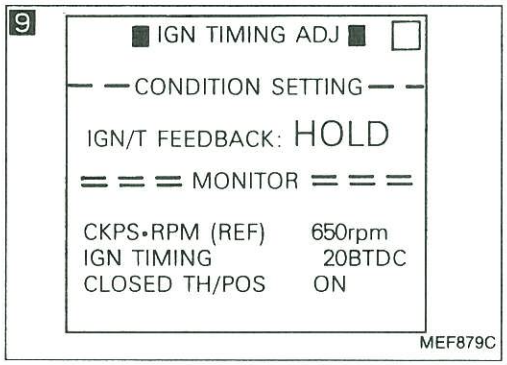


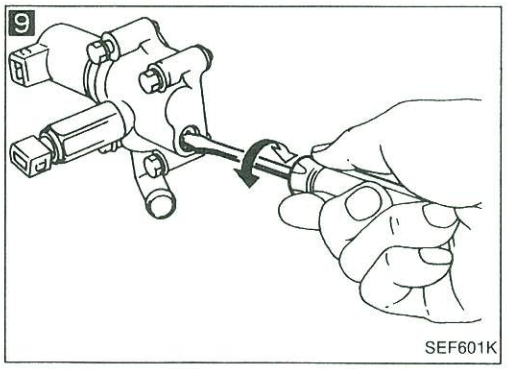


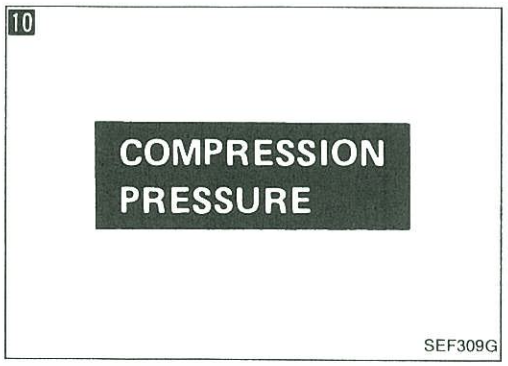


Ⓑ

**8** **CHECK FOR INTAKE AIR LEAK.**
When pinching blow-by hose (lowering the blow-by air supply), does the engine speed rise?

- Yes → Discover air leak location and repair.
- No ↓

**9** **CHECK IDLE ADJ. SCREW CLOGGING.**

1. Perform "IGN TIMING ADJ" in "WORK SUPPORT" mode.
2. Can you set engine speed at 650 ± 50 rpm (A/T in "N" position) by turning idle adjusting screw?

— OR —

1. Disconnect throttle position sensor harness connector.
2. Can you set engine speed at 650 ± 50 rpm (A/T in "N" position) by turning idle adjusting screw?

- No → Check for IAS clogging or throttle valve clogging.
- Yes ↓

**10** **CHECK COMPRESSION PRESSURE.**

- Check compression pressure.

**Standard: kPa (kg/cm², psi)/300 rpm**
**1,236 (12.6, 179)**
**Minimum: kPa (kg/cm², psi)/300 rpm**
**1,040 (10.6, 151)**
**Difference between each cylinder: kPa (kg/cm²,psi)/300 rpm**
**98 (1.0, 14)**

- N.G. → Check pistons, piston rings, valves, valve seats and cylinder head gaskets.
- O.K. ↓

**11** **CHECK ECM HARNESS CONNECTOR.**
Check the ECM pin terminals for damage or poor connection of ECM harness connector.

- N.G. → Repair or replace.
- O.K. ↓

**12** **TRY A KNOWN GOOD ECM*.**

- O.K. ↓

INSPECTION END

*: ECM may be the cause of a problem, but this is rarely the case.

## Diagnostic Procedure 4 — Hard to Start or Impossible to Start when the Engine is Cold

1

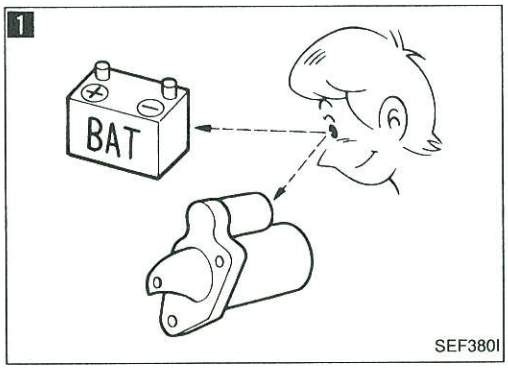

SEF380I

**CHECK BATTERY AND STARTER.**
Check battery and starter condition. (Refer to EL section.)

N.G. → Repair or replace.

O.K. ↓

2

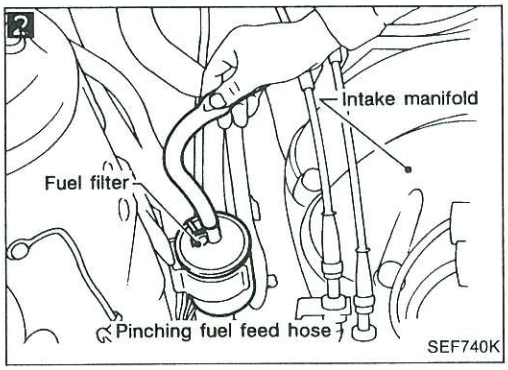

SEF740K

**CHECK FUEL PRESSURE.**
1. Pinch fuel feed hose with fingers.
2. When cranking the engine, is there any pressure on the fuel feed hose?

No → Check fuel pump and circuit. (See page EF & EC-135.)

Yes ↓

3

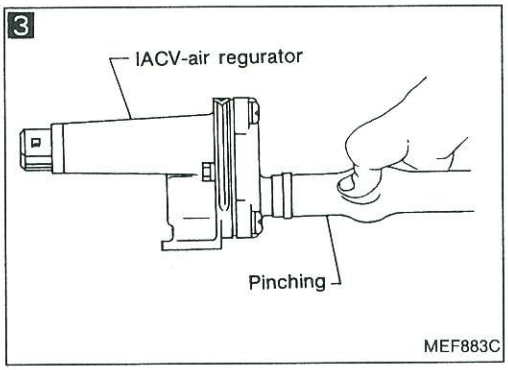

MEF883C

**CHECK IACV-AIR REGULATOR.**
When pinching the IACV-air regulator hose, does the engine speed drop?

No → Check IACV-air regulator and circuit.

Yes ↓

4

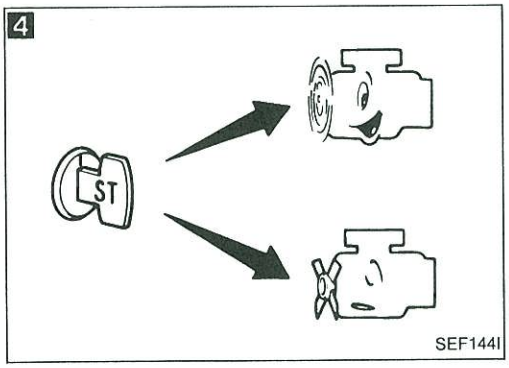

SEF144I

**CHECK IACV-AAC VALVE.**
When pressing accelerator pedal fully, can you start the engine.

Yes → Check IACV-AAC valve and circuit. (See page EF & EC-143.)

No ↓

5

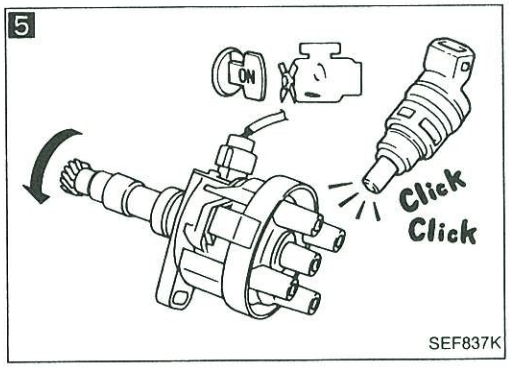

SEF837K

**CHECK INJECTOR.**
1. Remove distributor assembly from engine. (Crankshaft position sensor harness connector should remain connected.)
2. Disconnect ignition coil harness connector.
3. Turn ignition switch ON. (Do not start engine.)
4. When rotating crankshaft position sensor shaft, does each injector make an operating sound?

No → Check injector(s) and circuit(s).

Yes ↓

(Go to Ⓐ on next page.)

## Diagnostic Procedure 4 — Hard to Start or Impossible to Start when the Engine is Cold (Cont'd)

6

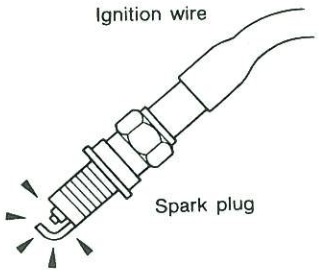


SEF282G

7

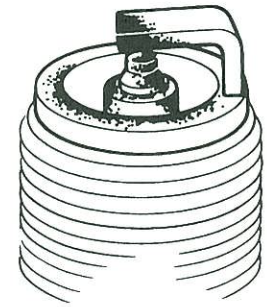

SEF879J

Ⓐ

**6**

**CHECK IGNITION SPARK.**
1. Disconnect ignition wire from rocker cover.
2. Connect a known good spark plug to the ignition wire.
3. Place end of spark plug against a suitable ground and crank engine.
4. Check for spark.

N.G. → Check ignition coil, power transistor unit and their circuits. (See page EF & EC-104.)

O.K. ↓

**7**

**CHECK SPARK PLUGS.**
Remove the spark plugs and check for fouling, etc.

N.G. → Repair or replace spark plug(s).

O.K. ↓

**8**

**CHECK ECM HARNESS CONNECTOR.**
Check the ECM pin terminals for damage or poor connection of ECM harness connector.

N.G. → Repair or replace.

O.K. ↓

**9**

**CHECK ECM POWER SUPPLY AND GROUND CIRCUIT.**
Refer to page EF & EC-93.

N.G. → Repair or replace.

O.K. ↓

**10**

**TRY A KNOWN GOOD ECM*.**

↓

INSPECTION END

*: ECM may be the cause of a problem, but this is rarely the case.

## Diagnostic Procedure 5 — Hard to Start or Impossible to Start when the Engine is Hot

1

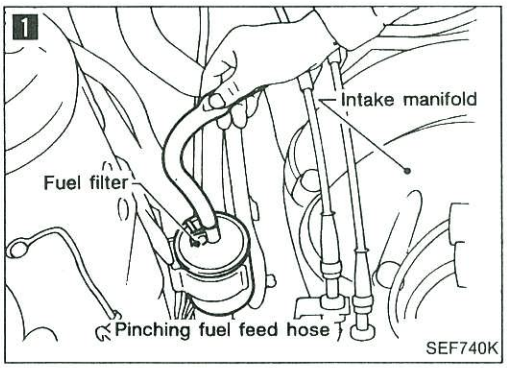


**CHECK FUEL PRESSURE.**
1. Pinch fuel feed hose with fingers.
2. When cranking the engine, is there any pressure on the fuel feed hose?

No → Check fuel pump and circuit. (See page EF & EC-135.)

Yes ↓

2

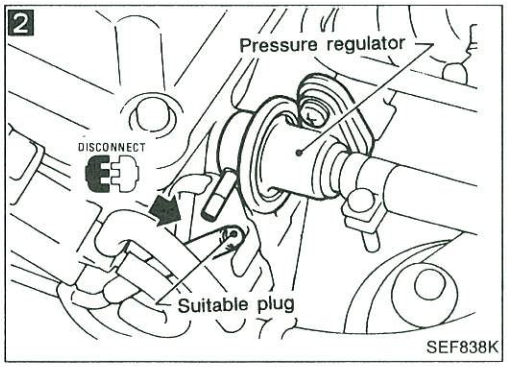


**CHECK FUEL VAPOR.**
1. Disconnect fuel pressure regulator vacuum hose and plug hose.
2. Can you start engine?

Yes → Check fuel properties.

No ↓

3

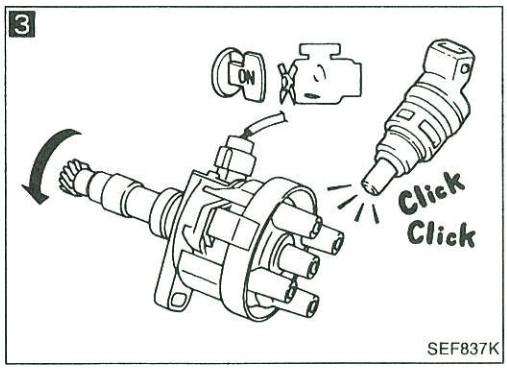


**CHECK INJECTOR.**
1. Remove distributor assembly from engine. (Crankshaft position sensor harness connector should remain connected.)
2. Disconnect ignition coil harness connector.
3. Turn ignition switch ON. (Do not start engine.)
4. When rotating crankshaft position sensor shaft, does each injector make an operating sound?

No → Check injector(s) and circuit(s).

Yes ↓

4

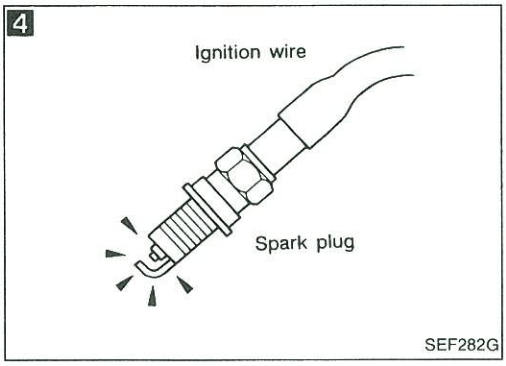


**CHECK IGNITION SPARK.**
1. Disconnect ignition wire from rocker cover.
2. Connect a known good spark plug to the ignition wire.
3. Place end of spark plug against a suitable ground and crank engine.
4. Check for spark.

N.G. → Check ignition coil, power transistor unit and circuits. (See page EF & EC-104.)

O.K. ↓

5

**CHECK ECM HARNESS CONNECTOR.**
Check the ECM pin terminals for damage or poor connection of ECM harness connector.

N.G. → Repair or replace.

O.K. ↓

6

**CHECK ECM POWER SUPPLY AND GROUND CIRCUIT.**
Refer to page EF & EC-90.

N.G. → Repair or replace.

O.K. ↓

7

**TRY A KNOWN GOOD ECM*.**

↓

INSPECTION END

*: ECM may be the cause of a problem, but this is rarely the case.

## Diagnostic Procedure 6 — Hard to Start or Impossible to Start under Normal Conditions

1

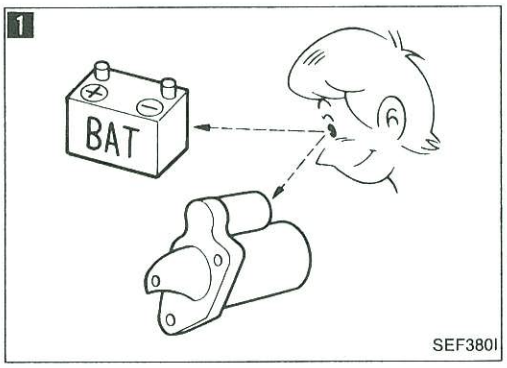

SEF380I

**CHECK BATTERY AND STARTER.**
Check battery and starter operation.
(Refer to EL section.)

N.G. → Repair or replace.

O.K. ↓

2

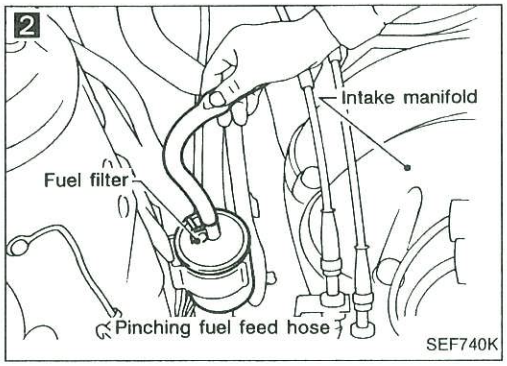

SEF740K

**CHECK FUEL PRESSURE.**
1. Pinch fuel feed hose with fingers.
2. When cranking the engine, is there any pressure on the fuel feed hose?

No → Check fuel pump and circuit. (See page EF & EC-135.)

Yes ↓

3

**CHECK INJECTOR FOR LEAKAGE.**
When pressing accelerator pedal fully, can you start the engine.

Yes → Check injector(s) for leakage.

No ↓

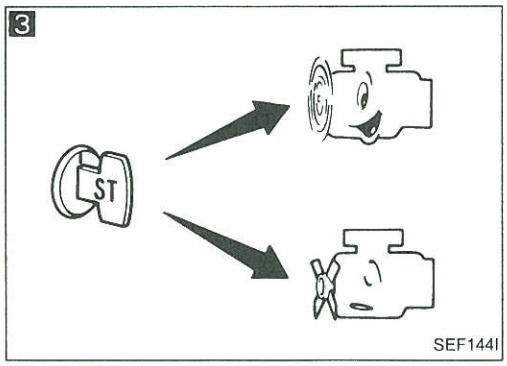

SEF144I

4

**CHECK INJECTOR.**
1. Remove distributor assembly from engine. (Crankshaft position sensor harness connector should remain connected.)
2. Disconnect ignition coil harness connector.
3. Turn ignition switch ON. (Do not start engine.)
4. When rotating crankshaft position sensor shaft, does each injector make an operating sound?

No → Check injectors and circuits.

Yes ↓

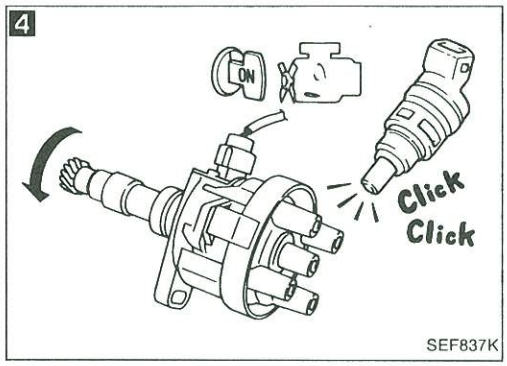

SEF837K

5

**CHECK IGNITION SPARK.**
1. Disconnect ignition wire from rocker cover.
2. Connect a known good spark plug to the ignition wire.
3. Place end of spark plug against a suitable ground and crank engine.
4. Check for spark.

N.G. → Check ignition coil, power transistor unit and circuits. (See page EF & EC-104.)

O.K. ↓

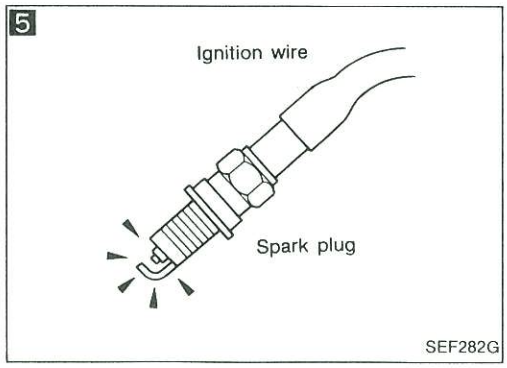

SEF282G

(Go to Ⓐ on next page.)

## Diagnostic Procedure 6 — Hard to Start or Impossible to Start under Normal Conditions (Cont'd)

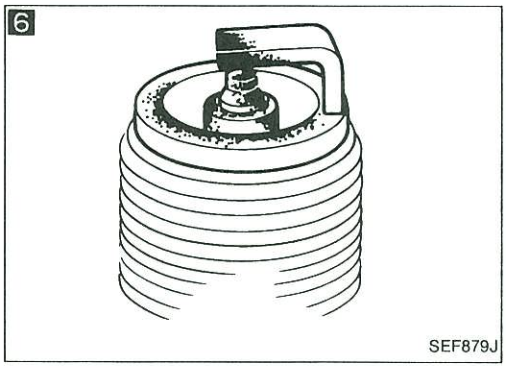


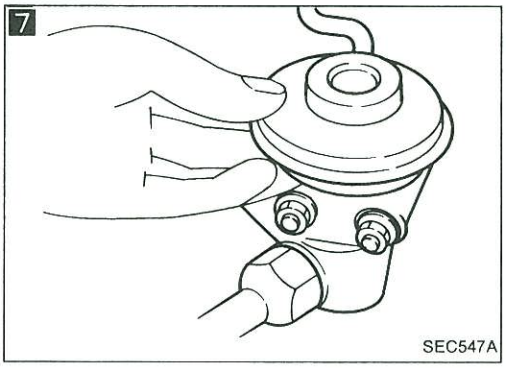


Ⓐ

**6** **CHECK SPARK PLUGS.**
Remove the spark plugs and check for fouling, etc.
N.G. → Repair or replace spark plug(s).
O.K. ↓

**7** **CHECK EGR VALVE.**
Check EGR valve for sticking.
N.G. → Repair or replace.
O.K. ↓

**8** **CHECK ECM HARNESS CONNECTOR.**
Check the ECM pin terminals for damage or poor connection of ECM harness connector.
N.G. → Repair or replace.
O.K. ↓

**9** **CHECK ECM POWER SUPPLY AND GROUND CIRCUIT.**
Refer to page EF & EC-90.
N.G. → Repair or replace.
O.K. ↓

**10** **TRY A KNOWN GOOD ECM*.**
↓

INSPECTION END

*: ECM may be the cause of a problem, but this is rarely the case.

## Diagnostic Procedure 7 — Hesitation when the Engine is Hot

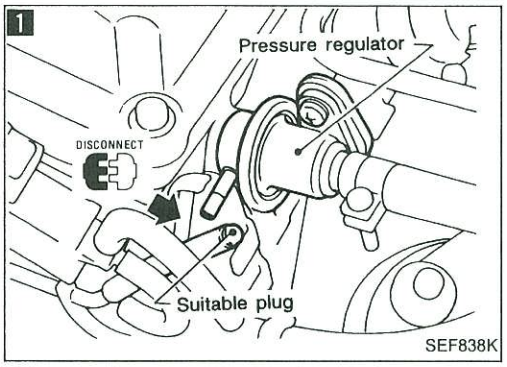


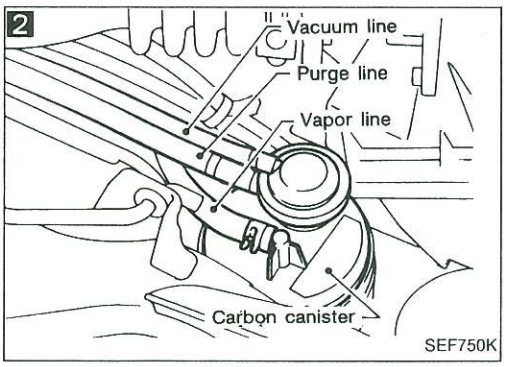


**1** **CHECK FUEL VAPOR.**
1. Disconnect fuel pressure regulator vacuum hose and plug hose.
2. Perform cruise test.
3. Does the hesitation disappear?

Yes → Check fuel properties.
No ↓

**2** **CHECK CANISTER PURGE.**
1. Disconnect canister purge line hose and plug hose.
2. Perform cruise test.
3. Does the hesitation disappear?

Yes → Check purge and vacuum lines.
No ↓

INSPECTION END

1

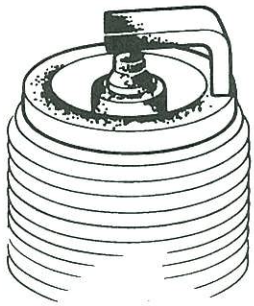

SEF879J

2

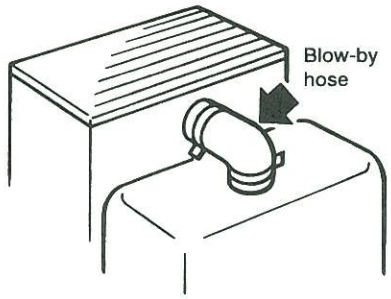


SEF300G

## Diagnostic Procedure 8 — Hesitation when the Engine is Cold

1

**CHECK SPARK PLUGS.**
Remove spark plugs and check for fouling, etc.

N.G. → Repair or replace spark plug(s).

O.K. ↓

2

**CHECK FOR INTAKE AIR LEAK.**
When pinching blow-by hose (lowering the blow-by air supply), does the engine speed rise?

Yes → Discover air leak location and repair.

No ↓

Trouble is fixed. ↓

3

**TRY A KNOWN GOOD MASS AIR FLOW SENSOR.**

→ Replace mass air flow sensor.

Trouble is not fixed. ↓

4

**CHECK FOR INTAKE VALVE DEPOSITS.**
If there are deposits on intake valves, remove them.

↓

INSPECTION END

## Diagnostic Procedure 9 — Hesitation under Normal Conditions

1

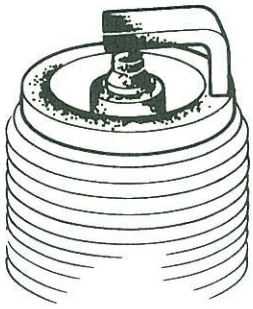

SEF879J

2

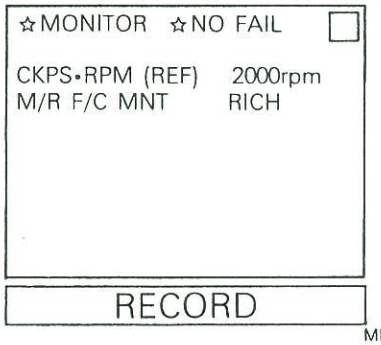


MEF871C

2

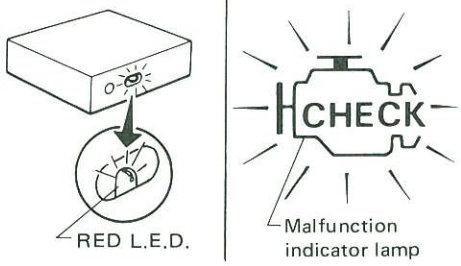


MEF998C

3

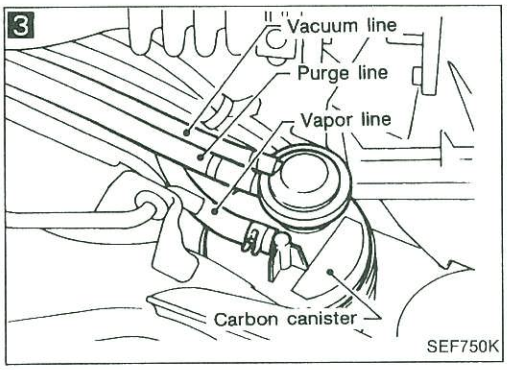


SEF750K

4

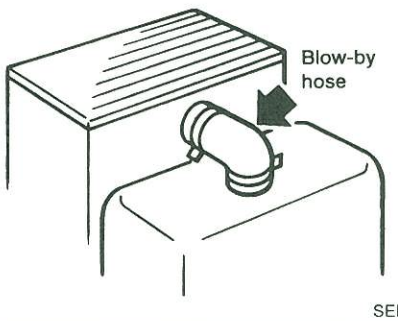


SEF300G

1

**CHECK SPARK PLUGS.**
Remove spark plugs and check for fouling, etc.

N.G. → Repair or replace spark plug(s).

O.K. ↓

2

**CHECK OXYGEN SENSOR.**

1. See "M/R F/C MNT" in "DATA MONITOR" mode.
2. Maintaining engine at 2,000 rpm under no-load (with engine warmed up sufficiently.), check to make sure that the monitor fluctuates between "LEAN" and "RICH" more than 5 times during 10 seconds.
   **RICH→LEAN→RICH→** (1 time, 2 times)
   **LEAN→RICH.....**

Yes → Replace oxygen sensor.

OR

1. Set diagnostic test mode II (oxygen sensor monitor). (See page EF & EC-44.)
2. Maintaining engine at 2,000 rpm under no load, check that malfunction indicator lamp or RED LED on the ECM goes ON and OFF more than 5 times during 10 seconds.

No ↓

3

**CHECK CANISTER PURGE.**

1. Disconnect canister purge line hose and plug hose.
2. Perform cruise test.
3. Does the hesitation disappear?

Yes → Check purge and vacuum lines.

No ↓

4

**CHECK FOR INTAKE AIR LEAK.**
When pinching blow-by hose (lowering the blow-by air supply), does the engine speed rise?

Yes → Discover air leak location and repair.

No ↓

INSPECTION END

## Diagnostic Procedure 10 — Engine Stalls when Turning

1

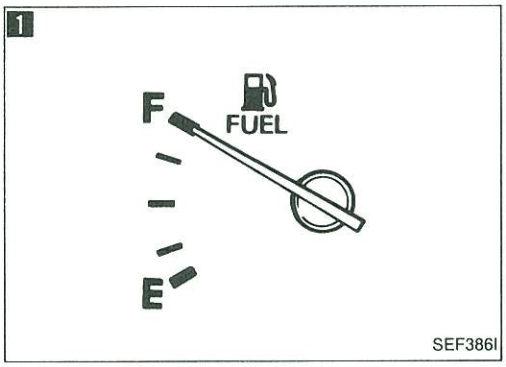


**CHECK FUEL LEVEL.**
Check to see that there is enough fuel in tank.

N.G. → Fill fuel tank with fuel.

O.K.

2

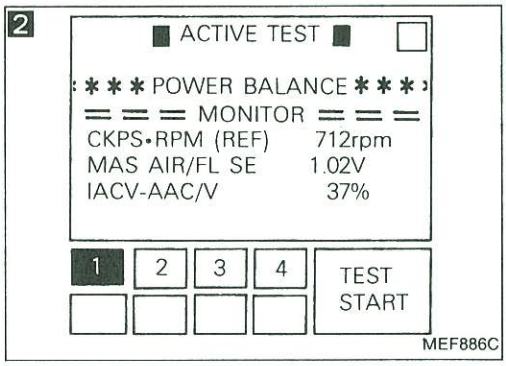


**PERFORM POWER BALANCE TEST.**

1. Perform "POWER BALANCE" in "ACTIVE TEST" mode.
2. Is there any cylinder which does not produce a momentary engine speed drop?

No → Go to 5

— OR —

When disconnecting each injector harness connector one at a time, is there any cylinder which does not produce a momentary engine speed drop?

Yes

2

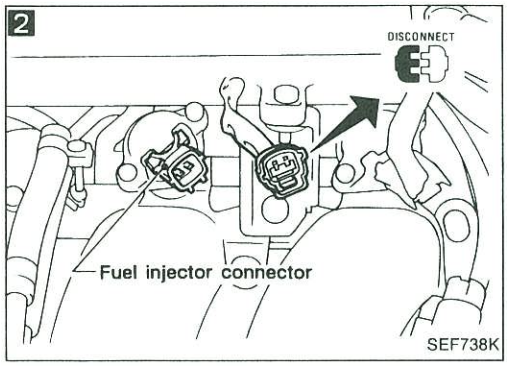


3

**CHECK INJECTOR.**

1. Remove distributor assembly from engine. (Crankshaft position sensor harness connector should remain connected.)
2. Disconnect ignition coil harness connector.
3. Turn ignition switch ON. (Do not start engine.)
4. When rotating crankshaft position sensor shaft, does each injector make an operating sound?

No → Check injector(s) and circuit(s).

Yes

3

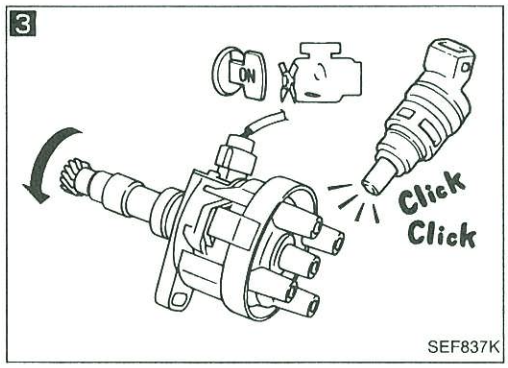


4

**CHECK IGNITION SPARK.**

1. Disconnect ignition wire from rocker cover.
2. Connect a known good spark plug to the ignition wire.
3. Place end of spark plug against a suitable ground and crank engine.
4. Check for spark.

N.G. → Check ignition coil, power transistor unit and circuits. (See page EF & EC-104.)

O.K.

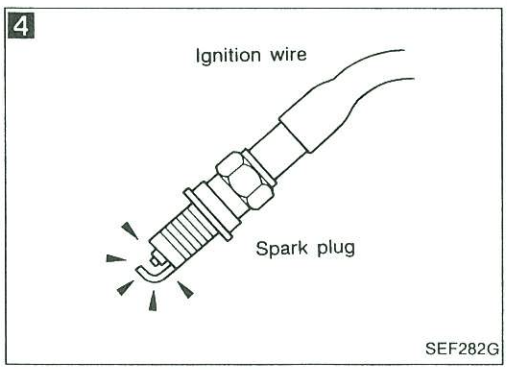


(Go to Ⓐ on next page.)

## Diagnostic Procedure 10 — Engine Stalls when Turning (Cont'd)

5

■ FUEL PRES RELEASE ■

FUEL PUMP WILL STOP BY TOUCHING START IN IDLING. CRANK A FEW TIMES AFTER ENGINE STALL.

START

SEF379I

Ⓐ

5

**CHECK FUEL PRESSURE.**

1. Perform "FUEL PRESSURE RELEASE" in "WORK SUPPORT" mode in order to release fuel pressure to zero.
2. Install fuel pressure gauge and check fuel pressure.

**A few seconds after ignition switch is turned OFF to ON:**
**Approx.**
**294 kPa (3.0 kg/cm², 43 psi)**
**At idle:**
**Approx.**
**235 kPa (2.4 kg/cm², 34 psi)**

N.G. → Check fuel pressure regulator diaphragm.

— OR —

1. Release fuel pressure to zero. (Refer to page EF & EC-169.)
2. Install fuel pressure gauge and check fuel pressure.

O.K.

6

**CHECK ECM HARNESS CONNECTOR.**
Check the ECM pin terminals for damage or poor connection of ECM harness connector.

N.G. → Repair or replace.

O.K.

7

**CHECK ECM POWER SUPPLY AND GROUND CIRCUIT.**
Refer to page EF & EC-90.

N.G. → Repair or replace.

O.K.

8

**TRY A KNOWN GOOD ECM*.**

INSPECTION END

*: ECM may be the cause of a problem, but this is rarely the case.

## Diagnostic Procedure 11 — Engine Stalls when the Engine is Hot

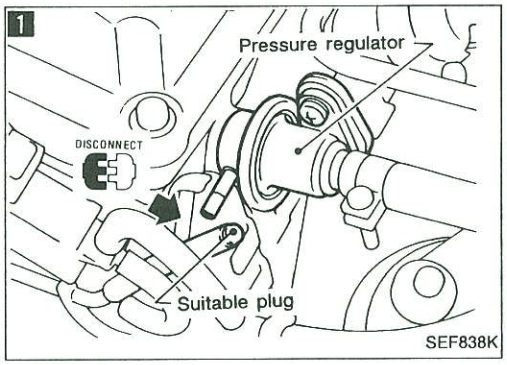


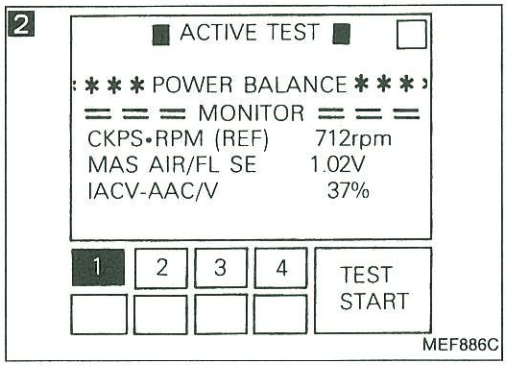


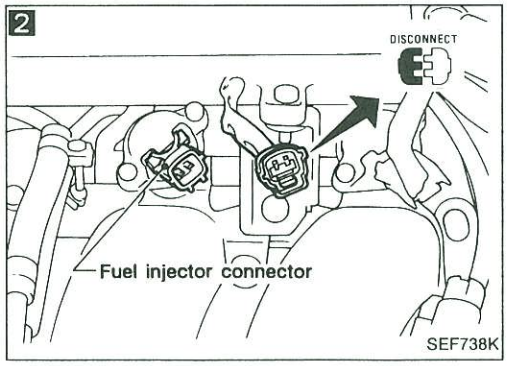


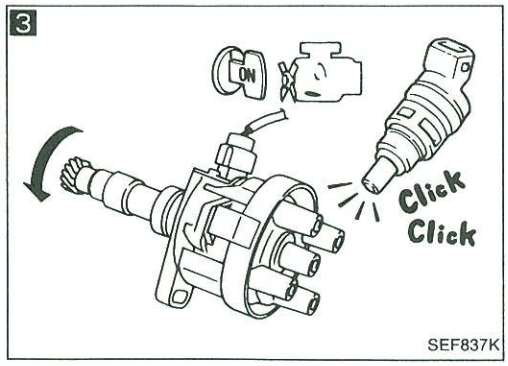


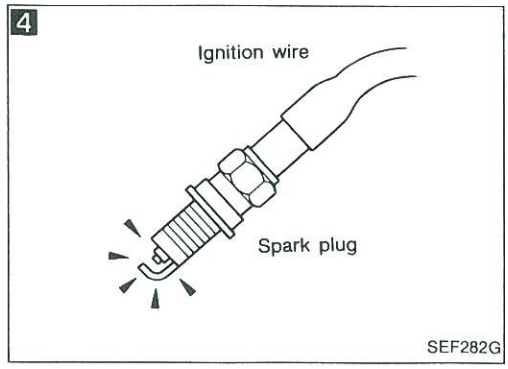


**1**

**CHECK FUEL VAPOR.**
1. Disconnect fuel pressure regulator vacuum hose and plug hose.
2. Perform cruise test.
3. Does the engine stall disappear?

Yes → Check fuel properties.

No ↓

**2**

**PERFORM POWER BALANCE TEST.**
1. Perform "POWER BALANCE" in "ACTIVE TEST" mode.
2. Is there any cylinder which does not produce a momentary engine speed drop?

OR

When disconnecting each injector harness connector one at a time, is there any cylinder which does not produce a momentary engine speed drop?

No → Go to **5** .

Yes ↓

**3**

**CHECK INJECTOR.**
1. Remove distributor assembly from engine. (Crankshaft position sensor harness connector should remain connected.)
2. Disconnect ignition coil harness connector.
3. Turn ignition switch ON. (Do not start engine.)
4. When rotating crankshaft position sensor shaft, does each injector make an operating sound?

No → Check injector(s) and circuit(s).

Yes ↓

**4**

**CHECK IGNITION SPARK.**
1. Disconnect ignition wire from rocker cover.
2. Connect a known good spark plug to the ignition wire.
3. Place end of spark plug against a suitable ground and crank engine.
4. Check for spark.

N.G. → Check ignition coil, power transistor unit and their circuits. (See page EF & EC-104.)

O.K. ↓

(Go to Ⓐ on next page.)

## Diagnostic Procedure 11 — Engine Stalls when the Engine is Hot (Cont'd)

5

■ FUEL PRES RELEASE ■

FUEL PUMP WILL STOP BY TOUCHING START IN IDLING. CRANK A FEW TIMES AFTER ENGINE STALL.

START

SEF379I

Ⓐ

5

**CHECK FUEL PRESSURE.**

1. Perform "FUEL PRESSURE RELEASE" in "WORK SUPPORT" mode in order to release fuel pressure to zero.
2. Install fuel pressure gauge and check fuel pressure.

**A few seconds after ignition switch is turned OFF to ON:**
**Approx.**
**294 kPa (3.0 kg/cm², 43 psi)**
**At idle:**
**Approx.**
**235 kPa (2.4 kg/cm², 34 psi)**

N.G. → Check fuel pressure regulator diaphragm.

OR

1. Release fuel pressure to zero. (Refer to page EF & EC-169.)
2. Install fuel pressure gauge and check fuel pressure.

O.K.

6

**CHECK ECM HARNESS CONNECTOR.**
Check the ECM pin terminals for damage or poor connection of ECM harness connector.

N.G. → Repair or replace.

O.K.

7

**CHECK ECM POWER SUPPLY AND GROUND CIRCUIT.**
Refer to page EF & EC-90.

N.G. → Repair or replace.

O.K.

8

**TRY A KNOWN GOOD ECM*.**

INSPECTION END

*: ECM may be the cause of a problem, but this is rarely the case.

## Diagnostic Procedure 12 — Engine Stalls when the Engine is Cold

1

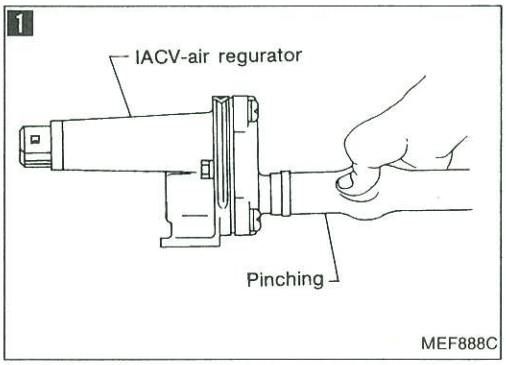


2

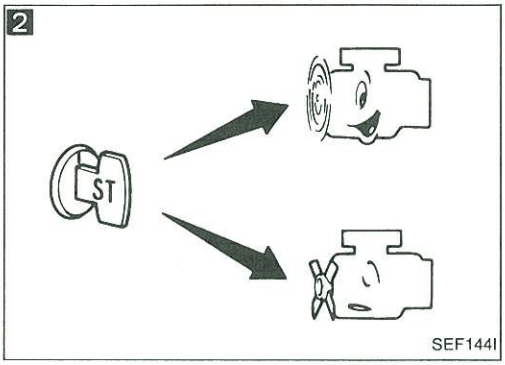


3

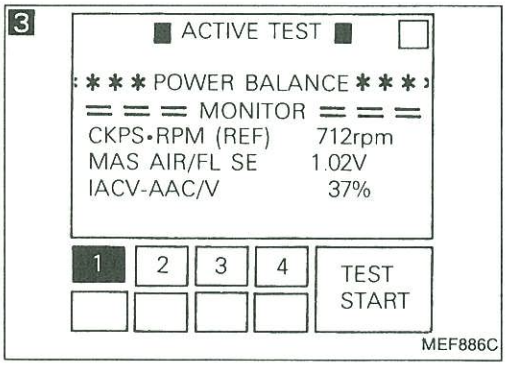


3

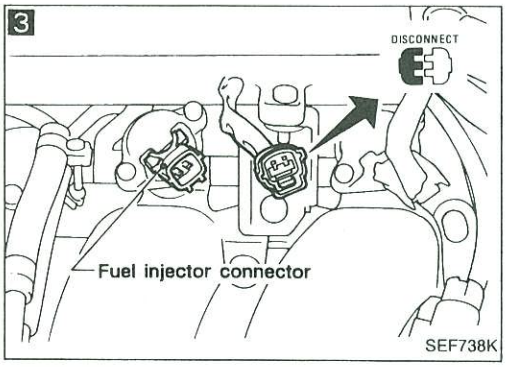


4

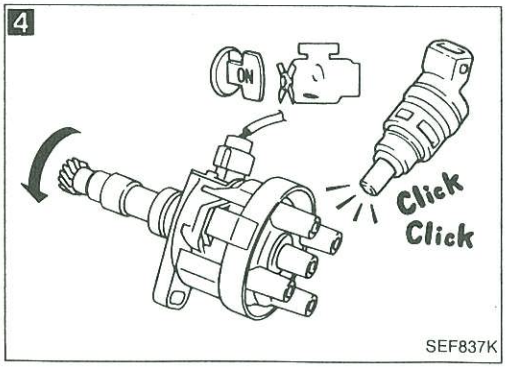


**1**

**CHECK IACV-AIR REGULATOR.**
When pinching the IACV-air regulator hose, does the engine speed drop?

No → Check IACV-air regulator and circuit.

Yes ↓

**2**

**CHECK IACV-AAC VALVE.**
When the engine is cold, can you start the engine when pressing accelerator pedal fully?

Yes → Check IACV-AAC valve and circuits. (See page EF & EC-143.)

No ↓

**3**

**PERFORM POWER BALANCE TEST.**

1. Perform "POWER BALANCE" in "ACTIVE TEST" mode.
2. Is there any cylinder which does not produce a momentary engine speed drop?

OR

When disconnecting each injector harness connector one at a time, is there any cylinder which does not produce a momentary engine speed drop?

N.G. → Go to **7**

O.K. ↓

**4**

**CHECK INJECTOR.**

1. Remove distributor assembly from engine. (Crankshaft position sensor harness connector should remain connected.)
2. Disconnect ignition coil harness connector.
3. Turn ignition switch ON. (Do not start engine.)
4. When rotating crankshaft position sensor shaft, does each injector make an operating sound?

N.G. → Check injector(s) and circuit(s).

O.K. ↓

(Go to Ⓐ on next page.)

## Diagnostic Procedure 12 — Engine Stalls when the Engine is Cold (Cont'd)

5

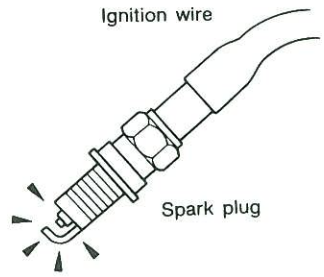


SEF282G

6

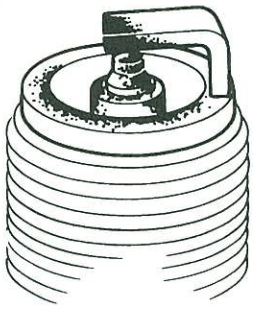

SEF879J

7

■ FUEL PRES RELEASE ■

FUEL PUMP WILL STOP BY TOUCHING START IN IDLING. CRANK A FEW TIMES AFTER ENGINE STALL.

START

SEF379I

Ⓐ

**5** **CHECK IGNITION SPARK.**
1. Disconnect ignition wire from rocker cover.
2. Connect a known good spark plug to the ignition wire.
3. Place end of spark plug against a suitable ground and crank engine.
4. Check for spark.

N.G. → Check ignition coil, power transistor unit and circuits. (See page EF & EC-104.)

O.K. ↓

**6** **CHECK SPARK PLUGS.**
Remove the spark plugs and check for fouling, etc.

N.G. → Repair or replace spark plug(s).

O.K. ↓

**7** **CHECK FUEL PRESSURE.**
1. Perform "FUEL PRESSURE RELEASE" in "WORK SUPPORT" mode in order to release fuel pressure to zero.
2. Install fuel pressure gauge and check fuel pressure.
   **A few seconds after ignition switch is turned OFF to ON:**
   **Approx.**
   **294 kPa (3.0 kg/cm², 43 psi)**
   **At idle:**
   **Approx.**
   **235 kPa (2.4 kg/cm², 34 psi)**

N.G. → Check fuel pressure regulator diaphragm.

OR

1. Release fuel pressure to zero. (Refer to page EF & EC-169.)
2. Install fuel pressure gauge and check fuel pressure.

O.K. ↓

**8** **CHECK ECM HARNESS CONNECTOR.**
Check the ECM pin terminals for damage or poor connection of ECM harness connector.

N.G. → Repair or replace.

O.K. ↓

**9** **CHECK ECM POWER SUPPLY AND GROUND CIRCUIT.**
Refer to page EF & EC-90.

N.G. → Repair or replace.

O.K. ↓

**10** **TRY A KNOWN GOOD ECM*.**

↓

INSPECTION END

*: ECM may be the cause of a problem, but this is rarely the case.

## Diagnostic Procedure 13 — Engine Stalls when Stepping on the Accelerator Momentarily

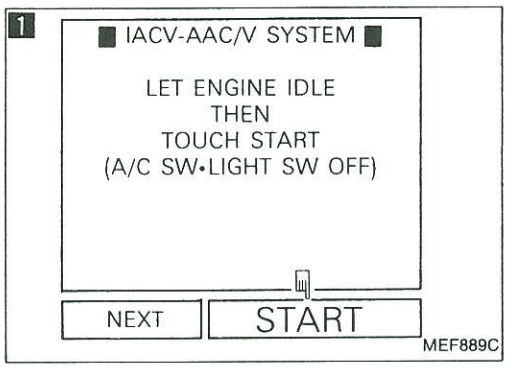


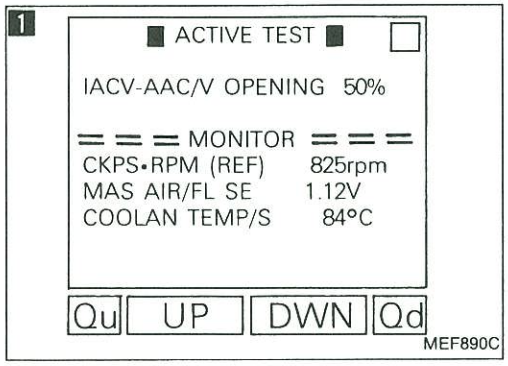


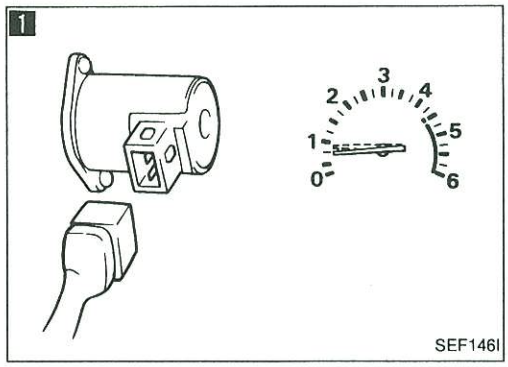


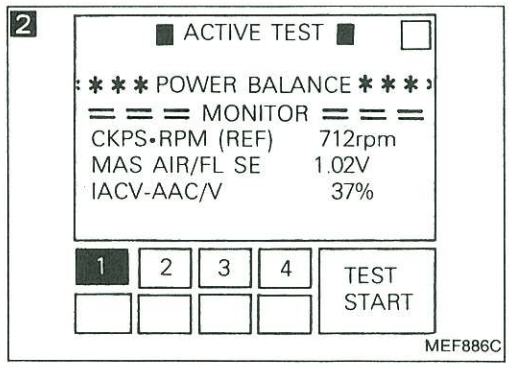


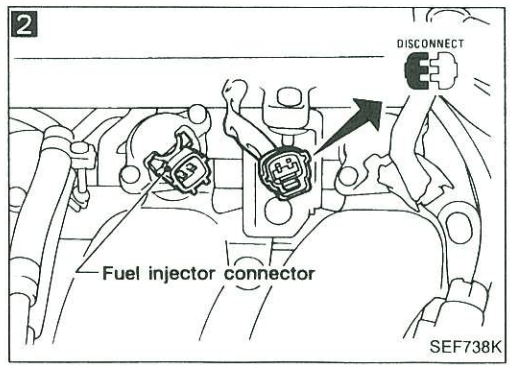


**1**

**CHECK OVERALL FUNCTION.**
1) Start engine and warm it up sufficiently.
2) Check idle speed.
**700 ± 50 rpm**
**(A/T in "N" position)**
3) Perform "IACV-AAC VALVE SYSTEM" in "FUNCTION TEST" mode with CONSULT.

No → Check IACV-AAC valve and circuit. (See page EF & EC-143.)

OR

**CHECK IACV-AAC VALVE.**
1. Select "IACV-AAC VALVE OPENING" in "ACTIVE TEST" mode.
2. When touching "Qu" and "Qd", does the engine speed change according to the percent of IACV-AAC valve opening?

OR

When disconnecting IACV-AAC valve harness connector, does the engine speed drop?

Yes

**2**

**PERFORM POWER BALANCE TEST.**
1. Perform "POWER BALANCE" in "ACTIVE TEST" mode.
2. Is there any cylinder which does not produce a momentary engine speed drop?

No → Go to 5

OR

When disconnecting each injector harness connector one at a time, is there any cylinder which does not produce a momentary engine speed drop?

Yes

**3**

**CHECK INJECTOR.**
1. Remove distributor assembly from engine. (Crankshaft position sensor harness connector should remain connected.)
2. Disconnect ignition coil harness connector.
3. Turn ignition switch ON. (Do not start engine.)
4. When rotating crankshaft position sensor shaft, does each injector make an operating sound?

No → Check injector(s) and their circuit(s).

Yes

(Go to Ⓐ on next page.)

## Diagnostic Procedure 13 — Engine Stalls when Stepping on the Accelerator Momentarily (Cont'd)

3

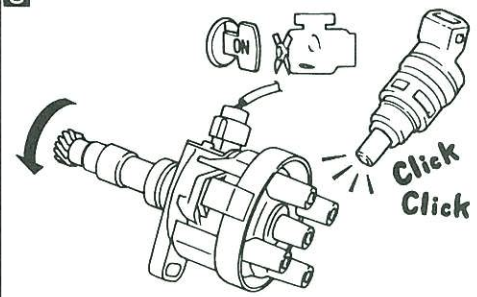


SEF837K

4

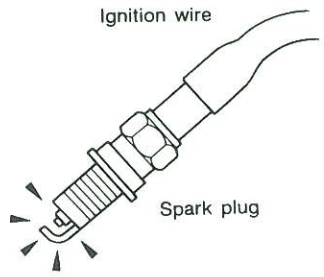


SEF282G

5

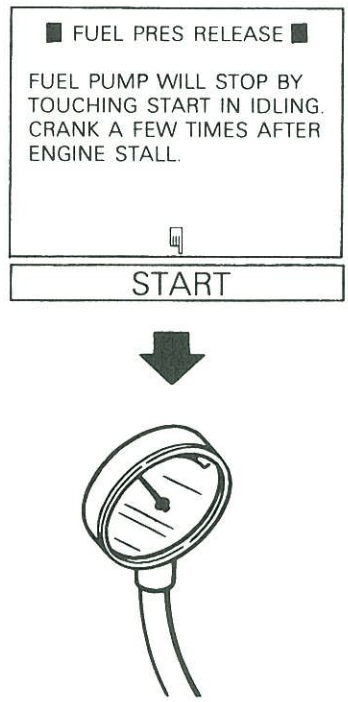


SEF379I

Ⓐ

**4** **CHECK IGNITION SPARK.**
1. Disconnect ignition wire from rocker cover.
2. Connect a known good spark plug to the ignition wire.
3. Place end of spark plug against an earth point with engine cranking.
4. Check for spark.

N.G. → Check ignition coil, power transistor unit and their circuits. (See page EF & EC-104.)

O.K.

**5** **CHECK FUEL PRESSURE.**
1. Perform "FUEL PRESSURE RELEASE" in "WORK SUPPORT" mode in order to release fuel pressure to zero.
2. Install fuel pressure gauge and check fuel pressure.
   **A few seconds after ignition switch is turned OFF to ON:**
   **Approx. 294 kPa (3.0 kg/cm², 43 psi)**
   **At idle:**
   **Approx. 235 kPa (2.4 kg/cm², 34 psi)**

N.G. → Check fuel pressure regulator diaphragm.

OR

1. Release fuel pressure to zero. (Refer to page EF & EC-169.)
2. Install fuel pressure gauge and check fuel pressure.

O.K.

**6** **CHECK ECM HARNESS CONNECTOR.**
Check the ECM pin terminals for damage or poor connection of ECM harness connector.

N.G. → Repair or replace.

O.K.

**7** **CHECK ECM POWER SUPPLY AND GROUND CIRCUIT.**
Refer to page EF & EC-90.

N.G. → Repair or replace.

O.K.

**8** **TRY A KNOWN GOOD ECM*.**

INSPECTION END

*: ECM may be the cause of a problem, but this is rarely the case.

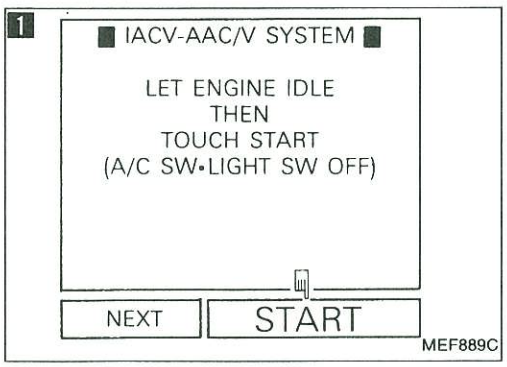


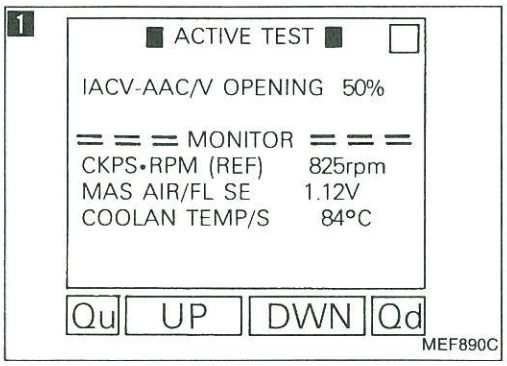


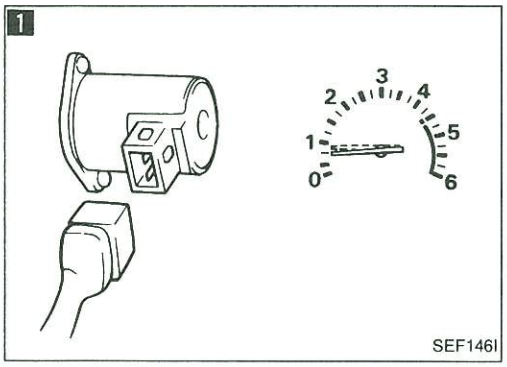


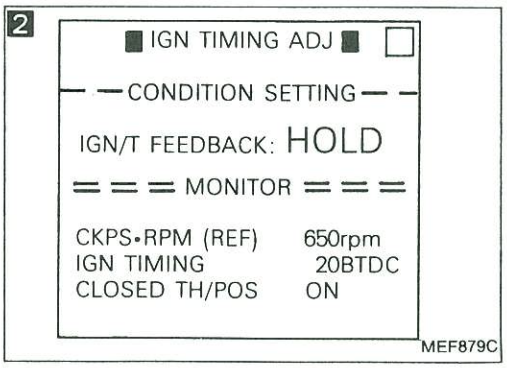


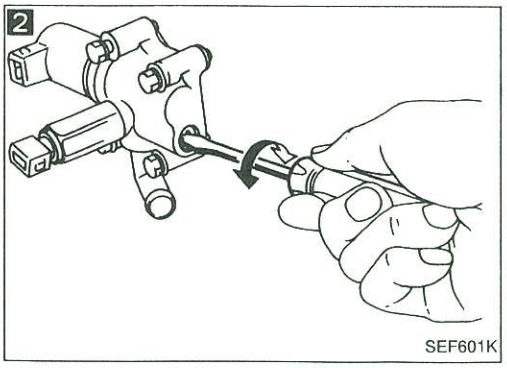


## Diagnostic Procedure 14 — Engine Stalls after Decelerating

**1**

**CHECK OVERALL FUNCTION.**

1) Start engine and warm it up sufficiently.
2) Check idle speed.
   **700 ± 50 rpm**
   **(A/T in "N" position)**
3) Perform "IACV-AAC/V SYSTEM" in "FUNCTION TEST" mode with CONSULT.

No → Check IACV-AAC valve and circuit. (See page EF & EC-143.)

OR

1. Select "IACV-AAC/V OPENING" in "ACTIVE TEST" mode.
2. When touching "Qu" and "Qd", does the engine speed change according to the percent of IACV-AAC valve opening?

OR

When disconnecting IACV-AAC valve harness connector, does the engine speed drop?

Yes

**2**

**CHECK IDLE ADJ. SCREW CLOGGING.**

1. Perform "IGN TIMING ADJ" in "WORK SUPPORT" mode.
2. Can you set engine speed at 650 ± 50 rpm (A/T in "N" position) by turning idle adjusting screw?

No → Check for IAS clogging or throttle body clogging.

OR

1. Disconnect throttle position sensor harness connector.
2. Can you set engine speed at 650 ± 50 rpm (A/T in "N" position) by turning idle adjusting screw?

Yes

(Go to Ⓐ on next page.)

## Diagnostic Procedure 14 — Engine Stalls after Decelerating (Cont'd)

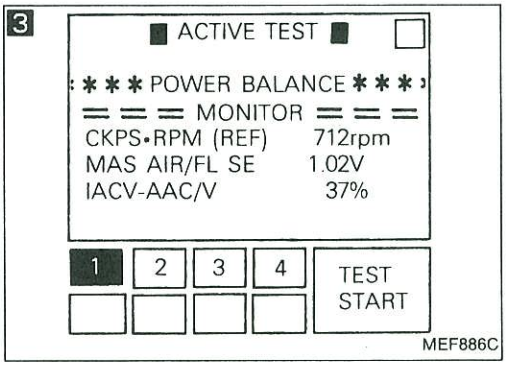


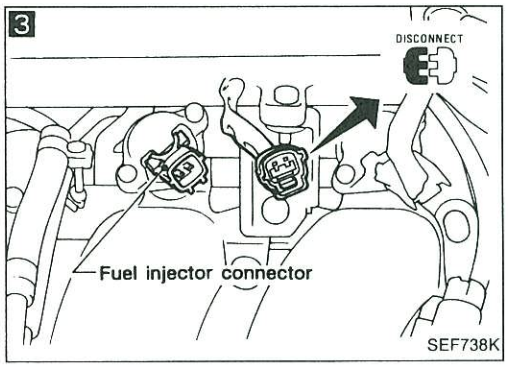


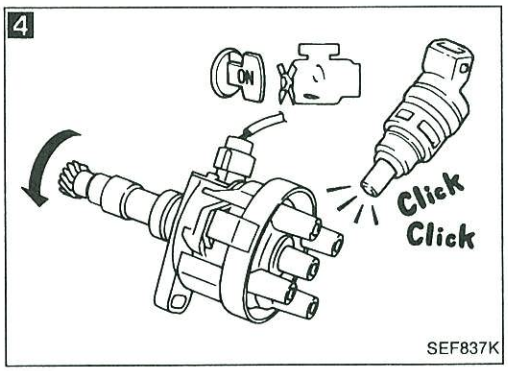


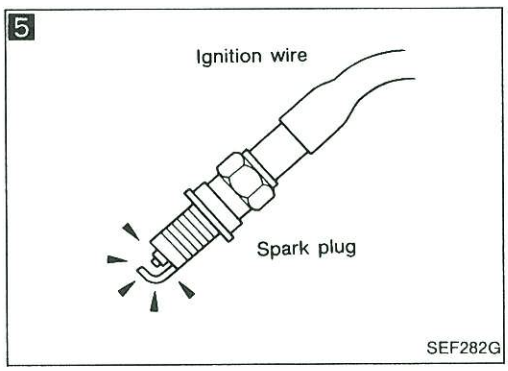


Ⓐ

**3**

**PERFORM POWER BALANCE TEST.**

1. Perform "POWER BALANCE" in "ACTIVE TEST" mode.
2. Is there any cylinder which does not produce a momentary engine speed drop?

No → Go to **6** .

OR

When disconnecting each injector harness connector one at a time, is there any cylinder which does not produce a momentary engine speed drop?

Yes

**4**

**CHECK INJECTOR.**

1. Remove distributor assembly from engine. (Crankshaft position sensor harness connector should remain connected.)
2. Disconnect ignition coil harness connector.
3. Turn ignition switch ON. (Do not start engine.)
4. When rotating crankshaft position sensor shaft, does each injector make an operating sound?

No → Check injector(s) and circuit(s).

Yes

**5**

**CHECK IGNITION SPARK.**

1. Disconnect ignition wire from rocker cover.
2. Connect a known good spark plug to the ignition wire.
3. Place end of spark plug against a suitable ground and crank engine.
4. Check for spark.

N.G. → Check ignition coil, power transistor unit and circuits. (See page EF & EC-104.)

O.K.

(Go to Ⓑ on next page.)

## Diagnostic Procedure 14 — Engine Stalls after Decelerating (Cont'd)

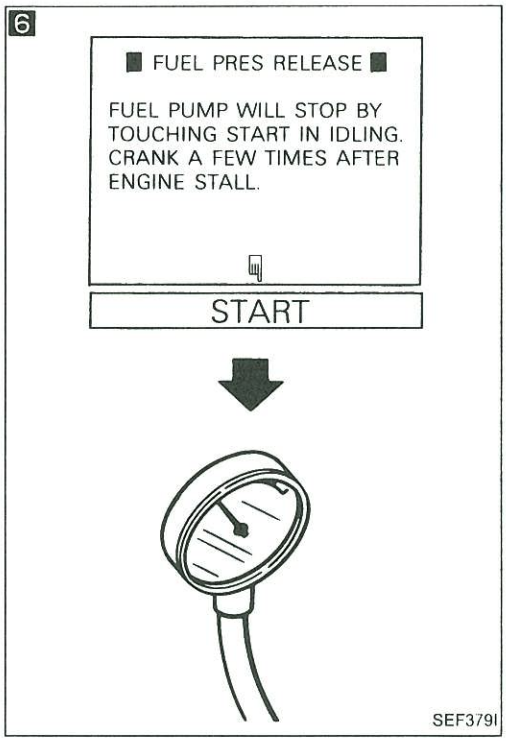


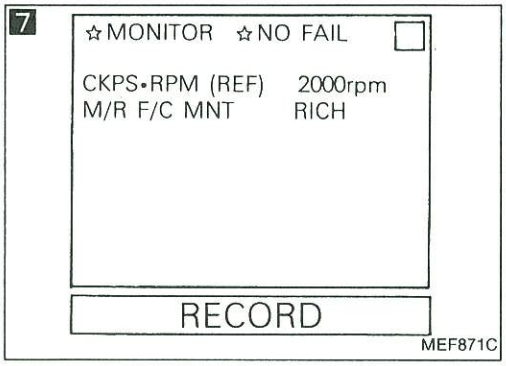


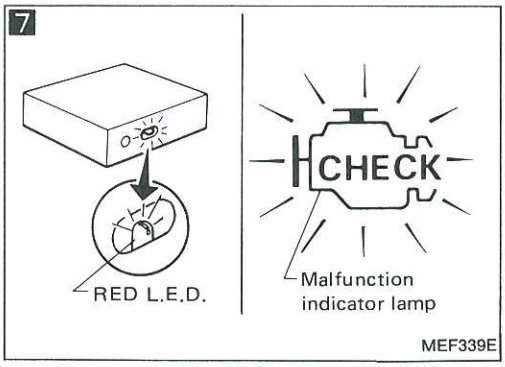


Ⓑ

**6**

**CHECK FUEL PRESSURE.**

1. Perform "FUEL PRESSURE RELEASE" in "WORK SUPPORT" mode in order to release fuel pressure to zero.
2. Install fuel pressure gauge and check fuel pressure.

**A few seconds after ignition switch is turned OFF to ON:**
**Approx.**
**294 kPa (3.0 kg/cm², 43 psi)**
**At idle:**
**Approx.**
**235 kPa (2.4 kg/cm², 34 psi)**

N.G. → Check fuel pressure regulator diaphragm.

**OR**

1. Release fuel pressure to zero. (Refer to page EF & EC-169.)
2. Install fuel pressure gauge and check fuel pressure.

O.K.

**7**

**CHECK OXYGEN SENSOR.**

1. See "M/R F/C MNT" in "DATA MONITOR" mode.
2. Maintaining engine at 2,000 rpm under no-load (with engine warmed up sufficiently.), check to make sure that the monitor fluctuates between "LEAN" and "RICH" more than 5 times during 10 seconds.

**RICH→LEAN→RICH→ LEAN→RICH.....**
**1 time** **2 times**

N.G. → Replace oxygen sensor.

OR

1. Set diagnostic test mode II (oxygen sensor monitor). (See page EF & EC-44.)
2. Maintaining engine at 2,000 rpm under no load, check that malfunction indicator lamp or RED LED on the ECM goes ON and OFF more than 5 times during 10 seconds.

O.K.

(Go to Ⓒ on next page.)

## Diagnostic Procedure 14 — Engine Stalls after Decelerating (Cont'd)

Ⓒ

**8** **CHECK ECM HARNESS CONNECTOR.**
Check the ECM pin terminals for damage or poor connection of ECM harness connector.
N.G. → Repair or replace.

O.K.

**9** **CHECK ECM POWER SUPPLY AND GROUND CIRCUIT.**
Refer to page EF & EC-90.
N.G. → Repair or replace.

O.K.

**10** **TRY A KNOWN GOOD ECM*.**

INSPECTION END

*: ECM may be the cause of a problem, but this is rarely the case.

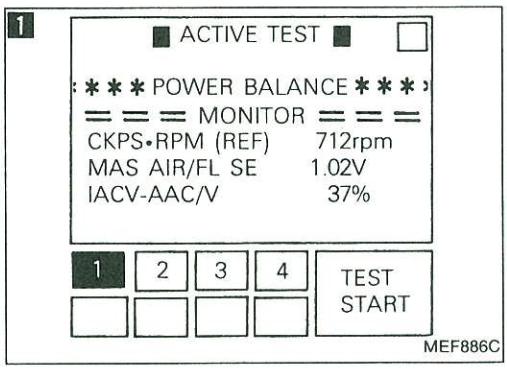


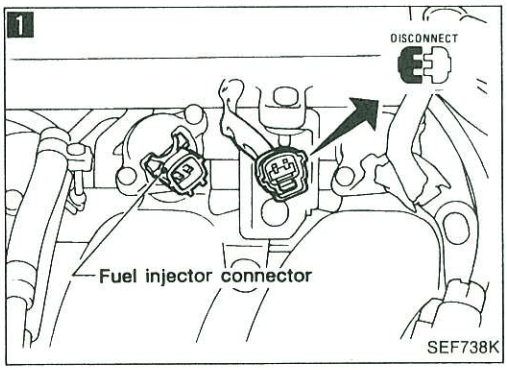


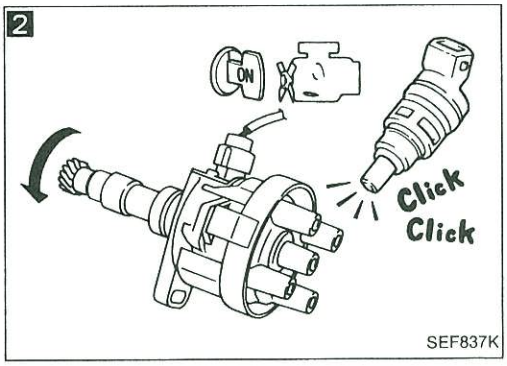


## Diagnostic Procedure 15 — Engine Stalls when Accelerating or when Driving at Constant Speed

**1** **PERFORM POWER BALANCE TEST.**
1. Perform "POWER BALANCE" in "ACTIVE TEST" mode.
2. Is there any cylinder which does not produce a momentary engine speed drop?

No → Go to **4**

OR

When disconnecting each injector harness connector one at a time, is there any cylinder which does not produce a momentary engine speed drop?

Yes

**2** **CHECK INJECTOR.**
1. Remove distributor assembly from engine. (Crankshaft position sensor harness connector should remain connected.)
2. Disconnect ignition coil harness connector.
3. Turn ignition switch ON. (Do not start engine.)
4. When rotating crankshaft position sensor shaft, does each injector make an operating sound?

No → Check injector(s) and circuit(s).

Yes

(Go to Ⓐ on next page.)

## Diagnostic Procedure 15 — Engine Stalls when Accelerating or when Driving at Constant Speed (Cont'd)

Ⓐ

3

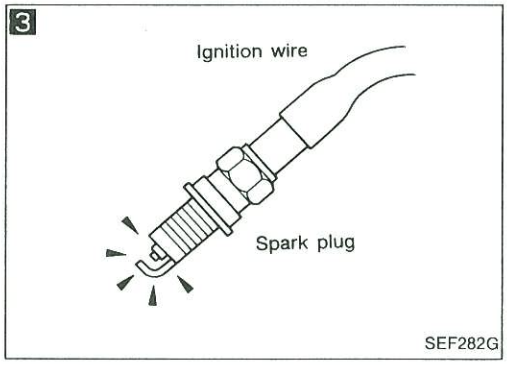


**3** **CHECK IGNITION SPARK.**
1. Disconnect ignition wire from rocker cover.
2. Connect a known good spark plug to the ignition wire.
3. Place end of spark plug against a suitable ground and crank engine.
4. Check for spark.

N.G. → Check ignition coil, power transistor unit and circuits. (See page EF & EC-104.)

O.K.

4

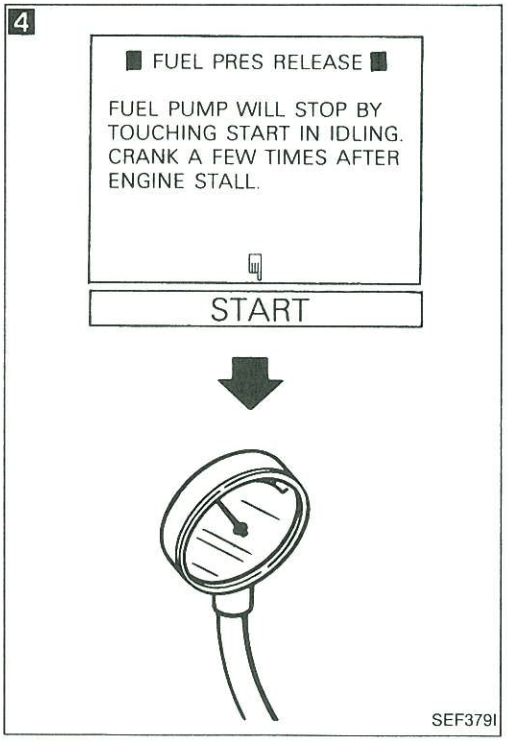


**4** **CHECK FUEL PRESSURE.**
1. Perform "FUEL PRESSURE RELEASE" in "WORK SUPPORT" mode in order to release fuel pressure to zero.
2. Install fuel pressure gauge and check fuel pressure.
   **A few seconds after ignition switch is turned OFF to ON:**
   **Approx. 294 kPa (3.0 kg/cm², 43 psi)**
   **At idle:**
   **Approx. 235 kPa (2.4 kg/cm², 34 psi)**

N.G. → Check fuel pump, circuit and fuel pressure regulator.

**OR**

1. Release fuel pressure to zero. (Refer to page EF & EC-169.)
2. Install fuel pressure gauge and check fuel pressure.

O.K.

5

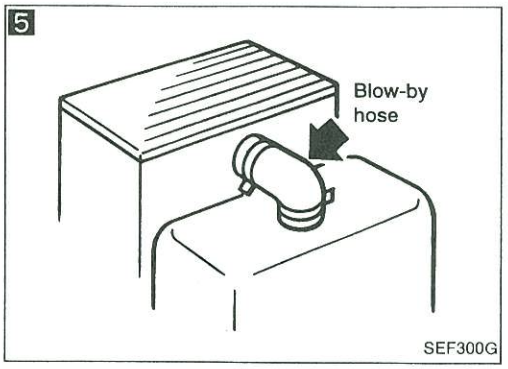


**5** **CHECK FOR INTAKE AIR LEAK.**
When pinching blow-by hose (lowering the blow-by air supply), does the engine speed rise?

Yes → Discover air leak location and repair.

No

**6** **CHECK ECM HARNESS CONNECTOR.**
Check the ECM pin terminals for damage or poor connection of ECM harness connector.

N.G. → Repair or replace.

O.K.

**7** **CHECK ECM POWER SUPPLY AND GROUND CIRCUIT.**
Refer to page EF & EC-90.

Yes → Repair or replace.

No

**8** **TRY A KNOWN GOOD ECM*.**

INSPECTION END

*: ECM may be the cause of a problem, but this is rarely the case.

## Diagnostic Procedure 16 — Engine Stalls when the Electrical Load is Heavy

1

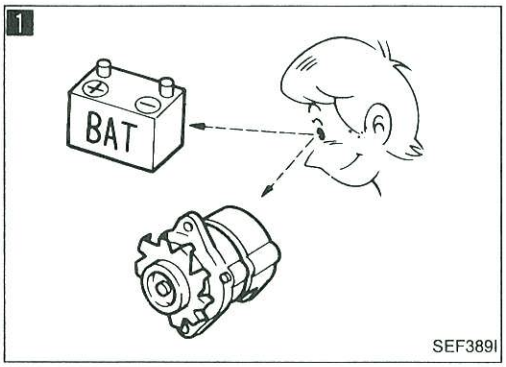

SEF389I

**CHECK BATTERY AND ALTERNATOR.**
Check battery and alternator condition. (Refer to EL section.)

N.G. → Repair or replace.

O.K. ↓

2

**PERFORM POWER BALANCE TEST.**

1. Perform "POWER BALANCE" in "ACTIVE TEST" mode.
2. Is there any cylinder which does not produce a momentary engine speed drop?

No → Go to 5

OR

When disconnecting each injector harness connector one at a time, is there any cylinder which does not produce a momentary engine speed drop?

Yes ↓

2

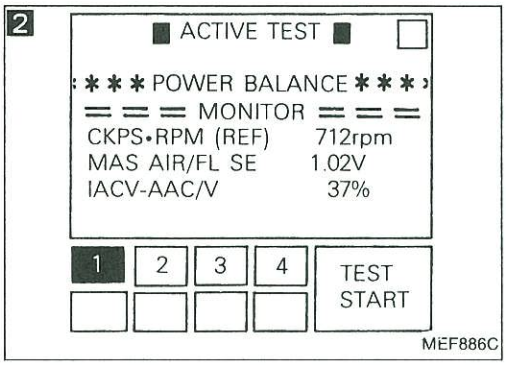

MEF886C

3

**CHECK INJECTOR.**

1. Remove distributor assembly from engine. (Crankshaft position sensor harness connector should remain connected.)
2. Disconnect ignition coil harness connector.
3. Turn ignition switch ON. (Do not start engine.)
4. When rotating crankshaft position sensor shaft, does each injector make an operating sound?

No → Check injector(s) and circuit(s).

Yes ↓

2

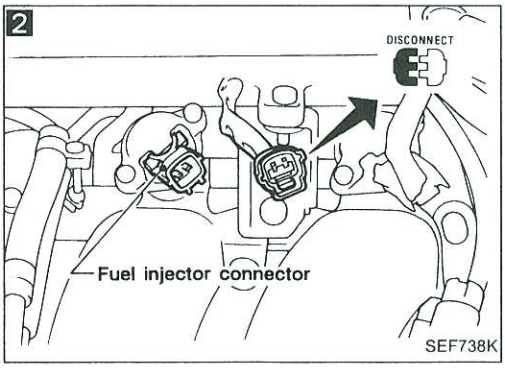

SEF738K

4

**CHECK IGNITION SPARK.**

1. Disconnect ignition wire from rocker cover.
2. Connect a known good spark plug to the ignition wire.
3. Place end of spark plug against a suitable ground and crank engine.
4. Check for spark.

N.G. → Check ignition coil, power transistor unit and circuits. (See page EF & EC-104.)

O.K. ↓

3

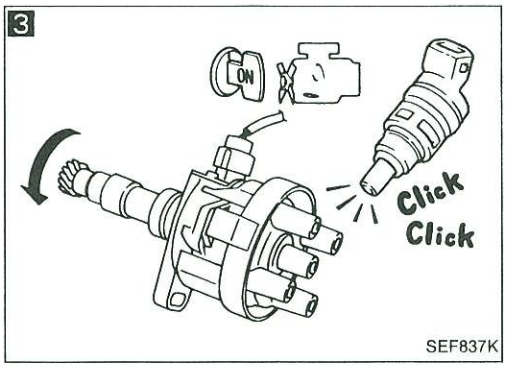

SEF837K

(Go to Ⓐ on next page.)

4

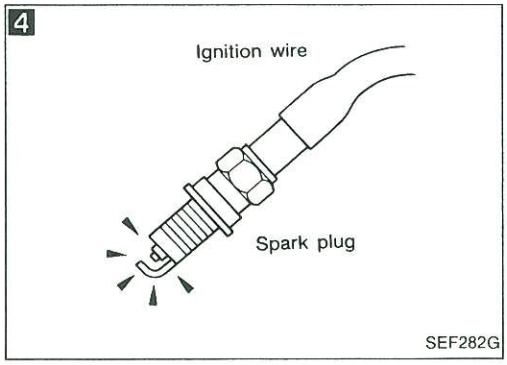

SEF282G

## Diagnostic Procedure 16 — Engine Stalls when the Electrical Load is Heavy (Cont'd)

5

■ FUEL PRES RELEASE ■

FUEL PUMP WILL STOP BY TOUCHING START IN IDLING. CRANK A FEW TIMES AFTER ENGINE STALL.

START

SEF379I

Ⓐ

5

**CHECK FUEL PRESSURE.**

1. Perform "FUEL PRESSURE RELEASE" in "WORK SUPPORT" mode in order to release fuel pressure to zero.
2. Install fuel pressure gauge and check fuel pressure.

**A few seconds after ignition switch is turned OFF to ON:**
**Approx.**
**294 kPa (3.0 kg/cm², 43 psi)**
**At idle:**
**Approx.**
**235 kPa (2.4 kg/cm², 34 psi)**

N.G. → Check fuel pressure regulator diaphragm.

**OR**

1. Release fuel pressure to zero. (Refer to page EF & EC-169.)
2. Install fuel pressure gauge and check fuel pressure.

O.K.

6

**CHECK ECM HARNESS CONNECTOR.**
Check the ECM pin terminals for damage or poor connection of ECM harness connector.

N.G. → Repair or replace.

O.K.

7

**CHECK ECM POWER SUPPLY AND GROUND CIRCUIT.**
Refer to page EF & EC-90.

N.G. → Repair or replace.

O.K.

8

**TRY A KNOWN GOOD ECM*.**

INSPECTION END

*: ECM may be the cause of a problem, but this is rarely the case.

1

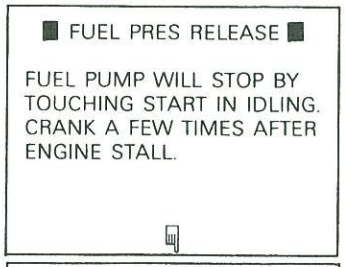

SEF379I

2

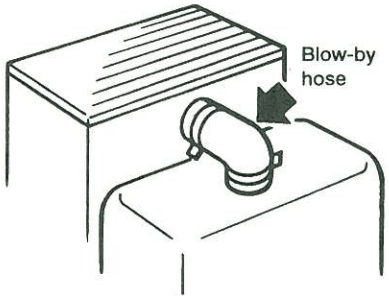


SEF300G

## Diagnostic Procedure 17 — Lack of Power and Stumble

1

**CHECK FUEL PRESSURE.**

1. Perform "FUEL PRESSURE RELEASE" in "WORK SUPPORT" mode in order to release fuel pressure to zero.
2. Install fuel pressure gauge and check fuel pressure.

**A few seconds after ignition switch is turned OFF to ON:**
**Approx.**
**294 kPa (3.0 kg/cm$^2$, 43 psi)**
**At idle:**
**Approx.**
**235 kPa (2.4 kg/cm$^2$, 34 psi)**

N.G. → Check fuel pressure regulator diaphragm.

**OR**

1. Release fuel pressure to zero. (Refer to page EF & EC-169.)
2. Install fuel pressure gauge and check fuel pressure.

O.K.

2

**CHECK FOR INTAKE AIR LEAK.**
When pinching blow-by hose (lowering the blow-by air supply), does the engine speed rise?

Yes → Discover air leak location and repair.

No

INSPECTION END

1

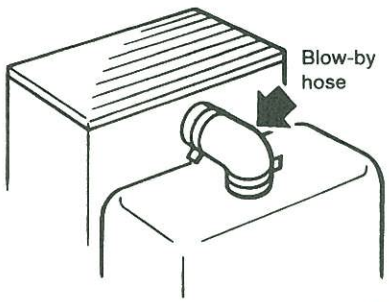


SEF300G

2

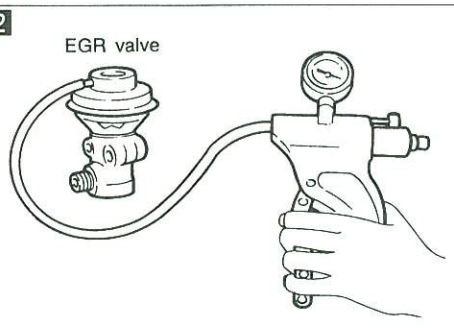


MEF892C

## Diagnostic Procedure 18 — Knock

1

**CHECK FOR INTAKE AIR LEAK.**
When pinching blow-by hose (lowering the blow-by air supply), does the engine speed rise?

Yes → Discover air leak location and repair.

No

2

**CHECK E.G.R. OPERATION.**

1. Apply vacuum directly to the EGR and canister valve using a handy vacuum pump.
2. Check to see that the engine runs rough or dies.

No → Check EGR and canister valve for sticking.

Yes

(Go to Ⓐ on next page.)

## Diagnostic Procedure 18 — Knock (Cont'd)

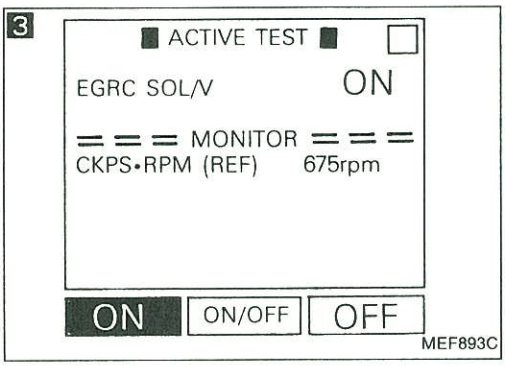


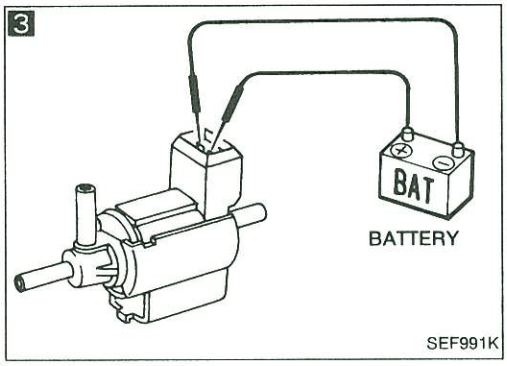


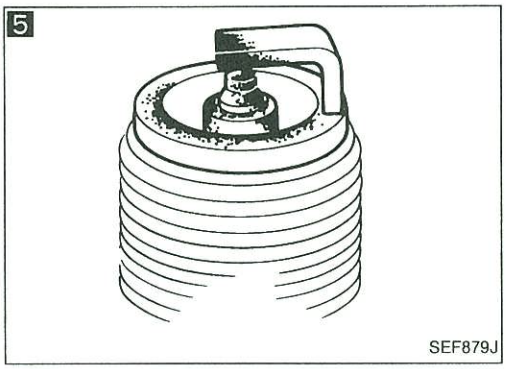


Ⓐ

**3**

**CHECK EGRC-SOLENOID VALVE.**

1. Select "EGRC SOLENOID VALVE" in "ACTIVE TEST" mode.
2. Turn EGR and canister control solenoid valve ON and OFF.
3. Check operating sound.

N.G. → Check solenoid valve and circuit.

OR

1. Disconnect EGR and canister control solenoid valve harness connector.
2. Supply EGR and canister control solenoid valve terminals with battery current and check operating sound.

O.K.

**4**

**CHECK VACUUM HOSES.**

Check the following vacuum hoses for clogging, cracks and poor connection.

a) Vacuum hose between EGR and canister control valve and EGRC-solenoid valve.
b) Vacuum hose between EGR and canister control solenoid valve and throttle body port.
c) Vacuum hose between EGR and canister control solenoid valve and air duct.

N.G. → Repair or replace.

O.K.

**5**

**CHECK FOR OIL LEAK TO COMBUSTION CHAMBER.**

Remove spark plugs and check for fouling with oil.

Yes → Check pistons, piston rings, valves, valve seats, valve oil seal, engine oil level, etc.

No

INSPECTION END

1

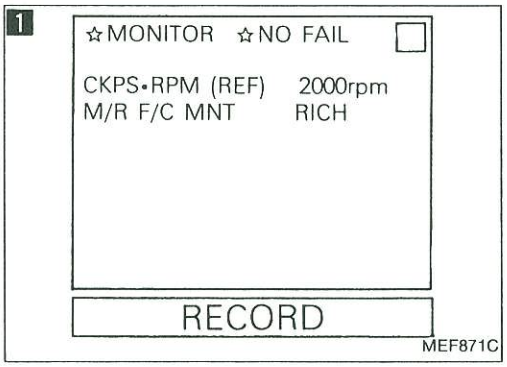


1

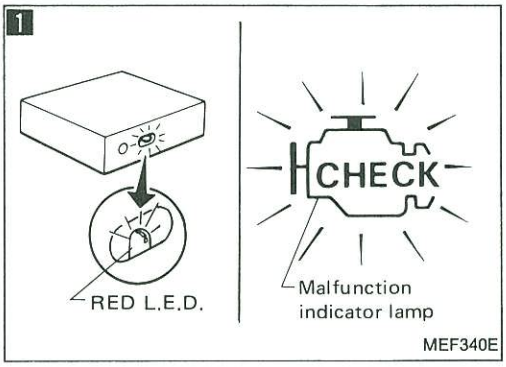


2

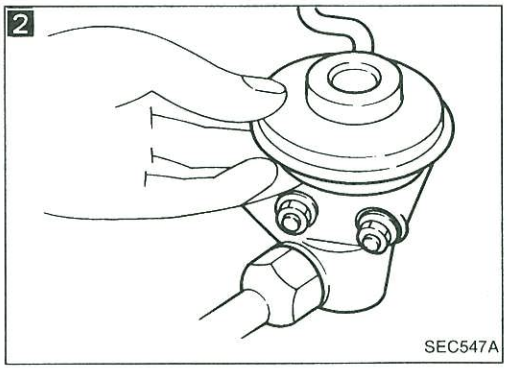


## Diagnostic Procedure 19 — Surge

1

**CHECK OXYGEN SENSOR.**

1. See "M/R F/C MNT" in "DATA MONITOR" mode.
2. Maintaining engine at 2,000 rpm under no-load (with engine warmed up sufficiently.), check to make sure that the monitor fluctuates between "LEAN" and "RICH" more than 5 times during 10 seconds.

**RICH→LEAN→RICH→**
**1 time 2 times**
**LEAN→RICH.....**

N.G. → Replace oxygen sensor.

OR

1. Set diagnostic test mode II (oxygen sensor monitor). (See page EF & EC-44.)
2. Maintaining engine at 2,000 rpm under no load, check that malfunction indicator lamp or RED LED on the ECM goes ON and OFF more than 5 times during 10 seconds.

O.K.

2

**CHECK EGR VALVE.**
Check EGR valve for sticking.

N.G. → Repair or replace.

O.K.

3

**TRY A KNOWN GOOD ECM*.**

O.K.

INSPECTION END

*: ECM may be the cause of a problem, but this is rarely the case.

1

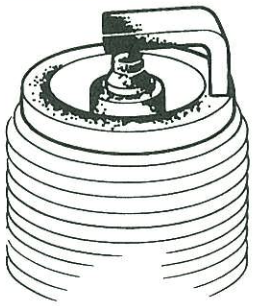

SEF879J

## Diagnostic Procedure 20 — Backfire through the Intake

1

**CHECK SPARK PLUGS.**
Remove the spark plugs and check for fouling, etc.

N.G. → Repair or replace spark plug.

O.K. ↓

2

**CHECK INTAKE AIR LEAK.**
When pinching blow-by hose (lowering the blow-by air supply), does the engine speed rise?

Yes → Discover air leak location and repair.

No ↓

3

**CHECK FOR INTAKE VALVE DEPOSITS.**
If there are deposits on intake valves, remove them.

↓

INSPECTION END

2

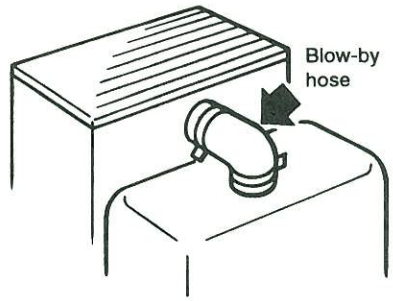


SEF300G

## Diagnostic Procedure 21 — Backfire through the Exhaust

**CHECK ENGINE COOLANT TEMPERATURE SENSOR.**
Check engine coolant temperature sensor and its circuit. (See page EF & EC-99.)

N.G. → Replace or repair.

O.K. ↓

INSPECTION END

## Diagnostic Procedure 22

### MAIN POWER SUPPLY AND GROUND CIRCUIT (Not self-diagnostic item)

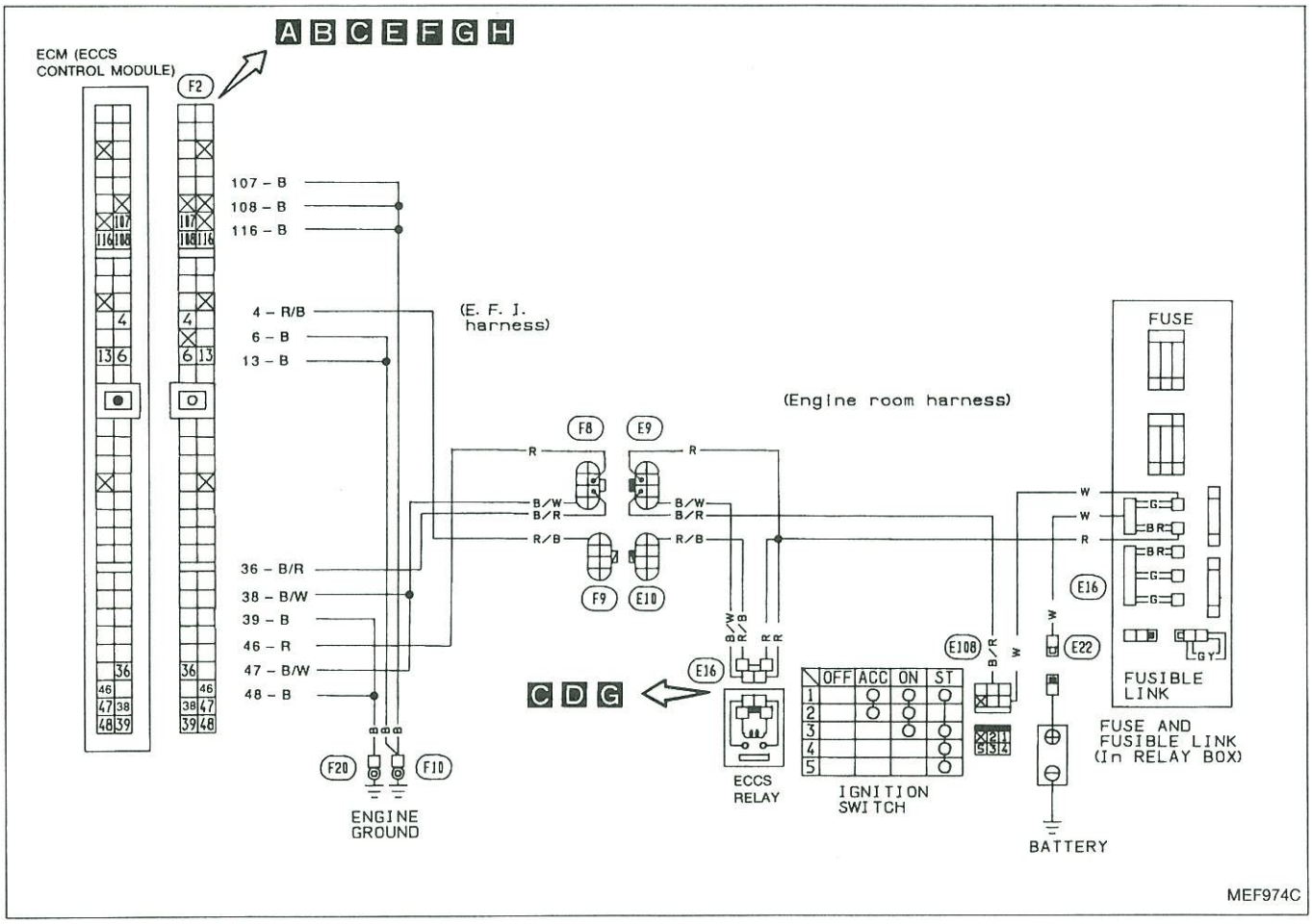


### Harness layout

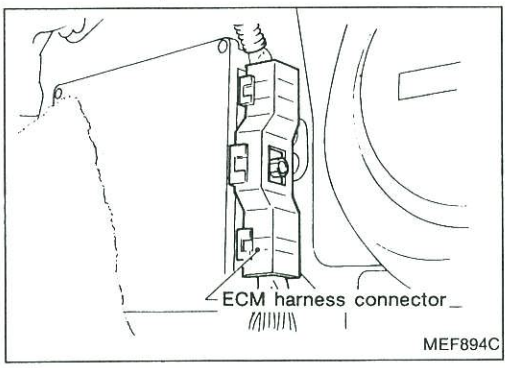


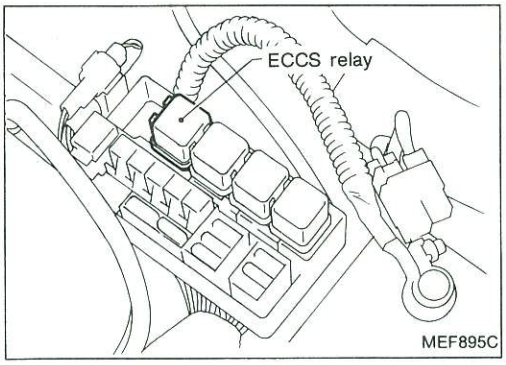

## Diagnostic Procedure 22 (Cont'd)

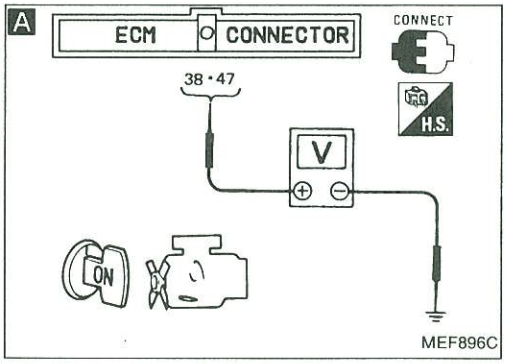


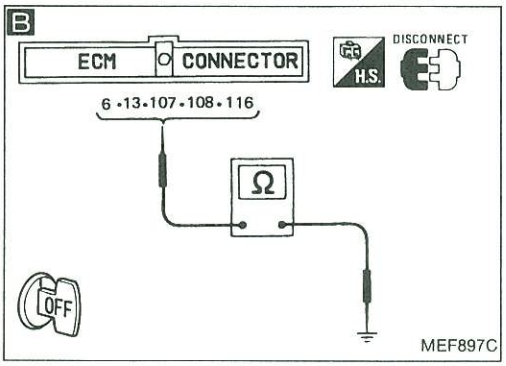


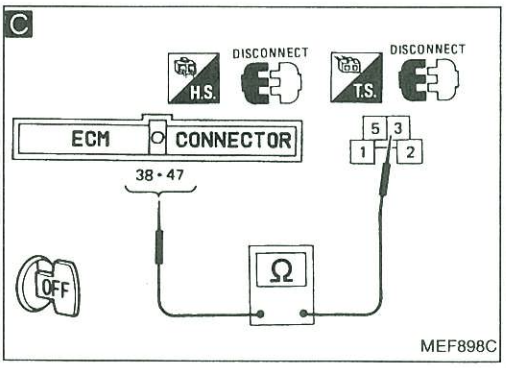


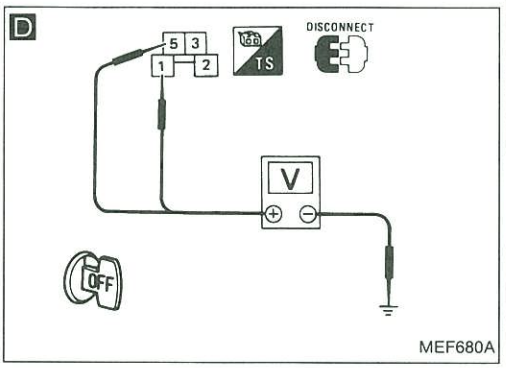


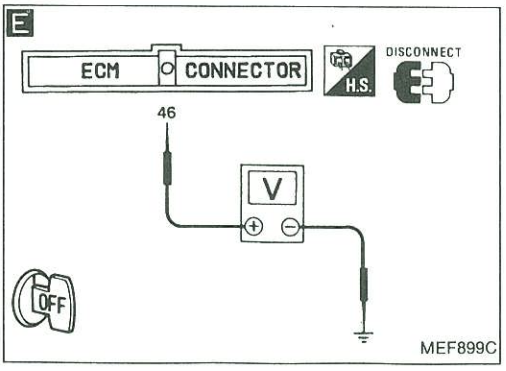


INSPECTION START

**A**

CHECK POWER SUPPLY.
1) Turn ignition switch "ON".
2) Check voltage between ECM terminals (38), (47) and ground.
**Voltage: Battery voltage**

O.K. → **B**

CHECK GROUND CIRCUIT.
1) Turn ignition switch "OFF".
2) Disconnect ECM harness connector.
3) Check harness continuity between ECM terminals (6), (13), (107), (108), (116) and engine ground.
**Continuity should exist.**
If N.G., repair harness or connectors.

O.K. ↓

Check ECM pin terminals for damage or the connection of ECM harness connector.

N.G. ↓

**C**

CHECK HARNESS CONTINUITY BETWEEN ECCS RELAY AND ECM
1) Turn ignition switch "OFF".
2) Disconnect ECM harness connector.
3) Disconnect ECCS relay.
4) Check harness continuity between ECM terminals (38), (47) and terminal (3).
**Continuity should exist.**

N.G. → Check the following.
- Harness connectors (F8), (E9)
- Harness continuity between ECM and ECCS relay

If N.G., repair harness or connectors.

O.K. ↓

**D**

CHECK VOLTAGE BETWEEN ECCS RELAY AND GROUND.
1) Check voltage between terminals (1), (5) and ground.
**Voltage: Battery voltage**

N.G. → Check the following.
- "BR" fusible link
- Harness continuity between ECCS relay and battery

If N.G., repair harness or connectors.

O.K. ↓

**E**

CHECK VOLTAGE BETWEEN ECM AND GROUND.
1) Check voltage between ECM terminal (46) and ground.
**Voltage: Battery voltage**

N.G. → Check the following.
- Harness connectors (F8), (E9)
- "BR" fusible link
- Harness continuity between ECM and battery

If N.G., repair harness or connectors.

O.K. ↓

Ⓐ

## Diagnostic Procedure 22 (Cont'd)

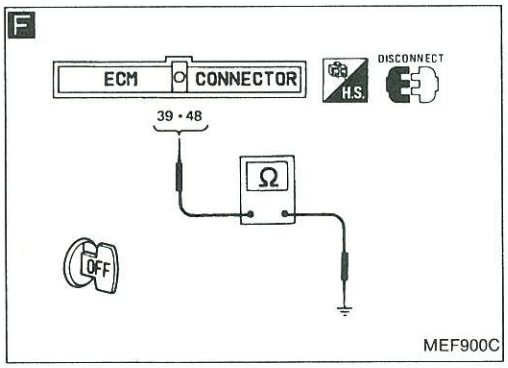


Ⓐ

F

CHECK GROUND CIRCUIT.
1) Check harness continuity between ECM terminals ㊴, ㊽ and engine ground.
**Continuity should exist.**

N.G. → Repair harness or connectors.

O.K.

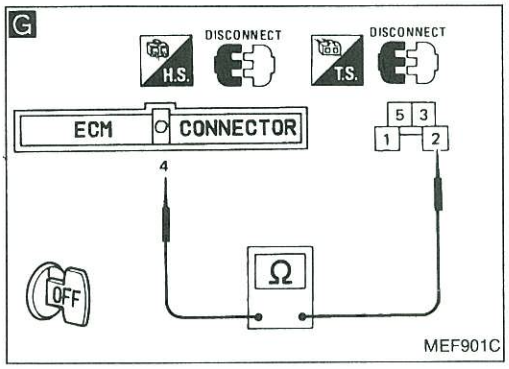


G

CHECK OUTPUT SIGNAL CIRCUIT.
1) Check harness continuity between ECM terminal ④ and terminal ②.
**Continuity should exist.**

N.G. → Check the following.
- Harness connectors (F9), (E10)
- Harness continuity between ECM and ECCS relay

If N.G., repair harness or connectors.

O.K.

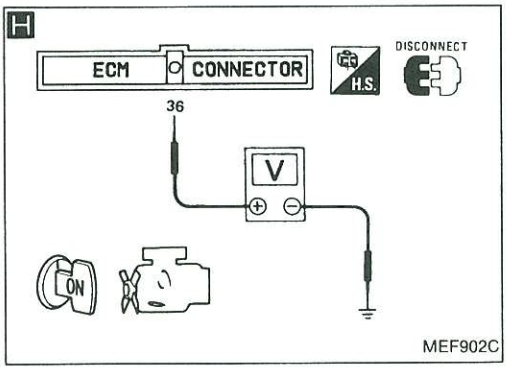


H

CHECK INPUT SIGNAL CIRCUIT.
1) Turn ignition switch "ON".
2) Check voltage between ECM terminal ㊱ and ground.
**Voltage: Battery voltage**

N.G. → Check the following.
- Harness connectors (F8), (E9)
- Harness continuity between ECM and ignition switch

If N.G., repair harness or connectors.

O.K.

CHECK COMPONENT
(ECCS relay).
Refer to "Electrical Components Inspection".
(See page EF & EC-166.)

N.G. → Replace ECCS relay.

O.K.

Check ECM pin terminals for damage or the connection of ECM harness connector.

## Diagnostic Procedure 23

### CRANKSHAFT POSITION SENSOR (Diagnostic trouble code No. 11)

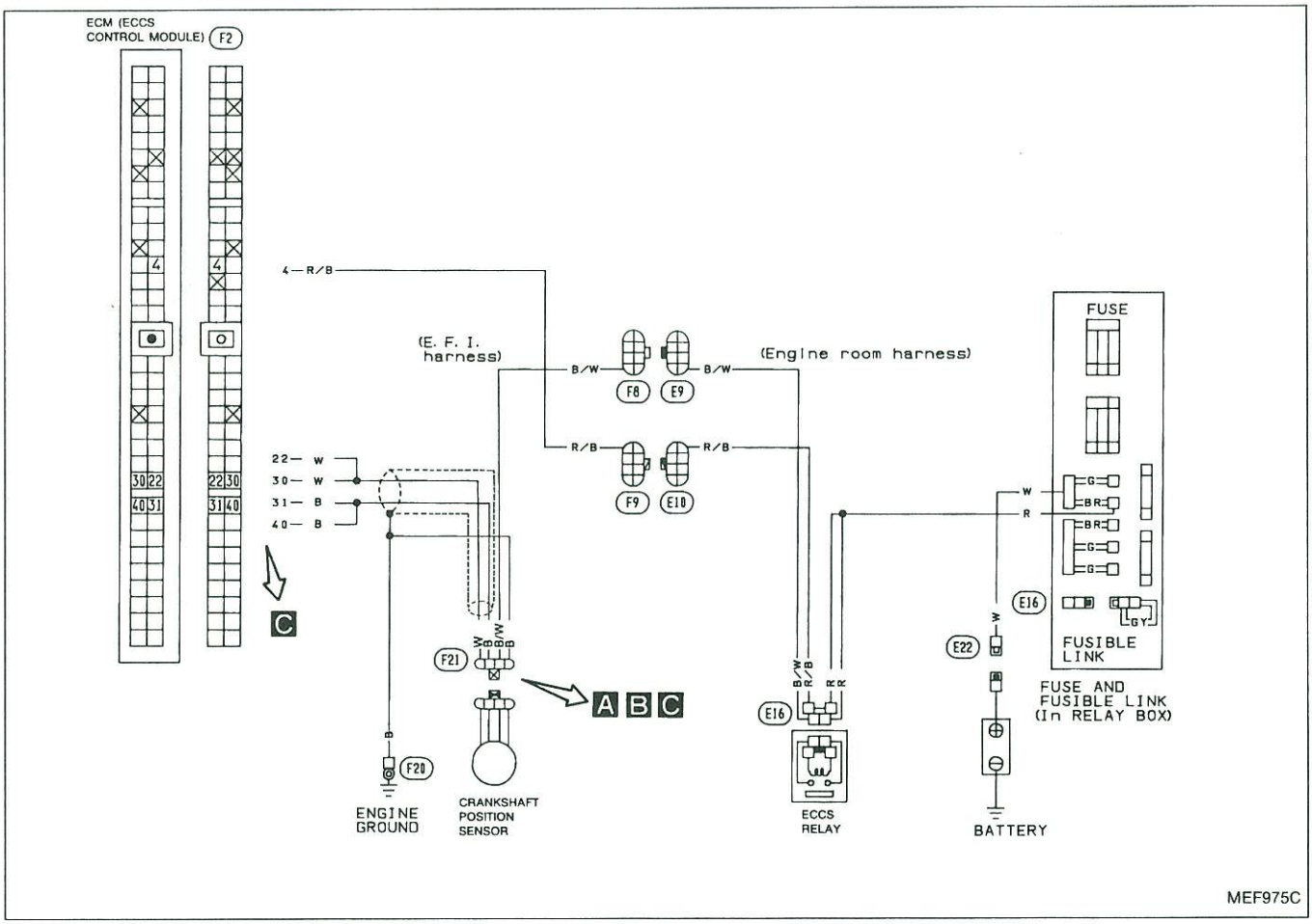


### Harness layout

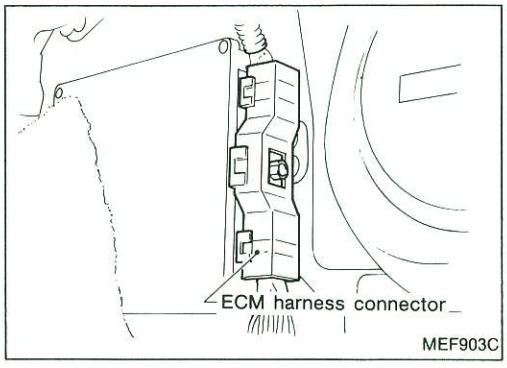


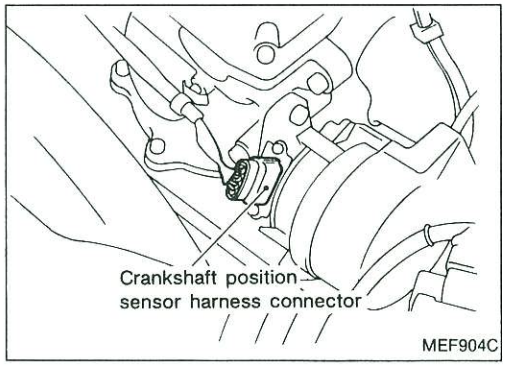

## Diagnostic Procedure 23 (Cont'd)

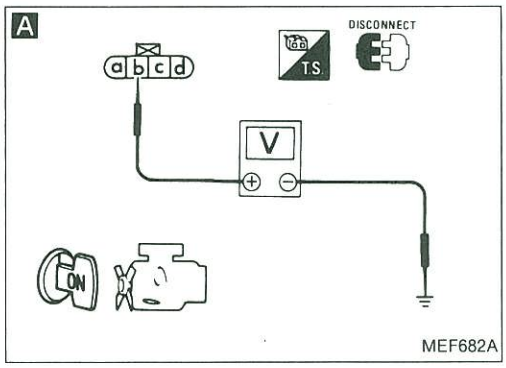


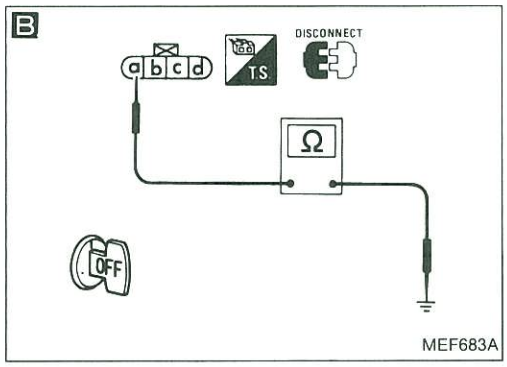


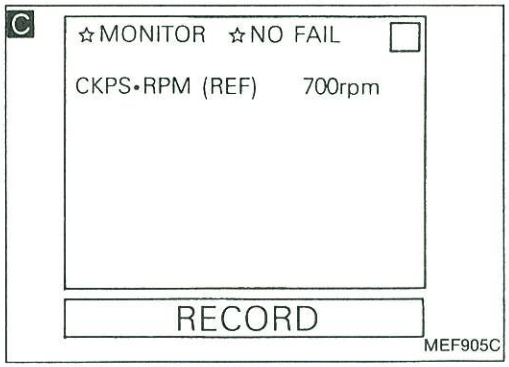


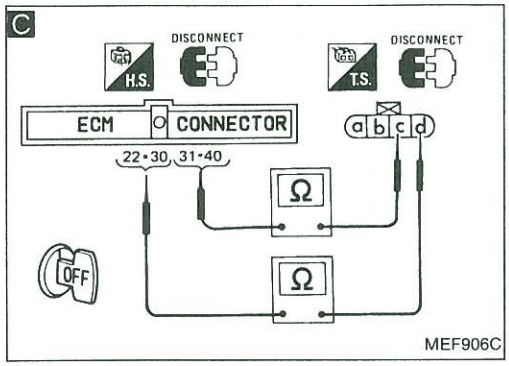


INSPECTION START

**A**

CHECK POWER SUPPLY.
1) Disconnect crankshaft position sensor harness connector.
2) Turn ignition switch "ON".
3) Check voltage between terminal ⓑ and ground.
**Voltage: Battery voltage**

N.G. → Check the following.
- Harness connectors (F8), (E9)
- Harness continuity between crankshaft position sensor and ECCS relay

If N.G., repair harness or connectors.

O.K. ↓

**B**

CHECK GROUND CIRCUIT.
1)Turn ignition switch "OFF".
2)Check harness continuity between terminal ⓐ and engine ground.
**Continuity should exist.**

N.G. → Repair harness or connectors.

O.K. ↓

**C**

CHECK INPUT SIGNAL CIRCUIT.

1) Reconnect crankshaft position sensor harness connector.
2) Start engine.
3) Read crankshaft position sensor signals in "DATA MONITOR" mode with CONSULT.
**rpm: 700 ± 50**

OR

1) Disconnect ECM harness connector.
2) Check harness continuity between terminal ⓒ and ECM terminals (31), (40) (1° signal), terminal ⓓ and ECM terminals (22), (30) (180° signal).
**Continuity should exist.**

N.G. → Repair harness or connectors.

O.K. ↓

CHECK COMPONENT
(Crankshaft position sensor).
Refer to "Electrical Components Inspection".
(See page EF & EC-159.)

N.G. → Replace crankshaft position sensor.

O.K. ↓

Check ECM pin terminals for damage or the connection of ECM harness connector.

## Diagnostic Procedure 23 (Cont'd)

**Perform FINAL CHECK by the following procedure after repair is completed.**

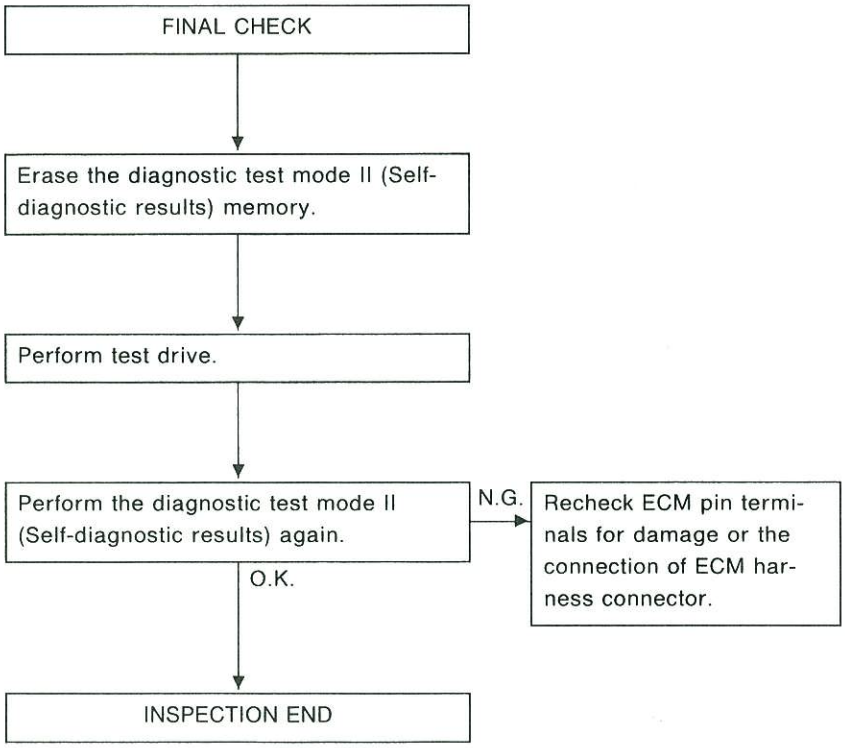

## Diagnostic Procedure 24

### MASS AIR FLOW SENSOR (Diagnostic trouble code No. 12) CHECK (MALFUNCTION INDICATOR LAMP ITEM)

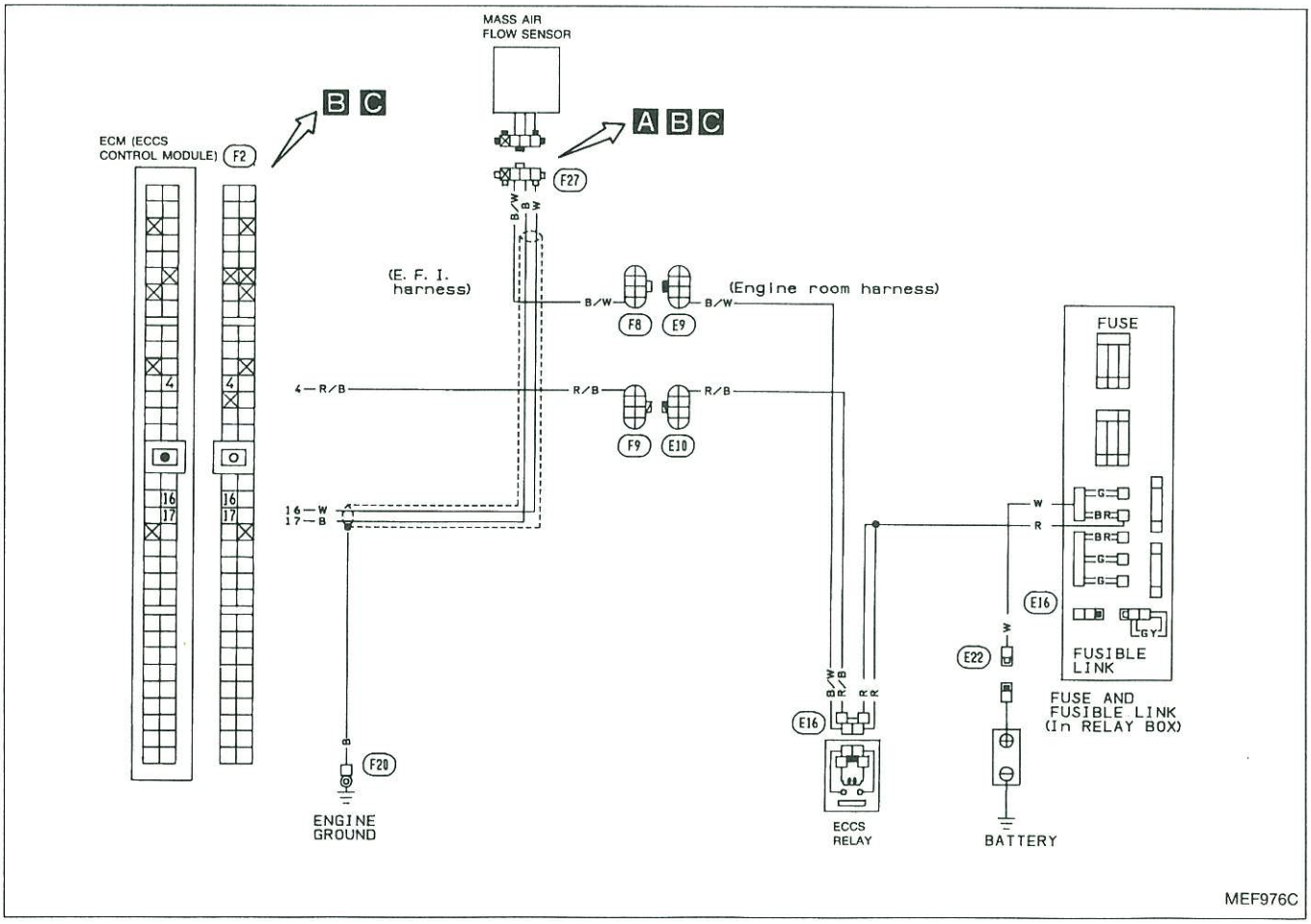


### Harness layout

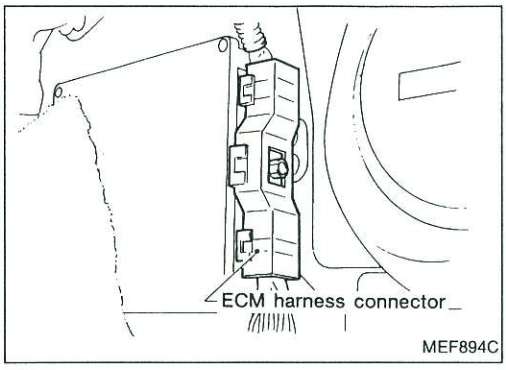


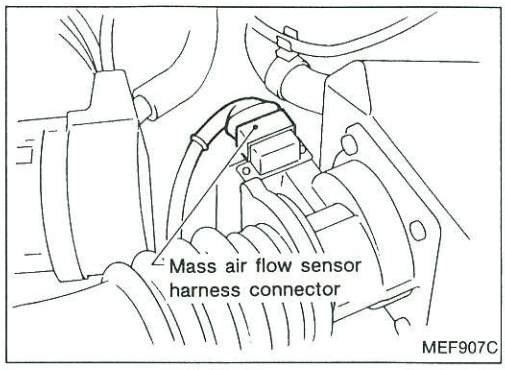

## Diagnostic Procedure 24 (Cont'd)

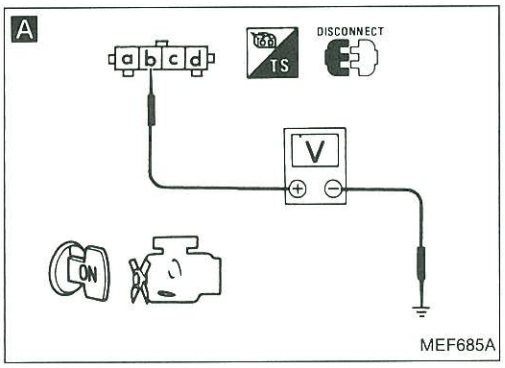


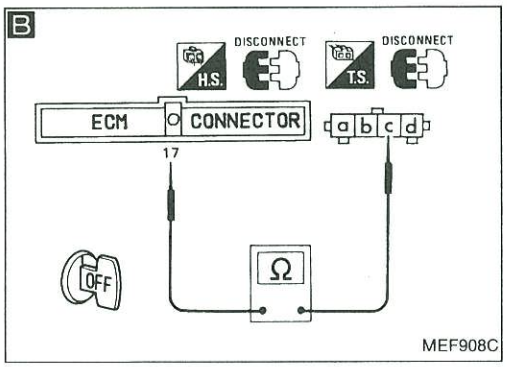


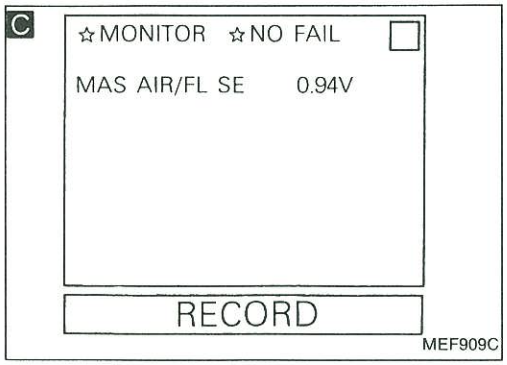


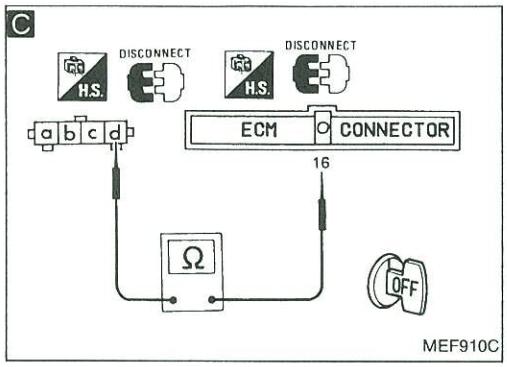


INSPECTION START

**A**

CHECK POWER SUPPLY.
1) Disconnect mass air flow sensor harness connector.
2) Turn ignition switch "ON".
3) Check voltage between terminal ⓑ and ground.
**Voltage: Battery voltage**

N.G. → Check the following.
- Harness connectors (F8), (E9)
- Harness continuity between mass air flow sensor and ECCS relay

If N.G., repair harness or connectors.

O.K. ↓

**B**

CHECK GROUND CIRCUIT.
1) Turn ignition switch "OFF".
2) Disconnect ECM harness connector.
3) Check harness continuity between terminal ⓒ and ECM terminal ⑰.
**Continuity should exist.**

N.G. → Repair harness or connectors.

O.K. ↓

**C**

CHECK INPUT SIGNAL CIRCUIT.

1) Reconnect mass air flow sensor harness connector and ECM harness connector.
2) Start engine and warm it up sufficiently.
3) Read mass air flow sensor signal in "DATA MONITOR" mode with CONSULT.
**Voltage: 0.8 - 1.2V**
**(At idle)**

OR

1) Check harness continuity between terminal ⓓ and ECM terminal ⑯.
**Continuity should exist.**

N.G. → Repair harness or connectors.

O.K. ↓

CHECK COMPONENT
(Mass air flow sensor).
Refer to "Electrical Components Inspection".
(See page EF & EC-160.)

N.G. → Replace mass air flow sensor.

O.K. ↓

Check ECM pin terminals for damage or the connection of ECM harness connector.

## Diagnostic Procedure 24 (Cont'd)

**Perform FINAL CHECK by the following procedure after repair is completed.**

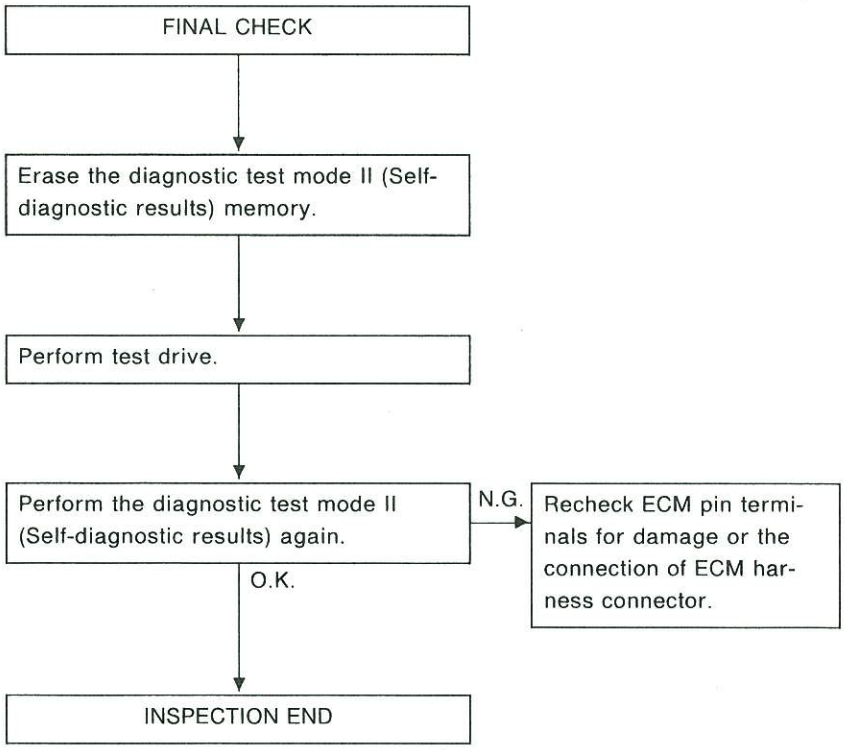

## Diagnostic Procedure 25

### ENGINE COOLANT TEMPERATURE SENSOR (Diagnostic trouble code No. 13)

### CHECK (MALFUNCTION INDICATOR LAMP ITEM)

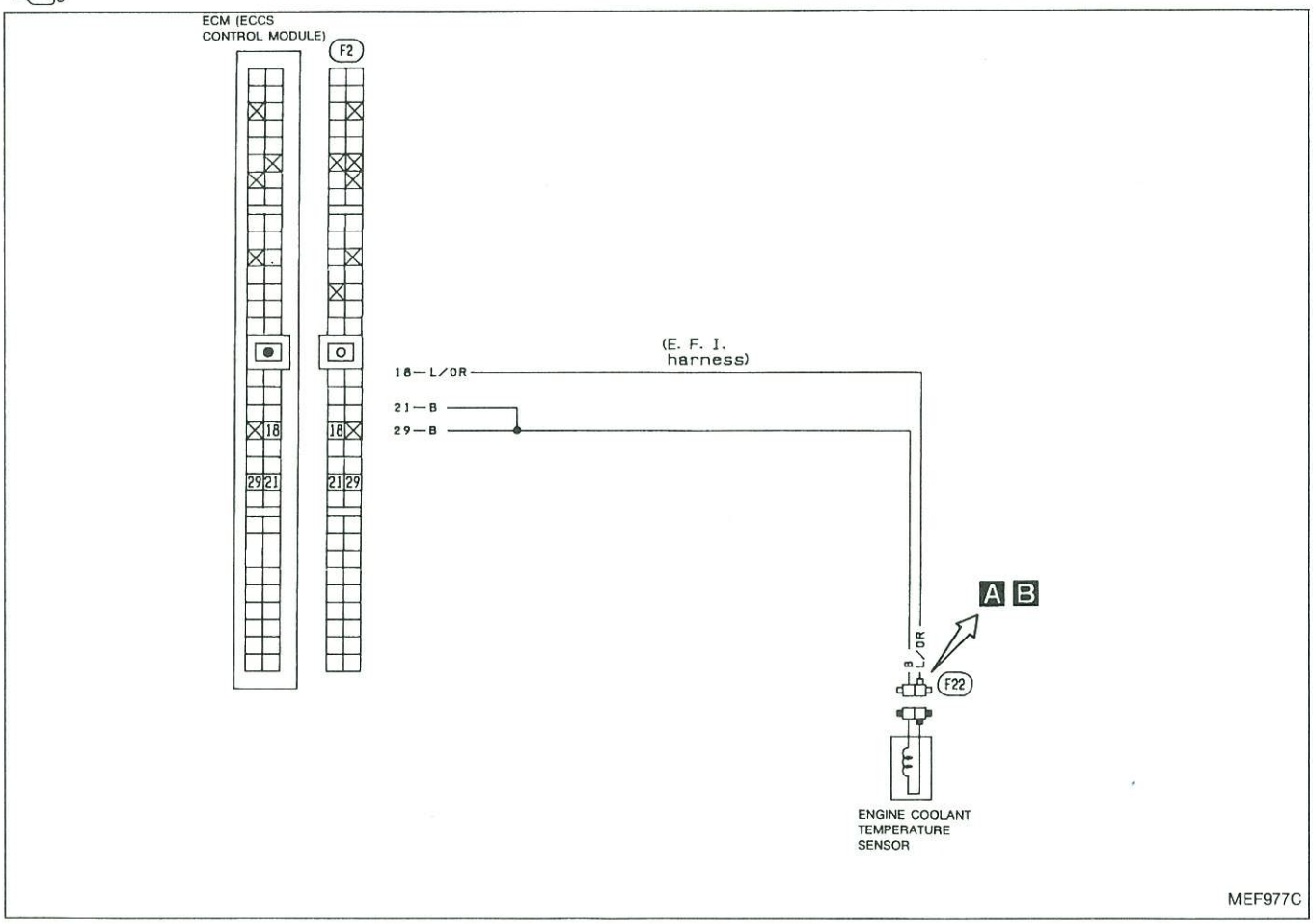


### Harness layout

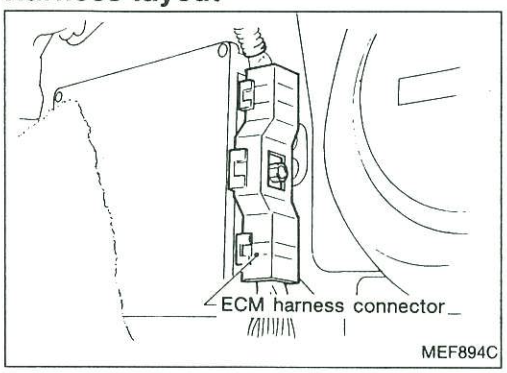


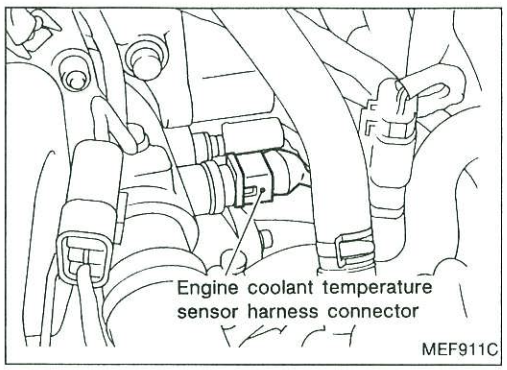

## Diagnostic Procedure 25 (Cont'd)

A

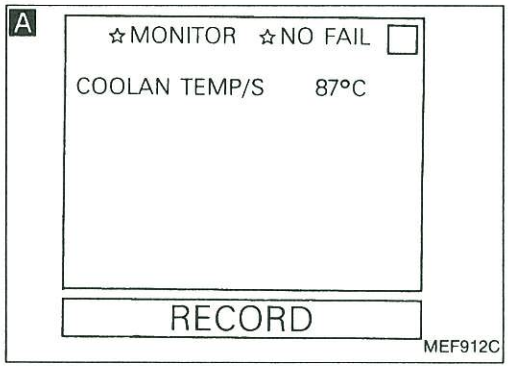


A

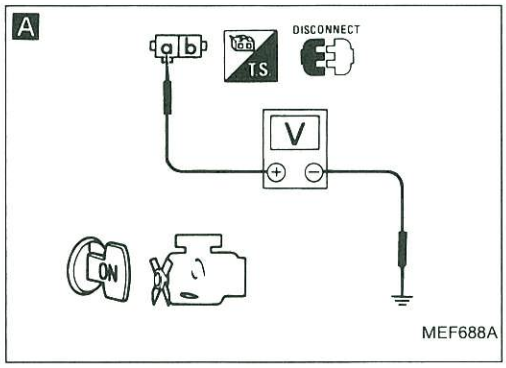


B

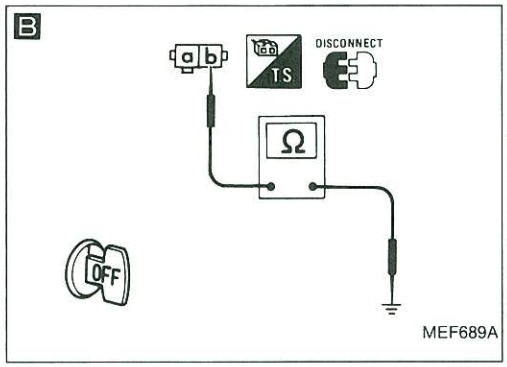


INSPECTION START

A

CHECK POWER SUPPLY.

1) Start engine.
2) Read engine coolant temperature sensor signal in "DATA MONITOR" mode with CONSULT.
**Engine coolant temperature should gradually rise and reach more than 70°C (158°F) after engine warm-up.**

N.G. → Repair harness or connectors.

OR

1) Disconnect engine coolant temperature sensor harness connector.
2) Turn ignition switch "ON".
3) Check voltage between terminal ⓐ and ground.
**Voltage:**
**Approximately 5V**

O.K.

B

CHECK GROUND CIRCUIT.

1) Turn ignition switch "OFF".
2) Check harness continuity between terminal ⓑ and engine ground.
**Continuity should exist.**

N.G. → Repair harness or connectors.

O.K.

CHECK COMPONENT
(Engine coolant temperature sensor).
Refer to "Electrical Components Inspection".
(See page EF & EC-160.)

N.G. → Replace engine coolant temperature sensor.

O.K.

Check ECM pin terminals for damage or the connection of ECM harness connector.

## Diagnostic Procedure 25 (Cont'd)

**Perform FINAL CHECK by the following procedure after repair is completed.**

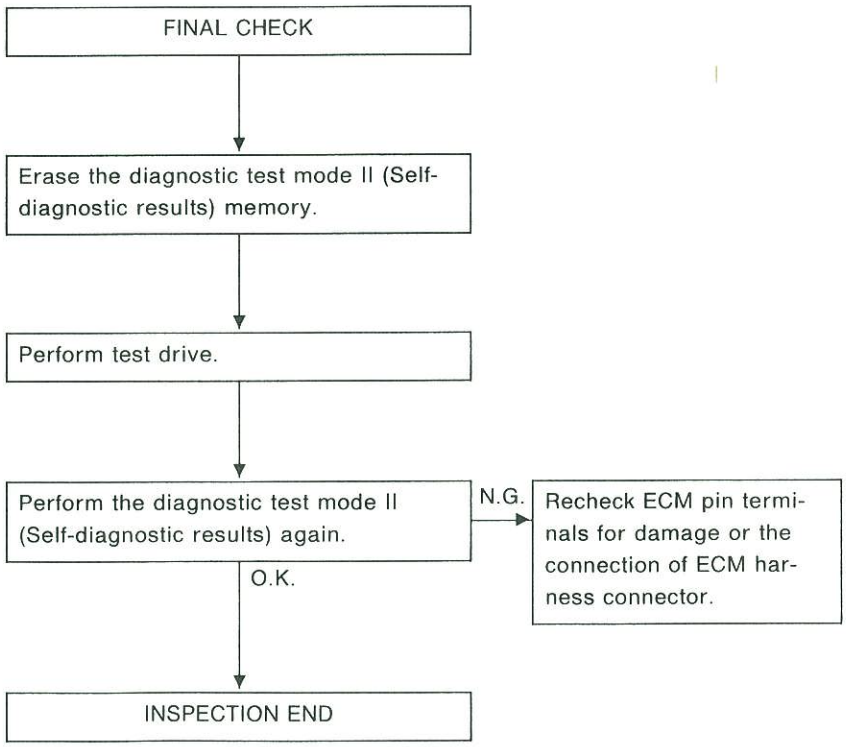

## Diagnostic Procedure 26

### VEHICLE SPEED SENSOR (Diagnostic trouble code No. 14) CHECK (MALFUNCTION INDICATOR LAMP ITEM)

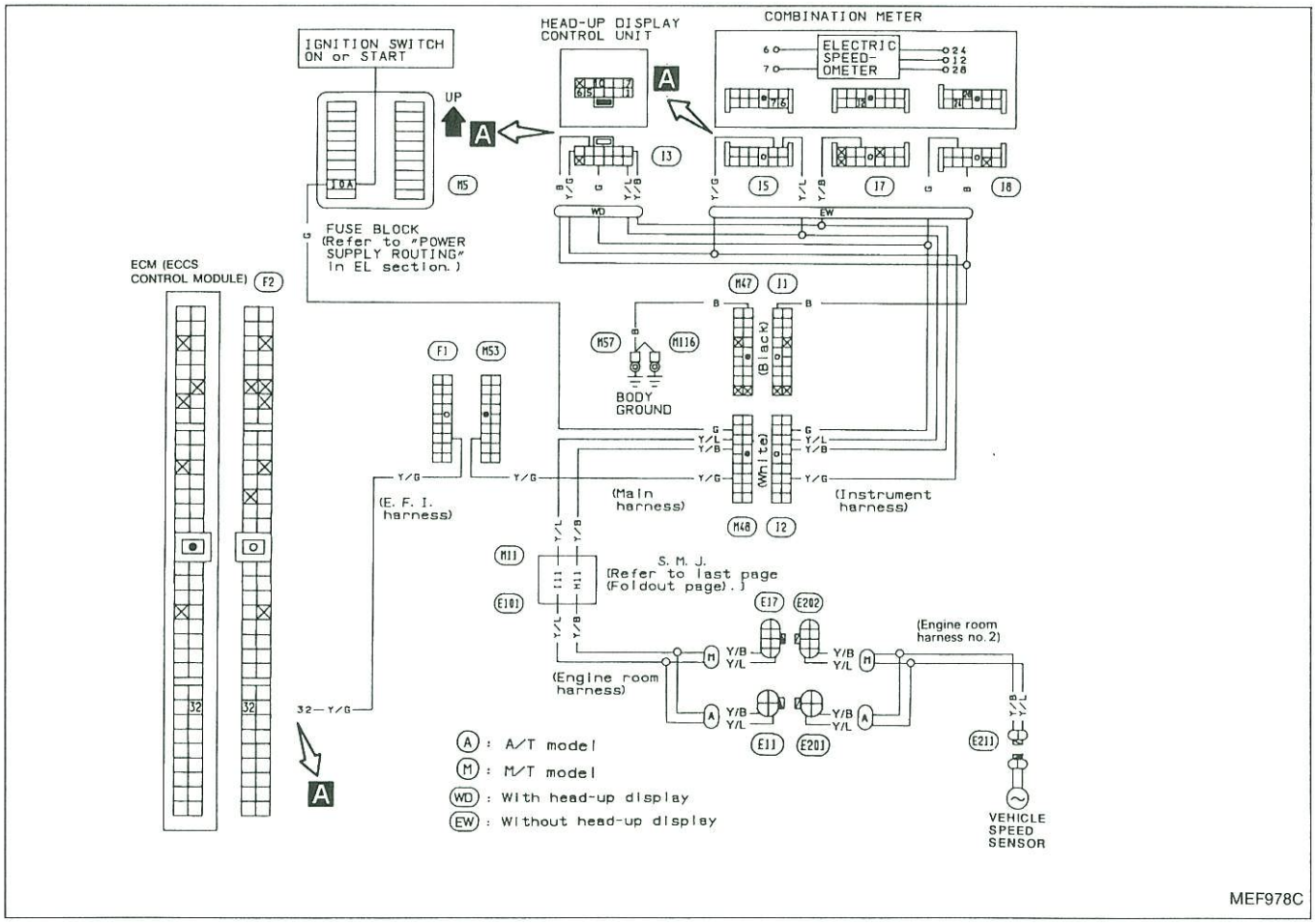


### Harness layout

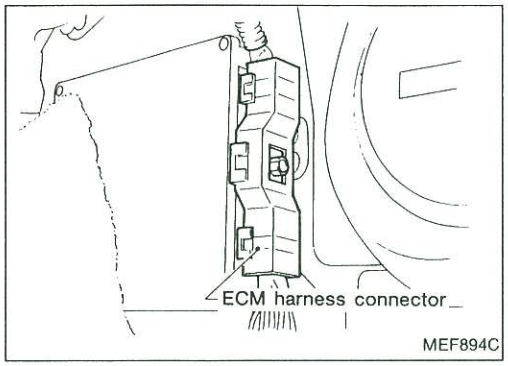


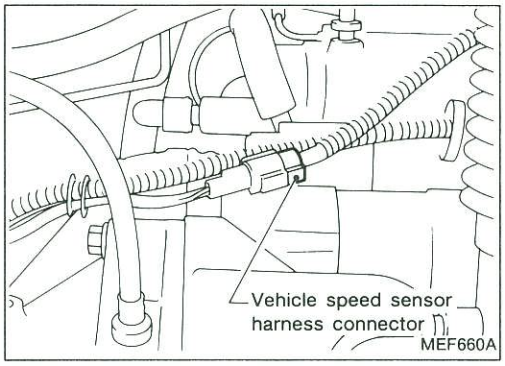

## Diagnostic Procedure 26 (Cont'd)

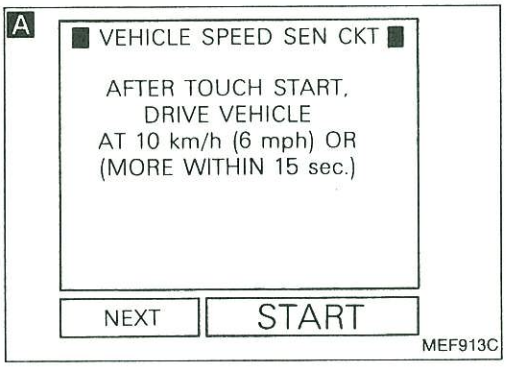


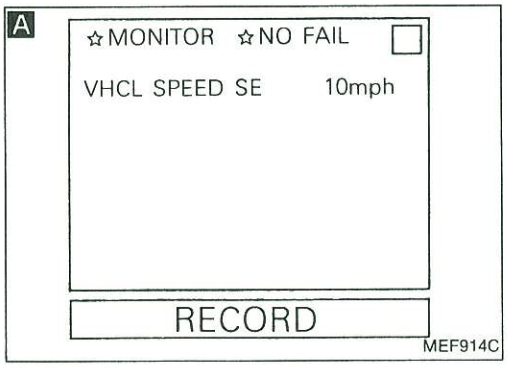


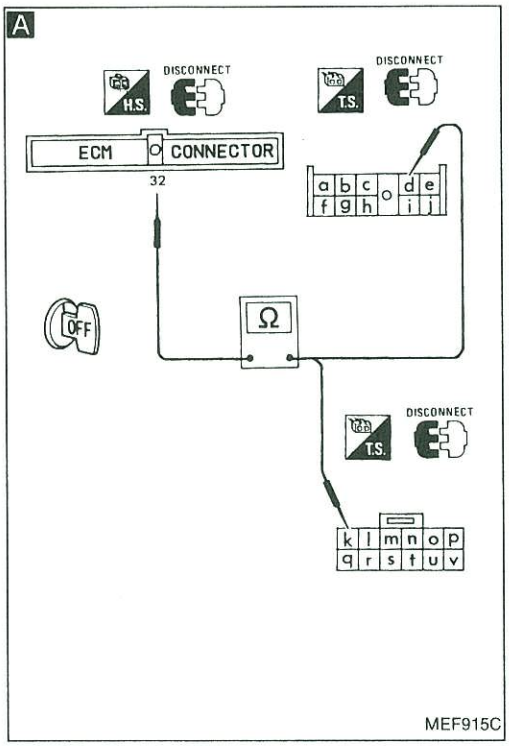


INSPECTION START

CHECK SPEEDOMETER FUNCTION.
Make sure that speedometer functions properly.

N.G. → Check vehicle speed sensor and circuit. (Refer to EL section.)

O.K.

A

CHECK INPUT SIGNAL CIRCUIT.

Perform "VEHICLE SPEED SEN CIRCUIT" in "FUNCTION TEST" mode with CONSULT.

OR

1) Read vehicle speed sensor signal in "DATA MONITOR" mode with CONSULT.
**CONSULT value should be the same as the speedometer indication.**

OR

1) Turn ignition switch "OFF".
2) Disconnect ECM harness connector and combination meter harness connector.
3) Check harness continuity between ECM terminal ㉜ and terminal ⓓ (Models without head-up display), ⓚ (Models with head-up display).
**Continuity should exist.**

N.G. → Check the following.
- Harness connectors (F1), (M53)
- Harness connectors (M48), (I2)
- Harness continuity between ECM and combination meter

If N.G., repair harness or connectors.

O.K.

Check ECM pin terminals for damage or the connection of ECM harness connector.

**Perform FINAL CHECK by the following procedure after repair is completed.**

FINAL CHECK

Start engine.

Perform the diagnostic test mode II (Self-diagnostic results).

N.G. → Recheck ECM pin terminals for damage or the connection of ECM harness connector.

O.K.

INSPECTION END

## Diagnostic Procedure 27

### IGNITION SIGNAL (Diagnostic trouble code No. 21)

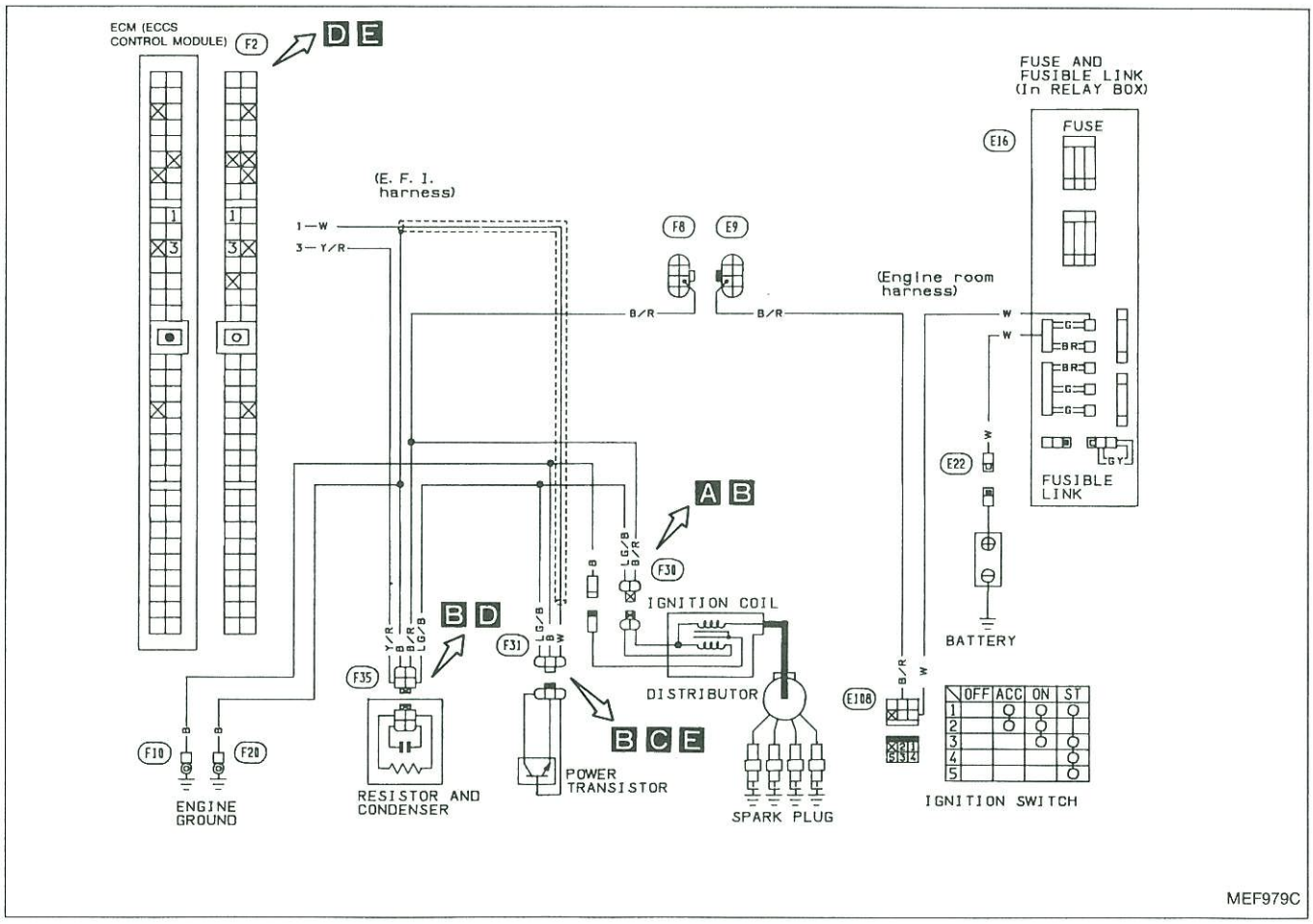


### Harness layout

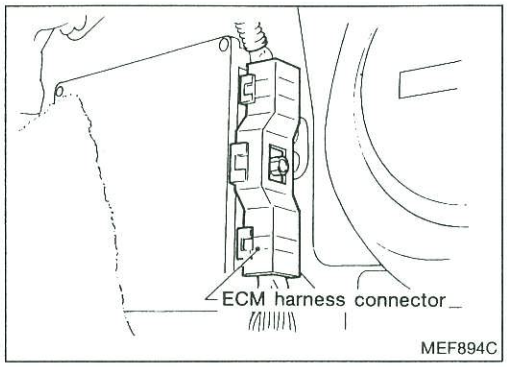


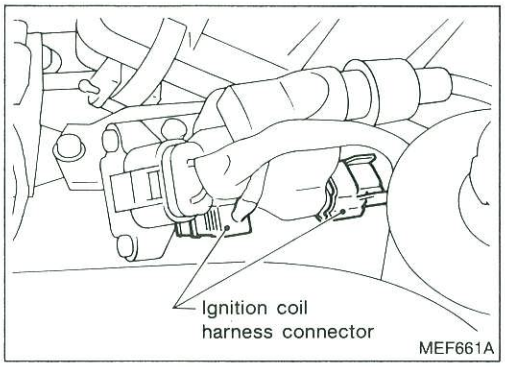


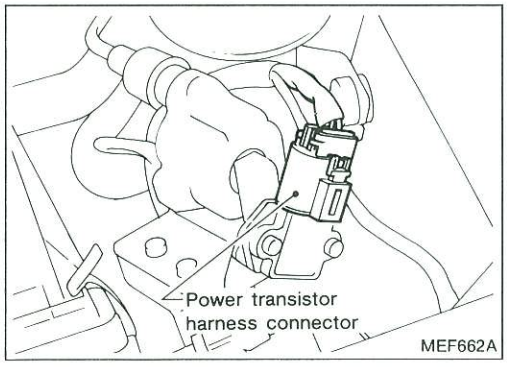


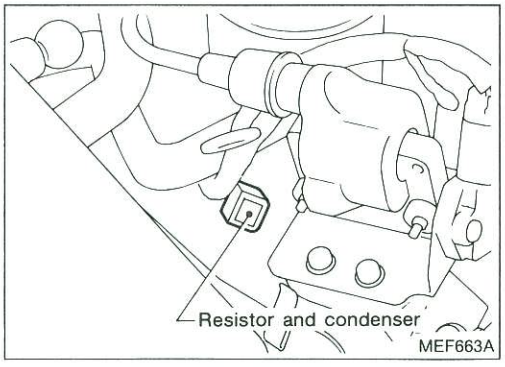

## Diagnostic Procedure 27 (Cont'd)

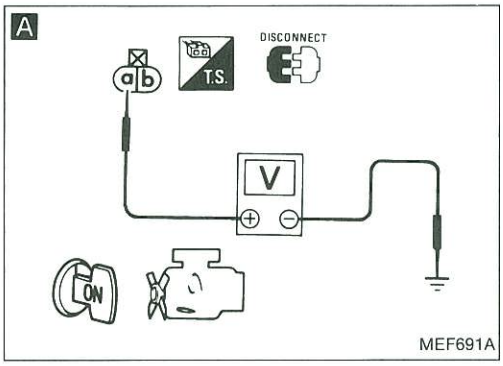


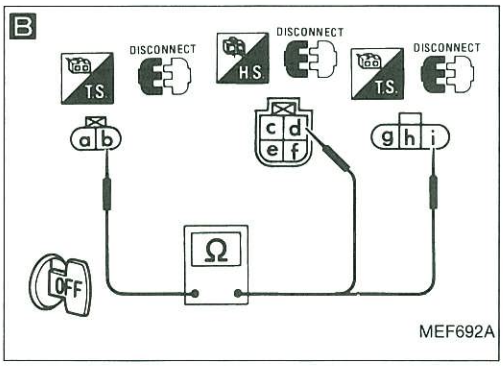


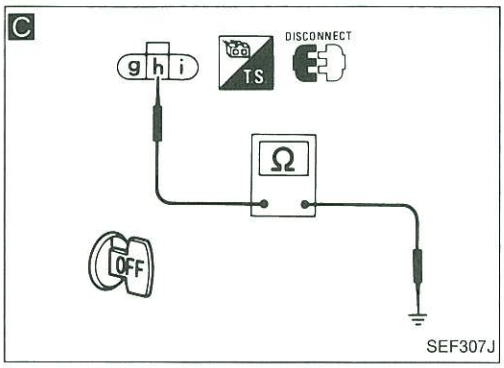


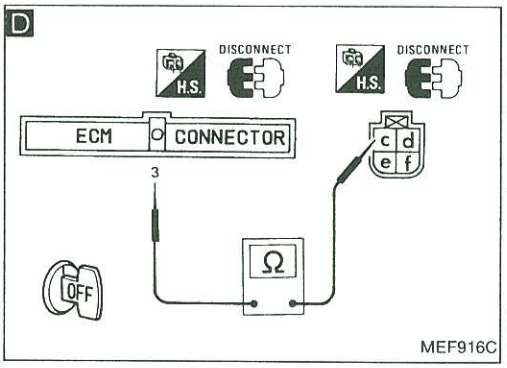


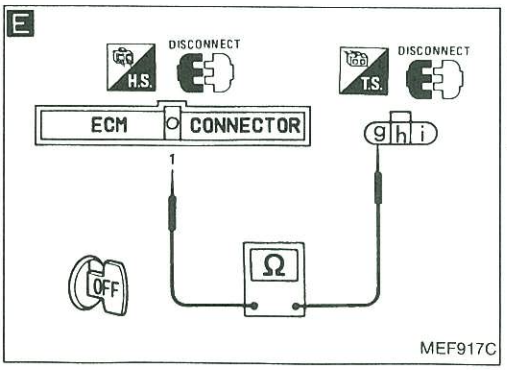


INSPECTION START

**A**

CHECK POWER SUPPLY.
1) Disconnect ignition coil harness connector.
2) Turn ignition switch "ON".
3) Check voltage between terminal ⓐ and ground.
**Voltage: Battery voltage**

N.G. → Check the following.
- Harness connectors (F8), (E9)
- Harness continuity between ignition coil and ignition switch

If N.G., repair harness or connectors.

O.K. ↓

CHECK GROUND CIRCUIT.
1) Turn ignition switch "OFF".
2) Disconnect resistor and condenser harness connector.
3) Disconnect power transistor harness connector.

**B** 4) Check harness continuity between terminal ⓑ and terminals ⓓ, ⓘ.
**Continuity should exist.**

**C** 5) Check harness continuity between terminal ⓗ and engine ground.
**Continuity should exist.**

N.G. → Repair harness or connectors.

O.K. ↓

**D**

CHECK INPUT SIGNAL CIRCUIT.
1) Disconnect ECM harness connector.
2) Check harness continuity between terminal ⓒ and ECM terminal ③.
**Continuity should exist.**

N.G. → Repair harness or connectors.

O.K. ↓

**E**

CHECK OUTPUT SIGNAL CIRCUIT.
1) Check harness continuity between terminal ⓖ and ECM terminal ①.
**Continuity should exist.**

N.G. → Repair harness or connectors.

O.K. ↓

CHECK COMPONENTS
(Ignition coil, resistor and power transistor).
Refer to "Electrical Components Inspection".
(See pages EF & EC-161, 168.)

N.G. → Replace malfunctioning component(s).

O.K. ↓

Check ECM pin terminals for damage or the connection of ECM harness connector.

## Diagnostic Procedure 27 (Cont'd)

**Perform FINAL CHECK by the following procedure after repair is completed.**

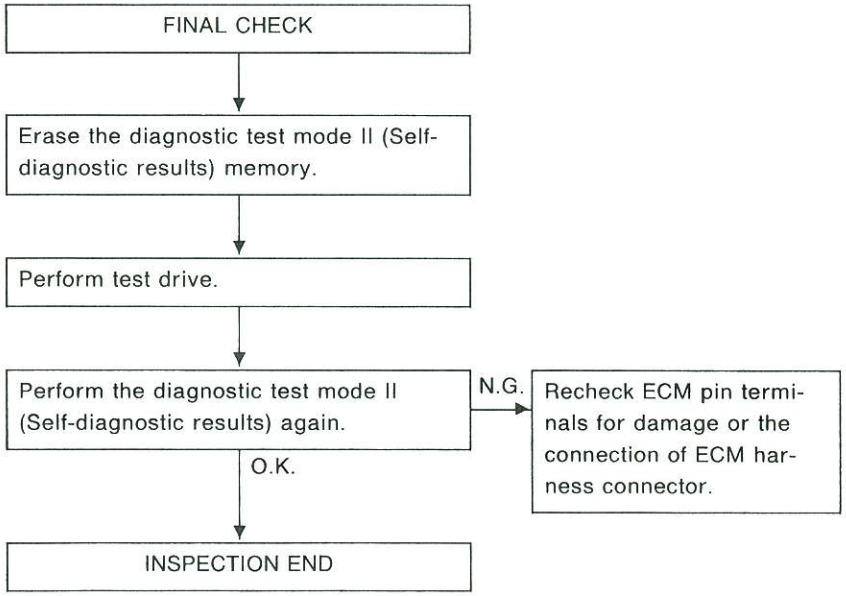


## Diagnostic Procedure 28

**ECM (ECCS CONTROL MODULE) (Diagnostic trouble code No. 31) CHECK (MALFUNCTION INDICATOR LAMP ITEM)**

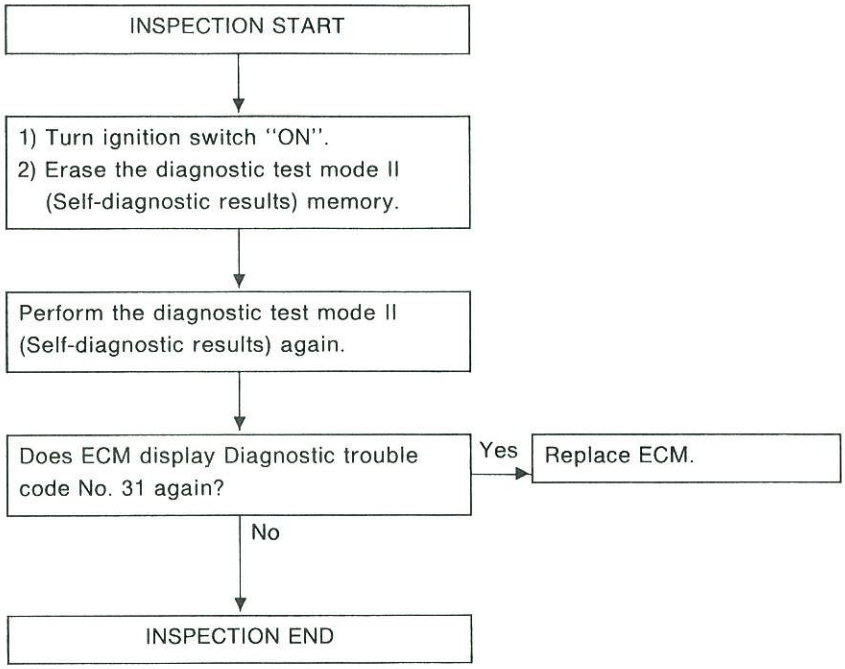

## Diagnostic Procedure 29

**EGR FUNCTION (Diagnostic trouble code No. 32) (CHECK) (MALFUNCTION INDICATOR LAMP ITEM): CALIFORNIA MODEL**
**EGR CONTROL (Not self-diagnostic item): NON-CALIFORNIA MODEL**

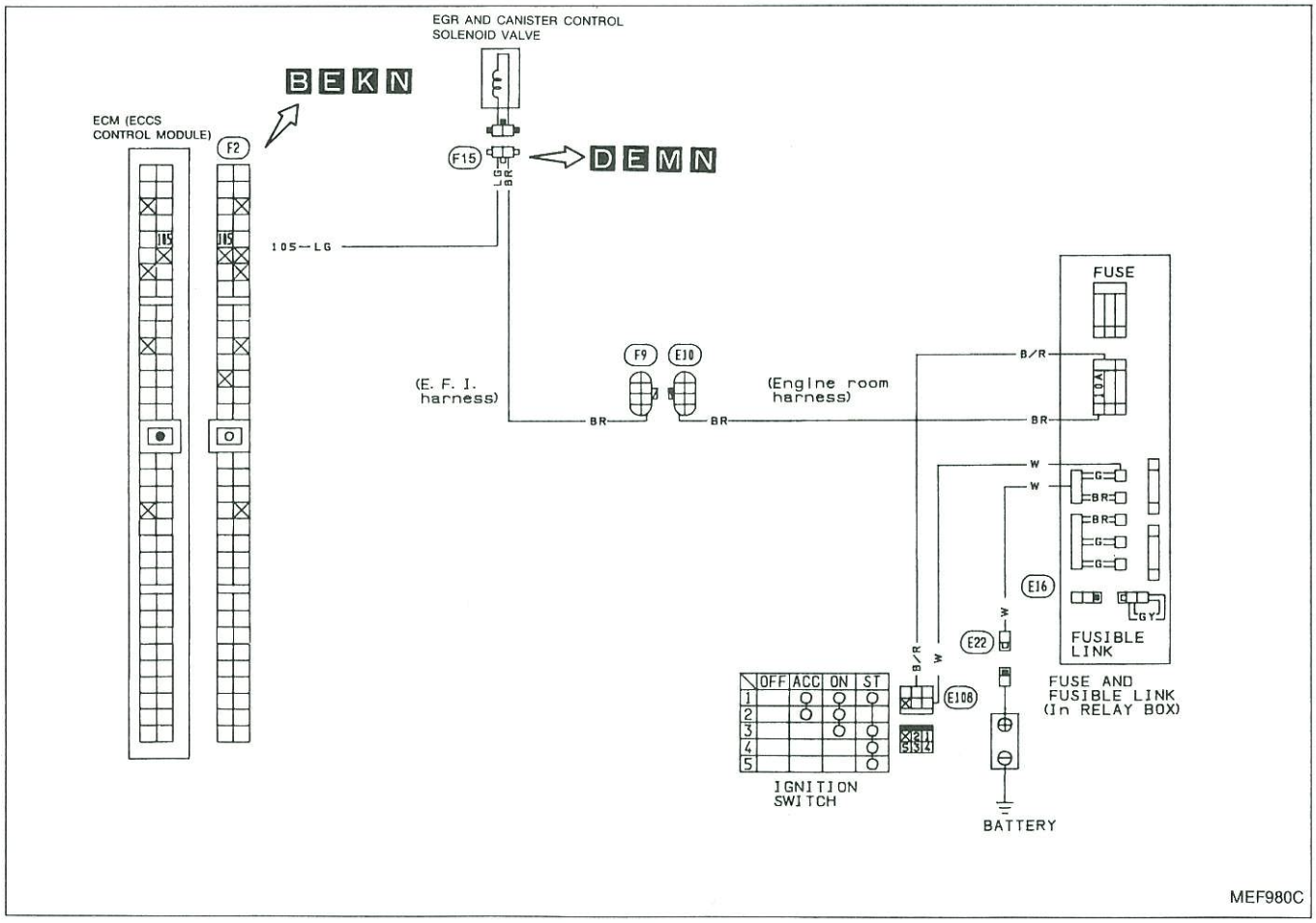


### Harness layout

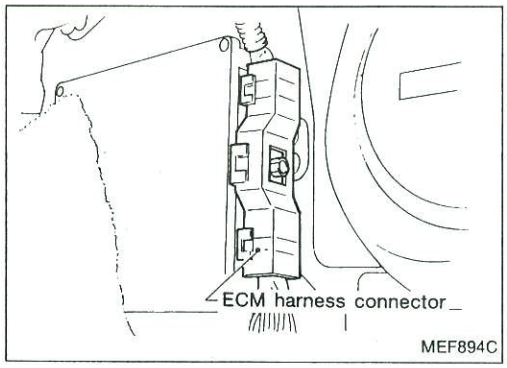


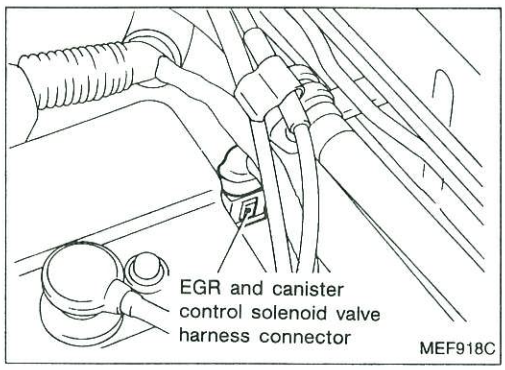

## Diagnostic Procedure 29 (Cont'd)

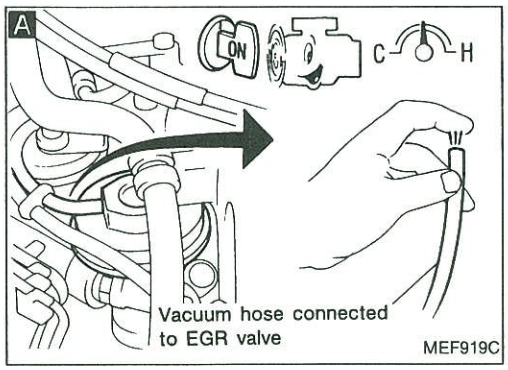


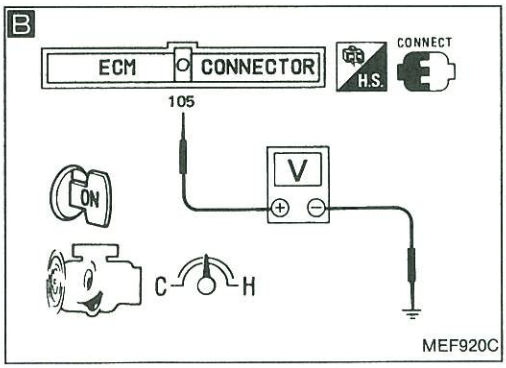


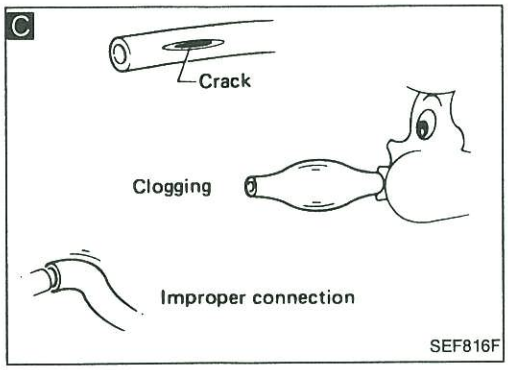


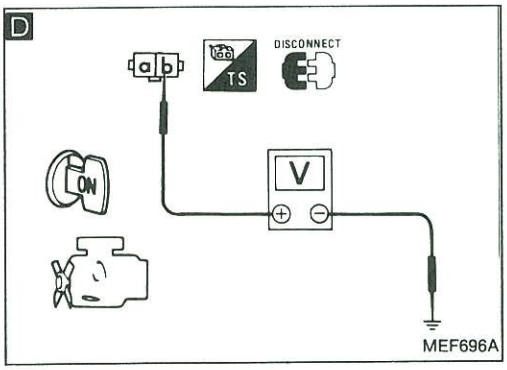


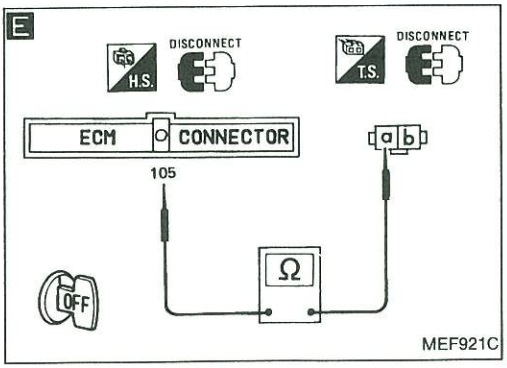


**California model**

INSPECTION START

A

CHECK VACUUM SOURCE TO EGR VALVE.
1) Start engine and warm it up sufficiently.
2) Perform the diagnostic test mode II (Self-diagnostic results).
   Make sure that none of the diagnostic trouble codes No. 12, No. 13, No. 35 or No. 43 are displayed.
3) Keep engine speed at about 2,000 rpm.
4) Disconnect vacuum hose to EGR valve.
5) Make sure that vacuum exists under the following conditions.
   **At idle:**
   **Vacuum should not exist.**
   **Engine speed is about 2,000 rpm.:**
   **Vacuum should exist.**

O.K. → CHECK COMPONENTS (EGR valve, EGRC-BPT valve and EGR temperature sensor).
Refer to "Electrical Components Inspection".
(See page EF & EC-162.)

N.G. → Replace malfunctioning component(s).

N.G.

B

CHECK CONTROL FUNCTION.
1) Check voltage between ECM terminal (105) and ground under the following conditions.
   **Voltage:**
   **At idle**
   **Approximately 0V**
   **Engine speed is about 2,000 rpm.**
   **Battery voltage**

O.K. → C

C

CHECK VACUUM HOSE.
1) Check vacuum hose for clogging, cracks and proper connection.

N.G.

D

CHECK POWER SUPPLY.
1) Stop engine.
2) Disconnect EGR & canister control solenoid valve harness connector.
3) Turn ignition switch "ON".
4) Check voltage between terminal (b) and ground.
   **Voltage: Battery voltage**

N.G. → Check the following.
- Harness connectors (F9), (E10)
- 10A fuse
- Harness continuity between EGR & canister control solenoid valve and fuse

If N.G., repair harness or connectors.

O.K.

Ⓐ

## Diagnostic Procedure 29 (Cont'd)

F

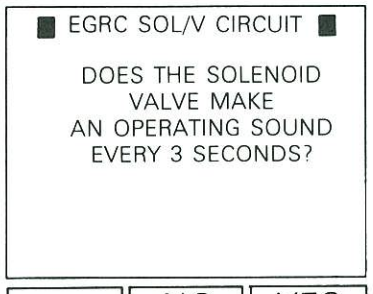


MEF922C

F

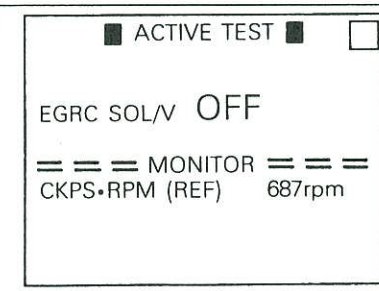


MEF923C

Ⓐ

E

CHECK OUTPUT SIGNAL CIRCUIT.
1) Turn ignition switch "OFF".
2) Disconnect ECM harness connector.
3) Check harness continuity between ECM terminal (105) and terminal ⓐ.
**Continuity should exist.**

N.G. → Repair harness or connectors.

O.K.

F

CHECK COMPONENT
(EGR & canister control solenoid valve).

1) Reconnect EGR & canister control solenoid valve harness connector and ECM harness connector.
2) Turn ignition switch "ON".
3) Perform "EGRC SOL/V CIRCUIT" in "FUNCTION TEST" mode with CONSULT.

N.G. → Replace EGR & canister control solenoid valve.

OR

2) Start engine.
3) Turn EGRC-solenoid valve "ON" and "OFF" in "ACTIVE TEST" mode with CONSULT and check operating sound.

OR

Refer to "Electrical Components Inspection".
(See page EF & EC-162.)

O.K.

Check resistance of EGR temperature sensor.
(See page EF & EC-163.)

Check ECM pin terminals for damage or the connection of ECM harness connector.

## Diagnostic Procedure 29 (Cont'd)

**G ROAD TEST**

**Test condition**

Drive vehicle under the following conditions with suitable shift position.

(1) Engine speed:
2,400±800 rpm

(2) Intake manifold vacuum:
−40.0±13.3 kPa
(−300±100 mmHg, −11.81±3.94 inHg)

**Driving mode**

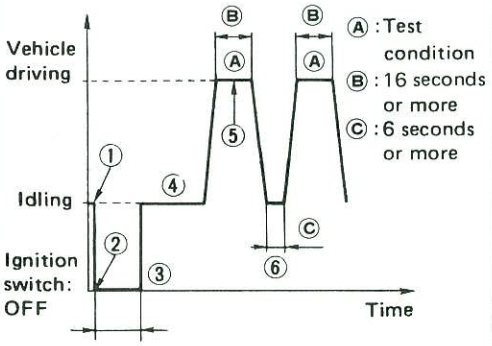


Until red L.E.D. goes off.

① Start engine and warm it up sufficiently.
② Turn off ignition switch and keep it off until red L.E.D. goes off.
③ Start engine and make sure that air conditioner switch and rear defogger are turned "OFF" during test drive.
④ Keep engine running for at least 4 minutes.
⑤ Shift to suitable gear position and drive in "Test condition" for at least 16 seconds.
⑥ Decrease engine revolutions to less than 1,500 rpm for at least 6 seconds.
⑦ Repeat steps ⑤ through ⑥ at lest 1 more time.

SEF007L

**H**

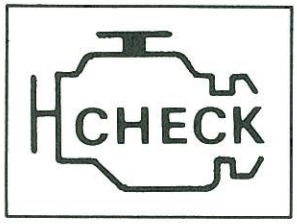


MALFUNCTION INDICATOR LAMP

MEF997C

**Perform FINAL CHECK by the following procedure after repair is completed.**

FINAL CHECK

↓

G

Erase the diagnostic test mode II (Self-diagnostic results) memory.

↓

Perform test drive under the following conditions.
1) Warm up engine sufficiently.
2) Use test driving modes indicated in figure G .

↓

H

Make sure that malfunction indicator lamp does not come on during test drive.

Comes on. → Recheck ECM pin terminals for damage or the connection of ECM harness connector.

↓ Does not come on.

INSPECTION END

## Diagnostic Procedure 29 (Cont'd)

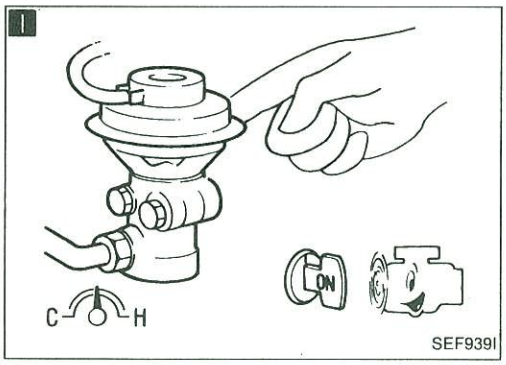


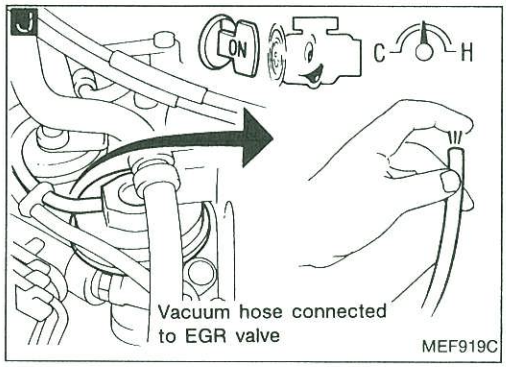


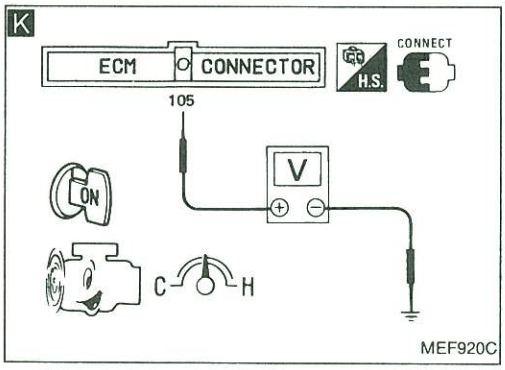


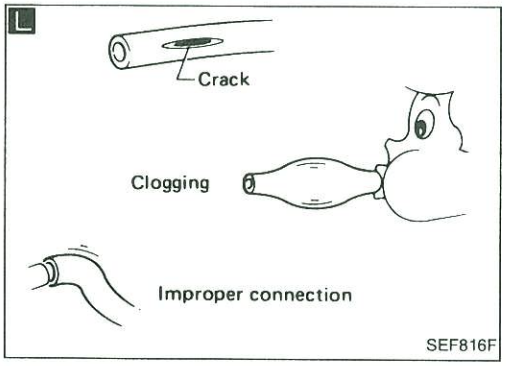


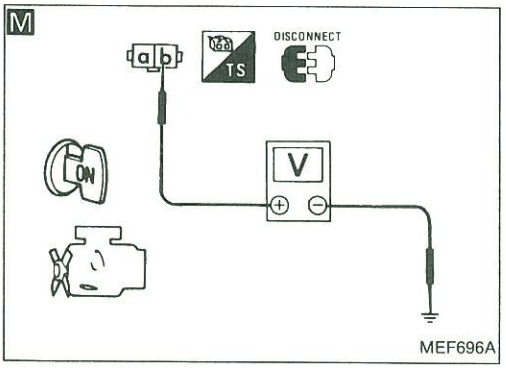


**Non-California model**

INSPECTION START

I

CHECK OVERALL FUNCTION.
1) Start engine and warm it up sufficiently.
2) Make sure that EGR valve spring is lifted up and down when racing engine (2,000 rpm).
(Use your finger.)

Is lifted up and down. → INSPECTION END

Is not lifted up and down.

J

CHECK VACUUM SOURCE TO EGR VALVE.
1) Disconnect vacuum hose to EGR valve.
2) Make sure that vacuum exists under the following conditions.
**At idle:**
**Vacuum should not exist.**
**Engine speed is about 2,000 rpm:**
**Vacuum should exist.**

O.K. → CHECK COMPONENTS (EGR valve and EGRC-BPT valve).
Refer to "Electrical Components Inspection".
(See page EF & EC-162.)

N.G. → Replace malfunctioning component(s).

N.G.

K

CHECK CONTROL FUNCTION.
1) Check voltage between ECM terminal (105) and ground under the following conditions.
**Voltage:**
**At idle**
**Approximately 0V**
**Engine speed is about 2,000 rpm.**
**Battery voltage**

O.K. → L

L

CHECK VACUUM HOSE.
1) Check vacuum hose for clogging, cracks and proper connection.

N.G.

M

CHECK POWER SUPPLY.
1) Stop engine.
2) Disconnect EGR and canister control solenoid valve harness connector.
3) Turn ignition switch "ON".
4) Check voltage between terminal (b) and ground.
**Voltage: Battery voltage**

N.G. → Check the following.
- Harness connectors (F9), (E10)
- 10A fuse
- Harness continuity between EGR and canister control solenoid valve and fuse

If N.G., repair harness or connectors.

O.K.

Ⓐ

## Diagnostic Procedure 29 (Cont'd)

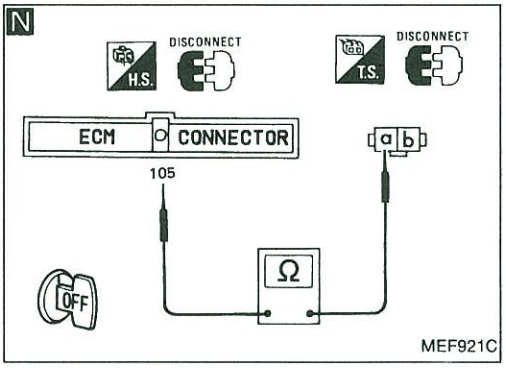


Ⓐ

N

CHECK OUTPUT SIGNAL CIRCUIT.
1) Turn ignition switch "OFF".
2) Disconnect ECM harness connector.
3) Check harness continuity between ECM terminal (105) and terminal (a).
**Continuity should exist.**

N.G. → Repair harness or connectors.

O.K. ↓

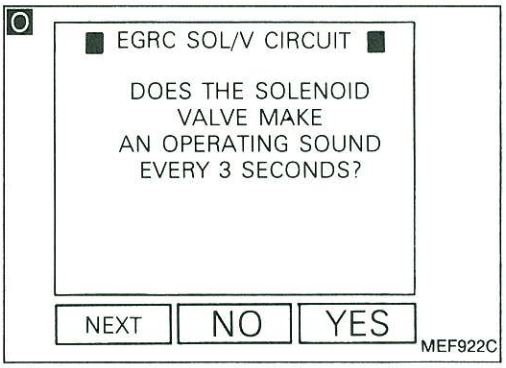


O

CHECK COMPONENT
(E.G.R. & canister control solenoid valve).

1) Reconnect EGR and canister control solenoid valve harness connector and ECM harness connector.
2) Turn ignition switch "ON".
3) Perform "EGRC SOL/V CIRCUIT" in "FUNCTION TEST" mode with CONSULT.

OR

2) Start engine.
3) Turn EGRC-solenoid valve "ON" and "OFF" in "ACTIVE TEST" mode with CONSULT and check operating sound.

OR

Refer to "Electrical Components Inspection".
(See page EF & EC-162.)

N.G. → Replace EGR and canister control solenoid valve.

O.K. ↓

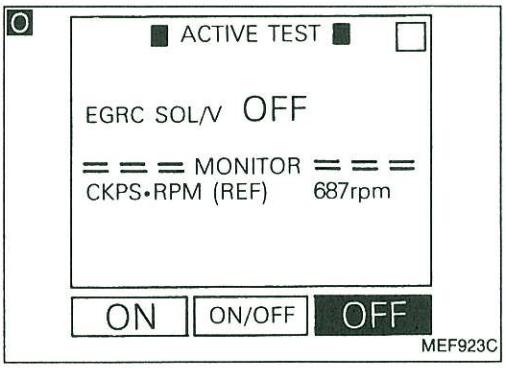


Check ECM pin terminals for damage or the connection of ECM harness connector.

## Diagnostic Procedure 30

### OXYGEN SENSOR (Diagnostic trouble code No. 33) (MALFUNCTION INDICATOR LAMP ITEM): CALIFORNIA MODEL ONLY

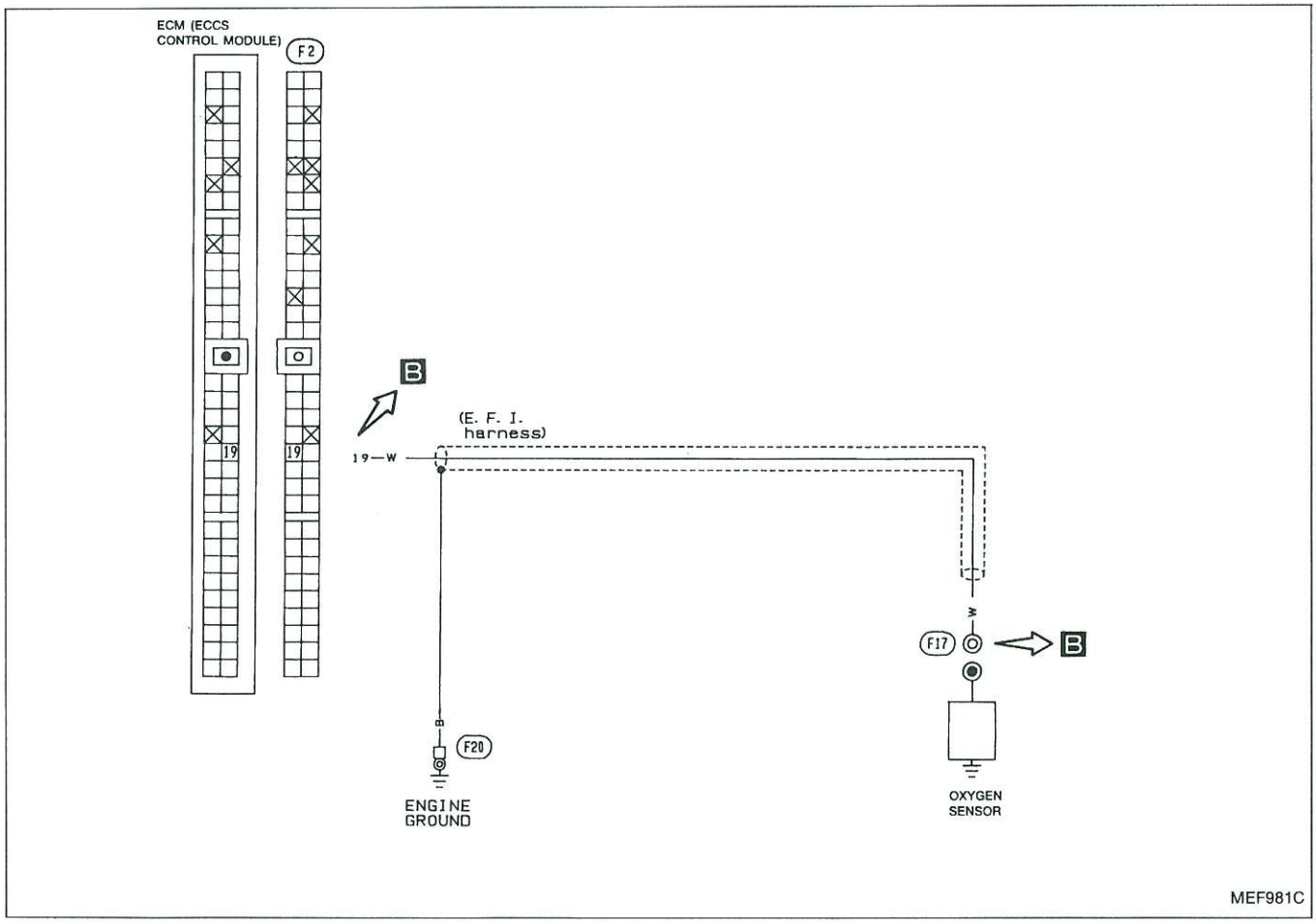


### Harness layout

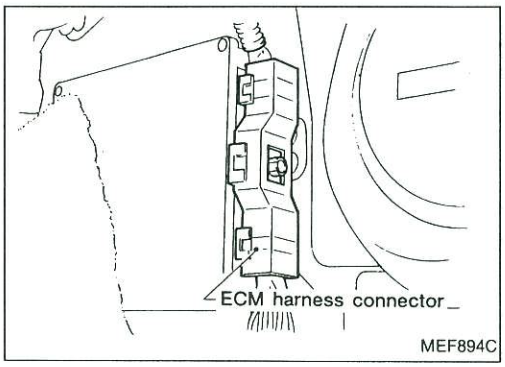


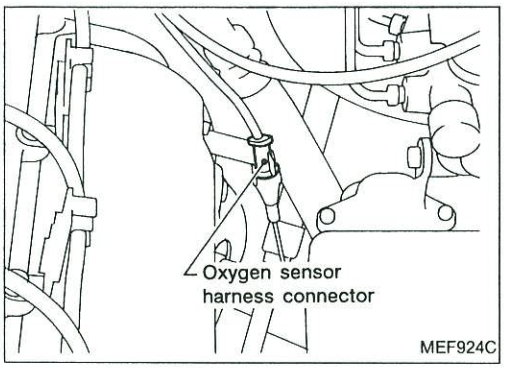

## Diagnostic Procedure 30 (Cont'd)

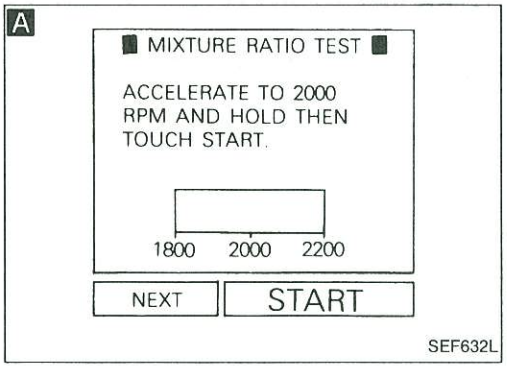


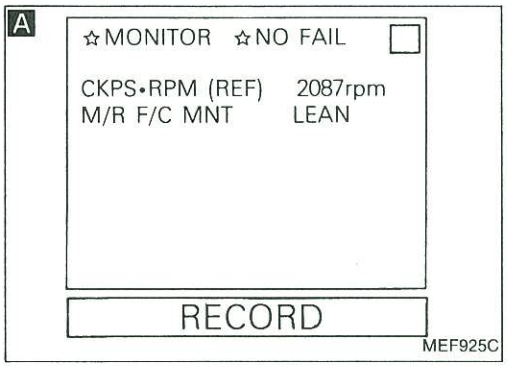


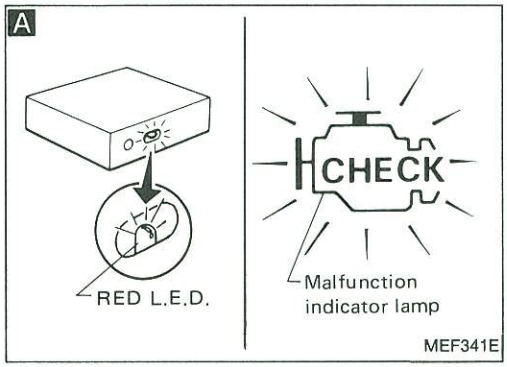


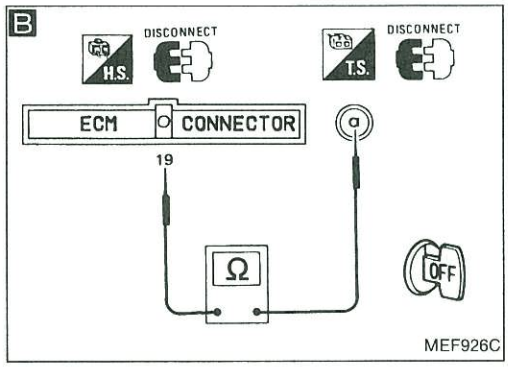


INSPECTION START

A

CHECK OVERALL FUNCTION.

1) Start engine and warm it up sufficiently.
2) Perform "MIXTURE RATIO TEST" in "FUNCTION TEST" mode with CONSULT.

O.K. → INSPECTION END.

OR

1) Start engine and warm it up sufficiently.
2) Make sure that "M/R F/C MNT" in "DATA MONITOR" mode indicates "RICH" and "LEAN" periodically more than 5 times during 10 seconds at 2,000 rpm.

OR

1) Start engine and warm it up sufficiently.
2) Run engine at about 2,000 rpm for about 2 minutes under no-load.
3) Set Diagnostic Test Mode II (oxygen sensor monitor).
4) Keep engine speed at 2,000 rpm and make sure that RED L.E.D. on ECM and malfunction indicator lamp on instrument panel go on and off more than 5 times during 10 seconds.

N.G.

B

CHECK INPUT SIGNAL CIRCUIT.

1) Turn ignition switch "OFF".
2) Disconnect oxygen sensor harness connector and ECM harness connector.
3) Check harness continuity between terminal ⓐ and ECM terminal ⑲.
**Continuity should exist.**

N.G. → Repair harness or connectors.

O.K.

Replace oxygen sensor.

## Diagnostic Procedure 30 (Cont'd)

**Perform FINAL CHECK by the following procedure after repair is completed.**

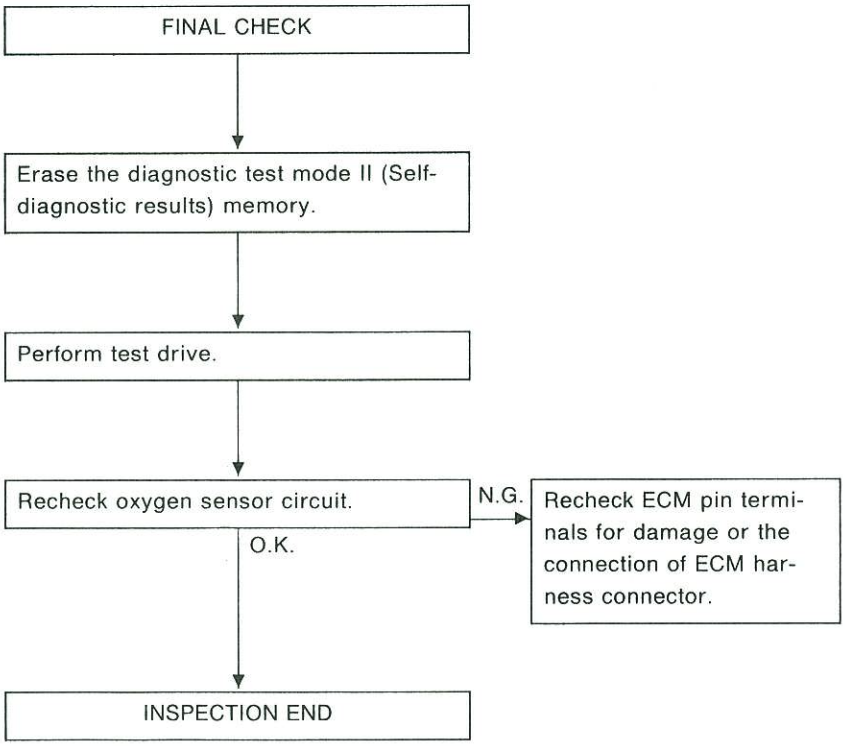

## Diagnostic Procedure 31

### KNOCK SENSOR (Diagnostic trouble code No. 34)

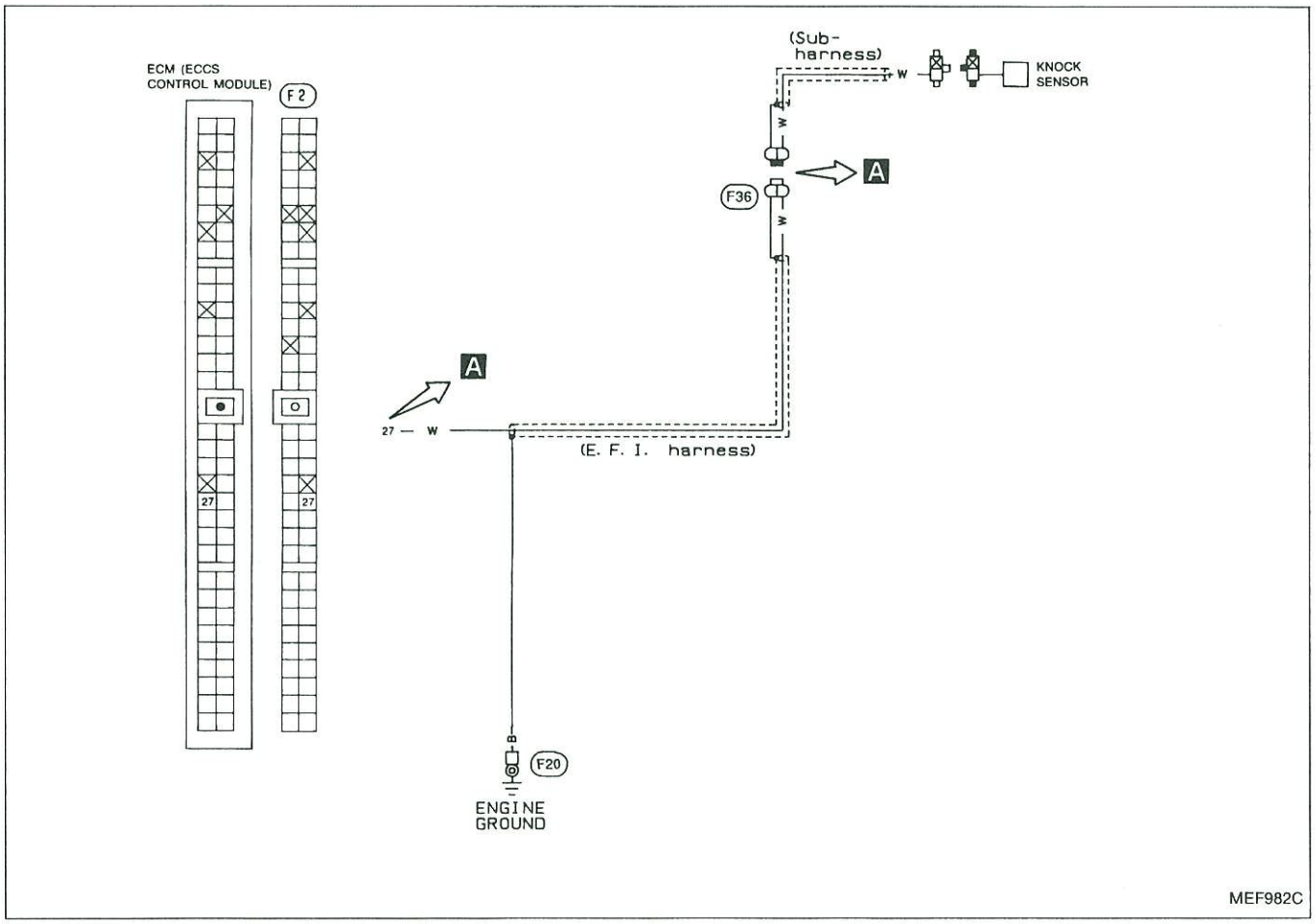


### Harness layout

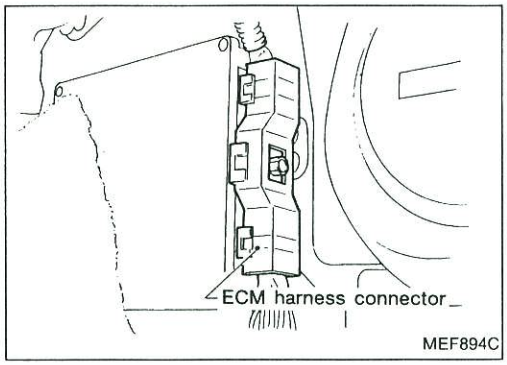


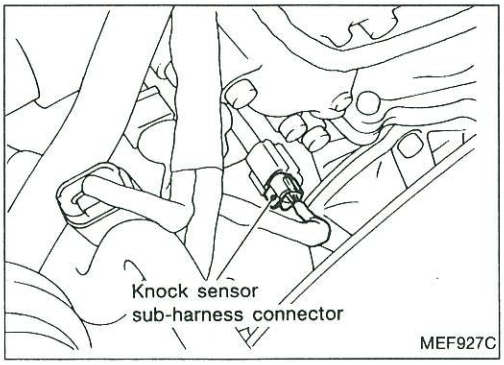

## Diagnostic Procedure 31 (Cont'd)

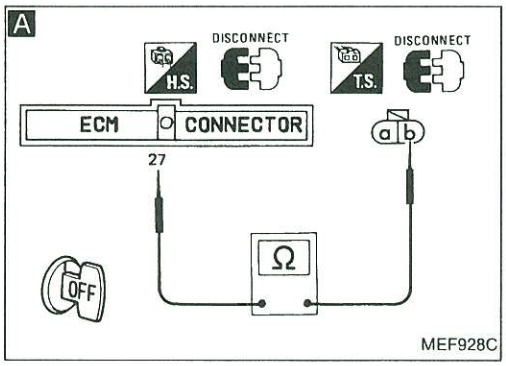


INSPECTION START

A

CHECK INPUT SIGNAL CIRCUIT.
1) Disconnect ECM harness connector and knock sensor sub-harness connector.
2) Check harness continuity between terminal ⓑ and ECM terminal ㉗.
**Continuity should exist.**

N.G. → Repair harness or connectors.

O.K. ↓

CHECK COMPONENT
(Knock sensor).
Refer to "Electrical Components Inspection".
(See page EF & EC-165.)

N.G. → Replace knock sensor.

O.K. ↓

Check ECM pin terminals for damage or the connection of ECM harness connector.

**Perform FINAL CHECK by the following procedure after repair is completed.**

FINAL CHECK ↓

Erase the diagnostic test mode II (Self-diagnostic results) memory. ↓

Perform test drive. ↓

Perform the diagnostic test mode II (Self-diagnostic results) again.

N.G. → Recheck ECM pin terminals for damage or the connection of ECM harness connector.

O.K. ↓

INSPECTION END

## Diagnostic Procedure 32

### EGR TEMPERATURE SENSOR (Diagnostic trouble code No. 35) CHECK (MALFUNCTION INDICATOR LAMP ITEM): CALIFORNIA MODEL ONLY

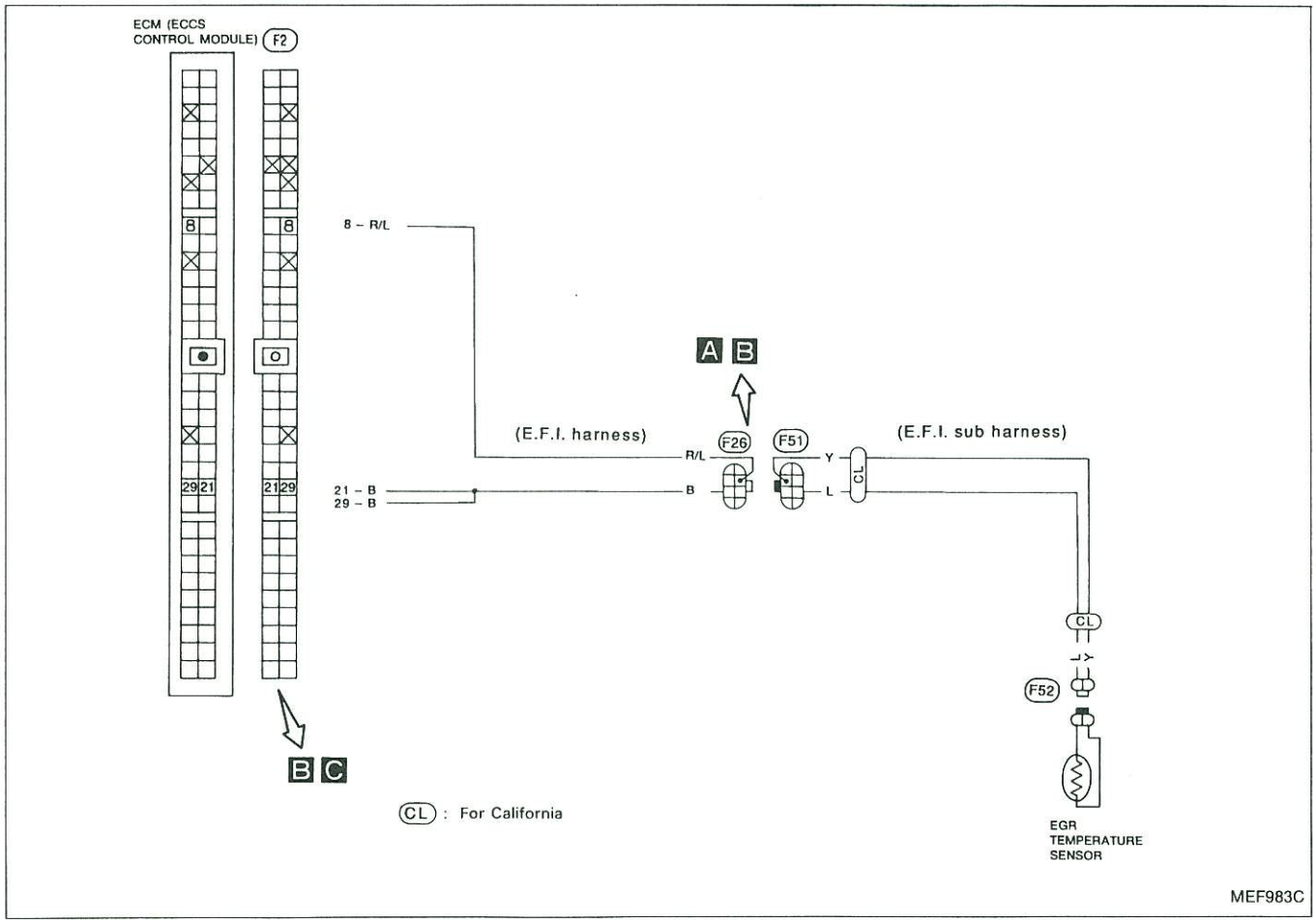


### Harness layout

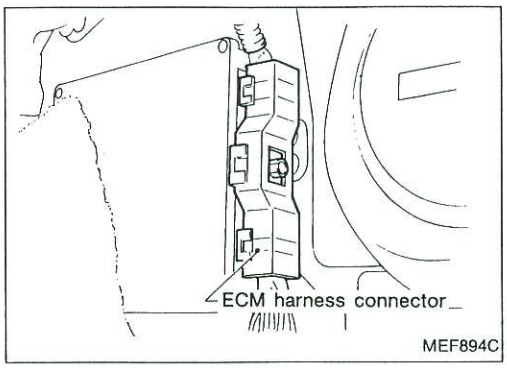


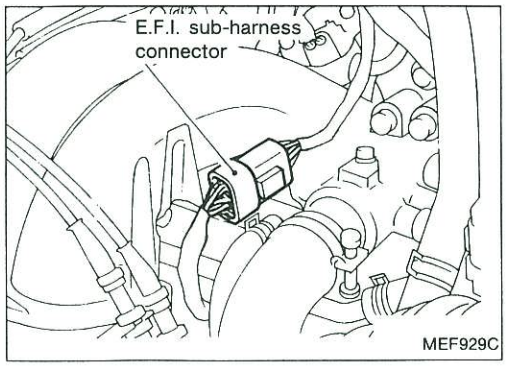

## Diagnostic Procedure 32 (Cont'd)

A

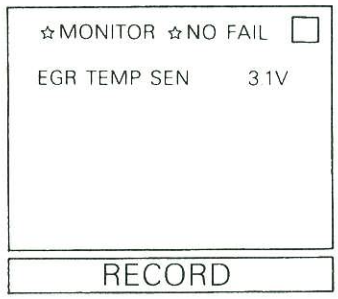


SEF589I

A

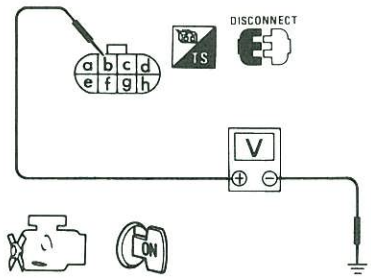


MEF699A

B

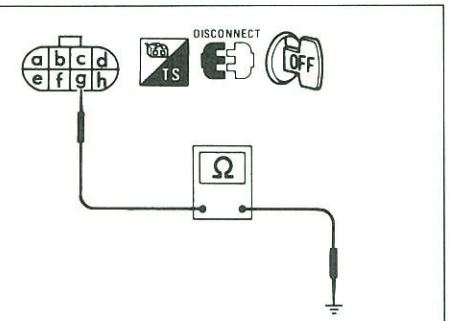


MEF700A

INSPECTION START

CHECK POWER SUPPLY.
1) Start engine and warm it up sufficiently.
2) Read EGR temperature sensor signal in "DATA MONITOR" mode with CONSULT.
**Voltage:**
**Less than 4.5V**
**(at idle)**

N.G. → Repair harness or connectors.

OR

2) Stop engine.
3) Disconnect EGR temperature sensor sub-harness connector (F51).
4) Turn ignition switch "ON".
5) Check voltage between terminal (b) and ground.
**Voltage:**
**Less than 4.5V**
**(at idle)**

O.K. ↓

CHECK GROUND CIRCUIT.
1) Turn ignition switch "OFF".
2) Check harness continuity between terminal (g) and engine ground.
**Continuity should exist.**

N.G. → Repair harness or connectors.

O.K. ↓

CHECK COMPONENT.
(EGR temperature sensor).
Refer to "Electrical Components Inspection".
(See page EF & EC-163.)

N.G. → Replace EGR temperature sensor.

O.K. ↓

Check ECM pin terminals for damage or the connection of ECM harness connector.

## Diagnostic Procedure 32 (Cont'd)

**Perform FINAL CHECK by the following procedure after repair is completed.**

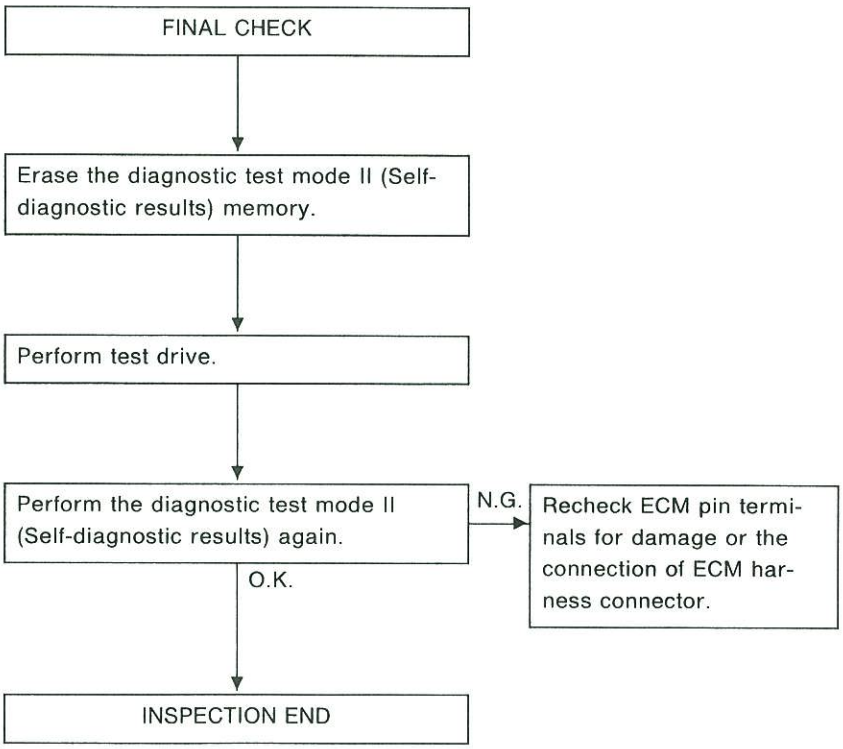

## Diagnostic Procedure 33

### THROTTLE POSITION SENSOR (Diagnostic trouble code No. 43) CHECK (MALFUNCTION INDICATOR LAMP ITEM)

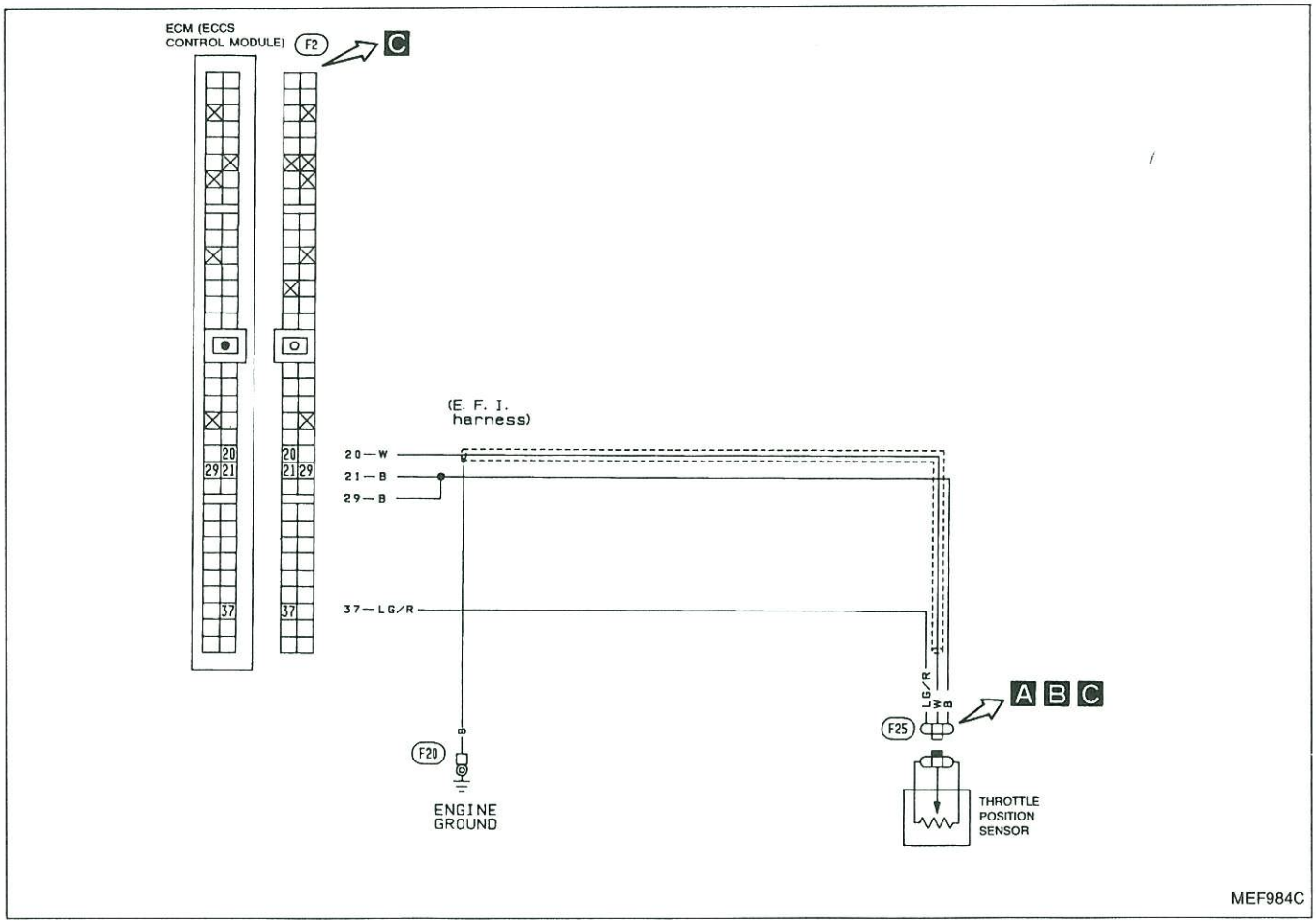


### Harness layout

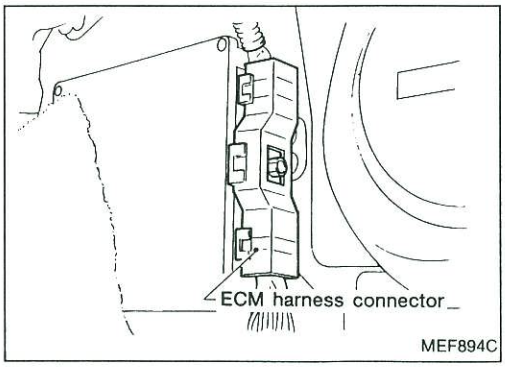


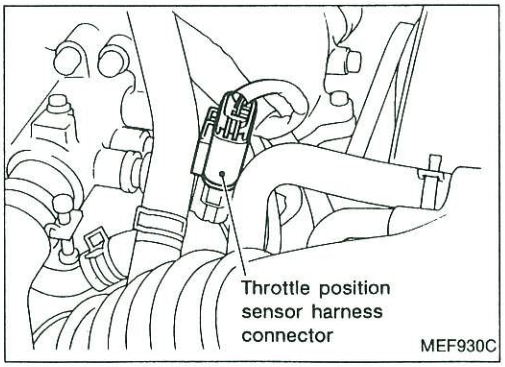

## Diagnostic Procedure 33 (Cont'd)

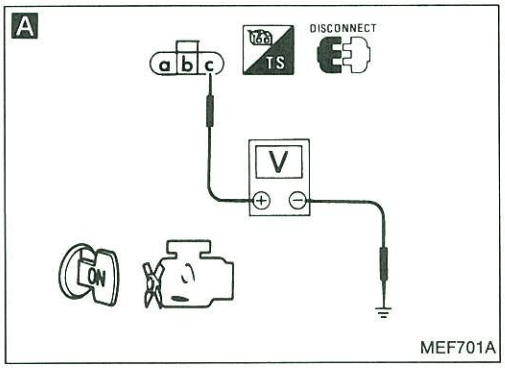


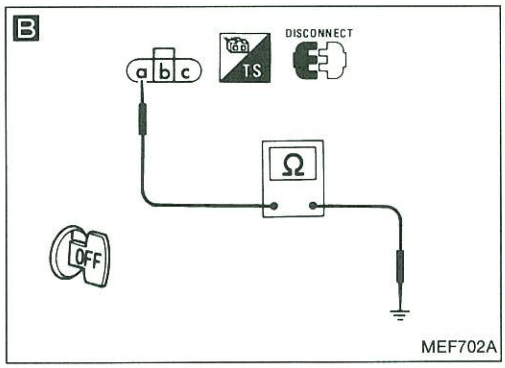


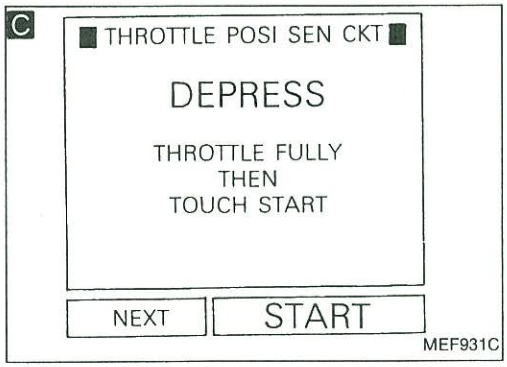


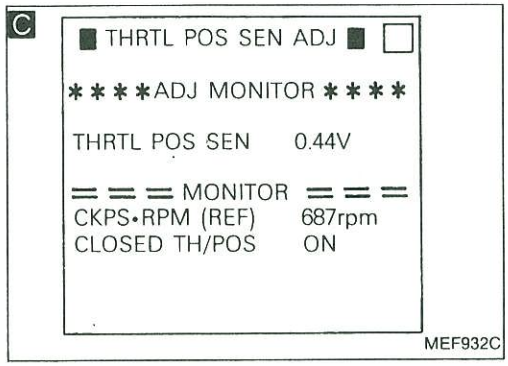


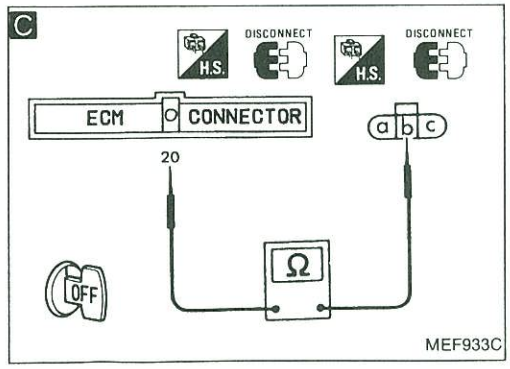


INSPECTION START

**A**

CHECK POWER SUPPLY.
1) Disconnect throttle position sensor harness connector.
2) Turn ignition switch "ON".
3) Check voltage between terminal ⓒ and ground.
**Voltage: Approximately 5V**

N.G. → Repair harness or connectors.

O.K.

**B**

CHECK GROUND CIRCUIT.
1) Turn ignition switch "OFF".
2) Check harness continuity between terminal ⓐ and engine ground.
**Continuity should exist.**

N.G. → Repair harness or connectors.

O.K.

**C**

CHECK INPUT SIGNAL CIRCUIT.
1) Reconnect throttle position sensor harness connector.
2) Turn ignition switch "ON".
3) Perform "THROTTLE POSI SEN CKT" in "FUNCTION TEST" mode with CONSULT.

N.G. → Repair harness or connectors.

OR

3) Read "THRTL POS SEN ADJ" in "WORK SUPPORT" mode with CONSULT.
**Throttle valve fully closed:**
**Approx. 0.5V**
**Throttle valve fully open:**
**Approx. 4.0V**

OR

1) Disconnect ECM harness connector.
2) Check harness continuity between ECM terminal ⑳ and terminal ⓑ.
**Continuity should exist.**

O.K.

CHECK COMPONENT
(Throttle position sensor).
Refer to "Electrical Components Inspection".
(See page EF & EC-163.)

N.G. → Replace throttle position sensor.

O.K.

Check ECM pin terminals for damage or the connection of ECM harness connector.

## Diagnostic Procedure 33 (Cont'd)

**Perform FINAL CHECK by the following procedure after repair is completed.**

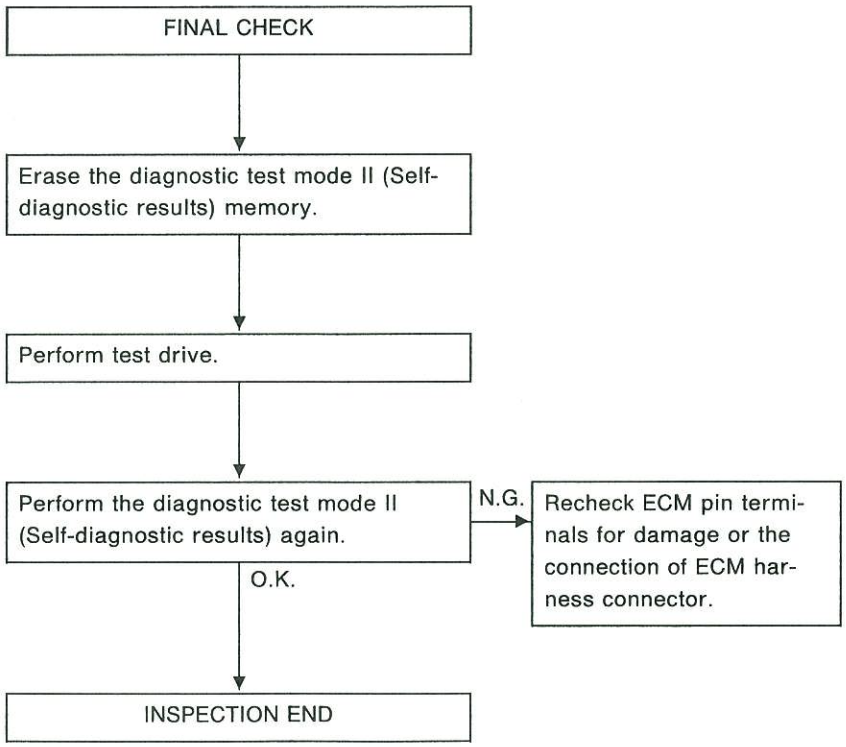

## Diagnostic Procedure 34

### INJECTOR LEAK (Diagnostic trouble code No. 45) CHECK (MALFUNCTION INDICATOR LAMP ITEM); CALIFORNIA MODEL ONLY

A

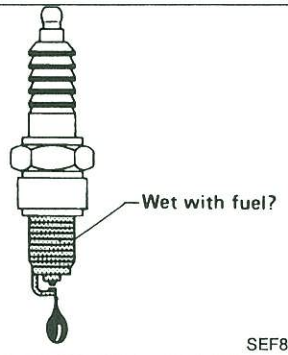


SEF832F

B

| ACTIVE TEST | |
|---|---|
| SELF-LEARN CONTROL | 100% R100% |
| MONITOR | |
| CKPS•RPM (POS) | 750rpm |
| COOLAN TEMP/S | 77°C |
| O2 SEN | 0.16V |
| O2 SEN-R | 0.17V |
| A/F ALPHA | 92% |
| A/F ALPHA-R | 96% |

CLEAR

MEF934C

C

Engine racing mode

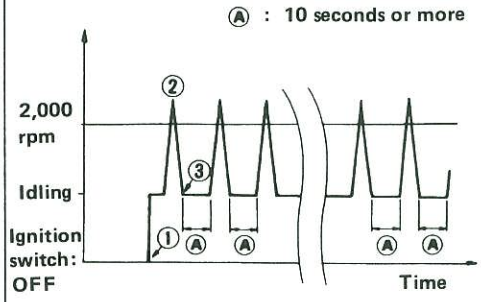


① Start engine and warm it up sufficiently.
② Race engine revolution higher than 2,000 rpm under no-load.
③ Keep engine at idle speed for at last 10 seconds..
④ Repeart steps ② throught ③ at lest 10 times.

SEF329G

D

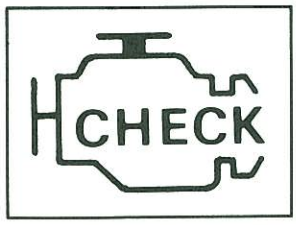


MALFUNCTION INDICATOR LAMP

MEF342E

INSPECTION START

Start engine and warm it up sufficiently.

Make sure engine runs smoothly at idle after warming.

Runs smoothly.

Race engine two or three times under no-load, then run engine at idle speed.

Does not run smoothly.

Set the diagnosis mode selector of ECM to Diagnostic Test Mode I.

Check if the red L.E.D. on ECM stays off for 10 seconds with engine at idle speed.

Stays off.

Does not stay off.

Check mixture ratio feedback system. (See page EF & EC-28.)

Set diagnostic test mode II and check that red L.E.D. on ECM blinks almost simultaneously at 2,000 rpm under no-load.

Does not blink.

Blinks.

Check idle CO%. (See page EF & EC-28.)

INSPECTION END

A

Remove all spark plugs from cylinder head. Is any plug wet with fuel?

Yes

Replace injector which supply cylinders having wet spark plugs.

No

Remove injector assembly. (See page EF & EC-170.) Keep fuel hose and all injectors connected to injector gallery.

Turn ignition switch "ON". Make sure fuel does not drip from injector.

Drips

Replace the injectors from which fuel is dripping.

Does not drip

Go to FINAL CHECK.

## Diagnostic Procedure 34 (Cont'd)

**Perform FINAL CHECK by the following procedure after repair is completed.**

FINAL CHECK

↓

Erase the diagnostic test mode II (Self-diagnostic results) memory. Make sure Diagnostic trouble code No. 55 is displayed in Diagnostic Test Mode II.

↓

B

Clear the self-learning data using the following procedure:

1) Start engine and warm it up sufficiently.

2) Select "SELF-LEARNING CONT" in "ACTIVE TEST" mode.
3) Clear the self-leaning control coefficient by touching "CLEAR"

OR

2) Disconnect mass air flow sensor connector, and restart and run engine for at least 30 seconds at 2,000 rpm.
3) Stop engine and reconnect mass air flow sensor connector.
4) Make sure Diagnostic trouble code No. 12 is displayed in Diagnostic Test Mode II.
5) Erase the diagnostic test mode II (Self-diagnostic results) memory. Make sure Diagnostic trouble code No. 55 is displayed in Diagnostic Test Mode II (Self-diagnostic results).

↓

C

Perform engine racing test as indicated in figure C

↓

D

Make sure that malfunction indicator lamp does not come on during engine test.

Comes on. → Recheck ECM pin terminals for damage or the connection of ECM harness connector.

↓ Does not come on.

INSPECTION END

## Diagnostic Procedure 35

### A/T CONTROL (Diagnostic trouble code No. 54)

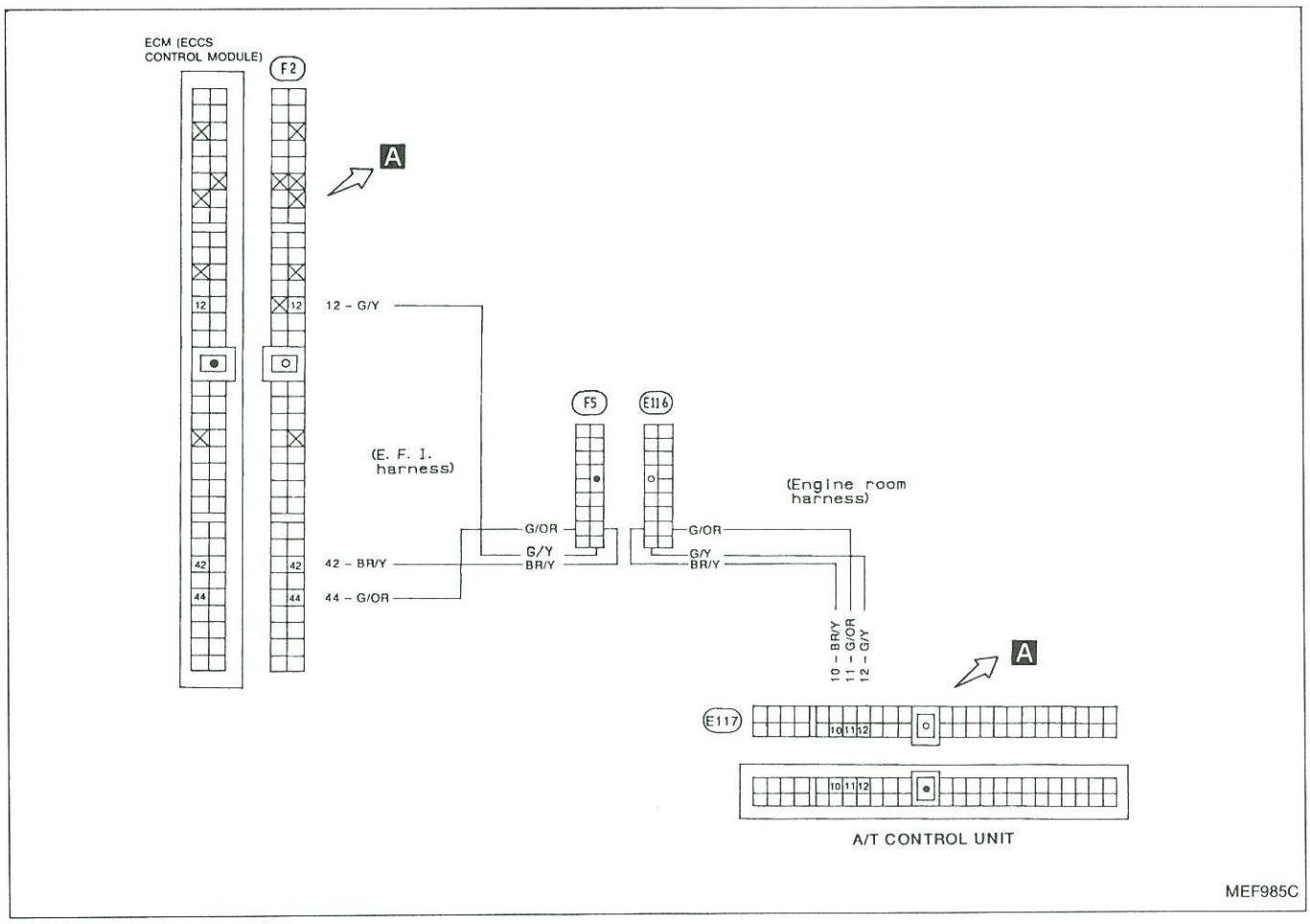


### Harness layout

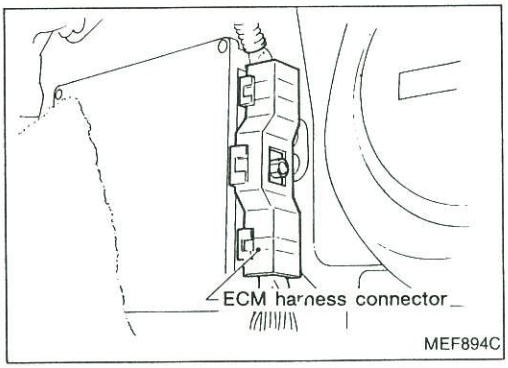


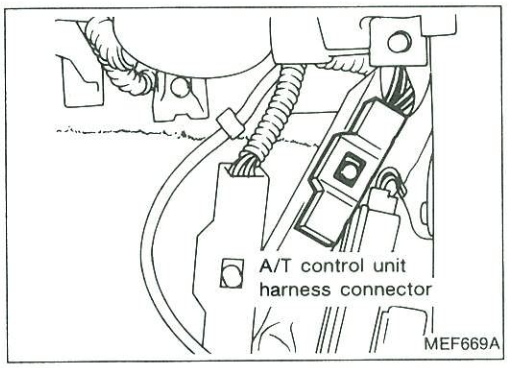

## Diagnostic Procedure 35 (Cont'd)

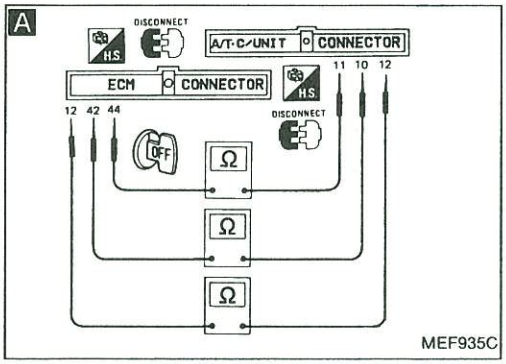


INSPECTION START

A

CHECK INPUT SIGNAL CIRCUIT.
1) Disconnect ECM harness connector and A/T control unit harness connector.
2) Check harness continuity between ECM terminal ⑫ and terminal ⑫, ECM terminal ㊷ and terminal ⑩, ECM terminal ㊹ and terminal ⑪.
**Continuity should exist.**

N.G. → Check the following.
- Harness connectors (F5), (E116)
- Harness continuity between ECM and A/T control unit

If N.G., repair harness or connectors.

O.K. ↓

Check ECM pin terminals for damage or the connection of ECM harness connector.

**Perform FINAL CHECK by the following procedure after repair is completed.**

FINAL CHECK

↓

Erase the diagnostic test mode II (Self-diagnostic results) memory.

↓

Perform test drive.

↓

Perform the diagnostic test mode II (Self-diagnostic results) again.

N.G. → Recheck ECM pin terminals for damage or the connection of ECM harness connector.

O.K. ↓

INSPECTION END

## Diagnostic Procedure 36

### START SIGNAL (Not self-diagnostic item)

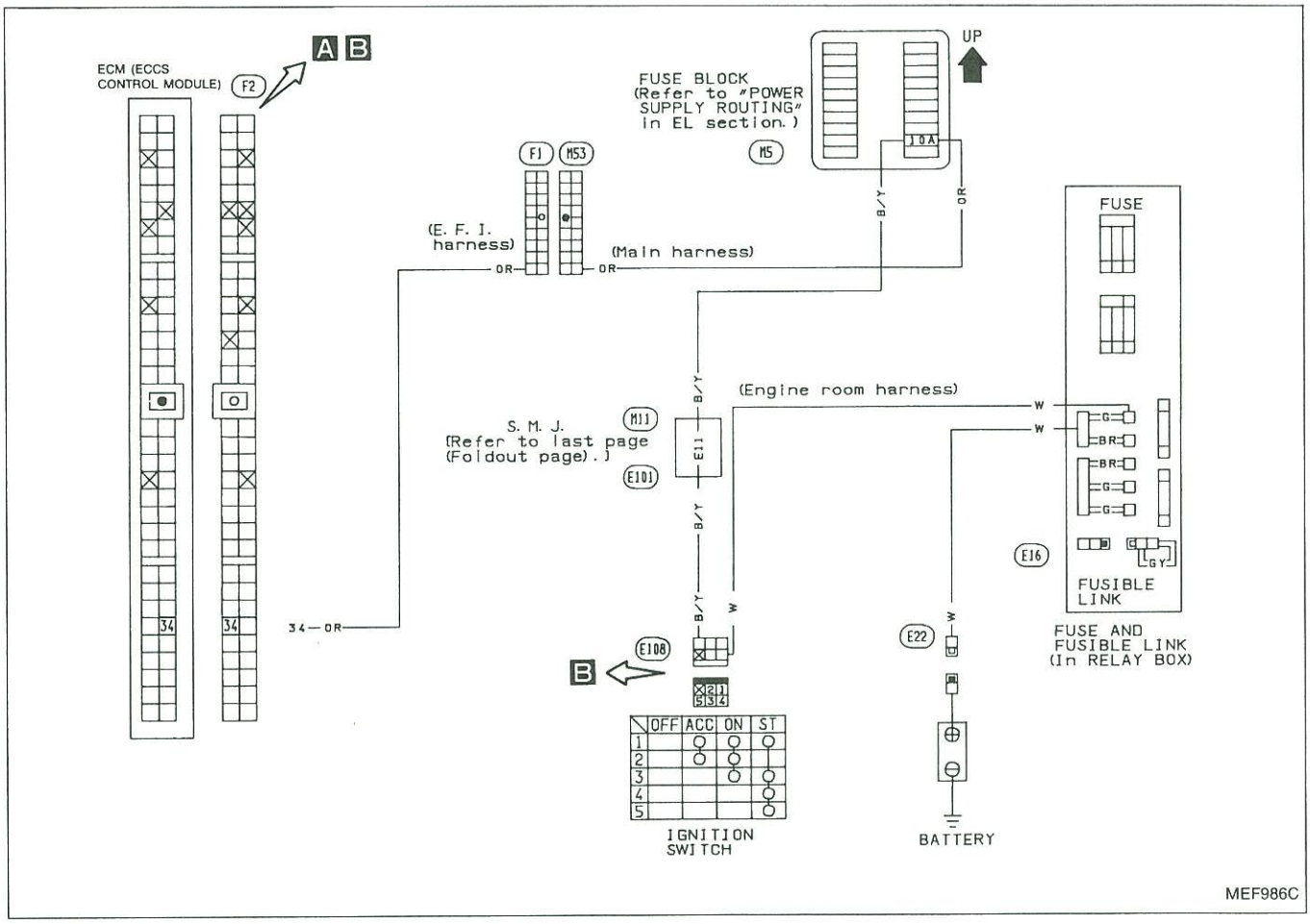


### Harness layout

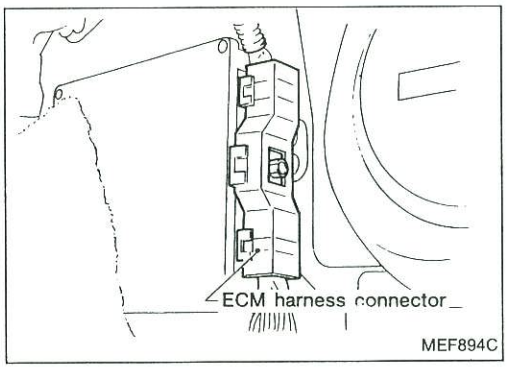

## Diagnostic Procedure 36 (Cont'd)

A

■ START SIGNAL CKT ■

1. CLOSE THROTTLE, SHIFT TO P OR N RANGE.
2. TOUCH START AND START ENGINE IMMEDIATELY.

NEXT | START

SEF191L

A

☆MONITOR ☆NO FAIL ☐

| | |
|---|---|
| START SIGNAL | OFF |
| CLOSED TH/POS | ON |
| AIR COND SIG | OFF |
| NEUT POSI SW | ON |

RECORD

MEF936C

A

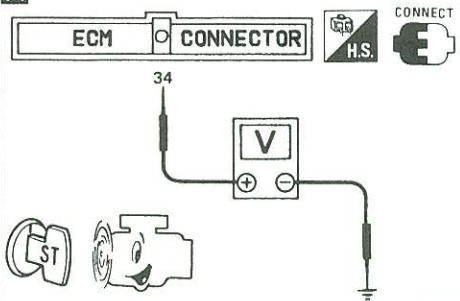


MEF937C

B

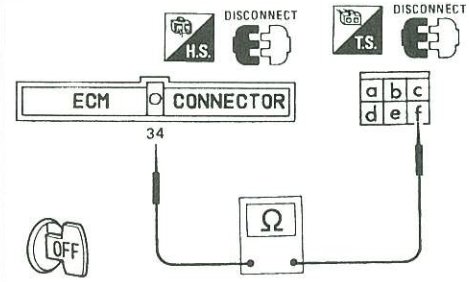


MEF938C

INSPECTION START

A

CHECK OVERALL FUNCTION.

1) Turn ignition switch "ON".
2) Perform "START SIGNAL CIRCUIT" in "FUNCTION TEST" mode with CONSULT.

OR

1) Turn ignition switch "ON".
2) Check start signal in "DATA MONITOR" mode with CONSULT.

| IGN "ON" | OFF |
|---|---|
| IGN "START" | ON |

OR

1) Turn ignition switch to "START".
2) Check voltage between ECM terminal ㉞ and ground.

**Voltage:**

**Ignition switch "START"**
**Battery voltage**
**Except above**
**Approximately 0V**

O.K. → INSPECTION END

N.G.

B

CHECK INPUT SIGNAL CIRCUIT.

1) Turn ignition switch "OFF".
2) Disconnect ECM harness connector and ignition switch harness connector.
3) Check harness continuity between ECM terminal ㉞ and terminal ⓕ.

**Continuity should exist.**

N.G. → Check the following.

- Harness connectors (F1), (M53)
- Harness connectors (M11), (E101)
- 10A fuse
- Harness continuity between ECM and ignition switch

If N.G., repair harness or connectors.

O.K.

Check ECM pin terminals for damage or the connection of ECM harness connector.

## Diagnostic Procedure 37

### PAIR valve CONTROL (Not self-diagnostic item)

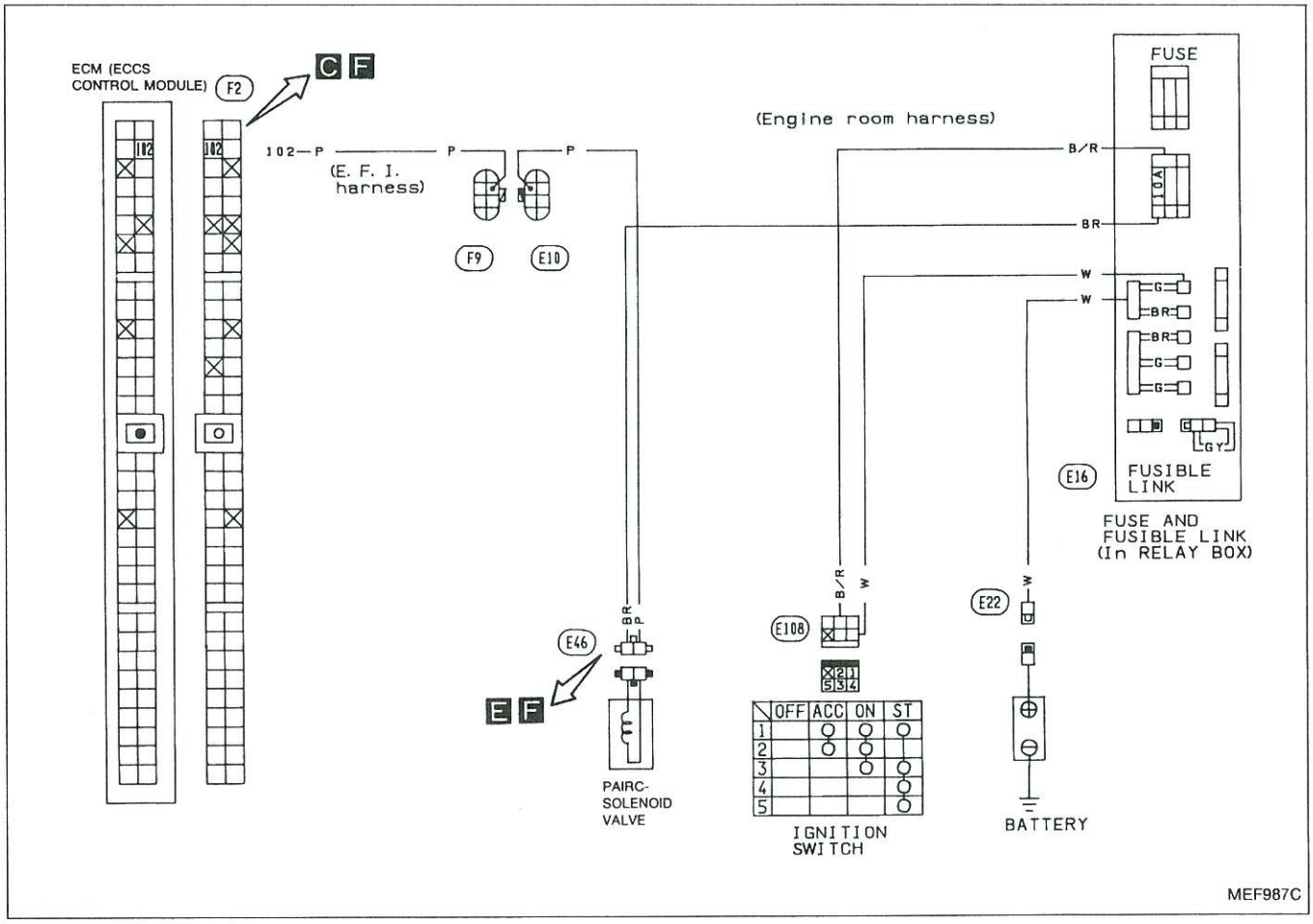


### Harness layout

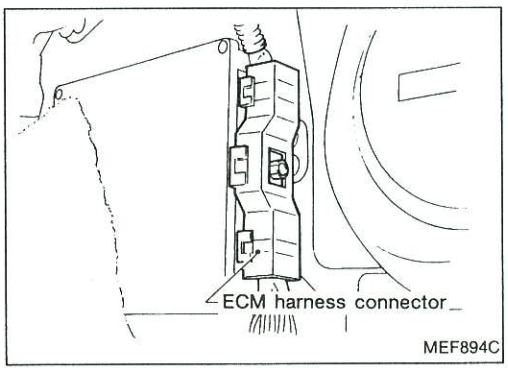


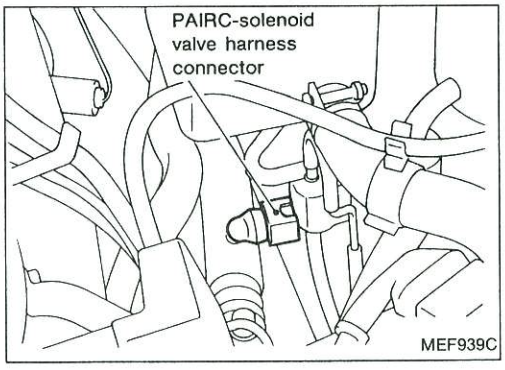

## Diagnostic Procedure 37 (Cont'd)

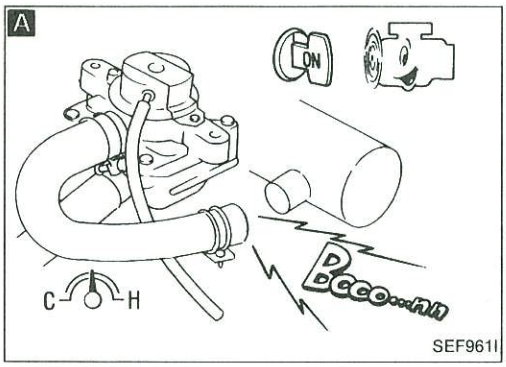


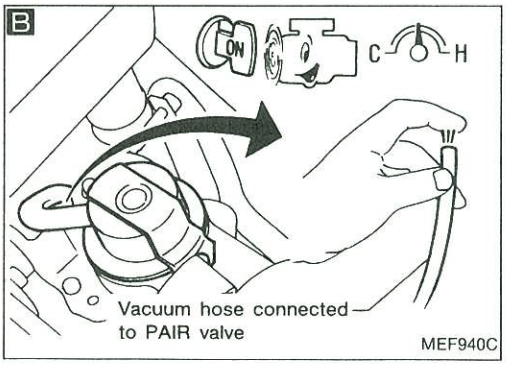


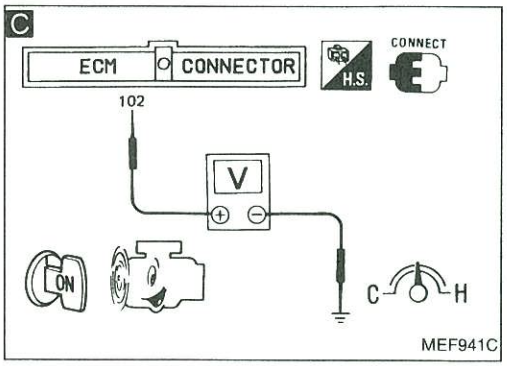


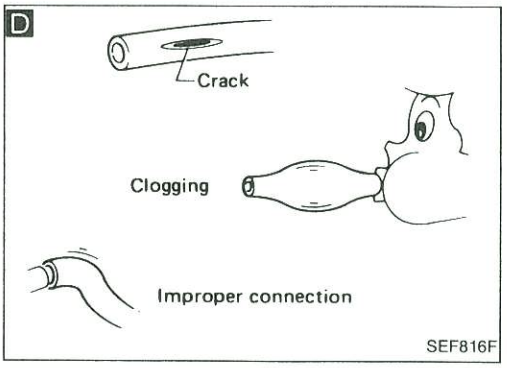


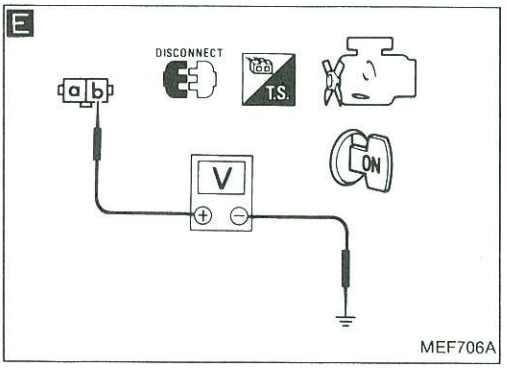


INSPECTION START

**A**

CHECK OVERALL FUNCTION.
1) Start engine and warm it up sufficiently.
2) Run engine at about 2,000 rpm for about 2 minutes under no-load.
3) Release accelerator pedal fully, and run engine at idle.
4) Listen to PAIR valve operating sound.
   **At idle and during deceleration:**
   **PAIR valve should operate.**
   **Except above:**
   **PAIR valve should not operate.**

O.K. → INSPECTION END

N.G.

**B**

CHECK VACUUM SOURCE TO PAIR valve
1) Disconnect vacuum hose to PAIR valve
2) Make sure that vacuum exists under the following conditions.
   **At idle and during deceleration:**
   **Vacuum should exist.**
   **Except above:**
   **Vacuum should not exist.**

O.K. → CHECK COMPONENT (PAIR valve).
Refer to "Electrical Components Inspection".
(See page EF & EC-167.)

N.G.

**C**

CHECK CONTROL FUNCTION.
1) Check voltage between ECM terminal (102) and ground.
   **Voltage:**
   **At idle and during deceleration**
   **Approximately 0V**
   **Except above**
   **Battery voltage**

O.K. → **D** CHECK VACUUM HOSE.
Check vacuum hose for clogging, cracks and proper connections.

N.G.

**E**

CHECK POWER SUPPLY.
1) Stop engine.
2) Disconnect PAIRC-solenoid valve harness connector.
3) Turn ignition switch "ON".
4) Check voltage between terminal (b) and ground.
   **Voltage: Battery voltage**

N.G. → Check the following.
- 10A fuse
- Harness continuity between fuse and PAIRC-solenoid valve

If N.G., repair harness or connectors.

O.K.

Ⓐ

## Diagnostic Procedure 37 (Cont'd)

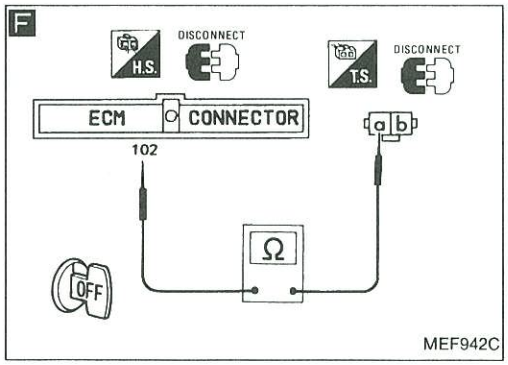


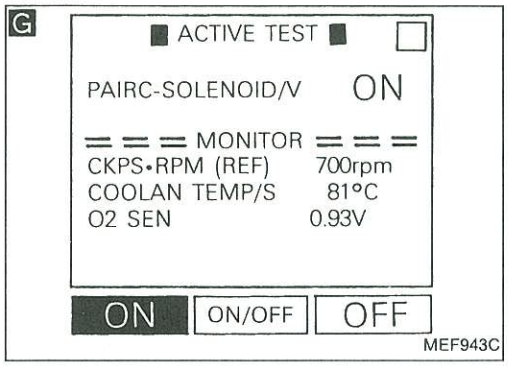


Ⓐ

F

CHECK OUTPUT SIGNAL CIRCUIT.
1) Turn ignition switch "OFF".
2) Disconnect ECM harness connector.
3) Check harness continuity between ECM terminal (102) and terminal ⓐ.
**Continuity should exist.**

N.G. → Repair harness or connectors.

O.K. ↓

G

CHECK COMPONENT
(PAIRC-solenoid valve).

1) Reconnect ECM harness connector and PAIRC-solenoid valve harness connector.
2) Start engine.
3) Perform "PAIRC-SOLENOID/V TEST" in "ACTIVE TEST" mode with CONSULT.

N.G. → Replace PAIRC-solenoid valve.

OR

Refer to "Electrical Components Inspection".
(See page EF & EC-162.)

O.K. ↓

Check ECM pin terminals for damage or the connection of ECM harness connector.

## Diagnostic Procedure 38

### INJECTOR (Not self-diagnostic item)

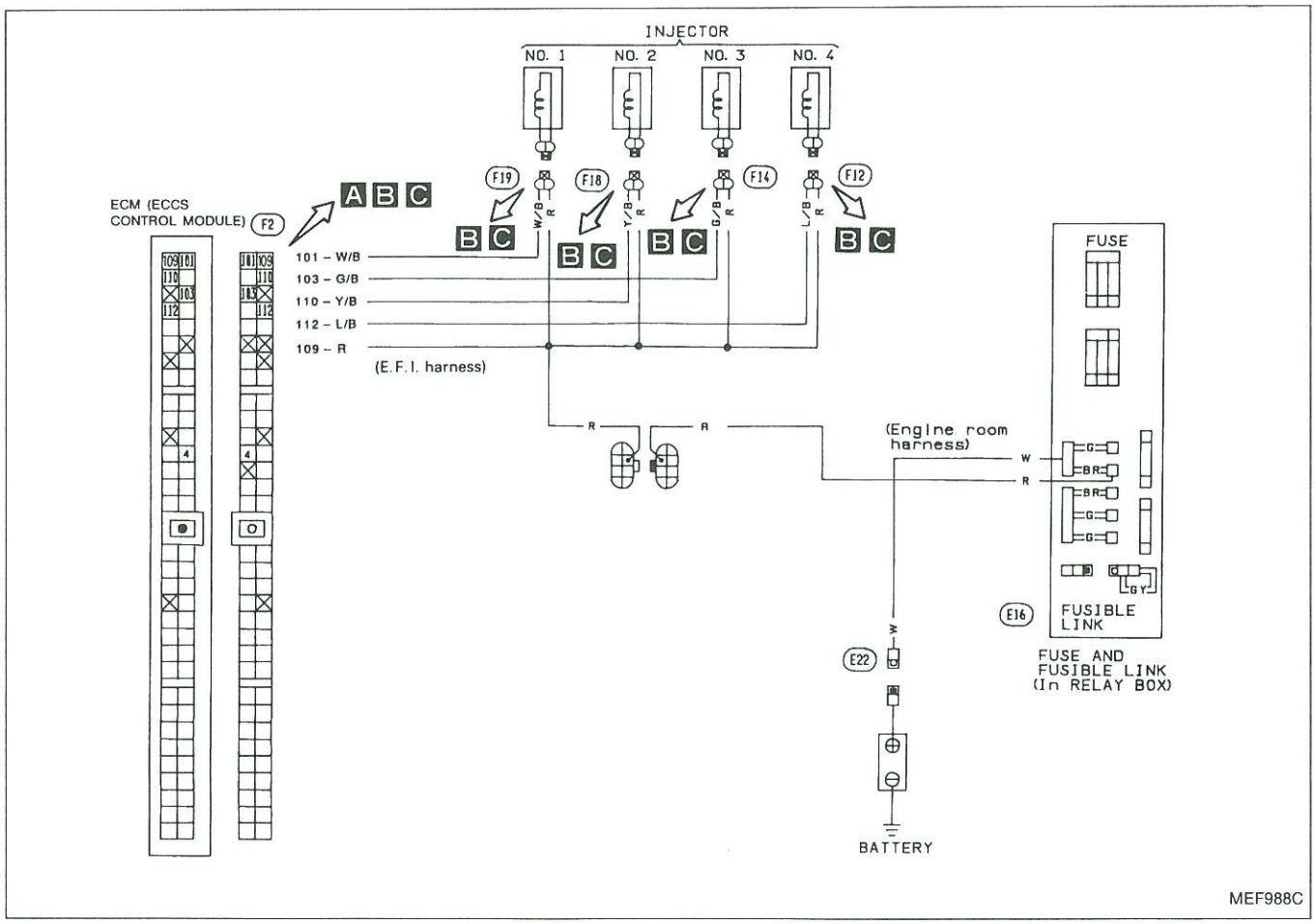


### Harness layout

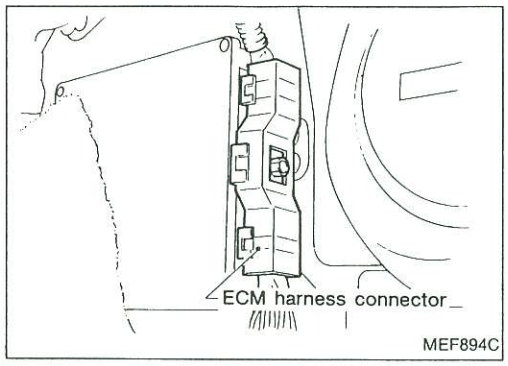


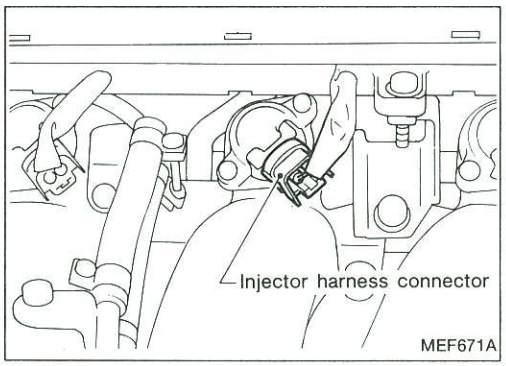

## Diagnostic Procedure 38 (Cont'd)

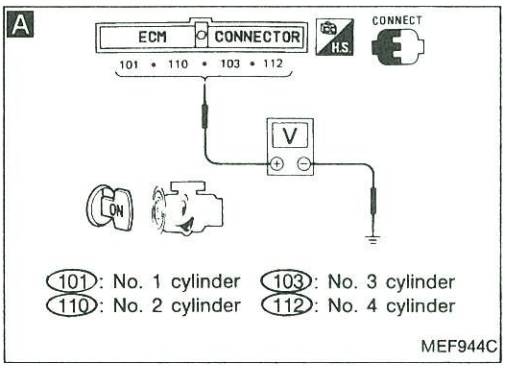


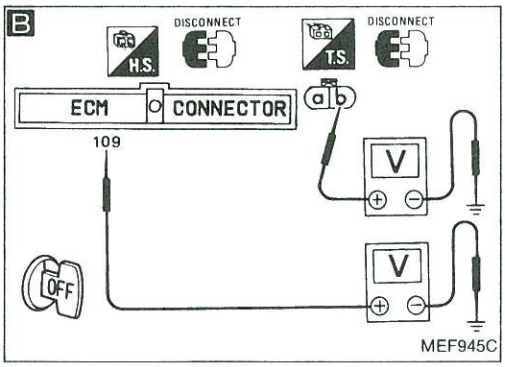


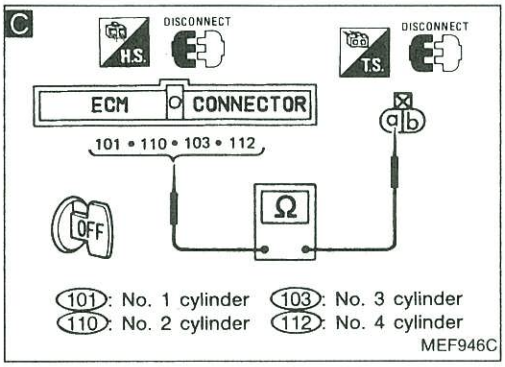


INSPECTION START

A

CHECK CONTROL FUNCTION.
1) Start engine.
2) Check voltage between ECM terminals (101), (110), (103), (112) and ground.
**Voltage: Battery voltage**

O.K. → INSPECTION END

N.G.

B

CHECK POWER SUPPLY.
1) Stop engine.
2) Disconnect injector harness connector and ECM harness connector.
3) Check voltage between terminal (b) and ground, ECM terminal (109) and ground.
**Voltage: Battery voltage**

N.G. → Check the following.
- Harness connectors (F8), (E9)
- "BR" fusible link
- Harness continuity between ECM, injector and battery

If N.G., repair harness or connectors.

O.K.

C

CHECK OUTPUT SIGNAL CIRCUIT.
1) Check harness continuity between terminal (a) and ECM terminals (101), (110), (103), (112).
**Continuity should exist.**

N.G. → Repair harness or connectors.

O.K.

CHECK COMPONENT (Injector).
Refer to "Electrical Components Inspection".
(See page EF & EC-165.)

N.G. → Replace injector.

O.K.

Check ECM pin terminals for damage or the connection of ECM harness connector.

## Diagnostic Procedure 39

### FUEL PUMP (Not self-diagnostic item)

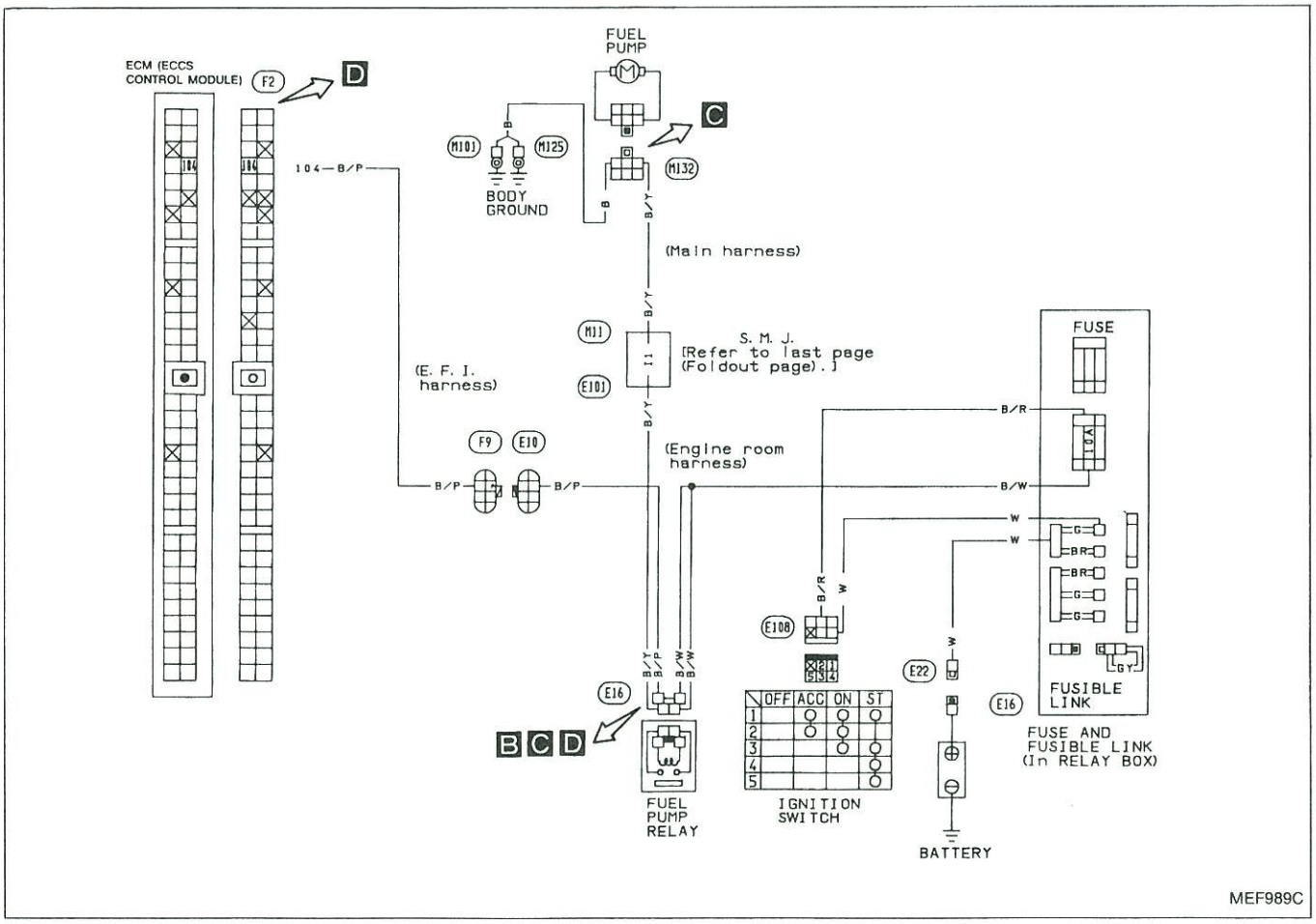


### Harness layout

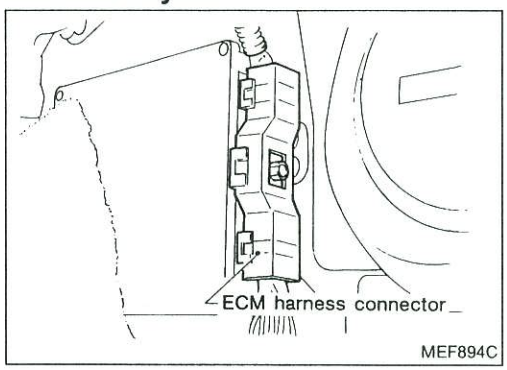


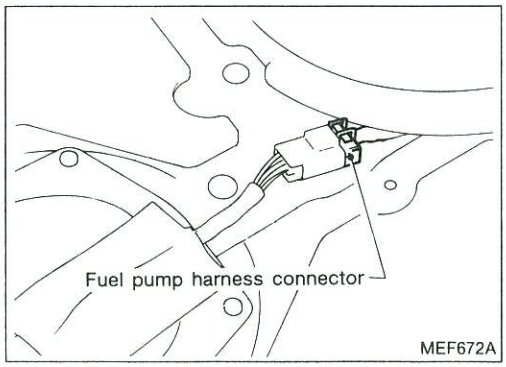


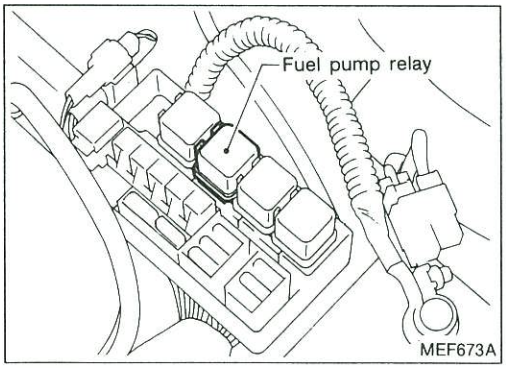

## Diagnostic Procedure 39 (Cont'd)

A

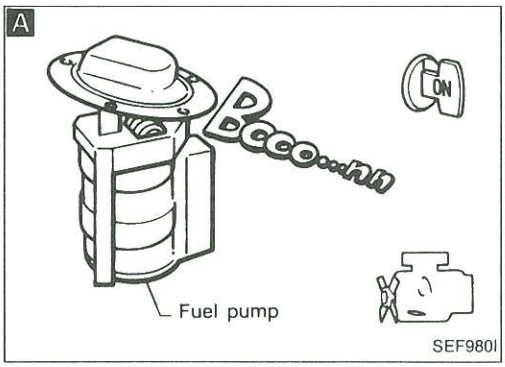


SEF980I

B

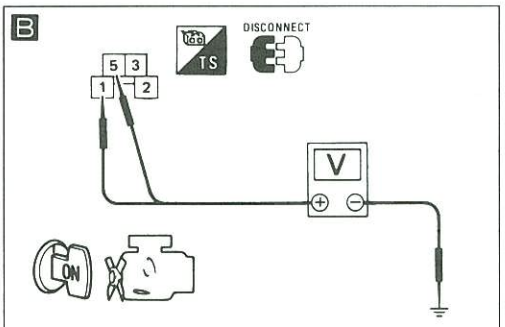


MEF709A

C

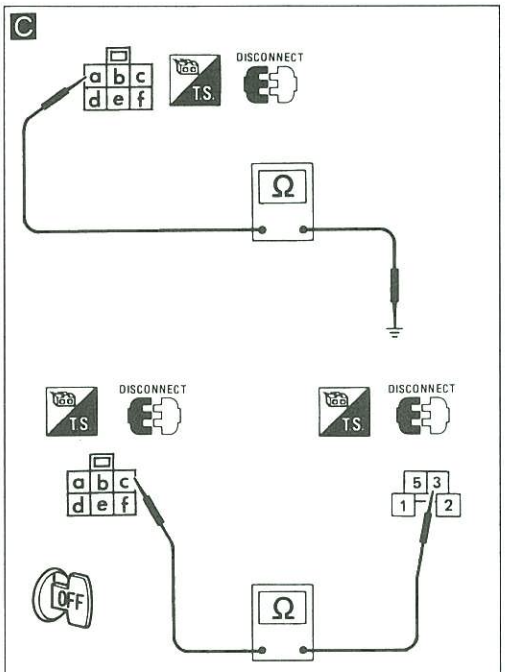


MEF710A

D

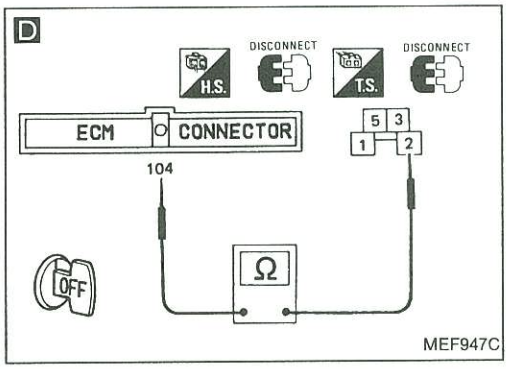


MEF947C

INSPECTION START

A

CHECK OVERALL FUNCTION.
1) Turn ignition switch "ON".
2) Listen to fuel pump operating sound.
**Fuel pump should operate for 5 seconds after ignition switch is turned "ON".**

O.K. → INSPECTION END

N.G.

B

CHECK POWER SUPPLY.
1) Turn ignition switch "OFF".
2) Disconnect fuel pump relay.
3) Turn ignition switch "ON".
4) Check voltage between terminals ①, ⑤ and ground.
**Voltage: Battery voltage**

N.G. → Check the following.
- 10A fuse
- Harness continuity between fuse and fuel pump relay

If N.G., repair harness or connectors.

O.K.

C

CHECK GROUND CIRCUIT.
1) Turn ignition switch "OFF".
2) Disconnect fuel pump harness connector.
3) Check harness continuity between terminal ⓐ and body ground, terminal ⓒ and terminal ③.
**Continuity should exist.**

N.G. → Check the following.
- Harness connectors (M11), (E101)
- Harness continuity between fuel pump and body ground
- Harness continuity between fuel pump and fuel pump relay

If N.G., repair harness or connectors.

O.K.

D

CHECK OUTPUT SIGNAL CIRCUIT.
1) Disconnect ECM harness connector.
2) Check harness continuity between ECM terminal (104) and terminal ②.
**Continuity should exist.**

N.G. → Check the following.
- Harness connectors (F9), (E10)
- Harness continuity between ECM and fuel pump relay

If N.G., repair harness or connectors.

O.K.

Ⓐ

## Diagnostic Procedure 39 (Cont'd)

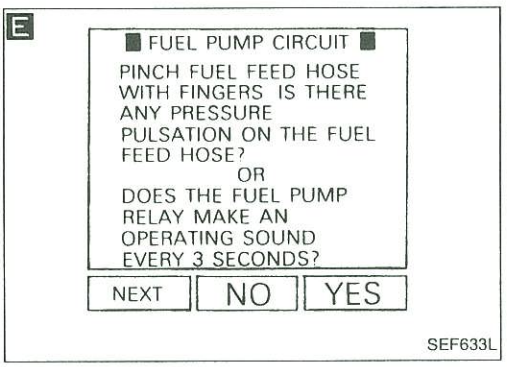


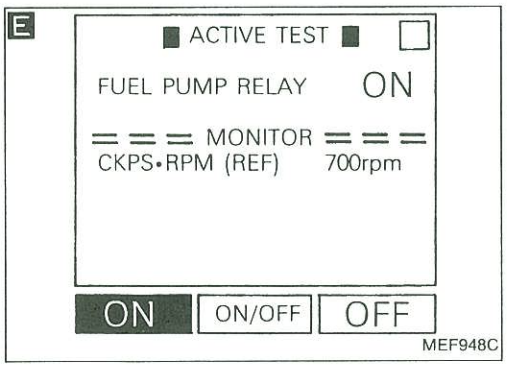


Ⓐ

E

CHECK COMPONENT
(Fuel pump relay).

1) Reconnect fuel pump relay, fuel pump harness connector and ECM harness connector.
2) Ignition switch "ON".
3) Perform "FUEL PUMP CIRCUIT" in "FUNCTION TEST" mode with CONSULT.

OR

3) Turn fuel pump relay "ON" and "OFF" in "ACTIVE TEST" mode with CONSULT and check operating sound.

OR

Refer to "Electrical Components Inspection".
(See page EF & EC-166.)

N.G. → Replace fuel pump relay.

O.K. ↓

CHECK COMPONENT
(Fuel pump).
Refer to "Electrical Components Inspection".
(See page EF & EC-161.)

N.G. → Replace fuel pump.

O.K. ↓

Check ECM pin terminals for damage or the connection of ECM harness connector.

## Diagnostic Procedure 40

### S.C.V. CONTROL (Not self-diagnostic item)

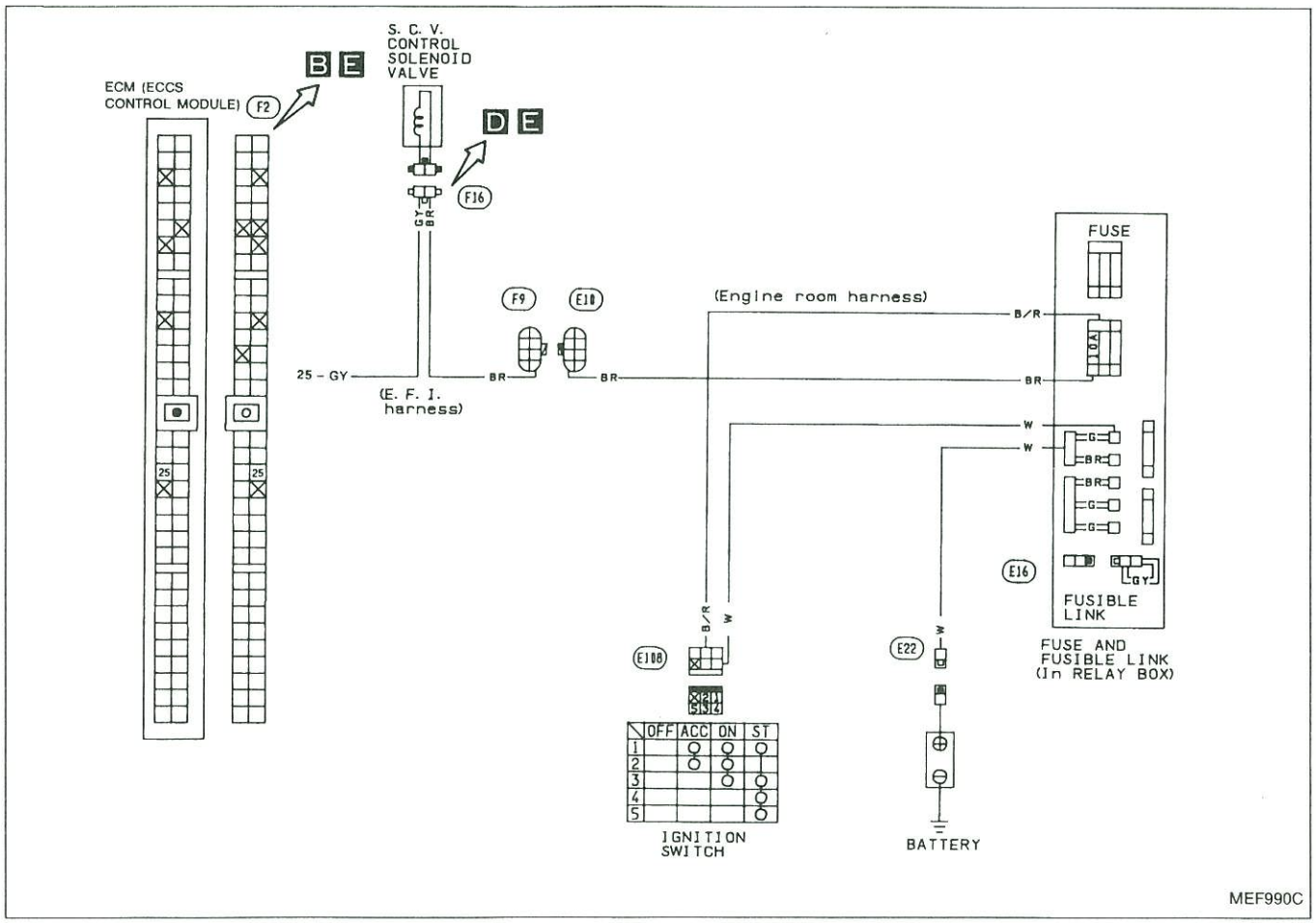


### Harness layout

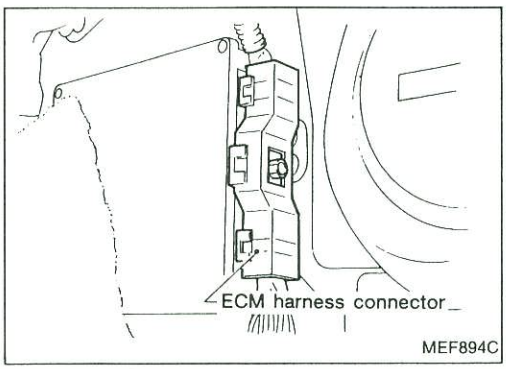


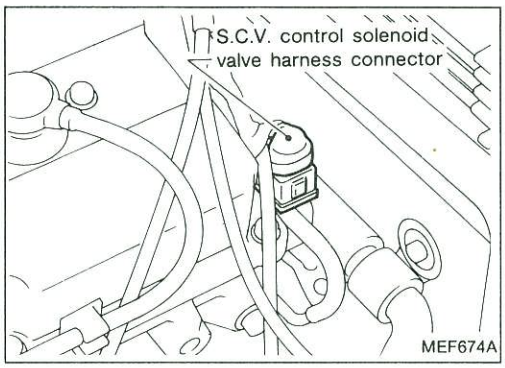

## Diagnostic Procedure 40 (Cont'd)

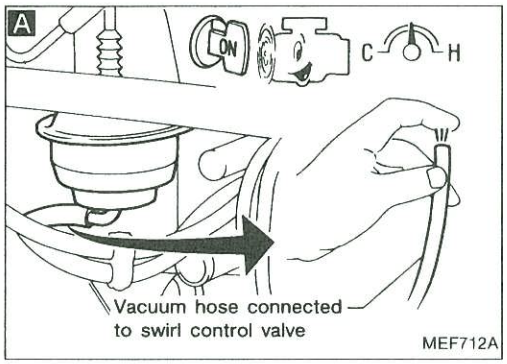


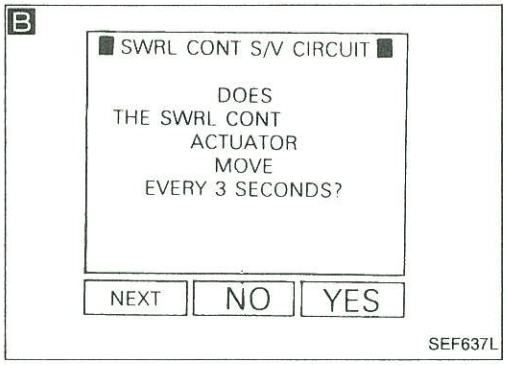


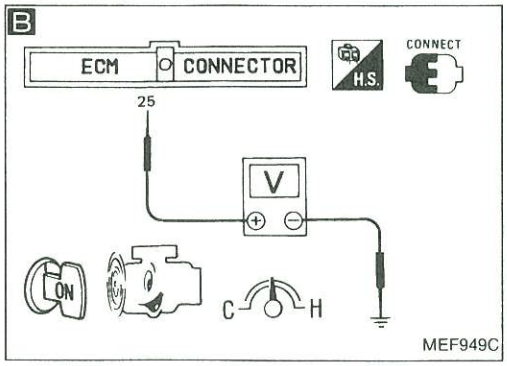


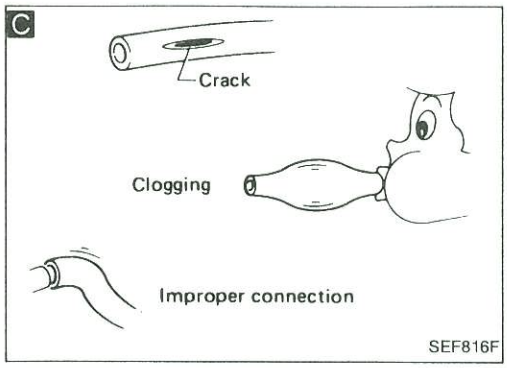


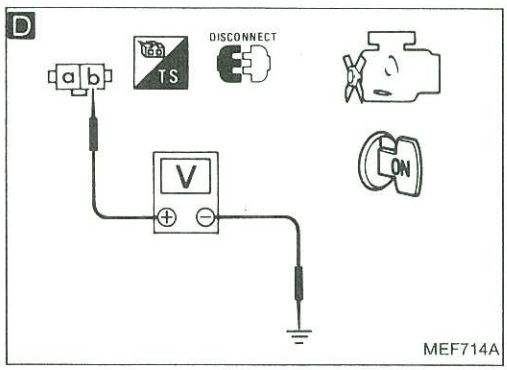


INSPECTION START

**A**

CHECK VACUUM SOURCE TO SWIRL CONTROL VALVE.
1) Start engine and warm it up sufficiently.
2) Stop engine
3) After a few seconds, disconnect vacuum hose to swirl control valve and restart engine.
4) Make sure that vacuum exists under the following conditions.
   **Engine speed is less than 2,400 rpm: Vacuum should exist.**
   **Engine speed is more than 2,400 rpm: Vacuum should not exist.**

O.K. → INSPECTION END

N.G. ↓

**B**

CHECK CONTROL FUNCTION.
1) Turn ignition switch "ON".
2) Perform "SWRL CONT S/V CIRCUIT" in "FUNCTION TEST" mode with CONSULT.

OR

1) Check voltage between ECM terminal (25) and ground.
   **Voltage:**
   **Engine speed is less than 2,400 rpm: Approximately 0V**
   **Engine speed is more than 2,400 rpm: Battery voltage**

O.K. → **C**

CHECK VACUUM HOSE AND SWIRL CONTROL VALVE.
1) Check vacuum hose and swirl control valve for clogging, cracks and proper connection.

N.G. ↓

**D**

CHECK POWER SUPPLY.
1) Stop engine.
2) Disconnect S.C.V. control solenoid valve harness connector.
3) Turn ignition switch "ON".
4) Check voltage between terminal (b) and ground.
   **Voltage: Battery voltage**

N.G. → Check the following.
- Harness connectors (F9), (E10)
- 10A fuse
- Harness continuity between fuse and S.C.V. control solenoid valve

If N.G., repair harness or connectors.

O.K. ↓

(A)

## Diagnostic Procedure 40 (Cont'd)

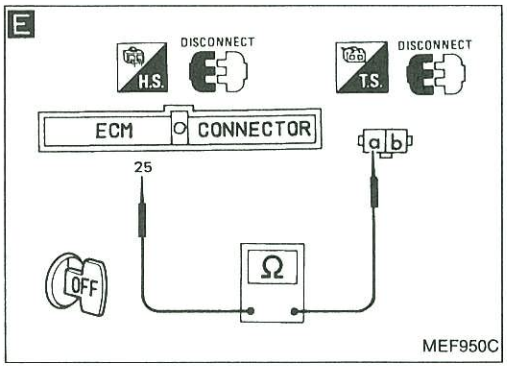


Ⓐ

E

CHECK OUTPUT SIGNAL CIRCUIT.
1) Turn ignition switch "OFF".
2) Disconnect ECM harness connector.
3) Check harness continuity between ECM terminal ㉕ and terminal ⓐ.
**Continuity should exist.**

N.G. → Repair harness or connectors.

O.K. ↓

CHECK COMPONENT
(S.C.V. control solenoid valve).
Refer to "Electrical Components Inspection".
(See page EF & EC-162.)

N.G. → Replace S.C.V. control solenoid valve.

O.K. ↓

Check ECM pin terminals for damage or the connection of ECM harness connector.

## Diagnostic Procedure 41

### IACV-AIR REGULATOR (Not self-diagnostic item)

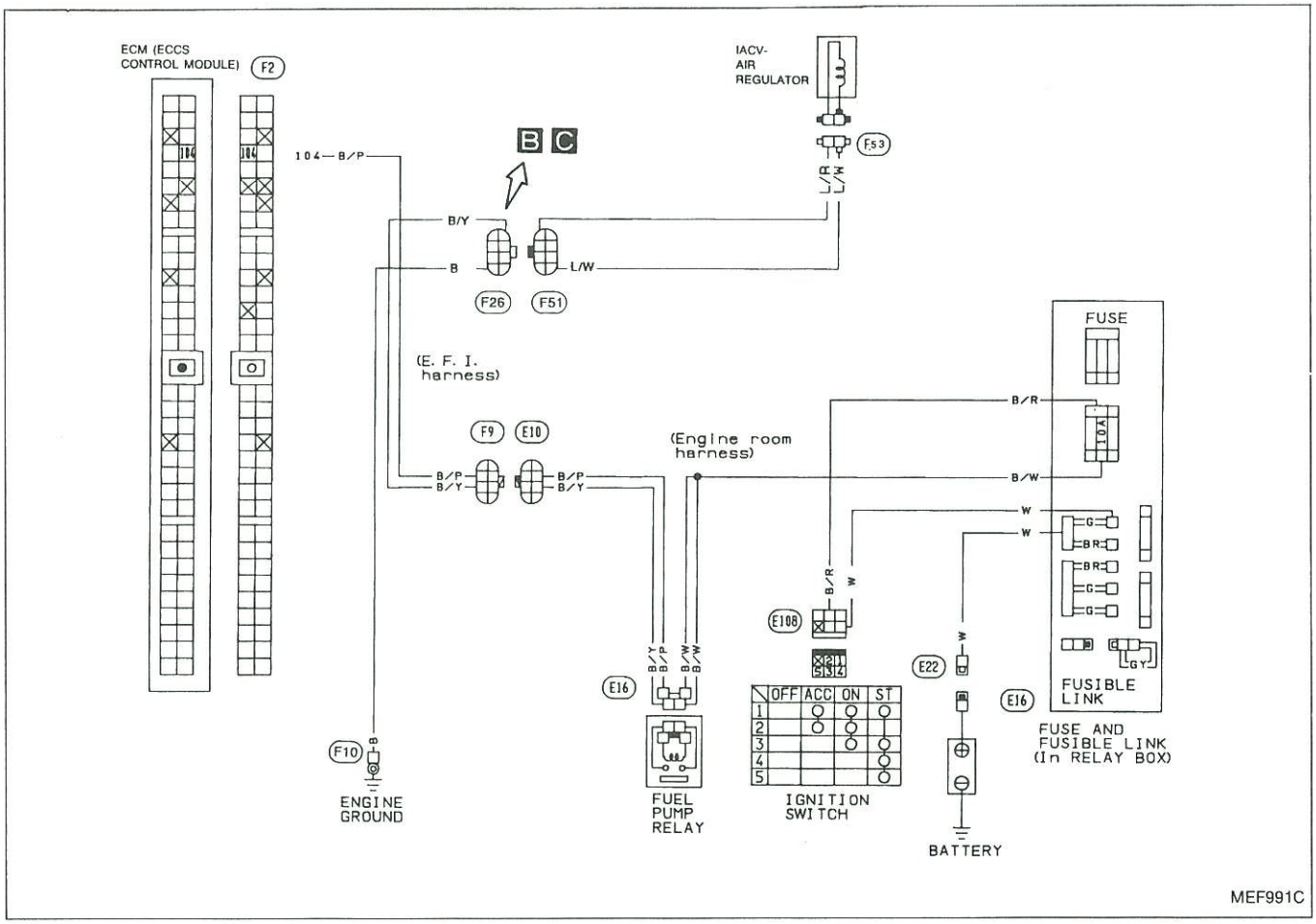


### Harness layout

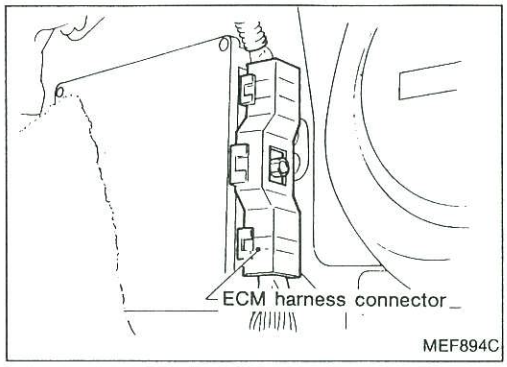


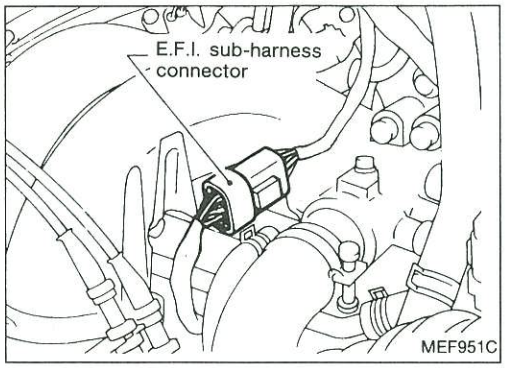

## Diagnostic Procedure 41 (Cont'd)

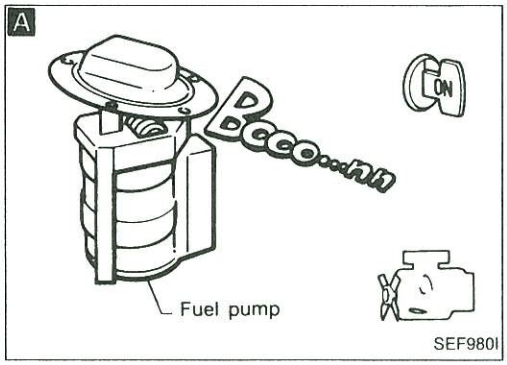


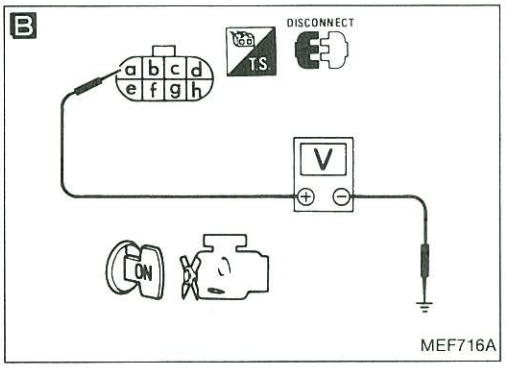


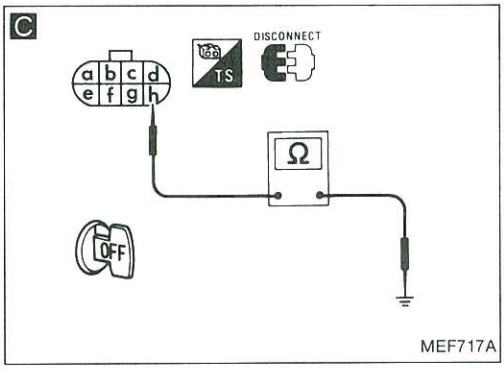


INSPECTION START

A

CHECK CONTROL FUNCTION.
1) Turn ignition switch "ON".
2) Listen to fuel pump operating sound.
**Fuel pump should operate for 5 seconds after ignition switch is turned "ON".**

N.G. → Check fuel pump control circuit.
(See page EF & EC-135.)

O.K.

B

CHECK POWER SUPPLY.
1) Turn ignition switch "OFF".
2) Disconnect IACV-air regulator sub-harness connector (F51).
3) Turn ignition switch "ON".
4) Check voltage between terminal ⓐ and ground.
**Battery voltage should exist for 5 seconds after ignition switch is turned "ON".**

N.G. → Check the following.
- Harness connectors (F9), (E10)
- Harness continuity between IACV-air regulator sub-harness connector and fuel pump relay

If N.G., repair harness or connectors.

O.K.

C

CHECK GROUND CIRCUIT.
1) Turn ignition switch "OFF".
2) Check harness continuity between terminal ⓗ and body ground.
**Continuity should exist.**

N.G. → Repair harness or connectors.

O.K.

CHECK COMPONENT
(IACV-air regulator).
Refer to "Electrical Components Inspection".
(See page EF & EC-167.)

N.G. → Replace IACV-air regulator.

O.K.

INSPECTION END

## Diagnostic Procedure 42

### IACV-AAC VALVE (Not self-diagnostic item)

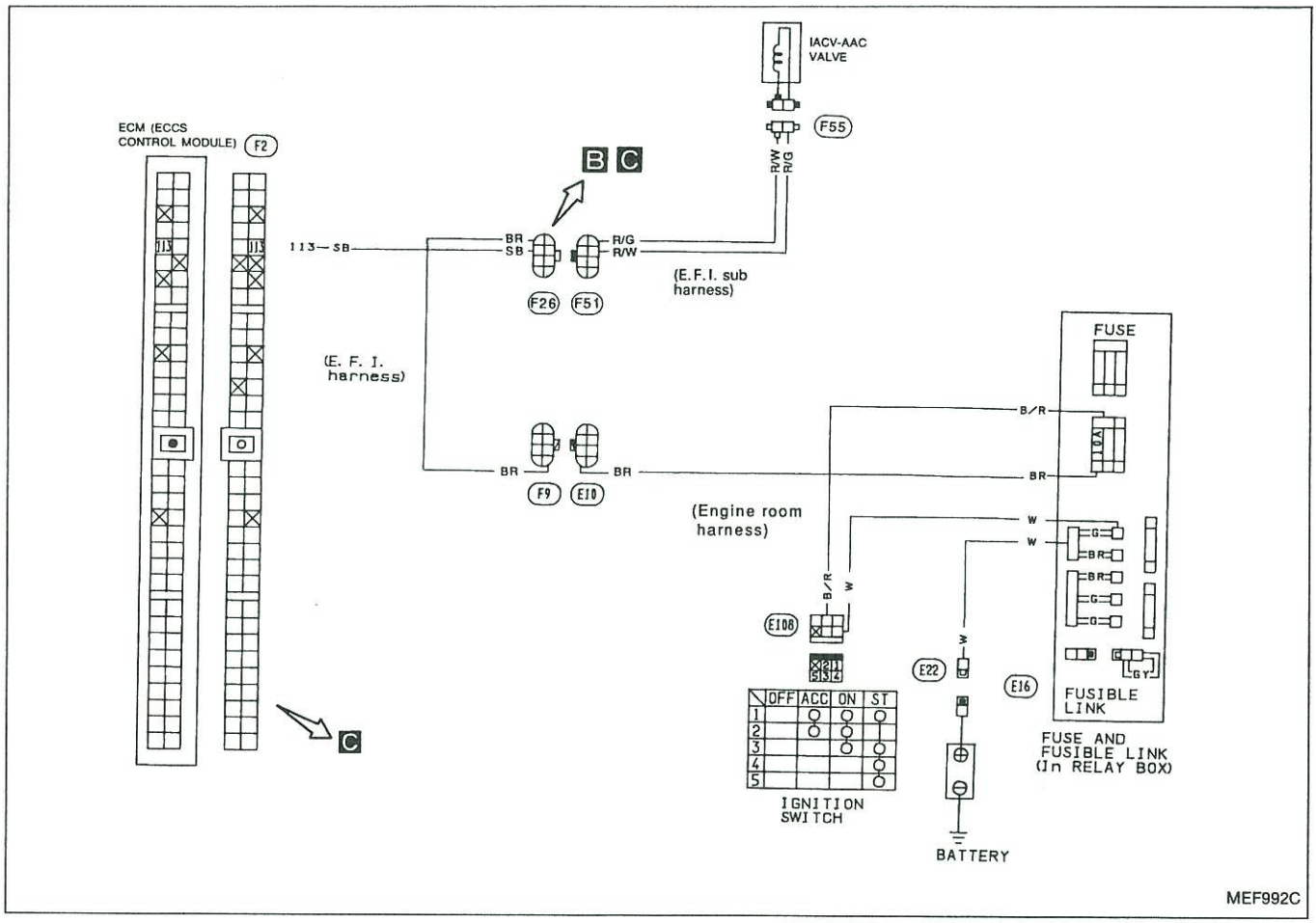


### Harness layout

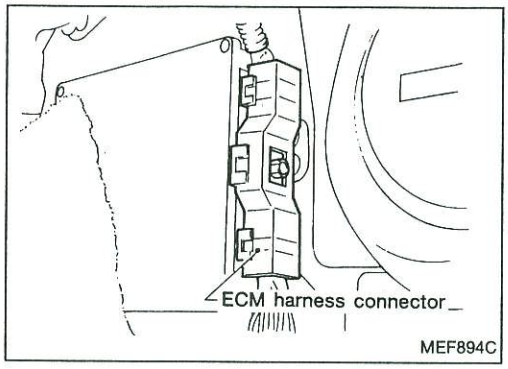


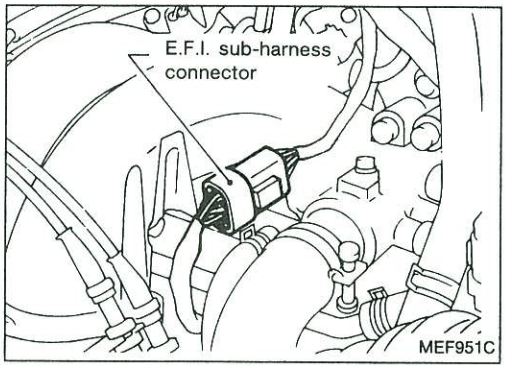

## Diagnostic Procedure 42 (Cont'd)

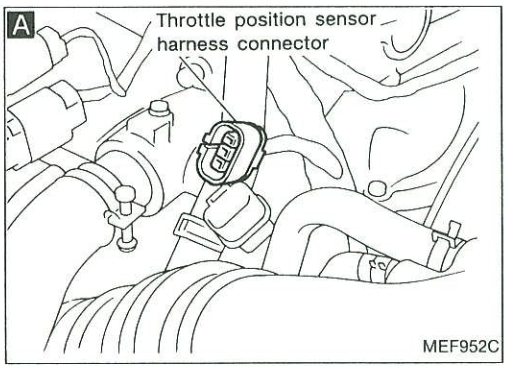


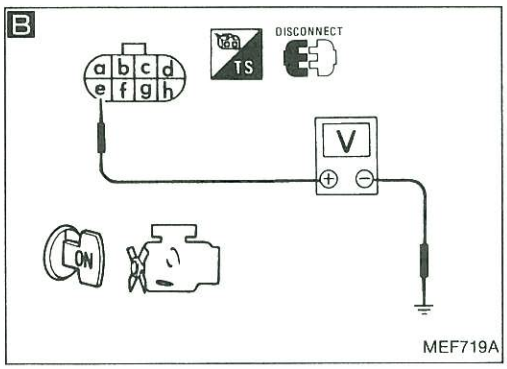


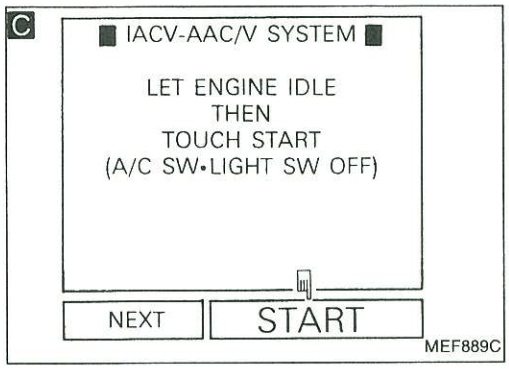


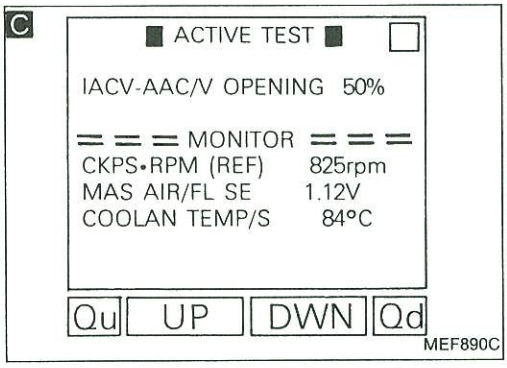


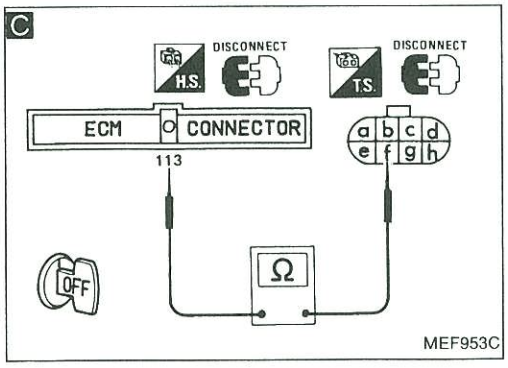


INSPECTION START

A

CHECK OVERALL FUNCTION.
1) Start engine and warm it up sufficiently.
2) Check idle speed.
**700 ± 50 rpm**
If N.G., adjust idle speed.
3) Perform the diagnostic test mode II (Self-diagnostic results).
Make sure that diagnostic trouble code No. 43 is not displayed.
Make sure that throttle position sensor is not in "fail-safe" state.
4) Disconnect throttle position sensor harness connector.
5) Make sure that idle speed drops.

Drops → INSPECTION END

Does not drop ↓

B

CHECK POWER SUPPLY.
1) Stop engine.
2) Disconnect IACV-AAC valve sub-harness connector (F51).
3) Turn ignition switch "ON".
4) Check voltage between terminal (e) and ground.
**Voltage: Battery voltage**

N.G. → Check the following.
- Harness connectors (F9), (E10)
- 10A fuse
- Harness continuity between IACV-AAC valve sub-harness connector and fuse

If N.G., repair harness or connectors.

O.K. ↓

C

CHECK OUTPUT SIGNAL CIRCUIT.
1) Perform "IACV-AAC/V SYSTEM" in "FUNCTION TEST" mode with CONSULT.

OR

1) Reconnect throttle position sensor harness connector and IACV-AAC valve sub-harness connector.
2) Perform "IACV-AAC/V OPENING" in "ACTIVE TEST" mode with CONSULT.

OR

1) Turn ignition switch "OFF".
2) Disconnect ECM harness connector.
3) Check harness continuity between ECM terminal (113) and terminal (f).
**Continuity should exist.**

N.G. → Repair harness or connectors.

O.K. ↓

(A)

## Diagnostic Procedure 42 (Cont'd)

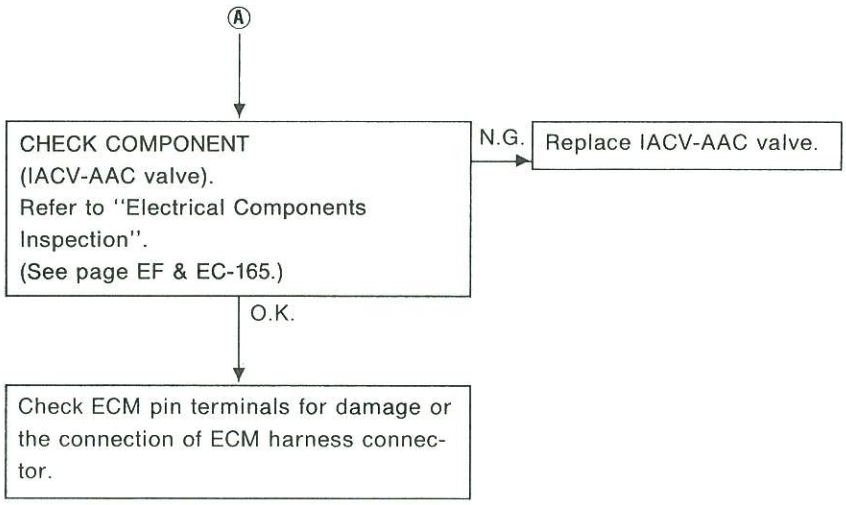

## Diagnostic Procedure 43

### CONDENSER FAN CONTROL (Not self-diagnostic item)

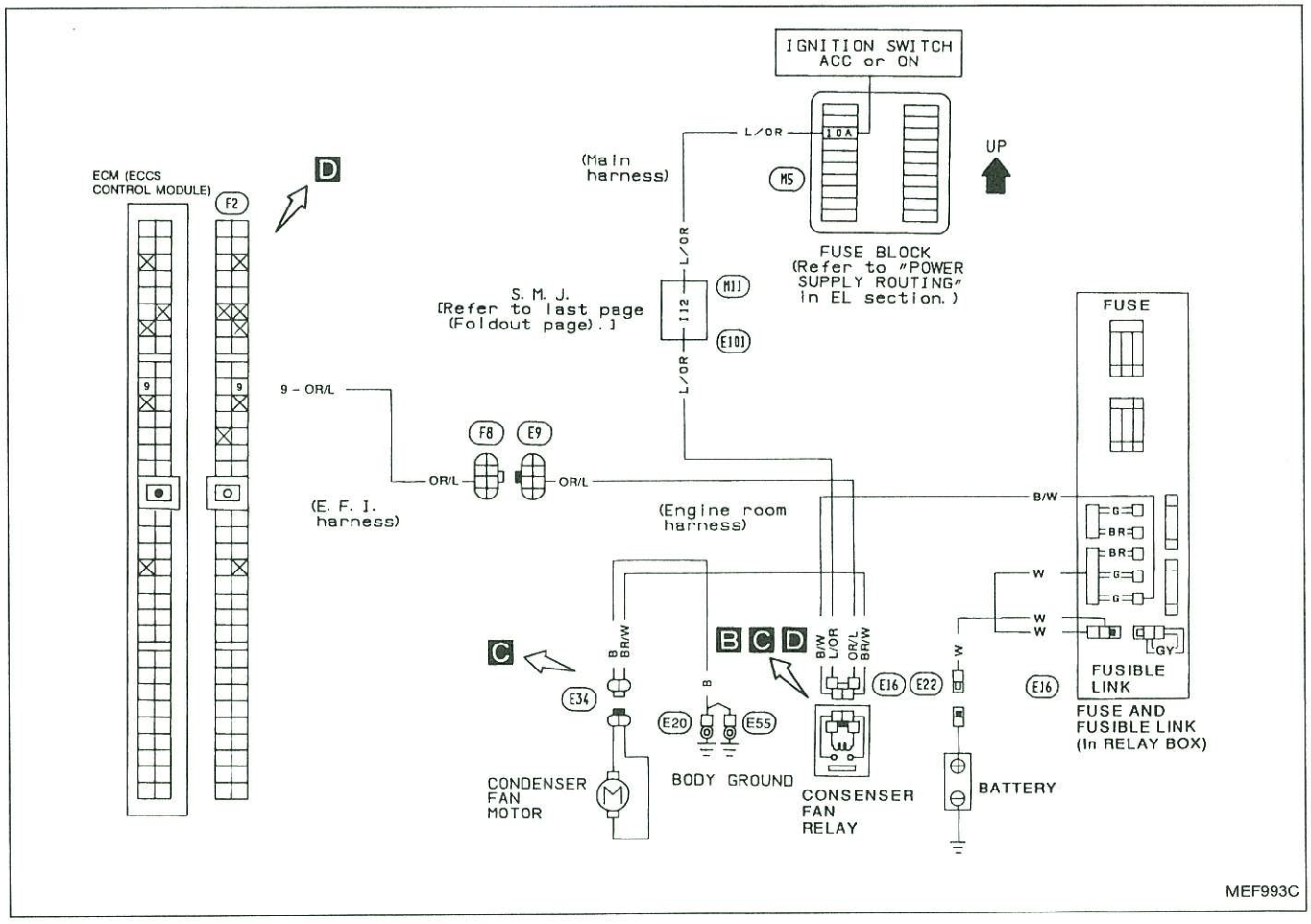


### Harness layout

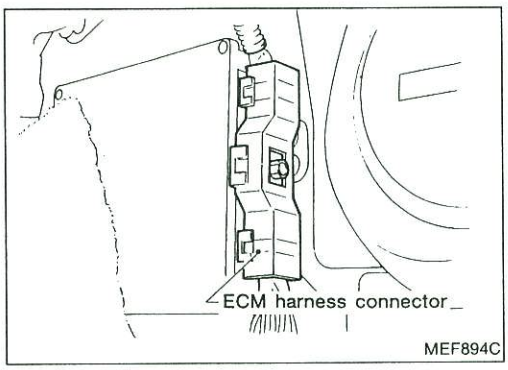


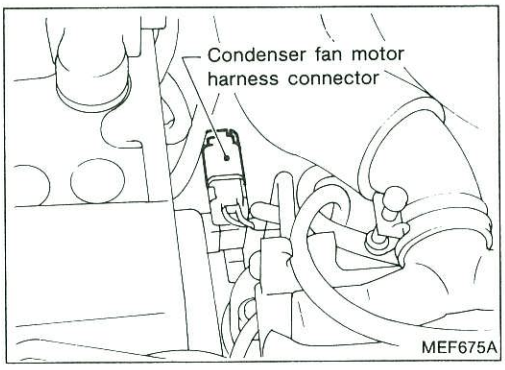


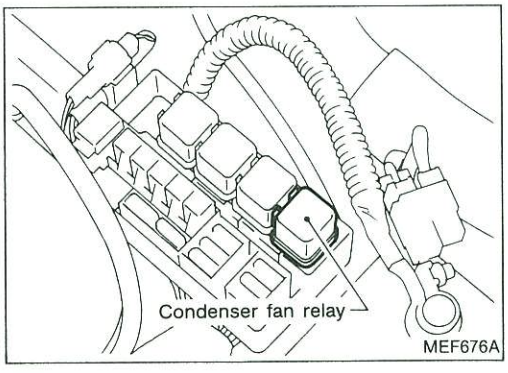

## Diagnostic Procedure 43 (Cont'd)

A

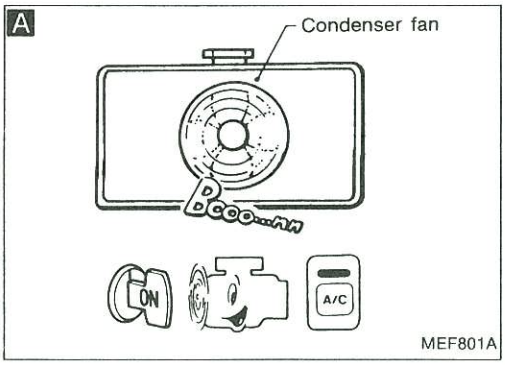


MEF801A

B

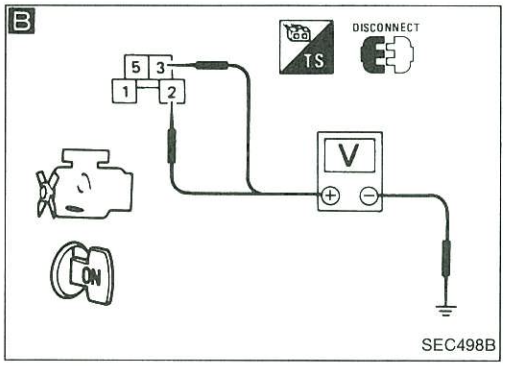


SEC498B

C

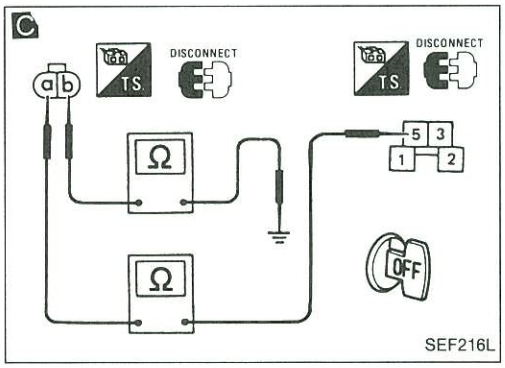


SEF216L

D

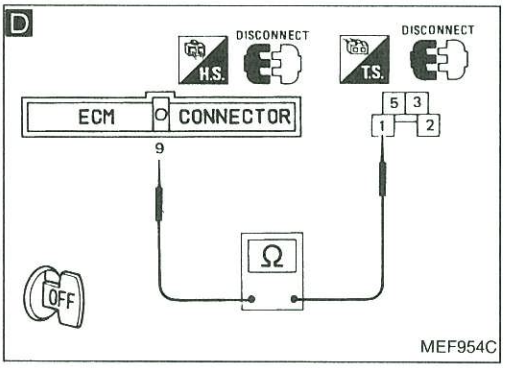


MEF954C

E

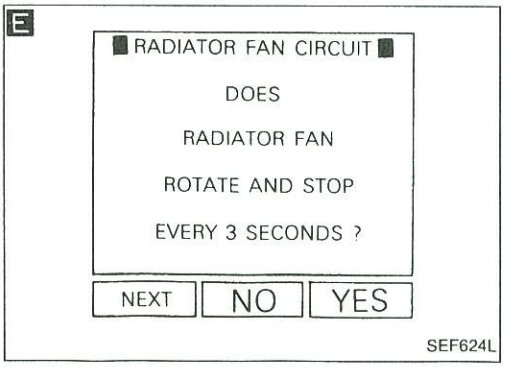


SEF624L

INSPECTION START

A

CHECK CONDENSER FAN OPERATION.
1) Start engine.
2) Set A/C temperature lever at full cold position.
3) Turn air conditioner switch "ON".
4) Turn blower fan switch "ON".
5) Run engine at idle for a few minutes with air conditioner operating.
6) Make sure that condenser fan operates.

O.K. → INSPECTION END

N.G.

B

CHECK POWER SUPPLY.
1) Turn air conditioner switch "OFF".
2) Turn blower fan switch "OFF".
3) Stop engine.
4) Disconnect condenser fan relay.
5) Turn ignition switch "ON".
6) Check voltage between terminals ②, ③ and ground.
**Voltage: Battery voltage**

N.G. → Check the following.
- Harness connectors (M11), (E101)
- "GY" fusible link
- "G" fusible link
- 10A fuse
- Harness continuity between battery and condenser fan relay
- Harness continuity between fuse and condenser fan relay

If N.G., repair harness or connectors.

O.K.

C

CHECK GROUND CIRCUIT.
1) Turn ignition switch "OFF".
2) Disconnect condenser fan motor harness connector.
3) Check harness continuity between terminal ⓐ and terminal ⑤, terminal ⓑ and body ground.
**Continuity should exist.**

N.G. → Repair harness or connectors.

O.K.

D

CHECK OUTPUT SIGNAL CIRCUIT.
1) Disconnect ECM harness connector.
2) Check harness continuity between ECM terminal ⑨ and terminal ①.
**Continuity should exist.**

N.G. → Check the following.
- Harness connectors (F8), (E9)
- Harness continuity between ECM and condenser fan relay

If N.G., repair harness or connectors.

O.K.

Ⓐ

GI MA EM LC EF & EC FE CL MT AT PD FA RA BR ST BF HA EL

## Diagnostic Procedure 43 (Cont'd)

E

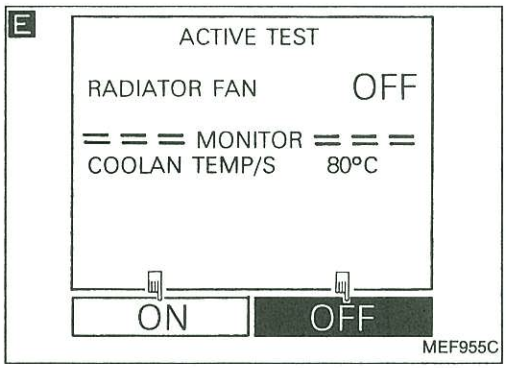


Ⓐ

CHECK COMPONENT
(Condenser fan relay).
Refer to "Electrical Components Inspection".
(See page EF & EC-166.)

N.G. → Replace condenser fan relay.

O.K. ↓

E

CHECK COMPONENT
(Condenser fan motor).

1) Reconnect condenser fan relay, condenser fan motor harness connector and ECM harness connector.
2) Perform "RADIATOR FAN CIRCUIT" in "FUNCTION TEST" mode with CONSULT.

OR

2) Start engine.
3) Perform "RADIATOR FAN TEST" in "ACTIVE TEST" mode with CONSULT.

OR

Refer to "Electrical Components Inspection".
(See page EF & EC-168.)

N.G. → Replace condenser fan motor.

O.K. ↓

Check ECM pin terminals for damage or the connection of ECM harness connector.

## Diagnostic Procedure 44

### POWER STEERING OIL PRESSURE SWITCH (Not self-diagnostic item)

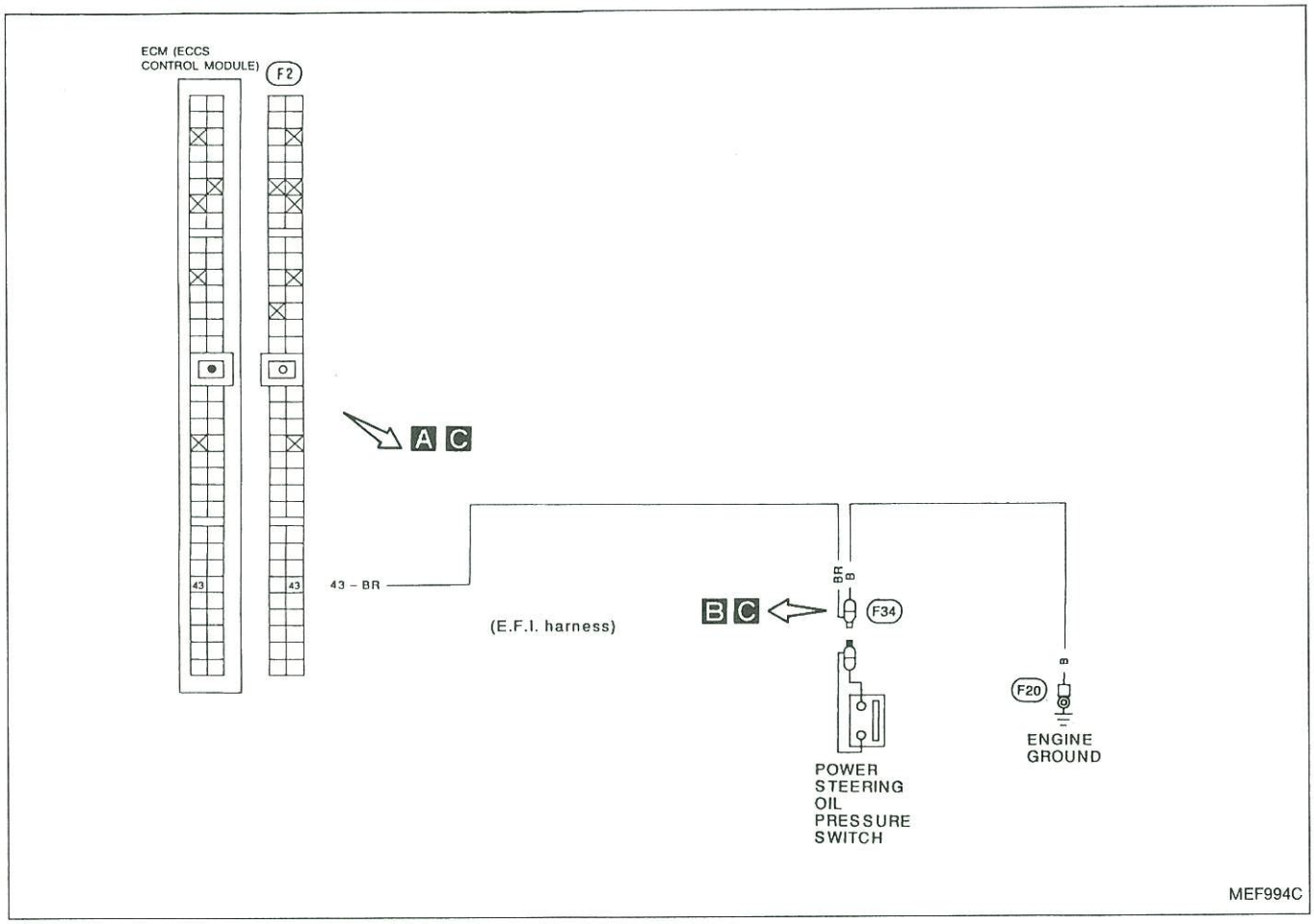


### Harness layout

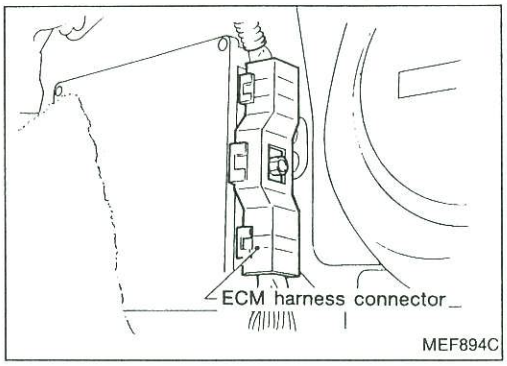


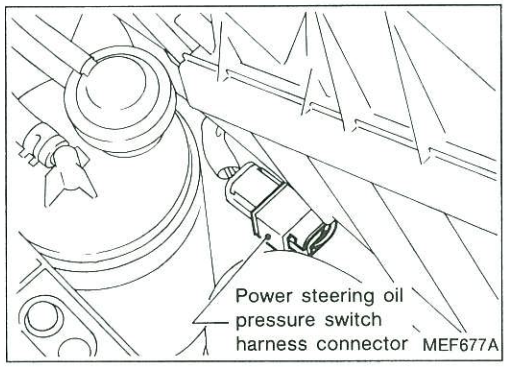

## Diagnostic Procedure 44 (Cont'd)

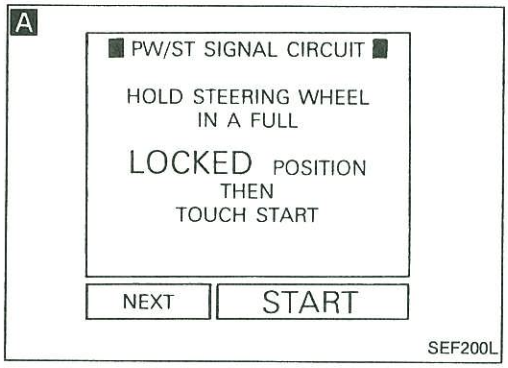


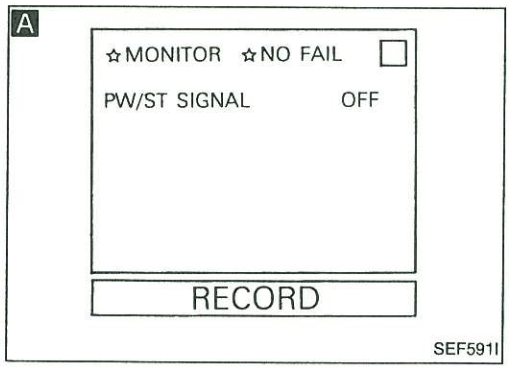


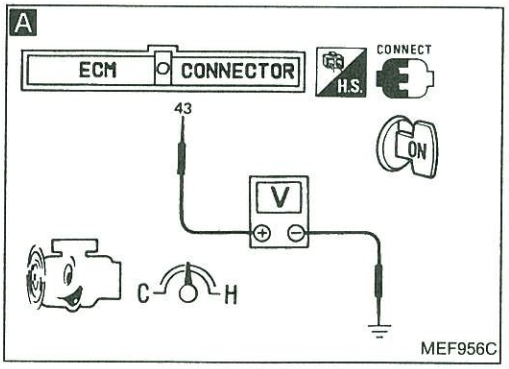


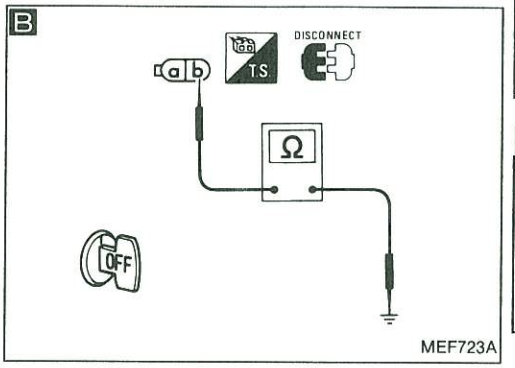


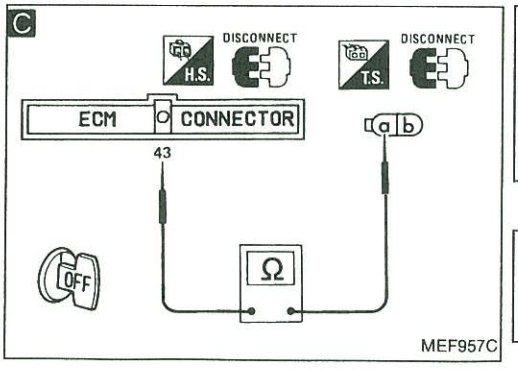


INSPECTION START

**A**

CHECK OVERALL FUNCTION.

1) Turn ignition switch "ON".
2) Perform "PW/ST SIGNAL CIRCUIT" in "FUNCTION TEST" mode with CONSULT.

O.K. → INSPECTION END

OR

1) Start engine.
2) Check power steering oil pressure switch signal in "DATA MONITOR" mode with CONSULT.

**Steering is neutral position: OFF**
**Steering is turned: ON**

OR

1) Start engine.
2) Check voltage between ECM terminal ㊵ and ground with CONSULT or tester.

**Voltage:**
**When steering wheel is turned quickly.**
**Approximately 0V**
**Except above**
**Approximately 7 - 9V**

N.G. ↓

**B**

CHECK GROUND CIRCUIT.

1) Stop engine.
2) Disconnect power steering oil pressure switch harness connector.
3) Check harness continuity between terminal ⓑ and engine ground.

**Continuity should exist.**

N.G. → Repair harness or connectors.

O.K. ↓

**C**

CHECK INPUT SIGNAL CIRCUIT.

1) Disconnect ECM harness connector.
2) Check harness continuity between ECM terminal ㊸ and terminal ⓐ.

**Continuity should exist.**

N.G. → Repair harness or connectors.

O.K. ↓

CHECK COMPONENT
(Power steering oil pressure switch).
Refer to "Electrical Components Inspection".
(See page EF & EC-167.)

N.G. → Replace power steering oil pressure switch.

O.K. ↓

Check ECM pin terminals for damage or the connection of ECM harness connector.

## Diagnostic Procedure 45

### NEUTRAL POSITION SWITCH/A/T CONTROL UNIT (NEUTRAL POSITION SIGNAL) (Not self-diagnostic item)

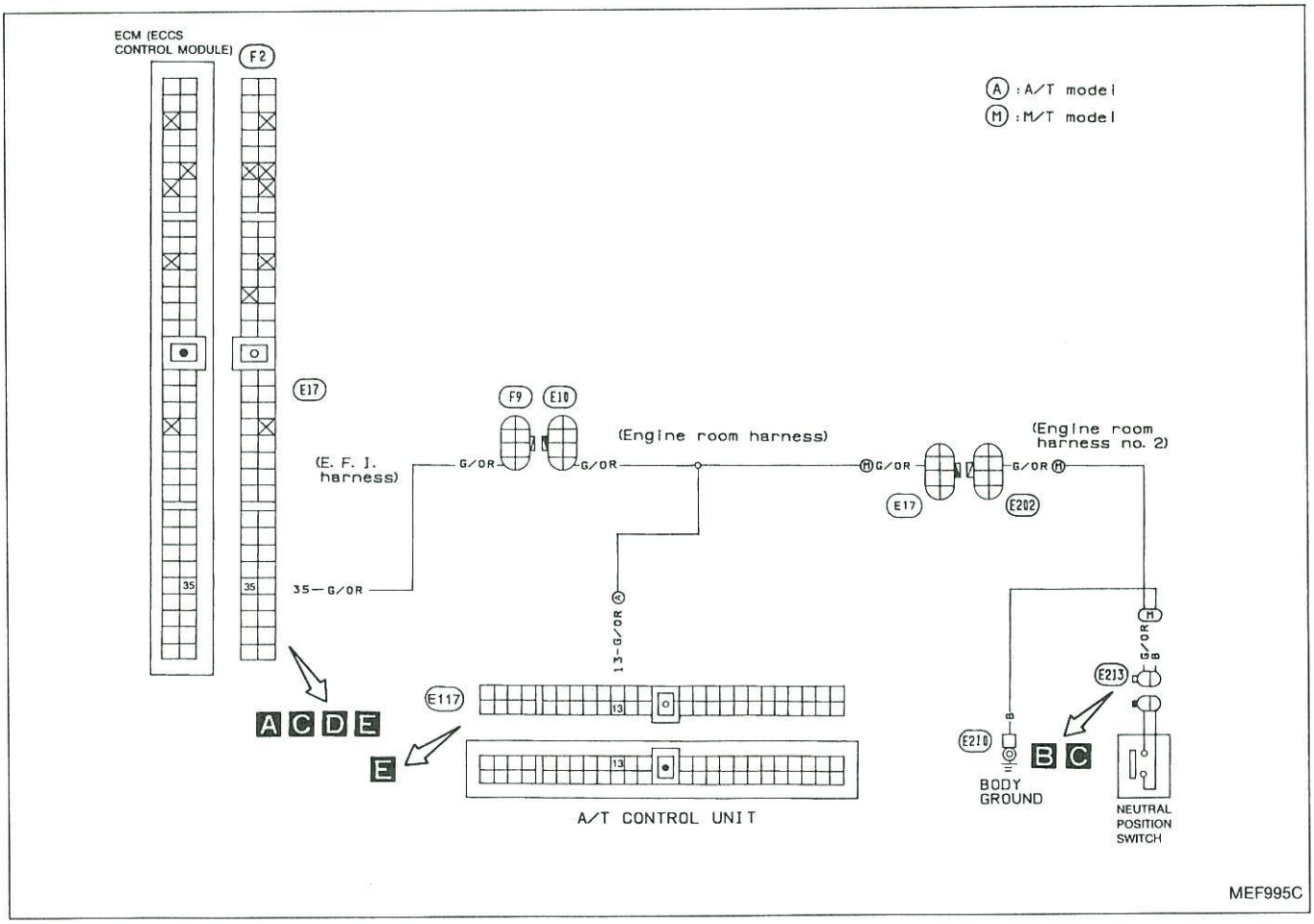


### Harness layout

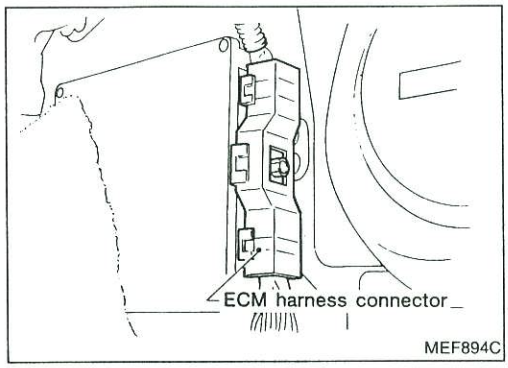


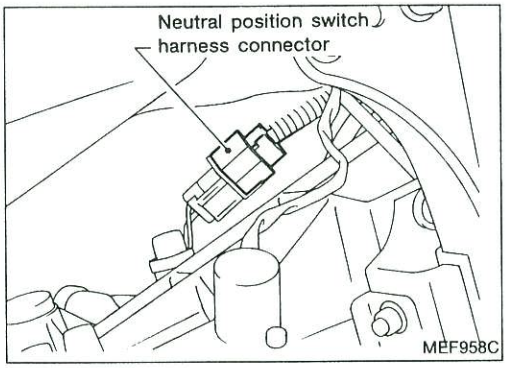


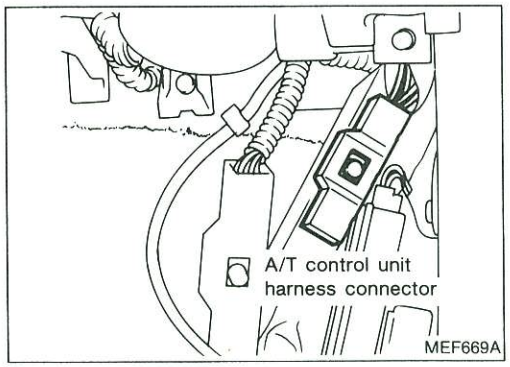

## Diagnostic Procedure 45 (Cont'd)

A

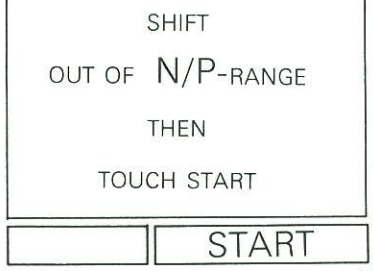


SEF206L

A

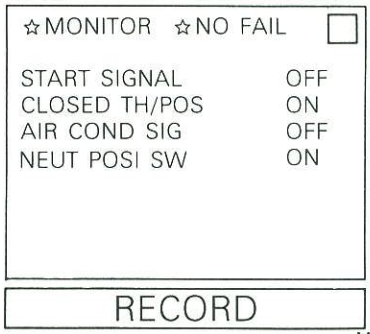


MEF936C

A

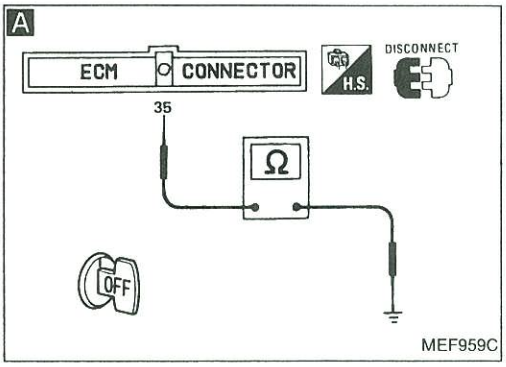


MEF959C

B

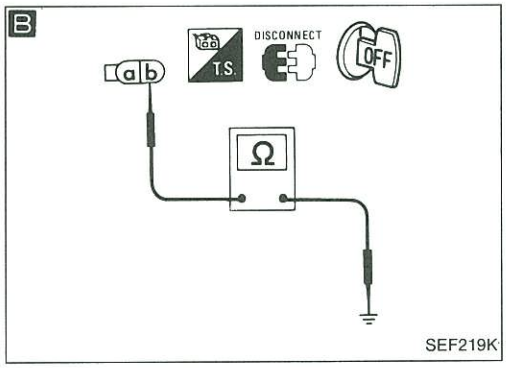


SEF219K

C

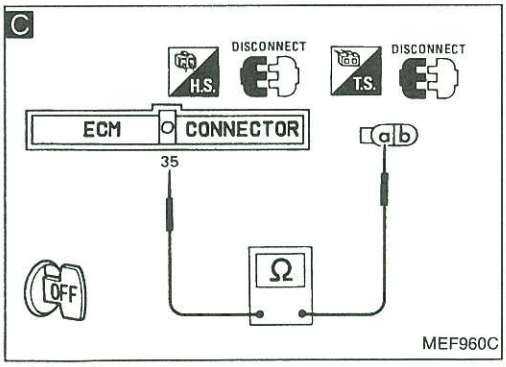


MEF960C

**Neutral position switch**

↓

INSPECTION START

↓

A

CHECK OVERALL FUNCTION.

1) Turn ignition switch "ON".
2) Perform "NEUTRAL POSI SW CKT" in "FUNCTION TEST" mode with CONSULT.

O.K. → INSPECTION END

OR

1) Turn ignition switch "ON".
2) Check neutral position switch signal in "DATA MONITOR" mode with CONSULT.

**Neutral position: ON**
**Except above: OFF**

OR

1) Set shift lever to the neutral position.
2) Disconnect ECM harness connector.
3) Check harness continuity between ECM terminal ㉟ and body ground.

**Continuity should exist.**

N.G.

↓

B

Turn ignition switch "OFF".

↓

C

CHECK GROUND CIRCUIT.

1) Disconnect neutral position switch harness connector.
2) Check harness continuity between terminal ⓑ and body ground.

**Continuity should exist.**

N.G. → Repair harness or connectors.

O.K.

↓

Disconnect ECM harness connector.

↓

CHECK INPUT SIGNAL CIRCUIT.

1) Check harness continuity between ECM terminal ㉟ and terminal ⓐ.

**Continuity should exist.**

N.G. → Check the following.
- Harness connectors (F9), (E10)
- Harness connectors (E17), (E202)
- Harness continuity between ECM and neutral position switch

If N.G., repair harness or connectors.

O.K.

↓

Ⓐ

## Diagnostic Procedure 45 (Cont'd)

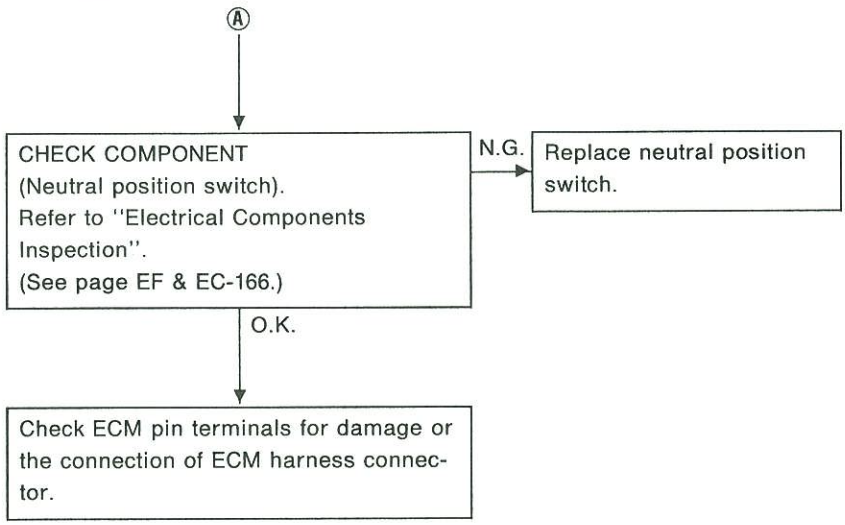

## Diagnostic Procedure 45 (Cont'd)

D

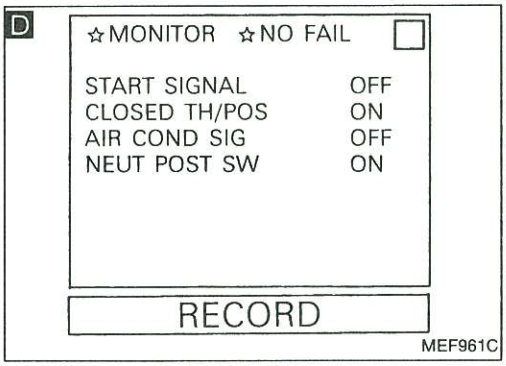


D

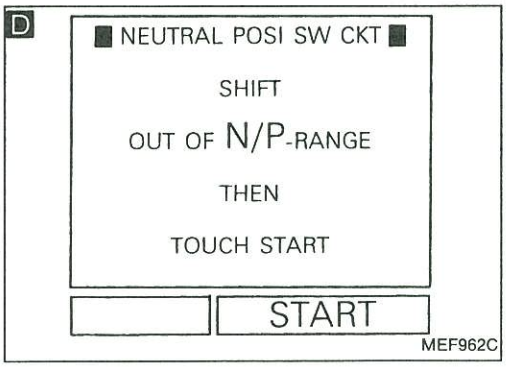


D

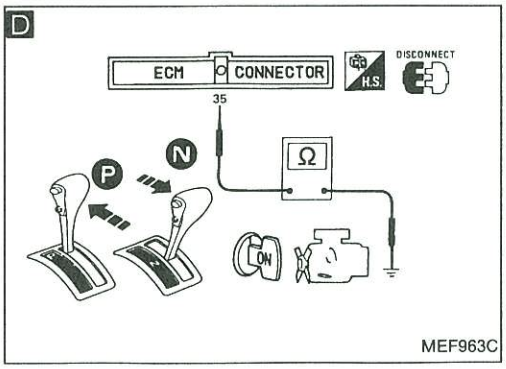


E

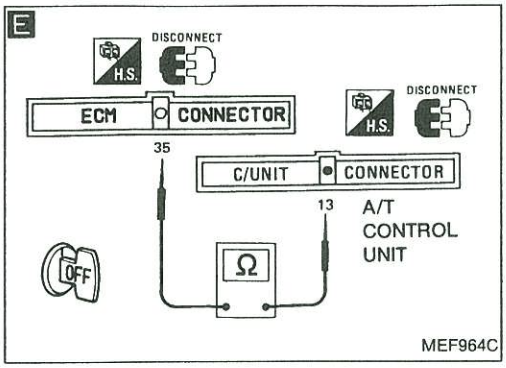


**A/T control unit**

↓

INSPECTION START

↓

D

CHECK OVERALL FUNCTION.

1) Turn ignition switch "ON".
2) Perform "NEUTRAL POSI SW CKT" in "FUNCTION TEST" mode with CONSULT.

O.K. → INSPECTION END

OR

1) Turn ignition switch "ON".
2) Check neutral position switch signal in "DATA MONITOR" mode with CONSULT.
   **"N" or "P": position ON**
   **Except above: OFF**

OR

1) Make sure that inhibitor switch circuit functions properly. (Refer to AT section.)
2) Disconnect ECM harness connector.
3) Shift selector lever to "P" position.
4) Turn ignition switch "ON".
5) Check harness continuity between ECM terminal ㉟ and body ground.
   **Continuity should exist.**
6) Shift selector lever to "N" position.
7) Check harness continuity between ECM terminal ㉟ and body ground.
   **Continuity should exist.**

↓ N.G.

E

CHECK INPUT SIGNAL CIRCUIT.

1) Turn ignition switch "OFF".
2) Disconnect A/T control unit harness connector.
3) Check harness continuity between ECM terminal ㉟ and terminal ⑬.
   **Continuity should exist.**

N.G. → Check the following.
- Harness connectors (F9), (E10)
- Harness continuity between ECM and A/T control unit

If N.G., repair harness or connectors.

↓ O.K.

Check ECM pin terminals for damage or the connection of ECM harness connector.

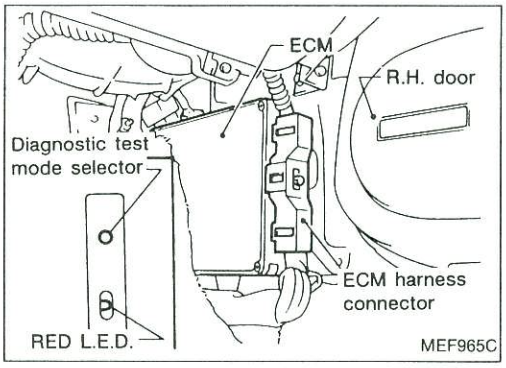


## Electrical Components Inspection

### ECM INPUT/OUTPUT SIGNAL INSPECTION

1. ECM is located behind front passenger side dash. For this inspection, remove the front passenger side dash.

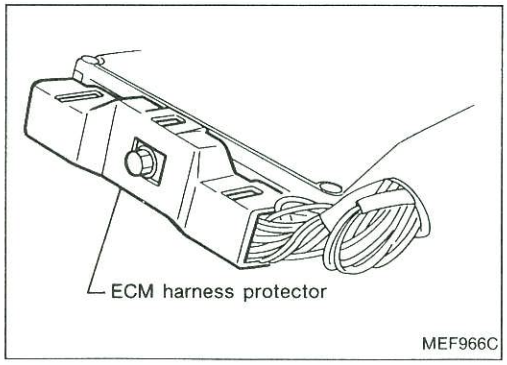


2. Remove ECM harness protector.

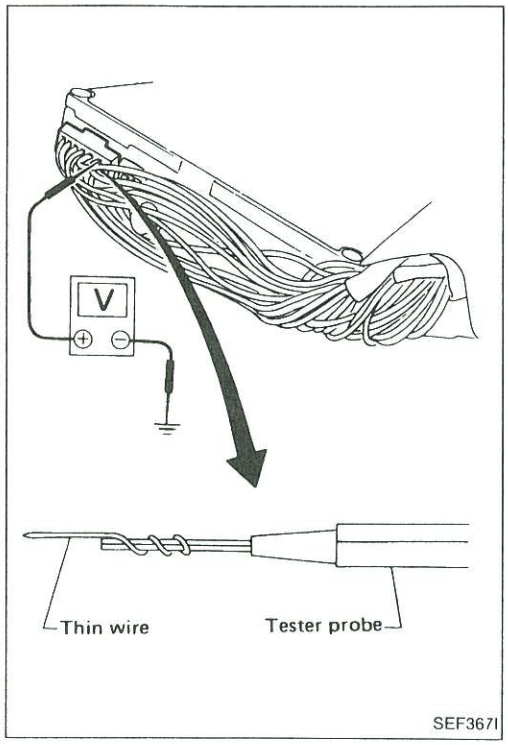


3. Perform all voltage measurements with the connectors connected. Extend tester probe as shown to perform tests easily.

## ECM inspection table

*Data are reference values.

| TER-MINAL NO. | ITEM | CONDITION | *DATA |
|---|---|---|---|
| 1 | Ignition signal | Engine is running.<br>└ Idle speed | 0.2 - 0.3V |
| | | Engine is running.<br>└ Engine speed is 2,000 rpm. | Approximately 0.8V |
| 3 | Ignition check | Engine is running.<br>└ Idle speed | BATTERY VOLTAGE (11 - 14V) |
| 4 | ECCS relay (Self-shutoff) | Engine is running.<br>Ignition switch "OFF"<br>└ For approximately 1 second after turning ignition switch "OFF" | 0 - 1V |
| | | Ignition switch "OFF"<br>└ Approximately 1 second after turning ignition switch "OFF" | BATTERY VOLTAGE (11 - 14V) |
| 8 | EGR temperature sensor | Engine is running.<br>└ EGR system is not operating. | Less than 4.5V |
| | | Engine is running.<br>└ EGR system is operating. | 0 - 1.0V |
| 9 | Condenser fan relay | Engine is running.<br>└ Condenser fan is not operating. | BATTERY VOLTAGE (11 - 14V) |
| | | Engine is running.<br>└ Condenser fan is operating. | Approximately 0.7V |
| 11 | Air conditioner relay | Engine is running.<br>└ Both A/C switch and blower switch are "ON". | Approximately 0.7V |
| | | Engine is running.<br>└ A/C switch is "OFF". | BATTERY VOLTAGE (11 - 14V) |
| 16 | Mass air flow sensor | Engine is running.<br>└ Idle speed | 0.8 - 3.0V<br>Output voltage varies with engine speed. |
| 18 | Engine coolant temperature sensor | Engine is running. | 0 - 5.0V<br>Output voltage varies with engine water temperature. |
| 19 | Oxygen sensor | Engine is running.<br>└ After warming up sufficiently | 0 - Approximately 1.0V |
| 20 | Throttle position sensor | Ignition switch "ON" | 0.3 - Approximately 5V<br>Output voltage varies with the throttle position. |

## Electrical Components Inspection (Cont'd)

*Data are reference values.

| TER-MINAL NO. | ITEM | CONDITION | *DATA |
|---|---|---|---|
| 20 | Throttle position sensor | Ignition switch "ON" | 0.3 - Approximately 5V<br>Output voltage varies with the throttle position. |
| 22<br>30 | Crankshaft position sensor (Reference signal) | Engine is running.<br>└ **Do not run engine at high speed under no-load.** | 0.1 - 1.3V |
| 25 | S.C.V. control solenoid valve | Engine is running. (Warm-up condition)<br>└ Idle speed | Approximately 0.7V |
| | | Engine is running.<br>└ Engine speed is about 2,000 rpm. | BATTERY VOLTAGE (11 - 14V) |
| 27 | Knock sensor | Engine is running.<br>└ Idle speed | Approximately 2.5V |
| 31<br>40 | Crankshaft position sensor (Position signal) | Engine is running.<br>└ **Do not run engine at high speed under no-load.** | 2.0 - 3.0V |
| 34 | Start signal | Ignition switch "ON" | Approximately 0V |
| | | Ignition switch "START" | BATTERY VOLTAGE (11 - 14V) |
| 35 | Neutral position switch | Ignition switch "ON"<br>└ Neutral position | 0V |
| | | Ignition switch "ON"<br>└ Except the above gear position | Approximately 6V |
| 36 | Ignition switch | Ignition switch "OFF" | 0V |
| | | Ignition switch "ON" | BATTERY VOLTAGE (11 - 14V) |
| 37 | Throttle position sensor power supply | Ignition switch "ON" | Approximately 5V |
| 38<br>47 | Power supply for ECM | Ignition switch "ON" | BATTERY VOLTAGE (11 - 14V) |
| 41 | Air conditioner switch | Engine is running.<br>└ Both air conditioner switch and blower switch are "ON". | Approximately 0V |
| | | Engine is running.<br>└ Air conditioner switch is "OFF". | BATTERY VOLTAGE (11 - 14V) |

## Electrical Components Inspection (Cont'd)

*Data are reference values.

| TER-MINAL NO. | ITEM | CONDITION | *DATA |
|---|---|---|---|
| 43 | Power steering oil pressure switch | Engine is running.<br>└ Steering wheel is being turned. | 0V |
| | | Engine is running.<br>└ Steering wheel is not being turned. | Approximately 8V |
| 45 | Fan switch | Engine is running.<br>└ Fan switch is "ON". | Approximately 0V |
| | | Engine is running.<br>└ Fan switch is "OFF". | Approximately 7V |
| 46 | Power supply (Back-up) | Ignition switch "OFF" | BATTERY VOLTAGE (11 - 14V) |
| 101 | Injector No. 1 | Engine is running. | BATTERY VOLTAGE (11 - 14V) |
| 103 | Injector No. 3 | | |
| 110 | Injector No. 2 | | |
| 112 | Injector No. 4 | | |
| 102 | PAIRC-solenoid valve | Engine is running. (Warm-up condition)<br>— Idle speed<br>└ During deceleration | Approximately 0.7V |
| | | Engine is running.<br>└ Accelerator pedal is depressed. | BATTERY VOLTAGE (11 - 14V) |
| 104 | Fuel pump relay | Ignition switch "ON"<br>└ For 5 seconds after turning ignition switch "ON"<br>Engine is running. | Approximately 0.8V |
| | | Ignition switch "ON"<br>└ 5 seconds after turning ignition switch "ON" | BATTERY VOLTAGE (11 - 14V) |
| 105 | EGR & canister control solenoid valve | Engine is running. (Warm-up condition)<br>└ Idle speed | Approximately 0.7V |
| | | Engine is running. (Warm-up condition)<br>└ Engine speed is about 2,000 rpm. | BATTERY VOLTAGE (11 - 14V) |

## Electrical Components Inspection (Cont'd)

*Data are reference values.

| TER-MINAL NO. | ITEM | CONDITION | *DATA |
|---|---|---|---|
| 113 | IACV-AAC valve | Engine is running.<br>└ Idle speed | 9 - 14V |
| | | Engine is running.<br>— Steering wheel is being turned.<br>— Air conditioner is operating.<br>— Rear defogger is "ON".<br>└ Headlamp are in high position. | 5 - 9V |



### ECM HARNESS CONNECTOR TERMINAL LAYOUT

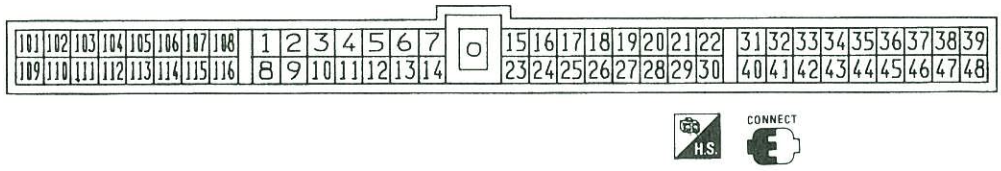


SEF419H

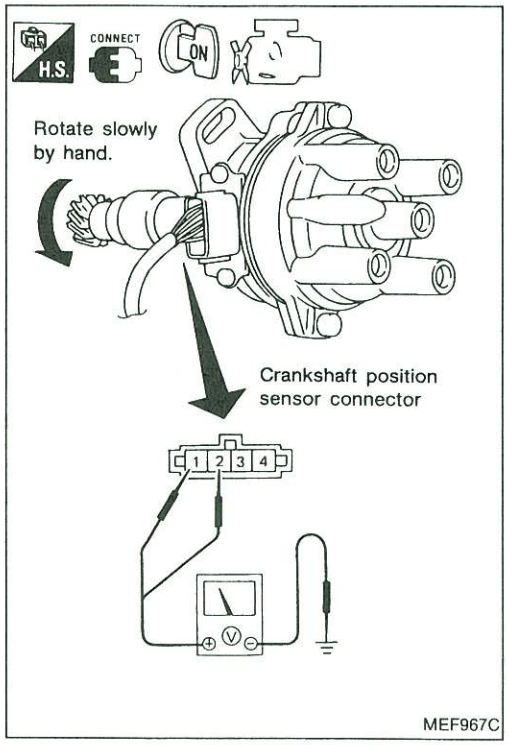


MEF967C

### CRANKSHAFT POSITION SENSOR

1. Remove distributor assembly from engine. Disconnect ignition wires and center cable from distributor. (Crankshaft position sensor harness connector should remain connected.)
2. Turn ignition switch "ON".
3. Rotate crankshaft position sensor shaft slowly by hand and check voltage between terminals ①, ② and ground.

| Terminal | Voltage |
|---|---|
| ① (180° signal) | Voltage fluctuates between 5V and 0V. |
| ② (1° signal) | |

4. Rotate crankshaft position sensor shaft slowly by hand and check voltage between terminals ⓐ and ⓑ ground.
   Measure with circuit tester set in 100 mV range, AC.
   **Tester pointer deflects: O.K.**
   **Tester pointer does not deflect: N.G.**
   If N.G., replace crankshaft position sensor.

**After this inspection, diagnostic trouble code No. 11 might be displayed though the crankshaft position sensor is functioning properly. In this case erase the stored memory.**

## Electrical Components Inspection (Cont'd)

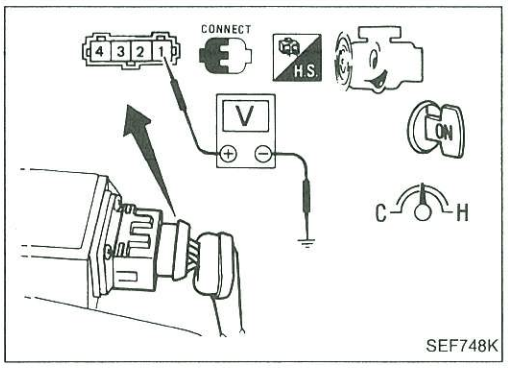


### MASS AIR FLOW SENSOR

1. Fold back mass air flow sensor harness connector rubber as shown in the figure if the harness connector is connected.
2. Turn ignition switch "ON".
3. Start engine and warm it up sufficiently.
4. Check voltage between terminal ① and ground.

| Conditions | Voltage V |
|---|---|
| Ignition switch "ON" (Engine stopped.) | Approximately 0.2 |
| Idle (Engine is warmed-up sufficiently.) | Approximately 1.0 - 1.4 |

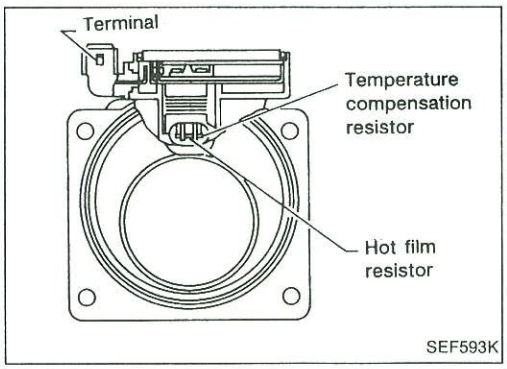


5. If N.G., remove mass air flow sensor from air duct. Check hot film for damage or dust.

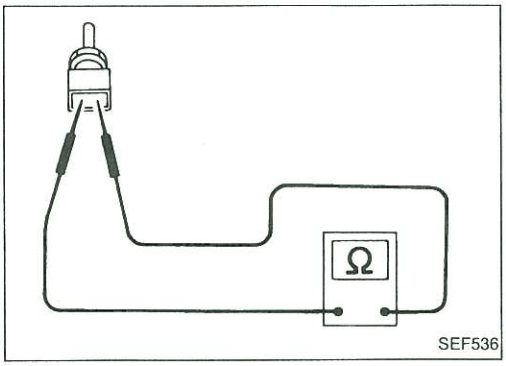


### ENGINE COOLANT TEMPERATURE SENSOR

1. Disconnect engine coolant temperature sensor harness connector.
2. Check resistance as shown in the figure.

| Temperature °C (°F) | Resistance kΩ |
|---|---|
| 20 (68) | 2.1 - 2.9 |
| 50 (122) | 0.68 - 1.00 |
| 80 (176) | 0.30 - 0.33 |

If N.G., replace engine coolant temperature sensor.

## Electrical Components Inspection (Cont'd)

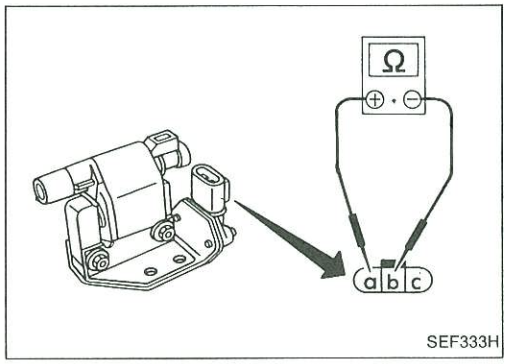

SEF333H

### POWER TRANSISTOR

1. Disconnect power transistor harness connector.
2. Check power transistor continuity between terminals with a digital tester as shown in the figure.

| ⊕ terminal side | ⊖ terminal side | | | | | |
|---|---|---|---|---|---|---|
| | Terminal ⓐ | | Terminal ⓑ | | Terminal ⓒ | |
| | Resistance Ω | Result | Resistance Ω | Result | Resistance Ω | Result |
| Terminal ⓐ | — | — | ∞ | O.K. | ∞ | O.K. |
| | — | — | Not ∞ or 0 | N.G. | Not ∞ or 0 | N.G. |
| | — | — | 0 | N.G. | 0 | N.G. |
| Terminal ⓑ | ∞ | N.G. | — | — | ∞ | N.G. |
| | Not ∞ or 0 | O.K. | — | — | Not ∞ or 0 | O.K. |
| | 0 | N.G. | — | — | 0 | N.G. |
| Terminal ⓒ | ∞ | N.G. | ∞ | N.G. | — | — |
| | Not ∞ or 0 | O.K. | Not ∞ or 0 | O.K. | — | — |
| | 0 | N.G. | 0 | N.G. | — | — |

If N.G., replace power transistor.

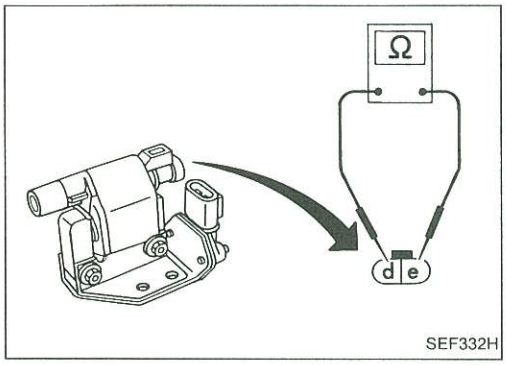

SEF332H

### IGNITION COIL

1. Disconnect ignition coil harness connector.
2. Check resistance as shown in the figure.

| Terminal | Resistance |
|---|---|
| ⓓ - ⓔ | Approximately 0.7Ω |

If N.G., replace power transistor.

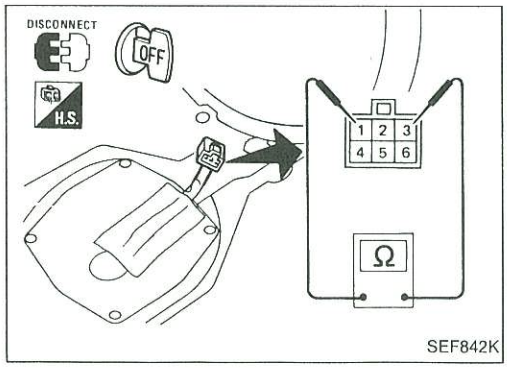

SEF842K

### FUEL PUMP

1. Disconnect fuel pump harness connector.
2. Check resistance between terminals ① and ③.
   **Resistance: Approximately 0.5Ω**

If N.G., replace fuel pump.

## Electrical Components Inspection (Cont'd)

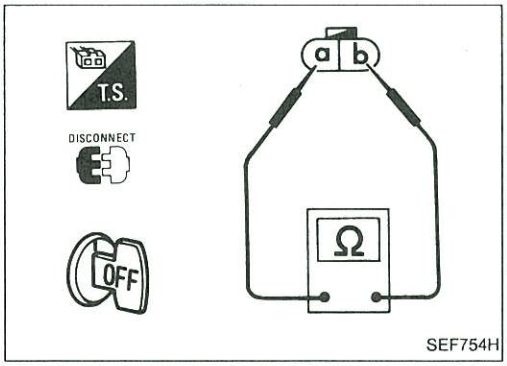

SEF754H

### VEHICLE SPEED SENSOR

1. Jack up rear wheels. Use stands to support vehicle.
2. Disconnect vehicle speed sensor harness connector.
3. Check continuity between terminals (a) and (b) while rotating rear wheel by hand.

**Continuity should come and go.**

If N.G. replace vehicle speed sensor.

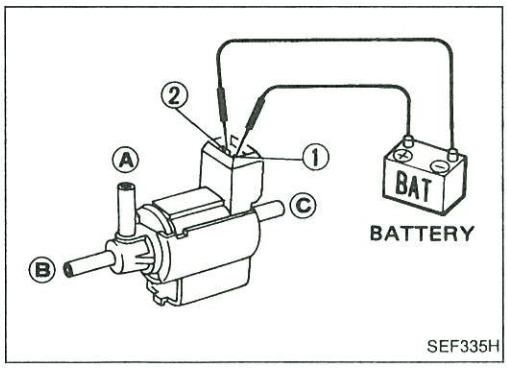

SEF335H

### EGR AND CANISTER CONTROL SOLENOID VALVE, S.C.V. CONTROL SOLENOID VALVE AND PAIRC-SOLENOID VALVE

Check air passage continuity.

| Condition | Air passage continuity between Ⓐ and Ⓑ | Air passage continuity between Ⓐ and Ⓒ |
|---|---|---|
| 12V direct current supply between terminals ① and ② | Yes | No |
| No supply | No | Yes |

If N.G., replace solenoid valve.

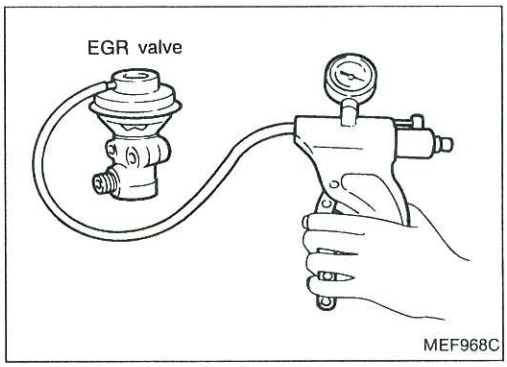

MEF968C

### EGR VALVE

Apply vacuum to E.G.R. vacuum port with a hand vacuum pump.

**EGR valve spring should lift.**

If N.G., replace EGR valve.

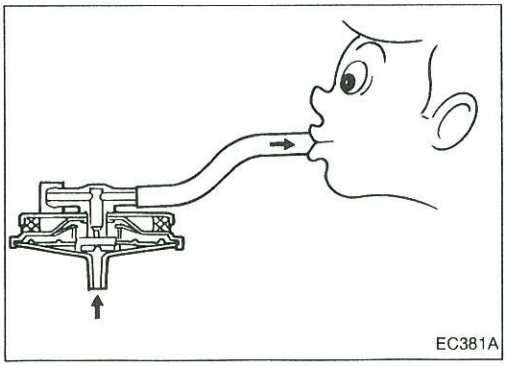
EC381A

### EGRC-BPT VALVE

Plug one of two ports of EGRC-BPT valve.

Apply a pressure above 0.490 kPa (50 $mmH_2O$, 1.97 $inH_2O$) to check for leakage. If a leak is noted, replace valve.

## Electrical Components Inspection (Cont'd)

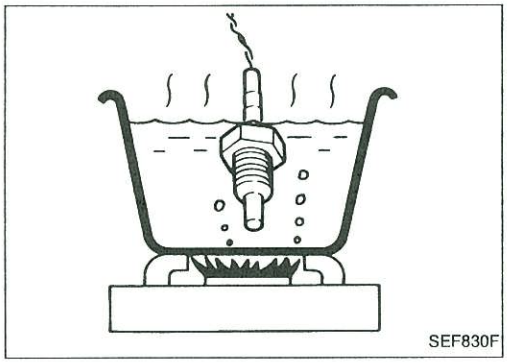
SEF830F

### EGR TEMPERATURE SENSOR

Check resistance change and resistance value at 100°C (212°F).

- **Resistance should decrease in response to temperature increase.**

  **Resistance: 100°C (212°F)**
  **85.3 ± 8.53 kΩ**

  If N.G., replace EGR temperature sensor.

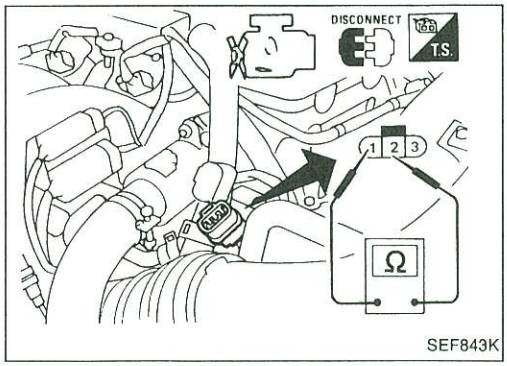

SEF843K

### THROTTLE POSITION SENSOR

1. Disconnect throttle position sensor harness connector.
2. Make sure that resistance between terminals ① and ② changes when opening throttle valve manually.

| Accelerator pedal conditions | Resistance kΩ |
|---|---|
| Completely released | Approximately 2 |
| Partially released | 2 - 10 |
| Completely depressed | Approximately 10 |

If N.G., replace throttle position sensor.

### Adjustment for throttle position sensor (M/T model only)

If throttle position sensor is replaced or removed, it is necessary to install in proper position, by following the procedure as shown below:

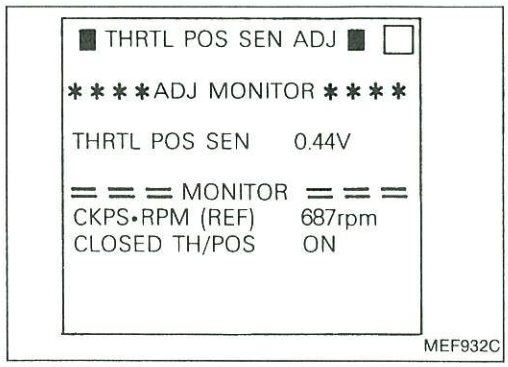

MEF932C

1. Install throttle position sensor body in throttle body. Do not tighten bolts. Leave bolts loose.
2. Connect throttle position sensor harness connector.
3. Start engine and warm it up sufficiently.
4. Perform "THRTL POS SEN ADJ" in "WORK SUPPORT" mode.

   Measure output voltage of throttle position sensor using voltmeter.

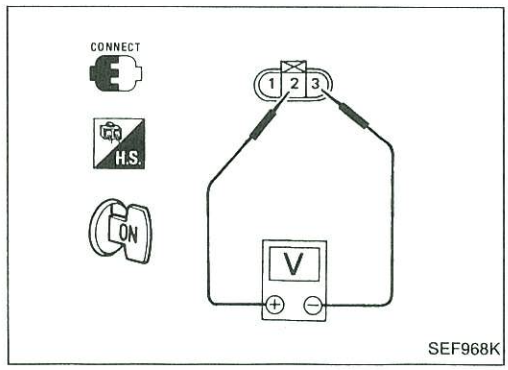

SEF968K

5. Adjust by rotating throttle position sensor body so that output voltage is 0.5 ± 0.2V.
6. Tighten mounting bolts.
7. Disconnect throttle position sensor harness connector for a few seconds and then reconnect it.

## Electrical Components Inspection (Cont'd)

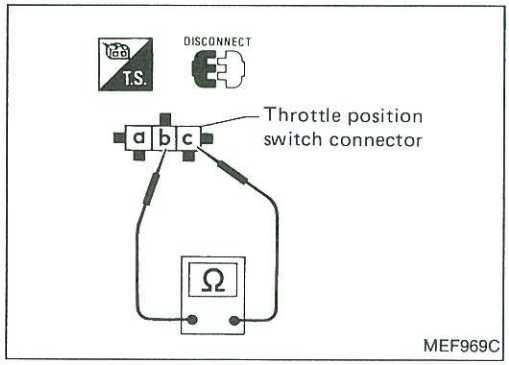


### CLOSED THROTTLE POSITION SWITCH (A/T model only)

1. Warm up engine sufficiently.
2. Disconnect throttle position switch harness connector.
3. Check continuity between terminals ⓑ and ⓒ.

| Accelerator pedal condition | Continuity |
|---|---|
| Released | Yes |
| Depressed | No |

If N.G., replace throttle position switch.

### Adjustment for closed throttle position switch (A/T model only)

If throttle position sensor or closed throttle position switch is replaced or removed, it is necessary to install it in the proper position, by following the procedure as shown below:

1. Install throttle position sensor body in throttle body. Do not tighten bolts.
2. Connect throttle position sensor and throttle position switch harness connector.
3. Start engine and warm it up sufficiently.
4. Disconnect throttle position switch harness connector.
5. Check closed throttle position switch OFF → ON speed with circuit tester, closing throttle valve manually.

**Closed throttle position switch OFF → ON speed:**
**A/T: Engine speed in "N" position**
**900 ± 150 rpm**

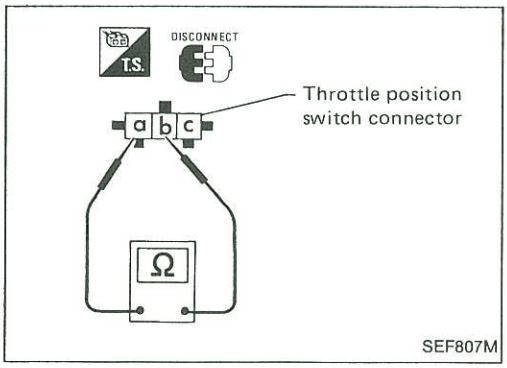


### WIDE OPEN THROTTLE POSITION SWITCH (AT model only)

1. Warm up engine sufficiently.
2. Disconnect throttle position switch harness connector.
3. Check continuity between terminals ⓐ and ⓑ.

| Accelerator pedal condition | Continuity |
|---|---|
| Released fully | No |
| Depressed fully | Yes |

If N.G., replace throttle position switch.



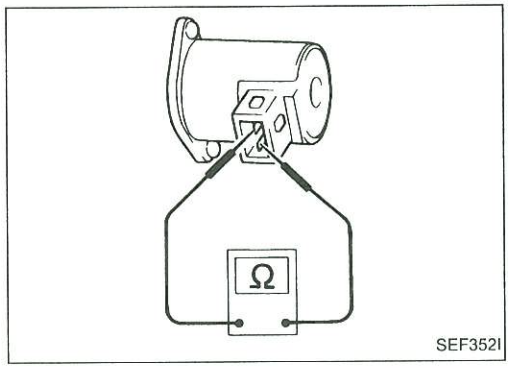


### IACV-AAC VALVE

- Check IACV-AAC valve resistance.
  **Resistance:**
  **Approximately 10Ω**

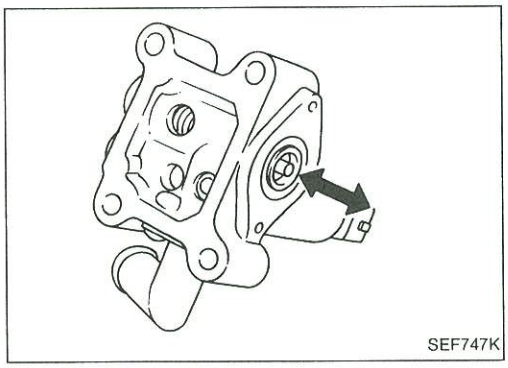


- Check plunger for seizing or sticking.
- Check for broken spring.

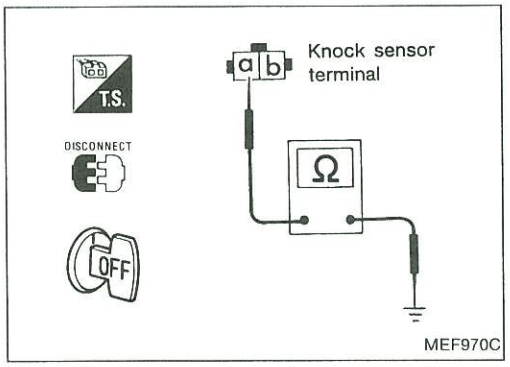


### KNOCK SENSOR

1. Disconnect knock sensor sub-harness connector.
2. Check continuity between terminal ⓐ and ground.

**Continuity should exist.**

- It is necessary to use an ohmmeter which can measure more than 10 MΩ.

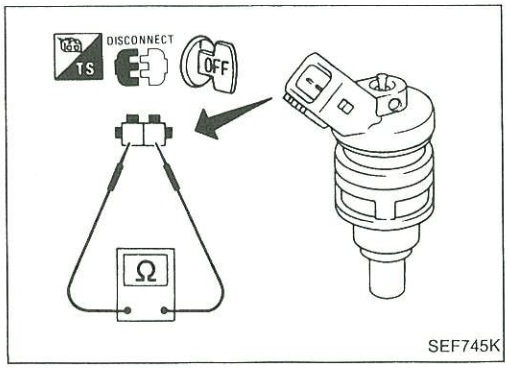


### INJECTOR

1. Disconnect injector harness connector.
2. Check resistance between terminals as shown in the figure.
   **Resistance: Approximately 11Ω [at 20°C (68°F)]**
   If N.G., replace injector.

## Electrical Components Inspection (Cont'd)

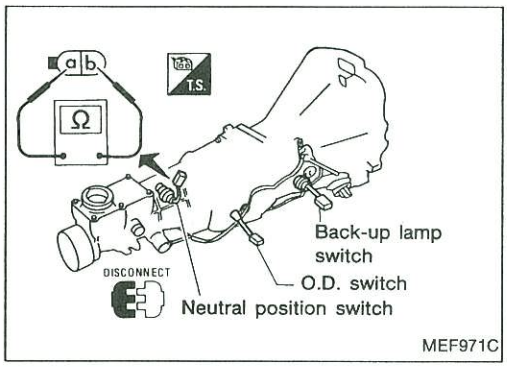


### NEUTRAL POSITION SWITCH (M/T models)

Check continuity between terminals as shown in the figure.

| Conditions | Continuity |
|---|---|
| Shift to neutral position | Yes |
| Shift to other position | No |

If N.G., replace neutral position switch.

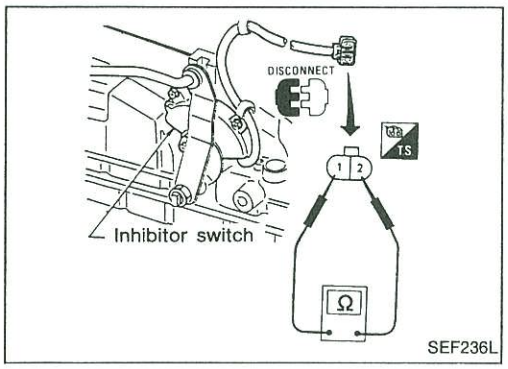


### INHIBITOR SWITCH (A/T models)

Check continuity between terminals ① and ②.

| Conditions | Continuity |
|---|---|
| Shift to "P" or "N" position | Yes |
| Shift to other position | No |

If N.G., replace inhibitor switch.

**Refer to section AT.**

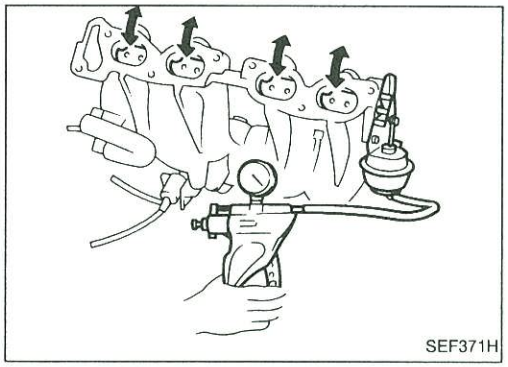


### SWIRL CONTROL VALVE

Supply vacuum to actuator and check swirl control valve operation.

| Conditions | Swirl control valve |
|---|---|
| Supply vacuum to actuator | Close |
| No supply | Open |

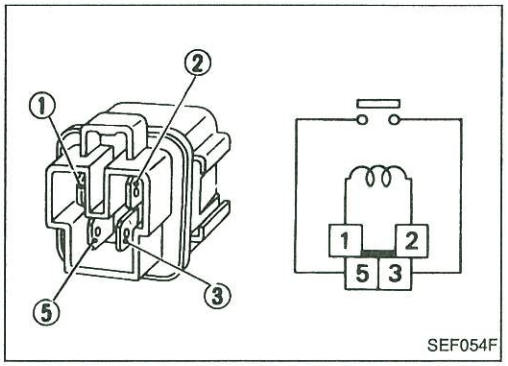


### ECCS RELAY, FUEL PUMP RELAY, CONDENSER FAN RELAY AND IGNITION COIL RELAY

Check continuity between terminals ③ and ⑤.

| Conditions | Continuity |
|---|---|
| 12V direct current supply between terminals ① and ② | Yes |
| No current supply | No |

If N.G., replace relay.

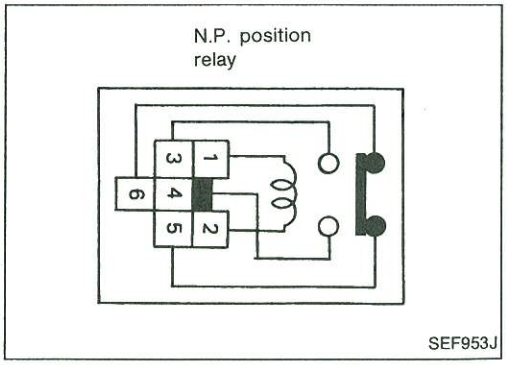


### N.P. POSITION RELAY

Check continuity between terminals ③ and ④.

| Conditions | Continuity |
|---|---|
| 12V direct current supply between terminals ① and ②. | Yes |
| No current supply | No |

If N.G., replace relay.

## Electrical Components Inspection (Cont'd)

### POWER STEERING OIL PRESSURE SWITCH

1. Disconnect power steering oil pressure switch harness connector.
2. Check continuity between terminals.

| Conditions | Continuity |
|---|---|
| Steering wheel is being turned | Yes |
| Steering wheel is not being turned | No |

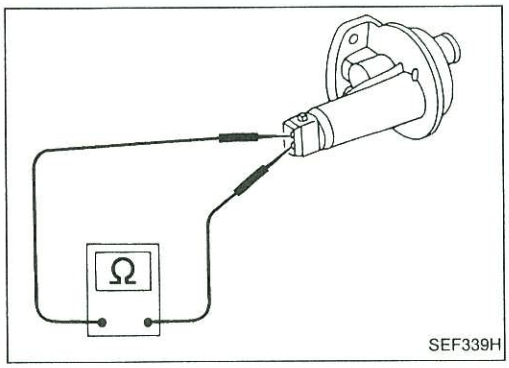


### IACV-AIR REGULATOR

- Check IACV-air regulator resistance.
  **Resistance:**
  **Approximately 75Ω**
- Check IACV-air regulator for clogging.

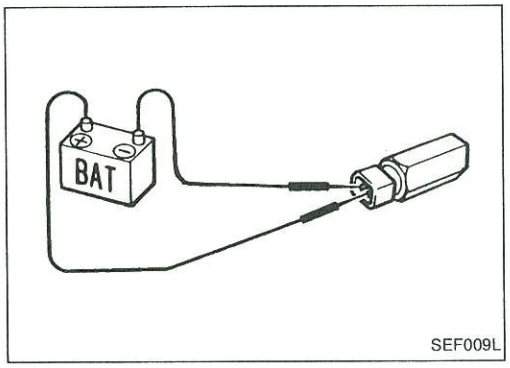


### IACV-FICD SOLENOID VALVE

- Check that clicking sound is heard when applying 12V direct current to terminals.

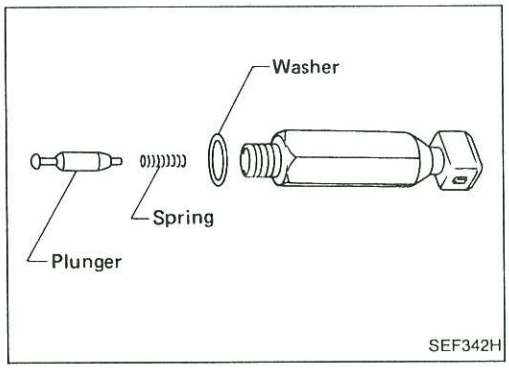


- Check plunger for seizure or sticking.
- Check for broken spring.

### PAIR VALVE

Apply vacuum to vacuum motor, suck or blow hose to make sure that air flows only towards the air induction side.

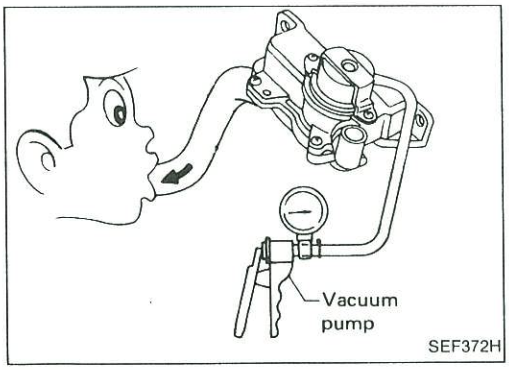

## Electrical Components Inspection (Cont'd)

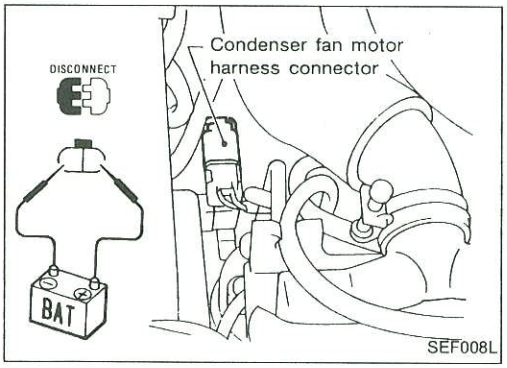


### CONDENSER FAN MOTOR

Check that condenser fan operates when applying 12V direct current to terminals as shown in figure.

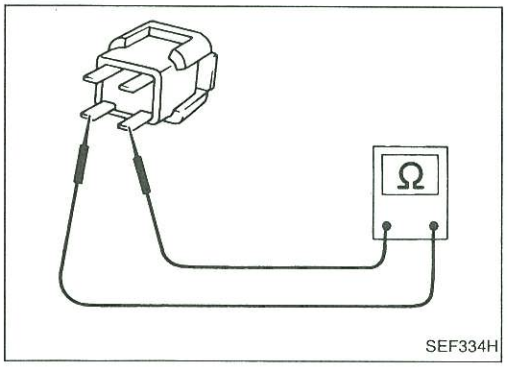


### RESISTOR

1. Disconnect resistor harness connector.
2. Check resistance between terminals ⓐ and ⓑ.
   **Resistance: Approximately 2.2kΩ**
   If N.G., replace resistor.

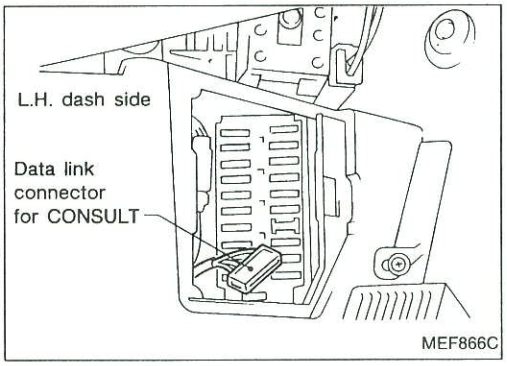


## Releasing Fuel Pressure

**Before disconnecting fuel line, release fuel pressure from fuel line to eliminate danger.**

Perform "FUEL PRESSURE RELEASE" in "WORK SUPPORT" mode with CONSULT.

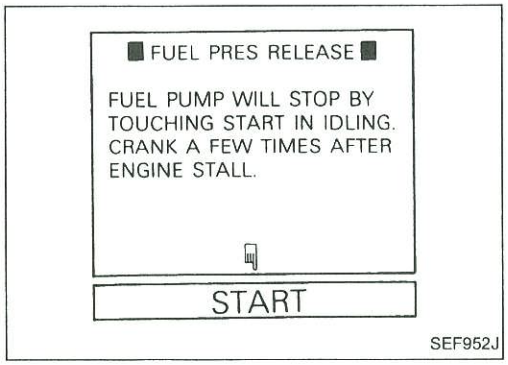


1. Remove fuel pump fuse.
2. Start engine.
3. After engine stalls, crank it two or three times to release all fuel pressure.
4. Turn ignition switch off and reconnect fuel pump fuse.

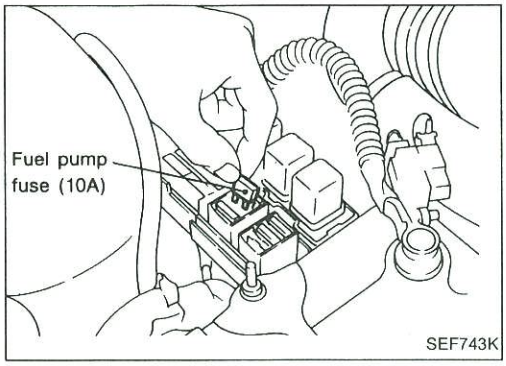


## Fuel Pressure Check

**a. Make sure that clamp screw does not contact adjacent parts.**
**b. Use a torque driver to tighten clamps.**
**c. Use Pressure Gauge to check fuel pressure.**
**d. Do not perform fuel pressure check while fuel pressure regulator control system is operating; otherwise, fuel pressure gauge might indicate incorrect readings.**

1. Release fuel pressure to zero.
2. Disconnect fuel hose between fuel filter and fuel tube (engine side).
3. Install pressure gauge between fuel filter and fuel tube.
4. Start engine and check for fuel leakage.

## Fuel Pressure Check (Cont'd)

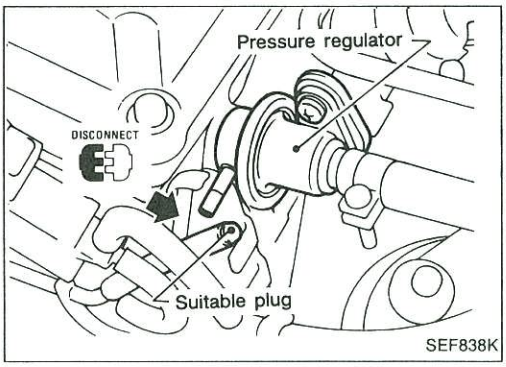


5. Read the indication of fuel pressure gauge.
   **At idling:**
   **When fuel pressure regulator valve vacuum hose is connected.**
   **Approximately 235 kPa (2.4 kg/cm$^2$, 34 psi)**
   **When fuel pressure regulator valve vacuum hose is disconnected.**
   **Approximately 294 kPa (3.0 kg/cm$^2$, 43 psi)**
6. Stop engine and disconnect fuel pressure regulator vacuum hose from intake manifold.
7. Plug intake manifold with a rubber cap.
8. Connect variable vacuum source to fuel pressure regulator.

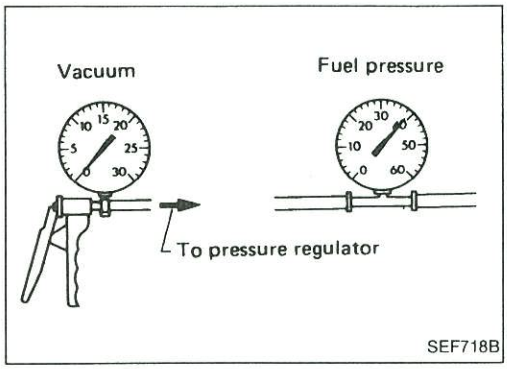


9. Start engine and read indication of fuel pressure gauge as vacuum is changed.

**Fuel pressure should decrease as vacuum increases. If results are unsatisfactory, replace fuel pressure regulator.**

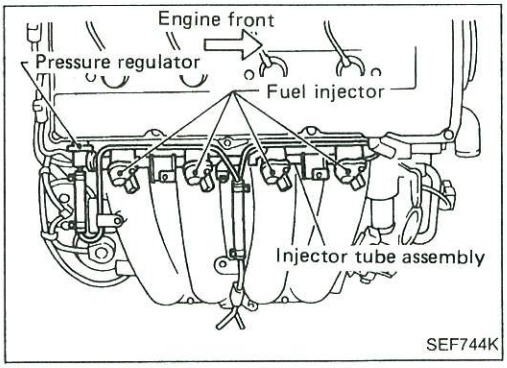


## Injector Removal and Installation

1. Release fuel pressure to zero.
2. Remove related covers, harnesses, wires and tubes.
3. Remove injector tube assembly with injectors from intake manifold.
4. Remove injectors from injector tube assembly.

- Push injector tail piece.
- Do not pull on the connector.

5. Install injectors as follows:

1) Clean exterior of injector tail piece.
2) Use new O-rings

**CAUTION:**
**After properly connecting injectors to fuel tube assembly, check connections for fuel leakage.**

6. Assemble injectors to injector tube assembly.
7. Install injector tube assembly to intake manifold.

## Description

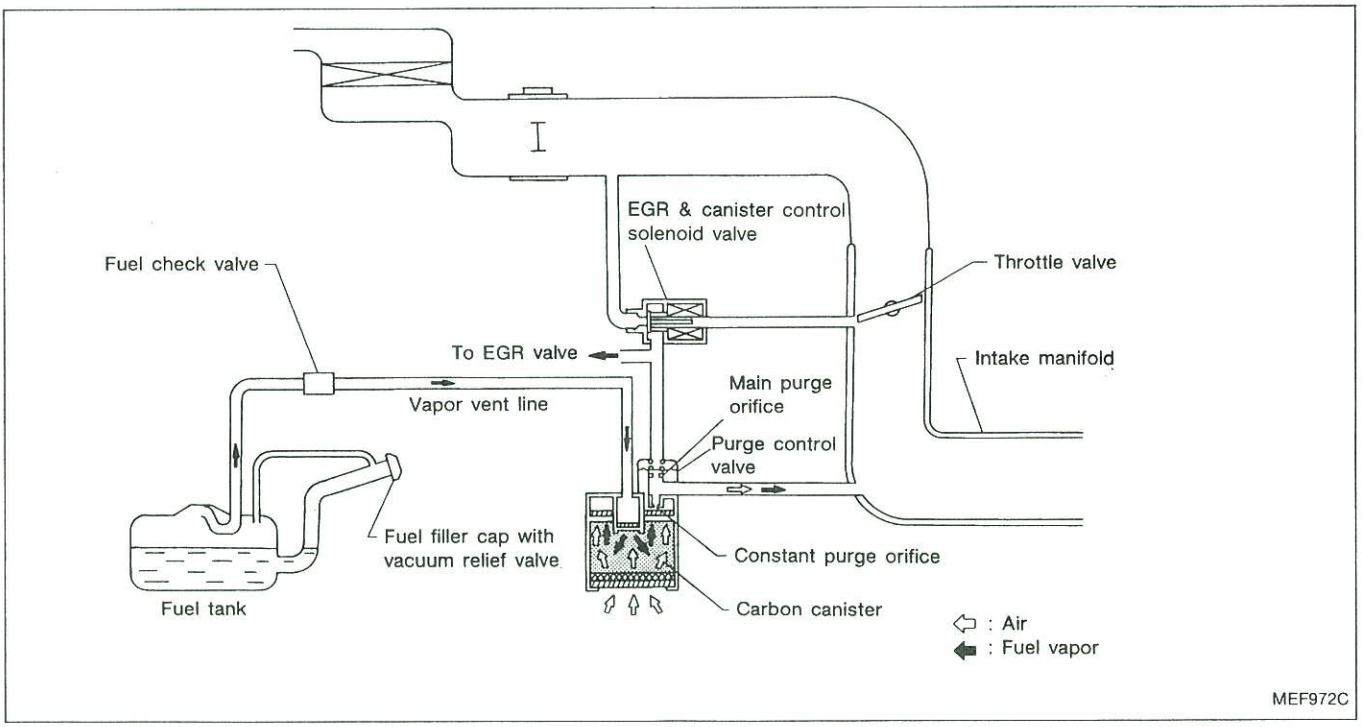


The evaporative emission system is used to reduce hydrocarbons emitted into the atmosphere from the fuel system. This reduction of hydrocarbons is accomplished by activated charcoals in the carbon canister.

The fuel vapor from the sealed fuel tank is led into the canister which contains activated carbon and the vapor is stored there when the engine is not running.

The canister retains the fuel vapor until the canister is purged by the air drawn through the bottom of the canister to the intake manifold when the engine is running. When the engine runs at idle, the purge control valve is closed.

Only a small amount of stored vapor flows into the intake manifold through the constant purge orifice. As the engine speed increases, and the throttle vacuum rises higher, the purge control valve opens and the vapor is sucked into the intake manifold through both the main purge orifice and the constant purge orifice.

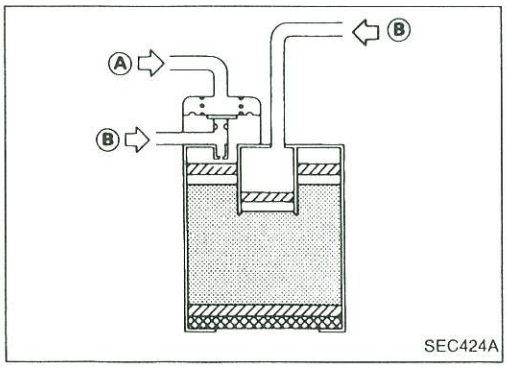


## Inspection

### CARBON CANISTER

Check carbon canister as follows:

Ⓐ : Blow air and ensure that there is no leakage.

Ⓑ : Blow air and ensure that there is leakage.

## Inspection (Cont'd)

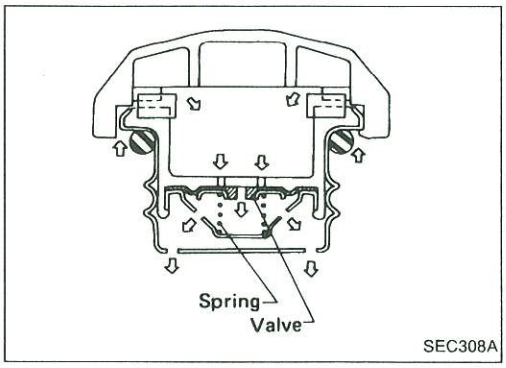


### FUEL TANK VACUUM RELIEF VALVE

1. Wipe clean valve housing.
2. Suck air through the cap. A slight resistance accompanied by valve clicks indicates that valve is in good mechanical condition. Note also that, by further sucking air, the resistance should disappear with valve clicks.
3. If valve is clogged or if no resistance is felt, replace cap as an assembly.

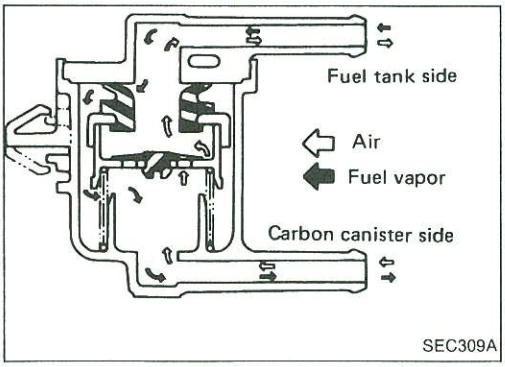


### FUEL CHECK VALVE

1. Blow air through connector on fuel tank side.
   A considerable resistance should be felt and a portion of air flow should be directed toward the canister.
2. Blow air through connector on canister side.
   Air flow should be smoothly directed toward fuel tank.
3. If fuel check valve is suspected of not properly functioning in steps 1 and 2 above, replace it.

## Description

This system returns blow-by gas to the intake collector.
The positive crankcase ventilation (P.C.V.) valve is provided to conduct crankcase blow-by gas to the intake manifold.
During partial throttle operation of the engine, the intake manifold sucks the blow-by gas through the P.C.V. valve.
Normally, the capacity of the valve is sufficient to handle any blow-by and a small amount of ventilating air.

The ventilating air is then drawn from the air duct, through the hose connecting air inlet tubes to rocker cover, into the crankcase.
Under full-throttle condition, the manifold vacuum is insufficient to draw the blow-by flow through the valve, and its flow goes through the hose connection in the reverse direction.
On vehicles with an excessively high blow-by some of the flow will go through the hose connection to the intake collector under all conditions.

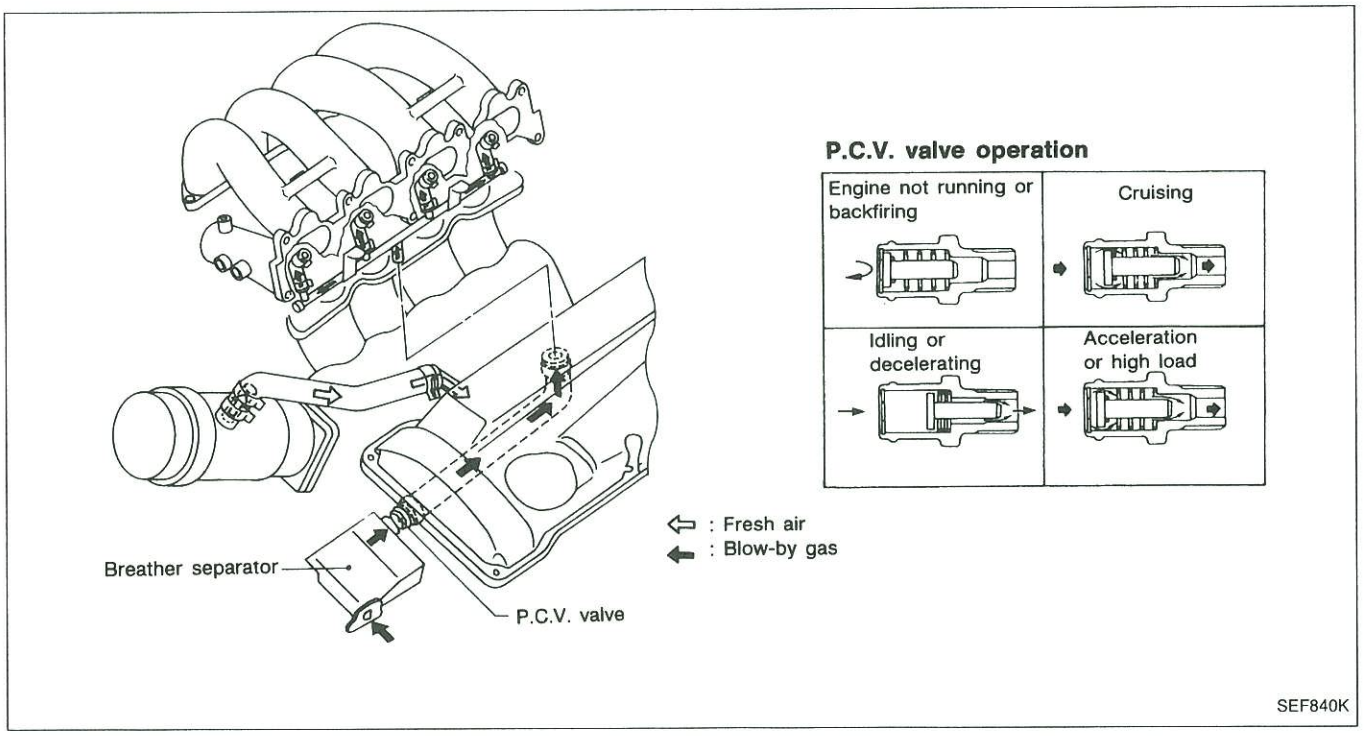


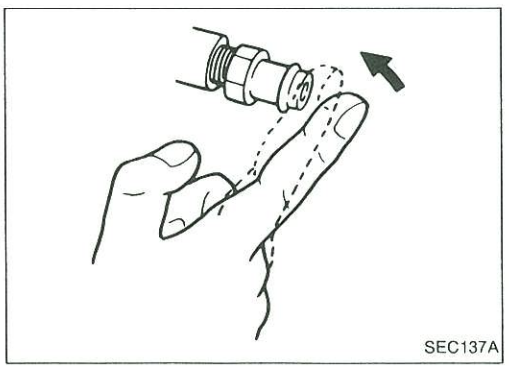


## Inspection

### P.C.V. (Positive Crankcase Ventilation)

With engine running at idle, remove ventilation hose from P.C.V. valve; if the valve is working properly, a hissing noise will be heard as air passes through it and a strong vacuum should be felt immediately when a finger is placed over valve inlet.

## Inspection (Cont'd)

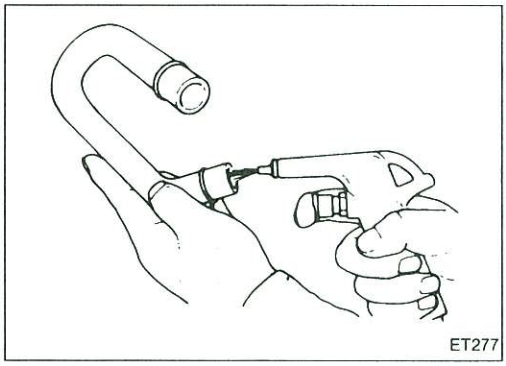


### VENTILATION HOSE

1. Check hoses and hose connections for leaks.
2. Disconnect all hoses and clean with compressed air. If any hose cannot be freed of obstructions, replace.

## General Specifications

| | |
|---|---|
| PRESSURE REGULATOR | |
| Fuel pressure at idling kPa (kg/cm$^2$, psi) | |
| Vacuum hose is connected | Approximately 235 (2.4, 34) |
| Vacuum hose is disconnected | Approximately 294 (3.0, 43) |

## Inspection and Adjustment

| | |
|---|---|
| Idle speed*1 rpm | |
| No-load*2 (in "N" position) | 700 ± 50 |
| Air conditioner: ON (in "N" position) | 1,000 ± 50 |
| Ignition timing | 20° ± 2° B.T.D.C. |
| Throttle position sensor (Closed throttle position) V | 0.4 - 0.5 |

*1: Feedback controlled and needs no adjustments
*2: Under the following conditions:
- Air conditioner switch: OFF
- Electric load: OFF (Lights, heater, fan & rear defogger)

### IGNITION COIL

| | | |
|---|---|---|
| Primary voltage | V | Battery voltage (11 - 14) |
| Primary resistance [at 20°C (68°F)] | Ω | Approximately 1.0 |
| Secondary resistance [at 20°C (68°F)] | kΩ | Approximately 10.0 |

### MASS AIR FLOW SENSOR

| | | |
|---|---|---|
| Supply voltage | V | Battery voltage (11 - 14) |
| Output voltage | V | 0.8 - 1.2 |

*: Engine is warmed up sufficiently and idling under no-load.

### ENGINE COOLANT TEMPERATURE SENSOR

| Temperature °C (°F) | Resistance kΩ |
|---|---|
| 20 (68) | 2.1 - 2.9 |
| 50 (122) | 0.68 - 1.00 |
| 80 (176) | 0.30 - 0.33 |

### EGR TEMPERATURE SENSOR

| | | |
|---|---|---|
| Resistance [at 100°C (212°F)] | kΩ | 85.3 ± 8.53 |

### FUEL PUMP

| | | |
|---|---|---|
| Resistance | Ω | Approximately 0.5 |

### IACV-AAC VALVE

| | | |
|---|---|---|
| Resistance | Ω | Approximately 10.0 |

### INJECTOR

| | | |
|---|---|---|
| Resistance | Ω | Approximately 11 |

### RESISTOR

| | | |
|---|---|---|
| Resistance | kΩ | Approximately 2.2 |

### THROTTLE POSITION SENSOR

| Accelerator pedal conditions | Resistance kΩ |
|---|---|
| Completely released | Approximately 2 |
| Partially released | 2 - 10 |
| Completely depressed | Approximately 10 |

# ACCELERATOR CONTROL, FUEL & EXHAUST SYSTEMS

SECTION FE

## CONTENTS


**ACCELERATOR CONTROL SYSTEM** ..... 2
Adjusting Accelerator Cable ..... 2
**FUEL SYSTEM** ..... 3
**EXHAUST SYSTEM** ..... 4

**CAUTION:**

- **When removing accelerator cable, make a mark to indicate lock nut's initial position.**
- **Check that throttle valve opens fully when accelerator pedal is fully depressed and that it returns to idle position when pedal is released.**
- **Check accelerator control parts for improper contact with any adjacent parts.**
- **When connecting accelerator cable, be careful not to twist or scratch its inner wire.**
- **Refer to section EL for A.S.C.D. cable adjustment.**
- **Refer to "ON-VEHICLE SERVICE" in section AT for Kickdown switch adjustment.**

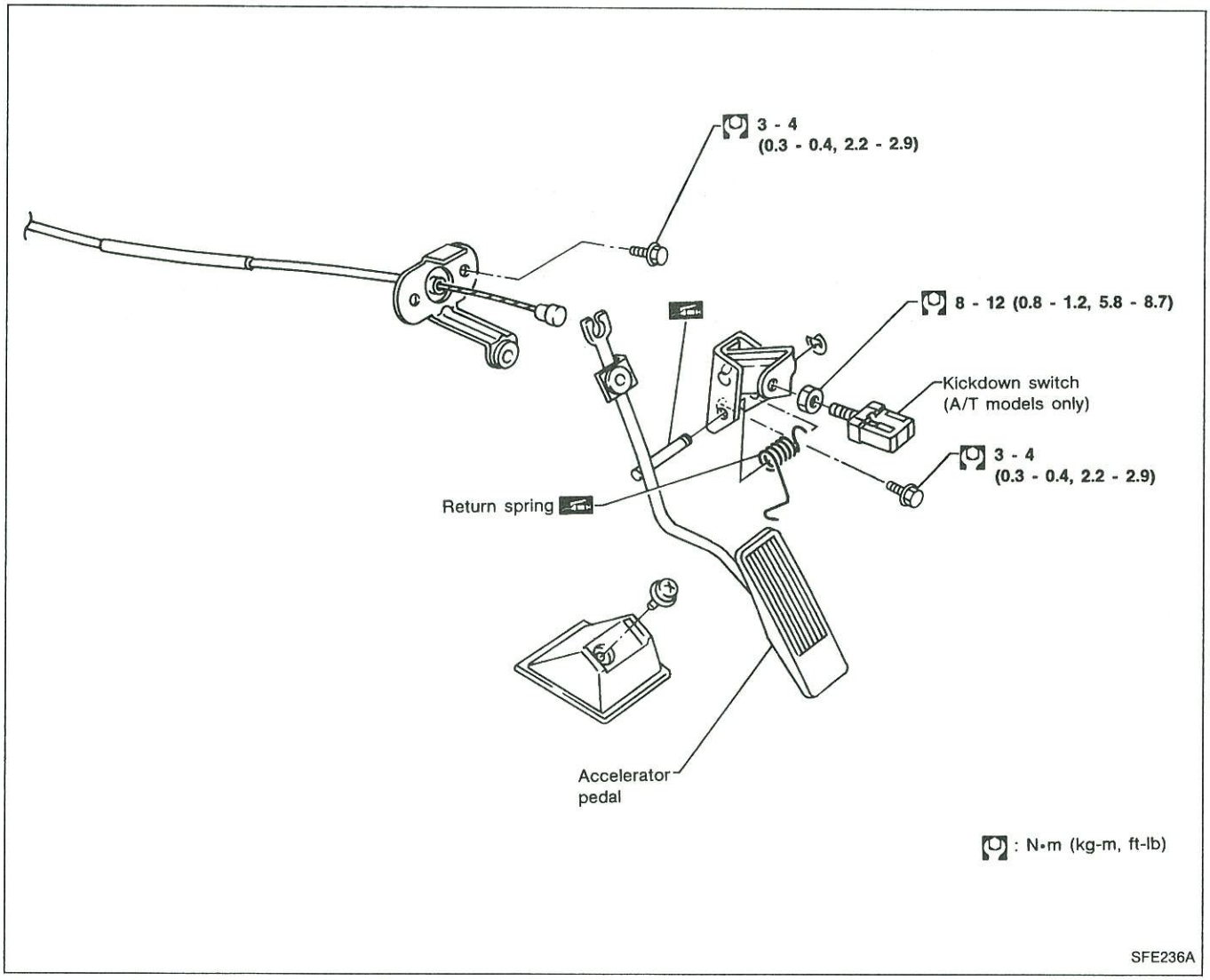


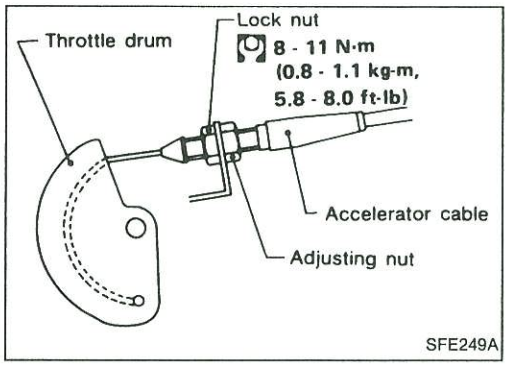


## Adjusting Accelerator Cable

1. Loosen lock nut, and tighten adjusting nut until throttle drum starts to move.
2. From that position turn back adjusting nut 1.5 to 2 turns, and fasten it with lock nut.

**WARNING:**

**When replacing fuel line parts, be sure to observe the following:**

- **Put a "CAUTION: INFLAMMABLE" sign in workshop.**
- **Do not smoke while servicing fuel system. Keep open flames and sparks away from work area.**
- **Be sure to disconnect battery ground cable before conducting operations.**
- **Be sure to furnish workshop with a $CO_2$ fire extinguisher.**
- **Put drained fuel in an explosion-proof container and put lid on securely.**

**CAUTION:**

- **For electric fuel pump model, before disconnecting fuel hose, release fuel pressure from fuel line. Refer to "Changing Fuel Filter" in section MA.**
- **Do not disconnect any fuel line unless absolutely necessary.**
- **Plug hose and pipe openings to prevent entry of dust or dirt.**
- **Always replace O-ring and clamps with new ones.**
- **Do not kink or twist hose and tube when they are installed.**
- **Do not tighten hose clamps excessively to avoid damaging hoses.**
- **When installing fuel check valve, be careful of its designated direction. (Refer to section EF & EC.)**
- **Tighten bolts to specified torque.**
- **After installation, run engine and check for leaks at connections.**

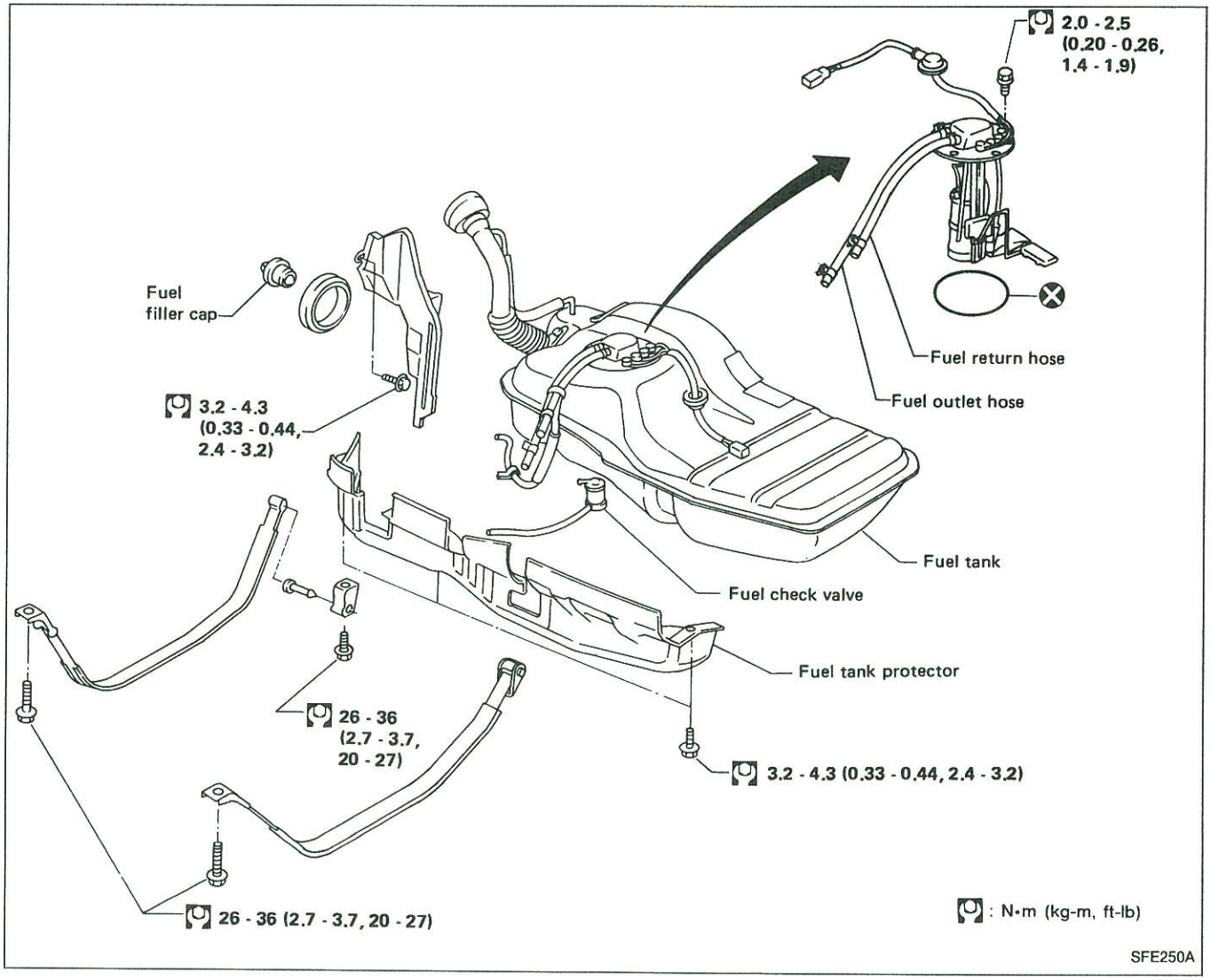

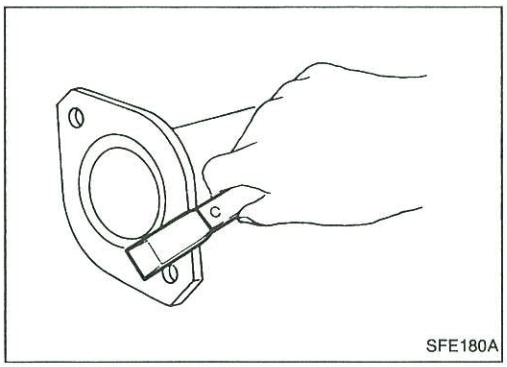


**CAUTION:**

- **Always replace exhaust gaskets with new ones when reassembling. If gasket is left on flange surface, scrape off completely as shown at left.**
- **With engine running, check all tube connections for exhaust gas leaks, and entire system for unusual noises.**
- **After installation, check to ensure that mounting brackets and mounting insulator are free from undue stress. If any of the above parts are not installed properly, excessive noise or vibration may be transmitted to the vehicle body.**

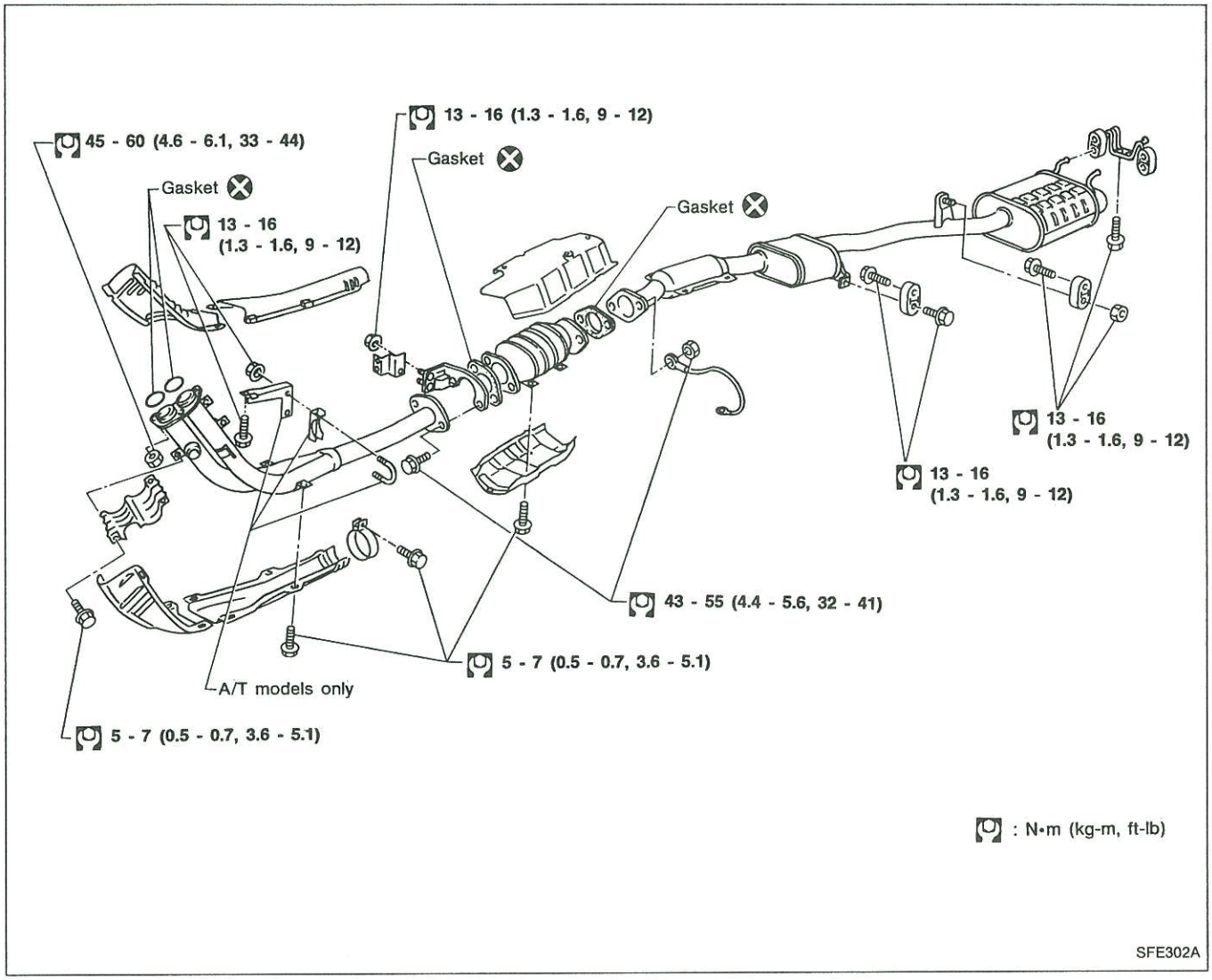

SECTION CL



# CONTENTS

**PRECAUTIONS AND PREPARATION** ..... 2
Precautions ..... 2
Special Service Tools ..... 2
Commercial Service Tools ..... 2
**CLUTCH SYSTEM** ..... 3
**INSPECTION AND ADJUSTMENT** ..... 4
Adjusting Clutch Pedal ..... 4
Bleeding Procedure ..... 5
**HYDRAULIC CLUTCH CONTROL** ..... 6
Clutch Master Cylinder ..... 6
Operating Cylinder ..... 7
**CLUTCH RELEASE MECHANISM** ..... 8
**CLUTCH DISC AND CLUTCH COVER** ..... 10
Clutch Cover and Flywheel ..... 10
Clutch Disc ..... 11
**SERVICE DATA AND SPECIFICATIONS (S.D.S.)** ..... 12
General Specifications ..... 12
Inspection and Adjustment ..... 12

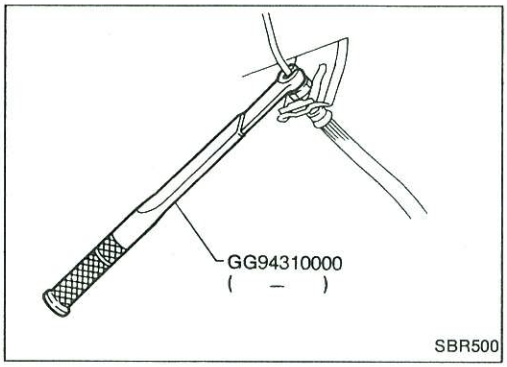


## Precautions

- **Recommended fluid is brake fluid "DOT 3".**
- **Never reuse drained brake fluid.**
- **Be careful not to splash brake fluid on painted areas.**
- **When removing and installing clutch piping, use Tool.**
- **Use new brake fluid to clean or wash all parts of master cylinder, operating cylinder and clutch damper.**
- **Never use mineral oils such as gasoline or kerosene. It will ruin the rubber parts of the hydraulic system.**

**WARNING:**
**After cleaning the clutch disc, wipe it with a dust collector. Do not use compressed air.**

## Special Service Tools

| Tool number<br>(Kent-Moore No.)<br>Tool name | Description | |
|---|---|---|
| ST20050010<br>( — )<br>Base plate | 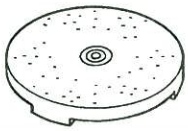 | Inspecting diaphragm spring of clutch cover |
| ST20050100<br>( — )<br>Distance piece | 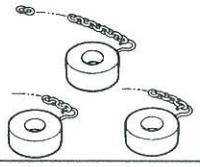 | Inspecting diaphragm spring of clutch cover |
| GG94310000<br>( — )<br>Flare nut torque wrench | 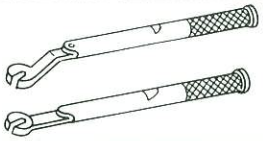 | Removing and installing each clutch piping |
| ST20600000<br>(J26366)<br>Clutch aligning bar | 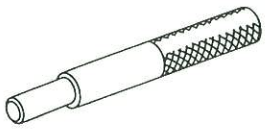 | Installing clutch cover and clutch disc |
| ST20050240<br>( — )<br>Diaphragm spring adjusting wrench | 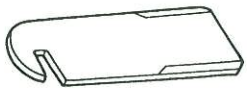 | Adjusting unevenness of diaphragm spring of clutch cover |

## Commercial Service Tools

| Tool name | Description | |
|---|---|---|
| Bearing puller | 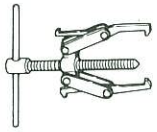 | Removing release bearing |
| Bearing drift | 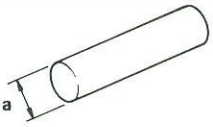 a: 50 mm (1.97 in) dia. | Installing release bearing |

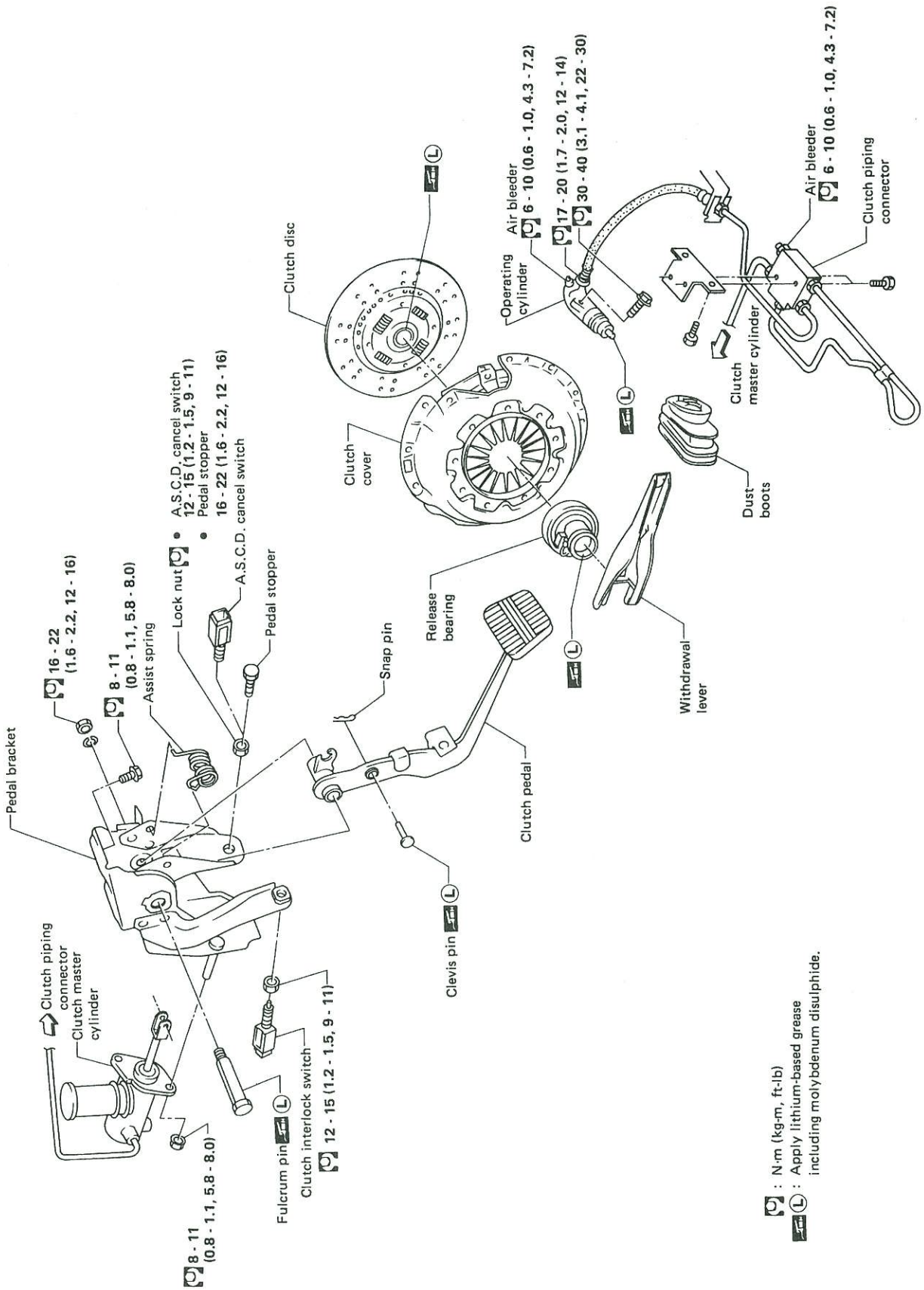
Pedal bracket
16 - 22 (1.6 - 2.2, 12 - 16)
8 - 11 (0.8 - 1.1, 5.8 - 8.0)
Assist spring
Lock nut
A.S.C.D. cancel switch
12 - 15 (1.2 - 1.5, 9 - 11)
Pedal stopper
16 - 22 (1.6 - 2.2, 12 - 16)
A.S.C.D. cancel switch
Pedal stopper
Clutch piping connector
Clutch master cylinder
8 - 11 (0.8 - 1.1, 5.8 - 8.0)
Fulcrum pin
Clutch interlock switch
12 - 15 (1.2 - 1.5, 9 - 11)
Snap pin
Clevis pin
Release bearing
Clutch pedal
Clutch disc
Clutch cover
Withdrawal lever
Operating cylinder
Air bleeder
6 - 10 (0.6 - 1.0, 4.3 - 7.2)
17 - 20 (1.7 - 2.0, 12 - 14)
30 - 40 (3.1 - 4.1, 22 - 30)
Dust boots
Clutch master cylinder
Air bleeder
6 - 10 (0.6 - 1.0, 4.3 - 7.2)
Clutch piping connector
: N·m (kg-m, ft-lb)
: Apply lithium-based grease including molybdenum disulphide.

SCL432

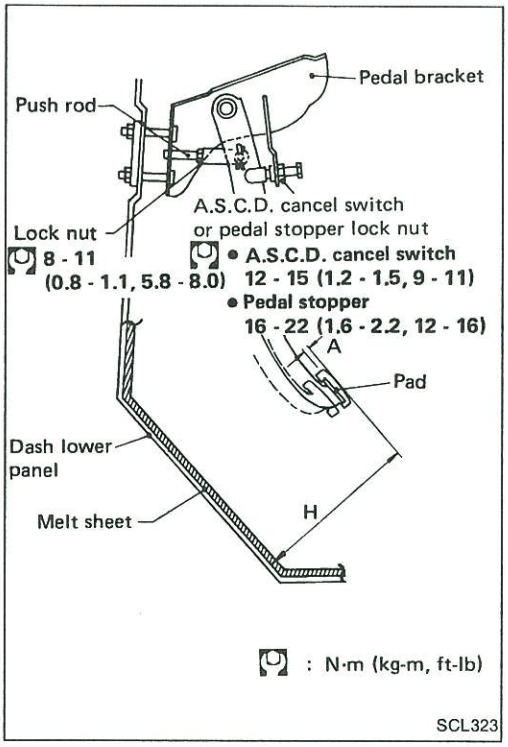


## Adjusting Clutch Pedal

1. Adjust pedal height with pedal stopper or A.S.C.D. cancel switch.
   **Pedal height "H":**
   **186 - 196 mm (7.32 - 7.72 in)**
2. Adjust pedal free play with master cylinder push rod. Then tighten lock nut.
   **Pedal free play "A":**
   **1.0 - 3.0 mm (0.039 - 0.118 in)**

**Pedal free play means the following total measured at position of pedal pad:**

- **Play due to clevis pin and clevis pin hole in clutch pedal.**

3. Make sure that clevis pin can be rotated smoothly. If not, readjust pedal free play with master cylinder push rod.

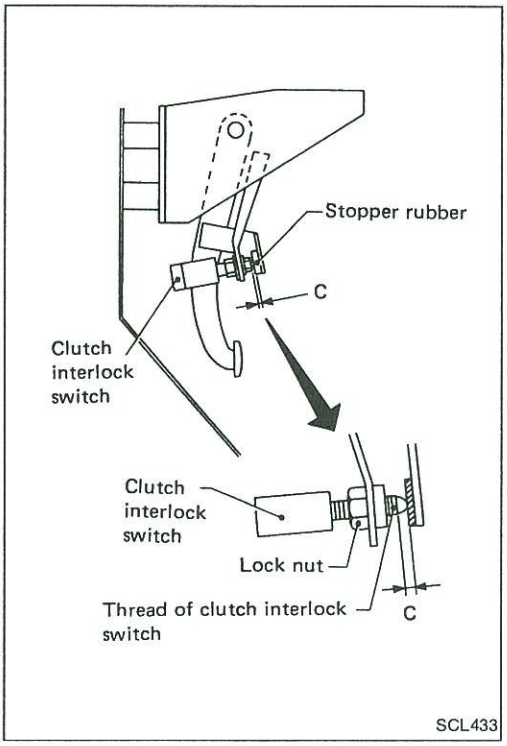


**— U.S.A. model only —**

3. Adjust clearance "C" between pedal stopper rubber and threaded end of clutch interlock switch while depressing clutch pedal fully.
   **Clearance C:**
   **1.0 - 2.0 mm (0.039 - 0.079 in)**

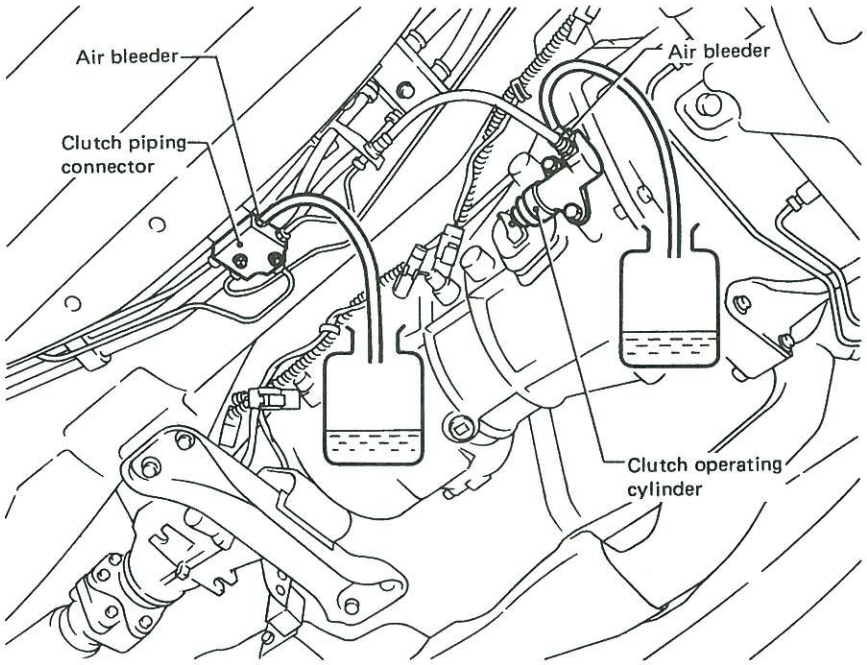


## Bleeding Procedure

1. Bleed air from clutch operating cylinder according to the following procedure.

**Carefully monitor fluid level at master cylinder during bleeding operation.**

a. Top up reservoir with recommended brake fluid.
b. Connect a transparent vinyl tube to air bleeder valve.
c. Fully depress clutch pedal several times.
d. With clutch pedal depressed, open bleeder valve to release air.
e. Close bleeder valve.
f. Repeat steps c through e above until brake fluid flows from air bleeder valve without air bubbles.

2. Bleed air from clutch piping connector according to the above same procedure.
3. Repeat the above bleeding procedures 1 and 2 several times.

## Clutch Master Cylinder

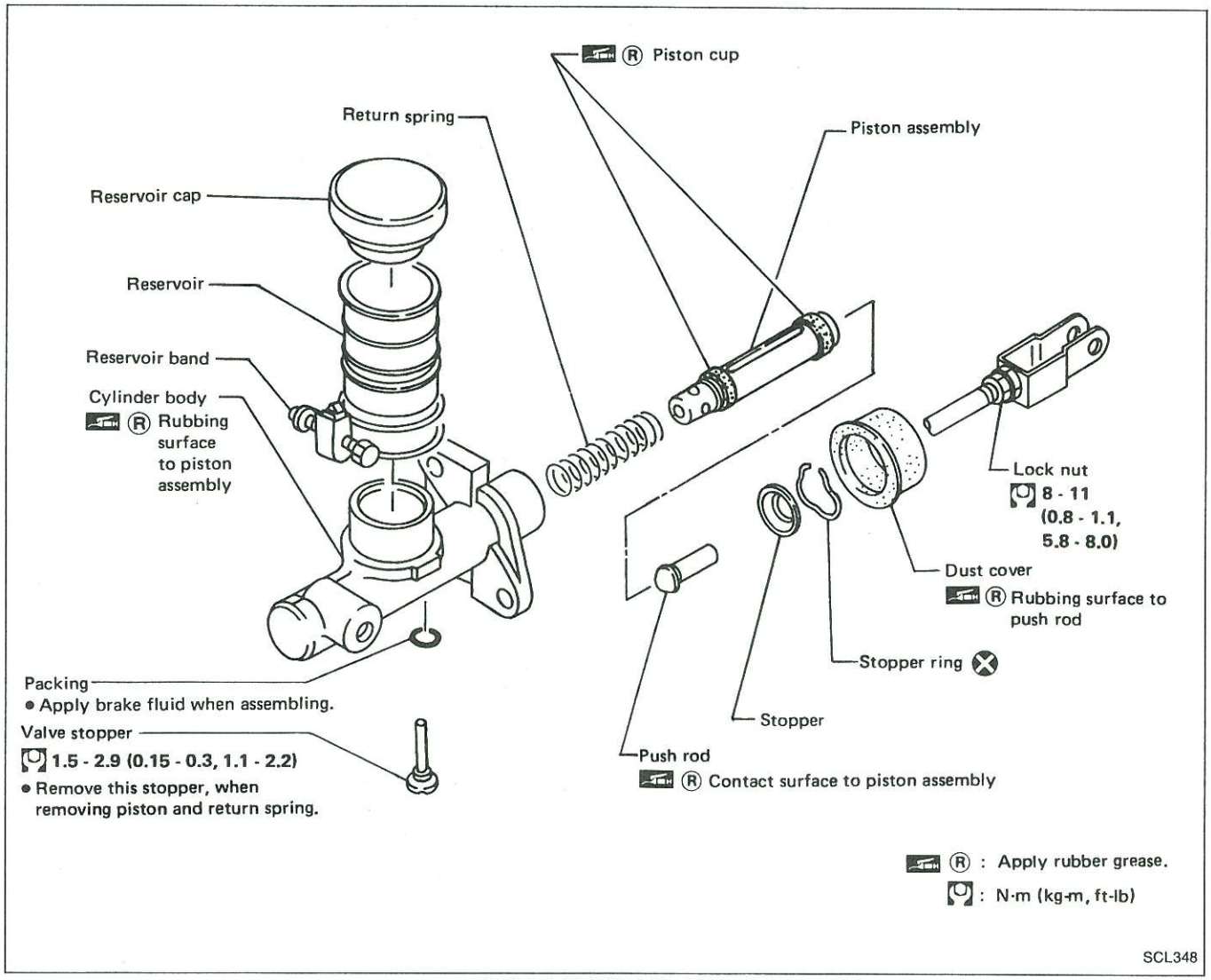


### DISASSEMBLY AND ASSEMBLY

- Push piston into cylinder body with screwdriver when removing and installing valve stopper.

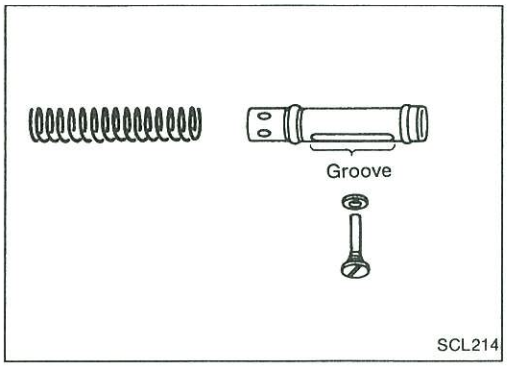


- Align groove of piston assembly and valve stopper when installing valve stopper.
- Check direction of piston cups.

## Clutch Master Cylinder (Cont'd)

### INSPECTION

- Check cylinder and piston rubbing surface for uneven wear, rust or damage. Replace if necessary.
- Check piston with piston cup for wear or damage. Replace if necessary.
- Check return spring for wear or damage. Replace if necessary.
- Check reservoir for deformation or damage. Replace if necessary.
- Check dust cover for cracks, deformation or damage. Replace if necessary.

## Operating Cylinder

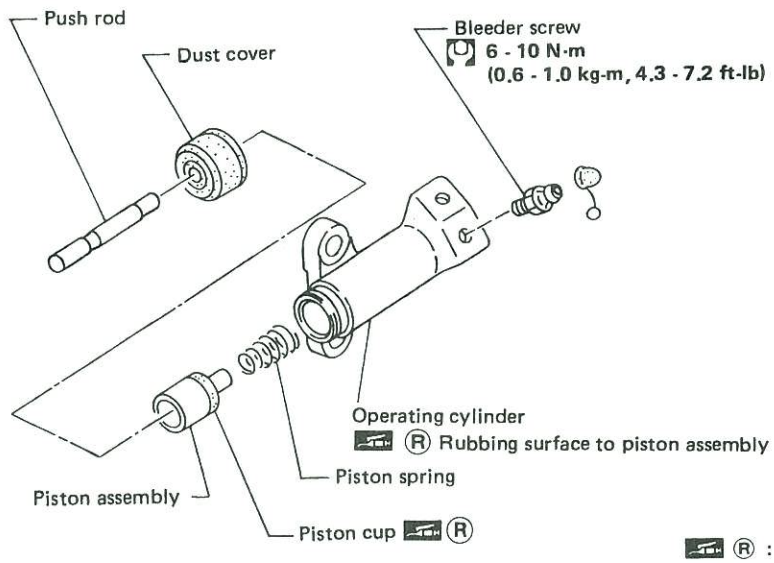


### INSPECTION

- Check rubbing surface of cylinder for wear, rust or damage. Replace if necessary.
- Check piston with piston cup for wear or damage. Replace if necessary.
- Check piston spring for wear or damage. Replace if necessary.
- Check dust cover for cracks, deformation or damage. Replace if necessary.

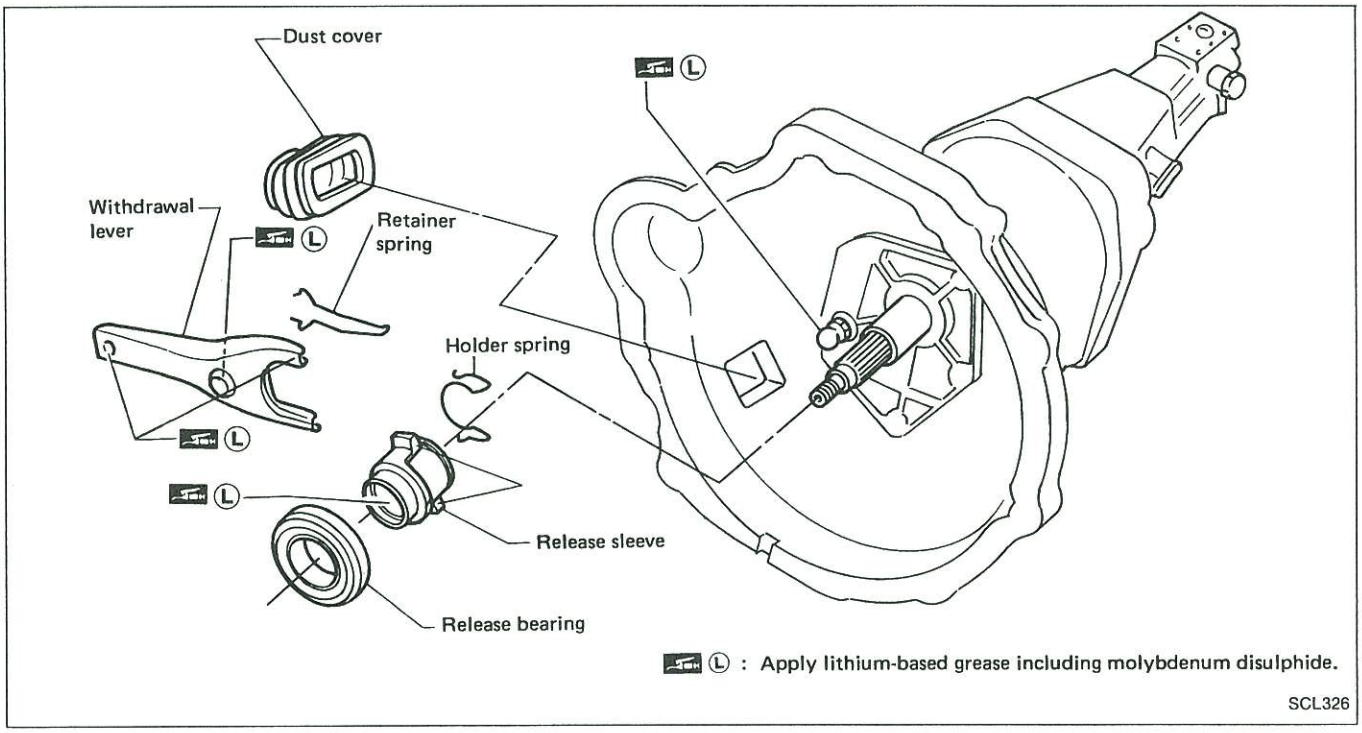


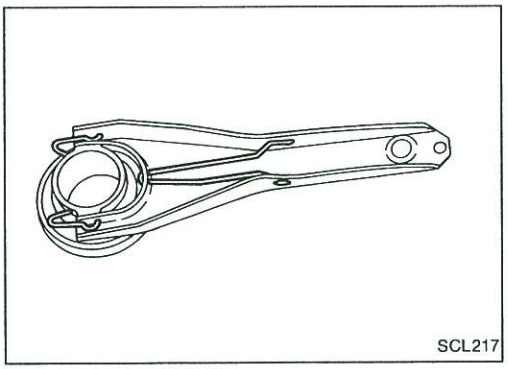


## REMOVAL AND INSTALLATION

- Install retainer spring and holder spring.

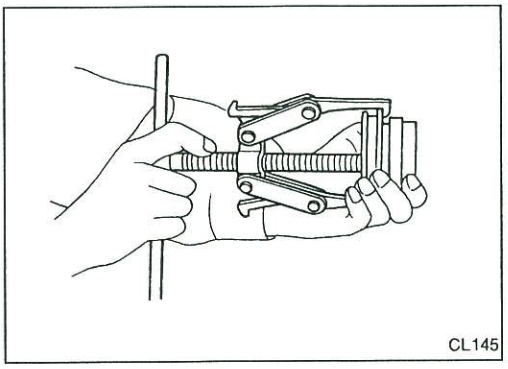


- Remove release bearing.

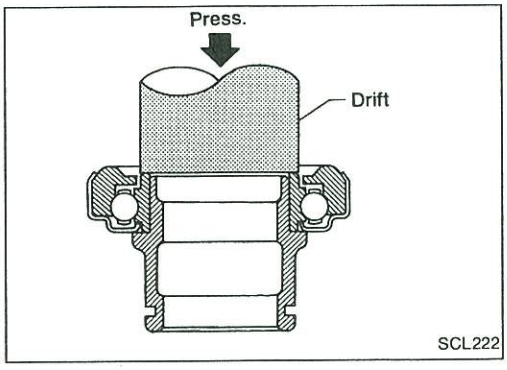


- Install release bearing with suitable drift.

## INSPECTION

- Check release bearing to see that it rolls freely and is free from noise, cracks, pitting or wear. Replace if necessary.
- Check release sleeve and withdrawal lever rubbing surface for wear, rust or damage. Replace if necessary.

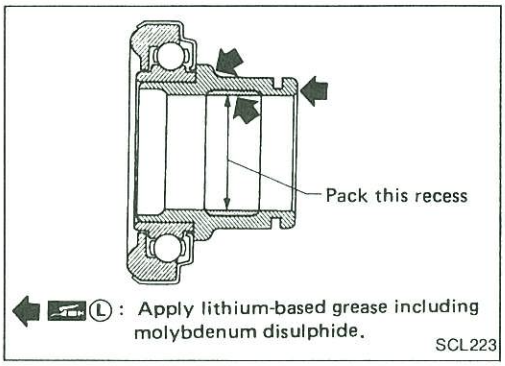


## LUBRICATION

- Apply recommended grease to contact surface and rubbing surface.

**Too much lubricant might damage clutch disc facing.**

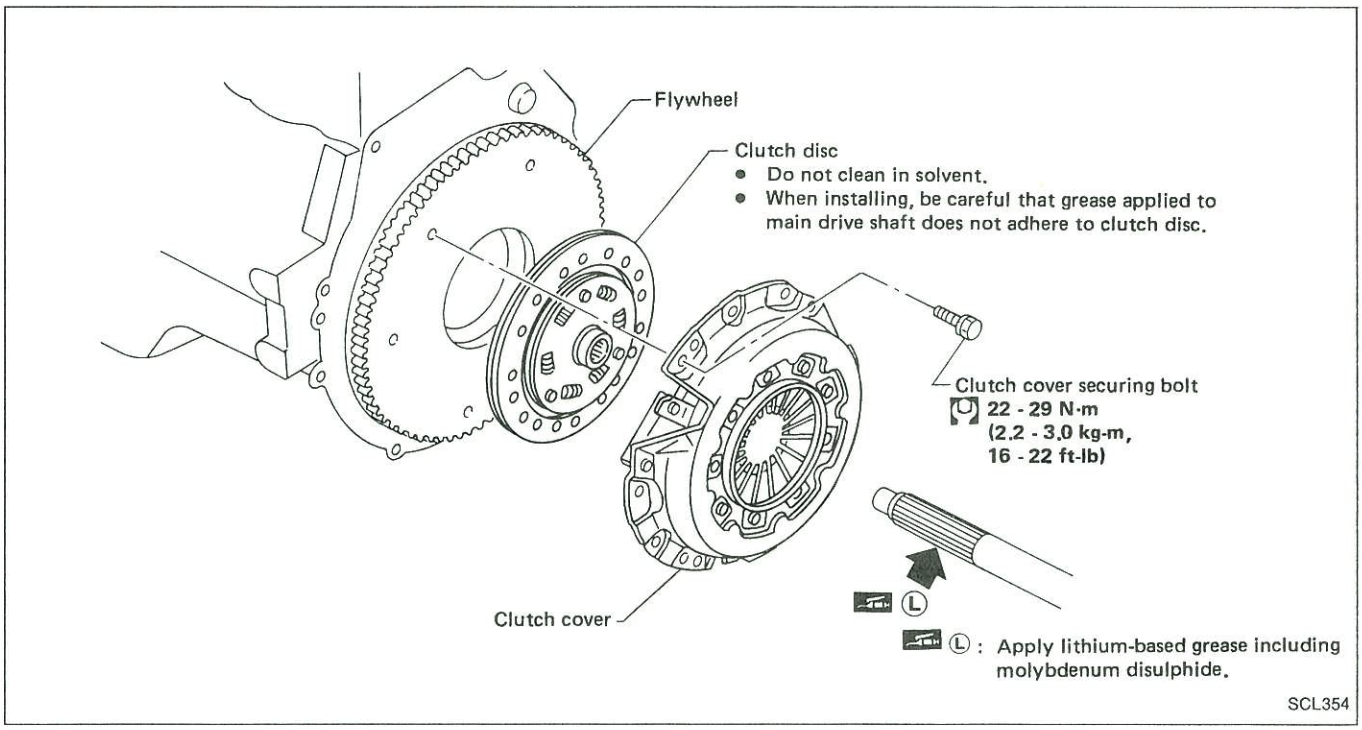


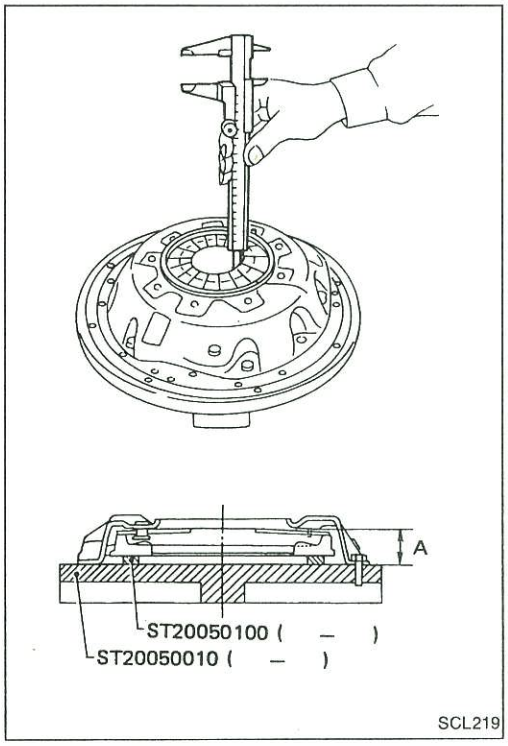


## Clutch Cover and Flywheel

### INSPECTION AND ADJUSTMENT

- Set Tool and check height and unevenness of diaphragm spring.
  **Diaphragm spring height "A":**
  **33.0 - 35.0 mm (1.299 - 1.378 in)**
- Check thrust rings for wear or damage by shaking cover assembly and listening for chattering noise, or lightly hammering on rivets for a slightly cracked noise. Replace clutch cover assembly if necessary.
- Check pressure plate and clutch disc contact surface for slight burns or discoloration. Repair pressure plate with emery paper.
- Check pressure plate and clutch disc contact surface for deformation or damage. Replace if necessary.

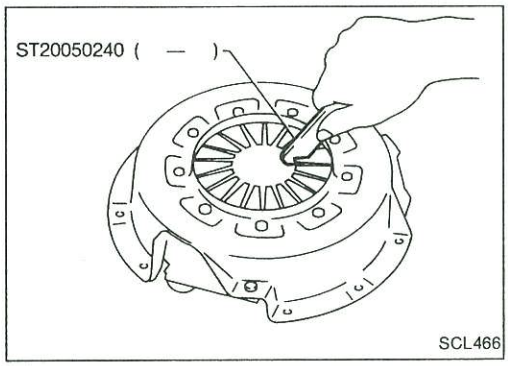


- Adjust unevenness of diaphragm spring with Tool.
  **Uneven limit:**
  **0.7 mm (0.028 in)**

## Clutch Cover and Flywheel (Cont'd)

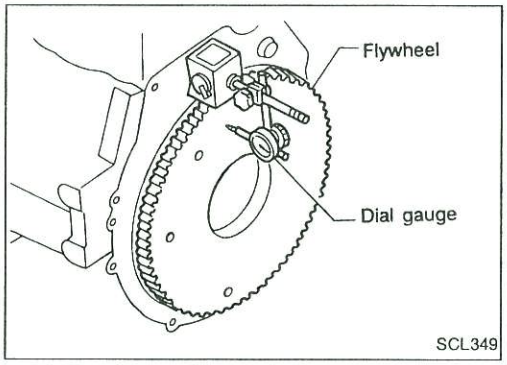


### FLYWHEEL INSPECTION

- Check contact surface of flywheel for slight burns or discoloration. Repair flywheel with emery paper.
- Check flywheel runout.
  **Runout (Total indicator reading):**
  **Less than 0.15 mm (0.0059 in)**

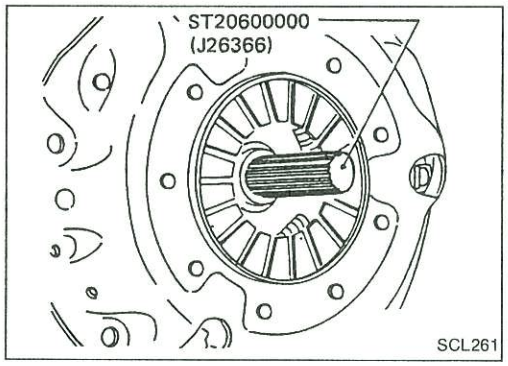


### INSTALLATION

- Insert Tool into clutch disc hub when installing clutch cover and disc.

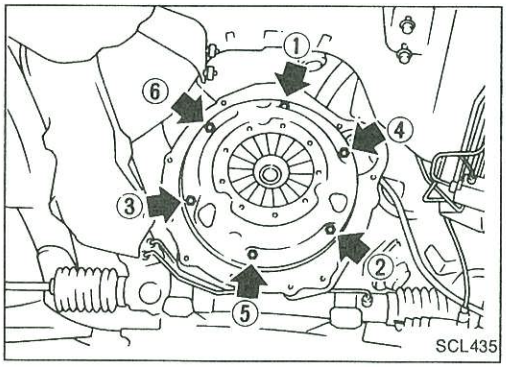


- Tighten clutch cover fixing bolts in numerical order by 2 steps.
  **Tightening torque:**
  **First step 20 N·m (2.0 kg-m, 14 ft-lb)**
  **Final step 22 - 29 N·m (2.2 - 3.0 kg-m, 16 - 22 ft-lb)**

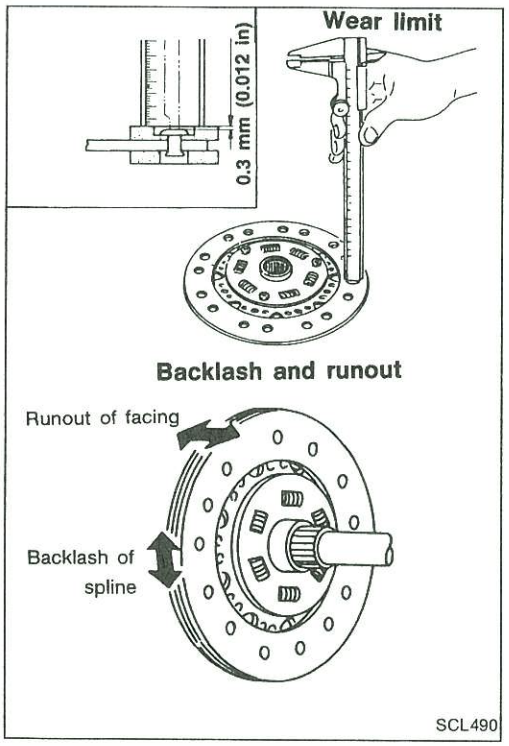


## Clutch Disc

### INSPECTION

- Check clutch disc for wear of facing.
  **Wear limit of facing surface to rivet head:**
  **0.3 mm (0.012 in)**
- Check for backlash of spline and runout of facing.
  **Maximum backlash of spline (at outer edge of disc):**
  **0.9 mm (0.035 in)**
  **Runout limit:**
  **1.0 mm (0.039 in)**
  **Distance of runout check point (from hub center):**
  **107.5 mm (4.23 in)**
- Check clutch disc for burns, discoloration or oil or grease leakage. Replace if necessary.

### INSTALLATION

- Apply recommended grease to contact surface of spring portion.

**Too much lubricant might damage clutch disc facing.**

# General Specifications

## CLUTCH CONTROL SYSTEM

| | |
|---|---|
| Type of clutch control | Hydraulic |

## CLUTCH MASTER CYLINDER

| | | |
|---|---|---|
| Inner diameter | mm (in) | 15.87 (5/8) |

## CLUTCH OPERATING CYLINDER

| | | |
|---|---|---|
| Inner diameter | mm (in) | 19.05 (3/4) |

## CLUTCH DISC

| Model | 225LTD |
|---|---|
| Facing size (Outer dia. x inner dia. x thickness) mm (in) | 225 x 150 x 3.5 (8.86 x 5.91 x 0.138) |
| Thickness of disc assembly With load mm (in) | 7.6 - 8.0 (0.299 - 0.315) with 5,394 N (550 kg, 1,213 lb) |

## CLUTCH COVER

| Model | | C225S |
|---|---|---|
| Full load | N (kg, lb) | 5,394 (550, 1,213) |

# Inspection and Adjustment

## CLUTCH PEDAL

Unit: mm (in)

| | |
|---|---|
| Pedal height "H*" | 186 - 196 (7.32 - 7.72) |
| Pedal free play (Backlash at clevis) | 1.0 - 3.0 (0.039 - 0.118) |
| Clearance between pedal stopper rubber and threaded end of clutch interlock switch | 1.0 - 2.0 (0.039 - 0.079) |

*: Measured from surface of melt sheet to pedal pad

## CLUTCH COVER

Unit: mm (in)

| Model | C225S |
|---|---|
| Diaphragm spring height | 33.0 - 35.0 (1.299 - 1.378) |
| Uneven limit of diaphragm spring toe height | 0.7 (0.028) |

## CLUTCH DISC

Unit: mm (in)

| Model | 225LTD |
|---|---|
| Wear limit of facing surface to rivet head | 0.3 (0.012) |
| Runout limit of facing | 1.0 (0.039) |
| Distance of runout check point (from the hub center) | 107.5 (4.23) |
| Maximum backlash of spline (at outer edge of disc) | 0.9 (0.035) |

# MANUAL TRANSMISSION

# SECTION MT

## CONTENTS


**PREPARATION** ..... 2
- Special Service Tools ..... 2
- Commercial Service Tool ..... 3

**ON-VEHICLE SERVICE** ..... 4
- Replacing Rear Oil Seal ..... 4
- Check of Position Switches ..... 4

**REMOVAL AND INSTALLATION** ..... 5
- Removal ..... 5
- Installation ..... 6

**MAJOR OVERHAUL** ..... 7
- Case Components ..... 7
- Gear Components ..... 8
- Shift Control Components ..... 9

**DISASSEMBLY** ..... 10
- Case Components ..... 10
- Shift Control Components ..... 11
- Gear Components ..... 12

**INSPECTION** ..... 15
- Shift Control Components ..... 15
- Gear Components ..... 15

**ASSEMBLY** ..... 17
- Gear Components ..... 17
- Shift Control Components ..... 23
- Case Components ..... 25

**SERVICE DATA AND SPECIFICATIONS (S.D.S.)** ..... 27
- General Specifications ..... 27
- Inspection and Adjustment ..... 28

## Special Service Tools

| Tool number (Kent-Moore No.) Tool name | Description | |
|---|---|---|
| ST23810001 ( — ) Adapter setting plate | | Fixing adapter plate with gear assembly |
| KV31100401 ( — ) Transmission press stand | 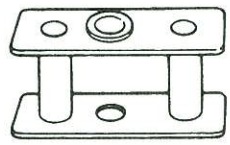 | Pressing counter gear and mainshaft |
| ST22520000 (J26348) Wrench | 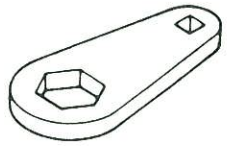 | Tightening mainshaft lock nut |
| ST23540000 (J25689-A) Pin punch | 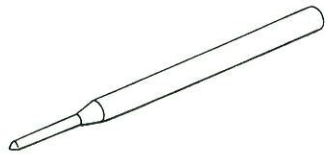 | Removing and installing fork rod retaining pin |
| ST30031000 (J22912-01) Puller | 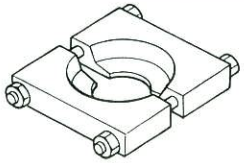 | Removing and installing 1st gear bushing<br>Removing main drive gear bearing<br>Measuring wear of baulk rings |
| ST23860000 ( — ) Drift | 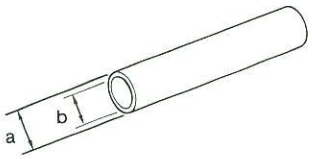 **a: 38 mm (1.50 in) dia.**<br>**b: 33 mm (1.30 in) dia.** | Installing counter drive gear |
| ST22360002 (J25679-01) Drift | 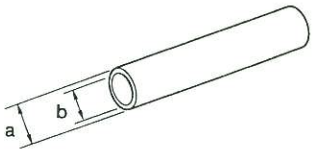 **a: 29 mm (1.14 in) dia.**<br>**b: 23 mm (0.91 in) dia.** | Installing counter gear front and rear end bearings |
| ST22350000 (J25678-01) Drift | 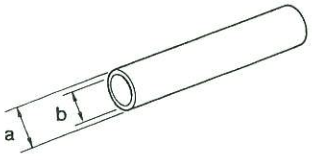 **a: 34 mm (1.34 in) dia.**<br>**b: 28 mm (1.10 in) dia.** | Installing O.D. gear bushing |

## Special Service Tools (Cont'd)

| Tool number (Kent-Moore No.) Tool name | Description | |
|---|---|---|
| ST23800000 (J25691-01) Drift | 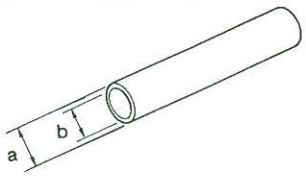 a: 44 mm (1.73 in) dia.<br>b: 31 mm (1.22 in) dia. | Installing front cover oil seal |
| ST33400001 (J26082) Drift | 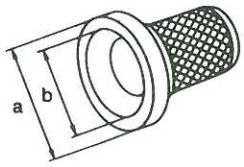 a: 60 mm (2.36 in) dia.<br>b: 47 mm (1.85 in) dia. | Installing rear oil seal |
| ST33290001 (J25810-A) Puller | | Removing rear oil seal |
| ST30720000 ( — ) Drift | 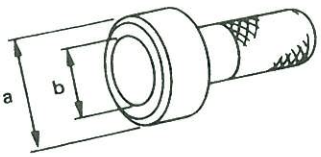 a: 77 mm (3.03 in) dia.<br>b: 55.5 mm (2.185 in) dia. | Installing mainshaft ball bearing |
| ST30613000 (J25742-3) Drift | 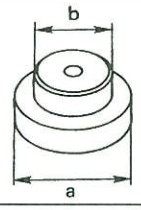 a: 71.5 mm (2.815 in) dia.<br>b: 47.5 mm (1.870 in) dia. | Installing main drive gear bearing |
| ST33200000 (J26082) Drift | 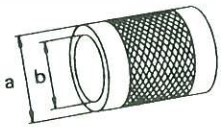 a: 60 mm (2.36 in) dia.<br>b: 44.5 mm (1.752 in) dia. | Installing counter rear bearing<br>Installing 3rd & 4th synchronizer assembly |

## Commercial Service Tool

| Tool name | Description | |
|---|---|---|
| Puller | 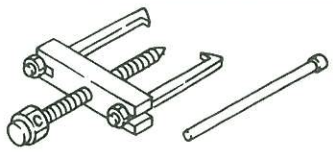 | Removing counter bearings, counter drive and O.D. gears |

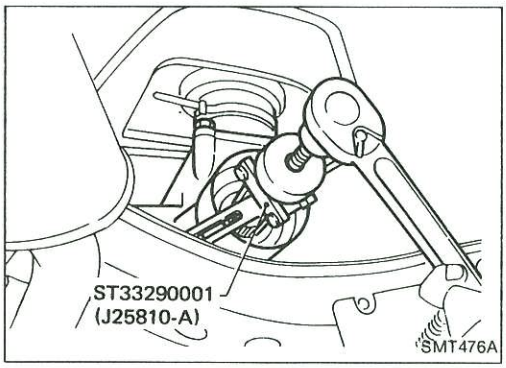


## Replacing Rear Oil Seal

### REMOVAL

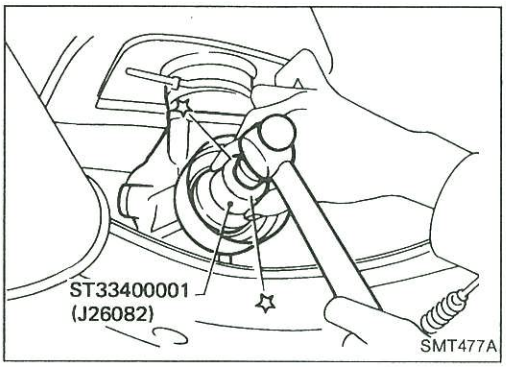


### INSTALLATION

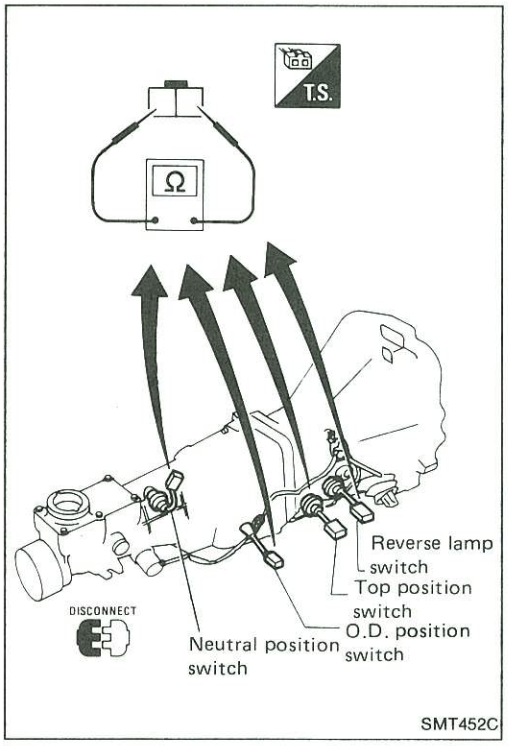


## Check of Position Switches

| Switch | Gear position | Continuity |
|---|---|---|
| Reverse lamp switch | Reverse | Yes |
| | Other than reverse | No |
| Neutral position switch | Neutral | Yes |
| | Other than neutral | No |
| Top (4th) position switch | 4th | Yes |
| | Other than 4th | No |
| O.D. (5th) position switch | 5th | Yes |
| | Other than 5th | No |

## Removal

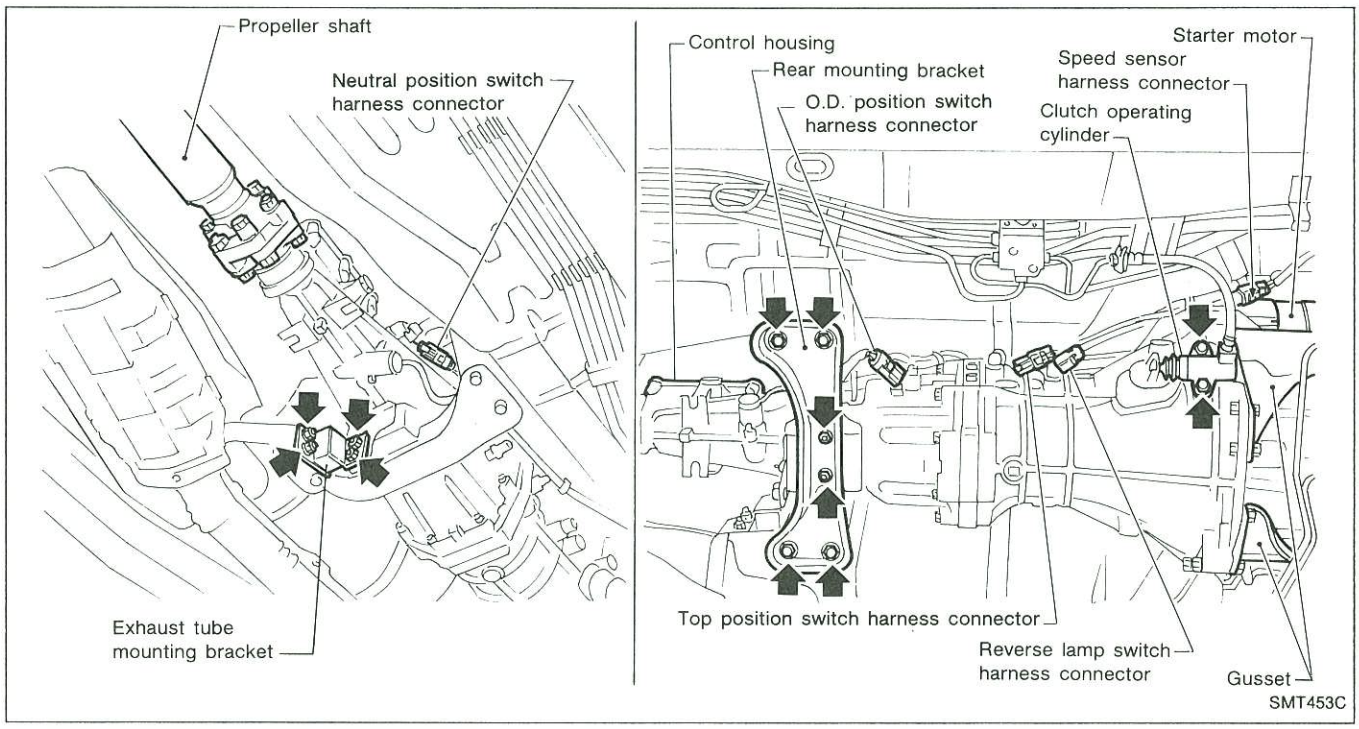


- Remove clutch operating cylinder from transmission.
- Disconnect speed sensor, O.D. position switch, top (4th) position switch, reverse lamp switch and neutral position switch harness connectors.
- Remove starter motor from transmission.
- Remove propeller shaft. — Refer to section PD.
- **Insert plug into rear oil seal after removing propeller shaft.**
- **Be careful not to damage spline, sleeve yoke and rear oil seal when removing propeller shaft.**
- Remove exhaust tube mounting bracket from transmission.
- Support manual transmission with a jack.
- Remove rear mounting bracket.
- Lower manual transmission as much as possible.
- Remove shift lever with control housing from transmission.

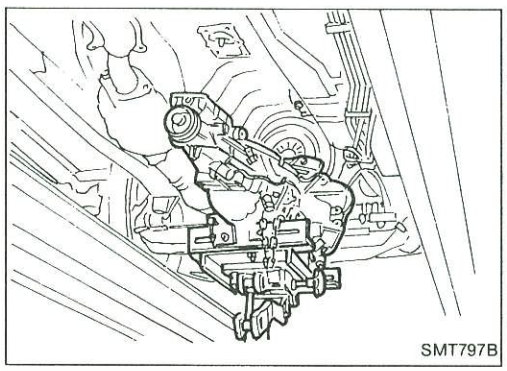


- Remove gussets and transmission fixing bolts.
- Remove transmission from engine.
- **Support manual transmission while removing it.**

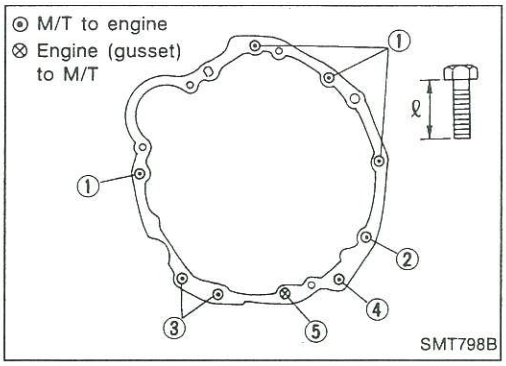


## Installation

- Tighten transmission fixing bolts.

| Bolt No. | Tightening torque N·m (kg-m, ft-lb) | "ℓ" mm (in) |
|---|---|---|
| ① | 39 - 49 (4.0 - 5.0, 29 - 36) | 60 (2.36) |
| ② | 39 - 49 (4.0 - 5.0, 29 - 36) | 70 (2.76) |
| ③ * | 29 - 39 (3.0 - 4.0, 22 - 29) | 35 (1.38) |
| ④ * | 29 - 39 (3.0 - 4.0, 22 - 29) | 65 (2.56) |
| ⑤ | 29 - 39 (3.0 - 4.0, 22 - 29) | 25 (0.98) |
| Gusset to engine | 29 - 39 (3.0 - 4.0, 22 - 29) | 20 (0.79) |

*: With nut.

- Install any part removed.

## Case Components

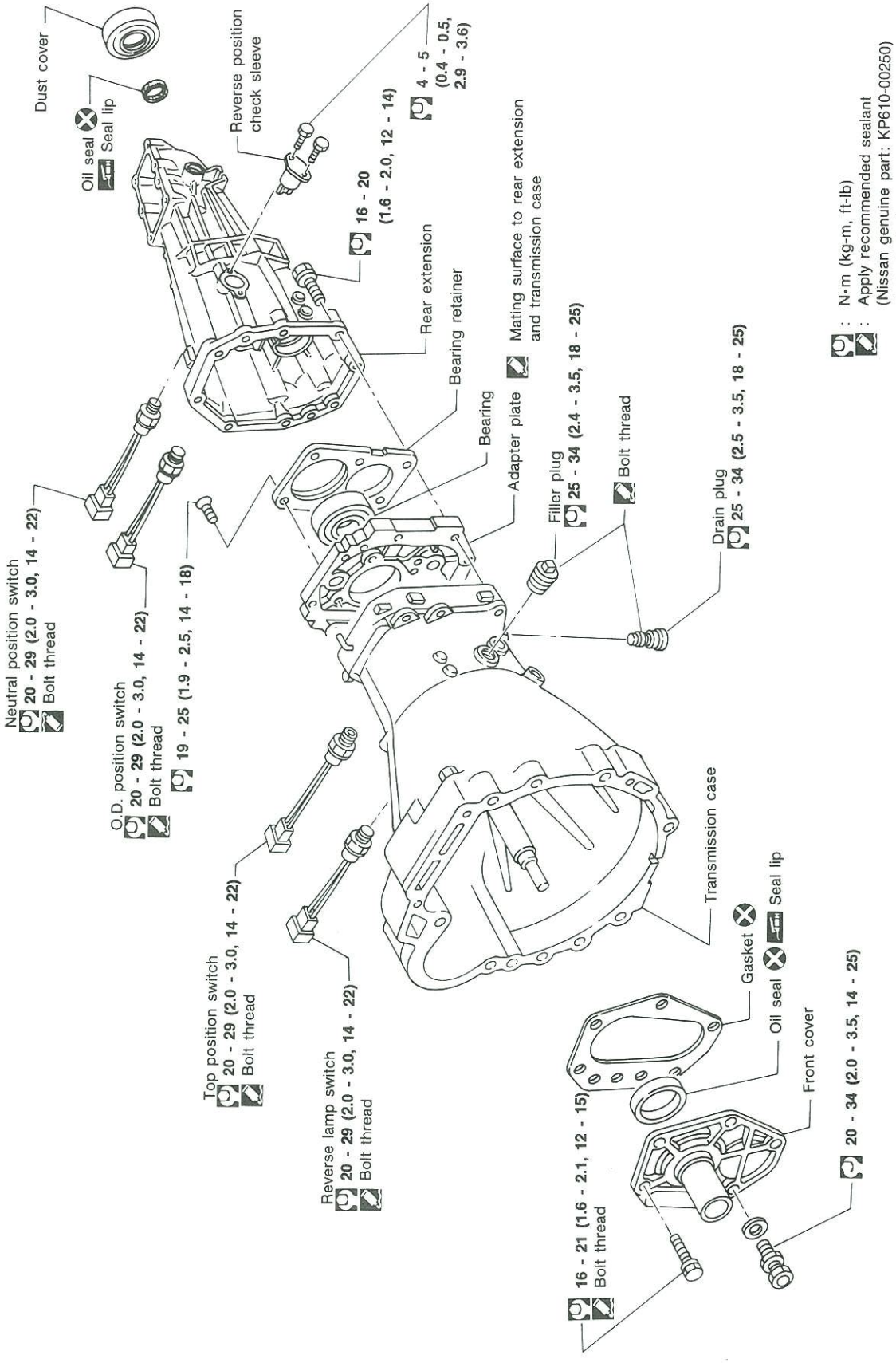


SMT450C

## Gear Components

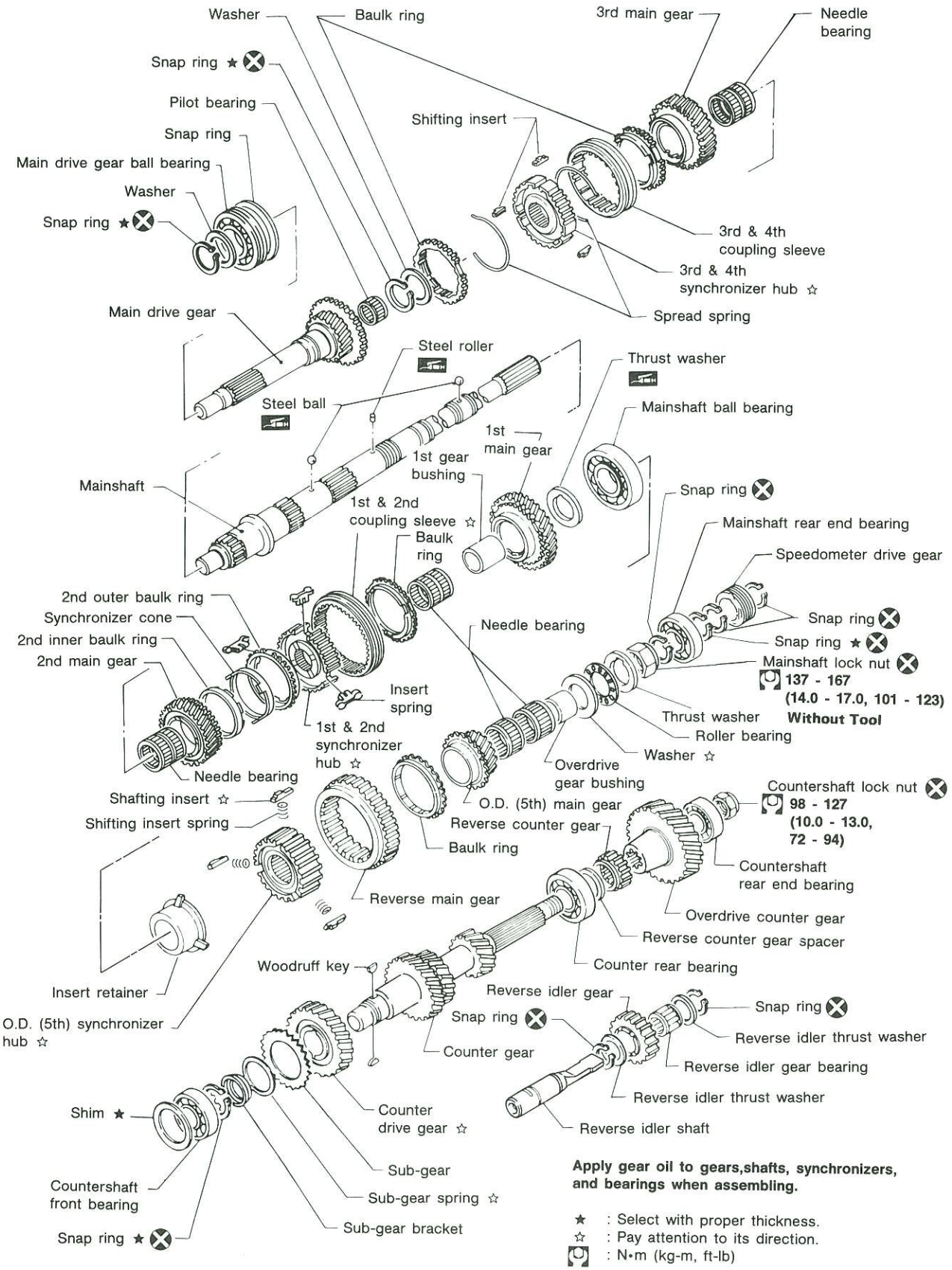


**Apply gear oil to gears,shafts, synchronizers, and bearings when assembling.**

★ : Select with proper thickness.
☆ : Pay attention to its direction.
: N•m (kg-m, ft-lb)

SMT037B

## Shift Control Components

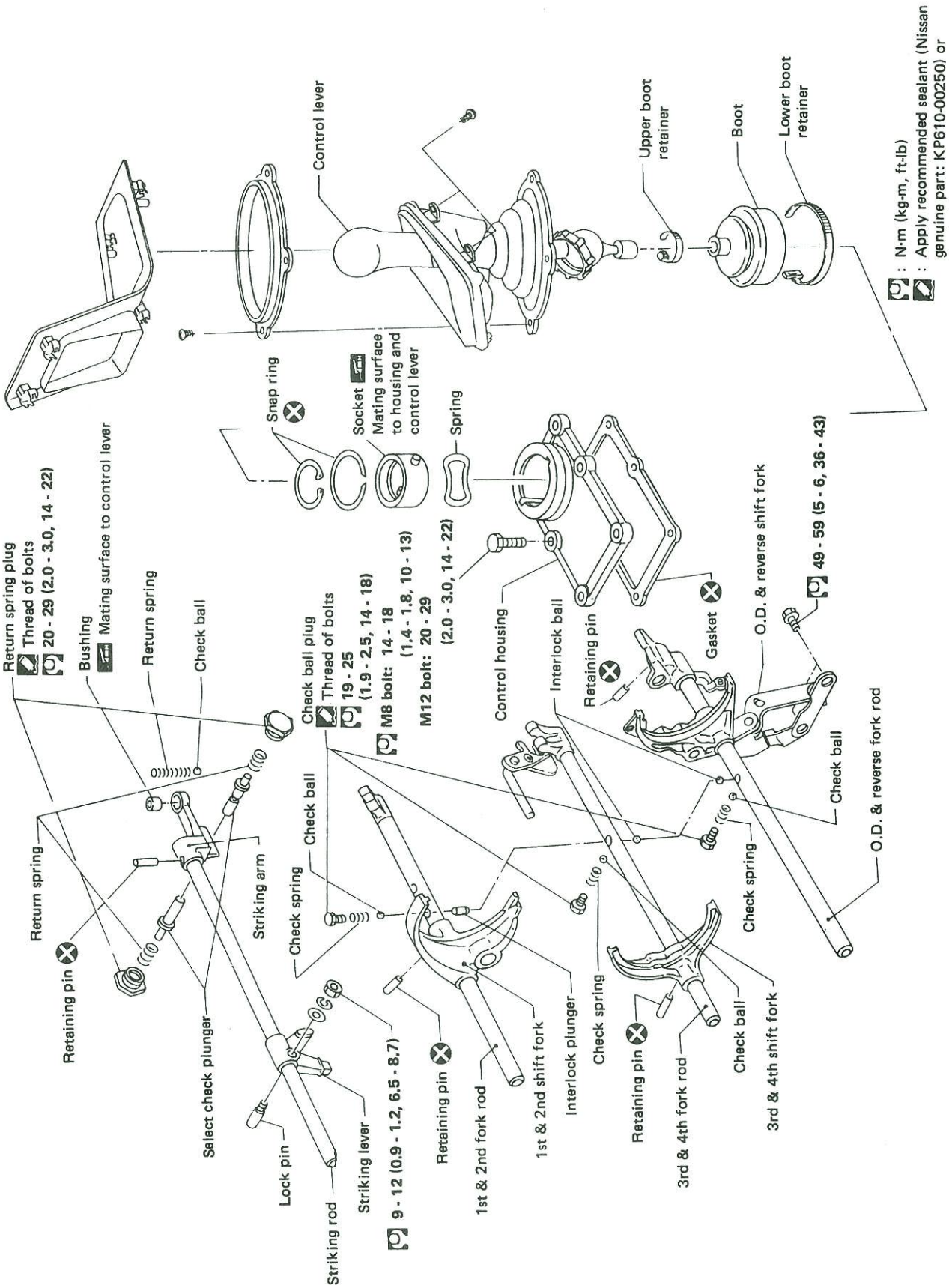


SMT382B

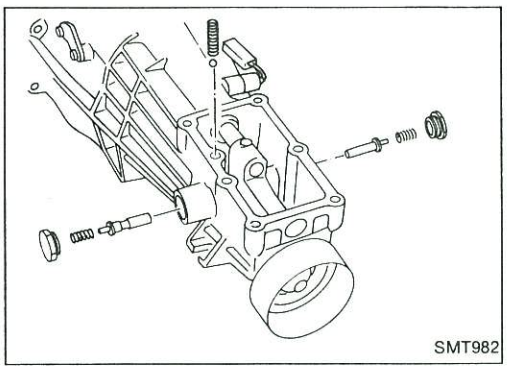
SMT982

## Case Components

1. Remove rear extension.

a. Remove control housing, check ball, return spring plug, select check plunger and return springs.

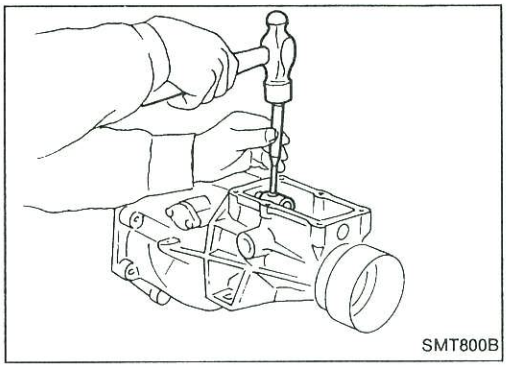
SMT800B

b Drive out striking arm retaining pin.

c Remove striking arm from striking rod.

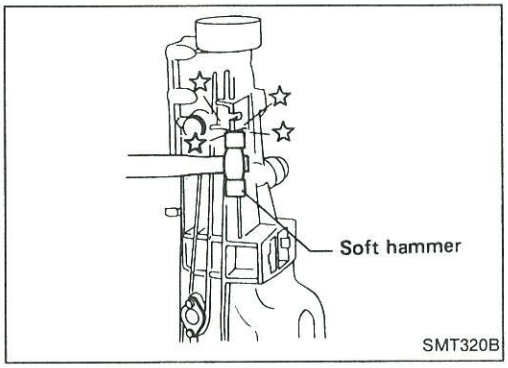

SMT320B

d. Remove rear extension by lightly tapping it.

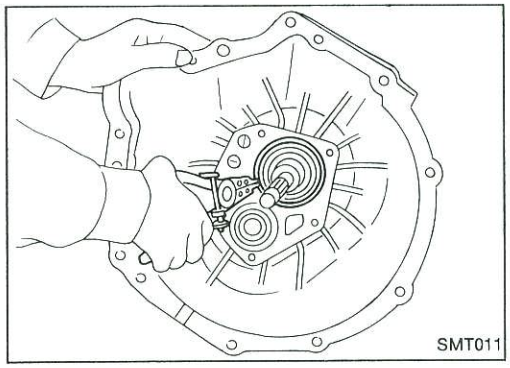
SMT011

2. Remove front cover, gasket, shim of countershaft front bearing, and snap ring of main drive gear ball bearing.

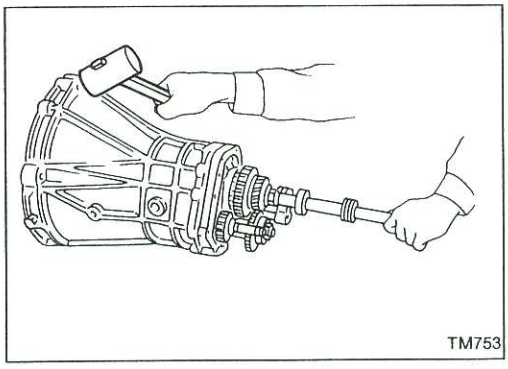
TM753

3. Remove transmission case by tapping lightly.

## Case Components (Cont'd)

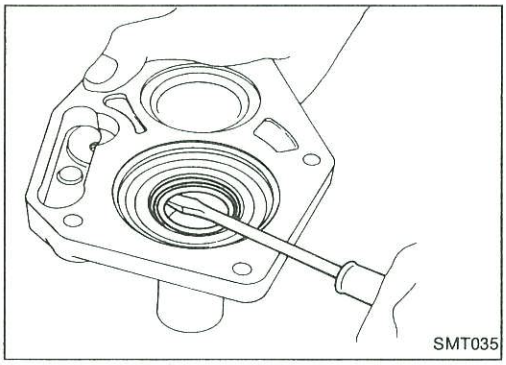


4. Remove front cover oil seal.

## Shift Control Components

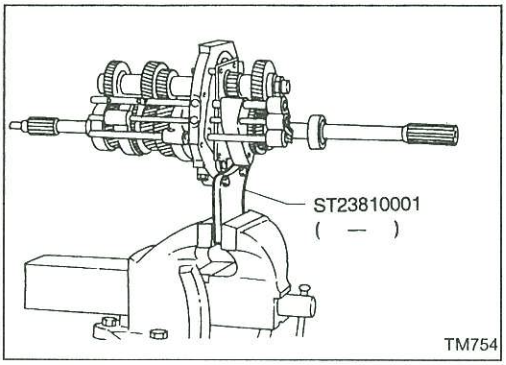


1. Set up Tool on adapter plate.
2. Remove striking rod from adapter plate.
3. Remove check ball plugs, check springs, and check balls.

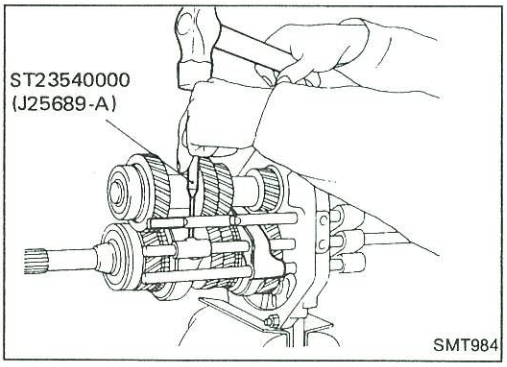


4. Drive out retaining pins. Then drive out fork rods and remove interlock balls.

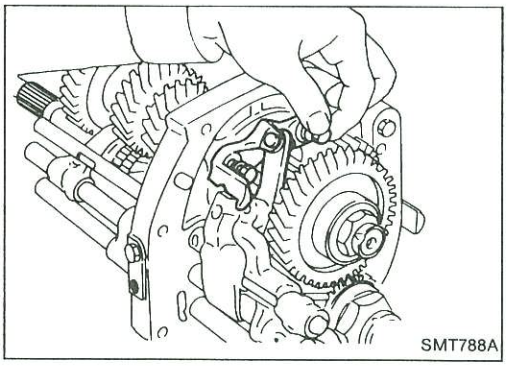


5. Remove lever bracket securing bolt.

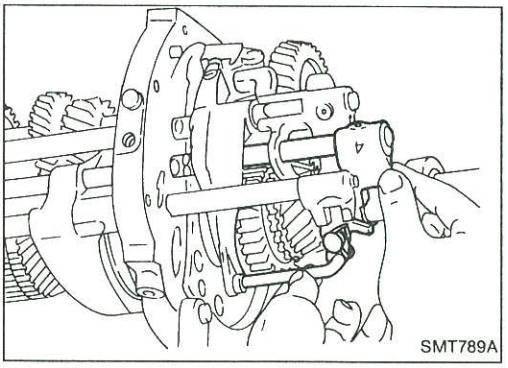


6. Draw out 3rd-4th fork rod.

## Shift Control Components (Cont'd)

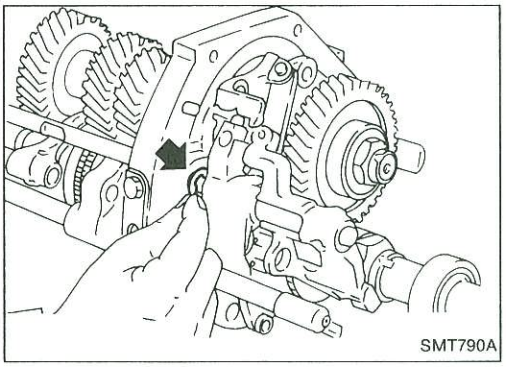


7. Remove E-ring from O.D. and reverse fork rod.

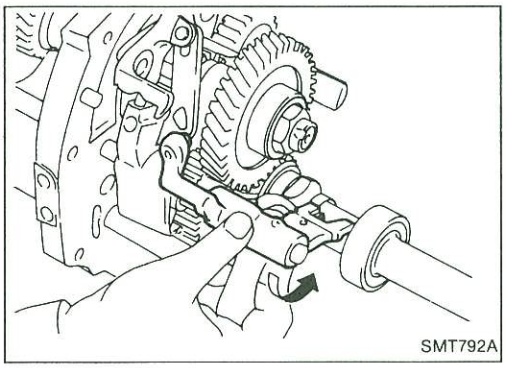


8. Draw out O.D. and reverse fork shaft by rotating O.D. and reverse bracket counterclockwise.

## Gear Components

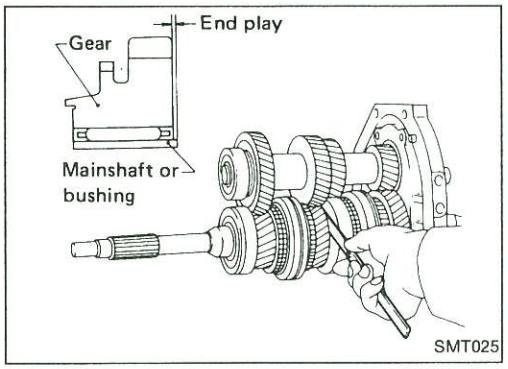


1. Before removing gears and shafts, measure each gear end play.

   **Gear end play: Refer to S.D.S.**

   If not within specification, disassemble and check contact surface of gear to hub, washer, bushing, needle bearing and shaft.

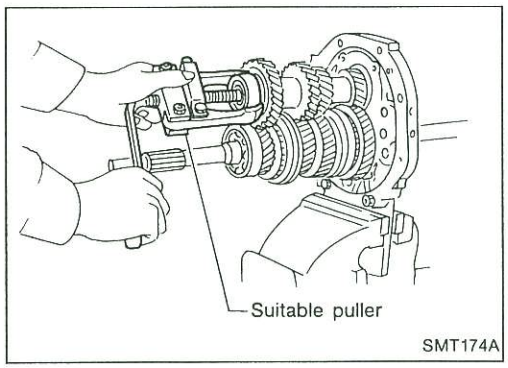


2. Mesh 2nd and reverse gear, then draw out counter front bearing with suitable puller.
3. Remove snap ring and then remove sub-gear bracket, sub-gear spring and sub-gear.

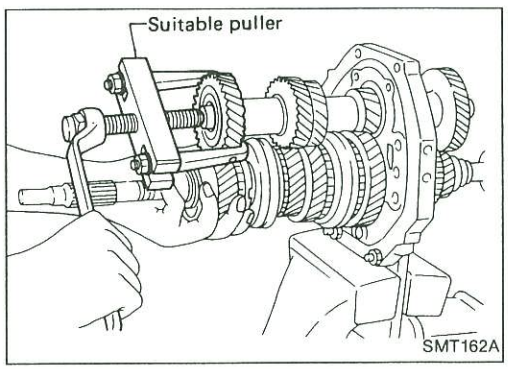


4. Draw out counter drive gear with main drive gear assembly with suitable puller.

- **When drawing out main drive gear assembly, be careful not to drop pilot bearing and baulk ring.**

## Gear Components (Cont'd)

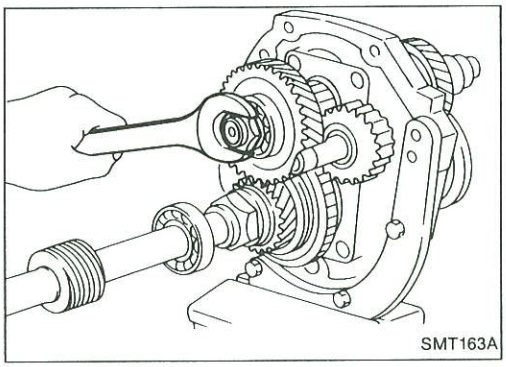
SMT163A

5. Remove rear side components on mainshaft and counter gear.
a. Release staking on countershaft nut and mainshaft nut and loosen these nuts.
**Mainshaft nut: Left-hand thread**

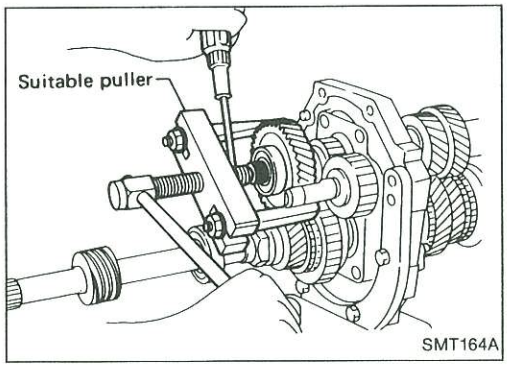

SMT164A

b. Pull out O.D. counter gear with bearing with suitable puller.
c. Draw out reverse counter gear and spacer.
d. Remove snap rings from reverse idler shaft and draw out reverse idler gear, thrust washers and reverse idler gear bearing.
e. Remove speedometer drive gear and steel ball.

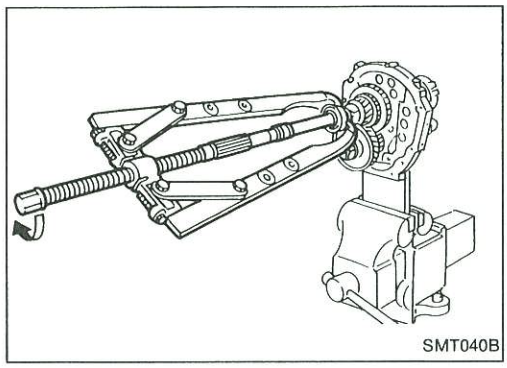
SMT040B

f. Remove snap ring and pull out overdrive mainshaft bearing, then remove snap ring.
g. Remove mainshaft nut.
h. Remove steel roller and washer.
i. Remove roller bearing and washer.
j. Remove O.D. main gear, needle bearing and baulk ring (O.D.).
k. Remove O.D. coupling sleeve, shifting inserts and shifting insert springs.

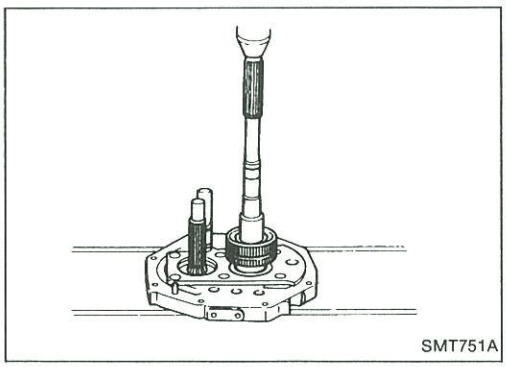
SMT751A

l. Press out mainshaft and counter gear alternately.
- **Make sure to alternate pressing of mainshaft and counter gear so as not to allow the front surface of one to contact the rear surface of the other.**

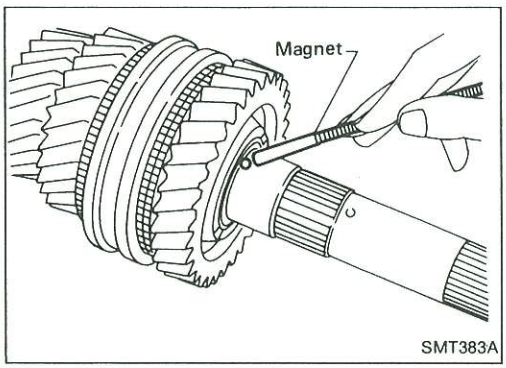

SMT383A

6. Remove front side components on mainshaft.
a. Remove 1st gear washer and steel ball.
b. Remove 1st main gear and 1st gear needle bearing.

## Gear Components (Cont'd)

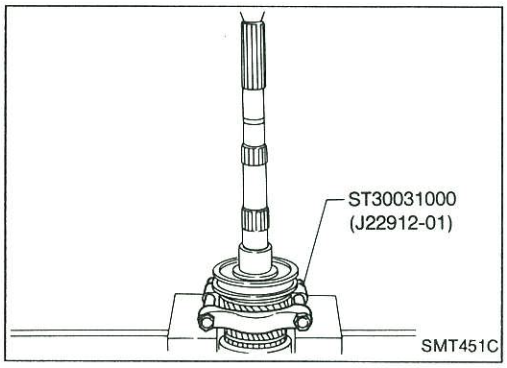


c. Press out 2nd main gear together with 1st gear bushing and 1st & 2nd synchronizer assembly.
d. Remove mainshaft front snap ring.

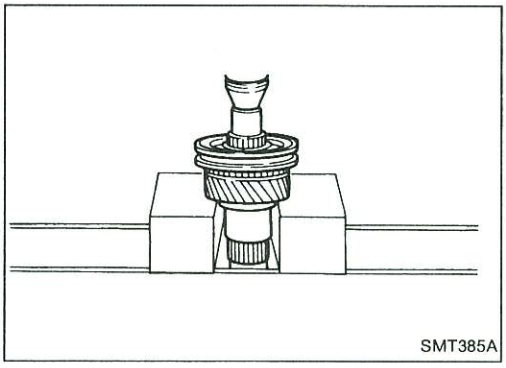


e. Press out 3rd main gear together with 3rd & 4th synchronizer assembly and 3rd gear needle bearing.

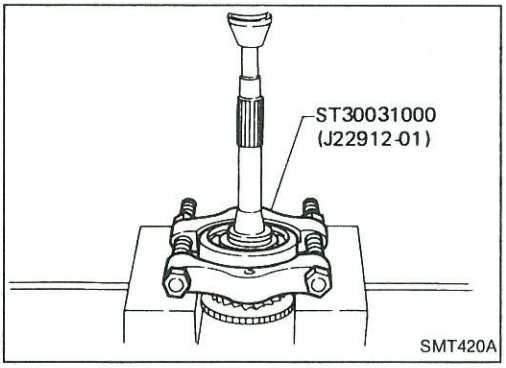


7. Remove main drive gear bearing.
a. Remove main drive gear snap ring and spacer.
b. Press out main drive gear bearing.

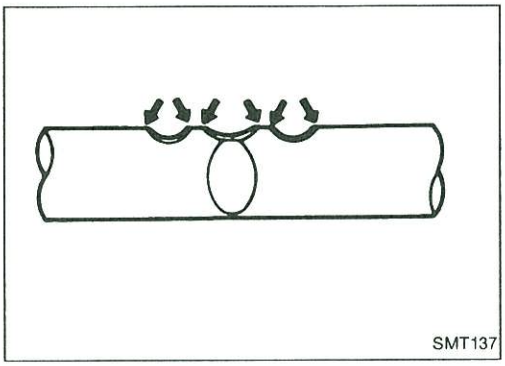
SMT137

## Shift Control Components

- Check contact surface and sliding surface for wear, scratches, projections or other damage.

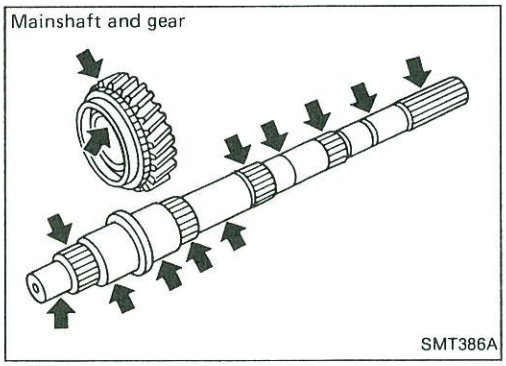

SMT386A

## Gear Components

### GEAR AND SHAFT

- Check shafts for cracks, wear or bending.
- Check gears for excessive wear, chips or cracks.

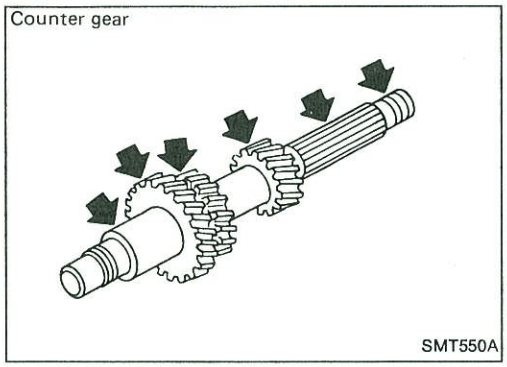

SMT550A

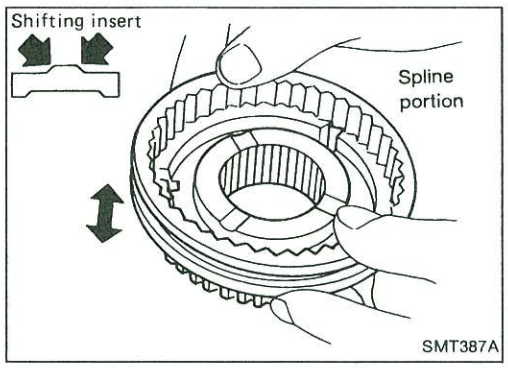

SMT387A

### SYNCHRONIZERS

- Check spline portion of coupling sleeves, hubs and gears for wear or cracks.
- Check baulk rings for cracks or deformation.
- Check shifting inserts for wear or deformation.
- Check insert springs for deformation.

## Gear Components (Cont'd)

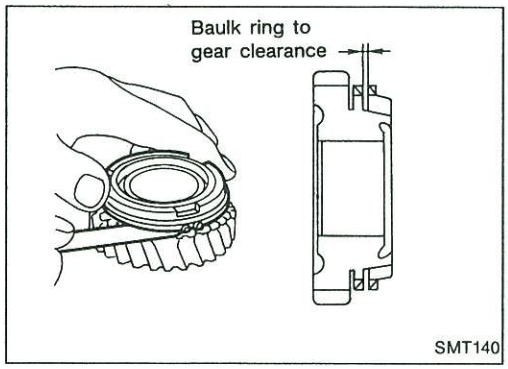


- Measure clearance between baulk ring and gear.

**Clearance between baulk ring and gear**

**(1st, 3rd, main drive and O.D. baulk ring):**

Unit: mm (in)

| Dimension | Standard | Wear limit |
|---|---|---|
| 1st | 1.2 - 1.6 (0.047 - 0.063) | 0.8 (0.031) |
| 3rd and main drive | 1.2 - 1.6 (0.047 - 0.063) | |
| O.D. | 1.2 - 1.4 (0.047 - 0.055) | |

If the clearance is smaller than the wear limit, replace baulk ring.

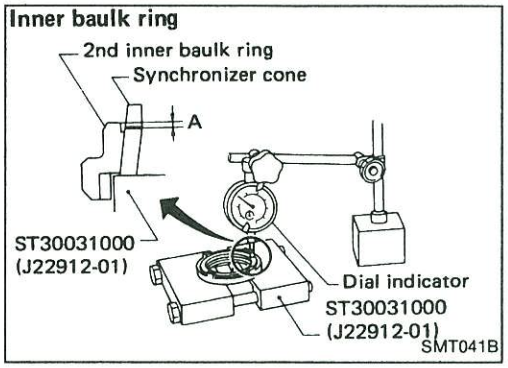


- Measure wear of 2nd baulk ring.

a. Place baulk rings in position on synchronizer cone.

b. While holding baulk rings against synchronizer cone as far as it will go, measure dimensions "A" and "B".

Unit: mm (in)

| Dimension | Standard | Wear limit |
|---|---|---|
| A | 0.6 - 1.1 (0.024 - 0.043) | 0.2 (0.008) |
| B | 0.7 - 0.9 (0.028 - 0.035) | |

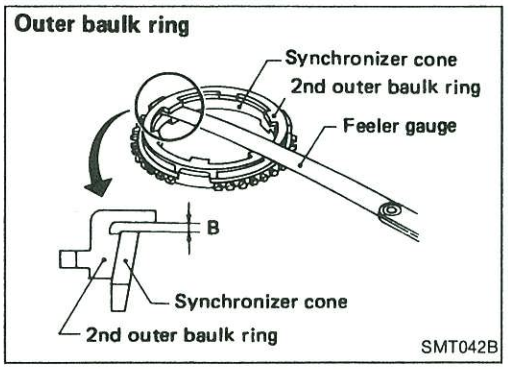


c. If dimension "A" or "B" is smaller than the wear limit, replace baulk ring.

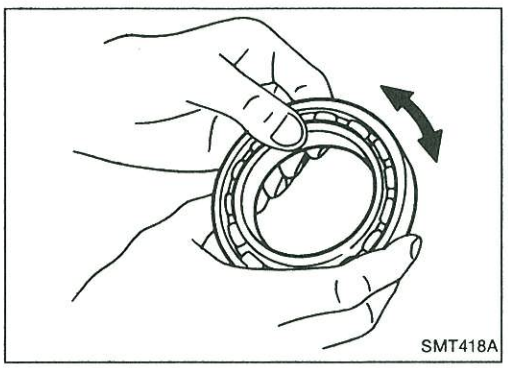


### BEARINGS

- Make sure bearings roll freely and are free from noise, crack, pitting or wear.

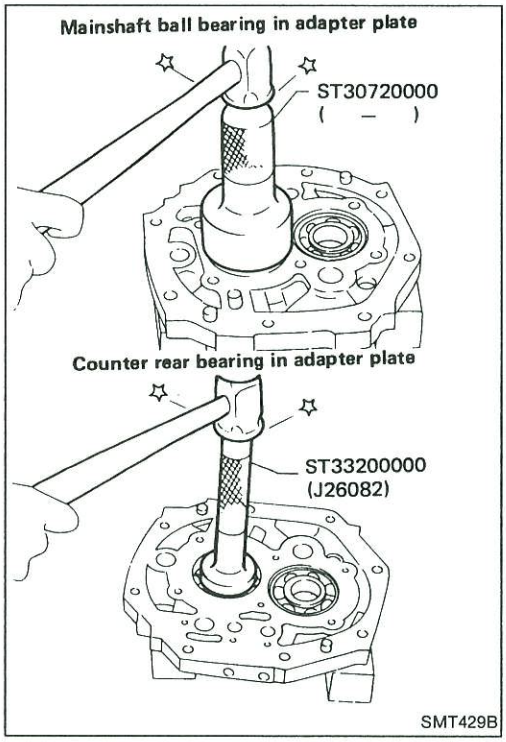


## Gear Components

1. Install bearings into case components.

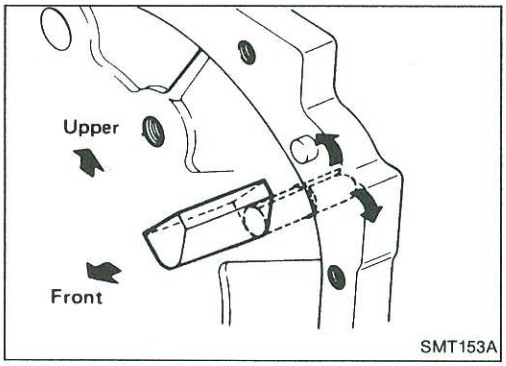


2. Assemble adapter plate parts.
- Install oil gutter on adapter plate and expand on rear side.

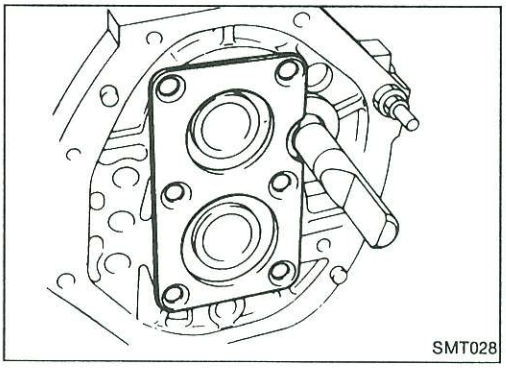


- Install bearing retainer.

a. Insert reverse shaft, then install bearing retainer.

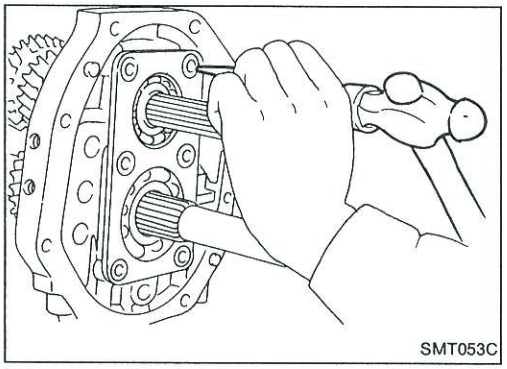


b. Tighten each screw, then stake each at two points.

## Gear Components (Cont'd)

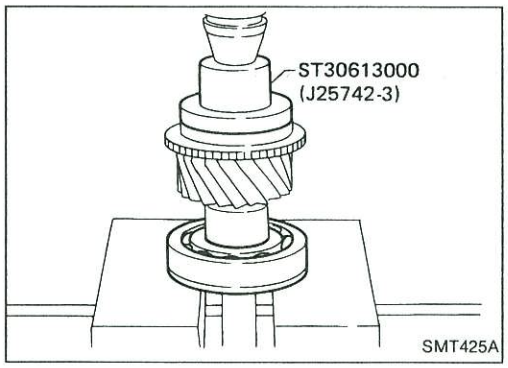


3. Install main drive gear bearing.
a. Press main drive gear bearing.
b. Install main drive gear spacer.

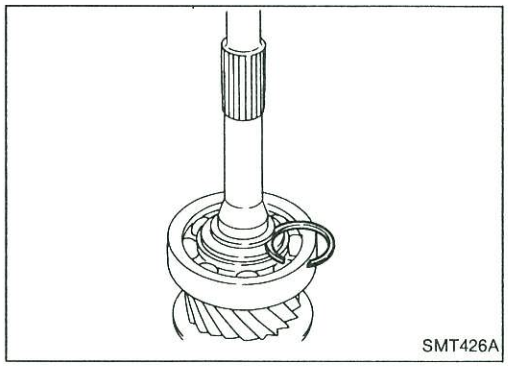


c. Select proper main drive gear snap ring to minimize clearance of groove and install it.

**Allowable clearance of groove:**
**0 - 0.13 mm (0 - 0.0051 in)**
**Main drive gear snap ring:**
**Refer to S.D.S.**

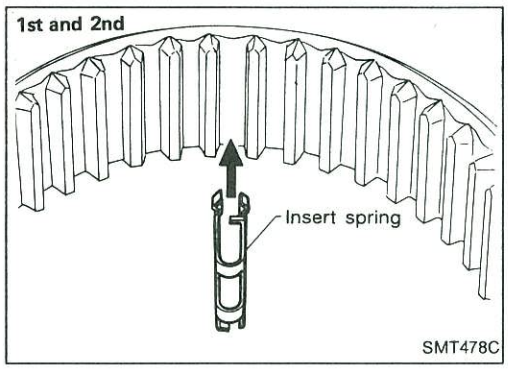


4. Assemble synchronizers.
- 1st & 2nd synchronizer

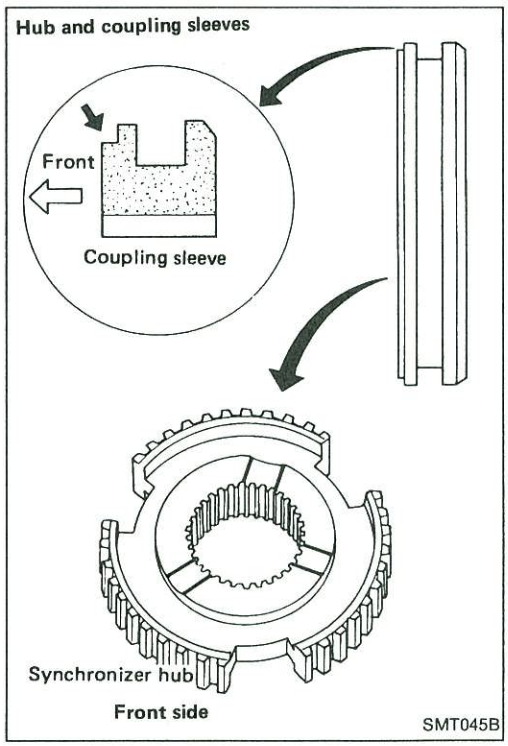


- Check coupling sleeve and synchronizer hub orientation.

## Gear Components (Cont'd)

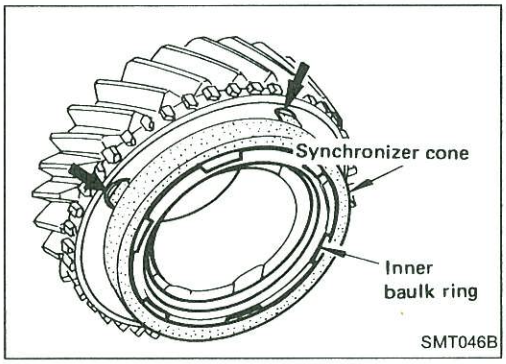


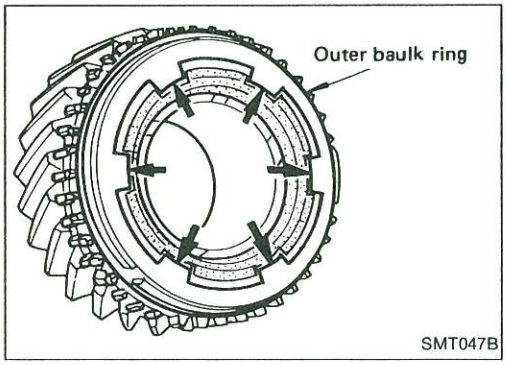


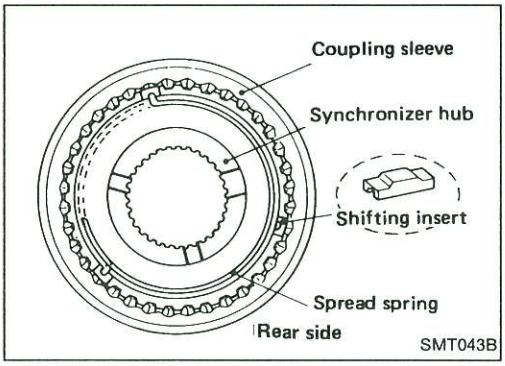


- 3rd & 4th synchronizer

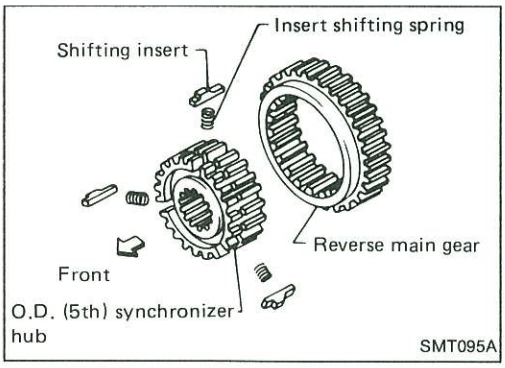


- O.D. synchronizer

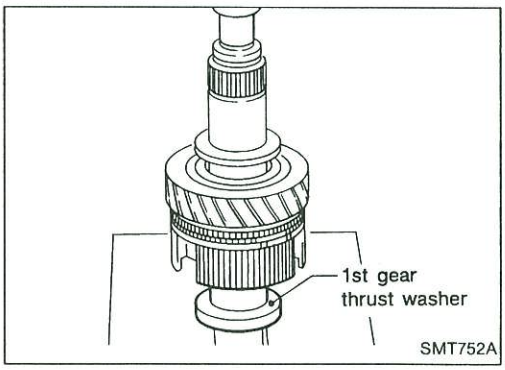


5. Install front side components on main shaft.
a. Assemble 2nd main gear, needle bearing and 1st & 2nd synchronizer assembly, then press 1st gear bushing on mainshaft.
b. Install 1st main gear.

## Gear Components (Cont'd)

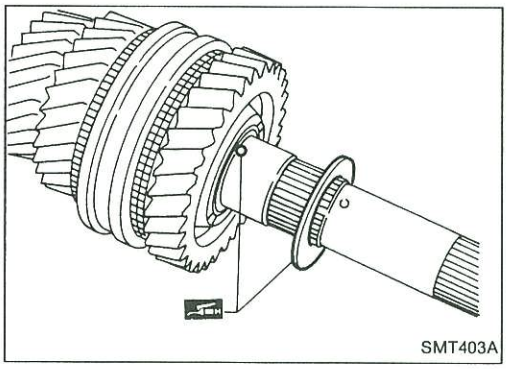
SMT403A

c. Install steel ball and 1st gear washer.

- **Apply multi-purpose grease to steel ball and 1st gear washer before installing.**

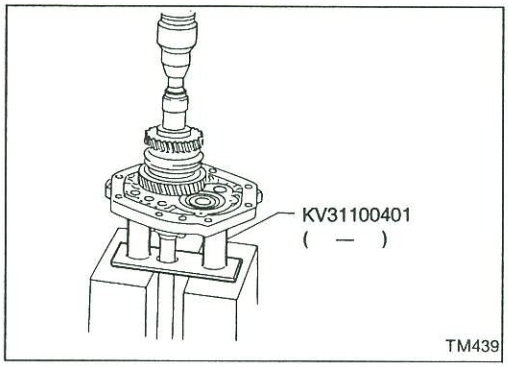

TM439

6. Install mainshaft and counter gear on adapter plate and main drive gear on mainshaft.
a. Press mainshaft assembly to adapter plate with Tool.

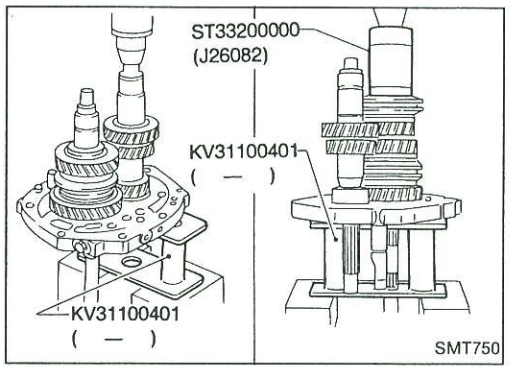

SMT750

b. Press counter gear into adapter plate with Tool.
c. Install 3rd main gear and then press 3rd & 4th synchronizer assembly.

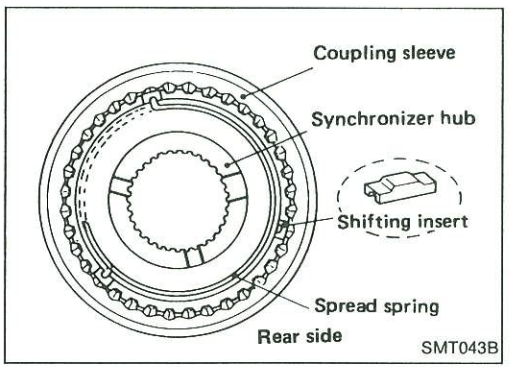

SMT043B

- **Pay attention to direction of 3rd & 4th synchronizer.**

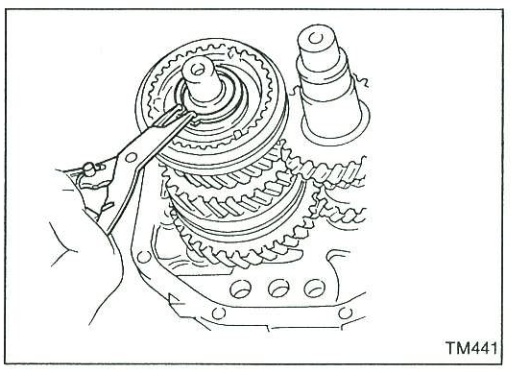
TM441

d. Install thrust washer on mainshaft and secure it with mainshaft front snap ring.
Select proper snap ring to minimize clearance of groove in mainshaft.

**Allowable clearance of groove:**
**0 - 0.18 mm (0 - 0.0071 in)**
**Mainshaft front snap ring:**
**Refer to S.D.S.**

e. Apply gear oil to mainshaft pilot bearing and install it on mainshaft.

## Gear Components (Cont'd)

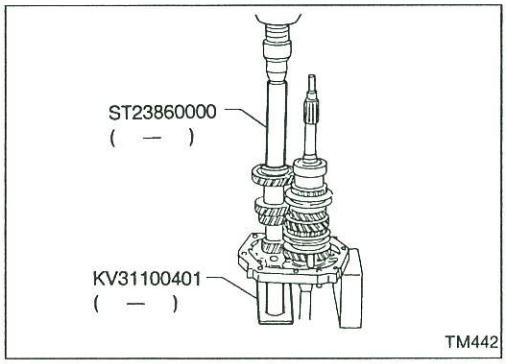


f. Press counter drive gear with main drive gear with Tool.

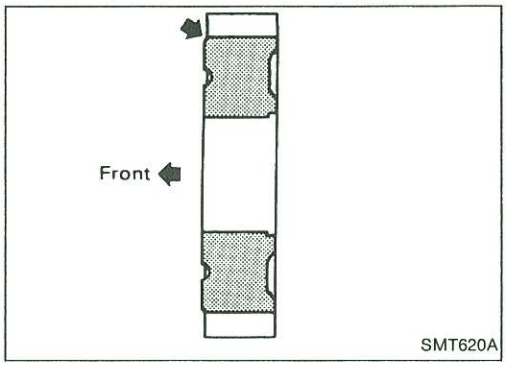


- **Pay attention to direction of counter drive gear.**

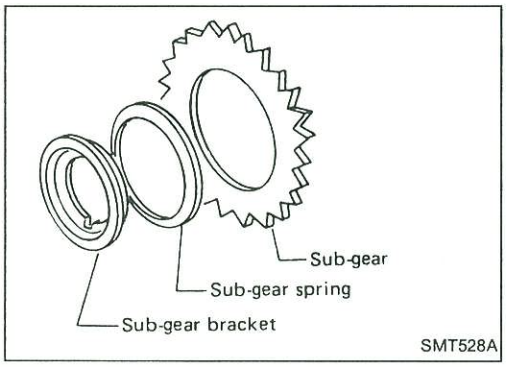


g. Install sub-gear components.

(1) Install sub-gear and sub-gear bracket on counter drive gear and then select proper snap ring to minimize clearance of groove in counter gear.

**Allowable clearance of groove:**
**0 - 0.18 mm (0 - 0.0071 in)**
**Counter drive gear snap ring: Refer to S.D.S.**

(2) Remove snap ring, sub-gear bracket and sub-gear from counter gear.

(3) Reinstall sub-gear, sub-gear spring and sub-gear bracket.

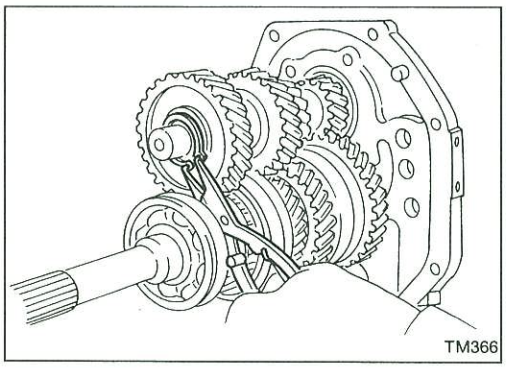


h. Install selected counter drive gear snap ring.

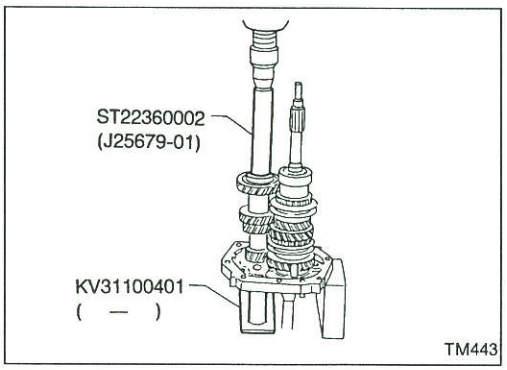


i. Press counter gear front bearing onto counter gear.

## Gear Components (Cont'd)

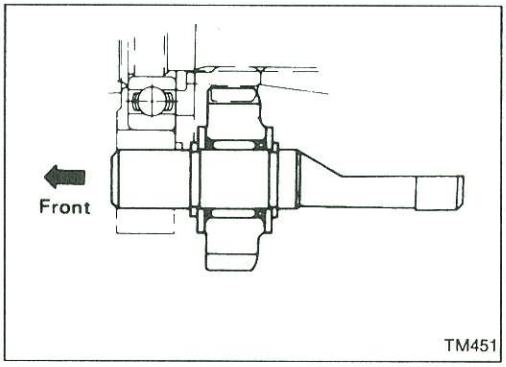


7. Install rear side components on mainshaft and counter gear.

a. Install reverse idler gear to reverse idler shaft with spacers, snap rings and needle bearing.

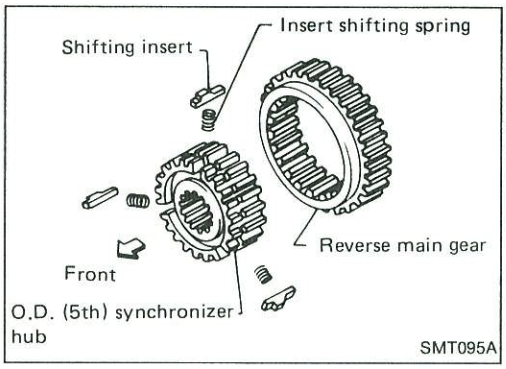


b. Install insert retainer and O.D. synchronizer to mainshaft.

- **Pay attention to direction of hub.**

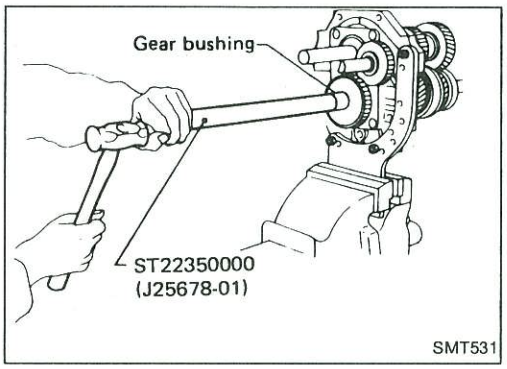


c. Install O.D. gear bushing with Tool.

d. Install O.D. main gear and needle bearing.

e. Install spacer, reverse counter gear and O.D. counter gear.

- **O.D. main gear and O.D. counter gear should be handled as a matched set.**

f. Install washer, roller bearing, steel roller and thrust washer.

g. Tighten mainshaft lock nut temporarily.

- **Always use new lock nut.**

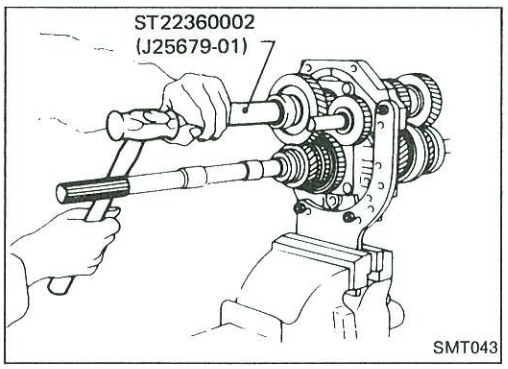


h. Install countershaft rear end bearing with Tool.

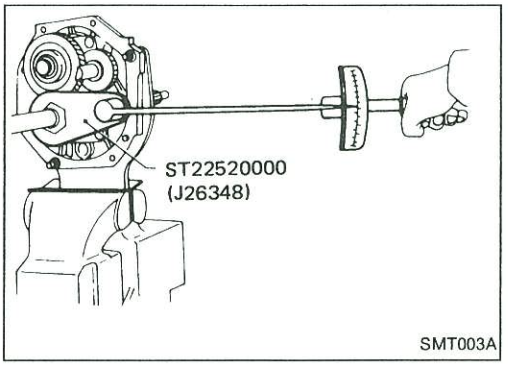


8. Mesh 2nd and reverse gears, then tighten mainshaft lock nut with Tool.

## Gear Components (Cont'd)

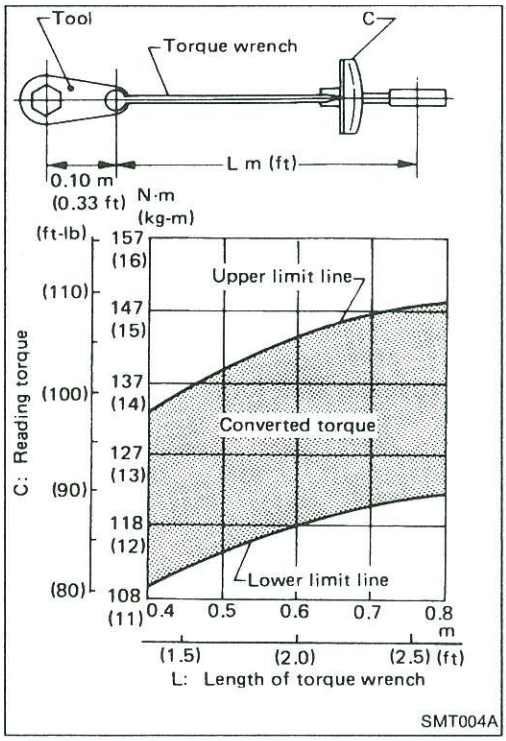


- Use the left chart when deciding the reading torque. (Length of torque wrench vs. setting or reading torque)

9. Tighten countershaft lock nut.
- **Always use new lock nut.**

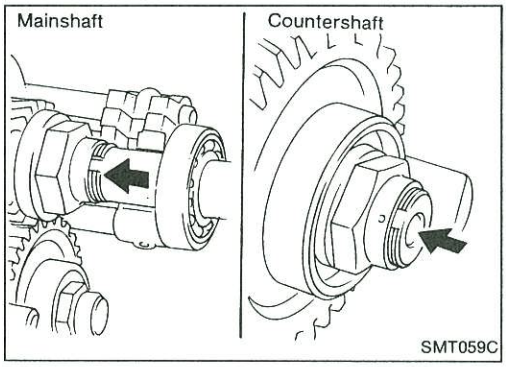


10. Stake mainshaft lock nut and countershaft lock nut with a punch.
11. Measure gear end play. For the description, refer to DISASSEMBLY for Gear Components.

## Shift Control Components

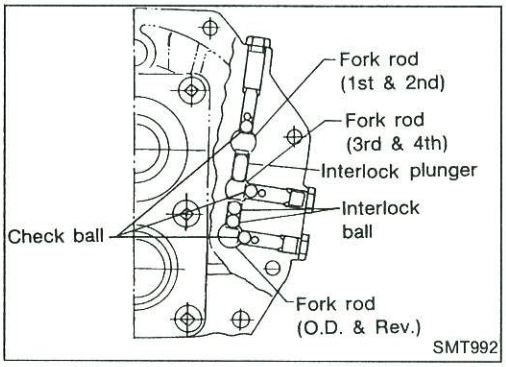


1. Install shift rods, interlock plunger, interlock balls and check balls.

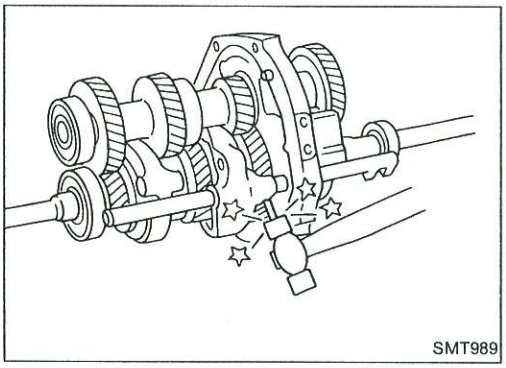


a. 1st-2nd shift fork

## Shift Control Components (Cont'd)

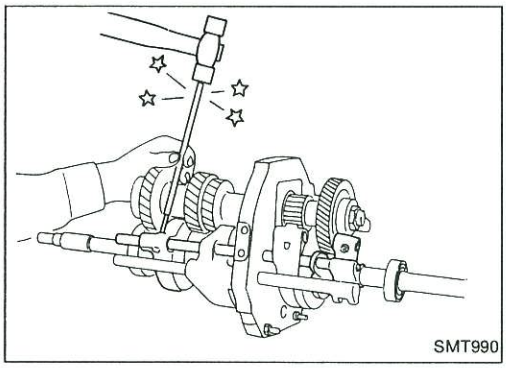
SMT990

b. 3rd-4th shift fork

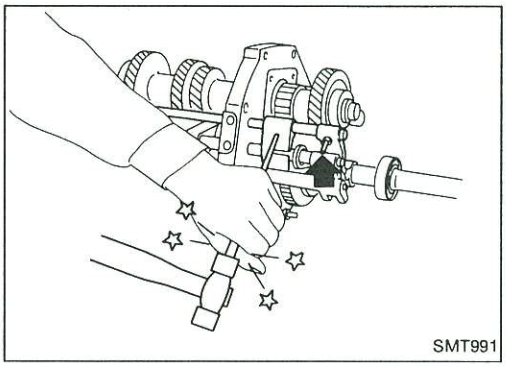
SMT991

c. O.D.-reverse shift fork or reverse shift fork.

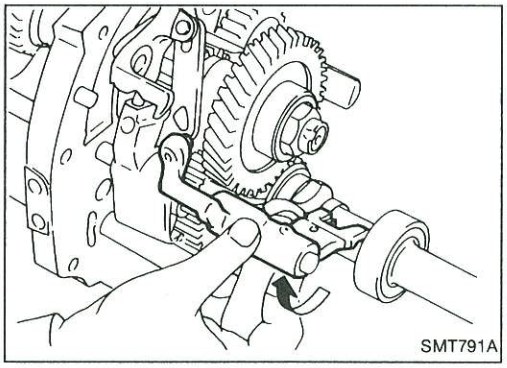
SMT791A

2. Install O.D. and reverse fork shaft by rotating O.D. and reverse bracket clockwise.

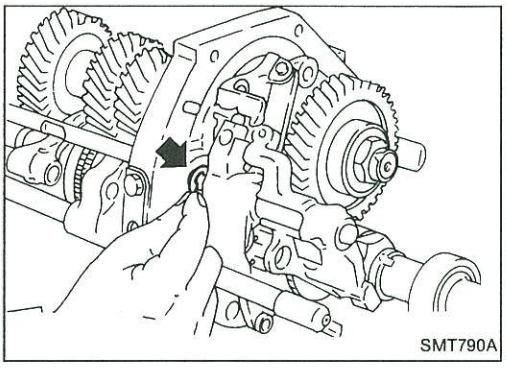
SMT790A

3. Install E-ring on O.D. and reverse fork rod.

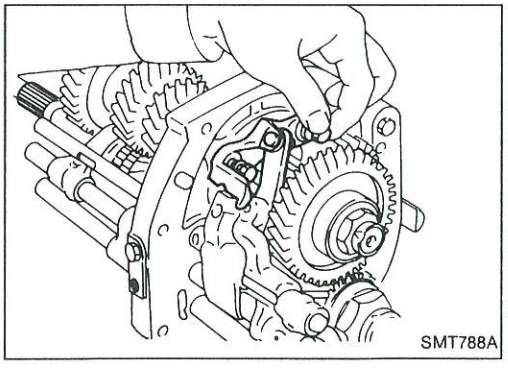
SMT788A

4. Install lever bracket securing bolt.

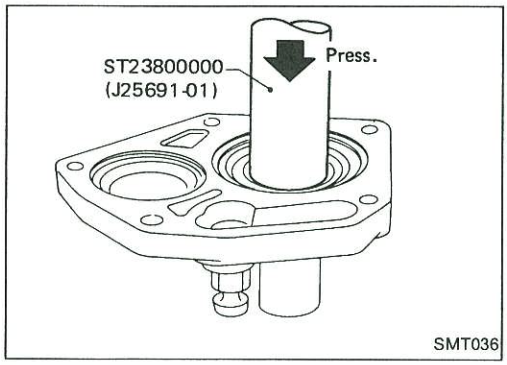


## Case Components

1. Install front cover oil seal.
- **Apply multi-purpose grease to seal lip of oil seal before installing.**

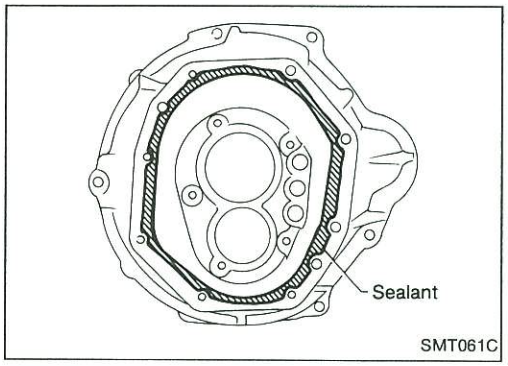


2. Apply sealant to mating surface of transmission case.

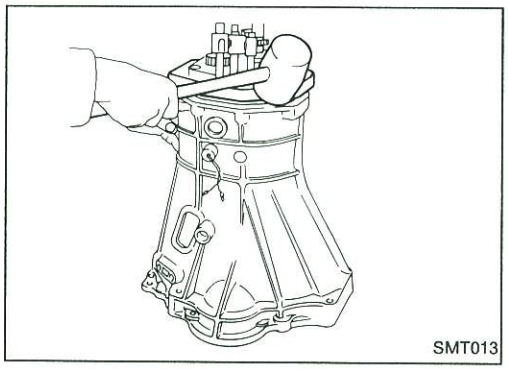


3. Install gear assembly onto transmission case.

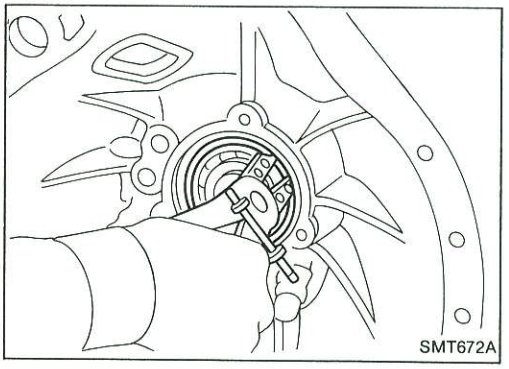


4. Install snap ring of main drive bearing.

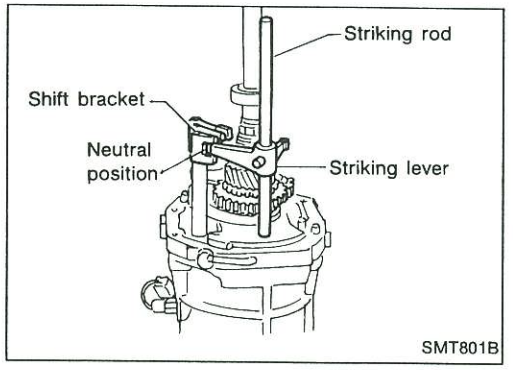


5. Set 1st & 2nd, 3rd & 4th and 5th & reverse shift forks in neutral position.
6. Install striking rod onto adapter plate while aligning striking lever with shift brackets.

## Case Components (Cont'd)

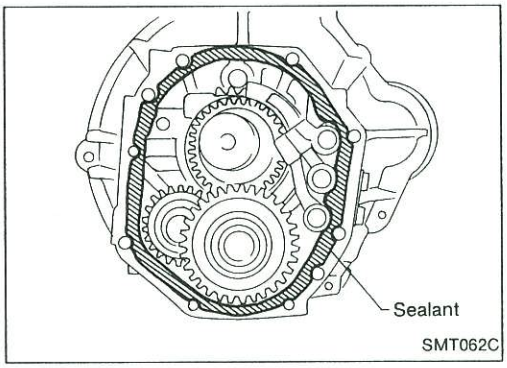


7. Apply sealant to mating surface of adapter plate.
8. Install rear extension while inserting striking arm into striking rod.

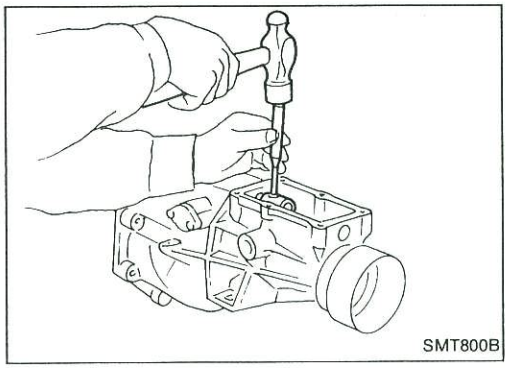


9. Install striking arm retaining pin.

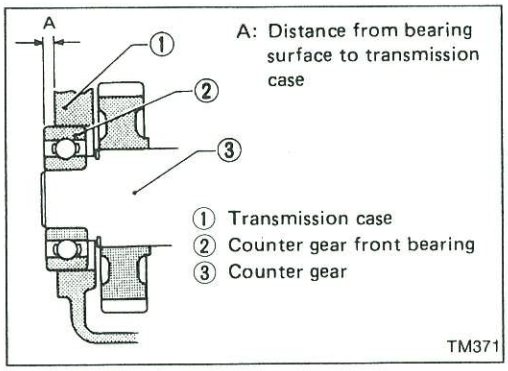


10. Select counter front bearing shim.
    **Counter front bearing shim: Refer to S.D.S.**
11. Install gasket and front cover.

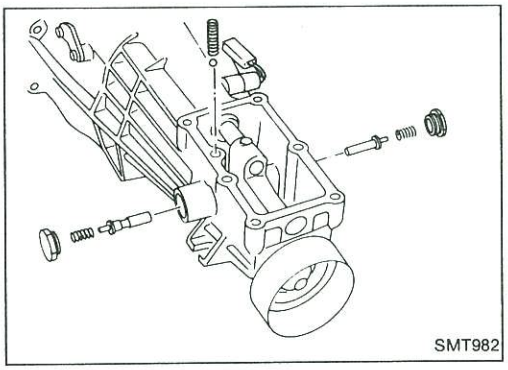


12. Install return spring plugs, check ball, return springs and select check plunger.
13. Install control housing and gasket.

## General Specifications

| | | |
|---|---|---|
| Transmission model | | FS5W71C |
| Number of speeds | | 5 |
| Shift pattern | | |
| Synchromesh type | | Warner |
| Gear ratio | 1st | 3.321 |
| | 2nd | 1.902 |
| | 3rd | 1.308 |
| | 4th | 1.000 |
| | O.D. | 0.759 |
| | Reverse | 3.382 |
| Number of teeth | | |
| Mainshaft | Drive | 22 |
| | 1st | 33 |
| | 2nd | 27 |
| | 3rd | 26 |
| | O.D. | 21 |
| | Reverse | 36 |
| Countershaft | Drive | 31 |
| | 1st | 14 |
| | 2nd | 20 |
| | 3rd | 28 |
| | O.D. | 39 |
| | Reverse | 15 |
| Reverse idler gear | | 21 |
| Oil capacity | ℓ (US pt, Imp pt) | 2.4 (5-1/8, 4-1/4) |
| Remarks | Sub-gear | ○ |
| | Mainshaft braking mechanism | ○ |
| | Double baulk ring type synchronizer | 2nd synchronizer |

# Inspection and Adjustment

## GEAR END PLAY

| Gear | End play mm (in) |
|---|---|
| 1st gear | 0.31 - 0.41 (0.0122 - 0.0161) |
| 2nd gear | 0.11 - 0.21 (0.0043 - 0.0083) |
| 3rd gear | 0.11 - 0.21 (0.0043 - 0.0083) |
| O.D. gear | 0.24 - 0.41 (0.0094 - 0.0161) |

## CLEARANCE BETWEEN BAULK RING AND GEAR

### 1st, 3rd, main drive and O.D. baulk ring

Unit: mm (in)

| | Standard | Wear limit |
|---|---|---|
| 1st | 1.2 - 1.6 (0.047 - 0.063) | 0.8 (0.031) |
| 3rd and main drive | 1.2 - 1.6 (0.047 - 0.063) | |
| O.D. | 1.2 - 1.4 (0.047 - 0.055) | |

### 2nd baulk ring

Unit: mm (in)

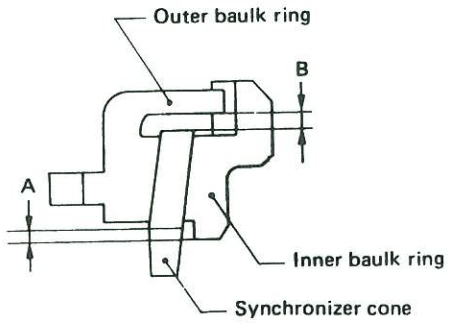


SMT044B

| Dimension | Standard | Wear limit |
|---|---|---|
| A | 0.6 - 1.1 (0.024 - 0.043) | 0.2 (0.008) |
| B | 0.7 - 0.9 (0.028 - 0.035) | |

## AVAILABLE SNAP RINGS

### Main drive gear bearing

| Allowable clearance | 0 - 0.13 mm (0 - 0.0051 in) |
|---|---|
| Thickness mm (in) | Part number |
| 1.73 (0.0681) | 32204-78005 |
| 1.80 (0.0709) | 32204-78000 |
| 1.87 (0.0736) | 32204-78001 |
| 1.94 (0.0764) | 32204-78002 |
| 2.01 (0.0791) | 32204-78003 |
| 2.08 (0.0819) | 32204-78004 |

### Mainshaft front

| Allowable clearance | 0 - 0.18 mm (0 - 0.0071 in) |
|---|---|
| Thickness mm (in) | Part number |
| 2.4 (0.094) | 32263-V5200 |
| 2.5 (0.098) | 32263-V5201 |
| 2.6 (0.102) | 32263-V5202 |

### Mainshaft rear end bearing

| Allowable clearance | 0 - 0.14 mm (0 - 0.0055 in) |
|---|---|
| Thickness mm (in) | Part number |
| 1.1 (0.043) | 32228-20100 |
| 1.2 (0.047) | 32228-20101 |
| 1.3 (0.051) | 32228-20102 |
| 1.4 (0.055) | 32228-20103 |

### Counter drive gear

| Allowable clearance | 0 - 0.18 mm (0 - 0.0071 in) |
|---|---|
| Thickness mm (in) | Part number |
| 1.4 (0.055) | 32215-E9000 |
| 1.5 (0.059) | 32215-E9001 |
| 1.6 (0.063) | 32215-E9002 |

## AVAILABLE SHIMS

### Counter front bearing

Unit: mm (in)

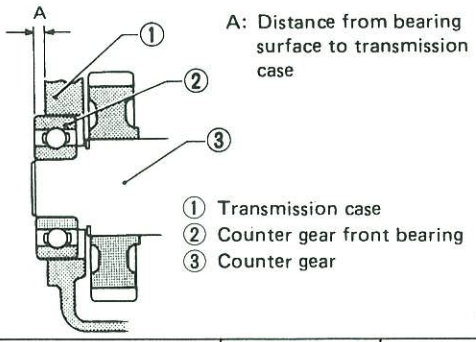


TM371

| "A" | Thickness of shim | Part number |
|---|---|---|
| 4.52 - 4.71 (0.1780 - 0.1854) | Not necessary | |
| 4.42 - 4.51 (0.1740 - 0.1776) | 0.1 (0.004) | 32218-V5000 |
| 4.32 - 4.41 (0.1701 - 0.1736) | 0.2 (0.008) | 32218-V5001 |
| 4.22 - 4.31 (0.1661 - 0.1697) | 0.3 (0.012) | 32218-V5002 |
| 4.12 - 4.21 (0.1622 - 0.1657) | 0.4 (0.016) | 32218-V5003 |
| 4.02 - 4.11 (0.1583 - 0.1618) | 0.5 (0.020) | 32218-V5004 |
| 3.92 - 4.01 (0.1543 - 0.1579) | 0.6 (0.024) | 32218-V5005 |

# AUTOMATIC TRANSMISSION

# SECTION AT

## CONTENTS


**PREPARATION** ..... 2
Special Service Tools ..... 2
**PRECAUTIONS** ..... 3
Service Notice ..... 3
**A/T CONTROL DIAGRAM** ..... 4
Hydraulic Control Circuits ..... 4
Electrical Control Chart ..... 5
Mechanical Operation ..... 5
Cross-Sectional View ..... 6
**ON-VEHICLE SERVICE** ..... 7
Control Valve Assembly and Accumulators Inspection ..... 7
Revolution Sensor Replacement ..... 7
Rear Oil Seal Replacement ..... 8
Parking Components Inspection ..... 8
Inhibitor Switch Adjustment ..... 9
Manual Control Linkage Adjustment ..... 9
Kickdown Switch Adjustment ..... 9
**TROUBLE DIAGNOSES** ..... 10
Contents ..... 10
**TROUBLE DIAGNOSES — A/T Shift Lock System** ..... 81
Shift Lock System Electrical Parts Location ..... 81
Circuit Diagram For Quick Pinpoint Check ..... 81
Wiring Diagram ..... 82
Diagnostic Procedure ..... 83
Shift Lock Control Unit Inspection Table ..... 92
Component Check ..... 93
**REMOVAL AND INSTALLATION** ..... 95
Removal ..... 95
Installation ..... 97
**MAJOR OVERHAUL** ..... 98
Oil Channel ..... 100
Locations of Needle Bearings, Thrust Washers and Snap Rings ..... 101
**DISASSEMBLY** ..... 102
Disassembly ..... 102
**REPAIR FOR COMPONENT PARTS** ..... 113
Oil Pump ..... 113
Control Valve Assembly ..... 117
Control Valve Upper Body ..... 123
Control Valve Lower Body ..... 129
Reverse Clutch ..... 131
High Clutch ..... 135
Forward and Overrun Clutches ..... 137
Low & Reverse Brake ..... 141
Forward Clutch Drum Assembly ..... 145
Rear Internal Gear and Forward Clutch Hub ..... 147
Band Servo Piston Assembly ..... 150
Parking Pawl Components ..... 154
**ASSEMBLY** ..... 156
Assembly ..... 156
Adjustment ..... 160
Assembly ..... 164
**SERVICE DATA AND SPECIFICATIONS (S.D.S.)** ..... 174
General Specifications ..... 174
Specifications and Adjustment ..... 174

## Special Service Tools

| Tool number<br>(Kent-Moore No.)<br>Tool name | Description | |
|---|---|---|
| ST2505S001<br>(J25695-A)<br>Oil pressure gauge set<br>① ST25051001<br>( — )<br>Oil pressure gauge<br>② ST25052000<br>( — )<br>Hose<br>③ ST25053000<br>( — )<br>Joint pipe<br>④ ST25054000<br>( — )<br>Adapter<br>⑤ ST25055000<br>( — )<br>Adapter | 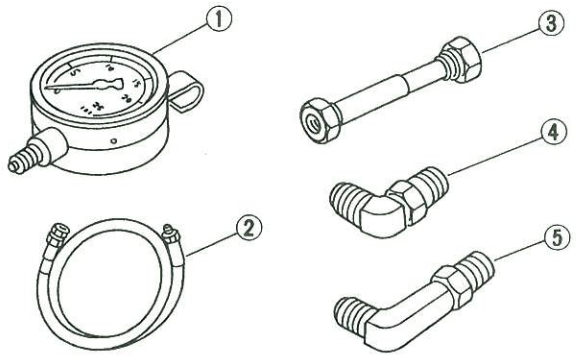 | Measuring line pressure |
| ST07870000<br>(J37068)<br>Transmission case stand | 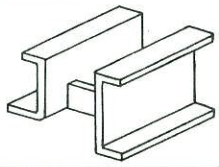 | Disassembling and assembling A/T |
| KV31102100<br>(J37065)<br>Torque converter one-way clutch check tool | 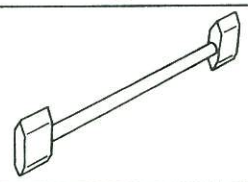 | Checking one-way clutch in torque converter |
| ST25850000<br>(J25721-A)<br>Sliding hammer | 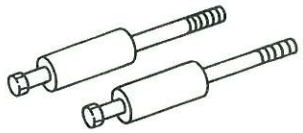 | Removing oil pump assembly |
| KV31102400<br>(J34285 and J34285-87)<br>Clutch spring compressor | 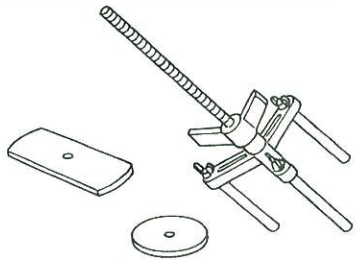 | Removing and installing clutch return springs |
| ST33200000<br>(J26082)<br>Drift | 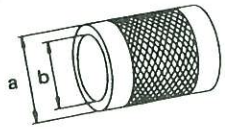 <br>**a: 60 mm (2.36in) dia.**<br>**b: 44.5 mm (1.75in) dia.** | Installing oil pump housing oil seal<br>Installing rear oil seal |
| (J34291)<br>Shim setting gauge set | | Selecting oil pump cover bearing race and oil pump thrust washer |

## Service Notice

- Before proceeding with disassembly, thoroughly clean the outside of the transmission. It is important to prevent the internal parts from becoming contaminated by dirt or other foreign matter.
- Disassembly should be done in a clean work area.
- Use lint-free cloth or towels for wiping parts clean. Common shop rags can leave fibers that could interfere with the operation of the transmission.
- When disassembling parts, place them in order in a parts rack so that they can be put back into the unit in their proper positions.
- All parts should be carefully cleaned with a general purpose, non-flammable solvent before inspection or reassembly.
- Gaskets, seals and O-rings should be replaced any time the transmission is disassembled.
- It is very important to perform functional tests whenever they are indicated.
- The valve body contains precision parts and requires extreme care when parts are removed and serviced. Place removed parts in order on a parts rack so they can be put back in the valve body in the same positions and sequences. Care will also prevent springs and small parts from becoming scattered or lost.
- Properly installed valves, sleeves, plugs, etc. will slide along their bores in the valve body under their own weight.
- Before assembly, apply a coat of recommended A.T.F. to all parts. Petroleum jelly may be applied to O-rings and seals and used to hold small bearings and washers in place during reassembly. Do not use grease.
- Extreme care should be taken to avoid damage to O-rings, seals and gaskets when assembling.
- After overhaul, refill the transmission with new A.T.F.

## Hydraulic Control Circuits

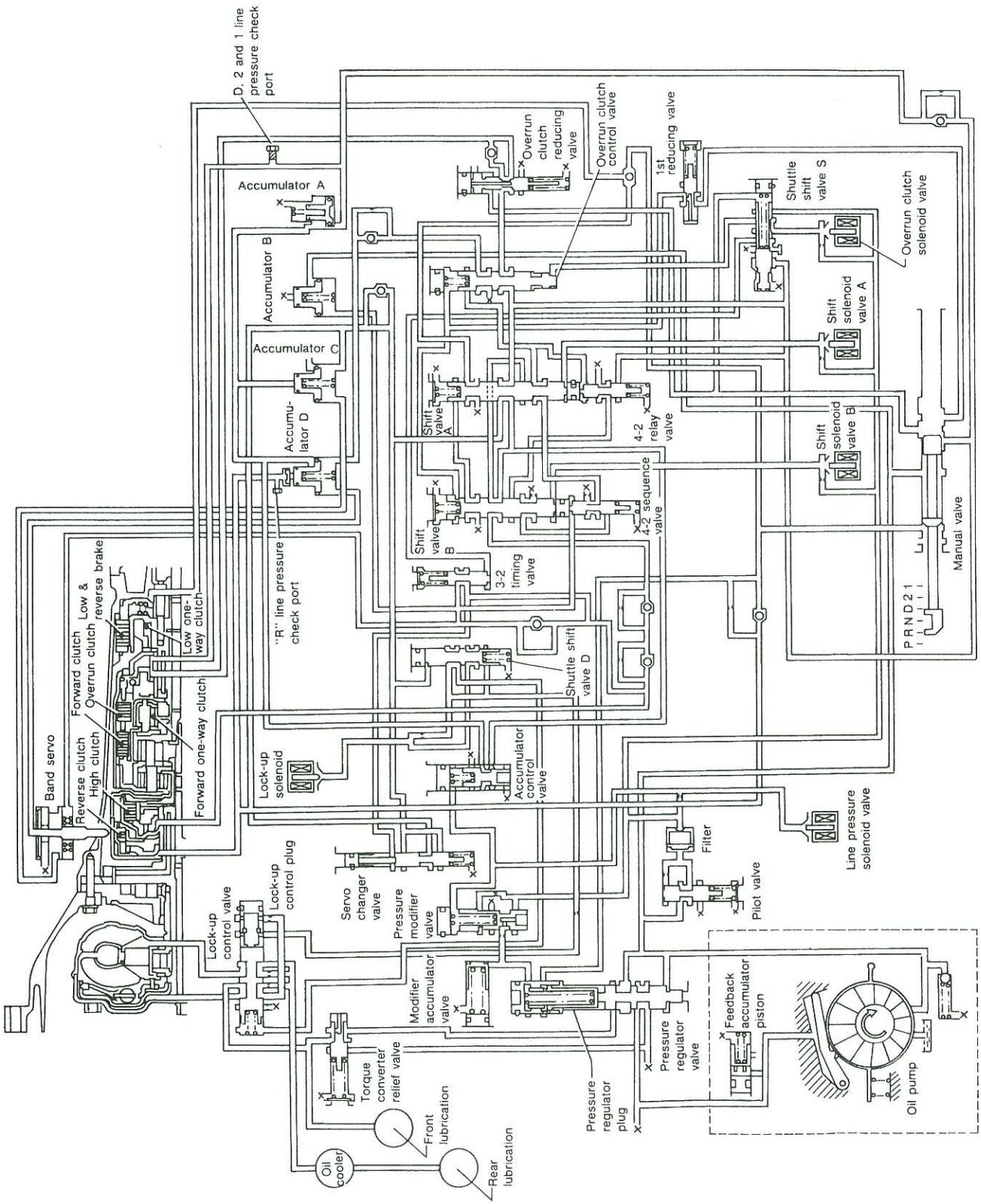


SAT044G

## Electrical Control Chart

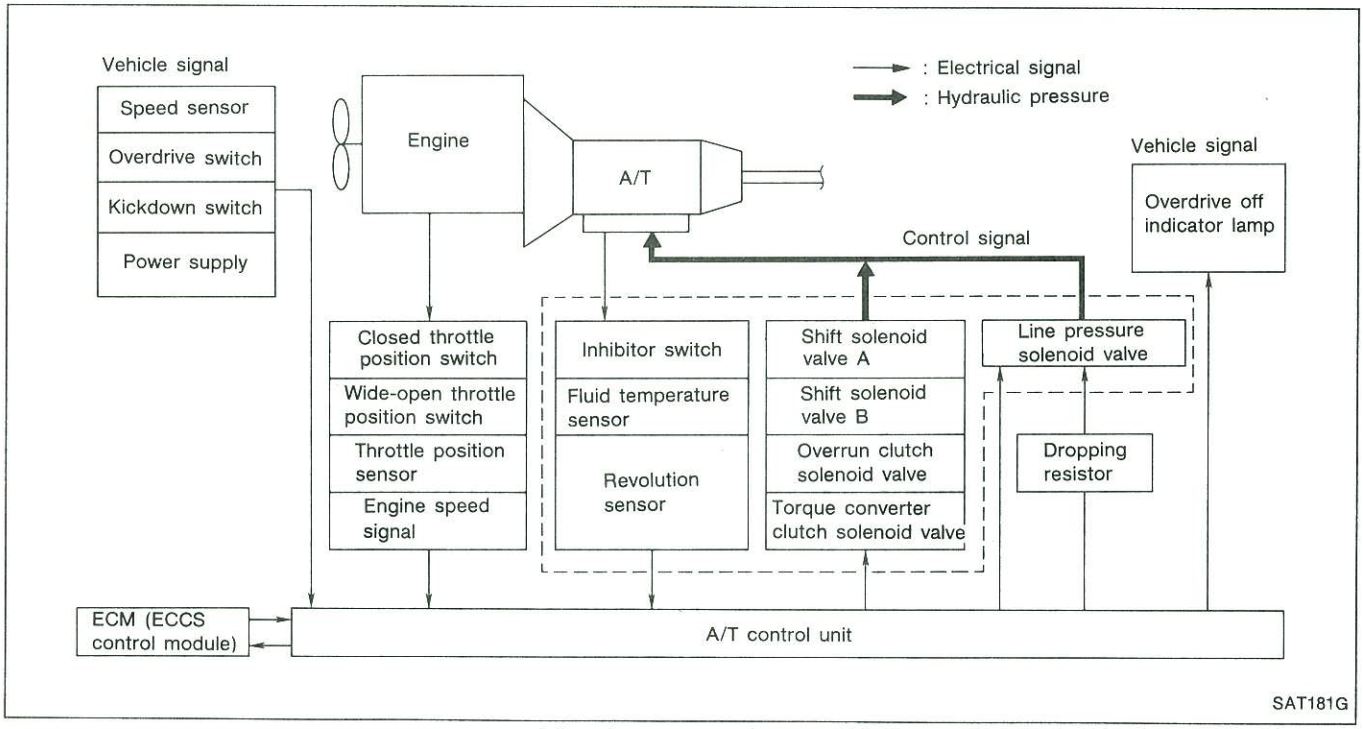


## Mechanical Operation

| Shift position | | Reverse clutch | High clutch | Forward clutch | Overrun clutch | Band servo 2nd apply | Band servo 3rd release | Band servo 4th apply | Forward one-way clutch | Low one-way clutch | Low & reverse brake | Lock-up | Remarks |
|---|---|---|---|---|---|---|---|---|---|---|---|---|---|
| P | | | | | | | | | | | | | PARK POSITION |
| R | | ○ | | | | | | | | | ○ | | REVERSE POSITION |
| N | | | | | | | | | | | | | NEUTRAL POSITION |
| D*4 | 1st | | | ○ | ⊗ | | | | ● | ● | | | Automatic shift 1 ↔ 2 ↔ 3 ↔ 4 |
| | 2nd | | | ○ | *1 ◎ | ○ | | | ● | | | | |
| | 3rd | | ○ | ○ | *1 ◎ | *2 ⊗ | ⊗ | | ● | | | | |
| | 4th | | ○ | ⊗ | | *3 ⊗ | ⊗ | ○ | | | | ○ | |
| 2 | 1st | | | ○ | ⊗ | | | | ● | ● | | | Automatic shift 1 ↔ 2 |
| | 2nd | | | ○ | ◎ | ○ | | | ● | | | | |
| 1 | 1st | | | ○ | ○ | | | | ● | | ○ | | Locks (held stationary) in 1st speed 1 ← 2 |
| | 2nd | | | ○ | ○ | ○ | | | ● | | | | |

*1. Operates when overdrive switch is set in "OFF" position.
*2. Oil pressure is applied to both 2nd "apply" side and 3rd "release" side of band servo piston. However, because oil pressure area on the "release" side is greater than that on the "apply" side, brake band does not contract.
*3. Oil pressure is applied to 4th "apply" side in condition *2 above, and brake band contracts.
*4. A/T will not shift to 4th when overdrive switch is set in "OFF" position.
○: Operates
◎: Operates when throttle opening is less than 1/16. Engine brake activates.
●: Operates during "progressive" acceleration.
⊗: Operates but does not affect power transmission.
⊗: Operates when throttle opening is less than 1/16 but does not affect engine brake.

## Cross-Sectional View

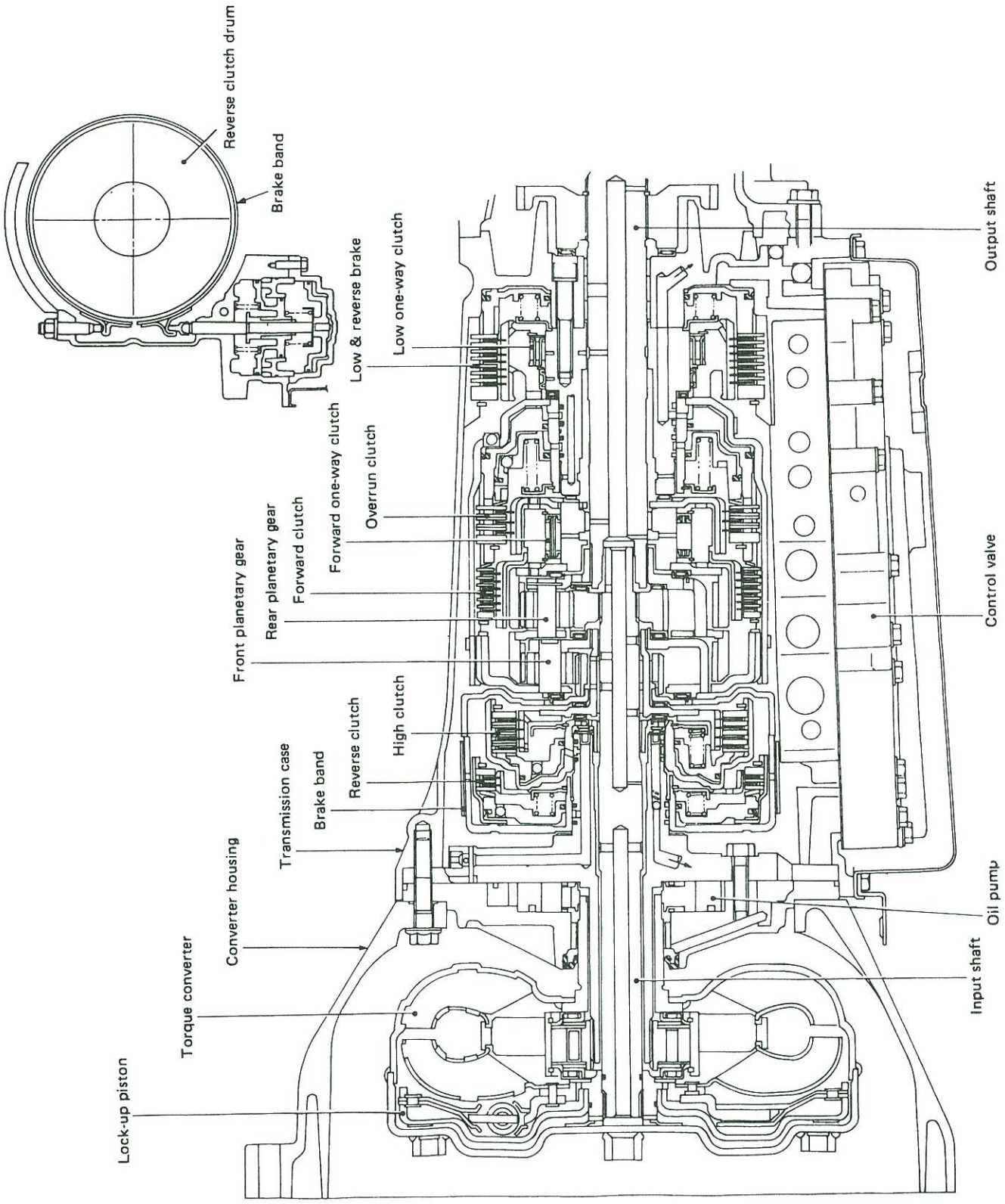


SAT125B

## Contents


**How to Perform Trouble Diagnoses for Quick and Accurate Repair** ..... AT- 9
**Preliminary Check** ..... AT-10
**Diagnosis by CONSULT** ..... AT-22
**A/T Electrical Parts Location** ..... AT-24
**Circuit Diagram for Quick Pinpoint Check** ..... AT-25
**Wiring Diagram** ..... AT-26
**Self-diagnosis** ..... AT-28
SELF-DIAGNOSTIC PROCEDURE (With CONSULT) ..... AT-29
SELF-DIAGNOSTIC PROCEDURE (Without CONSULT) ..... AT-30
JUDGMENT OF SELF-DIAGNOSIS CODE ..... AT-32
REVOLUTION SENSOR CIRCUIT CHECK ..... AT-33
SPEED SENSOR CIRCUIT CHECK ..... AT-34
THROTTLE POSITION SENSOR CIRCUIT CHECK ..... AT-34
SHIFT SOLENOID VALVE A CIRCUIT CHECK ..... AT-35
SHIFT SOLENOID VALVE B CIRCUIT CHECK ..... AT-36
OVERRUN CLUTCH SOLENOID VALVE CIRCUIT CHECK ..... AT-37
TORQUE CONVERTER CLUTCH SOLENOID VALVE CIRCUIT CHECK ..... AT-38
FLUID TEMPERATURE SENSOR CIRCUIT AND A/T CONTROL UNIT POWER SOURCE CIRCUIT CHECKS ..... AT-39
ENGINE SPEED SIGNAL CIRCUIT CHECK ..... AT-41
LINE PRESSURE SOLENOID VALVE CIRCUIT CHECK ..... AT-42
INHIBITOR, OVERDRIVE, KICKDOWN AND CLOSED THROTTLE POSITION SWITCH CIRCUIT CHECKS ..... AT-43
**Diagnostic Procedure 1**
(SYMPTOM: O.D. OFF indicator lamp does not come on for about 2 seconds when turning ignition switch to "ON".) ..... AT-47
**Diagnostic Procedure 2**
(SYMPTOM: Engine cannot be started with selector lever in "P" or "N" position or engine can be started with selector lever in "D", "2", "1" or "R" position.) ..... AT-48
**Diagnostic Procedure 3**
(SYMPTOM: Vehicle moves when it is pushed forward or backward with selector lever in "P" position.) ..... AT-49
**Diagnostic Procedure 4**
(SYMPTOM: Vehicle moves forward or backward when selecting "N" position.) ..... AT-49
**Diagnostic Procedure 5**
(SYMPTOM: There is large shock when changing from "N" to "R" position.) ..... AT-50
**Diagnostic Procedure 6**
(SYMPTOM: Vehicle does not creep backward when selecting "R" position.) ..... AT-51
**Diagnostic Procedure 7**
(SYMPTOM: Vehicle does not creep forward when selecting "D" , "2" or "1" position.) ..... AT-52
**Diagnostic Procedure 8**
(SYMPTOM: Vehicle cannot be started from $D_1$ on Cruise test — Part 1.) ..... AT-53
**Diagnostic Procedure 9**
(SYMPTOM: A/T does not shift from $D_1$ to $D_2$ at the specified speed. A/T does not shift from $D_4$ to $D_2$ when depressing accelerator pedal fully at the specified speed.) ..... AT-54
**Diagnostic Procedure 10**
(SYMPTOM: A/T does not shift from $D_2$ to $D_3$ at the specified speed.) ..... AT-55
**Diagnostic Procedure 11**
(SYMPTOM: A/T does not shift from $D_3$ to $D_4$ at the specified speed.) ..... AT-56
**Diagnostic Procedure 12**
(SYMPTOM: A/T does not perform lock-up at the specified speed.) ..... AT-57

## Contents (Cont'd)

**Diagnostic Procedure 13**
(SYMPTOM: A/T does not hold lock-up condition for more than 30 seconds.) ..... AT-58
**Diagnostic Procedure 14**
(SYMPTOM: Lock-up is not released when accelerator pedal is released.) ..... AT-59
**Diagnostic Procedure 15**
(SYMPTOM: Engine speed does not return to idle smoothly when A/T is shifted from $D_4$ to $D_3$ with accelerator pedal released.
Vehicle does not decelerate by engine brake when changing overdrive switch to "OFF" position with accelerator pedal released.
Vehicle does not decelerate by engine brake when changing selector lever from "D" to "2" position with accelerator pedal released.) ..... AT-60
**Diagnostic Procedure 16**
(SYMPTOM: Vehicle does not start from $D_1$ on Cruise test — Part 2.) ..... AT-61
**Diagnostic Procedure 17**
(SYMPTOM: A/T does not shift from $D_4$ on $D_3$ when changing overdrive switch to "OFF" position.) ..... AT-61
**Diagnostic Procedure 18**
(SYMPTOM: A/T does not shift from $D_3$ on $D_2$ when changing selector lever from "D" to "2" position.) ..... AT-62
**Diagnostic Procedure 19**
(SYMPTOM: A/T does not shift from $2_2$ to $1_1$ when changing selector lever from "2" to "1" position.) ..... AT-62
**Diagnostic Procedure 20**
(SYMPTOM: Vehicle does not decelerate by engine brake when shifting from $2_2$ ($1_2$) to $1_1$.) .. AT-63
**Electrical Components Inspection** ..... AT-63
**Final Check** ..... AT-70
**Symptom Chart** ..... AT-74

## How to Perform Trouble Diagnoses for Quick and Accurate Repair

### WORK FLOW

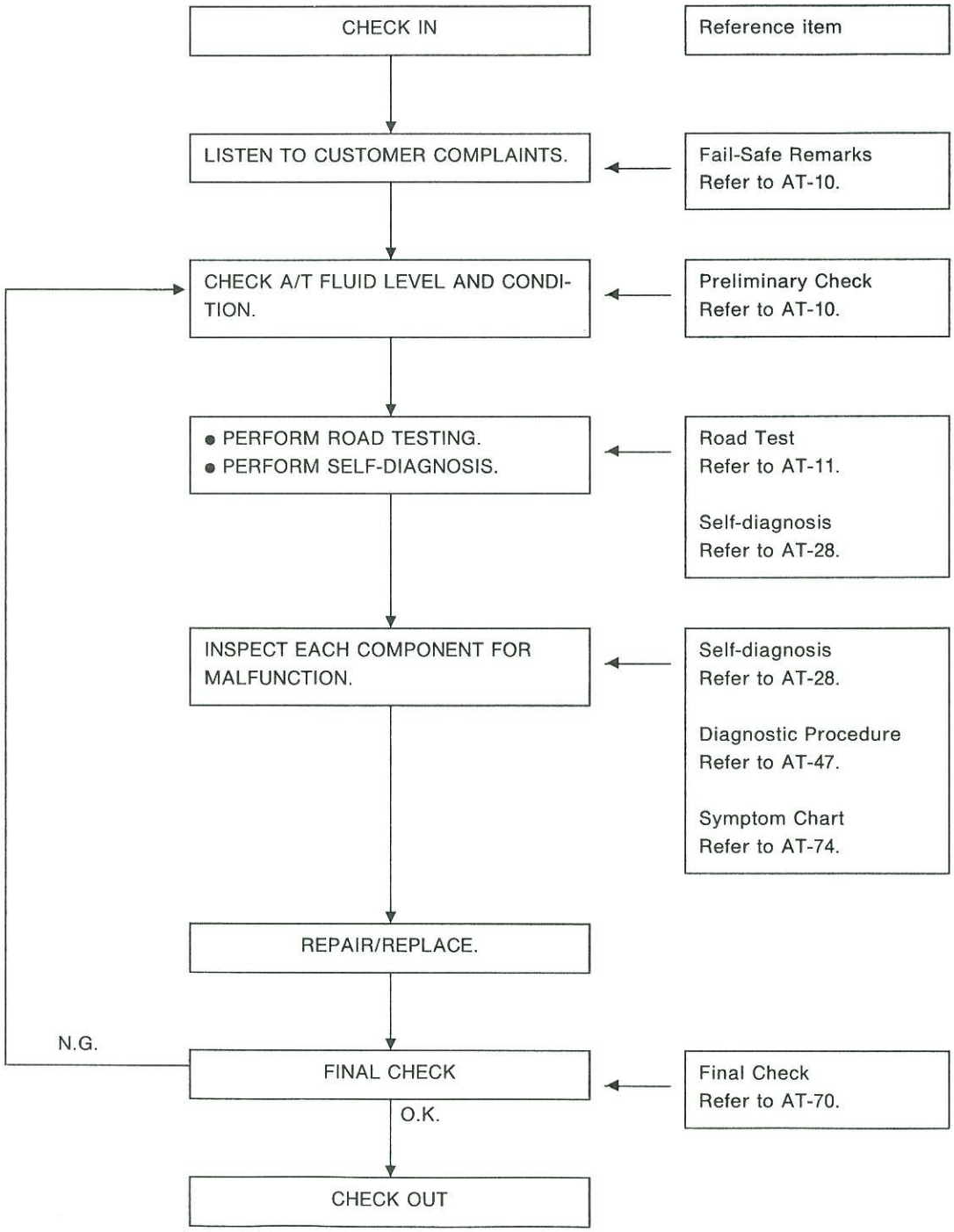

## Fail-Safe Remarks

The A/T control unit has an electronic Fail-Safe (limp home mode) to allow the vehicle to be driven even in the event of damage of a major electrical input or output device circuit.
In this condition, the vehicle runs in third gear in positions 1, 2 or D and will not upshift. Customer may say "Sluggish, poor acceleration".
When Fail-safe operation occurs the next time the key is turned to the ON position, the O.D. OFF indicator lamp will blink for about 8 seconds. (For diagnosis, refer to AT-11.)

### Remarks

If the vehicle is driven under extreme conditions such as excessive wheel spinning and emergency braking suddenly after, Fail-Safe may be activated even if all electrical circuits are undamaged.
In this case, normal shift pattern can be returned by turning key OFF for 3 seconds and then back ON.
The blinking of the O.D. OFF indicator lamp for about 8 seconds will appear only once and be cleared.
The customer may resume normal driving conditions by chance.
Always follow the "WORK FLOW" (see the previous page).
The SELF-DIAGNOSIS results will be as follows:

The first SELF-DIAGNOSIS will indicate the damage of the vehicle speed sensor or the revolution sensor.
During the next SELF-DIAGNOSIS performed after checking the sensor, no damages will be indicated.

## Preliminary Check

### A/T FLUID CHECK

#### Fluid leakage check

1. Clean area suspected of leaking, — for example, mating surface of converter housing and transmission case.
2. Start engine, apply foot brake, place selector lever in "D" position and wait a few minutes.
3. Stop engine.
4. Check for fresh leakage.

SAT638A

#### Fluid condition check

| Fluid color | Suspected problem |
|---|---|
| Dark or black with burned odor | Wear of frictional material |
| Milky pink | Water contamination<br>— Road water entering through filler tube or breather |
| Varnished fluid, light to dark brown and tacky | Oxidation<br>— Over or under filling<br>— Overheating |

#### Fluid level check — Refer to section MA.

## Preliminary Check (Cont'd)

### ROAD TESTING

ROAD TEST PROCEDURE

1. Check before engine is started.
⇩
2. Check at idle.
⇩
3. Cruise test.

SAT786A

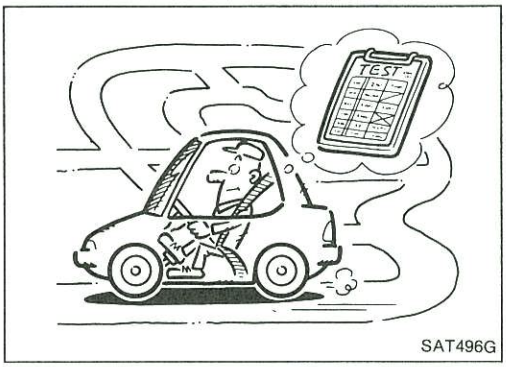


SAT496G

### Description

- The purpose of this road test is to determine overall performance of automatic transmission and analyze causes of problems.
- The road test consists of the following three parts:

1. Check before engine is started
2. Check at idle
3. Cruise test

- Before road test, familiarize yourself with all test procedures and items to check.
- Conduct tests on all items. Troubleshoot items which check out No Good after road test. Refer to "Self-diagnosis" and "Diagnostic Procedure".

### 1. Check before engine is started

1

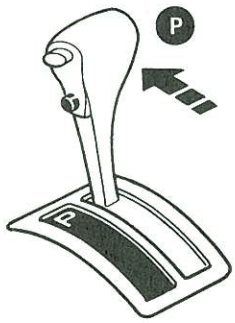


SAT768B

2 3

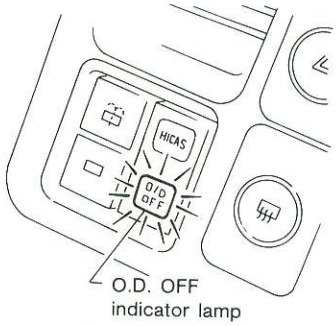


SAT746D

1 2

1. Park vehicle on flat surface.
2. Turn ignition switch to "OFF" position.
3. Move selector lever to "P" position.
4. Turn ignition switch to "ON" position. (Do not start engine.)
5. Does O.D. OFF indicator lamp come on for about 2 seconds?

No → Go to Diagnostic Procedure 1.

Yes ↓

3

Does O.D. OFF indicator lamp flicker for about 8 seconds?

Yes → Perform self-diagnosis. — Refer to SELF-DIAGNOSIS PROCEDURE.

No ↓

1. Turn ignition switch to "OFF" position.
2. Perform self-diagnosis. — Refer to SELF-DIAGNOSIS PROCEDURE and note N.G. items.
3. Go to "ROAD TESTING — 2. Check at idle".

## Preliminary Check (Cont'd)

### 2. Check at idle

1. Park vehicle on flat surface.
2. Turn ignition switch to "OFF" position.
3. Move selector lever to "P" or "N" position.
4. Turn ignition switch to start position.
5. Is engine started?

No → Go to Diagnostic Procedure 2.

Yes ↓

1. Turn ignition switch to "OFF" position.
2. Move selector lever to "D", "1", "2" or "R" position.
3. Turn ignition switch to start position.
4. Is engine started?

Yes → Go to Diagnostic Procedure 2.

No ↓

1

1. Turn ignition switch to "OFF" position.
2. Move selector lever to "P" position.
3. Release parking brake.
4. Push vehicle forward or backward.
5. Does vehicle move when it is pushed forward or backward?

Yes → Go to Diagnostic Procedure 3.

No ↓

Ⓐ

1

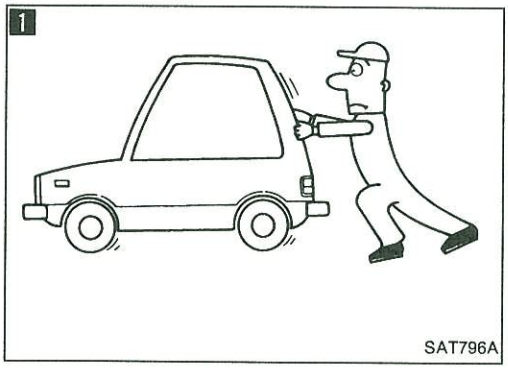

SAT796A

## Preliminary Check (Cont'd)

Ⓐ

1. Apply parking brake.
2. Move selector lever to "N" position.
3. Turn ignition switch to "START" position and start engine.
4. Release parking brake.
5. Does vehicle move forward or backward?

Yes → Go to Diagnostic Procedure 4.

No

2

1. Apply foot brake.
2. Move selector lever to "R" position.
3. Is there large shock when changing from "N" to "R" position?

Yes → Go to Diagnostic Procedure 5.

No

1. Release foot brake for several seconds.
2. Does vehicle creep backward when foot brake is released?

No → Go to Diagnostic Procedure 6.

Yes

1. Move selector lever to "D", "1" and "2" position and check if vehicle creeps forward.
2. Does vehicle creep forward in all three positions?

Yes → Go to Cruise test.

No

Go to Diagnostic Procedure 7.

2

Brake pedal

SAT797A

## Preliminary Check (Cont'd)

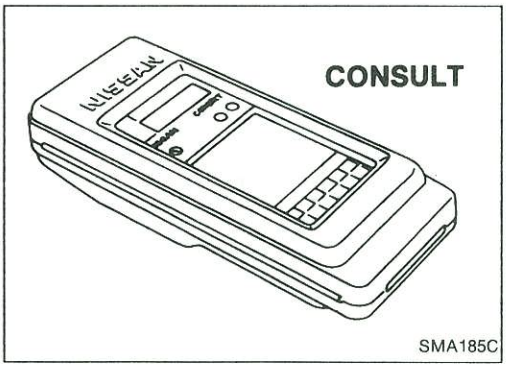


### 3. Cruise test

- Check all items listed in Parts 1 through 3.

**With CONSULT**

- Using CONSULT, conduct a cruise test and record the result.
- Print the result and ensure that shifts and lock-ups take place as per "Shift Schedule."

**CONSULT setting procedure**

1. Turn off ignition switch.
2. Connect "CONSULT" to data link connector for CONSULT. (Data link connector for CONSULT is located in left dash side panel.)

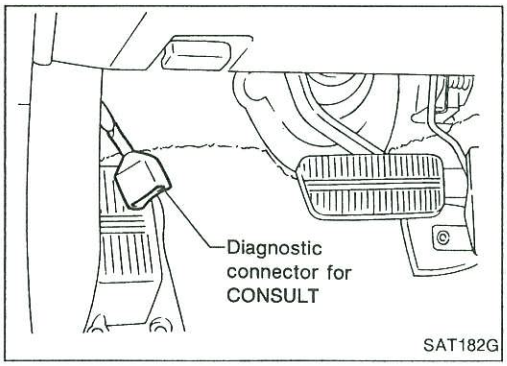


3. Turn on ignition switch.
4. Touch "START".

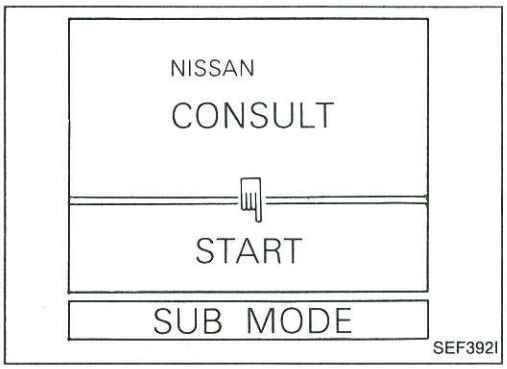


5. Touch "A/T".

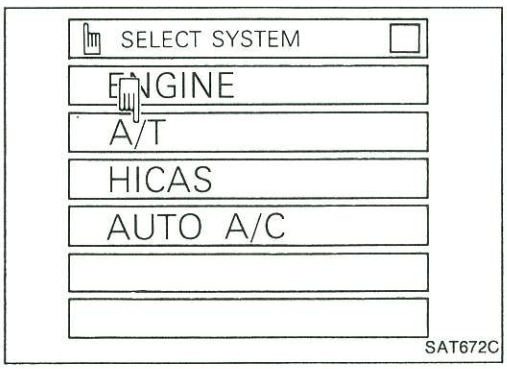


6. Touch "DATA MONITOR".

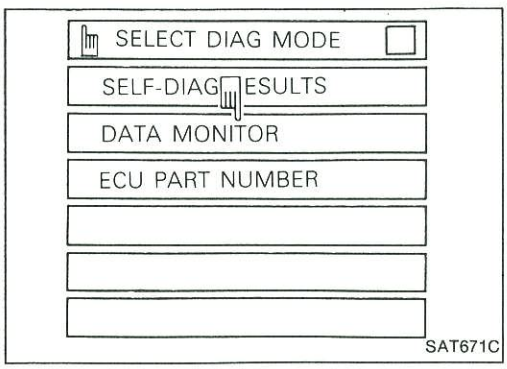

## Preliminary Check (Cont'd)

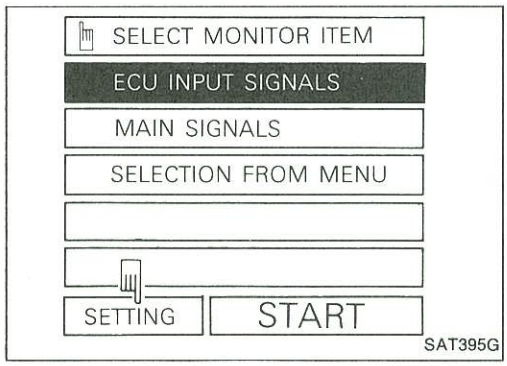


7. Touch "SETTING" to set recording condition.

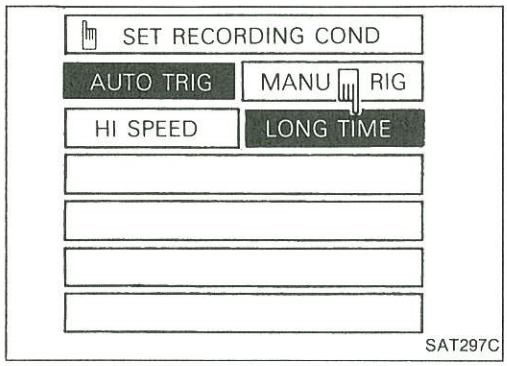


8. Touch "LONG TIME" and "ENTER" key.

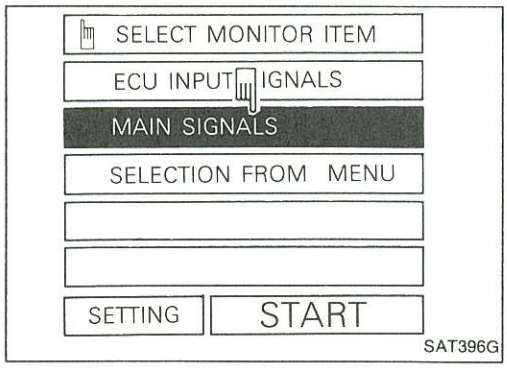


9. Go back to SELECT MONITOR ITEM and touch "MAIN SIGNALS".
10. Touch "START".

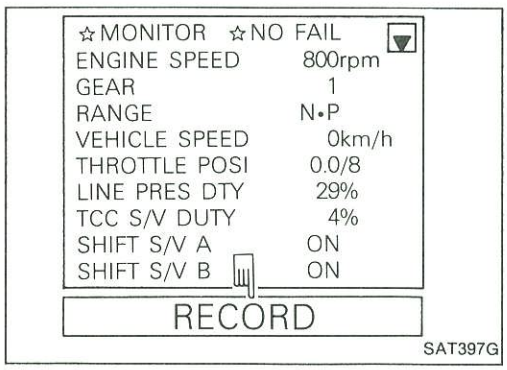


11. When performing cruise test, touch "RECORD".

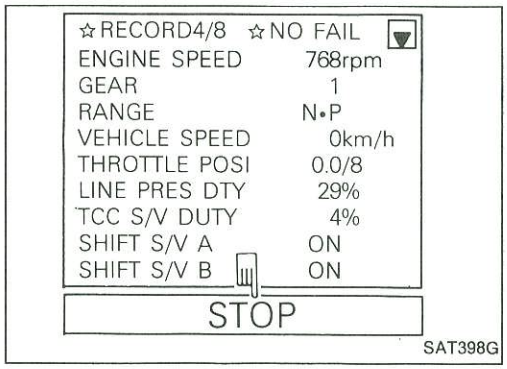


12. After finishing cruise test part 1, touch "STOP".

## Preliminary Check (Cont'd)

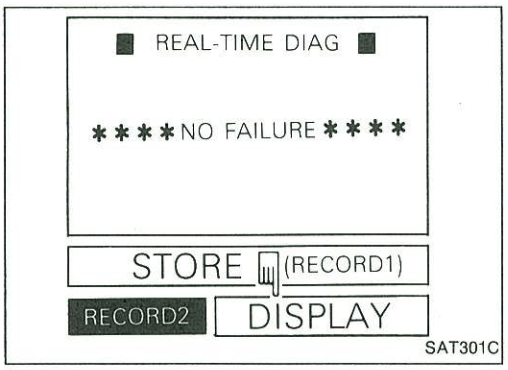


13. Touch "DISPLAY".

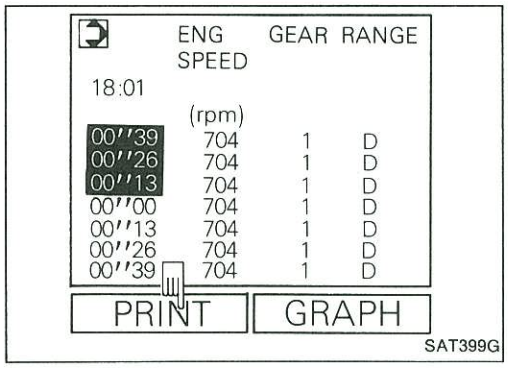


14. Touch "PRINT".

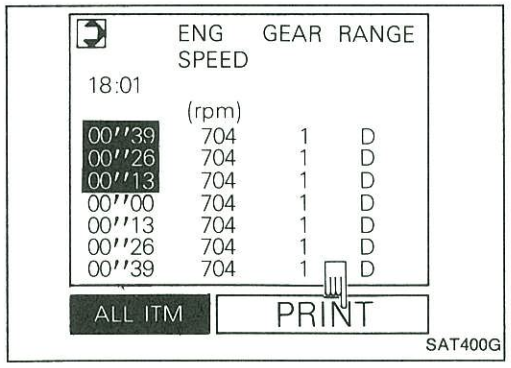


15. Touch "PRINT" again.

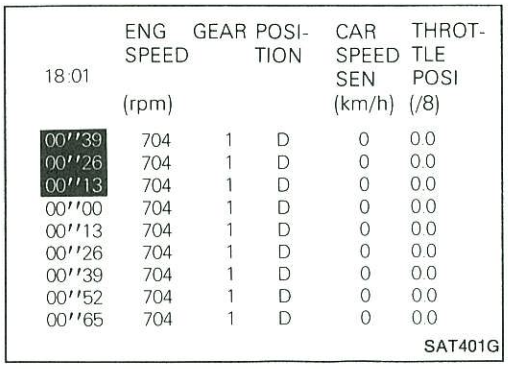

| 18:01 | ENG SPEED (rpm) | GEAR | POSITION | CAR SPEED SEN (km/h) | THROTTLE POSI (/8) |
|---|---|---|---|---|---|
| 00''39 | 704 | 1 | D | 0 | 0.0 |
| 00''26 | 704 | 1 | D | 0 | 0.0 |
| 00''13 | 704 | 1 | D | 0 | 0.0 |
| 00''00 | 704 | 1 | D | 0 | 0.0 |
| 00''13 | 704 | 1 | D | 0 | 0.0 |
| 00''26 | 704 | 1 | D | 0 | 0.0 |
| 00''39 | 704 | 1 | D | 0 | 0.0 |
| 00''52 | 704 | 1 | D | 0 | 0.0 |
| 00''65 | 704 | 1 | D | 0 | 0.0 |

SAT401G

16. Check the monitor data printed out.
17. Continue cruise test part 2 and 3.

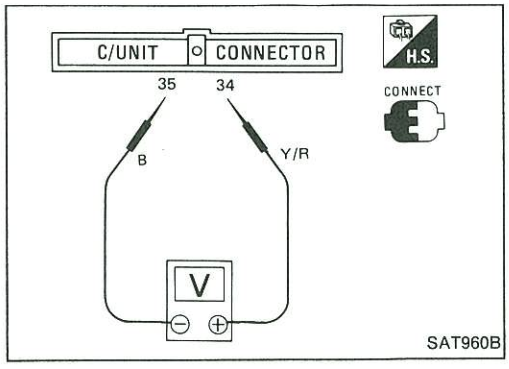


**Without CONSULT**

- Throttle position can be controlled by voltage across terminals ㉞ and ㉟ of A/T control unit.

## Preliminary Check (Cont'd)

### Cruise test — Part 1

Warm up engine until engine oil and A.T.F. reach operating temperature after vehicle has been driven approx. 10 minutes.

**A.T.F. operating temperature:**
**50 - 80°C (122 - 176°F)**

1

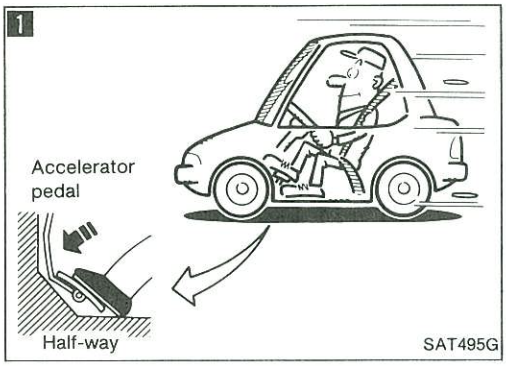


1. Park vehicle on flat surface.
2. Set overdrive switch in "ON" position.
3. Move selector lever to "P" position.
4. Turn ignition switch to "ON" position and start engine.
5. Move selector lever to "D" position.
6. Accelerate vehicle to half throttle.

Does vehicle start from $D_1$?
**Read gear position.**

No → Go to Diagnostic Procedure 8.

Yes

2

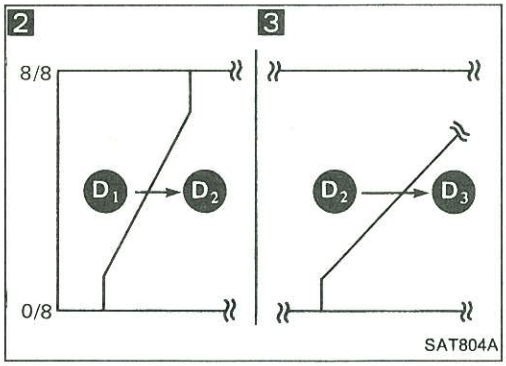


Does A/T shift from $D_1$ to $D_2$ at the specified speed?
**Read gear position, throttle opening and vehicle speed.**
**Specified speed when shifting from $D_1$ to $D_2$:**
**Refer to Shift schedule.**

No → Go to Diagnostic Procedure 9.

Yes

3

Does A/T shift from $D_2$ to $D_3$ at the specified speed?
**Read gear position, throttle opening and vehicle speed.**
**Specified speed when shifting from $D_2$ to $D_3$:**
**Refer to Shift schedule.**

No → Go to Diagnostic Procedure 10.

Yes

Ⓐ

## Preliminary Check (Cont'd)

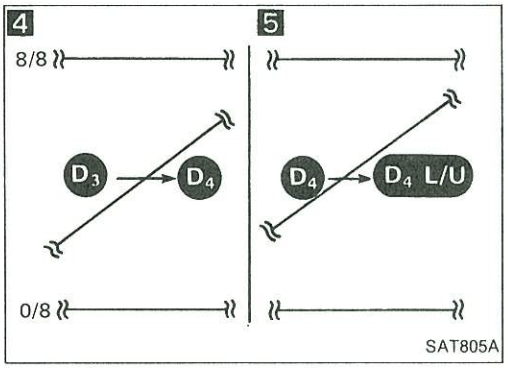


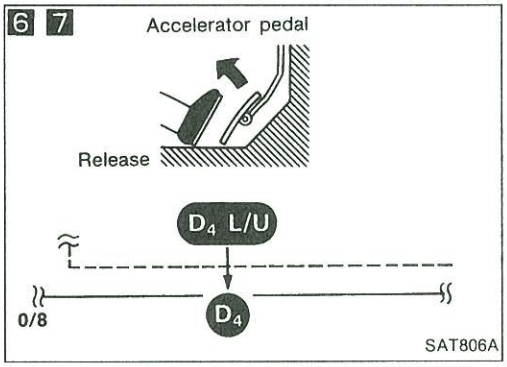


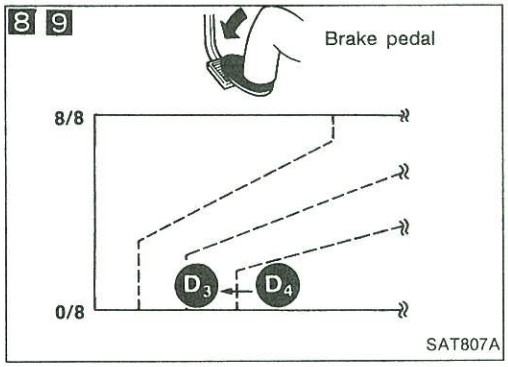


Ⓐ

**4**

Does A/T shift from $D_3$ to $D_4$ at the specified speed?

**Read gear position, throttle opening and vehicle speed.**

**Specified speed when shifting from $D_3$ to $D_4$:**
**Refer to Shift schedule.**

No → Go to Diagnostic Procedure 11.

Yes ↓

**5**

Does A/T perform lock-up at the specified speed?

**Read vehicle speed, throttle opening when lock-up duty becomes 94%.**

**Specified speed when lock-up occurs:**
**Refer to Shift schedule.**

No → Go to Diagnostic Procedure 12.

Yes ↓

Does A/T hold lock-up condition for more than 30 seconds?

No → Go to Diagnostic Procedure 13.

Yes ↓

**6 7**

1. Release accelerator pedal.
2. Is lock-up released when accelerator pedal is released?

No → Go to Diagnostic Procedure 14.

Yes ↓

**8 9**

1. Decelerate vehicle by applying foot brake lightly.
2. Does engine speed return to idle smoothly when A/T is shifted from $D_4$ to $D_3$?

**Read gear position and engine speed.**

No → Go to Diagnostic Procedure 15.

Yes ↓

1. Stop vehicle.
2. Go to "Cruise test — Part 2".

## Preliminary Check (Cont'd)

### Cruise test — Part 2

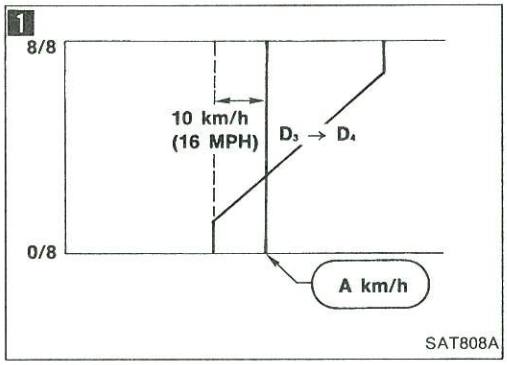


1. Confirm overdrive switch is in "ON" position.
2. Confirm selector lever is in "D" position.
3. Accelerator vehicle to half throttle again.

Does vehicle shift from $D_1$?
**Read gear position.**
No → Go to Diagnostic Procedure 16.
Yes

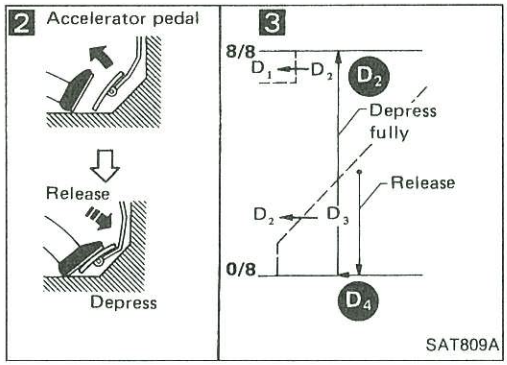


1 2 3

1. Accelerate vehicle to A km/h as shown in illustration.
2. Release accelerator pedal and then quickly depress it fully.
3. Does A/T shift from $D_4$ to $D_2$ as soon as accelerator pedal is depressed fully?

**Read gear position and throttle opening.**
No → Go to Diagnostic Procedure 9.
Yes

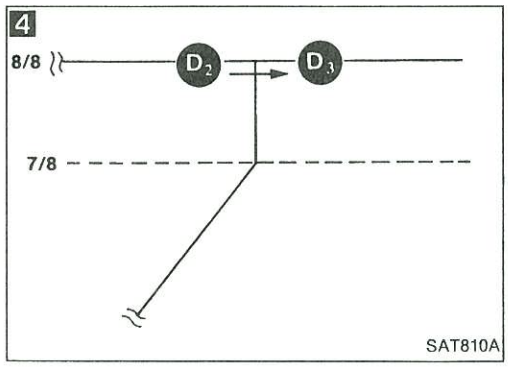


4

Does A/T shift from $D_2$ to $D_3$ at the specified speed?
**Read gear position, throttle opening and vehicle speed.**
**Specified speed when shifting from $D_2$ to $D_3$:**
**Refer to Shift schedule.**
No → Go to Diagnostic Procedure 10.
Yes

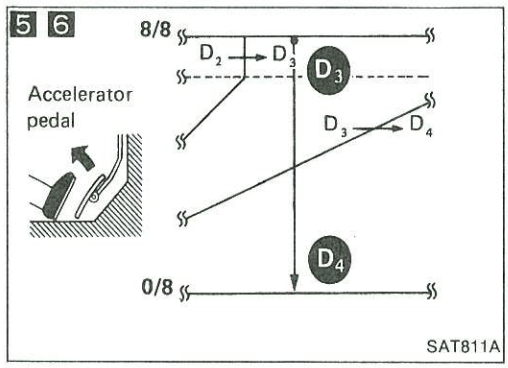


5 6

1. Release accelerator pedal after shifting from $D_2$ to $D_3$.
2. Does A/T shift from $D_3$ to $D_4$ and does vehicle decelerate by engine brake?

**Read gear position, throttle opening and vehicle speed.**
No → Go to Diagnostic Procedure 11.
Yes

1. Stop vehicle.
2. Go to "Cruise test — Part 3".

## Preliminary Check (Cont'd)

### Cruise test — Part 3

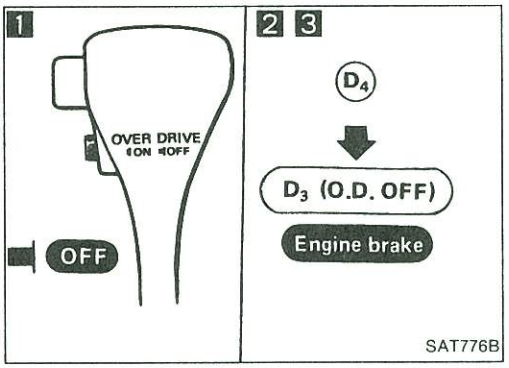


**1 2**

1. Confirm overdrive switch is in "ON" position.
2. Confirm selector lever is in "D" position.
3. Accelerate vehicle, using half-throttle, to $D_4$.
4. Release accelerator pedal.
5. Set overdrive switch to "OFF" position while driving in $D_4$ position.
6. Does A/T shift from $D_4$ to $D_3$?

**Read gear position and vehicle speed.**

No → Go to Diagnostic Procedure 17.

Yes ↓

**3**

Does vehicle decelerate by engine brake?

No → Go to Diagnostic Procedure 15.

Yes ↓

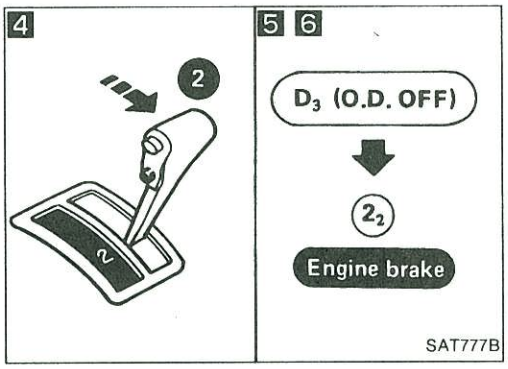


**4 5**

1. Move selector lever from "D" to "2" position while driving in $D_3$.
2. Does A/T shift from $D_3$ to $2_2$?

**Read gear position.**

No → Go to Diagnostic Procedure 18.

Yes ↓

**6**

Does vehicle decelerate by engine brake?

No → Go to Diagnostic Procedure 15.

Yes ↓

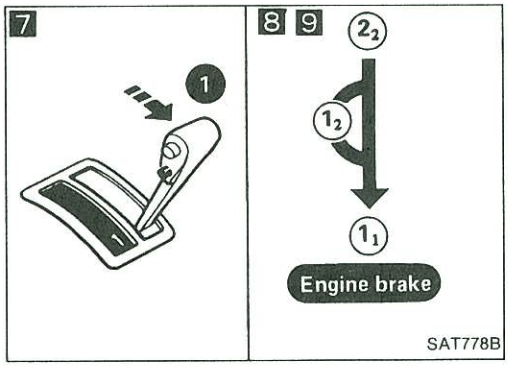


**7 8**

1. Move selector lever from "2" to "1" position while driving in $2_2$.
2. Does A/T shift from $2_2$ to $1_1$ position?

**Read gear position.**

No → Go to Diagnostic Procedure 19.

Yes ↓

**9**

Does vehicle decelerate by engine brake?

No → Go to Diagnostic Procedure 20.

Yes ↓

1. Stop vehicle.
2. Perform self-diagnosis. — Refer to SELF-DIAGNOSIS PROCEDURE.

## Preliminary Check (Cont'd)

### Vehicle speed when shifting gears

| Throttle position | Vehicle speed km/h (MPH) | | | | | | |
|---|---|---|---|---|---|---|---|
| | $D_1 \rightarrow D_2$ | $D_2 \rightarrow D_3$ | $D_3 \rightarrow D_4$ | $D_4 \rightarrow D_3$ | $D_3 \rightarrow D_2$ | $D_2 \rightarrow D_1$ | $1_2 \rightarrow 1_1$ |
| Full throttle | 56 - 60 (35 - 37) | 101 - 109 (63 - 68) | 158 - 168 (98 - 104) | 152 - 162 (94 - 101) | 91 - 99 (57 - 62) | 40 - 44 (25 - 27) | 53 - 57 (33 - 35) |
| Half throttle | 39 - 43 (24 - 27) | 74 - 80 (46 - 50) | 112 - 120 (70 - 75) | 56 - 64 (35 - 40) | 27 - 33 (17 - 21) | 10 - 14 (6 - 9) | 53 - 57 (33 - 35) |

### Vehicle speed when performing and releasing lock-up

| Throttle position | O.D. switch [Shift position] | Vehicle speed km/h (MPH) | |
|---|---|---|---|
| | | Lock-up "ON" | Lock-up "OFF" |
| Full throttle | ON [$D_4$] | 159 - 167 (99 - 104) | 153 - 161 (95 - 100) |
| | OFF [$D_3$] | 101 - 109 (63 - 68) | 91 - 99 (57 - 62) |
| Half throttle | ON[$D_4$] | 112 - 120 (70 - 75) | 101 - 109 (63 - 68) |
| | OFF [$D_3$] | 91 - 99 (57 - 62) | 86 - 94 (53 - 58) |

### Shift schedule (Overdrive ON)

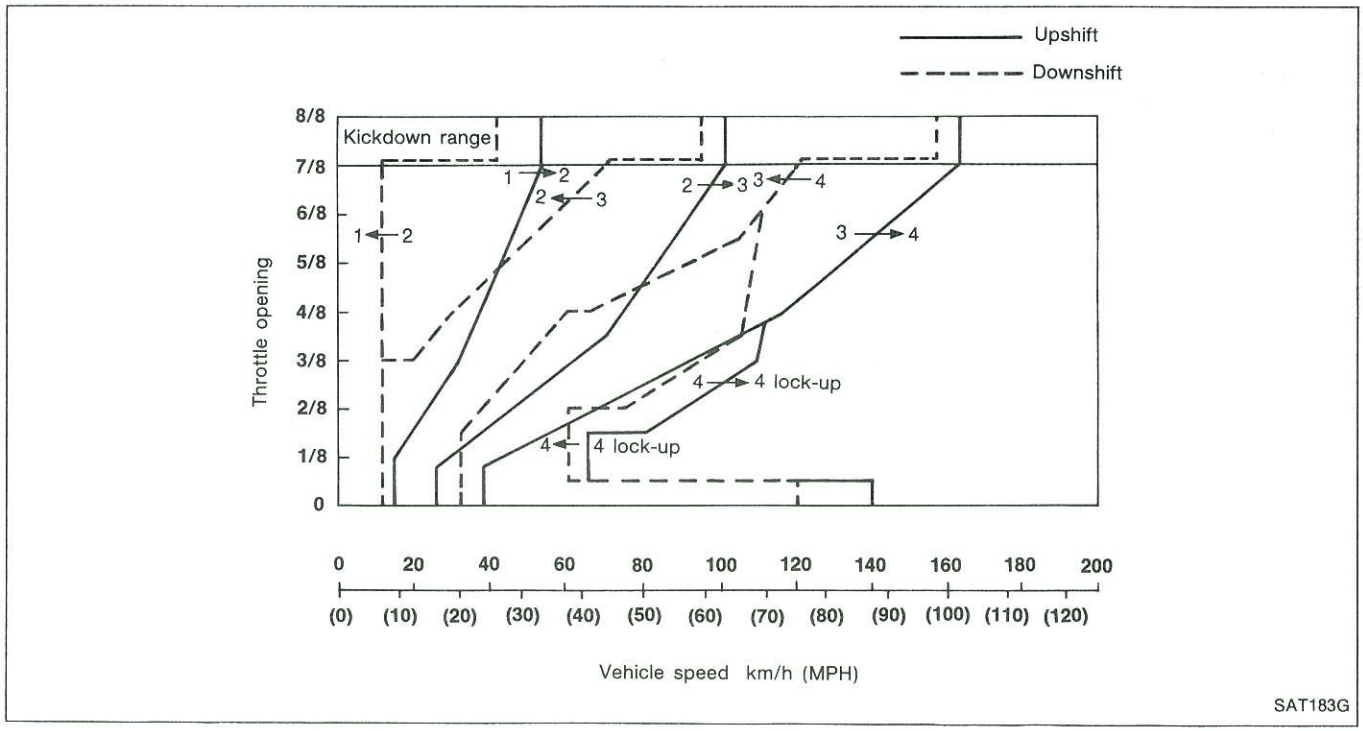

## Preliminary Check (Cont'd)

### Shift schedule (Overdrive OFF)

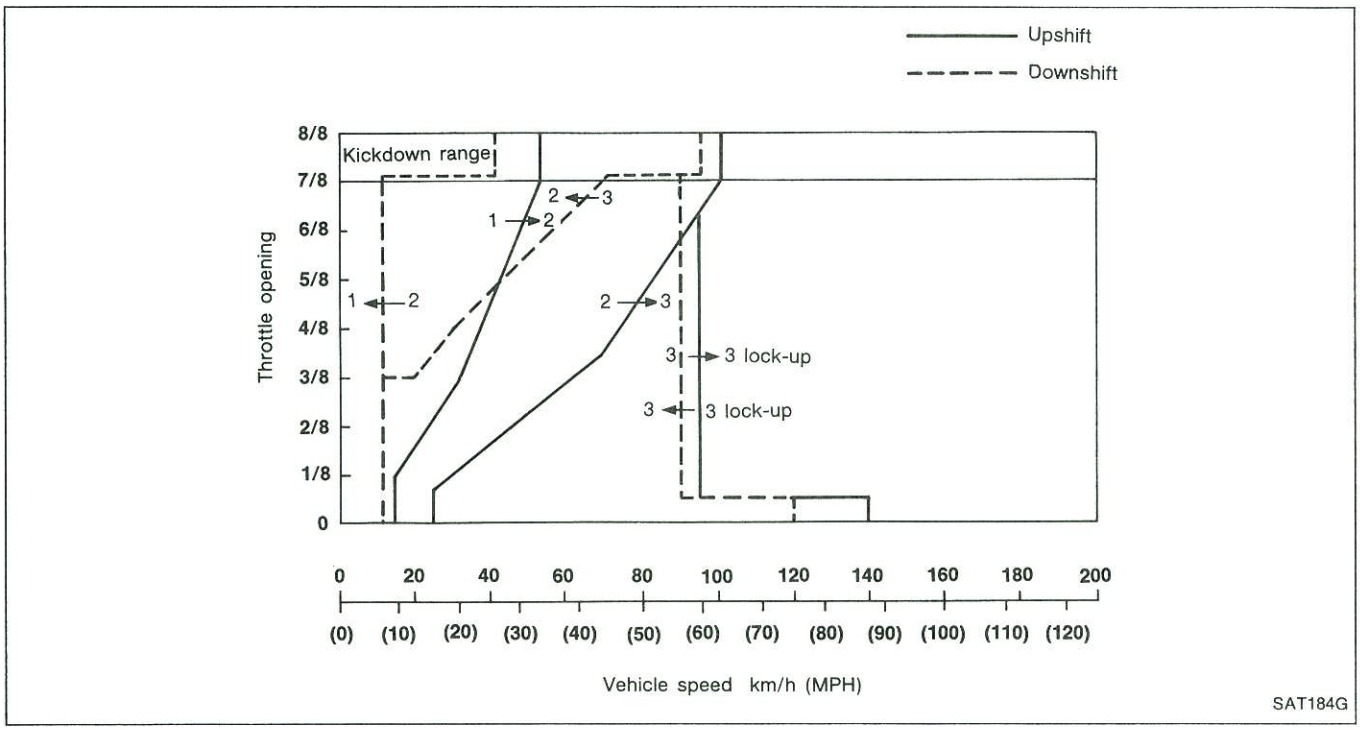


## Diagnosis by CONSULT

### NOTICE

1. The CONSULT electrically displays shift timing and lock-up timing (that is, operation timing of each solenoid). When a noticeable time difference occurs between shift timing which is manifested by shift shock and the CONSULT display, mechanical parts (except solenoids, sensors, etc.) are considered to be malfunctioning. Check mechanical parts using applicable diagnostic procedures.
2. Shift schedule (which implies gear position) displayed on CONSULT and that indicated in Service Manual may differ slightly. This occurs because of the following reasons:
   - Actual shift schedule has more or less tolerance or allowance,
   - Shift schedule indicated in Service Manual refers to the point where shifts starts, and
   - Gear position displayed on CONSULT indicates the point where shifts are completed.
3. Shift solenoid valve "A" or "B" is displayed on CONSULT at the start of shifting while gear position is displayed upon completion of shifting (which is computed by A/T control unit).

## Diagnosis by CONSULT (Cont'd)

### DATA MONITOR APPLICATION

| Item | Application |
|---|---|
| Vehicle speed sensor 1 (A/T) | X |
| Vehicle speed sensor 2 (meter) | X |
| Throttle position sensor | X |
| Fluid temperature sensor | X |
| Battery voltage | X |
| Engine speed | X |
| Selector lever switch (O.D. switch) | X |
| A.S.C.D. — cruise signal | X |
| A.S.C.D. — O.D. cut signal | X |
| Kickdown switch | X |
| Power shift switch | — |
| Closed throttle position switch | X |
| Wide open throttle position switch | X |
| Shift solenoid valve A | X |
| Shift solenoid valve B | X |
| Overrun clutch solenoid valve | X |
| *Shift solenoid valve A (feedback) | X |
| *Shift solenoid valve B (feedback) | X |
| *Overrun clutch solenoid valve (feedback) | X |
| Hold mode switch | — |
| 1 position switch | X |
| 2 position switch | X |
| D position switch | X |
| N position switch | X |
| R position switch | X |
| Gear position | X |
| Position position | X |
| Vehicle speed | X |
| Throttle opening | X |
| Line-pressure solenoid valve | X |
| Torque converter clutch solenoid valve | X |

X: Applicable —: Not applicable

### DATA ANALYSIS

| Item | Display | Condition |
|---|---|---|
| Lock-up duty | Approximately 4%<br>↓<br>Approximately 94% | Lock-up "OFF"<br>↓<br>Lock-up "ON" |
| Line pressure duty | Approximately 29%<br>↓<br>Approximately 94% | Low line-pressure (Small throttle opening)<br>↓<br>High line-pressure (Large throttle opening) |
| Throttle position sensor | Approximately 0.5V | Fully-closed throttle |
| | Approximately 4V | Fully-open throttle |
| Fluid temperature sensor | Approximately 1.5V<br>↓<br>Approximately 0.5V | Cold [20°C (68°F)]<br>↓<br>Hot [80°C (176°F)] |

| Gear position | 1 | 2 | 3 | 4 |
|---|---|---|---|---|
| Shift solenoid valve A | ON | OFF | OFF | ON |
| Shift solenoid valve B | ON | ON | OFF | OFF |

## A/T Electrical Parts Location

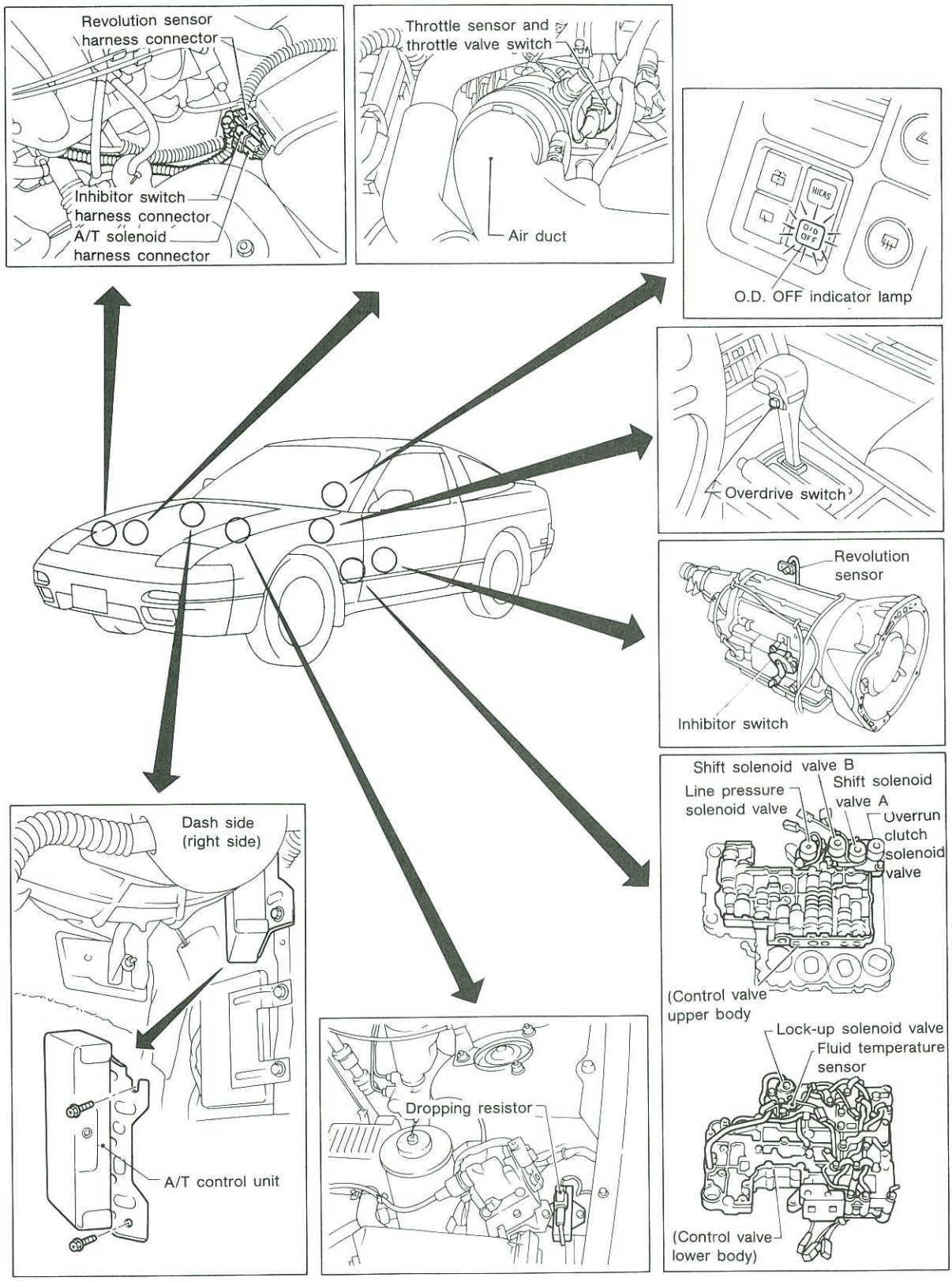


SAT185G

## Circuit Diagram for Quick Pinpoint Check

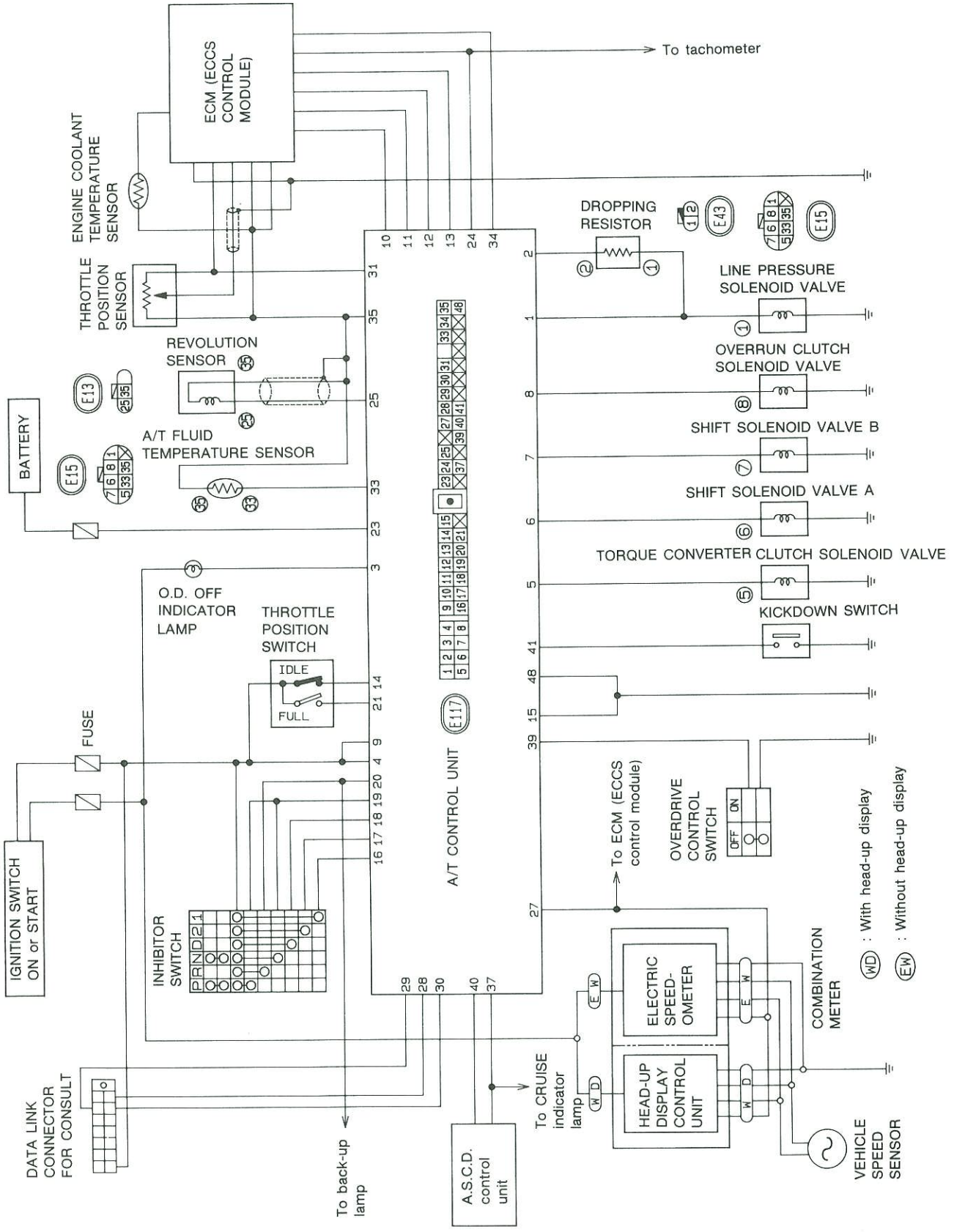


SAT186G

## Wiring Diagram

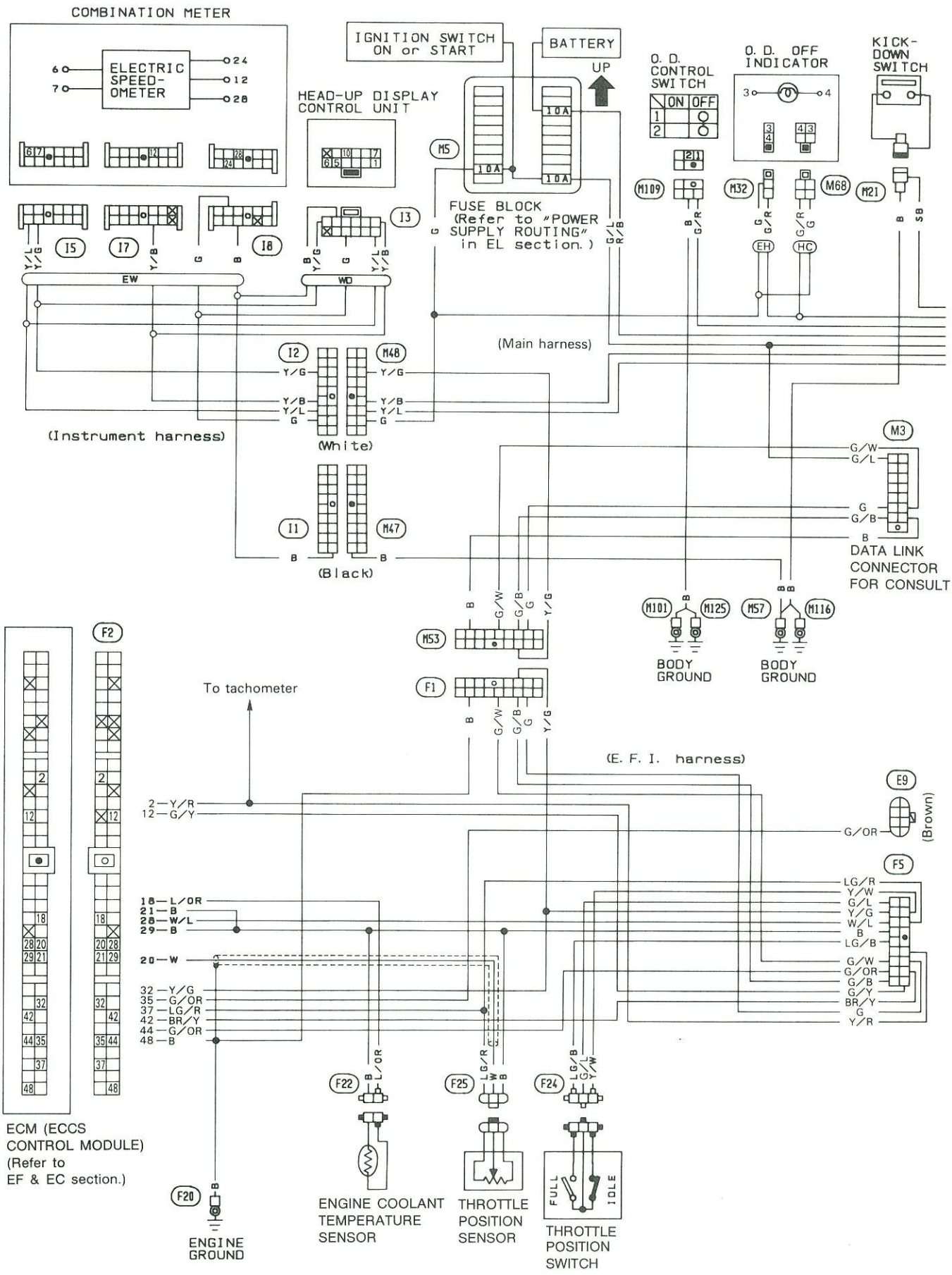

## Wiring Diagram (Cont'd)

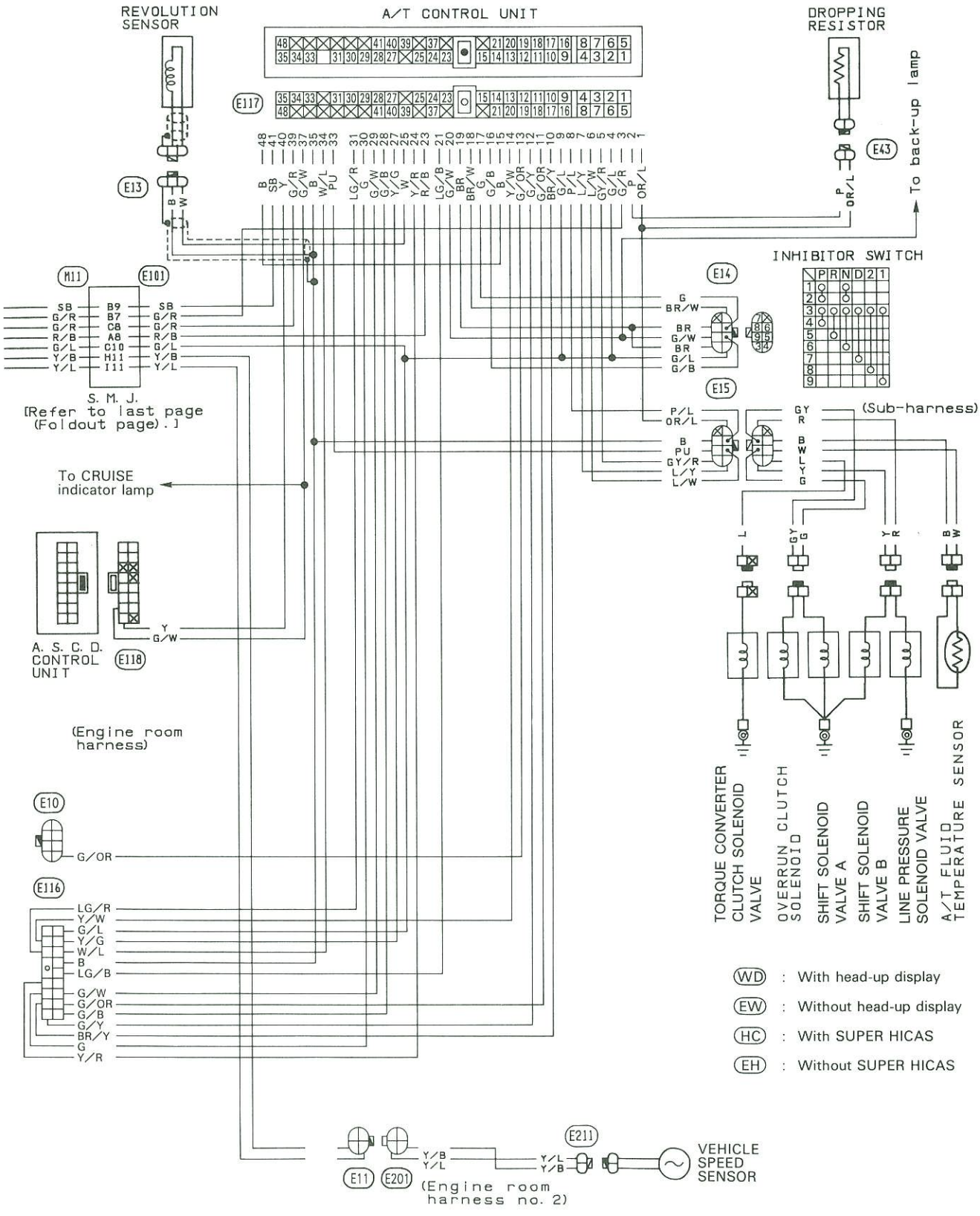


SAT187G

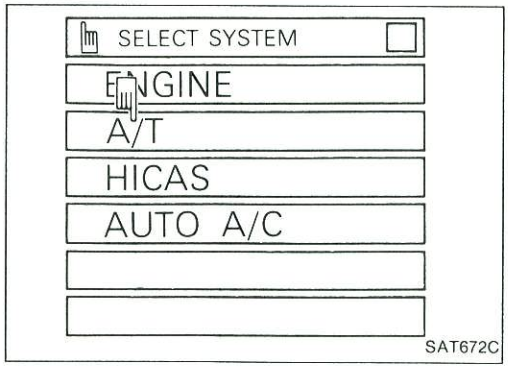


## Self-diagnosis

### SELF-DIAGNOSTIC PROCEDURE (With CONSULT)

1. Turn on CONSULT.
2. Touch "A/T".

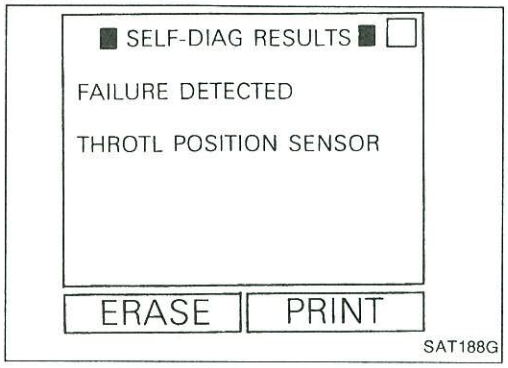


3. Touch "SELF-DIAGNOSIS".
   CONSULT performs REAL-TIME SELF-DIAGNOSIS.

## Self-diagnosis (Cont'd)

### SELF-DIAGNOSTIC PROCEDURE (Without CONSULT)

DIAGNOSIS START

1. Start engine and warm it up to normal engine operating temperature.
2. Turn ignition switch to "OFF" position.
3. Set overdrive switch in "ON" position.
4. Move selector lever to "P" position.
5. Turn ignition switch to "ON" position (Do not start engine.)
6. Does A/T check lamp come on for about 2 seconds?

No → Go to Diagnostic Procedure 1.

Yes

1. Turn ignition switch to "OFF" position.
2. Push shift lock release knob (if equipped).
3. Move selector lever to "D" position.
4. Set overdrive switch to "OFF" position.
5. Turn ignition switch to "ON" position (Do not start engine.)
- Wait for more than 2 seconds after ignition switch "ON".
6. Move selector lever to "2" position.
7. Set overdrive switch in "ON" position.
8. Move selector lever to "1" position.
9. Set overdrive switch in "OFF" position.
10. Depress accelerator pedal fully and release it.
11. Set overdrive switch in "ON" position.
12. Check O.D. OFF indicator lamp. Refer to JUDGMENT OF SELF-DIAGNOSIS CODE on next page.

DIAGNOSIS END

## Self-diagnosis (Cont'd)

### JUDGEMENT OF SELF-DIAGNOSIS CODE

Flickers of O.D. OFF indicator lamp: Damaged circuit

All judgement flickers are same.

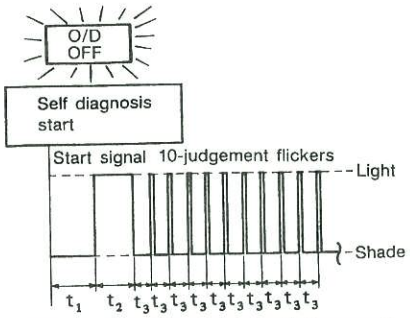


SAT436F

All circuits that can be confirmed by self-diagnosis are O.K.

4th judgement flicker is longer than others.

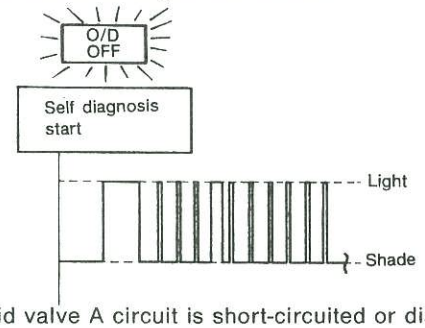


SAT443F

Shift solenoid valve A circuit is short-circuited or disconnected.

**➡Go to SHIFT SOLENOID VALVE A CIRCUIT CHECK.**

1st judgement flicker is longer than others.

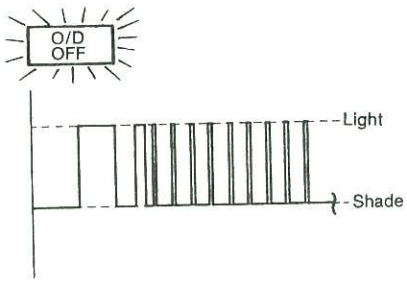


SAT437F

Revolution sensor circuit is short-circuited or disconnected.

**➡Go to REVOLUTION SENSOR CIRCUIT CHECK.**

5th judgement flicker is longer than others.

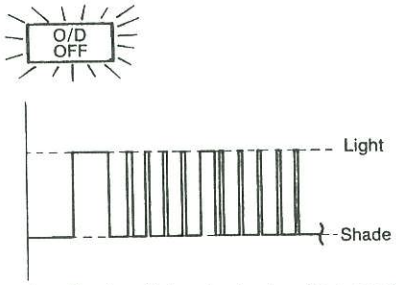


SAT445F

Shift solenoid valve B circuit is short-circuited or disconnected.

**➡Go to SHIFT SOLENOID VALVE B CIRCUIT CHECK.**

2nd judgement flicker is longer than others.

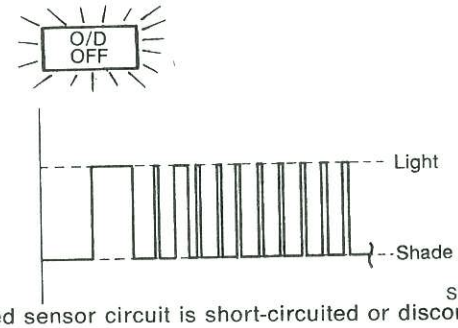


SAT439F

Vehicle speed sensor circuit is short-circuited or disconnected.

**➡Go to VEHICLE SPEED SENSOR CIRCUIT CHECK.**

6th judgement flicker is longer than others.

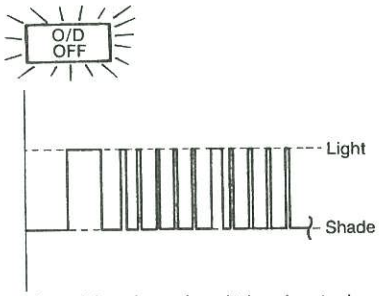


SAT447F

Overrun clutch solenoid valve circuit is short-circuited or disconnected.

**➡Go to OVERRUN CLUTCH SOLENOID VALVE CIRCUIT CHECK.**

3rd judgement flicker is longer than others.

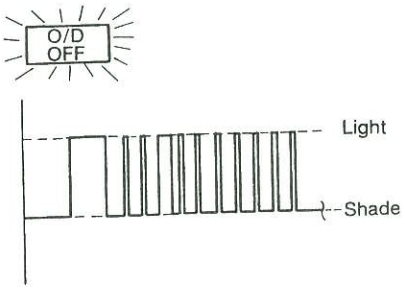


SAT441F

Throttle position sensor circuit is short-circuited or disconnected.

**➡Go to THROTTLE POSITION SENSOR CIRCUIT CHECK.**

7th judgement flicker is longer than others.

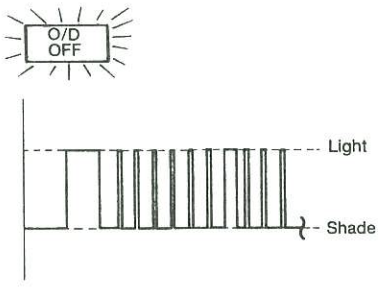


SAT449F

Torque converter clutch solenoid valve circuit is short-circuited or disconnected.

**➡Go to TORQUE CONVERTER CLUTCH SOLENOID VALVE CIRCUIT CHECK.**

$t_1$ = 2.5 seconds $t_2$ = 2.0 seconds $t_3$ = 1.0 second

## Self-diagnosis (Cont'd)

Flickers of O.D. OFF indicator lamp: Damaged circuit

8th judgement flicker is longer than others.

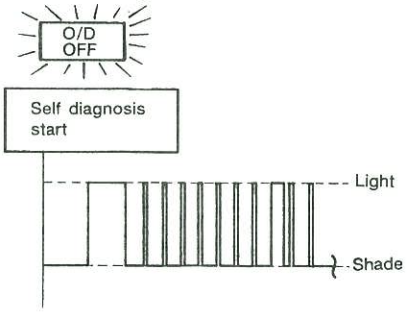


SAT451F

Fluid temperature sensor is disconnected or A/T control unit power source circuit is damaged.

➡**Go to FLUID TEMPERATURE SENSOR AND A/T CONTROL UNIT POWER SOURCE CIRCUIT CHECKS.**

Does not come on.

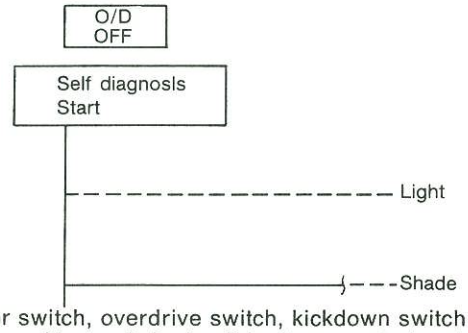


SAT414G

Inhibitor switch, overdrive switch, kickdown switch or closed throttle position switch circuit is disconnected or A/T control unit is damaged.

➡**Go to INHIBITOR SWITCH, OVERDRIVE SWITCH AND THROTTLE POSITION SWITCH CIRCUIT CHECKS.**

9th judgement flicker is longer than others.

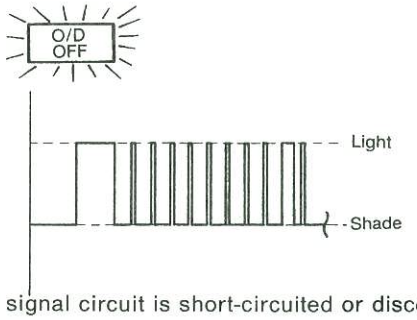


SAT453F

Engine speed signal circuit is short-circuited or disconnected.

➡**Go to ENGINE SPEED SIGNAL CIRCUIT CHECK.**

10th judgement flicker is longer than others.

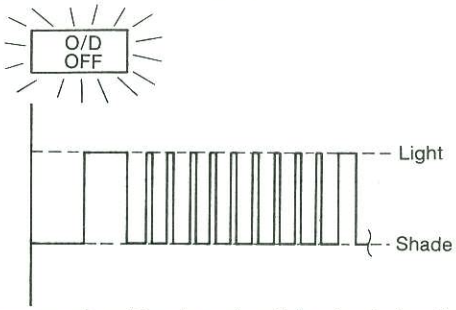


SAT455F

Line pressure solenoid valve circuit is short-circuited or disconnected.

➡**Go to LINE PRESSURE SOLENOID VALVE CIRCUIT CHECK.**

Flickers as shown below.

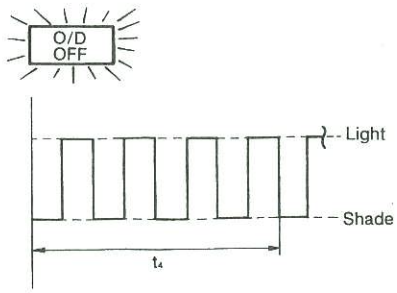


SAT457F

Battery power is low.
Battery has been disconnected for a long time.
Battery is conversely connected.
(When reconnecting A/T control unit connectors. — This is not a problem.)

$t_4$ = 1.0 second

## Self-diagnosis (Cont'd)

### REVOLUTION SENSOR CIRCUIT CHECK

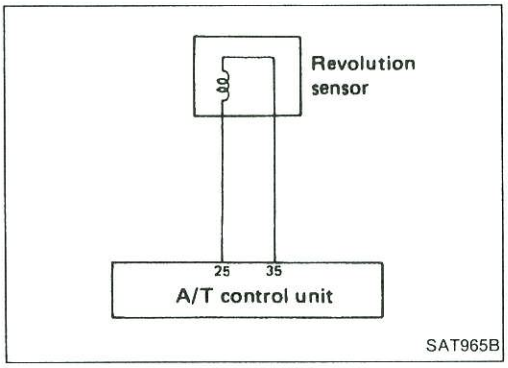


**CHECK REVOLUTION SENSOR.**
— Refer to "Electrical Components Inspection".

N.G. → Repair or replace revolution sensor.

O.K. ↓

A

**CHECK INPUT SIGNAL.**
1. Turn ignition switch to "START" position and start engine.
2.
   - Select "ECU INPUT SIGNALS".
   - Read out the value of "VHCL/S SE·A/T" while driving.
   - Check the value changes according to driving speed.

N.G. → Check harness continuity between A/T control unit and revolution sensor.

OR

Check voltage between A/T control unit terminal (25) and ground while driving.
(Measure with A.C. position.)
**Voltage:**
**At 0 km/h (0 MPH):**
**0V**
**At 30 km/h (19 MPH):**
**1V or more**
**(Voltage rises gradually in response to vehicle speed.)**

O.K. ↓

Perform self-diagnosis again after driving for a while.

N.G. →
1. Perform A/T control unit input/output signal inspection.
2. If N.G., recheck A/T control unit pin terminals for damage or connection of A/T control unit harness connector.

O.K. ↓

**INSPECTION END**

A

| MONITOR | NO FAIL |
|---|---|
| VHCL/S SE•A/T | 0km/h |
| VHCL/S SE•MTR | 5km/h |
| THRTL POS SEN | 0.4V |
| FLUID TEMP SE | 1.2V |
| BATTERY VOLT | 13.4V |
| ENGINE SPEED | 1024rpm |
| SLCT LEVER SW | O N |
| R POSITION SW | OFF |
| P/N POSI SW | O N |

RECORD

SAT416G

A

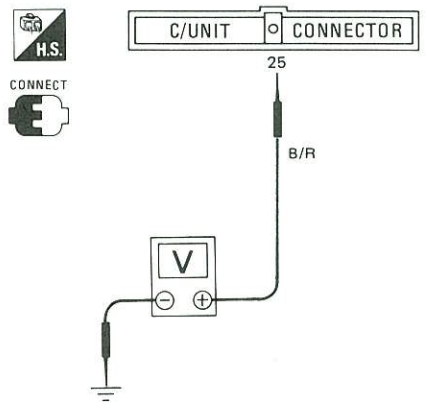

## Self-diagnosis (Cont'd)

### SPEED SENSOR CIRCUIT CHECK

A

| ☆MONITOR | ☆NO FAIL |
|---|---|
| VHCL/S SE•A/T | 0km/h |
| VHCL/S SE•MTR | 5km/h |
| THRTL POS SEN | 0.4V |
| FLUID TEMP SE | 1.2V |
| BATTERY VOLT | 13.4V |
| ENGINE SPEED | 1024rpm |
| SLCT LEVER SW | O N |
| R POSITION SW | OFF |
| P/N POSI SW | O N |

RECORD

SAT416G

A

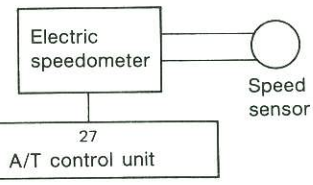

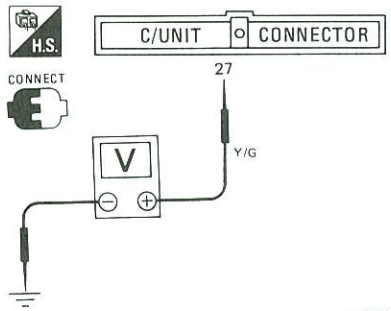


SAT512G

A

**CHECK INPUT SIGNAL.**

1. Turn ignition switch to "START" position and start engine.
2. 
   - Select "ECU INPUT SIGNALS".
   - Read out the value of "VHCL/S SE·MTR" while driving.
   - Check the value changes according to driving speed.

N.G. → Check the following items.
- Speed sensor and ground circuit for speed sensor — Refer to section EL.
- Harness continuity between A/T control unit and speed sensor

OR

- Check voltage between A/T control unit terminal (27) and ground while driving at 2 to 3 km/h (1 to 2 MPH) for 1 m (3 ft) or more.

**Voltage:**
**Varies from 0V to 5V**

O.K. ↓

Perform self-diagnosis again after driving for a while.

N.G. → 1. Perform A/T control unit input/output signal inspection.
2. If N.G., recheck A/T control unit pin terminals for damage or connection of A/T control unit harness connector.

O.K. ↓

**INSPECTION END**

## Self-diagnosis (Cont'd)

### THROTTLE POSITION SENSOR CIRCUIT CHECK

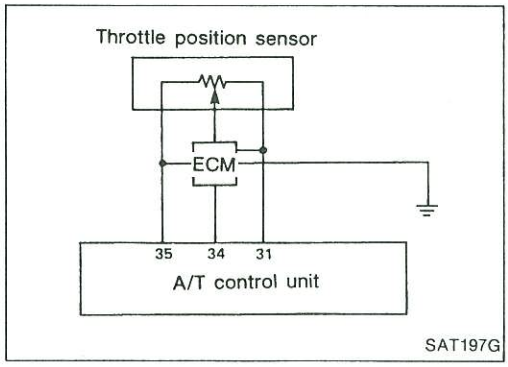


Perform self-diagnosis (Mode III) for engine control.

N.G. → Check throttle position sensor circuit for engine control. — Refer to section EF & EC.

O.K.

A

**CHECK INPUT SIGNAL.**

1. Turn ignition switch to "ON" position. (Do not start engine.)
2. 
   - Select "ECU INPUT SIGNALS".
   - Read out the value of "THROTTLE POSITION SENSOR".

   **Voltage:**
   **Fully-closed throttle:**
   **0.2 - 0.6V**
   **Fully-open throttle:**
   **2.9 - 3.9V**

N.G. → Check harness continuity between ECM and A/T control unit regarding throttle position sensor circuit.

OR

- Check voltage between A/T control unit terminals ㉞ and ㉟ while accelerator pedal is depressed slowly.

**Voltage:**
**Fully-closed throttle:**
**0.2 - 0.6V**
**Fully-open throttle:**
**2.9 - 3.9V**
**(Voltage rises gradually in response to throttle valve opening.)**

A

Depress slowly.

| MONITOR | NO FAIL |
|---|---|
| VHCL/S SE•A/T | 0km/h |
| VHCL/S SE•MTR | 5km/h |
| THRTL POS SEN | 0.4V |
| FLUID TEMP SE | 1.2V |
| BATTERY VOLT | 13.4V |
| ENGINE SPEED | 1024rpm |
| SLCT LEVER SW | O N |
| R POSITION SW | OFF |
| P/N POSI SW | O N |

RECORD

SAT417G

O.K.

Perform self-diagnosis again after driving for a while.

N.G. →
1. Perform A/T control unit input/output signal inspection.
2. If N.G., recheck A/T control unit pin terminals for damage or connection of A/T control unit harness connector.

O.K.

**INSPECTION END**

A

Depress slowly.

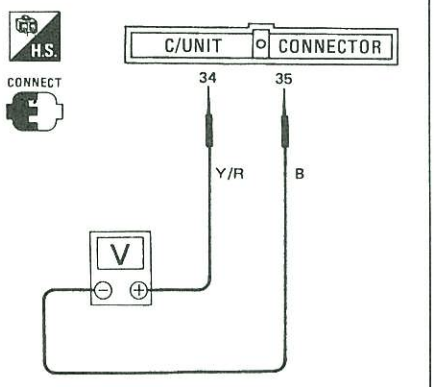


SAT978B

## Self-diagnosis (Cont'd)

### SHIFT SOLENOID VALVE A CIRCUIT CHECK

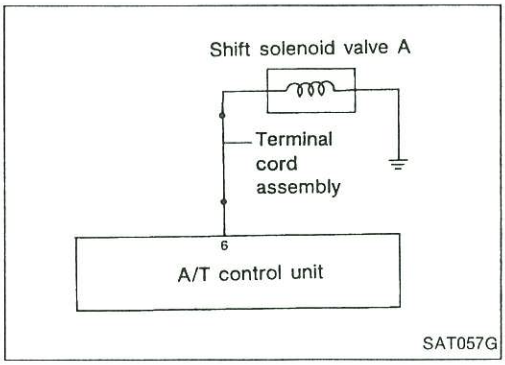


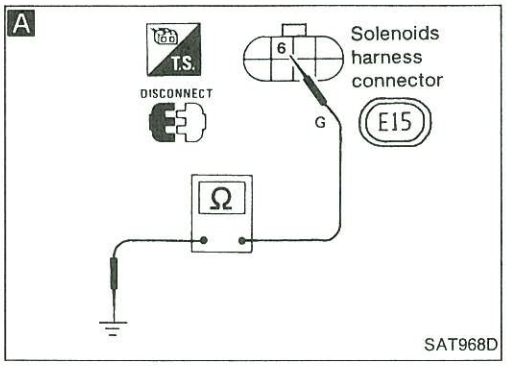


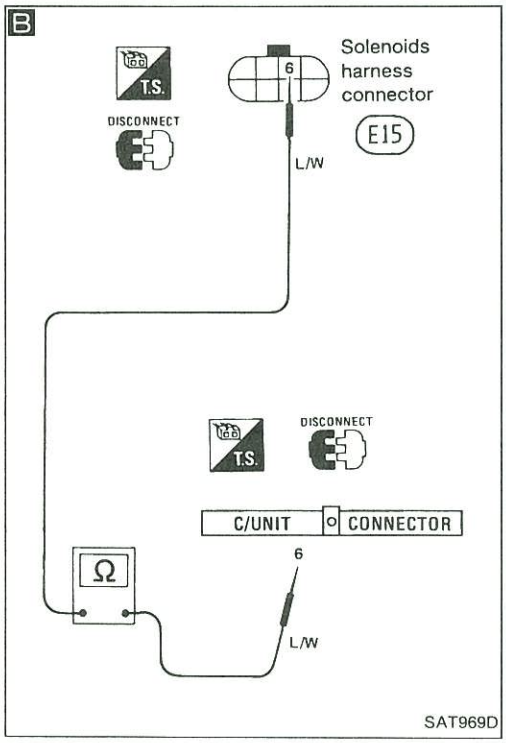


A

**CHECK GROUND CIRCUIT.**
1. Turn ignition switch to "OFF" position.
2. Disconnect terminal cord assembly connector in engine compartment.
3. Check resistance between terminal ⑥ and ground.
   **Resistance: 20 - 30Ω**

N.G. →
1. Remove control valve assembly. — Refer to "ON-VEHICLE SERVICE".
2. Check the following items.
- Shift solenoid valve A — Refer to "Electrical Components Inspection".
- Harness continuity of terminal cord assembly

O.K. ↓

B

**CHECK POWER SOURCE CIRCUIT.**
1. Turn ignition switch to "OFF" position.
2. Disconnect A/T control unit connector.
3. Check resistance between terminal ⑥ and A/T control unit terminal ⑥.
   **Resistance:**
   **Approximately 0Ω**
4. Reinstall any part removed.

N.G. → Repair or replace harness between A/T control unit and terminal cord assembly.

O.K. ↓

Perform self-diagnosis after driving for a while.

N.G. →
1. Perform A/T control unit input/output signal inspection.
2. If N.G., recheck A/T control unit pin terminals for damage or connection of A/T control unit harness connector.

O.K. ↓

**INSPECTION END**

## Self-diagnosis (Cont'd)

### SHIFT SOLENOID VALVE B CIRCUIT CHECK

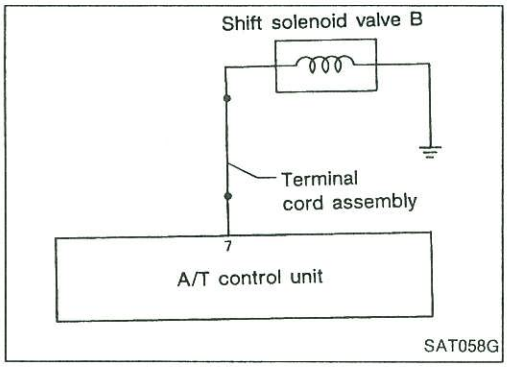


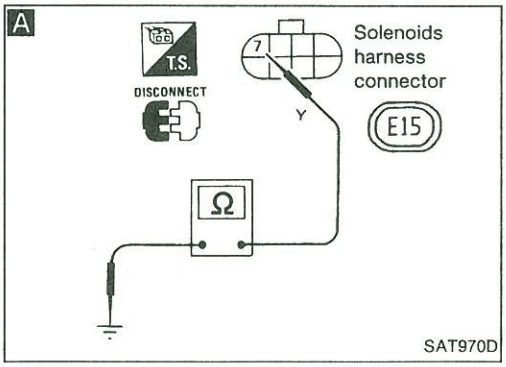


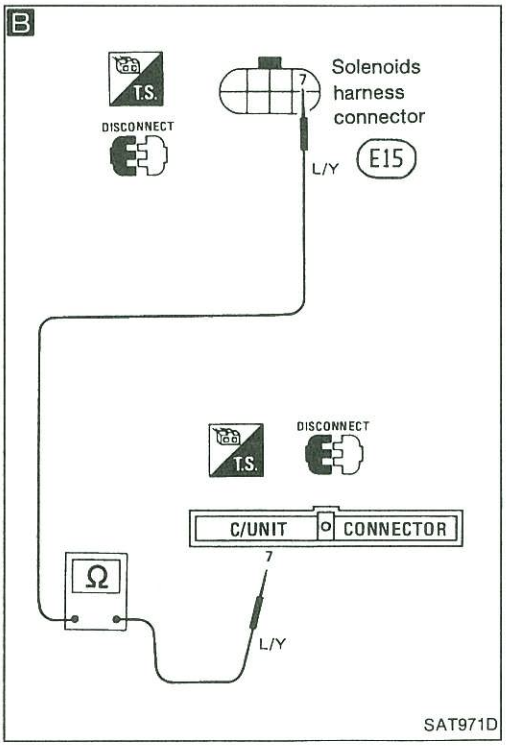


A

**CHECK GROUND CIRCUIT.**

1. Turn ignition switch to "OFF" position.
2. Disconnect terminal cord assembly connector in engine compartment.
3. Check resistance between terminal ⑦ and ground.
   **Resistance: 20 - 40Ω**

N.G. →
1. Remove control valve assembly. — Refer to "ON-VEHICLE SERVICE".
2. Check the following items.
- Shift solenoid valve B — Refer to "Electrical Components Inspection".
- Harness continuity of terminal cord assembly

O.K. ↓

B

**CHECK POWER SOURCE CIRCUIT.**

1. Turn ignition switch to "OFF" position.
2. Disconnect A/T control unit connector.
3. Check resistance between terminal ⑦ and A/T control unit terminal ⑦.
   **Resistance:**
   **Approximately 0Ω**
4. Reinstall any part removed.

N.G. → Repair or replace harness between A/T control unit and terminal cord assembly.

O.K. ↓

Perform self-diagnosis after driving for a while.

N.G. →
1. Perform A/T control unit input/output signal inspection.
2. If N.G., recheck A/T control unit pin terminals for damage or connection of A/T control unit harness connector.

O.K. ↓

**INSPECTION END**

## Self-diagnosis (Cont'd)

### OVERRUN CLUTCH SOLENOID VALVE CIRCUIT CHECK

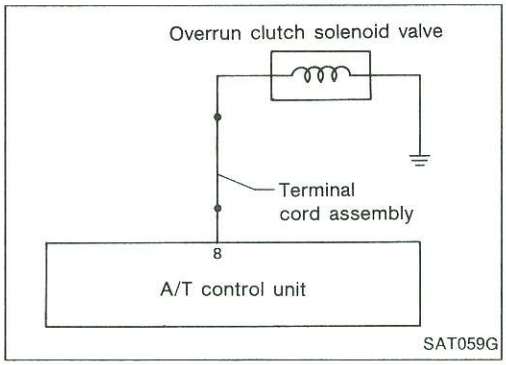


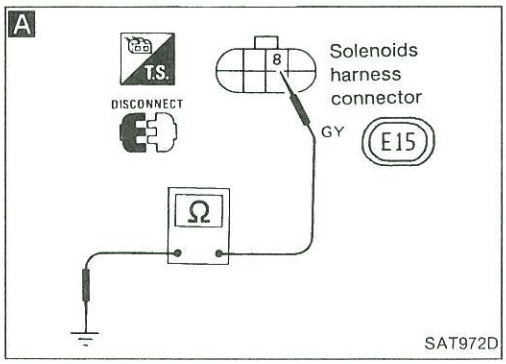


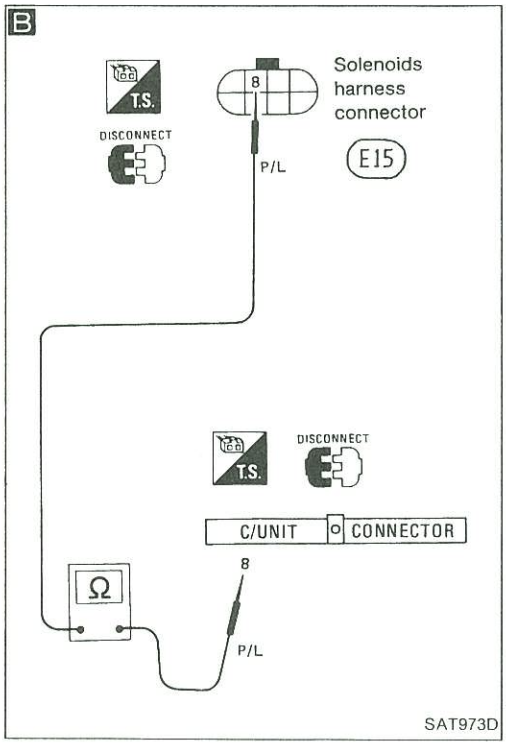


A

**CHECK GROUND CIRCUIT.**

1. Turn ignition switch to "OFF" position.
2. Disconnect terminal cord assembly connector in engine compartment.
3. Check resistance between terminal ⑧ and ground.
   **Resistance: 20 - 30Ω**

N.G. →
1. Remove control valve assembly. — Refer to "ON-VEHICLE SERVICE".
2. Check the following items.
- Overrun clutch solenoid valve. — Refer to "Electrical Components Inspection".
- Harness continuity of terminal cord assembly

O.K. ↓

B

**CHECK POWER SOURCE CIRCUIT.**

1. Turn ignition switch to "OFF" position.
2. Disconnect A/T control unit connector.
3. Check resistance between terminal ⑧ and A/T control unit terminal ⑧.
   **Resistance:**
   **Approximately 0Ω**
4. Reinstall any part removed.

N.G. → Repair or replace harness between A/T control unit and terminal cord assembly.

O.K. ↓

Perform self-diagnosis after driving for a while.

N.G. →
1. Perform A/T control unit input/output signal inspection.
2. If N.G., recheck A/T control unit pin terminals for damage or connection of A/T control unit harness connector.

O.K. ↓

**INSPECTION END**

## Self-diagnosis (Cont'd)

### TORQUE CONVERTER CLUTCH SOLENOID VALVE CIRCUIT CHECK

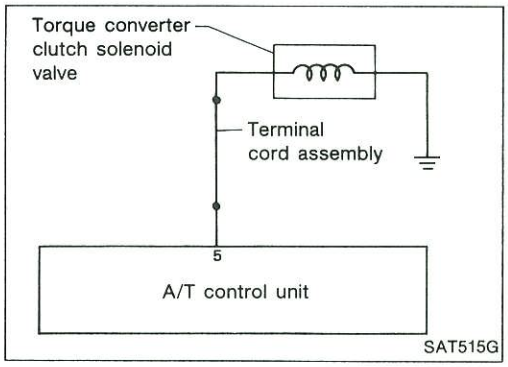


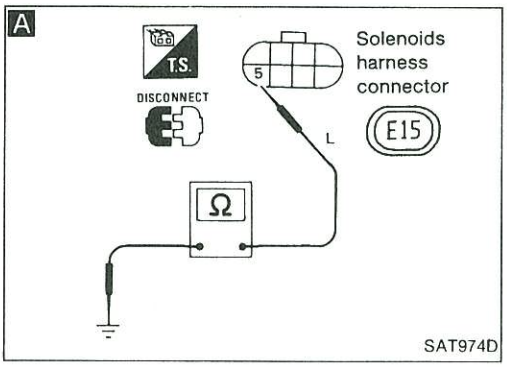


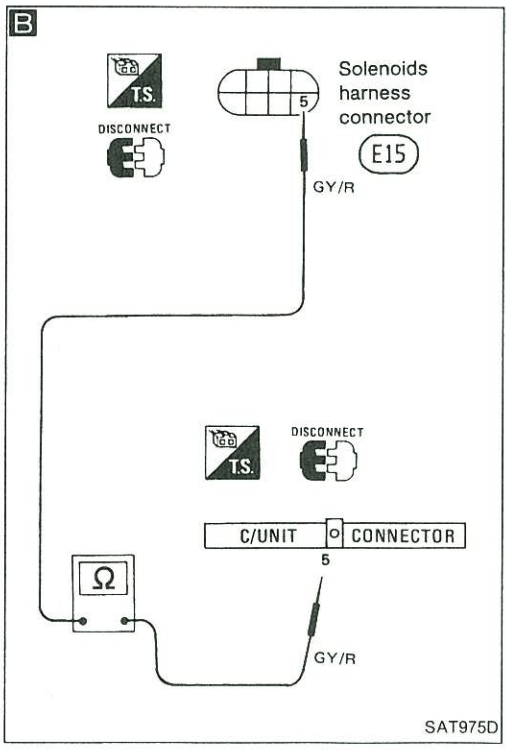


A

**CHECK GROUND CIRCUIT.**

1. Turn ignition switch to "OFF" position.
2. Disconnect terminal cord assembly connector in engine compartment.
3. Check resistance between terminal ⑤ and ground.
   **Resistance: 10 - 20Ω**

N.G. →
1. Remove oil pan. — Refer to "ON-VEHICLE SERVICE".
2. Check the following items.
- Torque converter clutch solenoid valve valve — Refer to "Electrical Components Inspection".
- Harness continuity of terminal cord assembly

O.K. ↓

B

**CHECK POWER SOURCE CIRCUIT.**

1. Turn ignition switch to "OFF" position.
2. Disconnect A/T control unit connector.
3. Check resistance between terminal ⑤ and A/T control unit terminal ⑤.
   **Resistance:**
   **Approximately 0Ω**
4. Reinstall any part removed.

N.G. → Repair or replace harness between A/T control unit and terminal cord assembly.

O.K. ↓

Perform self-diagnosis after driving for a while.

N.G. →
1. Perform A/T control unit input/output signal inspection.
2. If N.G., recheck A/T control unit pin terminals for damage or connection of A/T control unit harness connector.

O.K. ↓

**INSPECTION END**

## Self-diagnosis (Cont'd)

### FLUID TEMPERATURE SENSOR CIRCUIT AND A/T CONTROL UNIT POWER SOURCE CIRCUIT CHECKS

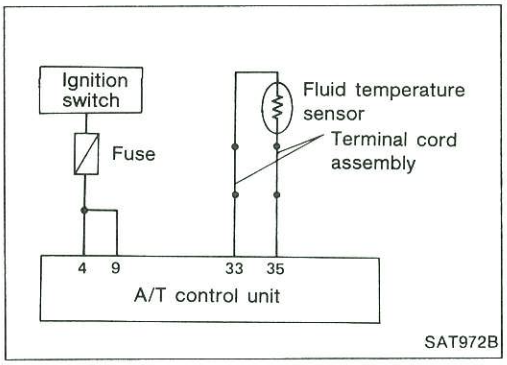


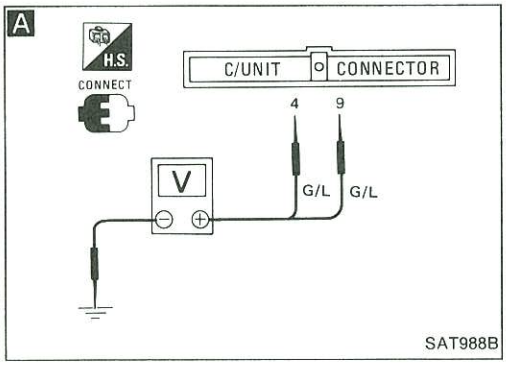


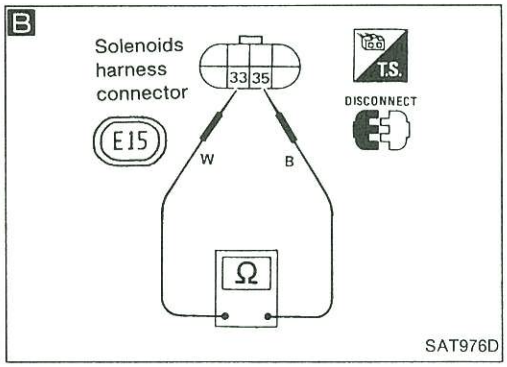


A

**CHECK A/T CONTROL UNIT POWER SOURCE.**

1. Turn ignition switch to "ON" position. (Do not start engine.)
2. Check voltage between A/T control unit terminals ④, ⑨ and ground.
   **Battery voltage should exist.**

N.G. → Check the following items.
- Harness continuity between ignition switch and A/T control unit
- Ignition switch and fuse — Refer to section EL.

O.K. ↓

B

**CHECK FLUID TEMPERATURE SENSOR WITH TERMINAL CORD ASSEMBLY.**

1. Turn ignition switch to "OFF" position.
2. Disconnect terminal cord assembly connector in engine compartment.
3. Check resistance between terminals ㉝ and ㉟ when A/T is cold.
   **Resistance:**
   **Cold [20°C (68°F)]**
   **Approximately 2.5 kΩ**
4. Reinstall any part removed.

N.G. → 1. Remove control valve cover.
2. Check the following items.
- Fluid temperature sensor — Refer to "Electrical Components Inspection".
- Harness continuity of terminal cord assembly

O.K. ↓

Ⓐ

## Self-diagnosis (Cont'd)

C

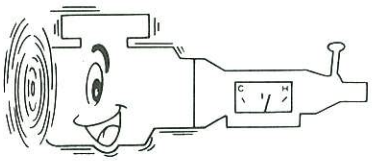

| ☆MONITOR | ☆NO FAIL |
|---|---|
| VHCL/S SE•A/T | 0km/h |
| VHCL/S SE•MTR | 5km/h |
| THRTL POS SEN | 0.4V |
| FLUID TEMP SE | 1.2V |
| BATTERY VOLT | 13.4V |
| ENGINE SPEED | 1024rpm |
| SLCT LEVER SW | O N |
| R POSITION SW | OFF |
| P/N POSI SW | O N |

RECORD

SAT418G

C

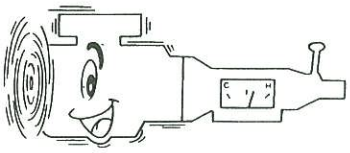

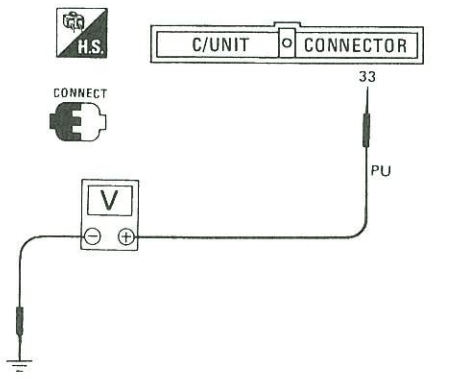


SAT990B

Ⓐ

C

**CHECK INPUT SIGNAL OF FLUID TEMPERATURE SENSOR.**

1. Turn ignition switch to "ON" position and start engine.
2. 
   - Select "ECU INPUT SIGNALS".
   - Read out the value of "FLUID TEMPERATURE SENSOR".

   **Voltage:**
   **Cold [20°C (68°F)] →**
   **Hot [80°C (176°F)]:**
   **Approximately**
   **1.5V → 0.5V**

N.G. → Check harness continuity between A/T control unit and terminal cord assembly.

OR

- Check voltage between A/T control unit terminal ㉝ and ground while warming up A/T.

  **Voltage:**
  **Cold [20°C (68°F)] →**
  **Hot [80°C (176°F)]:**
  **Approximately**
  **1.5V → 0.5V**

O.K.

Perform self-diagnosis after driving for a while.

N.G. →
1. Perform A/T control unit input/output signal inspection.
2. If N.G., recheck A/T control unit pin terminals for damage or connection of A/T control unit harness connector.

O.K.

**INSPECTION END**

## Self-diagnosis (Cont'd)

### ENGINE SPEED SIGNAL CIRCUIT CHECK

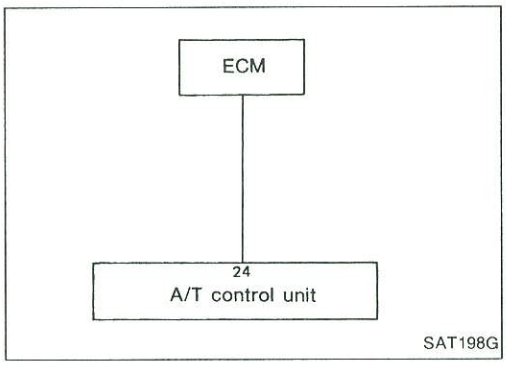


Check ignition circuit condition for engine.

N.G. → Repair or replace. — Refer to section EF & EC.

O.K.

A

**CHECK INPUT SIGNAL.**

1. Turn ignition switch to "ON" position and start engine.
2. ● Select "ECU INPUT SIGNALS".
   ● Read out the value of "ENGINE SPEED".
   ● Check engine speed changes according to throttle opening.

N.G. → Check harness continuity between A/T control unit and ECM (ECCS control module).

OR

● Check voltage between A/T control unit terminal ㉔ and ground.
**Voltage: 0.9 - 4.5V**

O.K.

Perform self-diagnosis again after driving for a while.

N.G. → 1. Perform A/T control unit input/output signal inspection.
2. If N.G., recheck A/T control unit pin terminals for damage or connection of A/T control unit harness connector.

O.K.

**INSPECTION END**

A

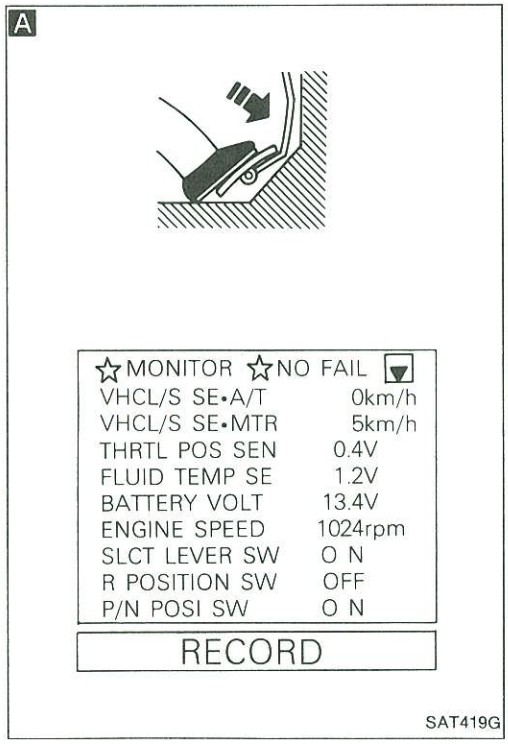


A

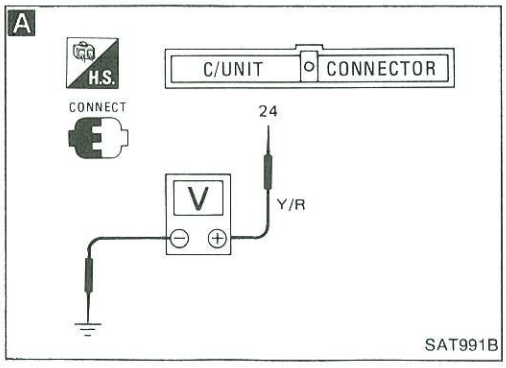

## Self-diagnosis (Cont'd)

### LINE PRESSURE SOLENOID VALVE CIRCUIT CHECK

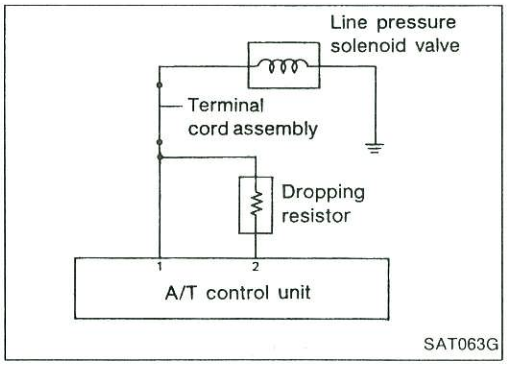


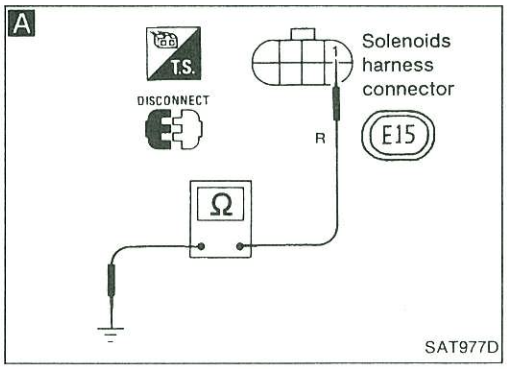


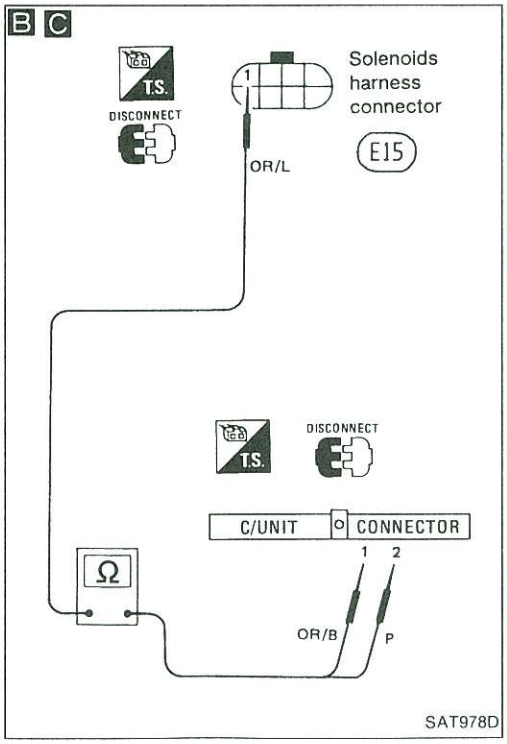


**A**

**CHECK GROUND CIRCUIT.**
1. Turn ignition switch to "OFF" position.
2. Disconnect terminal cord assembly connector in engine compartment.
3. Check resistance between terminal ① and ground.
   **Resistance: 2.5 - 5Ω**

N.G. →
1. Remove control valve assembly. — Refer to "ON-VEHICLE SERVICE".
2. Check the following items.
   - Line pressure solenoid valve — Refer to "Electrical Components Inspection".
   - Harness continuity of terminal cord assembly

O.K. ↓

**B**

**CHECK POWER SOURCE CIRCUIT.**
1. Turn ignition switch to "OFF" position.
2. Disconnect A/T control unit connector.
3. Check resistance between terminal ① and A/T control unit terminal ②.
   **Resistance: 11.2 - 12.8Ω**

N.G. →
Check the following items.
- Dropping resistor — Refer to "Electrical Components Inspection".
- Harness continuity between A/T control unit ② and terminal cord assembly

O.K. ↓

**C**

**CHECK POWER SOURCE CIRCUIT.**
1. Turn ignition switch to "OFF" position.
2. Check resistance between terminal ① and A/T control unit terminal ①.
   **Resistance:**
   **Approximately 0Ω**
3. Reinstall any part removed.

N.G. →
Repair or replace harness between A/T control unit ① and terminal cord assembly.

O.K. ↓

Perform self-diagnosis after driving for a while.

N.G. →
1. Perform A/T control unit input/output signal inspection.
2. If N.G., recheck A/T control unit pin terminals for damage or connection of A/T control unit harness connector.

O.K. ↓

**INSPECTION END**

## Self-diagnosis (Cont'd)

### INHIBITOR, OVERDRIVE, KICKDOWN AND CLOSED THROTTLE POSITION SWITCH CIRCUIT CHECKS

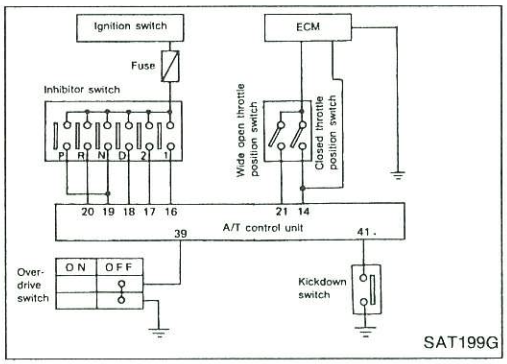

SAT199G

A

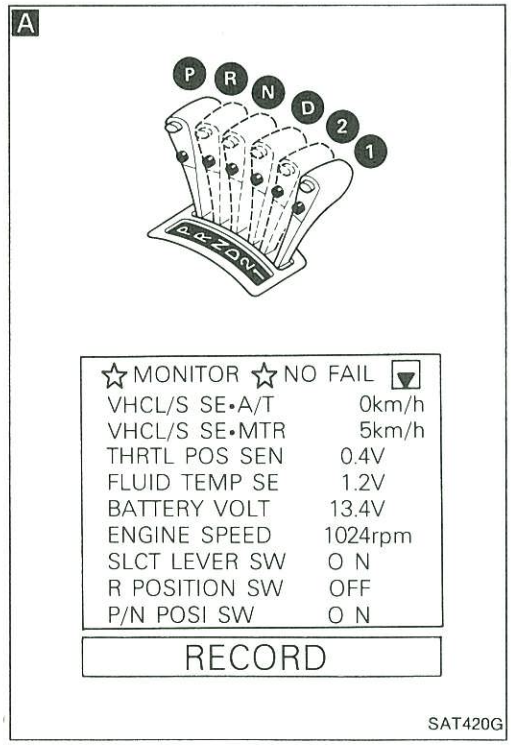

SAT420G

A

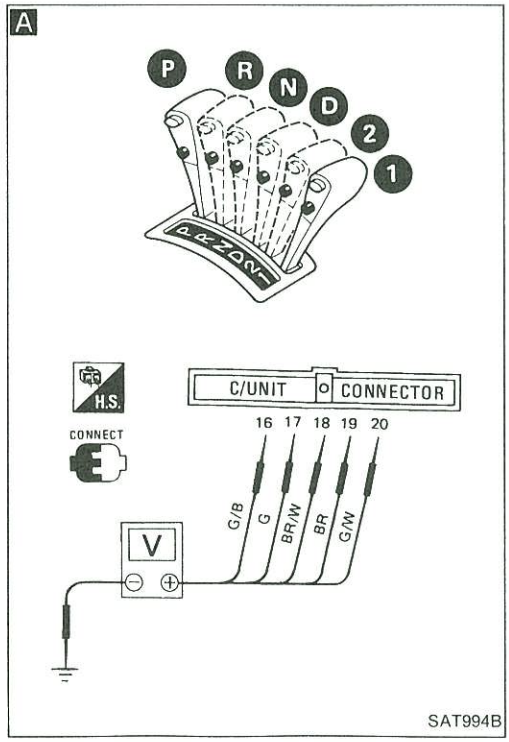

SAT994B

A

**CHECK INHIBITOR SWITCH CIRCUIT.**

1. Turn ignition switch to "ON" position. (Do not start engine.)
2. 
   - Select "ECU INPUT SIGNALS".
   - Read out "R, N, D, 1 and 2 position switches" moving selector lever to each position.
   - Check the selector lever position is indicated properly.

OR

Check voltage between A/T control unit terminals ⑯, ⑰, ⑱, ⑲, ⑳ and ground while moving selector lever through each position.

**Voltage:**

**B: Battery voltage**

**0: 0V**

| Lever position | Terminal No. ⑲ | ⑳ | ⑱ | ⑰ | ⑯ |
|---|---|---|---|---|---|
| P, N | **B** | 0 | 0 | 0 | 0 |
| R | 0 | **B** | 0 | 0 | 0 |
| D | 0 | 0 | **B** | 0 | 0 |
| 2 | 0 | 0 | 0 | **B** | 0 |
| 1 | 0 | 0 | 0 | 0 | **B** |

N.G. → Check the following items.
- Inhibitor switch — Refer to "Electrical Components Inspection".
- Harness continuity between ignition switch and inhibitor switch
- Harness continuity between inhibitor switch and A/T control unit

O.K. → Ⓐ

## Self-diagnosis (Cont'd)

B

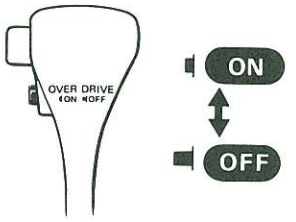


| ☆MONITOR | ☆NO FAIL |
|---|---|
| VHCL/S SE•A/T | 0km/h |
| VHCL/S SE•MTR | 5km/h |
| THRTL POS SEN | 0.4V |
| FLUID TEMP SE | 1.2V |
| BATTERY VOLT | 13.4V |
| ENGINE SPEED | 1024rpm |
| SLCT LEVER SW | O N |
| R POSITION SW | OFF |
| P/N POSI SW | O N |

RECORD

SAT421G

B

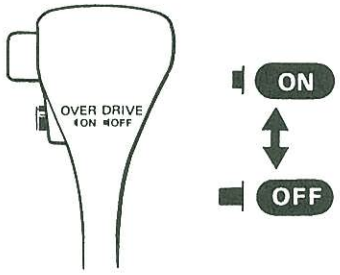


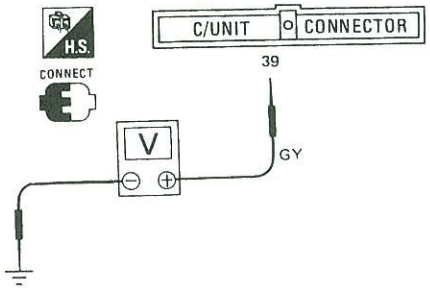


SAT995B

Ⓐ

B

**CHECK OVERDRIVE SWITCH CIRCUIT.**

1. Turn ignition switch to "ON" position. (Do not start engine.)
2. 
   - Select "ECU INPUT SIGNALS".
   - Read out "SELECTOR LEVER SWITCH (Overdrive switch)".
   - Check the selector lever switch position is indicated properly.
     (Selector lever switch "ON" displayed on CONSULT means overdrive "OFF".)

OR

- Check voltage between A/T control unit terminal ㊴ and ground when overdrive switch is in "ON" position and in "OFF" position.

| Switch position | Voltage |
|---|---|
| ON | Battery voltage |
| OFF | 1V or less |

N.G. →

Check the following items.

- Overdrive switch — Refer to "Electrical Components Inspection".
- Harness continuity between A/T control unit and overdrive switch
- Harness continuity of ground circuit for overdrive switch

O.K. ↓

Ⓑ

## Self-diagnosis (Cont'd)

C

| ☆MONITOR | ☆NO FAIL |
|---|---|
| D POSITION SW | OFF |
| 1 POSITION SW | OFF |
| 2 POSITION SW | OFF |
| ASCD•CRUISE | OFF |
| ASCD•OD OUT | OFF |
| KICKDOWN SW | OFF |
| POWERSHIFT SW | OFF |
| CLOSED THL/SW | O N |
| W/O THRL/P-SW | OFF |

RECORD

SAT422G

C

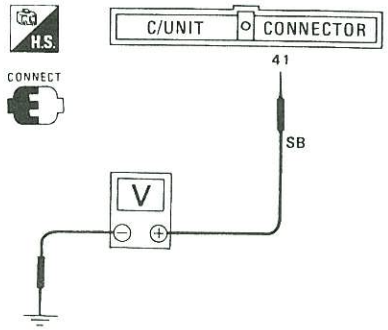


SAT337C

Ⓑ

C

**CHECK KICKDOWN SWITCH CIRCUIT.**

1. Turn ignition switch to "ON" position. (Do not start engine.)
2. ● Select "ECU INPUT SIGNALS".
   ● Read out "KICKDOWN SWITCH" depressing accelerator pedal fully.
   ● Check kickdown switch position is indicated properly.

OR

● Check voltage between A/T control unit terminal ㊶ and ground while depressing accelerator pedal slowly. (after warming up engine)

**Voltage:**

**When releasing accelerator pedal: 3 - 8V**

**When depressing accelerator pedal fully: 1V or less**

N.G. →

Check the following items.

- Kickdown switch
- Harness continuity between A/T control unit and kickdown switch
- Harness continuity of ground circuit for kickdown switch
- Adjust kickdown switch — Refer to "ON-VEHICLE SERVICE".

O.K. ↓

Ⓒ

## Self-diagnosis (Cont'd)

D

| ☆MONITOR | ☆NO FAIL |
|---|---|
| D POSITION SW | OFF |
| 1 POSITION SW | OFF |
| 2 POSITION SW | OFF |
| ASCD•CRUISE | OFF |
| ASCD•OD OUT | OFF |
| KICKDOWN SW | OFF |
| POWERSHIFT SW | OFF |
| CLOSED THL/SW | O N |
| W/O THRL/P-SW | OFF |

RECORD

SAT423G

D

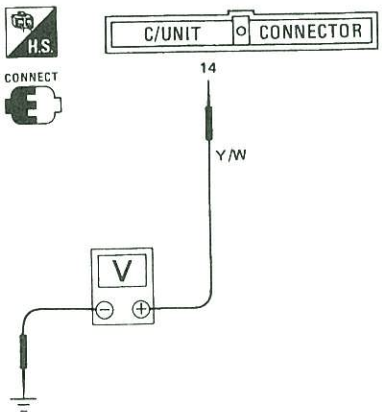


SAT979D

Ⓒ

D

**CHECK CLOSED THROTTLE POSITION SWITCH CIRCUIT.**

1. Turn ignition switch to "ON" position. (Do not start engine.)
2. ● Select "ECU INPUT SIGNALS".
   ● Read out "CLOSED THROTTLE POSITION SWITCH" depressing and releasing accelerator pedal.
   ● Check closed throttle position switch changes ON or OFF.

N.G. → Perform self-diagnosis (Mode IV) for engine control. Check closed throttle position switch circuit.

O.K. → Check harness continuity between A/T control unit and closed throttle position switch.

N.G. → Check closed throttle position switch circuit for engine control. — Refer to section EF & EC.

OR

● Check voltage between A/T control unit terminal ⑭ and ground while depressing accelerator pedal slowly.

**Voltage:**

**When releasing accelerator pedal:**

**8 - 15V**

**When depressing accelerator pedal fully:**

**1V or less**

O.K. ↓

Perform self-diagnosis again after driving for a while.

N.G. → 1. Perform A/T control unit input/output signal inspection.
2. If N.G., recheck A/T control unit pin terminals for damage or connection of A/T control unit harness connector.

O.K. ↓

**INSPECTION END**

## Diagnostic Procedure 1

**SYMPTOM: O.D. OFF indicator lamp does not come on for about 2 seconds when turning ignition switch to "ON".**

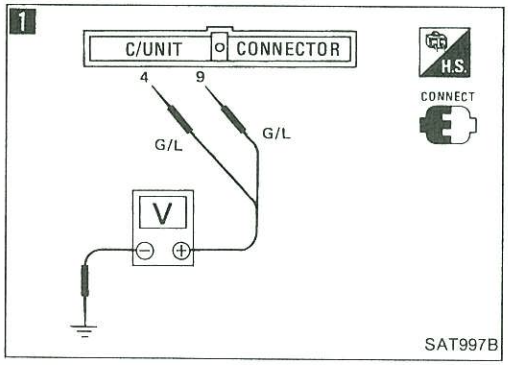


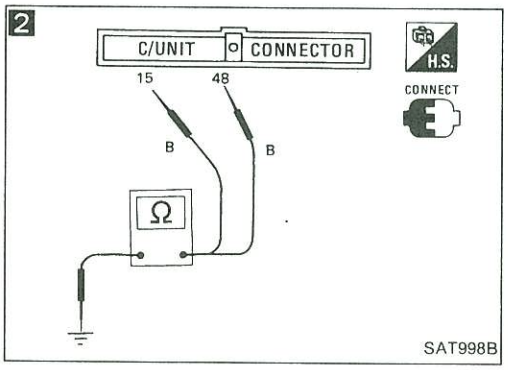


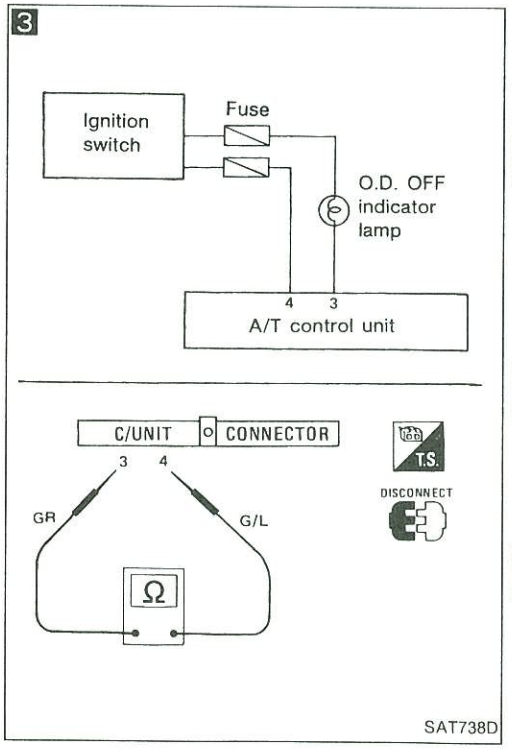


**1** **CHECK A/T CONTROL UNIT POWER SOURCE.**

1. Turn ignition switch to "ON" position. (Do not start engine.)
2. Check voltage between A/T control unit terminals ④, ⑨ and ground.
   **Battery voltage should exist.**

N.G. → Check the following items.
- Harness continuity between ignition switch and A/T control unit
- Ignition switch and fuse — Refer to section EL.

O.K. ↓

**2** **CHECK A/T CONTROL UNIT GROUND CIRCUIT.**

1. Turn ignition switch to "OFF" position.
2. Disconnect A/T control unit connector.
3. Check resistance between A/T control unit terminals ⑮, ㊽ and ground.
   **Resistance:**
   **Approximately 0Ω**

N.G. → Check harness continuity between A/T control unit and ground.

O.K. ↓

**3** **CHECK LAMP CIRCUIT.**

1. Turn ignition switch to "OFF" position.
2. Disconnect A/T control unit connector.
3. Check resistance between A/T control unit terminals ③ and ④.
   **Resistance: 50 - 100Ω**
4. Reinstall any part removed.

N.G. → Check the following items.
- O.D. OFF indicator lamp — Refer to section EL.
- Harness continuity between ignition switch and O.D. OFF indicator lamp (Main harness)
- Harness continuity between O.D. OFF indicator lamp and A/T control unit

O.K. ↓

Check again.

N.G. → 1. Perform A/T control unit input/output signal inspection.
2. If N.G., recheck A/T control unit pin terminals for damage or connection of A/T control unit harness connector.

O.K. ↓

**INSPECTION END**

## Diagnostic Procedure 2

**SYMPTOM: Engine cannot be started with selector lever in "P" or "N" position or engine can be started with selector lever in "D", "2", "1" or "R" position.**

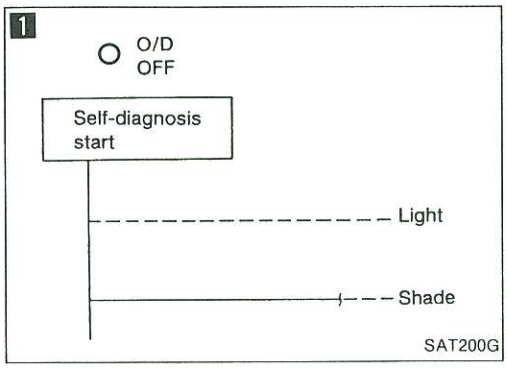


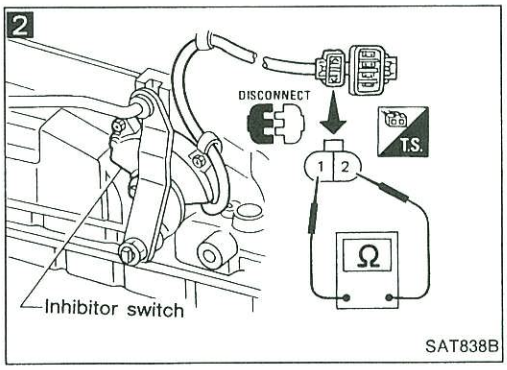


Does "ECU INPUT SIGNALS" show damage to inhibitor switch circuit? — Yes → Check inhibitor switch circuit. — Refer to "Self-diagnosis".

OR

1 Does self-diagnosis show damage to inhibitor switch circuit?

No

2 Check continuity of inhibitor switch 2-pin connector. — Refer to "Electrical Components Inspection". — N.G. → Repair or replace inhibitor switch.

O.K.

Check starting system. — Refer to section EL. — N.G. → Repair or replace damaged parts.

O.K.

**INSPECTION END**

## Diagnostic Procedure 3

**SYMPTOM: Vehicle moves when it is pushed forward or backward with selector lever in "P" position.**

Check parking components. — Refer to "ON-VEHICLE SERVICE". — N.G. → Repair or replace damaged parts.

O.K.

**INSPECTION END**

## Diagnostic Procedure 4

### SYMPTOM: Vehicle moves forward or backward when selecting "N" position.

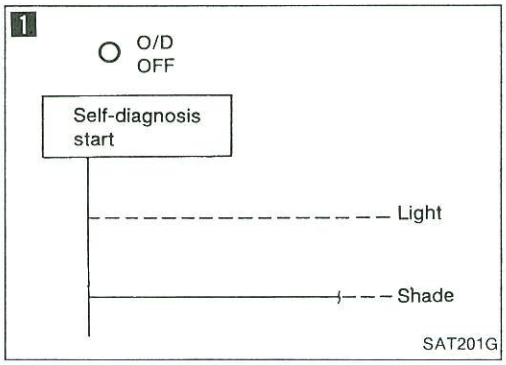


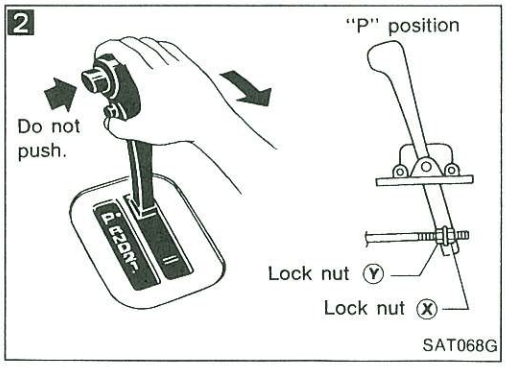


Does "ECU INPUT SIGNALS" show damage to inhibitor switch circuit? — Yes → Check inhibitor switch circuit. — Refer to "Self-diagnosis".

OR

1 Does self-diagnosis show damage to inhibitor switch circuit?

No

Check manual control linkage. — Refer to "ON-VEHICLE SERVICE". — N.G. → 2 Adjust manual control linkage. — Refer to "ON-VEHICLE SERVICE".

O.K.

Check A/T fluid level again. — N.G. → Refill A.T.F.

O.K.

1. Remove oil pan.
2. Check A/T fluid condition. — N.G. →
   1. Disassemble A/T.
   2. Check the following items.
      - Forward clutch assembly
      - Overrun clutch assembly
      - Reverse clutch assembly
      - Accumulator piston D

O.K.

Check again. — N.G. →
1. Perform A/T control unit input/output signal inspection.
2. If N.G., recheck A/T control unit pin terminals for damage or connection of A/T control unit harness connector.

O.K.

**INSPECTION END**

## Diagnostic Procedure 5

### SYMPTOM: There is large shock when changing from "N" to "R" position.

**1**

Does self-diagnosis show damage to throttle position sensor, line pressure solenoid valve or fluid temperature sensor circuit?

Yes → **2** Check damaged circuit. — Refer to "Self-diagnosis".

No

**3** Check throttle position sensor. — Refer to section EF & EC.

N.G. → Repair or replace throttle position sensor.

O.K.

Check line pressure at idle with selector lever in "D" position. — Refer to "PRESSURE TESTING".

N.G. →
1. Remove control valve assembly. — Refer to "ON-VEHICLE SERVICE".
2. Check the following items.
- Valves to control line pressure (Pressure regulator valve modifier valve, pilot valve and pilot filter)
- Line pressure solenoid valve

O.K.

Check again.

N.G. →
1. Perform A/T control unit input/output signal inspection.
2. If N.G., recheck A/T control unit pin terminals for damage or connection of A/T control unit harness connector.

O.K.

**INSPECTION END**

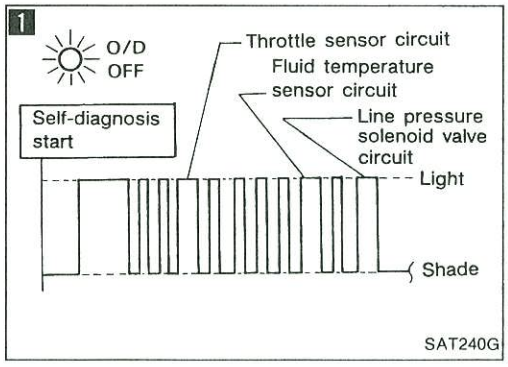


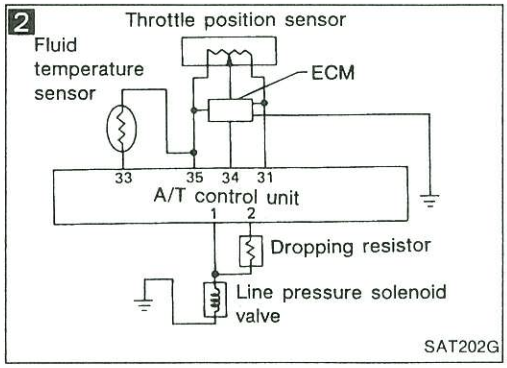


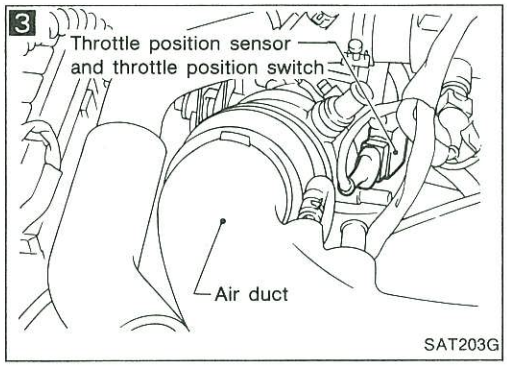

## Diagnostic Procedure 6

### SYMPTOM: Vehicle does not creep backward when selecting "R" position.

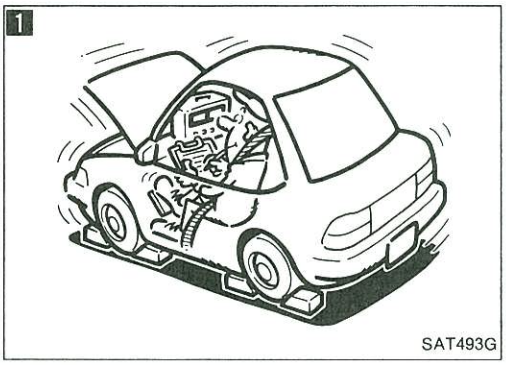

Check A/T fluid level again. — N.G. → Refill A.T.F.

O.K.

N.G. in both "1" and "R" position

1

Check stall revolution with selector lever in "1" and "R" position.

O.K.

O.K. in "1" position
N.G. in "R" position.

2

Check line pressure at idle with selector lever in "R" position. — Refer to "PRESSURE TESTING". — N.G. →

1. Remove control valve assembly. — Refer to "ON-VEHICLE SERVICE".
2. Check the following items.
- Valves to control line pressure (Pressure regulator valve, pilot valve and pilot filter)
- Line pressure solenoid valve
3. Disassemble A/T.
4. Check the following items.
- Oil pump assembly
- Torque converter
- Reverse clutch assembly
- High clutch assembly
- Low & reverse brake assembly
- Low one-way clutch

O.K.

1. Remove oil pan.
2. Check fluid condition. — N.G. →

O.K.

Check again. — N.G. →

1. Perform A/T control unit input/output signal inspection.
2. If N.G., recheck A/T control unit pin terminals for damage or connection of A/T control unit harness connector.

O.K.

**INSPECTION END**

## Diagnostic Procedure 7

**SYMPTOM: Vehicle does not creep forward when selecting "D", "2" or "1" position.**

Check A/T fluid level again. — N.G. → Refill A.T.F.

O.K. ↓

1

Check stall revolution with selector lever in "D" position. — Refer to "STALL TESTING". — N.G. →
1. Remove control valve assembly. — Refer to "ON-VEHICLE SERVICE".
2. Check the following items.
- Valves to control line pressure (Pressure regulator valve, modifier valve, pilot valve and pilot filter)
- Line pressure solenoid valve
3. Disassemble A/T
4. Check the following items.
- Oil pump assembly

O.K. ↓

2

Check line pressure at idle with selector lever in "D" position. — Refer to "PRESSURE TESTING". — N.G. →
- Forward clutch assembly
- Forward one-way clutch
- Low one-way clutch
- Low & reverse brake assembly
- Torque converter

O.K. ↓

1. Remove oil pan.
2. Check A/T fluid condition. — N.G. →
1. Perform A/T control unit input/output signal inspection.
2. If N.G., recheck A/T control unit pin terminals for damage or connection of A/T control unit harness connector.

O.K. ↓

Check again. — N.G. →

O.K. ↓

**INSPECTION END**

1

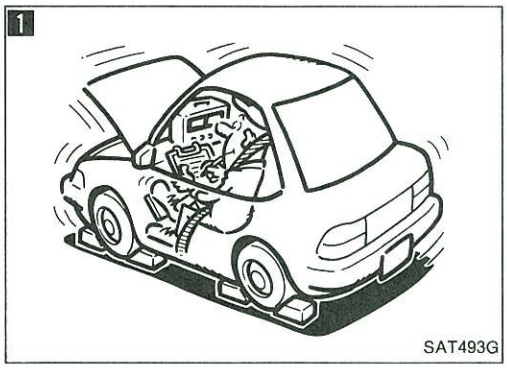

SAT493G

2

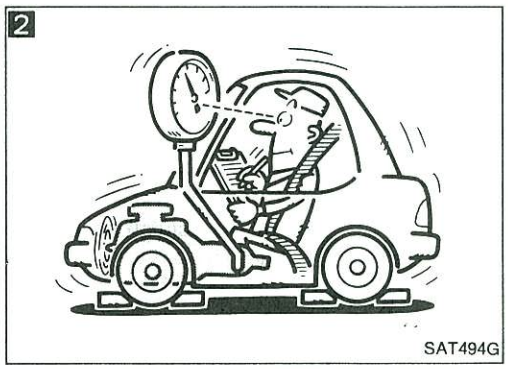

SAT494G

## Diagnostic Procedure 8

### SYMPTOM: Vehicle cannot be started from $D_1$ on Cruise test — Part 1.

Is Diagnostic Procedure 7 O.K.?
- No → Go to Diagnostic Procedure 7.
- Yes ↓

**1** Does self-diagnosis show damage to revolution sensor, speed sensor, shift solenoid valve A or B after cruise test?
- Yes → Check damaged circuit. — Refer to "Self-diagnosis".
- No ↓

**2** Check throttle position sensor. — Refer to section EF & EC.
- N.G. → Repair or replace throttle position sensor.
- O.K. ↓

**3** Check line pressure at stall point with selector lever in "D" position. — Refer to "PRESSURE TESTING".
- N.G. →
  1. Remove control valve assembly. — Refer to "ON-VEHICLE SERVICE".
  2. Check the following items.
     - Shift valve A
     - Shift valve B
     - Shift solenoid valve A
     - Shift solenoid valve B
     - Pilot valve
     - Pilot filter
- O.K. ↓

1. Remove oil pan.
2. Check A/T fluid condition.
- O.K. → (to 2. above)
- N.G. →
  3. Disassemble A/T.
  4. Check the following items.
     - Forward clutch assembly
     - Forward one-way clutch
     - Low one-way clutch
     - High clutch assembly
     - Torque converter
     - Oil pump assembly
- O.K. ↓

Check again.
- N.G. →
  1. Perform A/T control unit input/output signal inspection.
  2. If N.G., recheck A/T control unit pin terminals for damage or connection of A/T control unit harness connector.
- O.K. ↓

**INSPECTION END**

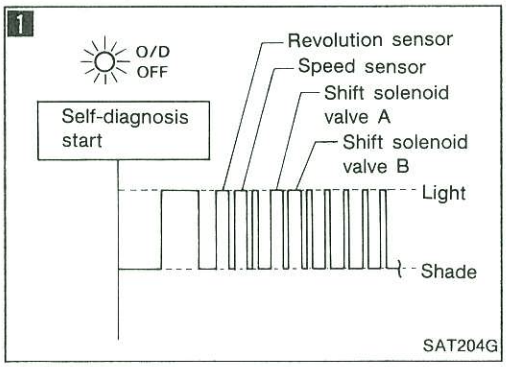


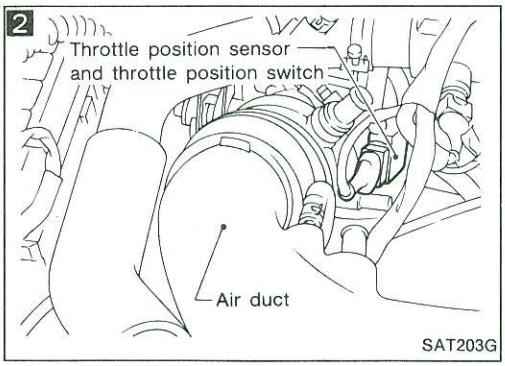


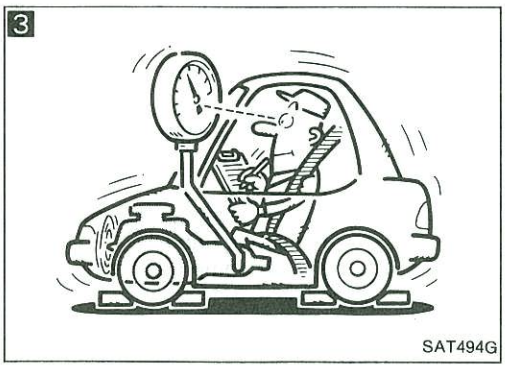

## Diagnostic Procedure 9

**SYMPTOM: A/T does not shift from $D_1$ to $D_2$ at the specified speed.**
**A/T does not shift from $D_4$ to $D_2$ when depressing accelerator pedal fully at the specified speed.**

Are Diagnostic Procedures 7 and 8 O.K.?
- No → Go to Diagnostic Procedure 7 or 8.
- Yes ↓

Does "ECU INPUT SIGNALS" show damage to inhibitor switch circuit?
- Yes → Check inhibitor switch circuit. — Refer to "Self-diagnosis".
- OR

1 Does self-diagnosis show damage to inhibitor switch circuit?
- No ↓

2 Check revolution sensor and speed sensor circuit. — Refer to "Self-diagnosis".
- N.G. → Repair or replace revolution sensor and speed sensor circuits.
- O.K. ↓

3 Check throttle position sensor. — Refer to section EF & EC.
- N.G. → Repair or replace throttle position sensor.
- O.K. ↓

1. Remove oil pan.
2. Check A/T fluid condition.
- N.G. →
  1. Remove control valve. — Refer to "ON-VEHICLE SERVICE".
  2. Check the following items.
     - Shift valve A
     - Shift solenoid valve A
     - Pilot valve
     - Pilot filter
- O.K. ↓ (from step 2)
- O.K. ↓ (from step 3)
- O.K. ↓ (from step 1)

3. Disassemble A/T.
4. Check the following items.
   - Servo piston assembly
   - Brake band
   - Oil pump assembly

4 Check again.
- N.G. →
  1. Perform A/T control unit input/output signal inspection.
  2. If N.G., recheck A/T control unit pin terminals for damage or connection of A/T control unit harness connector.
- O.K. ↓

**INSPECTION END**

1

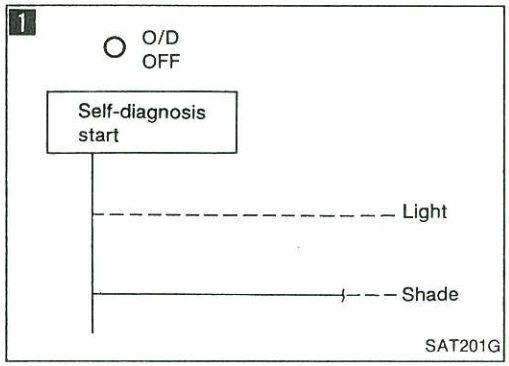


2

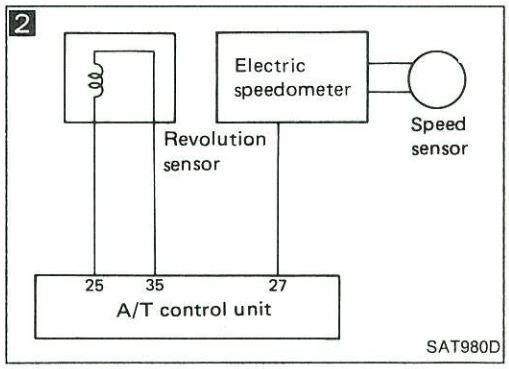


3

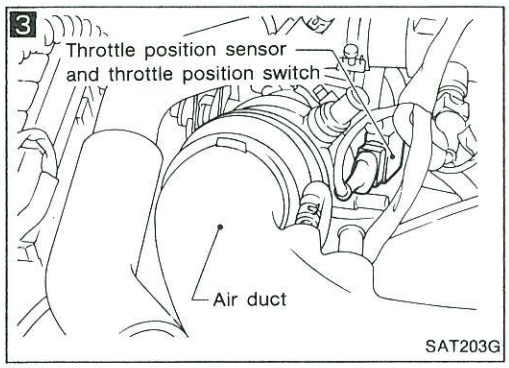


4

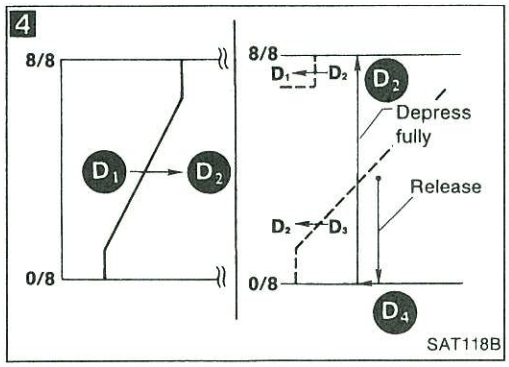

## Diagnostic Procedure 10

### SYMPTOM: A/T does not shift from $D_2$ to $D_3$ at the specified speed.

Are Diagnostic Procedures 7 and 8 O.K.?

No → Go to Diagnostic Procedure 7 or 8.

Yes

Does "ECU INPUT SIGNALS" show damage to inhibitor switch circuit?

Yes → Check inhibitor switch circuit. — Refer to "Self-diagnosis".

OR

1

Does self-diagnosis show damage to inhibitor switch circuit?

No

2

Check throttle position sensor. — Refer to section EF & EC.

N.G. → Repair or replace throttle position sensor.

O.K.

1. Remove oil pan.
2. Check A/T fluid condition.

N.G. →
1. Remove control valve assembly. — Refer to "ON-VEHICLE SERVICE".
2. Check the following items.
   - Shift valve B
   - Shift solenoid valve B
   - Pilot valve
   - Pilot filter

O.K.

3. Disassemble A/T.
4. Check the following items.
   - Servo piston assembly
   - High clutch assembly
   - Oil pump assembly

3

Check again.

N.G. →
1. Perform A/T control unit input/output signal inspection.
2. If N.G., recheck A/T control unit pin terminals for damage or connection of A/T control unit harness connector.

O.K.

**INSPECTION END**

1

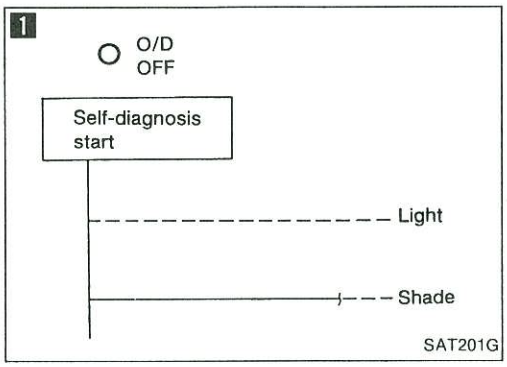


2

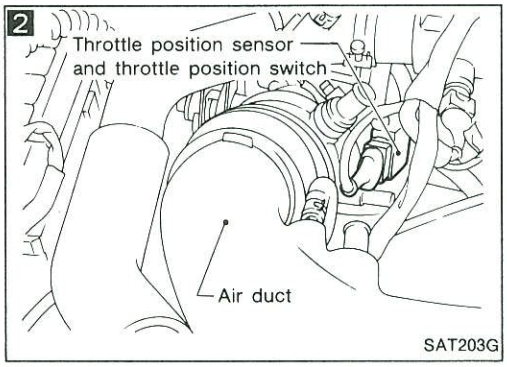


3

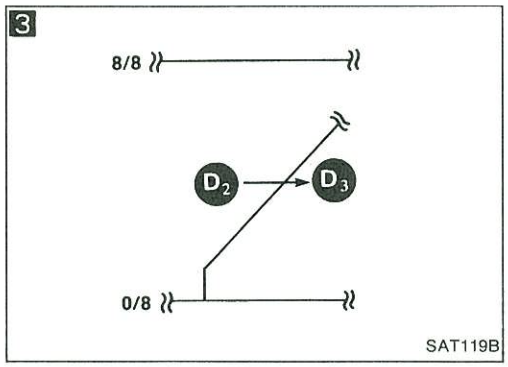

## Diagnostic Procedure 11

### SYMPTOM: A/T does not shift from $D_3$ to $D_4$ at the specified speed.

Are Diagnostic Procedures 7 and 8 O.K.?

No → Go to Diagnostic Procedure 7 or 8.

Yes ↓

**1**

Does self-diagnosis show damage to inhibitor switch, overdrive switch, shift solenoid valve A, B, revolution sensor, speed sensor or fluid temperature sensor circuit after cruise test?

Yes → Check damaged circuit. — Refer to "Self-diagnosis".

No ↓

**2**

Check throttle position sensor. — Refer to section EF & EC.

N.G. → Repair or replace throttle position sensor.

O.K. ↓

1. Remove oil pan.
2. Check A/T fluid condition.

N.G. →
1. Remove control valve assembly. — Refer to "ON-VEHICLE SERVICE".
2. Check the following items.
   - Shift valve B
   - Overrun clutch control valve
   - Shift solenoid valve B
   - Pilot valve
   - Pilot filter
3. Disassemble A/T.
4. Check the following items.
   - Servo piston assembly
   - Brake band
   - Torque converter
   - Oil pump assembly

O.K. ↓

**3**

Check again.

N.G. →
1. Perform A/T control unit input/output signal inspection.
2. If N.G., recheck A/T control unit pin terminals for damage or connection of A/T control unit harness connector.

O.K. ↓

**INSPECTION END**

**1**

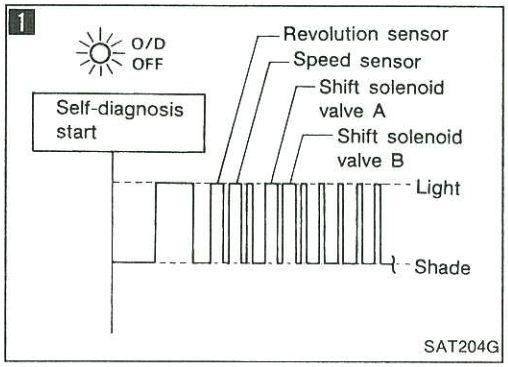


SAT204G

**2**

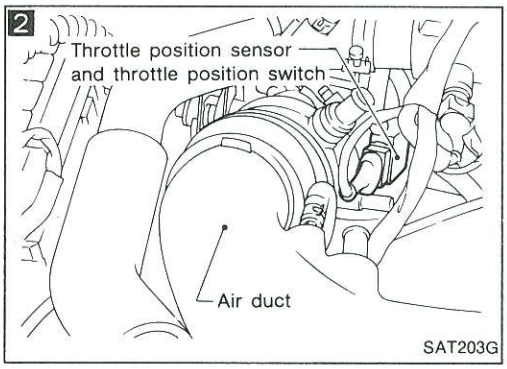


SAT203G

**3**

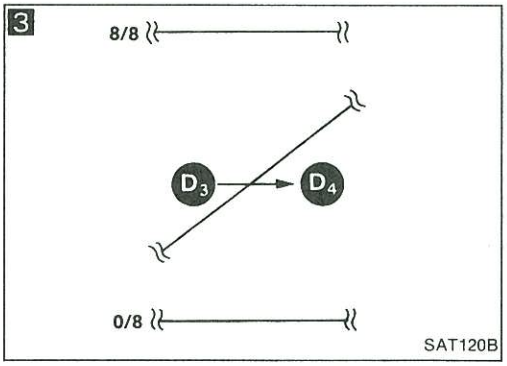


SAT120B

## Diagnostic Procedure 12

### SYMPTOM: A/T does not perform lock-up at the specified speed.

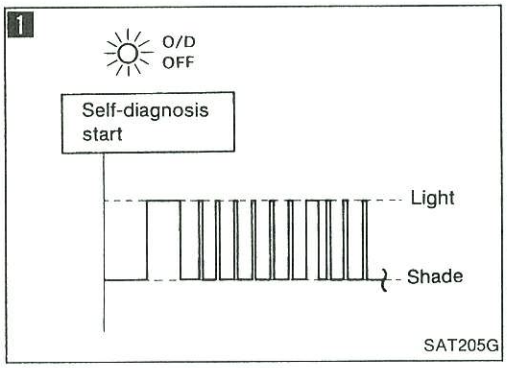


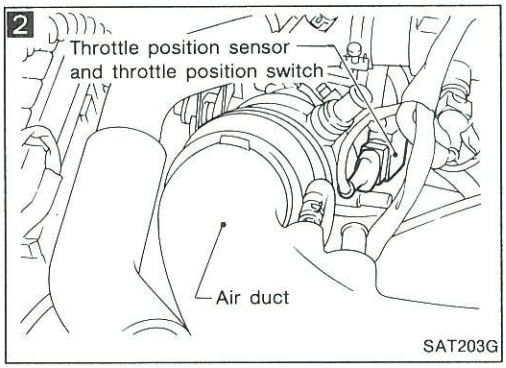


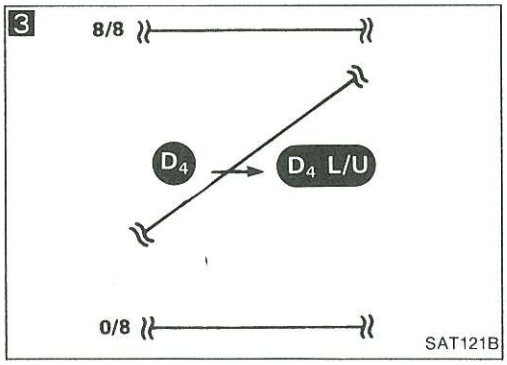


**1**

Does self-diagnosis show damage to torque converter clutch solenoid valve circuit after cruise test?

Yes → Check torque converter clutch solenoid valve circuit. — Refer to "Self-diagnosis".

No ↓

**2**

Check throttle position sensor. — Refer to section EF & EC.

N.G. → Repair or replace throttle position sensor.

O.K. ↓

1. Remove control valve. — Refer to "ON-VEHICLE SERVICE".
2. Check the following items.
   - Lock-up control valve
   - Shuttle shift valve D
   - Torque converter relief valve
   - Torque converter clutch solenoid valve
   - Pilot valve
   - Pilot filter

N.G. → Repair or replace damaged parts.

O.K. ↓

**3**

Check again.

N.G. → 1. Perform A/T control unit input/output signal inspection.
2. If N.G., recheck A/T control unit pin terminals for damage or connection of A/T control unit harness connector.

O.K. ↓

**INSPECTION END**

## Diagnostic Procedure 13

**SYMPTOM: A/T does not hold lock-up condition for more than 30 seconds.**

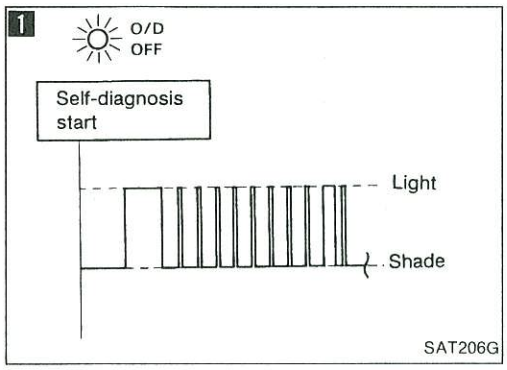


1

Does self-diagnosis show damage to engine speed signal circuit after cruise test?

Yes → Check engine speed sensor circuit. — Refer to "Self-diagnosis".

No

1. Remove oil pan.
2. Check A/T fluid condition.

N.G. →
1. Remove control valve assembly. — Refer to "ON-VEHICLE SERVICE".
2. Check the following items.
- Lock-up control valve
- Pilot valve
- Pilot filter
3. Disassemble A/T.
4. Check torque converter and oil pump assembly.

O.K. (from 1. Remove oil pan. 2. Check A/T fluid condition.)

O.K. (from 3. Disassemble A/T.)

O.K. (from 4. Check torque converter and oil pump assembly.)

Check again.

N.G. →
1. Perform A/T control unit input/output signal inspection.
2. If N.G., recheck A/T control unit pin terminals for damage or connection of A/T control unit harness connector.

O.K.

**INSPECTION END**

## Diagnostic Procedure 14

**SYMPTOM: Lock-up is not released when accelerator pedal is released.**

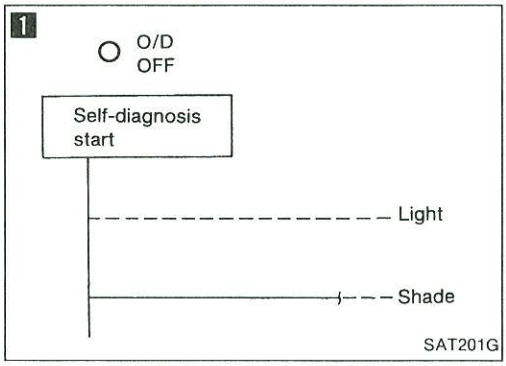


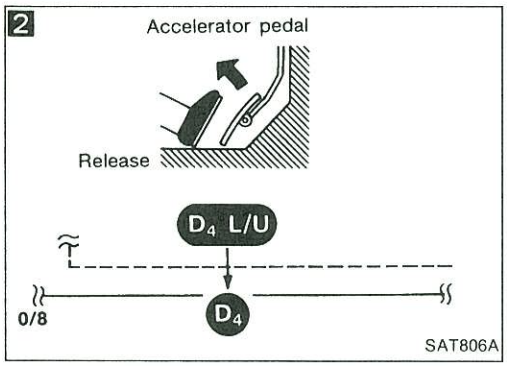


Does "ECU INPUT SIGNALS" show damage to closed throttle position switch circuit?

Yes → Check closed throttle position switch circuit. — Refer to "Self-diagnosis".

— OR —

1

Does self-diagnosis show damage to closed throttle position switch circuit?

No

2

Check again.

N.G. →
1. Perform A/T control unit input/output signal inspection.
2. If N.G., recheck A/T control unit pin terminals for damage or connection of A/T control unit harness connector.

O.K.

**INSPECTION END**

## Diagnostic Procedure 15

**SYMPTOM: Engine speed does not return to idle smoothly when A/T is shifted from $D_4$ to $D_3$ with accelerator pedal released.**
**Vehicle does not decelerate by engine brake when changing overdrive switch to "OFF" position with accelerator pedal released.**
**Vehicle does not decelerate by engine brake when changing selector lever from "D" to "2" position with accelerator pedal released.**

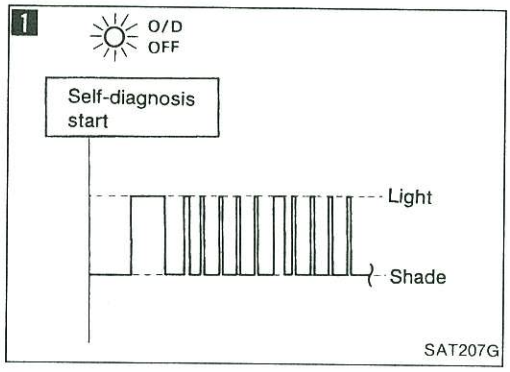


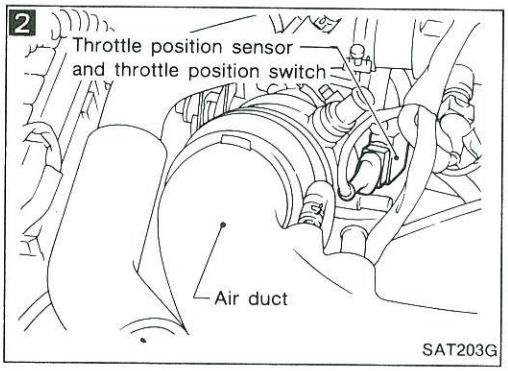


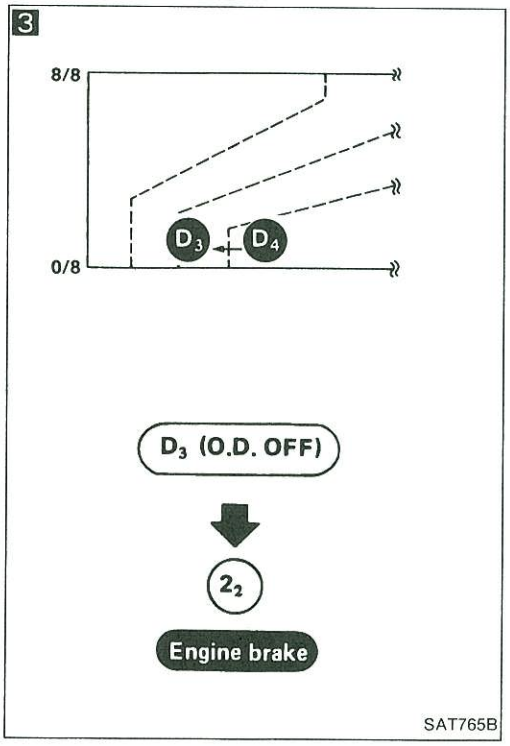


**1**

Does self-diagnosis show damage to overrun clutch solenoid valve circuit after cruise test?

Yes → Check overrun clutch solenoid valve circuit. — Refer to "Self-diagnosis".

No

**2**

Check throttle position sensor. — Refer to section EF & EC.

N.G. → Repair or replace throttle position sensor.

O.K.

1. Remove oil pan.
2. Check A/T fluid condition.

N.G. → 1. Remove control valve assembly. — Refer to "ON-VEHICLE SERVICE".
2. Check the following items.
- Overrun clutch control valve
- Overrun clutch reducing valve
- Overrun clutch solenoid valve

O.K.

O.K.

3. Disassemble A/T.
4. Check the following items.
- Overrun clutch assembly
- Oil pump assembly

**3**

Check again.

N.G. → 1. Perform A/T control unit input/output signal inspection.
2. If N.G., recheck A/T control unit pin terminals for damage or connection of A/T control unit harness connector.

O.K.

**INSPECTION END**

## Diagnostic Procedure 16

**SYMPTOM: Vehicle does not start from $D_1$ on Cruise test — Part 2.**

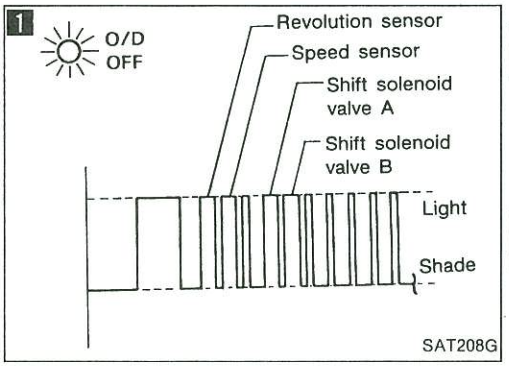


1

Does self-diagnosis show damage to revolution sensor, speed sensor, shift solenoid valve A or B after cruise test?

Yes → Check damaged circuit. — Refer to "Self-diagnosis".

No

Check again.

N.G. →
1. Perform A/T control unit input/output signal inspection.
2. If N.G., recheck A/T control unit pin terminals for damage or connection of A/T control unit harness connector.

O.K.

Go to Diagnostic Procedure 8.

## Diagnostic Procedure 17

**SYMPTOM: A/T does not shift from $D_4$ to $D_3$ when changing overdrive switch to "OFF" position.**

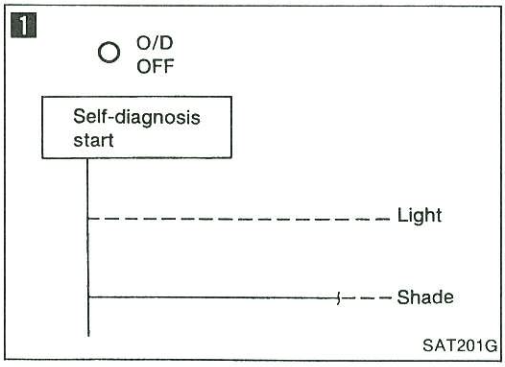


Does "ECU INPUT SIGNALS" show damage to overdrive switch circuit?

Yes → Check overdrive switch circuit. — Refer to "Self-diagnosis".

OR

1

Does self-diagnosis show damage to overdrive switch circuit?

No → Go to Diagnostic Procedure 10.

## Diagnostic Procedure 18

**SYMPTOM: A/T does not shift from $D_3$ to $2_2$ when changing selector lever from "D" to "2" position.**

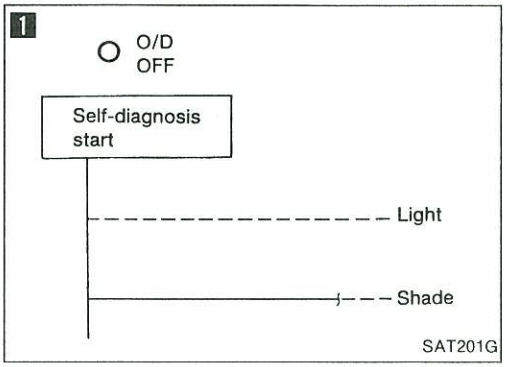


Does "ECU INPUT SIGNALS" show damage to inhibitor switch circuit? — Yes → Check inhibitor switch circuit. — Refer to "Self-diagnosis".

OR

1 Does self-diagnosis show damage to inhibitor switch circuit?

No → Go to Diagnostic Procedure 9.

## Diagnostic Procedure 19

**SYMPTOM: A/T does not shift from $2_2$ to $1_1$ when changing selector lever from "2" to "1" position.**

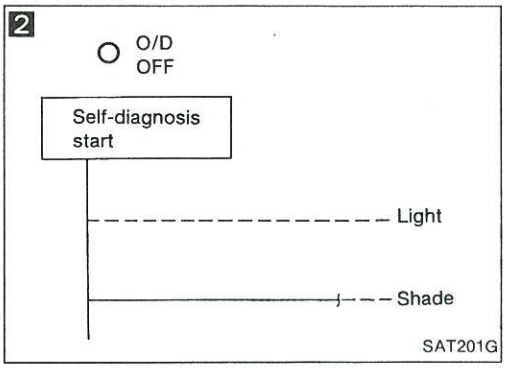


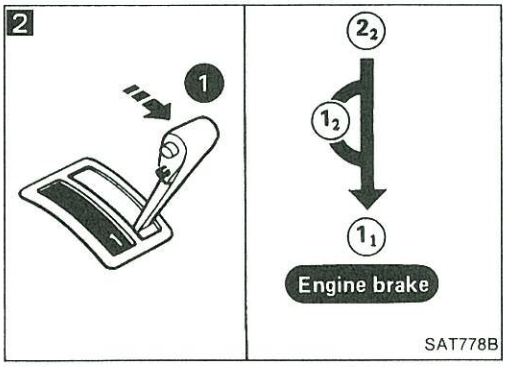


Does "ECU INPUT SIGNALS" show damage to inhibitor switch circuit? — Yes → Check inhibitor switch circuit. — Refer to "Self-diagnosis".

OR

1 Does self-diagnosis show damage to inhibitor switch circuit?

No

2 Check again. — N.G. →
1. Perform A/T control unit input/output signal inspection.
2. If N.G., recheck A/T control unit pin terminals for damage or connection of A/T control unit harness connector.

O.K. → **INSPECTION END**

## Diagnostic Procedure 20

**SYMPTOM: Vehicle does not decelerate by engine brake when shifting from $2_2$ ($1_2$) to $1_1$.**

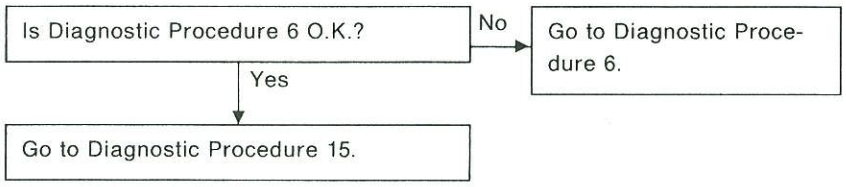


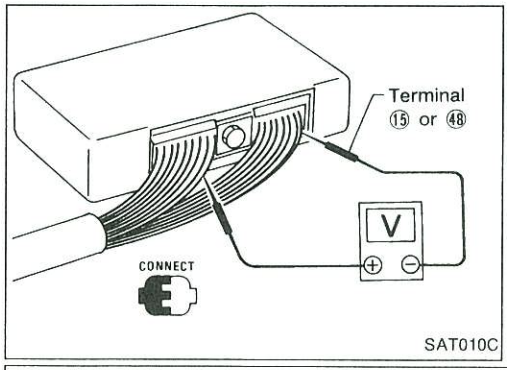


## Electrical Components Inspection

### INSPECTION OF A/T CONTROL UNIT

- Measure voltage between each terminal and terminal ⑮ or ㊽ by following "A/T CONTROL UNIT INSPECTION TABLE".

- Pin connector terminal layout.

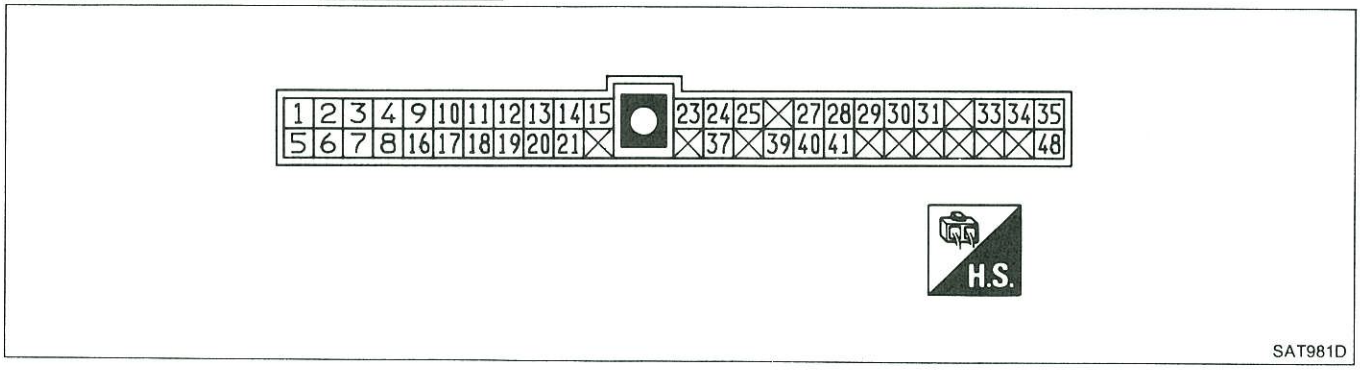

## A/T CONTROL UNIT INSPECTION TABLE

**(Data are reference values.)**

| Terminal No. | Item | Condition | | Judgement standard |
|---|---|---|---|---|
| 1 | Line pressure solenoid valve | | When accelerator pedal is released after warming up engine. | 1.5 - 2.5V |
| | | | When accelerator pedal is depressed fully after warming up engine. | 0.5V or less |
| 2 | Line pressure solenoid valve (with dropping resistor) | | When accelerator pedal is released after warming up engine. | 5 - 14V |
| | | | When accelerator pedal is depressed fully after warming up engine. | 0.5V or less |
| 3 | O.D. OFF indicator lamp | | When A/T check lamp is on. | 1V or less |
| | | | When A/T check lamp is not on. | Battery voltage |
| 4 | Power source | | When ignition switch is turned to "ON". | Battery voltage |
| | | | When ignition switch is turned to "OFF". | 1V or less |
| 5 | Torque converter clutch solenoid valve | | When A/T is performing lock-up. | 8 - 15V |
| | | | When A/T is not performing lock-up. | 1V or less |
| 6 | Shift solenoid valve A | | When shift solenoid valve A is operating. (When driving in "$D_1$" or "$D_4$".) | Battery voltage |
| | | | When shift solenoid valve A is not operating. (When driving in "$D_2$" or "$D_3$".) | 1V or less |
| 7 | Shift solenoid valve B | | When shift solenoid valve B is operating. (When driving in "$D_1$" or "$D_2$".) | Battery voltage |
| | | | When shift solenoid valve B is not operating. (When driving in "$D_3$" or "$D_4$".) | 1V or less |
| 8 | Overrun clutch solenoid valve | | When timing solenoid is operating. (When driving in "$D_1$" or "$D_4$".) | Battery voltage |
| | | | When timing solenoid is not operating. (When driving in "$D_2$" or "$D_3$".) | 1V or less |

## Electrical Components Inspection (Cont'd)

| Terminal No. | Item | Condition | | Judgement standard |
|---|---|---|---|---|
| 9 | Power source | | Same as No. 4 | |
| 10* | — | | — | — |
| 11 | — | | — | — |
| 12 | — | | — | — |
| 13 | — | | — | — |
| 14 | Closed throttle position switch (in throttle position switch) | | When accelerator pedal is released after warming up engine. | 8 - 15V |
| | | | When accelerator pedal is depressed after warming up engine. | 1V or less |
| 15 | Ground | | — | — |
| 16 | Inhibitor "1" position switch | | When selector lever is set to "1" position. | Battery voltage |
| | | | When selector lever is set to other positions. | 1V or less |
| 17 | Inhibitor "2" position switch | | When selector lever is set to "2" position. | Battery voltage |
| | | | When selector lever is set to other positions. | 1V or less |
| 18 | Inhibitor "D" position switch | | When selector lever is set to "D" position. | Battery voltage |
| | | | When selector lever is set to other positions. | 1V or less |
| 19 | Inhibitor "N" or "P" position switch | | When selector lever is set to "N" position. | Battery voltage |
| | | | When selector lever is set to other positions. | 1V or less |
| 20 | Inhibitor "R" position switch | | When selector lever is set to "R" position. | Battery voltage |
| | | | When selector lever is set to other positions. | 1V or less |
| 21 | Wide open throttle position switch (in throttle position switch) | | When accelerator pedal is depressed more than half-way after warming up engine. | 8 - 15V |
| | | | When accelerator pedal is released after warming up engine. | 1V or less |
| 22 | — | | — | — |

*: This terminal is connected to terminal No. 42 of ECM (ECCS control module).
When code No. 54 appears during engine self-diagnosis, check line between above terminals for proper continuity.

## Electrical Components Inspection (Cont'd)

| Terminal No. | Item | Condition | | Judgement standard |
|---|---|---|---|---|
| 23 | Power source (Back-up) | 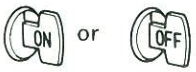  | When ignition switch is turned to "OFF". | Battery voltage |
| | | | When ignition switch is turned to "ON". | Battery voltage |
| 24 | Engine speed signal | 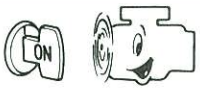  | When engine is running at idle speed. | 0.9V |
| | | | When engine is running at 3,000 rpm. | Approximately 3.7V |
| 25 | Revolution sensor (Measure in AC position) | | When vehicle is cruising at 30 km/h (19 MPH). | 1V or more<br>Voltage rises gradually in response to vehicle speed. |
| | | | When vehicle is parked. | 0V |
| 26 | — | | — | — |
| 27 | Speed sensor | | When vehicle is moving at 2 to 3 km/h (1 to 2 MPH) for 1 m (3 ft) or more. | Vary from 0 to 5V |
| 28 | — | | — | — |
| 29 | — | | — | — |
| 30 | — | | — | — |
| 31 | Throttle position sensor (Power source) | | — | 4.5 - 5.5V |
| 32 | — | | — | — |
| 33 | Fluid temperature sensor | | When A.T.F. temperature is 20°C (68°F). | Approximately 1.5V |
| | | | When A.T.F. temperature is 80°C (176°F). | Approximately 0.5V |
| 34 | Throttle position sensor | | When accelerator pedal is depressed slowly after warming up engine.<br>Voltage rises gradually in response to throttle opening angle. | Fully-closed throttle: Approximately 0.5V<br>Fully-open throttle: Approximately 4V |
| 35 | Throttle position sensor (Ground) | | — | — |
| 36 | — | | — | — |
| 37 | A.S.C.D. cruise signal | | When A.S.C.D. cruise is being performed. ("CRUISE" light comes on.) | Battery voltage |
| | | | When A.S.C.D. cruise is not being performed. ("CRUISE" light does not come on.) | 1V or less |

## Electrical Components Inspection (Cont'd)

| Terminal No. | Item | Condition | | Judgement standard |
|---|---|---|---|---|
| 38 | — | 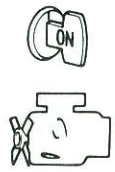 | — | — |
| 39 | Overdrive switch | | When overdrive switch is set in "ON" position | Battery voltage |
| | | | When overdrive switch is set in "OFF" position | 1V or less |
| 40 | A.S.C.D. O.D. cut signal | | When "ACCEL" set switch on A.S.C.D. cruise is released. | 5 - 8V |
| | | | When "ACCEL" set switch on A.S.C.D. cruise is applied. | 1V or less |
| 41 | Kickdown switch | 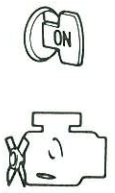 | When accelerator pedal is released after warming up engine. | 3 - 8V |
| | | | When accelerator pedal is depressed fully after warming up engine. | 1V or less |
| 42 | — | | — | — |
| 43 | — | | — | — |
| 44 | — | | — | — |
| 45 | — | | — | — |
| 46 | — | | — | — |
| 47 | — | | — | — |
| 48 | Ground | | — | — |

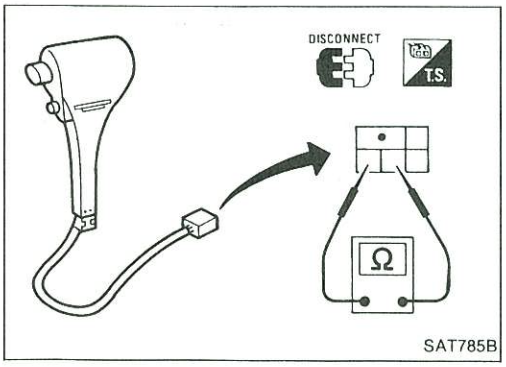


### OVERDRIVE SWITCH

- Check continuity between two terminals.

| O.D. switch position | Continuity |
|---|---|
| ON | No |
| OFF | Yes |

### THROTTLE POSITION SWITCH (Idle position)

Refer to Electrical Components Inspection in EF & EC section.

## Electrical Components Inspection (Cont'd)

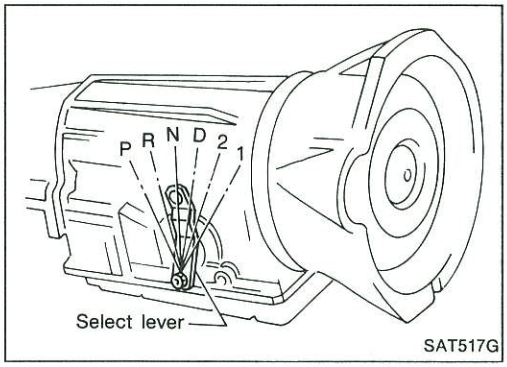


### INHIBITOR SWITCH

1. Check continuity between terminals ① and ② and between terminals ③ and ④, ⑤, ⑥, ⑦, ⑧, ⑨ while moving selector lever through each position.

| Lever position | Terminal No. | | | | | | | | |
|---|---|---|---|---|---|---|---|---|---|
| | ① | ② | ③ | ④ | ⑤ | ⑥ | ⑦ | ⑧ | ⑨ |
| P | ○ | ○ | ○ | ○ | | | | | |
| R | | | ○ | | ○ | | | | |
| N | ○ | ○ | ○ | | | ○ | | | |
| D | | | ○ | | | | ○ | | |
| 2 | | | ○ | | | | | ○ | |
| 1 | | | ○ | | | | | | ○ |

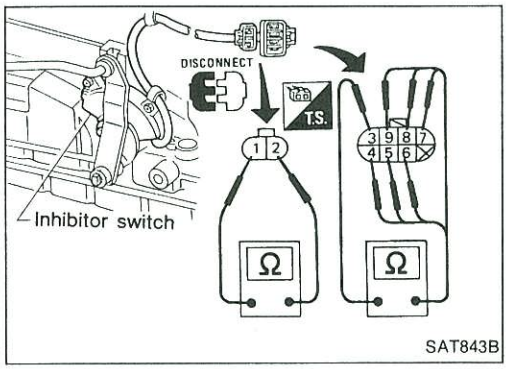


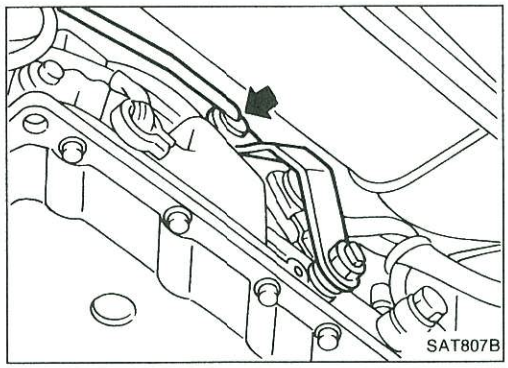


2. If N.G., check again with manual control linkage disconnected from manual shaft of A/T assembly. — Refer to step 1.
3. If O.K. on step 2, adjust manual control linkage. — Refer to "ON-VEHICLE SERVICE".

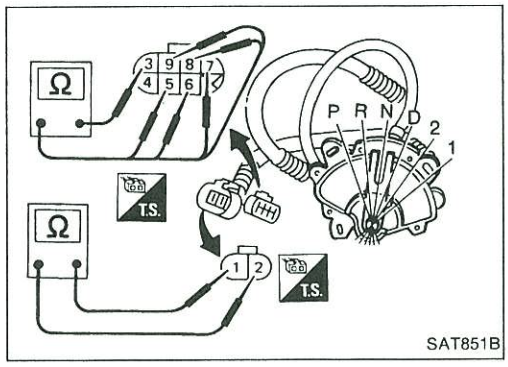


4. If N.G. on step 2, remove inhibitor switch from A/T and check continuity of inhibitor switch terminal. — Refer to step 1.
5. If O.K. on step 4, adjust inhibitor switch. — Refer to "ON-VEHICLE SERVICE".
6. If N.G. on step 4, replace inhibitor switch.

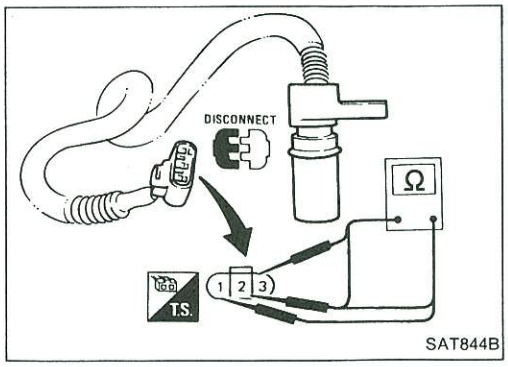


### REVOLUTION SENSOR

- For removal and installation, refer to "ON-VEHICLE SERVICE".
- Check resistance between terminals ①, ② and ③.

| Terminal No. | | Resistance |
|---|---|---|
| ① | ② | 500 - 650Ω |
| ② | ③ | No continuity |
| ① | ③ | No continuity |

## Electrical Components Inspection (Cont'd)

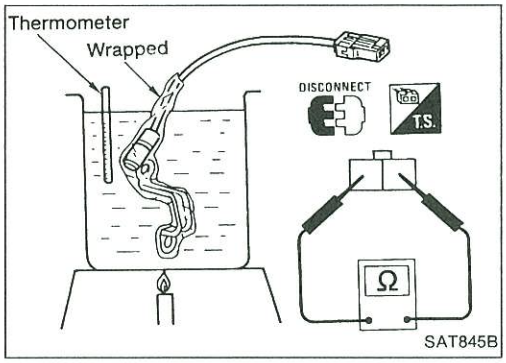


### FLUID TEMPERATURE SENSOR

- For removal and installation, refer to "ON-VEHICLE SERVICE".
- Check resistance between two terminals while changing temperature as shown at left.

| Temperature °C (°F) | Resistance |
|---|---|
| 20 (68) | Approximately 2.5 kΩ |
| 80 (176) | Approximately 0.3 kΩ |

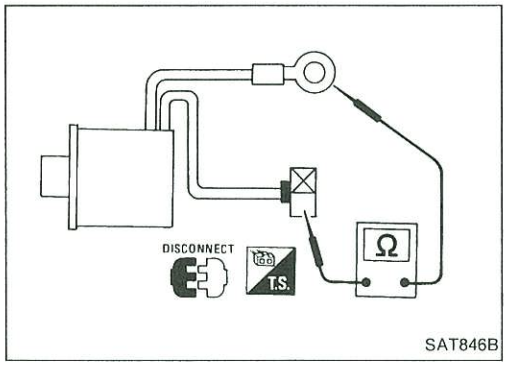


### TORQUE CONVERTER CLUTCH SOLENOID VALVE

- For removal and installation, refer to "ON-VEHICLE SERVICE".
- Check resistance between two terminals.

**Resistance:**

**Torque converter clutch solenoid valve 10 - 20Ω**

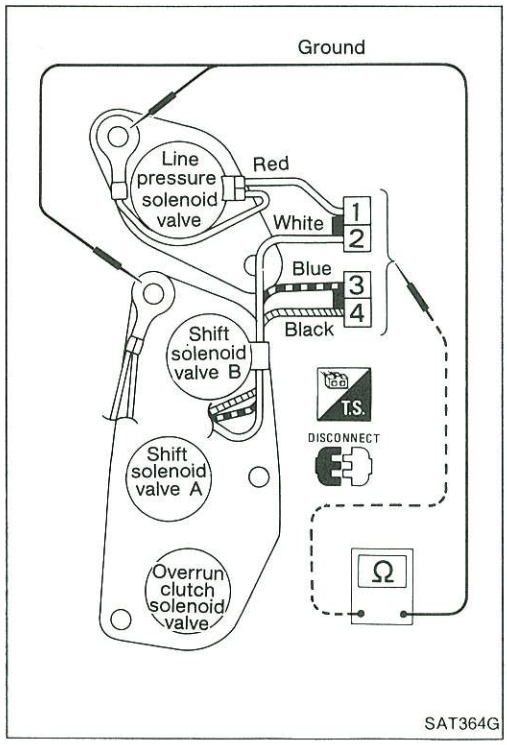


### 3-UNIT SOLENOID ASSEMBLY (Shift solenoid valve A, B and overrun clutch solenoid valve) AND LINE PRESSURE SOLENOID VALVE

- For removal and installation, refer to "ON-VEHICLE SERVICE".
- Check resistance between terminals of each solenoid.

| Solenoid | Terminal No. | | Resistance |
|---|---|---|---|
| Shift solenoid valve A | ③ | Ground terminal | 20 - 40Ω |
| Shift solenoid valve B | ② | | |
| Overrun clutch solenoid valve | ④ | | |
| Line pressure solenoid valve | ① | | 2.5 - 5Ω |

## Electrical Components Inspection (Cont'd)

### DROPPING RESISTOR

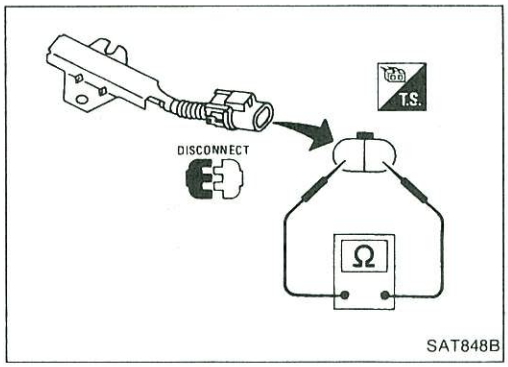


- Check resistance between two terminals.
  **Resistance: 11.2 - 12.8Ω**

## Final Check

### STALL TESTING

#### Stall test procedure

1. Check A/T and engine fluid levels. If necessary, add.
2. Warm up engine until engine oil and A.T.F. reach operating temperature after vehicle has been driven approx. 10 minutes.
   **A.T.F. operating temperature:**
   **50 - 80°C (122 - 176°F)**

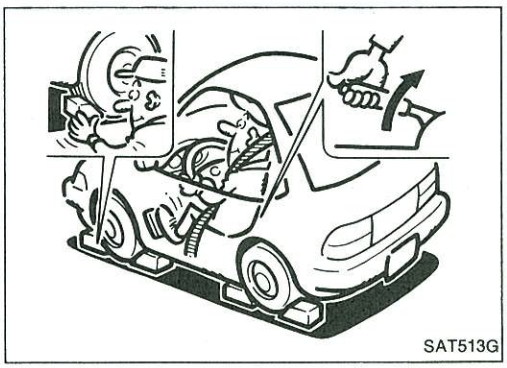


3. Set parking brake and block wheels.
4. Install a tachometer where it can be seen by driver during test.

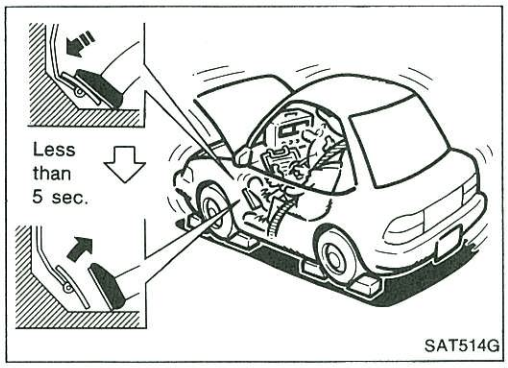


- **It is good practice to put a mark on point of specified engine speed on indicator.**

5. Start engine, apply foot brake, and place selector lever in "D" position.
6. Accelerate to wide-open throttle gradually while applying foot brake.
7. Quickly note the engine stall revolution and immediately release throttle.

- **During test, never hold throttle wide-open for more than 5 seconds.**
  **Stall revolution:**
  **2,050 - 2,250 rpm**

8. Shift selector lever to "N".
9. Cool off A.T.F.

- **Run engine at idle for at least one minute.**

10. Perform stall tests in the same manner as in steps 5 through 9 with selector lever in "2", "1" and "R", respectively.

## Final Check (Cont'd)

### Judgement of stall test

| Selector lever position | Judgement | | |
|---|---|---|---|
| D | L | O | H |
| 2 | L | O | H |
| 1 | L | O | O |
| R | L | H | H |

O : Stall revolution is normal.
H : Stall revolution is higher than specified.
L : Stall revolution is lower than specified.

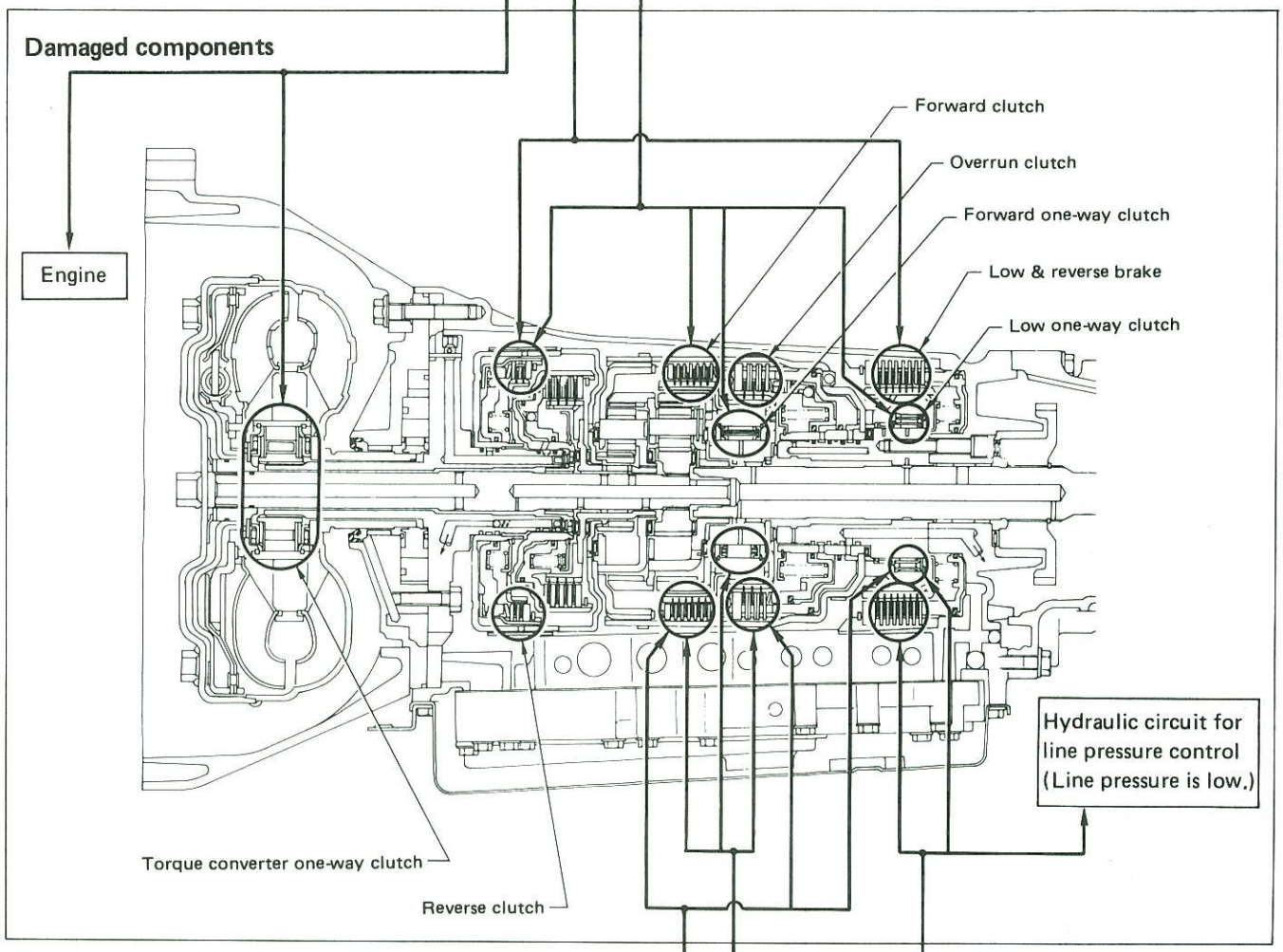


Clutches and brakes except high clutch and brake band are O.K. (Condition of high clutch and brake band cannot be confirmed by stall test.)

| Selector lever position | Judgement | | | |
|---|---|---|---|---|
| D | H | H | H | O |
| 2 | H | H | H | O |
| 1 | O | H | H | O |
| R | O | O | H | O |

SAT107B

## Final Check (Cont'd)

### PRESSURE TESTING

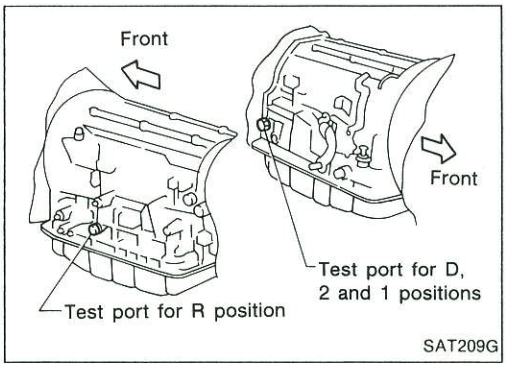


- Location of line pressure test port
- **Line pressure plugs are hexagon headed bolts.**
- **Always replace line pressure plugs as they are self-sealing bolts.**

### Line pressure test procedure

1. Check A/T and engine fluid levels. If necessary, add.
2. Warm up engine until engine oil and A.T.F. reach operating temperature after vehicle has been driven approx. 10 minutes.

   **A.T.F. operating temperature:**
   **50 - 80°C (122 - 176°F)**

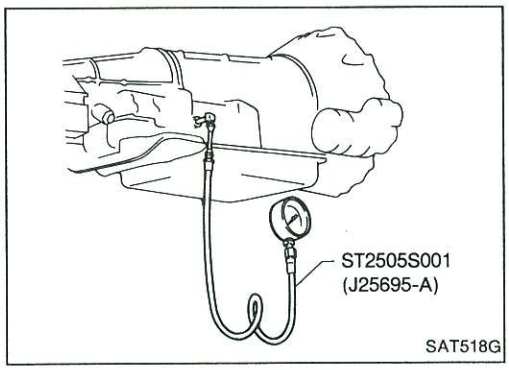


3. Install pressure gauge to line pressure port.

**— D, 2 and 1 positions —**

4. Set parking brake and block wheels.

- **Continue to depress brake pedal fully while line pressure test at stall speed is performed.**

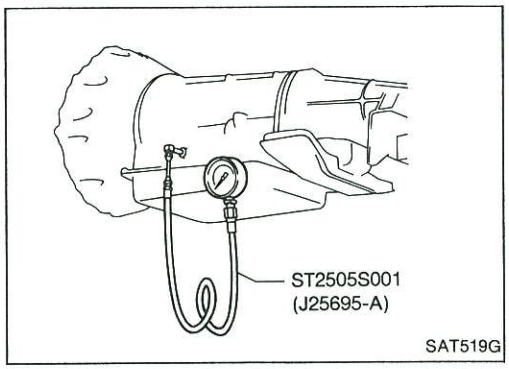

## Final Check (Cont'd)

SAT494G

5. Start engine and measure line pressure at idle and stall speed.

- **When measuring line pressure at stall speed, follow the stall test procedure.**

### Line pressure:

| Engine speed rpm | Line pressure kPa (kg/cm$^2$, psi) | |
|---|---|---|
| | D, 2 and 1 positions | R position |
| Idle | 422 - 461 (4.3 - 4.7, 61 - 67) | 588 - 628 (6.0 - 6.4, 85 - 91) |
| Stall | 1,020 - 1,098 (10.4 - 11.2, 148 - 159) | 1,422 - 1,500 (14.5 - 15.3, 206 - 218) |

### JUDGEMENT OF LINE PRESSURE TEST

| | Judgement | Suspected parts |
|---|---|---|
| At idle | Line pressure is low in all positions. | • Oil pump wear<br>• Control piston damage<br>• Pressure regulator valve or plug sticking<br>• Spring for pressure regulator valve damaged<br>• Fluid pressure leakage between oil strainer and pressure regulator valve |
| | Line pressure is low in particular position. | • Fluid pressure leakage between manual valve and particular clutch.<br>• For example:<br>If line pressure is low in "R" and "1" positions but is normal in "D" and "2" position, fluid leakage exists at or around low & reverse brake circuit. |
| | Line pressure is high. | • Mal-adjustment of throttle position sensor<br>• Fluid temperature sensor damaged<br>• Line pressure solenoid valve sticking<br>• Short circuit of line pressure solenoid valve circuit<br>• Pressure modifier valve sticking<br>• Pressure regulator valve or plug sticking |
| At stall speed | Line pressure is low. | • Mal-adjustment of throttle position sensor<br>• Control piston damaged<br>• Line pressure solenoid valve sticking<br>• Short circuit of line pressure solenoid valve circuit<br>• Pressure regulator valve or plug sticking<br>• Pressure modifier valve sticking<br>• Pilot valve sticking |

# Symptom Chart

| — | Reference page (AT- ) | 10 | 68 | 68 | 72 | 69, 117 | 69 | 69 | 69 | 92 | 92 | 102, 113 | 131, 135 | 137, 147 | 137, 145 | 141 | 154 |
|---|---|---|---|---|---|---|---|---|---|---|---|---|---|---|---|---|---|
| | | ON vehicle | | | | | | | | | | OFF vehicle | | | | | |
| Reference page (AT- ) | Numbers are arranged in order of probability.<br>Perform inspections starting with number one and work up. Circled numbers indicate that the transmission must be removed from the vehicle. | Fluid level<br>Control linkage | Inhibitor switch<br>Throttle position sensor (Adjustment) | Revolution sensor and speed sensor<br>Engine speed signal | Engine idling rpm<br>Line pressure | Control valve assembly<br>Shift solenoid valve A | Shift solenoid valve B<br>Line pressure solenoid valve | Torque converter clutch solenoid valve<br>Overrun clutch solenoid valve | Fluid temperature sensor<br>Accumulator N-D | Accumulator 1-2<br>Accumulator 2-3 | Accumulator 3-4 (N-R)<br>Ignition switch and starter | Torque converter<br>Oil pump | Reverse clutch<br>High clutch | Forward clutch<br>Forward one-way clutch | Overrun clutch<br>Low one-way clutch | Low & reverse brake<br>Brake band | Parking components |
| 48 | Engine does not start in "N", "P" positions. | 2 | 3 | | | | | | | | 1 | | | | | | |
| 48 | Engine starts in position other than "N" and "P" positions. | 1 | 2 | | | | | | | | | | | | | | |
| — | Transmission noise in "P" and "N" positions. | 1 | 3 | 4 5 | 2 | | | | | | | ⑦ ⑥ | | | | | |
| 48 | Vehicle moves when changing into "P" position or parking gear does not disengage when shifted out of "P" position. | 1 | | | | | | | | | | | | | | | ② |
| 49 | Vehicle runs in "N" position. | 1 | | | | | | | | | 4 | | ③ | ② | ⑤ | | |
| 49 | Vehicle will not run in "R" position (but runs in "D", "2" and "1" positions).<br>Clutch slips.<br>Very poor acceleration. | 1 | | | 2 | 4 | 3 | | | | | | ⑤ ⑥ | ⑦ | ⑧ | ⑨ | |
| — | Vehicle braked when shifting into "R" position. | 1 2 | | | 3 | 5 | 4 | | | | | | ⑥ | ⑧ | ⑨ | ⑦ | |
| — | Sharp shock in shifting from "N" to "D" position. | | 2 | 5 | 1 3 | 7 | 6 | | 4 8 | | | | | ⑨ | | | |
| — | Vehicle will not run in "D" and "2" positions (but runs in "1" and "R" positions). | 1 | | | | | | | | | | | | | ② | | |
| 52 | Vehicle will not run in "D", "1", "2" positions (but runs in "R" position).<br>Clutch slips.<br>Very poor acceleration. | 1 | | | 2 | 4 | 3 | | 5 | | | | ⑥ ⑦ | ⑧ ⑨ | ⑩ | | |
| — | Clutches or brakes slip somewhat in starting. | 1 2 | 3 | | 4 | 6 | 5 | | 7 | | 8 | ⑬ ⑫ | ⑩ | ⑨ | | ⑪ | |
| — | Excessive creep. | | | | 1 | | | | | | | | | | | | |
| 51, 52 | No creep at all. | 1 | | | 2 | 3 | | | | | | ⑥ ⑤ | | ④ | | | |
| — | Failure to change gear from "$D_1$" to "$D_2$". | 2 | 1 | 5 | | 4 3 | | | | | | | | | | ⑥ | |
| — | Failure to change gear from "$D_2$" to "$D_3$". | 2 | 1 | 5 | | 4 | 3 | | | | | | ⑥ | | | ⑦ | |
| — | Failure to change gear from "$D_3$" to "$D_4$". | 2 | 1 | 4 | | 3 | | | 5 | | | | | | | ⑥ | |
| 54, 55, 56 | Too high a gear change point from "$D_1$" to "$D_2$", from "$D_2$" to "$D_3$", from "$D_3$" to "$D_4$". | | 1 | 2 | | 3 | 4 | | | | | | | | | | |
| — | Gear change directly from "$D_1$" to "$D_3$" occurs. | 1 | | | | | | | | 2 | | | | | | ③ | |
| — | Engine stops when shifting lever into "R", "D", "2" and "1". | | | | 1 | 3 | | 2 | | | | ④ | | | | | |
| — | Too sharp a shock in change from "$D_1$" to "$D_2$". | | 1 | | 2 | 4 | | | 5 | 3 | | | | | | ⑥ | |
| — | Too sharp a shock in change from "$D_2$" to "$D_3$". | | 1 | | 2 | 4 | | | | 3 | | | ⑤ | | | ⑥ | |

## Symptom Chart (Cont'd)

| | | ON vehicle | | | | | | | | | | OFF vehicle | | | | | |
|---|---|---|---|---|---|---|---|---|---|---|---|---|---|---|---|---|---|
| — | Reference page (AT- ) | 10 | 68 | 68 | 72 | 69, 117 | 69 | 69 | 69 | 92 | 92 | 102, 113 | 131, 135 | 137, 147 | 137, 145 | 141 | 154 |
| Reference page (AT- ) | Numbers are arranged in order of probability. Perform inspections starting with number one and work up. Circled numbers indicate that the transmission must be removed from the vehicle. | Fluid level / Control linkage | Inhibitor switch / Throttle position sensor (Adjustment) | Revolution sensor and speed sensor / Engine speed signal | Engine idling rpm / Line pressure | Control valve assembly / Shift solenoid valve A | Shift solenoid valve B / Line pressure solenoid valve | Torque converter clutch solenoid valve / Overrun clutch solenoid valve | Fluid temperature sensor / Accumulator N-D | Accumulator 1-2 / Accumulator 2-3 | Accumulator 3-4 (N-R) / Ignition switch and starter | Torque converter / Oil pump | Reverse clutch / High clutch | Forward clutch / Forward one-way clutch | Overrun clutch / Low one-way clutch | Low & reverse brake / Brake band | Parking components |
| — | Too sharp a shock in change from "$D_3$" to "$D_4$". | . . | . 1 | . . | . 2 | 4 . | . . | . . | . . | . . | 3 . | . . | . . | . . | ⑥ . | . ⑤ | . |
| — | Almost no shock or clutches slipping in change from "$D_1$" to "$D_2$". | 1 . | . 2 | . . | . 3 | 5 . | . . | . . | . . | 4 . | . . | . . | . . | . . | . . | . ⑥ | . |
| — | Almost no shock or slipping in change from "$D_2$" to "$D_3$". | 1 . | . 2 | . . | . 3 | 5 . | . . | . . | . . | . 4 | . . | . . | . ⑥ | . . | . . | . ⑦ | . |
| — | Almost no shock or slipping in change from "$D_3$" to "$D_4$". | 1 . | . 2 | . . | . 3 | 5 . | . . | . . | . . | . . | 4 . | . . | . ⑥ | . . | . . | . ⑦ | . |
| — | Vehicle braked by gear change from "$D_1$" to "$D_2$". | 1 . | . . | . . | . . | . . | . . | . . | . . | . . | . . | . . | ② ④ | . . | . ⑤ | ③ . | . |
| — | Vehicle braked by gear change from "$D_2$" to "$D_3$". | 1 . | . . | . . | . . | . . | . . | . . | . . | . . | . . | . . | . . | . . | . . | . ② | . |
| — | Vehicle braked by gear change from "$D_3$" to "$D_4$". | 1 . | . . | . . | . . | . . | . . | . . | . . | . . | . . | . . | ④ . | . ③ | ② . | . . | . |
| — | Maximum speed not attained. Acceleration poor. | 1 . | 2 . | . . | . . | 5 3 | 4 . | . . | . . | . . | . . | ⑪ ⑩ | ⑥ ⑦ | . . | . . | ⑨ ⑧ | . |
| — | Failure to change gear from "$D_4$" to "$D_3$". | 1 . | . 2 | . . | . . | 6 4 | . 5 | . 3 | . . | . . | . . | . . | . . | . . | ⑧ . | ⑦ . | . |
| — | Failure to change gear from "$D_3$" to "$D_2$" or from "$D_4$" to "$D_2$". | 1 . | . 2 | . . | . . | 5 3 | 4 . | . . | . . | . . | . . | . . | . ⑥ | . . | . . | . ⑦ | . |
| — | Failure to change gear from "$D_2$" to "$D_1$" or from "$D_3$" to "$D_1$". | 1 . | . 2 | . . | . . | 5 3 | 4 . | . . | . . | . . | . . | . . | . ⑦ | . . | . ⑥ | . ⑧ | . |
| — | Gear change shock felt during deceleration by releasing accelerator pedal. | . . | . 1 | . . | . 2 | 4 . | . . | . 3 | . . | . . | . . | . . | . . | . . | . . | . . | . |
| — | Too high a change point from "$D_4$" to "$D_3$", from "$D_3$" to "$D_2$", from "$D_2$" to "$D_1$". | . . | . 1 | 2 . | . . | . . | . . | . . | . . | . . | . . | . . | . . | . . | . . | . . | . |
| — | Kickdown does not operate when depressing pedal in "$D_4$" within kickdown vehicle speed. | . . | . 1 | 2 . | . . | . 3 | 4 . | . . | . . | . . | . . | . . | . . | . . | . . | . . | . |
| — | Kickdown operates or engine overruns when depressing pedal in "$D_4$" beyond kickdown vehicle speed limit. | . . | . 2 | 1 . | . . | . 3 | 4 . | . . | . . | . . | . . | . . | . . | . . | . . | . . | . |
| — | Races extremely fast or slips in changing from "$D_4$" to "$D_3$" when depressing pedal. | 1 . | . 2 | . . | . 3 | 5 . | . 4 | . . | . . | . . | . . | . . | . ⑥ | ⑦ . | . . | . . | . |
| — | Races extremely fast or slips in changing from "$D_4$" to "$D_2$" when depressing pedal. | 1 . | . 2 | . . | . 3 | 6 5 | . 4 | . . | . . | . . | . . | . . | . . | ⑧ . | . . | . ⑦ | . |
| | Races extremely fast or slips in changing from "$D_3$" to "$D_2$" when depressing pedal. | 1 . | . 2 | . . | . 3 | 5 . | . 4 | . . | 8 . | . 0 | . . | . . | . ⑨ | ⑦ . | . . | . ⑥ | . |
| | Races extremely fast or slips in changing from "$D_4$" or "$D_3$" to "$D_1$" when depressing pedal. | 1 . | . 2 | . . | . 3 | 5 . | . 4 | . . | . . | . . | . . | . . | . . | ⑥ ⑦ | . ⑧ | . . | . |
| — | Vehicle will not run in any position. | 1 2 | . . | . . | . 3 | . . | . 4 | . . | . . | . . | . . | ⑨ ⑤ | . ⑥ | . . | . . | ⑧ ⑦ | ⑩ |
| — | Transmission noise in "D", "2", "1" and "R" positions. | 1 . | . . | . . | . . | . . | . . | . . | . . | . . | . . | ② . | . . | . . | . . | . . | . |

## Symptom Chart (Cont'd)

| | | ON vehicle | | | | | | | | | | OFF vehicle | | | | | |
|---|---|---|---|---|---|---|---|---|---|---|---|---|---|---|---|---|---|
| — | Reference page (AT- ) | 10 | 68 | 68 | 72 | 69, 117 | 69 | 63 | 69 | 92 | 92 | 102, 113 | 131, 135 | 137, 147 | 137, 145 | 141 | 154 |
| Reference page (AT- ) | Numbers are arranged in order of probability. Perform inspections starting with number one and work up. Circled numbers indicate that the transmission must be removed from the vehicle. | Fluid level / Control linkage | Inhibitor switch / Throttle position sensor (Adjustment) | Revolution sensor and speed sensor / Engine speed signal | Engine idling rpm / Line pressure | Control valve assembly / Shift solenoid valve A | Shift solenoid valve B / Line pressure solenoid valve | Torque converter clutch solenoid valve / Overrun clutch solenoid valve | Fluid temperature sensor / Accumulator N-D | Accumulator 1-2 / Accumulator 2-3 | Accumulator 3-4 (N-R) / Ignition switch and starter | Torque converter / Oil pump | Reverse clutch / High clutch | Forward clutch / Forward one-way clutch | Overrun clutch / Low one-way clutch | Low & reverse brake / Brake band | Parking components |
| 61 | Failure to change from "$D_3$" to "22" when changing lever into "2" position. | . 7 | 1 2 | . . | . . | 6 5 | 4 . | . 3 | . . | . . | . . | . . | . . | . . | ⑨ . | . ⑧ | . |
| — | Gear change from "$2_2$" to "$2_3$" in "2" position. | . . | 1 . | . . | . . | . . | . . | . . | . . | . . | . . | . . | . . | . . | . . | . . | . |
| 62 | Engine brake does not operate in "1" position. | . 2 | 1 3 | 4 . | . . | 6 5 | . . | . 7 | . . | . . | . . | . . | . . | . . | ⑧ . | ⑨ . | . |
| — | Gear change from "$1_1$" to "$1_2$" in "1" position. | 2 | 1 . | . . | . . | . . | . . | . . | . . | . . | . . | . . | . . | . . | . . | . . | . |
| — | Does not change from "$1_2$" to "$1_1$" in "1" position. | . . | 1 . | 2 . | . . | 4 3 | . . | . 5 | . . | . . | . . | . . | . . | . . | ⑥ . | ⑦ . | . |
| — | Large shock changing from "$1_2$" to "1 1" in "1" position. | . . | . . | . . | . . | 1 . | . . | . . | . . | . . | . . | . . | . . | . . | . . | ② . | . |
| — | Transmission overheats. | 1 . | . 3 | . . | 2 4 | 6 . | . 5 | . . | . . | . . | . . | ⑭ ⑦ | ⑧ ⑨ | ⑪ . | ⑫ . | ⑬ ⑩ | . |
| — | A.T.F. shoots out during operation. White smoke emitted from exhaust pipe during operation. | 1 . | . . | . . | . . | . . | . . | . . | . . | . . | . . | . . | ② ③ | ⑤ . | ⑥ . | ⑦ ④ | . |
| — | Offensive smell at fluid charging pipe. | 1 . | . . | . . | . . | . . | . . | . . | . . | . . | . . | ② ③ | ④ ⑤ | ⑦ . | ⑧ . | ⑨ ⑥ | . |
| — | Torque converter is not locked up. | . . | 3 1 | 2 4 | . 6 | 8 . | . . | 7 . | 5 . | . . | . . | ⑨ . | . . | . . | . . | . . | . |
| — | Lock-up piston slip. | 1 . | . 2 | . . | . 3 | 6 . | . 5 | 4 . | . . | . . | . . | ⑦ . | . . | . . | . . | . . | . |
| 57 | Lock-up point is extremely high or low. | . . | . 1 | 2 . | . . | 4 . | . . | 3 . | . . | . . | . . | . . | . . | . . | . . | . . | . |
| — | A/T does not shift to "$D_4$" when driving with overdrive switch "ON". | . . | 2 1 | 3 . | . 8 | 6 4 | . . | . 5 | 7 . | . . | . . | . . | . . | . . | ⑩ . | . ⑨ | . |
| — | Engine is stopped at "R", "D", "2" and "1" positions. | 1 . | . . | . . | . . | 5 4 | 3 . | 2 . | . . | . . | . . | . . | . . | . . | . . | . . | .. |

## Contents

**Shift Lock System Electrical Parts Location** ..... AT-78
**Circuit Diagram for Quick Pinpoint Check** ..... AT-78
**Wiring Diagram** ..... AT-79
**Diagnostic Procedure** ..... AT-80
SYMPTOM 1: Selector lever cannot be moved from "P" position when applying brake pedal or can be moved when releasing brake pedal.
Selector lever can be moved from "P" position when key is removed from key cylinder.
SYMPTOM 2: Ignition key cannot be removed when selector lever is set to "P" position or can be removed when selector lever is set to any position except "P".)
**Shift Lock Control Unit Inspection** ..... AT-88
**Shift Lock Control Unit Inspection Table** ..... AT-89
**Component Check** ..... AT-90

## Shift Lock System Electrical Parts Location

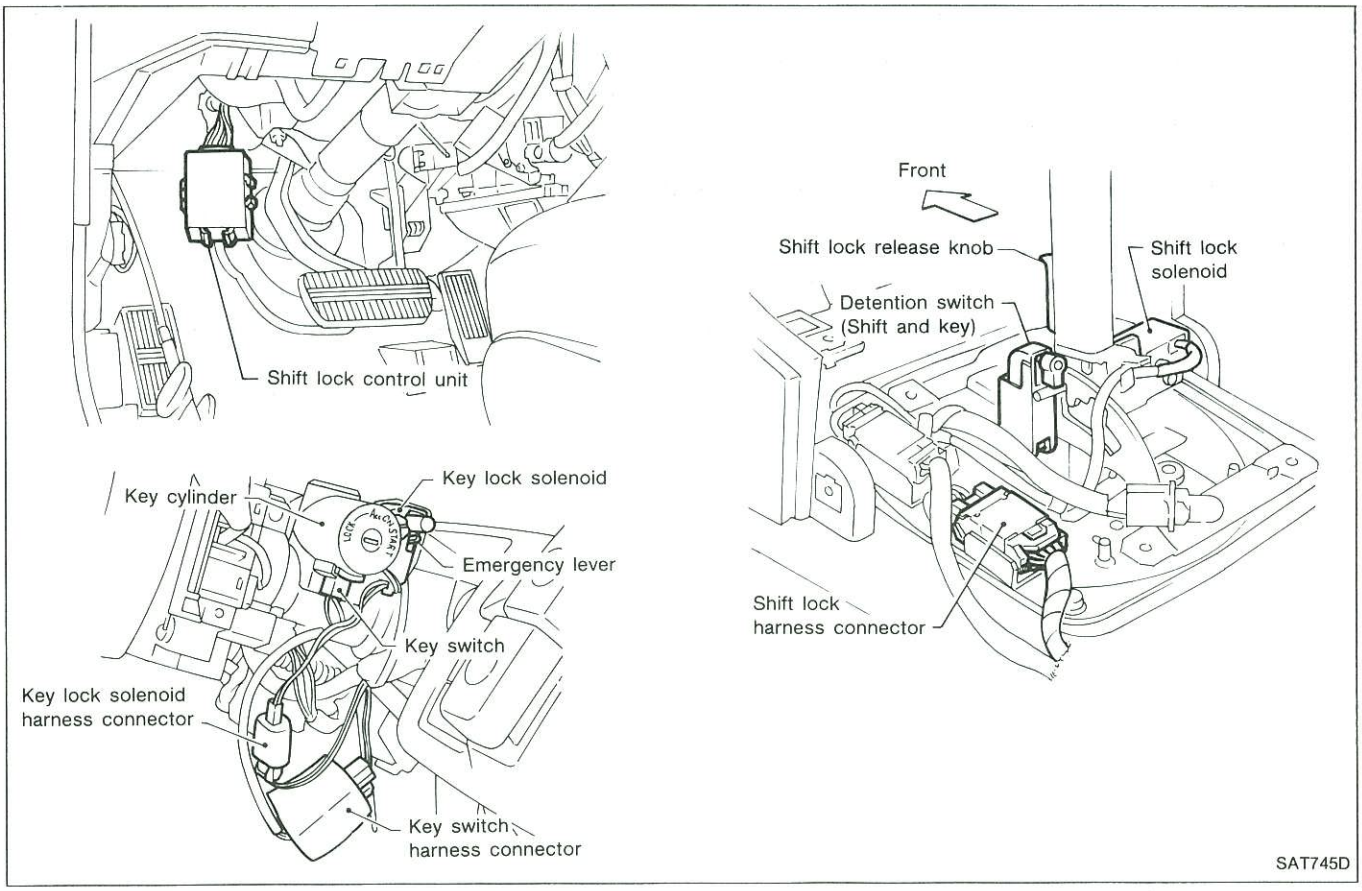


## Circuit Diagram For Quick Pinpoint Check

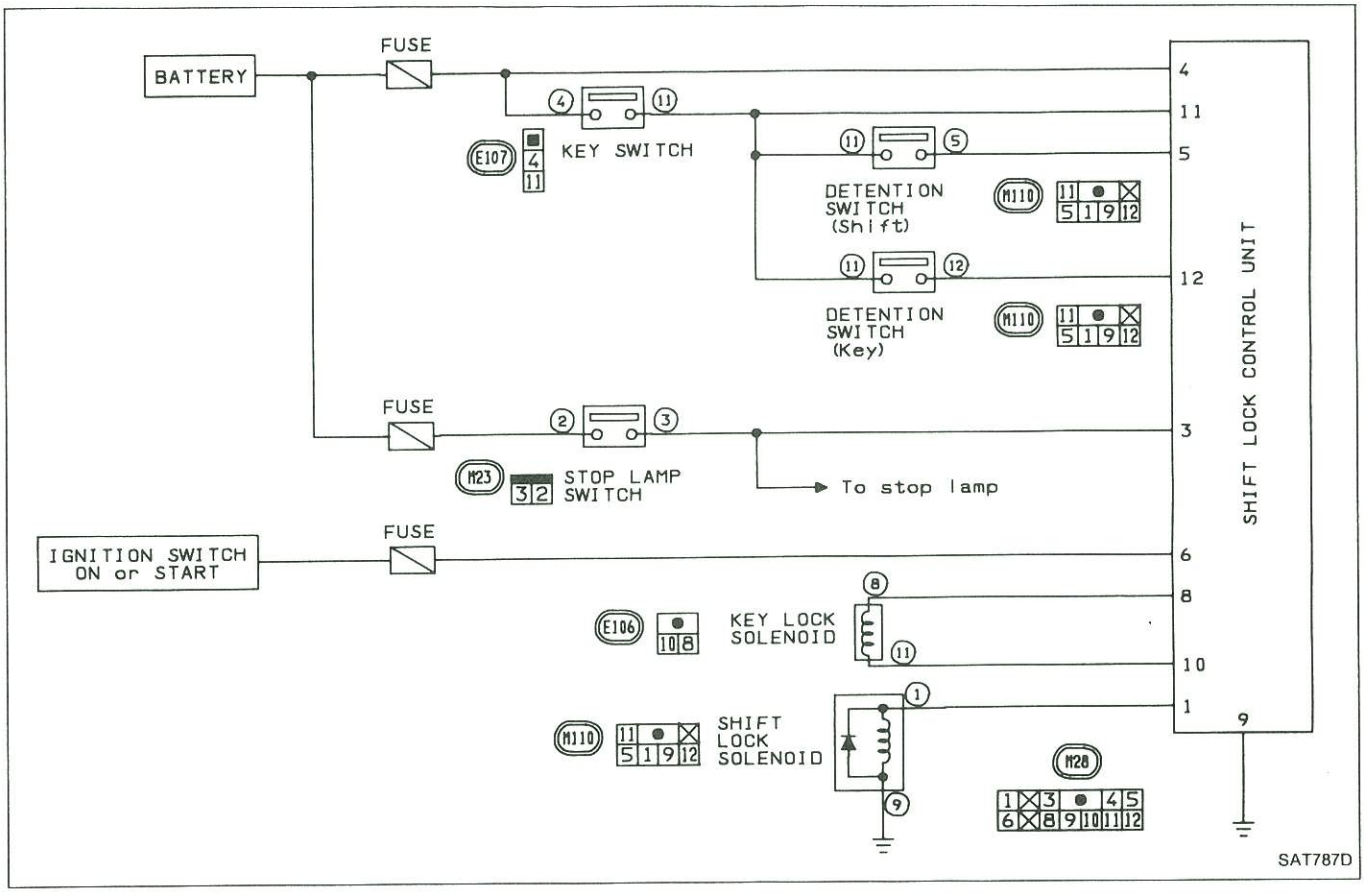

## Wiring Diagram

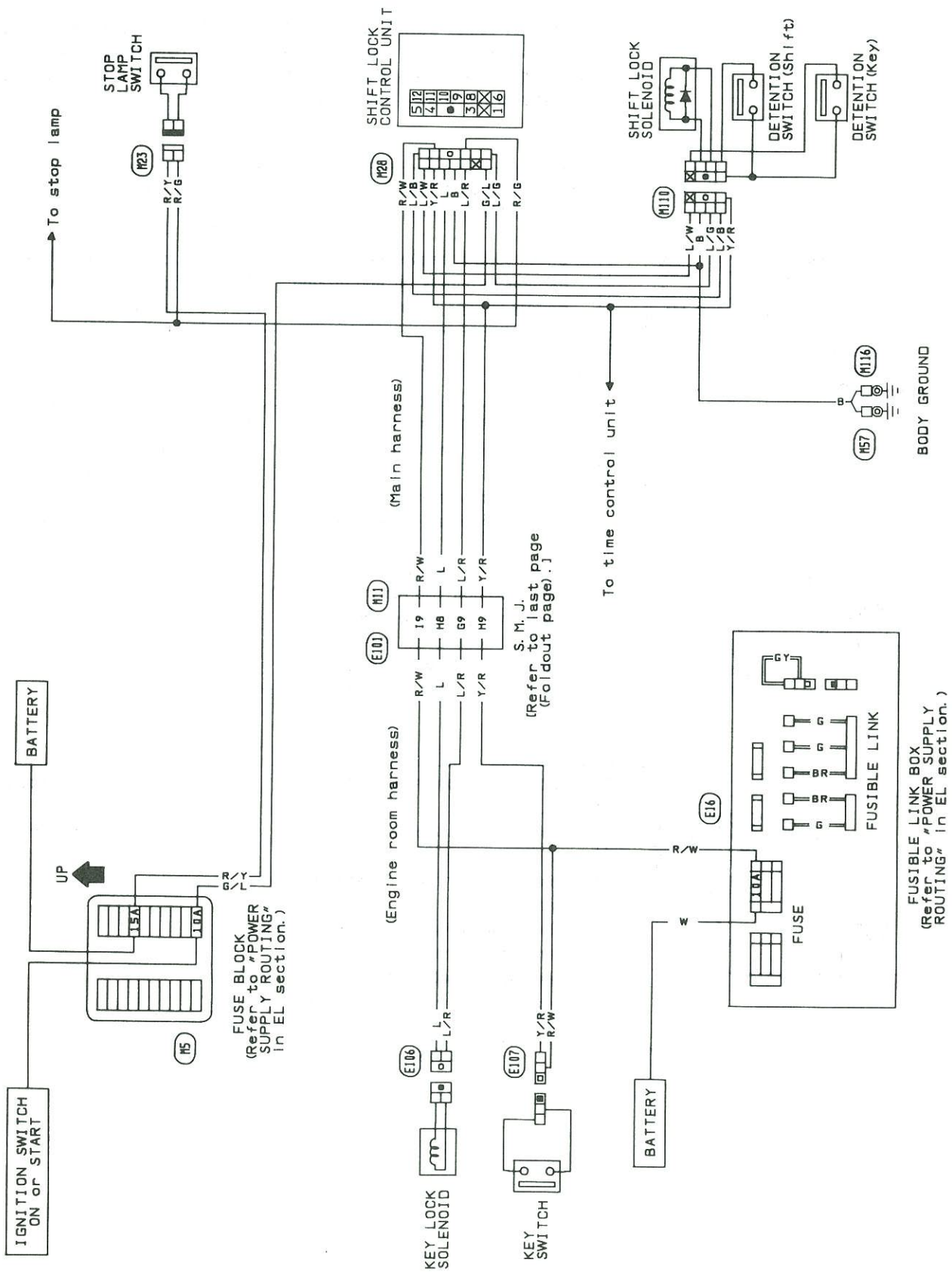


SAT786D

## Diagnostic Procedure

### SYMPTOM 1:

**Selector lever cannot be moved from "P" position when applying brake pedal or can be moved when releasing brake pedal. Selector lever can be moved from "P" position when key is removed from key cylinder.**

1

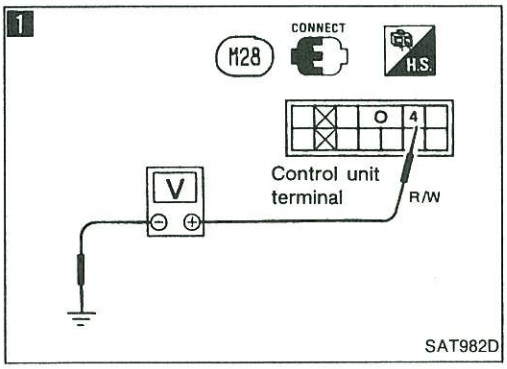


**CHECK POWER SOURCE.**
1. Turn ignition switch to "OFF" position.
2. Check voltage between control unit harness terminals ④ and ground.
**Battery voltage should exist.**

N.G. → Check the following items:
1. Harness continuity between battery and control unit harness terminal ④
2. Fuse

O.K. ↓

2

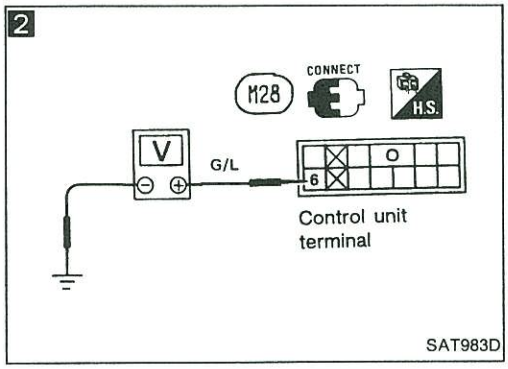


**CHECK IGNITION SIGNAL.**
1. Turn ignition switch to "OFF" position.
2. Check voltage between control unit harness terminal ⑥ and ground.
**0V**
3. Turn ignition switch from "OFF" to "ON" position. (Do not start engine.)
4. Check voltage between control unit harness terminal ⑥ and ground.
**Battery voltage should exist.**

N.G. → Check the following items:
1. Harness continuity between battery and control unit harness terminal ⑥
2. Fuse
3. Ignition switch

O.K. ↓

3

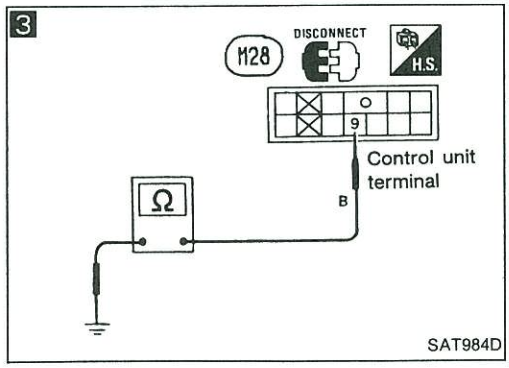


**CHECK GROUND CIRCUIT FOR CONTROL UNIT.**
1. Turn ignition switch from "ON" to "OFF" position.
2. Disconnect control unit harness connector.
3. Check continuity between control unit harness terminal ⑨ and ground.
**Continuity should exist.**

N.G. → Repair harness or connector.

O.K. ↓

Ⓐ

## Diagnostic Procedure (Cont'd)

Ⓐ

**4**

**CHECK INPUT SIGNAL (KEY SWITCH).**
1. Reconnect control unit harness connector.
2. Remove key from ignition switch.
3. Check voltage between control unit terminal ⑪ and ground.
   **0V**

N.G. → Check key switch. (Refer to "COMPONENT CHECK".)

O.K.

**5**

1. Insert key into ignition switch.
2. Check voltage between control unit harness terminal ⑪ and ground.

**Battery voltage should exist.**

N.G. → Check the following items:
1. Harness continuity between control unit harness terminal ⑪ and key switch harness terminal ⑪.
2. Harness continuity between key switch harness terminal ④ and fuse
3. Key switch (Refer to "COMPONENT CHECK".)

O.K.

**CHECK INPUT SIGNAL (DETENTION SWITCH—SHIFT).**
1. Turn ignition switch from "OFF" to "ON" position. (Do not start engine.)

**6** 2. Set selector lever in "P" position and release selector lever button.

**7** 3. Check voltage between control unit harness terminal ⑤ and ground.
   **0V**

N.G. → Check detention switch —shift. (Refer to "COMPONENT CHECK".)

O.K.

Ⓑ

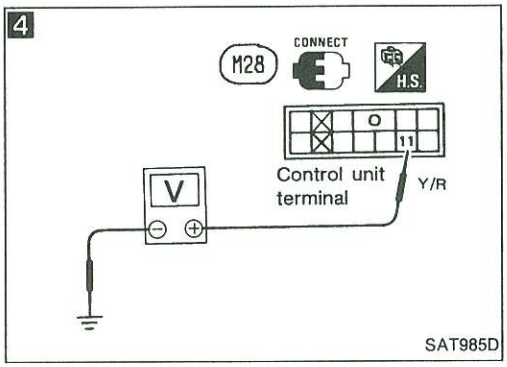


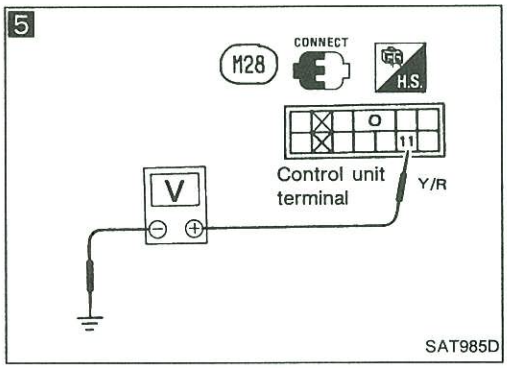


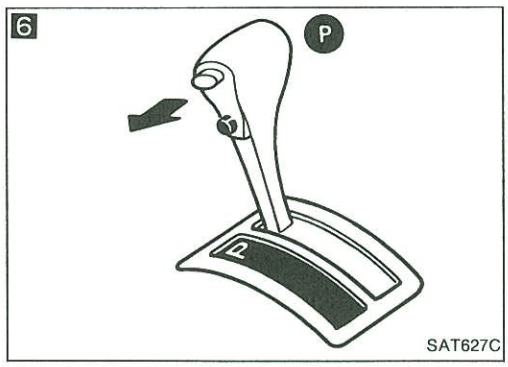


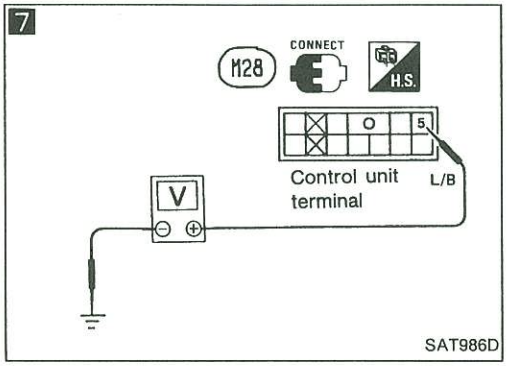

## Diagnostic Procedure (Cont'd)

Ⓑ

**CHECK INPUT SIGNAL (DETENTION SWITCH—SHIFT).**

1. Turn ignition switch to "ON" position. (Do not start engine.)
8 2. Check voltage between control unit harness terminal ⑤ and ground with brake pedal depressed and selector lever button pushed.
**Battery voltage should exist.**
9 3. Check voltage between control unit harness terminal ⑤ and ground with selector lever set in any position except "P".
**When selector lever cannot be moved from "P" position with brake pedal depressed, push shift lock release knob.**
**Battery voltage should exist.**

N.G. → Check the following items:
1. Harness continuity between control unit harness terminal ⑤ and detention switch harness terminal ⑤
2. Harness continuity between detention switch harness terminal ⑪ and key switch harness terminal ⑪
3. Detention switch—shift (Refer to "COMPONENT CHECK".)

O.K. ↓

10

**CHECK INPUT SIGNAL (STOP LAMP SWITCH).**

Turn ignition switch to "ON" position. (Do not start engine.)

- Check voltage between control unit harness terminal ③ and ground.

| Brake pedal | Voltage |
|---|---|
| Depressed | Battery voltage |
| Released | 0V |

N.G. → Check the following items:
1. Harness continuity between control unit harness terminal ③ and stop lamp switch harness terminal ③
2. Stop lamp switch (Refer to "COMPONENT CHECK".)

O.K. ↓

11

Set selector lever in "P" position.

Ⓒ

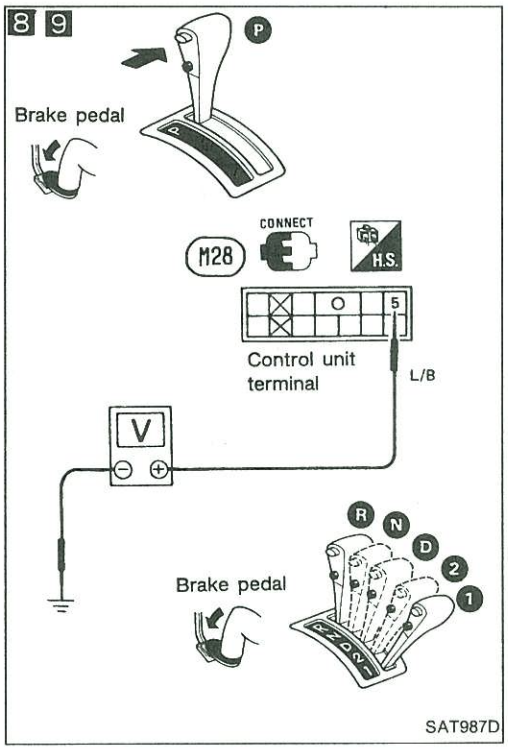


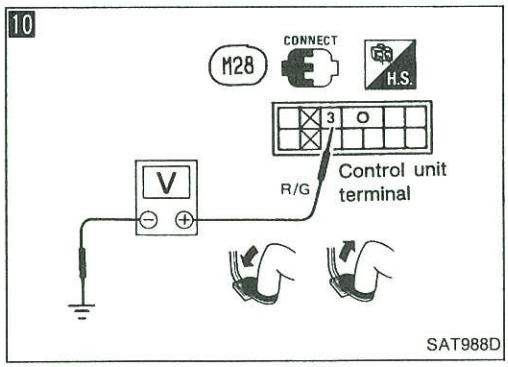


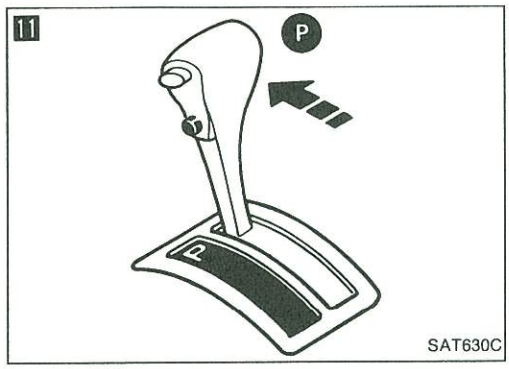

## Diagnostic Procedure (Cont'd)

Ⓒ

**CHECK OUTPUT SIGNAL (SHIFT LOCK SOLENOID).**

1. Turn ignition switch to "ON" position. (Do not start engine.)
2. 12 Check voltage between shift lock harness connector terminal ① and body ground.

| Brake pedal | Voltage |
|---|---|
| Depressed | Battery voltage |
| Released | 0V |

3. Turn ignition switch from "ON" to "OFF" position.
4. 13 Check voltage between shift lock harness connector terminal ① and ground with brake pedal depressed.
   **0V**

N.G. → Check harness continuity between control unit harness terminal ① and shift lock solenoid harness terminal ①.

O.K. ↓

**14**

**CHECK GROUND CIRCUIT FOR SHIFT LOCK SOLENOID.**

1. Disconnect shift lock harness connector.
2. Check continuity between shift lock harness terminal ⑨ and ground.
   **Continuity should exist.**

N.G. → Repair harness or connector.

O.K. ↓

Check shift lock solenoid. (Refer to "COMPONENT CHECK".)

N.G. → Replace A/T shift lock control device assembly.

O.K. ↓

1. Reconnect shift lock harness connector.
2. Turn ignition switch from "OFF" to "ON" position. (Do not start engine.)
3. Recheck shift lock operation.

N.G. →
1. Perform control unit input/output signal inspection test.
2. If N.G., recheck harness connector connection.

O.K. ↓

INSPECTION END

12

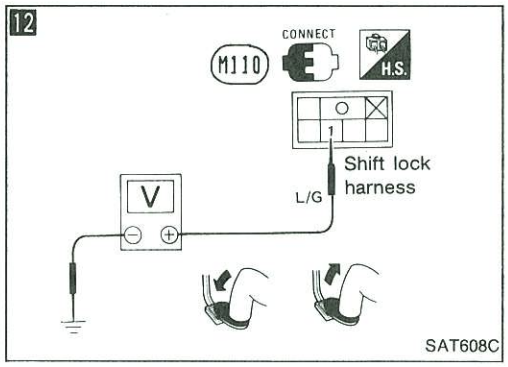


SAT608C

13

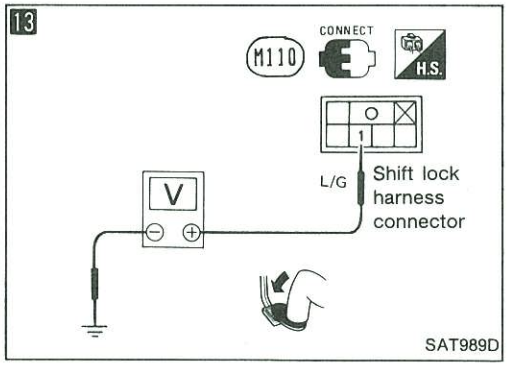


SAT989D

14

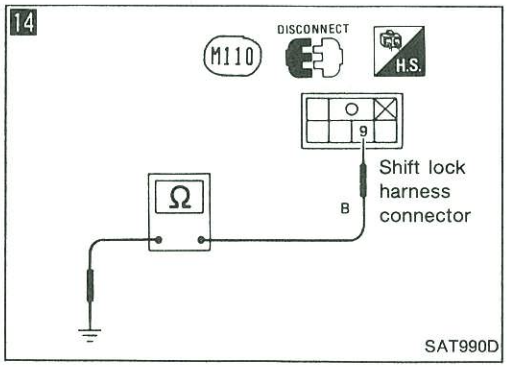


SAT990D

GI MA EM LC EF & EC FE CL MT AT PD FA RA BR ST BF HA EL

## Diagnostic Procedure (Cont'd)

### SYMPTOM 2:

**Ignition key cannot be removed when selector lever is set to "P" position or can be removed when selector lever is set to any position except "P".**

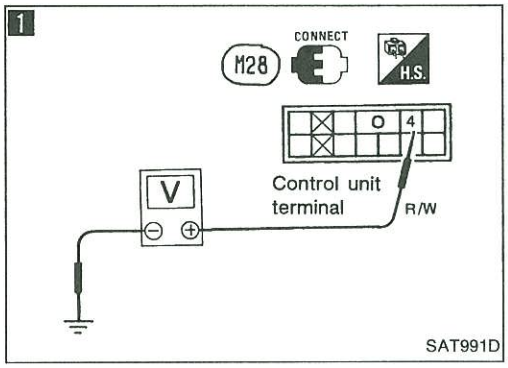


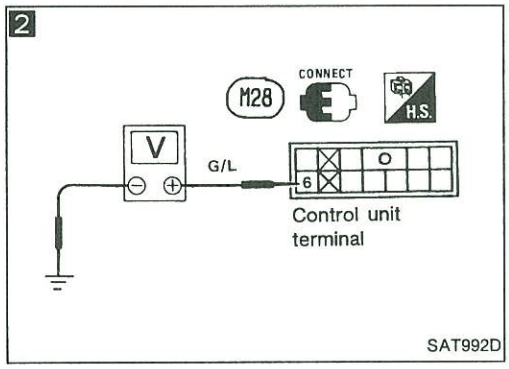


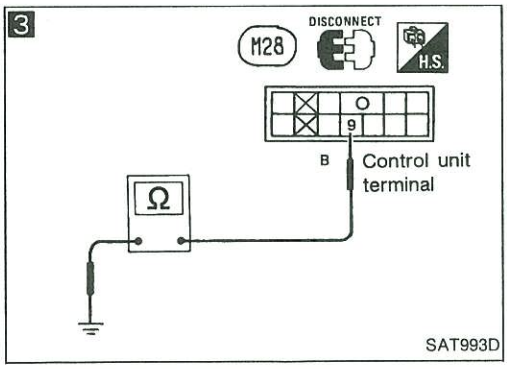


**1**

CHECK POWER SOURCE.
1. Turn ignition switch to "OFF" position.
2. Check voltage between control unit harness terminal ④ and ground.
   **Battery voltage should exist.**

N.G. → Check the following items:
1. Harness continuity between battery and control unit harness terminal ④
2. Fuse

O.K. ↓

**2**

**CHECK IGNITION SIGNAL.**
1. Turn ignition switch to "OFF" position.
2. Check voltage between control unit harness terminal ⑥ and ground.
   **0V**
3. Turn ignition switch from "OFF" to "ON" position.
   (Do not start engine.)
4. Check voltage between control unit harness terminal ⑥ and ground.
   **Battery voltage should exist.**

N.G. → Check the following items:
1. Harness continuity between battery and control unit harness terminal ⑥
2. Fuse
3. Ignition switch

O.K. ↓

**3**

**CHECK GROUND CIRCUIT FOR CONTROL UNIT.**
1. Turn ignition switch from "ON" to "OFF" position.
2. Disconnect control unit harness connector.
3. Check continuity between control unit harness terminal ⑨ and ground.
   **Continuity should exist.**

N.G. → Repair harness or connector.

O.K. ↓

Ⓐ

## Diagnostic Procedure (Cont'd)

4

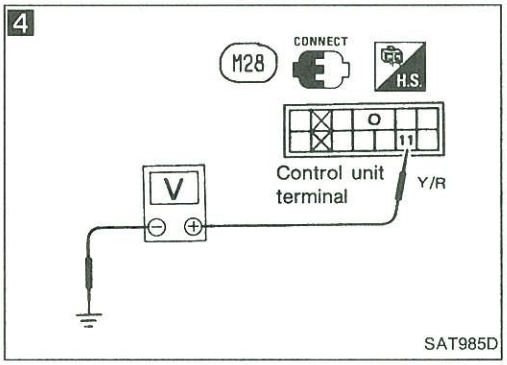


5

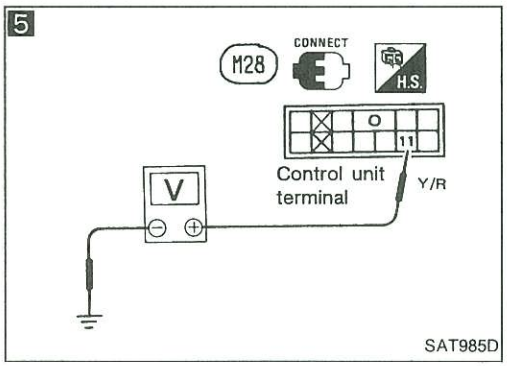


6

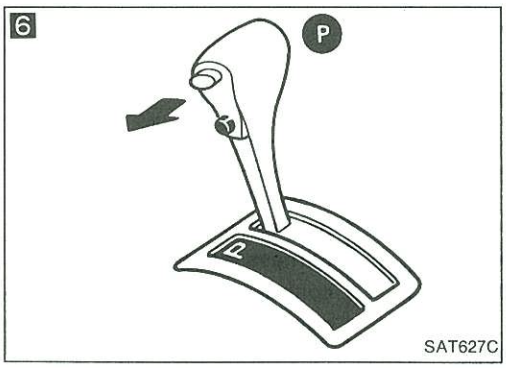


7

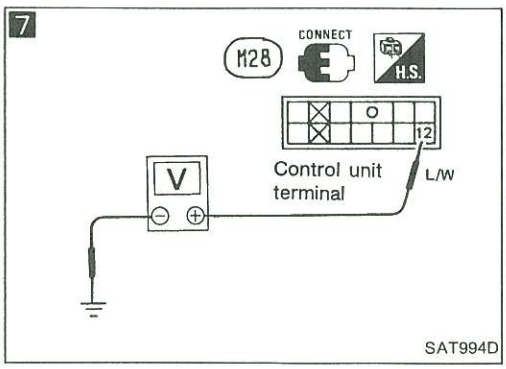


Ⓐ

**4**

**CHECK INPUT SIGNAL (KEY SWITCH).**

1. Reconnect control unit harness connector.
2. Remove key from ignition switch.
   **When ignition key cannot be removed, even if selector lever is in "P" position, use emergency lever.**
3. Check voltage between control unit terminal ⑪ and ground.
   **0V**

N.G. → Check key switch. (Refer to "COMPONENT CHECK".)

O.K. ↓

**5**

1. Insert key into ignition switch.
2. Check voltage between control unit harness terminal ⑪ and ground.
   **Battery voltage should exist.**

N.G. → Check the following items:
1. Harness continuity between control unit harness terminal ⑪ and key switch harness terminal ⑪.
2. Harness continuity between key switch harness terminal ④ and fuse
3. Key switch (Refer to "COMPONENT CHECK".)

O.K. ↓

**CHECK INPUT SIGNAL (DETENTION SWITCH—KEY).**

1. Turn ignition switch from "ON" to "OFF" position. (Do not start engine.)

**6** 2. Set selector lever in "P" position and release selector lever button.

**7** 3. Check voltage between control unit harness terminal ⑫ and ground.
   **0V**

N.G. → Check detention switch—key. (Refer to "COMPONENT CHECK".)

O.K. ↓

Ⓑ

## Diagnostic Procedure (Cont'd)

Ⓑ

**CHECK INPUT SIGNAL (DETENTION SWITCH—KEY).**

Turn ignition switch to "ON" position. (Do not start engine.)

8 1. Check voltage between control unit harness terminal ⑫ and ground with brake pedal depressed and selector lever button pushed.
**Battery voltage should exist.**

9 2. Check voltage between control unit harness terminal ⑫ and ground with selector lever set in any position except "P".
**Battery voltage should exist.**

N.G. → Check the following items:
1. Harness continuity between control unit harness terminal ⑫ and detention switch harness terminal ⑫
2. Harness continuity between detention switch harness terminal ⑪ and key switch harness terminal ⑪
3. Detention switch—key (Refer to "COMPONENT CHECK".)

O.K. ↓

10

1. Set selector lever in "P" position and release selector lever button.
2. Turn ignition switch from "ON" to "OFF" position.

11

**CHECK OUTPUT SIGNAL (KEY LOCK SIGNAL).**

1. Turn ignition switch from "OFF" position to "ON" position. (Do not start engine.)
2. Check voltage between key lock solenoid harness terminal ⑧ and ground at the moment ignition key is turned from OFF to ON.

**Battery voltage should exist for approximately 0.1 seconds.**

N.G. → Check harness continuity between shift lock solenoid harness terminal ⑧ and control unit harness terminal ⑧.

O.K. → Replace control unit.

N.G. → Repair harness or connector.

O.K. ↓

Ⓒ

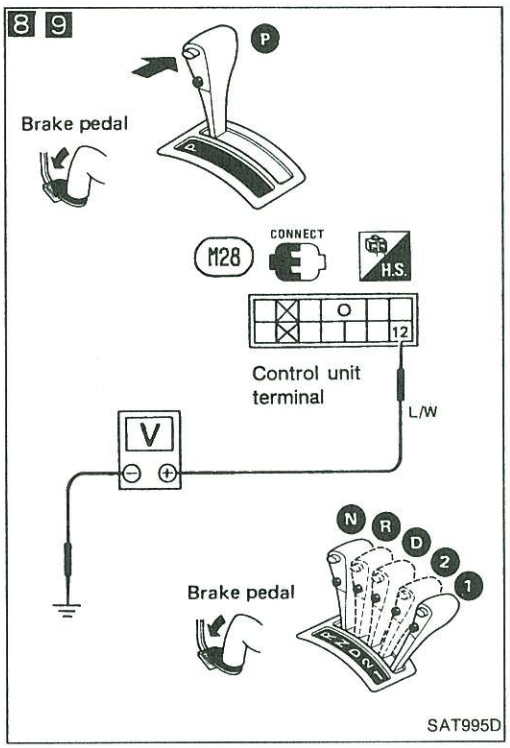


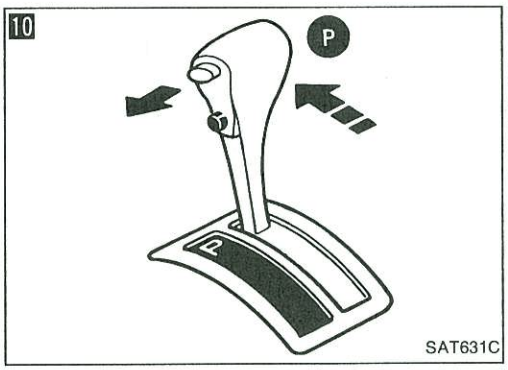


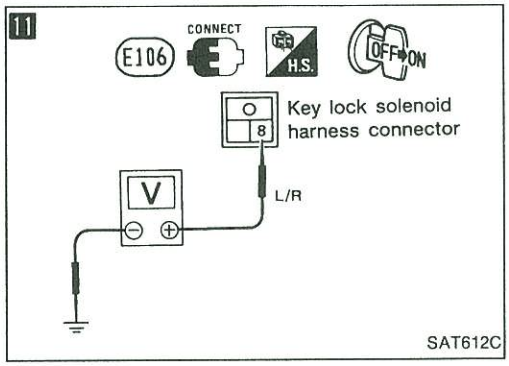

## Diagnostic Procedure (Cont'd)

Ⓒ

**12**

**CHECK OUTPUT SIGNAL (KEY UNLOCK SIGNAL CAUSED BY IGNITION SIGNAL).**

1. Turn ignition switch from "ON" to "OFF" position.
2. Check voltage between key lock solenoid harness terminal ⑩ and ground at the moment ignition key is turned from ON to OFF.

**Battery voltage should exist for approximately 0.1 seconds.**

N.G. → Check harness continuity between shift lock solenoid harness terminal ⑩ and control unit harness terminal ⑩.

- O.K. → Replace control unit.
- N.G. → Repair harness or connector.

O.K. ↓

Turn ignition switch from "OFF" to "ON" position. (Do not start engine.)

**13**

1. Push selector lever button with brake pedal depressed.
2. Turn ignition switch from "ON" position to "OFF" position.

**When turning ignition key, keep selector lever button pushed and brake pedal depressed.**

**14**

**CHECK OUTPUT SIGNAL (KEY UNLOCK SIGNAL CAUSED BY DETENTION SWITCH—KEY).**

1. Turn ignition switch to "OFF" position.
2. Check voltage between key lock solenoid harness terminal ⑩ and ground at the moment selector lever button is released.

**Battery voltage should exist for approximately 0.1 seconds.**

N.G. → Replace control unit.

O.K. ↓

Check key lock solenoid. (Refer to "COMPONENT CHECK".)

N.G. → Replace key lock solenoid.

O.K. ↓

Ⓓ

**12**

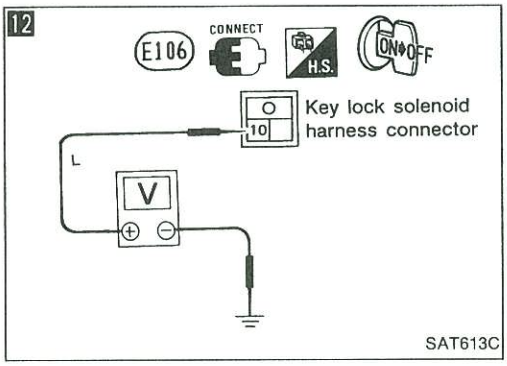


SAT613C

**13**

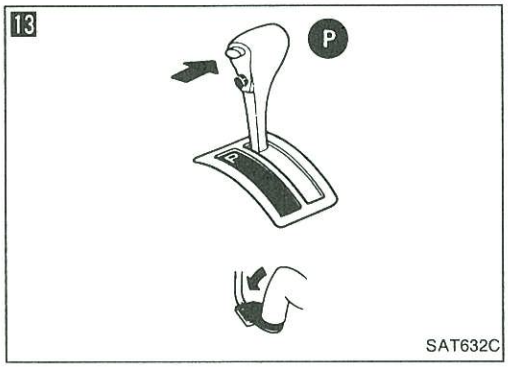


SAT632C

**14**

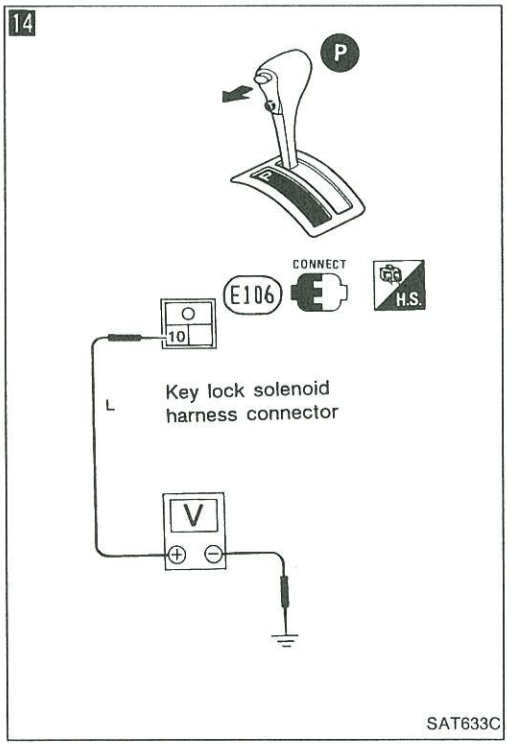


SAT633C

## Diagnostic Procedure (Cont'd)

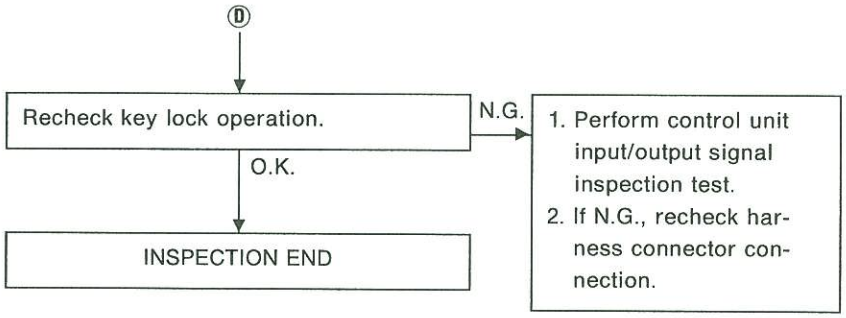


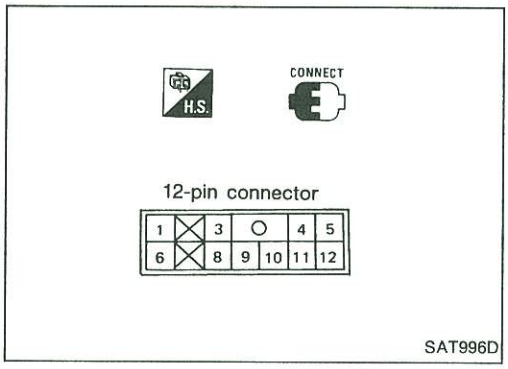


### Shift Lock Control Unit Inspection

- Measure voltage between each terminal and terminal ⑨ by following "SHIFT LOCK CONTROL UNIT INSPECTION TABLE".
- Pin connector terminal layout.

## Shift Lock Control Unit Inspection Table

(Data are reference values.)

| Terminal No. ⊕ | Terminal No. ⊖ | Item | Condition | Judgement standard |
|---|---|---|---|---|
| 1 | 9 | Shift lock signal | Turn ignition switch to "ON" position. When selector lever is set in "P" position and brake pedal is depressed | Battery voltage |
| | | | Except above | 0V |
| 3 | | Stop lamp switch | When brake pedal is depressed | Battery voltage |
| | | | When brake pedal is released | 0V |
| 4 | | Power source | Turn ignition switch to "OFF" position. | Battery voltage |
| 5 | | Detention switch (Shift) | When key is inserted into key cylinder, selector lever is set in "P" position and selector lever button is released | 0V |
| | | | Except above | Battery voltage |
| 6 | | Ignition signal | Turn ignition switch to "ON" position. | Battery voltage |
| 8 | 10 | Key lock signal | When ignition switch is turned from LOCK, OFF or ACC to ON. | Battery voltage (Approximately 0.1 seconds) |
| | | | Except above | 0V |
| 9 | — | Ground | — | — |
| 10 | 8 | Key unlock signal | When ignition switch is turned from ON to LOCK, OFF, or ACC, selector lever is set in "P" position and selector lever button is released | Battery voltage (Approximately 0.1 seconds) |
| | | | Except above | 0V |
| 11 | 9 | Key switch | When key is inserted into key cylinder | Battery voltage |
| | | | When key is removed from key cylinder | 0V |
| 12 | | Detention switch (Key) | When key is inserted into key cylinder, selector lever is set in "P" position and selector lever button is released | 0V |
| | | | Except above | Battery voltage |

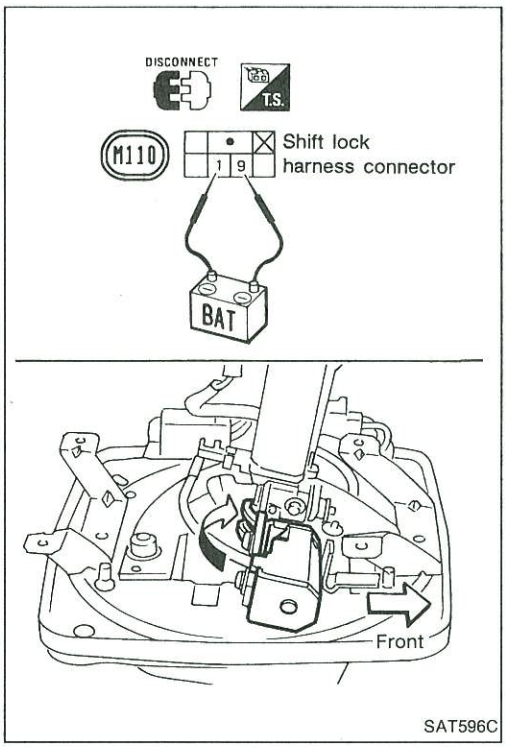


## Component Check

### SHIFT LOCK SOLENOID

- Check operation by applying battery voltage to shift lock harness connector.

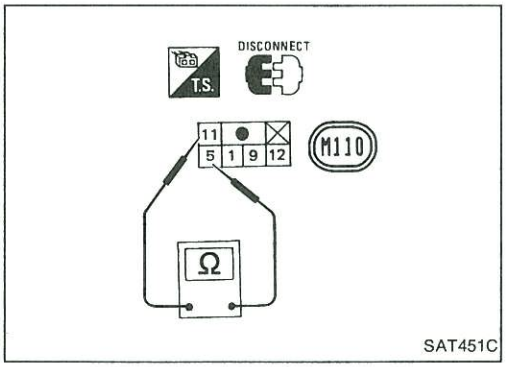


### DETENTION SWITCH—SHIFT

- Check continuity between terminals ⑤ and ⑪ of shift lock harness connector.

| Condition | Continuity |
|---|---|
| When selector lever is set in "P" position and selector lever button is released | No |
| Except the above | Yes |

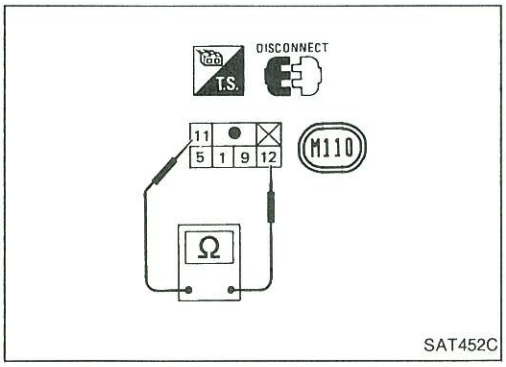


### DETENTION SWITCH—KEY

- Check continuity between terminals ⑪ and ⑫ of shift lock harness connector.

| Condition | Continuity |
|---|---|
| When selector lever is set in "P" position and selector lever button is released | No |
| Except the above | Yes |

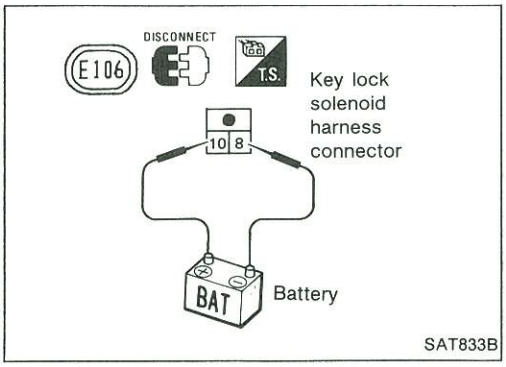


### KEY LOCK SOLENOID

- Check operation by applying battery voltage to key lock solenoid harness connector.

**Operating sound must be emitted.**

## Component Check (Cont'd)

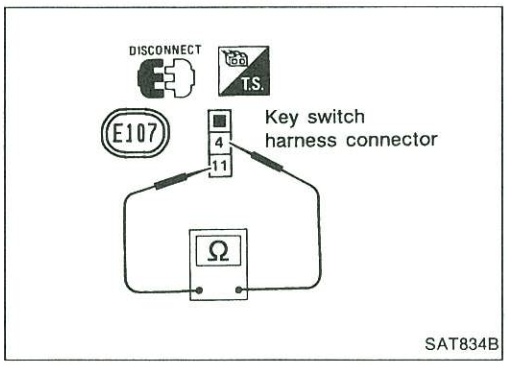


### KEY SWITCH

- Check continuity between terminals ④ and ① of key switch harness connector.

| Condition | Continuity |
|---|---|
| When key is inserted into key cylinder | Yes |
| When key is removed from key cylinder | Yes |

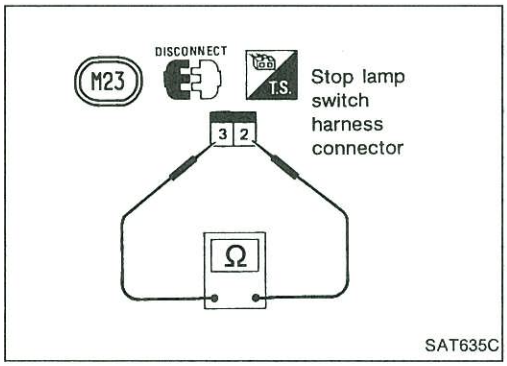


### STOP LAMP SWITCH

- Check continuity between terminals ② and ③ of stop lamp switch harness connector.

| Condition | Continuity |
|---|---|
| When brake pedal is depressed | Yes |
| When brake pedal is released | No |

**Check stop lamp switch after adjusting brake pedal — refer to section BR.**

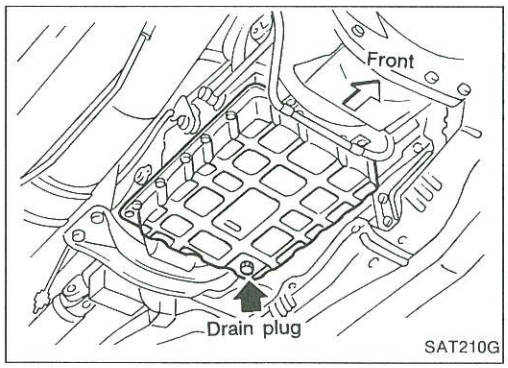


## Control Valve Assembly and Accumulators Inspection

1. Drain fluid from drain plug.
2. Remove oil pan and gasket.
3. Remove oil strainer.

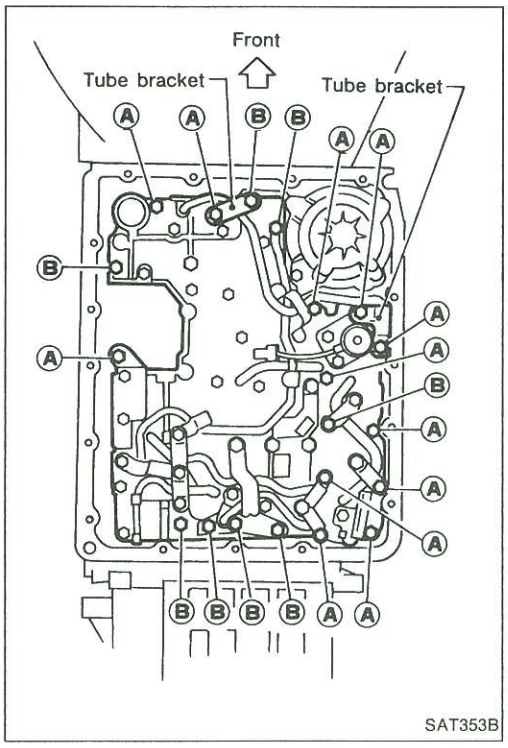


4. Remove control valve assembly by removing fixing bolts and disconnecting harness connector.

**Bolt length and location**

| Bolt symbol | ℓ mm (in) |
|---|---|
| Ⓐ | 33 (1.30) |
| Ⓑ | 45 (1.77) |

5. Remove solenoids and valves from valve body if necessary.
6. Remove terminal cord assembly if necessary.

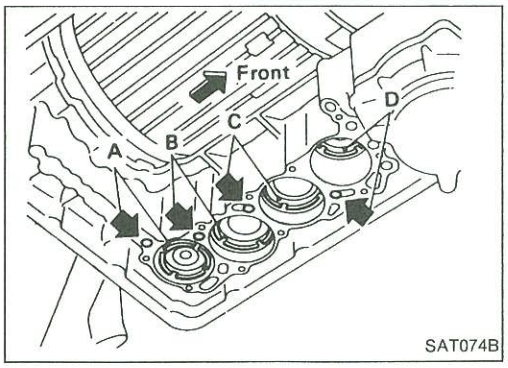


7. Remove accumulator A, B, C and D by applying compressed air if necessary.
- **Hold each piston with rag.**
8. Reinstall any part removed.
- **Always use new sealing parts.**

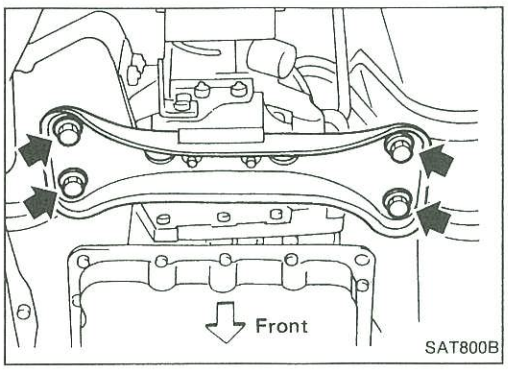


## Revolution Sensor Replacement

1. Remove rear engine mounting member from body panel while supporting A/T with jack.
2. Lower A/T assembly as much as possible.

## Revolution Sensor Replacement (Cont'd)

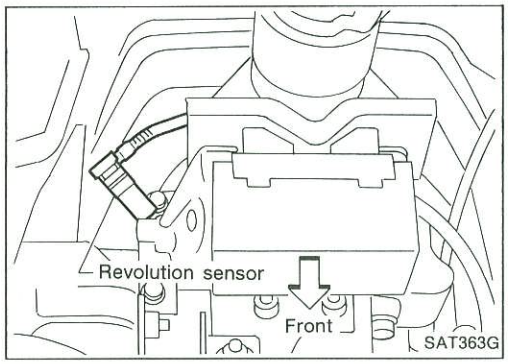


3. Remove revolution sensor from A/T assembly.
4. Reinstall any part removed.

- **Always use new sealing parts.**

## Rear Oil Seal Replacement

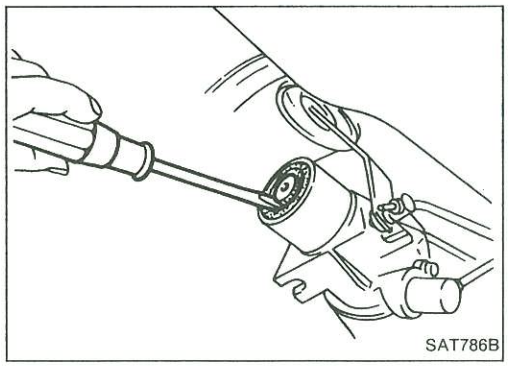


1. Remove propeller shaft from vehicle. — Refer to section PD.
2. Remove rear oil seal.

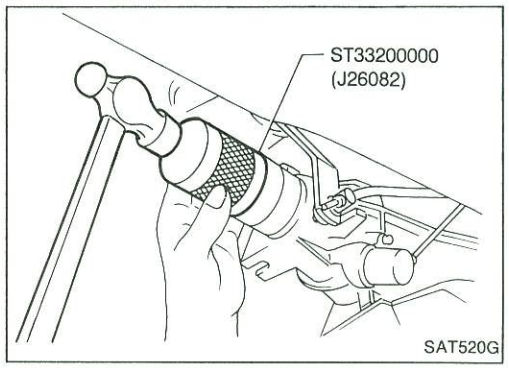


3. Install rear oil seal.

- **Apply A.T.F. before installing.**

4. Reinstall any part removed.

## Parking Components Inspection

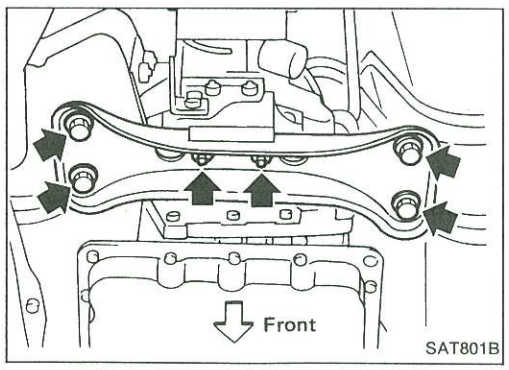


1. Remove propeller shaft from vehicle. — Refer to section PD.
2. Remove rear engine mounting member from A/T assembly.

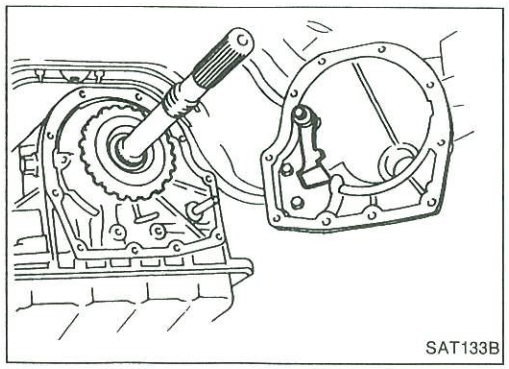


3. Remove rear extension from transmission case.
4. Replace parking components if necessary.
5. Reinstall any part removed.

- **Always use new sealing parts.**

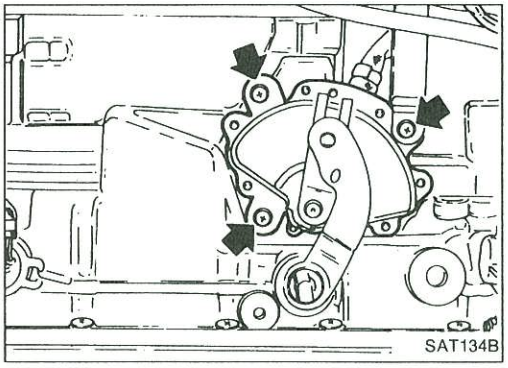
SAT134B

## Inhibitor Switch Adjustment

1. Remove manual control linkage from manual shaft of A/T assembly.
2. Set manual shaft of A/T assembly in "N" position.
3. Loosen inhibitor switch fixing bolts.

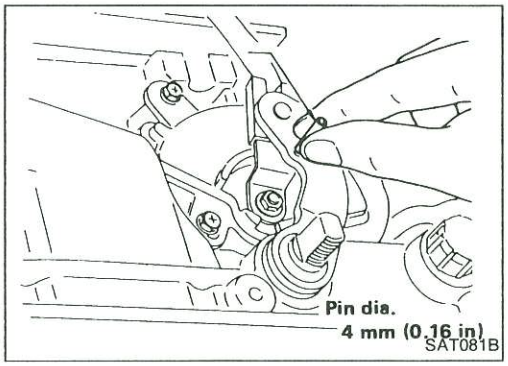

SAT081B

4. Insert pin into adjustment holes in both inhibitor switch and manual shaft of A/T assembly as near vertical as possible.
5. Reinstall any part removed.
6. Check continuity of inhibitor switch. — Refer to "Electrical Components Inspection".

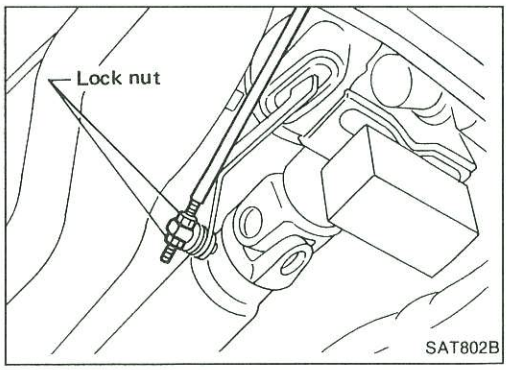

SAT802B

## Manual Control Linkage Adjustment

Move selector lever from "P" position to "1" position. You should be able to feel the detentes in each position.
If the detentes cannot be felt or the pointer indicating the position is improperly aligned, the linkage needs adjustment.

1. Place selector lever in "P" position.
2. Loosen lock nuts.

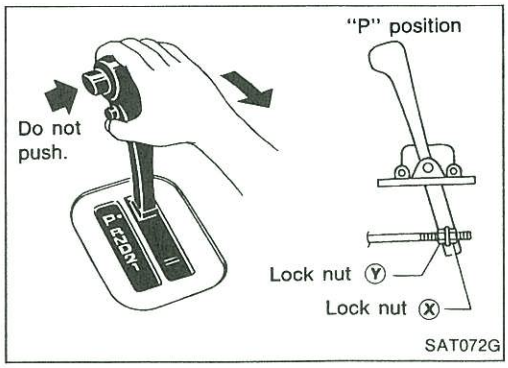

SAT072G

3. Tighten lock nut Ⓧ until it touches trunnion pulling selector lever toward "R" position side without pushing button.
4. Back off lock nut Ⓧ 1 turn and tighten lock nut Ⓨ to the specified torque.
   **Lock nut:**
   **: 11 - 15 N·m (1.1 - 1.5 kg-m, 8 - 11 ft-lb)**
5. Move selector lever from "P" position to "1" position. Make sure that selector lever can move smoothly.

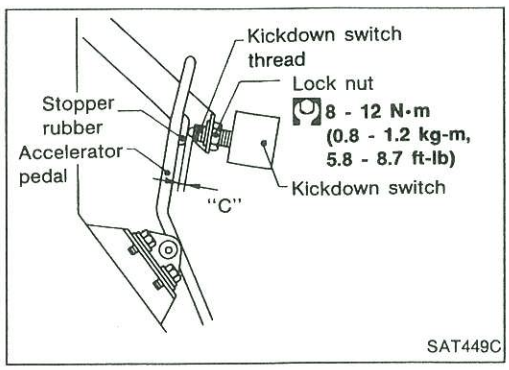

SAT449C

## Kickdown Switch Adjustment

1. Adjust accelerator cable — Refer to section FE.
2. Adjust clearance "C" between stopper rubber and end of kickdown switch thread while depressing accelerator pedal fully.
   **Clearance "C": 0.3 - 1.0 mm (0.012 - 0.039 in)**

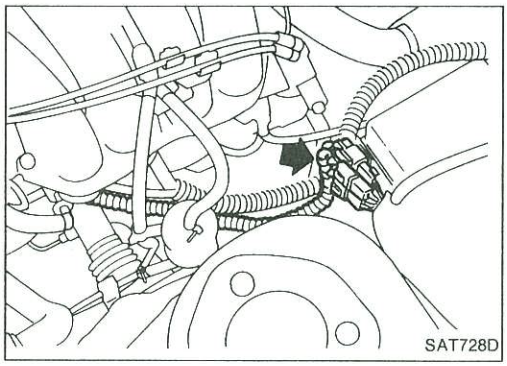


## Removal

- Disconnect A/T harness connector and clamps.

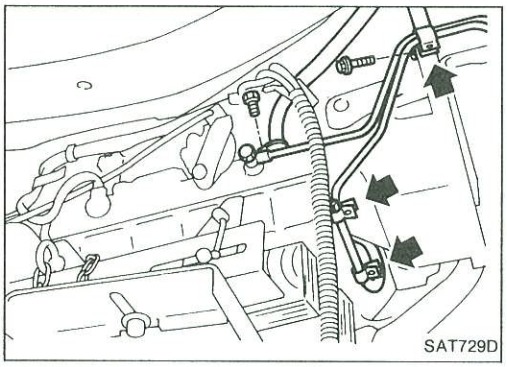


- Remove fluid charging pipe and oil cooler pipe at right side of A/T assembly. Plug up openings.
- Remove oil cooler pipe clamp at engine oil pan.
- Disconnect speed sensor harness connector.
- Remove control linkage from selector lever.

- Remove propeller shaft — Refer to section PD.

**Insert plug into rear oil seal after removing propeller shaft. Be careful not to damage spline, sleeve yoke and rear oil seal, when removing propeller shaft.**

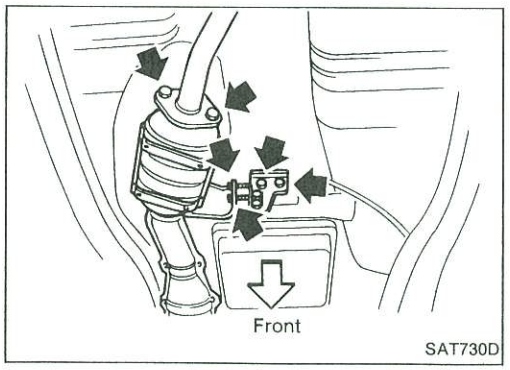


- Remove heat insulator from catalytic converter.
- Remove exhaust tube bracket and separate rear exhaust tube from converter.
- Remove starter motor.

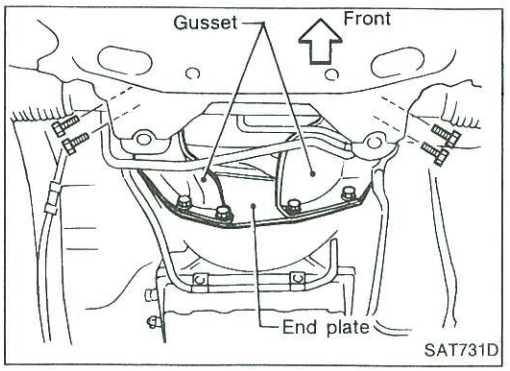


- Remove gussets and end plate.

## Removal (Cont'd)

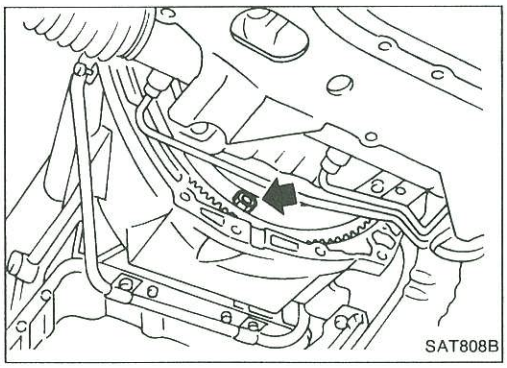


- Remove bolts securing torque converter to drive plate. Gain access to bolts by turning crankshaft.

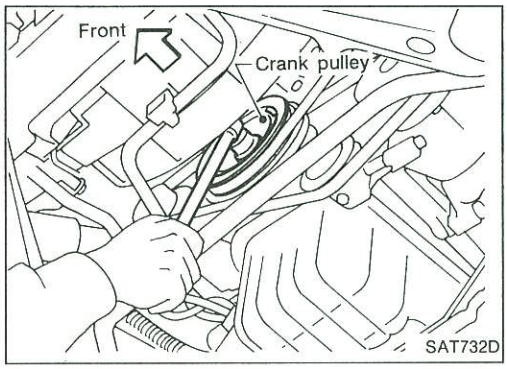


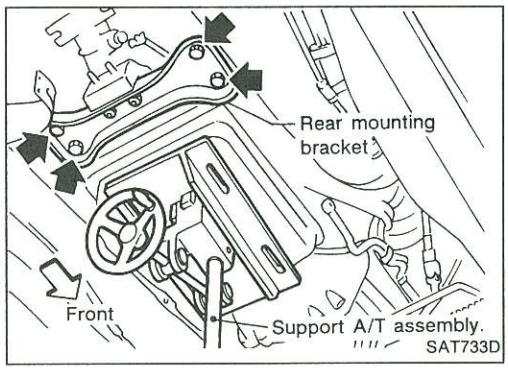


- Support A/T assembly by placing a jack under oil pan.
- Remove rear mounting bracket from body.

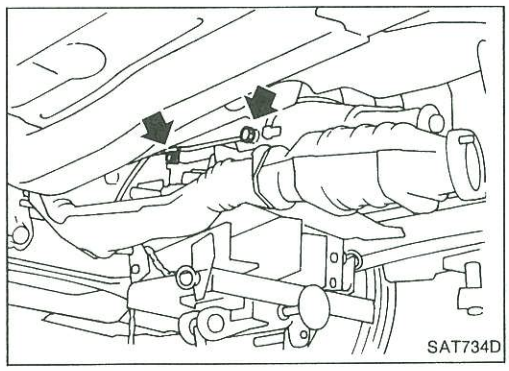


- Lower A/T assembly as much as possible.
- Remove oil cooler pipe from left side of A/T assembly. Plug up openings.

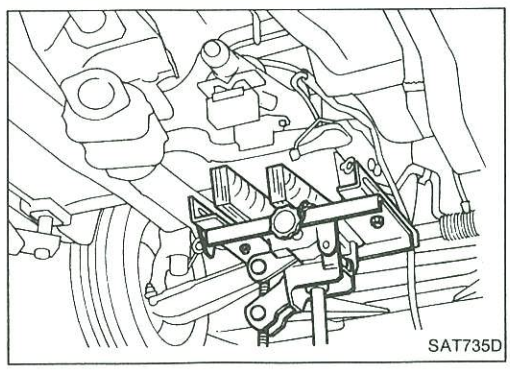


- Remove bolts securing A/T assembly to engine.
- Remove and lower A/T assembly.
  Be careful not to damage steering gear and tubes.

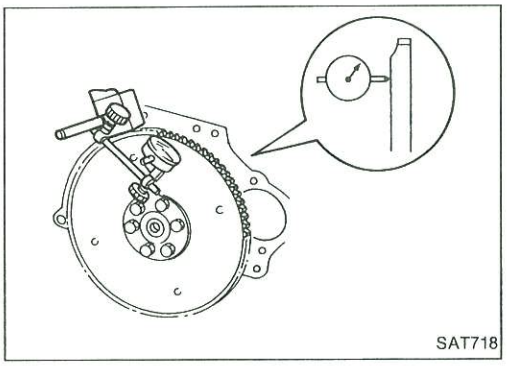
SAT718

## Installation

- Drive plate runout
  **Maximum allowable runout:**
  **0.5 mm (0.020 in)**
  If this runout is out of allowance, replace drive plate with ring gear.

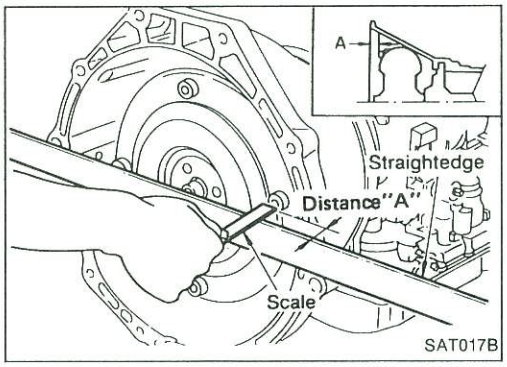

SAT017B

- When connecting torque converter to transmission, measure distance "A" to be certain that they are correctly assembled.
  **Distance "A":**
  **26.0 mm (1.024 in) or more**
- Install converter to drive plate.
- Reinstall any part removed.
- **After converter is installed to drive plate, rotate crankshaft several turns and check to be sure that transmission rotates freely without binding.**

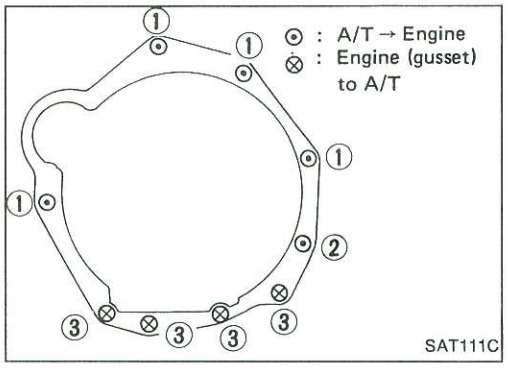

SAT111C

- Tighten bolts securing transmission.

| Bolt No. | Tightening torque N·m (kg-m, ft-lb) | Bolt length "L" mm (in) |
|---|---|---|
| 1 | 39 - 49 (4.0 - 5.0, 29 - 36) | 40 (1.57) |
| 2 | 39 - 49 (4.0 - 5.0, 29 - 36) | 50 (1.97) |
| 3 | 29 - 39 (3.0 - 4.0, 22 - 29) | 25 (0.98) |
| Gusset to engine (4 bolts) | 29 - 39 (3.0 - 4.0, 22 - 29) | 20 (0.79) |

SAT638A

- Reinstall any part removed.
- Check fluid level in transmission.
- Move selector lever through all positions to be sure that transmission operates correctly.
  With parking brake applied, rotate engine at idling. Move selector lever through "N" to "D", to "2", to "1" and to "R". A slight shock should be felt by hand gripping selector each time transmission is shifted.
- Perform road test. — Refer to "ROAD TESTING".

: N·m (kg-m, ft-lb)
: Apply recommended sealant (Nissan genuine part: KP610-00250) or equivalent.
(ATF): Apply A.T.F.
Ⓟ: Apply petroleum jelly
★ : Select with proper thickness.
☆ : Adjustment is required.

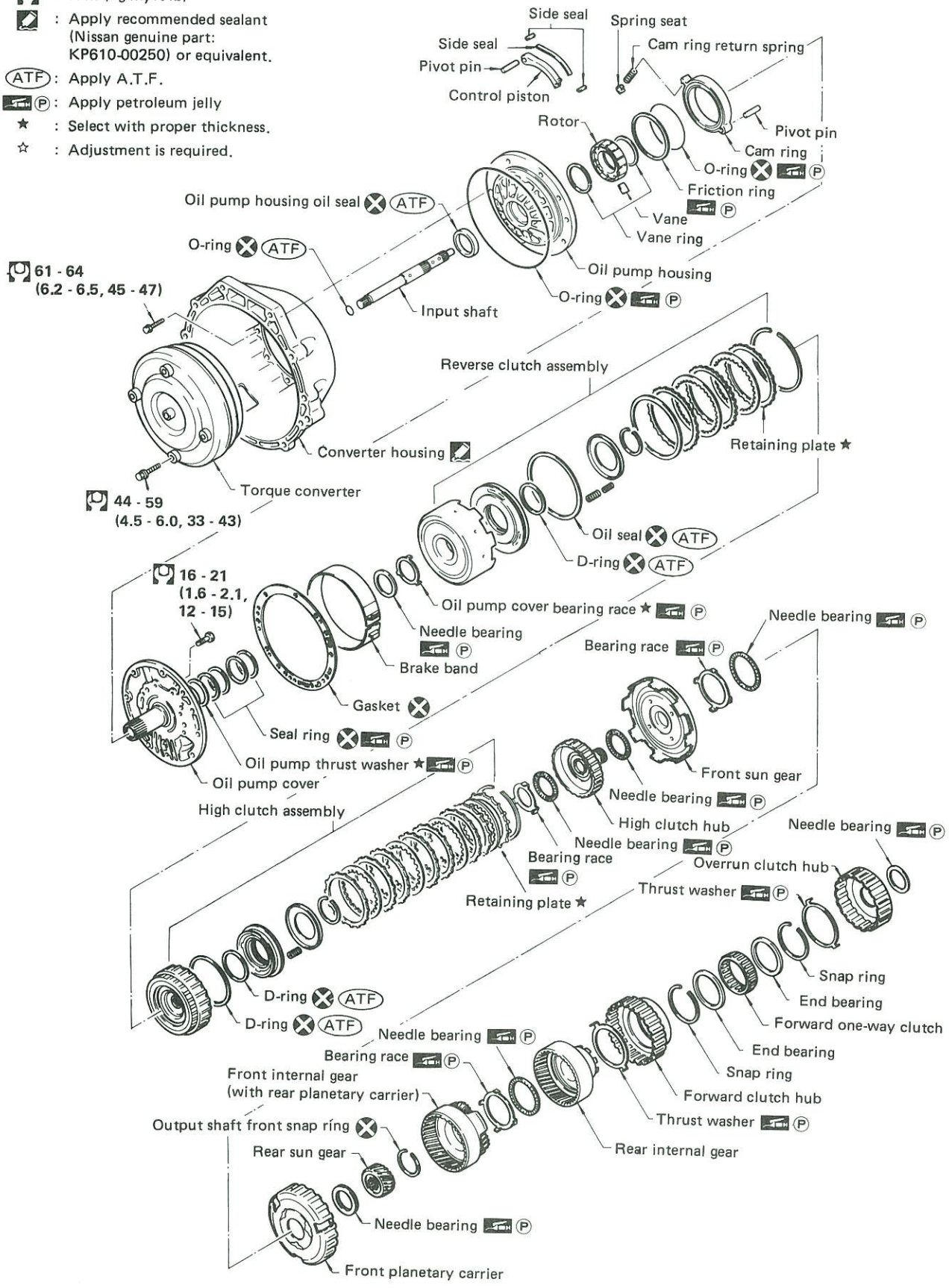

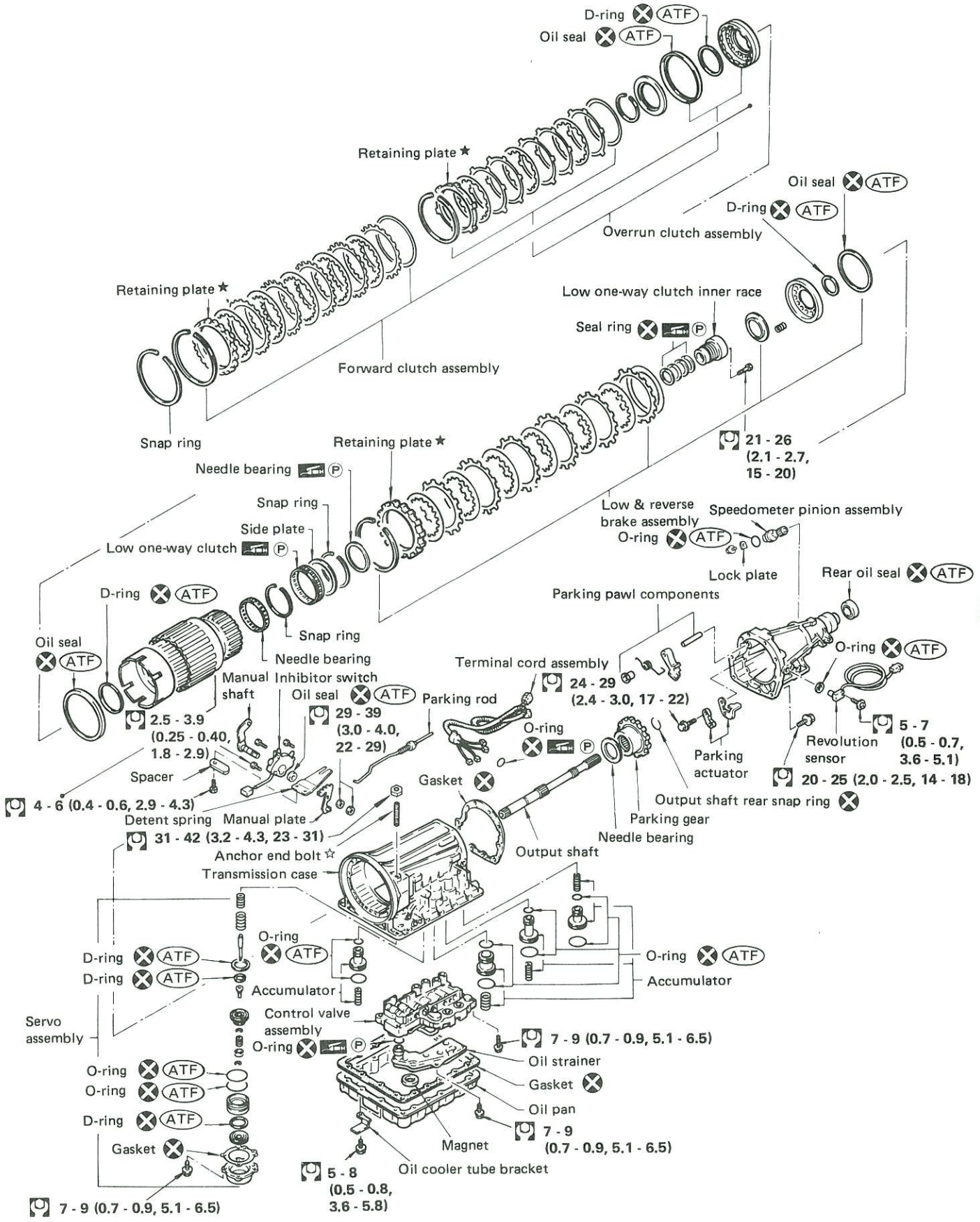
D-ring ⊗ ATF
Oil seal ⊗ ATF
Retaining plate ★
Oil seal ⊗ ATF
D-ring ⊗ ATF
Overrun clutch assembly
Retaining plate ★
Low one-way clutch inner race
Seal ring ⊗ Ⓟ
Forward clutch assembly
Snap ring
Retaining plate ★
21 - 26 (2.1 - 2.7, 15 - 20)
Needle bearing Ⓟ
Snap ring
Side plate
Low one-way clutch Ⓟ
Low & reverse brake assembly
Speedometer pinion assembly
O-ring ⊗ ATF
Lock plate
Rear oil seal ⊗ ATF
Parking pawl components
D-ring ⊗ ATF
Oil seal ⊗ ATF
Snap ring
Needle bearing
Manual shaft
Inhibitor switch
Oil seal ⊗ ATF
Terminal cord assembly
24 - 29 (2.4 - 3.0, 17 - 22)
O-ring ⊗ ATF
2.5 - 3.9 (0.25 - 0.40, 1.8 - 2.9)
29 - 39 (3.0 - 4.0, 22 - 29)
Parking rod
O-ring ⊗ Ⓟ
5 - 7 (0.5 - 0.7, 3.6 - 5.1)
Revolution sensor
Parking actuator
20 - 25 (2.0 - 2.5, 14 - 18)
Spacer
Gasket ⊗
Output shaft rear snap ring ⊗
4 - 6 (0.4 - 0.6, 2.9 - 4.3)
Detent spring
Manual plate
Parking gear
Needle bearing
31 - 42 (3.2 - 4.3, 23 - 31)
Anchor end bolt ☆
Output shaft
Transmission case
O-ring ⊗ ATF
D-ring ⊗ ATF
D-ring ⊗ ATF
Accumulator
O-ring ⊗ ATF
Accumulator
Servo assembly
Control valve assembly
O-ring ⊗ Ⓟ
7 - 9 (0.7 - 0.9, 5.1 - 6.5)
Oil strainer
Gasket ⊗
O-ring ⊗ ATF
O-ring ⊗ ATF
D-ring ⊗ ATF
Oil pan
7 - 9 (0.7 - 0.9, 5.1 - 6.5)
Gasket ⊗
Magnet
Oil cooler tube bracket
5 - 8 (0.5 - 0.8, 3.6 - 5.8)
7 - 9 (0.7 - 0.9, 5.1 - 6.5)

SAT742D

## Oil Channel

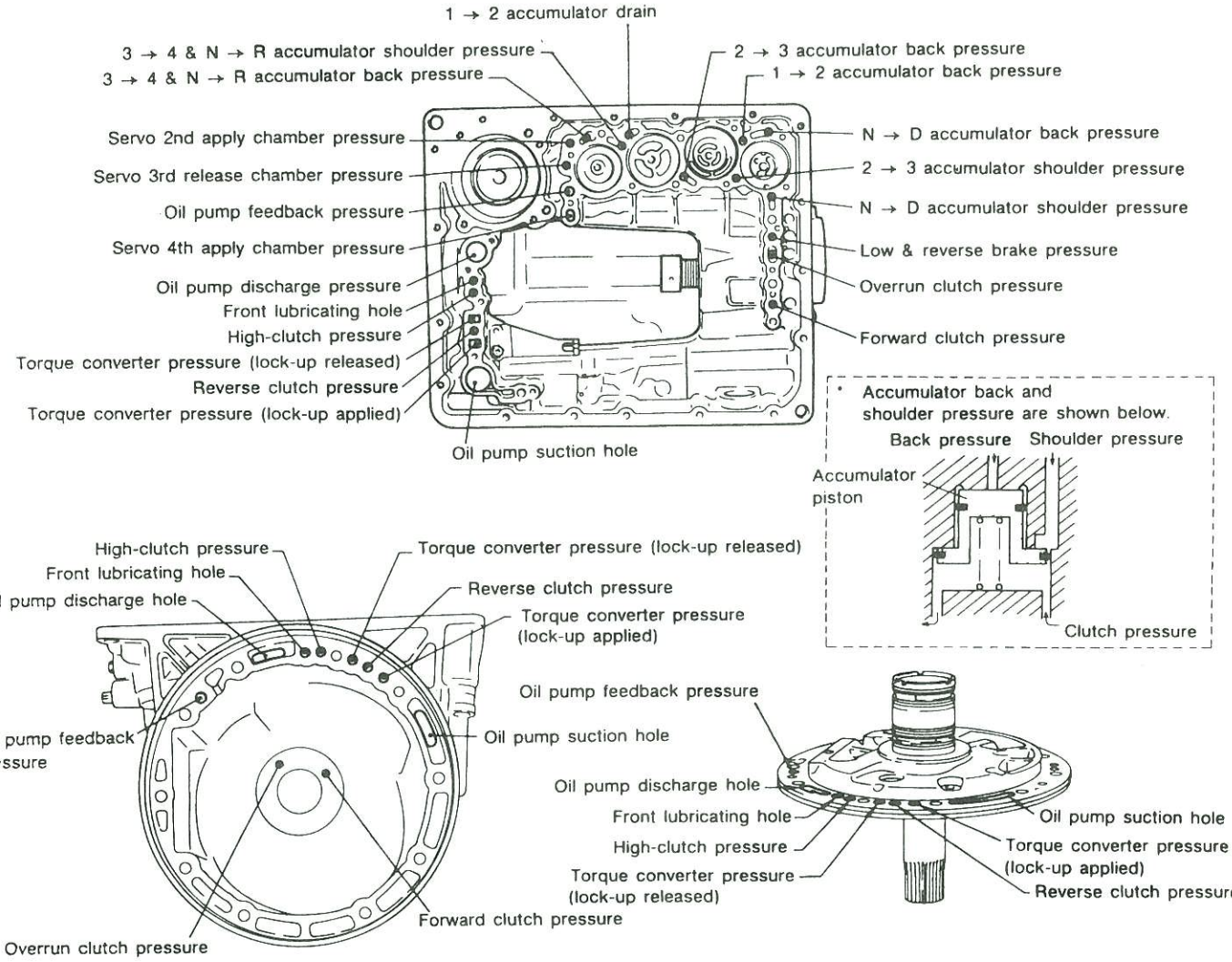


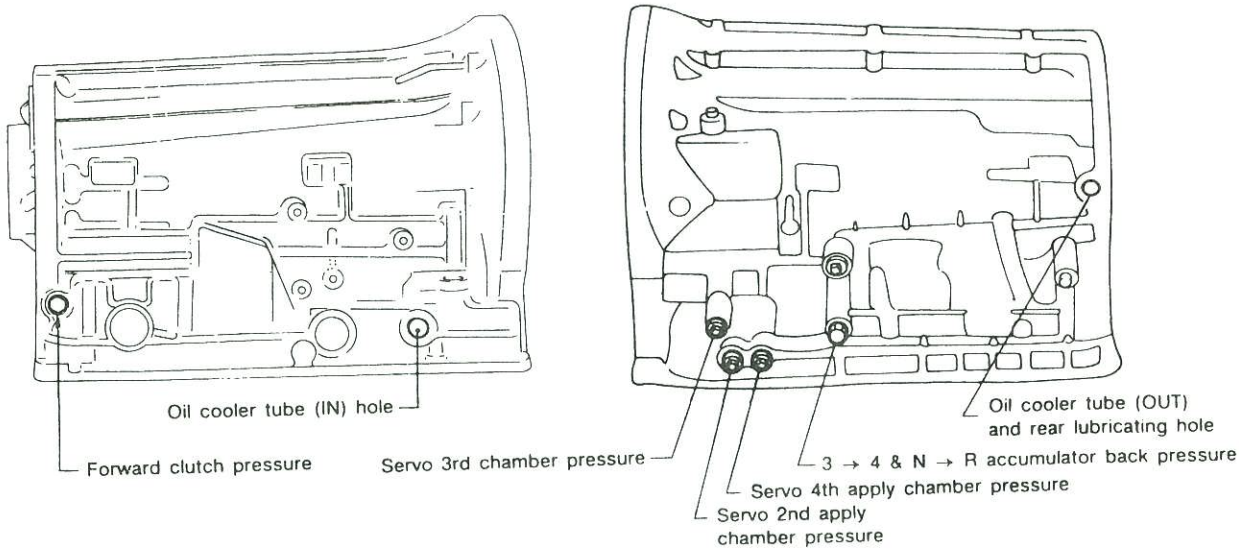


SAT185B

## Locations of Needle Bearings, Thrust Washers and Snap Rings

Outer diameter of snap rings

| Item number | Outer diameter mm (in) |
|---|---|
| ② | 161.0 (6.34) |
| ③ | 140.1 (5.52) |
| ④ | 156.4 (6.16) |
| ⑥ | 142.0 (5.59) |
| ⑦ | 159.2 (6.27) |

Thrust washers

| Item number | Color |
|---|---|
| ① | Black |
| ⑤ | White |

Outer diameter of needle bearings

| Item number | Outer diameter mm (in) |
|---|---|
| ⑧ | 47 (1.85) |
| ⑨ | 53 (2.09) |
| ⑩ | 53 (2.09) |
| ⑪ | 78 (3.07) |
| ⑫ | 53 (2.09) |
| ⑬ | 78 (3.07) |
| ⑭ | 59 (2.32) |
| ⑮ | 78 (3.07) |
| ⑯ | 64 (2.52) |

Inner diameter of bearing races

| Item number | Outer diameter mm (in) |
|---|---|
| ⑪ | 58 (2.28) |
| ⑬ | 58.8 (2.315) |

Installation of one-piece bearings

| Item number | Bearing race (black) location |
|---|---|
| ⑫ | Front |
| ⑮ | Rear side |
| ⑯ | Rear side |

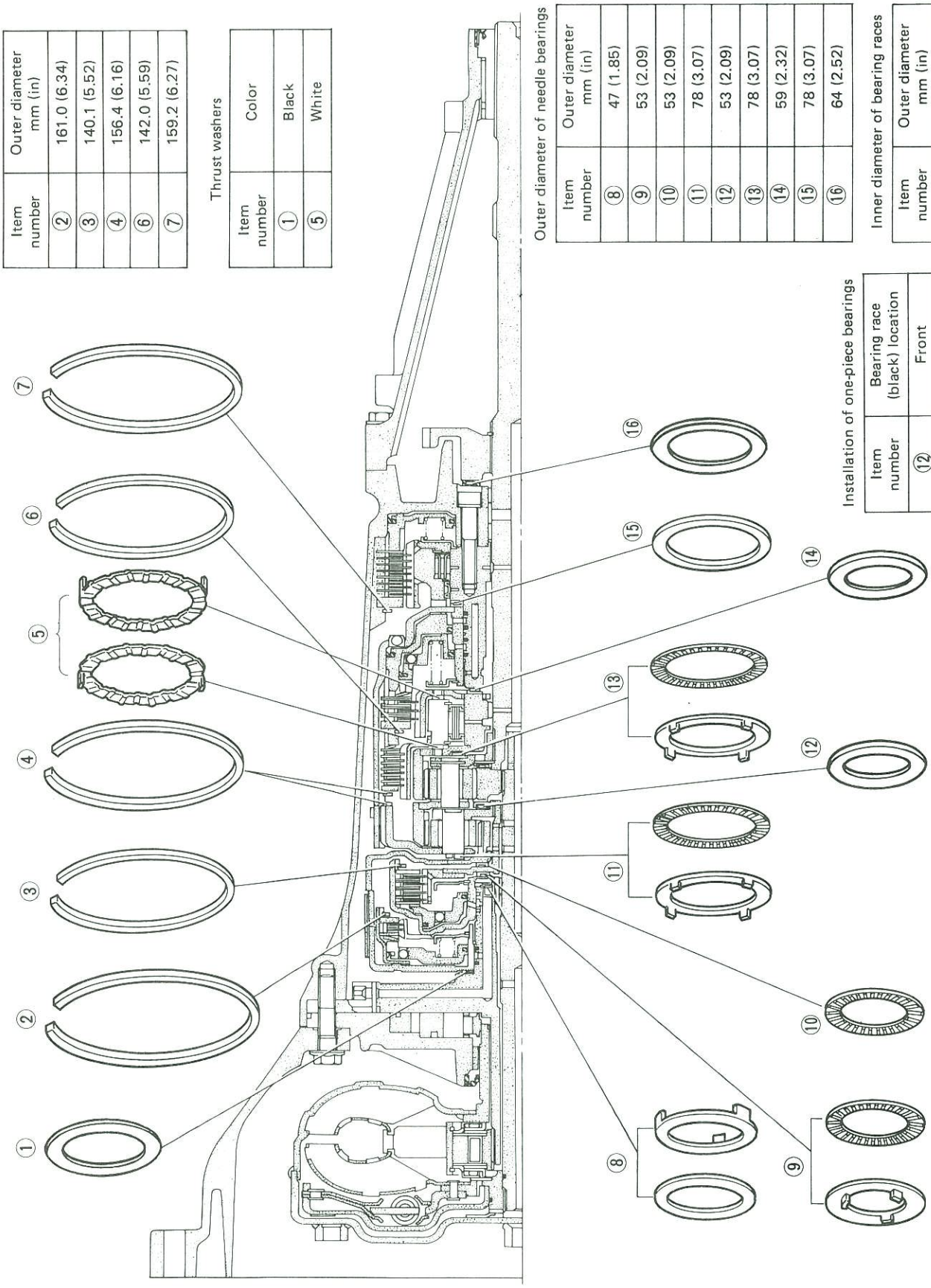


SAT647A

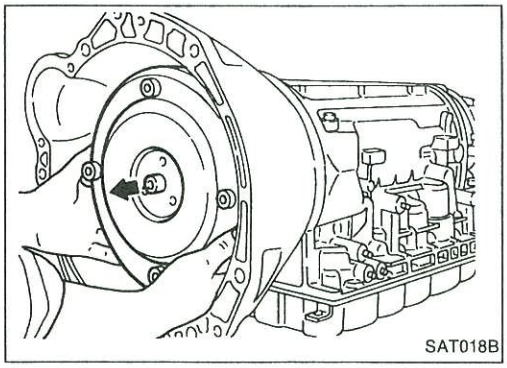
SAT018B

## Disassembly

1. Remove torque converter by holding it firmly and turning while pulling straight out.

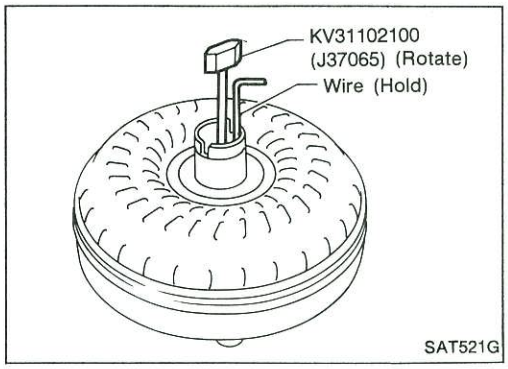

SAT521G

2. Check torque converter one-way clutch.
a. Insert Tool into spline of one-way clutch inner race.
b. Hook bearing support unitized with one-way clutch outer race with suitable wire.
c. Check that one-way clutch inner race rotates only clockwise with Tool while holding bearing support with wire.

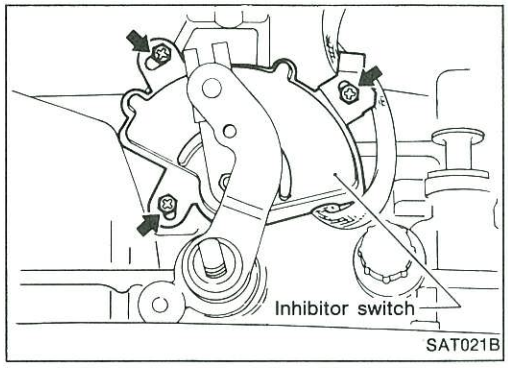

SAT021B

3. Remove inhibitor switch from transmission case.

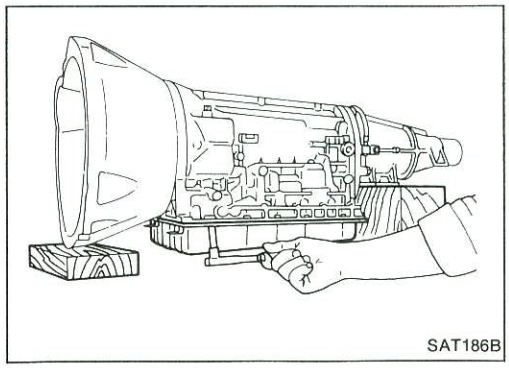
SAT186B

4. Remove oil pan.
a. Drain A.T.F. from rear extension.
b. Raise oil pan by placing wooden blocks under converter housing and rear extension.
c. Separate the oil pan and transmission case.

- **Always place oil pan straight down so that foreign particles inside will not move.**

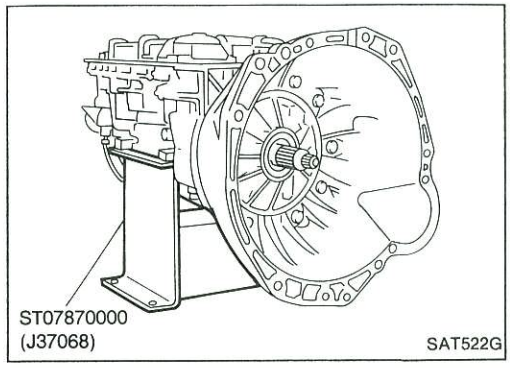

SAT522G

5. Place transmission into Tool with the control valve facing up.

## Disassembly (Cont'd)

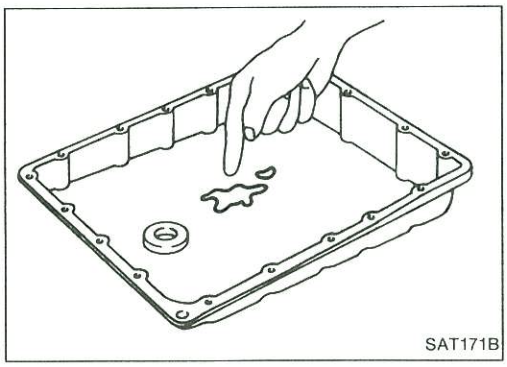
SAT171B

6. Check oil pan and oil strainer for accumulation of foreign particles.
- If materials of clutch facing are found, clutch plates may be worn.
- If metal filings are found, clutch plates, brake bands, etc. may be worn.
- If aluminum filings are found, bushings or aluminum cast parts may be worn.

In above cases, replace torque converter and check unit for cause of particle accumulation.

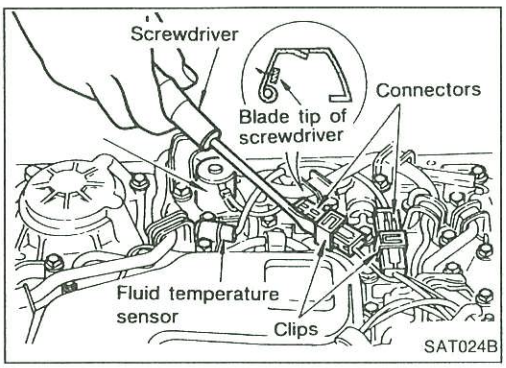

SAT024B

7. Remove torque converter clutch solenoid valve and fluid temperature sensor connectors.
- **Be careful not to damage connector.**

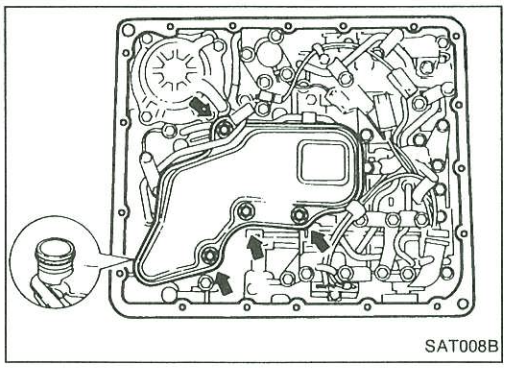
SAT008B

8. Remove oil strainer.

a. Remove oil strainer from control valve assembly. Then remove O-ring from oil strainer.

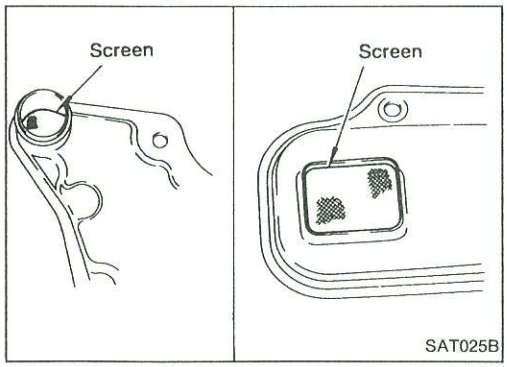

SAT025B

b. Check oil strainer screen for damage.

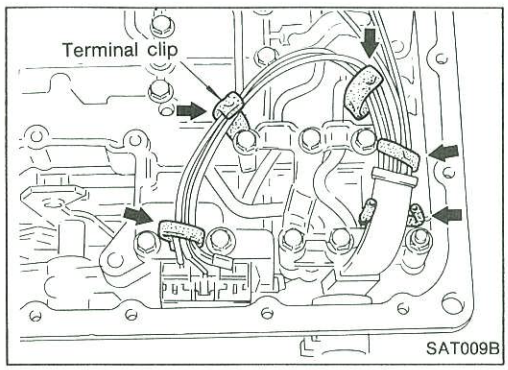

SAT009B

9. Remove control valve assembly.

a. Straighten terminal clips to free terminal cords then remove terminal clips.

## Disassembly (Cont'd)

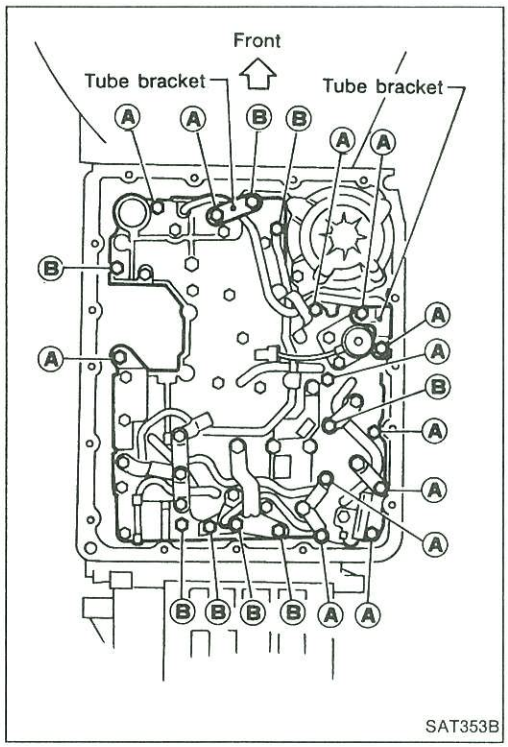


b. Remove bolts Ⓐ and Ⓑ, and remove control valve assembly from transmission.

| Bolt symbol | ℓ mm (in) xxxx |
|---|---|
| Ⓐ | 33 (1.30) |
| Ⓑ | 45 (1.77) |

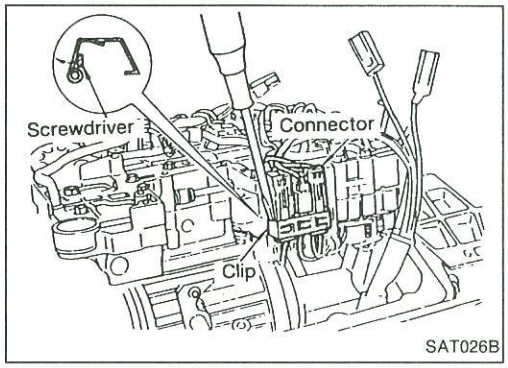


c. Remove solenoid connector.

- **Be careful not to damage connector.**

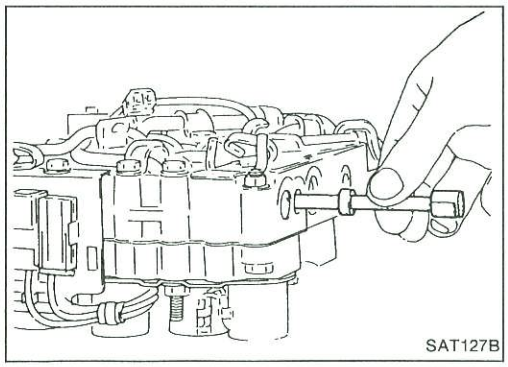


d. Remove manual valve from control valve assembly.

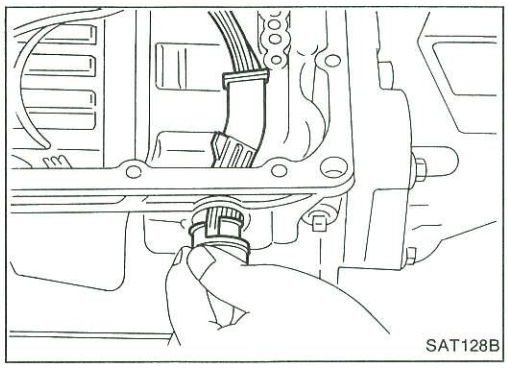


10. Remove terminal cord assembly from transmission case while pushing on stopper.

- **Be careful not to damage cord.**
- **Do not remove terminal cord assembly unless it is damaged.**

## Disassembly (Cont'd)

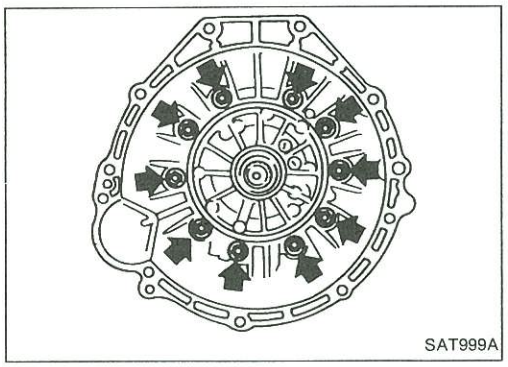
SAT999A

11. Remove converter housing from transmission case.
- **Be careful not to scratch converter housing.**

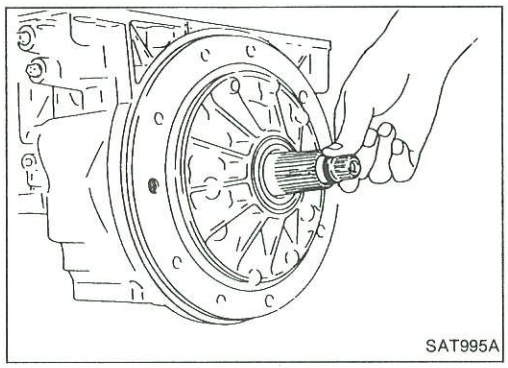
SAT995A

12. Remove O-ring from input shaft.

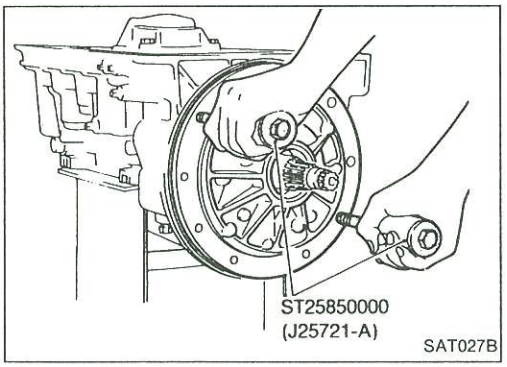

SAT027B

13. Remove oil pump assembly.
a. Attach Tool to oil pump assembly and extract it evenly from transmission case.

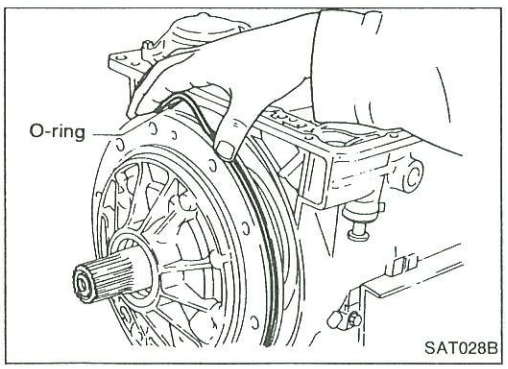

SAT028B

b. Remove O-ring from oil pump assembly.
c. Remove traces of sealant from oil pump housing.
- **Be careful not to scratch pump housing.**

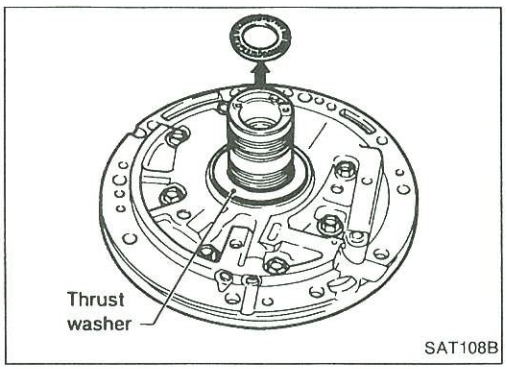

SAT108B

d. Remove needle bearing and thrust washer from oil pump assembly.

## Disassembly (Cont'd)

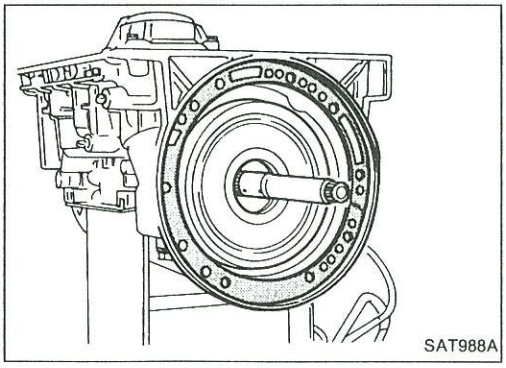
SAT988A

14. Remove input shaft and oil pump gasket.

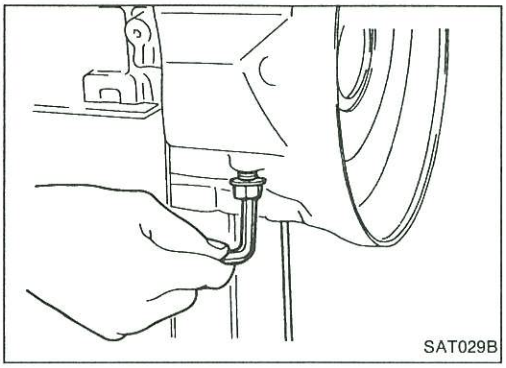
SAT029B

15. Remove brake band and band strut.
a. Loosen lock nut and remove band servo anchor end pin from transmission case.

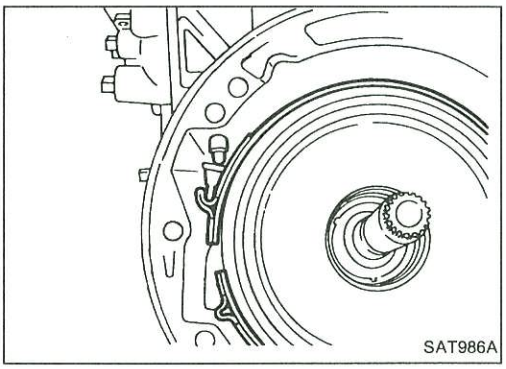
SAT986A

b. Remove brake band and band strut from transmission case.

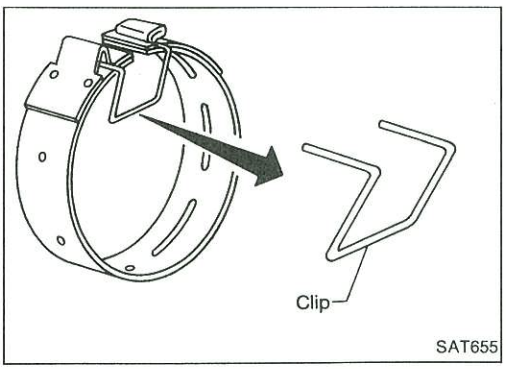

SAT655

c. Hold brake band in a circular shape with clip.

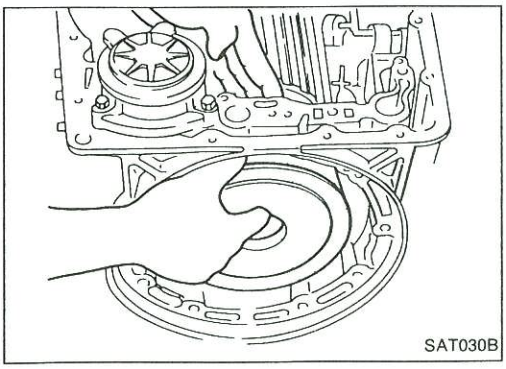
SAT030B

16. Remove front side clutch and gear components.
a. Remove clutch pack (reverse clutch, high clutch and front sun gear) from transmission case.

## Disassembly (Cont'd)

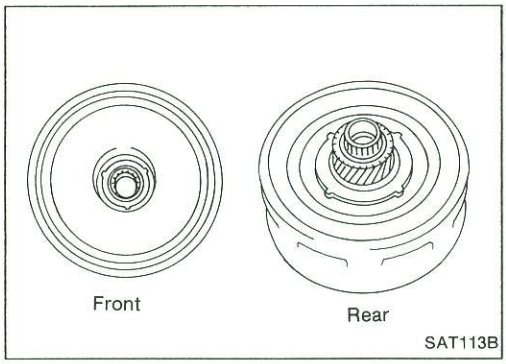


b. Remove front bearing race from clutch pack.
c. Remove rear bearing race from clutch pack.

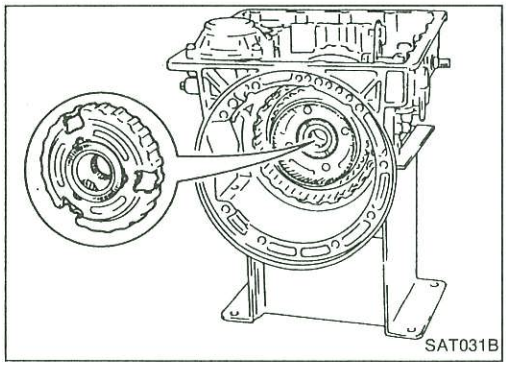


d. Remove front planetary carrier from transmission case.

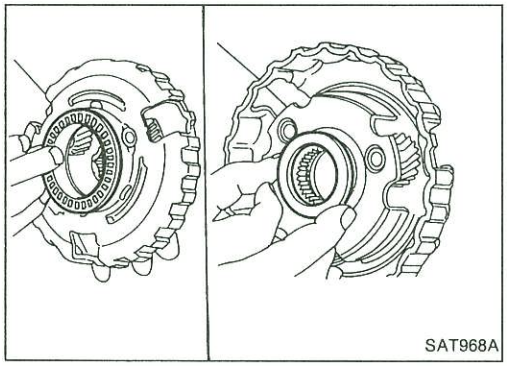


e. Remove front needle bearing from front planetary carrier.
f. Remove rear bearing from front planetary carrier.

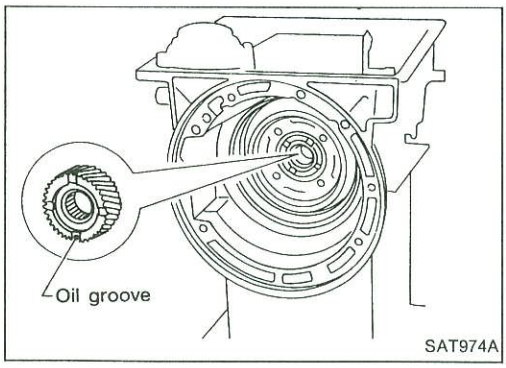


g. Remove rear sun gear from transmission case.

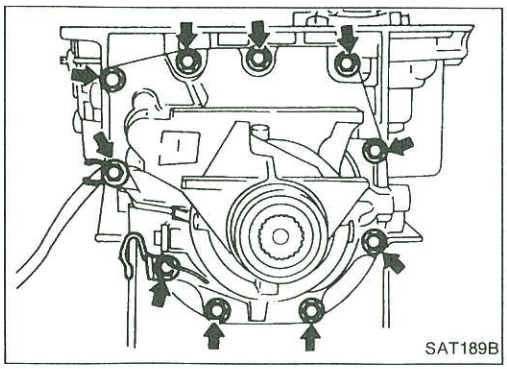


17. Remove rear extension.
a. Remove rear extension from transmission case.
b. Remove rear extension gasket from transmission case.

## Disassembly (Cont'd)

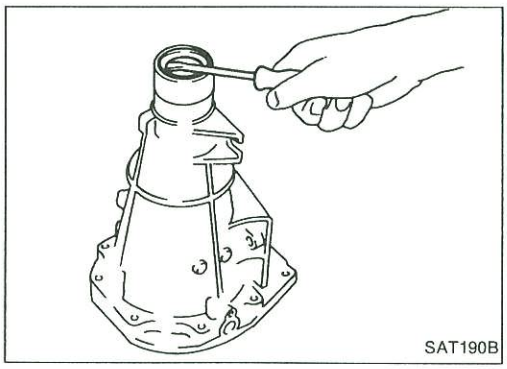


c. Remove oil seal from rear extension.

- **Do not remove oil seal unless it is to be replaced.**

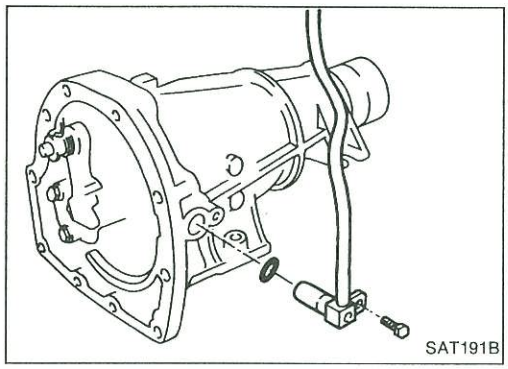


d. Remove revolution sensor from rear extension.
e. Remove O-ring from revolution sensor.

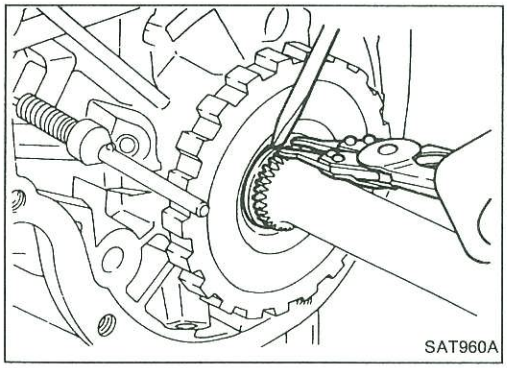


18. Remove output shaft and parking gear.
a. Remove rear snap ring from output shaft.

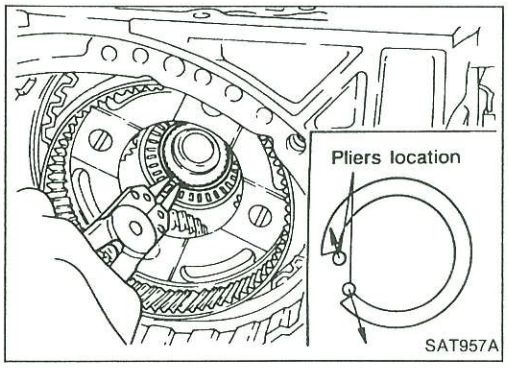


b. Slowly push output shaft all the way forward.

- **Do not use excessive force.**

c. Remove snap ring from output shaft.

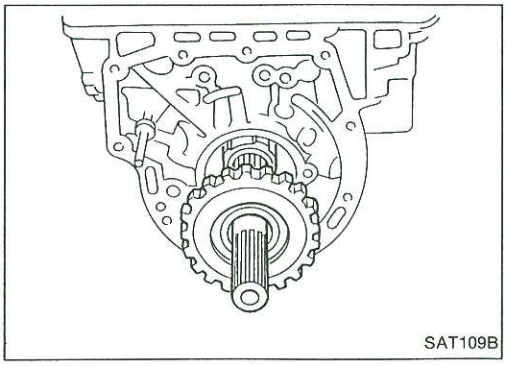


d. Remove output shaft and parking gear as a unit from transmission case.
e. Remove parking gear from output shaft.

## Disassembly (Cont'd)

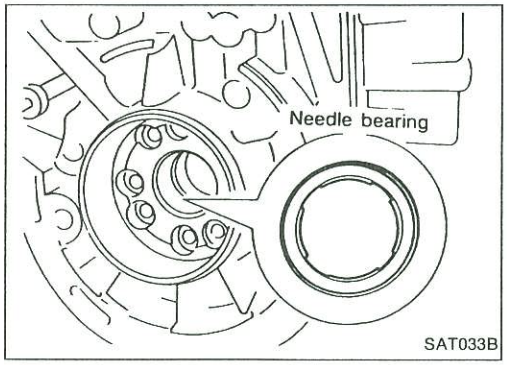


f. Remove needle bearing from transmission case.

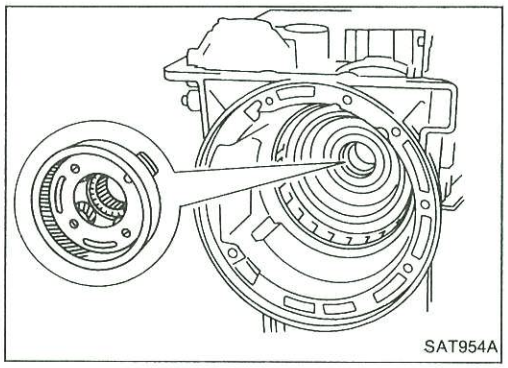


19. Remove rear side clutch and gear components.
a. Remove front internal gear.

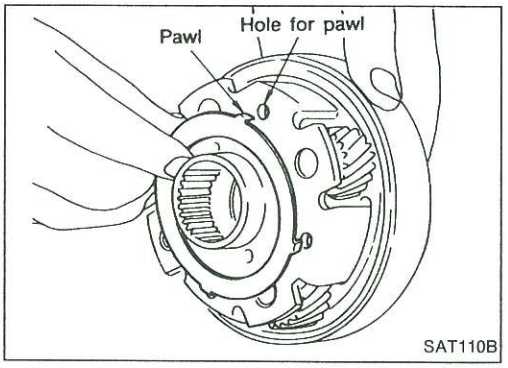


b. Remove bearing race from front internal gear.

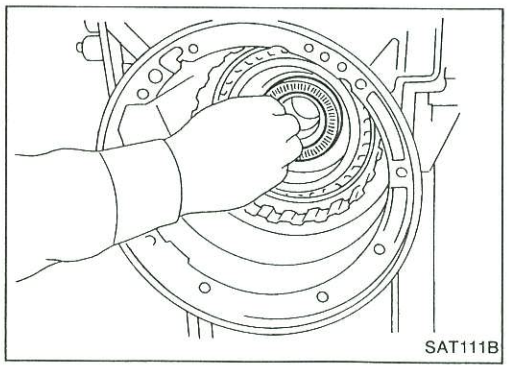


c. Remove needle bearing from rear internal gear.

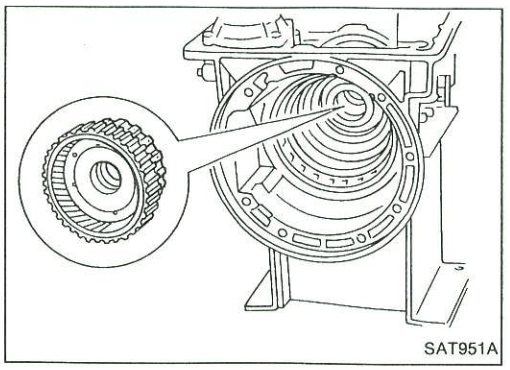


d. Remove rear internal gear, forward clutch hub and overrun clutch hub as a set from transmission case.

## Disassembly (Cont'd)

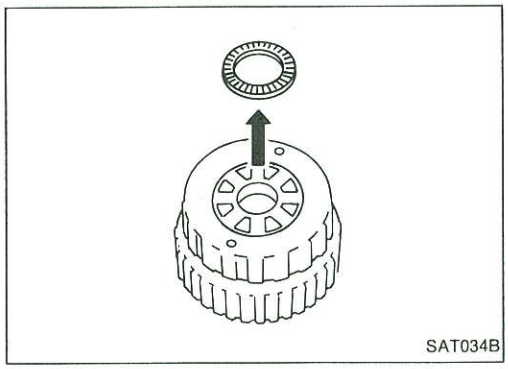


e. Remove needle bearing from overrun clutch hub.

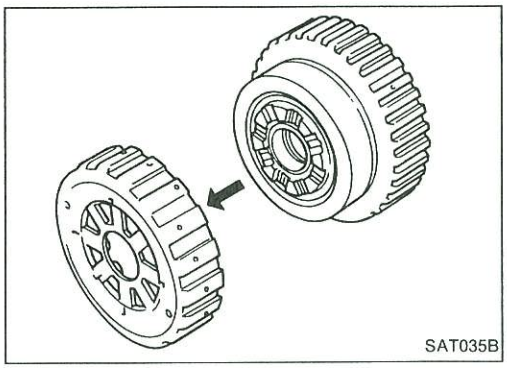


f. Remove overrun clutch hub from rear internal gear and forward clutch hub.

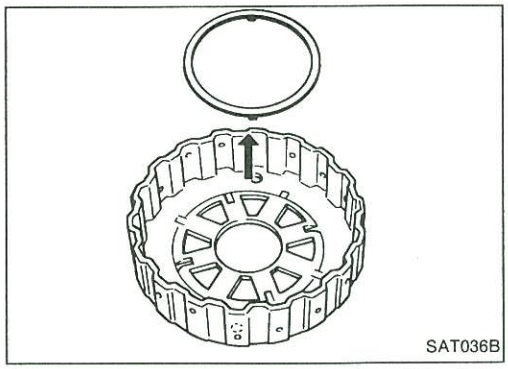


g. Remove thrust washer from overrun clutch hub.

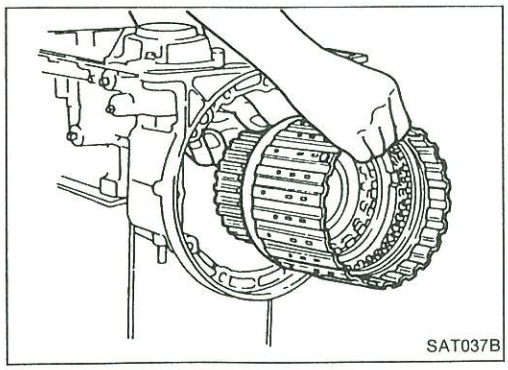


h. Remove forward clutch assembly from transmission case.

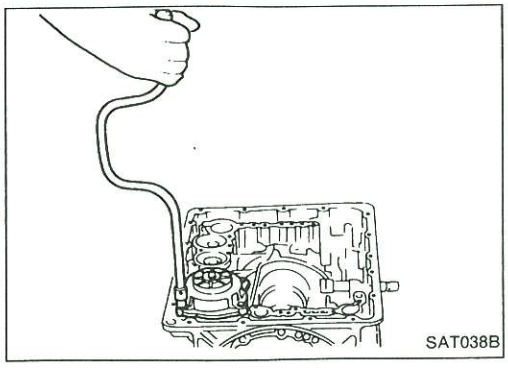


20. Remove band servo and accumulator components.
a. Remove band servo retainer from transmission case.

## Disassembly (Cont'd)

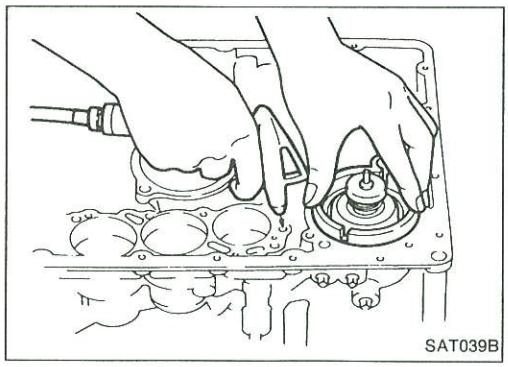


b. Apply compressed air to oil hole until band servo piston comes out of transmission case.

- **Hold piston with a rag and gradually direct air to oil hole.**

c. Remove return springs.

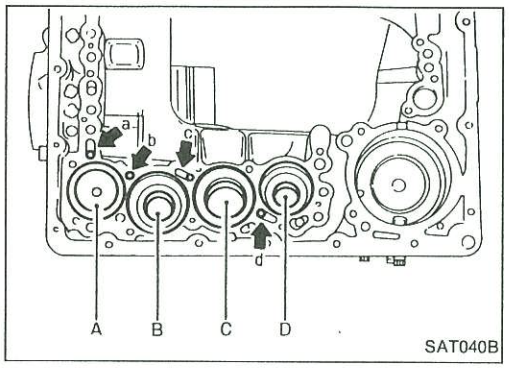


d. Remove springs from accumulator pistons B, C and D.
e. Apply compressed air to each oil hole until piston comes out.

- **Hold piston with a rag and gradually direct air to oil hole.**

| Identification of accumulator pistons | A | B | C | D |
|---|---|---|---|---|
| Identification of oil holes | a | b | c | d |

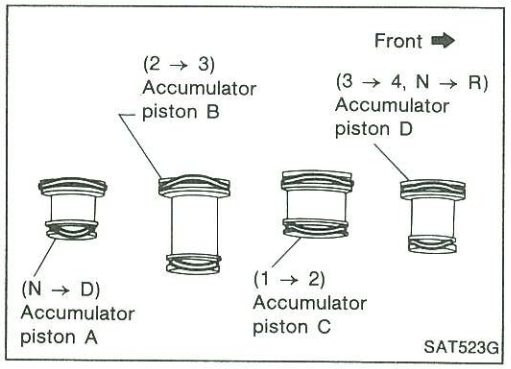


f. Remove O-ring from each piston.

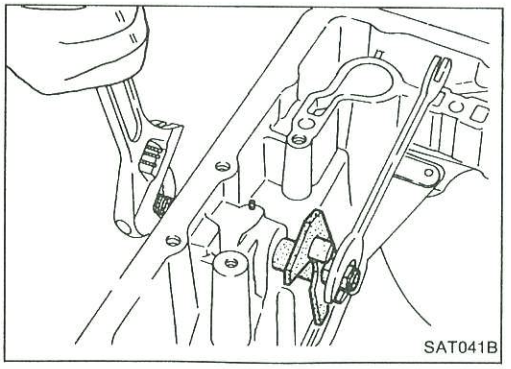


21. Remove manual shaft components, if necessary.
a. Hold width across flats of manual shaft (outside the transmission case) and remove lock nut from shaft.

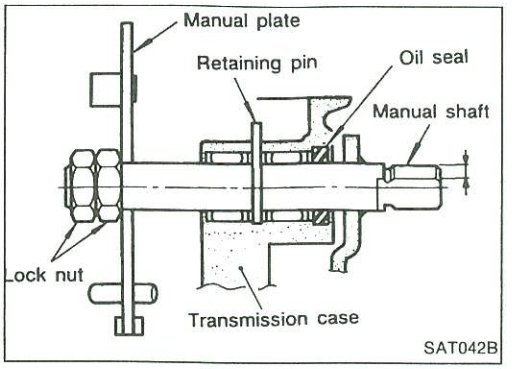


b. Remove retaining pin from transmission case.

## Disassembly (Cont'd)

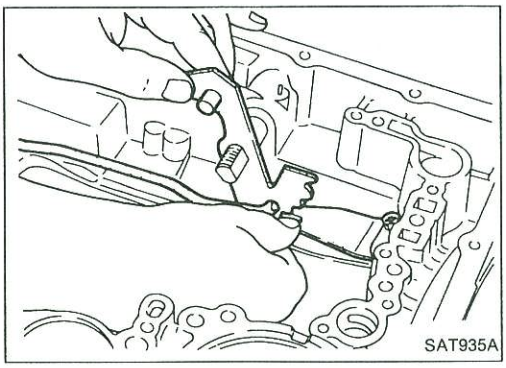


c. While pushing detent spring down, remove manual plate and parking rod from transmission case.

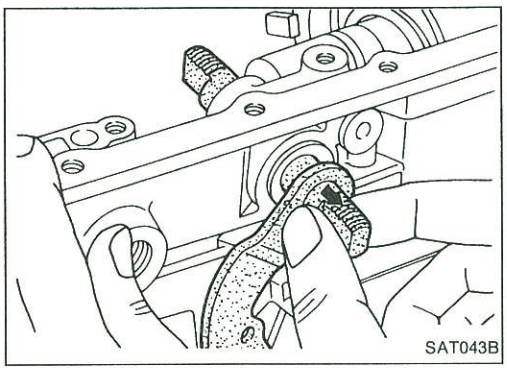


d. Remove manual shaft from transmission case.

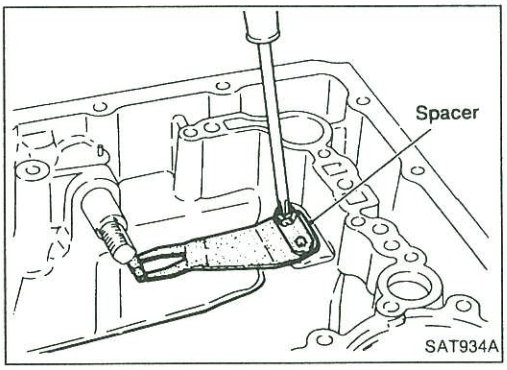


e. Remove spacer and detent spring from transmission case.

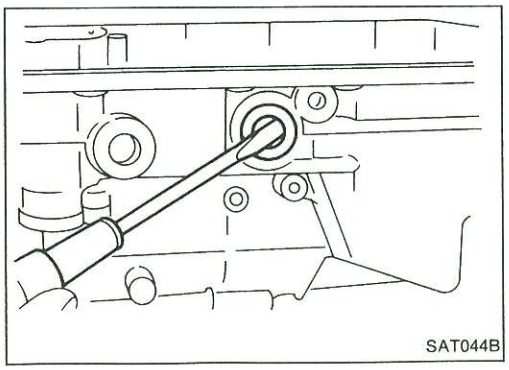


f. Remove oil seal from transmission case.

## Oil Pump

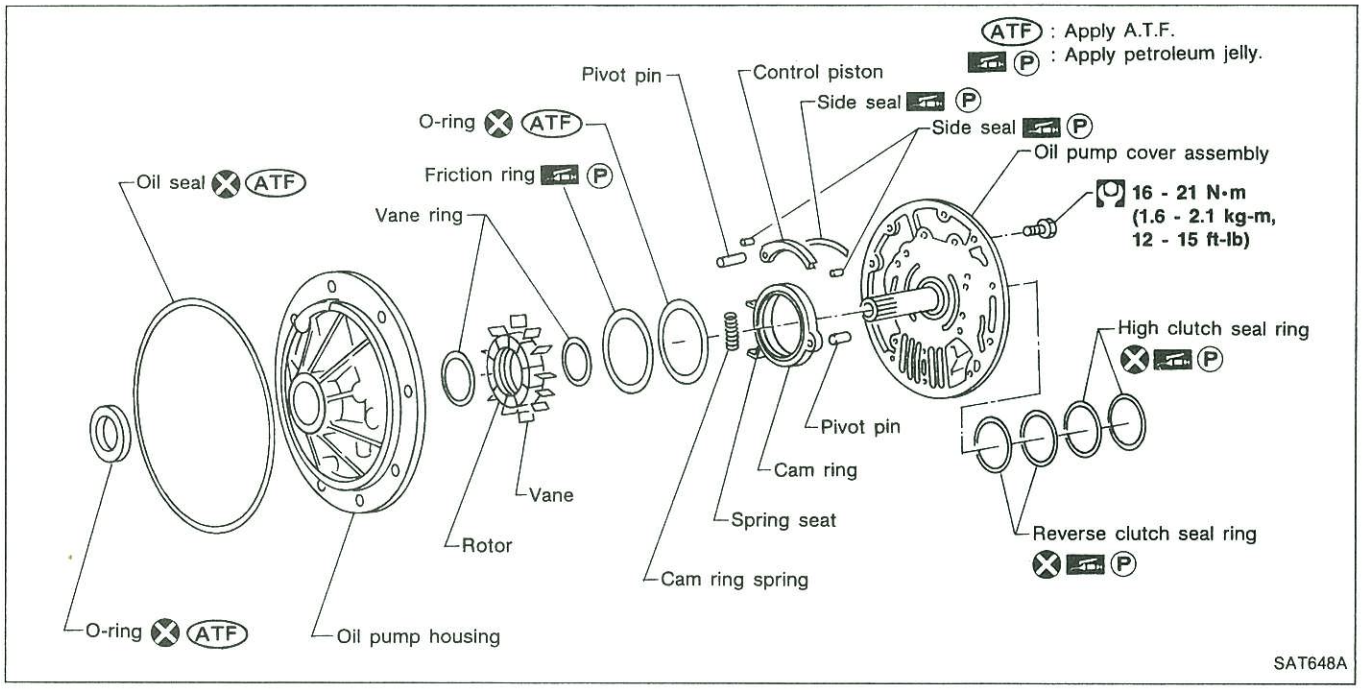


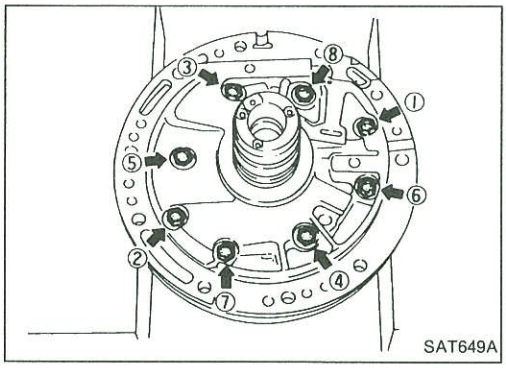


### DISASSEMBLY

1. Loosen bolts in numerical order and remove oil pump cover.

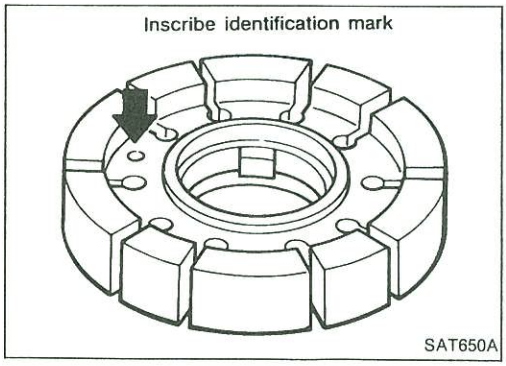


2. Remove rotor, vane rings and vanes.
   - **Inscribe a mark on back of rotor for identification of fore-aft direction when reassembling rotor. Then remove rotor.**

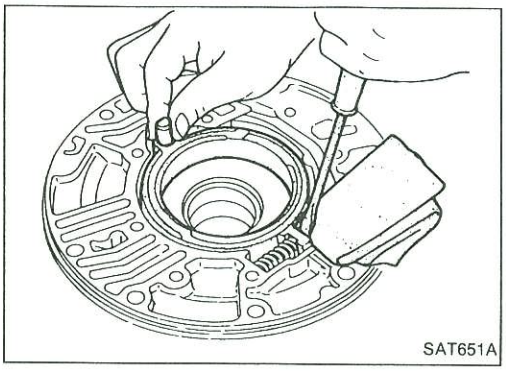


3. While pushing on cam ring remove pivot pin.
   - **Be careful not to scratch oil pump housing.**

## Oil Pump (Cont'd)

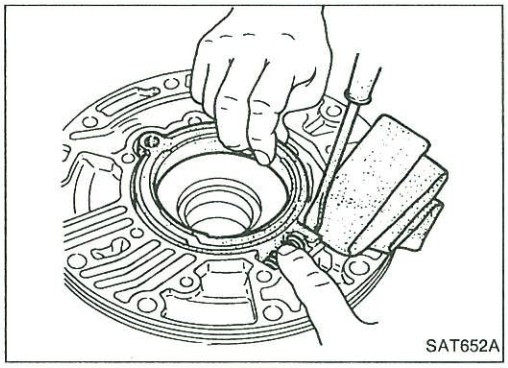
SAT652A

4. While holding cam ring and spring lift out cam ring spring.
- **Be careful not to damage oil pump housing.**
- **Hold cam ring spring to prevent it from jumping.**

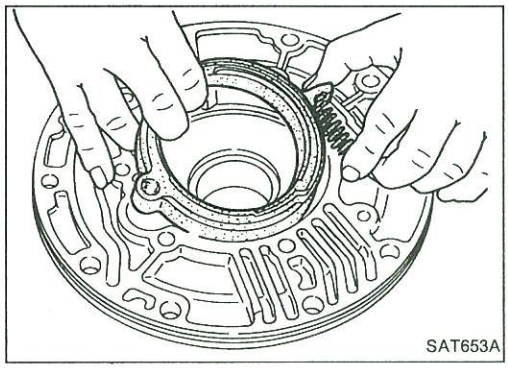
SAT653A

5. Remove cam ring and cam ring spring from oil pump housing.

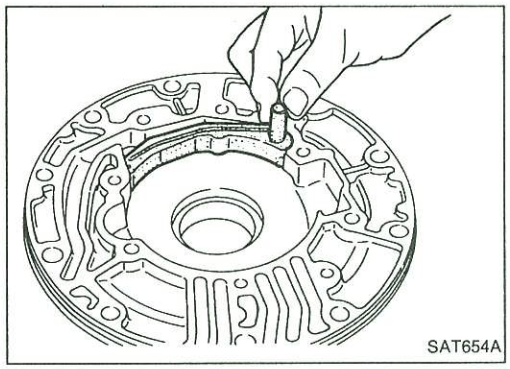
SAT654A

6. Remove pivot pin from control piston and remove control piston assembly.

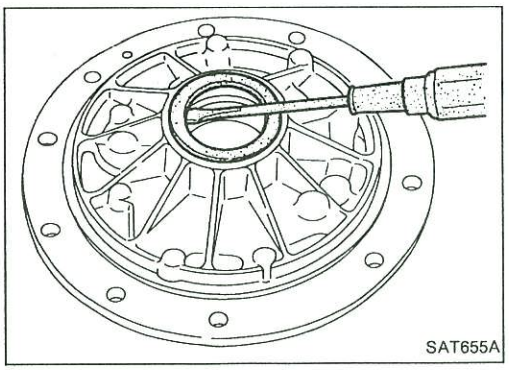
SAT655A

7. Remove oil seal from oil pump housing.
- **Be careful not to scratch oil pump housing.**

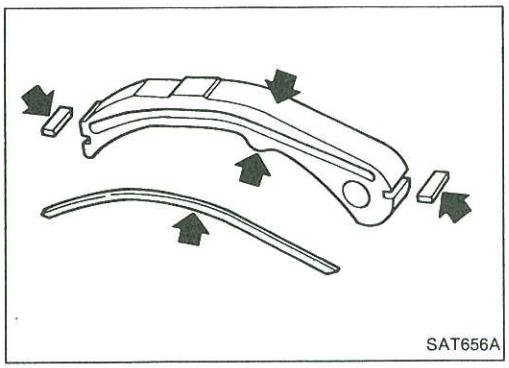
SAT656A

### INSPECTION

**Oil pump cover, rotor, vanes, control piston, side seals, cam ring and friction ring**

- Check for wear or damage.

## Oil Pump (Cont'd)

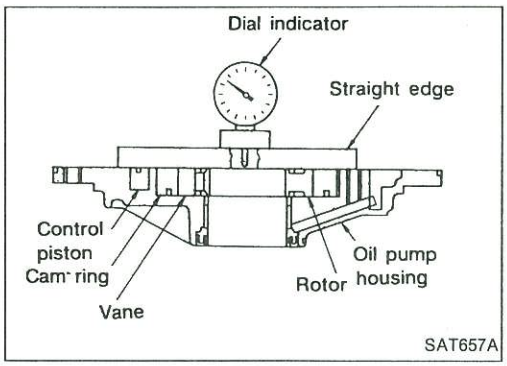


### Side clearances

- Measure side clearances between end of oil pump housing and cam ring, rotor, vanes and control piston in at least four places along their circumferences. Maximum measured values should be within specified positions.
- **Before measuring side clearance, check that friction rings, O-ring, control piston side seals and cam ring spring are removed.**
  **Standard clearance (Cam ring, rotor, vanes and control piston):**
  **Refer to S.D.S.**
- If not within standard clearance, replace oil pump assembly except oil pump cover assembly.

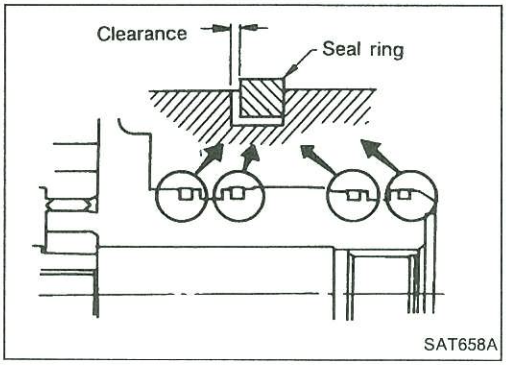


### Seal ring clearance

- Measure clearance between seal ring and ring groove.
  **Standard clearance:**
  **0.10 - 0.25 mm (0.0039 - 0.0098 in)**
  **Wear limit:**
  **0.25 mm (0.0098 in)**
- If not within wear limit, replace oil pump cover assembly.

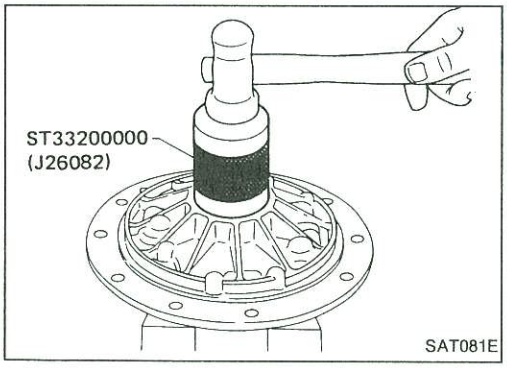


### ASSEMBLY

1. Drive oil seal into oil pump housing.
- **Apply A.T.F. to outer periphery and lip surface.**

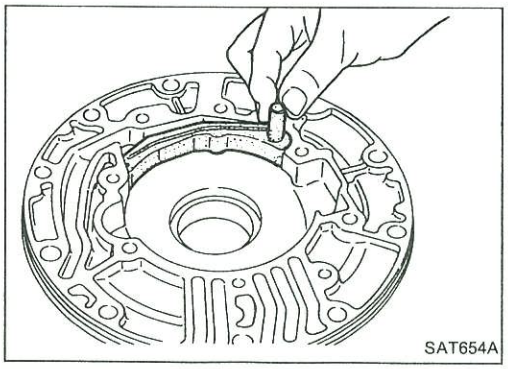


2. Install cam ring in oil pump housing by the following steps.
a. Install side seal on control piston.
- **Pay attention to its direction — Black surface goes toward control piston.**
- **Apply petroleum jelly to side seal.**

b. Install control piston on oil pump.

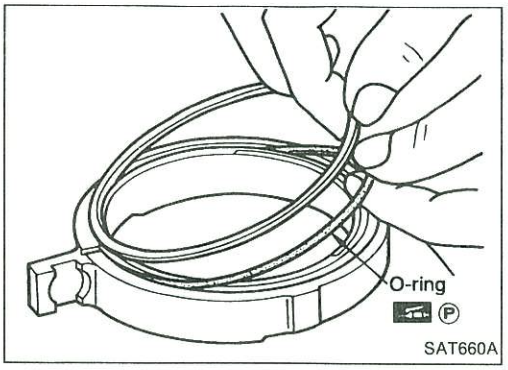


c. Install O-ring and friction ring on cam ring.
- **Apply petroleum jelly to O-ring.**

## Oil Pump (Cont'd)

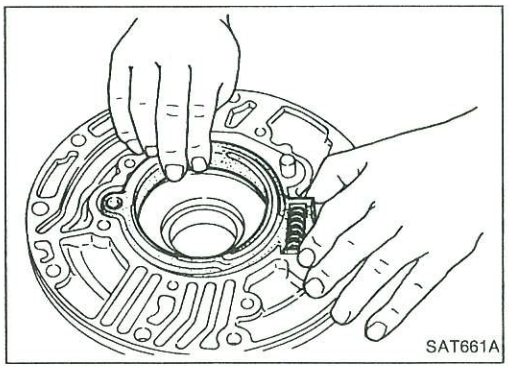
SAT661A

d. Assemble cam ring, cam ring spring and spring seat. Install spring by pushing it against pump housing.

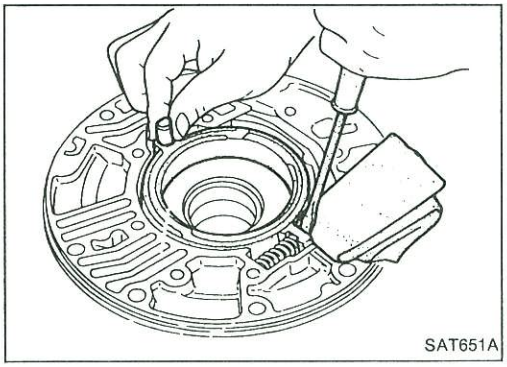
SAT651A

e. While pushing on cam ring install pivot pin.

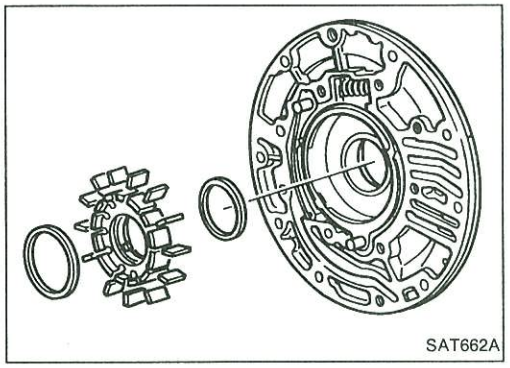
SAT662A

3. Install rotor, vanes and vane rings.

- **Pay attention to direction of rotor.**

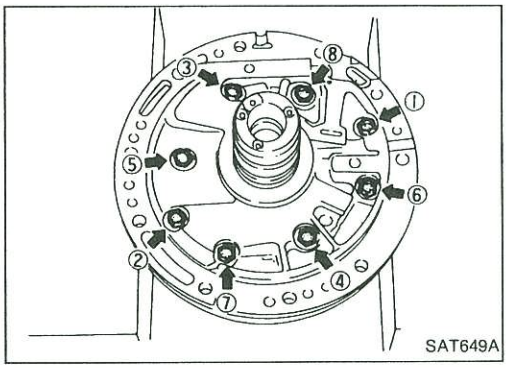

SAT649A

4. Install oil pump housing and oil pump cover.

a. Wrap masking tape around splines of oil pump cover assembly to protect seal. Position oil pump cover assembly in oil pump housing assembly, then remove masking tape.

b. Tighten bolts in a criss-cross pattern.

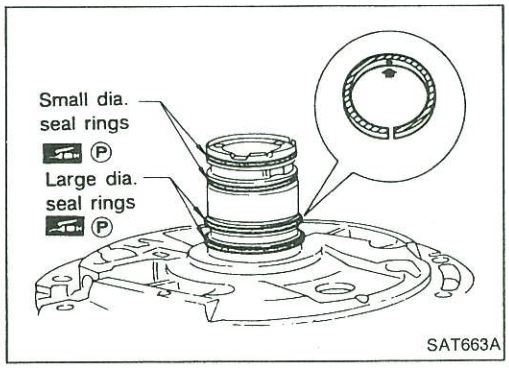

SAT663A

5. Install seal rings carefully after packing ring grooves with petroleum jelly. Press rings down into jelly to a close fit.

- **Seal rings come in two different diameters. Check fit carefully in each groove.**
  - **Small dia. seal ring:**
    - **No mark**
  - **Large dia. seal ring:**
    - **Yellow mark in area shown by arrow**
- **Do not spread gap of seal ring excessively while installing. It may deform ring.**

## Control Valve Assembly

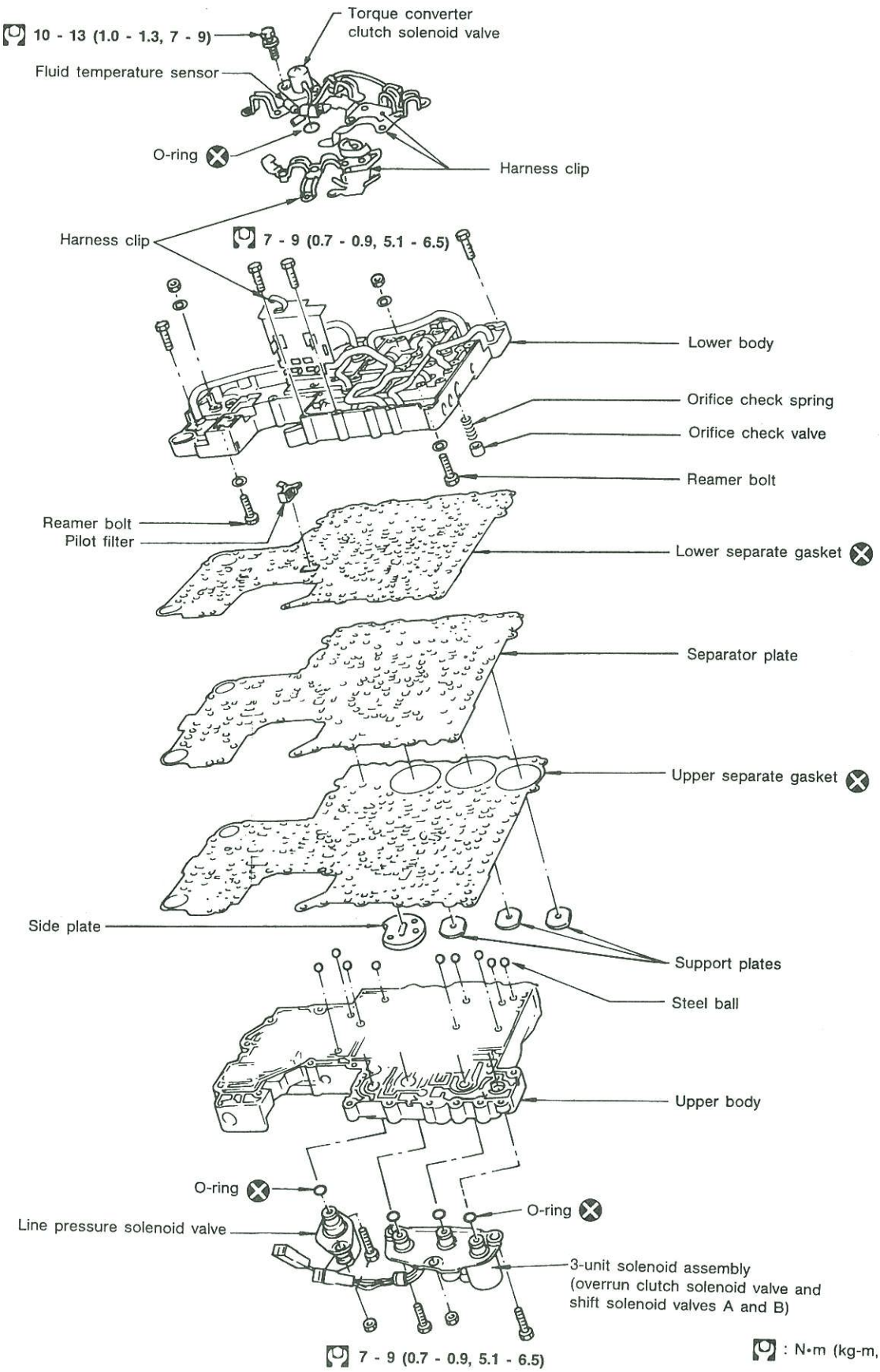


SAT963F

## Control Valve Assembly (Cont'd)

### DISASSEMBLY

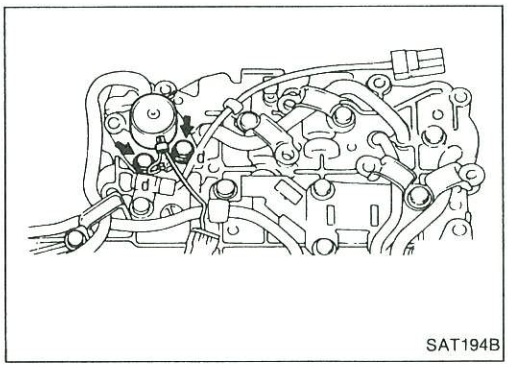
SAT194B

1. Remove solenoids.
a. Remove torque converter clutch solenoid valve and side plate from lower body.
b. Remove O-ring from solenoid.

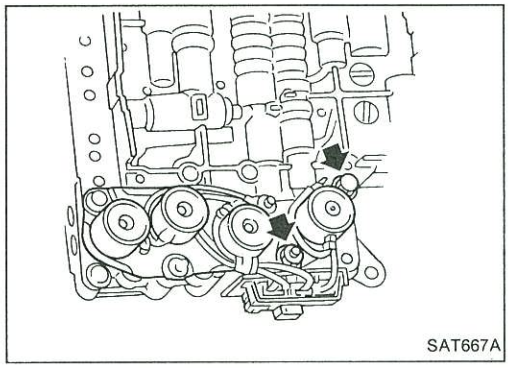
SAT667A

c. Remove line pressure solenoid valve from upper body.
d. Remove O-ring from solenoid.

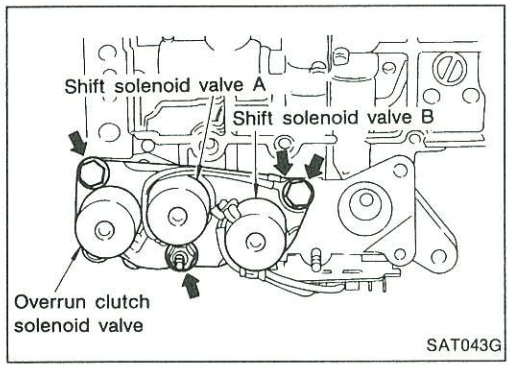

SAT043G

e. Remove 3-unit solenoid assembly from upper body.
f. Remove O-rings from solenoids.

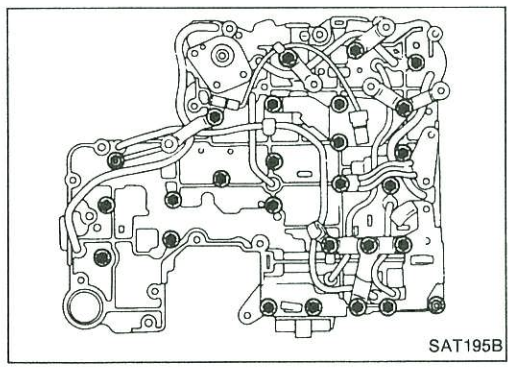
SAT195B

2. Disassemble upper and lower bodies.
a. Place upper body facedown, and remove bolts, reamer bolts and support plates.
b. Remove lower body, separator plate and separate gasket as a unit from upper body.

- **Be careful not to drop pilot filter, orifice check valve, spring and steel balls.**

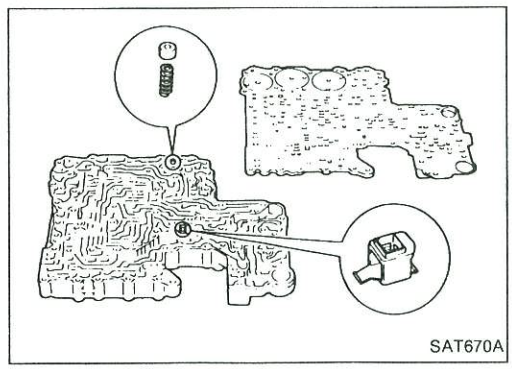
SAT670A

c. Place lower body facedown, and remove separate gasket and separator plate.
d. Remove pilot filter, orifice check valve and orifice check spring.

## Control Valve Assembly (Cont'd)

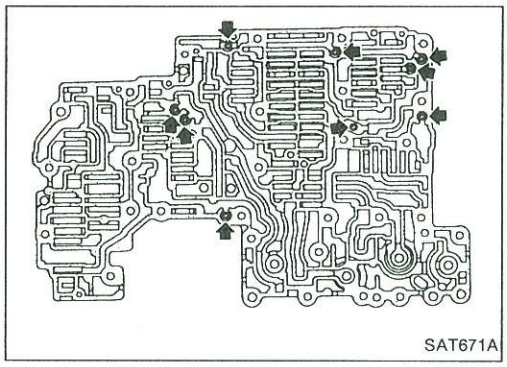
SAT671A

e. Check to see that steel balls are properly positioned in upper body and then remove them from upper body.

### INSPECTION

#### Lower and upper bodies

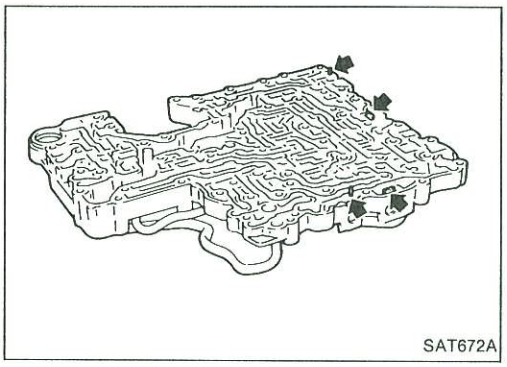
SAT672A

- Check to see that there are pins and retainer plates in lower body.

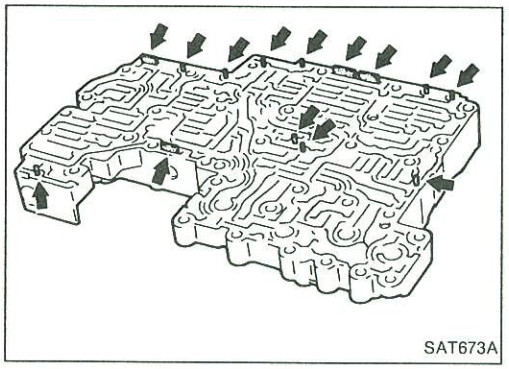
SAT673A

- Check to see that there are pins and retainer plates in upper body.
- **Be careful not to lose these parts.**

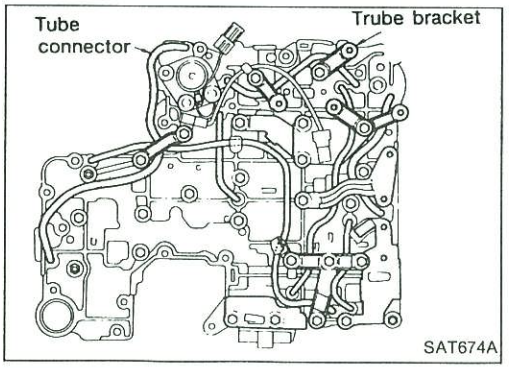

SAT674A

- Check to make sure that oil circuits are clean and free from damage.
- Check tube brackets and tube connectors for damage.

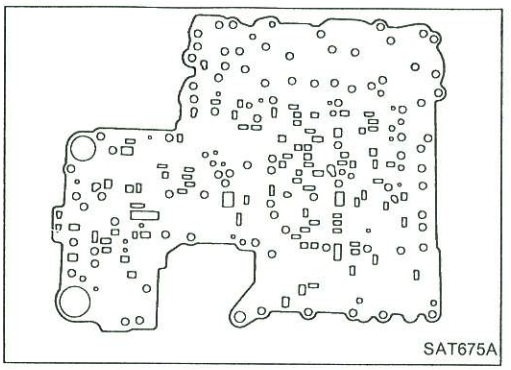
SAT675A

#### Separator plates

- Check to make sure that separator plate is free of damage and not deformed and oil holes are clean.

## Control Valve Assembly (Cont'd)

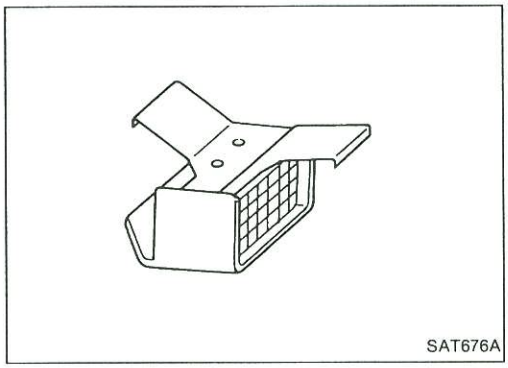
SAT676A

### Pilot filter

- Check to make sure that filter is not clogged or damaged.

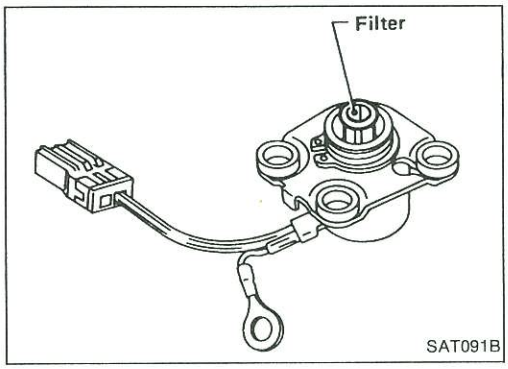

SAT091B

### Torque converter clutch solenoid valve

- Check that filter is not clogged or damaged.
- Measure resistance. — Refer to "Electrical Components Inspection".

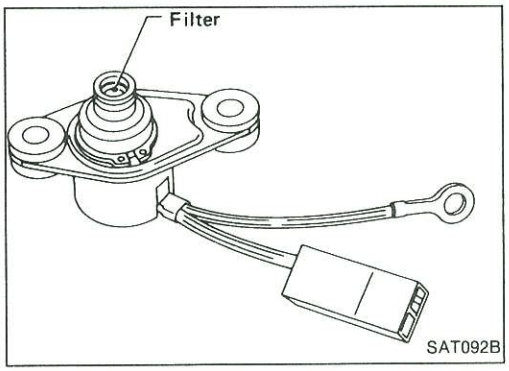

SAT092B

### Line pressure solenoid valve

- Check that filter is not clogged or damaged.
- Measure resistance. — Refer to "Electrical Components Inspection".

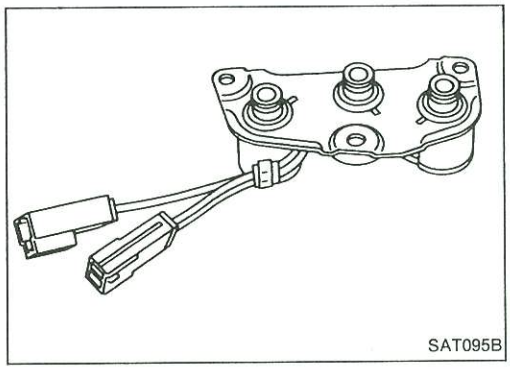
SAT095B

### 3-unit solenoid assembly (Overrun clutch solenoid valve and shift solenoid valves A and B)

- Measure resistance of each solenoid. — Refer to "Electrical Components Inspection".

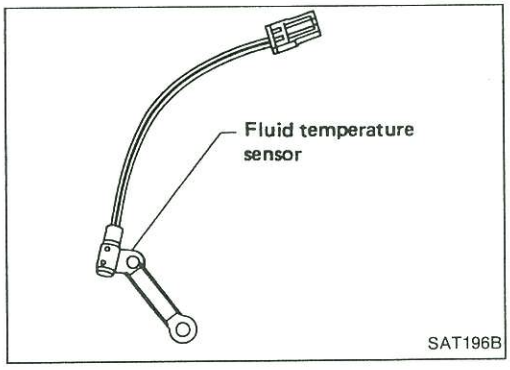

SAT196B

### Fluid temperature sensor

- Measure resistance. — Refer to "Electrical Components Inspection".

## Control Valve Assembly (Cont'd)

### ASSEMBLY

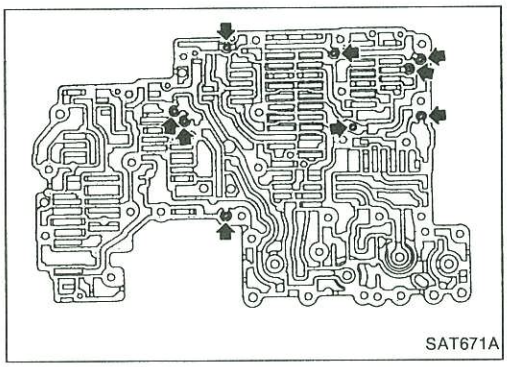
SAT671A

1. Install upper and lower bodies.

a. Place oil circuit of upper body face up. Install steel balls in their proper positions.

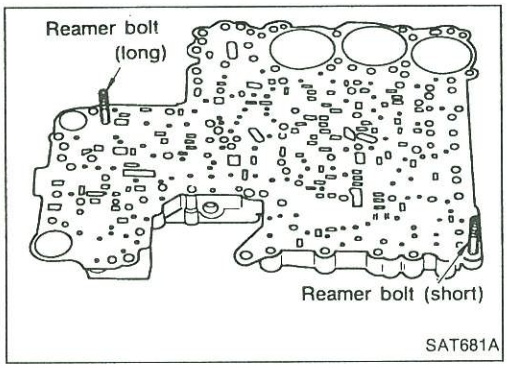

SAT681A

b. Install reamer bolts from bottom of upper body and install separate gaskets.

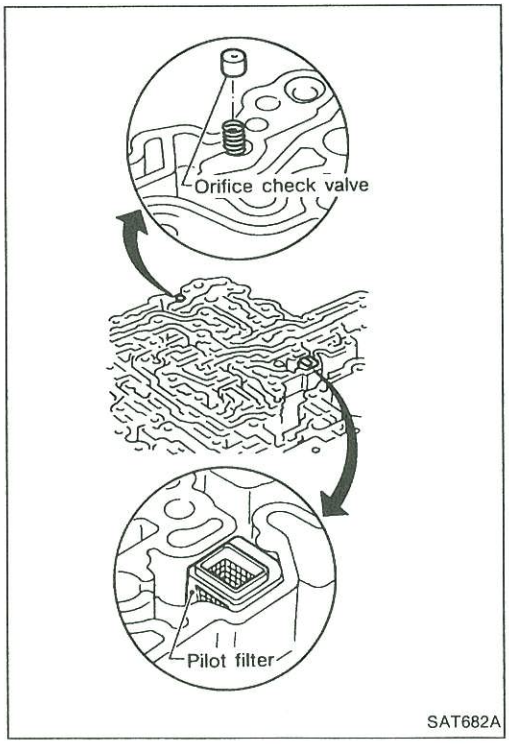

SAT682A

c. Place oil circuit of lower body face up. Install orifice check spring, orifice check valve and pilot filter.

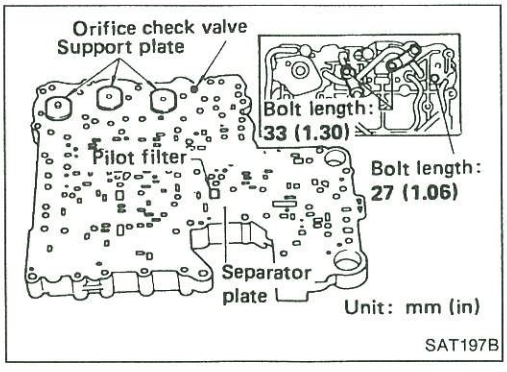

SAT197B

d. Install lower separate gaskets and separator plates on lower body.

e. Install and temporarily tighten support plates, fluid temperature sensor and tube brackets.

## Control Valve Assembly (Cont'd)

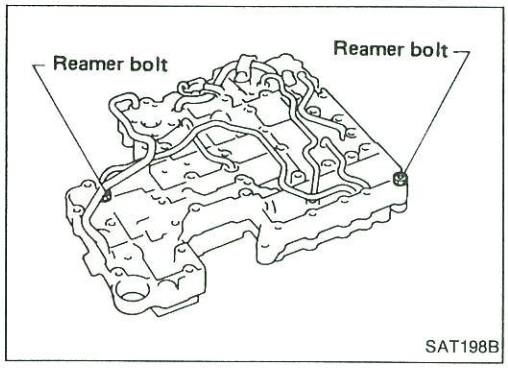

SAT198B

f. Temporarily assemble lower and upper bodies, using reamer bolt as a guide.

- **Be careful not to dislocate or drop steel balls, orifice check spring, orifice check valve and pilot filter.**

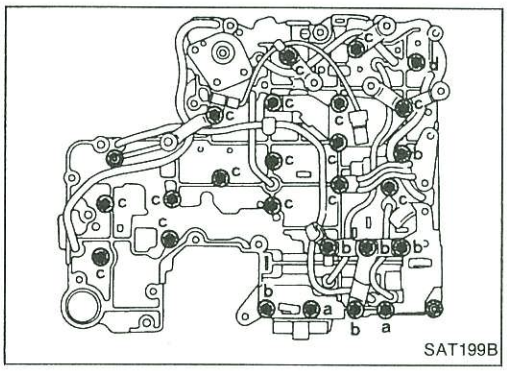
SAT199B

g. Install and temporarily tighten bolts and tube brackets in their proper locations.

**Bolt length and location:**

| Bolt symbol | | a | b | c | d |
|---|---|---|---|---|---|
| Bolt length | mm (in) | 70 (2.76) | 50 (1.97) | 33 (1.30) | 27 (1.06) |

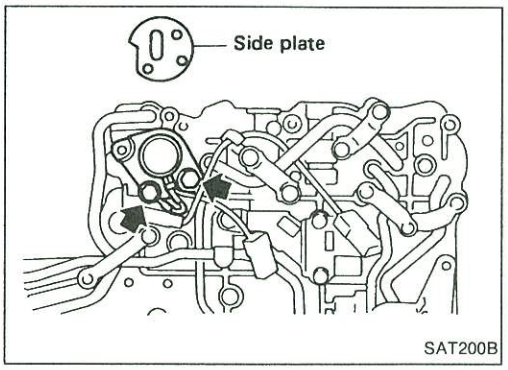

SAT200B

2. Install solenoids.

a. Attach O-ring and install torque converter clutch solenoid valve and side plates onto lower body.

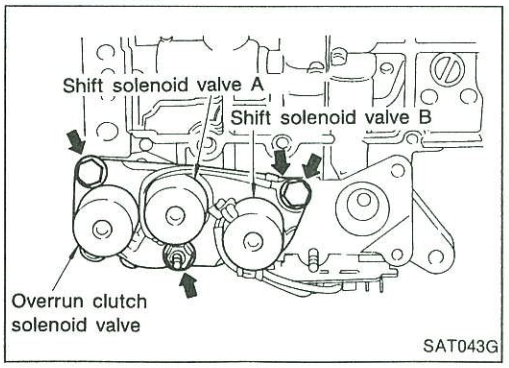

SAT043G

b. Attach O-rings and install 3-unit solenoids assembly onto upper body.

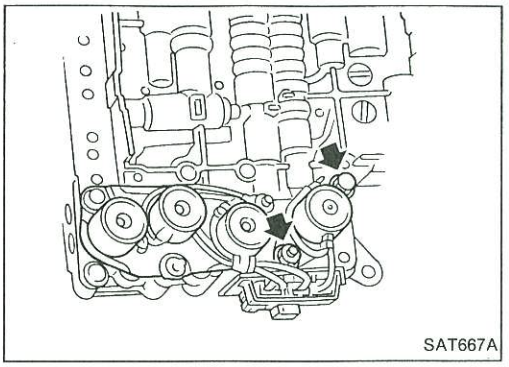
SAT667A

c. Attach O-ring and install line pressure solenoid valve onto upper body.

3. Tighten all bolts.

## Control Valve Upper Body

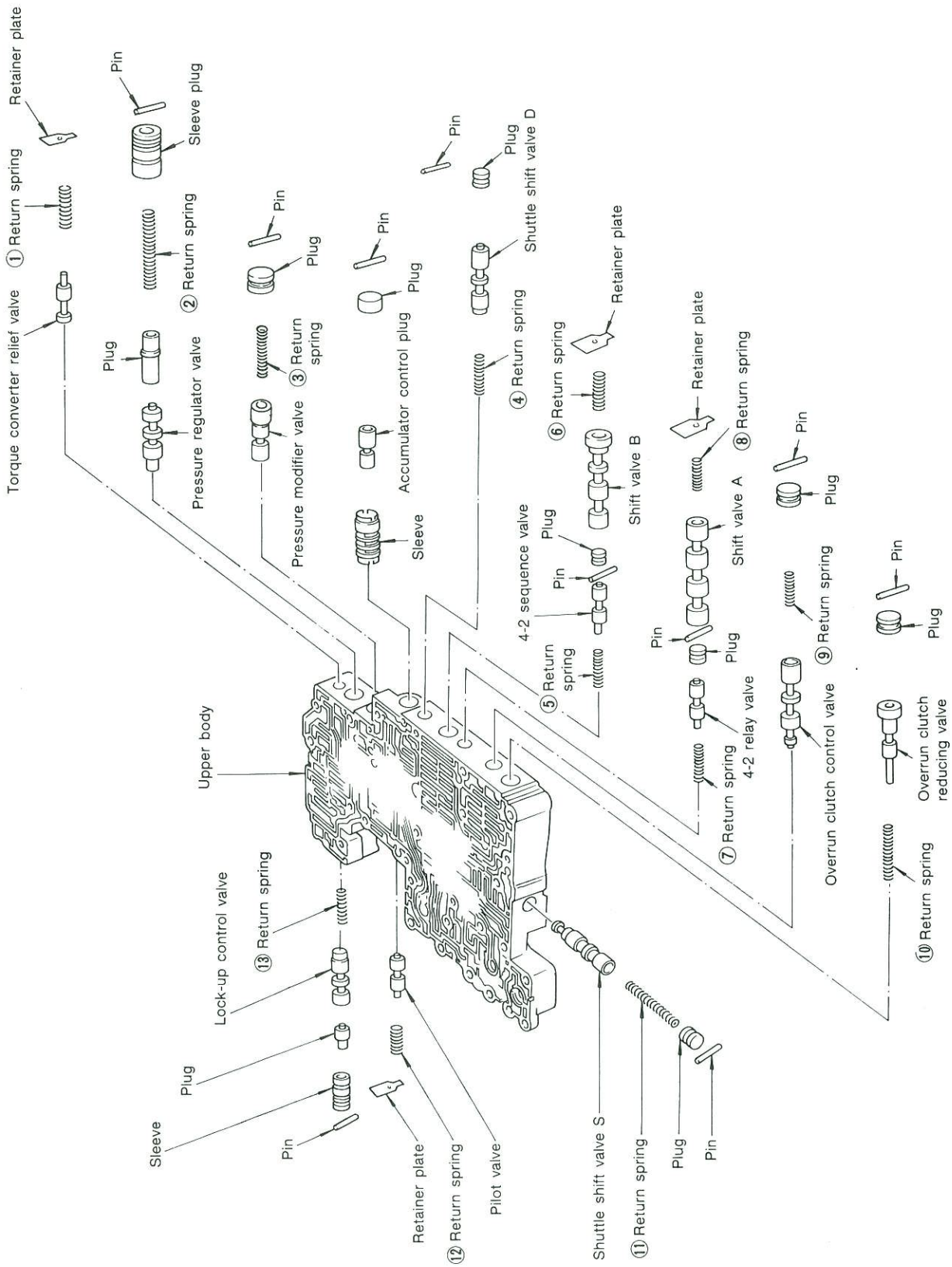


Numbers preceding valve springs correspond with those shown in Spring Chart on page AT-126.

**Apply A.T.F. to all components before their installation.**

SAT837B

## Control Valve Upper Body (Cont'd)

### DISASSEMBLY

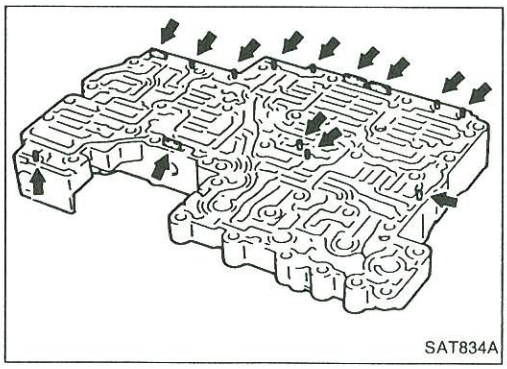
SAT834A

1. Remove valves at parallel pins.

- **Do not use a magnetic hand.**

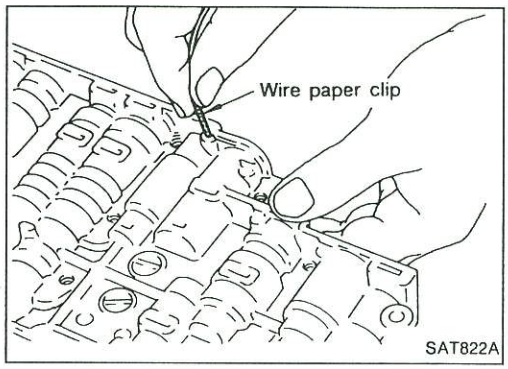

SAT822A

a. Use a wire paper clip to push out parallel pins.

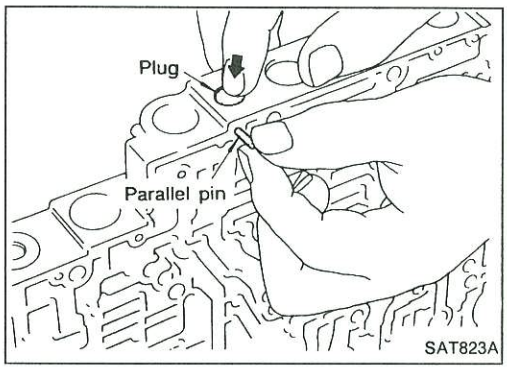

SAT823A

b. Remove parallel pins while pressing their corresponding plugs and sleeves.

- **Remove plug slowly to prevent internal parts from jumping out.**

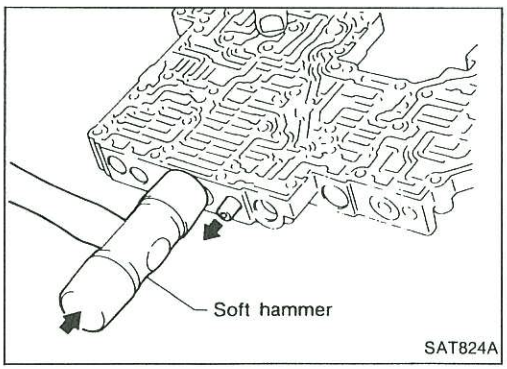

SAT824A

c. Place mating surface of valve facedown, and remove internal parts.

- **If a valve is hard to remove, place valve body facedown and lightly tap it with a soft hammer.**
- **Be careful not to drop or damage valves and sleeves.**

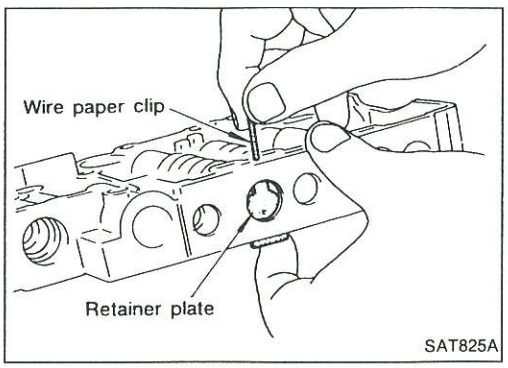

SAT825A

2. Remove valves at retainer plates.

a. Pry out retainer plate with wire paper clip.

## Control Valve Upper Body (Cont'd)

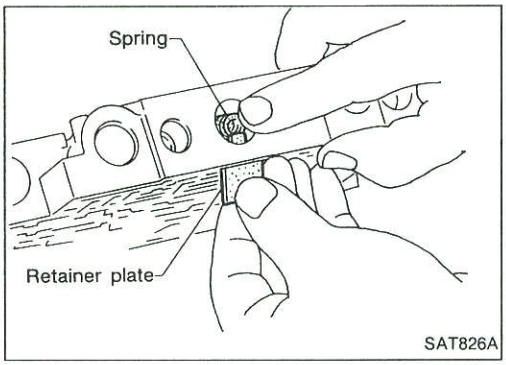


b. Remove retainer plates while holding spring.

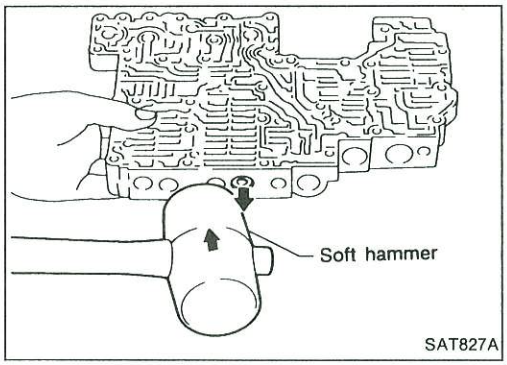


c. Place mating surface of valve facedown, and remove internal parts.

- **If a valve is hard to remove, lightly tap valve body with a soft hammer.**
- **Be careful not to drop or damage valves, sleeves, etc.**

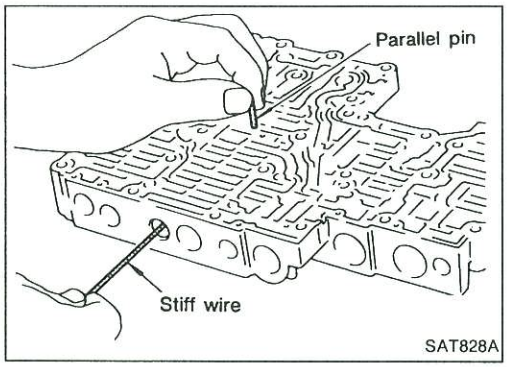


- 4-2 sequence valve and relay valve are located far back in upper body. If they are hard to remove, carefully push them out using stiff wire.
- **Be careful not to scratch sliding surface of valve with wire.**

## Control Valve Upper Body (Cont'd)

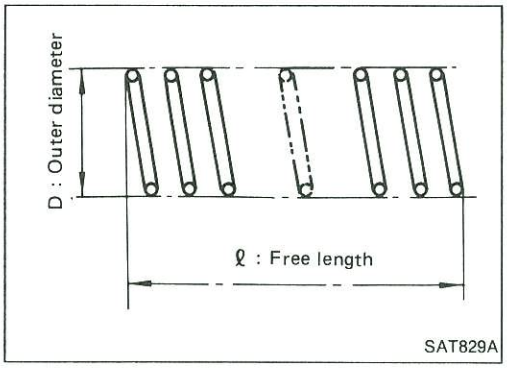


### INSPECTION

#### Valve springs

- Measure free length and outer diameter of each valve spring. Also check for damage or deformation.
- Numbers of each valve spring listed in table below are the same as those in the figure on AT-125.

**Inspection standard**

Unit: mm (in)

| | Parts | Part No. | ℓ | D |
|---|---|---|---|---|
| ① | Torque converter relief valve spring | 31742-41X23 | 38.0 (1.496) | 9.0 (0.354) |
| ② | Pressure regulator valve spring | 31742-41X24 | 44.0 (1.732) | 14.0 (0.551) |
| ③ | Pressure modifier valve spring | 31742-41X19 | 31.95 (1.2579) | 6.8 (0.268) |
| ④ | Shuttle shift valve D spring | 31762-41X00 | 26.5 (1.043) | 6.0 (0.236) |
| ⑤ | 4-2 sequence valve spring | 31756-41X00 | 29.1 (1.146) | 6.95 (0.2736) |
| ⑥ | Shift valve B spring | 31762-41X01 | 25.0 (0.984) | 7.0 (0.276) |
| ⑦ | 4-2 relay valve spring | 31756-41X00 | 29.1 (1.146) | 6.95 (0.2736) |
| ⑧ | Shift valve A spring | 31762-41X01 | 25.0 (0.984) | 7.0 (0.276) |
| ⑨ | Overrun clutch control valve spring | 31762-41X03 | 23.6 (0.929) | 7.0 (0.276) |
| ⑩ | Overrun clutch reducing valve spring | 31742-41X20 | 32.5 (1.280) | 7.0 (0.276) |
| ⑪ | Shuttle shift valve S spring | 31762-41X04 | 51.0 (2.008) | 5.65 (0.2224) |
| ⑫ | Pilot valve spring | 31742-41X13 | 25.7 (1.012) | 9.1 (0.358) |
| ⑬ | Lock-up control valve spring | 31742-41X22 | 18.5 (0.728) | 13.0 (0.512) |

- Replace valve springs if deformed or fatigued.

#### Control valves

- Check sliding surfaces of valves, sleeves and plugs.

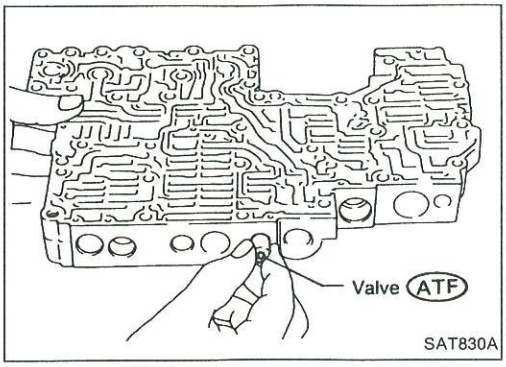


### ASSEMBLY

1. Lubricate the control valve body and all valves with A.T.F. Install control valves by sliding them carefully into their bores.

- **Be careful not to scratch or damage valve body.**

## Control Valve Upper Body (Cont'd)

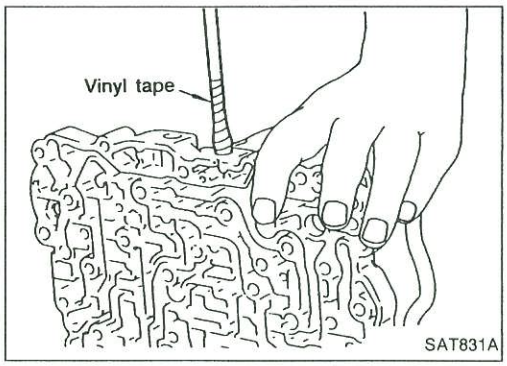


- Wrap a small screwdriver with vinyl tape and use it to insert the valves into proper position.

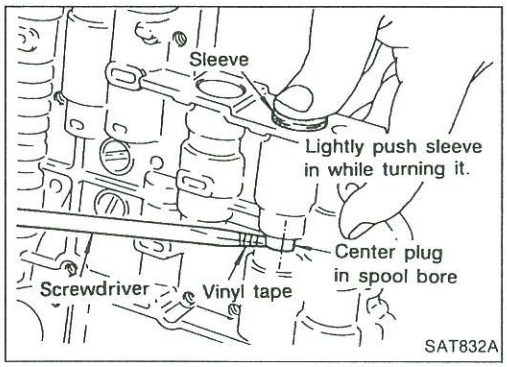


### Pressure regulator valve

- If pressure regulator plug is not centered properly, sleeve cannot be inserted into bore in upper body.
  If this happens, use vinyl tape wrapped screwdriver to center sleeve until it can be inserted.
- Turn sleeve slightly while installing.

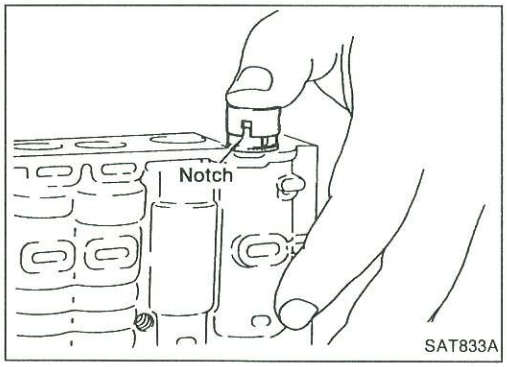


### Accumulator control plug

- Align protrusion of accumulator control sleeve with notch in plug.
- Align parallel pin groove in plug with parallel pin, and install accumulator control valve.

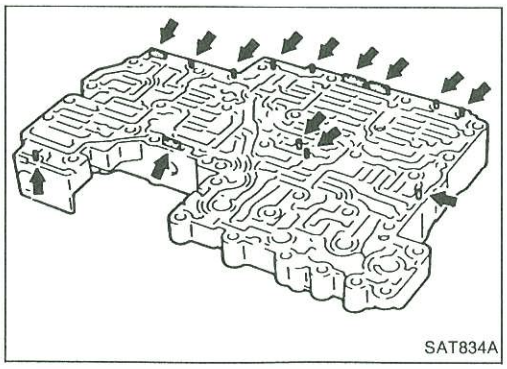


2. Install parallel pins and retainer plates.

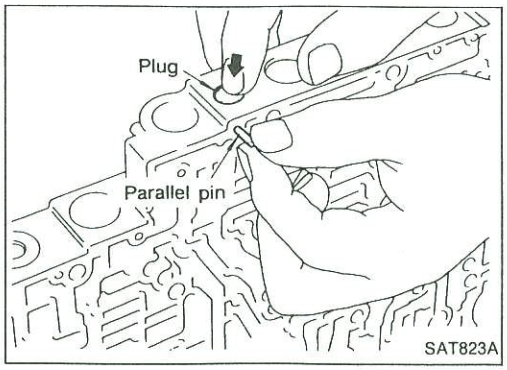


- **While pushing plug, install parallel pin.**

## Control Valve Upper Body (Cont'd)

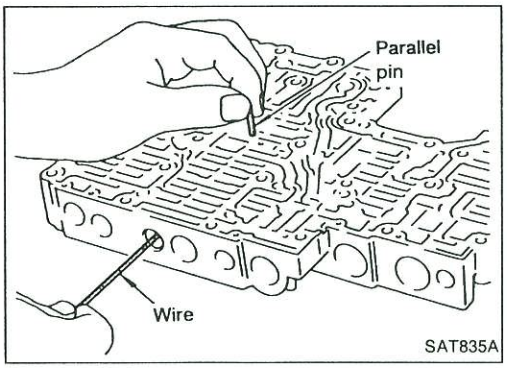


### 4-2 sequence valve and relay valve

- Push 4-2 sequence valve and relay valve with wire wrapped in vinyl tape to prevent scratching valve body. Install parallel pins.

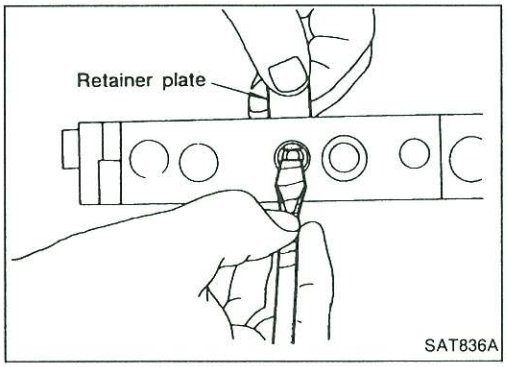


- Insert retainer plate while pushing spring.

## Control Valve Lower Body

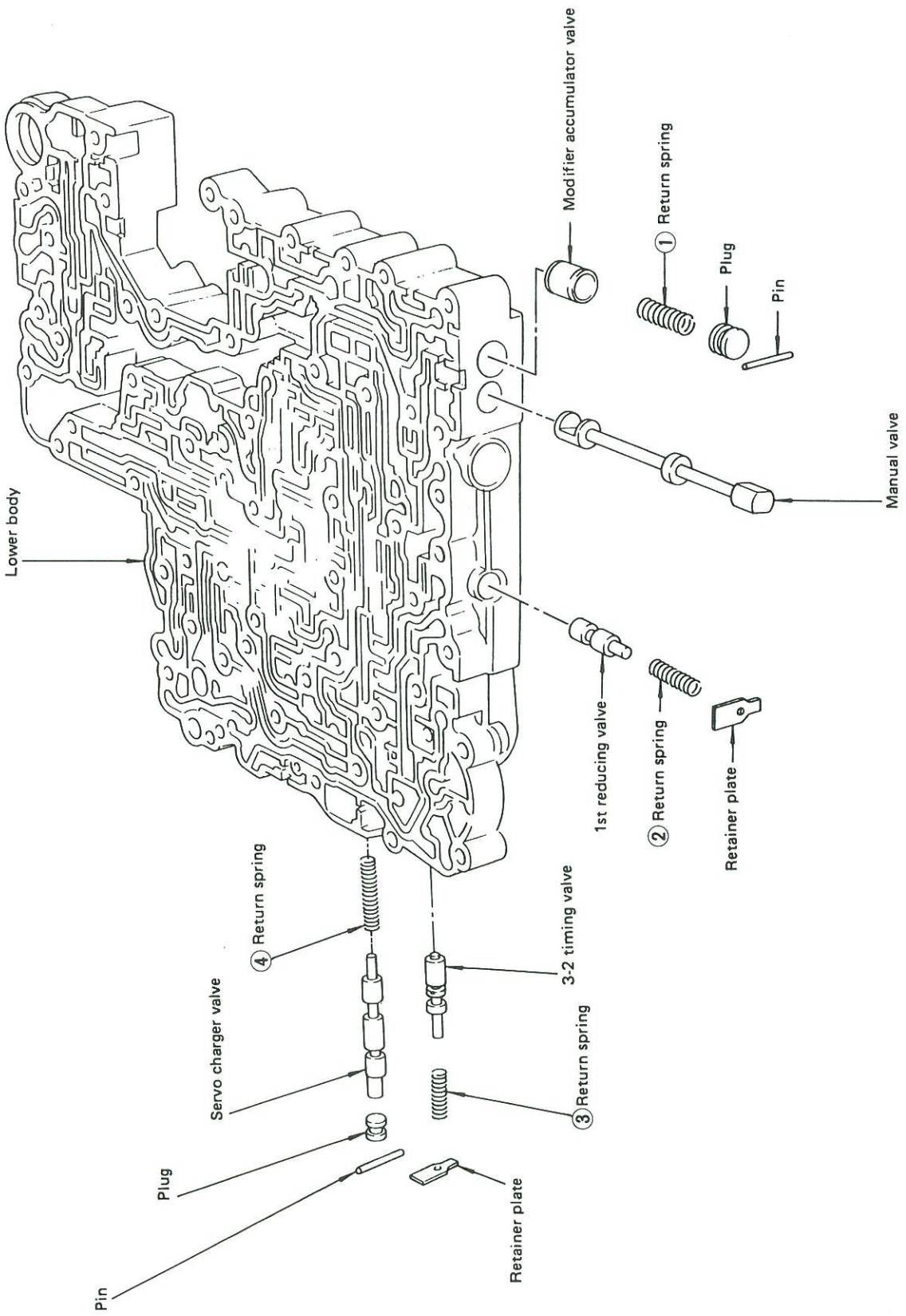


Numbers preceding valve springs correspond with those shown in Spring Chart on next page.

**Apply A.T.F. to all components before their installation.**

SAT740D

## Control Valve Lower Body (Cont'd)

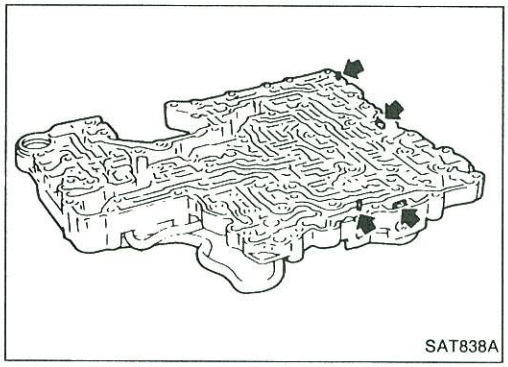
SAT838A

### DISASSEMBLY

1. Remove valves at parallel pins.
2. Remove valves at retainer plates.
   For removal procedures, refer to "DISASSEMBLY" of Control Valve Upper Body.

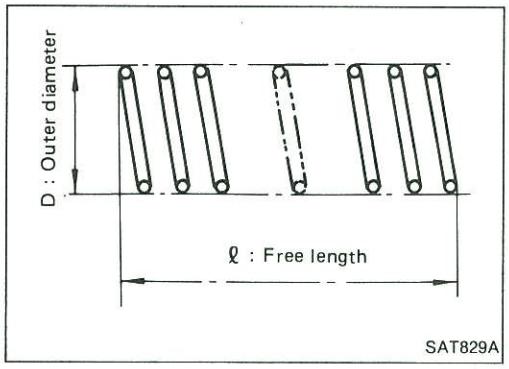

SAT829A

### INSPECTION

#### Valve springs

- Check each valve spring for damage or deformation. Also measure free length and outer diameter.
- Numbers of each valve spring listed in table below are the same as those in the figure on AT-131.

**Inspection standard:**

Unit: mm (in)

| | Parts | Part No. | ℓ | D |
|---|---|---|---|---|
| ① | Modifier accumulator piston spring | 31742-27X70 | 31.4 (1.236) | 9.8 (0.386) |
| ② | 1st reducing valve spring | 31756-41X05 | 25.4 (1.000) | 6.75 (0.2657) |
| ③ | 3-2 timing valve spring | 31742-41X08 | 20.55 (0.8091) | 6.75 (0.2657) |
| ④ | Servo charger valve spring | 31742-41X06 | 23.0 (0.906) | 6.7 (0.264) |

- Replace valve springs if deformed or fatigued.

#### Control valves

- Check sliding surfaces of control valves, sleeves and plugs for damage.

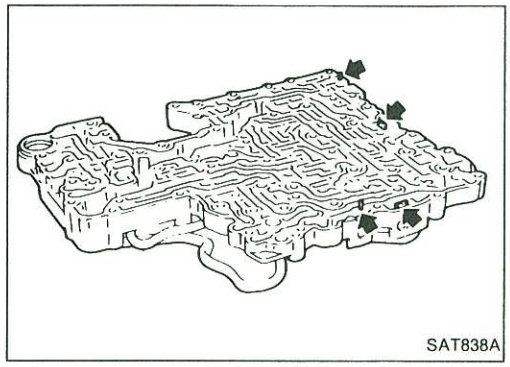
SAT838A

### ASSEMBLY

- Install control valves.
  For installation procedures, refer to "ASSEMBLY" of Control Valve Upper Body.

## Reverse Clutch

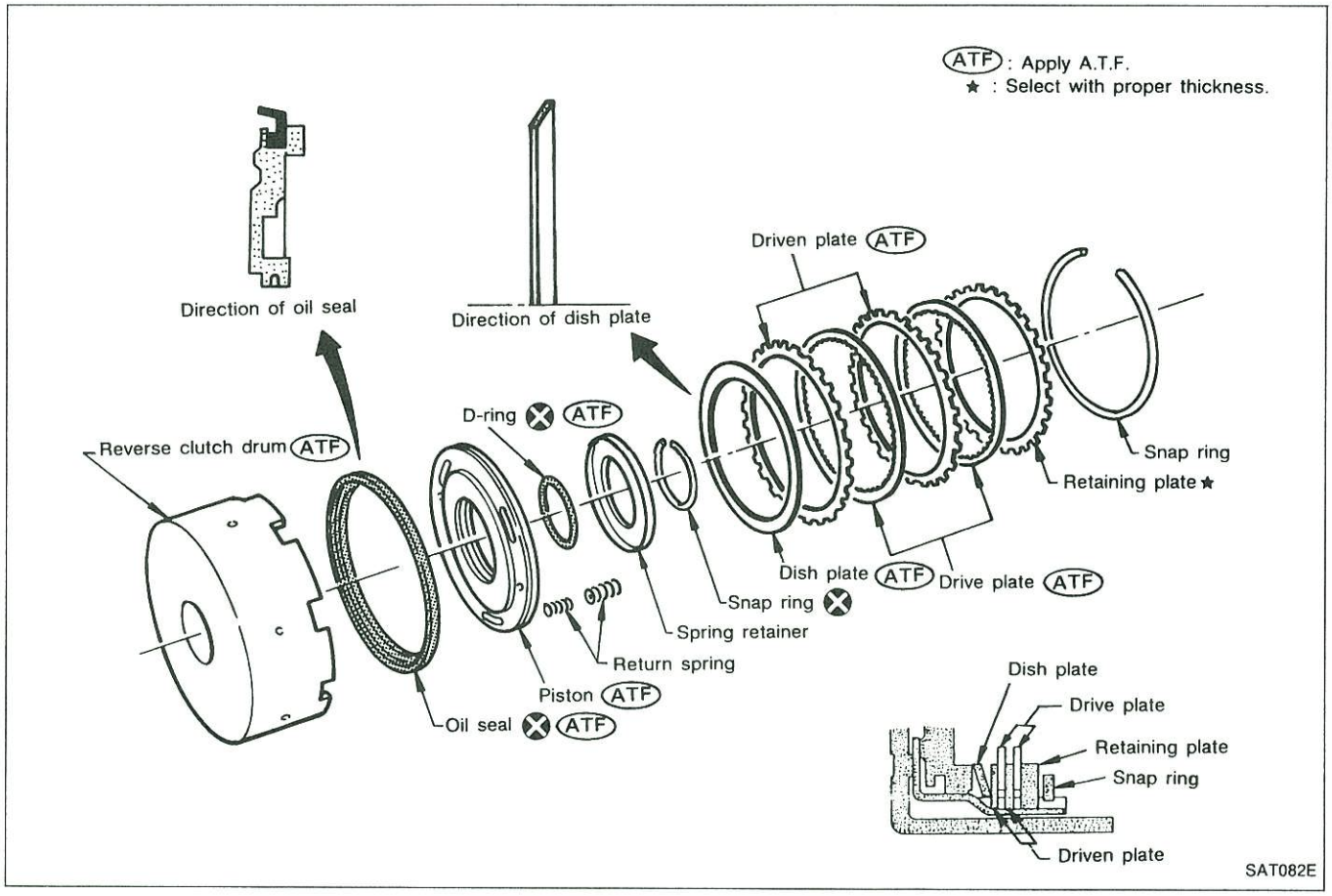


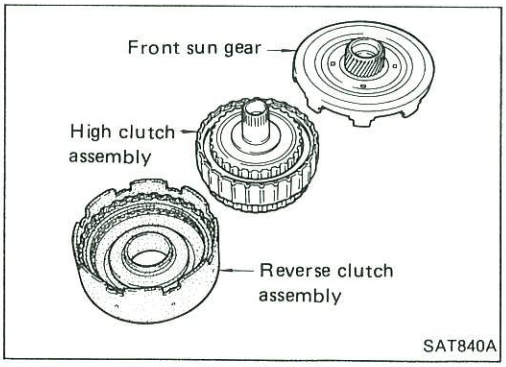


### DISASSEMBLY

1. Remove reverse clutch assembly from clutch pack.

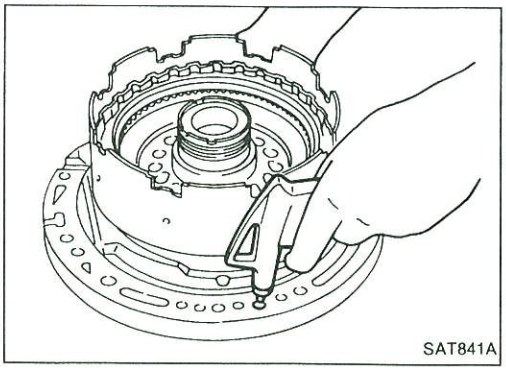


2. Check operation of reverse clutch.
a. Install seal ring onto oil pump cover and install reverse clutch. Apply compressed air to oil hole.
b. Check to see that retaining plate moves to snap ring.
c. If retaining plate does not move to snap ring, D-ring or oil seal may be damaged or fluid may be leaking at piston check ball.

## Reverse Clutch (Cont'd)

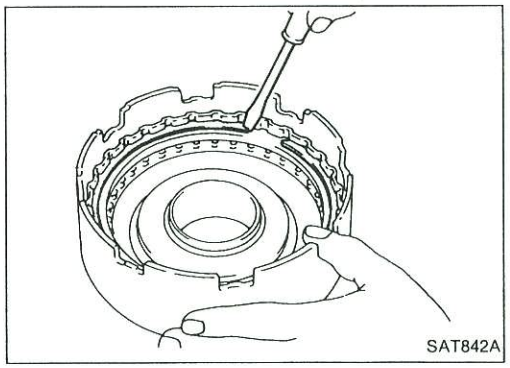
SAT842A

3. Remove drive plates, driven plates, retaining plate, dish plate and snap ring.

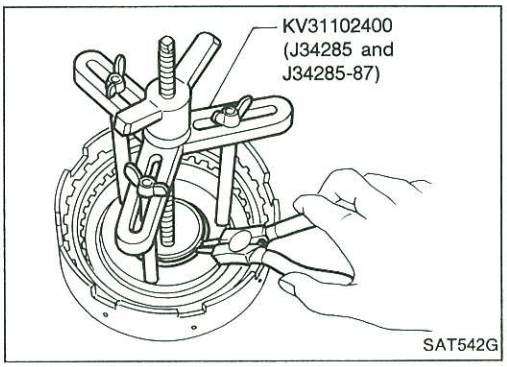

SAT542G

4. Remove snap ring from clutch drum while compressing clutch springs.
- **Do not expand snap ring excessively.**
5. Remove spring retainer and return spring.

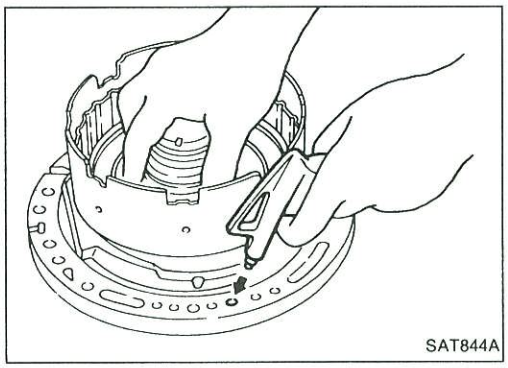
SAT844A

6. Install seal ring onto oil pump cover and install reverse clutch drum. While holding piston, gradually apply compressed air to oil hole until piston is removed.
- **Do not apply compressed air abruptly.**
7. Remove D-ring and oil seal from piston.

### INSPECTION

#### Reverse clutch snap ring and spring retainer

- Check for deformation, fatigue or damage.

#### Reverse clutch return springs

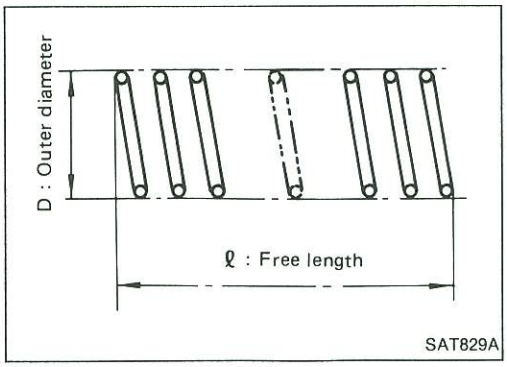

SAT829A

- Check for deformation or damage. Also measure free length and outside diameter.

**Inspection standard:**

Unit: mm (in)

| Parts | Part No. | ℓ | D |
|---|---|---|---|
| Spring | 31505-41X02 | 19.69 (0.7752) | 11.6 (0.457) |

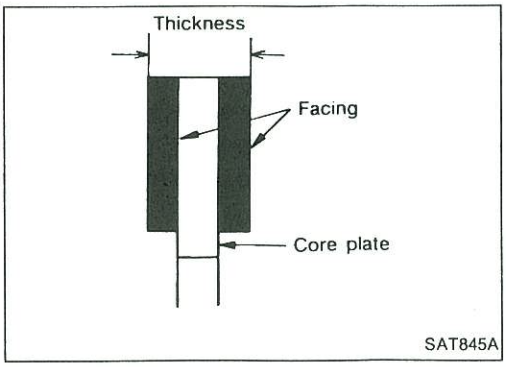

SAT845A

#### Reverse clutch drive plates

- Check facing for burns, cracks or damage.
- Measure thickness of facing.

  **Thickness of drive plate:**

  **Standard value: 2.0 mm (0.079 in)**

  **Wear limit: 1.8 mm (0.071 in)**
- If not within wear limit, replace.

#### Reverse clutch dish plate

- Check for deformation or damage.

## Reverse Clutch (Cont'd)

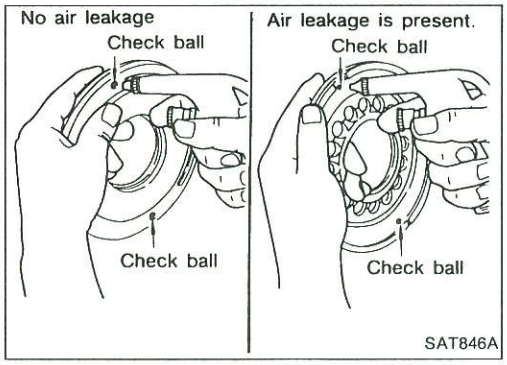


### Reverse clutch piston

- Shake piston to assure that balls are not seized.
- Apply compressed air to check ball oil hole opposite the return spring to assure that there is no air leakage.
- Also apply compressed air to oil hole on return spring side to assure that air leaks past ball.

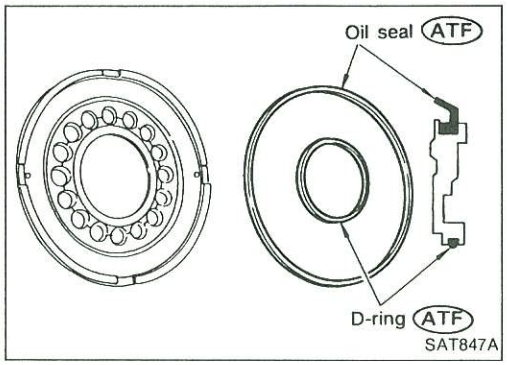


### ASSEMBLY

1. Install D-ring and oil seal on piston.
- **Apply A.T.F. to both parts.**

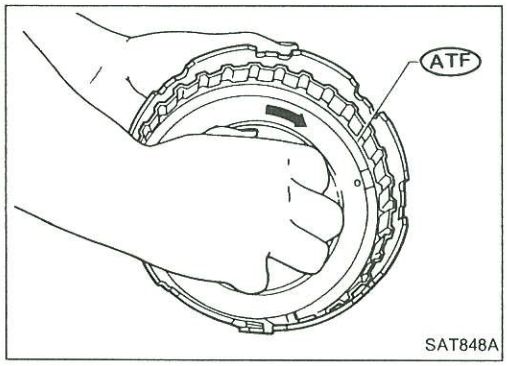


2. Install piston assembly by turning it slowly and evenly.
- **Apply A.T.F. to inner surface of drum.**

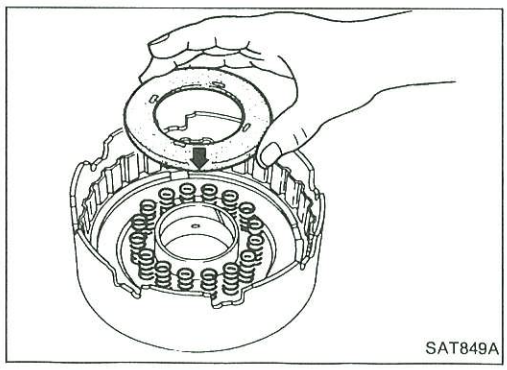


3. Install return springs and spring retainer.

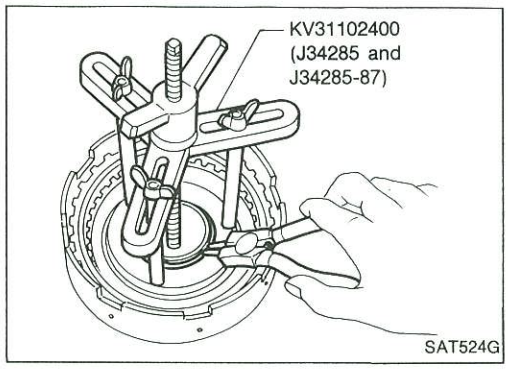


4. Install snap ring while compressing clutch springs.

## Reverse Clutch (Cont'd)

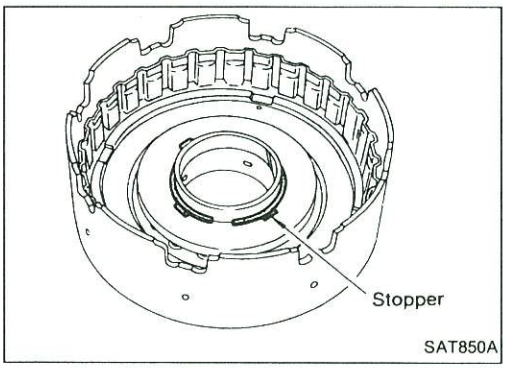


- **Do not align snap ring gap with spring retainer stopper.**

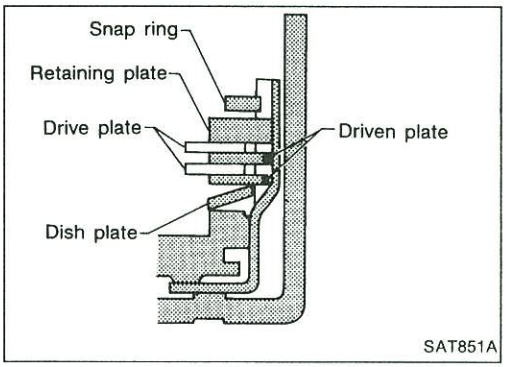


5. Install drive plates, driven plates, retaining plate and dish plate.

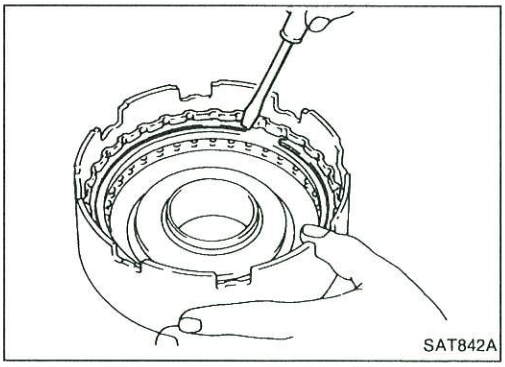


6. Install snap ring.

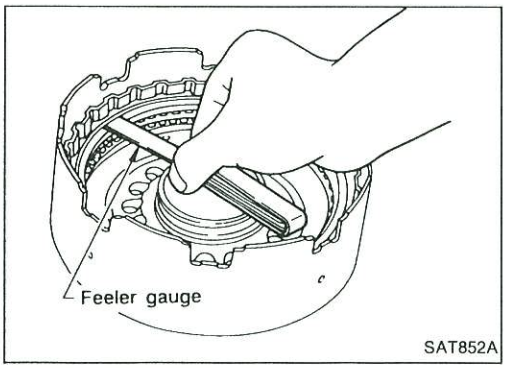


7. Measure clearance between retaining plate and snap ring. If not within allowable limit, select proper retaining plate.
   **Specified clearance:**
   **Standard**
   **0.5 - 0.8 mm (0.020 - 0.031 in)**
   **Allowable limit**
   **1.2 mm (0.047 in)**
   **Retaining plate:**
   **Refer to S.D.S.**

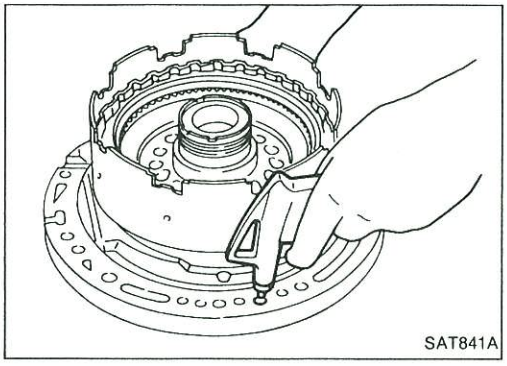


8. Check operation of reverse clutch.
   Refer to "DISASSEMBLY" of Reverse Clutch.

## High Clutch

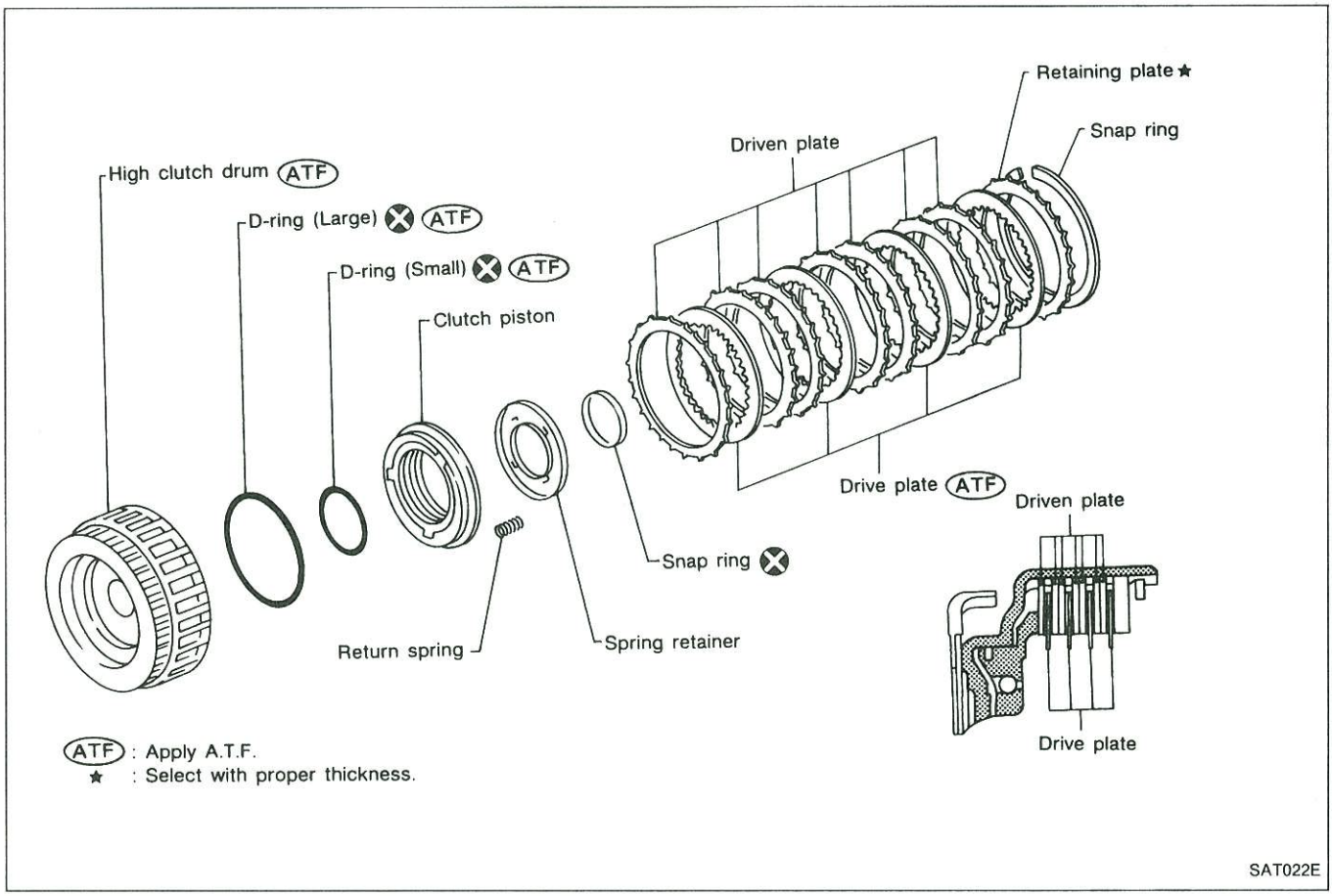


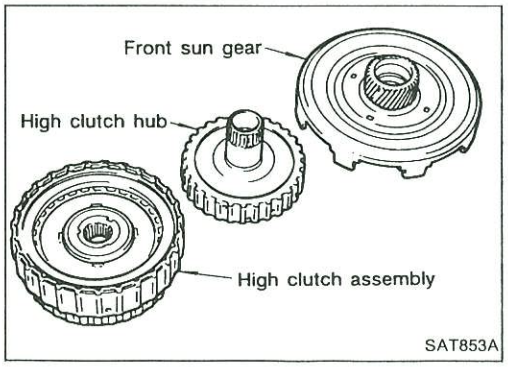


Service procedures for high clutch are essentially the same as those for reverse clutch, with the following exception:

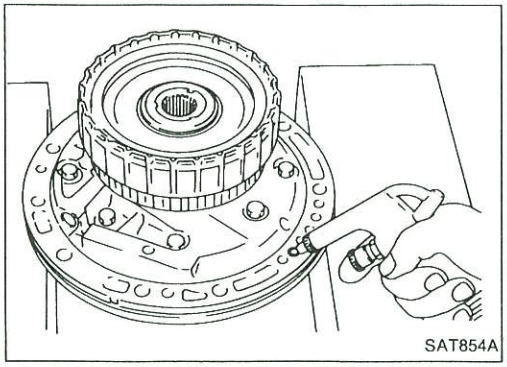


- Check of high clutch operation

## High Clutch (Cont'd)

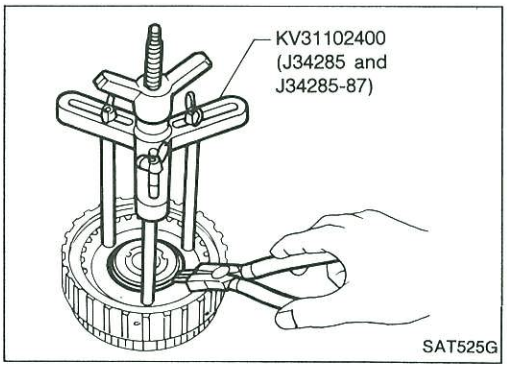


- Removal and installation of return spring

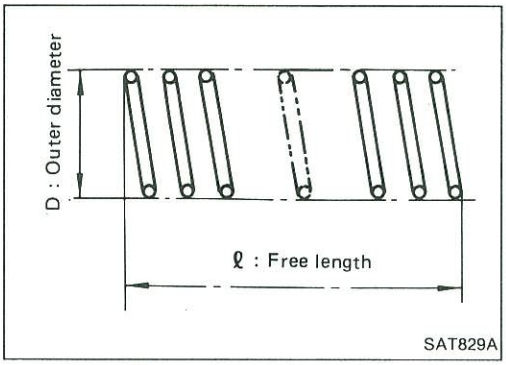


- Inspection of high clutch return springs

**Inspection standard:**

Unit: mm (in)

| Part No. | ℓ | D |
|---|---|---|
| 31505-21X03 | 22.1 (0.870) | 11.6 (0.457) |

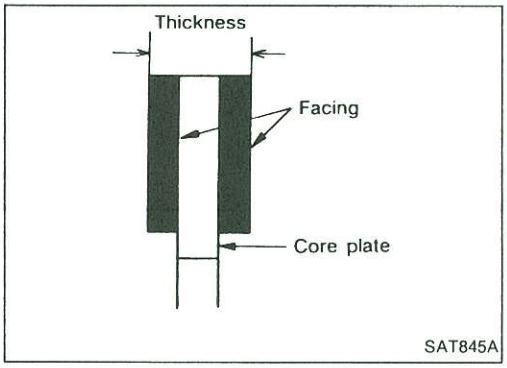


- Inspection of high clutch drive plate
  - **Thickness of drive plate:**
    - **Standard**
      - **1.6 mm (0.063 in)**
    - **Wear limit**
      - **1.4 mm (0.055 in)**

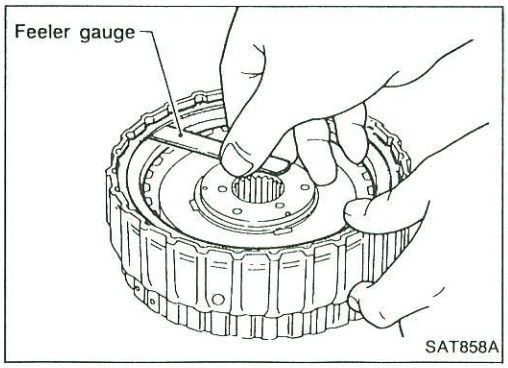


- Measurement of clearance between retaining plate and snap ring
  - **Specified clearance:**
    - **Standard**
      - **1.8 - 2.2 mm (0.071 - 0.087 in)**
    - **Allowable limit**
      - **3.0 mm (0.118 in)**
  - **Retaining plate:**
    - **Refer to S.D.S.**

## Forward and Overrun Clutches

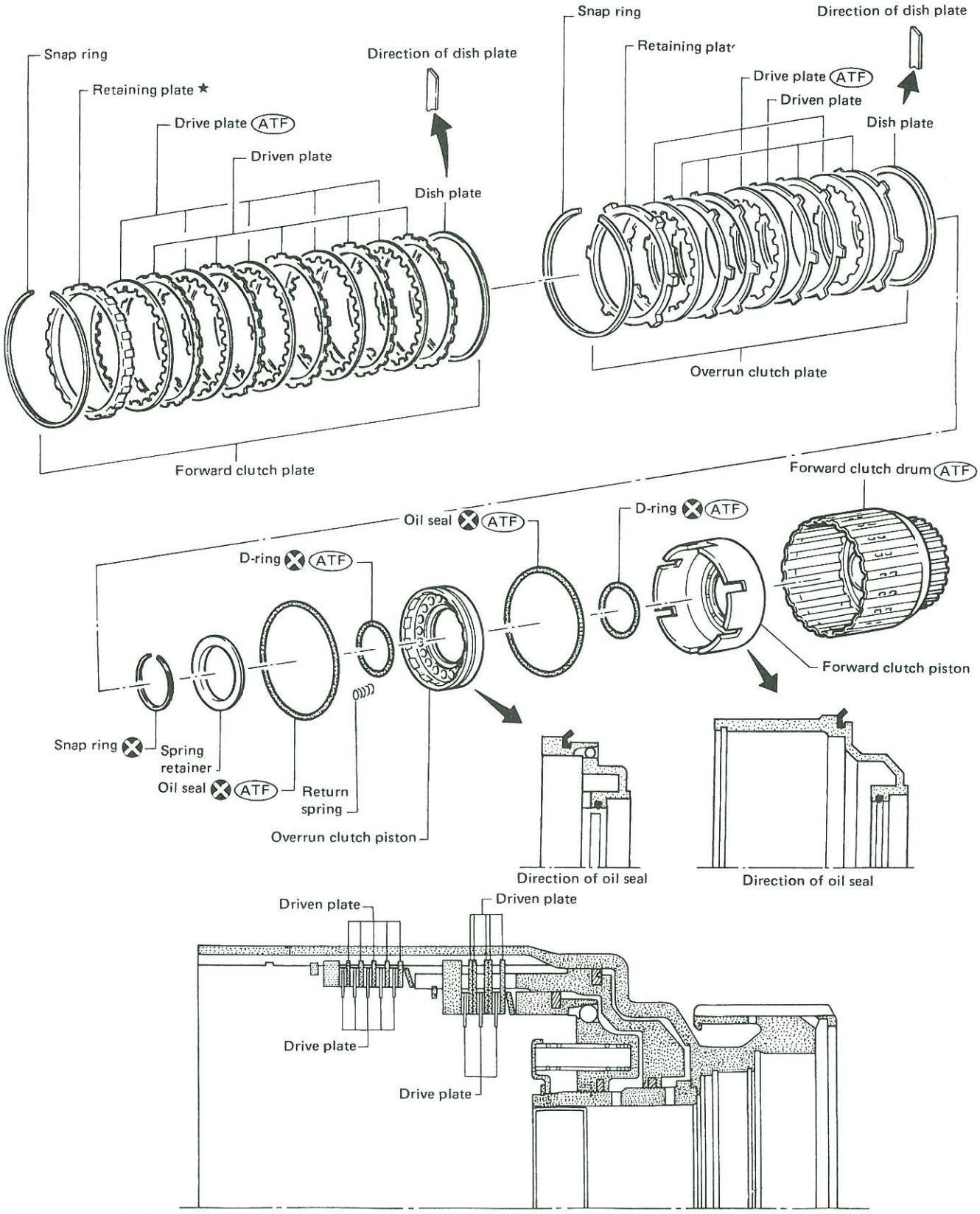


(ATF) : Apply A.T.F.

★ : Select with proper thickness.

SAT083E

## Forward and Overrun Clutches (Cont'd)

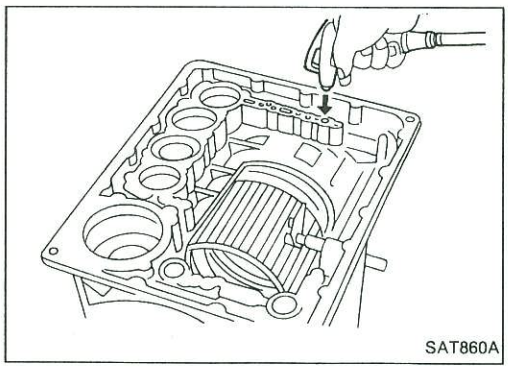
SAT860A

Service procedures for forward and overrun clutches are essentially the same as those for reverse clutch, with the following exception:

- Check of forward clutch operation.

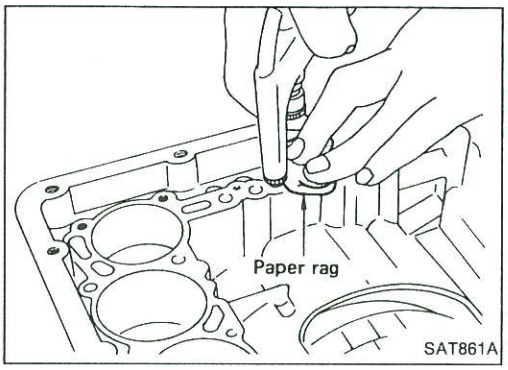

SAT861A

- Check of overrun clutch operation.

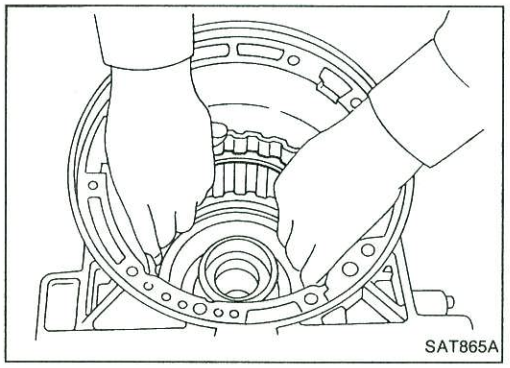
SAT865A

- Removal of forward clutch drum
  Remove forward clutch drum from transmission case by holding snap ring.

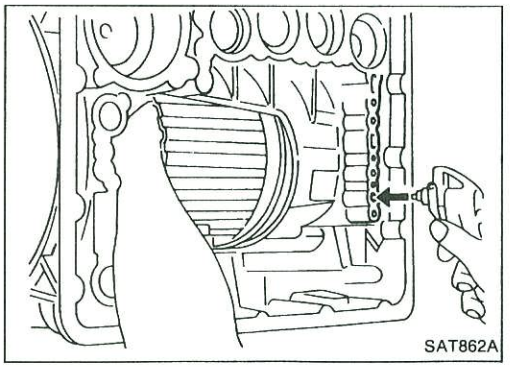
SAT862A

- Removal of forward clutch and overrun clutch pistons

1. While holding overrun clutch piston, gradually apply compressed air to oil hole.

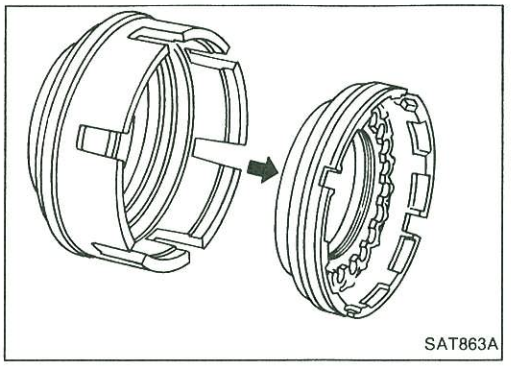
SAT863A

2. Remove overrun clutch from forward clutch.

## Forward and Overrun Clutches (Cont'd)

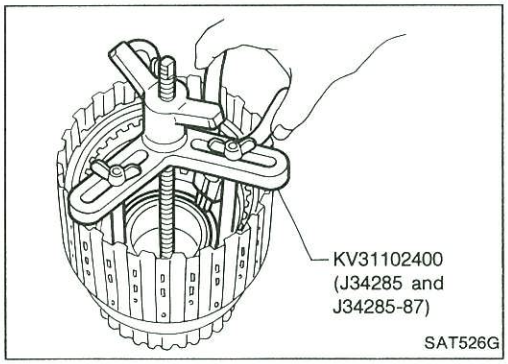


- Removal and installation of return springs

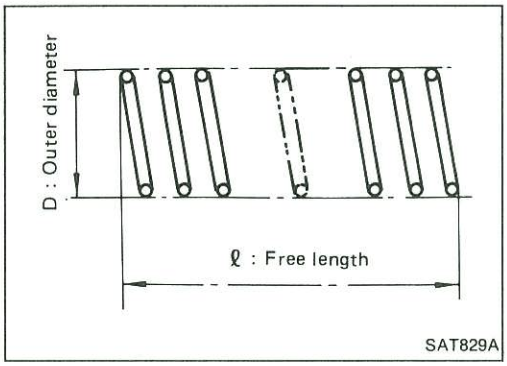


- Inspection of forward clutch and overrun clutch return springs

**Inspection standard:**

Unit: mm (in)

| Part No. | ℓ | D |
|---|---|---|
| 31505-41X01 | 35.77 (1.4083) | 9.7 (0.382) |

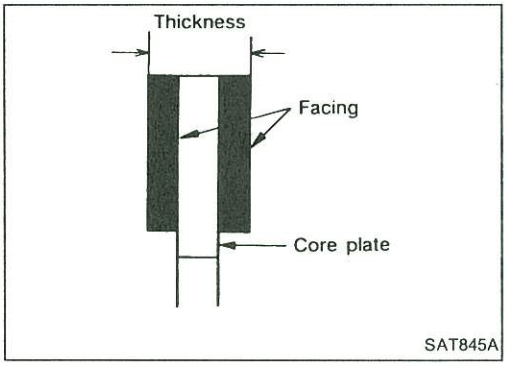


- Inspection of forward clutch drive plates
  - **Thickness of drive plate:**
    - **Standard**
      - **2.0 mm (0.079 in)**
    - **Wear limit**
      - **1.8 mm (0.071 in)**

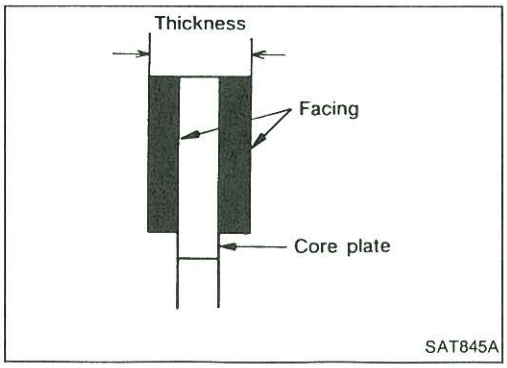


- Inspection of overrun clutch drive plates
  - **Thickness of drive plate:**
    - **Standard**
      - **2.0 mm (0.079 in)**
    - **Wear limit**
      - **1.8 mm (0.071 in)**

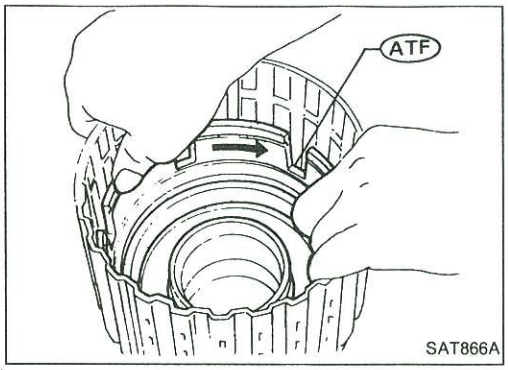


- Installation of forward clutch piston and overrun clutch piston

1. Install forward clutch piston by turning it slowly and evenly.

- **Apply A.T.F. to inner surface of clutch drum.**

## Forward and Overrun Clutches (Cont'd)

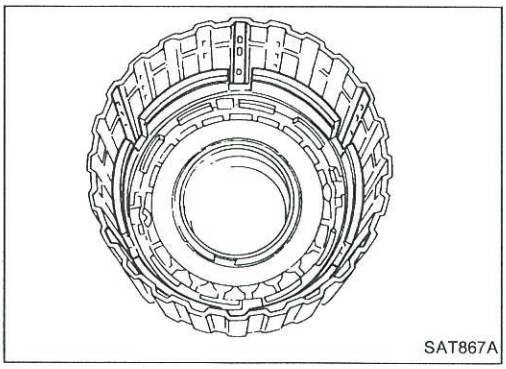
SAT867A

- **Align notch in forward clutch piston with groove in forward clutch drum.**

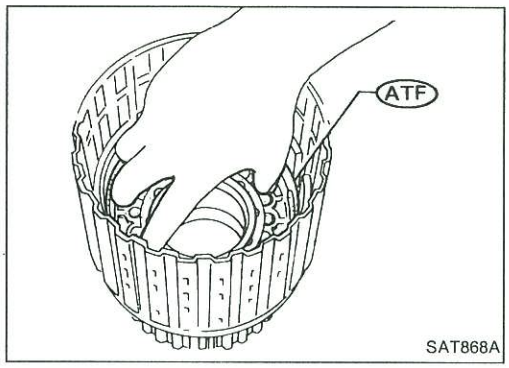

SAT868A

2. Install overrun clutch by turning it slowly and evenly.
- **Apply A.T.F. to inner surface of forward clutch piston.**

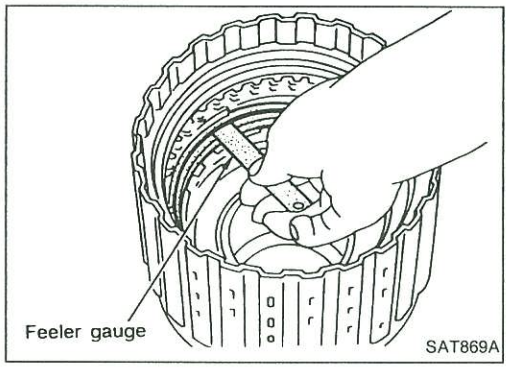

SAT869A

- Measurement of clearance between retaining plate and snap ring of overrun clutch
  **Specified clearance:**
  **Standard**
  **1.0 - 1.4 mm (0.039 - 0.055 in)**
  **Allowable limit**
  **2.0 mm (0.079 in)**
  **Retaining plate:**
  **Refer to S.D.S.**

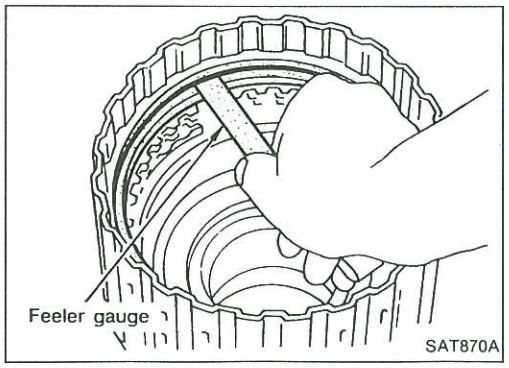

SAT870A

- Measurement of clearance between retaining plate and snap ring of forward clutch
  **Specified clearance:**
  **Standard**
  **0.45 - 0.85 mm (0.0177 - 0.0335 in)**
  **Allowable limit**
  **1.85 mm (0.0728 in)**
  **Retaining plate:**
  **Refer to S.D.S.**

## Low & Reverse Brake

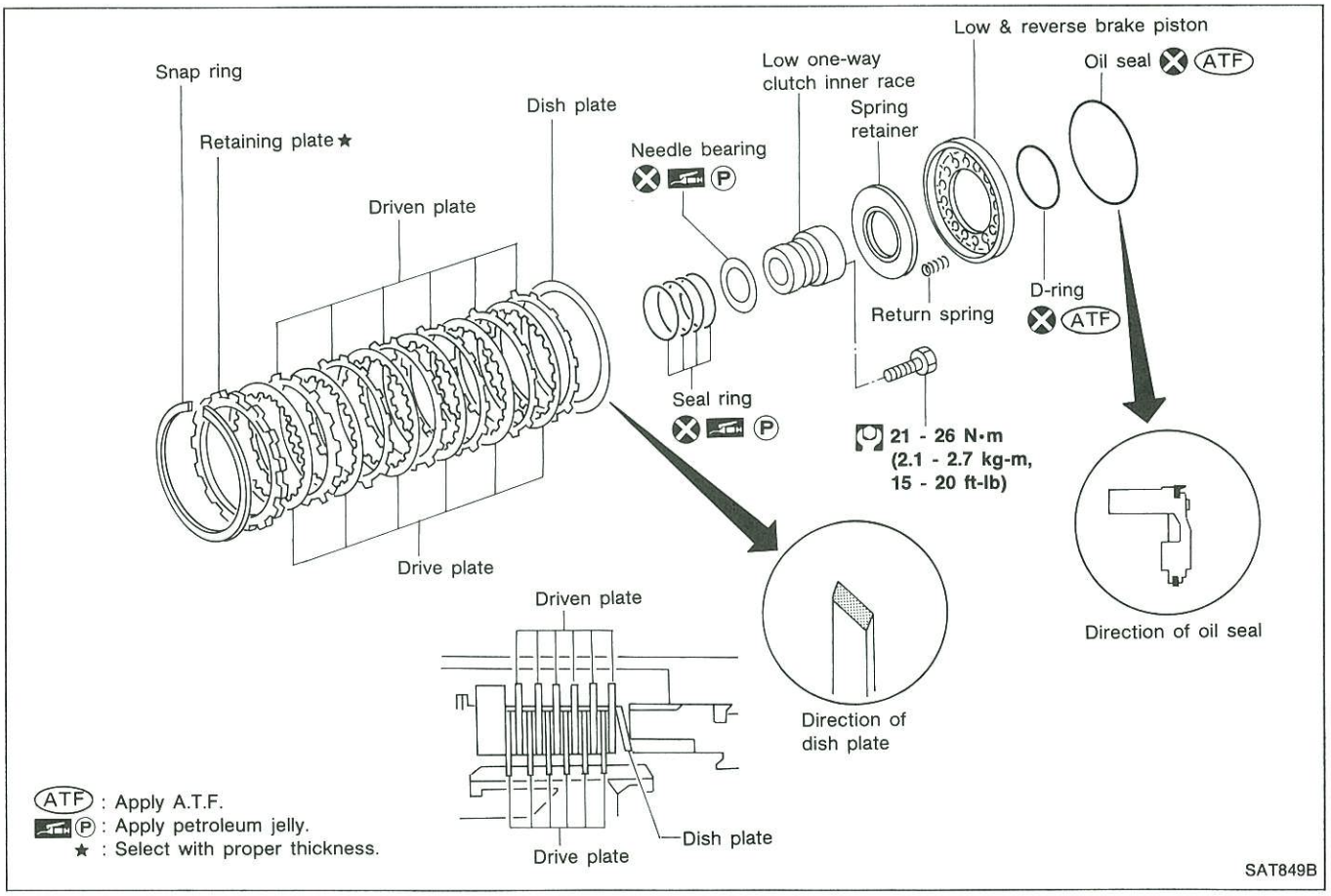




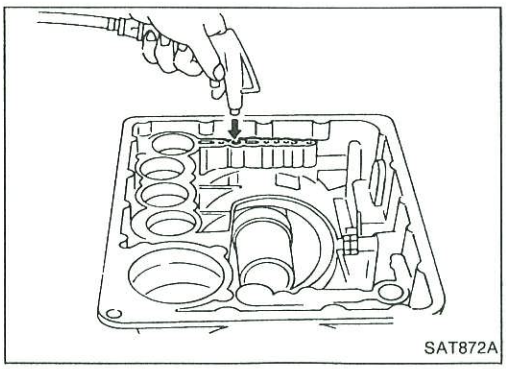


### DISASSEMBLY

1. Check operation of low and reverse brake.
   a. Install seal ring onto oil pump cover and install reverse clutch. Apply compressed air to oil hole.
   b. Check to see that retaining plate moves to snap ring.
   c. If retaining plate does not move to snap ring, D-ring or oil seal may be damaged or fluid may be leaking at piston check ball.

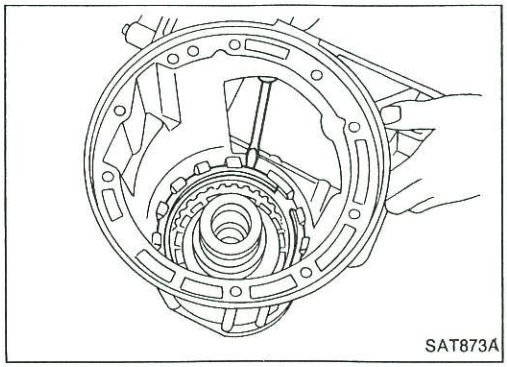


2. Remove snap ring, low and reverse brake drive plates, driven plates and dish plate.

## Low & Reverse Brake (Cont'd)

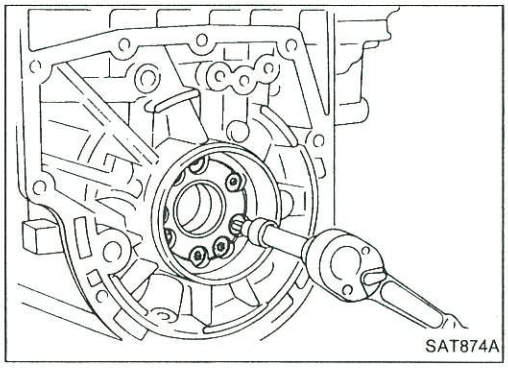
SAT874A

3. Remove low one-way clutch inner race, spring retainer and return spring from transmission case.

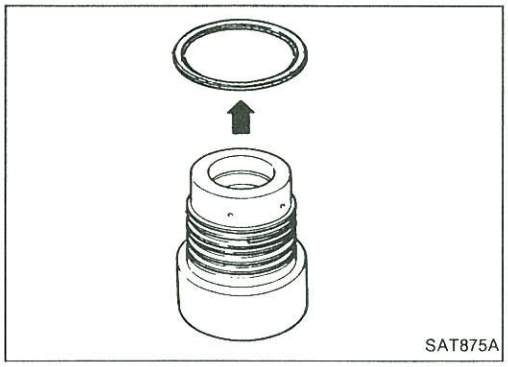
SAT875A

4. Remove seal rings from low one-way clutch inner race.
5. Remove needle bearing from low one-way clutch inner race.

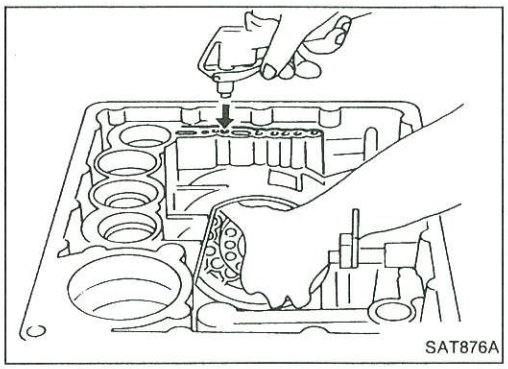
SAT876A

6. Remove low and reverse brake piston using compressed air.
7. Remove oil seal and D-ring from piston.

### INSPECTION

#### Low and reverse brake snap ring and spring retainer

- Check for deformation, or damage.

#### Low and reverse brake return springs

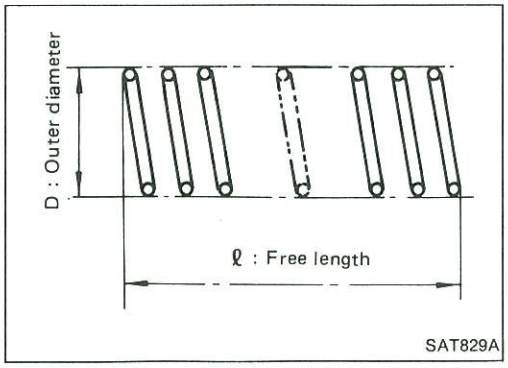

SAT829A

- Check for deformation or damage. Also measure free length and outside diameter.

**Inspection standard:**

Unit: mm (in)

| Part No. | ℓ | D |
|---|---|---|
| 31521-21X00 | 23.7 (0.933) | 11.6 (0.457) |

#### Low and reverse brake drive plates

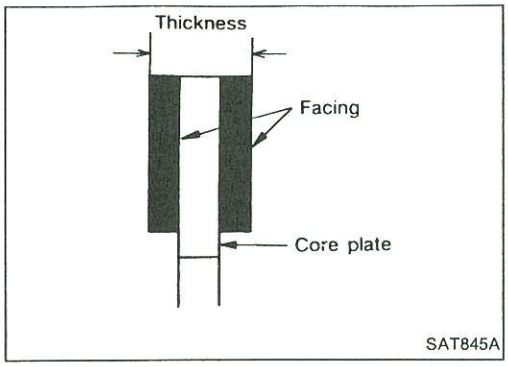

SAT845A

- Check facing for burns, cracks or damage.
- Measure thickness of facing.

  **Thickness of drive plate:**

  **Standard value**

  **2.0 mm (0.079 in)**

  **Wear limit**

  **1.8 mm (0.071 in)**
- If not within wear limit, replace.

## Low & Reverse Brake (Cont'd)

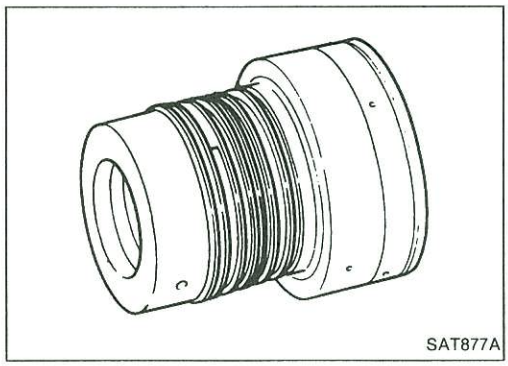
SAT877A

### Low one-way clutch inner race

- Check frictional surface of inner race for wear or damage.

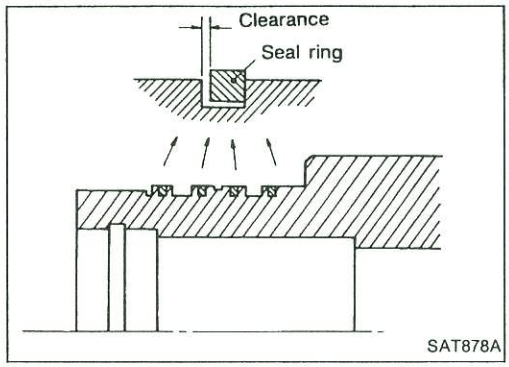

SAT878A

- Install a new seal rings onto low one-way clutch inner race.
- **Be careful not to expand seal ring gap excessively.**
- Measure seal ring-to-groove clearance.

  **Inspection standard:**

  **Standard value: 0.10 - 0.25 mm (0.0039 - 0.0098 in)**

  **Allowable limit: 0.25 mm (0.0098 in)**
- If not within allowable limit, replace low one-way clutch inner race.

### ASSEMBLY

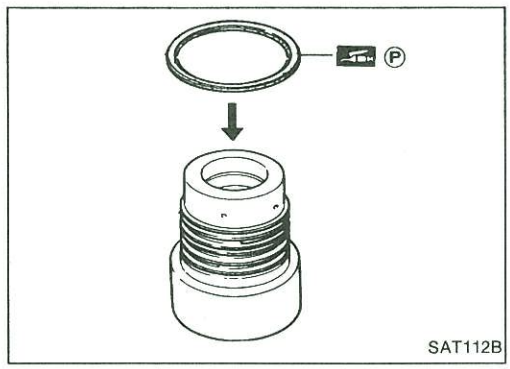
SAT112B

1. Install bearing onto one-way clutch inner race.
- **Pay attention to its direction — Black surface goes to rear side.**
- **Apply petroleum jelly to needle bearing.**

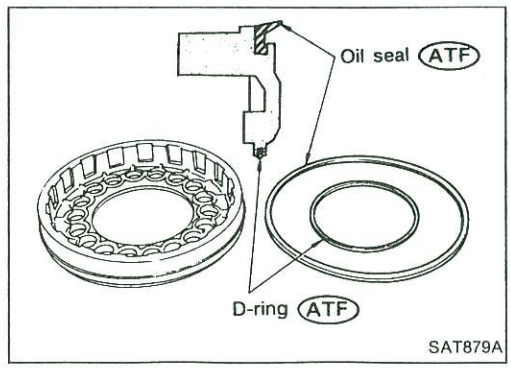

SAT879A

2. Install oil seal and D-ring onto piston.
- **Apply A.T.F. to oil seal and D-ring.**

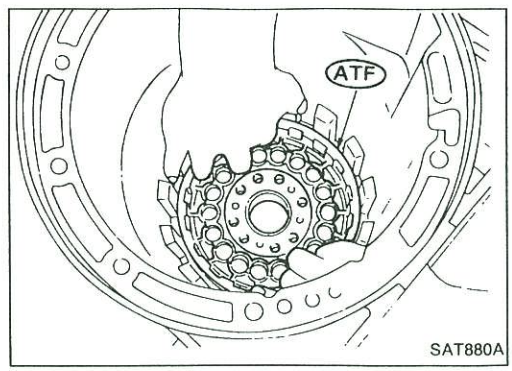

SAT880A

3. Install piston by rotating it slowly and evenly.
- **Apply A.T.F. to inner surface of transmission case.**

## Low & Reverse Brake (Cont'd)

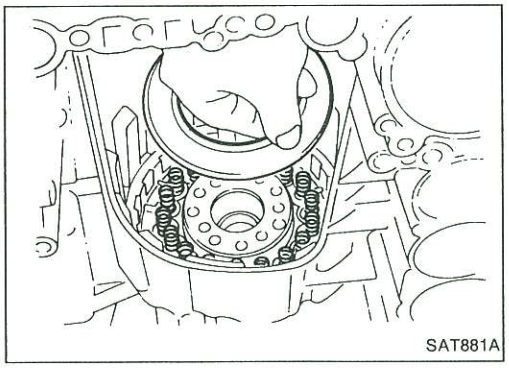
SAT881A

4. Install return springs, spring retainer and low one-way clutch inner race onto transmission case.

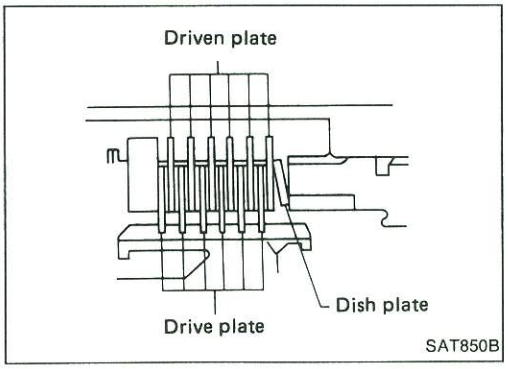

SAT850B

5. Install dish plate, low and reverse brake drive plates, driven plates and retaining plate.
6. Install snap ring on transmission case.

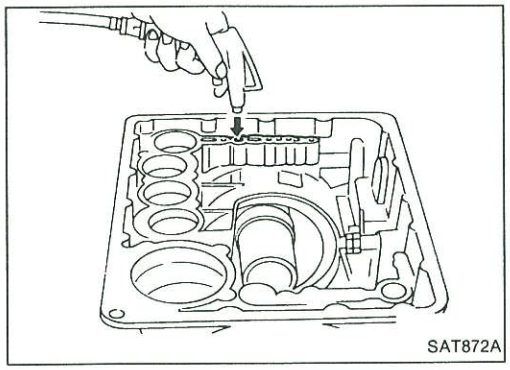
SAT872A

7. Check operation of low and reverse brake clutch piston. Refer to "DISASSEMBLY".

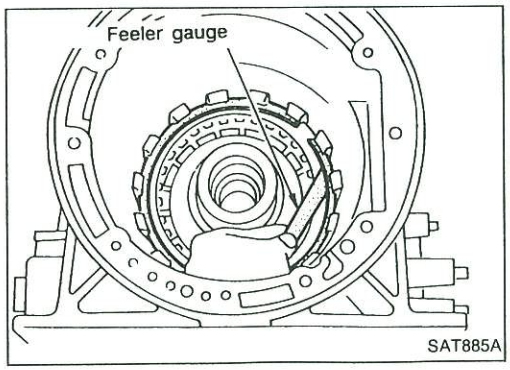

SAT885A

8. Measure clearance between retaining plate and snap ring. If not within allowable limit, select proper retaining plate.
   **Specified clearance:**
   **Standard**
   **0.7 - 1.1 mm (0.028 - 0.043 in)**
   **Allowable limit**
   **2.3 mm (0.091 in)**
   **Retaining plate:**
   **Refer to S.D.S.**

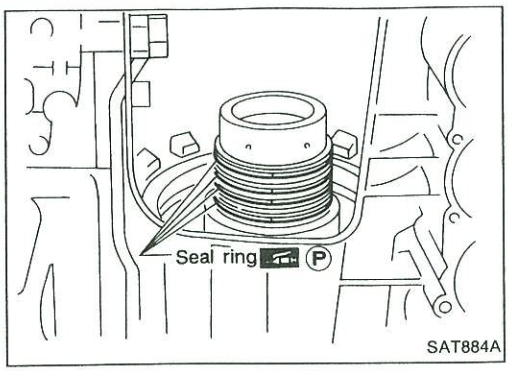

SAT884A

9. Install low one-way clutch inner race seal ring.

- **Apply petroleum jelly to seal ring.**
- **Make sure seal rings are pressed firmly into place and held by petroleum jelly.**

## Forward Clutch Drum Assembly

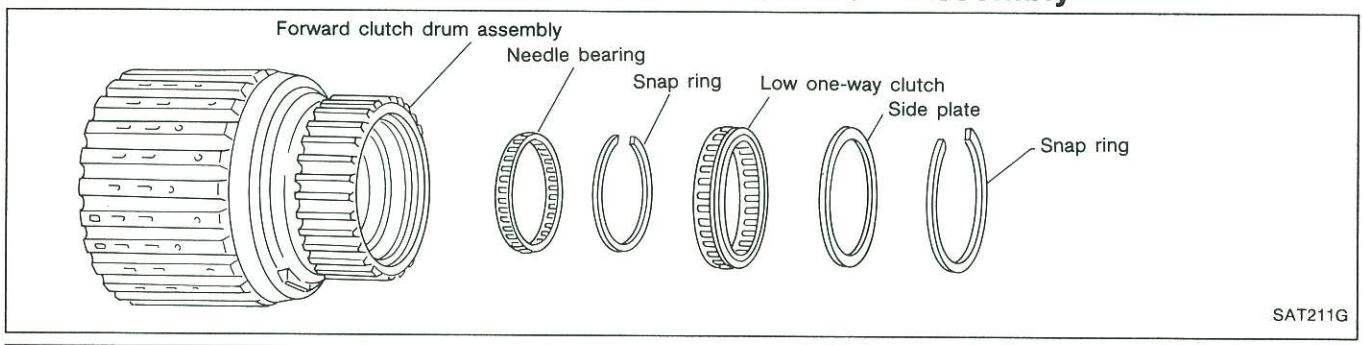


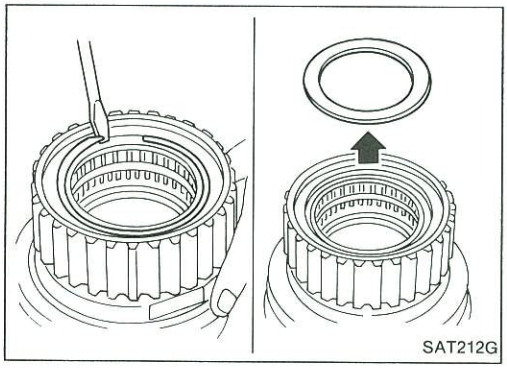


### DISASSEMBLY

1. Remove snap ring from forward clutch drum.
2. Remove side plate from forward clutch drum.

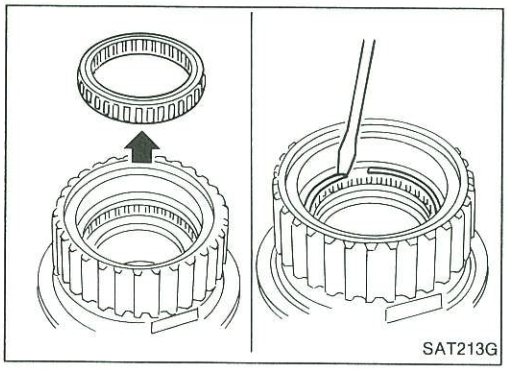


3. Remove low one-way clutch from forward clutch drum.
4. Remove snap ring from forward clutch drum.

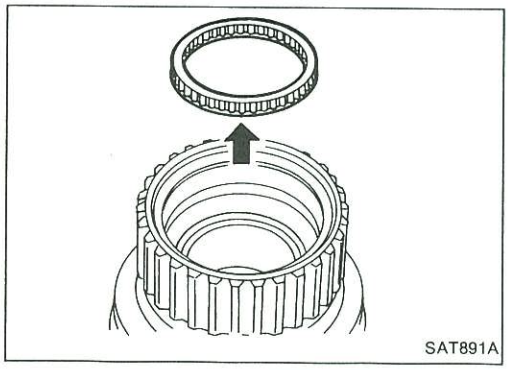


5. Remove needle bearing from forward clutch drum.

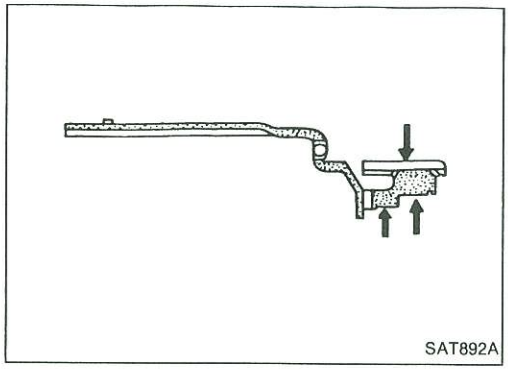


### INSPECTION

#### Forward clutch drum

- Check spline portion for wear or damage.
- Check frictional surfaces of low one-way clutch and needle bearing for wear or damage.

## Forward Clutch Drum Assembly (Cont'd)

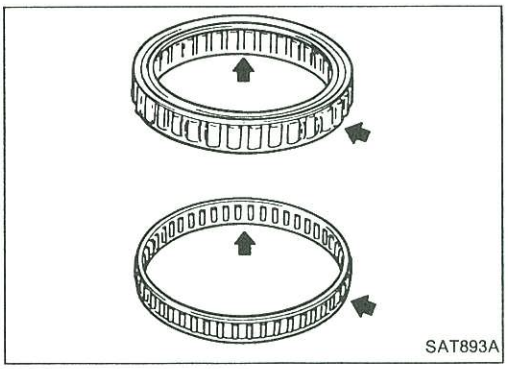
SAT893A

### Needle bearing and low one-way clutch

- Check frictional surface for wear or damage.

### ASSEMBLY

1. Install needle bearing in forward clutch drum.
2. Install snap ring onto forward clutch drum.

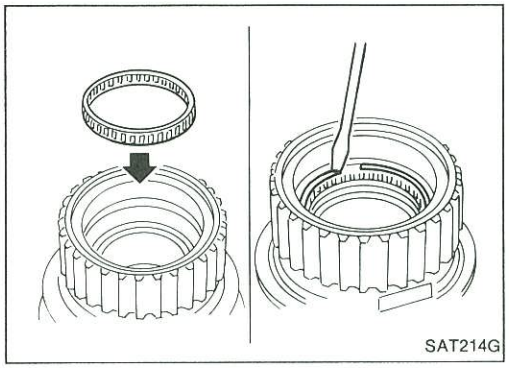
SAT214G

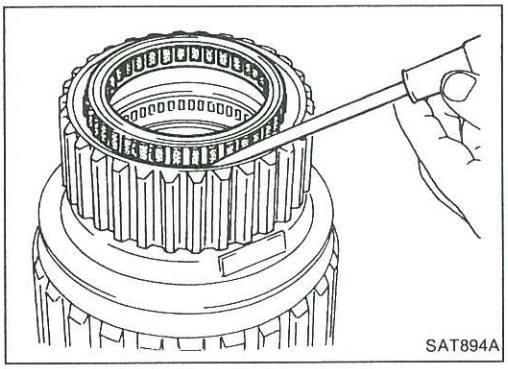
SAT894A

3. Install low one-way clutch onto forward clutch drum by pushing the roller in evenly.

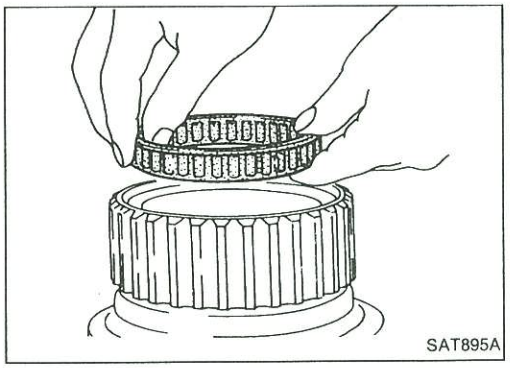
SAT895A

- **Install low one-way clutch with flange facing rearward.**

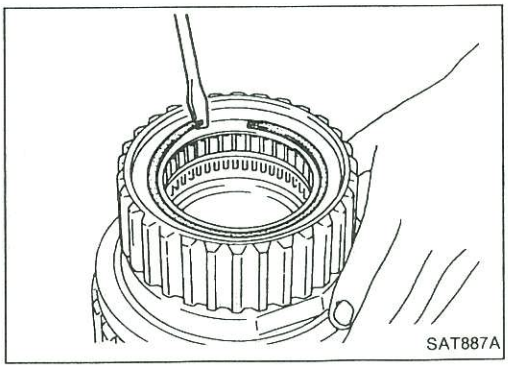
SAT887A

4. Install side plate onto forward clutch drum.
5. Install snap ring onto forward clutch drum.

## Rear Internal Gear and Forward Clutch Hub

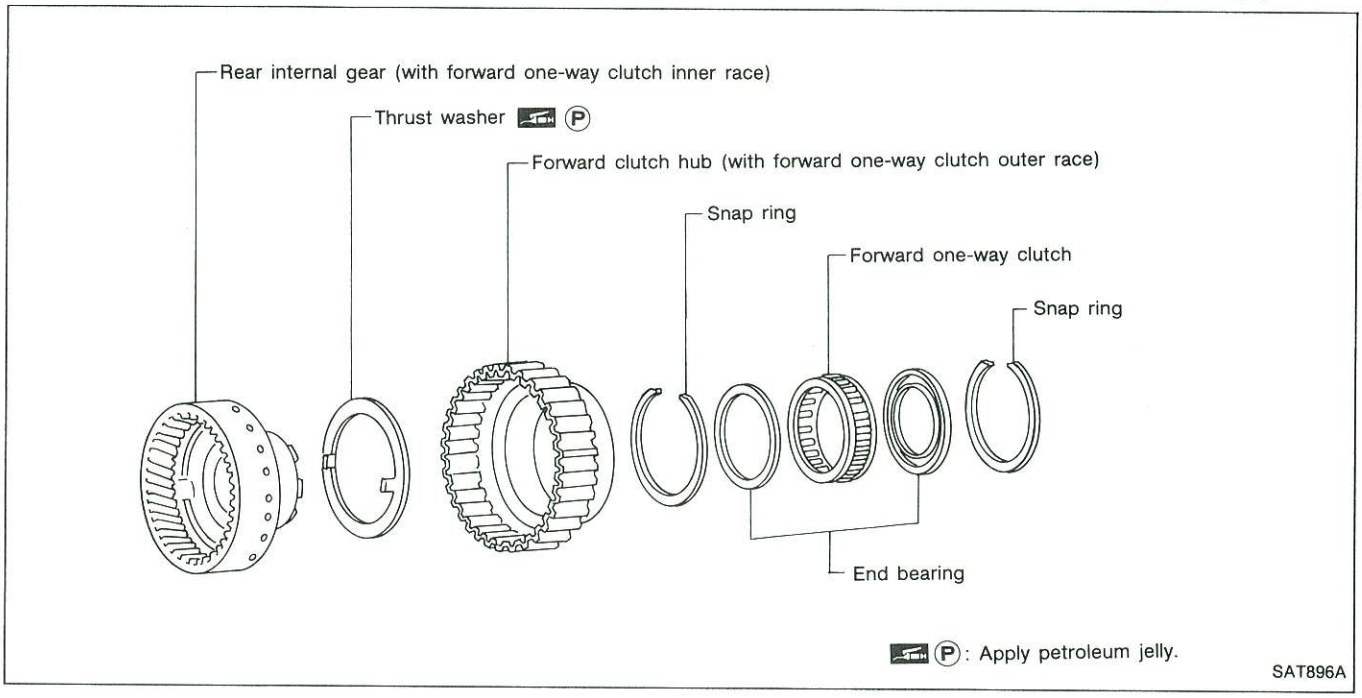


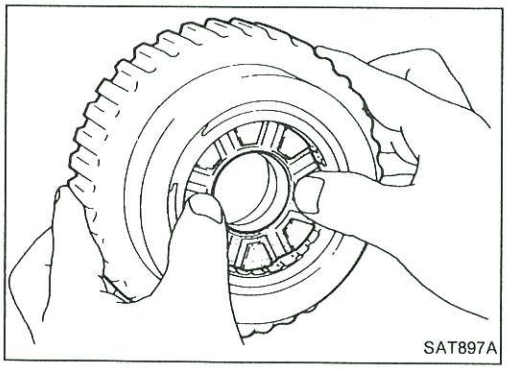


### DISASSEMBLY

1. Remove rear internal gear by pushing forward clutch hub forward.

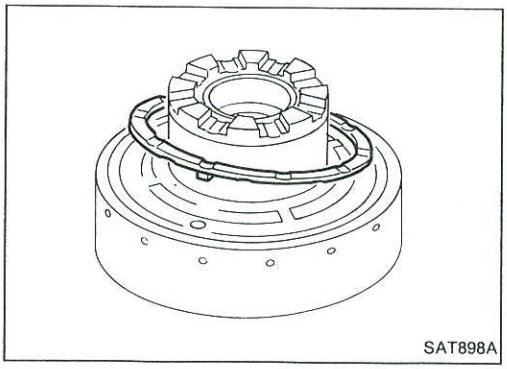


2. Remove thrust washer from rear internal gear.

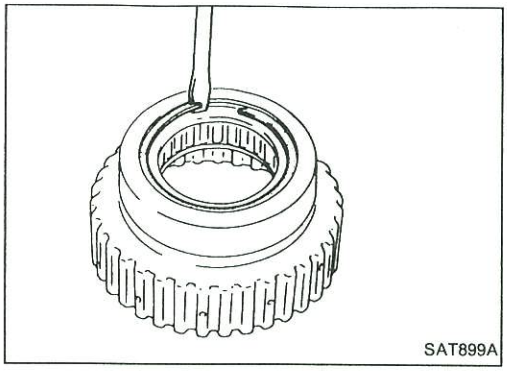


3. Remove snap ring from forward clutch hub.

## Rear Internal Gear and Forward Clutch Hub (Cont'd)

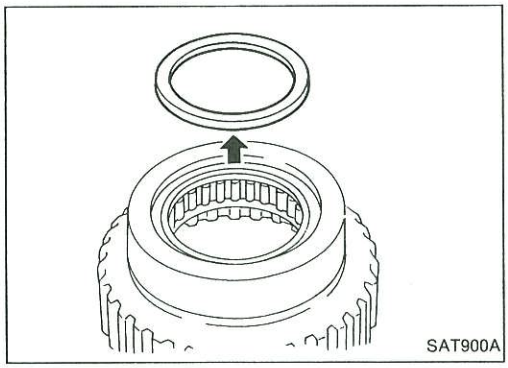


4. Remove end bearing.

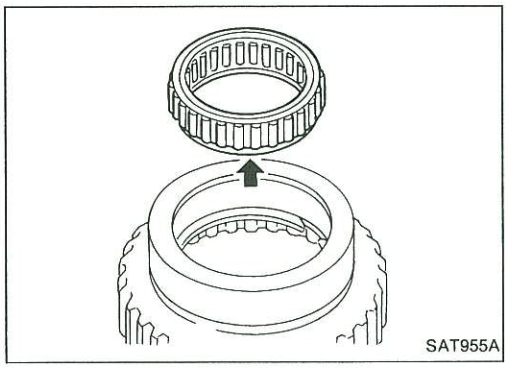


5. Remove forward one-way clutch and end bearing as a unit from forward clutch hub.

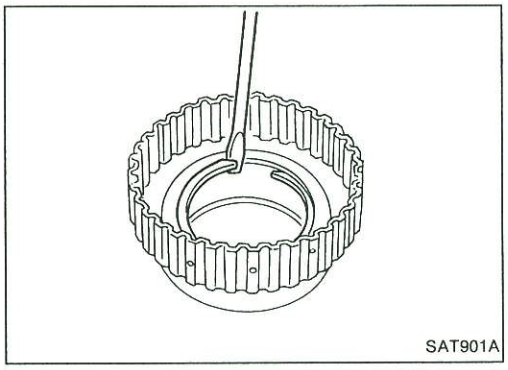


6. Remove snap ring from forward clutch hub.

### INSPECTION

**Rear internal gear and forward clutch hub**

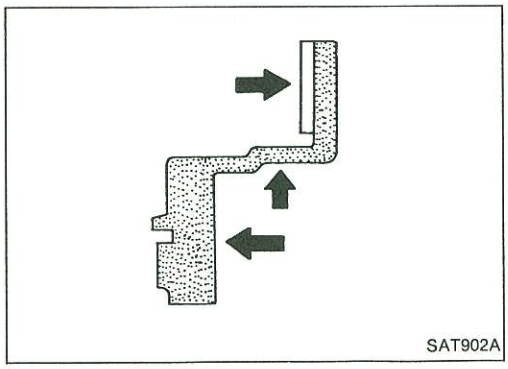


- Check gear for excessive wear, chips or cracks.
- Check frictional surfaces of forward one-way clutch and thrust washer for wear or damage.
- Check spline for wear or damage.

**Snap ring and end bearing**

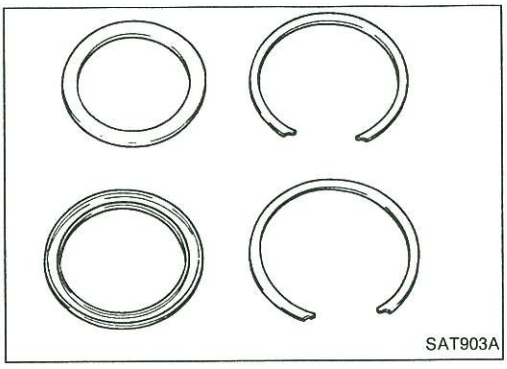


- Check for deformation or damage.

## Rear Internal Gear and Forward Clutch Hub (Cont'd)

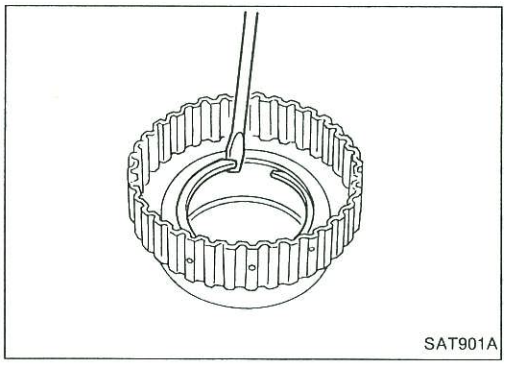
SAT901A

### ASSEMBLY

1. Install snap ring onto forward clutch hub.
2. Install end bearing.

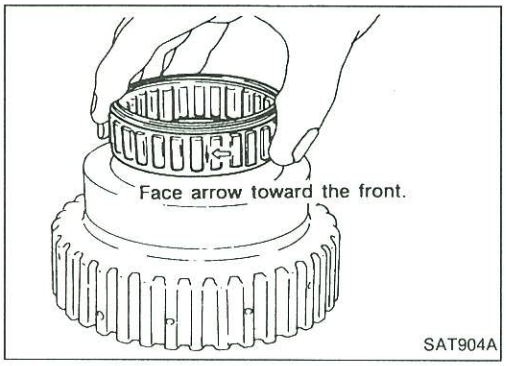

SAT904A

3. Install forward one-way clutch onto clutch hub.
- **Install forward one-way clutch with flange facing rearward.**
4. Install end bearing.
5. Install snap ring onto forward clutch hub.

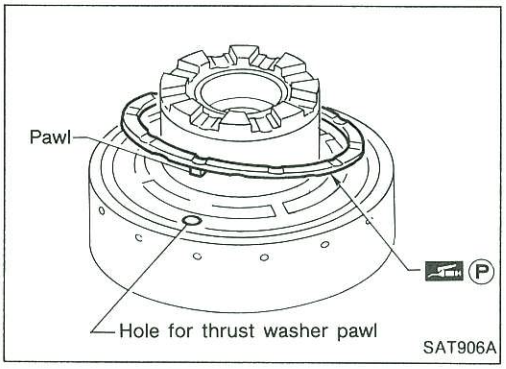

SAT906A

6. Install thrust washer onto rear internal gear.
- **Apply petroleum jelly to thrust washer.**
- **Securely insert pawls of thrust washer into holes in rear internal gear.**

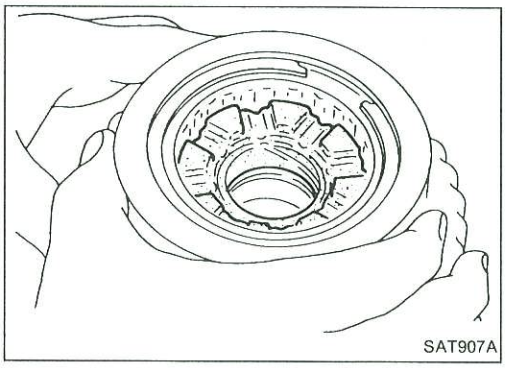
SAT907A

7. Position forward clutch hub in rear internal gear.

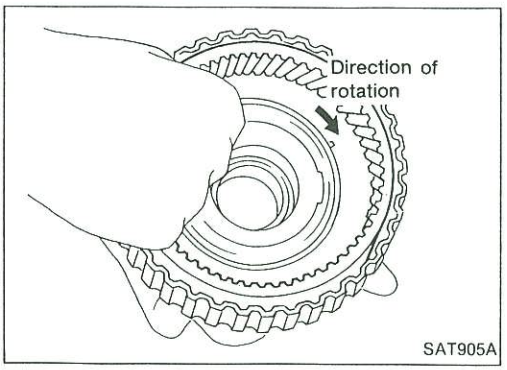

SAT905A

8. After installing, check to assure that forward clutch hub rotates clockwise.

## Band Servo Piston Assembly

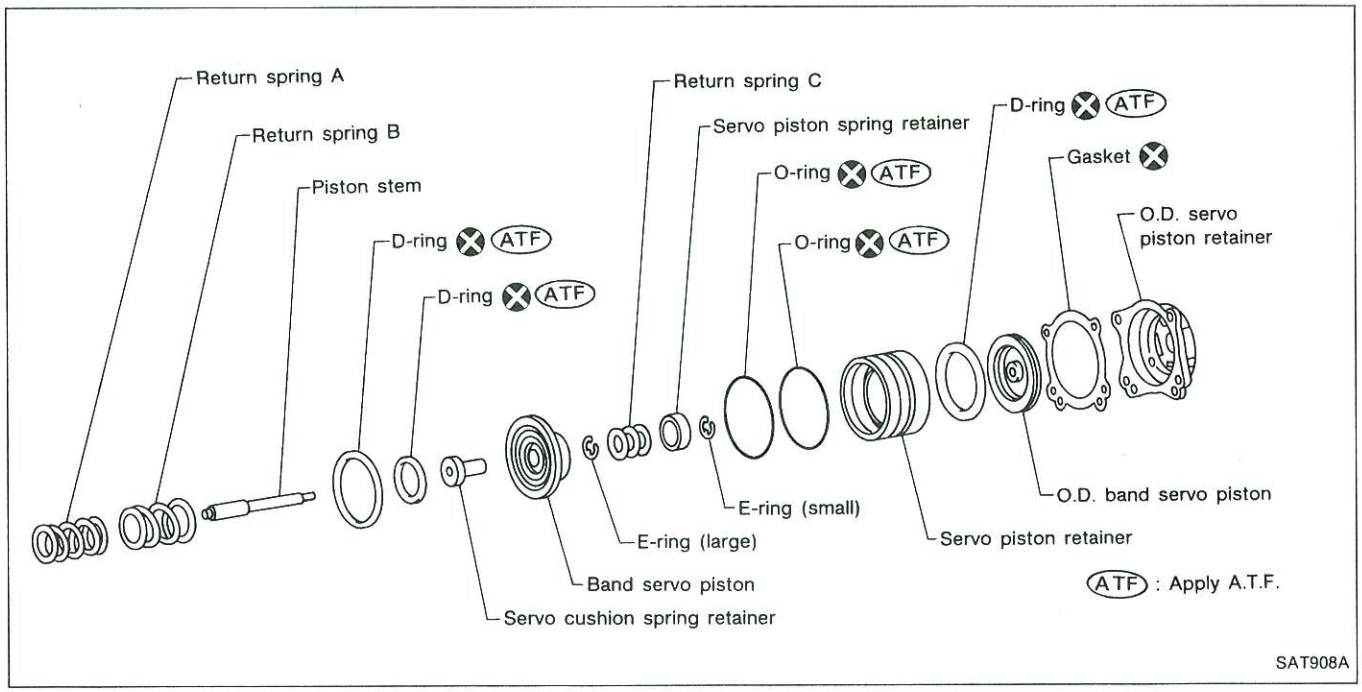


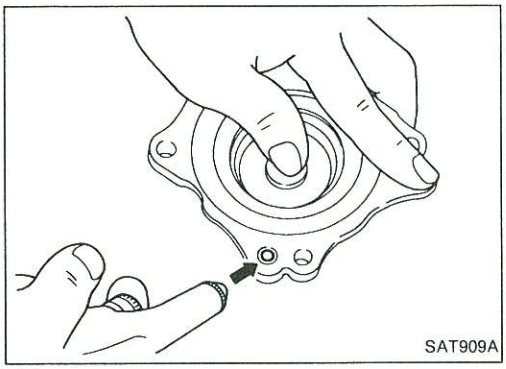


### DISASSEMBLY

1. Block one oil hole in O.D. servo piston retainer and the center hole in O.D. band servo piston.
2. Apply compressed air to the other oil hole in piston retainer to remove O.D. band servo piston from retainer.
3. Remove D-ring from O.D. band servo piston.

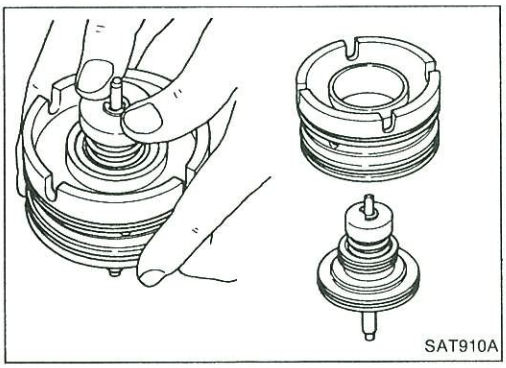


4. Remove band servo piston assembly from servo piston retainer by pushing it forward.

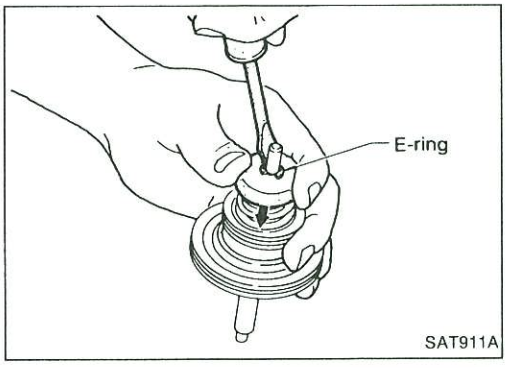


5. Place piston stem end on a wooden block. While pushing servo piston spring retainer down, remove E-ring.

## Band Servo Piston Assembly (Cont'd)

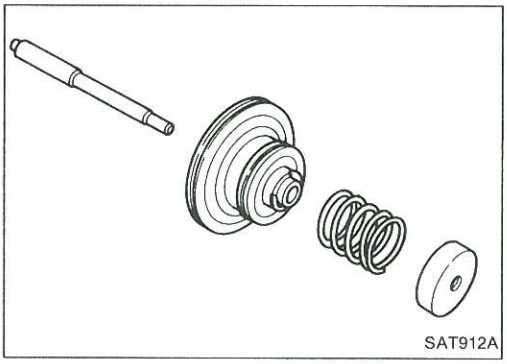
SAT912A

6. Remove servo piston spring retainer, return spring C and piston stem from band servo piston.

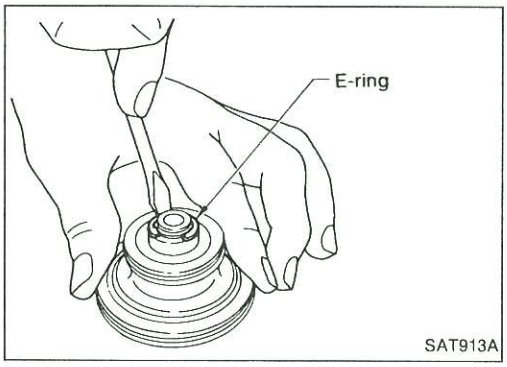

SAT913A

7. Remove E-ring from band servo piston.

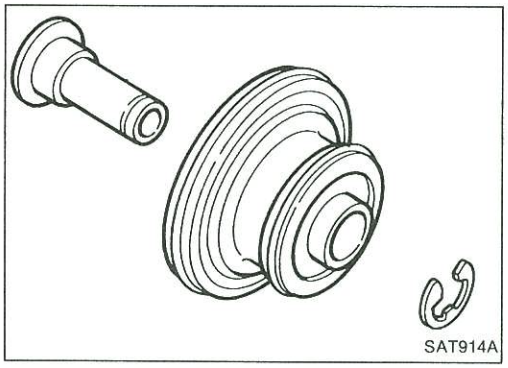
SAT914A

8. Remove servo cushion spring retainer from band servo piston.
9. Remove D-rings from band servo piston.
10. Remove O-rings from servo piston retainer.

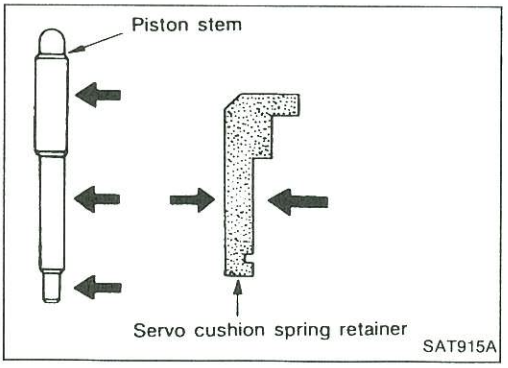

SAT915A

### INSPECTION

#### Pistons, retainers and piston stem

- Check frictional surfaces for abnormal wear or damage.

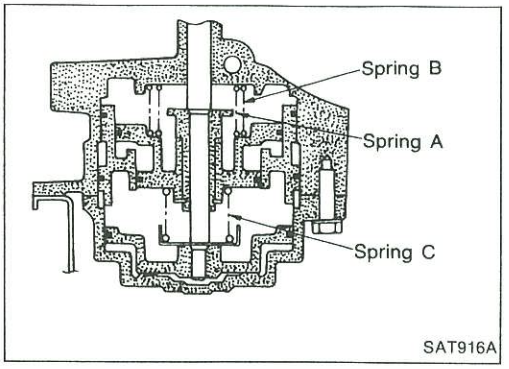

SAT916A

#### Return springs

- Check for deformation or damage. Measure free length and outer diameter.

**Inspection standard:**

Unit: mm (in)

| Parts | Free length | Outer diameter |
|---|---|---|
| Spring A | 45.6 (1.795) | 34.3 (1.350) |
| Spring B | 53.8 (2.118) | 40.3 (1.587) |
| Spring C | 29.7 (1.169) | 27.6 (1.087) |

## Band Servo Piston Assembly (Cont'd)

### ASSEMBLY

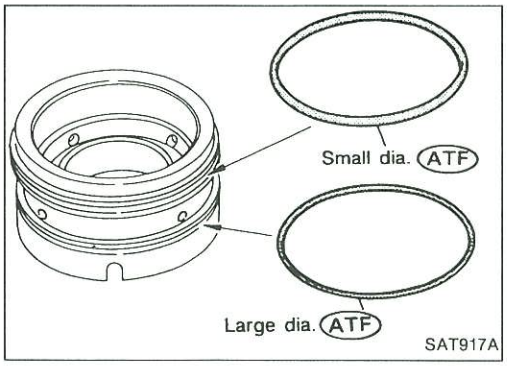


1. Install O-rings onto servo piston retainer.
   - **Apply A.T.F. to O-rings.**
   - **Pay attention to position of each O-ring.**

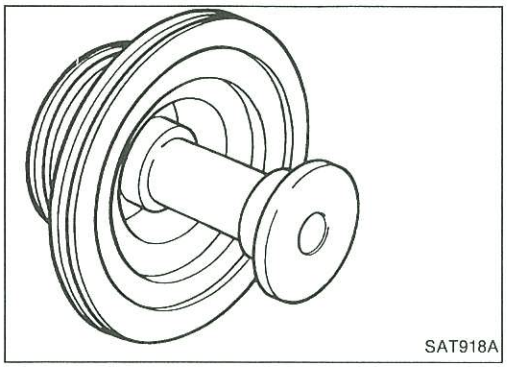


2. Install servo cushion spring retainer onto band servo piston.

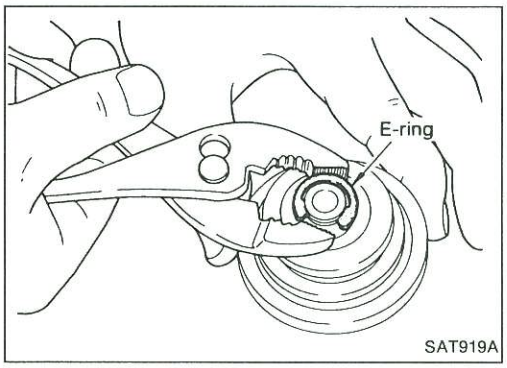


3. Install E-ring onto servo cushion spring retainer.

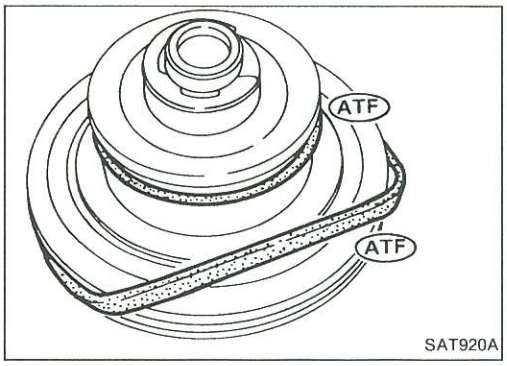


4. Install D-rings onto band servo piston.
   - **Apply A.T.F. to D-rings.**

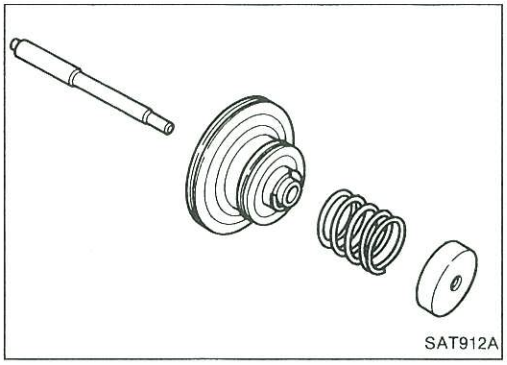


5. Install servo piston spring retainer, return spring C and piston stem onto band servo piston.

## Band Servo Piston Assembly (Cont'd)

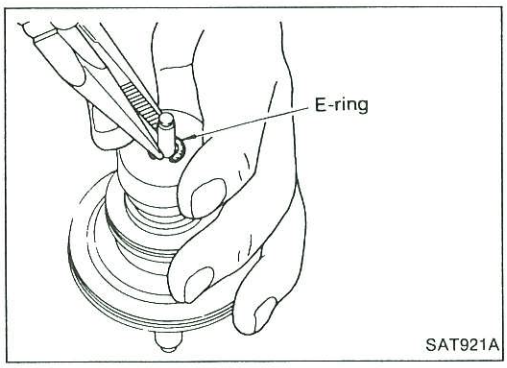


6. Place piston stem end on a wooden block. While pushing servo piston spring retainer down, install E-ring.

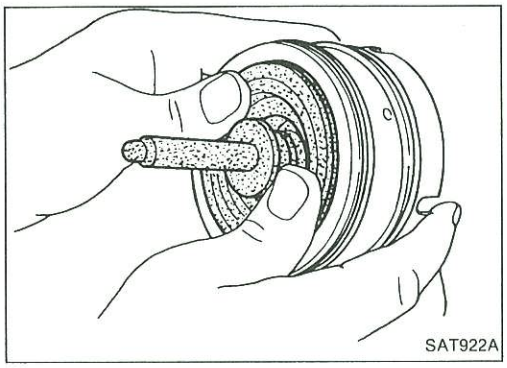


7. Install band servo piston assembly onto servo piston retainer by pushing it inward.

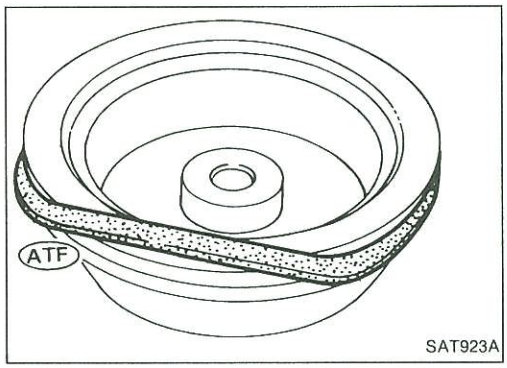


8. Install D-ring on O.D. band servo piston.
   - **Apply A.T.F. to D-ring.**

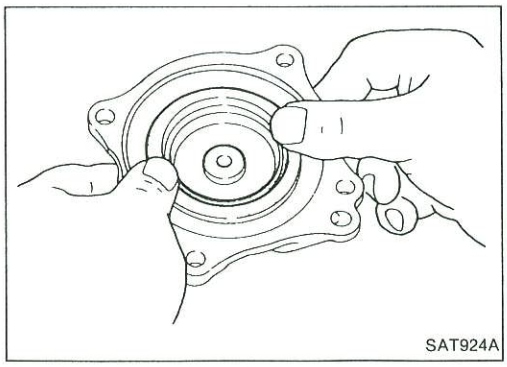


9. Install O.D. band servo piston onto servo piston retainer by pushing it inward.

## Parking Pawl Components

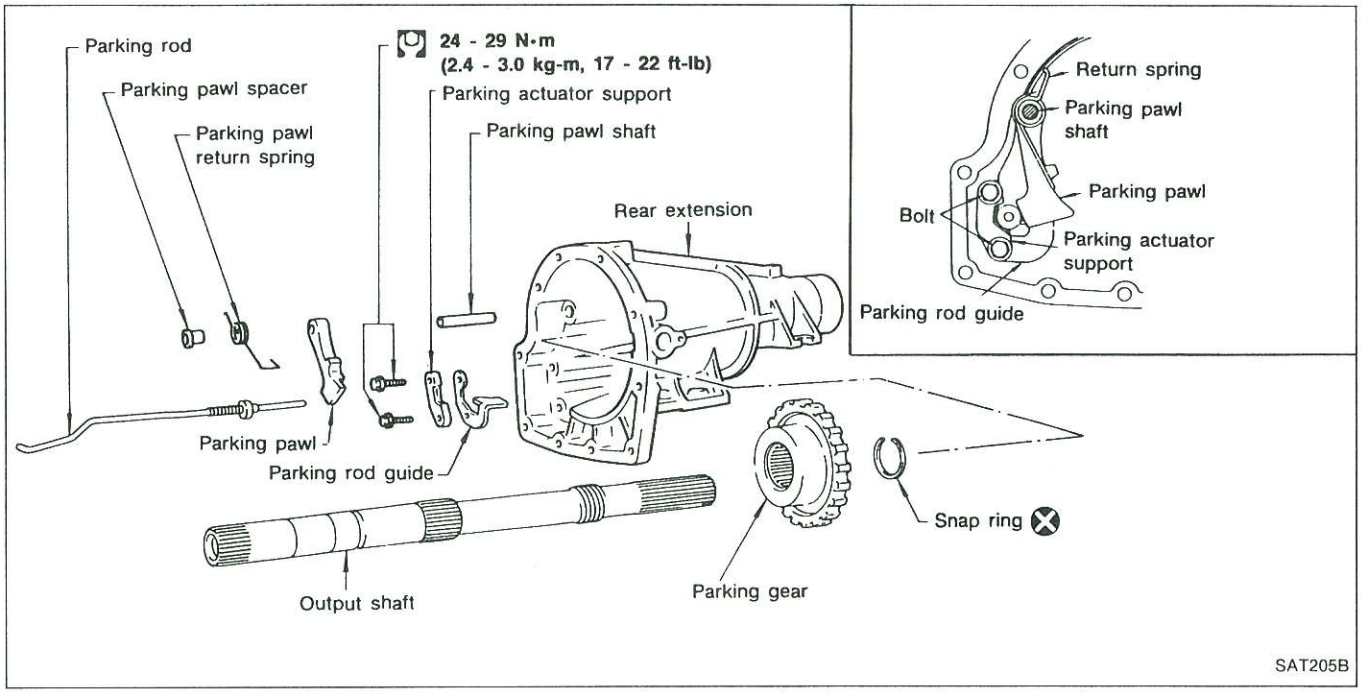


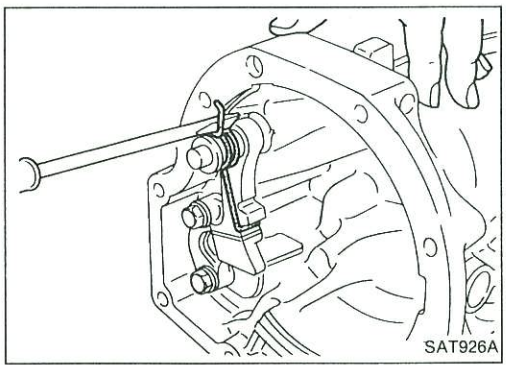


### DISASSEMBLY

1. Slide return spring to the front of rear extension flange.

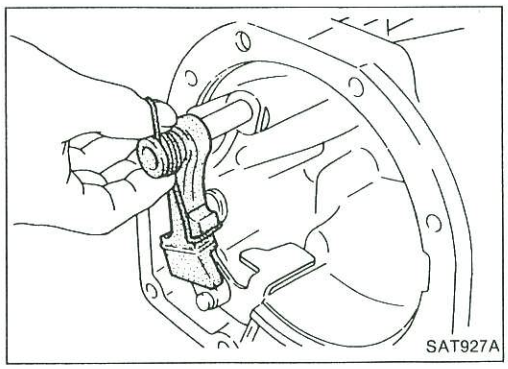


2. Remove return spring, pawl spacer and parking pawl from rear extension.
3. Remove parking pawl shaft from rear extension.

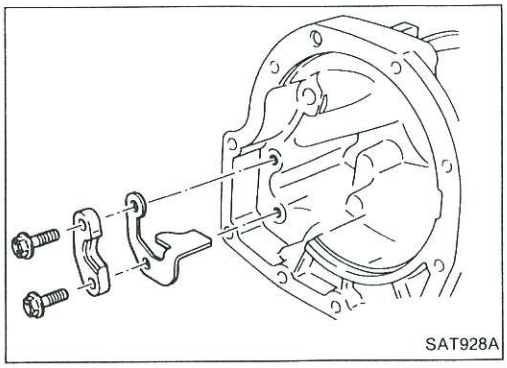


4. Remove parking actuator support and rod guide from rear extension.

## Parking Pawl Components (Cont'd)

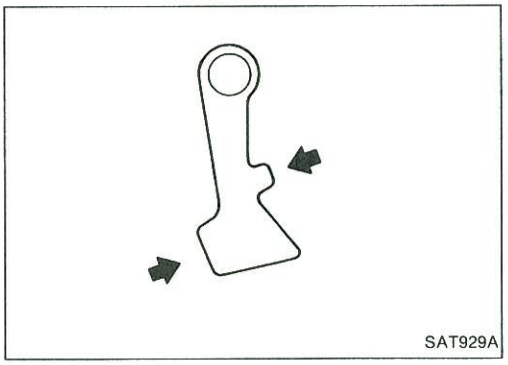
SAT929A

### INSPECTION

**Parking pawl and parking actuator support**

- Check contact surface of parking rod for wear.

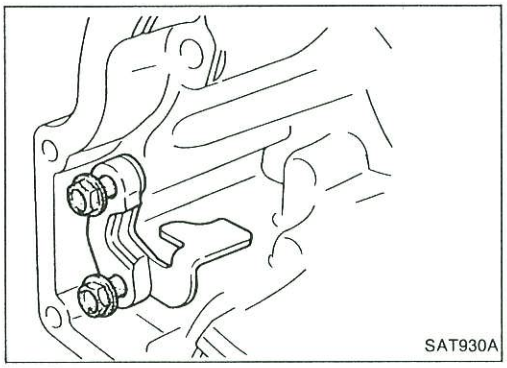
SAT930A

### ASSEMBLY

1. Install rod guide and parking actuator support onto rear extension.
2. Insert parking pawl shaft into rear extension.

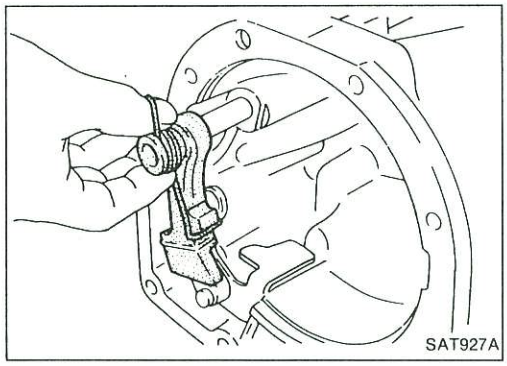
SAT927A

3. Install return spring, pawl spacer and parking pawl onto parking pawl shaft.

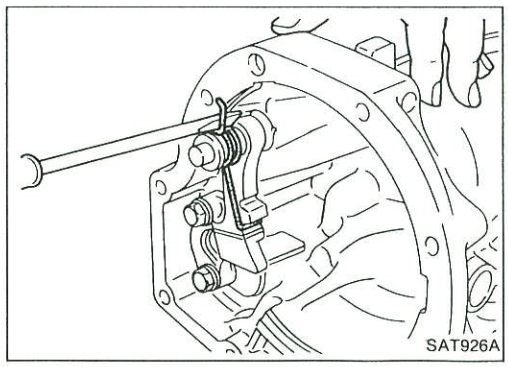
SAT926A

4. Bend return spring upward and install it onto rear extension.

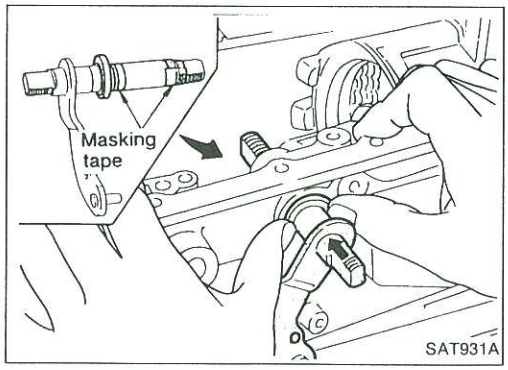


## Assembly

1. Install manual shaft components.
a. Install oil seal onto manual shaft.
- **Apply A.T.F. to oil seal.**
- **Wrap threads of manual shaft with masking tape.**

b. Insert manual shaft and oil seal as a unit into transmission case.
c. Remove masking tape.

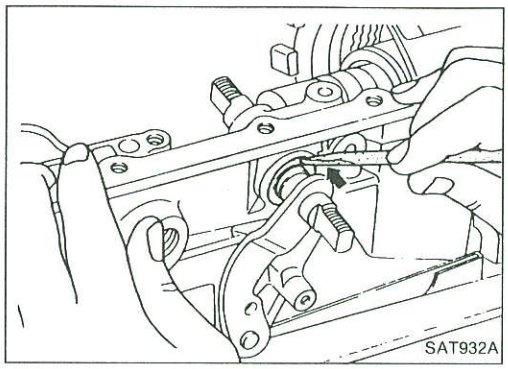


d. Push oil seal evenly and install it onto transmission case.

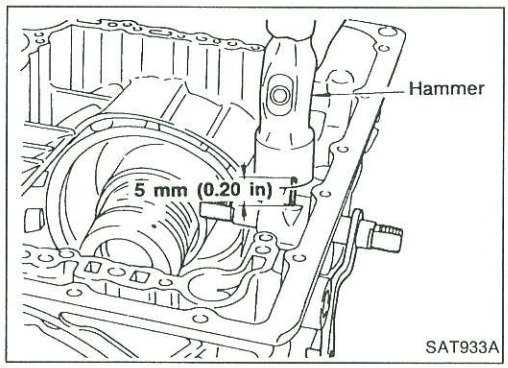


e. Align groove in shaft with drive pin hole, then drive pin into position as shown in figure at left.

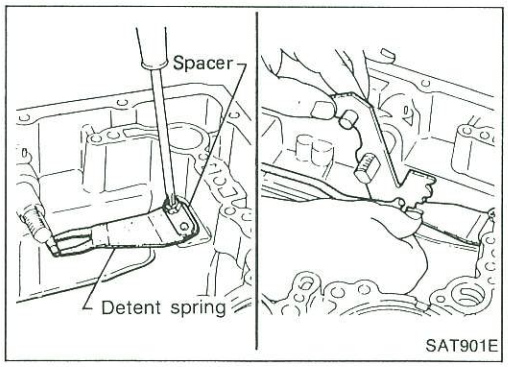


f. Install detent spring and spacer.
g. While pushing detent spring down, install manual plate onto manual shaft.

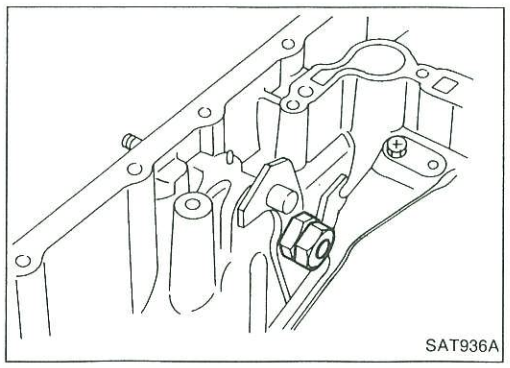


h. Install lock nuts onto manual shaft.

## Assembly (Cont'd)

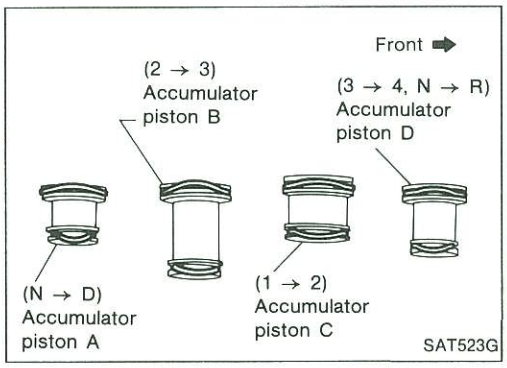


2. Install accumulator piston.
a. Install O-rings onto accumulator piston.

- **Apply A.T.F. to O-rings.**

**Accumulator piston O-rings**

Unit: mm (in)

| Accumulator | A | B | C | D |
|---|---|---|---|---|
| Small diameter end | 29 (1.14) | 32 (1.26) | 45 (1.77) | 29 (1.14) |
| Large diameter end | 45 (1.77) | 50 (1.97) | 50 (1.97) | 45 (1.77) |

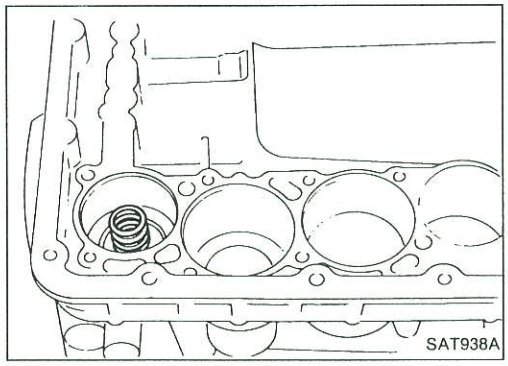


b. Install return spring for accumulator A onto transmission case.

**Free length of return spring**

Unit: mm (in)

| Accumulator | A |
|---|---|
| Free length | 43 (1.69) |

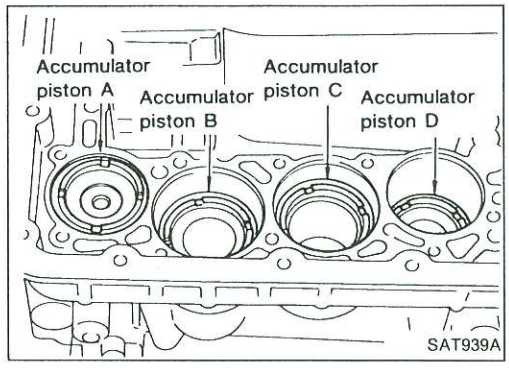


c. Install accumulator pistons A, B, C and D.

- **Apply A.T.F. to transmission case.**

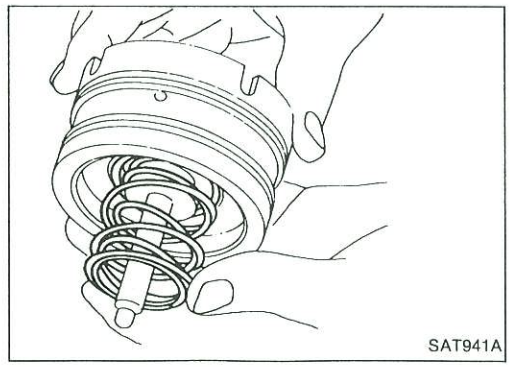


3. Install band servo piston.
a. Install return springs onto servo piston.

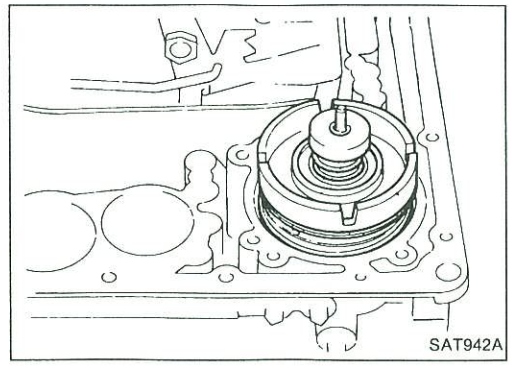


b. Install band servo piston onto transmission case.

- **Apply A.T.F. to O-ring of band servo piston and transmission case.**

c. Install gasket for band servo onto transmission case.

## Assembly (Cont'd)

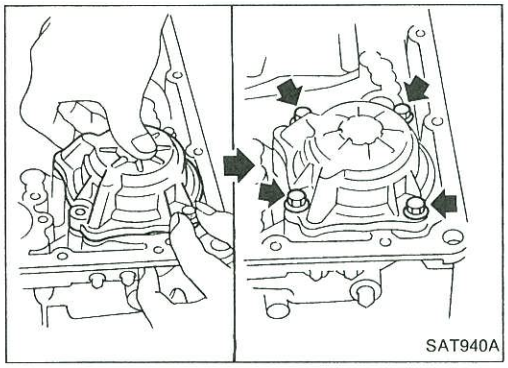
SAT940A

d. Install band servo retainer onto transmission case.

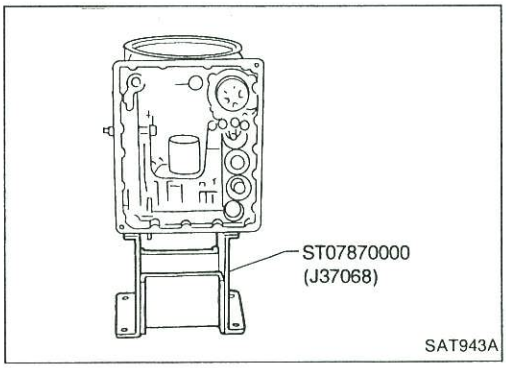

SAT943A

4. Install rear side clutch and gear components.
a. Place transmission case in vertical position.

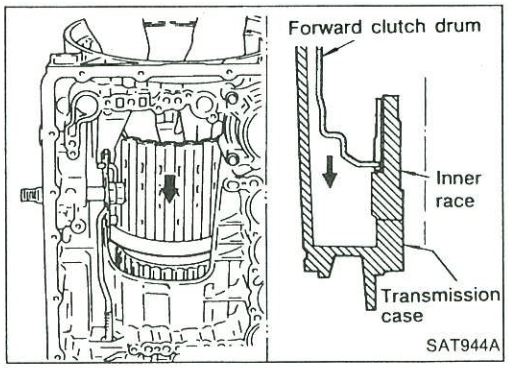

SAT944A

b. Slightly lift forward clutch drum assembly and slowly rotate it clockwise until its hub passes fully over the clutch inner race inside transmission case.

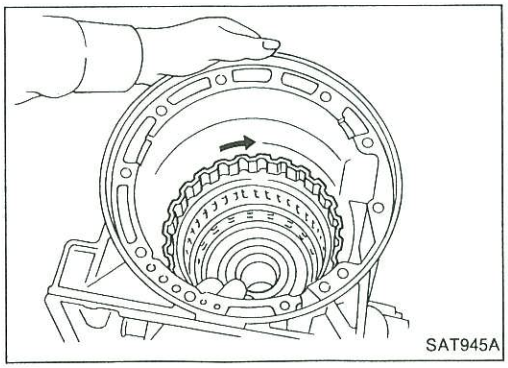
SAT945A

c. Check to be sure that rotation direction of forward clutch assembly is correct.

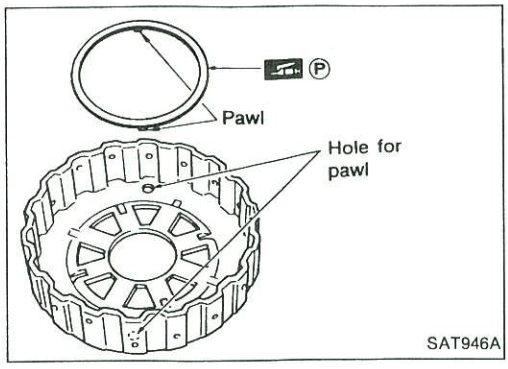

SAT946A

d. Install thrust washer onto front of overrun clutch hub.

- **Apply petroleum jelly to the thrust washer.**
- **Insert pawls of thrust washer securely into holes in overrun clutch hub.**

## Assembly (Cont'd)

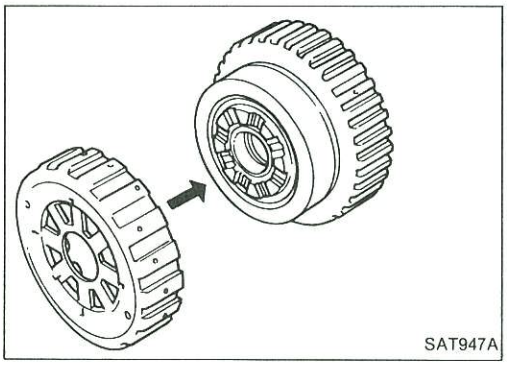
SAT947A

e. Install overrun clutch hub onto rear internal gear assembly.

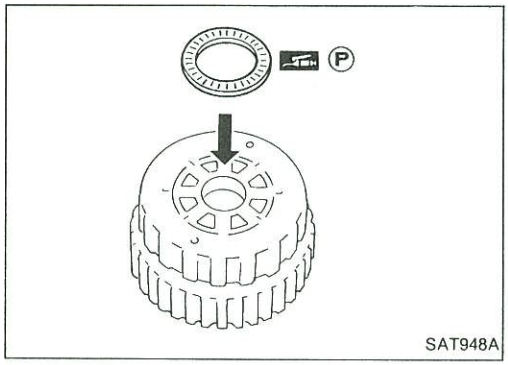
SAT948A

f. Install needle bearing onto rear of overrun clutch hub.

- **Apply petroleum jelly to needle bearing.**

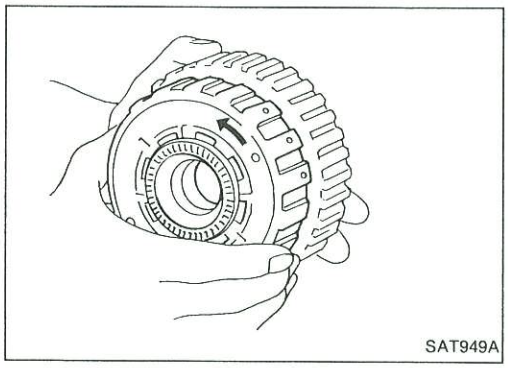
SAT949A

g. Check that overrun clutch hub rotates as shown while holding forward clutch hub.

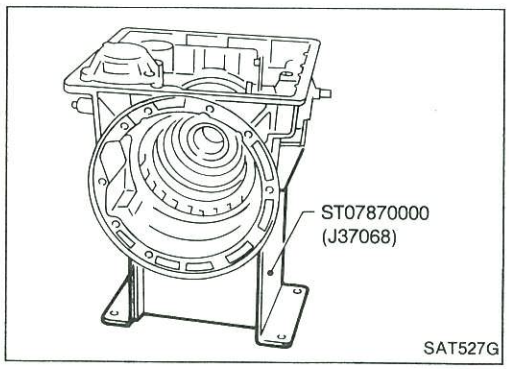

SAT527G

h. Place transmission case into horizontal position.

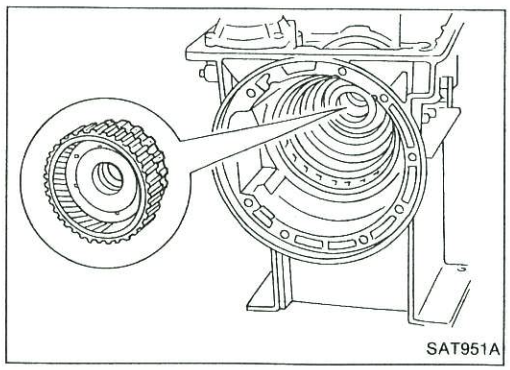
SAT951A

i. Install rear internal gear, forward clutch hub and overrun clutch hub as a unit onto transmission case.

## Assembly (Cont'd)

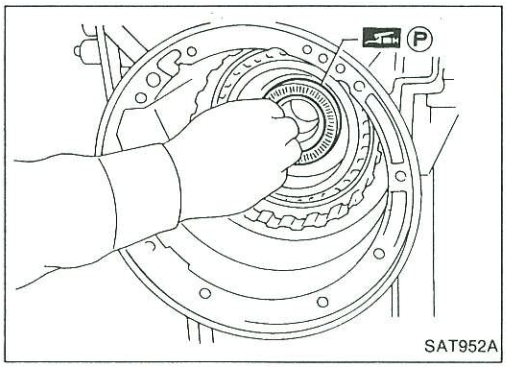


j. Install needle bearing onto rear internal gear.

- **Apply petroleum jelly to needle bearing.**

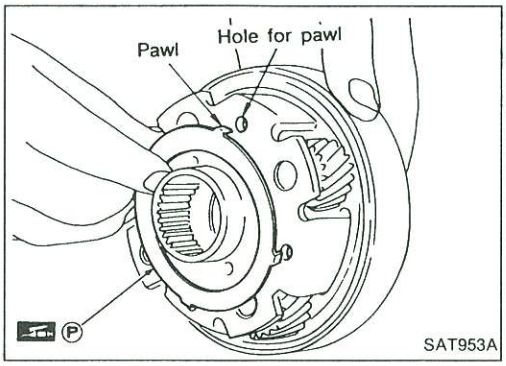


k. Install bearing race onto rear of front internal gear.

- **Apply petroleum jelly to bearing race.**
- **Securely engage pawls of bearing race with holes in front internal gear.**

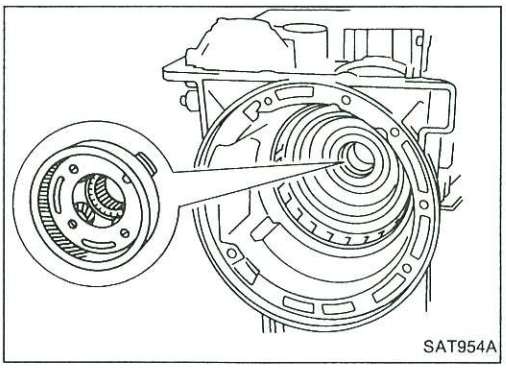


l. Install front internal gear on transmission case.

## Adjustment

When any parts listed in the following table are replaced, total end play or reverse clutch end play must be adjusted.

| Part name | Total end play | Reverse clutch end play |
|---|---|---|
| Transmission case | ● | ● |
| Low one-way clutch inner race | ● | ● |
| Overrun clutch hub | ● | ● |
| Rear internal gear | ● | ● |
| Rear planetary carrier | ● | ● |
| Rear sun gear | ● | ● |
| Front planetary carrier | ● | ● |
| Front sun gear | ● | ● |
| High clutch hub | ● | ● |
| High clutch drum | ● | ● |
| Oil pump cover | ● | ● |
| Reverse clutch drum | — | ● |

## Adjustment (Cont'd)

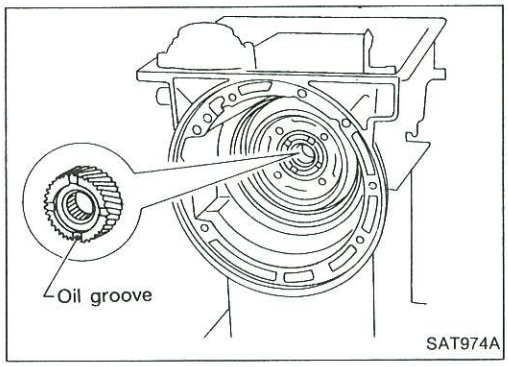


1. Install front side clutch and gear components.
a. Install rear sun gear on transmission case.
- **Pay attention to its direction.**

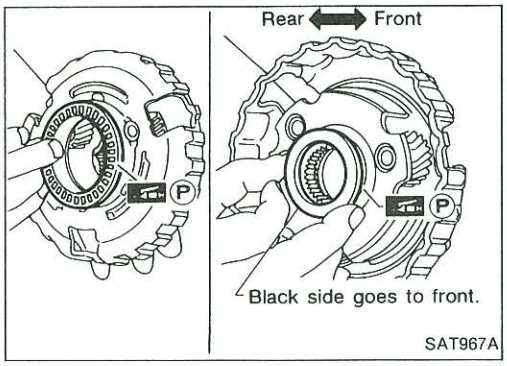


b. Install needle bearing on front of front planetary carrier.
- **Apply petroleum jelly to needle bearing.**

c. Install needle bearing on rear of front planetary carrier.
- **Apply petroleum jelly to bearing.**
- **Pay attention to its direction — Black side goes to front.**

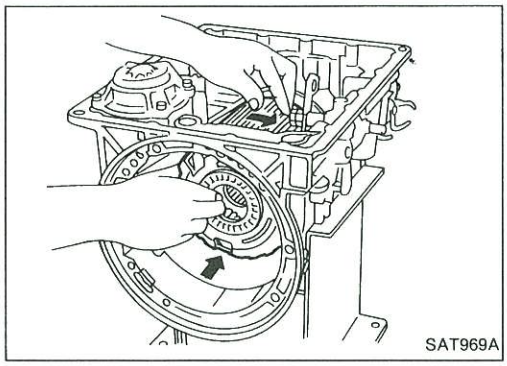


d. While rotating forward clutch drum clockwise, install front planetary carrier on forward clutch drum.

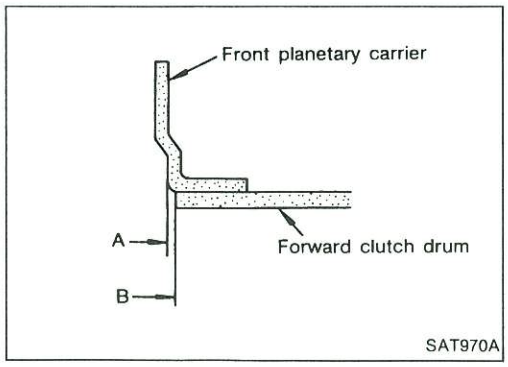


- **Check that portion A of front planetary carrier protrudes approximately 2 mm (0.08 in) beyond portion B of forward clutch assembly.**

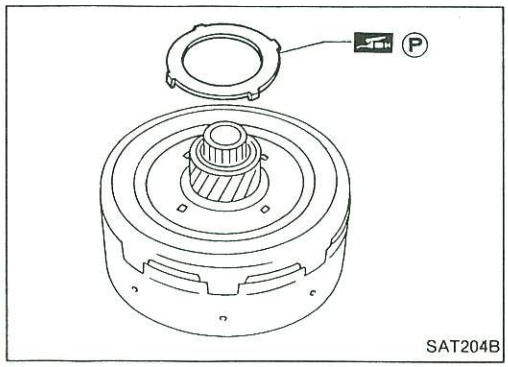


e. Install bearing races on rear of clutch pack.
- **Apply petroleum jelly to bearing races.**
- **Securely engage pawls of bearing race with hole in clutch pack.**

## Adjustment (Cont'd)

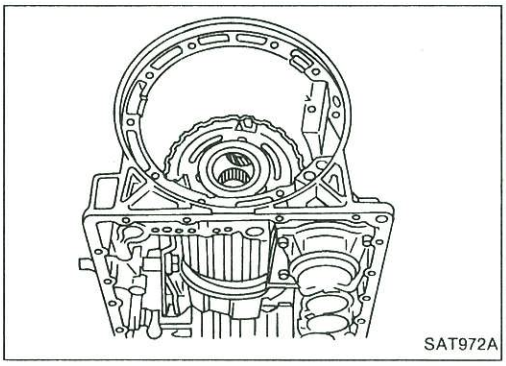
SAT972A

f. Place transmission case in vertical position.

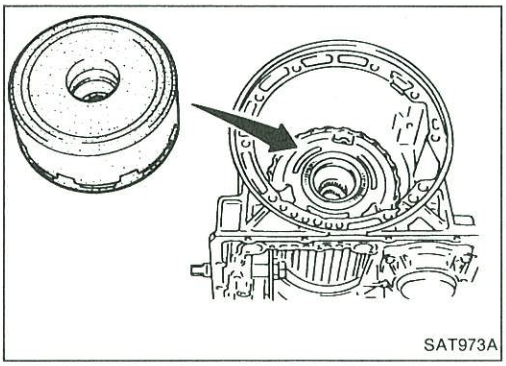
SAT973A

g. Install clutch pack into transmission case.

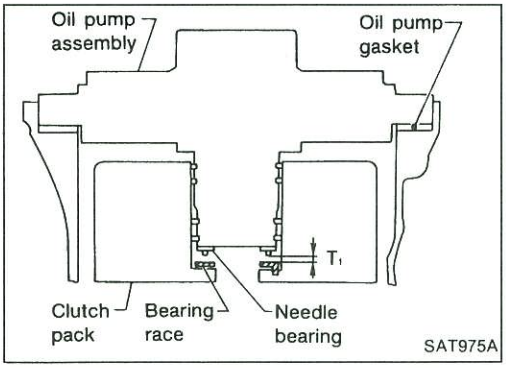

SAT975A

2. Adjust total end play.
   **Total end play "$T_1$":**
   **0.25 - 0.55 mm (0.0098 - 0.0217 in)**

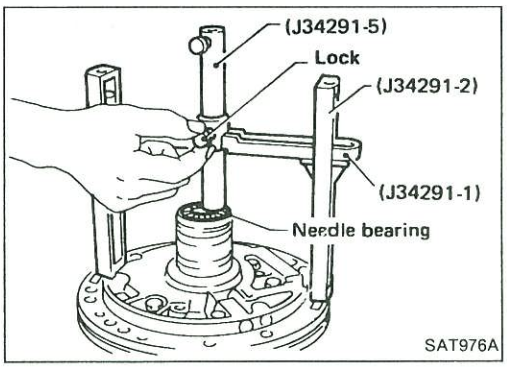

SAT976A

a. With needle bearing installed, place J34291-1 (bridge), J34291-2 (legs) and the J34291-5 (gauging cylinder) onto oil pump. The long ends of legs should be placed firmly on machined surface of oil pump assembly and gauging cylinder should rest on top of the needle bearing. Lock gauging cylinder in place with set screw.

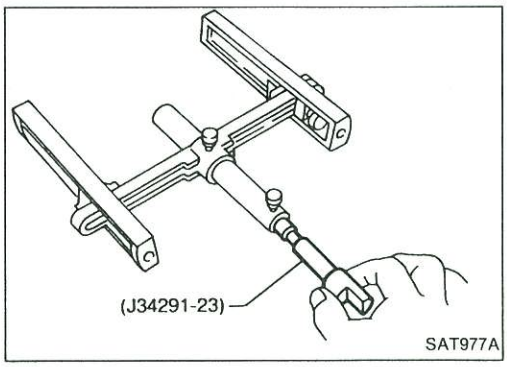

SAT977A

b. Install J34291-23 (gauging plunger) into gauging cylinder.

## Adjustment (Cont'd)

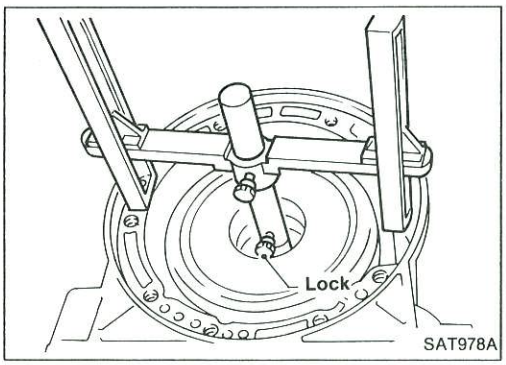


c. With original bearing race installed inside reverse clutch drum, place shim selecting gauge with its legs on machined surface of transmission case (no gasket) and allow gauging plunger to rest on bearing race. Lock gauging plunger in place with set screw.

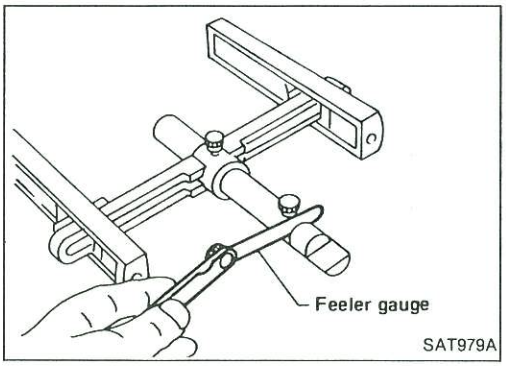


d. Remove Tool and use feeler gauge to measure gap between gauging cylinder and gauging plunger. This measurement should give exact total end play.

**Total end play "$T_1$":**
**0.25 - 0.55 mm (0.0098 - 0.0217 in)**

- If end play is out of specification, decrease or increase thickness of oil pump cover bearing race as necessary.

**Available oil pump cover bearing race:**
**Refer to S.D.S.**

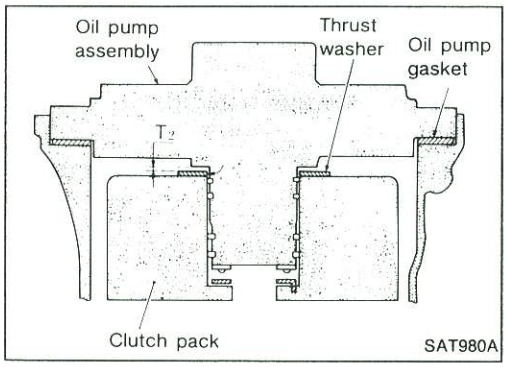


3. Adjust reverse clutch drum end play.

**Reverse clutch drum end play "$T_2$":**
**0.55 - 0.90 mm (0.0217 - 0.0354 in)**

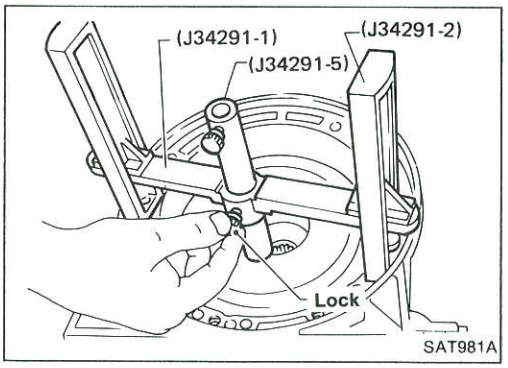


a. Place J34291-1 (bridge), J34291-2 (legs) and J34291-5 (gauging cylinder) on machined surface of transmission case (no gasket) and allow gauging cylinder to rest on front thrust surface of reverse clutch drum. Lock cylinder in place with set screw.

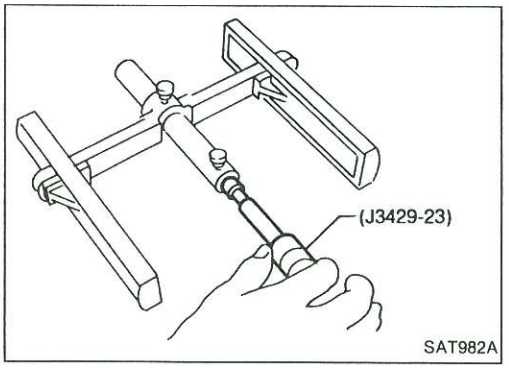


b. Install J34291-23 (gauging plunger) into gauging cylinder.

## Adjustment (Cont'd)

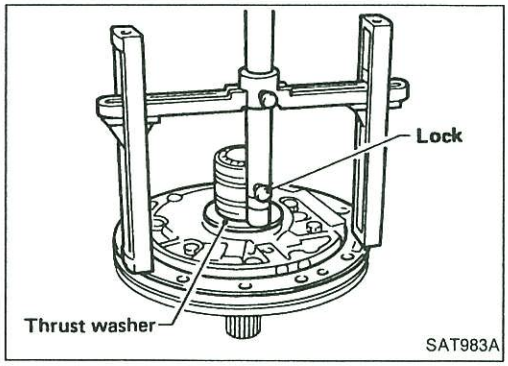


c. With original thrust washer installed on oil pump, place shim setting gauge legs onto machined surface of oil pump assembly and allow gauging plunger to rest on thrust washer. Lock plunger in place with set screw.

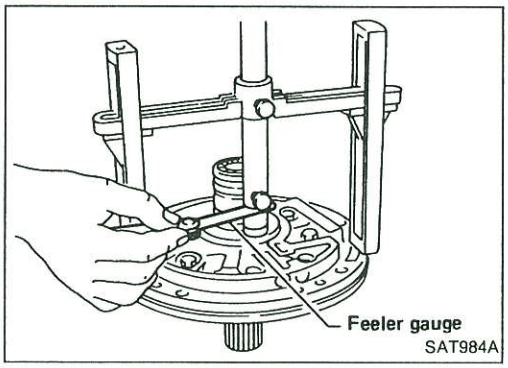


d. Use feeler gauge to measure gap between gauging plunger and gauging cylinder. This measurement should give you exact reverse clutch drum end play.

**Reverse clutch drum end play "$T_2$":**
**0.55 - 0.90 mm (0.0217 - 0.0354 in)**

- If end play is out of specification, decrease or increase thickness of oil pump thrust washer as necessary.

**Available oil pump thrust washer:**
**Refer to S.D.S.**

## Assembly

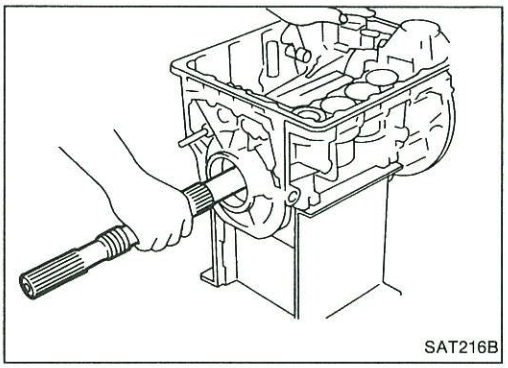


1. Install output shaft and parking gear.

a. Insert output shaft from rear of transmission case while slightly lifting front internal gear.

- **Do not force output shaft against front of transmission case.**

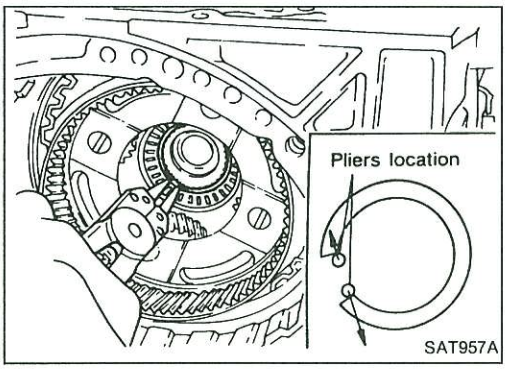


b. Carefully push output shaft against front of transmission case. Install snap ring on front of output shaft.

- **Check to be sure output shaft cannot be removed in rear direction.**

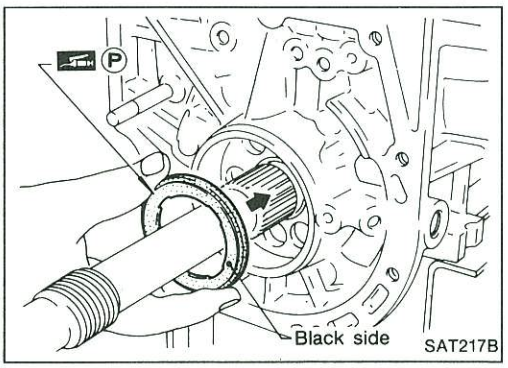


c. Install needle bearing on transmission case.

- **Pay attention to its direction — Black side goes to rear.**
- **Apply petroleum jelly to needle bearing.**

## Assembly (Cont'd)

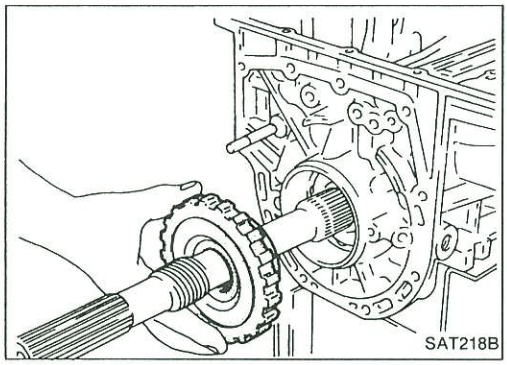


d. Install parking gear on transmission case.

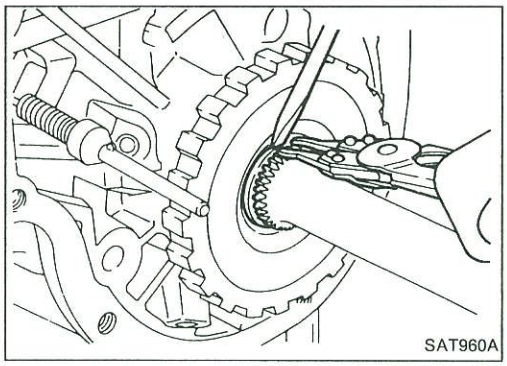


e. Install snap ring on rear of output shaft.

- **Check to be sure output shaft cannot be removed in forward direction.**

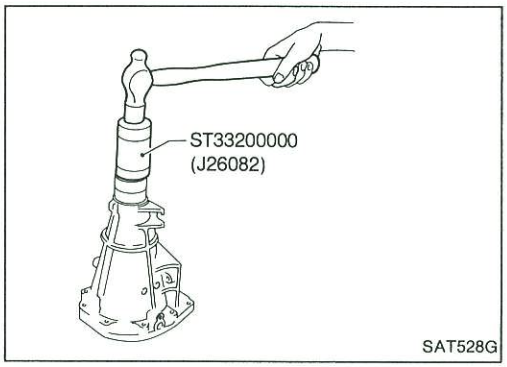


2. Install rear extension.

a. Install oil seal on rear extension.

- **Apply A.T.F. to oil seal.**

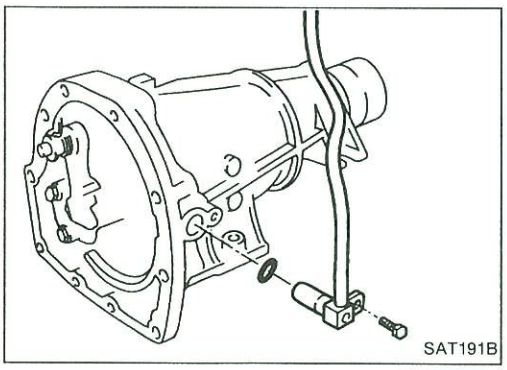


b. Install O-ring on revolution sensor.

- **Apply A.T.F. to O-ring.**

c. Install revolution sensor on rear extension.

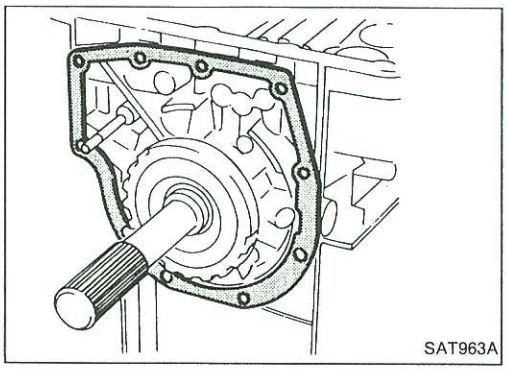


d. Install rear extension gasket on transmission case.

## Assembly (Cont'd)

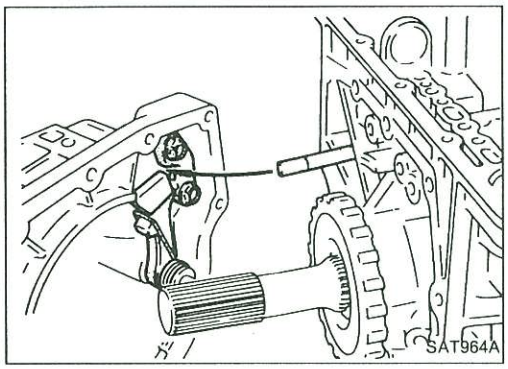


e. Install parking rod on transmission case.

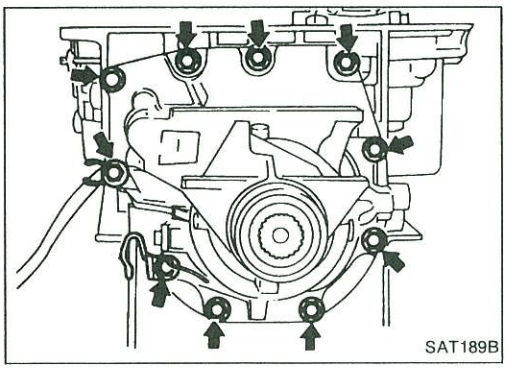


f. Install rear extension on transmission case.

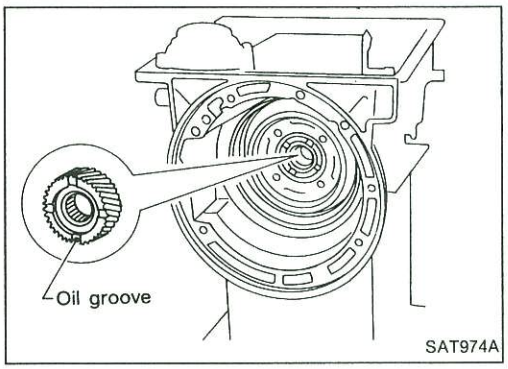


3. Install front side clutch and gear components.
a. Install rear sun gear on transmission case.
- **Pay attention to its direction.**

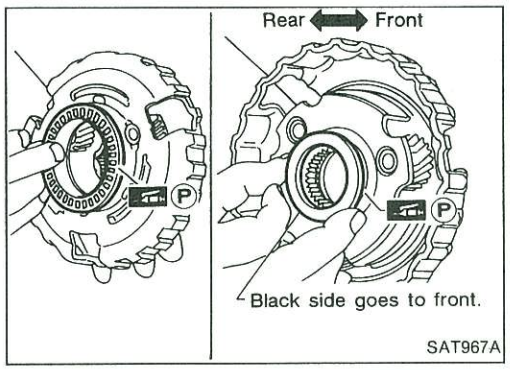


b. Make sure needle bearing is on front of front planetary carrier.
- **Apply petroleum jelly to needle bearing.**

c. Make sure needle bearing is on rear of front planetary carrier.
- **Apply petroleum jelly to bearing.**
- **Pay attention to its direction — Black side goes to front.**

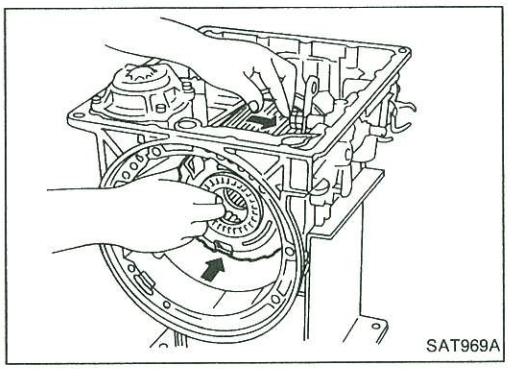


d. While rotating forward clutch drum clockwise, install front planetary carrier on forward clutch drum.

## Assembly (Cont'd)

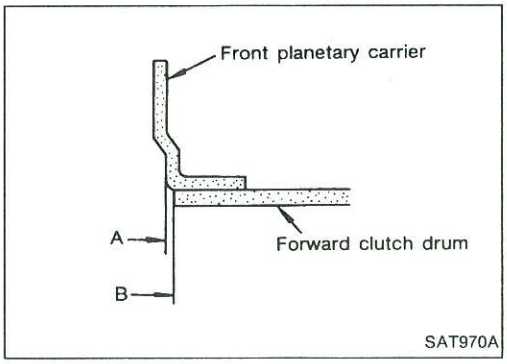


- **Check that portion A of front planetary carrier protrudes approximately 2 mm (0.08 in) beyond portion B of forward clutch assembly.**

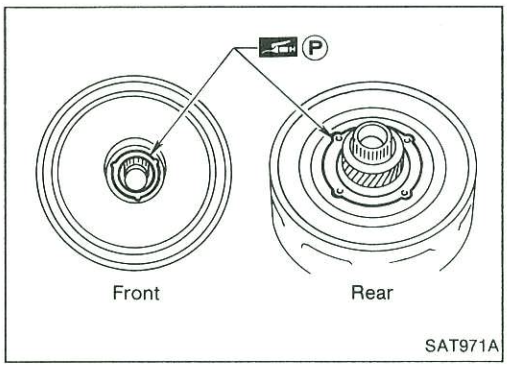


e. Make sure bearing races are on front and rear of clutch pack.
- **Apply petroleum jelly to bearing races.**
- **Securely engage pawls of bearing races with holes in clutch pack.**

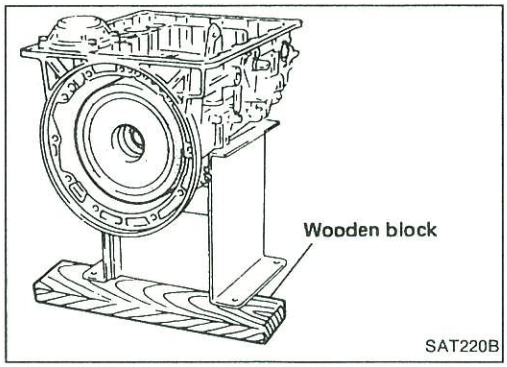


f. Install clutch pack into transmission case.

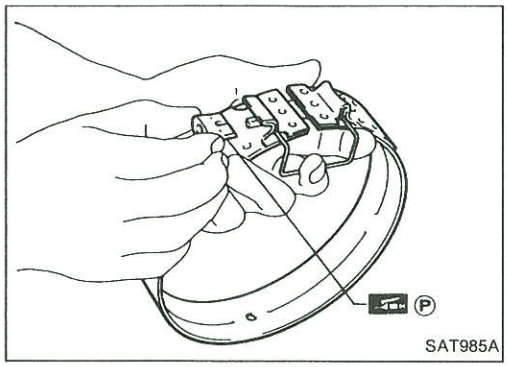


4. Install brake band and band strut.
a. Install band strut on brake band.
- **Apply petroleum jelly to band strut.**

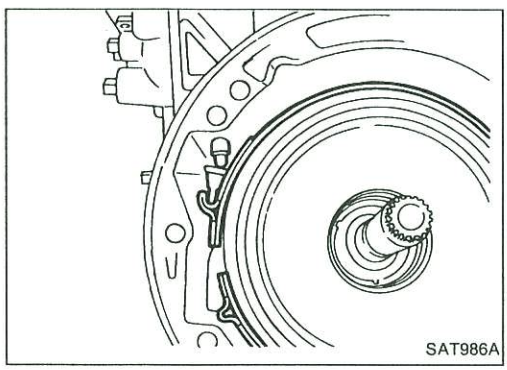


b. Place brake band on periphery of reverse clutch drum, and insert band strut into end of band servo piston stem.

## Assembly (Cont'd)

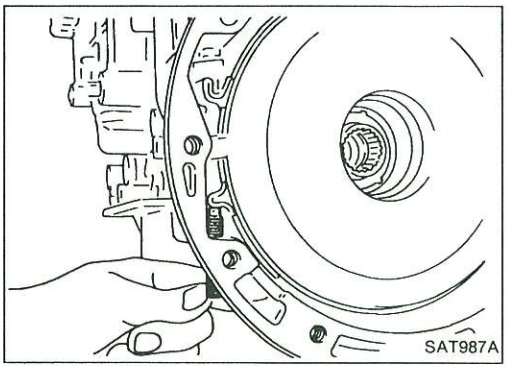


c. Install anchor end bolt on transmission case. Then, tighten anchor end bolt just enough so that reverse clutch drum (clutch pack) will not tilt forward.

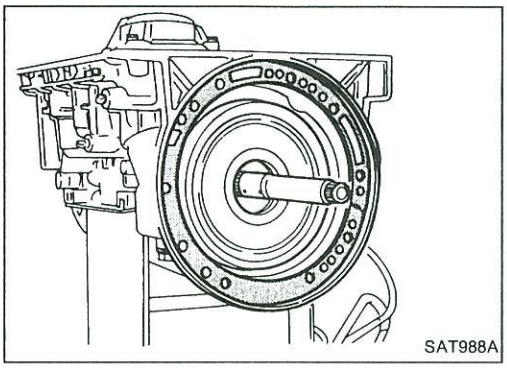


5. Install input shaft on transmission case.
- **Pay attention to its direction — O-ring groove side is front.**

6. Install gasket on transmission case.

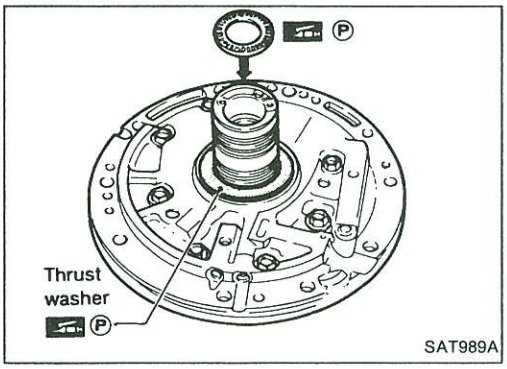


7. Install oil pump assembly.

a. Install needle bearing on oil pump assembly.
- **Apply petroleum jelly to the needle bearing.**

b. Install selected thrust washer on oil pump assembly.
- **Apply petroleum jelly to thrust washer.**

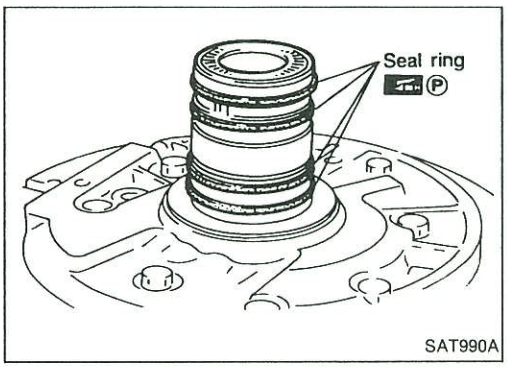


c. Carefully install seal rings into grooves and press them into the petroleum jelly so that they are a tight fit.

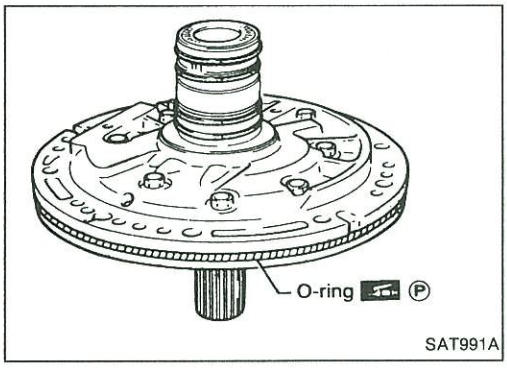


d. Install O-ring on oil pump assembly.
- **Apply petroleum jelly to O-ring.**

## Assembly (Cont'd)

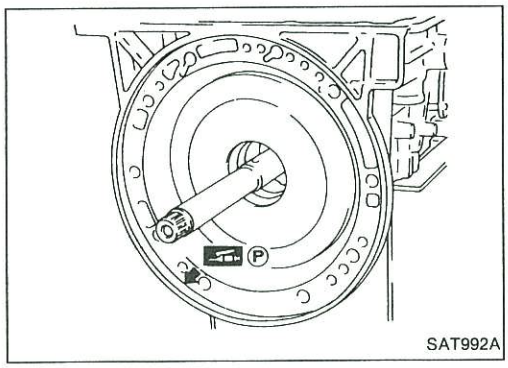


e. Apply petroleum jelly to mating surface of transmission case and oil pump assembly.

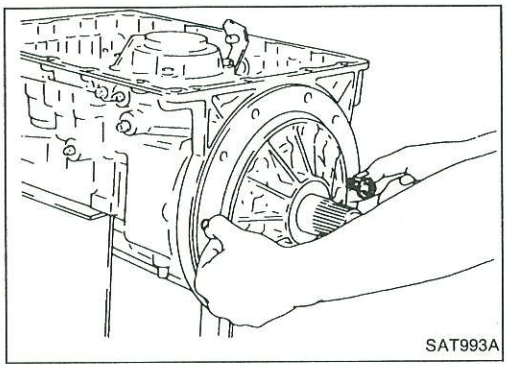


f. Install oil pump assembly.

- **Install two converter housing securing bolts in bolt holes in oil pump assembly as guides.**

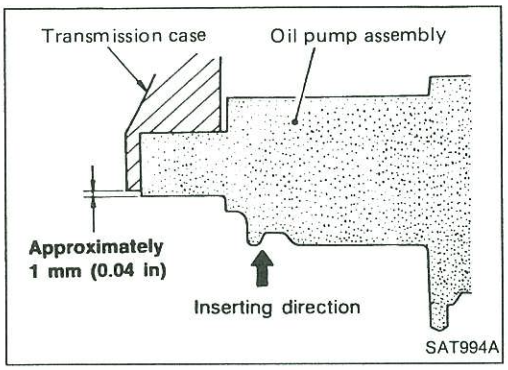


- **Insert oil pump assembly to the specified position in transmission, as shown at left.**

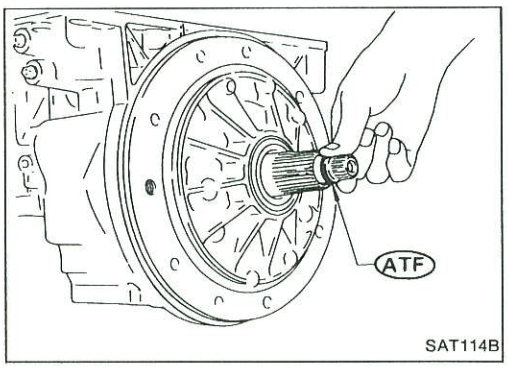


8. Install O-ring on input shaft.

- **Apply A.T.F. to O-rings.**

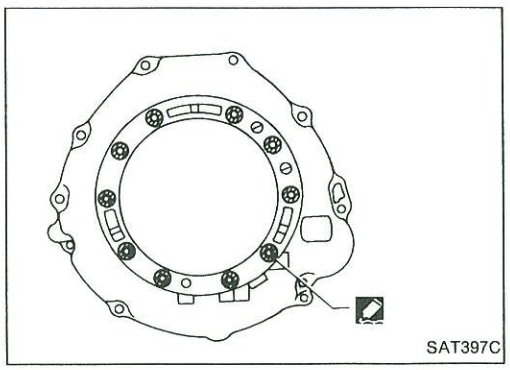


9. Install converter housing.

a. Apply recommended sealant (Nissan genuine part: KP610-00250 or equivalent) to outer periphery of bolt holes in converter housing.

- **Do not apply too much sealant.**

## Assembly (Cont'd)

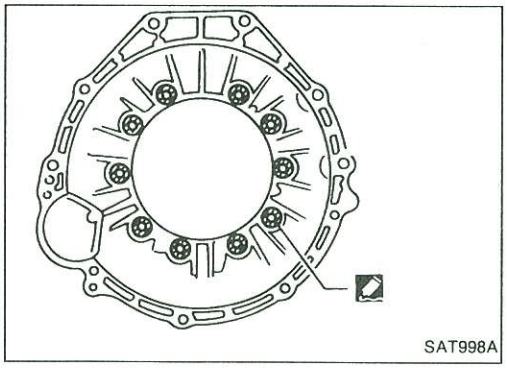
SAT998A

b. Apply recommended sealant (Nissan genuine part: KP610-00250 or equivalent) to seating surfaces of bolts that secure front of converter housing.

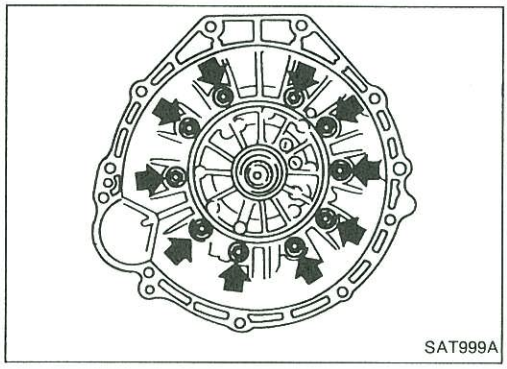
SAT999A

c. Install converter housing on transmission case.

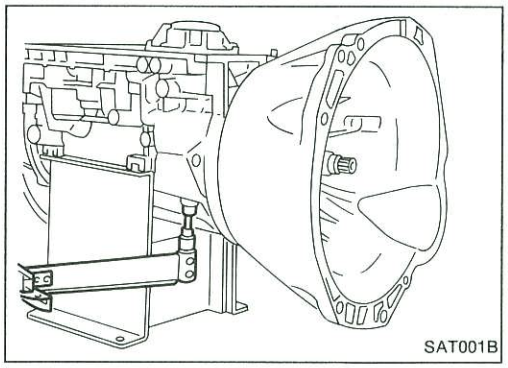
SAT001B

10. Adjust brake band.
a. Tighten anchor end bolt to specified torque.
**Anchor end bolt:**
**: 4 - 6 N·m**
**(0.4 - 0.6 kg-m, 2.9 - 4.3 ft-lb)**
b. Back off anchor end bolt two and a half turns.

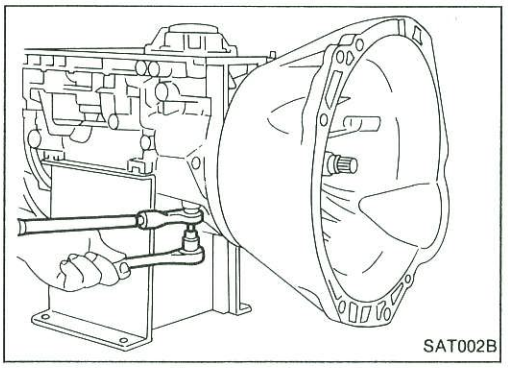
SAT002B

c. While holding anchor end pin, tighten lock nut.

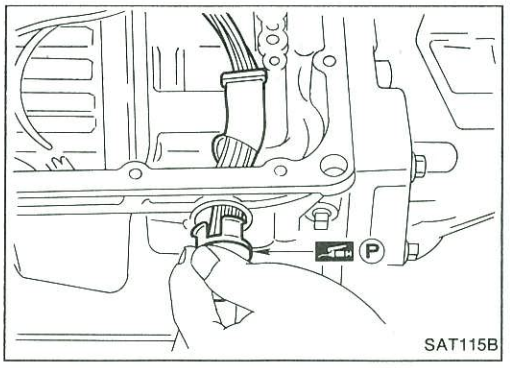

SAT115B

11. Install terminal cord assembly.
a. Install O-ring on terminal cord assembly.
- **Apply petroleum jelly to O-ring.**

b. Compress terminal cord assembly stopper and install terminal cord assembly on transmission case.

## Assembly (Cont'd)

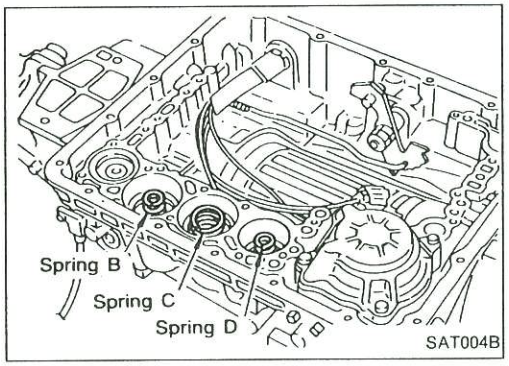


12. Install control valve assembly.
a. Install accumulator piston return springs B, C and D.

**Free length of return springs:**

Unit: mm (in)

| Accumulator | B | C | D |
|---|---|---|---|
| Free length | 66 (2.60) | 45 (1.77) | 58.4 (2.299) |

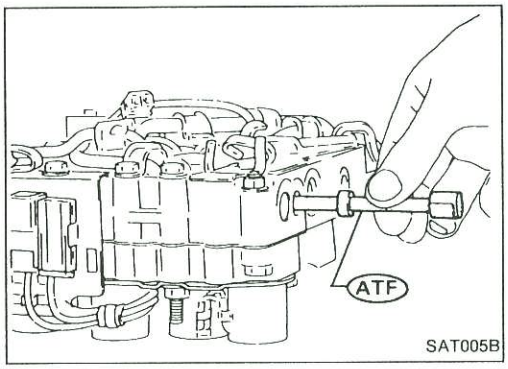


b. Install manual valve on control valve.
- **Apply A.T.F. to manual valve.**

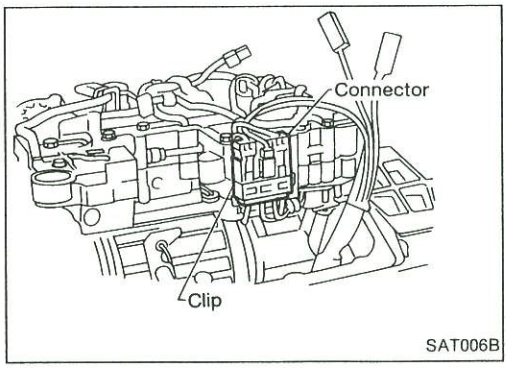


c. Place control valve assembly on transmission case. Connect solenoid connector for upper body.
d. Install connector clip.

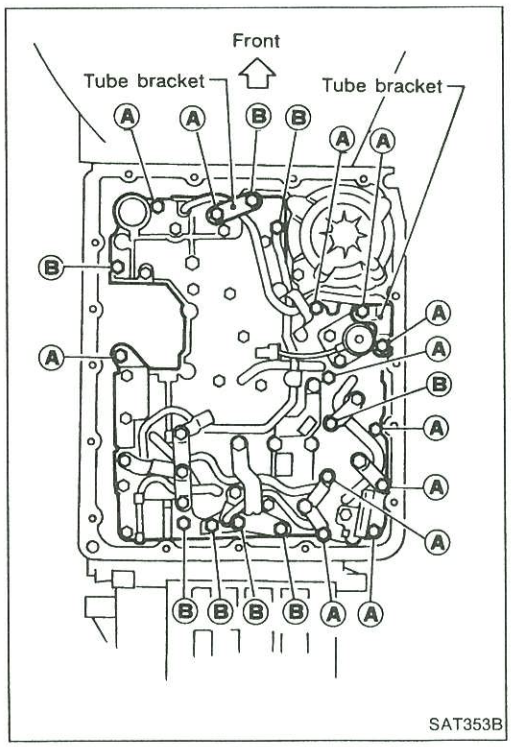


e. Install control valve assembly on transmission case.
f. Install connector tube brackets and tighten bolts Ⓐ and Ⓑ.
- **Check that terminal assembly does not catch.**

| Bolt symbol | ℓ mm (in) ℓ |
|---|---|
| Ⓐ | 33 (1.30) |
| Ⓑ | 45 (1.77) |

## Assembly (Cont'd)

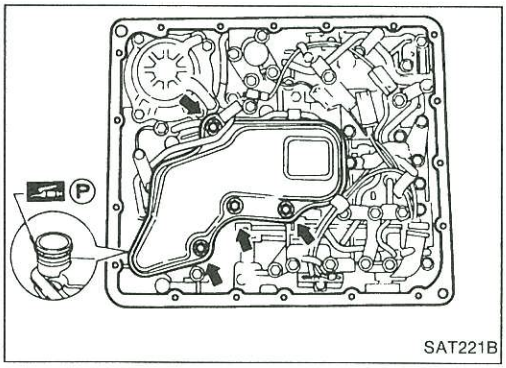


g. Install O-ring on oil strainer.
- **Apply petroleum jelly to O-ring.**

h. Install oil strainer on control valve.

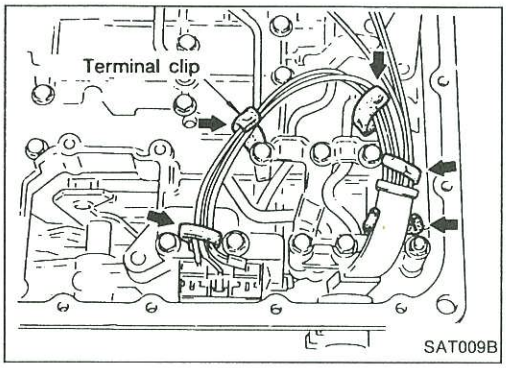


i. Securely fasten terminal harness with clips.

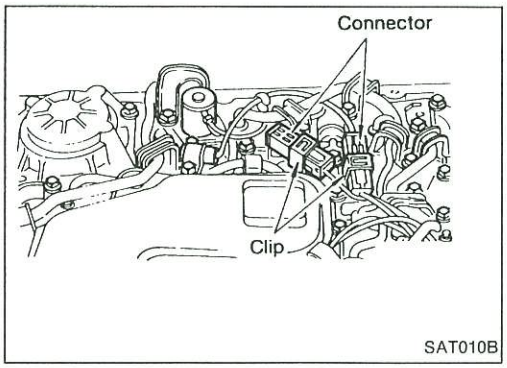


j. Install torque converter clutch solenoid valve and fluid temperature sensor connectors.

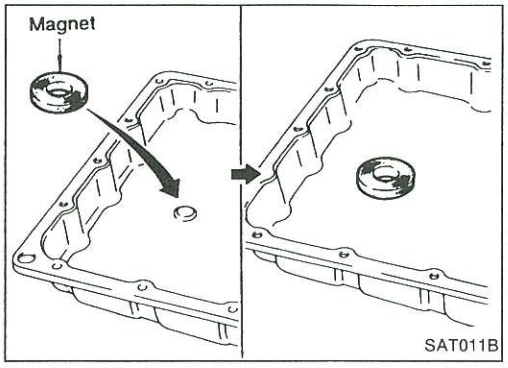


13. Install oil pan.

a. Attach a magnet to oil pan.

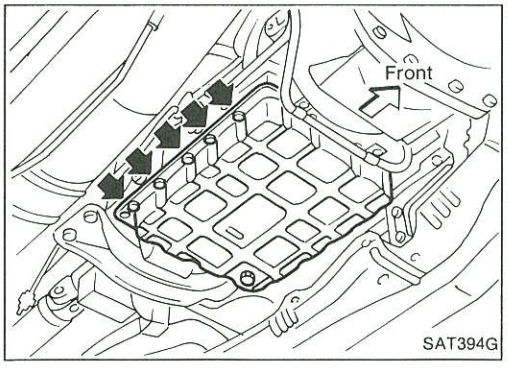


b. Install oil pan gasket on transmission case.

c. Install oil pan and bracket on transmission case.
- **Tighten four bolts in a criss-cross pattern to prevent dislocation of gasket.**

## Assembly (Cont'd)

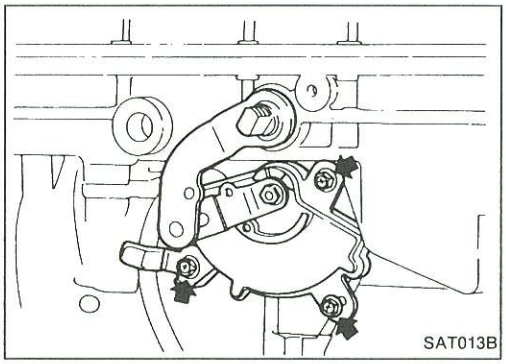


14. Install inhibitor switch.
a. Check that manual shaft is in "1" position.
b. Temporarily install inhibitor switch on manual shaft.
c. Move manual shaft to "N".

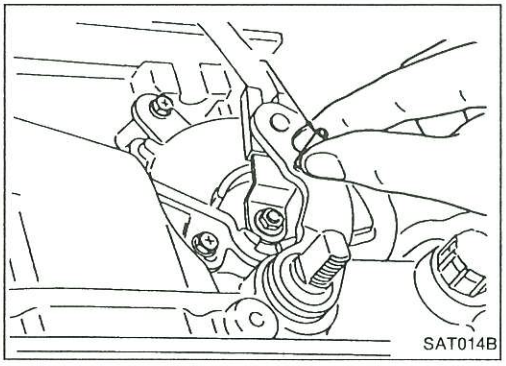


d. Tighten bolts while inserting 4.0 mm (0.157 in) dia. pin vertically into locating holes in inhibitor switch and manual shaft.

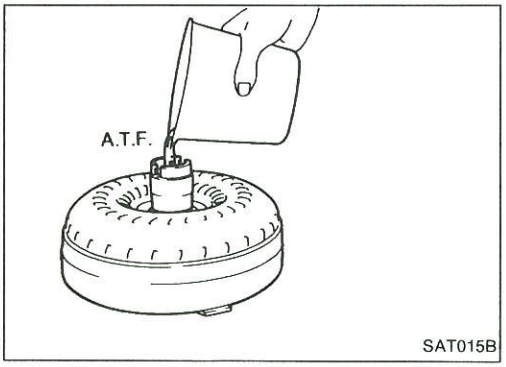


15. Install torque converter.
a. Pour A.T.F. into torque converter.

- **Approximately 2 liters (2-1/8 US qt, 1-3/4 Imp qt) of fluid are required for a new torque converter.**
- **When reusing old torque converter, add the same amount of fluid as was drained.**

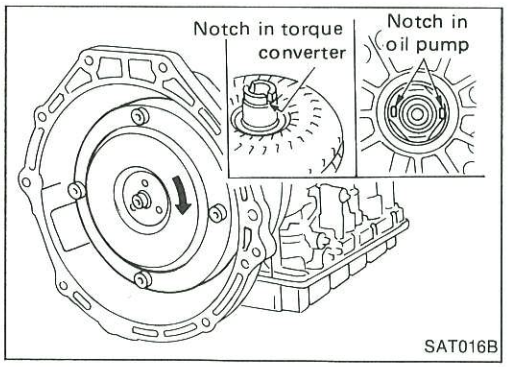


b. Install torque converter while aligning notches and oil pump.

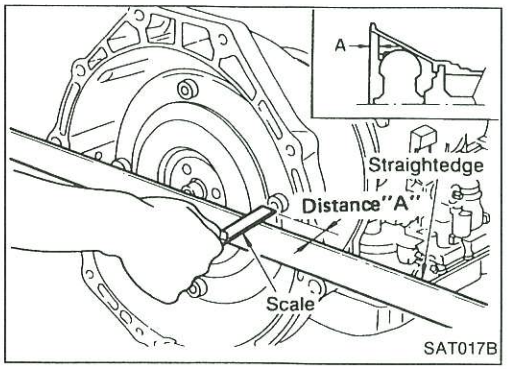


c. Measure distance A to check that torque converter is in proper position.
**Distance "A":**
**26.0 mm (1.024 in) or more**

## General Specifications

| | |
|---|---|
| Engine | KA24DE |
| Automatic transmission model | RE4R01A |
| Transmission model code number | 45X64 |
| Stall torque ratio | 2.0 : 1 |
| Transmission gear ratio | |
| 1st | 2.785 |
| 2nd | 1.545 |
| Top | 1.000 |
| O.D. | 0.694 |
| Reverse | 2.272 |
| Recommended oil | Genuine Nissan ATF or equivalent type DEXRON™II |
| Oil capacity ℓ (US qt, Imp qt) | 8.3 (8-3/4, 7-1/4) |

## Specifications and Adjustment

### VEHICLE SPEED WHEN SHIFTING GEARS

| Throttle position | Vehicle speed km/h (MPH) | | | | | | |
|---|---|---|---|---|---|---|---|
| | $D_1 \rightarrow D_2$ | $D_2 \rightarrow D_3$ | $D_3 \rightarrow D_4$ | $D_4 \rightarrow D_3$ | $D_3 \rightarrow D_2$ | $D_2 \rightarrow D_1$ | $1_2 \rightarrow 1_1$ |
| Full throttle | 56 - 60 (35 - 37) | 101 - 109 (63 - 68) | 158 - 168 (98 - 104) | 152 - 162 (94 - 101) | 91 - 99 (57 - 62) | 40 - 44 (25 - 27) | 53 - 57 (33 - 35) |
| Half throttle | 39 - 43 (24 - 27) | 74 - 80 (46 - 50) | 112 - 120 (70 - 75) | 56 - 64 (35 - 40) | 27 - 33 (17 - 21) | 10 - 14 (6 - 9) | 53 - 57 (33 - 35) |

### VEHICLE SPEED WHEN PERFORMING AND RELEASING LOCK-UP

| Throttle position | O.D. switch [Shift position] | Vehicle speed km/h (MPH) | |
|---|---|---|---|
| | | Lock-up "ON" | Lock-up "OFF" |
| Full throttle | ON [$D_4$] | 159 - 167 (99 - 104) | 153 - 161 (95 - 100) |
| | OFF [$D_3$] | 101 - 109 (63 - 68) | 91 - 99 (57 - 62) |
| Half throttle | ON[$D_4$] | 112 - 120 (70 - 75) | 101 - 109 (63 - 68) |
| | OFF [$D_3$] | 91 - 99 (57 - 62) | 86 - 94 (53 - 58) |

### STALL REVOLUTION

| Stall revolution rpm |
|---|
| 2,050 - 2,250 |

### LINE PRESSURE

| Engine speed rpm | Line pressure kPa (kg/cm$^2$, psi) | |
|---|---|---|
| | D, 2 and 1 positions | R position |
| Idle | 422 - 461 (4.3 - 4.7, 61 - 67) | 588 - 628 (6.0 - 6.4, 85 - 91) |
| Stall | 1,020 - 1,098 (10.4 - 11.2, 148 - 159) | 1,422 - 1,500 (14.5 - 15.3, 206 - 218) |

## Specifications and Adjustment (Cont'd)

### RETURN SPRINGS

Unit: mm (in)

| Parts | | | Part No. | Free length | Outer diameter |
|---|---|---|---|---|---|
| Control valve | Upper body | Torque converter relief valve spring | 31742-41X23 | 38.0 (1.496) | 9.0 (0.354) |
| | | Pressure regulator valve spring | 31742-41X24 | 44.0 (1.732) | 14.0 (0.551) |
| | | Pressure modifier valve spring | 31742-41X19 | 31.95 (1.2579) | 6.8 (0.268) |
| | | Shuttle shift valve D spring | 31762-41X00 | 26.5 (1.043) | 6.0 (0.236) |
| | | 4-2 sequence valve spring | 31756-41X00 | 29.1 (1.146) | 6.95 (0.2736) |
| | | Shift valve B spring | 31762-41X01 | 25.0 (0.984) | 7.0 (0.276) |
| | | 4-2 relay valve spring | 31756-41X00 | 29.1 (1.146) | 6.95 (0.2736) |
| | | Shift valve A spring | 31762-41X01 | 25.0 (0.984) | 7.0 (0.276) |
| | | Overrun clutch control valve spring | 31762-41X03 | 23.6 (0.929) | 7.0 (0.276) |
| | | Overrun clutch reducing valve spring | 31742-41X20 | 32.5 (1.280) | 7.0 (0.276) |
| | | Shuttle shift valve S spring | 31762-41X04 | 51.0 (2.008) | 5.65 (0.2224) |
| | | Pilot valve spring | 31742-41X13 | 25.7 (1.012) | 9.1 (0.358) |
| | | Lock-up control valve spring | 31742-41X22 | 18.5 (0.728) | 13.0 (0.512) |
| | Lower body | Modifier accumulator piston spring | 31742-27X70 | 31.4 (1.236) | 9.8 (0.386) |
| | | 1st reducing valve spring | 31756-41X05 | 25.4 (1.000) | 6.75 (0.2657) |
| | | 3-2 timing valve spring | 31742-41X08 | 20.55 (0.8091) | 6.75 (0.2657) |
| | | Servo charger valve spring | 31742-41X06 | 23.0 (0.906) | 6.7 (0.264) |
| Reverse clutch | | 16 pcs | 31505-41X02 | 19.69 (0.7752) | 11.6 (0.457) |
| High clutch | | 16 pcs | 31505-21X03 | 22.1 (0.870) | 11.6 (0.457) |
| Forward clutch (Overrun clutch) | | 20 pcs | 31505-41X01 | 35.77 (1.4083) | 9.7 (0.382) |
| Low & reverse brake | | 18 pcs | 31521-21X00 | 23.7 (0.933) | 11.6 (0.457) |
| Band servo | | Spring A | 31605-41X05 | 45.6 (1.795) | 34.3 (1.350) |
| | | Spring B | 31605-41X00 | 53.8 (2.118) | 40.3 (1.587) |
| | | Spring C | 31605-41X01 | 29.7 (1.169) | 27.6 (1.087) |
| Accumulator | | Accumulator A | 31605-41X02 | 43.0 (1.693) | — |
| | | Accumulator B | 31605-41X10 | 66.0 (2.598) | — |
| | | Accumulator C | 31605-41X09 | 45.0 (1.772) | — |
| | | Accumulator D | 41605-41X06 | 58.4 (2.299) | — |

## Specifications and Adjustment (Cont'd)

### ACCUMULATOR O-RING

| Accumulator | Diameter mm (in) | | | |
|---|---|---|---|---|
| | A | B | C | D |
| Small diameter end | 29 (1.14) | 32 (1.26) | 45 (1.77) | 29 (1.14) |
| Large diameter end | 45 (1.77) | 50 (1.97) | 50 (1.97) | 45 (1.77) |

### CLUTCHES AND BRAKES

**Reverse clutch**

| | |
|---|---|
| Number of drive plates | 2 |
| Number of driven plates | 2 |
| Thickness of drive plate mm (in) | |
| Standard | 2.0 (0.079) |
| Wear limit | 1.8 (0.071) |
| Clearance mm (in) | |
| Standard | 0.5 - 0.8 (0.020 - 0.031) |
| Allowable limit | 1.2 (0.047) |

| Thickness of retaining plate | Thickness mm (in) | Part number |
|---|---|---|
| | 4.6 (0.181) | 31537-42X01 |
| | 4.8 (0.189) | 31537-42X02 |
| | 5.0 (0.197) | 31537-42X03 |
| | 5.2 (0.205) | 31537-42X04 |
| | 5.4 (0.213) | 31537-42X05 |

**High clutch**

| | |
|---|---|
| Number of drive plates | 4 |
| Number of driven plates | 7 |
| Thickness of drive plate mm (in) | |
| Standard | 1.6 (0.063) |
| Wear limit | 1.4 (0.055) |
| Clearance mm (in) | |
| Standard | 1.8 - 2.2 (0.071 - 0.087) |
| Allowable limit | 3.0 (0.118) |

| Thickness of retaining plate | Thickness mm (in) | Part number |
|---|---|---|
| | 3.0 (0.118) | 31537-41X69 |
| | 3.2 (0.126) | 31537-41X70 |
| | 3.4 (0.134) | 31537-41X71 |
| | 3.6 (0.142) | 31537-41X61 |
| | 3.8 (0.150) | 31537-41X62 |
| | 4.0 (0.157) | 31537-41X63 |
| | 4.2 (0.165) | 31537-41X64 |
| | 4.4 (0.173) | 31537-41X65 |

**Forward clutch**

| | |
|---|---|
| Number of drive plates | 5 |
| Number of driven plates | 5 |
| Thickness of drive plate mm (in) | |
| Standard | 2.0 (0.079) |
| Wear limit | 1.8 (0.071) |
| Clearance mm (in) | |
| Standard | 0.45 - 0.85 (0.0177 - 0.0335) |
| Allowable limit | 1.85 (0.0728) |

| Thickness of retaining plate | Thickness mm (in) | Part number |
|---|---|---|
| | 8.0 (0.315) | 31537-41X00 |
| | 8.2 (0.323) | 31537-41X01 |
| | 8.4 (0.331) | 31537-41X02 |
| | 8.6 (0.339) | 31537-41X03 |
| | 8.8 (0.346) | 31537-41X04 |
| | 9.0 (0.354) | 31537-41X05 |
| | 9.2 (0.362) | 31537-41X06 |

**Overrun clutch**

| | |
|---|---|
| Number of drive plates | 3 |
| Number of driven plates | 5 |
| Thickness of drive plate mm (in) | |
| Standard | 2.0 (0.079) |
| Wear limit | 1.8 (0.071) |
| Clearance mm (in) | |
| Standard | 1.0 - 1.4 (0.039 - 0.055) |
| Allowable limit | 2.0 (0.079) |

| Thickness of retaining plate | Thickness mm (in) | Part number |
|---|---|---|
| | 4.0 (0.157) | 31537-41X79 |
| | 4.2 (0.165) | 31537-41X80 |
| | 4.4 (0.173) | 31537-41X81 |
| | 4.6 (0.181) | 31537-41X82 |
| | 4.8 (0.189) | 31537-41X83 |
| | 5.0 (0.197) | 31537-41X84 |
| | 5.2 (0.205) | 31537-41X20 |

## Specifications and Adjustment (Cont'd)

| | | |
|---|---|---|
| Low & reverse brake | | |
| Number of drive plates | 6 | |
| Number of driven plates | 6 | |
| Thickness of drive plate mm (in) | | |
| Standard | 2.0 (0.079) | |
| Wear limit | 1.8 (0.071) | |
| Clearance mm (in) | | |
| Standard | 0.7 - 1.1 (0.028 - 0.043) | |
| Allowable limit | 2.3 (0.091) | |
| Thickness of retaining plate | Thickness mm (in) | Part number |
| | 9.0 (0.354) | 31667-41X05 |
| | 9.2 (0.362) | 31667-41X06 |
| | 9.4 (0.370) | 31667-41X09 |
| | 9.6 (0.378) | 31667-41X10 |
| | 9.8 (0.386) | 31667-41X18 |
| | 10.0 (0.394) | 31667-41X19 |
| Brake band | | |
| Anchor end bolt tightening torque N·m (kg-m, ft-lb) | 4 - 6 (0.4 - 0.6, 2.9 - 4.3) | |
| Number of returning revolutions for anchor end bolt | 2.5 | |

### OIL PUMP AND LOW ONE-WAY CLUTCH

| | |
|---|---|
| Oil pump clearance mm (in) | |
| Cam ring — oil pump housing | |
| Standard | 0.01 - 0.024 (0.0004 - 0.0009) |
| Rotor, vanes and control piston — oil pump housing | |
| Standard | 0.03 - 0.044 (0.0012 - 0.0017) |
| Seal ring clearance mm (in) | |
| Standard | 0.10 - 0.25 (0.0039 - 0.0098) |
| Allowable limit | 0.25 (0.0098) |

### TOTAL END PLAY

| | | |
|---|---|---|
| Total end play "$T_1$" | 0.25 - 0.55 mm (0.0098 - 0.0217 in) | |
| Thickness of oil pump cover bearing race | Thickness mm (in) | Part number |
| | 0.8 (0.031) | 31429-21X00 |
| | 1.0 (0.039) | 31429-21X01 |
| | 1.2 (0.047) | 31429-21X02 |
| | 1.4 (0.055) | 31429-21X03 |
| | 1.6 (0.063) | 31429-21X04 |
| | 1.8 (0.071) | 31429-21X05 |
| | 2.0 (0.079) | 31429-21X06 |

### REVERSE CLUTCH DRUM END PLAY

| | | |
|---|---|---|
| Reverse clutch drum end play "$T_2$" | 0.55 - 0.90 mm (0.0217 - 0.0354 in) | |
| Thickness of oil pump thrust washer | Thickness mm (in) | Part number |
| | 0.7 (0.028) | 31528-21X00 |
| | 0.9 (0.035) | 31528-21X01 |
| | 1.1 (0.043) | 31528-21X02 |
| | 1.3 (0.051) | 31528-21X03 |
| | 1.5 (0.059) | 31528-21X04 |
| | 1.7 (0.067) | 31528-21X05 |
| | 1.9 (0.075) | 31528-21X06 |

### REMOVAL AND INSTALLATION

| | |
|---|---|
| Manual control linkage | |
| Number of returning revolutions for lock nut | 1 |
| Lock nut tightening torque | 11 - 15 N·m (1.1 - 1.5 kg-m, 8 - 11 ft-lb) |
| Distance between end of clutch housing and torque converter | 26.0 mm (1.024 in) or more |
| Drive plate runout limit | 0.5 mm (0.020 in) |

# PROPELLER SHAFT & DIFFERENTIAL CARRIER

# SECTION PD



## CONTENTS


**PREPARATION** ..... 2
Special Service Tools ..... 2

**PROPELLER SHAFT**

**PROPELLER SHAFT** ..... 5
On-vehicle Service ..... 6
Removal ..... 6
Installation ..... 6
Inspection ..... 7
Disassembly ..... 7
Assembly ..... 8

**FINAL DRIVE**

**ON-VEHICLE SERVICE/REMOVAL AND INSTALLATION** ..... 9
Front Oil Seal Replacement ..... 9
Side Oil Seal Replacement ..... 9
Removal ..... 10
Installation ..... 10
**FINAL DRIVE** ..... 11
**DISASSEMBLY** ..... 13
Pre-inspection ..... 13
Differential Carrier ..... 13
Differential Case ..... 15
**INSPECTION** ..... 17
Ring Gear and Drive Pinion ..... 17
Bearing ..... 17
Differential Case Assembly ..... 17
**ADJUSTMENT** ..... 18
Side Bearing Preload ..... 18
Pinion Gear Height and Pinion Bearing Preload ..... 19
Tooth Contact ..... 24
**ASSEMBLY** ..... 25
Differential Case ..... 25
Differential Carrier ..... 27

**SERVICE DATA AND SPECIFICATIONS (S.D.S.)** ..... 31
Propeller Shaft ..... 31
Final Drive ..... 31

## Special Service Tools

| Tool number<br>(Kent-Moore No.)<br>Tool name | Description | |
|---|---|---|
| ST38060002<br>(J34311)<br>Drive pinion flange wrench | 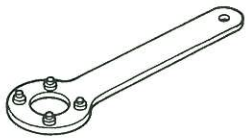 | Removing and installing propeller shaft lock nut, and drive pinion lock nut. |
| KV38100800<br>( — )<br>Equivalent tool<br>(J25604-01)<br>Differential attachment | 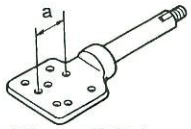 <br>**a: 152 mm (5.98 in)** | Mounting final drive<br>(To use, make a new hole.) |
| ST3090S000<br>( — )<br>Drive pinion rear inner race puller set<br>① ST30031000<br>(J22912-01)<br>Puller<br>② ST30901000<br>( — )<br>Equivalent tool<br>(J26010-01)<br>Base | 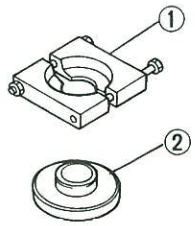 | Removing and installing drive pinion rear cone |
| ST3306S001<br>( — )<br>Differential side bearing puller set<br>① ST33051001<br>( — )<br>Equivalent tool<br>(J22888)<br>Body<br>② ST33061000<br>(J8107-2)<br>Equivalent tool<br>(J26010-01)<br>Adapter | 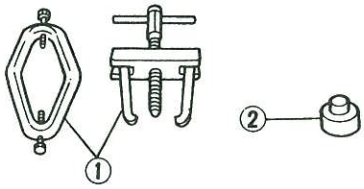 | Removing and installing differential side bearing inner cone |
| ST30611000<br>(J25742-1)<br>Drift | | Installing pinion rear bearing outer race |
| ST30613000<br>(J25742-3)<br>Drift | 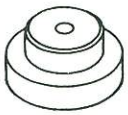 | Installing pinion front bearing outer race |

## Special Service Tools (Cont'd)

| Tool number (Kent-Moore No.) Tool name | Description | |
|---|---|---|
| ST30701000 (J25742-2) Drift | | Installing pinion rear bearing outer race |
| KV38100200 (J26233) Gear carrier side oil seal drift | 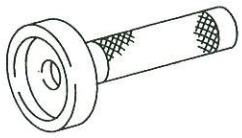 | Installing side oil seal |
| KV38100500 ( — ) Gear carrier front oil seal drift | 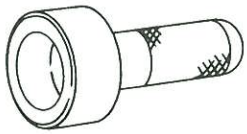 | Installing front oil seal |
| KV38100300 (J25523) Differential side bearing inner cone | 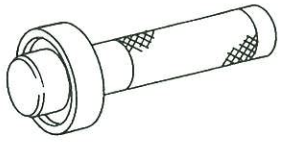 | Installing side bearing inner cone |
| KV38100600 (J25267) Side bearing spacer drift | 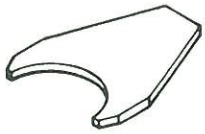 | Installing side bearing spacer |
| ST3127S000 (See J25765-A) Preload gauge ① GG91030000 (J25765) Torque wrench ② HT62940000 ( — ) Socket adapter ③ HT62900000 ( — ) Socket adapter | 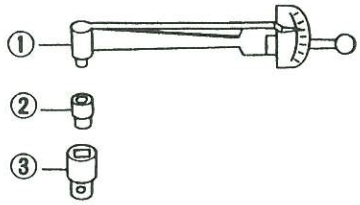  | Measuring pinion bearing preload and total preload |
| HT72400000 ( — ) Slide hammer | 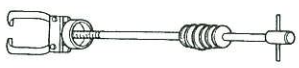 | Removing differential case assembly |

## Special Service Tools (Cont'd)

| Tool number<br>(Kent-Moore No.)<br>Tool name | Description | |
|---|---|---|
| (J34309)<br>Differential shim selector | | Adjusting bearing preload and gear height |
| (J25269-4)<br>Side bearing discs<br>(2 Req'd) | 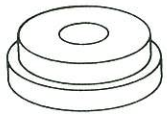 | Selecting pinion height adjusting washer |
| (J8129)<br>Spring gauge | 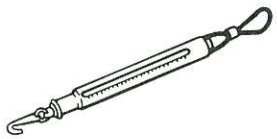 | Measuring carrier turning torque |
| KV38107900<br>(J39352)<br>Side oil seal protector | 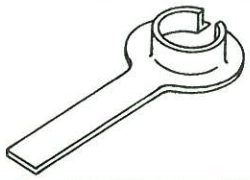 | Installing final drive side flange |

3S63A-T

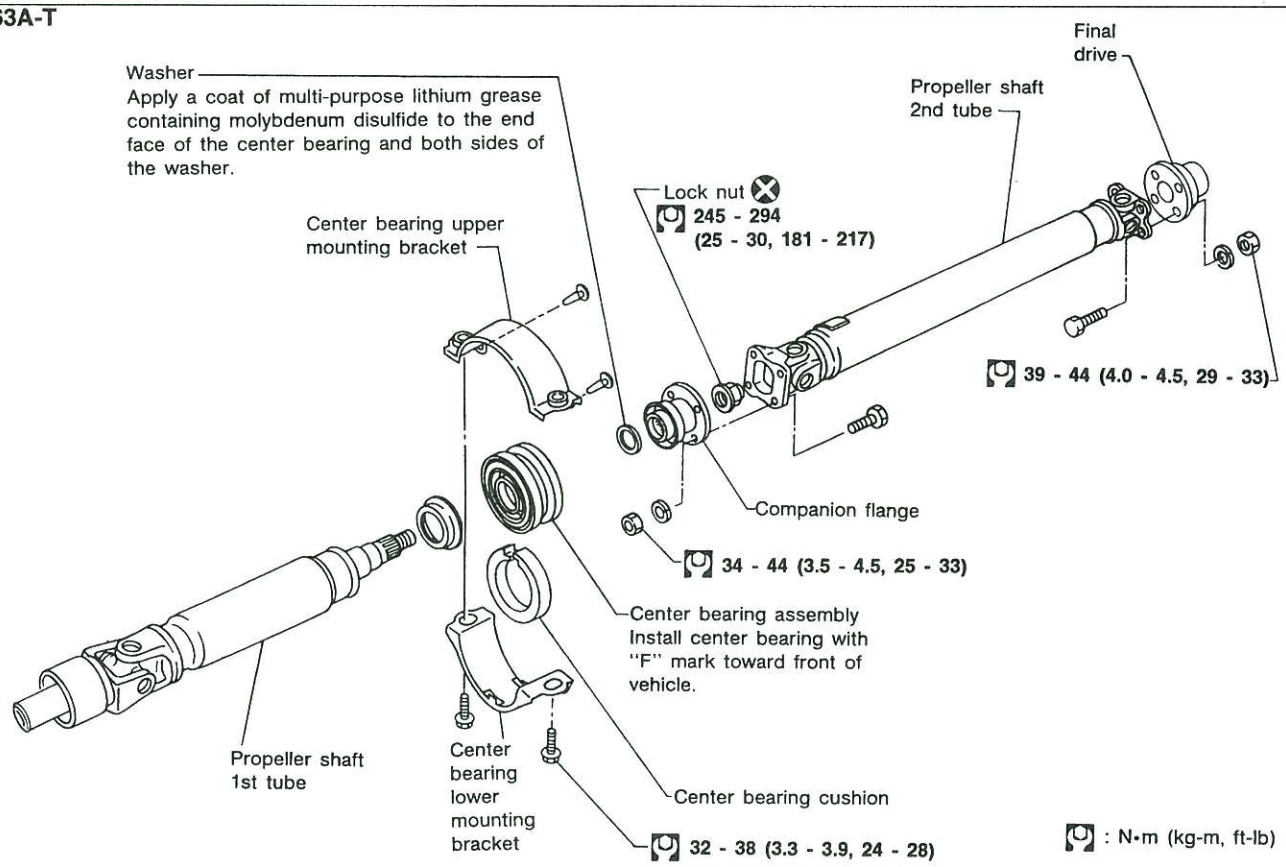


3S63A-R

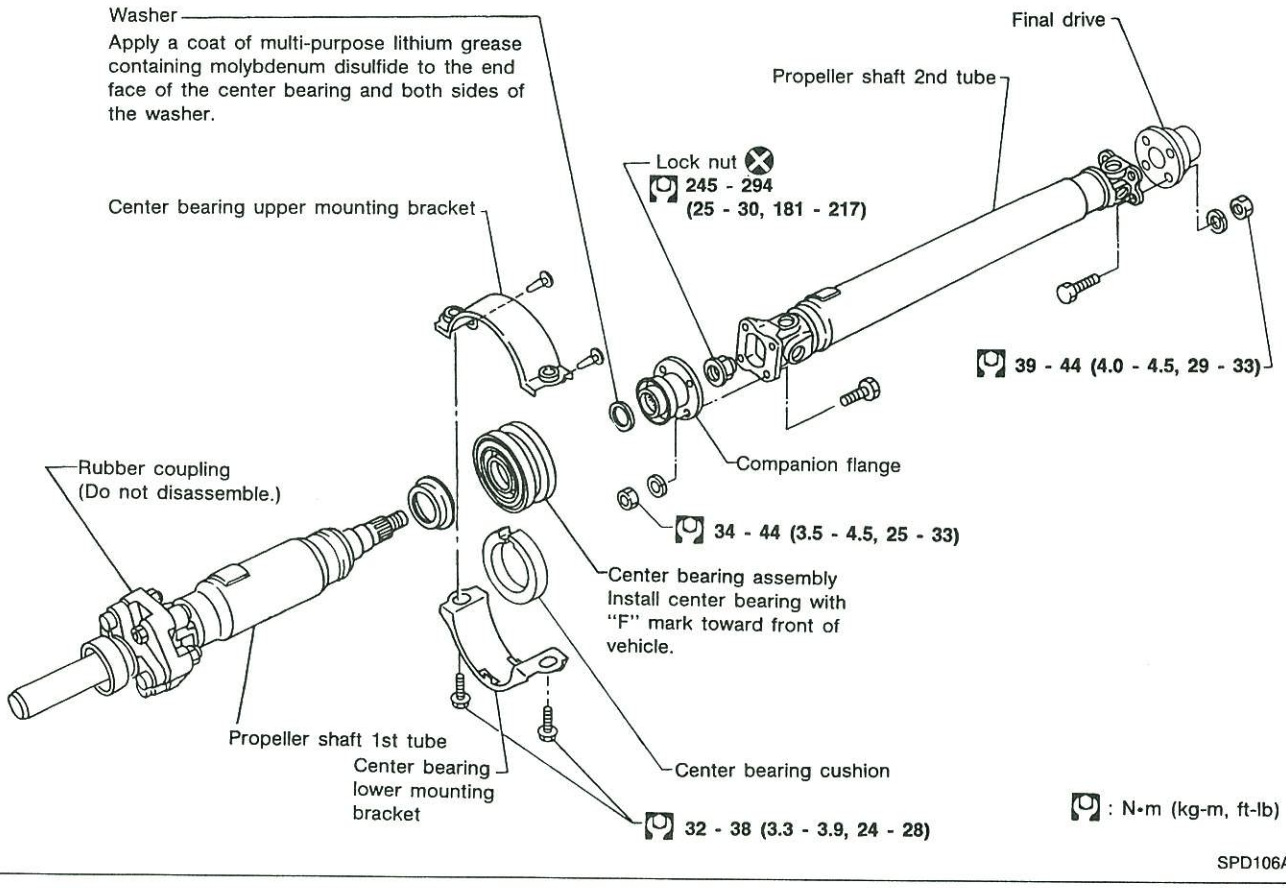

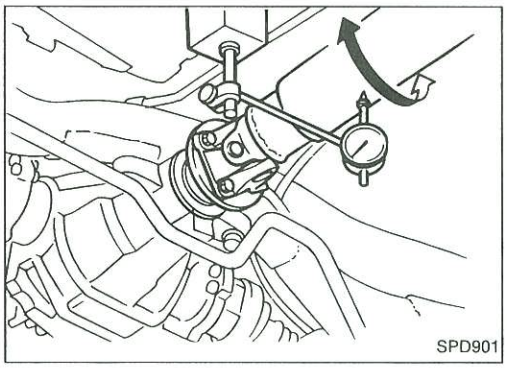
SPD901

## On-vehicle Service

### PROPELLER SHAFT VIBRATION

If vibration is present at high speed, inspect propeller shaft runout first.

1. Raise rear wheels.
2. Measure propeller shaft runout at indicated points by rotating final drive companion flange with hands.
   **Runout limit: 0.6 mm (0.024 in)**

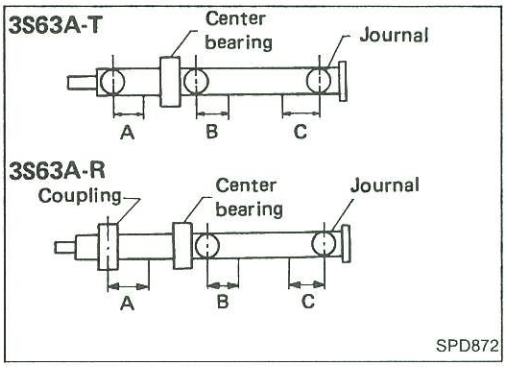

SPD872

**Propeller shaft runout measuring points:**

Unit: mm (in)

| Distance | Model | |
|---|---|---|
| | 3S63A-T | 3S63A-R |
| A | 155 (6.10) | 175 (6.89) |
| B | 165 (6.50) | 165 (6.50) |
| C | 185 (7.28) | 185 (7.28) |

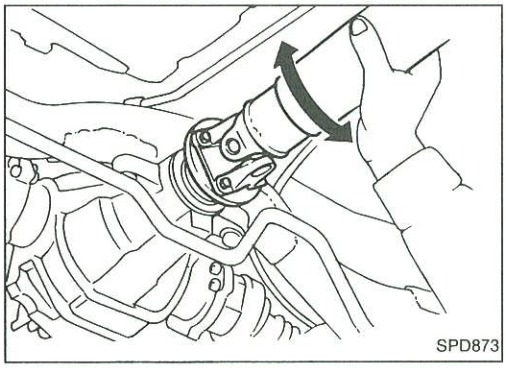
SPD873

3. If runout exceeds specifications, disconnect propeller shaft at final drive companion flange; then rotate companion flange 90, 180 or 270 degrees and reconnect propeller shaft.
   **Runout limit: 0.6 mm (0.024 in)**
4. Check runout again. If runout still exceeds specifications, replace propeller shaft assembly.
5. Perform road test.

### APPEARANCE CHECKING

- Inspect propeller shaft tube surface for dents or cracks. If damaged, replace propeller shaft assembly.
- If center bearing is noisy or damaged, replace it.

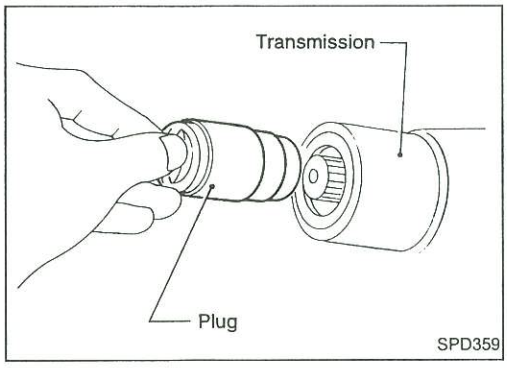

SPD359

## Removal

- Draw out propeller shaft from transmission and plug up rear end of transmission rear extension housing.

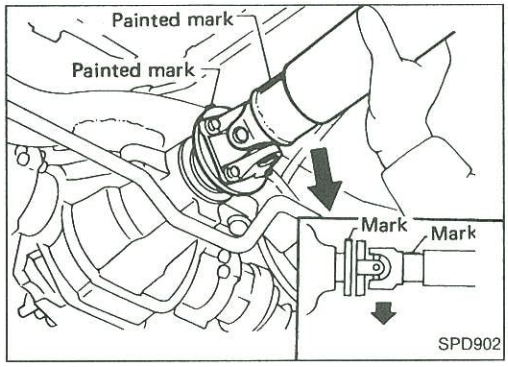

SPD902

## Installation

- Temporarily install differential companion flange and flange yoke so that their alignment marks are located as close to each other as possible.
- Turn propeller shaft until alignment marks face straight upward. Securely fasten propeller shaft so that lower side wall of concave flange yoke will touch lower side wall of convex companion flange.

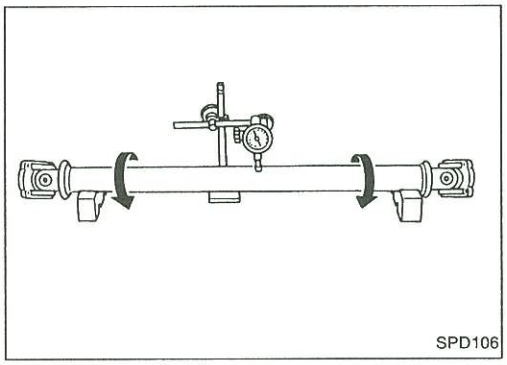
SPD106

## Inspection

- Inspect propeller shaft runout. If runout exceeds specifications, replace propeller shaft assembly.
  **Runout limit: 0.6 mm (0.024 in)**

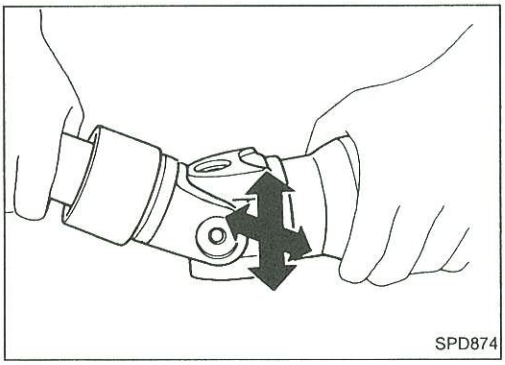
SPD874

- Inspect journal axial play.
  If the play exceeds specifications, replace propeller shaft assembly.
  **Journal axial play:**
  **0 mm (0 in)**

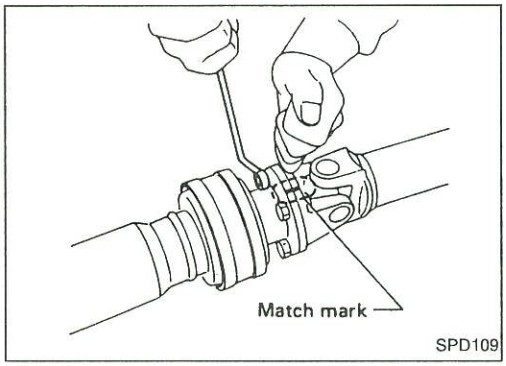

SPD109

## Disassembly

### CENTER BEARING

1. Put matchmarks on flanges, and separate 2nd tube from 1st tube.

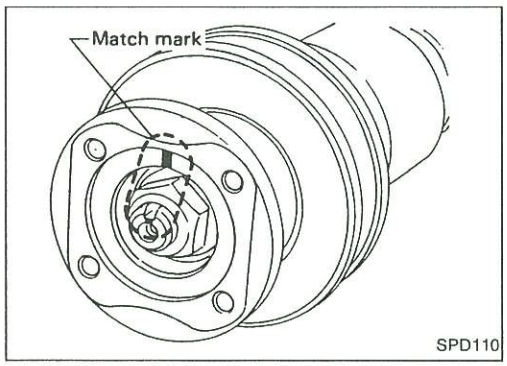

SPD110

2. Put matchmarks on the flange and shaft.

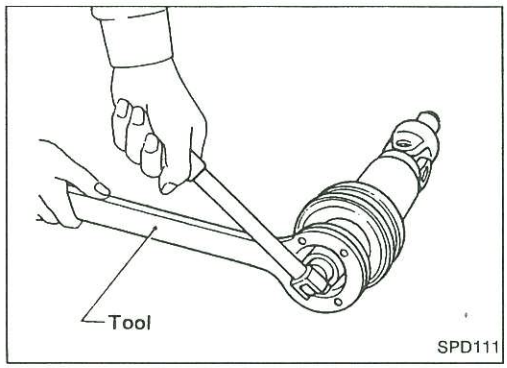

SPD111

3. Remove locking nut with Tool.
   **Tool number: ST38060002 (J34311)**

## Disassembly (Cont'd)

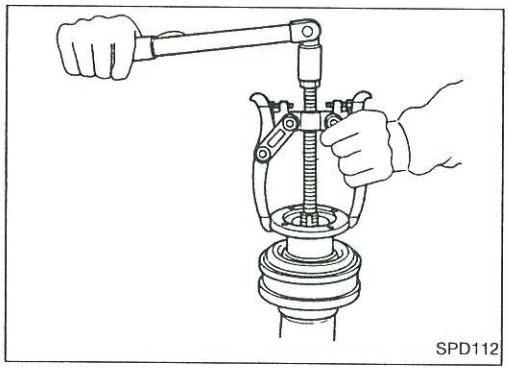


4. Remove companion flange with puller.

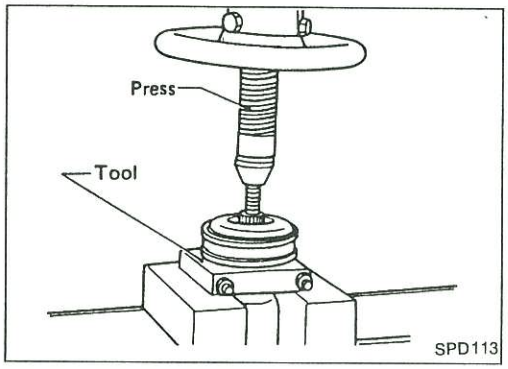


5. Remove center bearing with Tool and press.
   **Tool number: ST30031000 (J22912-01)**

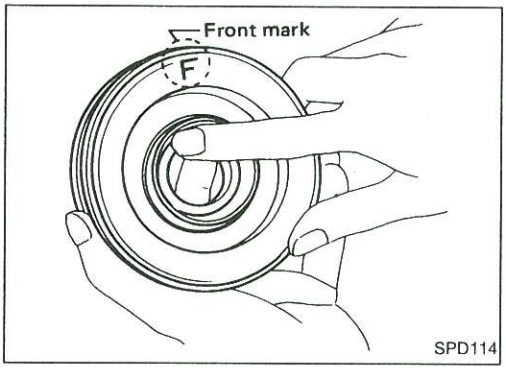


## Assembly

### CENTER BEARING

- When installing center bearing, position the "F" mark on center bearing toward front of vehicle.
- **Apply a coat of multi-purpose lithium grease containing molybdenum disulfide to the end face of the center bearing and both sides of the washer.**

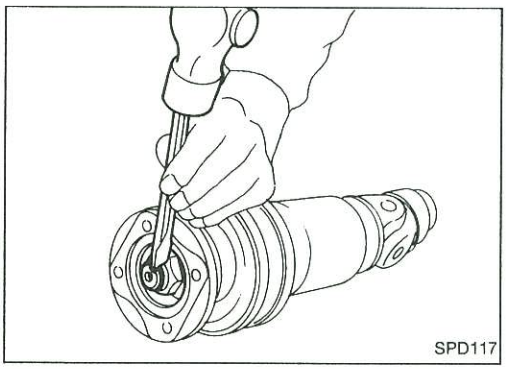


- Stake the nut. Always use new one.
- Align matchmarks when assembling tubes.

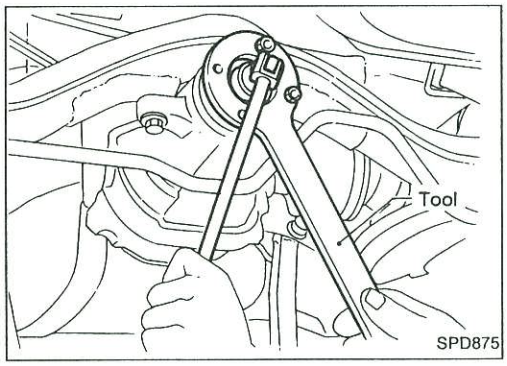


## Front Oil Seal Replacement

1. Remove propeller shaft.
2. Loosen drive pinion nut with Tool.
   **Tool number: ST38060002 (J34311)**

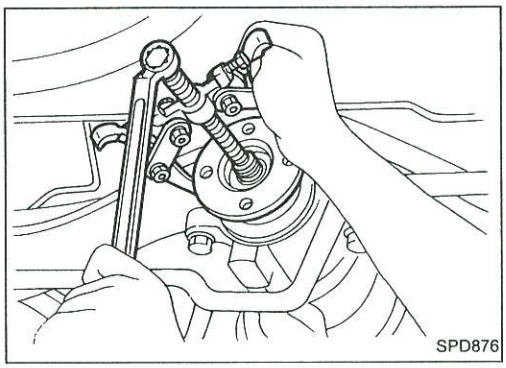


3. Remove companion flange.

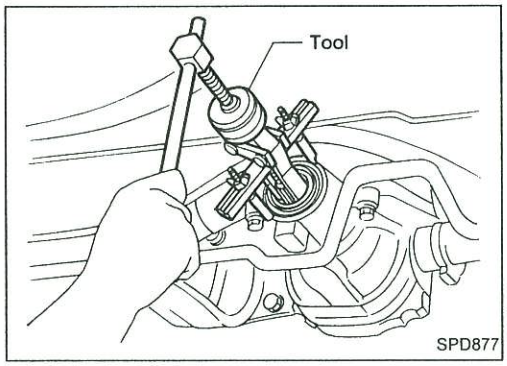


4. Remove front oil seal.

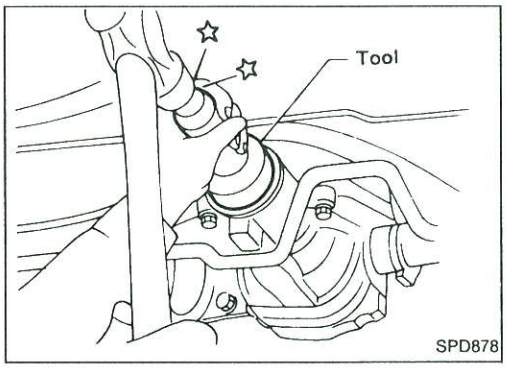


5. Apply multi-purpose grease to sealing lips of oil seal. Press front oil seal into carrier.
6. Install companion flange and drive pinion nut.
7. Install propeller shaft.

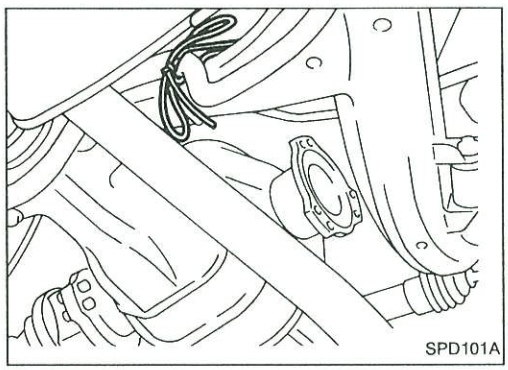


## Side Oil Seal Replacement

1. Disconnect final drive side flange and drive shaft flange and suspend drive shaft flange with wire.
2. Remove final drive side flange.

## Side Oil Seal Replacement (Cont'd)

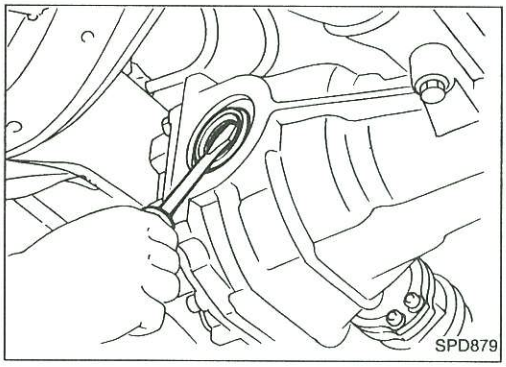


3. Remove oil seal.

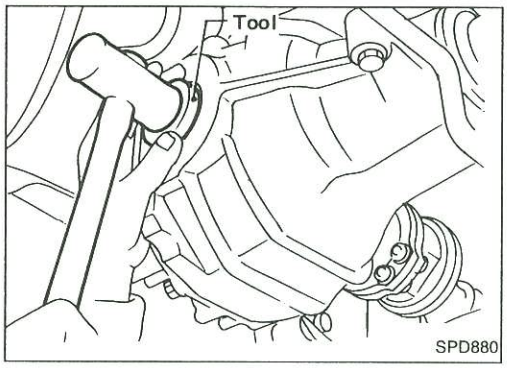


4. Apply multi-purpose grease to sealing lips of oil seal. Press-fit oil seal into carrier with Tool.
   **Tool number: KV38100200 (J26233)**

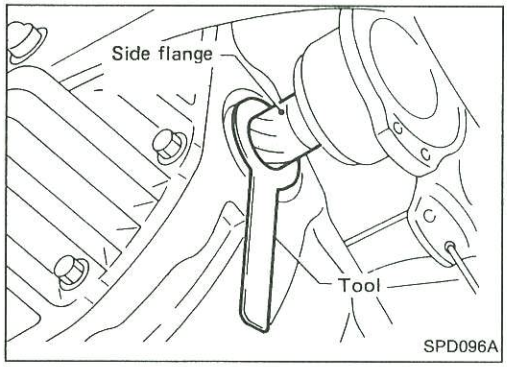


5. Install final drive side flange with Tool.
   **Tool number: KV38107900 (J39352)**
6. Connect final drive side flange and drive shaft flange.

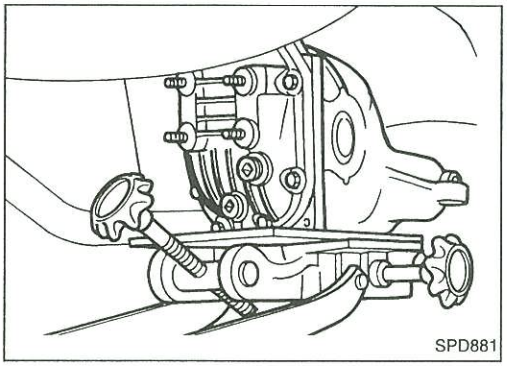


## Removal

- Remove propeller shaft.

**Insert plug into rear oil seal after removing propeller shaft.**

- Remove drive shafts. Refer to section RA.
- Pull off final drive backward together with jack.

**CAUTION:**

- **Be careful not to damage spline, sleeve yoke and front oil seal, when removing propeller shaft.**
- **After final drive is removed, support suspension member on a stand to prevent its insulators from being twisted or damaged.**

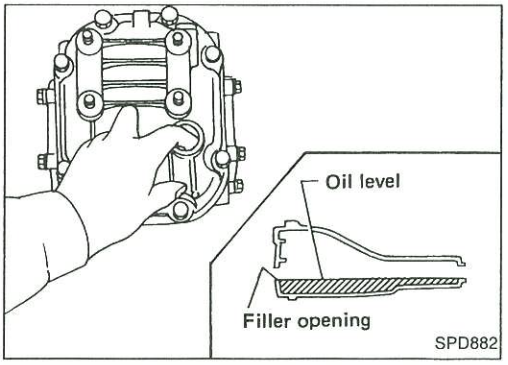


## Installation

- Fill final drive with recommended gear oil.

## R200

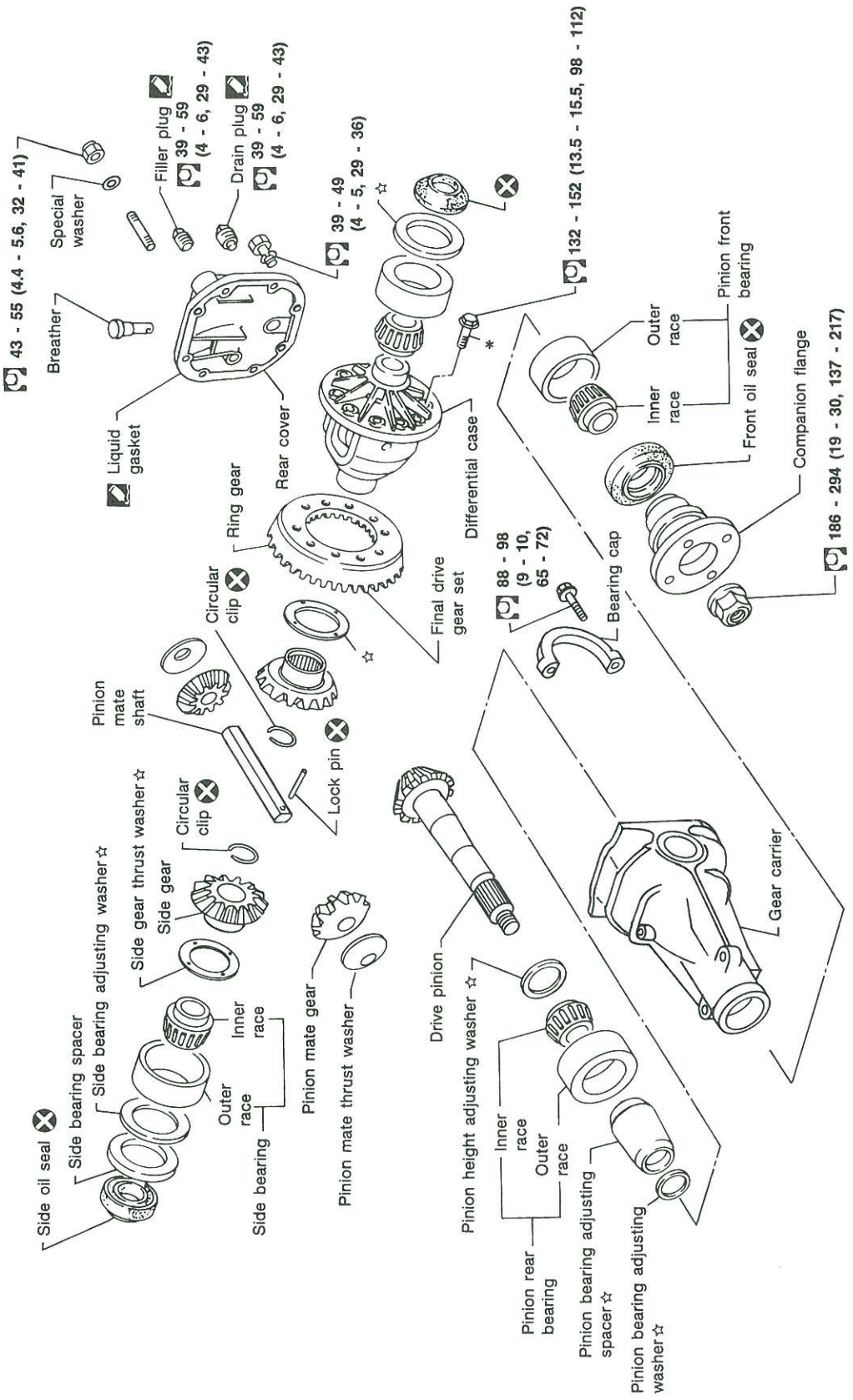


☆ : Adjustment is required.
* : Using locking agent [Locktite (stud lock) or equivalent]
: N•m (kg-m, ft-lb)
: Using Genuine Liquid Gasket or equivalent.

SPD227A

## R200V

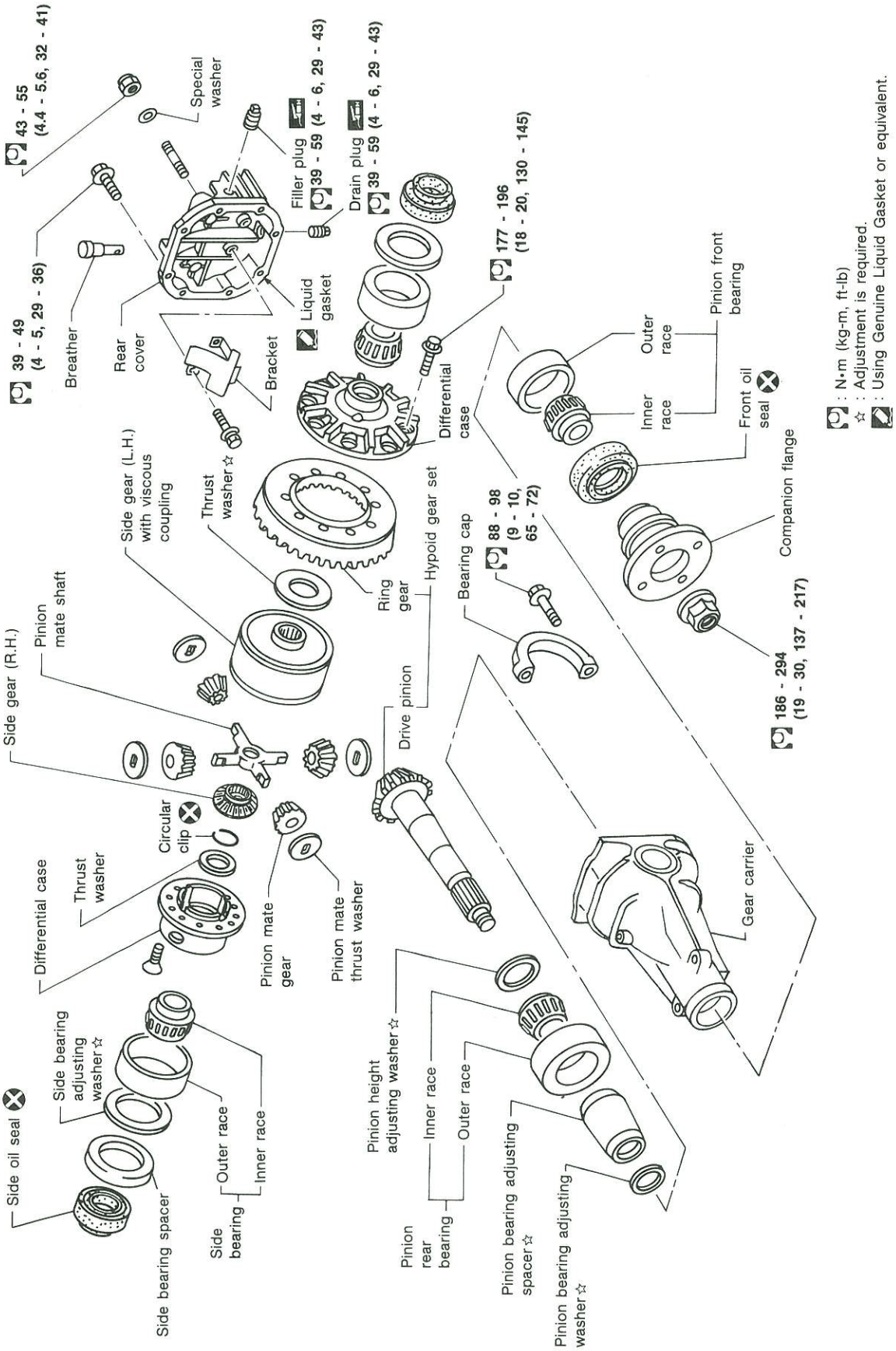


SPD228A

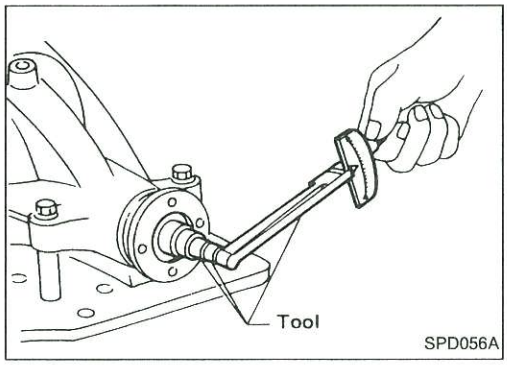


## Pre-inspection

Before disassembling final drive, perform the following inspection.

- Total preload

1) Turn drive pinion in both directions several times to set bearing rollers.
2) Check total preload with Tool.
   **Tool number: ST3127S000 (J25765-A)**
   **Total preload:**
   **1.1 - 1.4 N·m (11 - 14 kg-cm, 9.5 - 12.2 in-lb)**

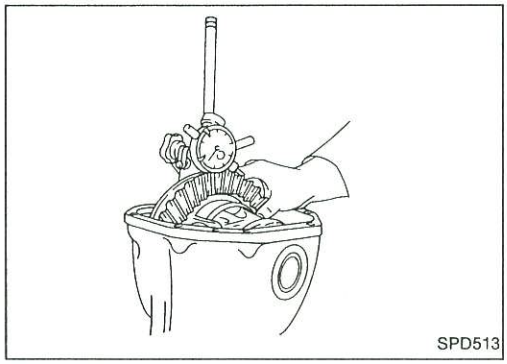


- Ring gear to drive pinion backlash
  Check ring gear-to-drive pinion backlash with a dial indicator at several points.
  **Ring gear-to-drive pinion backlash:**
  **0.10 - 0.15 mm (0.0039 - 0.0059 in)**

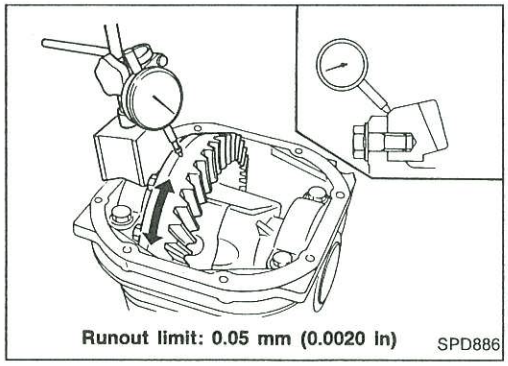


- Ring gear runout
  Check runout of ring gear with a dial indicator.
  **Runout limit: 0.05 mm (0.0020 in)**
- Tooth contact
  Check tooth contact. (Refer to Adjustment.)

## Differential Carrier

1. Using two 45 mm spacers, mount carrier on Tool.
   **Tool number: KV38100800 ( — )**

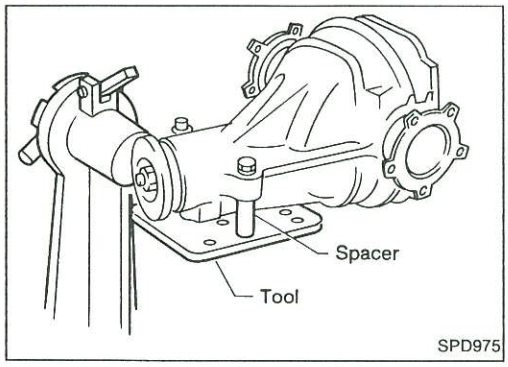


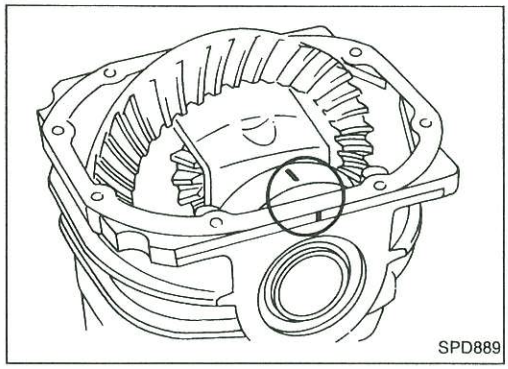


2. Paint or punch matchmarks on one side of the side bearing cap so it can be properly reinstalled.

**Bearing caps are line-board during manufacture. Replace them in their proper positions.**

## Differential Carrier (Cont'd)

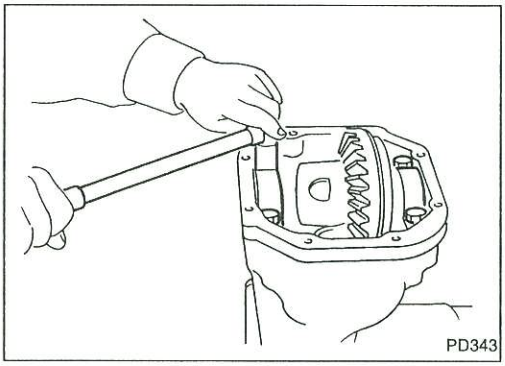


3. Remove side bearing caps.

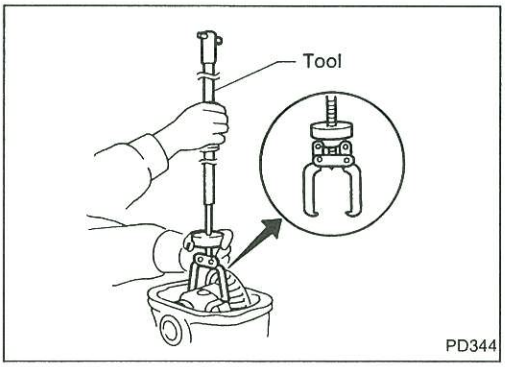


4. Lift differential case assembly out with Tool.
   **Tool number: HT72400000 ( — )**

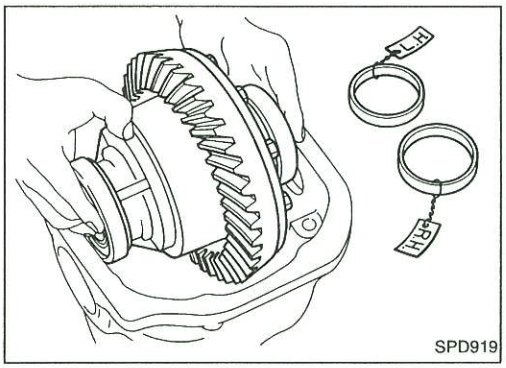


**Keep the side bearing outer races together with inner cone — do not mix them up.**

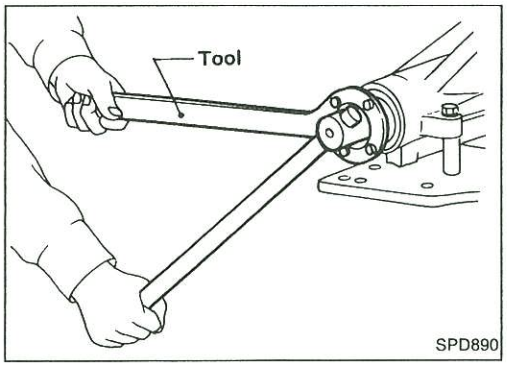


5. Loosen drive pinion nut and pull off companion flange.

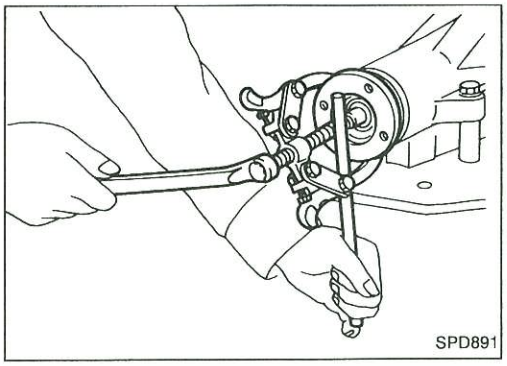

## Differential Carrier (Cont'd)

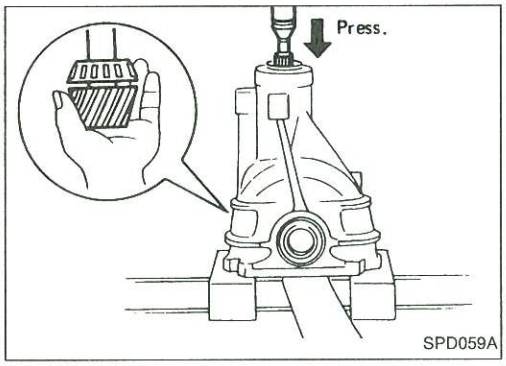


6. Take out drive pinion (together with rear bearing inner race, bearing spacer and adjusting washer).
7. Remove oil seal.
8. Remove front bearing inner race.
9. Remove side oil seal.

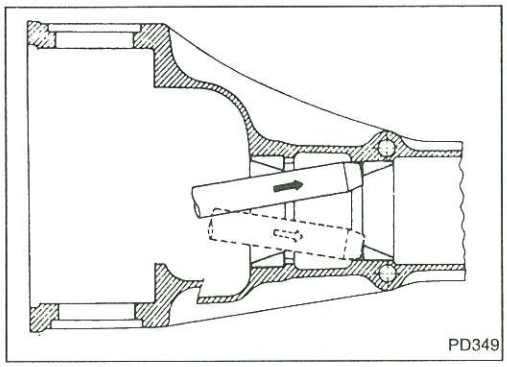


10. Remove pinion bearing outer races with a brass drift.

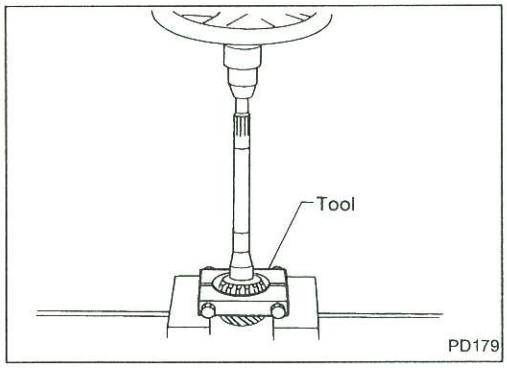


11. Remove pinion rear bearing inner race and drive pinion height adjusting washer with suitable tool.

## Differential Case

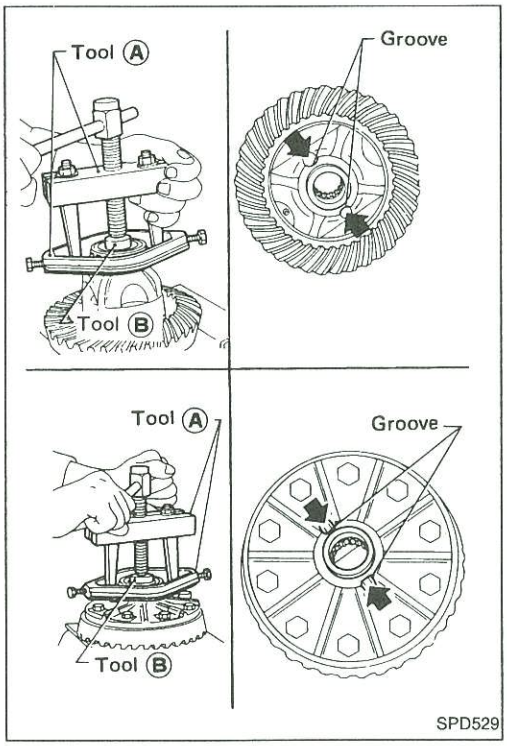


1. Remove side bearing inner cones.

**To prevent damage to bearing, engage puller jaws in groove.**

**Tool number:**

**Ⓐ ST33051001 ( — )**
**Equivalent tool (J2288)**
**Ⓑ ST33061000 (J8107-2)**

## Differential Case (Cont'd)

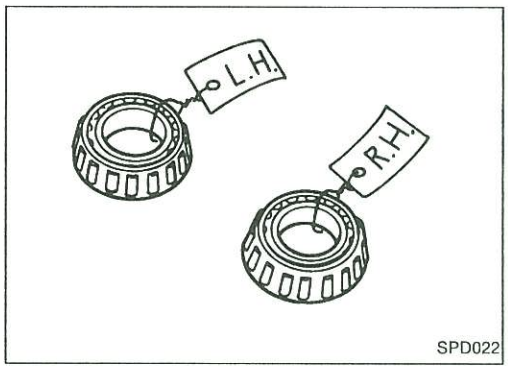


**Be careful not to confuse left- and right-hand parts. Keep bearing and bearing race for each side together.**

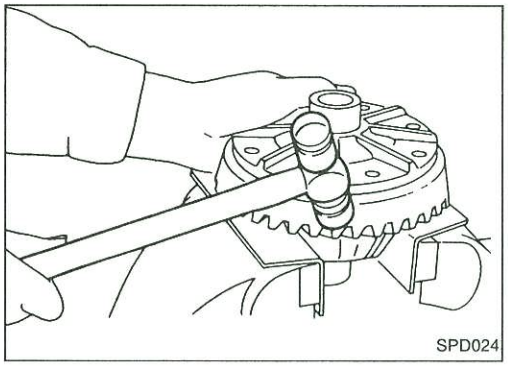


2. Loosen ring gear bolts in a criss-cross fashion.
3. Tap ring gear off the differential case with a soft hammer.

**Tap evenly all around to keep ring gear from binding.**

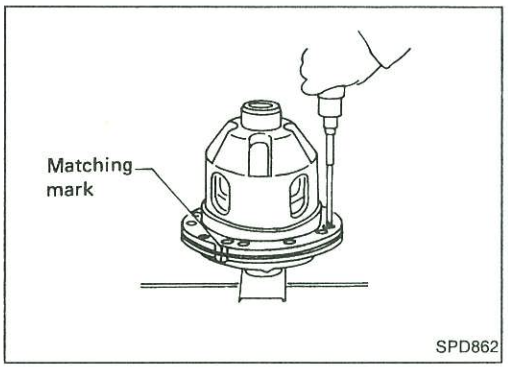


**R200V ONLY**

4. Loosen screws on differential cases A and B.
5. Separate differential cases A and B.

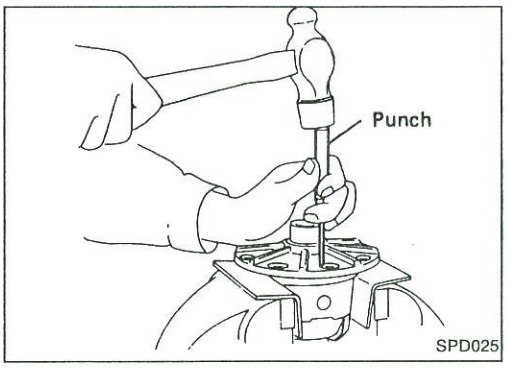


**R200 ONLY**

4. Drive out pinion mate shaft lock pin, with punch from ring gear side.

## Ring Gear and Drive Pinion

Check gear teeth for scoring, cracking or chipping. If any part is damaged, replace ring gear and drive pinion as a set (hypoid gear set).

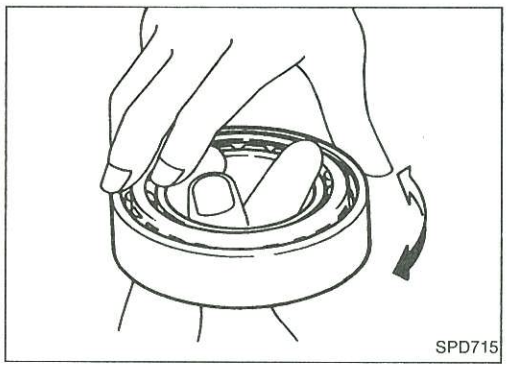
SPD715

## Bearing

1. Thoroughly clean bearing.
2. Check bearings for wear, scratches, pitting or flaking. Check tapered roller bearing for smooth rotation. If damaged, replace outer race and inner cone as a set.

R200

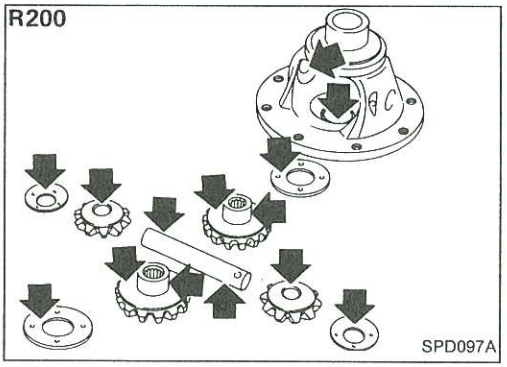
SPD097A

## Differential Case Assembly

Check mating surfaces of differential case, side gears, pinion mate gears, pinion mate shaft and thrust washers.

### R200V ONLY

In addition, check viscous coupling for oil leakage. If necessary, replace it with new one.

R200V

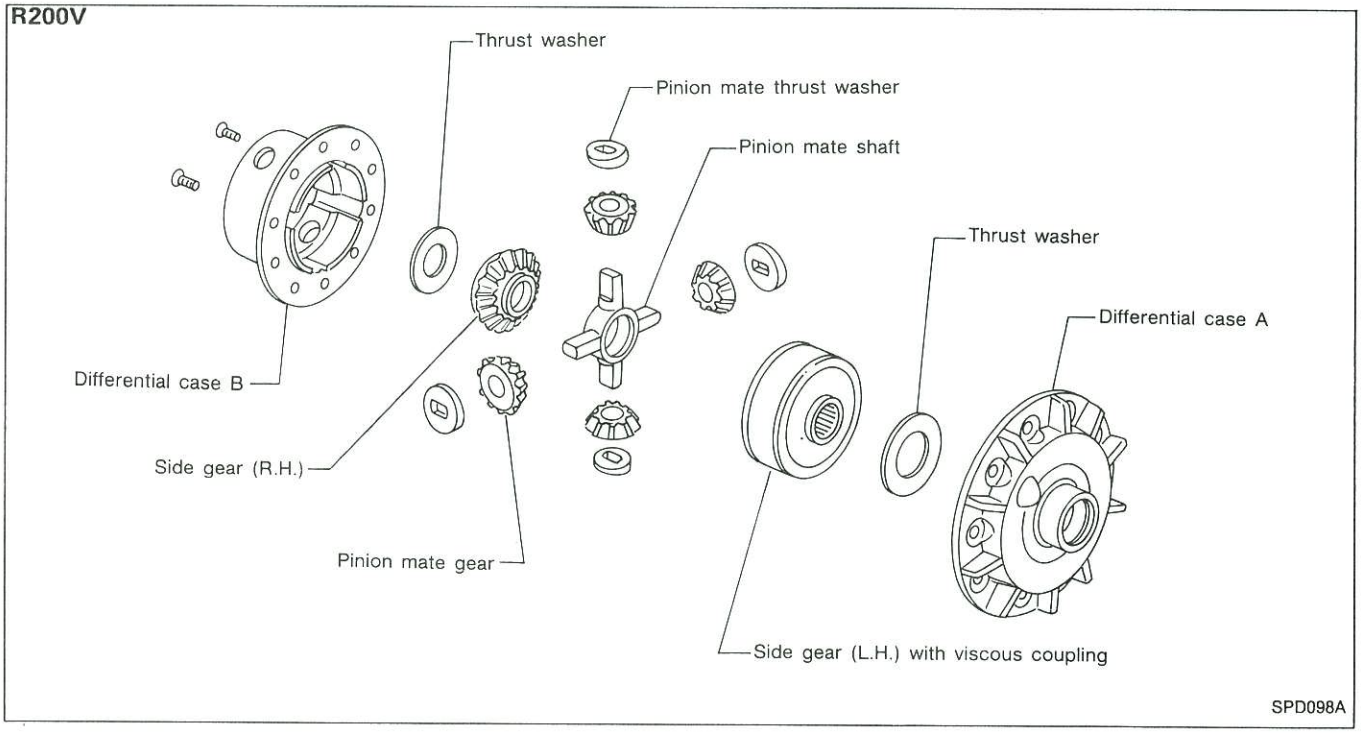

SPD098A

For quiet and reliable final drive operation, the following five adjustments must be made correctly.

1. Side bearing preload
2. Pinion gear height
3. Pinion bearing preload
4. Ring gear to pinion backlash (Refer to ASSEMBLY.)
5. Ring and pinion gear tooth contact pattern

## Side Bearing Preload

**A selection of carrier side bearing preload shims is required for successful completion of this procedure.**

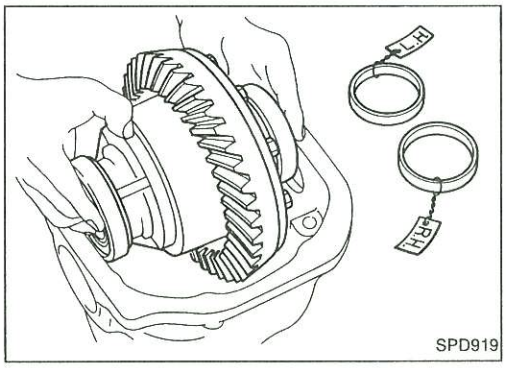

SPD919

1. Make sure all parts are clean and that the bearings are well lubricated with hypoid gear oil.
2. Place the differential carrier, with side bearings and bearing races installed, into the final drive housing.

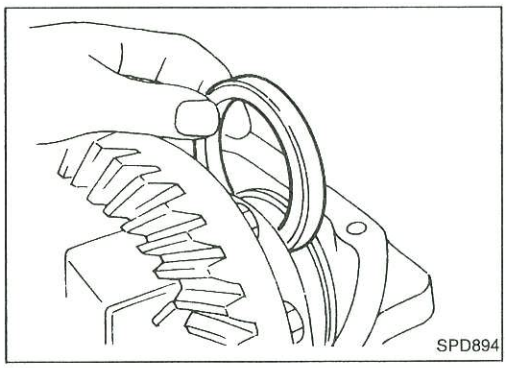
SPD894

3. Put the side bearing spacer in place on the ring gear end of the carrier.

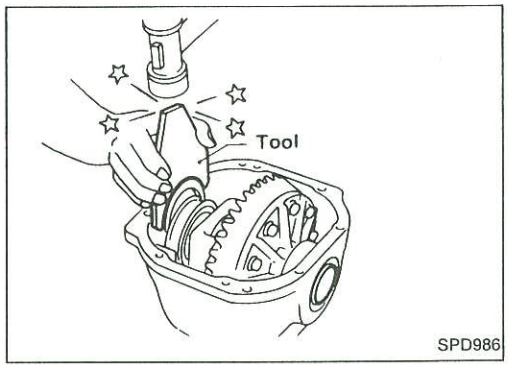

SPD986

4. Using Tool side bearing spacer drift, place both of the original carrier side bearing preload shims on the carrier end, opposite the ring gear.

**Tool number: KV38100600 (J25267)**

## Side Bearing Preload (Cont'd)

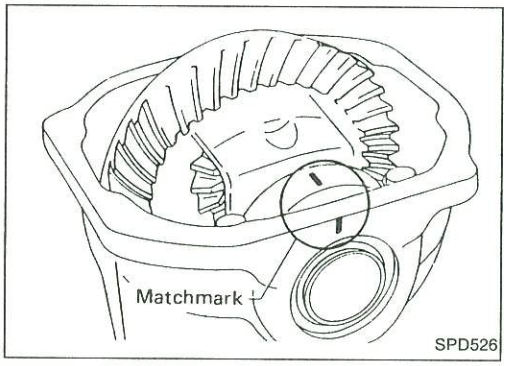


5. Install the side bearing caps in their correct locations and torque the bearing cap retaining bolts.
   **Specification:**
   **88 - 98 N·m (9 - 10 kg-m, 65 - 72 ft-lb)**
6. Turn the carrier several times to seat the bearings.

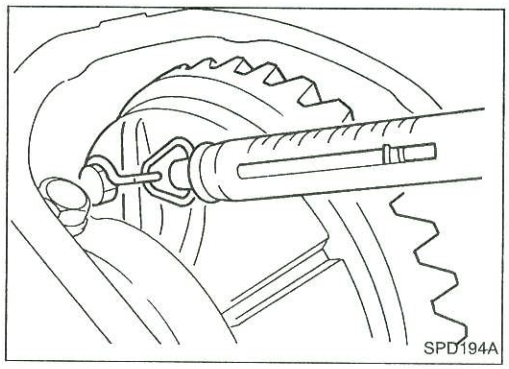


7. Measure the turning torque of the carrier at the ring gear retaining bolts with a spring gauge, J8129.
   **Specification:**
   **34.3 - 39.2 N (3.5 - 4 kg, 7.7 - 8.8 lb)**
   **of pulling force at the ring gear bolt**

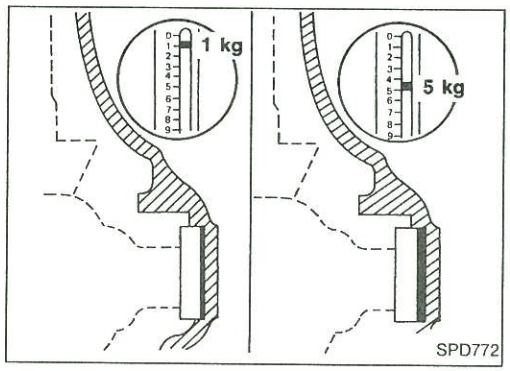


8. If the carrier turning torque is not within the specification range, increase or decrease the total thickness of the side bearing adjusting washers until the turning torque is correct. If the turning torque is less than the specified range, install washers of greater thickness; if the turning torque is greater than the specification, install thinner washers. See the S.D.S. section for washer dimensions and part numbers.
9. Record the total amount of washer thickness required for the correct carrier side bearing preload.

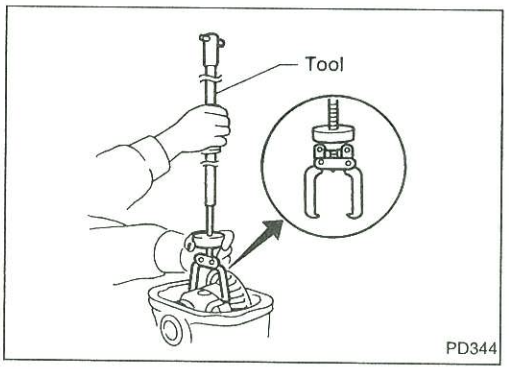


10. Remove the carrier from the final drive housing, saving the selected preload washers for later use during the assembly of the final drive unit.

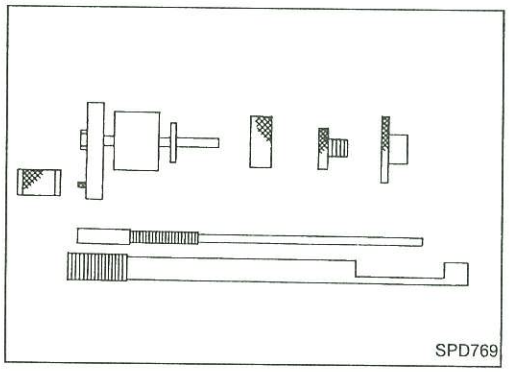


## Pinion Gear Height and Pinion Bearing Preload

1. Make sure all parts are clean and that the bearings are well lubricated.
2. Assemble the pinion gear bearings into the pinion preload shim selector Tool, J34309.

## Pinion Gear Height and Pinion Bearing Preload (Cont'd)

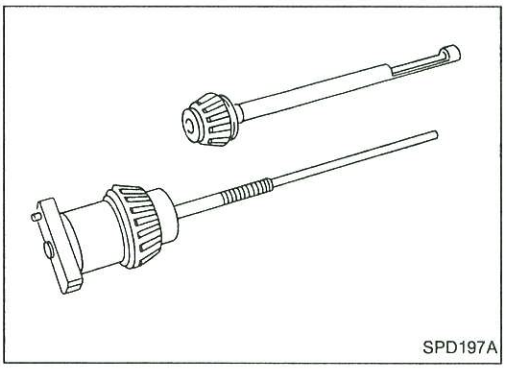
SPD197A

- **Front pinion bearing** — make sure the J34309-3 front pinion bearing seat is secured tightly against the J34309-2 gauge anvil. Then turn the front pinion bearing pilot, J34309-5, to secure the bearing in its proper position.
- **Rear pinion bearing** — the rear pinion bearing pilot, J34309-8, is used to center the rear pinion bearing only. The rear pinion bearing locking seat, J34309-4, is used to lock the bearing to the assembly.

**R200V ONLY**

- **Installation of J34309-9 and J34309-16** — place a suitable 2.5 mm (0.098 in) thick plain washer between J34309-9 and J34309-16. Both surfaces of J34309-9 and J34309-16 must be parallel with a clearance of 2.5 mm (0.098 in).

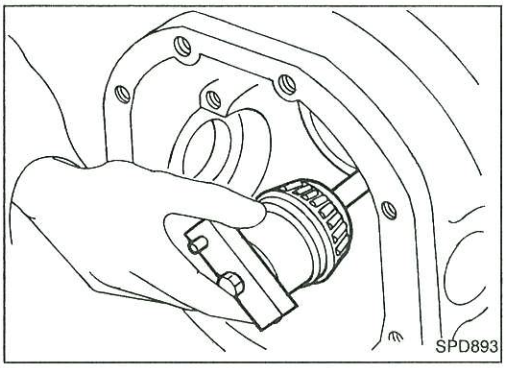
SPD893

3. Place the pinion preload shim selector Tool, J34309-1, gauge screw assembly with the pinion rear bearing inner cone installed into the final drive housing.

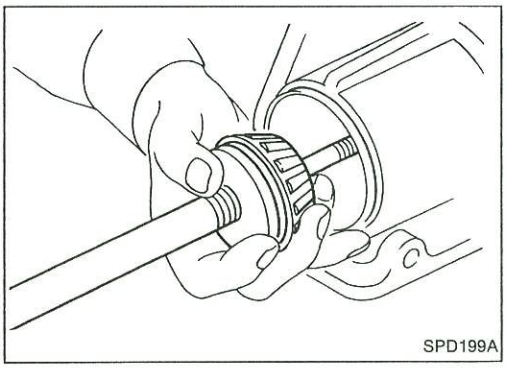
SPD199A

4. Assemble the front pinion bearing inner cone and the J34309-2 gauge anvil together with the J34309-1 gauge screw in the final drive housing. Make sure that the pinion height gauge plate, J34309-16, will turn a full 360 degrees, and tighten the two sections together by hand.

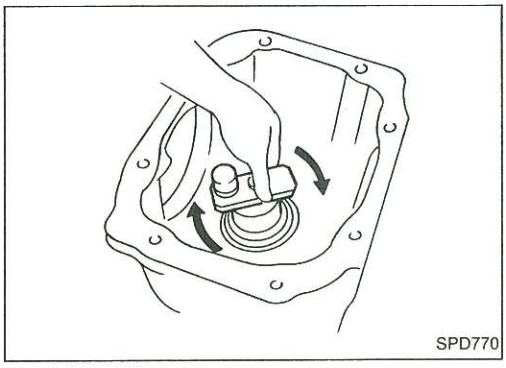
SPD770

5. Turn the assembly several times to seat the bearings.

## Pinion Gear Height and Pinion Bearing Preload (Cont'd)

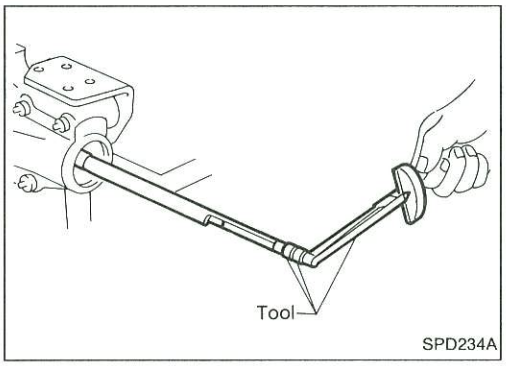


6. Measure the turning torque at the end of the J34309-2 gauge anvil using torque wrench J25765A.
   **Turning torque specification:**
   **1.0 - 1.3 N·m (10 - 13 kg-cm, 8.7 - 11.3 in-lb)**

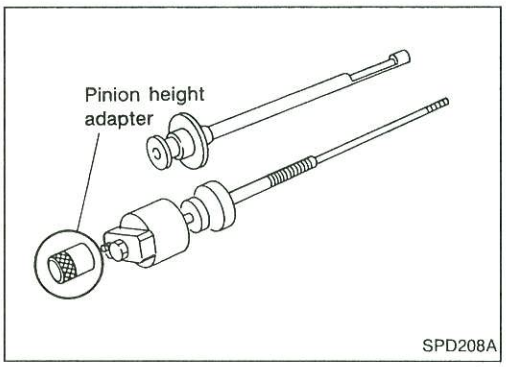


7. Place the J34309-11 "R200A" pinion height adapter onto the gauge plate and tighten it by hand.

**CAUTION:**
**Make sure all machined surfaces are clean.**

**— PINION BEARING PRELOAD WASHER SELECTION —**

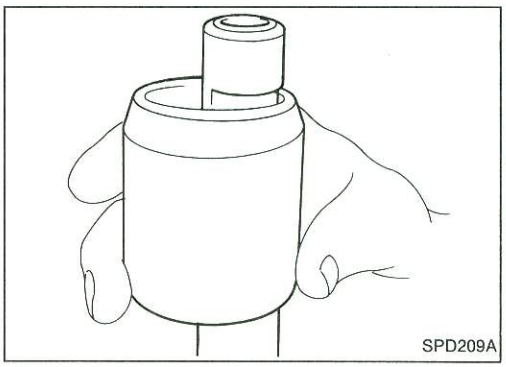


8. Place the solid pinion bearing spacer, small end first, over the J34309-2 gauge anvil and seat the small end squarely against the tip of the J34309-1 gauge screw in the tool recessed portion.

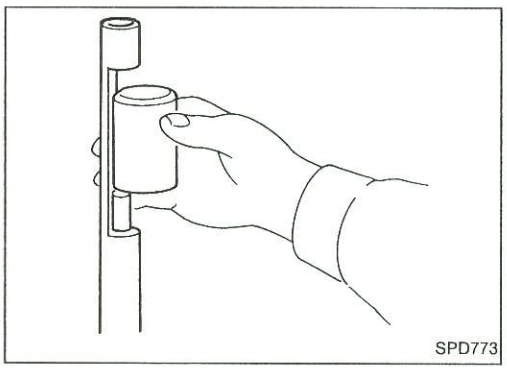


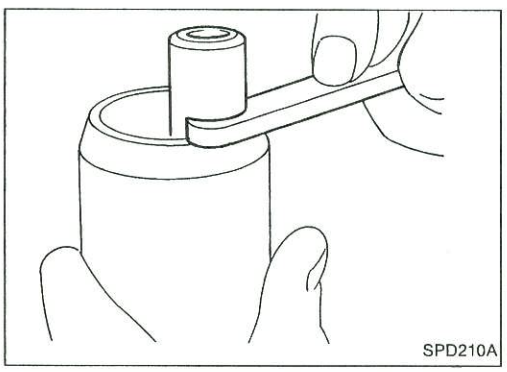


9. Select the correct thickness of pinion bearing preload adjusting washer using a standard gauge of 3.5 mm (0.138 in) and your J34309-101 feeler gauge. The exact measure you get with your gauges is the thickness of the adjusting washer required. Select the correct washer from the following chart.
   **Drive pinion bearing preload adjusting washer:**
   **Refer to S.D.S.**

## Pinion Gear Height and Pinion Bearing Preload (Cont'd)

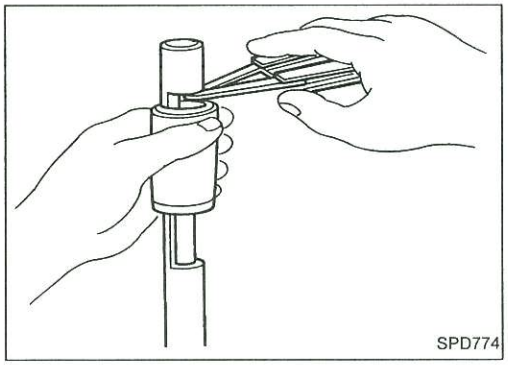
SPD774

10. Set your selected, correct pinion bearing preload adjusting washer aside for use when assembling the pinion gear and bearings into the final drive.

**— PINION HEIGHT ADJUSTING WASHER SELECTION —**

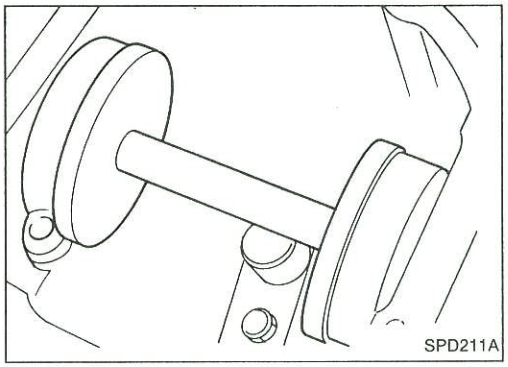
SPD211A

11. Now, position the side bearing discs, J25269-4, and arbor firmly into the side bearing bores.
    Install the side bearing caps and tighten the cap bolts to proper torque.

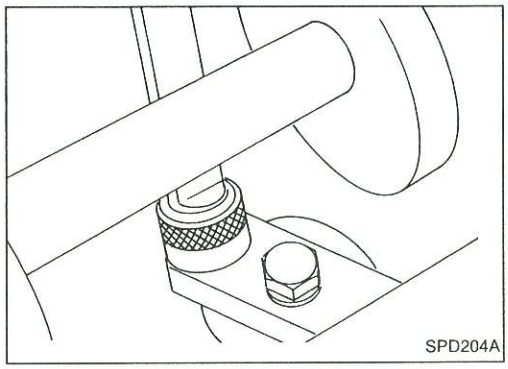
SPD204A

12. Select the correct standard pinion height adjusting washer thickness using a standard gauge of 3 mm (0.12 in) and your J34309-101 feeler gauge. Measure the distance between the J34309-11 pinion height adapter including the standard gauge and the arbor.

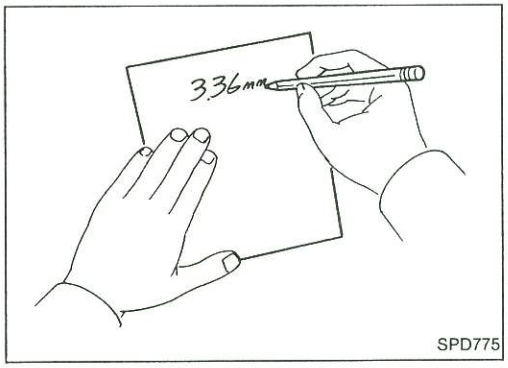

SPD775

13. Write down your exact measurement.

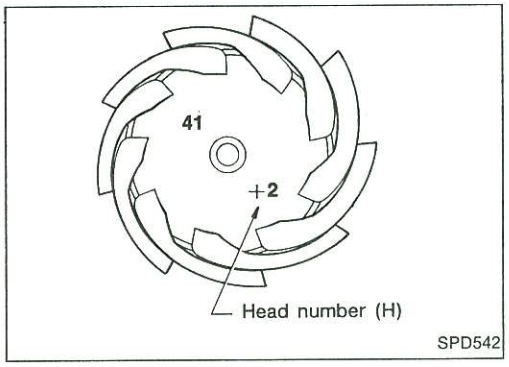

SPD542

14. Correct the pinion height washer size by referring to the "pinion head number."

**There are two numbers painted on the pinion gear. The first one refers to the pinion and ring gear as a matched set and should be the same as the number on the ring gear. The second number is the "pinion head height number", and it refers to the ideal pinion height from standard for quietest operation. Use the following chart to determine the correct pinion height washer.**

## Pinion Gear Height and Pinion Bearing Preload (Cont'd)

| Pinion head height number | Add or remove from the standard pinion height washer thickness measurement |
|---|---|
| –6 | Add 0.06 mm (0.0024 in) |
| –5 | Add 0.05 mm (0.0020 in) |
| –4 | Add 0.04 mm (0.0016 in) |
| –3 | Add 0.03 mm (0.0012 in) |
| –2 | Add 0.02 mm (0.0008 in) |
| –1 | Add 0.01 mm (0.0004 in) |
| 0 | Use the selected washer thickness |
| +1 | Subtract 0.01 mm (0.0004 in) |
| +2 | Subtract 0.02 mm (0.0008 in) |
| +3 | Subtract 0.03 mm (0.0012 in) |
| +4 | Subtract 0.04 mm (0.0016 in) |
| +5 | Subtract 0.05 mm (0.0020 in) |
| +6 | Subtract 0.06 mm (0.0024 in) |

15. Select the correct pinion height washer.
    **Drive pinion height adjusting washer:**
    **Refer to S.D.S.**

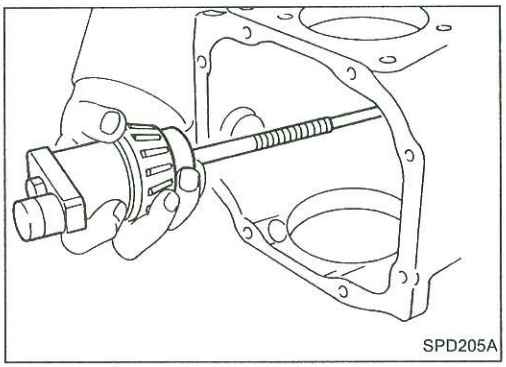
SPD205A

16. Remove the J34309 pinion preload shim selector Tool from the final drive housing and disassemble to retrieve the pinion bearings.

## Tooth Contact

Checking gear tooth contact pattern is necessary to verify correct relationship between ring gear and drive pinion.
Hypoid gears which are not positioned properly in relation to one another may be noisy, or have short life or both. With the checking of gear tooth contact pattern, the most desirable contact for low noise level and long life can be assured.

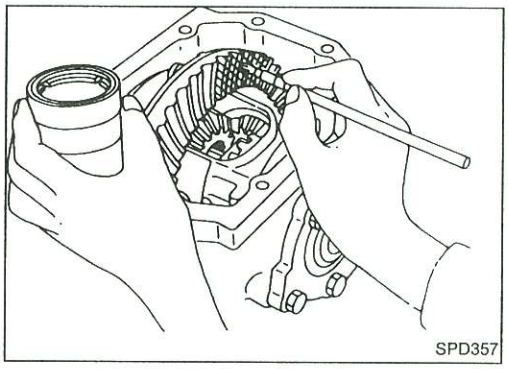
SPD357

1. Thoroughly clean ring gear and drive pinion teeth.
2. Sparingly apply a mixture of powdered titanium oxide and oil or equivalent to 3 or 4 teeth of ring gear drive side.

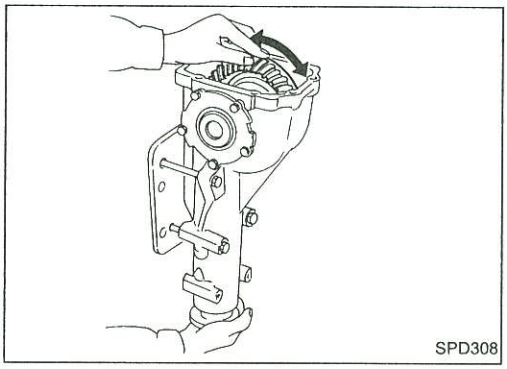
SPD308

3. Hold companion flange steady by hand and rotate the ring gear in both directions.

**Usually the pattern will be correct if you have calculated the shims correctly and the backlash is correct.**
**However, in rare cases you may have to use trial-and-error processes until you get a good tooth contact pattern.**
**The tooth pattern is the best indication of how well a differential has been set up.**

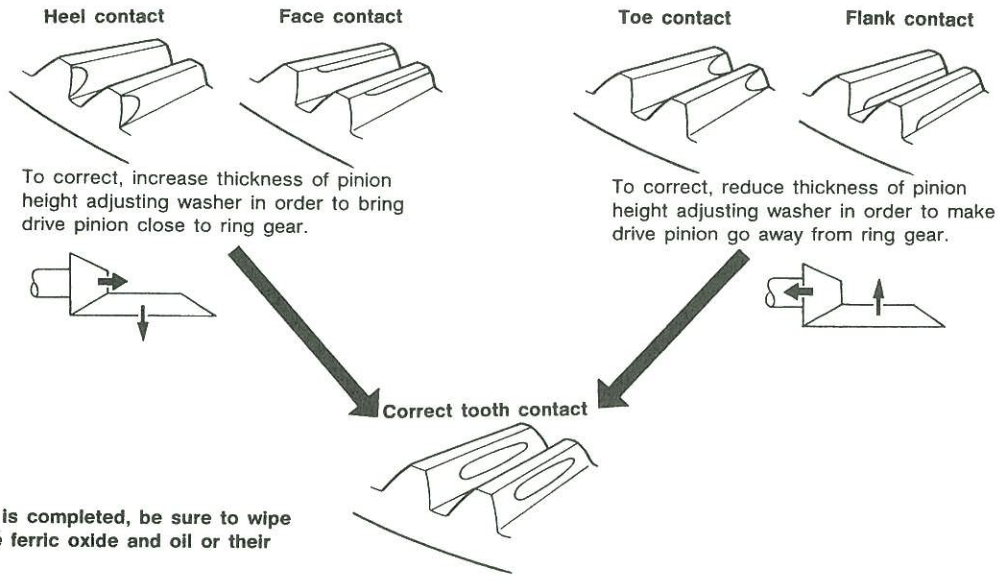


**When adjustment is completed, be sure to wipe off completely the ferric oxide and oil or their equivalent.**

SPD007

## Differential Case

Whenever side gears or pinion mate gears are replaced, selection of thrust washers should be carried out.
Before selecting thrust washers, make sure all parts are clean and well lubricated with hypoid gear oil.

**THRUST WASHER SELECTION**

**R200V ONLY**

1. Install the previously removed thrust washer on right side gear. On left side gear, install a suitable thrust washer. Temporarily tighten differential cases using two screws.
2. Position differential assembly so that right side gear is on the upper side. Place two feeler gauges with thickness of 0.03 mm (0.0012 in) between right side gear and thrust washer as shown at left.

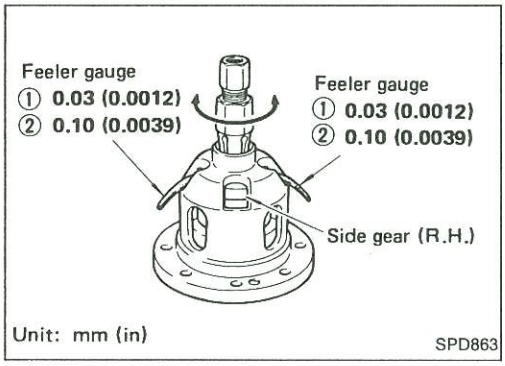


**Do not insert feeler gauge in oil groove portion of differential case.**

3. Rotate right side gear with a suitable tool attached to splines.
   If right side gear cannot be rotated, replace thrust washer used on left side gear with a thinner one.
4. Replace both 0.03 mm (0.0012 in) feeler gauges with 0.10 mm (0.0039 in) gauges. At this point, make sure right side gear does not rotate. If it does, replace thrust washer on left side gear with a thicker one so that right side gear does not rotate.

**R200 ONLY**

1. Install side gears, pinion mate gears, thrust washers and thrust block into differential case.

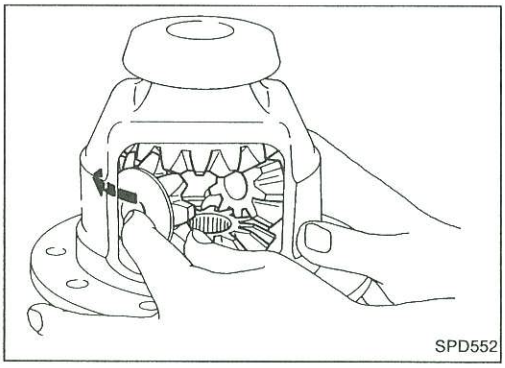


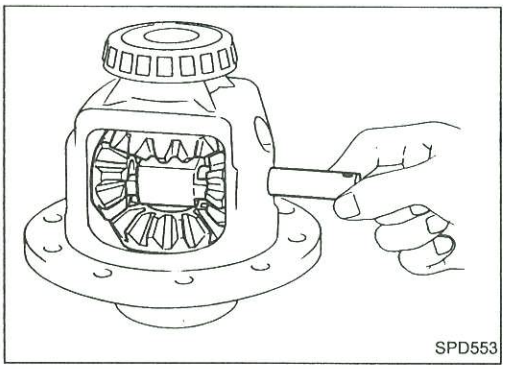


2. Fit pinion mate shaft to differential case so that it meets lock pin holes.

## Differential Case (Cont'd)

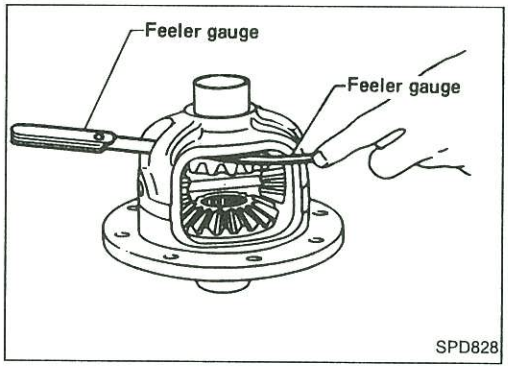


3. Adjust clearance between rear face of side gear and thrust washer by selecting side gear thrust washer. Refer to S.D.S.

**Clearance between side gear thrust washer and differential case:**
**0.10 - 0.20 mm (0.0039 - 0.0079 in)**

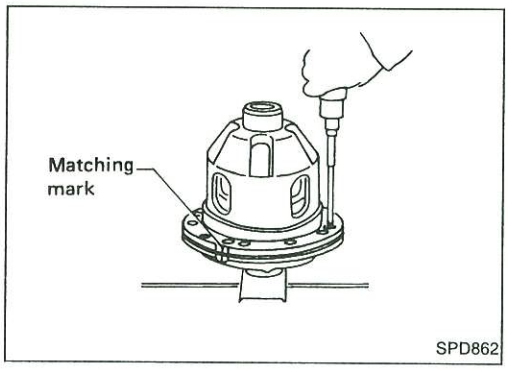


### ASSEMBLY

1. Install differential case A and B. —R200V ONLY—

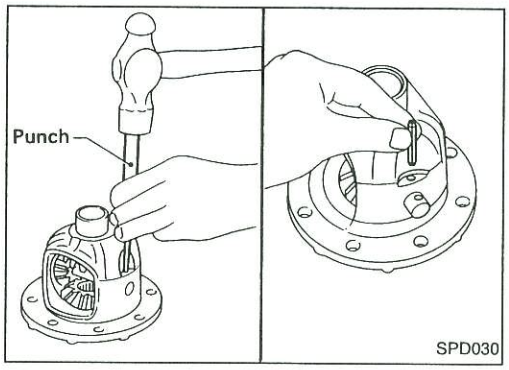


1. Install pinion mate shaft lock pin with a punch. —R200 ONLY—

**Make sure lock pin is flush with case.**

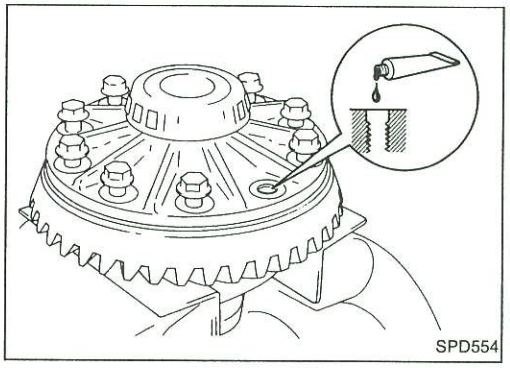


2. Place differential case on ring gear.
3. Apply locking sealant to ring gear bolts, and install them.

**Tighten bolts in a criss-cross fashion, lightly tapping bolt head with a hammer.**

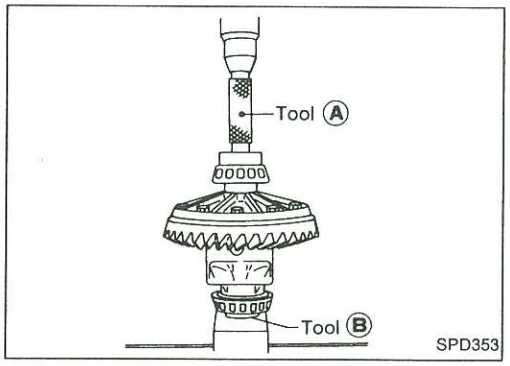


4. Press-fit side bearing inner cones on differential case with Tool.

**Tool number:**
**Ⓐ KV38100300 (J25523)**
**Ⓑ ST33061000 (J8107-2)**

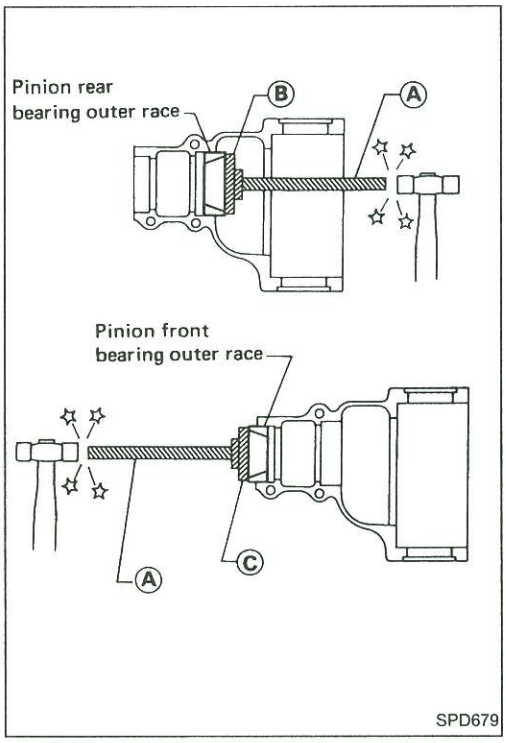


## Differential Carrier

1. Press-fit front and rear bearing outer races with Tools.
   **Tool number:**
   **Ⓐ ST30611000 (J25742-1)**
   **Ⓑ ST30701000 (J25742-2)**
   **Ⓒ ST30613000 (J25742-3)**
2. Select pinion bearing adjusting washer and drive pinion bearing spacer, referring to ADJUSTMENT.

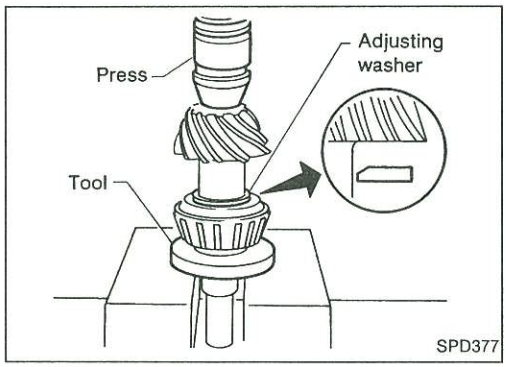


3. Install selected drive pinion height adjusting washer in drive pinion, and press-fit pinion rear bearing inner cone in it, using press and Tool.
   **Tool number: ST30901000 ( — )**

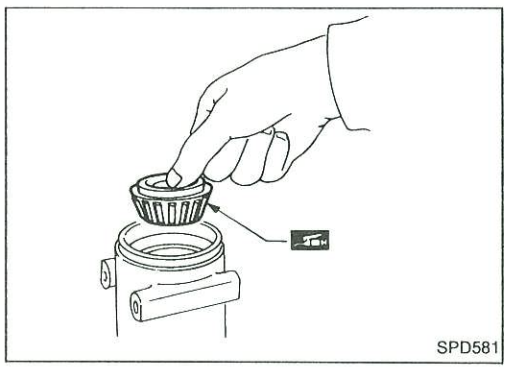


4. Place pinion front bearing inner cone in final drive housing.

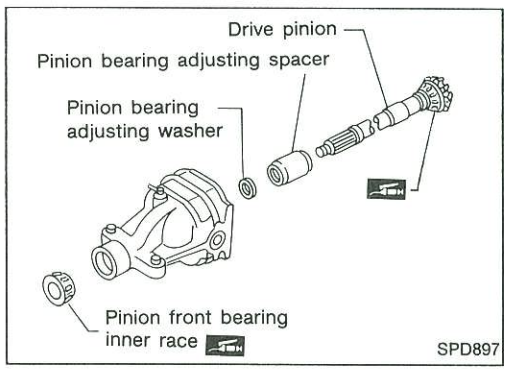


5. Set drive pinion assembly (as shown in figure at left) in differential carrier and install drive pinion, with press and suitable tool.

**Stop when drive pinion touches bearing.**
**Apply multi-purpose grease to pinion rear bearing inner race, pinion front bearing inner race.**

## Differential Carrier (Cont'd)

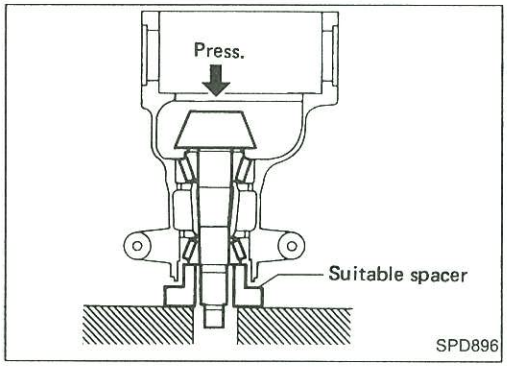


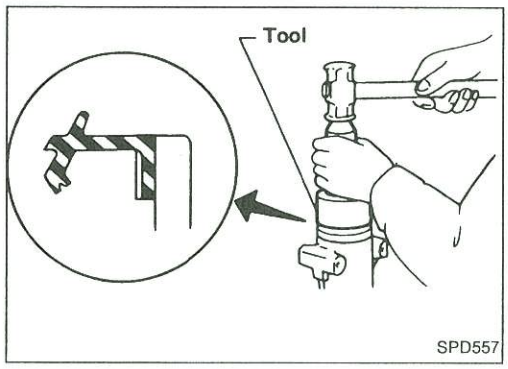


6. Apply multi-purpose grease to cavity at sealing lips of oil seal. Install front oil seal with Tool.
   **Tool number: KV38100500 ( — )**

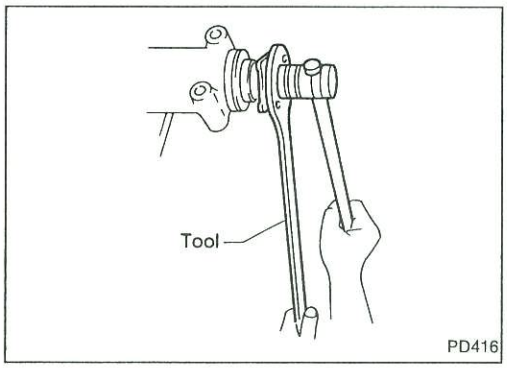


7. Install companion flange, and tighten pinion nut to specified torque with Tool.

**Make sure that threaded portion of drive pinion and pinion nut are free from oil or grease.**

**Tool number: ST38060002 (J34311)**

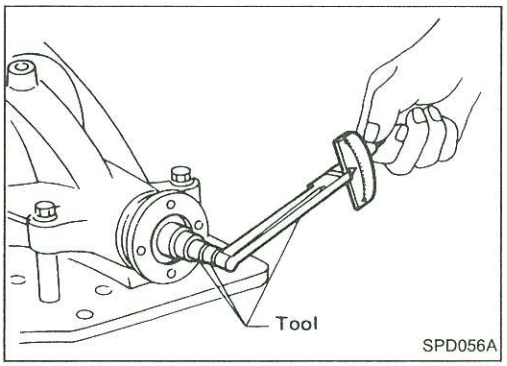


8. Turn drive pinion in both directions several times, and measure pinion bearing preload.
   **Pinion bearing preload:**
   **1.1 - 1.4 N·m (11 - 14 kg-cm, 9.5 - 12.2 in-lb)**

**When pinion bearing preload is outside the specifications, replace pinion bearing adjusting washer and spacer with a different thickness.**

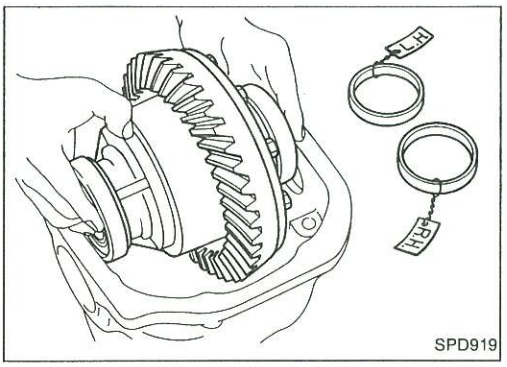


9. Select side bearing adjusting washer.
   Refer to ADJUSTMENT.
10. Install differential case assembly with side bearing outer races into gear carrier.

## Differential Carrier (Cont'd)

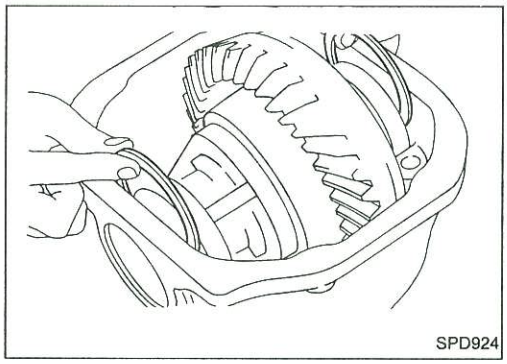
SPD924

11. Insert left and right side bearing adjusting washers in place between side bearings and carrier.

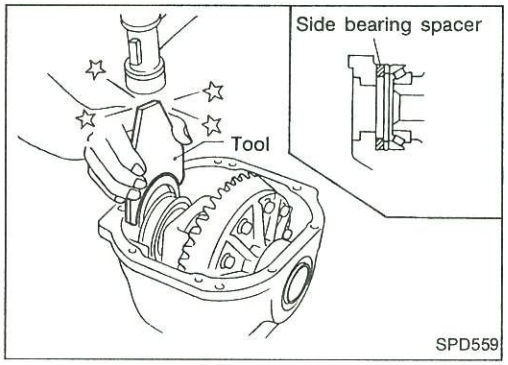

SPD559

12. Drive in side bearing spacer with Tool.
    **Tool number: KV38100600 (J25267)**

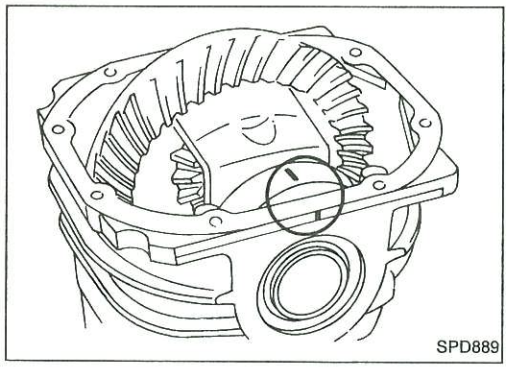
SPD889

13. Align mark on bearing cap with that on gear carrier and install bearing cap on gear carrier.

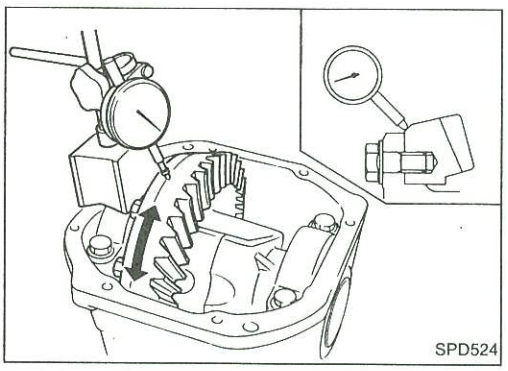
SPD524

14. Check runout of ring gear with a dial indicator.
    **Runout limit: 0.05 mm (0.0020 in)**

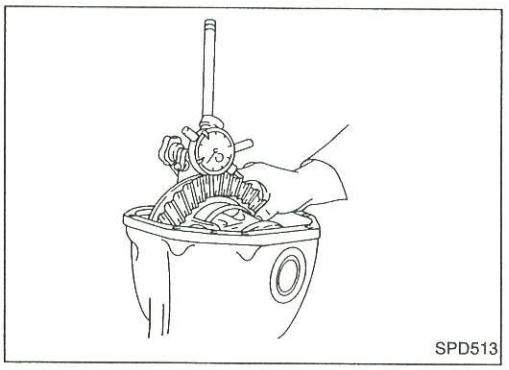
SPD513

15. Measure ring gear to drive pinion backlash with a dial indicator.
    **Ring gear to drive pinion backlash:**
    **0.10 - 0.15 mm (0.0039 - 0.0059 in)**

- If backlash is too small, decrease thickness of left shim and increase thickness of right shim by the same amount.
  If backlash is too great, reverse the above procedure.

**Never change the total amount of shims as it will change the bearing preload.**

## Differential Carrier (Cont'd)

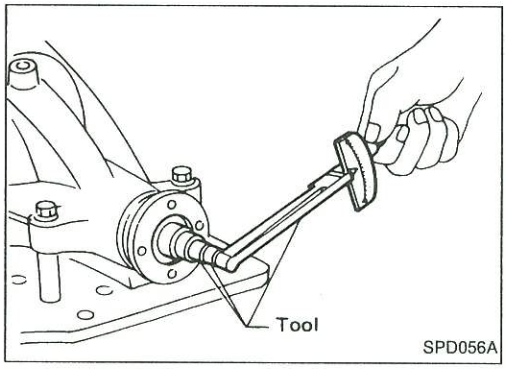


16. Check total preload with Tool.

**When checking preload, turn drive pinion in both directions several times to seat bearing rollers correctly.**

**Total preload:**

**Value more than 0.29 N·m (3.0 kg-cm, 2.6 in-lb) added on measured value of drive pinion preload**

- If preload is too great, remove the same amount of shim from each side.
- If preload is too small, add the same amount of shim to each side.

**Never add or remove a different number of shims for each side as it will change ring gear to drive pinion backlash.**

17. Recheck ring gear to drive pinion backlash because increase or decrease in thickness of shims will cause change of ring gear to pinion backlash.
- If backlash varies excessively in different places, foreign matter may be caught between the ring gear and the differential case.
- If the backlash varies greatly when the ring gear runout is within a specified range, replace the hypoid gear set or differential case.

18. Check tooth contact.
Refer to ADJUSTMENT.

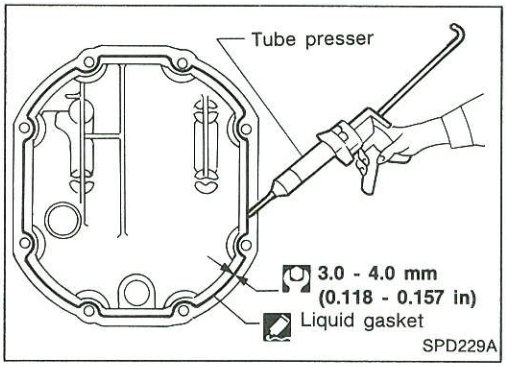


19. Install rear cover

a. Before installing rear cover, remove all traces of liquid gasket from mating surface of rear cover using a scraper.
- Also remove traces of liquid gasket from mating surface of gear carrier.

b. Apply a continuous bead of liquid gasket to mating surface of rear cover.

- **Use Genuine Liquid Gasket or equivalent.**
- **Attaching should be done within 5 minutes after coating.**
- **Wait at least 1 hour before refilling gear oil.**
- **For the first 12 hours avoid abrupt acceleration or deceleration.**

# Propeller Shaft

## GENERAL SPECIFICATIONS

Unit: mm (in)

| Transmission | M/T | A/T |
|---|---|---|
| Propeller shaft model | 3S63A-R | 3S63A-T |
| Number of joints | 3 | |
| Coupling method with transmission | Sleeve type | |
| Type of journal bearings | Shell type (Non-disassembly type) | |
| Distance between yokes | 63.0 (2.480) | |

## SPECIFICATIONS AND ADJUSTMENT

Unit: mm (in)

| Propeller shaft model | 3S63A-R | 3S63A-T |
|---|---|---|
| Propeller shaft runout limit | 0.6 (0.024) | |
| Journal axial play | 0 (0) | |

Unit: mm (in)

| Propeller shaft model | 3S63A-R | 3S63A-T |
|---|---|---|
| Shaft length (Spider to spider) | | |
| 1st | 395.0 (15.55) | 432.0 (17.01) |
| 2nd | | |
| Without A.B.S. | 605.0 (23.82) | |
| With A.B.S. | 590 (23.23) | |
| Shaft outer diameter | | |
| 1st | 75.0 (2.953) | |
| 2nd | 75.0 (2.953) | 75.0 (2.953) ... Large side<br>63.5 (2.500) ... Small side |

# Final Drive

## GENERAL SPECIFICATIONS

| Final drive model | R200V | R200 |
|---|---|---|
| Ring gear pitch diameter mm (in) | 205 (8.07) | |
| Gear ratio | 4.083 | |
| Number of teeth (Ring gear/drive pinion) | 49/12 | |
| Oil capacity (approx.) ℓ (US pt, Imp pt) | 1.5 (3-1/8, 2-5/8) | 1.3 (2-3/4, 2-1/4) |
| Number of pinion gears | 4 | 2 |
| Side gear bearing spacer location | Right | |

## INSPECTION AND ADJUSTMENT

### Ring gear runout

| Ring gear runout limit mm (in) | 0.05 (0.0020) |
|---|---|

### Side gear adjustment —R200V—

| Clearance between side gear and differential case mm (in) | 0.03 - 0.09 (0.0012 - 0.0035) |
|---|---|

### Available side gear thrust washers (R200V)

| Thickness mm (in) | Part number |
|---|---|
| 0.80 (0.0315) | 38424-40F60 |
| 0.83 (0.0327) | 38424-40F61 |
| 0.86 (0.0339) | 38424-40F62 |
| 0.89 (0.0350) | 38424-40F63 |
| 0.92 (0.0362) | 38424-40F64 |
| 0.95 (0.0374) | 38424-40F65 |
| 0.98 (0.0386) | 38424-40F66 |
| 1.01 (0.0398) | 38424-40F67 |
| 1.04 (0.0409) | 38424-40F68 |
| 1.07 (0.0421) | 38424-40F69 |
| 1.10 (0.0433) | 38424-40F70 |
| 1.13 (0.0445) | 38424-40F71 |
| 1.16 (0.0457) | 38424-40F72 |
| 1.19 (0.0469) | 38424-40F73 |
| 1.22 (0.0480) | 38424-40F74 |
| 1.25 (0.0492) | 38424-40F75 |
| 1.28 (0.0504) | 38424-40F76 |
| 1.31 (0.0516) | 38424-40F77 |
| 1.34 (0.0528) | 38424-40F78 |
| 1.37 (0.0539) | 38424-40F79 |
| 1.40 (0.0551) | 38424-40F80 |
| 1.43 (0.0563) | 38424-40F81 |
| 1.46 (0.0575) | 38424-40F82 |
| 1.49 (0.0587) | 38424-40F83 |

## Final Drive (Cont'd)

### Side gear adjustment —R200—

| | |
|---|---|
| Clearance between side gear and differential case mm (in) | 0.10 - 0.20 (0.0039 - 0.0079) |

### Available side gear thrust washers (R200)

| Thickness mm (in) | Part number |
|---|---|
| 0.75 (0.0295) | 38424-N3110 |
| 0.78 (0.0307) | 38424-N3111 |
| 0.81 (0.0319) | 38424-N3112 |
| 0.84 (0.0331) | 38424-N3113 |
| 0.87 (0.0343) | 38424-N3114 |
| 0.90 (0.0354) | 38424-N3115 |
| 0.93 (0.0366) | 38424-N3116 |

### Drive pinion height adjustment

### Available pinion height adjusting washers

| Thickness mm (in) | Part number |
|---|---|
| 3.09 (0.1217) | 38154-P6017 |
| 3.12 (0.1228) | 38154-P6018 |
| 3.15 (0.1240) | 38154-P6019 |
| 3.18 (0.1252) | 38154-P6020 |
| 3.21 (0.1264) | 38154-P6021 |
| 3.24 (0.1276) | 38154-P6022 |
| 3.27 (0.1287) | 38154-P6023 |
| 3.30 (0.1299) | 38154-P6024 |
| 3.33 (0.1311) | 38154-P6025 |
| 3.36 (0.1323) | 38154-P6026 |
| 3.39 (0.1335) | 38154-P6027 |
| 3.42 (0.1346) | 38154-P6028 |
| 3.45 (0.1358) | 38154-P6029 |
| 3.48 (0.1370) | 38154-P6030 |
| 3.51 (0.1382) | 38154-P6031 |
| 3.54 (0.1394) | 38154-P6032 |
| 3.57 (0.1406) | 38154-P6033 |
| 3.60 (0.1417) | 38154-P6034 |
| 3.63 (0.1429) | 38154-P6035 |
| 3.66 (0.1441) | 38154-P6036 |

### Drive pinion preload adjustment

| | |
|---|---|
| Drive pinion bearing adjusting method | Pinion bearing adjusting washer and spacer |
| Drive pinion preload with front oil seal N·m (kg-cm, in-lb) | 1.1 - 1.4 (11 - 14, 9.5 - 12.2) |

### Available drive pinion bearing preload adjusting washers

| Thickness mm (in) | Part number |
|---|---|
| 3.80 - 3.82 (0.1496 - 0.1504) | 38125-61001 |
| 3.82 - 3.84 (0.1504 - 0.1512) | 38126-61001 |
| 3.84 - 3.86 (0.1512 - 0.1520) | 38127-61001 |
| 3.86 - 3.88 (0.1520 - 0.1528) | 38128-61001 |
| 3.88 - 3.90 (0.1528 - 0.1535) | 38129-61001 |
| 3.90 - 3.92 (0.1535 - 0.1543) | 38130-61001 |
| 3.92 - 3.94 (0.1543 - 0.1551) | 38131-61001 |
| 3.94 - 3.96 (0.1551 - 0.1559) | 38132-61001 |
| 3.96 - 3.98 (0.1559 - 0.1567) | 38133-61001 |
| 3.98 - 4.00 (0.1567 - 0.1575) | 38134-61001 |
| 4.00 - 4.02 (0.1575 - 0.1583) | 38135-61001 |
| 4.02 - 4.04 (0.1583 - 0.1591) | 38136-61001 |
| 4.04 - 4.06 (0.1591 - 0.1598) | 38137-61001 |
| 4.06 - 4.08 (0.1598 - 0.1606) | 38138-61001 |
| 4.08 - 4.10 (0.1606 - 0.1614) | 38139-61001 |

### Available drive pinion bearing preload adjusting spacers

| Length mm (in) | Part number |
|---|---|
| 54.50 (2.1457) | 38165-B4000 |
| 54.80 (2.1575) | 38165-B4001 |
| 55.10 (2.1693) | 38165-B4002 |
| 55.40 (2.1811) | 38165-B4003 |
| 55.70 (2.1929) | 38165-B4004 |
| 56.00 (2.2047) | 38165-61001 |

### Total preload adjustment

| | |
|---|---|
| Drive pinion to ring gear backlash mm (in) | 0.10 - 0.15 (0.0039 - 0.0059) |
| Total preload | Value more than 0.29 N·m (3.0 kg-cm, 2.6 in-lb) added on measured value of drive pinion preload |
| Side bearing adjusting method | Adjusting washer |

### Available side bearing adjusting washers

| Thickness mm (in) | Part number |
|---|---|
| 2.00 (0.0787) | 38453-N3100 |
| 2.05 (0.0807) | 38453-N3101 |
| 2.10 (0.0827) | 38453-N3102 |
| 2.15 (0.0846) | 38453-N3103 |
| 2.20 (0.0866) | 38453-N3104 |
| 2.25 (0.0886) | 38453-N3105 |
| 2.30 (0.0906) | 38453-N3106 |
| 2.35 (0.0925) | 38453-N3107 |
| 2.40 (0.0945) | 38453-N3108 |
| 2.45 (0.0965) | 38453-N3109 |
| 2.50 (0.0984) | 38453-N3110 |
| 2.55 (0.1004) | 38453-N3111 |
| 2.60 (0.1024) | 38453-N3112 |
| 2.65 (0.1043) | 38453-N3113 |

# FRONT AXLE & FRONT SUSPENSION

SECTION FA

## CONTENTS


**PRECAUTIONS AND PREPARATION** ..... 2
- Precautions ..... 2
- Special Service Tools ..... 2
- Commercial Service Tools ..... 3

**FRONT AXLE AND FRONT SUSPENSION** ..... 4

**ON-VEHICLE SERVICE** ..... 5
- Front Axle and Front Suspension Parts ..... 5
- Front Wheel Bearing ..... 6
- Front Wheel Alignment ..... 6

**FRONT AXLE** ..... 8
- Wheel Hub and Knuckle ..... 8
- Baffle Plate ..... 10

**FRONT SUSPENSION** ..... 11
- Coil Spring and Strut Assembly ..... 12
- Tension Rod and Stabilizer Bar ..... 13
- Transverse Link and Lower Ball Joint ..... 14

**SERVICE DATA AND SPECIFICATIONS (S.D.S.)** ..... 15
- General Specifications ..... 15
- Inspection and Adjustment ..... 16

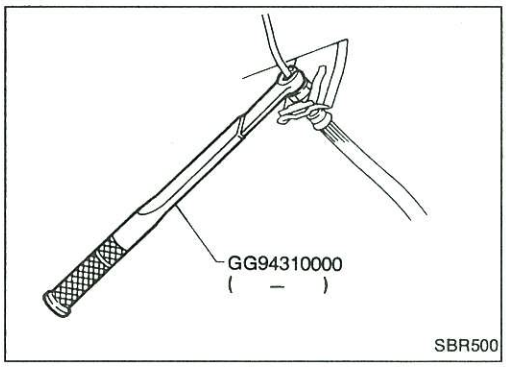


## Precautions

- **When installing rubber parts, final tightening must be carried out under unladen condition* with tires on ground.**
  ***: Fuel, radiator coolant and engine oil full. Spare tire, jack, hand tools and mats in designated positions.**
- **When removing each suspension part, check wheel alignment and adjust if necessary.**
- **Use Tool when removing or installing brake tubes.**

## Special Service Tools

| Tool number<br>(Kent-Moore No.)<br>Tool name | Description | |
|---|---|---|
| HT72520000<br>(J25730-A)<br>Ball joint remover | 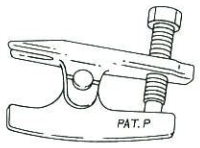 | Removing tie-rod outer end and lower ball joint |
| HT71780000<br>( — )<br>Spring compressor | | Removing and installing coil spring |
| ST35652000<br>( — )<br>Strut attachment | 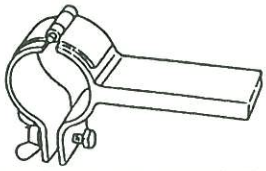 | Fixing strut assembly |
| GG94310000<br>( — )<br>Flare nut torque wrench | 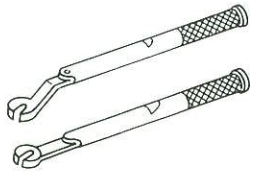 | Removing and installing brake piping |

## Commercial Service Tools

| Tool name | Description | |
|---|---|---|
| Wheel bearing drift | 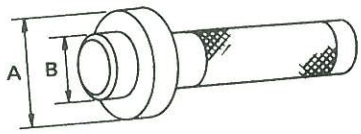 | Removing wheel bearing<br>**A: 45 mm (1.77 in) dia.**<br>**B: 30 mm (1.18 in) dia.** |
| Wheel bearing drift | 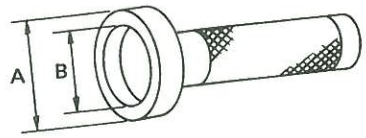 | Installing wheel bearing<br>**A: 68 mm (2.68 in) dia.**<br>**B: 60 mm (2.36 in) dia.** |
| Baffle plate drift | 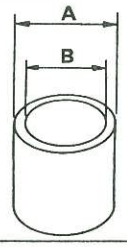 | Installing baffle plate<br>**A: 88 mm (3.46 in) dia.**<br>**B: 68 mm (2.68 in) dia.** |
| Tension rod bushing drift | 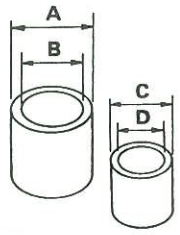 | Removing and installing tension rod bushing<br>**A: 75 mm (2.95 in) dia.**<br>**B: 66 mm (2.60 in) dia.**<br>**C: 62 mm (2.44 in) dia.**<br>**D: 25 - 55 mm (0.98 - 2.17 in) dia.** |
| Attachment<br>Wheel alignment | 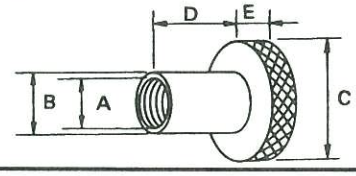 | Measure wheel alignment<br>**A: Screw M22 x 1.5**<br>**B: 35 (1.38) dia.**<br>**C: 65 (2.56) dia.**<br>**D: 56 (2.20)**<br>**E: 12 (0.47)**<br>Unit: mm (in) |

**When installing rubber parts, final tightening must be carried out under unladen condition* with tires on ground.**

*** Fuel, radiator coolant and engine oil full. Spare tire, jack, hand tools and mats in designated positions.**

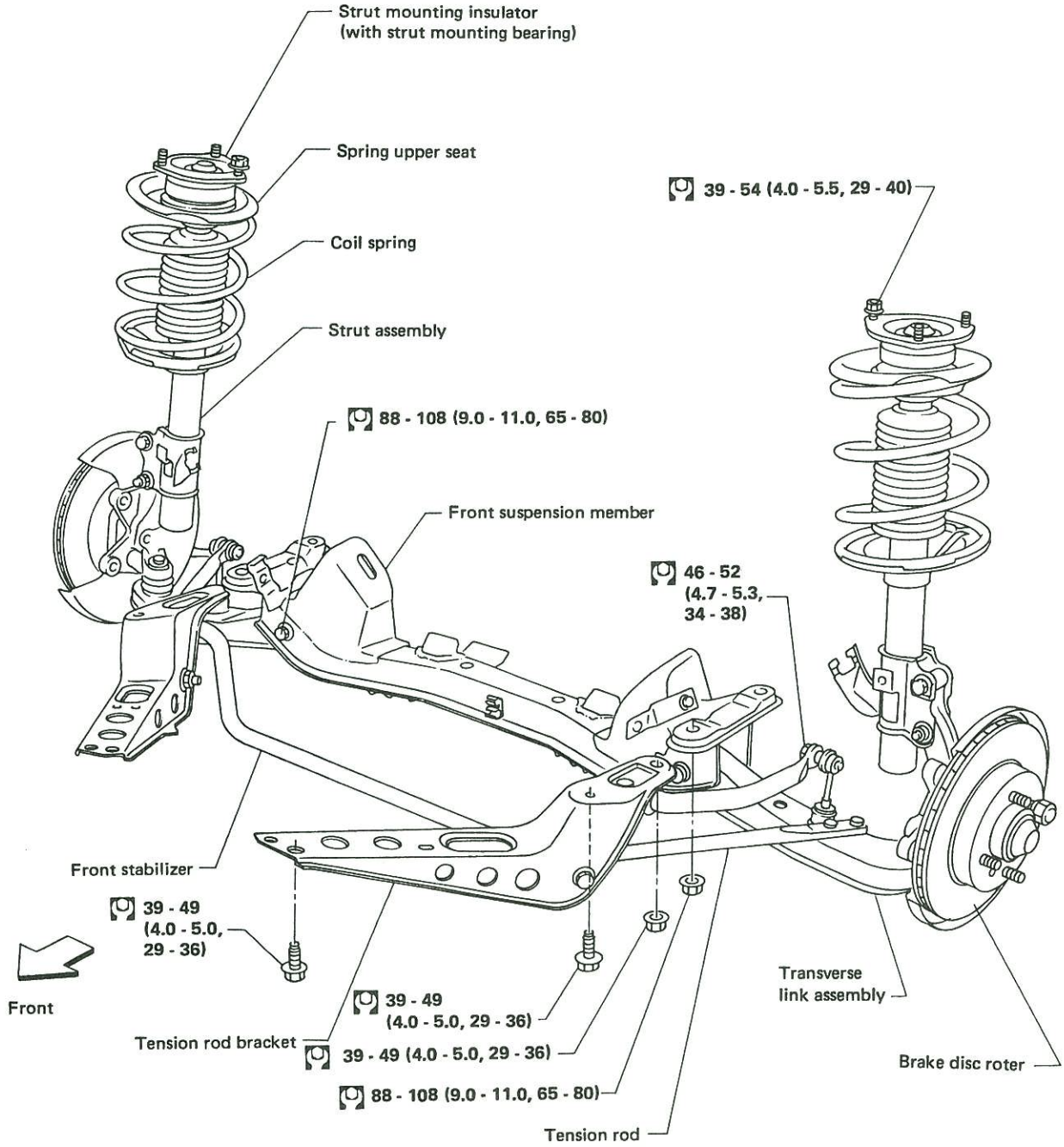


: N·m (kg-m, ft-lb)

SFA540A

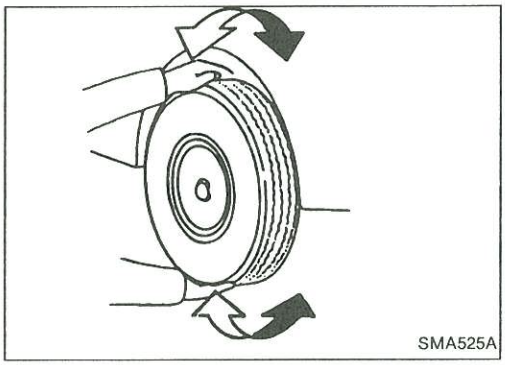
SMA525A

## Front Axle and Front Suspension Parts

Check front axle and front suspension parts for looseness, cracks, wear or other damage.

- Shake each front wheel to check for excessive play.
- Retighten all axle and suspensions nuts and bolts to the specified torque.
  **Tightening torque: Refer to FRONT SUSPENSION.**
- Make sure that cotter pins are inserted.

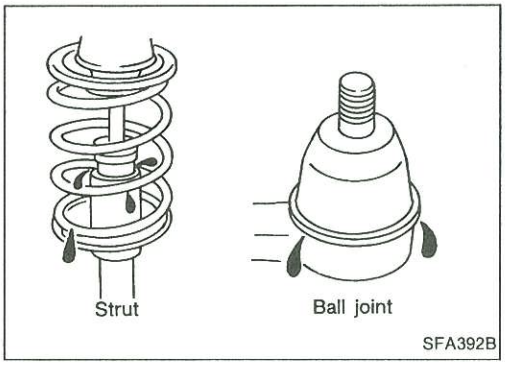

SFA392B

- Check strut (shock absorber) for oil leakage or other damage.
- Check suspension ball joint for grease leakage and ball joint dust cover for cracks or other damage.

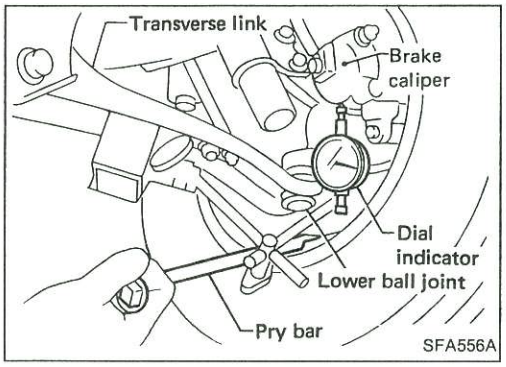

SFA556A

- Check suspension ball joint end play.

(1) Jack up front of vehicle and set the stands.
(2) Clamp dial indicator onto transverse link and place indicator tip on lower edge of brake caliper.
(3) Make sure front wheels are straight and brake pedal is depressed.
(4) Place a pry bar between transverse link and inner rim of road wheel.
(5) While raising and releasing pry bar, observe maximum dial indicator value.
**Vertical end play: 0 mm (0 in)**
(6) If ball joint movement is beyond specifications, remove and recheck it.

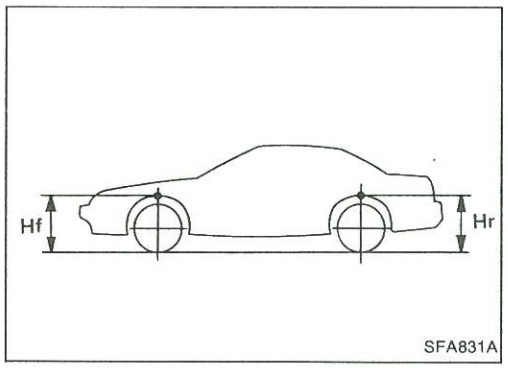

SFA831A

- Check spring height from the top of the wheelarch to the ground.

(1) Vehicle must be unladen*, parked on a level surface, and tires checked for proper inflation and wear (tread wear indicator must not be showing).
*: Fuel, radiator coolant and engine oil full. Spare tire, jack, hand tools and mats in designated positions.
(2) Bounce the vehicle up and down several times before measuring.
**Wheelarch height: Front (Hf): 694 mm (27.32 in)**
**Rear (Hr): 670 mm (26.38 in)**
(3) Spring height is not adjustable. If out of specification, check for worn springs or suspension parts.

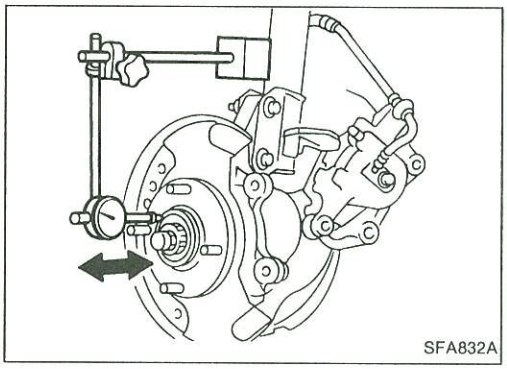
SFA832A

## Front Wheel Bearing

- Check that wheel bearings operate smoothly.
- Check axial end play.
  **Axial end play: 0.03 mm (0.0012 in) or less**
- If axial end play is not within specification or wheel bearing does not turn smoothly, replace wheel bearing assembly.
  Refer to FRONT AXLE — Wheel Hub and Knuckle.

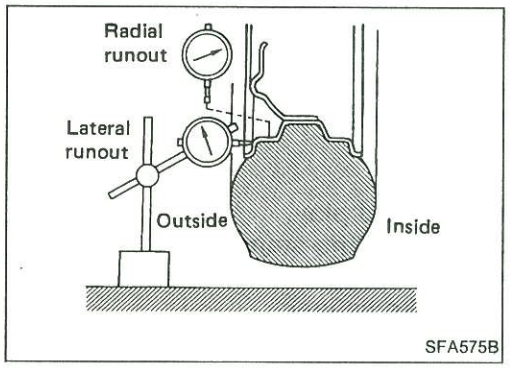

SFA575B

## Front Wheel Alignment

Before checking front wheel alignment, be sure to make a preliminary inspection (Unladen*).

*: Fuel, radiator coolant and engine oil full. Spare tire, jack, hand tools and mats in designated positions.

### PRELIMINARY INSPECTION

1. Check tires for wear and improper inflation.
2. Check wheel runout.
   **Wheel runout: Refer to S.D.S.**
3. Check front wheel bearings for looseness.
4. Check front suspension for looseness.
5. Check steering linkage for looseness.
6. Check that front shock absorbers work properly by using the standard bounce test.
7. Check vehicle posture (Unladen).

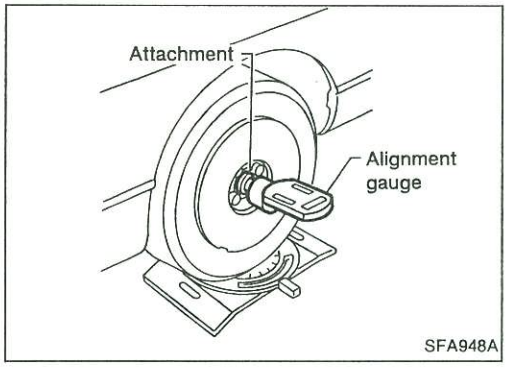

SFA948A

### CAMBER, CASTER AND KINGPIN INCLINATION

**Camber, caster and kingpin inclination are preset at factory and cannot be adjusted.**

1. Measure camber, caster and kingpin inclination of both right and left wheels with a suitable alignment gauge.
   **Camber, Caster and Kingpin inclination: Refer to S.D.S.**
2. If camber, caster and kingpin inclination are not within specification, inspect and replace any damaged or worn front suspension parts.

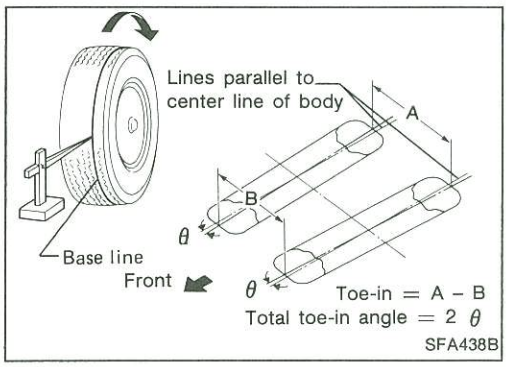

SFA438B

### TOE-IN

1. Draw a base line across the tread.
- After lowering front of vehicle, move it up and down to eliminate friction, and set steering wheel in straight-ahead position.
2. Measure toe-in.
   Measure distance "A" and "B" at same height as hub center.
   **Toe-in: Refer to S.D.S.**

## Front Wheel Alignment (Cont'd)

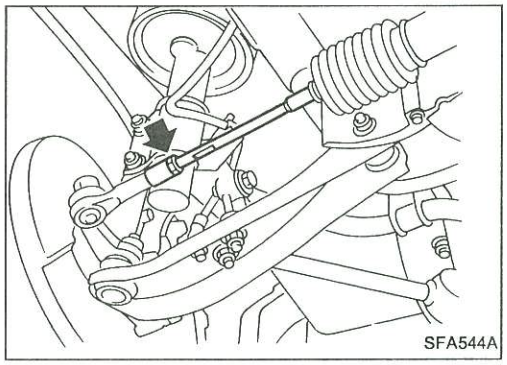
SFA544A

3. Adjust toe-in by varying length of steering tie-rods.
(1) Loosen lock nuts.
(2) Adjust toe-in by turning forward and reverse tie-rod.

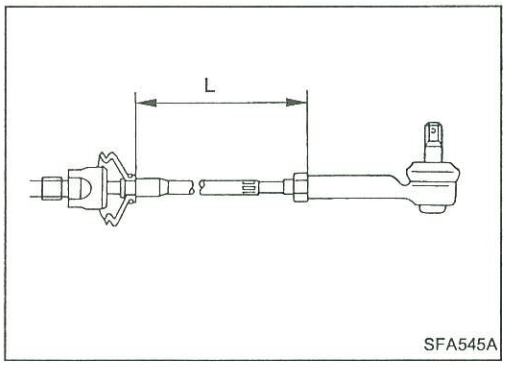

SFA545A

Make sure both tie-rods are the same length.
**Standard length "L":**
**Refer to ST section.**
(3) Tighten lock nuts to specified torque.
**Lock nut tightening torque:**
**Refer to ST section.**

### FRONT WHEEL TURNING ANGLE

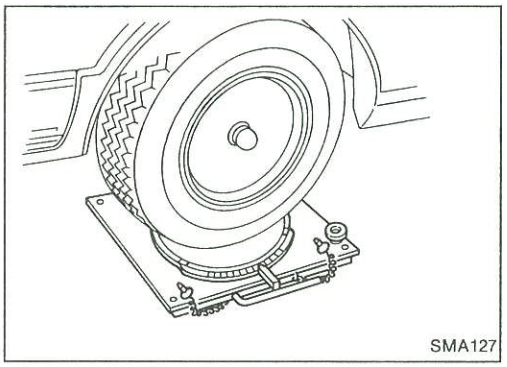
SMA127

1. Set wheels in straight-ahead position and then move vehicle forward until front wheels rest on turning radius gauge properly.

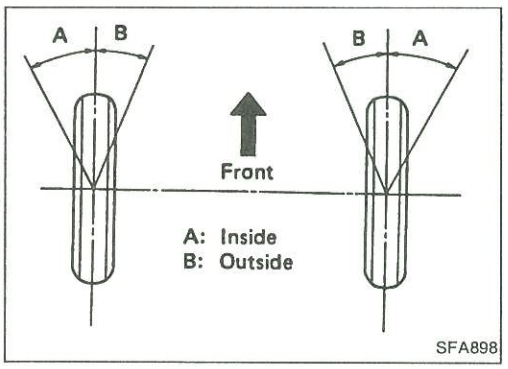

SFA898

2. Rotate fully steering wheel to the right or left; measure turning angle.

**Wheel turning angle:**

| | | |
|---|---|---|
| Full turns | Inside wheel: A | 39° - 43° |
| | Outside wheel: B | 33° |

- **On power steering models, wheel turning force (at circumference of steering wheel) of 98 to 147 N (10 to 15 kg, 22 to 33 lb) with engine at idle.**

## Wheel Hub and Knuckle

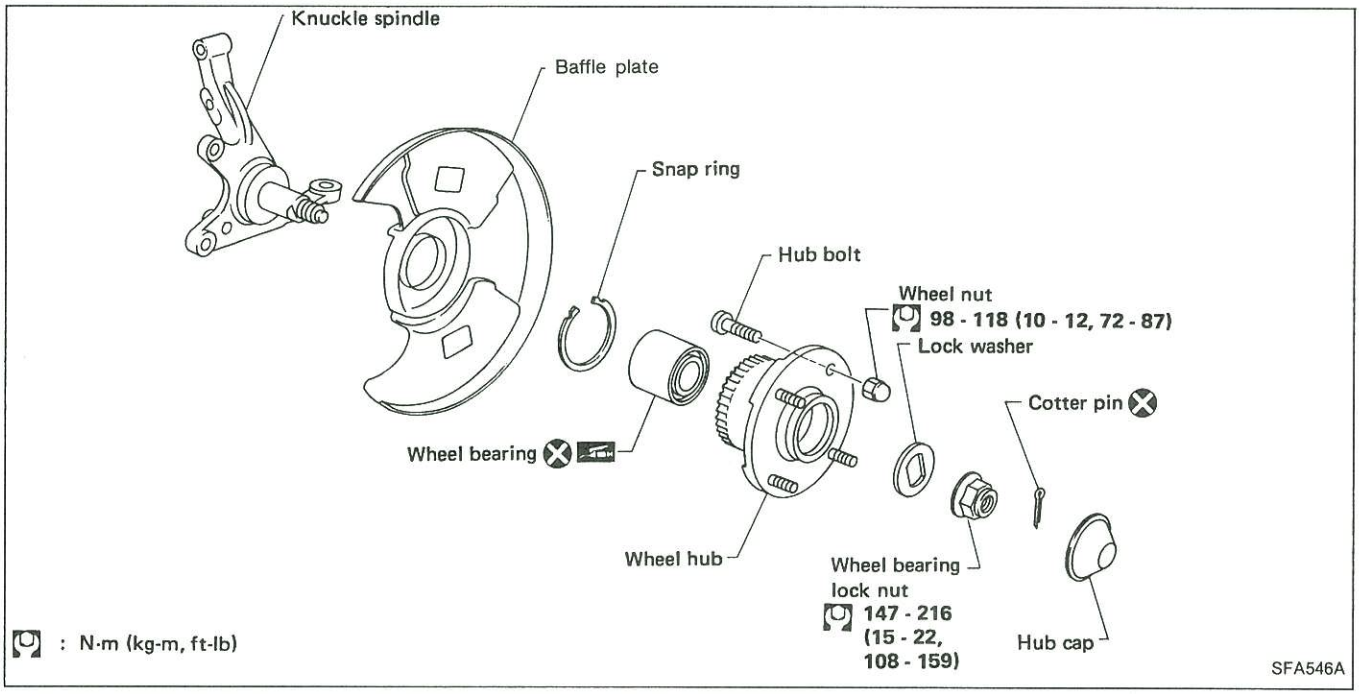


SFA546A

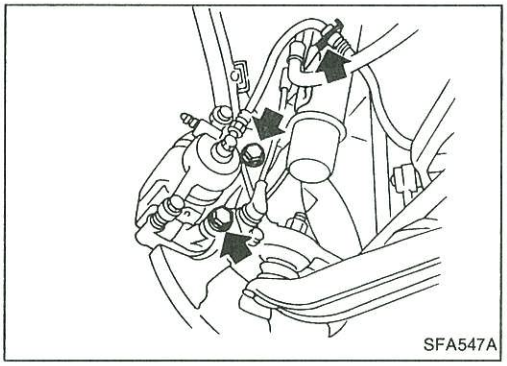


### REMOVAL

- Remove brake caliper assembly.

**Brake hose need not be disconnected from brake caliper. Be careful not to depress brake pedal, or piston will pop out. Make sure brake hose is not twisted.**

- Remove brake rotor.

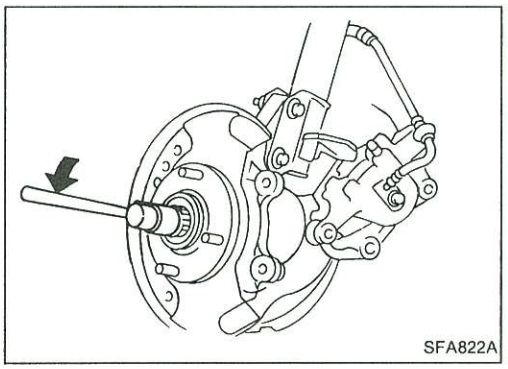


- Remove wheel bearing lock nut. Remove wheel hub from spindle.

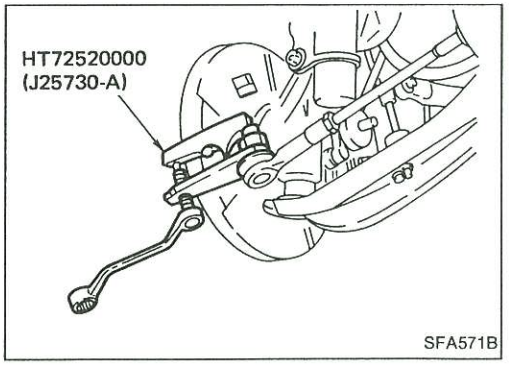


- Remove tie-rod ball joint and lower ball joint.

## Wheel Hub and Knuckle (Cont'd)

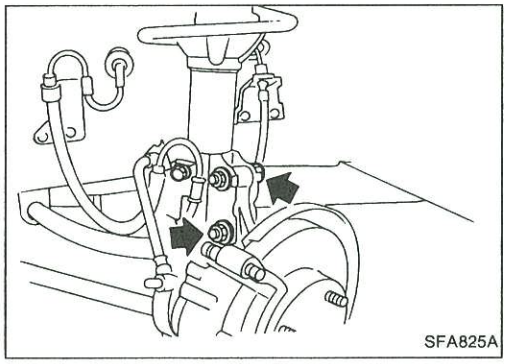
SFA825A

- Disconnect knuckle from strut.

### INSTALLATION

- Install wheel hub.
- Tighten wheel bearing lock nut.
  **: 147 - 216 N·m**
  **(15 - 22 kg-m, 108 - 159 ft-lb)**

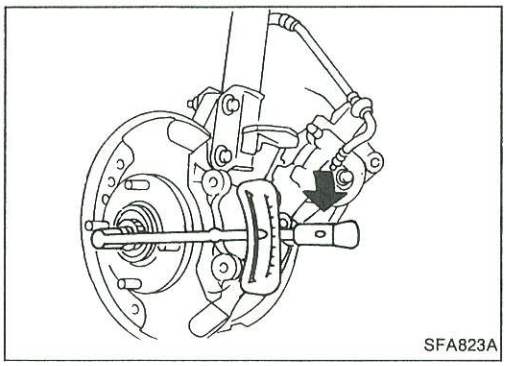
SFA823A

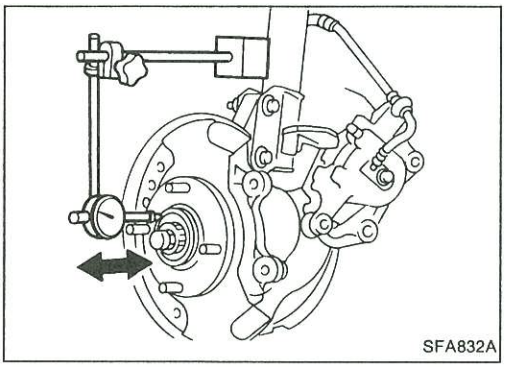
SFA832A

- Check wheel bearing axial end play.
  **Axial end play: 0.03 mm (0.0012 in) or less**

### DISASSEMBLY

**CAUTION:**
**When removing wheel bearing from wheel hub, replace wheel bearing assembly (outer race, inner races and grease seal) with a new one.**

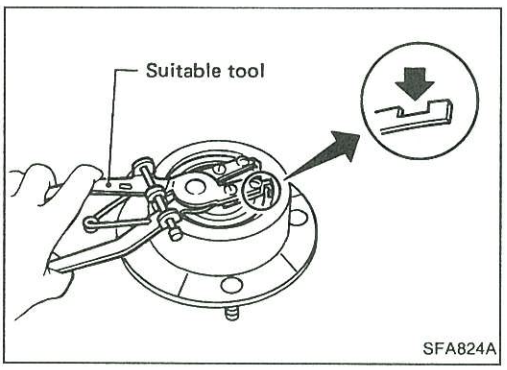

SFA824A

- Remove circular clip with suitable tool.

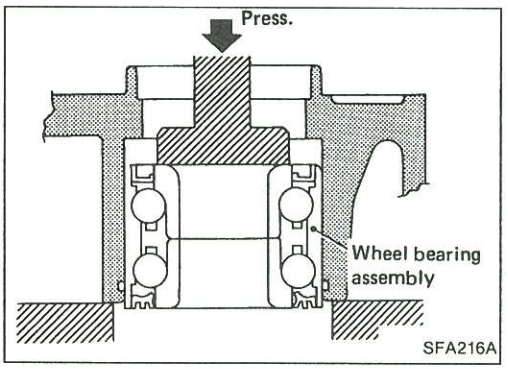

SFA216A

- Press out wheel bearing assembly from wheel hub.

## Wheel Hub and Knuckle (Cont'd)

### INSPECTION

#### Wheel hub

Check wheel hub for any cracks by using a magnetic exploration or dyeing test.

#### Circular clip

Check circular clip for wear or cracks.
Replace if necessary.

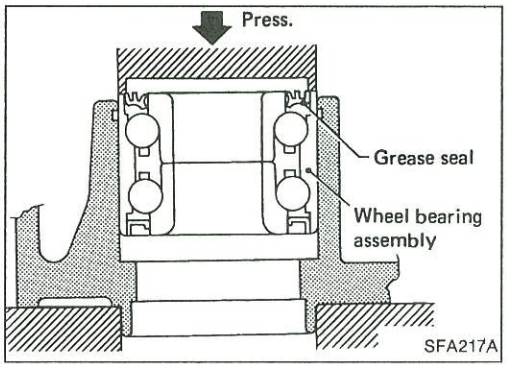


### ASSEMBLY

1. Press new wheel bearing assembly into wheel hub from inside of wheel hub.
   **Maximum load P:**
   **29 kN (3 ton, 3.3 US ton, 3.0 Imp ton)**

**CAUTION:**

- **Do not press inner race of wheel bearing assembly.**
- **Do not apply oil or grease to mating surfaces of wheel bearing outer race and wheel hub.**
  **Be careful not to damage grease seal.**

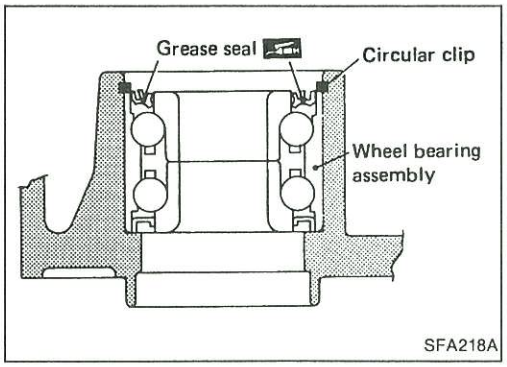


2. Install circular clip into groove of wheel hub.
3. Apply multi-purpose grease to sealing lip.

## Baffle Plate

### REMOVAL

- Mark matchmarks on baffle plate before removing.
- If baffle plate raplacement requires removal of knuckle spindle, separate it equally using a screwdriver.

**Be careful not to scratch knuckle spindle.**

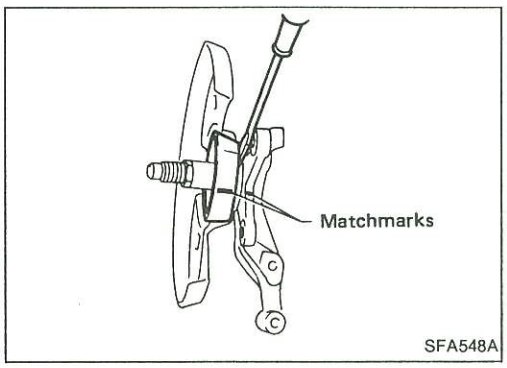


### INSTALLATION

Align matchmarks previously marked on baffle plate and install baffle plate by lightly tapping with a copper hammer and suitable tool.

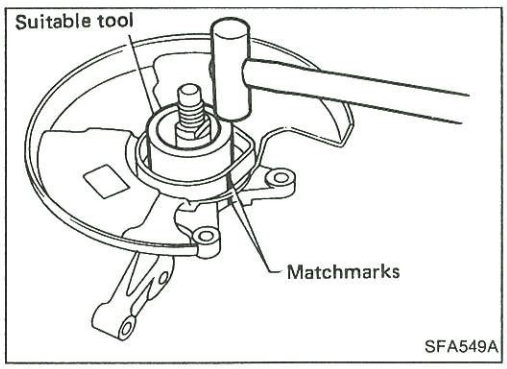

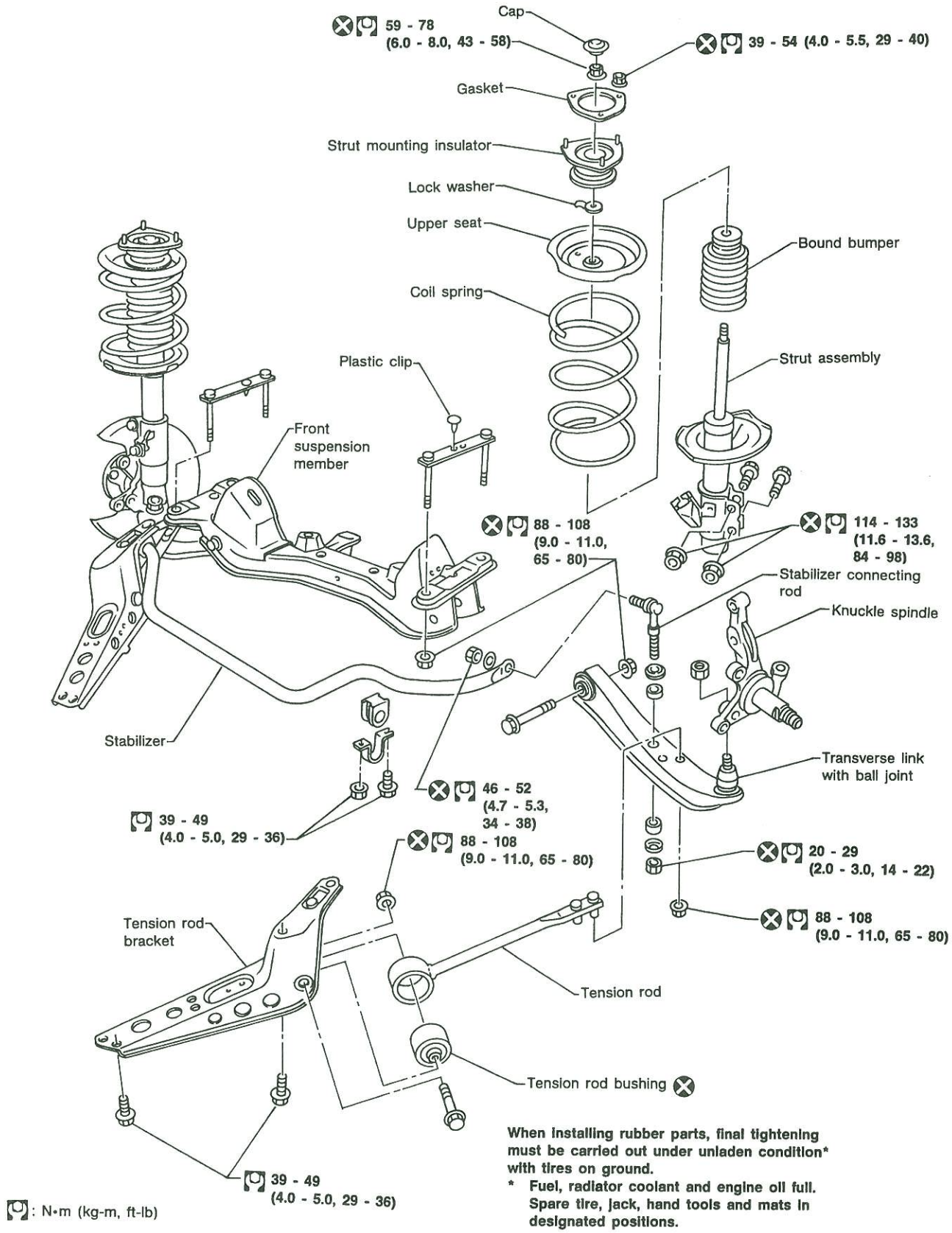


: N•m (kg-m, ft-lb)

**When installing rubber parts, final tightening must be carried out under unladen condition* with tires on ground.**

*** Fuel, radiator coolant and engine oil full. Spare tire, jack, hand tools and mats in designated positions.**

SFA550A

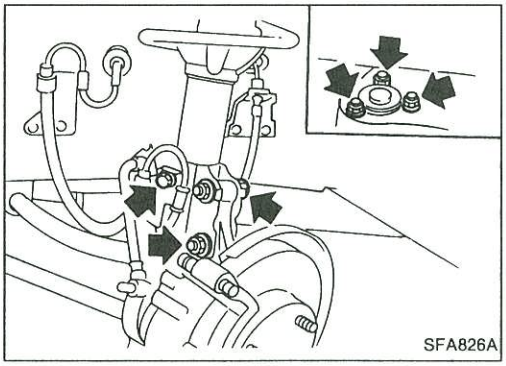


## Coil Spring and Strut Assembly

### REMOVAL

Remove strut assembly fixing bolts and nuts (to hoodledge).

**Do not remove piston rod lock nut on vehicle.**

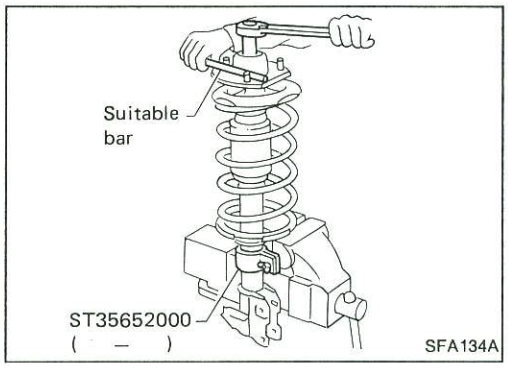


### DISASSEMBLY

1. Set strut assembly on vise with Tool, then loosen piston rod lock nut.

**Do not remove piston rod lock nut.**

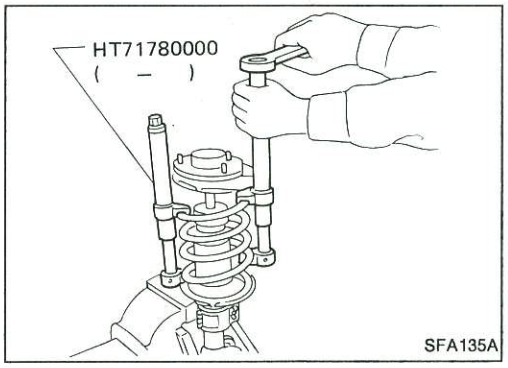


2. Compress spring with a Tool so that strut mounting insulator can be turned by hand.

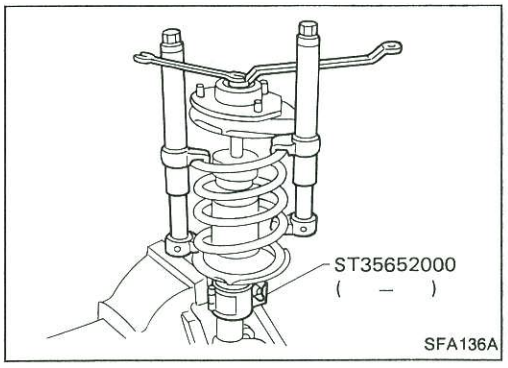


3. Remove piston rod lock nut.

### INSPECTION

#### Strut assembly

- Check for smooth operation through a full stroke, both compression and extension.
- Check for oil leakage occurring on welded or gland packing portion.
- Check piston rod for cracks, deformation or other damage. Replace if necessary.

## Coil Spring and Strut Assembly (Cont'd)

### Strut mounting insulator

- Check cemented rubber-to-metal portion for separation or cracks. Check rubber parts for deterioration.
- Check thrust bearing parts for abnormal noise or excessive rattle in axial direction.
  Replace if necessary.

### Lock washer

Check for cracks, deformation or other damage. Replace if necessary.

### Coil spring

Check for cracks, deformation or other damage. Replace if necessary.

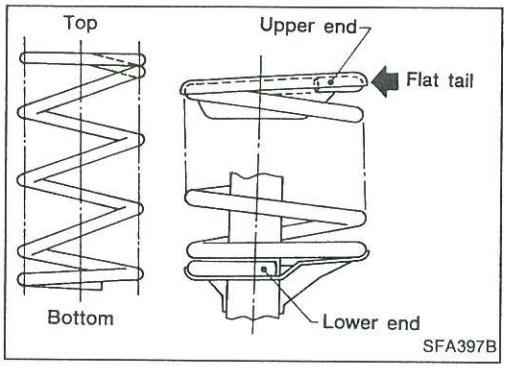


### ASSEMBLY

- When installing coil spring, be careful not to reverse top and bottom direction. (Top end is flat.)
- When installing coil spring on strut, it must be positioned as shown in figure at left.

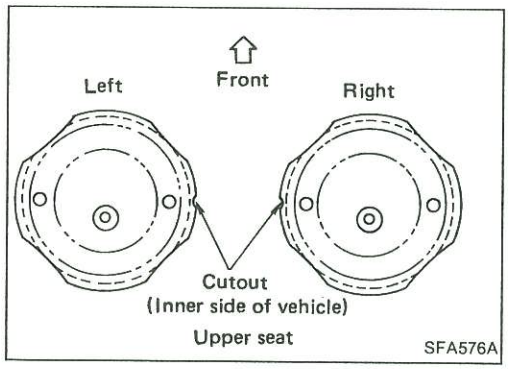


- Install upper spring seat with its cutout facing the inner side of vehicle.

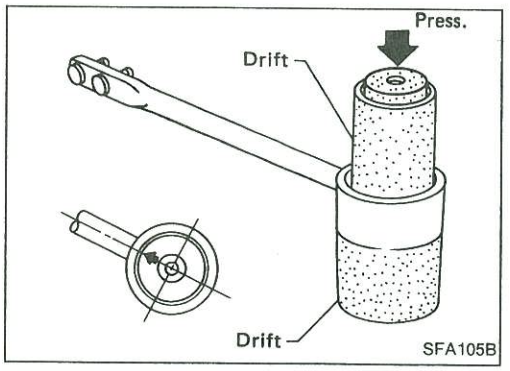


## Tension Rod and Stabilizer Bar

### REMOVAL AND INSTALLATION

- Remove tension rod and stabilizer bar.
- When removing tension rod bushing, place one drift on lower side of bushing and the other on upper side, as shown at left, and press bushing out.
- Place arrow mark on bushing facing tension rod before installing bushing.

## Tension Rod and Stabilizer Bar (Cont'd)

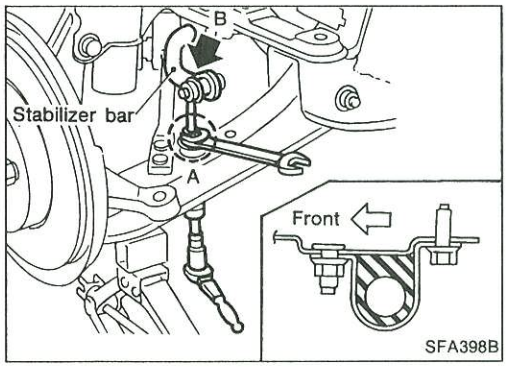


- Install stabilizer rear side bushings, then install front side bushings.
  When installing stabilizer bar clamp, make sure direction is correct (as shown at left).
- When removing and installing stabilizer bar, fix portion A.

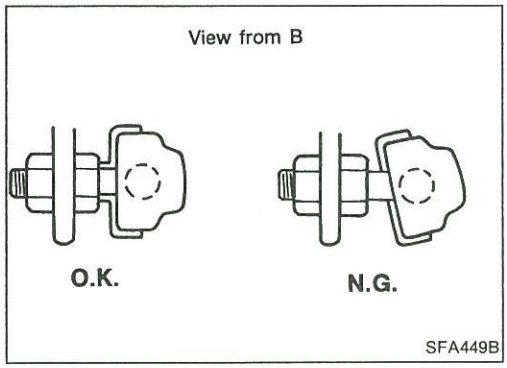


- Install stabilizer bar with ball joint socket properly placed.

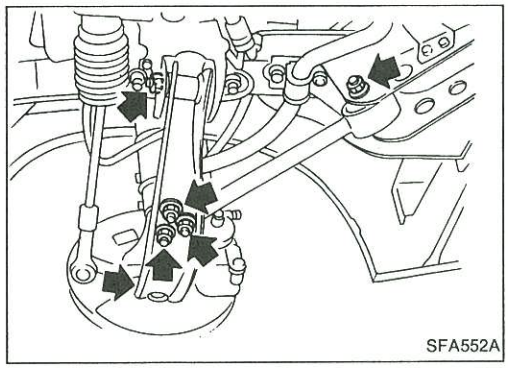


## Transverse Link and Lower Ball Joint

### REMOVAL AND INSTALLATION

- Remove stabilizer, tension rod, ball joint and transverse link assembly.
- During installation, final tightening must be carried out at curb weight with tires on ground.
- After installation, check wheel alignment.
  Refer to "Front Wheel Alignment" of ON-VEHICLE SERVICE.

### INSPECTION

#### Transverse link

- Check transverse link for damage, cracks or deformation. Replace it if necessary.
- Check rubber bushing for damage, cracks and deformation. Replace transverse link if necessary.

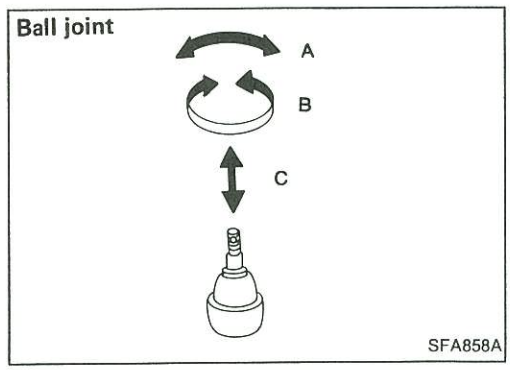


#### Lower ball joint

- Check ball joint for play. If ball stud is worn, play in axial direction is excessive or joint is hard to swing, replace lower ball joint.
  Before checking, turn ball joint at least 10 revolutions so that ball joint is properly broken in.
  **Swinging force "A": Refer to S.D.S.**
  **(measuring point: cotter pin hole of ball stud)**
  **Turning torque "B": Refer to S.D.S.**
  **Vertical end play "C": Refer to S.D.S.**
- Check dust cover for damage. Replace it if necessary.

## General Specifications

### COIL SPRING

| Applied model | | Convertible | Coupe | Hatchback | |
|---|---|---|---|---|---|
| | | Without HICAS | | | With HICAS |
| Wire diameter | mm (in) | 13.4 (0.528) | | | 13.3 (0.524) |
| Coil outer diameter | mm (in) | 170.4 (6.71) | | | 170.3 (6.70) |
| Free length | mm (in) | 356 (14.02) | 350 (13.78) | | 336 (13.23) |
| Identification color | | White x 1 | Yellow x 1, Light green x 1 | | Yellow x 1, Orange x 1 |

### STRUT

| Applied model | | Convertible | Coupe | Hatchback | |
|---|---|---|---|---|---|
| | | Without HICAS | | | With HICAS |
| Piston rod diameter | mm (in) | 20.0 (0.787) | | | |

### FRONT STABILIZER BAR

| | Convertible | Coupe & Hatchback |
|---|---|---|
| Stabilizer diameter mm (in) | 24 (0.94) | 25 (0.98) |
| Identification color | White | Orange |

### WHEEL ALIGNMENT (Unladen*)

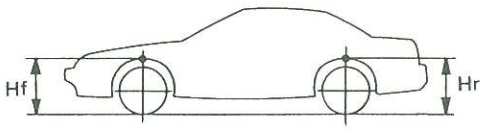


SFA831A

| Applied model | | All |
|---|---|---|
| Front (Hf) | mm (in) | 694 (27.32) |
| Rear (Hr) | mm (in) | 670 (26.38) |

*: Fuel, radiator coolant and engine oil full.
Spare tire, jack, hand tools and mats in designated positions.

# Inspection and Adjustment

## WHEEL ALIGNMENT (Unladen*1)

| | | |
|---|---|---|
| Camber | degree | –1°30′ to 0° |
| Caster | degree | 6°00′ - 7°30′ |
| Toe-in | | |
| A – B | mm (in) | 0.3 - 2.3 (0.012 - 0.091) |
| Total angle 2θ | degree | 2′ - 13′ |
| Kingpin inclination | degree | 12°30′ - 14°00′ |
| Front wheel turning angle | | |
| Full turn*2 inside/outside | degree | 39° - 43°/33° |

*1: Fuel, radiator coolant and engine oil full. Spare tire, jack, hand tools and mats in designated positions.

*2: On power steering models, wheel turning force (at circumference of steering wheel) of 98 to 147 N (10 to 15 kg, 22 to 33 lb) with engine at idle.

## WHEEL BEARING

| | |
|---|---|
| Wheel bearing axial end play mm (in) | 0.03 (0.0012) or less |
| Wheel bearing lock nut | |
| Tightening torque N·m (kg-m, ft-lb) | 147 - 216 (15 - 22, 108 - 159) |

## LOWER BALL JOINT

| | |
|---|---|
| Swinging force "A" (Measuring point: cotter pin hole of ball stud) N (kg, lb) | 7.8 - 54.9 (0.8 - 5.6, 1.8 - 12.3) |
| Turning torque "B" N·m (kg-cm, in-lb) | 0.49 - 3.43 (5.0 - 35, 4.3 - 30.4) |
| Vertical end play "C" mm (in) | 0 (0) |

## WHEEL RUNOUT (Radial and lateral)

| Wheel type | Radial runout | Lateral runout |
|---|---|---|
| Aluminum wheel mm (in) | 0.3 (0.012) or less | |
| Steel wheel mm (in) | 0.5 (0.020) or less | 0.8 (0.031) or less |

# REAR AXLE & REAR SUSPENSION

SECTION RA

# CONTENTS


**PRECAUTIONS AND PREPARATION** ..... 2
- Precautions ..... 2
- Special Service Tools ..... 2
- Commercial Service Tools ..... 3

**REAR AXLE AND REAR SUSPENSION** ..... 4

**ON-VEHICLE SERVICE** ..... 5
- Rear Axle and Rear Suspension Parts ..... 5
- Rear Wheel Bearing ..... 5
- Rear Wheel Alignment ..... 5
- Drive Shaft ..... 6

**REAR AXLE AND REAR SUSPENSION ASSEMBLY** ..... 7

**REAR AXLE** ..... 8
- Wheel Hub and Axle Housing ..... 8
- Drive Shaft ..... 11

**REAR SUSPENSION** ..... 17
- Coil Spring and Shock Absorber ..... 18
- Multi-link and Lower Ball Joint ..... 19
- Stabilizer Bar ..... 20

**SUPER HICAS** ..... 21
- Rear Wheel Alignment ..... 21
- Rear Axle Housing Ball Joint ..... 21

**SERVICE DATA AND SPECIFICATIONS (S.D.S.)** ..... 22
- General Specifications ..... 22
- Inspection and Adjustment ..... 23

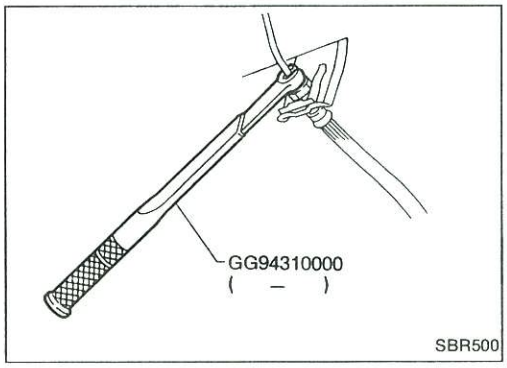


## Precautions

- **When installing rubber parts, final tightening must be carried out under unladen condition* with tires on ground.**
  ***: Fuel, radiator coolant and engine oil full. Spare tire, jack, hand tools and mats in designated positions.**
- **Use Tool when removing or installing brake tubes.**
- **When removing each suspension part, check wheel alignment and adjust if necessary.**
- **Do not jack up at the lower arm.**

## Special Service Tools

| Tool number<br>(Kent-Moore No.)<br>Tool name | Description | |
|---|---|---|
| HT71780000<br>( — )<br>Spring compressor | | Removing and installing coil spring |
| ST35652000<br>( — )<br>Strut attachment | 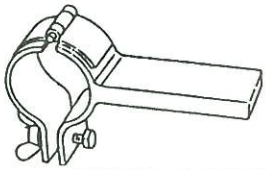 | Fixing strut assembly |
| GG94310000<br>( — )<br>Flare nut torque wrench | 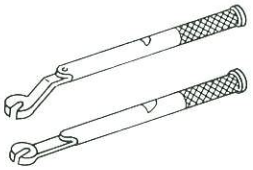 | Removing and installing brake piping |
| ST30031000<br>(J22912-01)<br>Bearing puller | 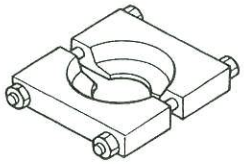 | Removing inner race of wheel bearing |
| ST38280000<br>( — )<br>Arm bushing remover | 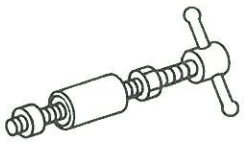 | Removing and installing bushing of rear axle housing |

## Commercial Service Tools

| Tool name | Description | |
|---|---|---|
| Attachment<br>Wheel alignment | 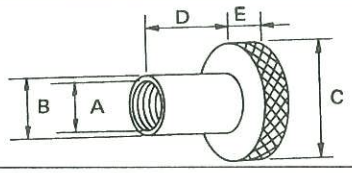 | Measure rear wheel alignment<br>**A: Screw M24 x 1.5**<br>**B: 35 (1.38) dia.**<br>**C: 65 (2.56) dia.**<br>**D: 56 (2.20)**<br>**E: 12 (0.47)**<br>Unit: mm (in) |
| Rear wheel hub drift | 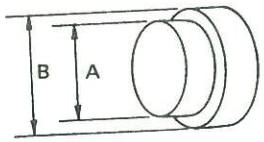 | Installing wheel bearing<br>**A: 41 mm (1.61 in) dia.**<br>**B: 49 mm (1.93 in) dia.** |
| Wheel bearing drift | 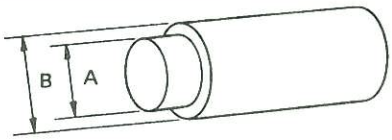 | Removing rear wheel hub<br>**A: 26 mm (1.02 in) dia.**<br>**B: 40 mm (1.57 in) dia.** |
| Rear drive shaft plug seal drift | 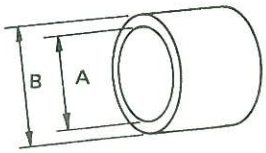 | Installing rear drive shaft plug seal<br>**A: 67 mm (2.64 in) dia.**<br>**B: 85 mm (3.35 in) dia.** |
| Rear axle housing ball joint drift | 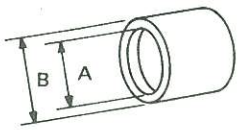 <br> 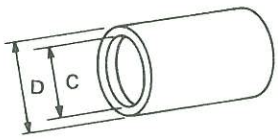 | Removing ball joint<br>**A: 20 (0.79) dia.**<br>**B: 28 (1.10) dia.**<br>**C: 40 (1.57) dia.**<br>**D: 43 (1.69) dia.**<br>Unit: mm (in) |
| Rear axle housing ball joint drift | 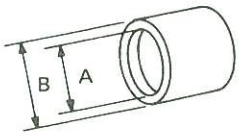 <br> 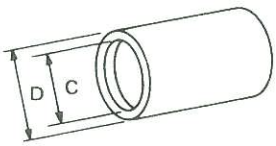 | Installing ball joint<br>**A: 33 (1.30) dia.**<br>**B: 43 (1.69) dia.**<br>**C: 30 (1.18) dia.**<br>**D: 40 (1.57) dia.**<br>Unit: mm (in) |

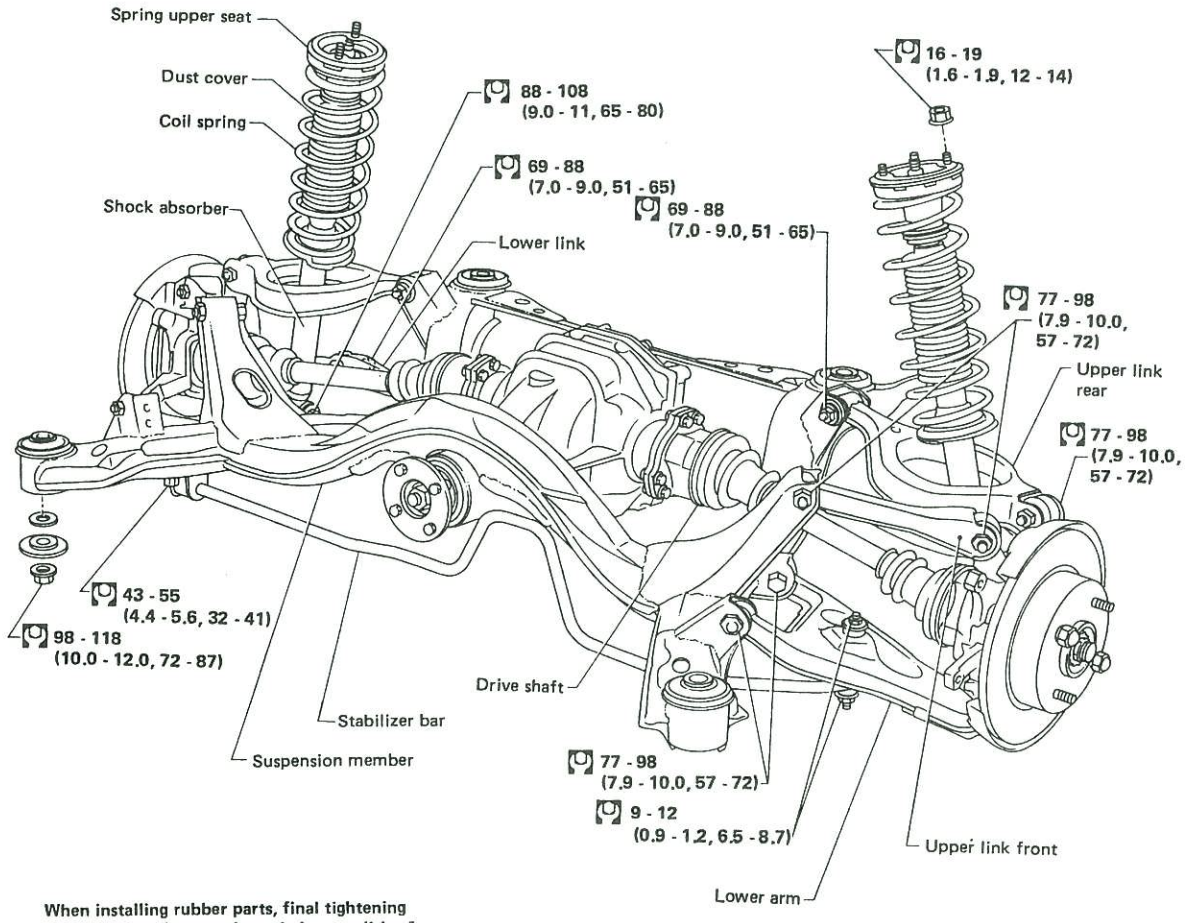


When installing rubber parts, final tightening must be carried out under unladen condition* with tires on ground.

* Fuel, radiator coolant and engine oil full. Spare tire, jack, hand tools and mats in designated positions.

: N·m (kg-m, ft-lb)

SRA093A

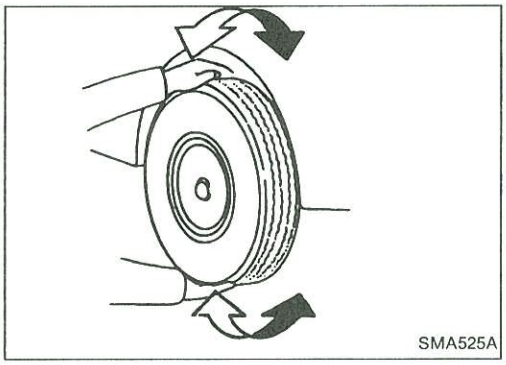
SMA525A

## Rear Axle and Rear Suspension Parts

Check axle and suspension parts for looseness, wear or damage.

- Shake each rear wheel.
- Retighten all axle and suspension nuts and bolts to the specified torque.
  **Tightening torque:**
  **Refer to REAR SUSPENSION.**
- Make sure that cotter pins are inserted.

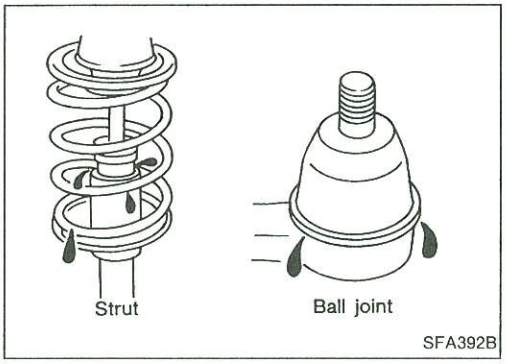

SFA392B

- Check shock absorber for oil leakage or other damage.
- Check wheelarch height. Refer to section FA.
- Check suspension lower ball joint for excessive play.
- Check suspension ball joint for grease leakage and ball joint dust cover for cracks or other damage.

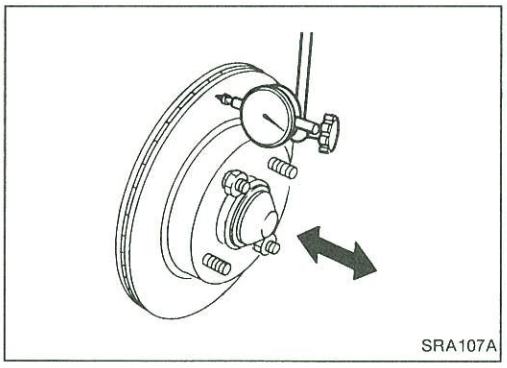
SRA107A

## Rear Wheel Bearing

- Check that wheel bearings operate smoothly.
- Check axial end play.
  **Axial end play:**
  **0.05 mm (0.0020 in) or less**
- If axial end play is not within specification or wheel bearing does not turn smoothly, replace wheel bearing assembly.
  Refer to REAR AXLE — Wheel Hub and Axle Housing.

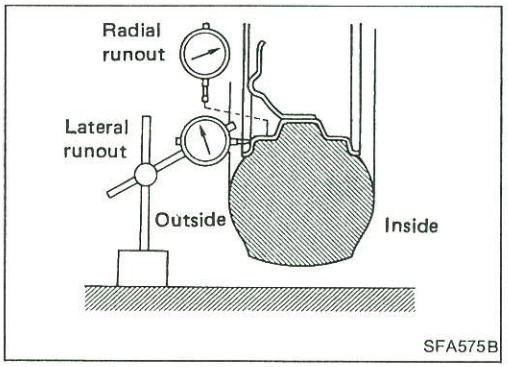

SFA575B

## Rear Wheel Alignment

Before checking rear wheel alignment, be sure to make a preliminary inspection.

**PRELIMINARY INSPECTION**

Make following checks. Adjust, repair or replace if necessary.

- Check tires for wear and for improper inflation.
- Check rear wheel bearings for looseness and wheel runout. Refer to S.D.S.
- Check that rear shock absorber works properly.
- Check rear axle and rear suspension parts for looseness.
- Check vehicle posture at Unladen.
  Fuel tank, radiator and engine oil full. Spare tire, jack, hand tools and mats in designated positions.

## Rear Wheel Alignment (Cont'd)

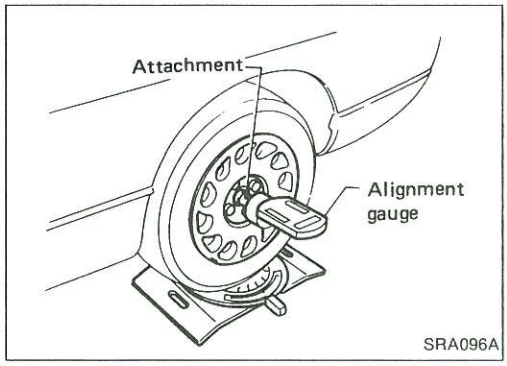


### CAMBER

Measure camber of both right and left wheels with a suitable alignment gauge and adjust in accordance with the following procedures.

**Camber:**
**Refer to S.D.S.**

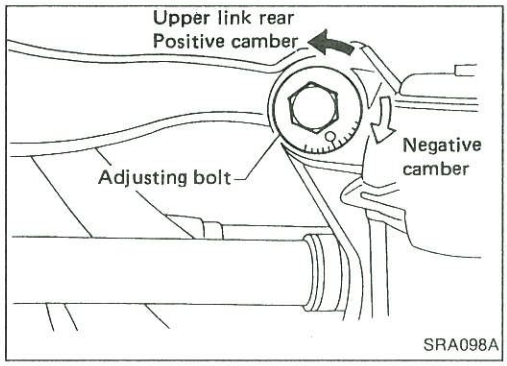


- If camber is not within specification, adjust by turning the adjusting bolt.

(1) Turn the adjusting bolt to adjust.

**Camber changes about 5′ with each graduation of the adjusting bolt.**

**(2) Tighten to the specified torque.**

**: 69 - 88 N·m**
**(7.0 - 9.0 kg-m, 51 - 65 ft-lb)**

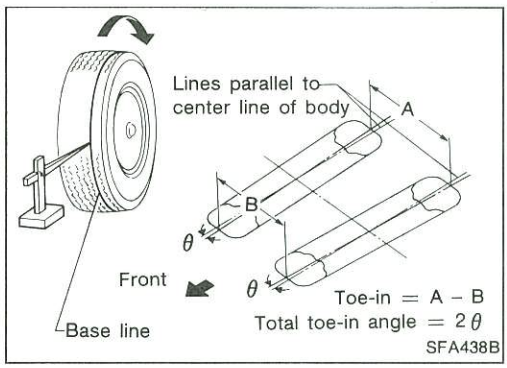


### TOE-IN

1. Draw a base line across the tread.

**After lowering rear of vehicle, move it up and down to eliminate friction.**

2. Measure toe-in.

**Measure distance "A" and "B" at the same height as hub center.**

**Toe-in:**
**Refer to S.D.S.**

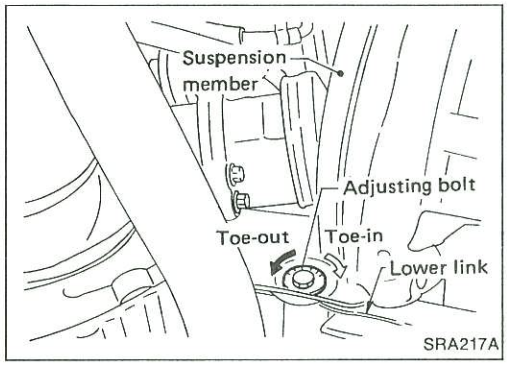


3. Adjust toe-in by turning adjusting bolts.

**Toe changes about 1.5 mm (0.059 in) [One side] with each graduation of the adjusting bolt.**

4. Tighten to the specified torque.

**: 69 - 88 N·m**
**(7.0 - 9.0 kg-m, 51 - 65 ft-lb)**

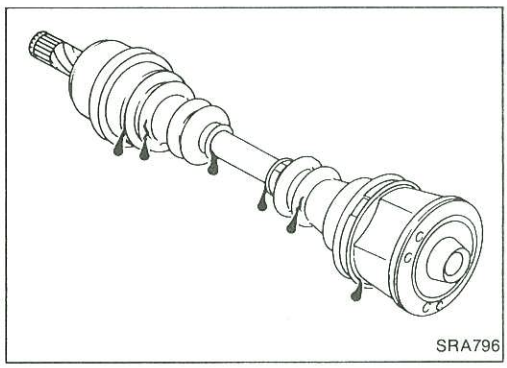


## Drive Shaft

Check boot and drive shaft for cracks,wear,damage or grease leakage.

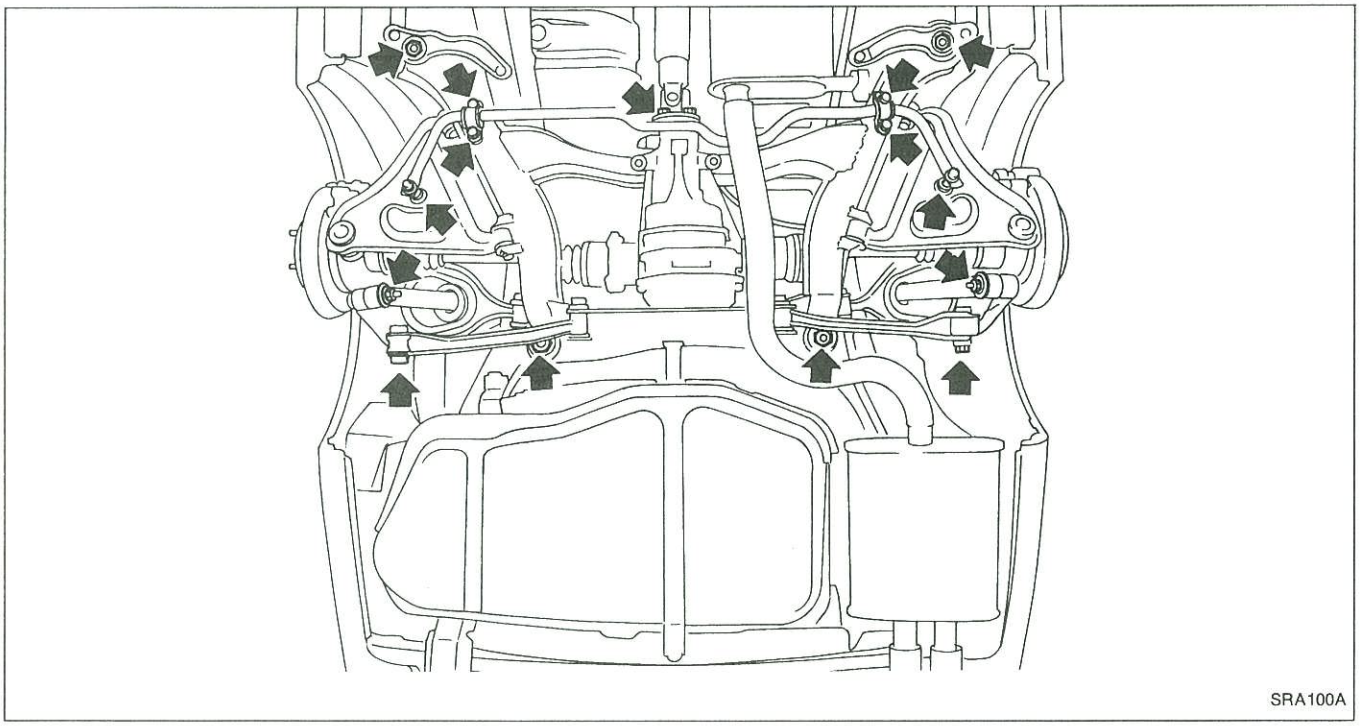
SRA100A

- Remove exhaust tube.
- Disconnect propeller shaft rear end.

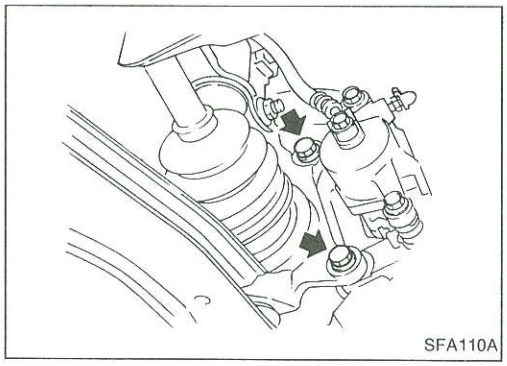
SFA110A

- Remove brake caliper assembly.

**Brake hose need not be disconnected from brake caliper.**
**Be careful not to depress brake pedal, or piston will pop out.**
**Make sure brake hose is not twisted.**

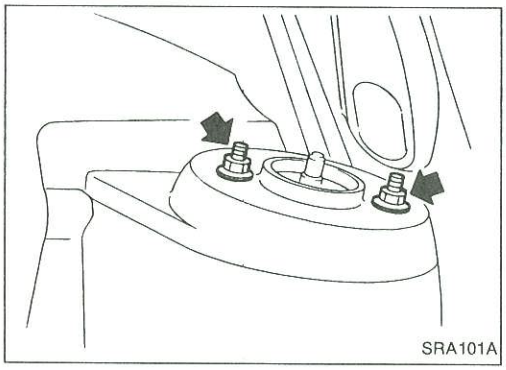
SRA101A

- Remove upper end nuts of shock absorber.

**Do not remove piston rod lock nut.**

- Remove suspension member fixing nuts. Then draw out rear axle and rear suspension assembly.

## Wheel Hub and Axle Housing

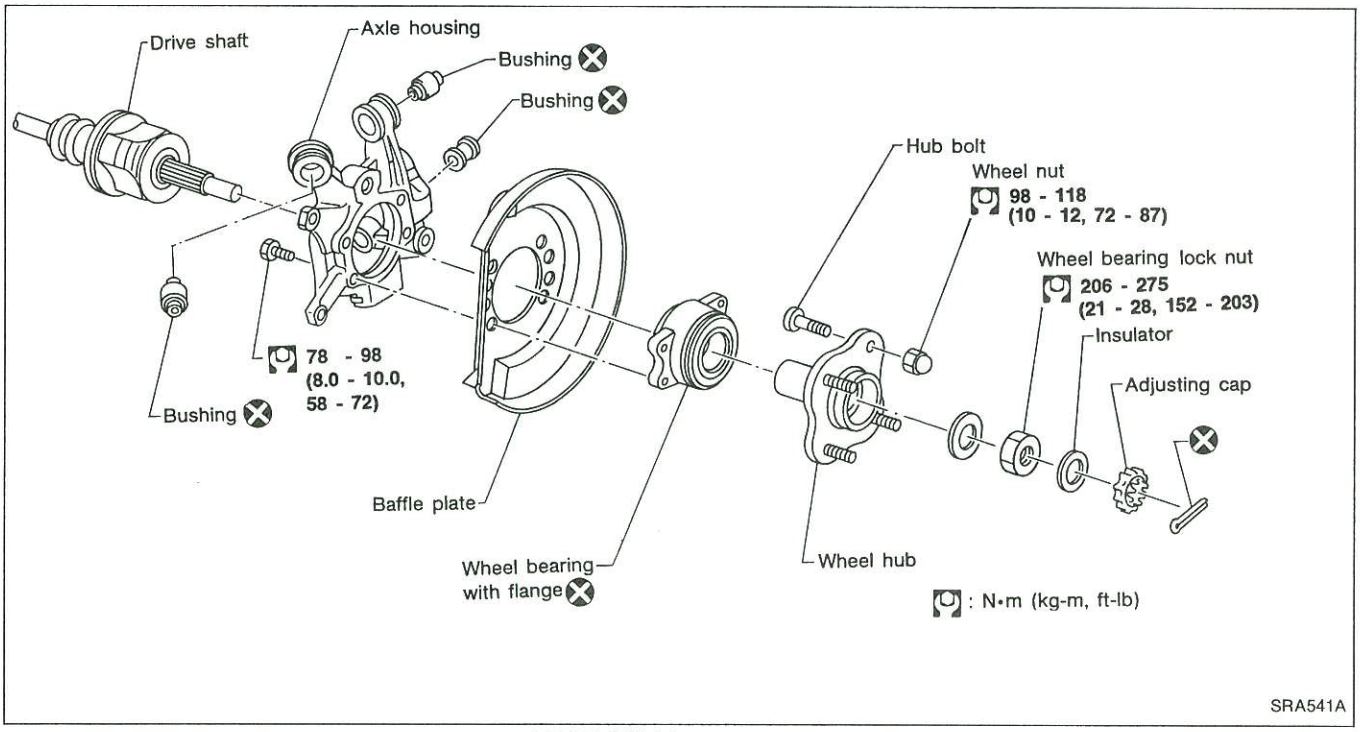


### REMOVAL

- Remove wheel bearing lock nut.

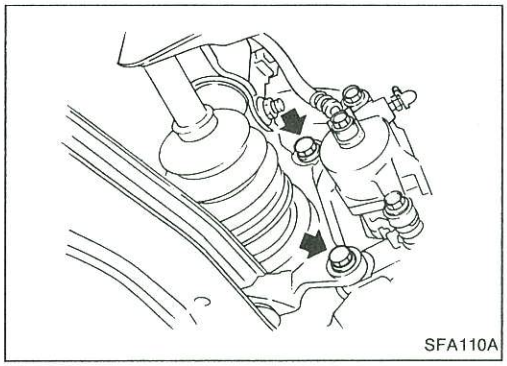


- Remove brake caliper assembly and rotor.

**Brake hose need not be disconnected from brake caliper. Be careful not to depress brake pedal, or piston will pop out. Make sure brake hose is not twisted.**

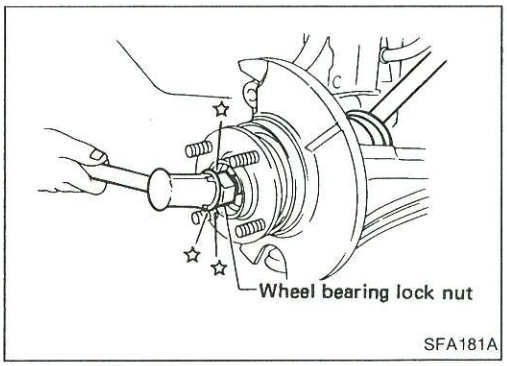


- Separate drive shaft from axle housing by slightly tapping it.

**When removing drive shaft, cover boots with shop towel to prevent them from being damaged.**

## Wheel Hub and Axle Housing (Cont'd)

- Remove axle housing.
- Remove wheel bearing with flange, and wheel hub from axle housing.

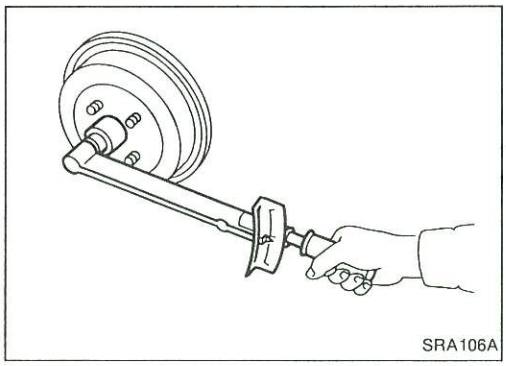
SRA106A

### INSTALLATION

- Install axle housing with wheel hub.
- Tighten wheel bearing lock nut.
  **[O]: 206 - 275 N·m**
  **(21 - 28 kg-m, 152 - 203 ft-lb)**

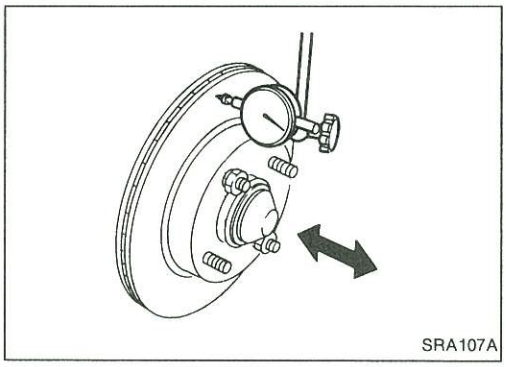
SRA107A

- Check wheel bearing axial end play.
  **Axial end play: 0.05 mm (0.0020 in) or less**

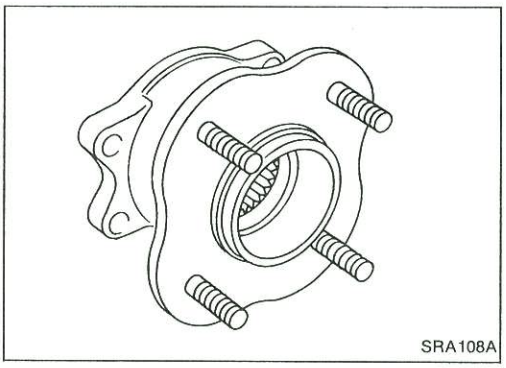
SRA108A

### DISASSEMBLY

**CAUTION:**
**Wheel bearing with flange usually does not require maintenance. If any of the following symptoms are noted, replace wheel bearing assembly (including flange, and inner and outer seals).**

- **Growling noise is emitted from wheel bearing during operation.**
- **Wheel bearing drags or turns roughly when hub is turned with your hand after bearing lock nut is tightened to specified torque.**
- **After wheel bearing is removed from hub.**

#### Wheel hub

Remove wheel bearing (with flange) and wheel hub as one unit from axle housing before disassembling.

## Wheel Hub and Axle Housing (Cont'd)

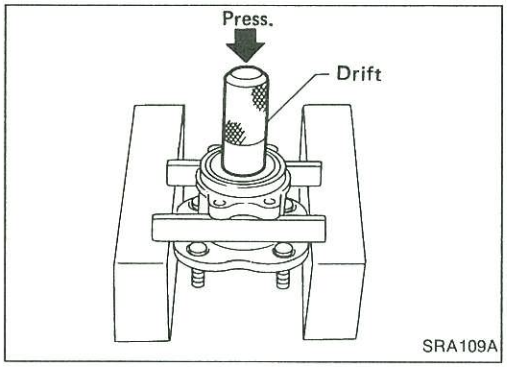


### Wheel bearing

- Using a press and drift as shown in figure at left, press wheel bearing out.
- Discard old wheel bearing assembly. Replace with a new wheel assembly.

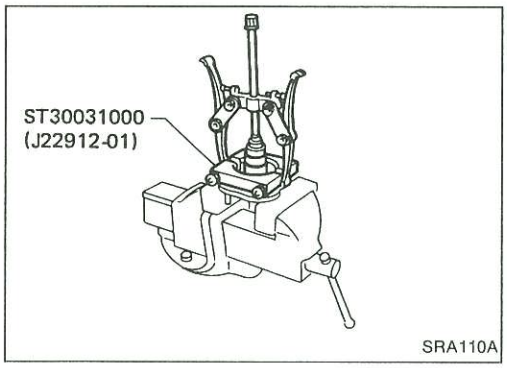


- Remove inner race from hub using a bearing replacer/ puller.

**CAUTION:**

**a. Do not reuse old inner race although it is of the same brand as the bearing assembly.**

**b. Do not replace grease seals as single parts.**

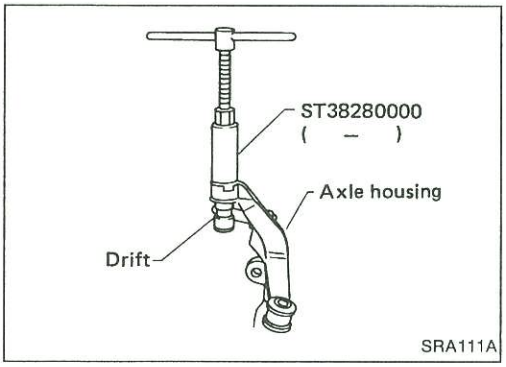


### Axle housing

- Attach a drift on outer shell or bushing as shown in figure at left, remove bushing using arm bushing remover.

**When placing axle housing in a vise, use wooden blocks or copper plates as pads.**

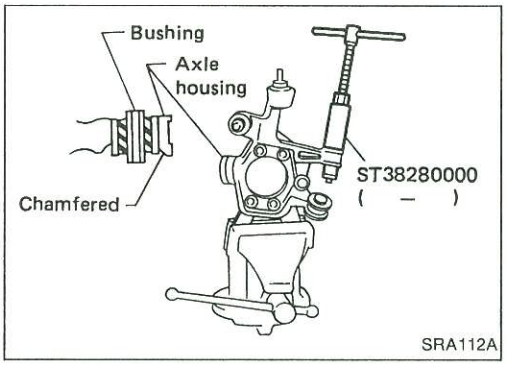


- Ensure axle housing bore is free from scratches or deformities before pressing bushing into it.
- Attach bushing to chamfered bore end of axle housing and press it until it is flush with end face of axle housing.

### INSPECTION

#### Wheel hub and axle housing

- Check wheel hub and axle housing for cracks by using a magnetic exploration or dyeing test.
- Check wheel bearing for damage, seizure, rust or rough operation.
- Check rubber bushing for wear or other damage. Replace if necessary.

## Wheel Hub and Axle Housing (Cont'd)

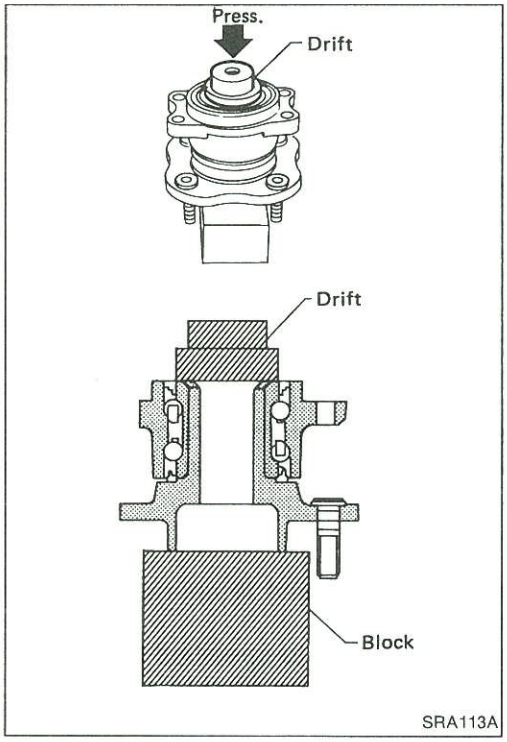


### ASSEMBLY

Place hub on a block. Attach a drift to inner race of wheel bearing and press it into hub as shown in figure at left.

**Be careful not to damage grease seal.**

## Drive Shaft

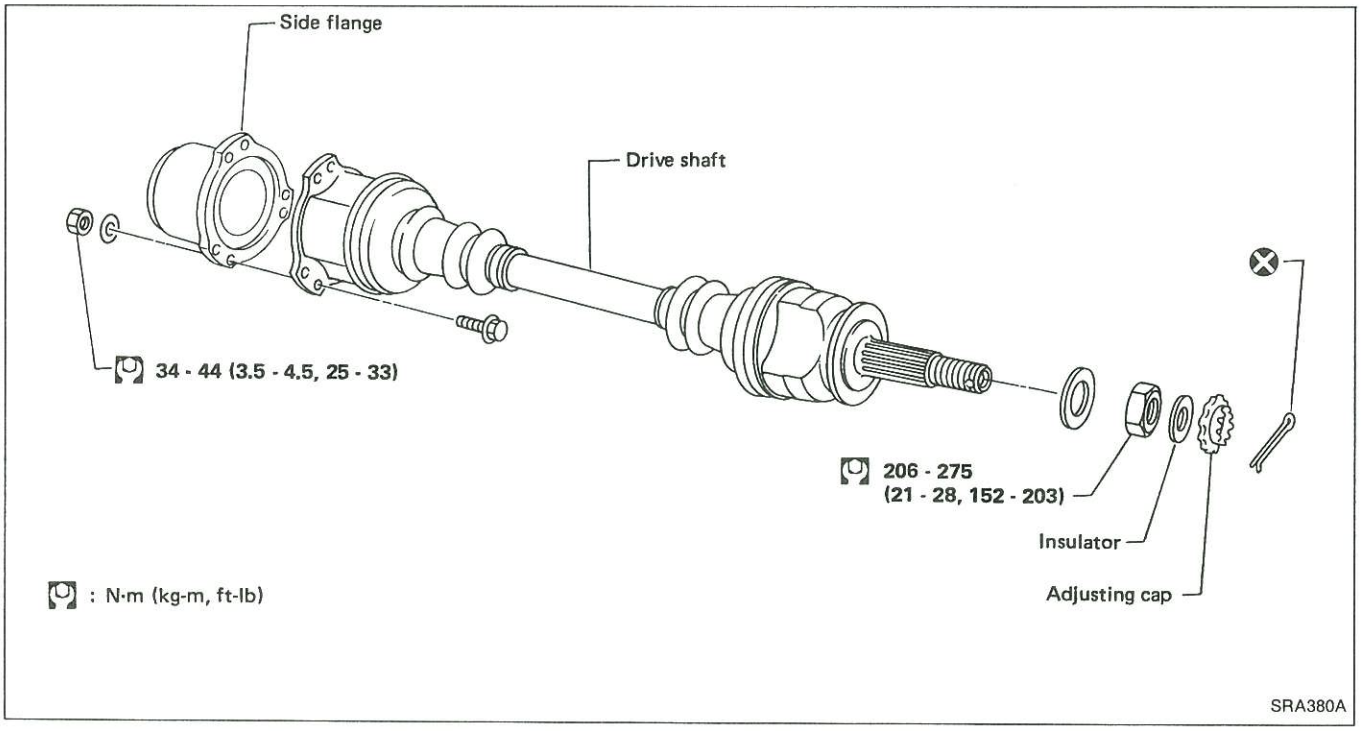

## Drive Shaft (Cont'd)

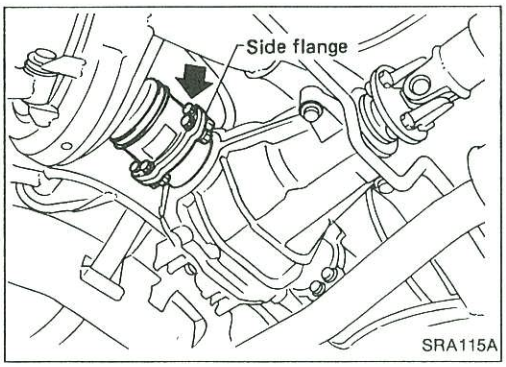


### REMOVAL

**When removing drive shaft, cover boots with shop towel to prevent damage to them.**

#### Final drive side

Remove side flange mounting bolt and separate shaft.

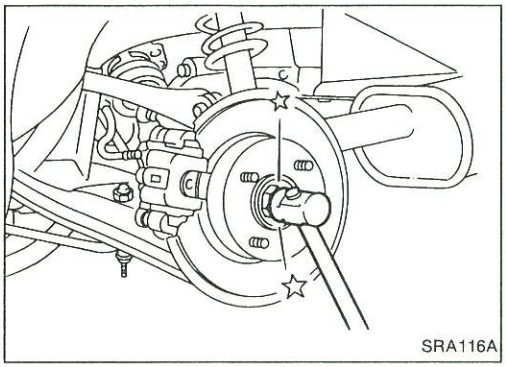


#### Wheel side

Remove drive shaft by lightly tapping it with a copper hammer.

**To avoid damaging threads of drive shaft, install a nut while removing drive shaft.**

### INSTALLATION

- Insert drive shaft from wheel hub and temporarily tighten wheel bearing lock nut.
- Tighten side flange mounting bolts to specified torque.
- Tighten wheel bearing lock nut to specified torque.

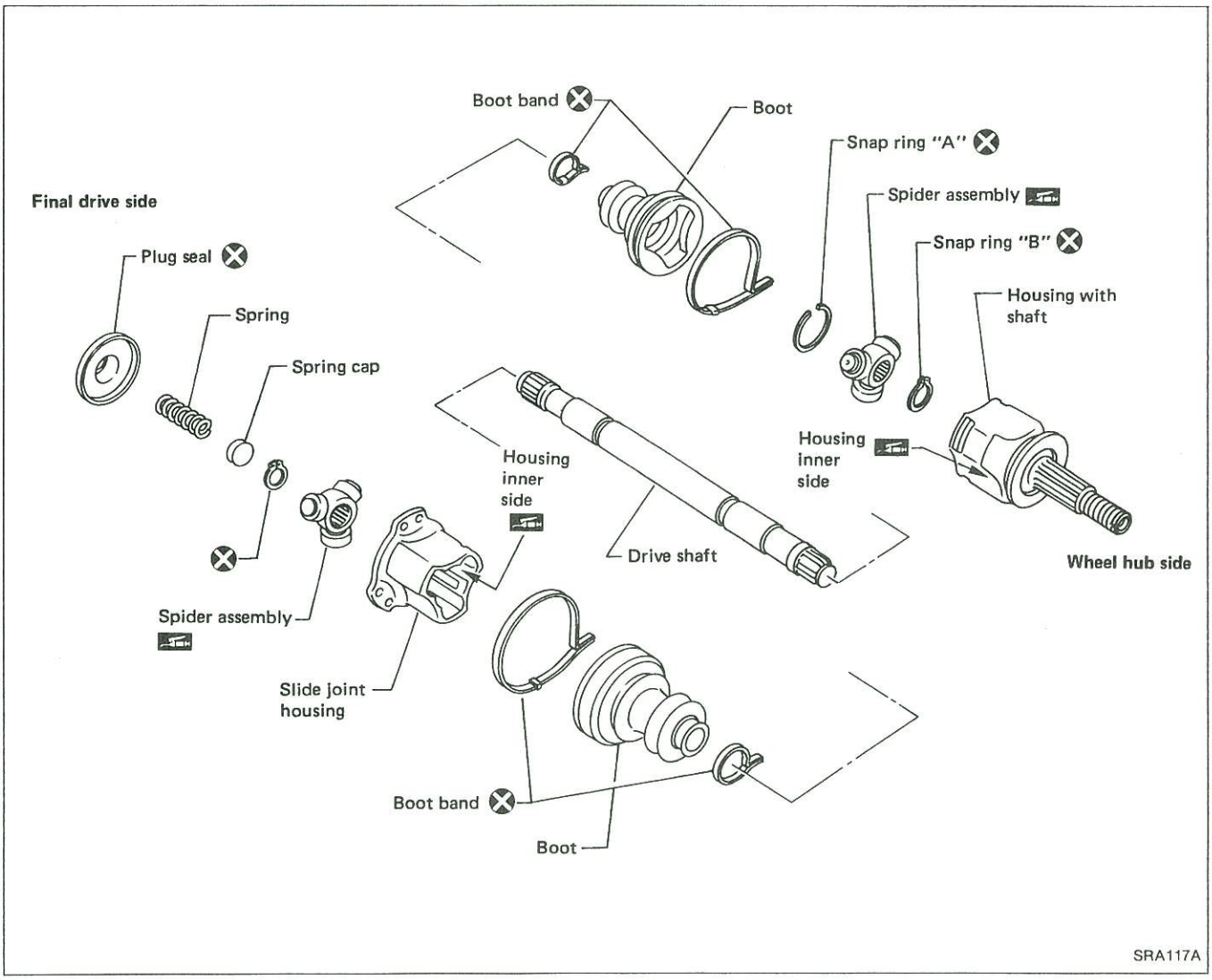

## Drive Shaft (Cont'd)

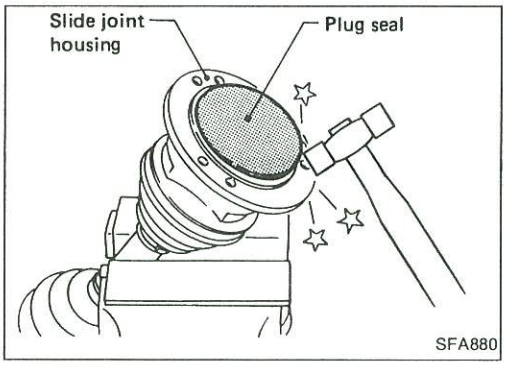


### DISASSEMBLY

#### Final drive side

1. Remove plug seal from slide joint housing by lightly tapping around slide joint housing.

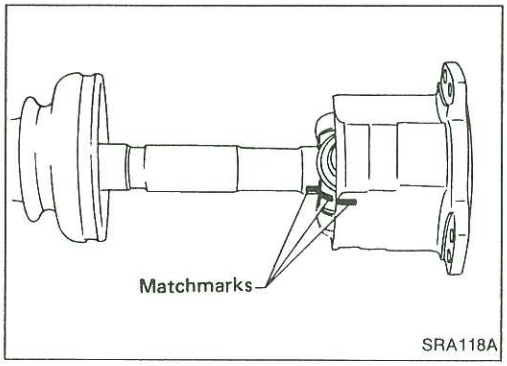


2. Remove boot bands.
3. Put matchmarks on slide joint housing and drive shaft before separating joint assembly.
4. Put matchmarks on spider assembly and drive shaft.

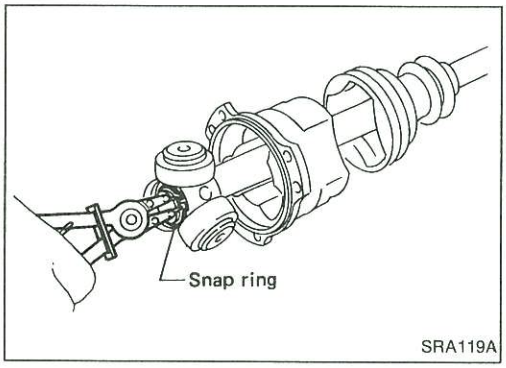


5. Pry off snap ring, then remove spider assembly.

**CAUTION:**
**Do not disassemble spider assembly.**

6. Draw out slide joint housing.
7. Draw out boot.

**Cover drive shaft serration with tape to prevent damage to the boot.**

#### Wheel side

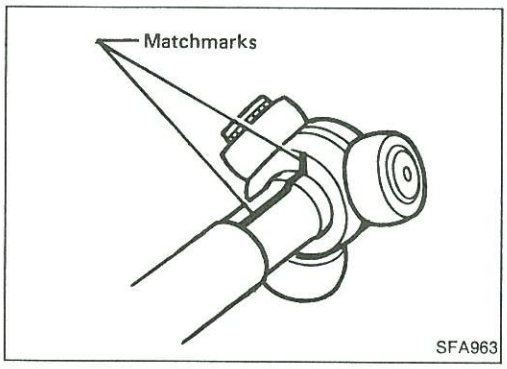


1. Remove boot bands.
2. Put matchmarks on housing together with shaft and drive shaft before separating joint assembly.
3. Put matchmarks on spider assembly and drive shaft.

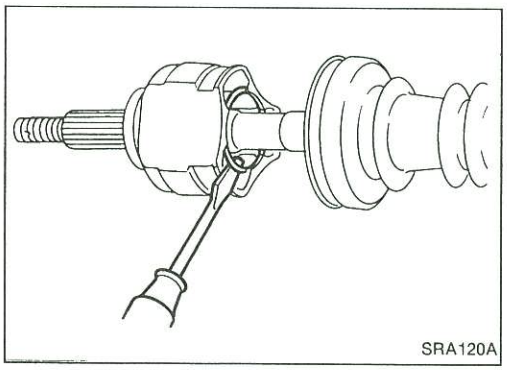


4. Pry off snap ring "A" with a screwdriver, and pull out slide joint housing.

## Drive Shaft (Cont'd)

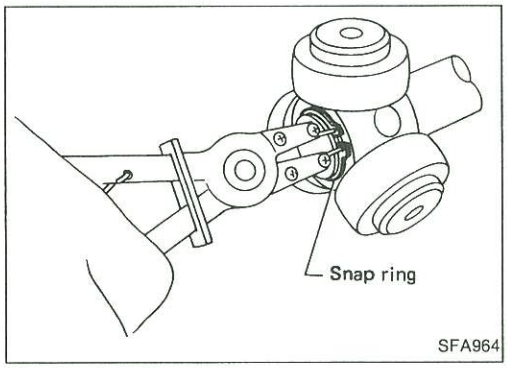


5. Pry off snap ring "B", then remove spider assembly.

**CAUTION:**

**Do not disassemble spider assembly.**

6. Draw out boot.

**Cover drive shaft serration with tape to prevent damage to the boot.**

### INSPECTION

Thoroughly clean all parts in cleaning solvent, and dry with compressed air. Check parts for deformation or other damage.

**Drive shaft**

Replace drive shaft if it is twisted or cracked.

**Boot**

Check boot for fatigue, cracks, or wear. Replace boot with new boot bands.

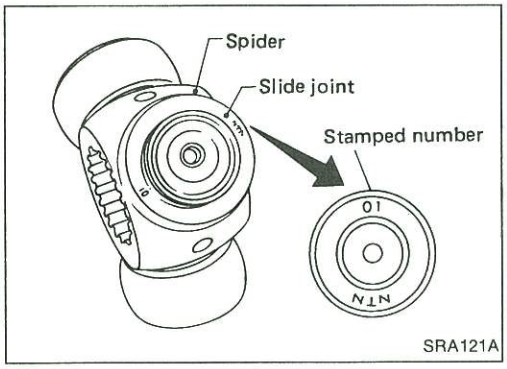


**Joint assembly**

- Check spider assembly for bearing, roller and washer damage. Replace spider assembly if necessary.
- Check housing for any damage. Replace housing set and spider assembly, if necessary.
- When replacing only spider assembly, select a new spider assembly from among those listed in table below. Ensure the number stamped on sliding joint is the same as that stamped on new part.

**Housing alone cannot be replaced. It must be replaced together with spider assembly.**

| Stamped number | Part No. |
|---|---|
| 00 | 39720 10V10 |
| 01 | 39720 10V11 |
| 02 | 39720 10V12 |

### ASSEMBLY

- **After drive shaft has been assembled, make sure it moves smoothly over its entire range without binding.**
- **Use Nissan Genuine Grease or equivalent after every overhaul.**

## Drive Shaft (Cont'd)

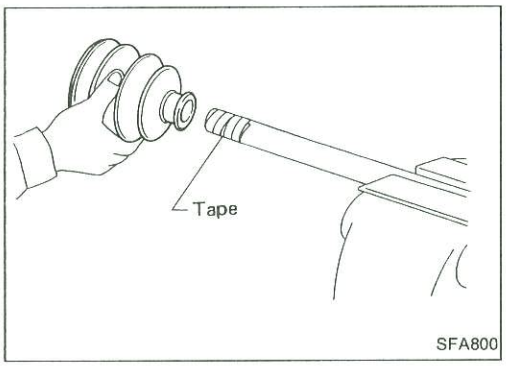


### Final drive side

1. Install new small boot band, boot and slide joint housing to drive shaft.

**Cover drive shaft serration with tape to prevent damage to boot during installation.**

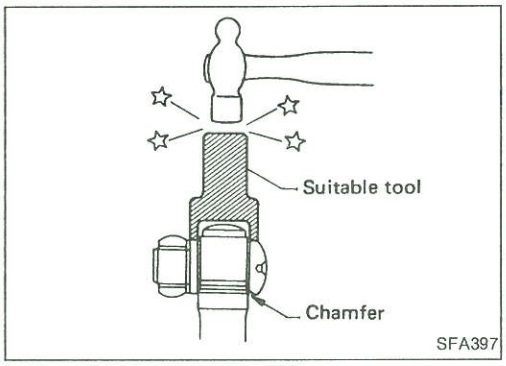


2. Install spider assembly securely, making sure marks are properly aligned.

**Press-fit with spider assembly serration chamfer facing shaft.**

3. Install new snap ring.

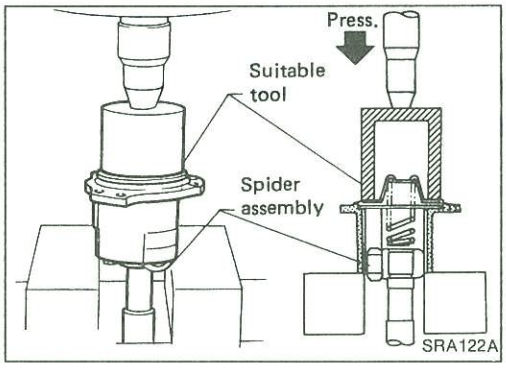


4. Install coil spring, spring cap and new plug seal to slide joint housing. Press plug seal.

**Apply sealant to mating surface of plug seal.**

**CAUTION:**

**a. When pressing plug seal into place, hold it horizontal so that spring inside it does not tilt or fall down.**

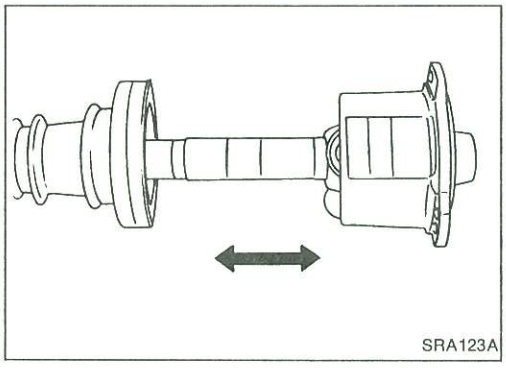


**b. Move shaft in axial direction to ensure that spring is installed properly. If shaft drags or if spring is not installed properly, remove plug seal and install a new one. Discard plug seal after removal.**

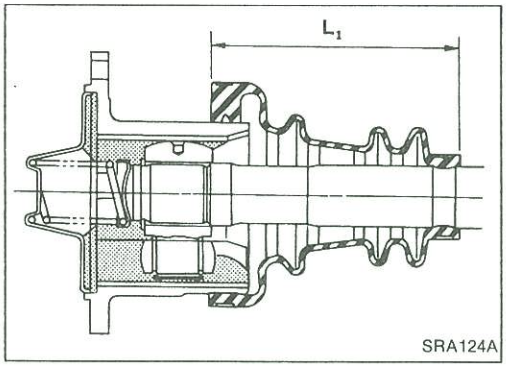


5. Pack drive shaft with specified amount of grease.

**Specified amount of grease:**
**185 - 195 g (6.52 - 6.88 oz)**

6. Set boot so that it does not swell and deform when its length is "$L_1$".

**Length "$L_1$":**
**110.5 - 112.5 mm (4.35 - 4.43 in)**

**Make sure that boot is properly installed on the drive shaft groove.**

## Drive Shaft (Cont'd)

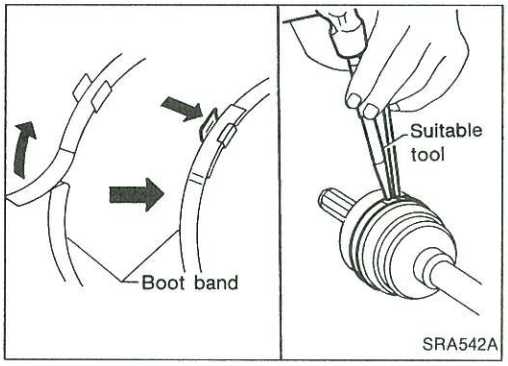


7. Lock new larger boot band securely with a suitable tool, then lock new smaller boot band.

### Wheel side

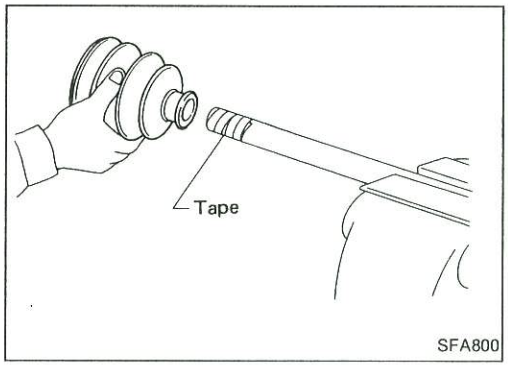


1. Install new small boot band and boot on drive shaft.

**Cover drive shaft serration with tape to prevent damage to boot during installation.**

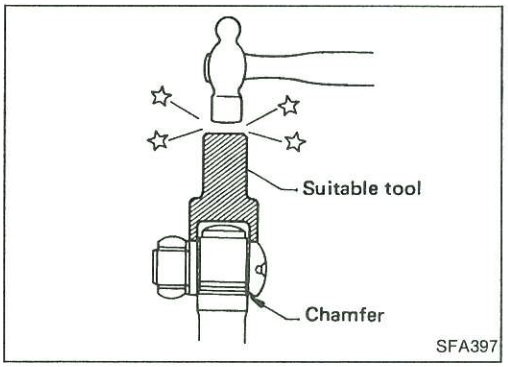


2. Install spider assembly securely, making sure marks are properly aligned.

**Press-fit with spider assembly serration chamfer facing shaft.**

3. Install new snap ring.

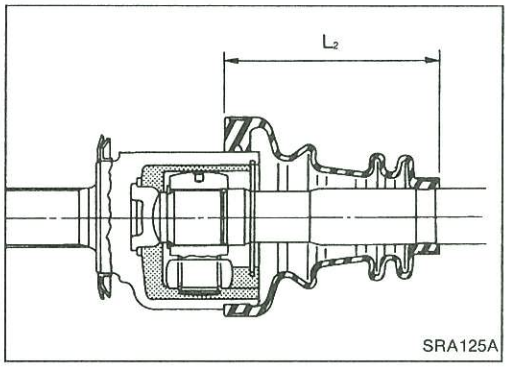


4. Pack drive shaft with specified amount of grease.
   **Specified amount of grease:**
   **145 - 155 g (5.11 - 5.47 oz)**
5. Install slide joint housing, then install new snap ring "A".
6. Set boot so that it does not swell and deform when its length is "$L_2$".
   **Length "$L_2$":**
   **110.5 - 112.5 mm (4.35 - 4.43 in)**

**Make sure that boot is properly installed on the drive shaft groove.**

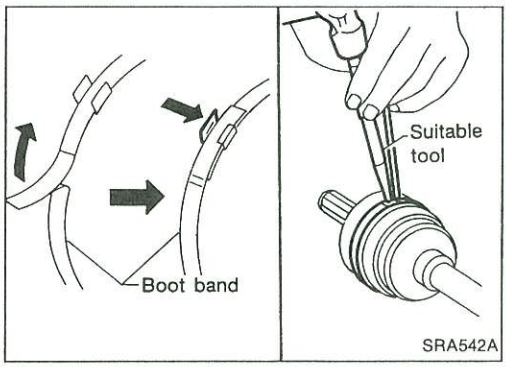


7. Lock new larger and smaller boot bands securely with a suitable tool.

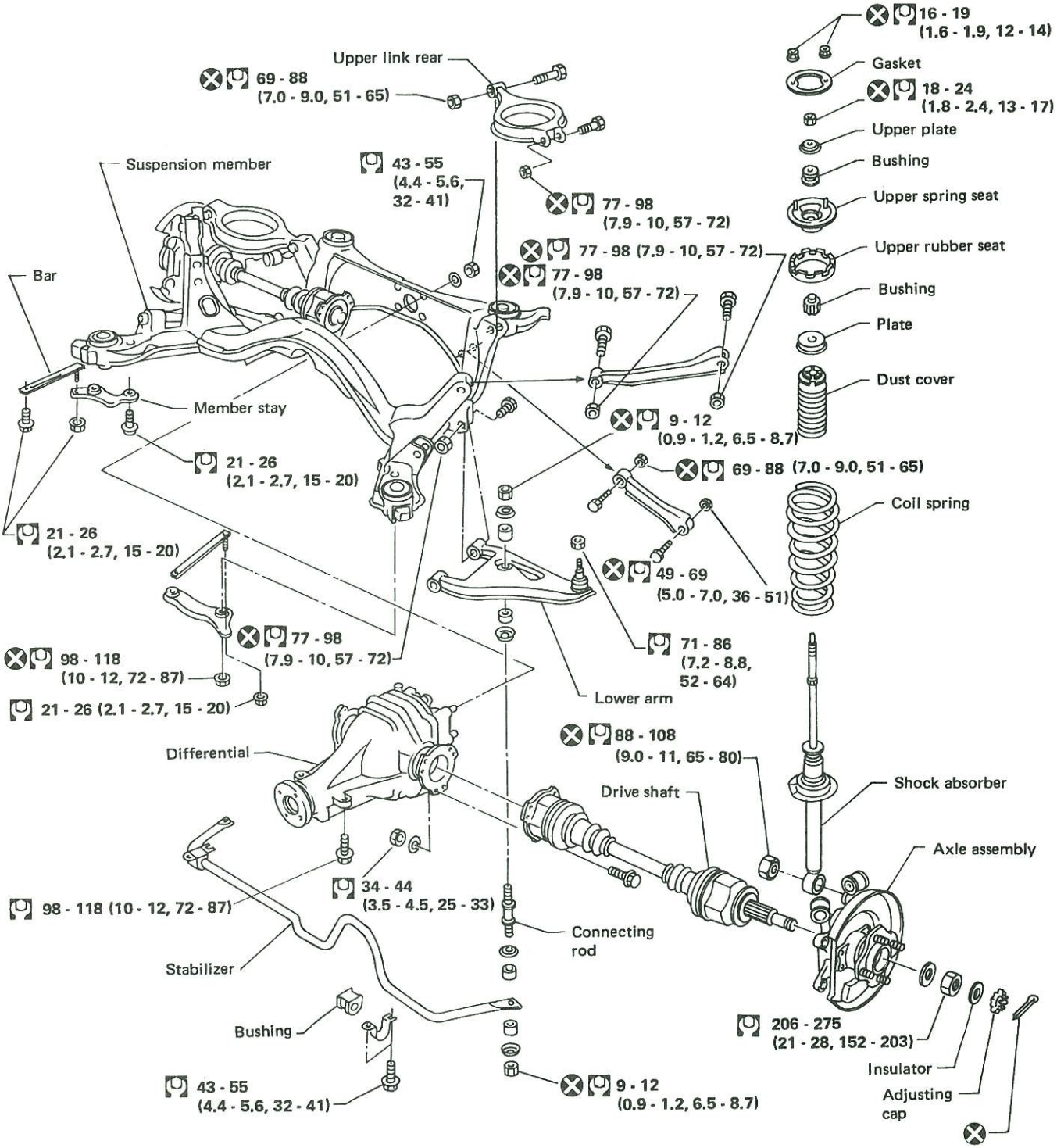


CAUTION:
Do not jack up at lower arm.
When installing rubber parts, final tightening must be carried out under unladen condition* with tires on ground.
* Fuel, radiator coolant and engine oil full. Spare tire, jack, hand tools and mats in designated positions.

: N·m (kg-m, ft-lb)

SRA374A

## Coil Spring and Shock Absorber

### REMOVAL

Remove shock absorber upper and lower fixing nuts.

**Do not remove piston rod lock nut on vehicle.**

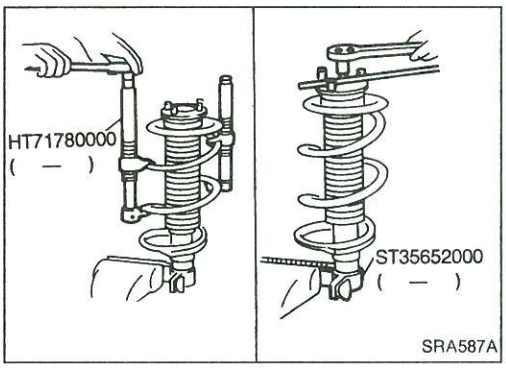


### DISASSEMBLY

1. Set shock absorber on vise with attachment, then loosen piston rod lock nut.

**Do not remove piston rod lock nut.**

2. Compress spring with Tool so that the strut upper spring seat can be turned by hand.

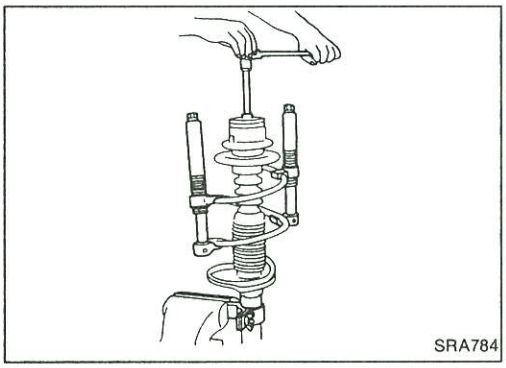


3. Remove piston rod lock nut.

### INSPECTION

#### Shock absorber assembly

- Check for smooth operation through a full stroke, both compression and extension.
- Check for oil leakage occurring on welded or gland packing portion.
- Check piston rod for cracks, deformation or other damage. Replace if necessary.

#### Upper rubber seat and bushing

Check rubber parts for deterioration or cracks.
Replace if necessary.

#### Coil spring

Check for cracks, deformation or other damage. Replace if necessary.

## Coil Spring and Shock Absorber (Cont'd)

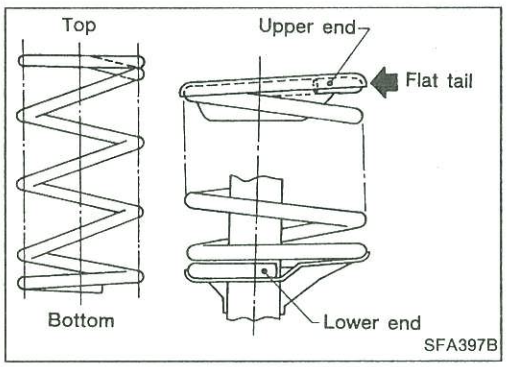


### ASSEMBLY

- When installing coil spring, be careful not to reverse top and bottom direction. (Top end is flat.)
- When installing coil spring on strut, it must be positioned as shown in figure at left.

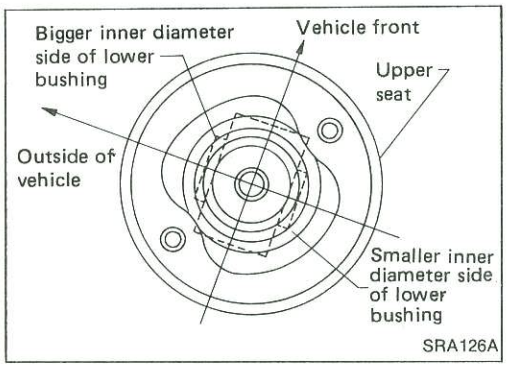


- When installing upper spring seat, make sure that it is positioned as shown.

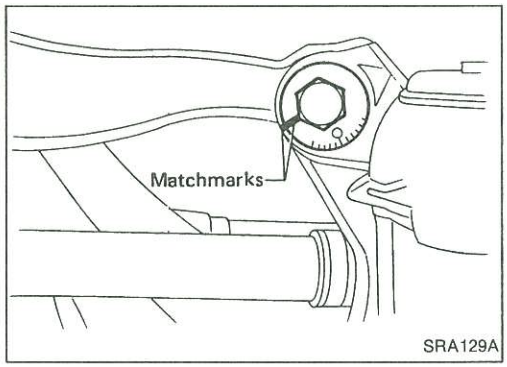


## Multi-link and Lower Ball Joint

### REMOVAL AND INSTALLATION

- Refer to "Removal and Installation" of REAR SUSPENSION.

**Before removing, put matchmarks on adjusting pin.**

- When installing, final tightening must be carried out at curb weight with tires on ground.
- After installation, check wheel alignment. Refer to "Rear Wheel Alignment" of ON-VEHICLE SERVICE.

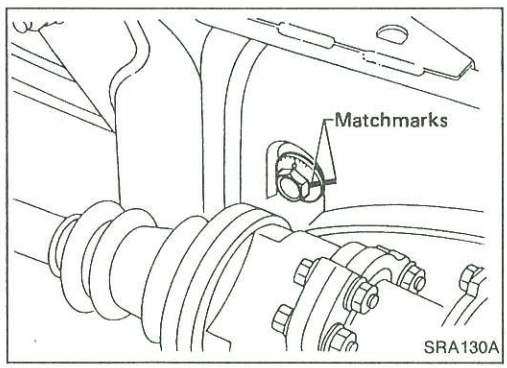


### INSPECTION

#### Rear suspension member

Replace suspension member assembly if cracked or deformed or if any part (insulator, for example) is damaged.

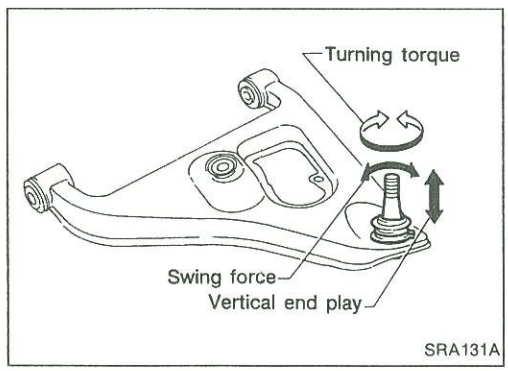


#### Upper and lower links

Replace upper or lower link as required if cracked or deformed or if bushing is damaged.

## Multi-link and Lower Ball Joint (Cont'd)

### Suspension lower ball joint

- Measure swing force, turning torque and vertical end play in axial direction. (Use same measurement procedures as that of FA section.)
- If ball stud is worn, play in axial direction is excessive, or joint is hard to swing, replace lower arm.

| | | |
|---|---|---|
| Ball joint specifications | Swing force | 12.7 - 90.2 N (1.3 - 9.2 kg, 2.9 - 20.3 lb) |
| | Turning torque | 0.5 - 3.4 N·m (5 - 35 kg-cm, 4.3 - 30.4 in-lb) |
| | Vertical end play | 0 mm (0 in) |

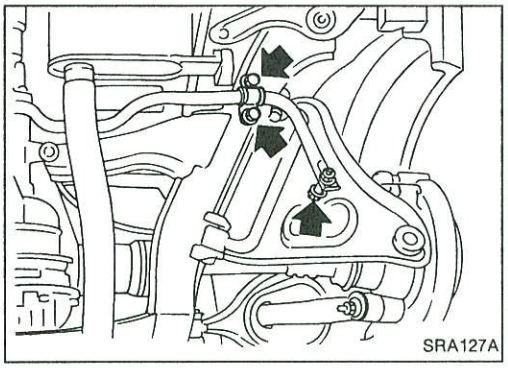
SRA127A

## Stabilizer Bar

### REMOVAL

- Remove connecting rod and clamp.

### INSPECTION

- Check stabilizer bar for deformation or cracks. Replace if necessary.
- Check rubber bushings for deterioration or cracks. Replace if necessary.

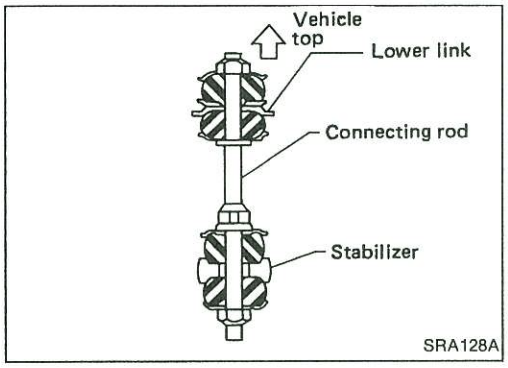

SRA128A

### INSTALLATION

When installing connecting rod, make sure direction is correct (as shown at left).

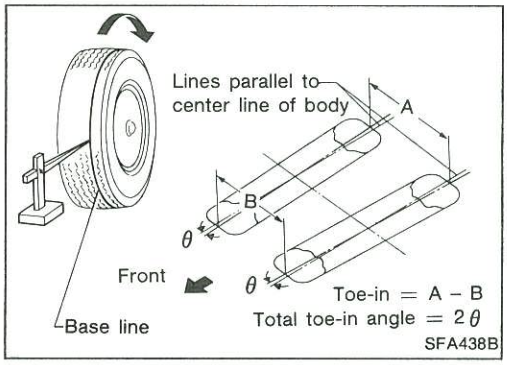


## Rear Wheel Alignment

### TOE-IN

1. Draw a base line across the tread.

**After lowering rear of vehicle, move it up and down to eliminate friction.**

2. Measure toe-in.

**Measure distance "A" and "B" at the same height as hub center.**

**Toe-in:**
**Refer to S.D.S.**

3. Adjust toe-in by varying length of power cylinder lower links.
(1) Loosen lock nuts.
(2) Adjust toe-in by turning lower links forward or backward.

**Make sure both lower links are the same length.**

**Standard length "L":**
**185.5 mm (7.30 in)**

(3) Tighten lock nuts to the specified torque.
**: 37 - 46 N·m**
**(3.8 - 4.7 kg-m, 27 - 34 ft-lb)**

- Refer to ON-VEHICLE SERVICE for other procedures.

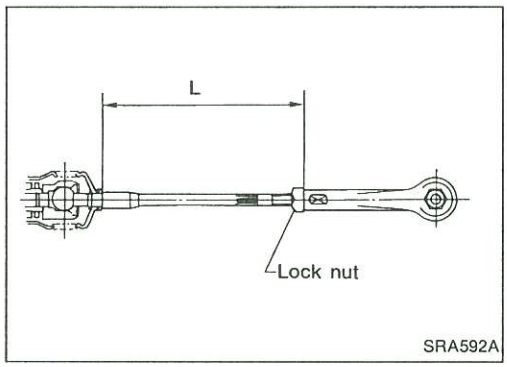


## Rear Axle Housing Ball Joint

### INSPECTION

- Measure swing force, turning torque and vertical end play in axial direction.
- If ball stud is worn, play in axial direction is excessive, or joint is hard to swing, replace ball joint.

**Swing force, turning torque and vertical end play:**
**Refer to S.D.S**

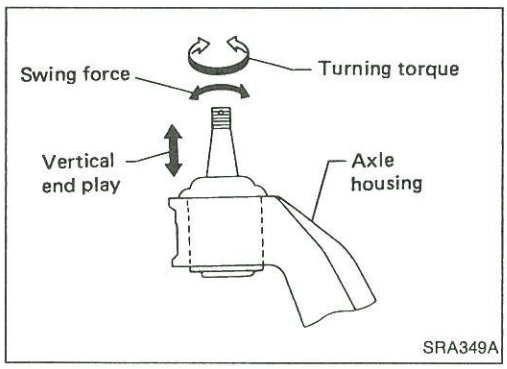


### REMOVAL

- Remove ball joint snap ring.
- Press out ball joint from axle housing.

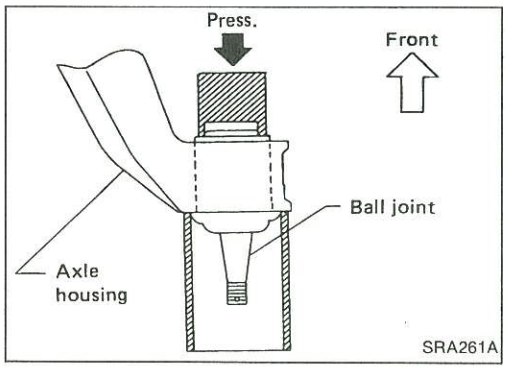


### ASSEMBLY

- Press new ball joint assembly into axle housing.
- Install snap ring into groove of ball joint.
- Refer to REAR AXLE — Wheel Hub and Axle Housing for other procedures.
- Refer to ST section for power cylinder and SUPER HICAS — Trouble Diagnoses.

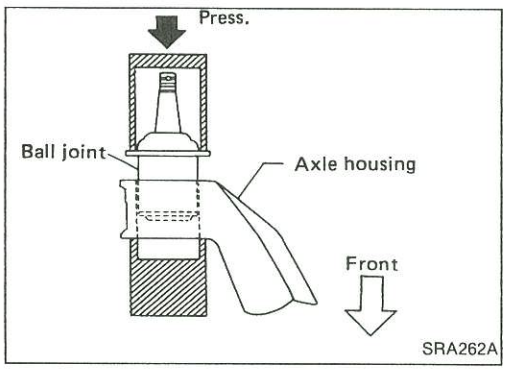

# General Specifications

## COIL SPRING

| Applied model | Convertible | Coupe | Hatchback | |
|---|---|---|---|---|
| | Without HICAS | | | With HICAS |
| Wire diameter mm (in) | 10.7 (0.421) | 10.6 (0.417) | | 11.0 (0.433) |
| Coil diameter mm (in) | 88.7 - 98.7 (3.492 - 3.886) | 90 - 100 (3.54 - 3.94) | | |
| Free length mm (in) | 397 (15.63) | 375 (14.76) | 385 (15.16) | 367.5 (14.47) |
| Identification color | Yellow x 1 | Pink x 1, Purple x 1 | Pink x 1, Light blue x 1 | Pink x 2 |

## SHOCK ABSORBER

| Applied model | Convertible | Coupe | Hatchback | |
|---|---|---|---|---|
| | Without HICAS | | | With HICAS |
| Piston rod diameter mm (in) | 12.5 (0.492) | | | |

## DRIVE SHAFT

| | |
|---|---|
| Joint type | |
| Final drive side | TS82F |
| Wheel side | TS82C |
| Grease name | |
| Final drive side | Nissan genuine grease or equivalent |
| Wheel side | Nissan genuine grease or equivalent |
| Specified amount of grease g (oz) | |
| Final drive side | 185 - 195 (6.52 - 6.88) |
| Wheel side | 145 - 155 (5.11 - 5.47) |
| Boot length mm (in) | |
| Final drive side ($L_1$) | 110.5 - 112.5 (4.35 - 4.43) |
| Wheel side ($L_2$) | |

Final drive side

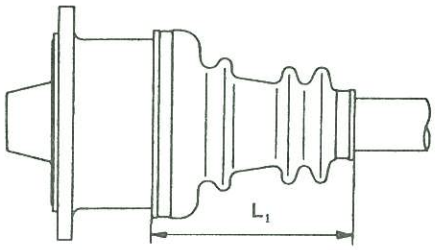


SRA133A

**Wheel side**

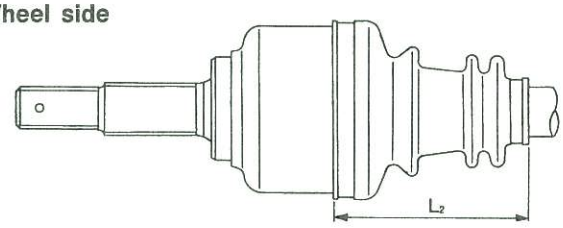


SRA543A

## REAR STABILIZER BAR

| Model | With HICAS | Without HICAS |
|---|---|---|
| Stabilizer diameter mm (in) | 21 (0.83) | 15 (0.59) |
| Identification color | Red | Light green |

## Inspection and Adjustment

### WHEEL ALIGNMENT (Unladen*1)

| | | |
|---|---|---|
| Camber | degree | –1°36′ to –0°36′ |
| Toe-in | | |
| A – B | mm (in) | 0.5 - 4.5 (0.020 - 0.177) |
| Total angle 2θ | degree | 3′ - 25′ |

*1: Fuel, radiator coolant and engine oil full.
Spare tire, jack, hand tools and mats in designated positions.

### WHEEL BEARING

| | |
|---|---|
| Wheel bearing axial end play mm (in) | 0.05 (0.0020) or less |
| Wheel bearing lock nut | |
| Tightening torque N·m (kg-m, ft-lb) | 206 - 275 (21 - 28, 152 - 203) |

### WHEEL RUNOUT (Radial and lateral)

| Wheel type | | Radial runout | Lateral runout |
|---|---|---|---|
| Aluminum wheel | mm (in) | 0.3 (0.012) or less | |
| Steel wheel | mm (in) | 0.5 (0.020) or less | 0.8 (0.031) or less |

### LOWER BALL JOINT

| | |
|---|---|
| Swing force (Measuring point: cotter pin hole of ball stud) N (kg, lb) | 12.7 - 90.2 (1.3 - 9.2, 2.9 - 20.3) |
| Turning torque N·m (kg-cm, in-lb) | 0.5 - 3.4 (5 - 35, 4.3 - 30.4) |
| Vertical end play mm (in) | 0 (0) |

### LOWER LINK BALL JOINT (SUPER HICAS)

| | |
|---|---|
| Swing force (at cotter pin hole) N (kg, lb) | 6.9 - 68.6 (0.7 - 7.0, 1.5 - 15.4) |
| Turning torque N·m (kg-cm, in-lb) | 0.3 - 2.9 (3 - 30, 2.6 - 26.0) |
| Vertical end play mm (in) | 0 (0) |

# BRAKE SYSTEM

# SECTION BR



## CONTENTS

**PRECAUTIONS AND PREPARATION** ..... 2
Precautions ..... 2
Special Service Tools ..... 2
**CHECK AND ADJUSTMENT** ..... 3
Checking Brake Fluid Level ..... 3
Checking Brake System ..... 3
Changing Brake Fluid ..... 3
**BRAKE HYDRAULIC LINE** ..... 4
Bleeding Procedure ..... 4
Removal and Installation ..... 5
Inspection ..... 5
**BRAKE PEDAL AND BRACKET** ..... 6
Removal and Installation ..... 6
Inspection ..... 6
Adjustment ..... 7
**BRAKE BOOSTER** ..... 8
Removal and Installation ..... 8
Inspection ..... 8
**VACUUM PIPING** ..... 9
Removal and Installation ..... 9
Inspection ..... 9
**MASTER CYLINDER** ..... 10
Removal and Installation ..... 10
**FRONT DISC BRAKE (CL22VB, CL25VA)** ..... 11
Pad Replacement ..... 12
Removal and Installation ..... 12
Disassembly ..... 12
Inspection ..... 12
Assembly ..... 13
**REAR DISC BRAKE (CL9H)** ..... 14
Pad Replacement ..... 14
Removal and Installation ..... 15
Disassembly ..... 15
Inspection ..... 16
Assembly ..... 16
Inspection ..... 17
**PARKING BRAKE CONTROL** ..... 18
Removal and Installation ..... 18
Inspection ..... 18
Adjustment ..... 19
**ANTI-LOCK BRAKING SYSTEM** ..... 20
System Components ..... 20
Hydraulic Circuit ..... 20
Wiring Diagram ..... 21
Removal and Installation ..... 22
**TROUBLE DIAGNOSES** ..... 23
Contents ..... 23
**SERVICE DATA AND SPECIFICATIONS (S.D.S.)** ..... 46
General Specifications ..... 46
Inspection and Adjustment ..... 46

## Precautions

- **Recommended fluid is brake fluid "DOT 3".**
- **Never reuse drained brake fluid.**
- **Be careful not to splash brake fluid on painted areas.**
- **To clean or wash all parts of master cylinder, disc brake caliper and wheel cylinder, use clean brake fluid.**
- **Never use mineral oils such as gasoline or kerosene. They will ruin rubber parts of hydraulic system.**

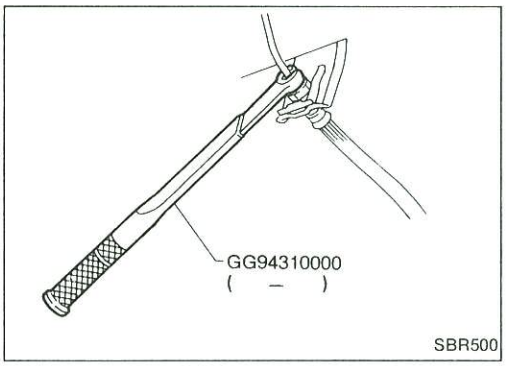


- **Use Tool when removing and installing brake tube.**

**WARNING:**

- **Clean brake pads and shoes with a waste cloth, then collect dust with a dust collector.**

## Special Service Tools

| Tool number<br>(Kent-Moore No.)<br>Tool name | Description | |
|---|---|---|
| GG94310000<br>( — )<br>Flare nut torque wrench | 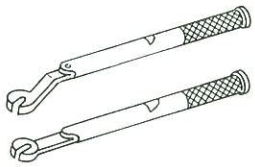 | Removing and installing each brake piping |
| KV991V0010<br>( — )<br>Brake fluid pressure gauge | 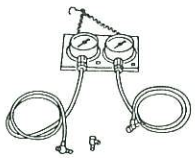 | Measuring brake fluid pressure |
| KV999P1000<br>( — )<br>ABS checker | 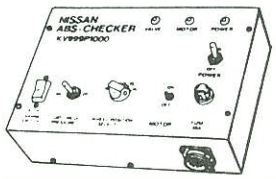 | Checking brake fluid pressure of ABS actuator |
| KV999P1010<br>( — )<br>ABS checker adapter harness | 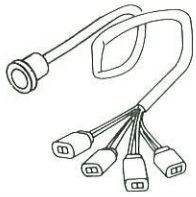 | Checking brake fluid pressure of ABS actuator |

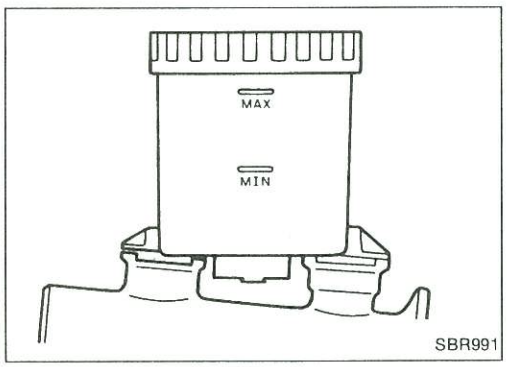

SBR991

## Checking Brake Fluid Level

- Check fluid level in reservoir tank. It should be between Max. and Min. lines on reservoir tank.
- If fluid level is extremely low, check brake system for leaks.

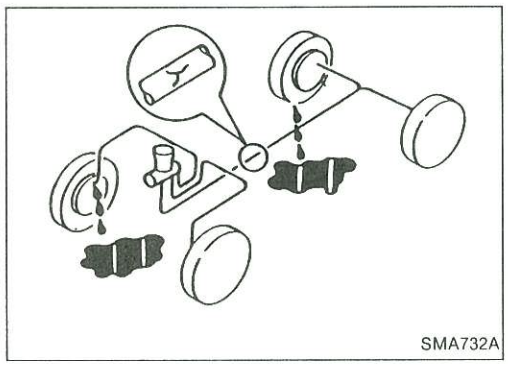
SMA732A

## Checking Brake System

- Check brake lines (tubes and hoses) for cracks, deterioration or other damage. Replace any damaged parts.
  If leakage occurs around joints, retighten or, if necessary, replace damaged parts.
- Check for oil leakage by fully depressing brake pedal.

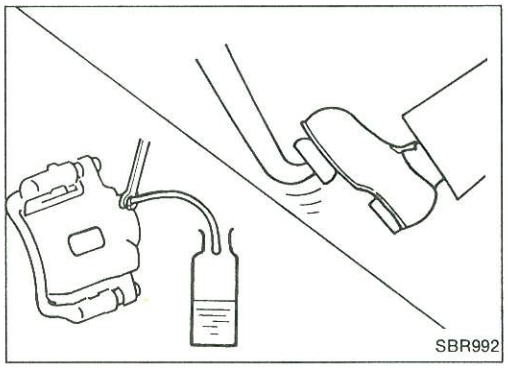
SBR992

## Changing Brake Fluid

1. Drain brake fluid in each air bleeder valve.
2. Refill until new brake fluid comes out of each air bleeder valve.
   Use same procedure as in bleeding hydraulic system to refill brake fluid.
   Refer to Bleeding Procedure.

- **Refill with recommended brake fluid "DOT 3".**
- **Never reuse drained brake fluid.**
- **Be careful not to splash brake fluid on painted areas.**

**Without Anti-lock Braking System (ABS)**

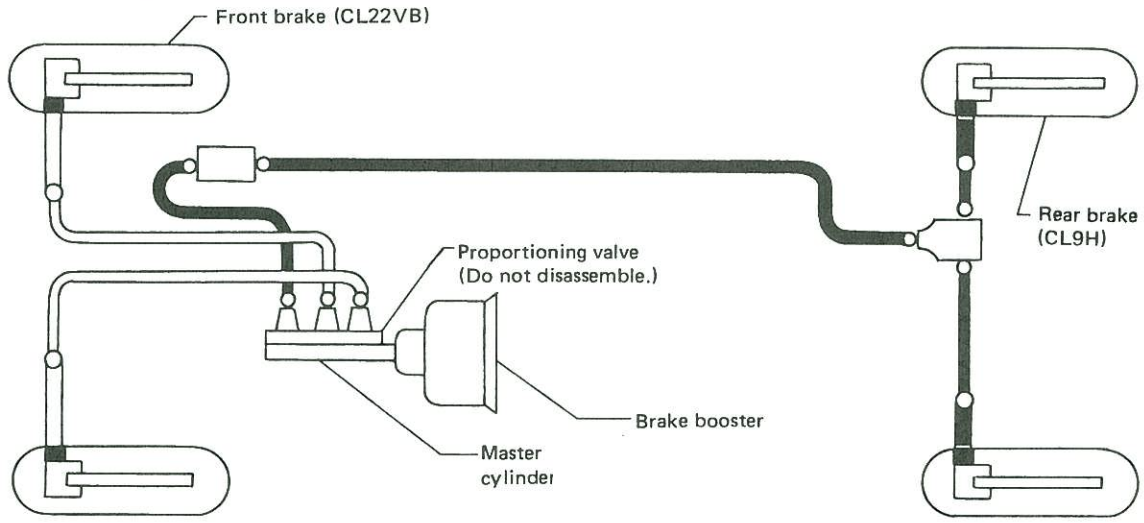


**With Anti-lock Braking System (ABS)**

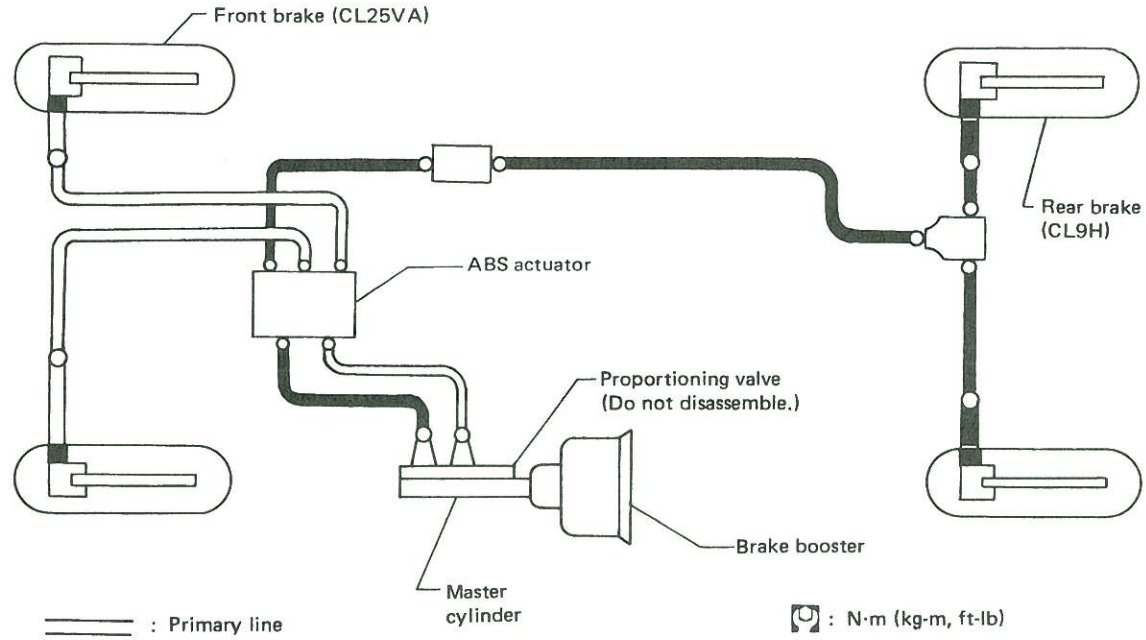


SBR501A

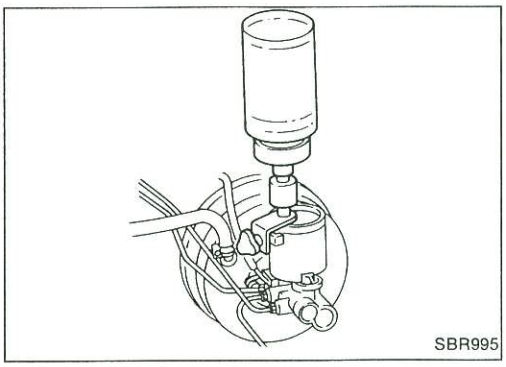

SBR995

## Bleeding Procedure

**CAUTION:**

- **Carefully monitor brake fluid level at master cylinder during bleeding operation.**
- **Fill reservoir with recommended brake fluid. Make sure it is full at all times while bleeding air out of system.**
- **Place a container beneath master cylinder to avoid spillage of brake fluid.**

## Bleeding Procedure (Cont'd)

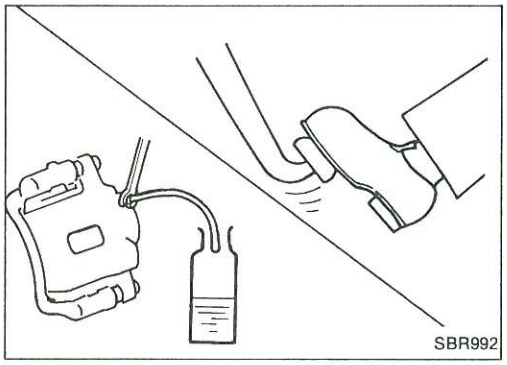


- Bleed air according to the following procedure.

**Without Anti-lock Braking System:**

Left rear caliper
↓
Right rear caliper
↓
Left front caliper
↓
Right front caliper

**With Anti-lock Braking System:**

Left rear caliper
↓
Right rear caliper
↓
Left front caliper
↓
Right front caliper
↓
Front side air bleeder on ABS actuator
↓
Rear side air bleeder on ABS actuator

- **To bleed air out of lines, wheel cylinders and calipers, use the following procedure.**

1) Connect a transparent vinyl tube to air bleeder valve.
2) Fully depress brake pedal several times.
3) With brake pedal depressed, open air bleeder valve to release air.
4) Close air bleeder valve.
5) Release brake pedal slowly.
6) Repeat steps 2) through 5) until clear brake fluid comes out of air bleeder valve.

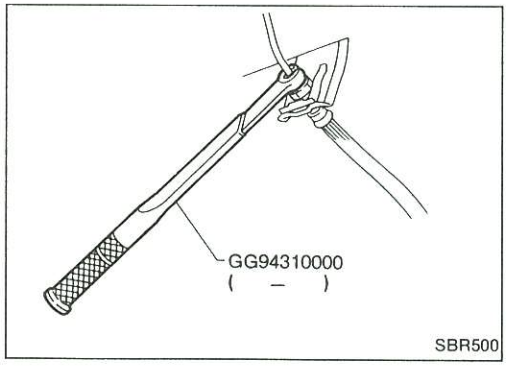


## Removal and Installation

1. To remove brake hose, first remove flare nut securing brake tube to hose, then withdraw lock spring.
2. Cover openings to prevent entrance of dirt whenever disconnecting hydraulic line.
3. All hoses must be free from excessive bending, twisting and pulling.
4. After installing brake lines, check for oil leakage by fully depressing brake pedal.

## Inspection

Check brake lines (tubes and hoses) for cracks, deterioration or other damage. Replace any damaged parts.
If leakage occurs around joints, retighten or, if necessary, replace damaged parts.

## Removal and Installation

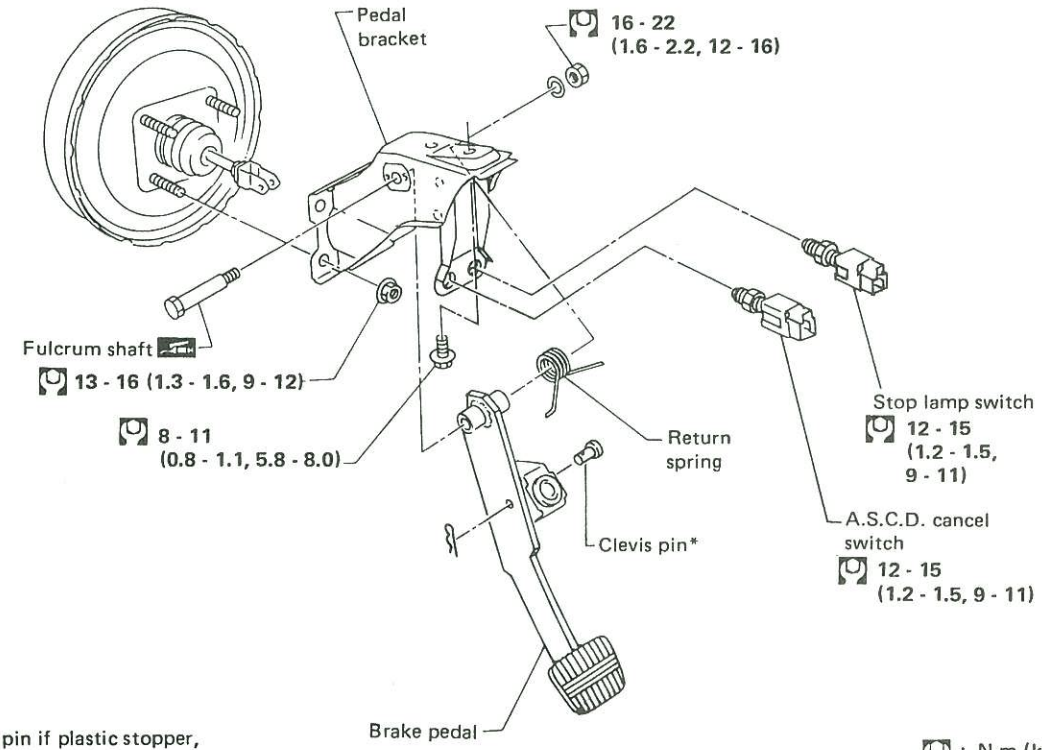


* Replace clevis pin if plastic stopper, which is located at the end of clevis pin, is deformed or damaged.

: N·m (kg-m, ft-lb)

SBR917A

## Inspection

Check brake pedal for following items.

- Brake pedal bend
- Clevis pin deformation
- Crack of any welded portion

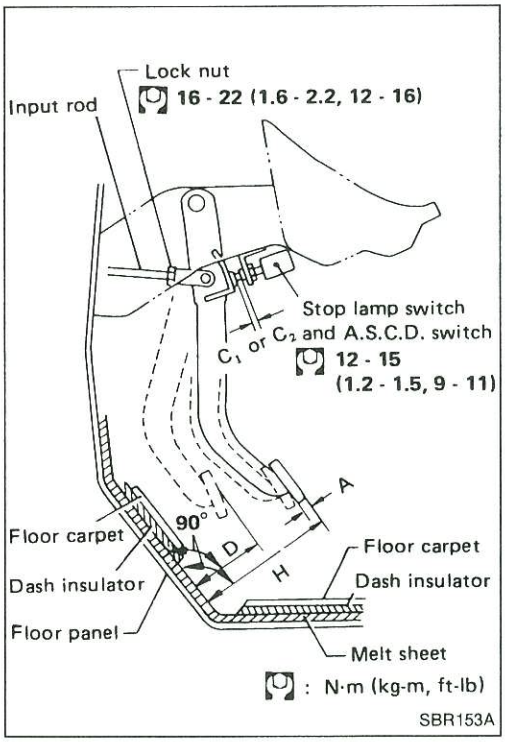


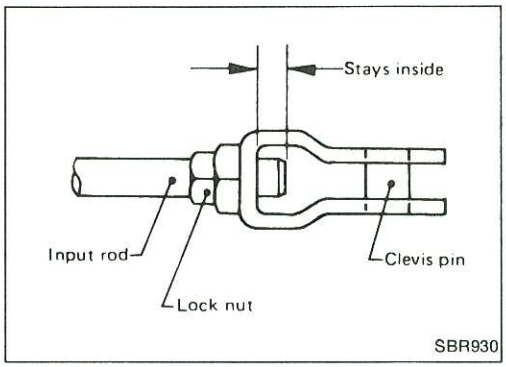


## Adjustment

Check brake pedal free height from dash reinforcement panel. Adjust if necessary.

**H:** **Free height**
**Refer to S.D.S.**

**D:** **Depressed height**
**Refer to S.D.S.**
**Under force of 490 N (50 kg, 110 lb) with engine running**

**$C_1$:** **Clearance between pedal stopper and threaded end of stop lamp switch**
**0.3 - 1.0 mm (0.012 - 0.039 in)**

**$C_2$:** **Clearance between pedal stopper and threaded end of A.S.C.D. switch**
**0.3 - 1.0 mm (0.012 - 0.039 in)**

**A:** **Pedal free play**
**1 - 3 mm (0.04 - 0.12 in)**

1. Adjust pedal free height with brake booster input rod. Then tighten lock nut.

**Make sure that tip of input rod stays inside.**

2. Adjust clearance "$C_1$" and "$C_2$" with stop lamp switch and A.S.C.D. switch respectively. Then tighten lock nuts.
3. Check pedal free play.

**Make sure that stop lamp is off when pedal is released.**

4. Check brake pedal's depressed height while engine is running.
   If depressed height is below specified value, check brake system for leaks, accumulation of air or any damage to components (master cylinder, wheel cylinder, etc.); then make necessary repairs.

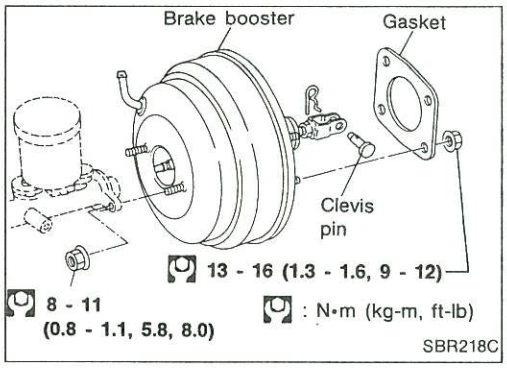


## Removal and Installation

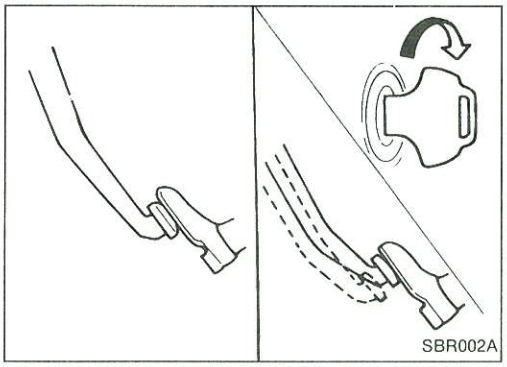


## Inspection

### OPERATING CHECK

- Depress brake pedal several times with engine off, and check that there is no change in pedal stroke.
- Depress brake pedal, then start engine. If pedal goes down slightly, operation is normal.

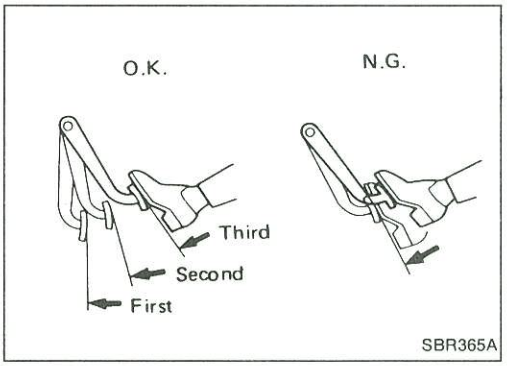


### AIRTIGHT CHECK

- Start engine, and stop it after one or two minutes. Depress brake pedal several times slowly. If pedal goes further down the first time and gradually rises after second or third time, booster is airtight.
- Depress brake pedal while engine is running, and stop engine with pedal depressed. If there is no change in pedal stroke after holding pedal down **30 seconds**, brake booster is airtight.

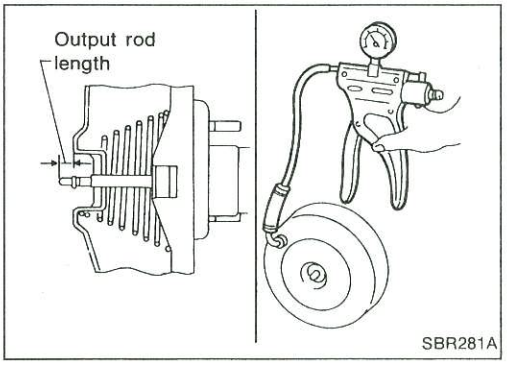


### OUTPUT ROD LENGTH CHECK

1. Supply brake booster with vacuum of –66.7 kPa (–500 mmHg, –19.69 inHg) using a handy vacuum pump.
2. Check output rod length.
   **Specified length:**
   **10.275 - 10.525 mm (0.4045 - 0.4144 in)**

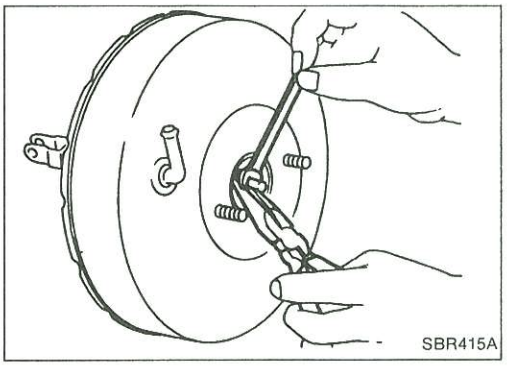


3. Adjust rod length if necessary.
4. If rod length is without specification, replace brake booster.

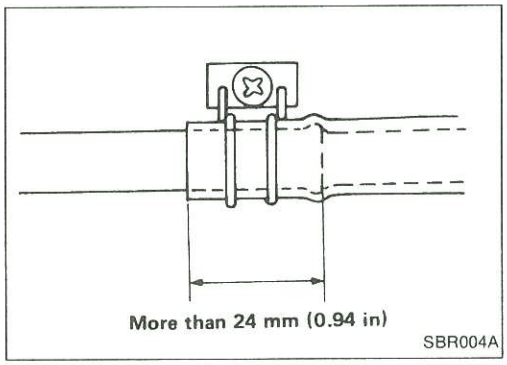


## Removal and Installation

- Insert vacuum tube into vacuum hose more than 24 mm (0.94 in).
- Do not apply any oil or lubricants to vacuum hose and check valve.

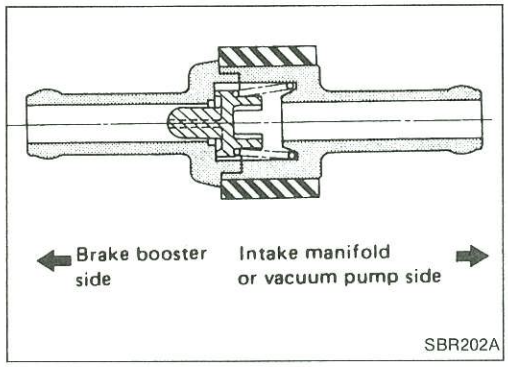


- Install check valve, paying attention to its direction.

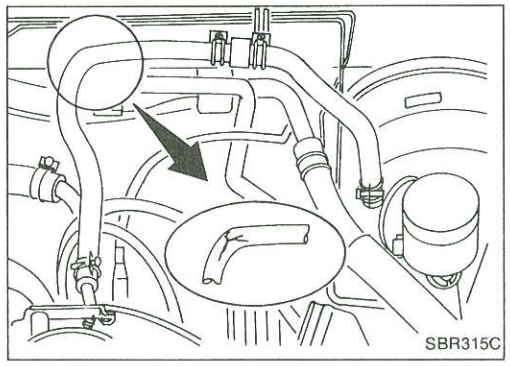


## Inspection

### HOSES AND CONNECTORS

- Check vacuum lines, connections and check valve for airtightness, improper attachment chafing and deterioration.

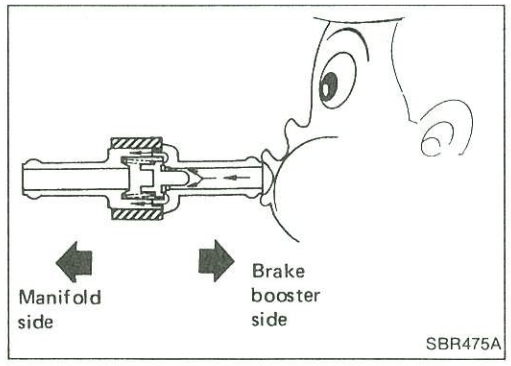


### CHECK VALVE

- When pressure is applied to brake booster side of check valve and valve does not open, replace check valve with a new one.

## Removal and Installation

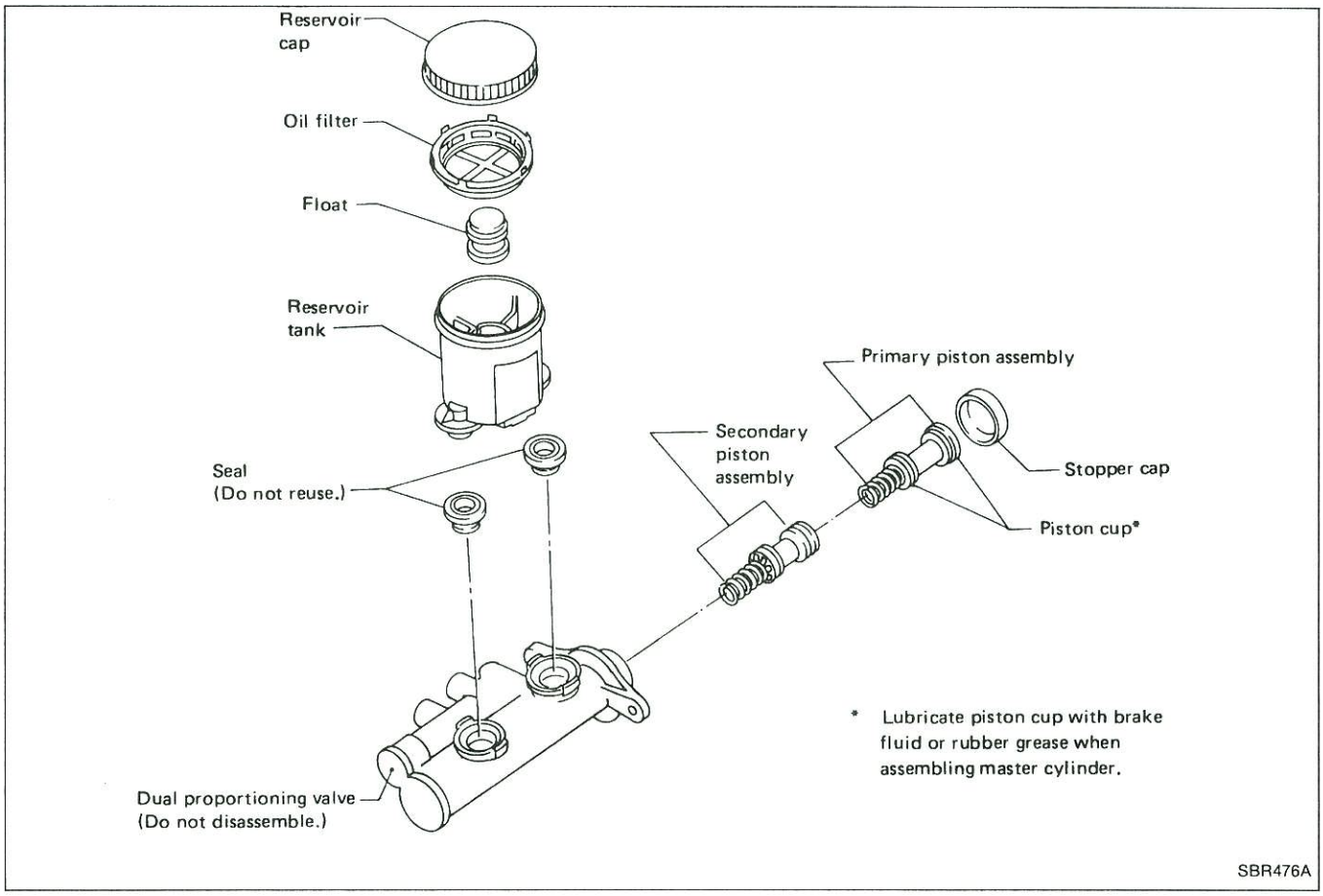


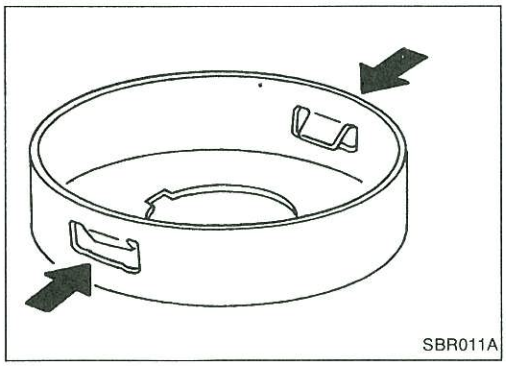


- Replace stopper cap if claw is damaged or deformed.
- Bend claws inward when installing stopper cap.

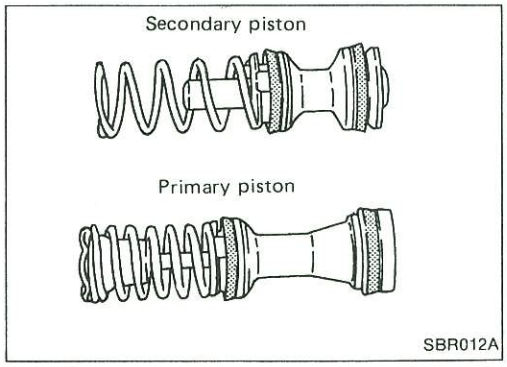


- Pay attention to direction of piston cups in figure at left.
- Check parts for wear or damage. Replace if necessary.

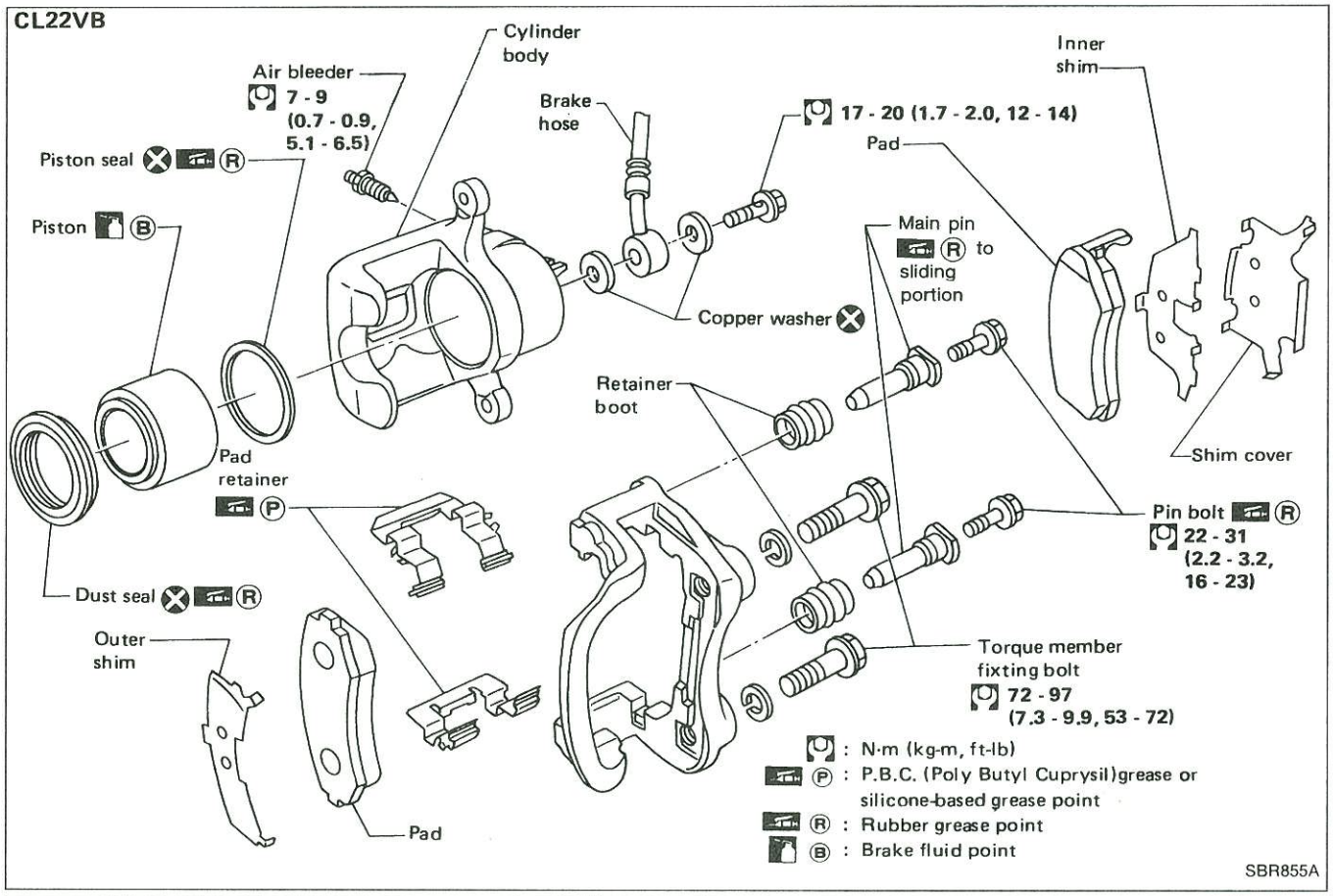
CL22VB
Air bleeder
7 - 9
(0.7 - 0.9,
5.1 - 6.5)
Cylinder body
Brake hose
17 - 20 (1.7 - 2.0, 12 - 14)
Inner shim
Pad
Piston seal
Piston
Main pin
to sliding portion
Copper washer
Retainer boot
Shim cover
Pad retainer
Pin bolt
22 - 31
(2.2 - 3.2,
16 - 23)
Dust seal
Outer shim
Torque member fixting bolt
72 - 97
(7.3 - 9.9, 53 - 72)
Pad
: N·m (kg-m, ft-lb)
: P.B.C. (Poly Butyl Cuprysil)grease or silicone-based grease point
: Rubber grease point
: Brake fluid point
SBR855A

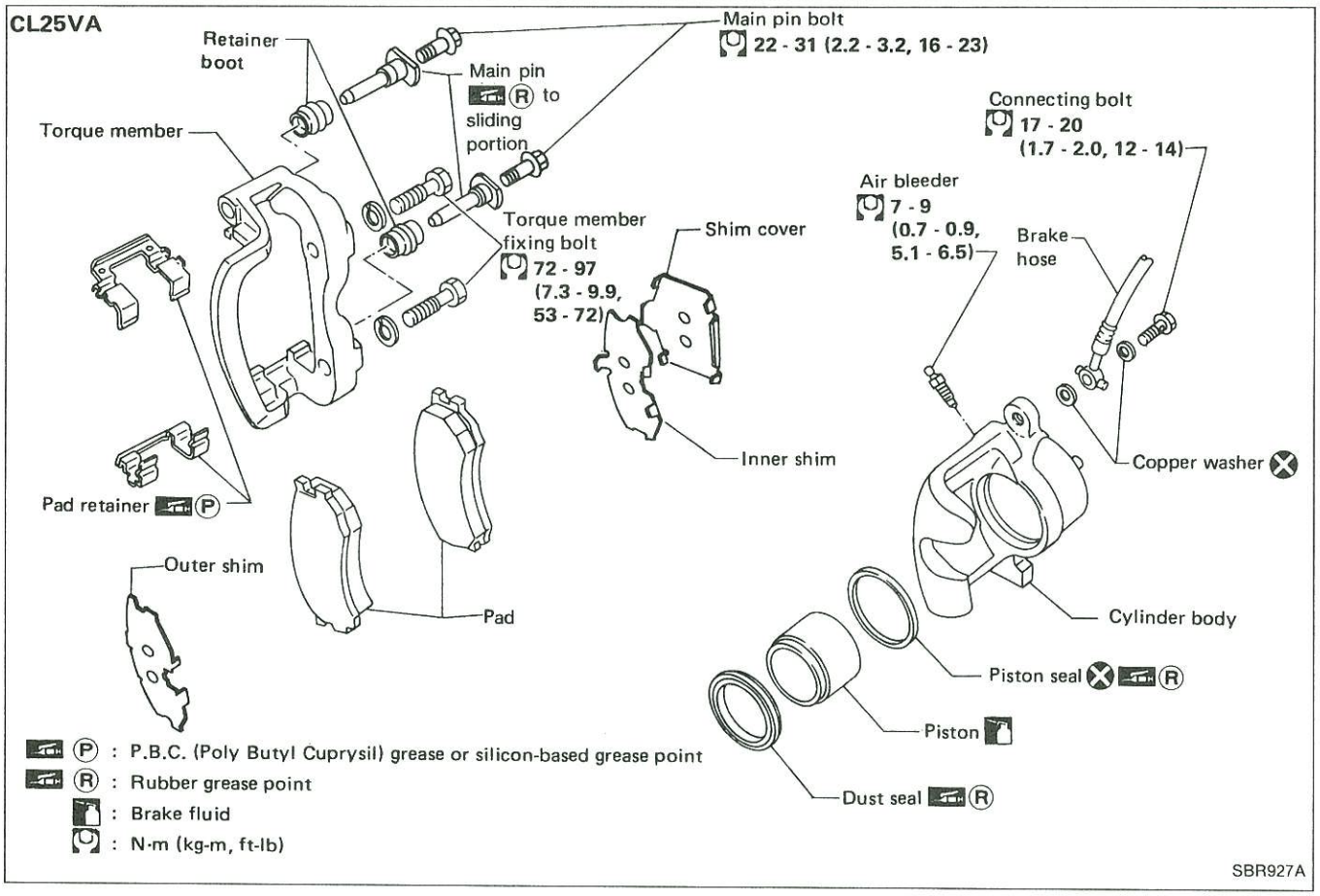
CL25VA
Retainer boot
Main pin bolt
22 - 31 (2.2 - 3.2, 16 - 23)
Main pin
to sliding portion
Connecting bolt
17 - 20
(1.7 - 2.0, 12 - 14)
Torque member
Air bleeder
7 - 9
(0.7 - 0.9,
5.1 - 6.5)
Brake hose
Torque member fixing bolt
72 - 97
(7.3 - 9.9,
53 - 72)
Shim cover
Inner shim
Copper washer
Pad retainer
Outer shim
Pad
Cylinder body
Piston seal
Piston
Dust seal
: P.B.C. (Poly Butyl Cuprysil) grease or silicon-based grease point
: Rubber grease point
: Brake fluid
: N·m (kg-m, ft-lb)
SBR927A

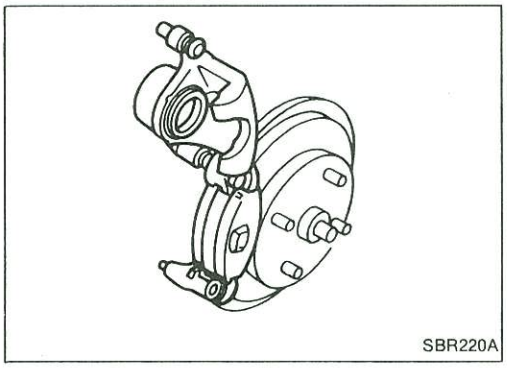
SBR220A

## Pad Replacement

1. Remove pin bolt.
2. Swing cylinder body upward. Then remove pad retainer, and inner and outer shims.

**CAUTION:**

- **When cylinder body is swung up, do not depress brake pedal because piston will pop out.**
- **Be careful not to damage dust seal or get oil on rotor. Always replace shims when replacing pads.**

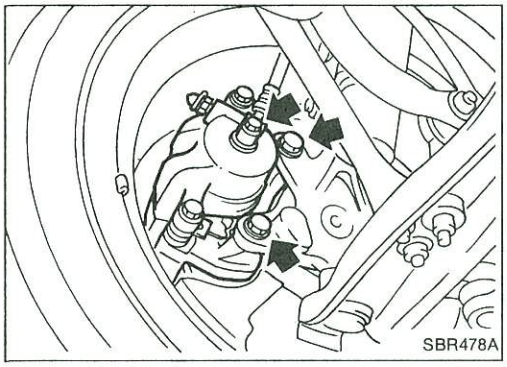
SBR478A

## Removal and Installation

- Remove torque member fixing bolts and union bolt.
- Install brake hose to caliper at protrusions securely.

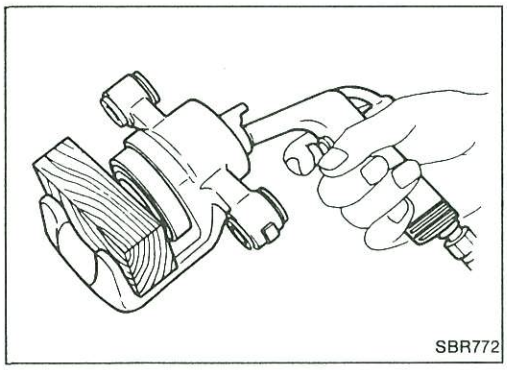
SBR772

## Disassembly

Push out piston with dust seal using compressed air.

## Inspection

### CYLINDER BODY

- Check inside surface of cylinder for scoring, rust, wear, damage or foreign materials. Replace if any such condition exists.
- Eliminate minor damage from rust or foreign materials by polishing surface with fine emery paper.

**CAUTION:**
**Use brake fluid to clean.**

### PISTON

Check piston for scoring, rust, wear, damage or foreign materials. Replace if any condition exists.

**CAUTION:**
**Piston sliding surface is plated. Do not polish with emery paper even if rust or foreign materials are stuck to sliding surface.**

### PIN, PIN BOLT AND PIN BOOT

Check for wear, cracks or other damage. Replace if any condition exists.

## Inspection (Cont'd)

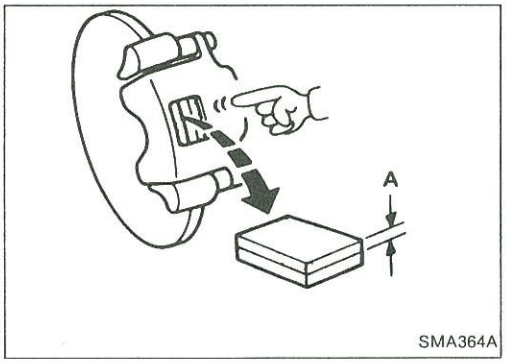


### DISC PAD

Check disc pad for wear or damage.

**Pad standard thickness (A):**
**CL22VB: 10.0 mm (0.394 in)**
**CL25VA: 11.0 mm (0.433 in)**
**Pad wear limit (A):**
**2.0 mm (0.079 in)**

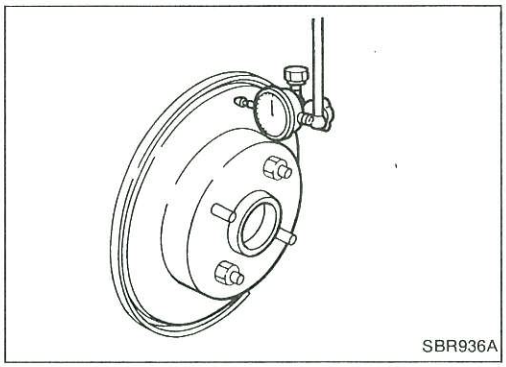


### ROTOR RUNOUT

1. Secure rotor to wheel hub with at least two nuts (M12 x 1.25).
2. Check runout using a dial indicator.

**Make sure that wheel bearing axial end play is within the specifications before measuring. Refer to section FA.**

**Maximum runout:**
**0.07 mm (0.0028 in)**

3. If the runout is out of specification, find minimum runout position as follows:
   a. Remove nuts and rotor from wheel hub.
   b. Shift the rotor one hole and secure rotor to wheel hub with nuts.
   c. Measure runout.
   d. Repeat steps a. to c. so that minimum runout position can be found.
4. If the runout is still out of specification, turn rotor with on-car brake lathe ("MAD, DL-8700", "AMMCO 700 and 705" or equivalent).

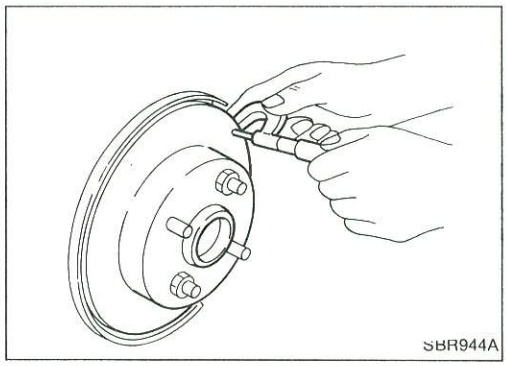


### ROTOR THICKNESS

**Thickness variation (At least 8 positions):**
**Maximum 0.01 mm (0.0004 in)**

If thickness variation exceeds the specification, turn rotor with on-car brake lathe.

**Rotor repair limit:**
**CL22VB 18.0 mm (0.709 in)**
**CL25VA 20.0 mm (0.787 in)**

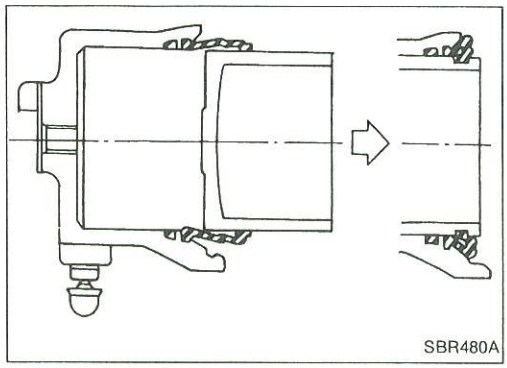


## Assembly

- Place piston boot over rear of piston. Fit piston boot's lip properly in corresponding groove on cylinder body.
- Insert piston into cylinder body and fit boot's lip properly in corresponding groove on piston.

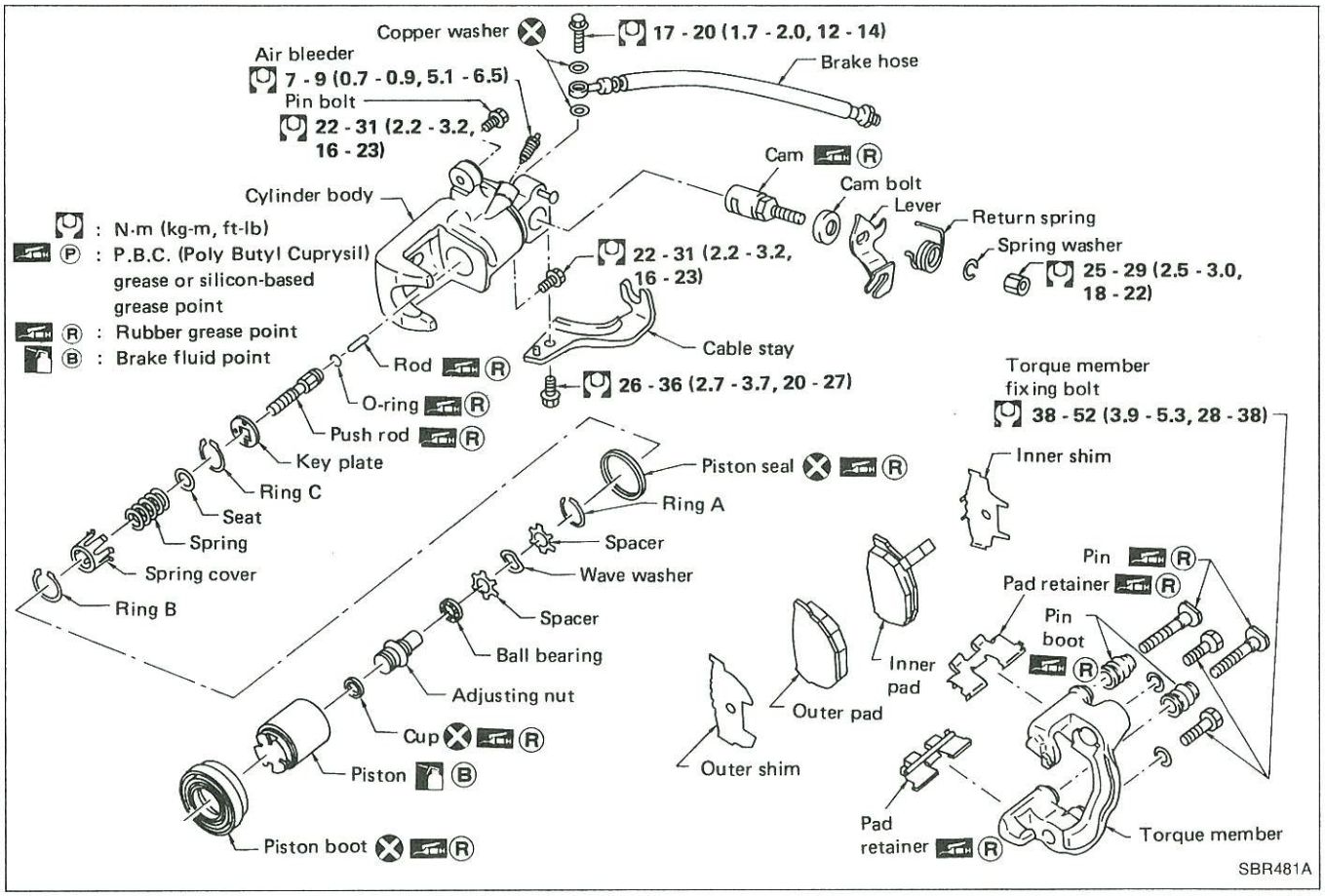


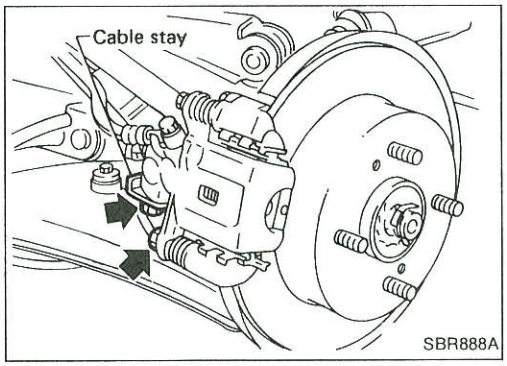


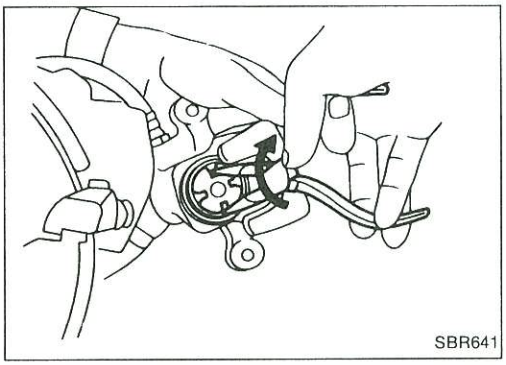


## Pad Replacement

**CAUTION:**

**When cylinder body is swung up, do not depress brake pedal because piston will pop out.**

- Release parking brake.
- Remove parking cable stay fixing bolt, pin bolts and lock spring. Then remove pad retainers, pads and shims.
- When installing pads, retract piston into cylinder body by turning it clockwise.

**Be careful not to damage piston boot or get oil on rotor.**
**Always replace shims when replacing pads.**

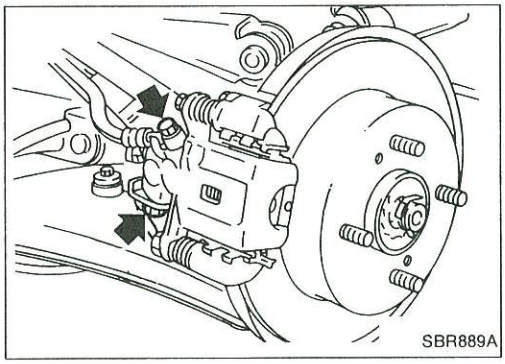
SBR889A

## Removal and Installation

- Release parking brake.
- Disconnect parking brake cable and brake hose, then remove caliper assembly.

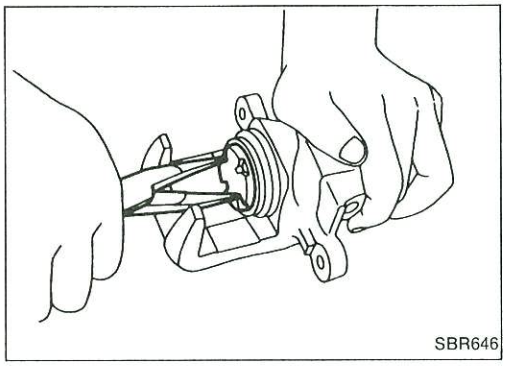
SBR646

## Disassembly

1. Remove piston by turning it counterclockwise with suitable longnose pliers.

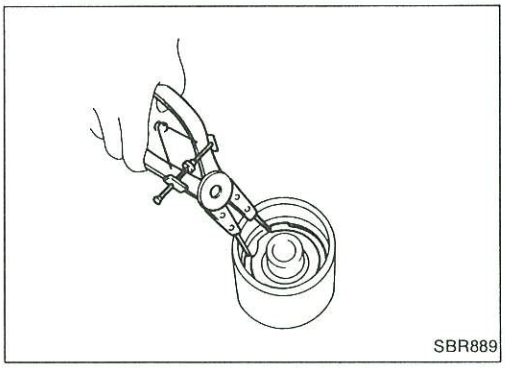
SBR889

2. Pry off ring A from piston with suitable pliers and remove adjusting nut.
3. Disassemble cylinder body.
- Pry off rings B and C with pliers, then remove spring cover, spring and seat.

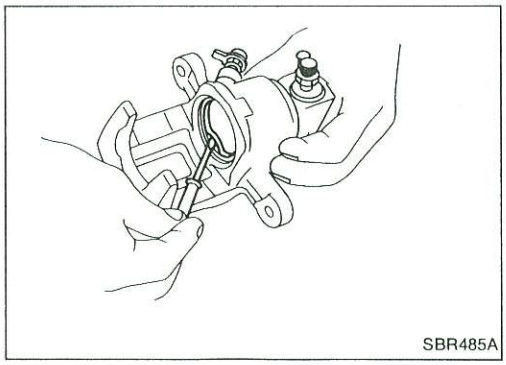
SBR485A

- Remove piston seal.

**Be careful not to damage cylinder body.**

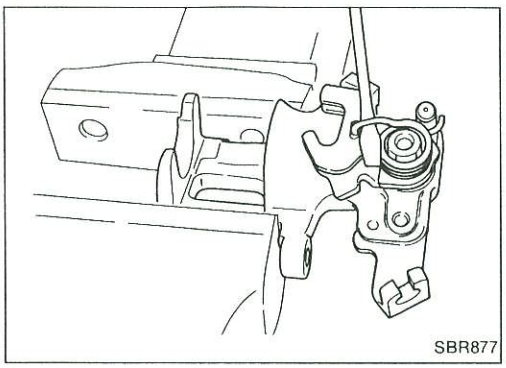
SBR877

4. Remove return spring and lever.

## Inspection

### CYLINDER BODY

- Check inside surface of cylinder for score, rust, wear or other damage.
- Minor damage from rust of foreign materials may be eliminated by polishing surface with a fine emery paper. Replace if necessary.

**CAUTION:**
**Use brake fluid to clean.**

### TORQUE MEMBER

Check for wear, cracks or other damage. Replace if necessary.

### PISTON

Check piston for score, rust, wear or other damage. Replace if necessary.

**CAUTION:**
**Piston sliding surface is plated. Do not polish with emery paper even if rust or foreign matter is stuck to sliding surface.**

### PIN AND PIN BOOT

Check for wear, cracks or other damage. Replace if necessary.

## Assembly

- Install cup securely in the specified direction.

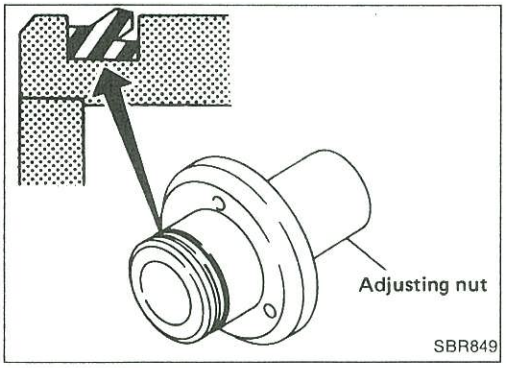


- Fit push rod into square hole in key plate. Also match convex portion of key plate with concave portion of cylinder.

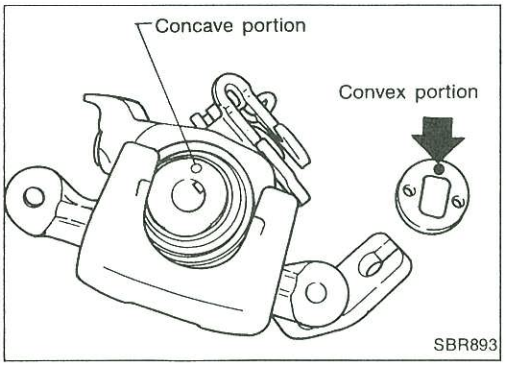


- Install ring C with suitable tool.

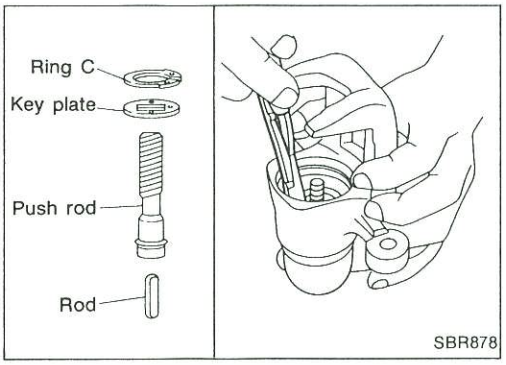

## Assembly (Cont'd)

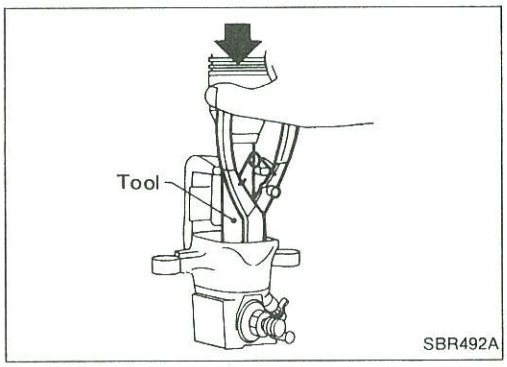


- Install seat, spring, spring cover and ring B with suitable press and drift.

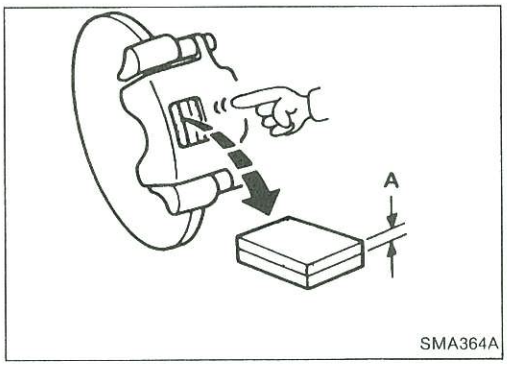


## Inspection

### DISC PAD

Check disc pad for wear or damage.

**Standard thickness (A):**
**9.5 mm (0.374 in)**
**Pad wear limit (A):**
**2.0 mm (0.079 in)**

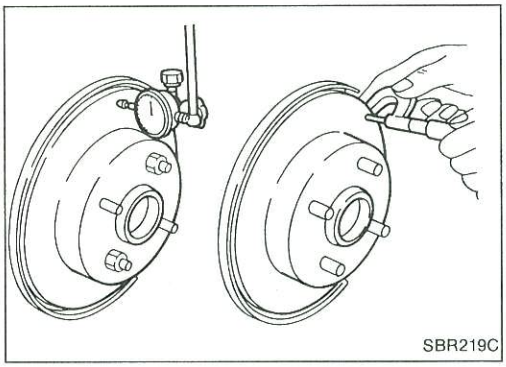


### ROTOR RUNOUT & THICKNESS

- Check runout using a dial indicator.
- Make sure that axial end play is within the specifications before measuring. Refer to section RA.
  **Rotor repair limit:**
  **Maximum runout: 0.07 mm (0.0028 in)**
  **(Total indicator reading at center of rotor pad contact surface)**
- Rotor thickness
  **Rotor repair limit:**
  **Minimum thickness: 8.0 mm (0.315 in)**

## Removal and Installation

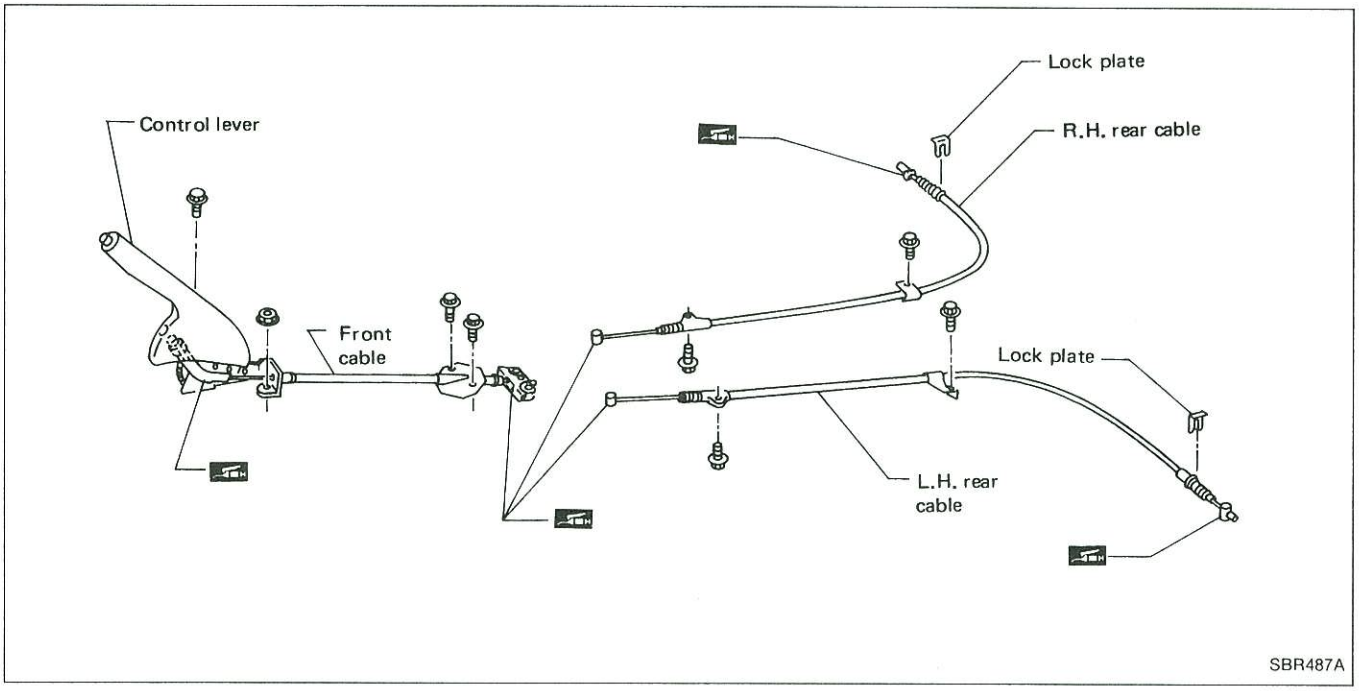


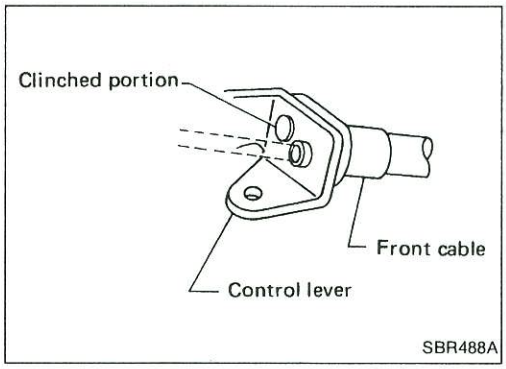


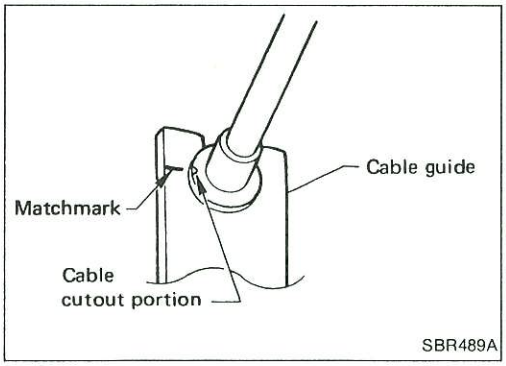


### REMOVAL

- Before removing parking brake control, remove console box.
- Loosen cable using control lever adjuster, and separate front and rear cables.
- Break clinched portion of control lever using a hammer and chisel as shown in figure at left, and replace cables with new parts.

**Apply multi-purpose grease to areas between control lever drum and cables.**

### INSTALLATION

**Be careful not to damage boot and inner cable.**

- When installing parking brake cable at rear caliper, make sure to align matchmarks on parking cable stay and cable.

## Inspection

1. Check control lever for wear or other damage. Replace if necessary.
2. Check parking brake cables, lamp and switch. Replace if necessary.
3. Check parts at each connecting portion for deformation or damage. If found, replace.

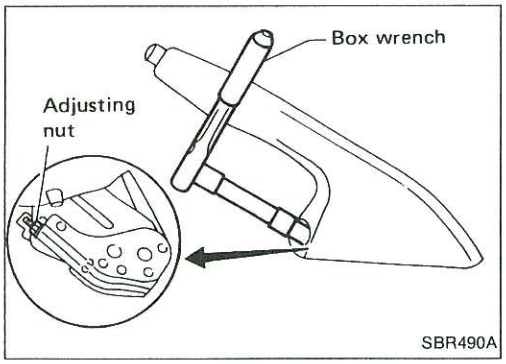


## Adjustment

1. Ensure that parking brake releases when control lever is pulled down completely. If control lever does not release parking brake, proceed as follows:
   - Pull control lever up by 4 or 5 notches.
   - Insert a box wrench into opening in control lever and loosen self-lock adjusting nut to slacken cables. Completely push control lever down.
2. Forcefully depress brake pedal about five times (so that caliper is automatically set in position.).
3. Pull lever up by 4 or 5 notches.
4. Turn adjusting nut as shown in figure at left and adjust lever stroke to specified value.
5. Completely push control lever down and ensure that:
   - Parking brake is released completely.
   - Rear brakes are free from dragging.

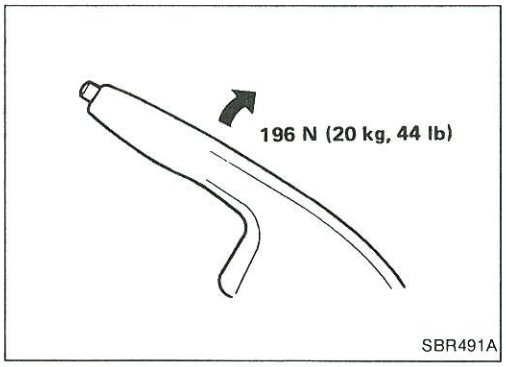


6. Pull control lever with specified amount of force. Check lever stroke and ensure smooth operation.
   **Number of notches:**
   **Center lever type 6 - 8**

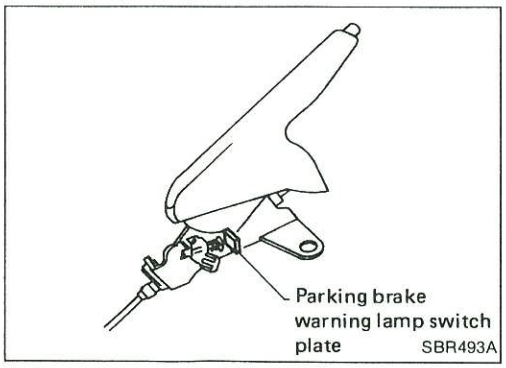


7. Bend parking brake warning lamp switch plate so that brake warning light comes on when ratchet at parking brake lever is pulled "A" notches and goes out when fully released.
   **Number of "A" notches: 1**

## System Components

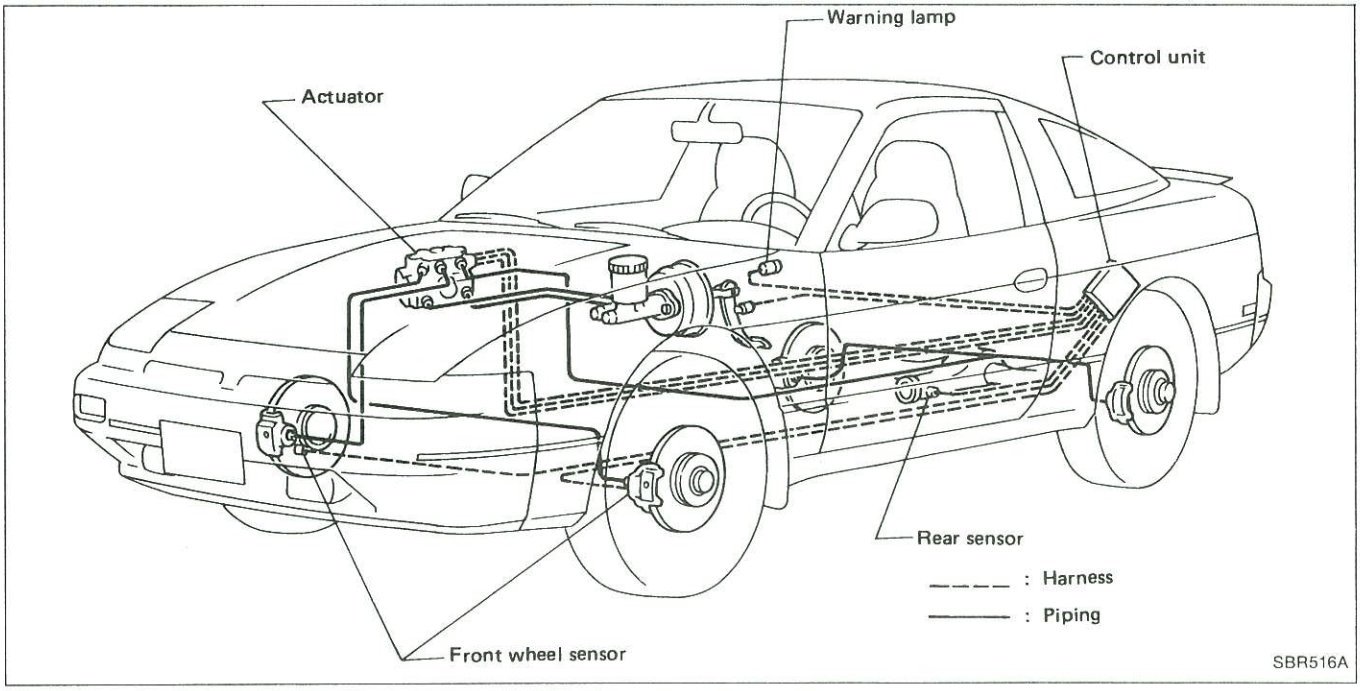


## Hydraulic Circuit

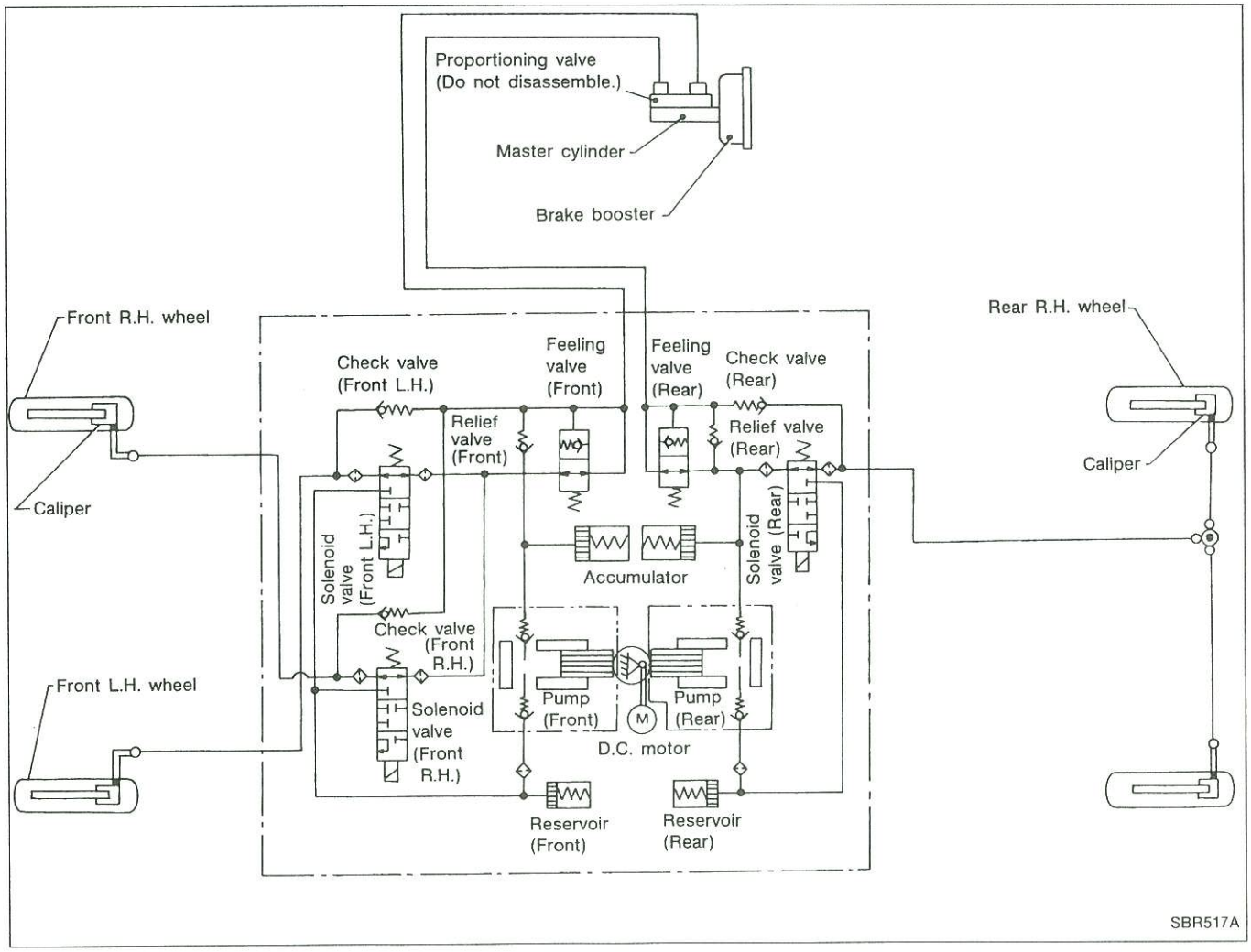

## Wiring Diagram

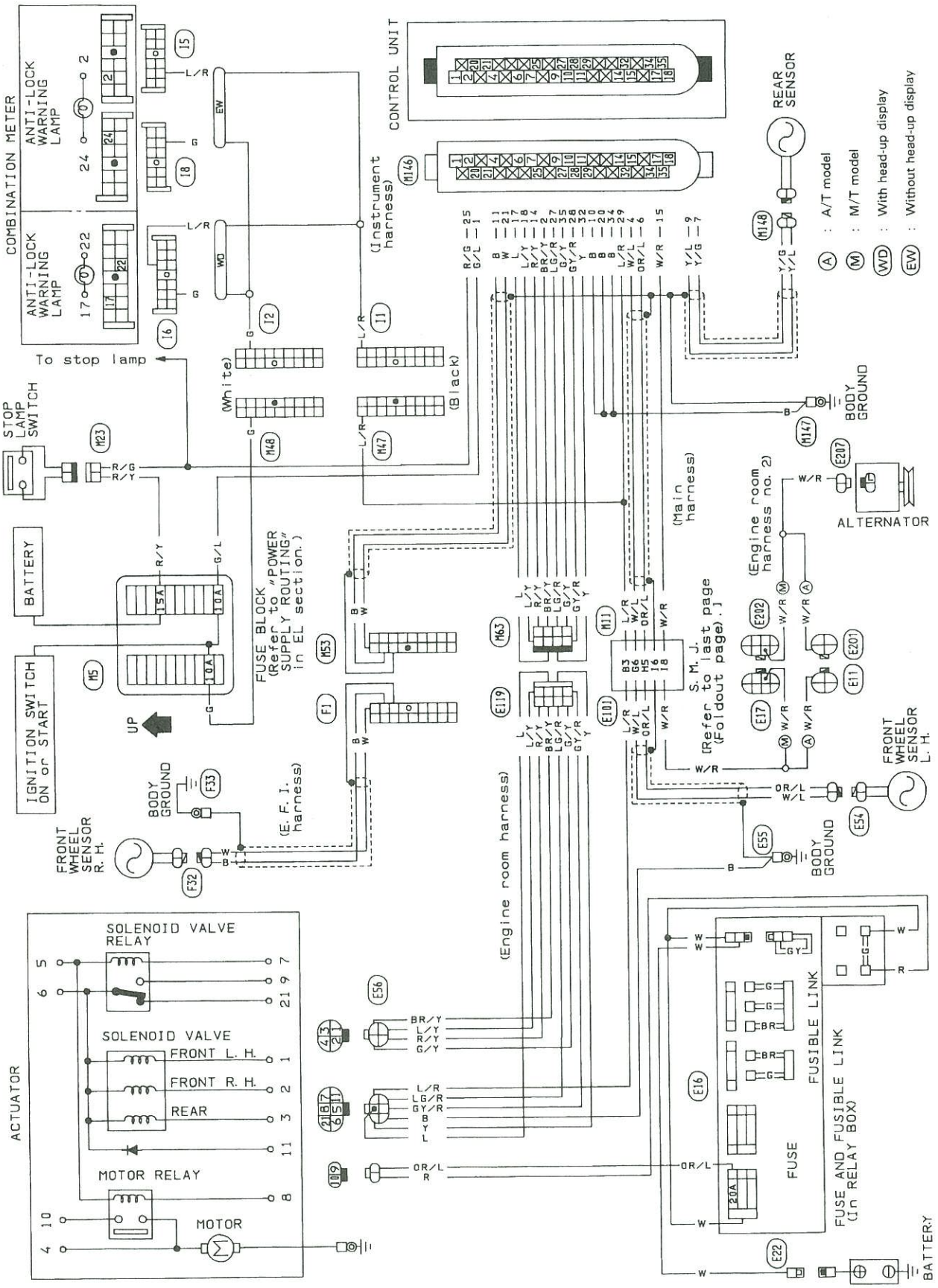


SBR552B

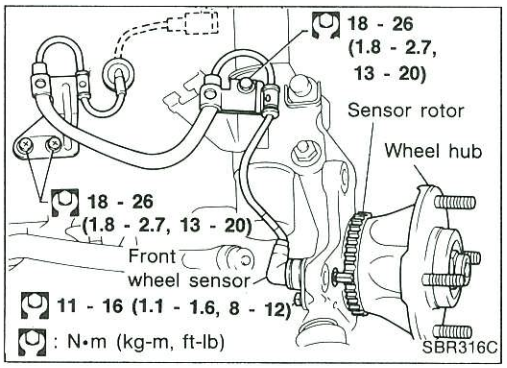


## Removal and Installation

**CAUTION:**
**Be careful not to damage sensor edge and sensor rotor teeth.**

### FRONT WHEEL SENSOR

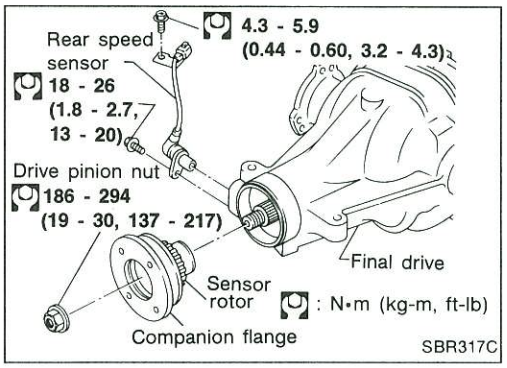


### REAR SENSOR

- Remove rear sensor rotor with companion flange after propeller shaft removal.
  Refer to PD section.

### ACTUATOR

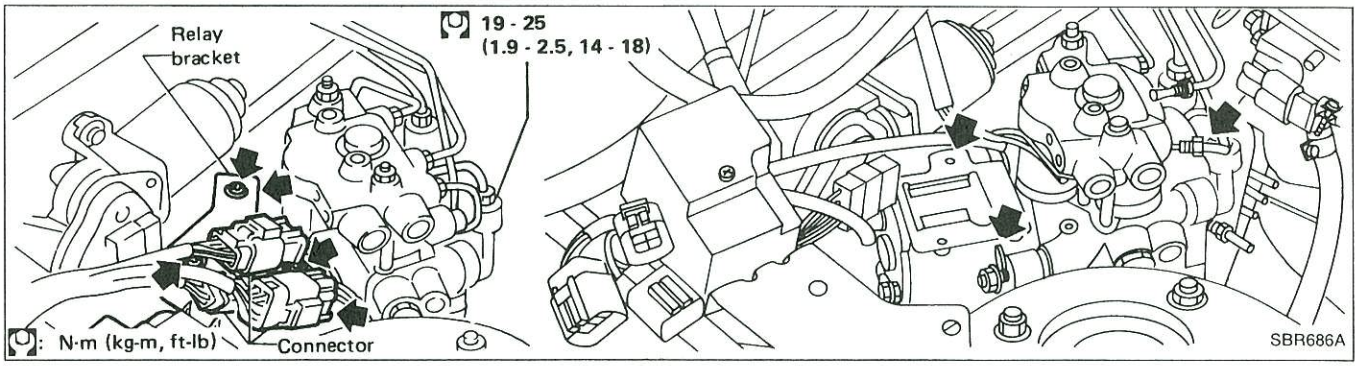


- Disconnect 3 connectors and brake tubes.
- Remove relay bracket.
- Remove actuator by removing 3 nuts fixing actuator to bracket.

## Contents


How to Perform Trouble Diagnoses for Quick and Accurate Repair ..... BR-24
Symptom Chart ..... BR-26
Preliminary Check 1 ..... BR-27
Preliminary Check 2 ..... BR-28
Preliminary Check 3, 4 ..... BR-29
Self-diagnosis ..... BR-30
Component Parts Location ..... BR-31
Harness Connector Location ..... BR-32
Ground Circuit Check ..... BR-33
Circuit Diagram for Quick Pinpoint Check ..... BR-33
Diagnostic Procedure 1 — Pedal vibration and noise ..... BR-34
Diagnostic Procedure 2 — Long stopping distance ..... BR-35
Diagnostic Procedure 3 — Abnormal pedal action ..... BR-36
Diagnostic Procedure 4 — ABS doesn't work ..... BR-36
Diagnostic Procedure 5 — ABS works but warning activates ..... BR-37
Diagnostic Procedure 6 — ABS works frequently ..... BR-37
Diagnostic Procedure 7 — ACTUATOR SOLENOID VALVE (L.E.D. flashing number 1 - 4) ..... BR-38
Diagnostic Procedure 8 — WHEEL SPEED SENSOR (L.E.D. flashing number 5 - 8) ..... BR-39
Diagnostic Procedure 9 — ACTUATOR MOTOR RELAY (L.E.D. flashing number 9) ..... BR-40
Diagnostic Procedure 10 — ACTUATOR SOLENOID VALVE RELAY (L.E.D. flashing number 10) ..... BR-41
Diagnostic Procedure 11 — CONTROL UNIT (L.E.D. flashing number 16) ..... BR-42
Diagnostic Procedure 12 — CONTROL UNIT OR POWER SUPPLY AND GROUND CIRCUIT (Warning activates but L.E.D. comes off.) ..... BR-43
Electrical Components Inspection — ACTUATOR (Not self-diagnostic item) ..... BR-44

## How to Perform Trouble Diagnoses for Quick and Accurate Repair

### WORK FLOW

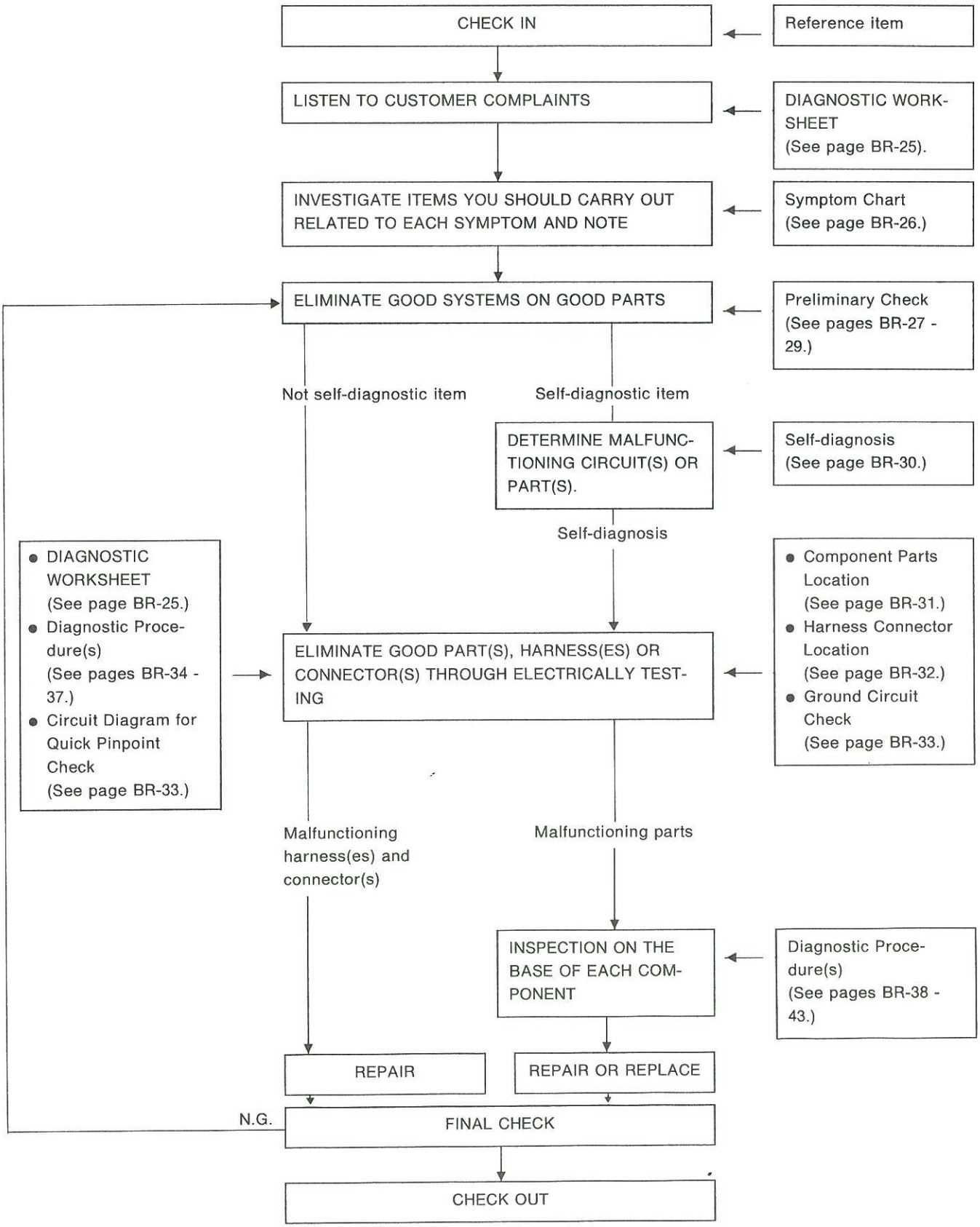

## How to Perform Trouble Diagnoses for Quick and Accurate Repair (Cont'd)

**KEY POINTS**

**WHAT** ..... Vehicle model
**WHEN** ..... Date, Frequencies
**WHERE** ..... Road conditions
**HOW** ..... Operating conditions, Weather conditions, Symptoms

SBR339B

### DIAGNOSTIC WORKSHEET

There are many kinds of operating conditions that lead to customer complaints, even if the system is normal.
A good grasp of such conditions can make trouble-shooting faster and more accurate.
In general, feelings for a problem depend on each customer's information. It is therefore important to fully understand the symptoms or under what conditions a customer complains.
Make good use of a diagnostic worksheet such as the one shown below in order to utilize all the complaints for trouble-shooting.

**Worksheet sample**

| | | | | | | | |
|---|---|---|---|---|---|---|---|
| Customer name MR/MS | | Model & Year | | | VIN | | |
| Engine # | | Trans. | | | Mileage | | |
| Incident Date | | Manuf. Date | | | In Service Date | | |
| Symptoms | ☐ Pedal vibration and noise | ☐ Warning activates | ☐ Long stopping distance | ☐ Abnormal pedal action | ☐ ABS doesn't work | ☐ ABS works but warning activates | ☐ ABS works frequently |
| Engine conditions | | ☐ When starting ☐ After starting<br>☐ Engine speed: 5,000 rpm or more | | | | | |
| Road conditions | | ☐ Low friction road (☐ Snow ☐ Gravel ☐ Other)<br>☐ Protrusion | | | | | |
| Driving conditions | | ☐ High speed cornering<br>☐ Vehicle speed: Greater than 10 km/h (6 MPH)<br>☐ Vehicle speed: 10 km/h (6 MPH) or less<br>☐ Vehicle is stopped | | | | | |
| Applying brake conditions | | ☐ Suddenly<br>☐ Gradually | | | | | |
| Other conditions | | ☐ Operation of electrical equipment<br>☐ Large pedal stroke<br>☐ Operation of clutch | | | | | |

## Symptom Chart

| PROCEDURE | Preliminary Check | | | | Diagnostic Procedure | | | | | | Diagnostic Procedure (Select inspection with L.E.D. flashing No.) | | | | | | Ground Circuit Check | Electrical Compo-nents Inspec-tion |
|---|---|---|---|---|---|---|---|---|---|---|---|---|---|---|---|---|---|---|
| REFERENCE PAGE | BR-27 | BR-28 | BR-29 | BR-29 | BR-34 | BR-35 | BR-36 | BR-36 | BR-37 | BR-37 | BR-38 | BR-39 | BR-40 | BR-41 | BR-42 | BR-43 | BR-33 | BR-44 |
| SYMPTOM | Preliminary Check 1 | Preliminary Check 2 | Preliminary Check 3 | Preliminary Check 4 | Diagnostic Procedure 1 | Diagnostic Procedure 2 | Diagnostic Procedure 3 | Diagnostic Procedure 4 | Diagnostic Procedure 5 | Diagnostic Procedure 6 | L.E.D. flashing 1 - 4 | L.E.D. flashing 5 - 8 | L.E.D. flashing 9 | L.E.D. flashing 10 | L.E.D. flashing 16 | L.E.D. comes off | Motor ground | Actuator inspection |
| Pedal vibration & noise | | | ○ | ○ | ○ | | | | | | ○ | ○ | ○ | ○ | ○ | ○ | | |
| Warning activates | | ○ | ○ | ○ | | | | | | | ○ | ○ | ○ | ○ | ○ | ○ | | |
| Long stopping distance | ○ | | | ○ | | ○ | | | | | ○ | ○ | ○ | ○ | ○ | ○ | | |
| Abnormal pedal action | ○ | | | ○ | | | ○ | | | | ○ | ○ | ○ | ○ | ○ | ○ | | |
| ABS doesn't work | | ○ | | ○ | | | | ○ | | | ○ | ○ | ○ | ○ | ○ | ○ | ○ | ○ |
| ABS works but warning activates | | | | ○ | | | | | ○ | | ○ | ○ | ○ | ○ | ○ | ○ | | |
| ABS works frequently | ○ | ○ | | | | | | | | ○ | | | | | | | | |

## Preliminary Check 1

**CHECK**

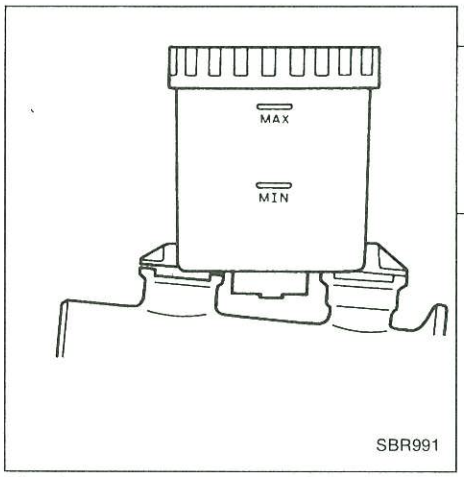


Check brake fluid level in reservoir tank.

N.G. → Fill up brake fluid.

O.K. →

**CHECK**

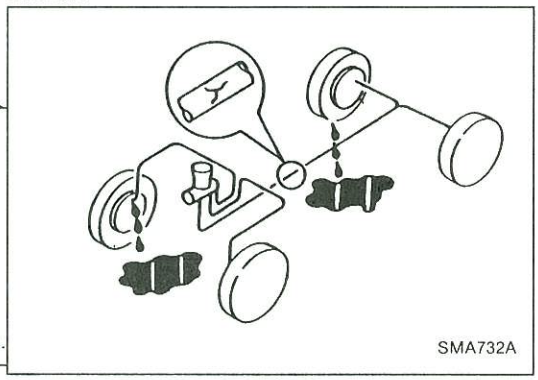


N.G. ← Repair brake system.

Check brake system.
Refer to CHECK AND ADJUSTMENT.

O.K. ↓

**CHECK**

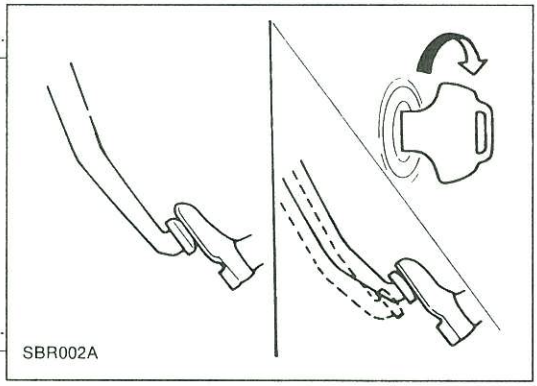


N.G. ← Repair or replace booster system.

Check brake booster operation and airtightness.
Refer to "Inspection" of BRAKE BOOSTER.

O.K. ←

**CHECK**

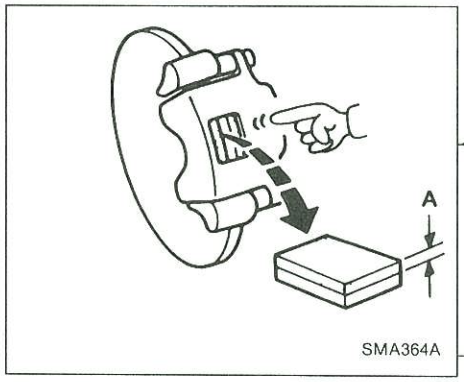


N.G. → Replace malfunctioning parts.

Check brake pads and rotor.
Refer to "Inspection" of FRONT and REAR DISC BRAKE.

## Preliminary Check 2

CHECK

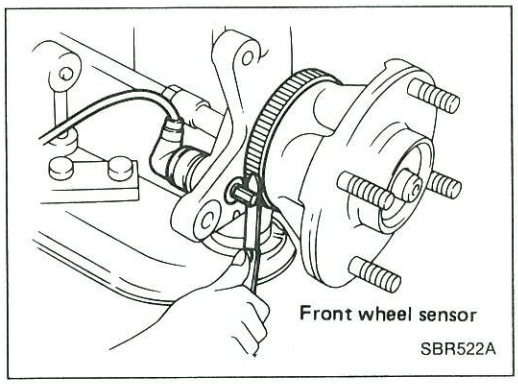


CHECK

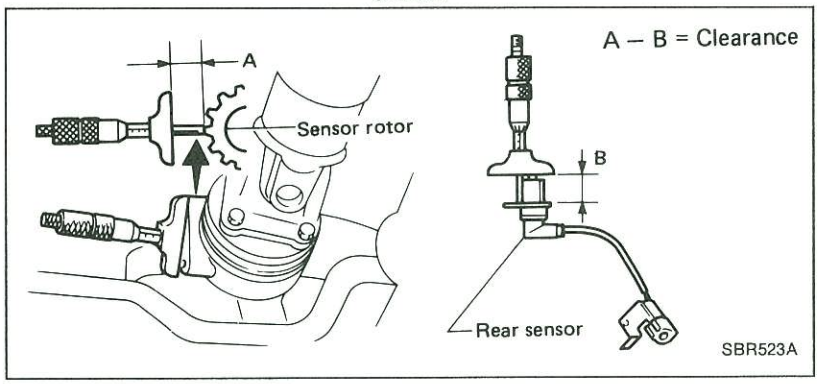


Check sensor clearance.

| | Clearance mm (in) |
|---|---|
| Front wheel sensor | 0.275 - 0.75 (0.0108 - 0.0295) |
| Rear sensor | 0.35 - 0.625 (0.0138 - 0.0246) |

N.G. → Check sensor for the following items:

- Dust, foreign materials, etc., at fastening portion
- Improper installation
- Breakage

O.K. → CHECK

N.G. → Repair or replace malfunctioning sensor.

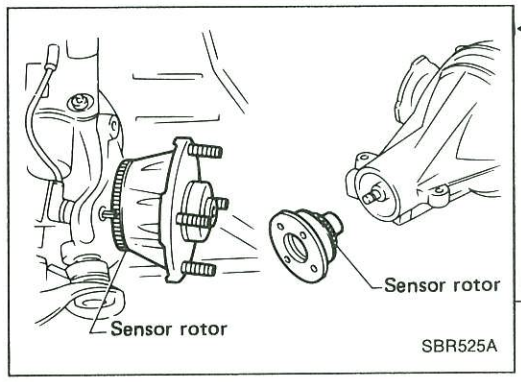


N.G. → Replace sensor rotor with wheel hub or companion flange as a set.

Check sensor rotor for teeth damage.

## Preliminary Check 3, 4

**Preliminary Check 3**
**CHECK**

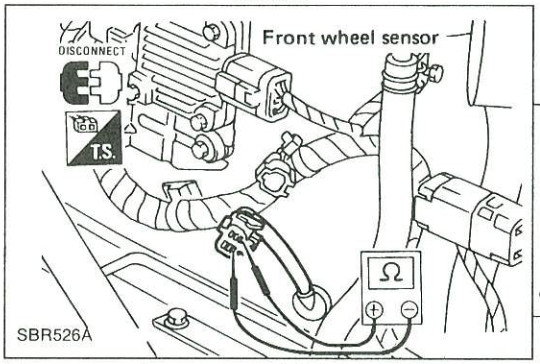


Measure each sensor resistance.
**0.8 - 12 kΩ**

N.G. → Replace.

O.K. →

**Preliminary Check 4**
**CHECK**

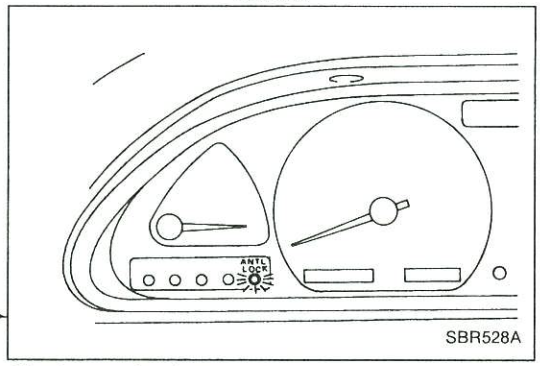


Check warning lamp activation.
When ignition switch is turned on, warning lamp turns on.

O.K. ↓

N.G. ↓

Check fuse.
Check bulb condition and remedy.

**CHECK**

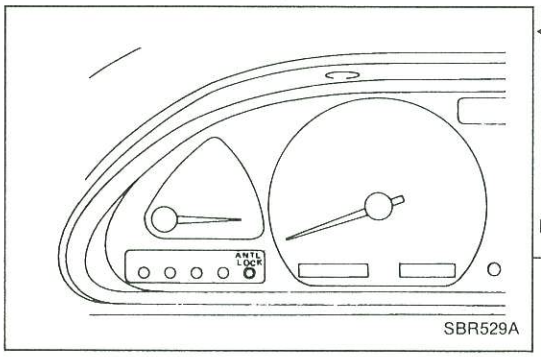


Check warning lamp for deactivation.
When engine starts, warning lamp deactivates.

↓O.K.

N.G. →

**CHECK**

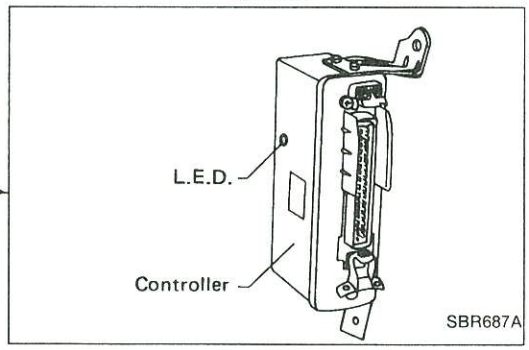


- Keep engine on and running.
- Remove rear side finisher.
- Count the number of L.E.D. flashes during 5 to 10 second "OFF" period.

↓

Go to Self-diagnosis.
(See next page.)

**DRIVE**

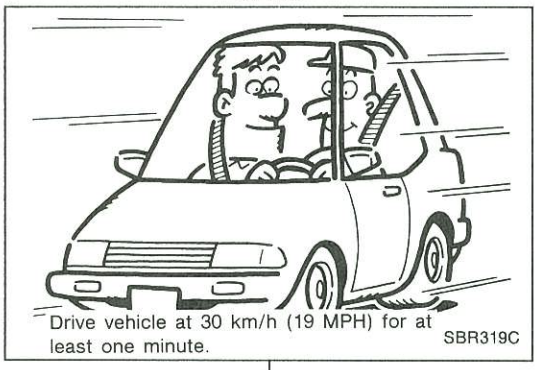


↓

**CHECK**

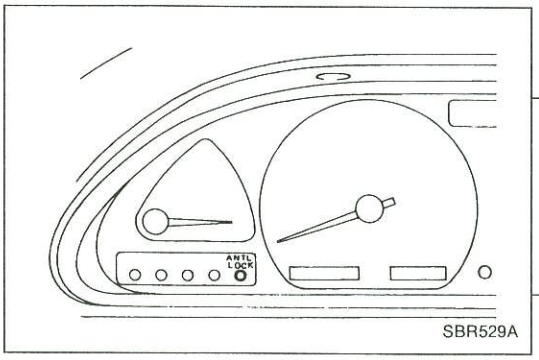


Ensure warning lamp remains off while driving.

N.G. →

O.K. → If Preliminary Check 2 is not performed and there is abnormal ABS operation, perform Preliminary Check 2.

## Self-diagnosis

### CHECKING THE NUMBER OF L.E.D. FLASHES

When a problem occurs in the ABS, the warning light on the instrument panel comes on. As shown in the Table, the control unit performs self-diagnosis.
To obtain satisfactory self-diagnosing results, the vehicle must be driven above 30 km/h (19 MPH) for at least one minute before the self-diagnosis is performed. After the vehicle is stopped, the number of L.E.D. flashes is counted while the engine is running.
The L.E.D. is located on the control unit, identifying a malfunctioning part or unit by the number of flashes.
Both the warning light and the L.E.D. persistently activate, even after a malfunctioning part or unit has been repaired, unless the ignition switch is turned "OFF". After repairs, turn the ignition switch "OFF". Then start the engine and drive the vehicle over 30 km/h (19 MPH) for at least one minute to ensure that the malfunctioning part or unit has been repaired properly.
If more than two circuits malfunction at the same time, the L.E.D. will flash to indicate one of the malfunctioning circuits. After the circuit has been repaired, the L.E.D. will then flash to indicate that the other circuit is malfunctioning.

| No. of L.E.D. flashes | Malfunctioning parts or circuit |
|---|---|
| 1 | Left front actuator solenoid circuit |
| 2 | Right front actuator solenoid circuit |
| 3 or 4 | Rear actuator solenoid circuit |
| 5 | Left front rotor sensor circuit |
| 6 | Right front rotor sensor circuit |
| 7 or 8 | Rear rotor sensor circuit |
| 9 | Actuator motor, motor relay circuit |
| 10 | Actuator solenoid valve relay |
| 16 | Control unit |
| Warning activates and L.E.D. "OFF" | Power supply or ground circuit for control unit |

**Example**
**Improper operation of left front rotor sensor circuit**

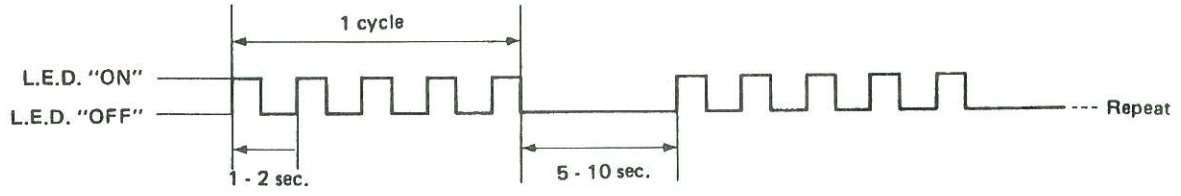


SBR531A

Go to Diagnostic Procedure from 7 to 10, where malfunction portion is concerned.

## Component Parts Location

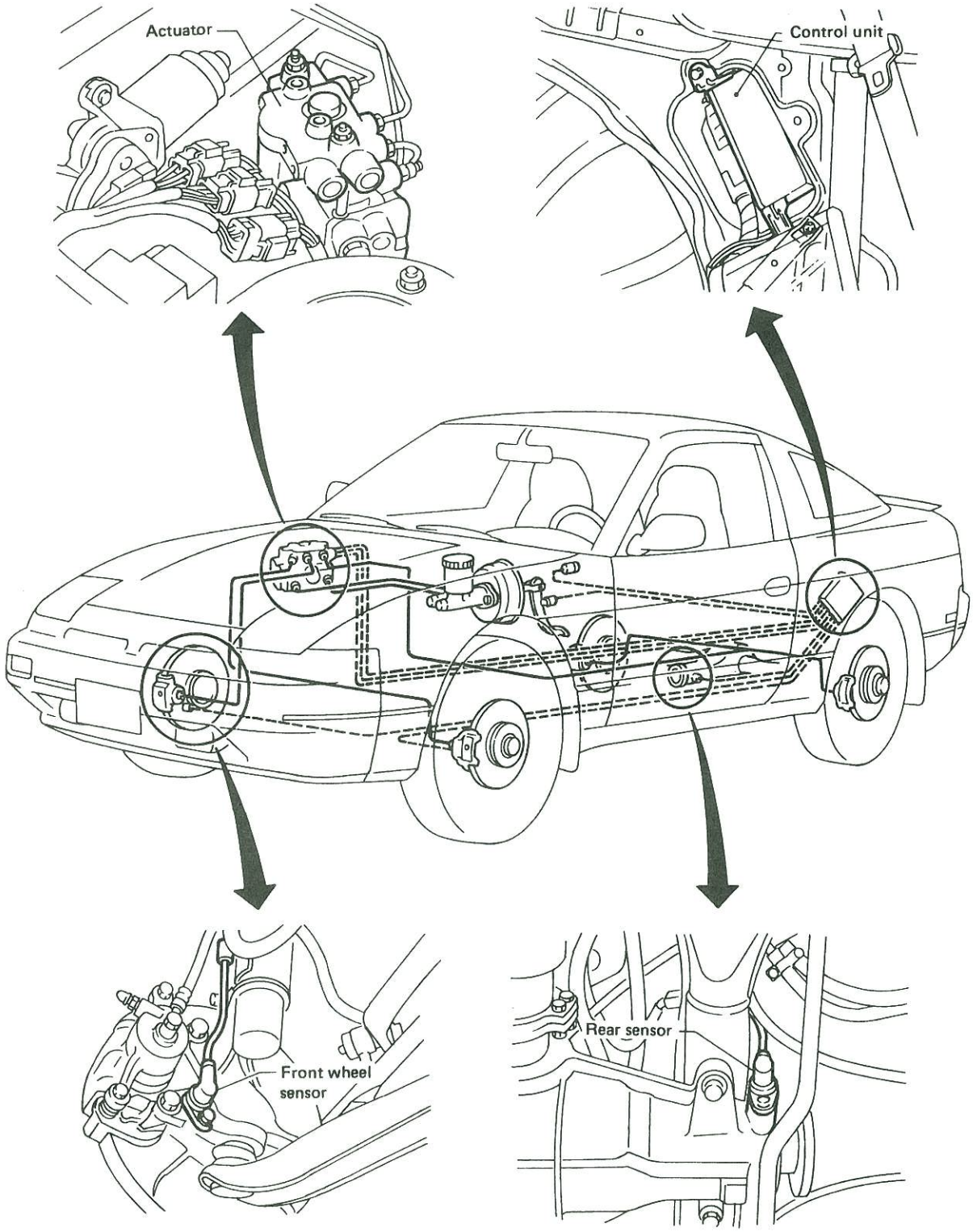


SBR532A

## Harness Connector Location

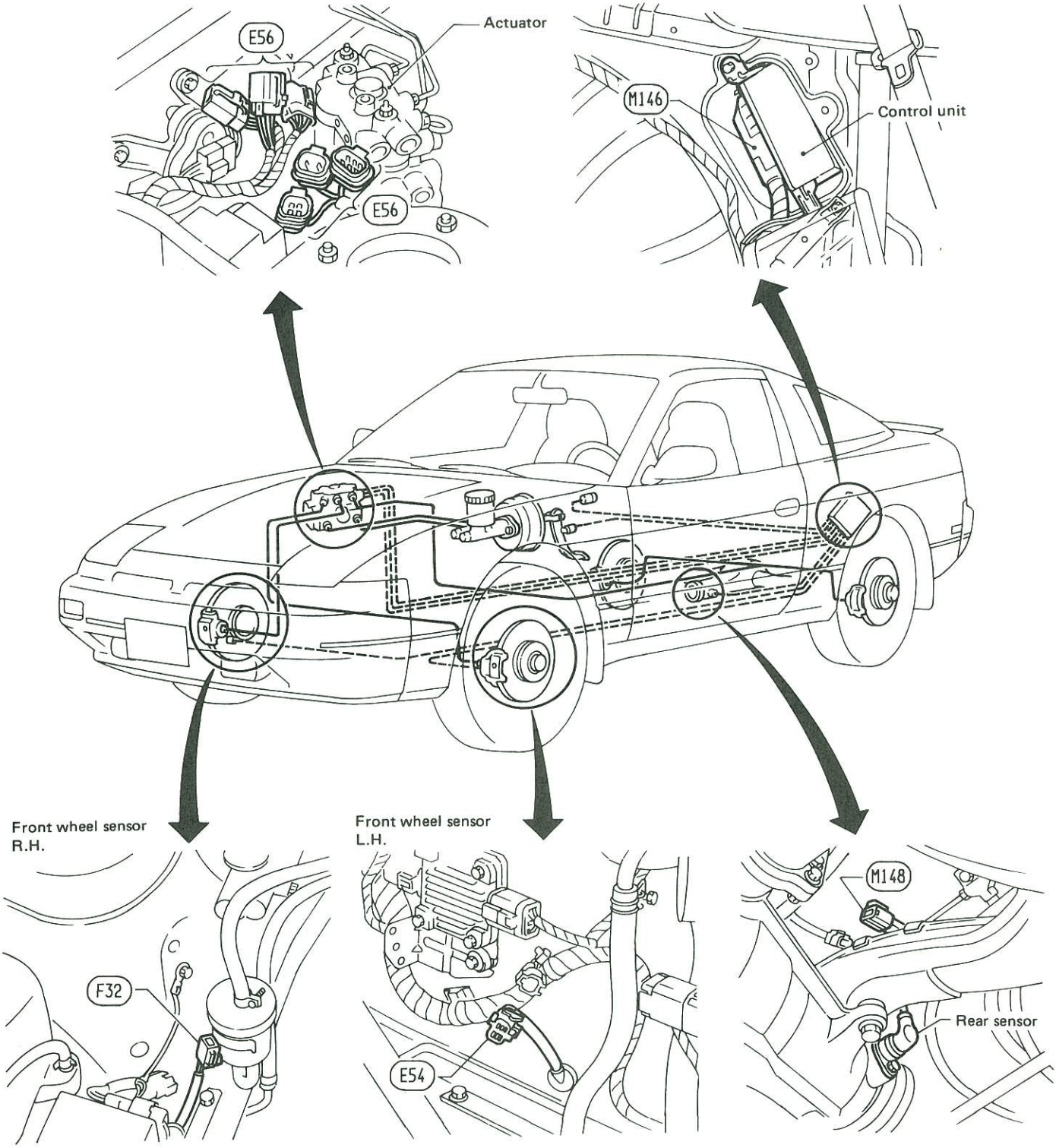


SBR533A

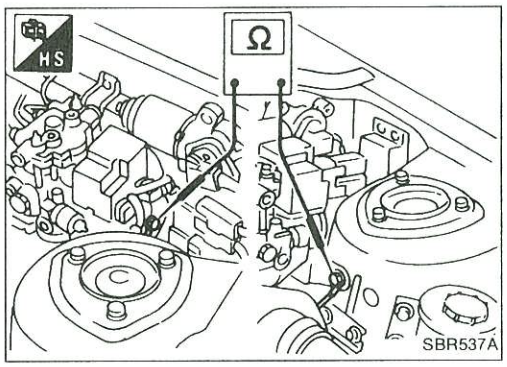


## Ground Circuit Check

### ACTUATOR MOTOR GROUND

- Check resistance between both terminals.
  **Resistance: 0Ω**

## Circuit Diagram for Quick Pinpoint Check

- The unit side connectors with a double circle " ◯ " are connected to the harness side connectors shown in the "Harness Connector Location". (See page BR-32.)
- The terminal numbers in the connector coincide with the circuit numbers surrounded by a single circle "○".

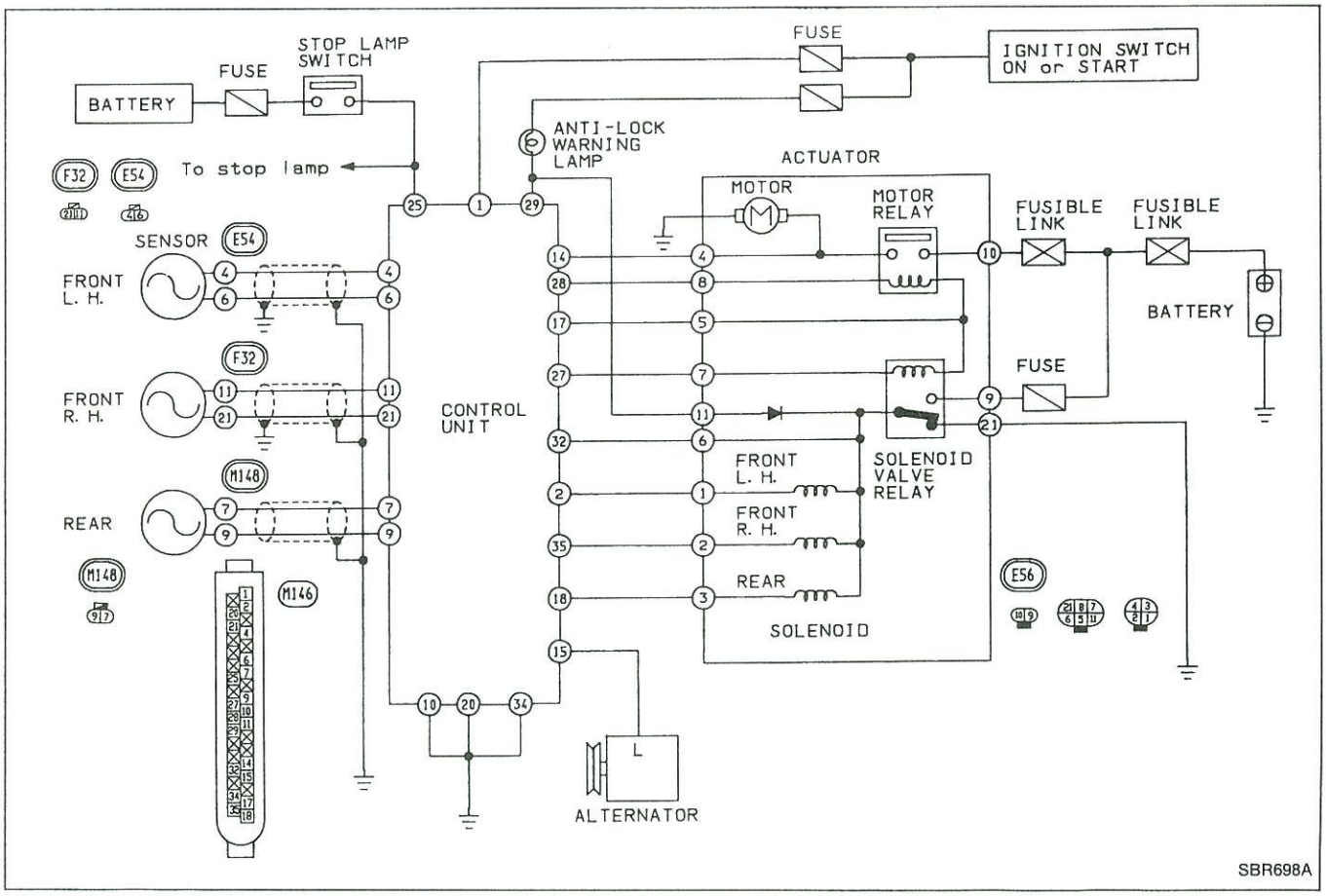

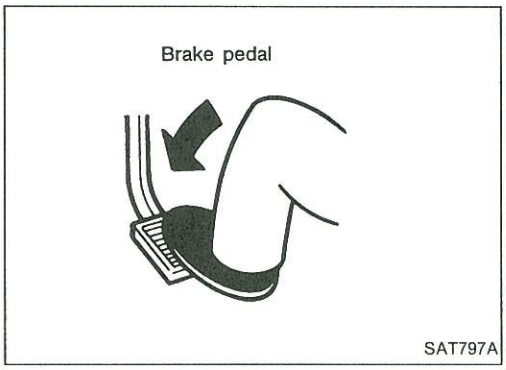


## Diagnostic Procedure 1

### SYMPTOM: Pedal vibration and noise

**Refer to worksheet result.**

Check whether the symptom appears only when brake is applied suddenly.

Yes → When brake is normally applied, ABS works and produces pedal vibration or noise.

No ↓

Check whether the symptom appears only when engine is started.

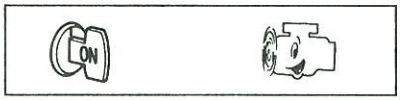


Yes → Refer to Preliminary Check 4 result.

No ↓

Check whether the symptom appears only when the vehicle speed is within 10 km/h (6 MPH) after starting engine.

Yes → Check whether the symptom disappears within 5 seconds.

- No → Ⓐ
- Yes → ABS may sometimes operate when load is high and voltage is low due to insufficient alternator output.

No ↓

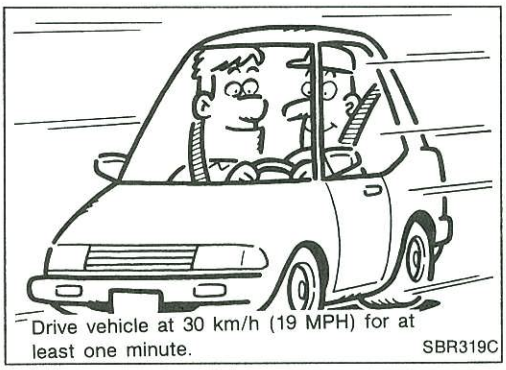


Check whether the symptom appears while the vehicle is being driven.

No → Ⓐ

Yes ↓

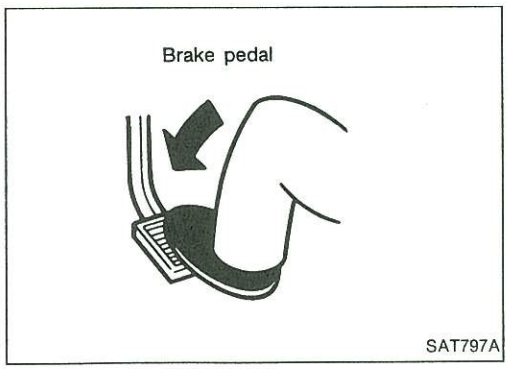


Check whether the symptom appears when brake is applied gradually.

No (Appears when brake is not applied.) → Check if there are any conditions, among those listed below, when symptom appears.

- Shifting
- Operating clutch
- Passing protrusion

- No → Ⓑ
- Yes → Under these conditions individual wheel speed can change suddenly. This may sometimes cause the A.B.S. to operate.

Yes ↓

Ⓑ

## Diagnostic Procedure 1 (Cont'd)

Ⓑ

Check if there are any conditions, among those listed below, when symptom appears.
- Low friction road
- High speed cornering
- Passing protrusion

Yes → For such conditions, if wheel speed is considerably different between front and rear or left and right, ABS will work normally.

No

Check whether engine speed is over 5,000 rpm with vehicle stopped.

Yes → Ⓐ Vibration related to sensor may cause ABS operation.

No

Refer to preliminary Check 4 result.
Go to Self-diagnosis. (See page BR-30.)

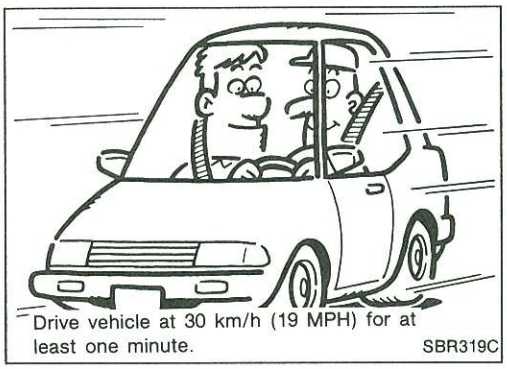

Drive vehicle at 30 km/h (19 MPH) for at least one minute. SBR319C

## Diagnostic Procedure 2

**SYMPTOM: Long stopping distance**

**Refer to worksheet results.**

Check if road condition is slippery with snow or gravel.

Yes → Stopping distance may be longer than vehicles which are not equipped with ABS.

No

Disconnect actuator connector and check whether stopping distance is still long.

No → Refer to Preliminary Check 4 result.
Go to Self-diagnosis.
(See page BR-30.)

Yes

Perform Preliminary Check 1 and air bleeding.

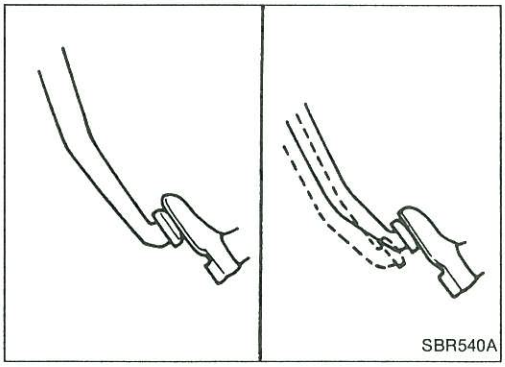
SBR540A

## Diagnostic Procedure 3

### SYMPTOM: Abnormal pedal action

**Refer to worksheet results.**

Check whether brake pedal stroke is abnormally large.
- Yes → Vehicle equipped with ABS may have a tendency for large pedal strokes.
- No ↓

Check that brake pedal force is firm but brake is effective.
- Yes → Normal condition.
- No ↓

A

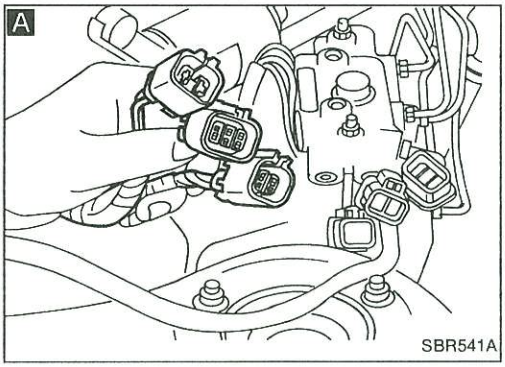
SBR541A

Disconnect actuator connector and check whether brake is effective.
- Yes → Refer to Preliminary Check 4 result. Go to Self-diagnosis. (See page BR-30.)
- No ↓

Perform Preliminary Check 1.

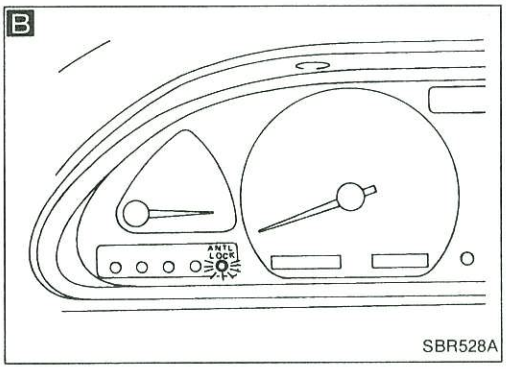
SBR528A

## Diagnostic Procedure 4

### SYMPTOM: ABS doesn't work.

**Refer to worksheet results.**

B

Check whether warning activates.
- Yes → Refer to Preliminary Check 4 result. Go to Self-diagnosis. (See page BR-30.)
- No ↓

Check whether vehicle speed is under 10 km/h (6 MPH).
- Yes → ABS doesn't work in this condition.
- No ↓

Refer to Preliminary Check 2 result.

O.K. but ABS still doesn't work. ↓

C

Check actuator by referring to Electrical Components Inspection — ACTUATOR. (See page BR-44.)

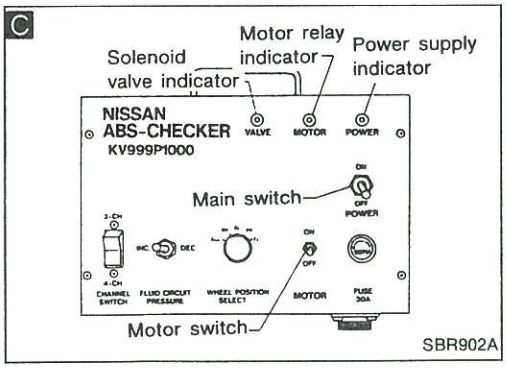

SBR902A

## Diagnostic Procedure 5

**SYMPTOM: ABS works but warning activates.**

Check whether alternator produces proper output.
Refer to EL section.
→ No → Remedy.
↓ Yes

Check whether battery has enough voltage.
Refer to EL section.
→ No → Remedy.
↓ Yes

Refer to Preliminary Check 4 result.
Go to Self-diagnosis. (See page BR-30.)

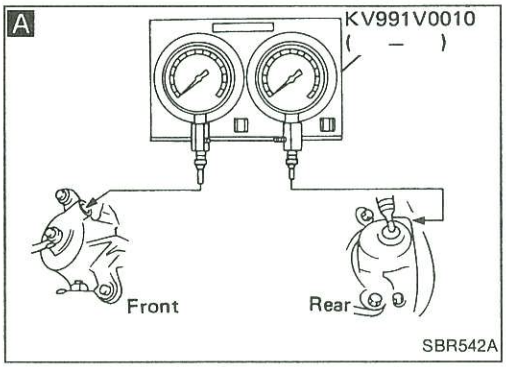


## Diagnostic Procedure 6

**SYMPTOM: ABS works frequently.**

A

CHECK BRAKE FLUID PRESSURE.
Check whether brake fluid pressure distribution is normal.
**$D_2/D_1$: 52 - 56/75**
→ N.G. → Perform Preliminary Check 1.
↓ O.K.

B

Check whether front axles have excessive looseness.
→ Yes → Remedy.
↓ No

Perform Preliminary Check 2 and Ground Circuit Check.

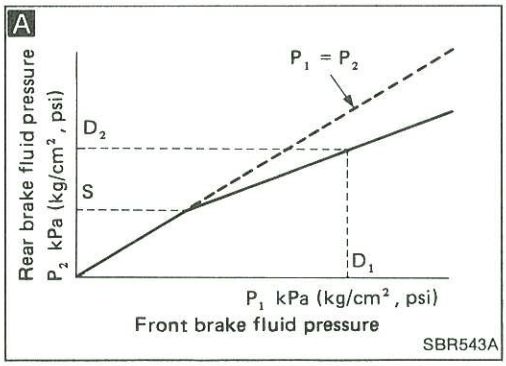


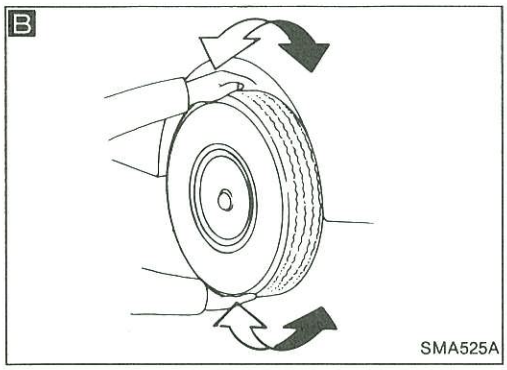

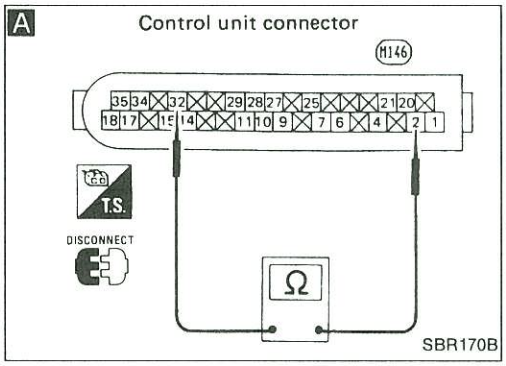


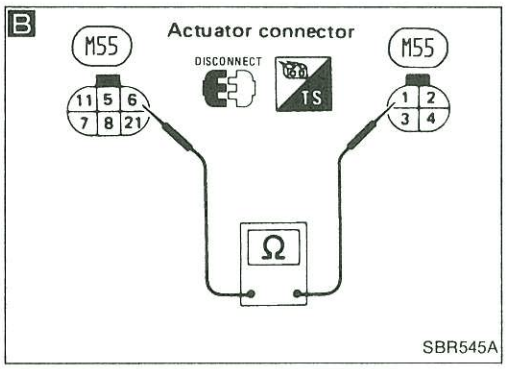


## Diagnostic Procedure 7

### ACTUATOR SOLENOID VALVAE (L.E.D. flashing number 1 - 4)

INSPECTION START
Remove battery negative terminal connector.

A

CHECK SOLENOID VALVE RESISTANCE.
Disconnect control unit connector.
Check resistance between control unit connector (vehicle side) terminals.
Flashing number 1:
Terminals ㉜ and ②
Flashing number 2:
Terminals ㉜ and ㉟
Flashing number 3 or 4:
Terminals ㉜ and ⑱
**Resistance: 0.7 - 1.6Ω**

O.K. → Replace control unit.

N.G.

B

Disconnect actuator connector.
Check resistance between actuator connector (actuator side) terminals.
Flashing number 1:
Terminals ⑥ and ①
Flashing number 2:
Terminals ⑥ and ②
Flashing number 3 or 4:
Terminals ⑥ and ③
**Resistance: 0.7 - 1.6Ω**

O.K. → Repair harness between actuator connector and control unit connector.

N.G.

Replace actuator.

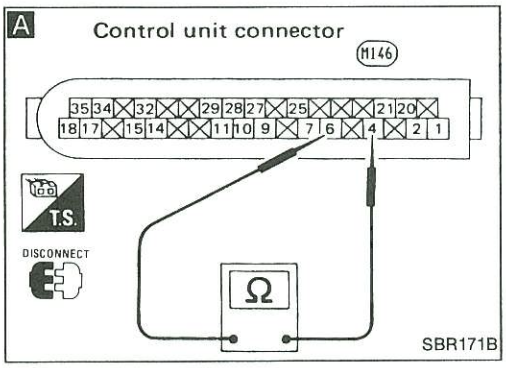


## Diagnostic Procedure 8

### WHEEL SPEED SENSOR (L.E.D. flashing number 5 - 8)

INSPECTION START
Remove battery negative terminal connector.

A

CHECK SPEED SENSOR RESISTANCE.
Disconnect control unit connector.
Check resistance between control unit connector (vehicle side) terminals.
Flashing number 5:
Terminals ④ and ⑥
Flashing number 6:
Terminals ⑪ and ㉑
Flashing number 7 or 8:
Terminals ⑦ and ⑨
**Resistance: 0.8 - 1.2 kΩ**

O.K. → Replace control unit.

N.G.

Refer to Preliminary Check 3 result.
Check whether sensor has 0.8 - 1.2 kΩ resistance.

N.G. → Replace sensor.

O.K.

Repair harness between sensor connector and control unit connector.

## Diagnostic Procedure 9

### ACTUATOR MOTOR RELAY (L.E.D. flashing number 9)

A

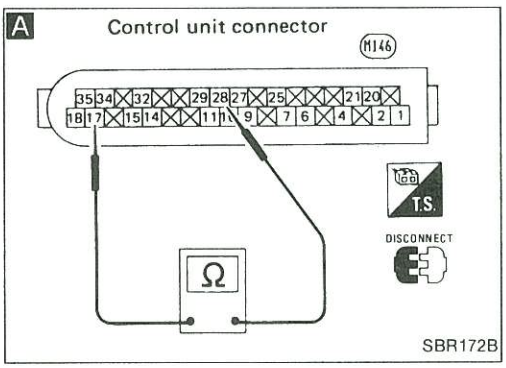


B

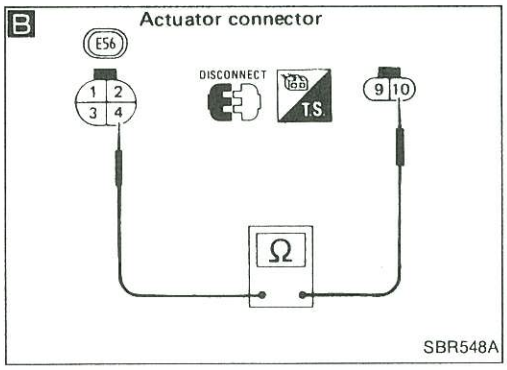


C

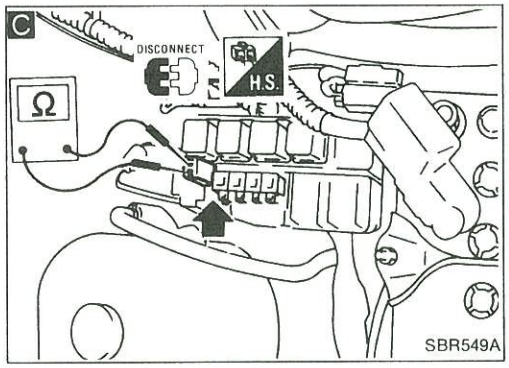


D

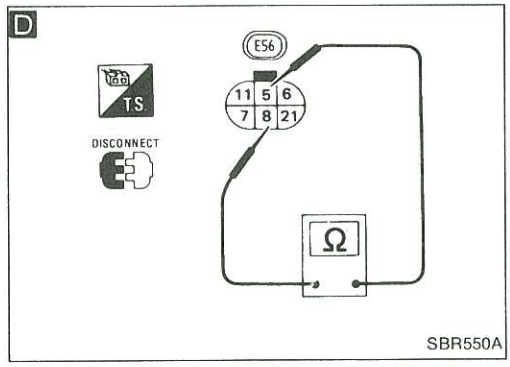


E

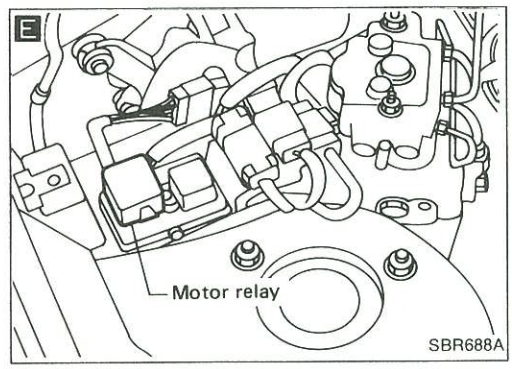


INSPECTION START
Remove battery negative terminal connector.

A

CHECK MOTOR RELAY SOLENOID RESISTANCE.
Disconnect control unit connector.
Check resistance between control unit connector (vehicle side) terminals ⑰ and ㉘.
**Resistance: 45 - 55Ω**

N.G. → D

D

Disconnect actuator connector.
Check resistance between actuator connector (actuator side) terminals ⑧ and ⑤.
**Resistance: 45 - 55Ω**

O.K. → Repair harness between actuator and control unit.

N.G. → E

E

Replace motor relay.

O.K. → B

B

CHECK MOTOR RELAY DEACTIVATION.
Disconnect actuator connector.
Check continuity between actuator connector (actuator side) terminals ④ and ⑩.

Yes → E

E

Replace motor relay.

No → C

C

Check if motor's fusible link is blown.
**Resistance:**
**Approximately 0Ω**

Yes → Replace fusible link.

No → Perform Electrical Components Inspection — ACTUATOR.
(See page BR-44.)

O.K. → Replace control unit.

N.G. → Replace actuator.

## Diagnostic Procedure 10

### ACTUATOR SOLENOID VALVE RELAY (L.E.D. flashing number 10)

A

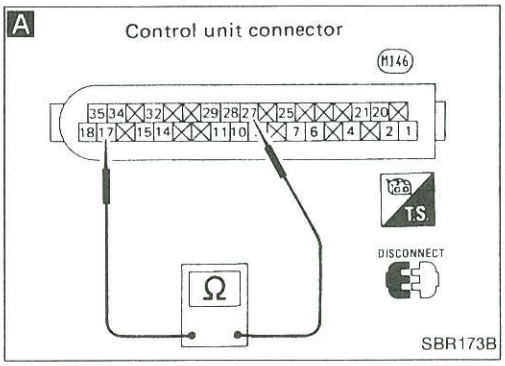


B

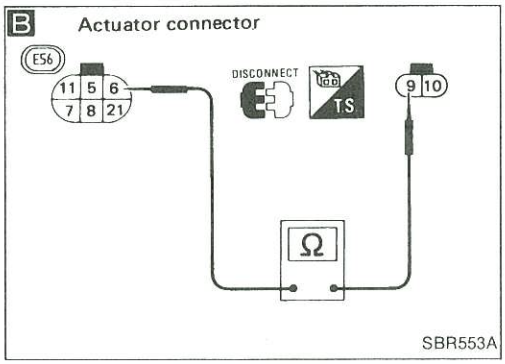


C

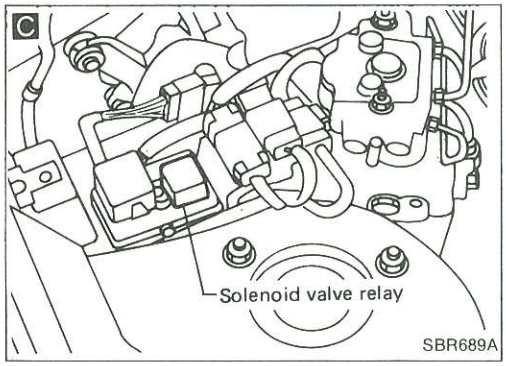


D

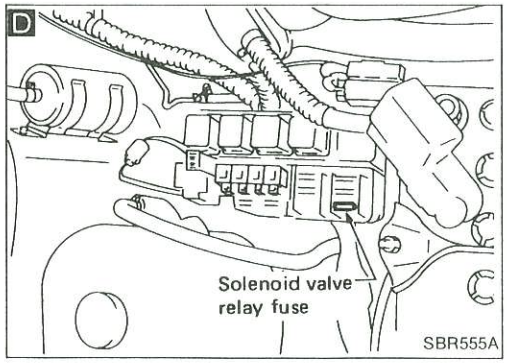


E

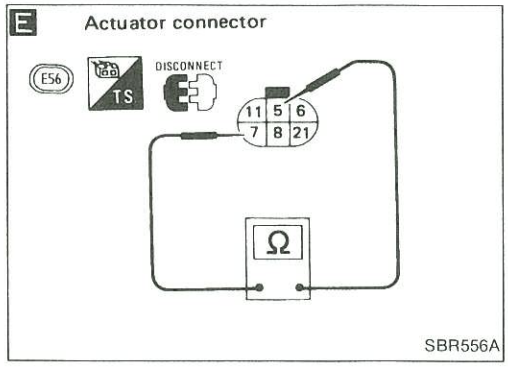


INSPECTION START
Remove battery negative terminal connector.

A

CHECK SOLENOID VALVE RELAY RESISTANCE.
Disconnect control unit connector.
Check resistance between control unit connector (vehicle side) terminals ㉗ and ⑰.
**Resistance: 80 - 90Ω**

N.G. → E

E

Check resistance between actuator connector (actuator side) terminals ⑦ and ⑤.
**Resistance: 80 - 90Ω**

O.K. → Repair harness between actuator and control unit.

N.G. → C

C

Replace solenoid valve relay.

O.K. → B

B

CHECK SOLENOID VALVE RELAY MOVEMENT.
Disconnect actuator connector.
Check continuity between actuator connector (actuator side) terminals ⑥ and ⑨.

Yes → C

C

Replace solenoid valve relay.

No → D

D

Check if solenoid valve relay fuse is blown.

No → Perform Electrical Components Inspection — ACTUATOR.
(See page BR-44.)

N.G. → Replace actuator.

O.K. → Replace control unit.

Yes → Replace fuse.

## Diagnostic Procedure 11

### CONTROL UNIT (L.E.D. flashing number 16)

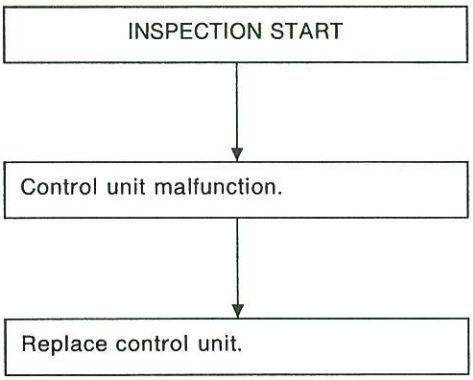

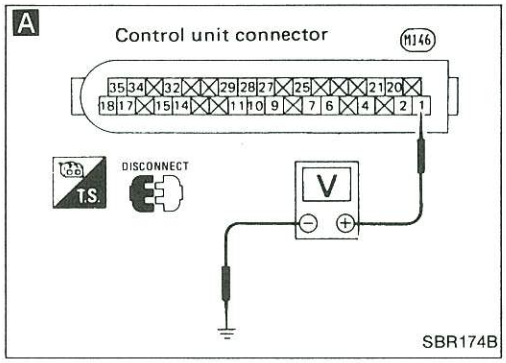


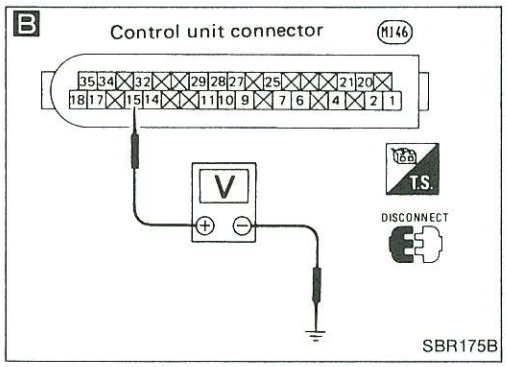


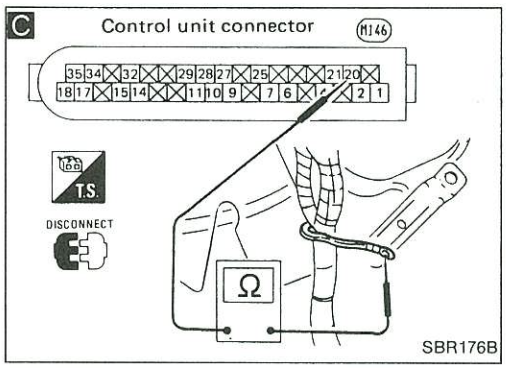


## Diagnostic Procedure 12

### CONTROL UNIT OR POWER SUPPLY AND GROUND CIRCUIT (Warning activates but L.E.D. comes off.)

INSPECTION START

**A**

CHECK CONTROL UNIT POWER SUPPLY.
Disconnect control unit connector.
Check voltage between control unit connector (vehicle side) terminal ① and body ground with ignition switch turned on.

N.G. → Check if control unit "10A" fuse is blown.

- Yes → Replace fuse.
- No → Repair power supply harness.

O.K.

**B**

CHECK ALTERNATOR L TERMINAL VOLTAGE.
Disconnect control unit connector.
Check voltage between control unit connector (vehicle side) terminal ⑮ and body ground after engine starting.
**Voltage: 6V or more**

N.G. → Check if other warnings activate.

- Yes → Repair harness between alternator and control unit.
- No → Malfunctioning alternator.

O.K.

**C**

Check continuity between control unit connector (vehicle side) terminal ⑳ and body ground with ignition switch "OFF".

N.G. → Repair ground harness.

O.K.

Replace control unit

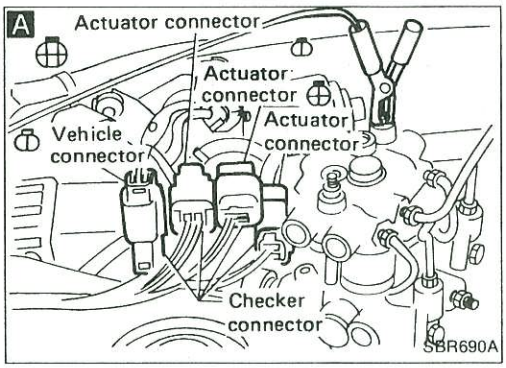


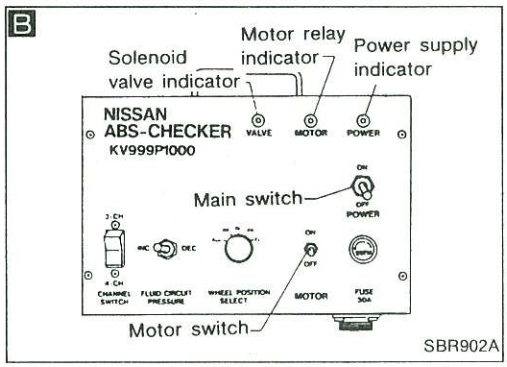


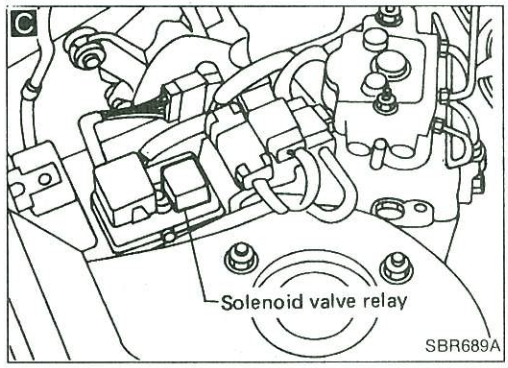


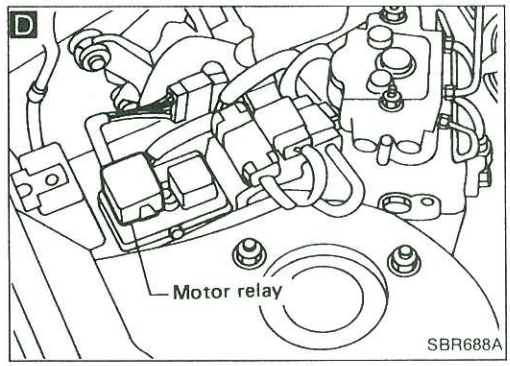


## Electrical Components Inspection

### ACTUATOR (Not self-diagnostic item)

INSPECTION START

A

Connect ABS checker to actuator connector and vehicle harness with battery terminal connected and all checker switches turned off.
Use harness for 3 channel.
Set channel select switch to 3 channel.

B

Turn checker main switch on.
Check power supply indicator for coming on.

No → Replace battery with fully charged new one, if checker connection is correct.

Yes

B

Check checker valve relay indicator for coming on.

No → C Replace solenoid valve relay, if checker connection is correct.

Yes

B step Ⓐ

Select one valve — FL, FR or RR (valves corresponding to each wheel position).
Select brake circuit pressure decreasing position by switch then turn motor switch on.
Select pressure increasing position.

B

Check motor relay indicator for coming on while motor switch is turned on.

No → D Replace motor relay, if checker connection is correct.

Yes

Check motor for operational sound beside the actuator in a quiet place.

No → Replace actuator as assembly, if Diagnostic Procedures 7 - 12 are already performed and checker connection is correct.

Yes

Ⓑ

## Electrical Components Inspection (Cont'd)

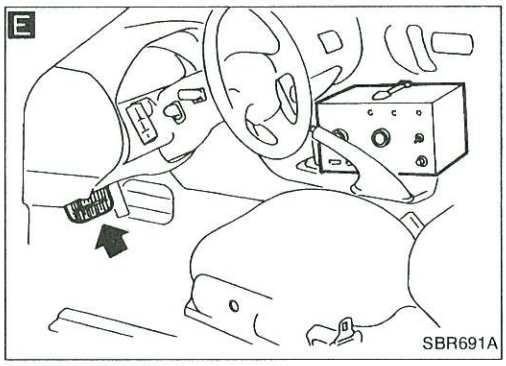


Ⓑ

E

Bring checker in the vehicle and depress the brake pedal.

Check brake pedal for vibration when motor switch is turned on or while operating solenoid valve selecting switch with motor switch turned on.
N.G.: No vibration
O.K.: Vibration

N.G. → Replace actuator as assembly.

O.K.

Check brake pedal for depression when select pressure increases.

N.G. → Replace actuator as assembly.

O.K.

Have all wheel positions been checked?

No → Replace from step Ⓐ.

Yes

Actuator works normally

**CAUTION:**
**Do not set checker at pressure decrease position for more than 5 seconds at a time. Actuator solenoid valve may be damaged.**

## General Specifications

| | Without ABS | With ABS |
|---|---|---|
| Front brake | | |
| Brake model | CL22VB | CL25VA |
| Cylinder bore diameter mm (in) | 54.0 (2.126) | 57.2 (2.252) |
| Pad length x width x thickness mm (in) | 112.8 x 44.8 x 10.0 (4.44 x 1.764 x 0.394) | 125.6 x 45.3 x 11.0 (4.94 x 1.783 x 0.433) |
| Rotor outer diameter x thickness mm (in) | 252 x 20 (9.92 x 0.79) | 257 x 22 (10.12 x 0.87) |
| Rear brake | | |
| Brake model | CL9H | |
| Cylinder bore diameter mm (in) | 33.96 (1.3370) | |
| Pad length x width x thickness mm (in) | 75.0 x 40.0 x 9.5 (2.953 x 1.575 x 0.374) | |
| Rotor outer diameter x thickness mm (in) | 258 x 9 (10.16 x 0.35) | |

| | Without ABS | With ABS |
|---|---|---|
| Master cylinder | | |
| Cylinder bore diameter mm (in) | 22.22 (7/8) | 23.81 (15/16) |
| Control valve | | |
| Valve model | Proportioning valve (within master cylinder) | |
| Split point x reducing ratio kPa (kg/cm$^2$, psi) | 3,923 (40, 569) x 0.4 | |
| Brake booster | | |
| Booster model | M23 | M195T |
| Diaphragm diameter mm (in) | 230 (9.06) | Primary 205 (8.07) Secondary 180 (7.09) |
| Brake fluid | | |
| Recommended brake fluid | DOT 3 | |

## Inspection and Adjustment

### DISC BRAKE

| Brake model | CL22VB | CL25VA | CL9H |
|---|---|---|---|
| Pad wear limit | | | |
| Minimum thickness mm (in) | 2.0 (0.079) | | |
| Rotor repair limit | | | |
| Minimum thickness mm (in) | 18.0 (0.709) | 20.0 (0.787) | 8.0 (0.315) |
| Maximum runout mm (in) | 0.07 (0.0028) | | |

### BRAKE PEDAL

| | |
|---|---|
| Free height mm (in) | |
| M/T | 177 - 187 (6.97 - 7.36) |
| A/T | 186 - 196 (7.32 - 7.72) |
| Depressed height [under force of 490 N (50 kg, 110 lb) with engine running] mm (in) | 100 (3.94) or more |
| Clearance between pedal stopper and threaded end of stop lamp and A.S.C.D. switches mm (in) | 0.3 - 1.0 (0.012 - 0.039) |
| Pedal free play at clevis mm (in) | 1 - 3 (0.04 - 0.12) |

### PARKING BRAKE

| | |
|---|---|
| Control type | Center lever |
| Number of notches [under force of 196 N (20 kg, 44 lb)] | 6 - 8 |
| Number of notches (when warning switch comes on) | 1 |

# STEERING SYSTEM

SECTION ST

# CONTENTS


**PRECAUTIONS AND PREPARATION** ..... 2
- Precautions ..... 2
- Special Service Tools ..... 2
- Commercial Service Tools ..... 3

**ON-VEHICLE SERVICE** ..... 4
- Checking Steering Wheel Play ..... 4
- Checking Neutral Position on Steering Wheel ..... 4
- Front Wheel Turning Angle ..... 4
- Checking Gear Housing Movement ..... 5
- Adjusting Rack Retainer ..... 5
- Checking and Adjusting Drive Belts ..... 5
- Checking Fluid Level ..... 5
- Checking Fluid Leakage ..... 5
- Bleeding Hydraulic System ..... 6
- Checking Steering Wheel Turning Force ..... 6
- Checking Hydraulic System ..... 7

**STEERING WHEEL AND STEERING COLUMN** ..... 8
- Removal ..... 8
- Installation ..... 9
- Disassembly and Assembly ..... 10
- Inspection ..... 11

**POWER STEERING GEAR AND LINKAGE (Model PR24SC)** ..... 12
- Removal and Installation ..... 12
- Disassembly and Assembly ..... 14
- Disassembly ..... 15
- Inspection ..... 16
- Assembly ..... 17
- Adjustment ..... 21

**POWER STEERING OIL PUMP** ..... 23
- Disassembly and Assembly ..... 23
- Pre-disassembly Inspection ..... 23
- Disassembly ..... 23
- Inspection ..... 24
- Assembly ..... 24

**SUPER HICAS SYSTEM** ..... 26
- HICAS Component Parts Location ..... 26
- System Diagram ..... 26
- On-vehicle Service ..... 27
- Repair of Component Parts ..... 29
- Trouble Diagnoses ..... 38

**SERVICE DATA AND SPECIFICATIONS (S.D.S.)** ..... 67
- General Specifications ..... 67
- Inspection and Adjustment ..... 67

## Precautions

- **Before disassembly, thoroughly clean the outside of the unit.**
- **Disassembly should be done in a clean work area. It is important to prevent the internal parts from becoming contaminated by dirt or other foreign matter.**
- **When disassembling parts, be sure to place them in order in a parts rack so they can be reinstalled in their proper positions.**
- **Use nylon cloths or paper towels to clean the parts; common shop rags can leave lint that might interfere with their operation.**
- **Before inspection or reassembly, carefully clean all parts with a general purpose, non-flammable solvent.**
- **Before assembly, apply a coat of recommended A.T.F.* to hydraulic parts. Vaseline may be applied to O-rings and seals. Do not use any grease.**
- **Replace all gaskets, seals and O-rings. Avoid damaging O-rings, seals and gaskets during installation. Perform functional tests whenever designated.**

*: **Automatic transmission fluid**

## Special Service Tools

| Tool number<br>(Kent-Moore No.)<br>Tool name | Description | |
|---|---|---|
| KV48100700<br>(J26364)<br>Torque adapter | | Measuring pinion rotating torque |
| ST27180001<br>(J25726-A)<br>Steering wheel puller | 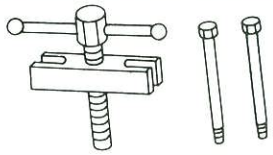 | Removing and installing steering wheel |
| HT72520000<br>(J25730-A)<br>Ball joint remover | 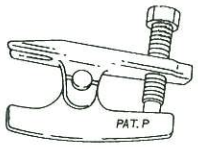 | Removing ball joint |
| ST27091000<br>(J26357)<br>Pressure gauge | 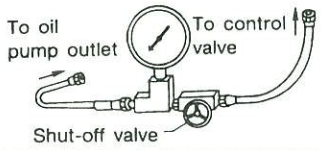 | Measuring oil pressure |
| KV48102500<br>( — )<br>Pressure gauge adapter | 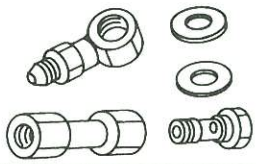 | Measuring oil pressure |

## Special Service Tools (Cont'd)

| Tool number<br>(Kent-Moore No.)<br>Tool name | Description | |
|---|---|---|
| ST327S000<br>(See J25765-A)<br>① GG91030000<br>(J25765-A)<br>Torque wrench<br>② HT62940000<br>( — )<br>Socket adapter<br>③ HT62900000<br>( — )<br>Socket adapter | 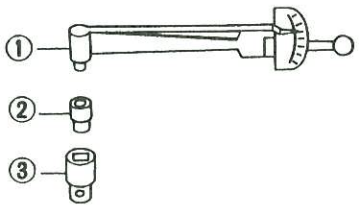 | Measuring turning torque |
| KV48104400<br>( — )<br>Rack seal ring reformer | 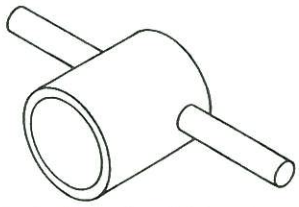 | Reforming teflon ring |
| KV32101100<br>( — )<br>Pin punch | 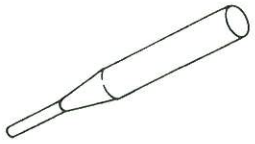 | Removing and installing tube seat |

## Commercial Service Tools

| Tool name | Description | |
|---|---|---|
| Rear oil seal drift | 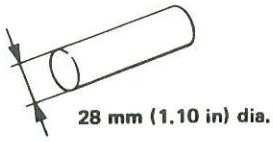 | Installing rear oil seal |
| Pinion oil seal drift | 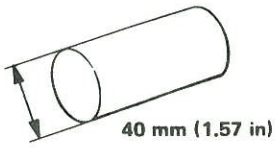 | Installing pinion oil seal |
| Oil pump attachment | 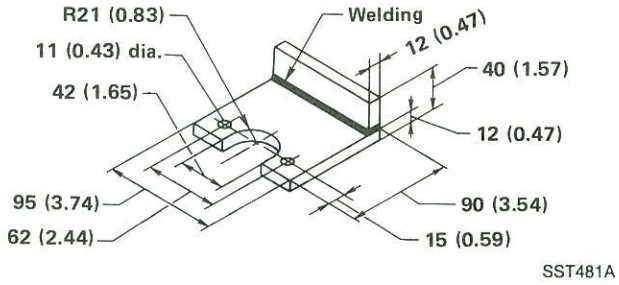 <br>Unit: mm (in) | Disassembling and assembling oil pump |

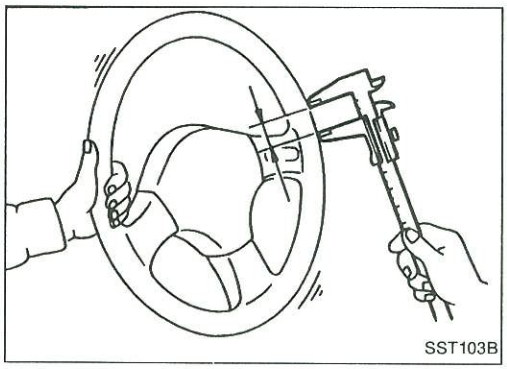
SST103B

## Checking Steering Wheel Play

1. With wheels in a straight-ahead position, check steering wheel play.
   **Steering wheel play:**
   **35 mm (1.38 in) or less**
2. If it is not within specification, check steering gear assembly when front suspension and axle, steering gear assembly and steering column are mounted correctly.

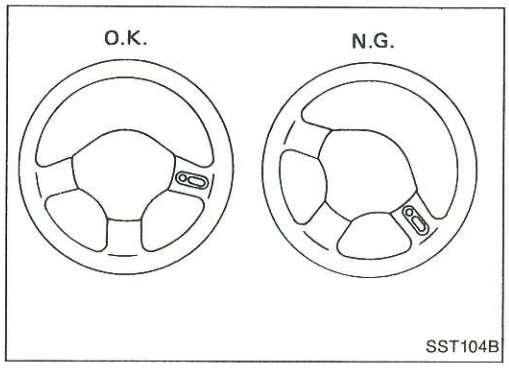

SST104B

## Checking Neutral Position on Steering Wheel

### Pre-checking

- Make sure that wheel alignment is correct.
  **Wheel alignment:**
  **Refer to section FA for S.D.S.**
- Verify that the steering gear is centered before removing the steering wheel.

### Checking

- Check that the steering wheel is in the neutral position when driving straight ahead.
- If it is not in the neutral position, remove the steering wheel and reinstall it correctly.
- If the neutral position is between two serrated teeth, loosen tie-rod lock nut and move tie-rod in the opposite direction by the same amount on both left and right sides to compensate for error in the neutral position.

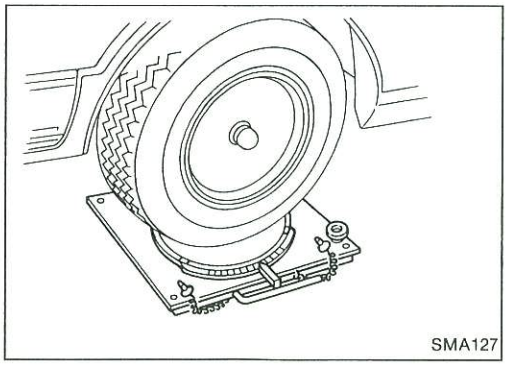
SMA127

## Front Wheel Turning Angle

- Rotate steering wheel all the way right and left; measure turning angle.
  **Turning angle of full turns:**
  **Refer to section FA for S.D.S.**

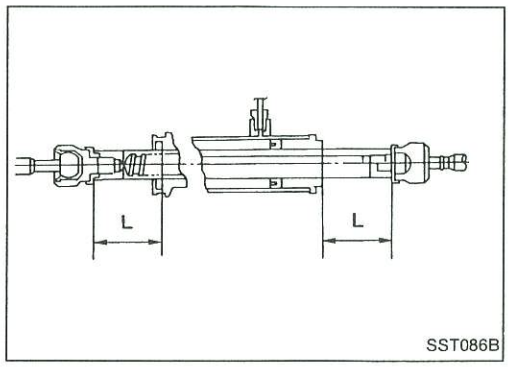

SST086B

- If it is not within specification, check rack stroke.
  **Measured length "L":**
  **Refer to S.D.S.**

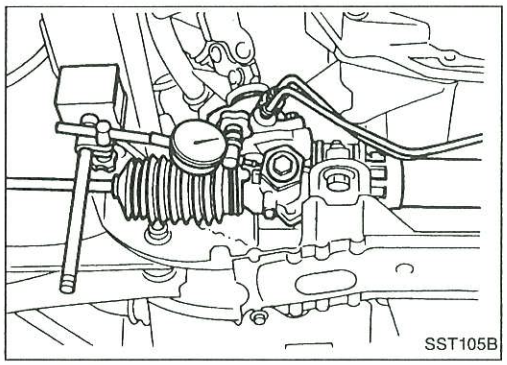
SST105B

## Checking Gear Housing Movement

1. Check the movement of steering gear housing during stationary steering on a dry paved surface.
- Apply a force of 49 N (5 kg, 11 lb) to steering wheel to check the gear housing movement.
  Turn off ignition key while checking.
  **Movement of gear housing:**
  **±2 mm (±0.08 in) or less**
2. If movement exceeds the limit, replace mount insulator after confirming proper installation of gear housing clamps.

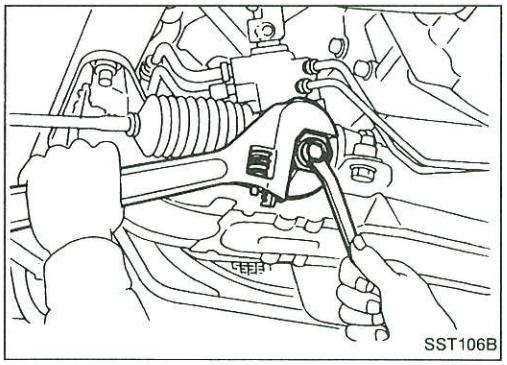
SST106B

## Adjusting Rack Retainer

- Perform this driving test on a flat road.
1. Check whether vehicle moves in a straight line when steering wheel is released.
2. Check whether steering wheel returns to neutral position when steering wheel is released from a slightly turned (approx. 20°) position.
- If any abnormality is found, correct it by resetting adjusting screw.

## Checking and Adjusting Drive Belts

Refer to section MA for Drive Belt Inspection.

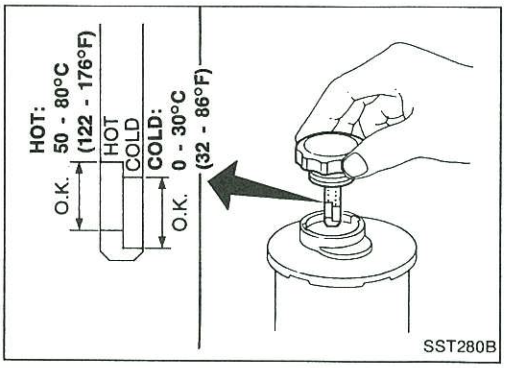

SST280B

## Checking Fluid Level

Check fluid level.
Fluid level should be checked using "HOT" range on dipstick at fluid temperatures of 50 to 80°C (122 to 176°F) or using "COLD" range on dipstick at fluid temperatures of 0 to 30°C (32 to 86°F).

**CAUTION:**
- **Do not overfill.**
- **Recommended fluid is Automatic Transmission Fluid "DEXRON™ II" type.**

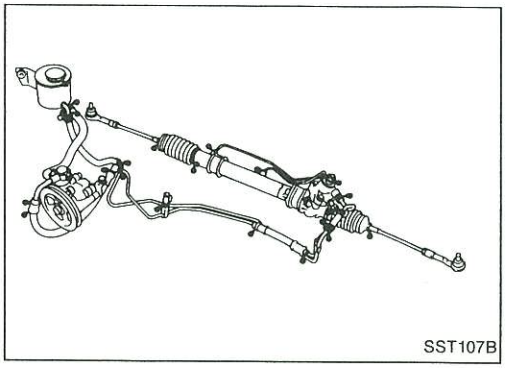
SST107B

## Checking Fluid Leakage

Check the lines for improper attachment and for leaks, cracks, damage, loose connections, chafing or deterioration.
1. Run engine at idle speed or 1,000 rpm.

**Make sure temperature of fluid in oil tank rises to 60 to 80°C (140 to 176°F).**

2. Turn steering wheel right-to-left several times.
3. Hold steering wheel at each "lock" position for five seconds and carefully check for fluid leakage.

## Checking Fluid Leakage (Cont'd)

**CAUTION:**

**Do not hold the steering wheel in a locked position for more than 15 seconds.**

4. If fluid leakage at connectors is noticed, loosen flare nut and then retighten.

**Do not overtighten connector as this can damage O-ring, washer and connector.**

## Bleeding Hydraulic System

1. Raise front end of vehicle until wheels clear ground.
2. Add fluid into oil tank to specified level. Meanwhile, quickly turn steering wheel fully to right and left and lightly touch steering stoppers.
   Repeat steering wheel operation until fluid level no longer decreases.
3. Start engine.
   Repeat step 2 above.

- Incomplete air bleeding will cause the following to occur. When this happens, bleed air again.

a. Generation of air bubbles in reservoir tank
b. Generation of clicking noise in oil pump
c. Excessive buzzing in oil pump

While the vehicle is stationary or while turning the steering wheel slowly, fluid noise may occur in the valve or oil pump. This noise is inherent in this steering system, and it will not affect performance or durability of the system.

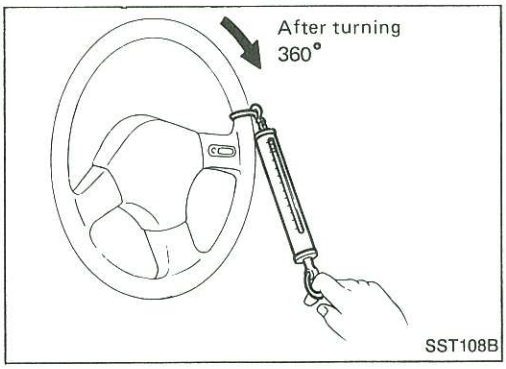


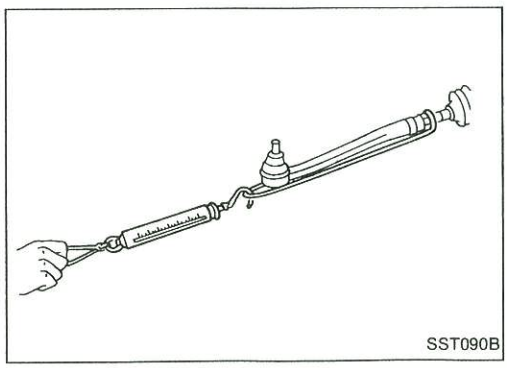


## Checking Steering Wheel Turning Force

1. Park vehicle on a level, dry surface and set parking brake.
2. Start engine.
3. Bring power steering fluid up to adequate operating temperature. [Make sure temperature of fluid is approximately 60 to 80°C (140 to 176°F).]

**Tires need to be inflated to normal pressure.**

4. Check steering wheel turning force when steering wheel has been turned 360° from the neutral position.
   **Steering wheel turning force:**
   **39 N (4 kg, 9 lb) or less**
5. If steering wheel turning force is out of specifications, check rack sliding force to detect condition of steering gear assembly.

a. Disconnect steering column lower joint and knuckle arms from the gear.
b. Start and run engine at idle to make sure steering fluid has reached normal operating temperature.
c. While pulling tie-rod slowly in the ±11.5 mm (±0.453 in) range from the neutral position, make sure rack sliding force is within specification.

## Checking Steering Wheel Turning Force (Cont'd)

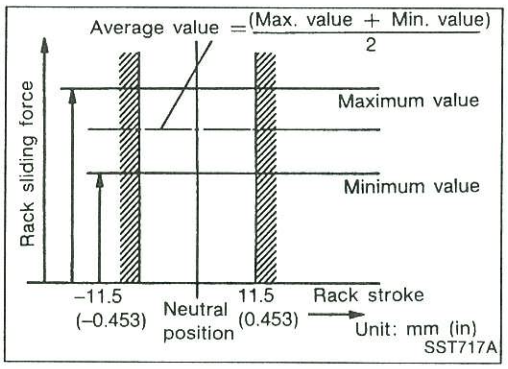


**Average rack sliding force:**
**167 - 226 N (17 - 23 kg, 37 - 51 lb)**

6. If rack sliding force is not within specification, overhaul steering gear assembly.

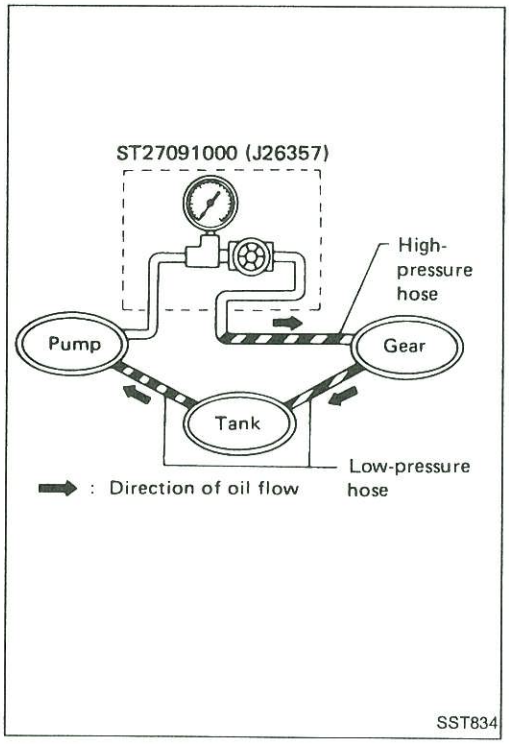


## Checking Hydraulic System

Before starting, check belt tension, driving pulley and tire pressure.

1. Set Tool. Open shut-off valve. Then bleed air. (See "Bleeding Hydraulic System".)
2. Run engine.

**Make sure temperature of fluid in tank rises to 60 to 80°C (140 to 176°F).**

**WARNING:**

**Warm up engine with shut-off valve fully opened. If engine is started with shut-off valve closed, oil pressure in oil pump will increase to relief pressure, resulting in an abnormal rise in oil temperature.**

3. Check pressure with steering wheel fully turned to left and right positions with engine idling at 1,000 rpm.

**CAUTION:**

**Do not hold the steering wheel in a locked position for more than 15 seconds.**

**Refer to S.D.S.**

4. If oil pressure is below the standard pressure, slowly close shut-off valve and check pressure.
- When pressure reaches standard pressure, gear is damaged.
- When pressure remains below standard pressure, pump is damaged.

**CAUTION:**

**Do not close shut-off valve for more than 15 seconds.**

5. If oil pressure is higher than standard pressure, check oil pump flow control valve.
6. After checking hydraulic system, remove Tool and add fluid as necessary, then completely bleed air out of system.

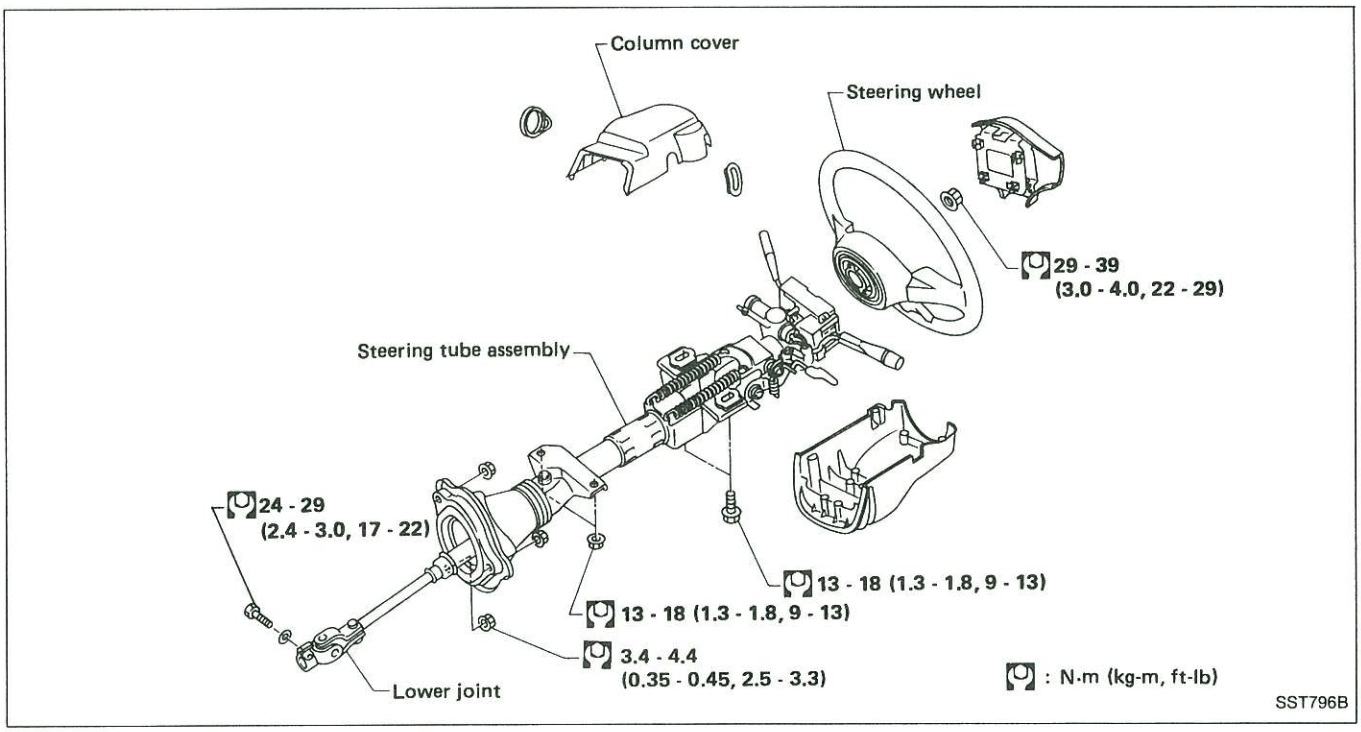


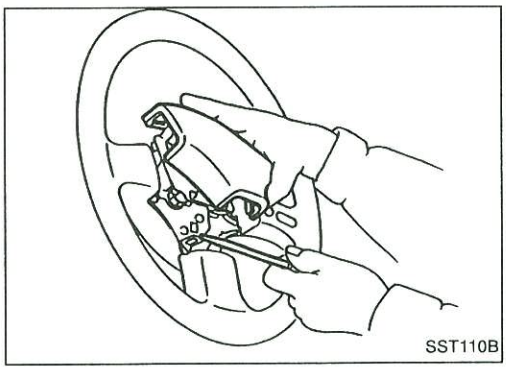


## Removal

### STEERING WHEEL

- Pull out horn pad.

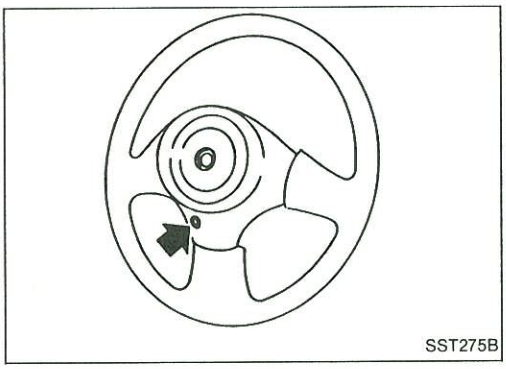


**If it is hard to pull out horn pad, temporarily loosen fixing screw of horn pad retaining spring.**

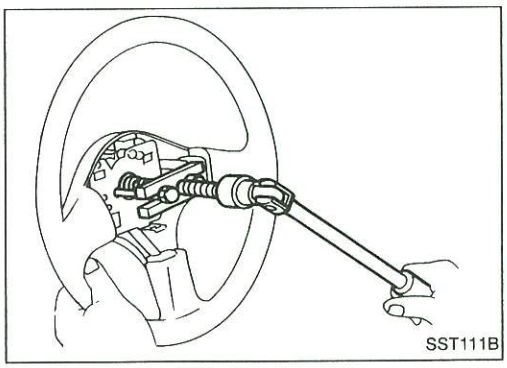


- Remove steering wheel with Tool.

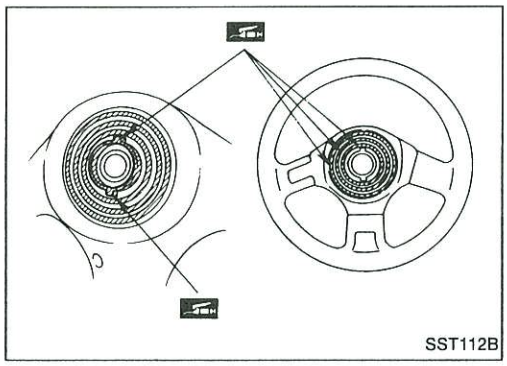
SST112B

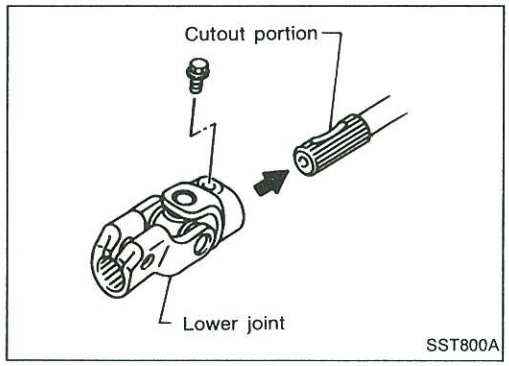

SST800A

## Installation

### STEERING WHEEL

When installing steering wheel, apply multi-purpose grease to entire surface of turn signal cancel pin (both portions) and also to horn contact slip ring.

### STEERING COLUMN

- When installing steering column, fingertighten all lower bracket and clamp retaining bolts; then tighten them securely. Do not apply undue stress to steering column.
- When attaching coupling joint, be sure tightening bolt faces cutout portion.

**CAUTION:**

**After installing steering column, turn steering wheel to make sure it moves smoothly and that the number of turns from the straight forward position to left and right locks are equal.**

**Be sure that the steering wheel is in a neutral position when driving straight ahead.**

## Disassembly and Assembly

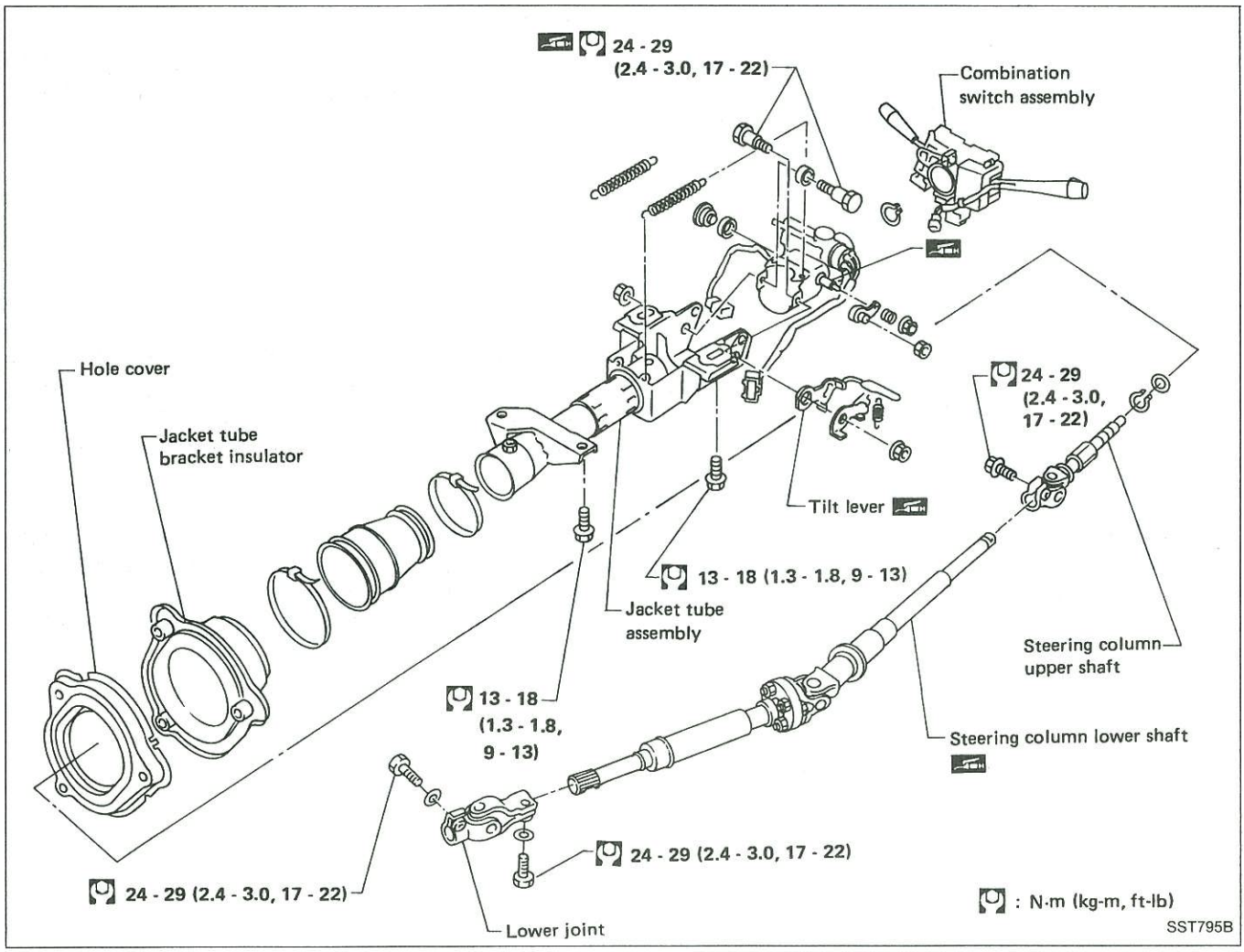


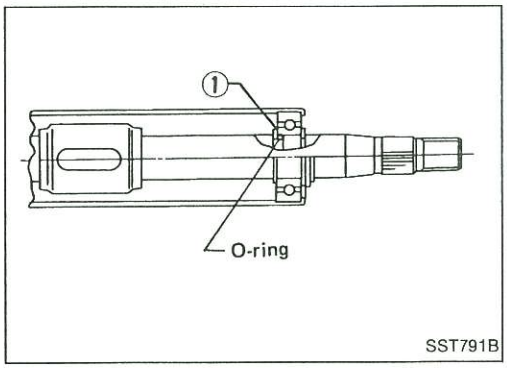


- When disassembling and assembling, unlock steering lock with key.
- Ensure that rounded surface of snap ring faces toward bearing when snap ring is installed.
- Install snap ring ①, then install O-ring into groove before inserting shaft into jacket tube.

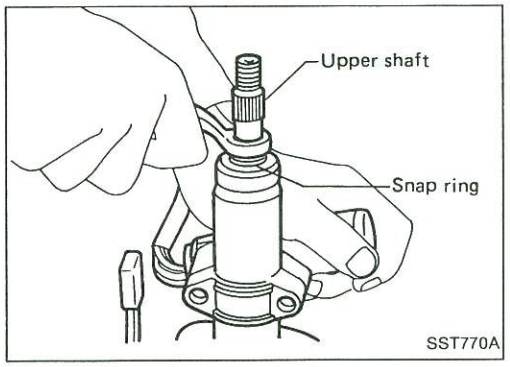


- Install snap ring on upper shaft with box wrench.

## Disassembly and Assembly (Cont'd)

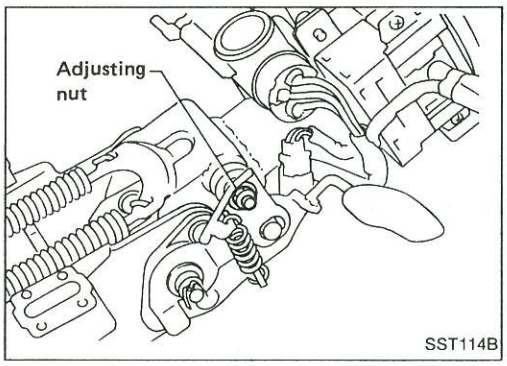

SST114B

- **Tilt mechanism**
  **Tighten adjusting nut to specification.**
  **[O]: 4 - 5 N·m**
  **(0.4 - 0.5 kg-m, 2.9 - 3.6 ft-lb)**

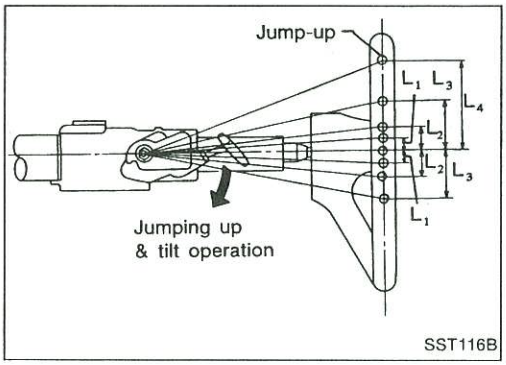

SST116B

- After installing steering column, check tilt mechanism operation.
  **$L_1$: 9.8 mm (0.386 in)**
  **$L_2$: 19.5 mm (0.768 in)**
  **$L_3$: 29.3 mm (1.154 in)**
  **$L_4$: 58.2 mm (2.291 in)**

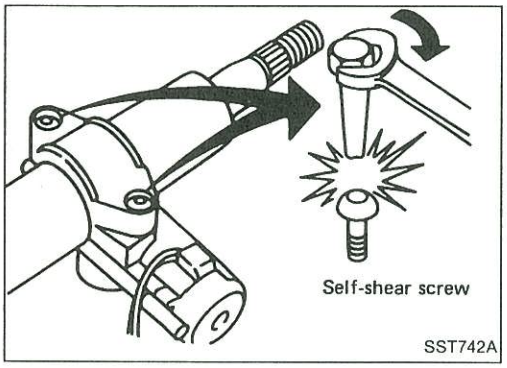

SST742A

- Steering lock

a) Break self-shear type screws with a drill or other appropriate tool.
b) Install self-shear type screws and then cut off self-shear type screw heads.

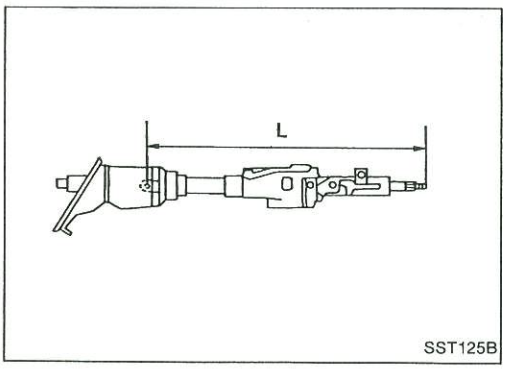

SST125B

## Inspection

- When steering wheel can not be rotated smoothly, check the steering column for the following matters and replace damaged parts.

a. Check column bearings for damage or unevenness. Lubricate with recommended multi-purpose grease or replace steering column as an assembly, if necessary.
b. Check steering column lower shaft for deformation or breakage. Replace if necessary.

- When the vehicle is involved in a light collision, check steering column length "$L_1$" and steering column lower shaft length"$L_2$". If it is not within specifications, replace steering column as an assembly.
  **Steering column length "$L_1$":**
  **652.9 - 654.5 mm (25.70 - 25.77 in)**
  **Steering column lower shaft length "$L_2$":**
  **323.9 - 325.5 mm (12.75 - 12.81 in)**

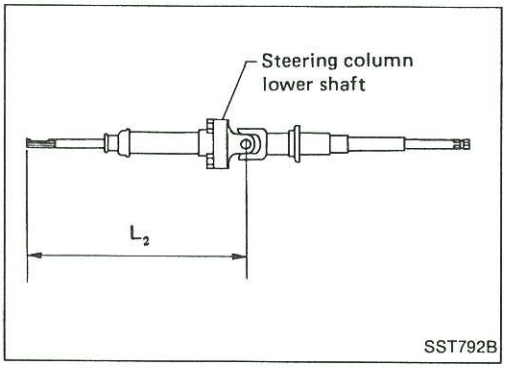

SST792B

## Removal and Installation

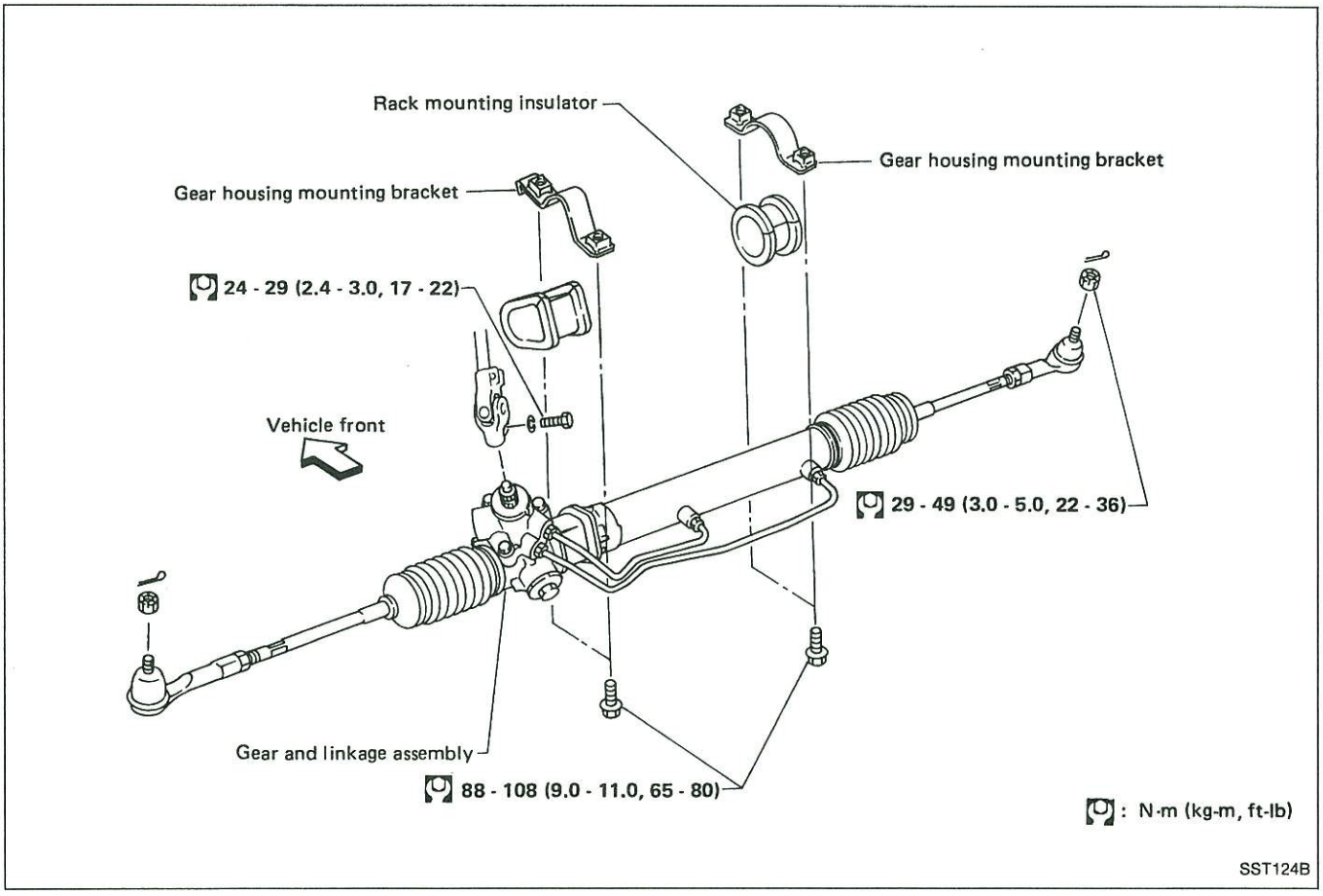


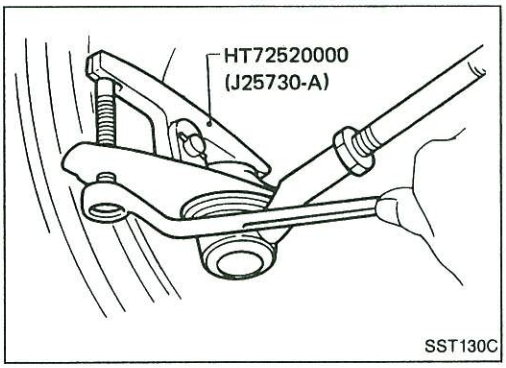


- Detach tie-rod outer sockets from knuckle arms with Tool.

## Removal and Installation (Cont'd)

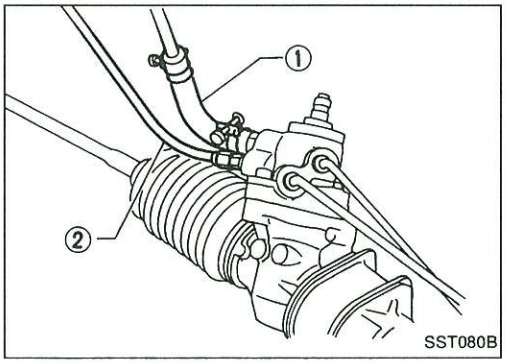


- Install pipe connector.
- Observe specified tightening torque when tightening high-pressure and low-pressure pipe connectors. Excessive tightening can damage threads or damaged connector O-ring.
- The O-ring in low-pressure pipe connector is larger than that in high-pressure connector. Take care to install the proper O-ring.

**Connector tightening torque:**
**Low-pressure side "1"**
**27 - 39 N·m (2.8 - 4.0 kg-m, 20 - 29 ft-lb)**
**High-pressure side "2"**
**15 - 25 N·m (1.5 - 2.5 kg-m, 11 - 18 ft-lb)**

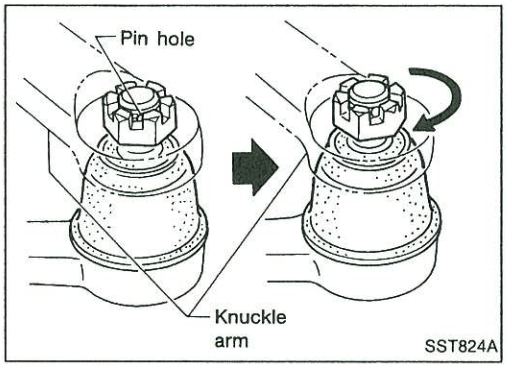


- Initially, tighten nut on tie-rod outer socket and knuckle arm to 29 to 39 N·m (3 to 4 kg-m, 22 to 29 ft-lb). Then tighten further to align nut groove with first pin hole so that cotter pin can be installed.

**CAUTION:**
**Tightening torque must not exceed 49 N·m (5 kg-m, 36 ft-lb).**

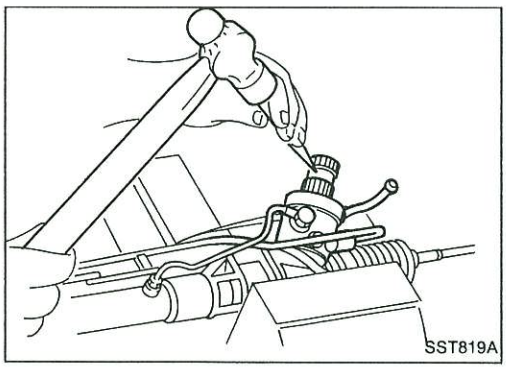


- Before removing lower joint from gear, set gear in neutral (wheels in straight-ahead position). After removing lower joint, put matching mark on pinion shaft and pinion housing to record neutral position of gear.
- To install, set left and right dust boots to equal deflection, and attach lower joint by aligning matching marks of pinion shaft and pinion housing.

## Disassembly and Assembly

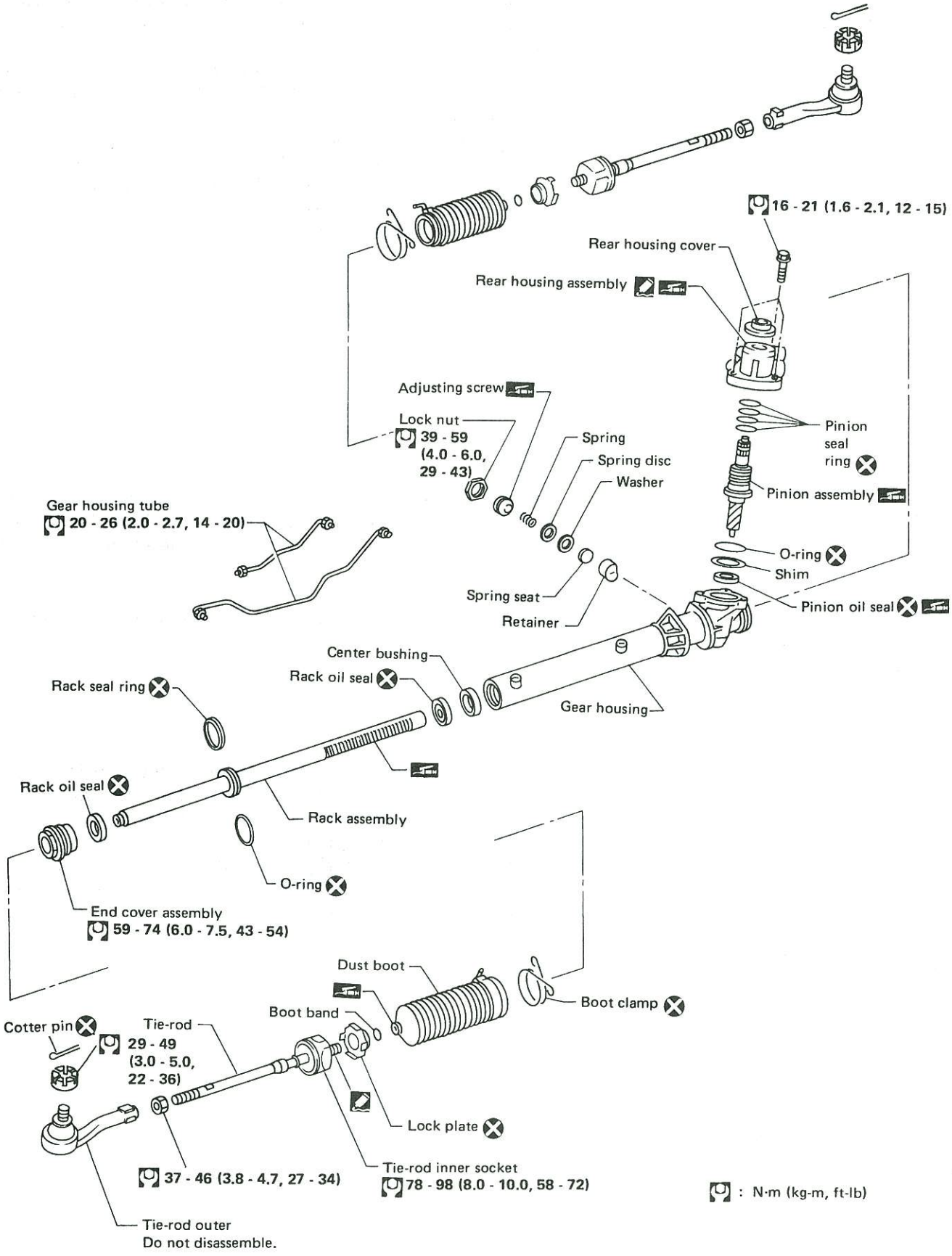


SST897B

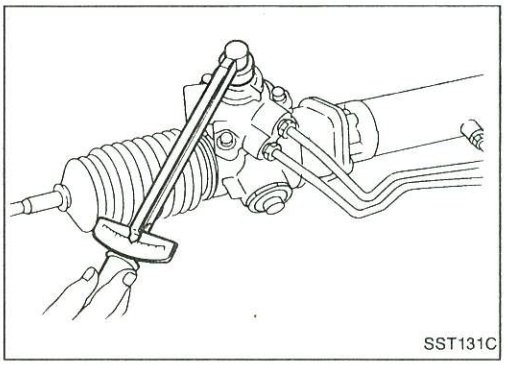
SST131C

## Disassembly

1. Prior to disassembling, measure pinion rotating torque. Record the pinion rotating torque as a reference.

- **Before measuring, disconnect cylinder tube and drain fluid.**
- **Use soft jaws when holding steering gear housing. Handle gear housing carefully, as it is made of aluminum. Do not grip cylinder in a vise.**

2. Remove pinion gear.

**Be careful not to damage pinion gear when removing pinion seal ring.**

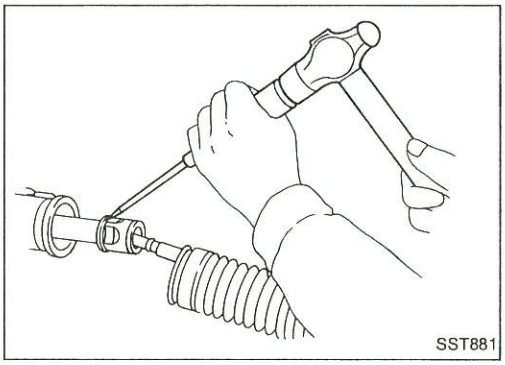
SST881

3. Remove tie-rod outer sockets and boots.
4. Loosen tie-rod inner socket by prying up staked portion, and remove socket.
5. Remove retainer.
6. Remove pinion assembly.

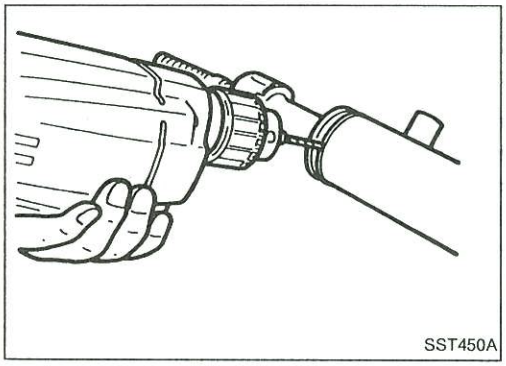
SST450A

7. Drill staked portion of cylinder end cover with drill of 2 to 2.5 mm (0.079 to 0.098 in) diameter, until the staking is eliminated.

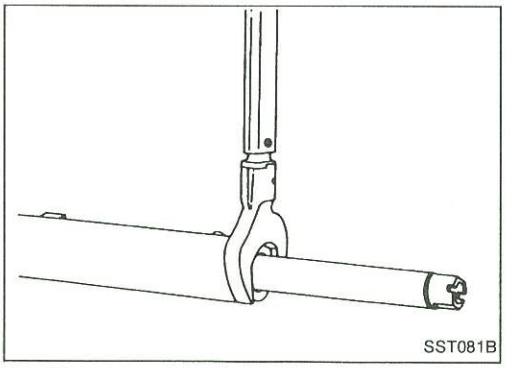
SST081B

8. Remove gear housing end cover assembly with Tool.
9. Draw out rack assembly.

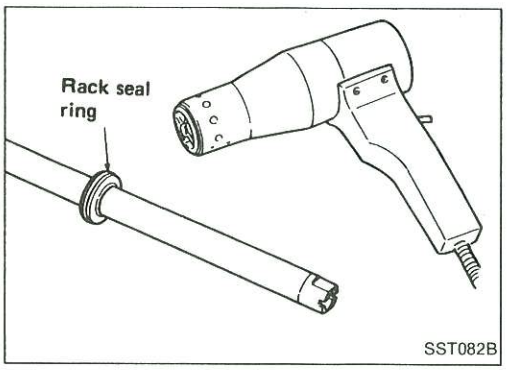

SST082B

10. Remove rack seal ring.

- Using a heat gun, heat rack seal to approximately 40°C (104°F).
- Remove rack seal ring.

**Be careful not to damage rack.**

## Disassembly (Cont'd)

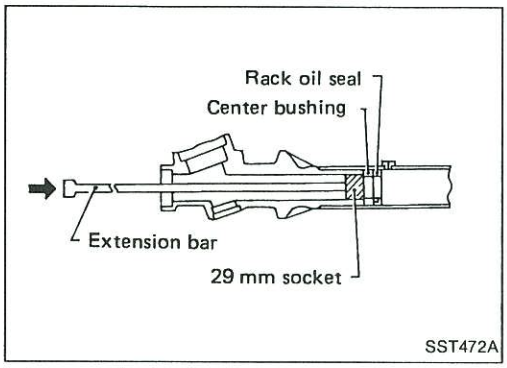


11. Remove center bushing and rack oil seal using tape wrapped socket and extension bar.

**Do not scratch inner surfaces of pinion housing.**

## Inspection

**Thoroughly clean all parts in cleaning solvent or automatic transmission fluid "DEXRON™ II" type, and blow dry with compressed air, if available.**

### BOOT

Check condition of boot. If cracked excessively, replace it.

### RACK

Thoroughly examine rack gear. If damaged, cracked or worn, replace it.

### PINION ASSEMBLY

- Thoroughly examine pinion gear. If pinion gear is damaged, cracked or worn, replace it.
- Inspect bearings to see that they roll freely and are free from cracked, pitted, or worn balls, rollers and races. Replace if necessary.

### GEAR HOUSING CYLINDER

Check gear housing cylinder bore for scratches or other damage. Replace if necessary.

### CYLINDER TUBES

Check cylinder tubes for scratches or other damage. Replace if necessary.

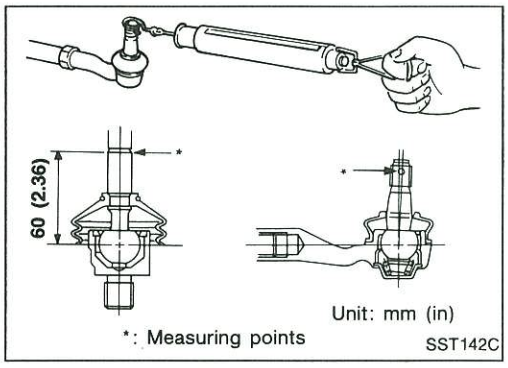


### TIE-ROD OUTER AND INNER SOCKET

- Check ball joint for swinging force.

**Tie-rod outer ball joint:**
**6.9 - 64.7 N**
**(0.7 - 6.6 kg, 1.5 - 14.6 lb)**
**Tie-rod inner ball joint:**
**7.8 - 122.6 N**
**(0.8 - 11.3 kg, 1.8 - 24.9 lb)**

## Inspection (Cont'd)

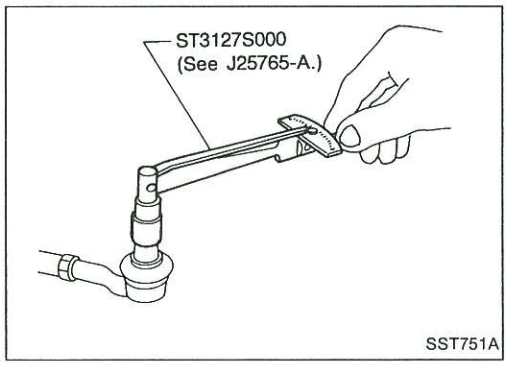


- Check ball joint for rotating torque.
  **Tie-rod outer ball joint:**
  **0.3 - 2.9 N·m**
  **(3 - 30 kg-cm, 2.6 - 26.0 in-lb)**
  **Tie-rod inner ball joint:**
  **7.4 N·m (75 kg-cm, 65 in-lb) or less**

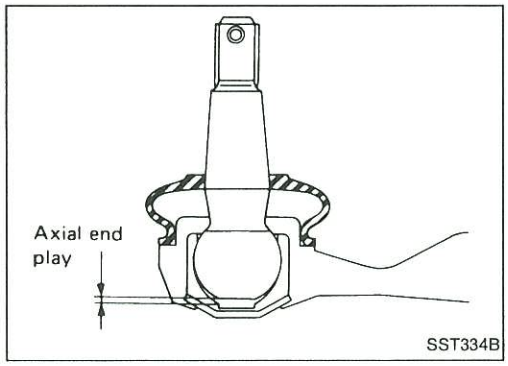


- Check ball joint for axial end play.
  **Tie-rod outer ball joint:**
  **0.5 mm (0.020 in) or less**
  **Tie-rod inner ball joint:**
  **0 mm (0 in)**
- Check condition of dust cover. If cracked excessively, replace it.

## Assembly

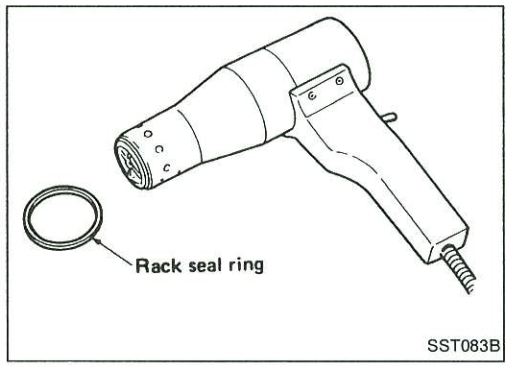


1. Using a heat gun, heat rack seal ring (made of Teflon) to approximately 40°C (104°F) and install it onto rack with your hand.

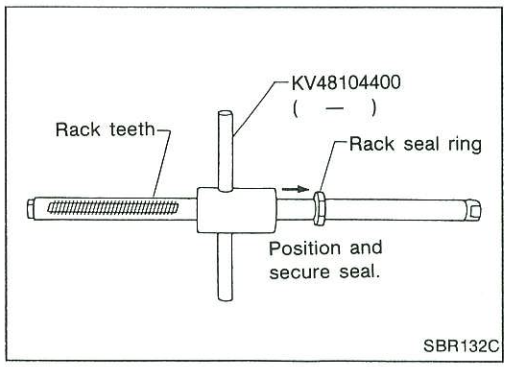


2. Using Tool, compress periphery of rack seal ring (made of Teflon) to position and secure it on rack.

**Always insert the tool from the rack gear side.**

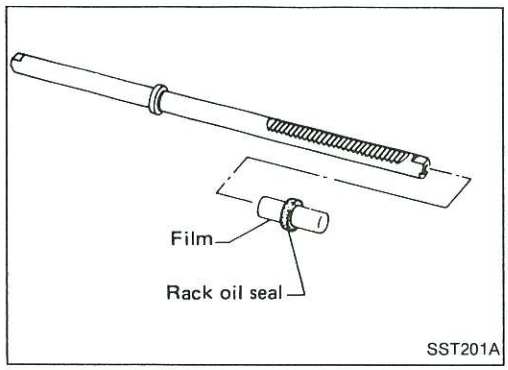


3. Insert rack oil seal.

- **Place plastic film into rack oil seal to prevent damage by rack teeth.**
- **Always remove plastic film after rack oil seal is positioned properly.**
- **Make sure lips of rack oil seal face each other.**

## Assembly (Cont'd)

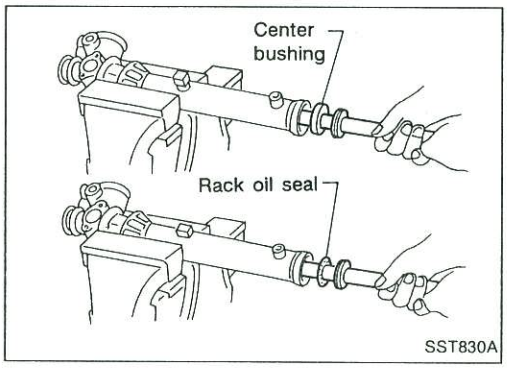


4. Install center bushing and rack oil seal with rack assembly.

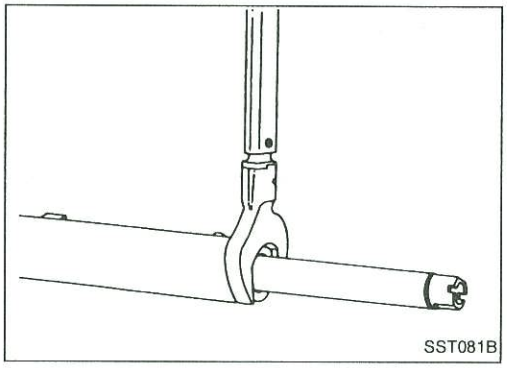


5. Tighten cylinder end cover assembly with Tool.

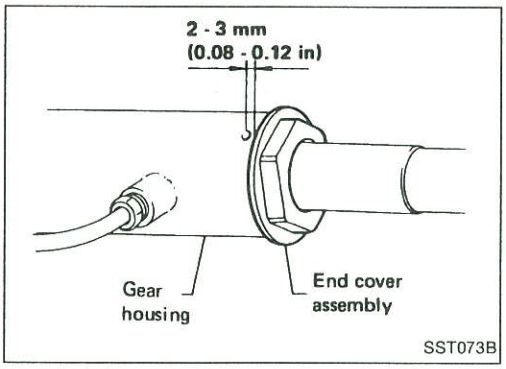


6. Fasten cylinder end cover assembly to gear housing by staking.

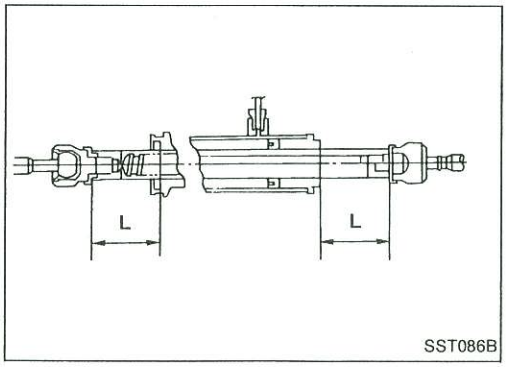


7. Set rack gear in the neutral position.
   **Measured length "L":**
   **Refer to S.D.S.**

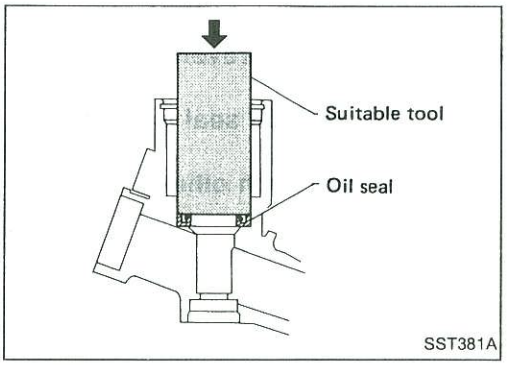


8. Coat seal lip of oil seal with multi-purpose grease and install new pinion oil seal to pinion housing with a suitable tool.

**Make sure lip of oil seal faces up when installed.**

## Assembly (Cont'd)

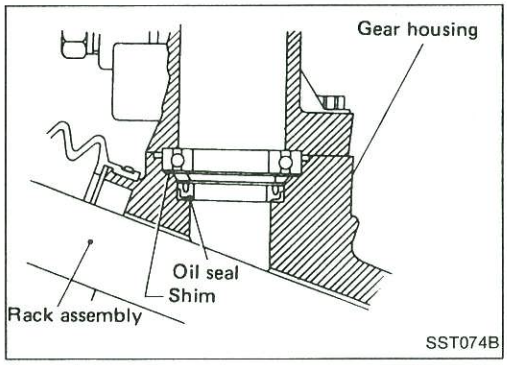


9. Install pinion bearing adjusting shim(s).

**Whenever pinion assembly, gear housing and rear housing are disassembled, replace shim(s) with new ones. Always use the same number of shim(s) when replacing.**

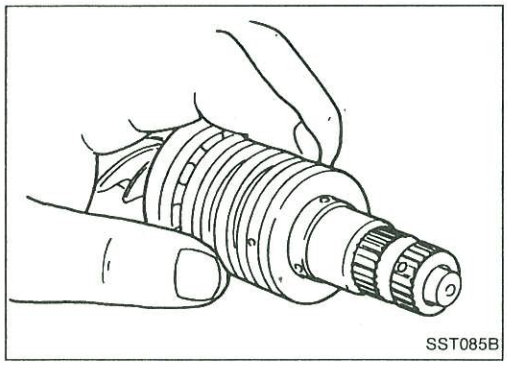


10. Install new pinion seal ring on pinion gear assembly.
- Using a heat gun, heat pinion seal ring to approximately 40°C (104°F) before installing it onto pinion gear assembly.
- Make sure pinion seal ring is properly settled in valve groove.

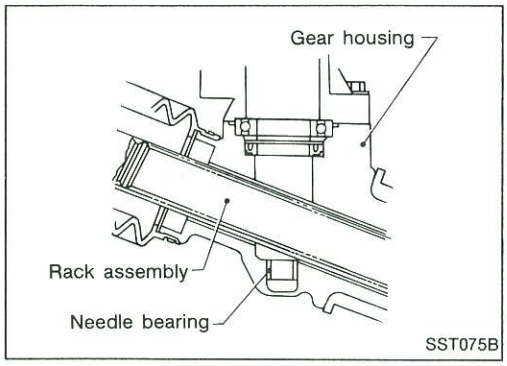


11. Apply a coat of multi-purpose grease to needle bearing roller and oil seal lip before installing pinion assembly in gear housing.

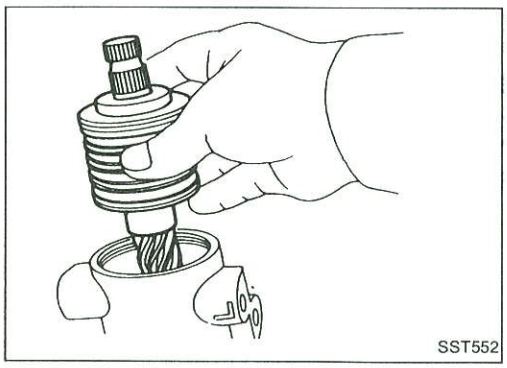


12. Install pinion assembly to pinion housing.

**Be careful not to damage pinion oil seal.**

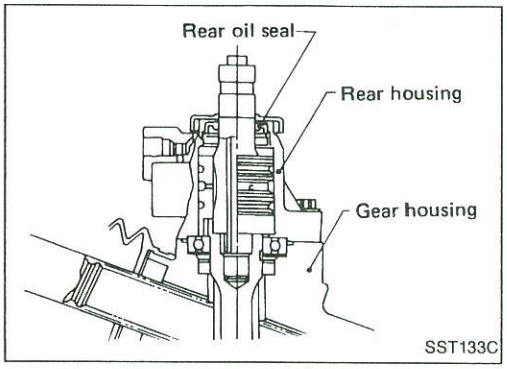


13. Apply a coat of multi-purpose grease to rear oil seal lip before installing rear housing.

## Assembly (Cont'd)

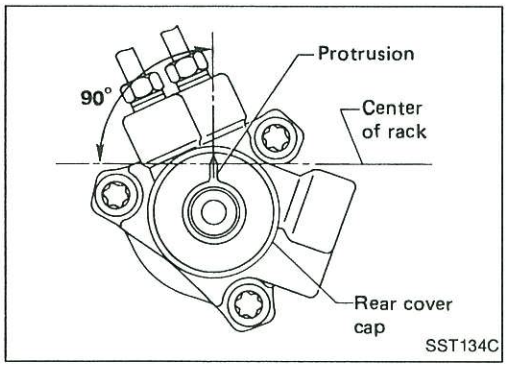


14. Install rear cover cap so that protrusion of rear housing cover is positioned as shown in figure at left when rack is centralized.

**Be careful not to damage worm ring and oil seal.**

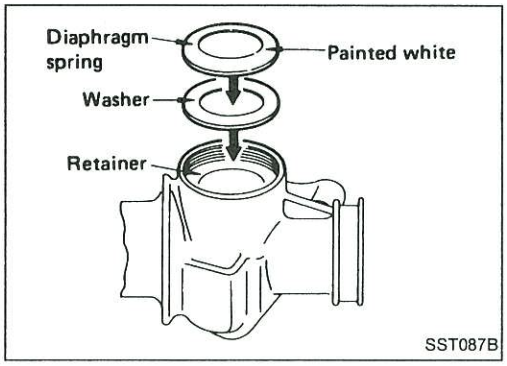


15. Install diaphragm spring at retainer.
- Always install retainer, spring washer and diaphragm spring in that order.
- Make sure convex end (painted white) of diaphragm spring faces outward when installing.

16. Install retainer spring and adjusting screw temporarily.

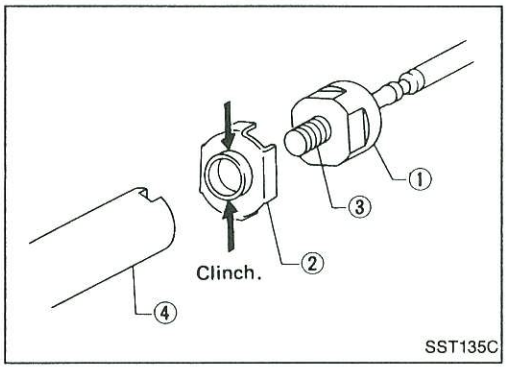


17. Install new lock plate.
- Attach lock plate ② to side rod inner socket ①.
- Apply locking sealant to inner socket threads ③. Screw inner socket into rack ④ and tighten to specified torque.
- Clinch two places of lock plate at rack's groove.

**CAUTION:**
**To prevent scratching the boot, remove burrs from lock plate.**

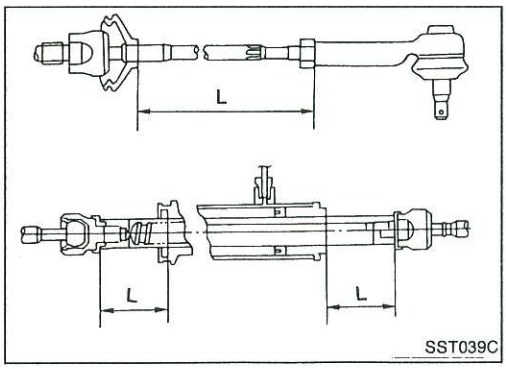


18. Tighten outer socket lock nut.
    **Tie-rod length "L":**
    **Refer to S.D.S.**
19. Measure rack stroke.
    **Measured length "L":**
    **Refer to S.D.S.**

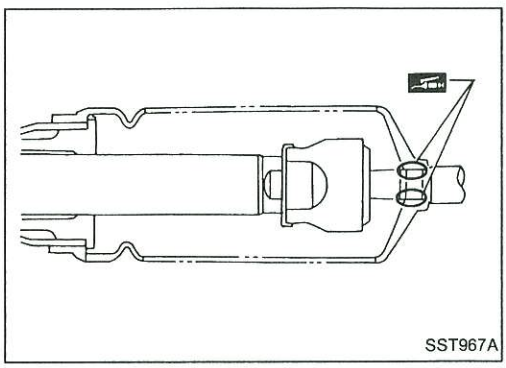


20. Before installing boot, coat the contact surfaces between boot and tie-rod with grease.

## Assembly (Cont'd)

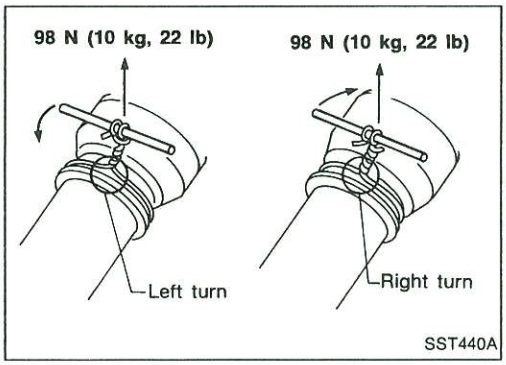


21. Install boot clamps.
- To install, wrap boot clamp around boot groove twice. Tighten clamp by twisting rings at both ends 4 to 4-1/2 turns with suitable tool while pulling with a force of approx. 98 N (10 kg, 22 lb).
- Twist boot clamp in the direction shown in figure at left.

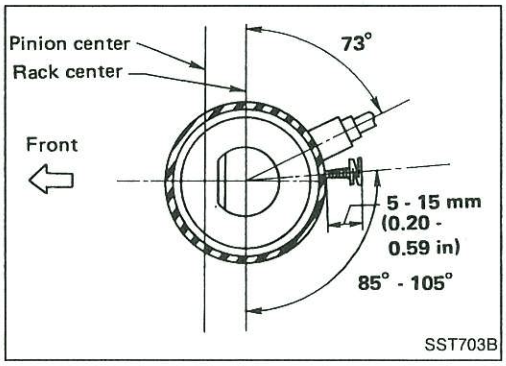


- Install boot clamps so they are behind the gear housing when gear assembly is attached to the body. (This will prevent interference with other parts.)

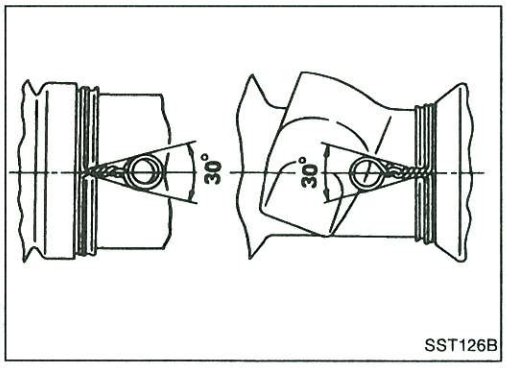


- After twisting boot clamp, bend twisted and diagonally so it does not contact boot.

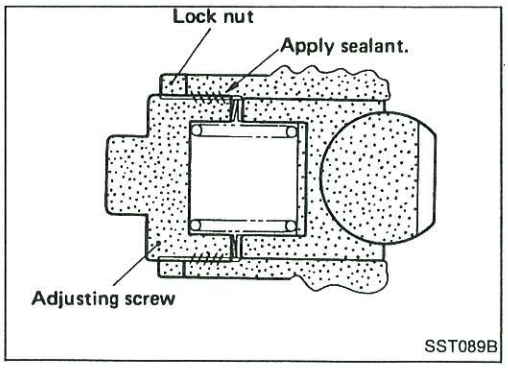


## Adjustment

Adjust pinion rotating torque as follows:

1. Set gears to Neutral without fluid in the gear.
2. Coat the adjusting screw with locking sealant and screw it in.
3. Lightly tighten lock nut.
4. Tighten adjusting screw to a torque of 4.9 to 5.9 N·m (50 to 60 kg-cm, 43 to 52 in-lb).
5. Loosen adjusting screw, then retighten it to 0.05 to 0.20 N·m (0.5 to 2 kg-cm, 0.43 to 1.74 in-lb).
6. Move rack over its entire stroke several times.
7. Measure pinion rotating torque within the range of 180° from neutral position.
   Stop the gear at the point of maximum torque.
8. Loosen adjusting screw, then retighten it to 4.9 N·m (50 kg-cm, 43 in-lb).
9. Loosen adjusting screw by 70° to 110°.

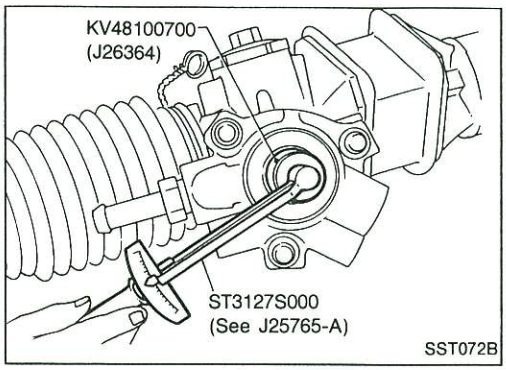

## Adjustment (Cont'd)

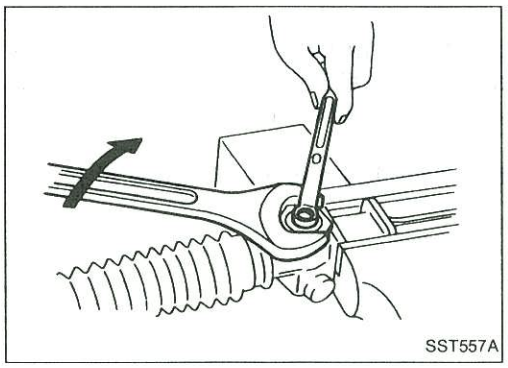
SST557A

10. Prevent adjusting screw from turning, and tighten lock nut to specified torque.

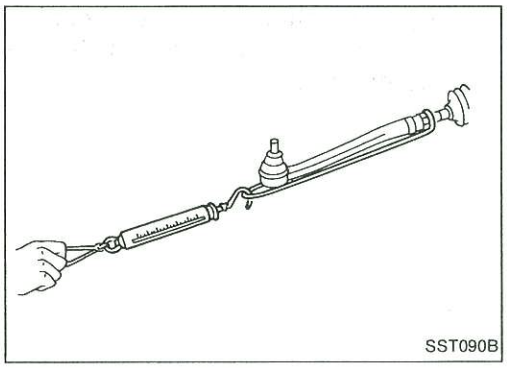
SST090B

11. Check steering gear for rack sliding frictional force.
    **Around neutral point of rack stroke**
    **±5.5 mm (±0.217 in):**
    **122.6 - 166.7 N (12.5 - 17 kg, 27.6 - 37.5 lb)**
    **Except above range:**
    **122.6 - 186.3 N (12.5 - 19 kg, 27.6 - 41.9 lb)**

If sliding frictional force is out of specification, repeat the adjustment procedure, starting from No. 4.
After the readjustment, if sliding force is still out of specification, steering gear is damaged.

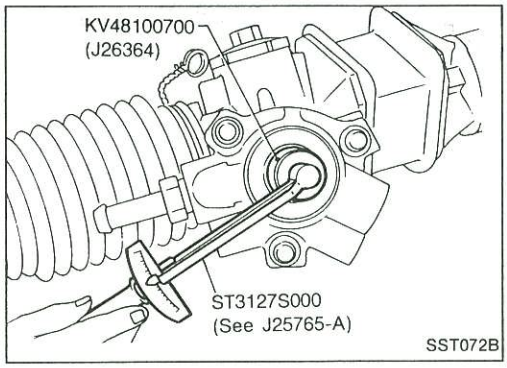

SST072B

12. Measure pinion rotating torque within the range of ±100° from the neutral point.
    **Average rotating torque**
    **[(Max. measured value + Min. measured value) x 0.5]:**
    **0.8 - 1.3 N·m (8 - 13 kg-cm, 6.9 - 11.3 in-lb)**
    **Maximum torque increment:**
    **Less than 0.4 N·m (4 kg-cm, 3.5 in-lb)**
    **Except for above mentioned measuring range:**
    **Maximum rotating torque**
    **1.9 N·m (19 kg-cm, 16 in-lb)**
    **Maximum torque increment**
    **Less than 0.6 N·m (6 kg-cm, 5.2 in-lb)**

- If pinion rotating torque is not within specification, readjust it.
- After the readjustment, if pinion rotating torque is still out of specification, steering gear is damaged.

13. As a final check, measure rack sliding force and steering wheel turing force under normal operating conditions. Refer to Checking Steering Wheel Turning Force in ON-VEHICLE SERVICE.

## Disassembly and Assembly

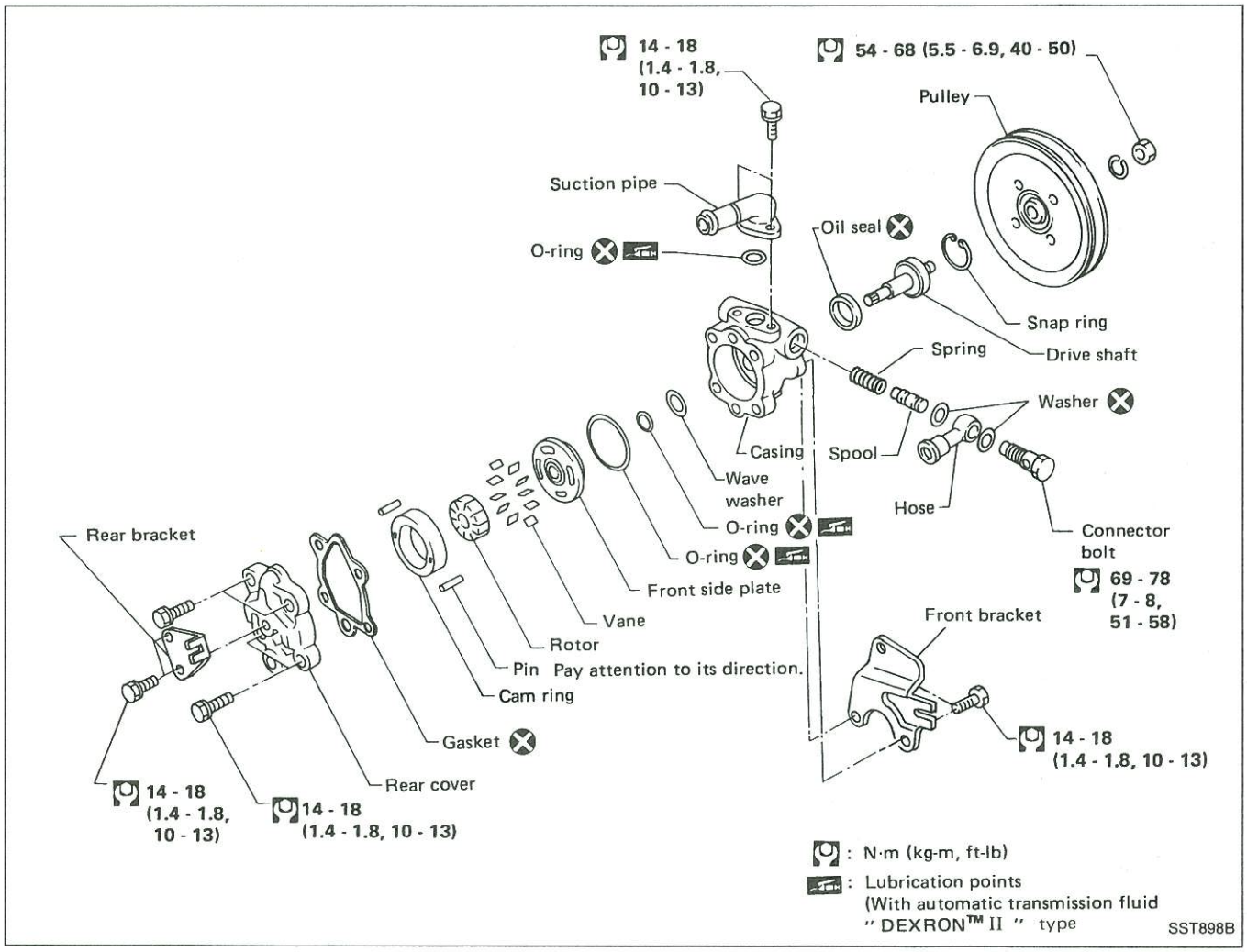


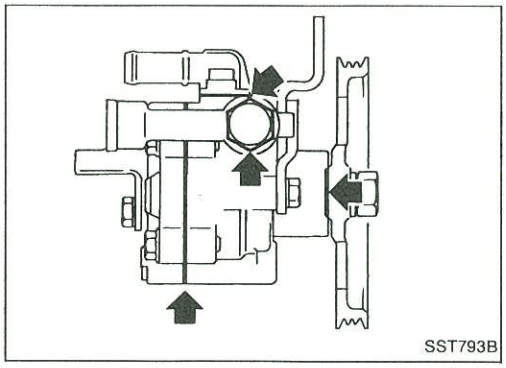


## Pre-disassembly Inspection

Disassemble the power steering oil pump only if the following items are found.

- Oil leak from any point shown in the figure.
- Deformed or damaged pulley.
- Poor performance.

## Disassembly

**CAUTION:**

- **Parts which can be disassembled are strictly limited. Never disassemble parts other than those specified.**
- **Disassemble in as clean a place as possible.**
- **Clean your hands before disassembly.**
- **Do not use rags; use nylon cloths or paper towels.**
- **Follow the procedures and cautions in the Service Manual.**
- **When disassembling and reassembling, do not let foreign matter enter or contact the parts.**

## Disassembly (Cont'd)

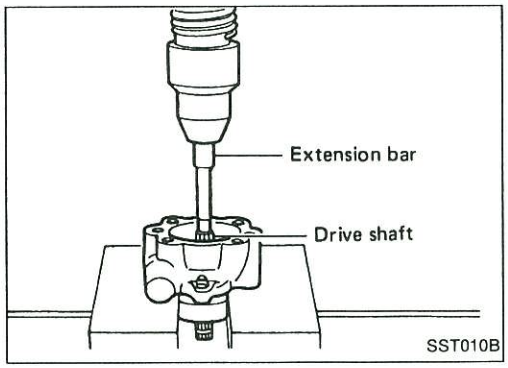


- Remove snap ring, then draw pulley shaft out.

**Be careful not to drop pulley shaft.**

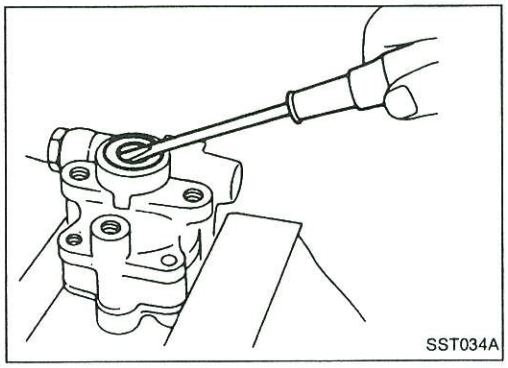


- Remove oil seal.

**Be careful not to damage front housing.**

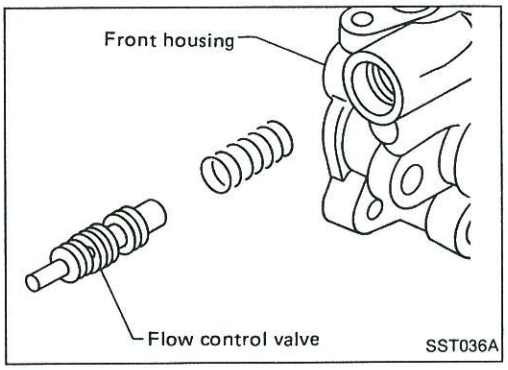


- Remove connector.

**Be careful not to drop flow control valve.**

## Inspection

### PULLEY AND PULLEY SHAFT

- If pulley is cracked or deformed, replace it.
- If an oil leak is found around pulley shaft oil seal, replace the seal.
- If serration of pulley or pulley shaft is deformed or worn, replace it.

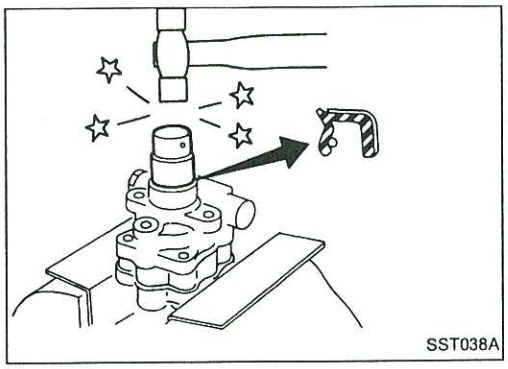


## Assembly

Assemble oil pump, noting the following instructions.

- Make sure O-rings and oil seal are properly installed.
- Always install new O-rings and oil seal.

**Be careful of oil seal direction.**

- Cam ring, rotor and vanes must be replaced as a set if necessary.
- Coat each part with A.T.F. when assembling.

## Assembly (Cont'd)

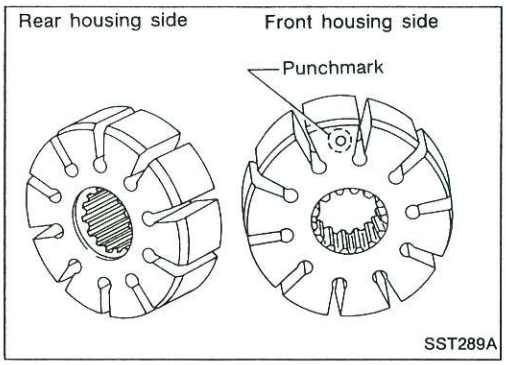


- Pay attention to the direction of rotor.

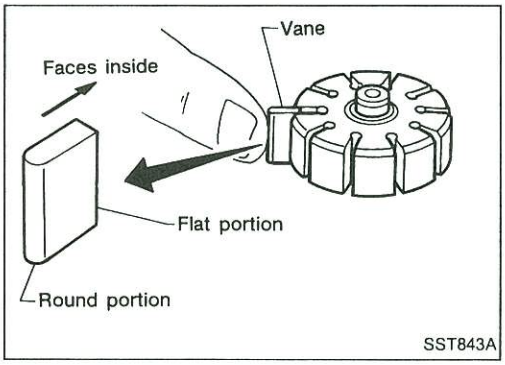


- When assembling vanes to rotor, rounded surfaces of vanes must face cam ring side.

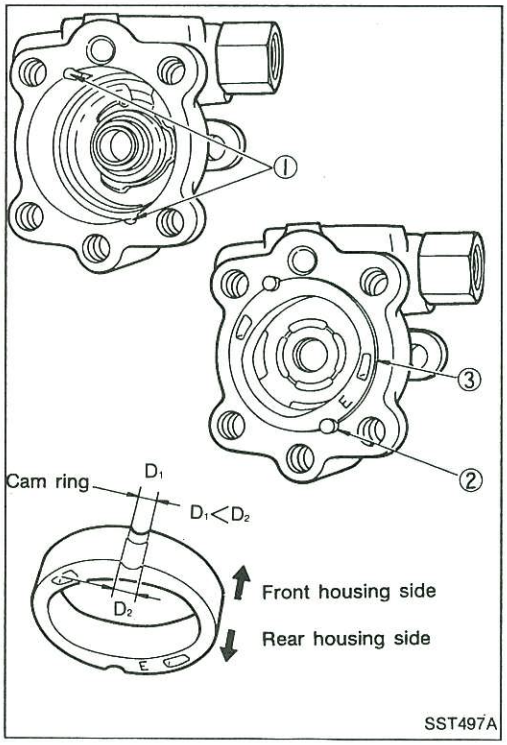


- Insert pin ② into pin groove ① of front housing and front side plate. Then install cam ring ③ as shown at left.

## HICAS Component Parts Location

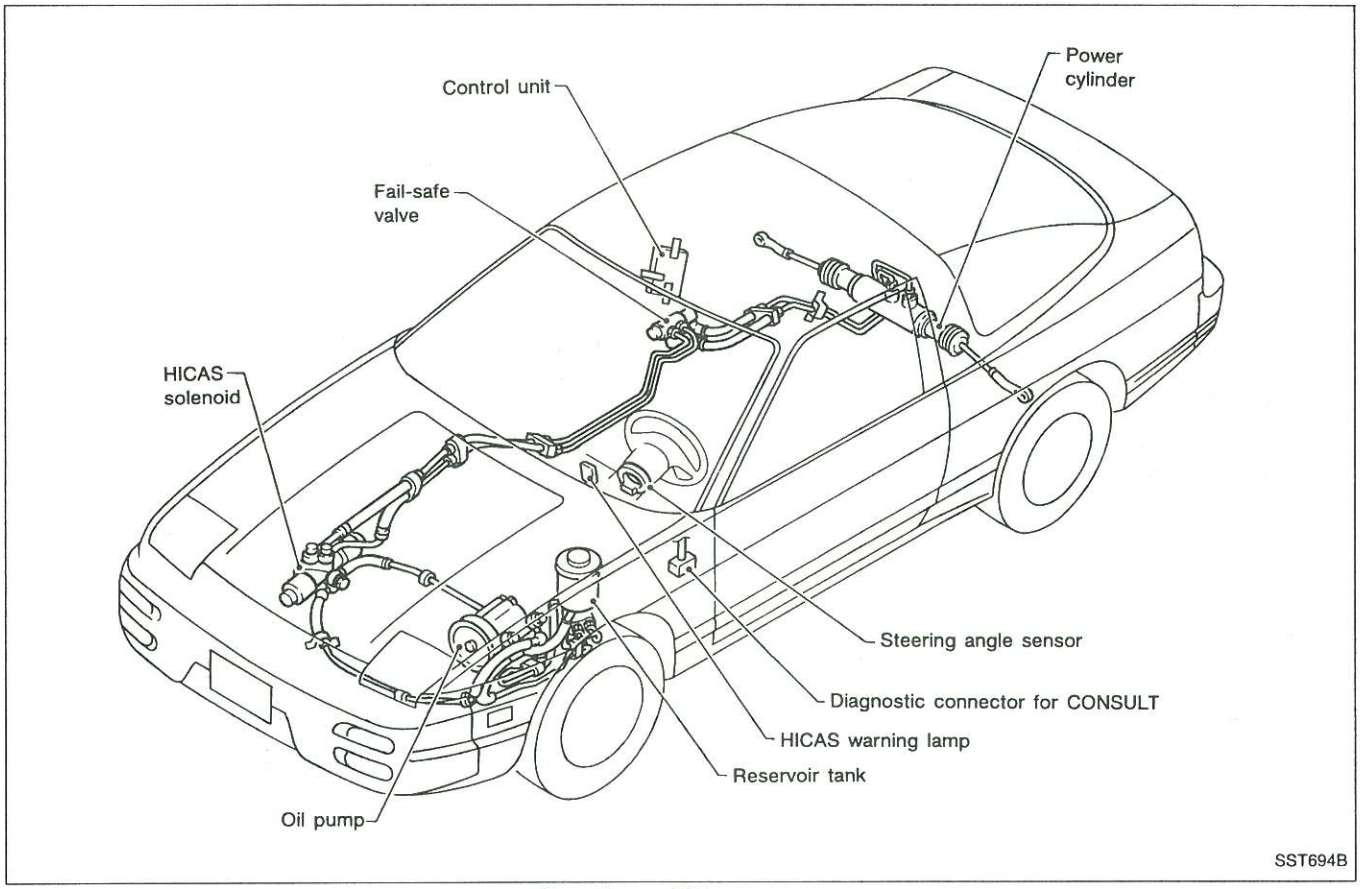


## System Diagram

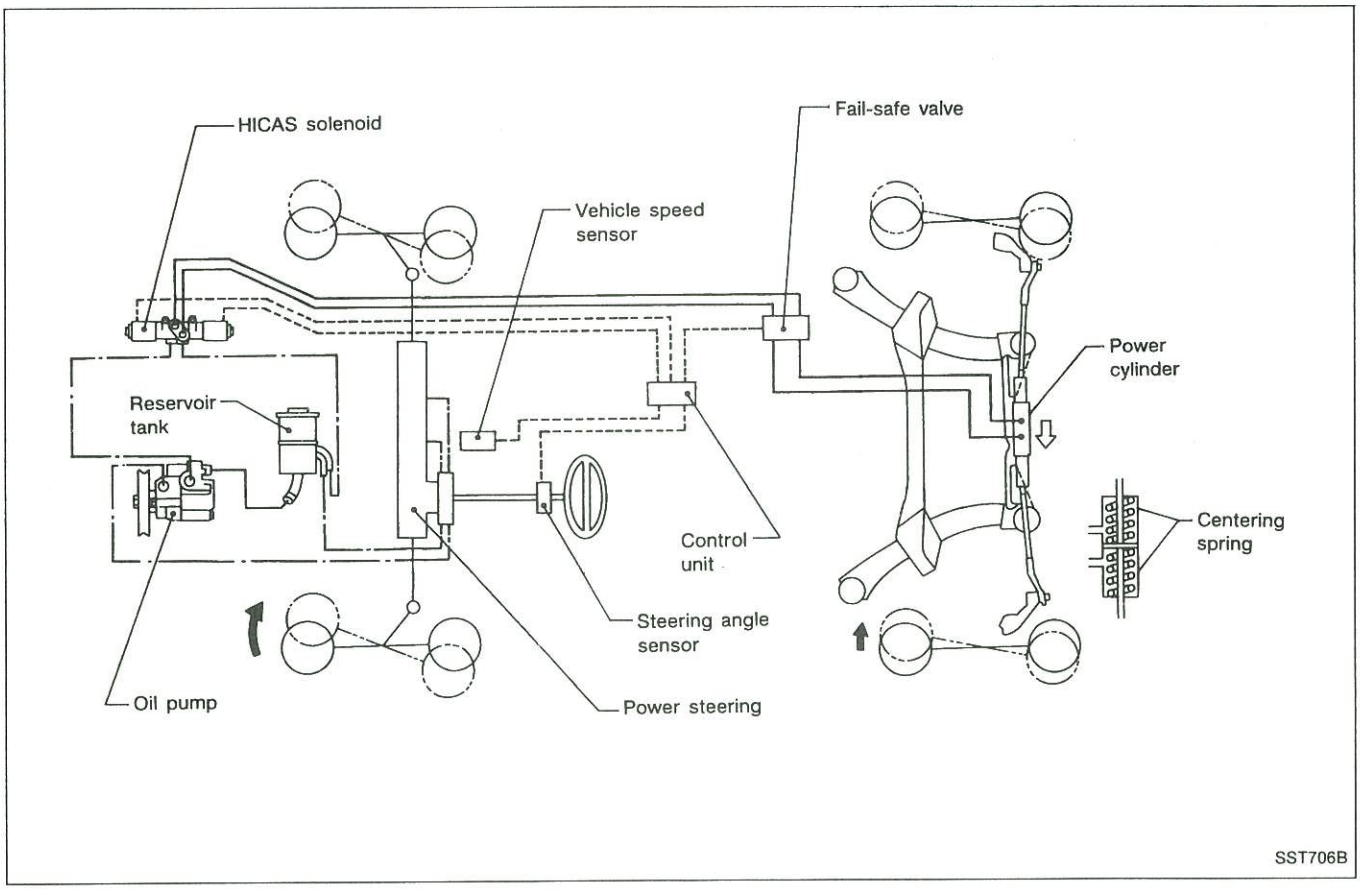

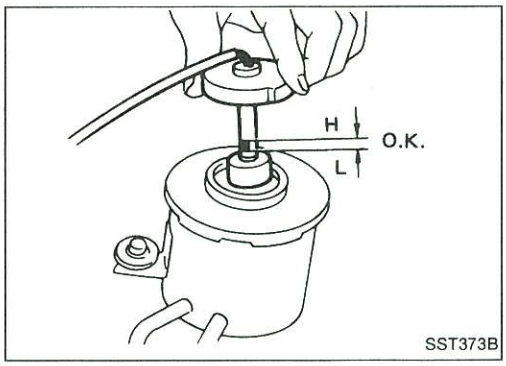

SST373B

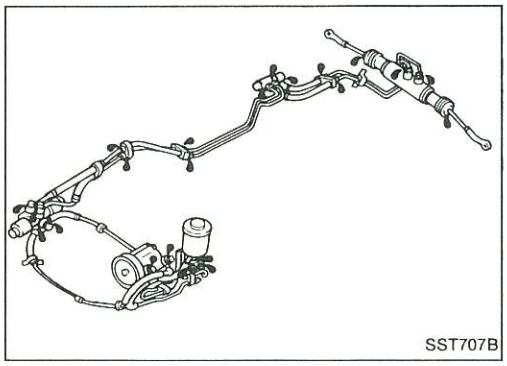
SST707B

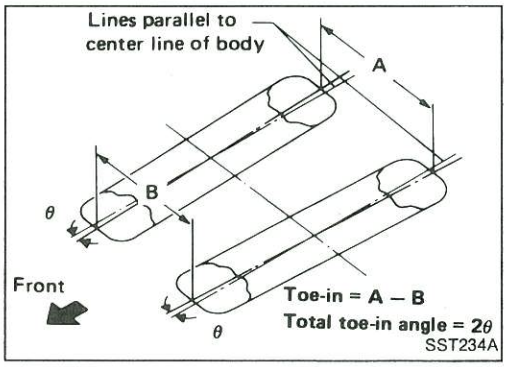

SST234A

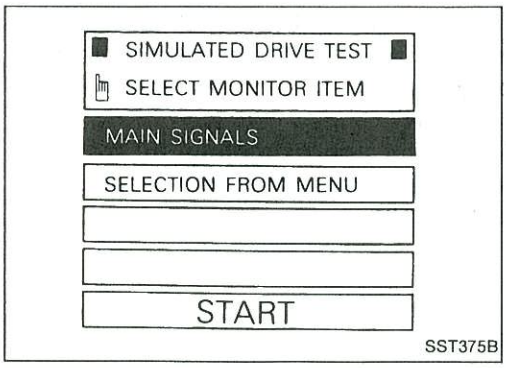

SST375B

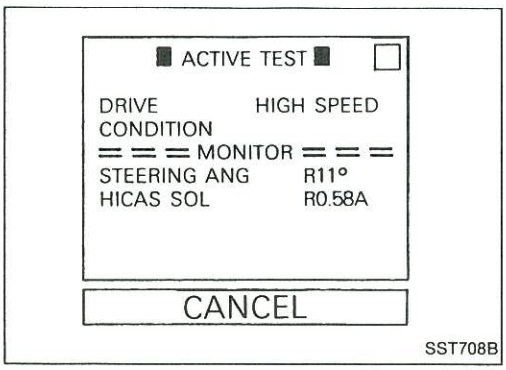

SST708B

## On-vehicle Service

### CHECKING FLUID LEVEL

Maintain the fluid level so that the lower surface of the float is maintained between the "L" and "H" marks on the gauge rod. The fluid level should be checked when the engine is stopped and the fluid temperature is normal.

**CAUTION:**

- **Do not overfill.**
- **Recommended fluid is Automatic Transmission Fluid "DEXRON™ II" type.**

### CHECKING FLUID LEAKAGE

Check lines for proper attachment, leaks, cracks, damage, loose connections, chafing and deterioration.
Fluid leakage should be checked for when the oil temperature is normal with the engine idling.

### MEASURING REAR TOE-IN

**Measure distance "A" and "B" at the same height as hub center.**

**Toe-in:**
**Refer to S.D.S. in section RA.**

### INSPECTION OF HICAS SYSTEM OPERATION

**CAUTION:**
**Ensure that shift lever is set to "P" (A/T model) or "Neutral" (M/T model) before checking HICAS system operation.**

**When CONSULT is used:**

1. Have a helper sit in the driver's compartment and raise vehicle.
   (Use a two-pole lift or a center pole lift so that the four wheels are free to rotate.)
2. Connect CONSULT unit to diagnostic connector and start engine.
3. Touch "START" on CONSULT display.
4. Touch "HICAS", "ACTIVE TEST" and "SIMULATED DRIVE" in that order.
5. Touch "START" when MAIN SIGNALS display is reversed.
6. Touch "START".

**After simulated drive condition has continued for 5 minutes, it will automatically cancel and CONSULT unit will then show "TEST IS INTERRUPTED TO AVOID OIL TEMP. RISE" display. To cancel this mode during self-diagnosis, simply touch "CANCEL".**

## On-vehicle Service (Cont'd)

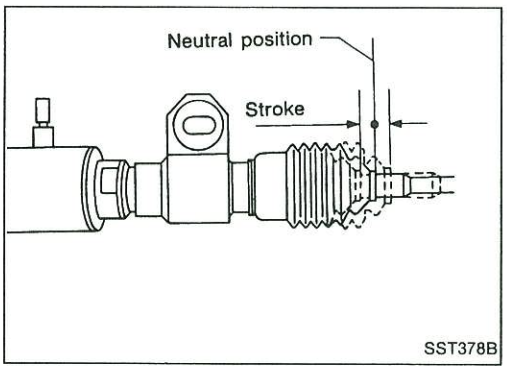


7. Operate engine at speeds greater than 2,000 rpm, and turn steering wheel 180° in one direction from the neutral position. Measure extension value of one power cylinder rod and retraction value of the other. Then, turn steering wheel 180° in the other direction from the neutral position, and measure extension value of one cylinder rod and retraction value of the other. Determine strokes of respective power cylinders by adding (measured) extension and retraction values.

**Measure rod strokes in as short a period of time as possible.**

**Specifications:**

**When turned to the right**
**3 mm (0.12 in)**
**When turned to the left**
**3 mm (0.12 in)**
**Total stroke**
**6 mm (0.24 in)**

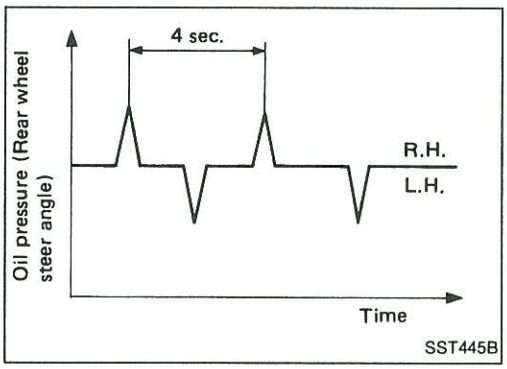


**When CONSULT is not used:**

1. Have a helper sit in the driver's compartment and raise vehicle.
   (Use a 2-pole lift or a center pole lift so that the four wheels are free to rotate.)
2. Set HICAS system in self-diagnosis mode.
(1) Turn ignition switch "OFF".
(2) Set shift lever to "P" or "N" position (A/T model), or "Neutral" position (M/T model).
(3) Turn ignition switch "ON".
(4) Immediately start engine.
(5) Turn steering wheel from left to right (at least 20° from the neutral position ) 5 times or more, then depress foot brake pedal at least 5 times all within 10 seconds after ignition switch has been turned "ON".
3. Set steering wheel to a point approximately 10° from the neutral position and check to ensure that rear wheels turn to the left and right alternately.

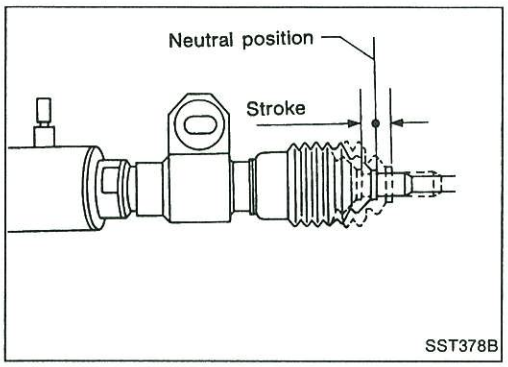


4. Operate engine at speeds greater than 2,000 rpm, and turn steering wheel 180° in one direction from the neutral position. Measure extension value of one power cylinder rod and retraction value of the other. Then, turn steering wheel 180° in the other direction from the neutral position, and measure extension value of one cylinder rod and retraction value of the other. Determine strokes of respective power cylinder rods by adding (measured) extension and retraction values.

## On-vehicle Service (Cont'd)

**Measure rod strokes in as short a period of time as possible.**

**Specifications:**

**When turned to the right**
**3 mm (0.12 in)**
**When turned to the left**
**3 mm (0.12 in)**
**Total stroke**
**6 mm (0.24 in)**

**Do not depress foot brake pedal during operation check, otherwise the operation will be stopped.**

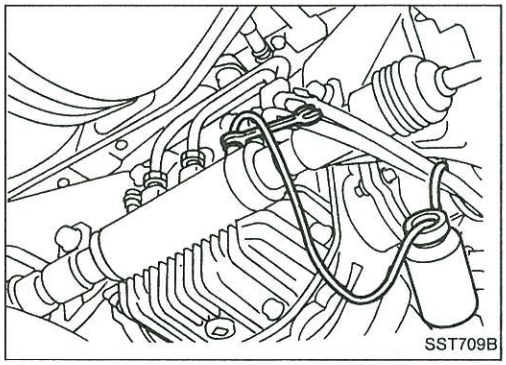
SST709B

### BLEEDING HYDRAULIC SYSTEM

Before bleeding air from the HICAS system, be sure to bleed air from the power steering system.
Refer to "SUPER HICAS SYSTEM — Repair of Component Parts".

## Repair of Component Parts

### POWER CYLINDER

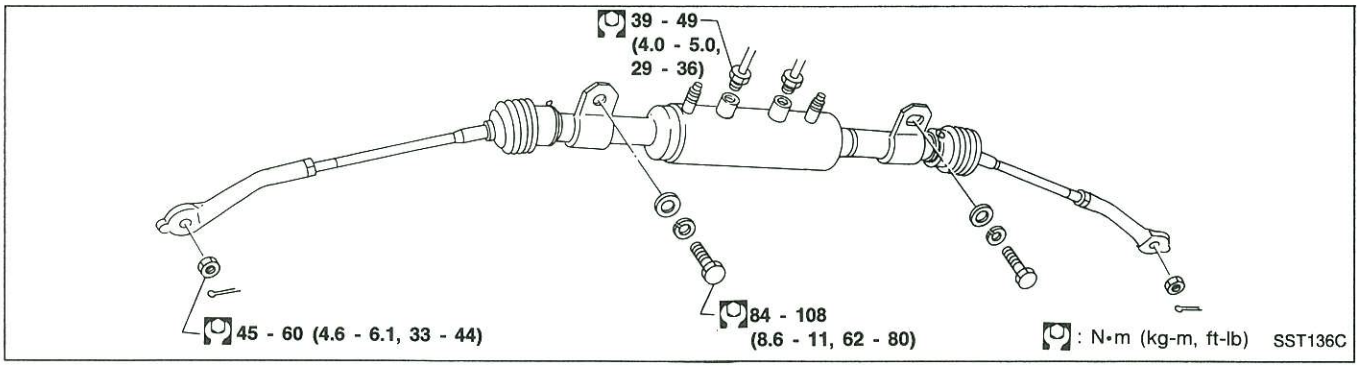


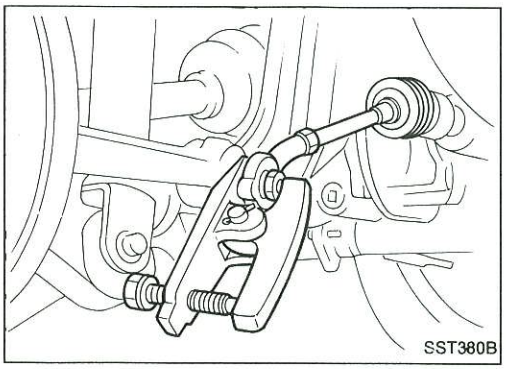
SST380B

### Removal

- Detach power cylinder lower links from axle housing sockets with Tool.

## Repair of Component Parts (Cont'd)

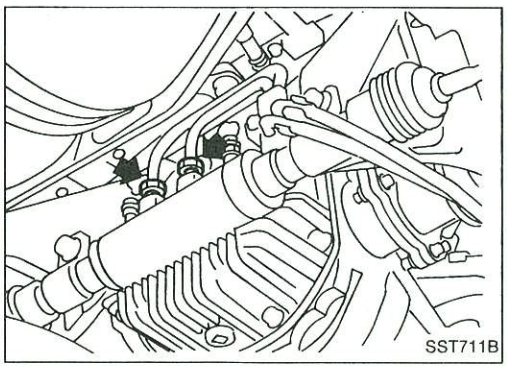


- Disconnect oil pipes from power cylinders and remove power cylinders.

**CAUTION:**
**Plug openings of oil pipes and power cylinders to prevent entry of foreign particles after removal.**

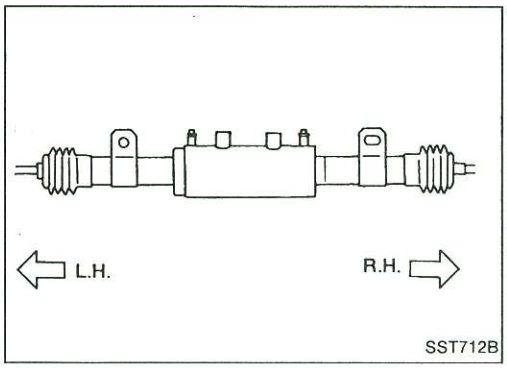


### Installation

1. Before installing power cylinder on suspension member, wipe power cylinder bracket and mating surface of suspension member. Using the left side of the bracket as a reference point, locate the right side (oblong hole side) and install power cylinder.

**CAUTION:**
**a. To prevent entry of foreign particles, clean oil pipes and connectors using dry compressed air.**
**b. Ensure that your hands are clean and free from foreign particles when connecting oil pipes.**

2. Install power cylinders and oil pipes.
3. After installing lower link assemblies, check toe-in to ensure that it is within specifications. If it is not within specifications, perform proper adjustments.
   Refer to "SUPER HICAS" in section RA.

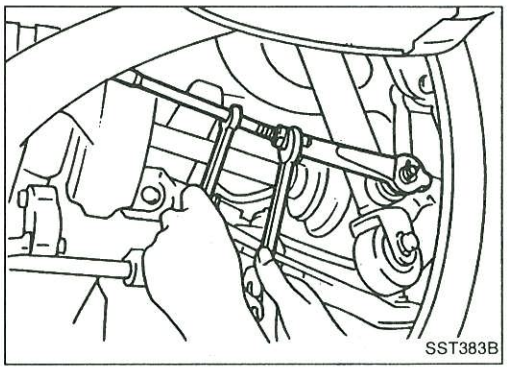


### Bleeding hydraulic system

Before bleeding air from the HICAS system, be sure to bleed air from the power steering system.

**CAUTION:**
**Ensure that shift lever is set to "P" (A/T model) or "Neutral" (M/T model).**
**When CONSULT is used:**

1. Connect CONSULT unit to diagnostic connector on body side.
2. Have a helper sit in the driver's compartment and raise vehicle.

## Repair of Component Parts (Cont'd)

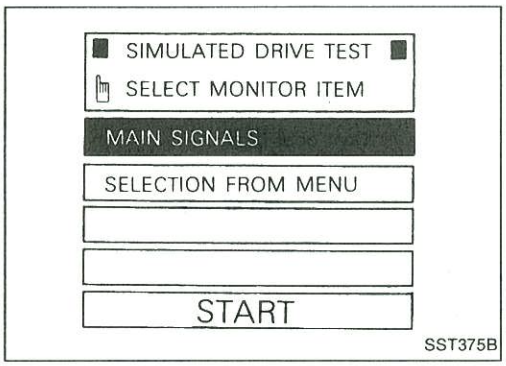

SST375B

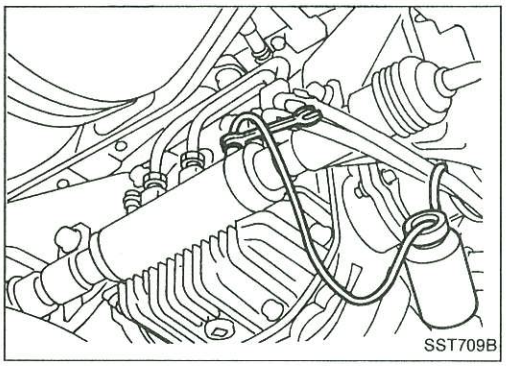
SST709B

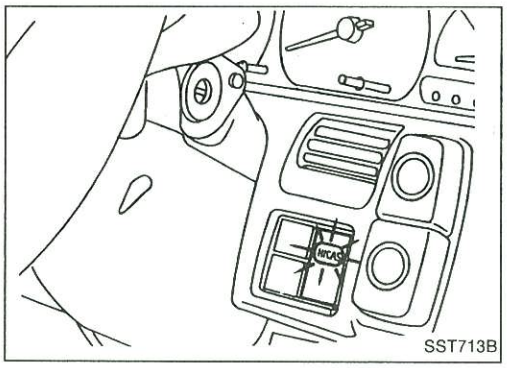
SST713B

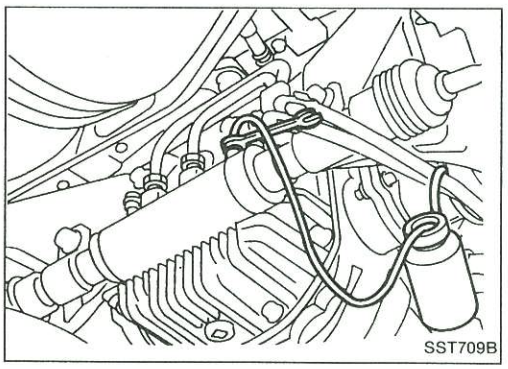
SST709B

**Use a two-pole lift or a center pole lift so that the four wheels are free to rotate.**

3. Start engine.
4. Touch "START" on CONSULT display. (Display will then change.)
5. Touch "HICAS", "ACTIVE TEST", "SIMULATED DRIVE" and "START" in that order.

**Before touching "START", ensure that MAIN SIGNALS display is reversed.**

6. Touch "START".
7. Operate engine at speeds greater than 2,000 rpm, and turn steering wheel 180° to the right from the neutral position. Loosen right power cylinder bleeder valve to bleed air, then retighten. Return steering wheel to the neutral position.
8. Operate engine at speeds greater than 2,000 rpm, and turn steering wheel 180° to the left from the neutral position. Loosen left power cylinder bleeder valve to bleed air, then retighten. Return steering wheel to the neutral position.
9. Repeat steps 7. and 8. until there are no air bubbles in fluid. While bleeding air from power cylinders, never allow fluid level to drop below inlet port of reservoir tank (by adding fluid as required).
10. Touch "CANCEL" on CONSULT display and turn ignition switch OFF.

**When CONSULT is not used:**

1. Have a helper sit in the driver's compartment, and raise vehicle.

**Use a two-pole lift or center pole lift so that the four wheels are free to rotate.**

2. Set HICAS system in self-diagnosis mode.
(1) Turn ignition switch "OFF".
(2) Set shift lever to "P" or "N" position (A/T model), or "Neutral" position (M/T model).
(3) Turn ignition switch "ON".
(4) Immediately start engine.
(5) Turn steering wheel from left to right (at least 20° from the neutral position ) 5 times or more, then depress foot brake pedal at least 5 times all within 10 seconds after ignition switch has been turned "ON".
3. Set steering wheel within 10° from the neutral position. Ensure that rear wheels turn to the left and right alternately.
4. Operate engine at idling speed, and turn steering wheel 180° to the right from the neutral position. Loosen right power cylinder bleeder valve to bleed air, then retighten. Return steering wheel to the neutral position.
5. Operate engine at idling speed, and turn steering wheel 180° to the left from the neutral position. Loosen left power cylinder bleeder valve to bleed air, then retighten. Return steering wheel to the neutral position.
6. Repeat steps 4. and 5. above until there are no air bubbles in fluid. While bleeding air from power cylinders, never allow fluid level to drop below inlet port of reservoir tank (by adding fluid as required).
7. Turn ignition switch OFF to complete self-diagnosis operation.

## Repair of Component Parts (Cont'd)

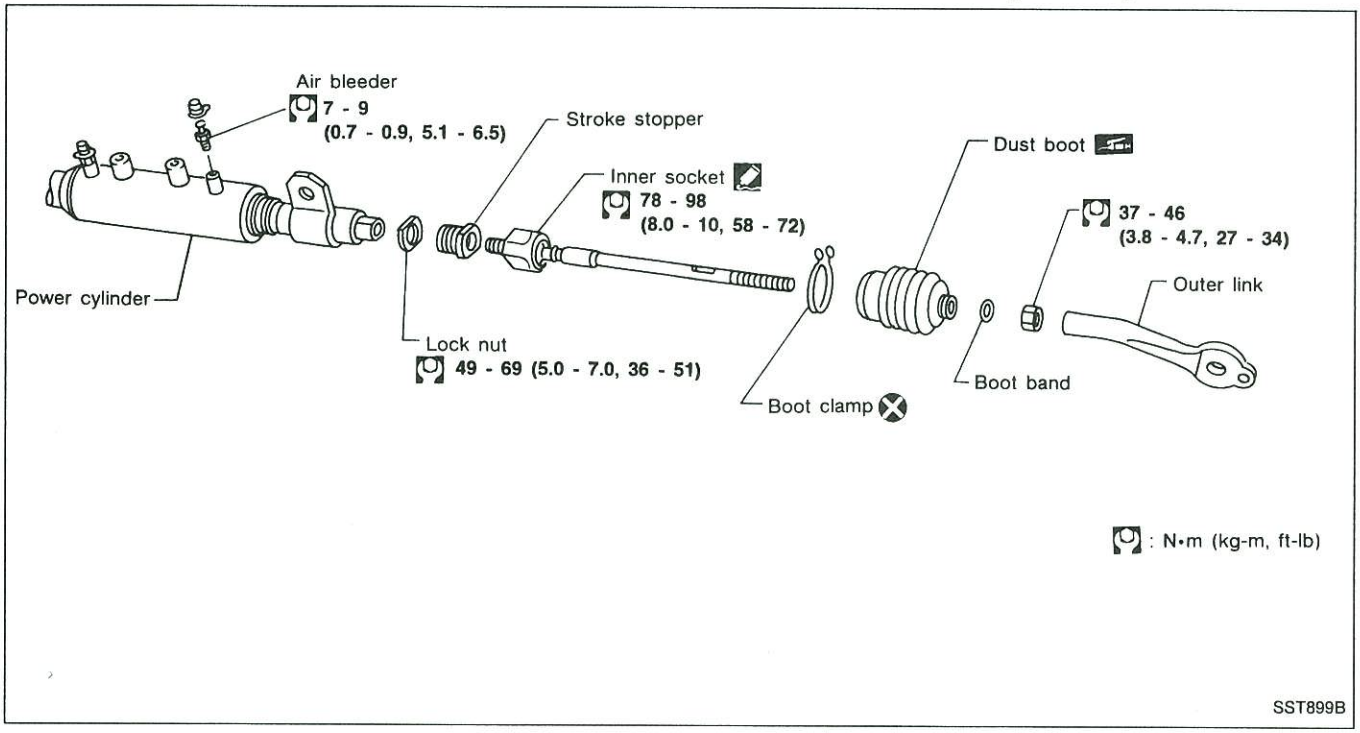


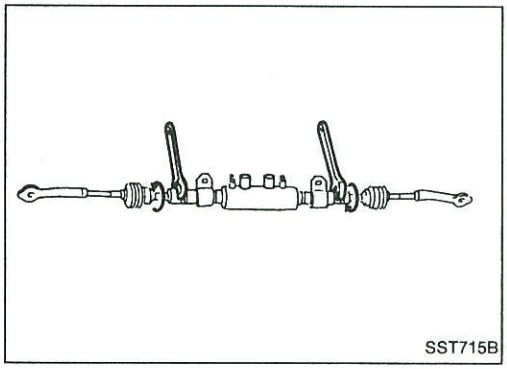


### Disassembly

**Power cylinder assembly cannot be disassembled. When it is malfunctioning, replace power cylinder as an assembly.**

1. Remove clamps from left and right dust boots, and move dust boots toward outer links.
2. Attach wrenches to left and right ball joint sockets, and turn in directions that loosen lower links. Remove one of loosened lower link assemblies.

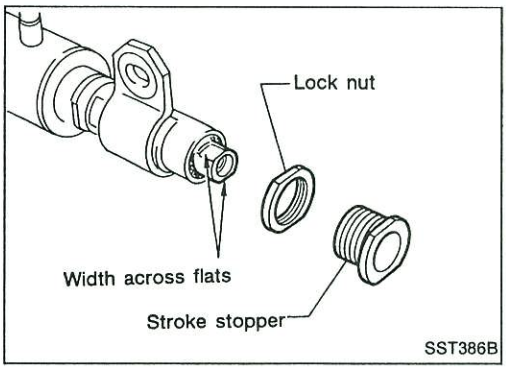


3. Loosen stroke stopper lock nut from which lower link assembly was removed, and remove stroke stopper.

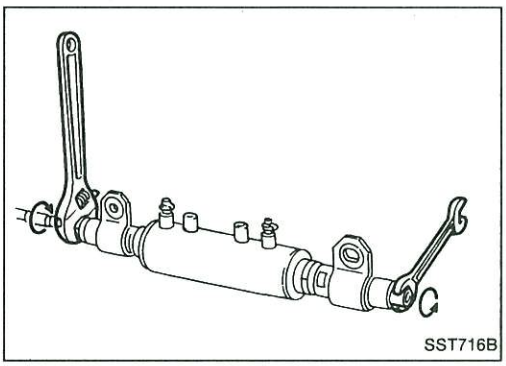


- While attaching a wrench to "width across flats" section of rod end from which stroke stopper was removed, remove the other lower link assembly.

## Repair of Component Parts (Cont'd)

### Assembly

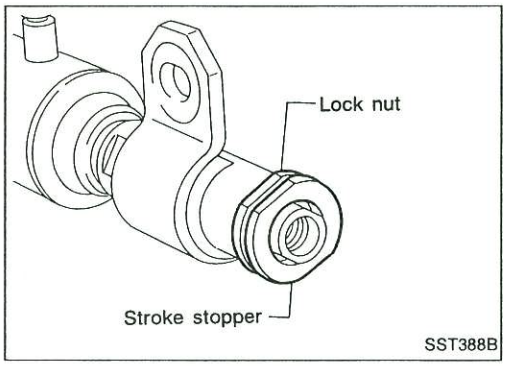


1. Install stroke stopper and lock nut on the lower link assembly to be assembled.

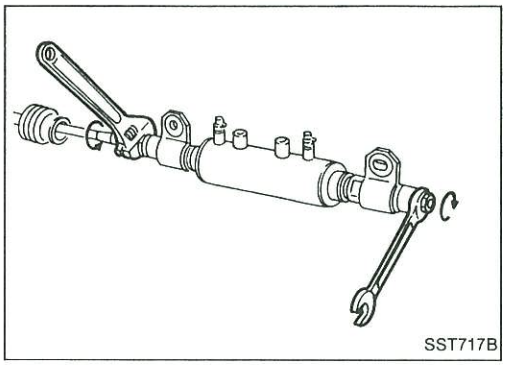


2. Apply Locktite to inner ball joint thread. Attach a wrench to "width across flats" section of piston rod (located on the other side) to prevent rod from turning. Install lower link assembly.

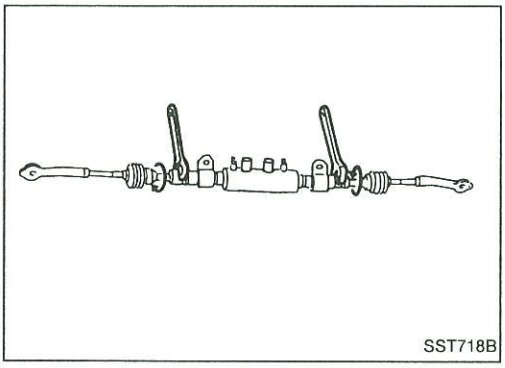


3. After installing stroke stopper and lock nut on the other lower link assembly, install lower link assembly. Attach a wrench to inner ball joint (to prevent it from turning), tighten inner socket to specified torque.

   **Inner socket:**

   **: 78 - 98 N·m (8 - 10 kg-m, 58 - 72 ft-lb)**

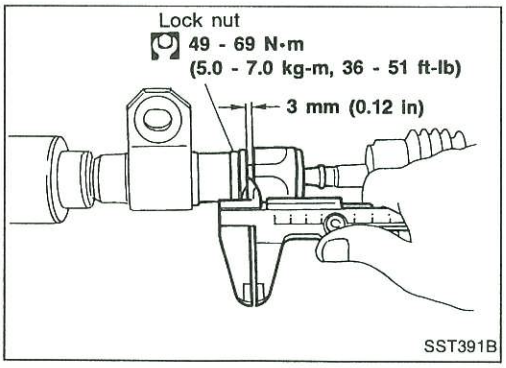


4. If stroke stopper was moved during removal of lower link, adjust it after installation, as described below:
   (1) Loosen lock nut which secures stroke stopper.
   (2) Turn stroke stopper until clearance between inner ball joint and stroke stopper is 3 mm (0.12 in) on each side.
   (3) Tighten lock nut securely.

   **Lock nut:**

   **: 49 - 69 N·m (5.0 - 7.0 kg-m, 36 - 51 ft-lb)**

   (4) Recheck clearance between inner ball joint and stroke stopper on each side.

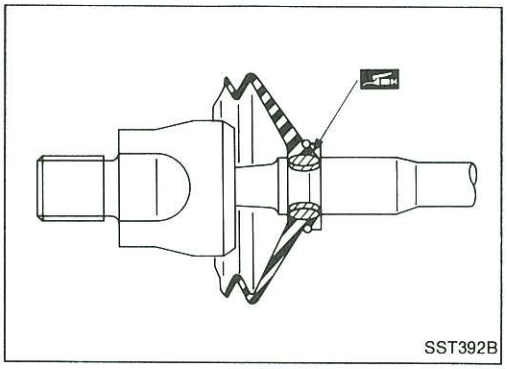


5. Install dust boot using new boot band and clamp.

- **Apply a coat of grease to grooves at boot location.**

## Repair of Component Parts (Cont'd)

### OIL PUMP

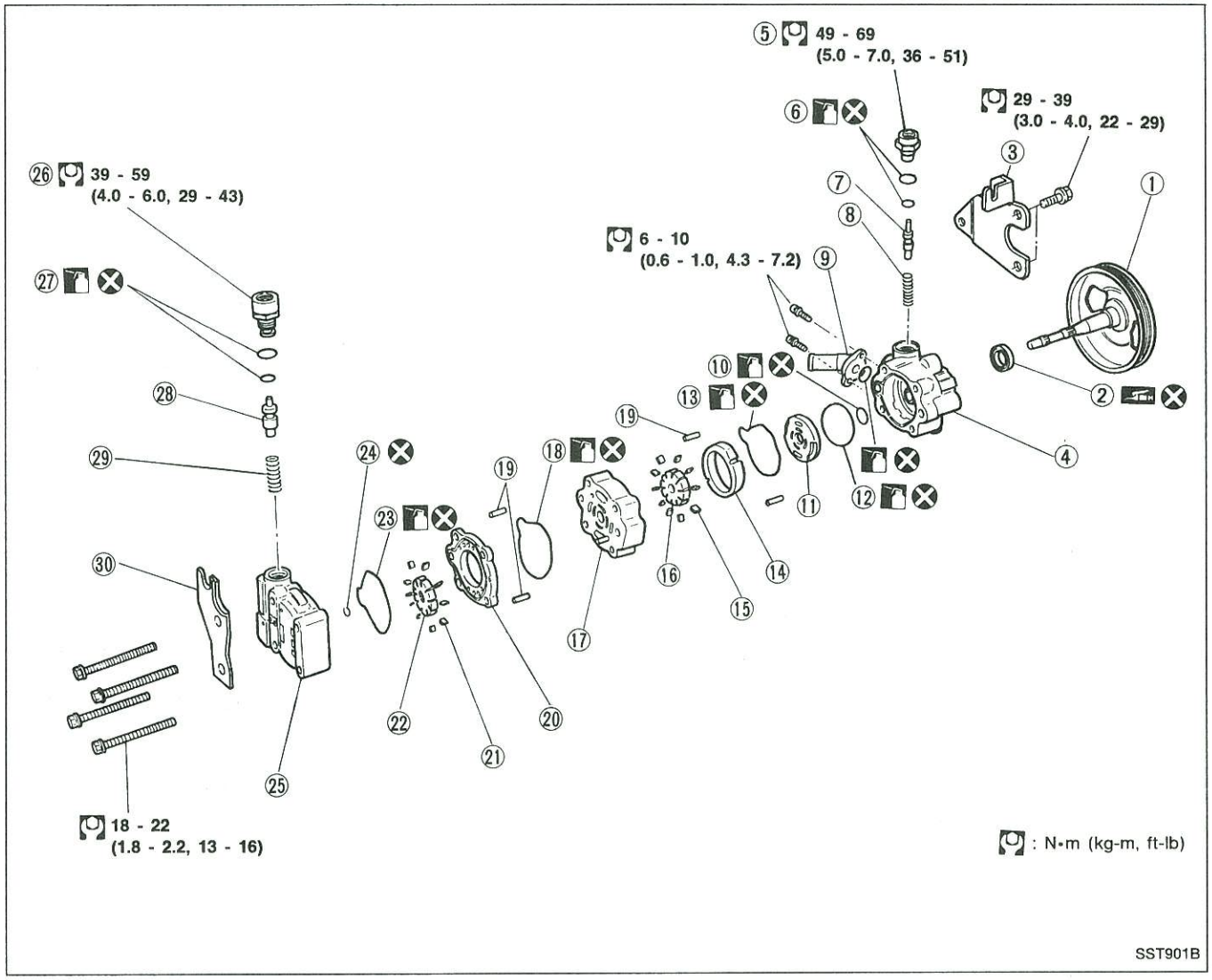


① Pulley
② Oil seal
③ Bracket
④ Front housing
⑤ Outlet connector
⑥ O-ring
⑦ Flow control valve
⑧ Spring
⑨ Inlet connector
⑩ O-ring
⑪ Side plate
⑫ O-ring
⑬ O-ring
⑭ Cam
⑮ Vane
⑯ Rotor
⑰ Center housing
⑱ O-ring
⑲ Pin
⑳ Cam
㉑ Vane
㉒ Rotor
㉓ O-ring
㉔ Snap ring
㉕ Rear housing
㉖ Outlet connector
㉗ O-ring
㉘ Flow control valve
㉙ Spring
㉚ Bracket

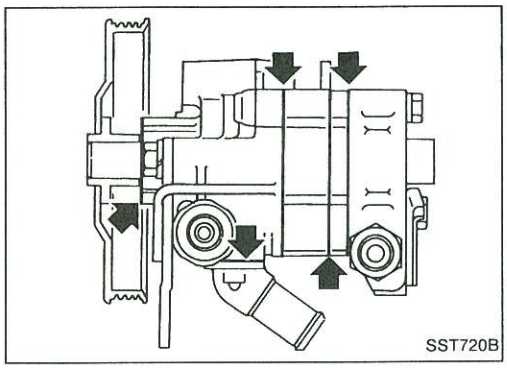


**Pre-disassembly inspection**

Disassemble the power steering oil pump only if the following items are found.

- Oil leak from any point shown in the figure.
- Deformed or damaged pulley.
- Poor performance

## Repair of Component Parts (Cont'd)

### Disassembly

**CAUTION:**

- **Parts which can be disassembled are strictly limited. Never disassemble parts other than those specified.**
- **Disassemble in as clean a place as possible.**
- **Clean your hands before disassembly.**
- **Do not use rags; use nylon cloths or paper towels.**
- **Follow the procedures and cautions in the Service Manual.**
- **When disassembling and reassembling, do not let foreign matter enter or contact the parts.**

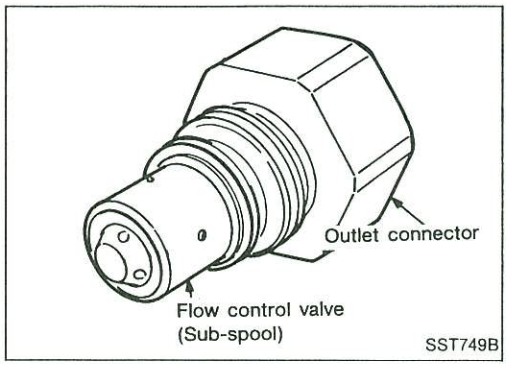


- Remove connector.
- **The discharge connector incorporates a flow control valve (sub-spool). Pay attention so as not to drop connector, as this may cause deformation.**
- **Do not disassemble discharge connector and flow control valve.**

**Be careful not to confuse main side with sub side.**

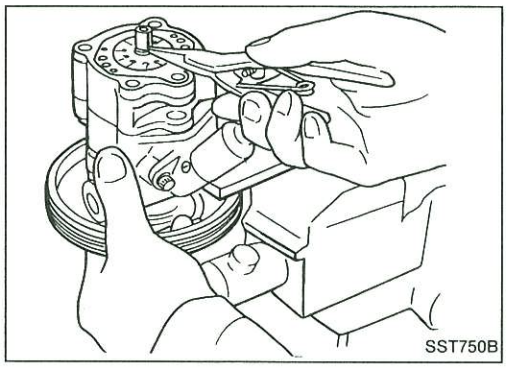


- Remove snap ring, then remove shaft with pulley.

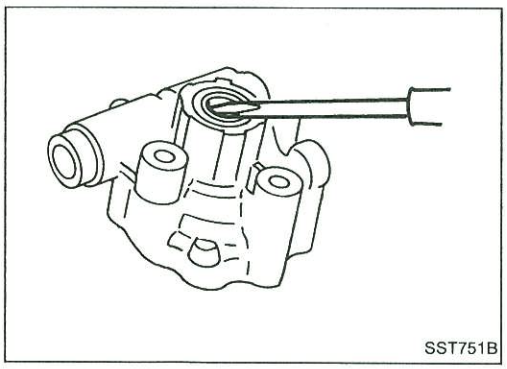


- Remove oil seal.

**Be careful not to damage front housing.**

### Inspection

If any of the following parts are scratched or damaged, replace oil pump assembly.

- Mating surfaces of front housing and cam center housing
- Mating surfaces of rear housing and cam center housing
- Front housing oil seal
- Flow control valve
- Drive shaft
- Rotor

## Repair of Component Parts (Cont'd)

### Assembly

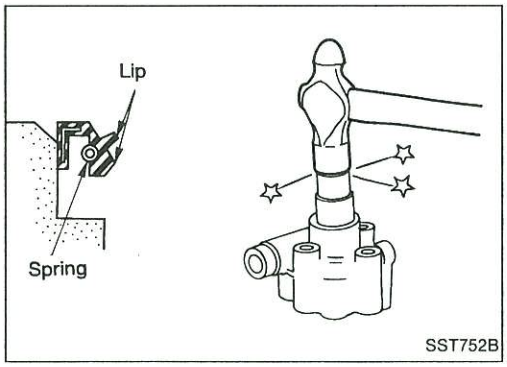


Assemble oil pump, noting the following instructions.

- Make sure O-rings and oil seal are properly installed.
- Always install new O-rings and oil seal.

**Be careful of oil seal direction.**

- Cam ring, rotor and vanes must be replaced as a set if necessary.
- Coat each part with A.T.F. when assembling.

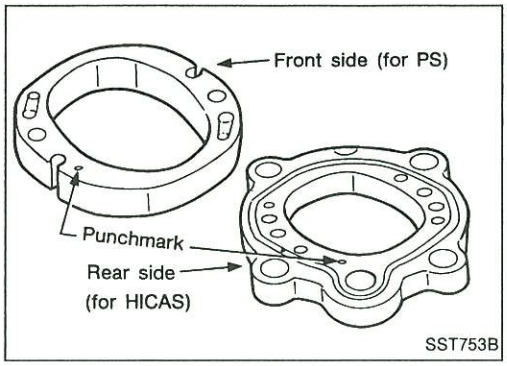


- The cam ring shape is different between front side cam (for PS) and rear side cam (for HICAS). Install front side cam ring with punchmark set on the pulley side, and install rear side cam ring with punchmark set on rear housing side.

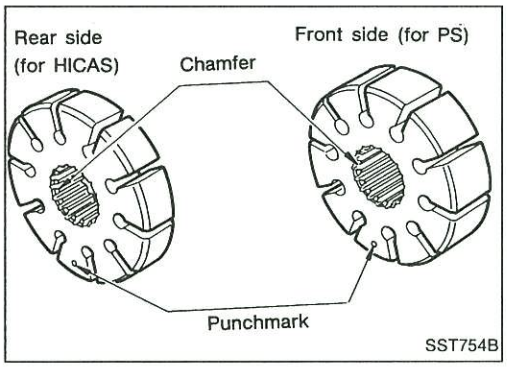


- Pay attention to rotor direction.

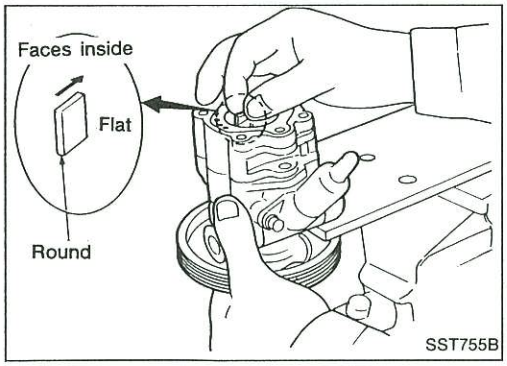


- When assembling vanes to rotor, rounded surfaces of vanes must face cam ring side.

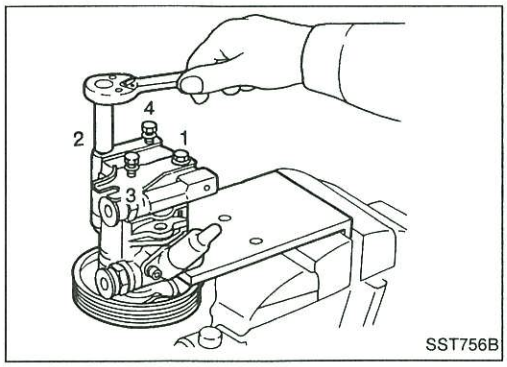


- Tighten rear housing bolts in diagonal sequence. First tighten bolts to about a half of the standard tightening torque, then tighten them again to the standard torque.

## Repair of Component Parts (Cont'd)

### HICAS SOLENOID AND FAIL-SAFE VALVE

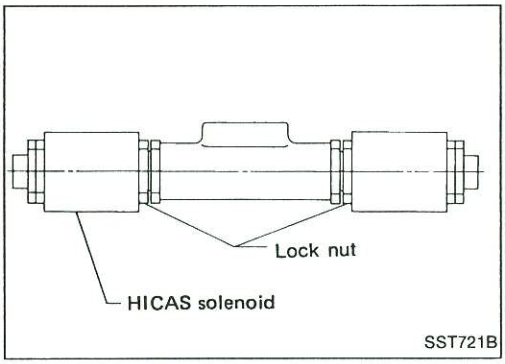

SST721B

- Do not loosen lock nut which secures solenoid since HICAS solenoid and fail-safe valves are of types that should not be disassembled.
- If any part is found to be malfunctioning, always replace as a valve assembly.

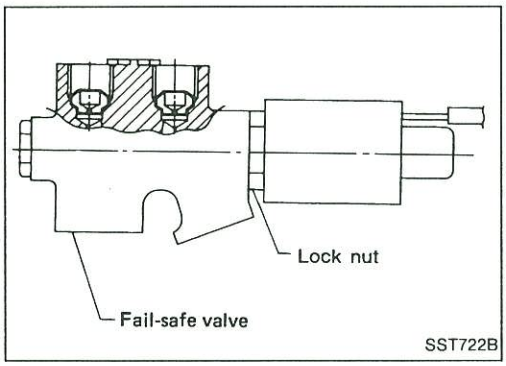

SST722B

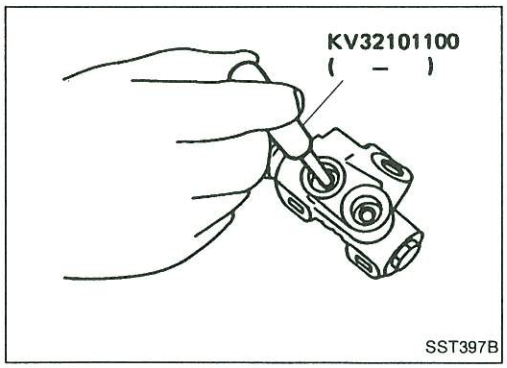

SST397B

- Whenever tubes are disconnected from fail-safe valve check tube seat for scratches or damage. A scratched or cracked tube seat may cause oil leakage. Replace it using pin punch.

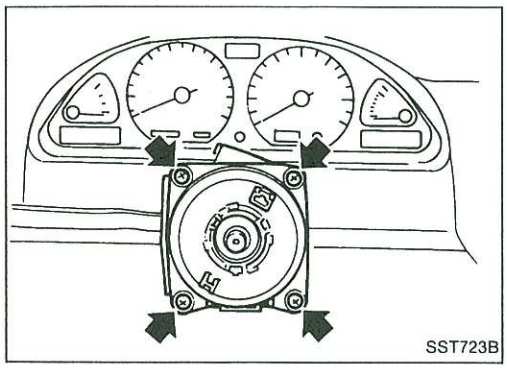
SST723B

### STEERING ANGLE SENSOR

- Ensure that steering angle sensor bolts are secure and tight.
- If any part of steering angle sensor is malfunctioning, replace steering angle sensor assembly.

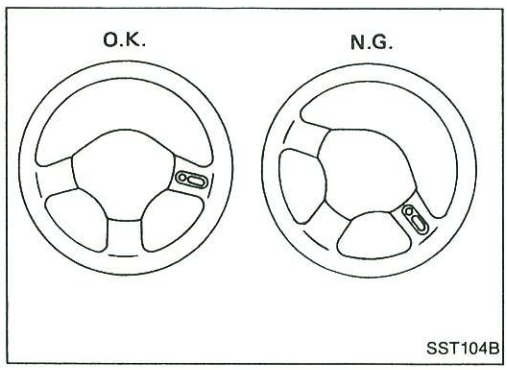

SST104B

### STEERING WHEEL

#### Checking neutral position

- Check that steering wheel is in neutral position when driving straight ahead at a speed of at least 70 km/h (43 MPH).
- If it is not in neutral position, remove steering wheel and reinstall it correctly.
- If neutral position is between two serrated teeth, loosen tie-rod lock nut and move tie-rod in opposite direction by the same amount on both left and right sides to compensate for error in neutral position.

# Trouble Diagnoses

## CONTENTS

**How to Perform Trouble Diagnoses for Quick and Accurate Repair** ..... ST-39
**Symptom Chart** ..... ST-40
**Preliminary Check** ..... ST-41
**Component Parts and Harness Connector Locations** ..... ST-43
**Circuit Diagram for Quick Pinpoint Check** ..... ST-44
**Wiring Diagram** ..... ST-45
**Self-diagnosis** ..... ST-46
**Diagnostic Procedure 1**
SYMPTOM: No warning lamp comes on when ignition is turned "ON" ..... ST-49
**Diagnostic Procedure 2**
SYMPTOM (A): Warning lamp comes on during operation. ..... ST-50
SYMPTOM (B): Warning lamp comes on when ignition switch is turned ON; however, it does not go out after engine start. ..... ST-51
**Diagnostic Procedure 3**
SYMPTOM: Abnormal noise occurs. ..... ST-51
**Diagnostic Procedure 4**
SYMPTOM: Vehicle behavior is abnormal. (Vehicle sways or jerks) ..... ST-52
**Diagnostic Procedure 5**
SYMPTOM: System not set in self-diagnosis test mode. ..... ST-57
**Diagnostic Procedure 6**
SYMPTOM: HICAS solenoid (left and right) output is not present. ..... ST-59
**Diagnostic Procedure 7**
SYMPTOM: Fail-safe valve output is not present. ..... ST-60
**Diagnostic Procedure 8**
SYMPTOM: Vehicle speed signal is not present. ..... ST-61
**Diagnostic Procedure 9**
SYMPTOM: Steering angle sensor input is not present. ..... ST-62
**Diagnostic Procedure 10**
SYMPTOM: Parking brake position (A/T) or clutch position switch (M/T) input is not present. ..ST-64
**Diagnostic Procedure 11**
SYMPTOM: Inhibitor position switch (A/T) or neutral position switch (M/T) input is not present. ..... ST-65
**Control Unit Inspection Table** ..... ST-66

## Trouble Diagnoses (Cont'd)

### HOW TO PERFORM TROUBLE DIAGNOSES FOR QUICK AND ACCURATE REPAIR

**Work flow**

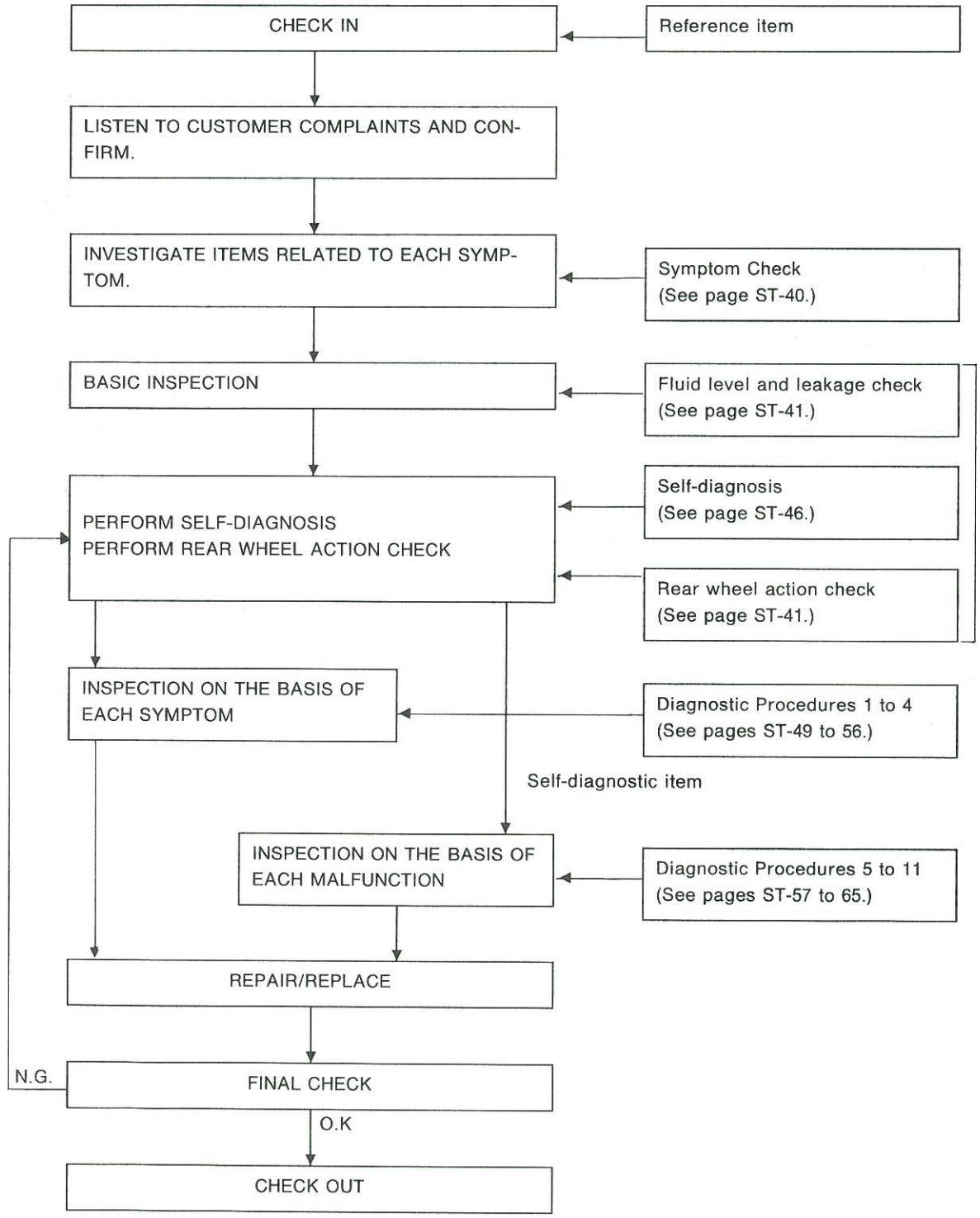

# Trouble Diagnoses (Cont'd)

## SYMPTOM CHART

### Diagnostic table

| PROCEDURE | | | | Preliminary Check | | | Diagnostic Procedure | | | | | | | | | | |
|---|---|---|---|---|---|---|---|---|---|---|---|---|---|---|---|---|---|
| REFERENCE PAGE (ST-) | | | | 41 | 41 | 41 | 49 | 49 | 51 | 52 | 57 | 59 | 60 | 61 | 62 | 64 | 65 |
| SYMPTOM | | | | Preliminary check 1 | Preliminary check 2 | Preliminary check 3 | Diagnostic procedure 1 | Diagnostic procedure 2 | Diagnostic procedure 3 | Diagnostic procedure 4 | Diagnostic procedure 5 | Diagnostic procedure 6 | Diagnostic procedure 7 | Diagnostic procedure 8 | Diagnostic procedure 9 | Diagnostic procedure 10 | Diagnostic procedure 11 |
| No warning lamp comes on when ignition switch is turned "ON". | | | | ○ | | | ○ | | | | | | | | | | |
| Warning lamp comes on when engine is running. | | | | ○ | ○ | ○ | | ○ | | ○ | ○ | ○ | ○ | ○ | ○ | ○ | ○ |
| Abnormal noise is emitted. | | | | ○ | ○ | ○ | | | ○ | | | | | | | | |
| Vehicle behavior is unusual (due to malfunctioning HICAS system.) | | | | ○ | ○ | ○ | | | | ○ | ○ | ○ | ○ | ○ | ○ | ○ | ○ |
| Self-diagnostic results | System is not set in self-diagnosis mode. | | | | | | | | | | ○ | | | | | | |
| | Self-diagnosis code No. | Diagnosed part | CONSULT indication | | | | | | | | | | | | | | |
| | 1 | HICAS solenoid (RH) output is not present. | HICAS SOLENOID-R [ABNORMAL SIGNAL] | | | | | | | | | ○ | | | | | |
| | 2 | HICAS solenoid (LH) output is not present. | HICAS SOLENOID-L [ABNORMAL SIGNAL] | | | | | | | | | ○ | | | | | |
| | 3 | Fail-safe valve output is not present. | FAIL-SAFE VALVE [ABNORMAL SIGNAL] | | | | | | | | | | ○ | | | | |
| | 4 | (Constantly normal mode) | — | | | | | | | | | | | | | | |
| | 5 | Vehicle speed signal is not present. | VEHICLE SPEED SENSOR [NO SIGNAL] (·a) CAR SPEED SENSOR [SIG-SUDDEN TURN] (-b) | | | | | | | | | | | ○ | | | |
| | 6 | Steering angle sensor input is not present. | STEERING ANGLE SEN [NO ANG SIGNAL] (·a) STEERING ANGLE SEN [NO NEUT SIGNAL] (·b) STEERING ANGLE SEN [NEUT SIG-360° OFF] (·c) STEERING ANGLE SEN [NEUT SIG-30° ON] (·d) | | | | | | | | | | | | ○ | | |
| | 7 | | | | | | | | | | | | | | | | |
| | 8 | Parking brake (AT) or clutch switch (MT) input is not present. | — | | | | | | | | | | | | | ○ | |
| | 9 | Inhibitor switch (AT) or neutral switch (MT) input is not present. | — | | | | | | | | | | | | | | ○ |

## Trouble Diagnoses (Cont'd)

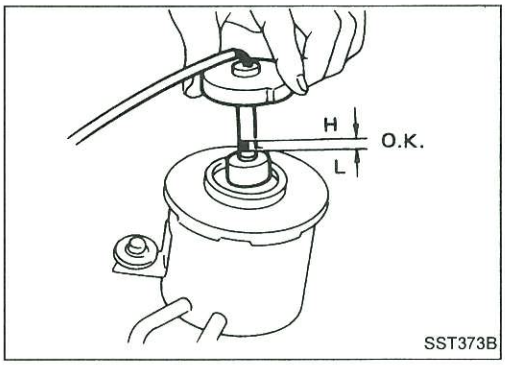

SST373B

### PRELIMINARY CHECK

**Check 1**
**Checking fluid level and fluid leakage**

Refer to "SUPER HICAS SYSTEM — On-vehicle Service" on page ST-27.

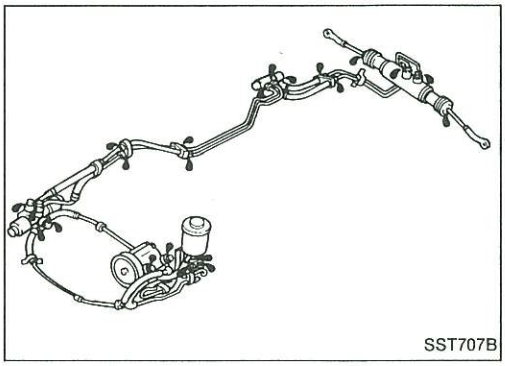
SST707B

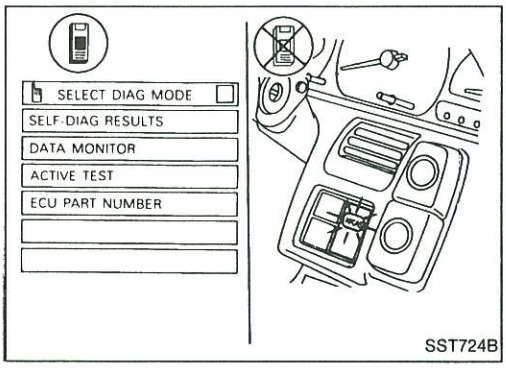

SST724B

**Check 2**
**Perform self-diagnosis.**

Refer to "Self-diagnosis" on page ST-46.

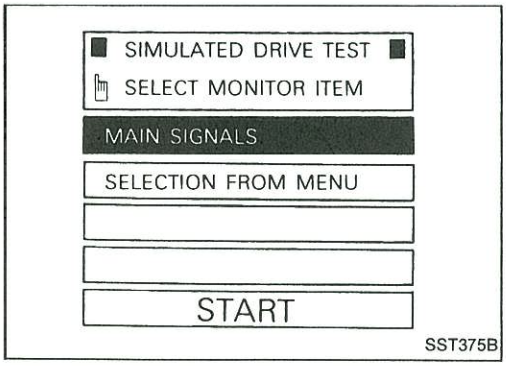

SST375B

**Check 3**
**Perform rear wheel action check.**

**When CONSULT is used:**

1. Have a helper sit in the driver's compartment, and raise vehicle.
   (Use a two-pole lift or a center pole lift so that the four wheels are free to rotate.)
2. Connect CONSULT unit to diagnostic connector and start engine.
3. Touch "START" on CONSULT display.
4. Touch "HICAS", "ACTIVE TEST" and "SIMULATED DRIVE" in that order.
5. Touch "START" when "MAIN SIGNALS" display is reversed.

## Trouble Diagnoses (Cont'd)

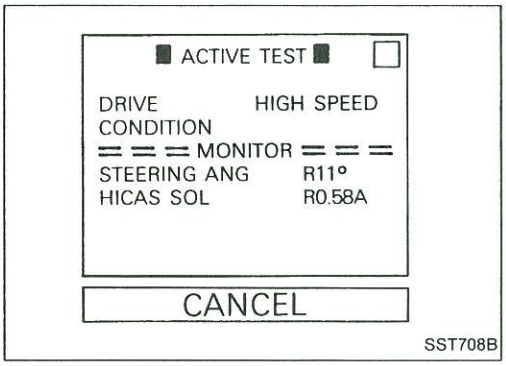


6. Touch "START."

**After simulated drive condition has continued for 5 minutes, it will automatically cancel and CONSULT unit will then show "TEST IS INTERRUPTED TO AVOID OIL TEMP RISE" display. To cancel this mode during self-diagnosis, simply touch "CANCEL".**

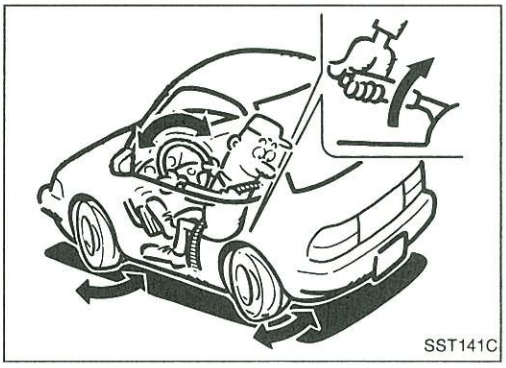


7. While running engine at speeds greater than 2,000 rpm, turn steering wheel 180° to the left and right from the neutral position. Ensure that rear wheels steer in response to rotation of steering wheel.

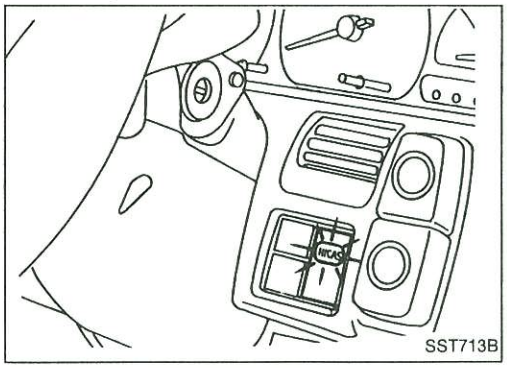


**When CONSULT is not used:**

1. Turn key switch "OFF".
2. Set HICAS system in self-diagnosis mode.
(1) Turn ignition switch "OFF".
(2) Set shift lever to "P" or "N" position (A/T model), or "Neutral" position (M/T model).
(3) Turn ignition switch "ON".
(4) Immediately start engine.
(5) Turn steering wheel from left to right (at least 20° from the neutral position) 5 times or more, then depress foot brake pedal at least 5 times all within 10 seconds after ignition switch has been turned "ON".
3. Set steering wheel to a point approximately 10° from the neutral position and check to ensure that rear wheels turn to the left and right alternately.

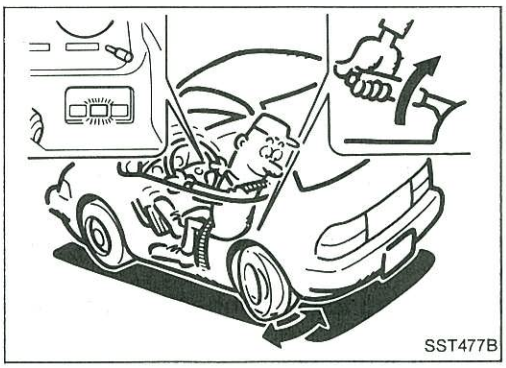

## Trouble Diagnoses (Cont'd)

### COMPONENT PARTS AND HARNESS CONNECTOR LOCATION

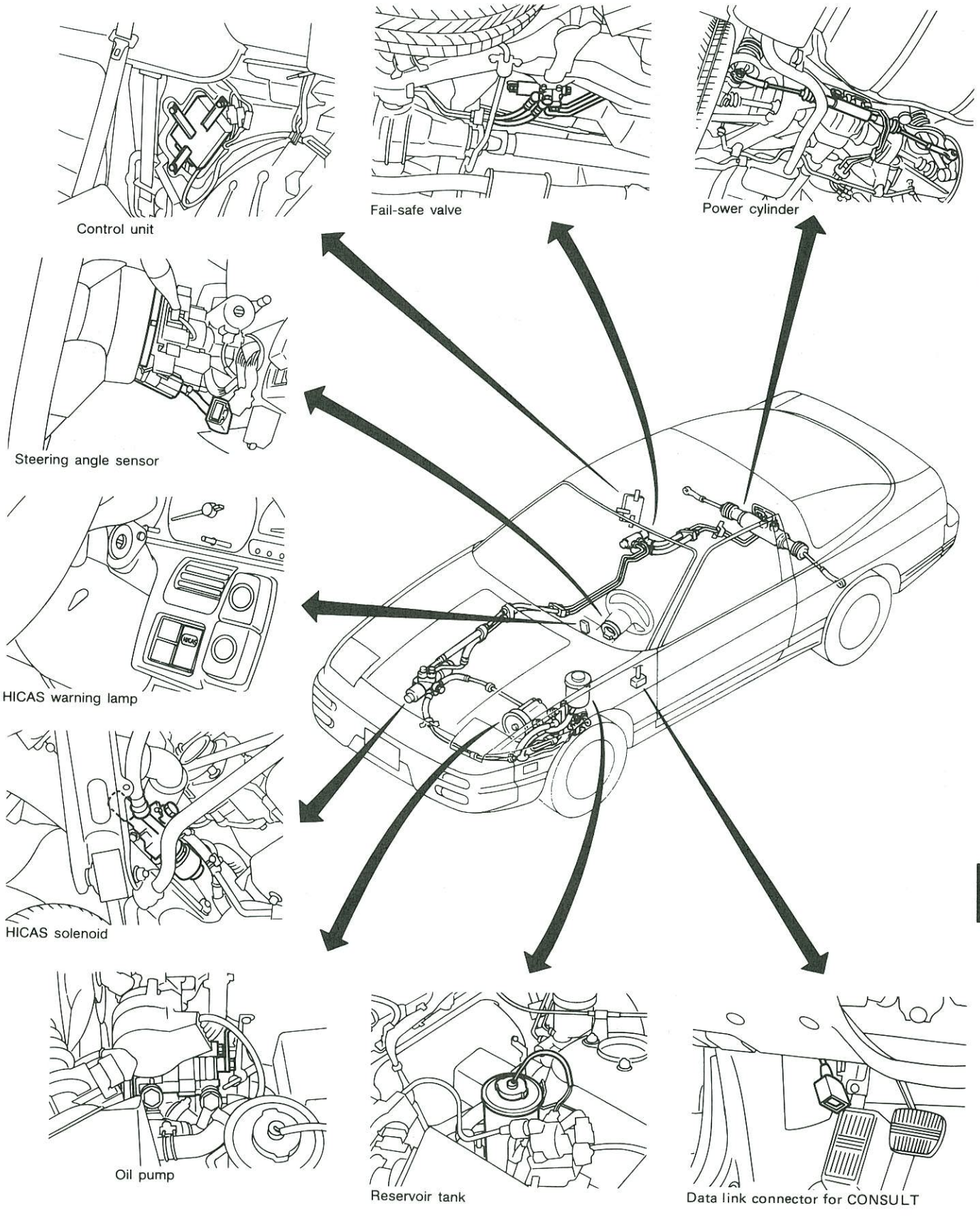


SST695B

## Trouble Diagnoses (Cont'd)

### CIRCUIT DIAGRAM FOR QUICK PINPOINT CHECK

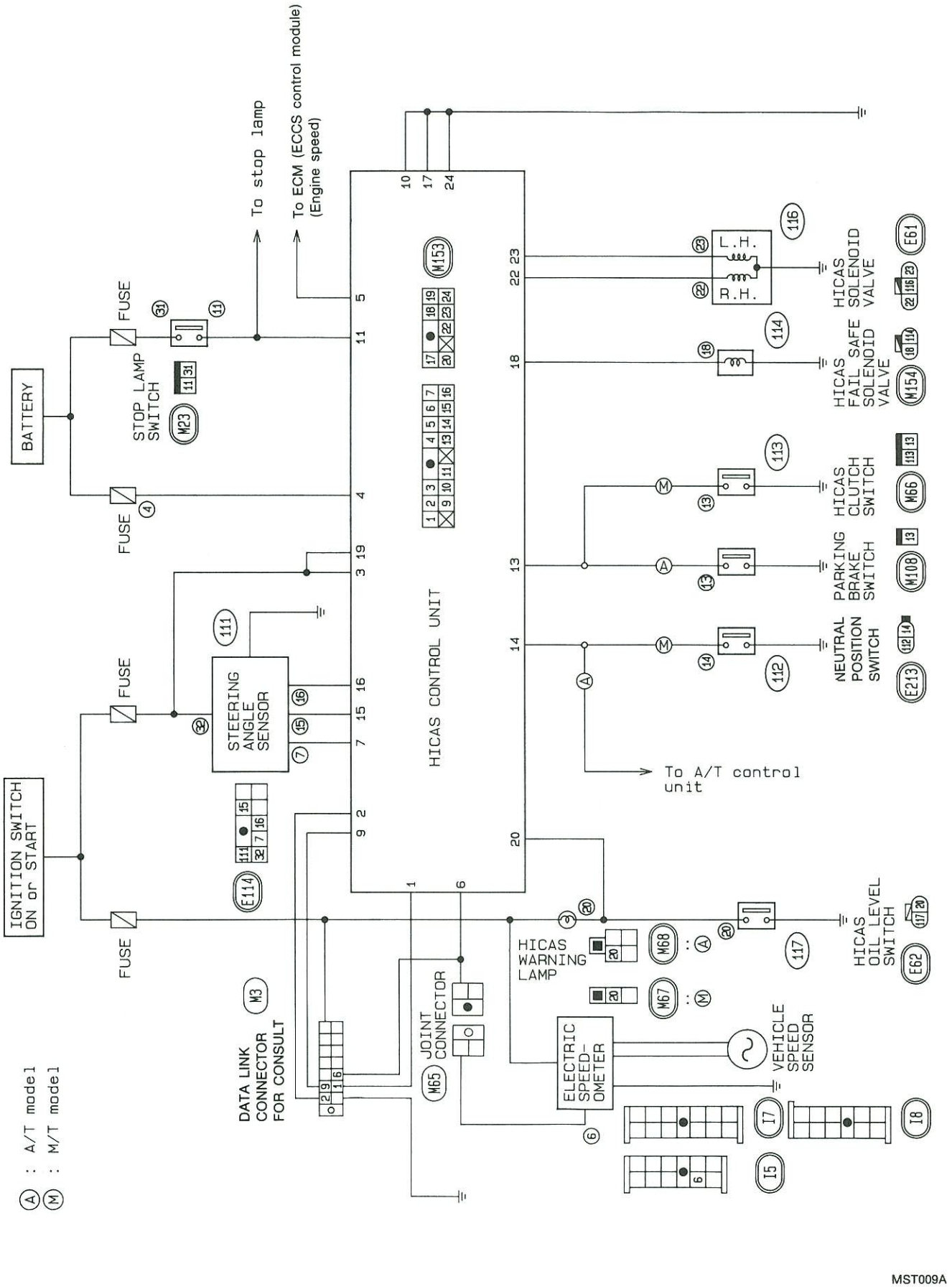


MST009A

## Trouble Diagnoses (Cont'd)

### WIRING DIAGRAM

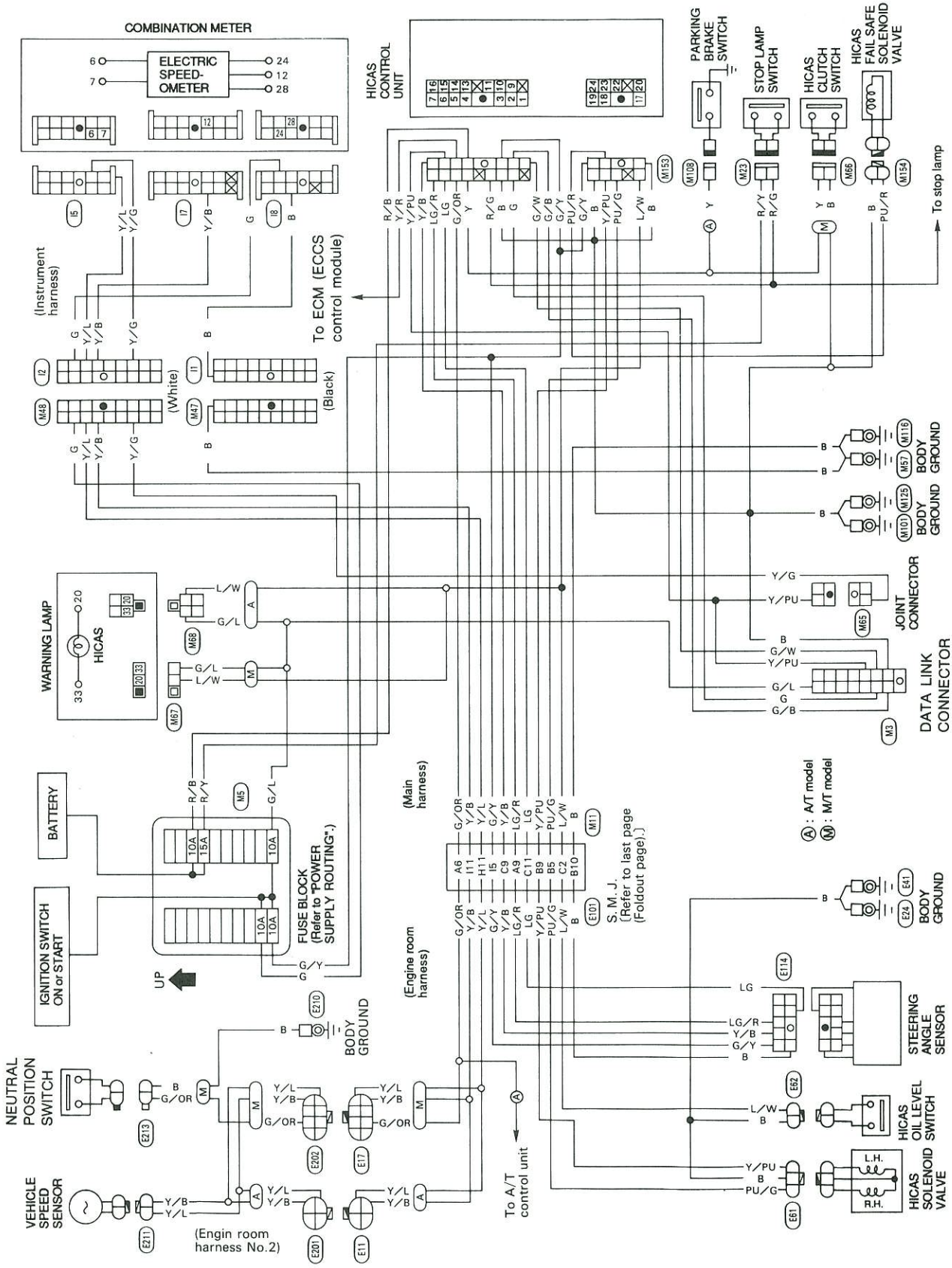


MST010A

## Trouble Diagnoses (Cont'd)

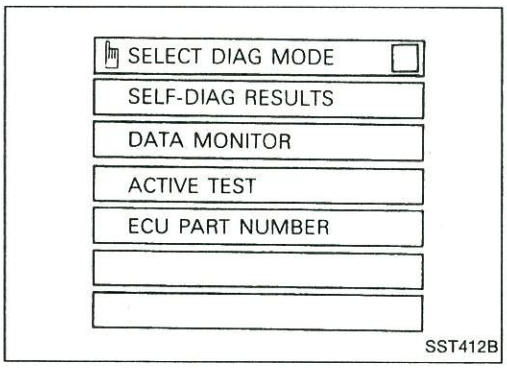


### SELF-DIAGNOSIS (When CONSULT is used)

- Start engine.
- Touch START (on CONSULT display).
- Touch HICAS.
- Touch SELF-DIAG RESULTS.

Refer to CONSULT operation manual "HICAS" for details.

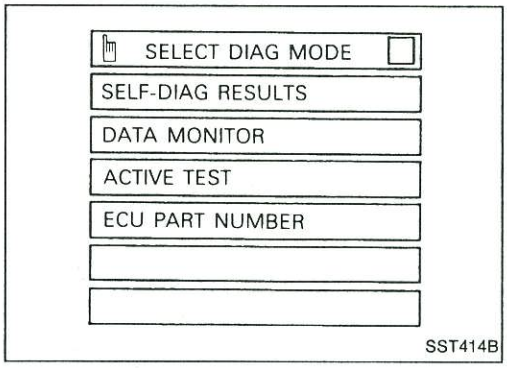


**For reference:**

**Recording input/output signals using data monitor function**

- Start engine.
- Touch START (on CONSULT display).
- Touch HICAS.
- Touch DATA MONITOR.

Refer to CONSULT operation manual "HICAS" for details.

### SELF-DIAGNOSIS (When CONSULT is not used)

#### Self-diagnosis procedures

1. Input starting conditions for self-diagnosis.
(1) Turn ignition switch "OFF".
(2) Set shift lever to "P" or "N" position (A/T model), or "Neutral" position (M/T model).
(3) Turn ignition switch "ON".
(4) Immediately start engine.
(5) Turn steering wheel from left to right (at least 20° from the neutral position ) 5 times or more, then depress foot brake pedal at least 5 times all within 10 seconds after ignition switch has been turned "ON".
2. Input self-diagnosis item.
(1) Depress and release foot brake pedal.
(2) Turn steering wheel from left to right (at least 20°) from the neutral position.
(3) (M/T model)
Depress clutch pedal and move gear shift lever to any position other than Neutral land return to Neutral. Release clutch pedal.
(A/T model)
Disengage and engage parking brake lever. Move shift lever to any position other than Neutral or Parking and return to Parking.
(4) Move car at least 3 meters (10 ft) forward and proceed at an indicated speed of at least 2 km/h (1 MPH) in self-diagnosis mode.
3. The self-diagnosis mode will then appear in the "HICAS" warning lamp.

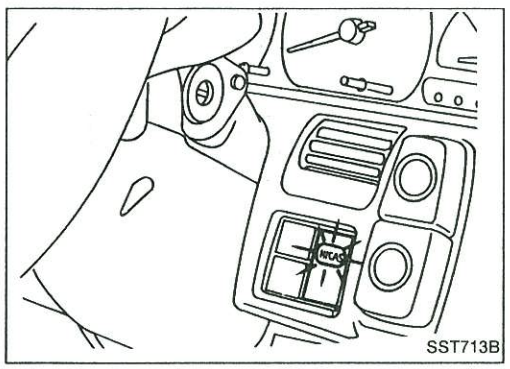


**When all systems are normal:**

HICAS warning lamp flashes at 0.25-second intervals.

## Trouble Diagnoses (Cont'd)

**When there is a system malfunction:**

Example: When ② HICAS solenoid LH, and ⑤ vehicle speed sensor have experienced a malfunction.

The warning lamp displays abnormal mode (1 sec. ON).

A If fail-safe system was operated (fail-safe valve is operating) when ignition switch was turned OFF for the last time, fail-safe items will be displayed in numerical order in modes indicated. After all items are displayed, display is repeated again.

- **To change the display mode to A , turn OFF ignition switch after mode B is displayed.**
- **When battery charge is insufficient, mode B is displayed.**

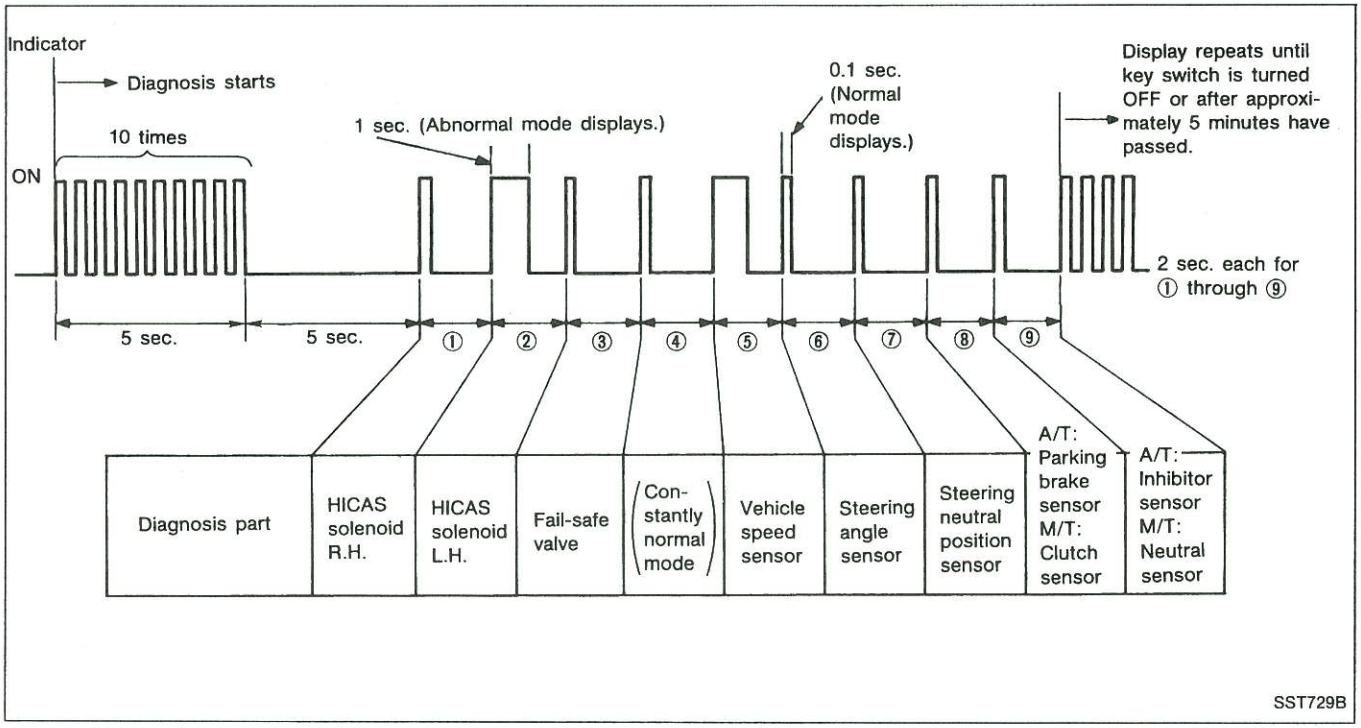

## Trouble Diagnoses (Cont'd)

B If fail-safe system was not operated when ignition switch was turned OFF for the last time, display will show self-diagnosis results in numerical sequence in modes indicated below. After all self-diagnosis results are shown, display is repeated again.

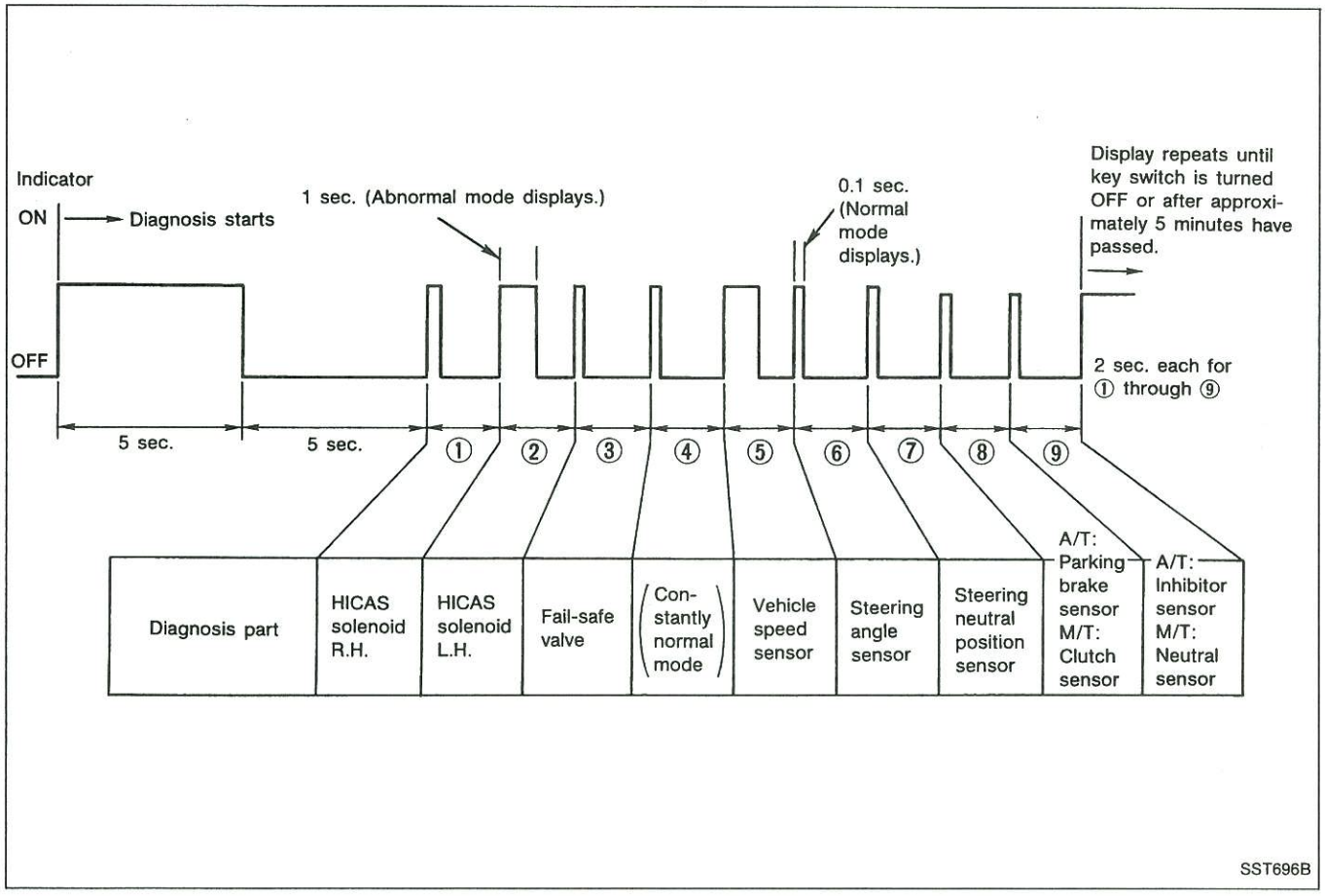


### Canceling the self-diagnosis function

There are three methods for canceling the self-diagnosis function, as described below:

- The self-diagnosis system is canceled by the turning ignition switch "OFF".
- After self-diagnosing has been operated for approximately 5 minutes, the self-diagnosis system will be automatically canceled.
- The self-diagnosis system is canceled by a vehicle speed of 30 km/h (19 MPH) or over.

## Trouble Diagnoses (Cont'd)

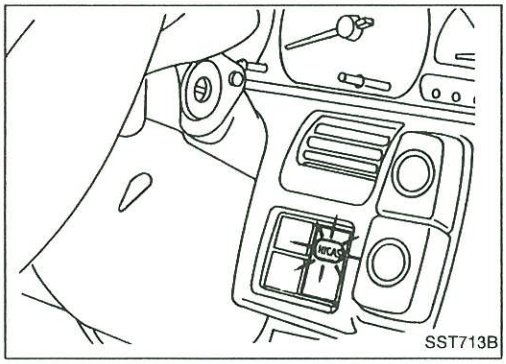


### DIAGNOSTIC PROCEDURE 1

**SYMPTOM:**

**No warning lamp comes on when ignition switch is turned "ON".**

START

A

CHECK WARNING LAMP POWER SUPPLY.
1) Turn ignition switch "ON".
2) Measure voltage across warning lamp connector terminal ⑳ and ground.
**Voltage:**
**Approximately 12V**

N.G. → Check and repair wiring.

O.K.

Replace warning lamp.

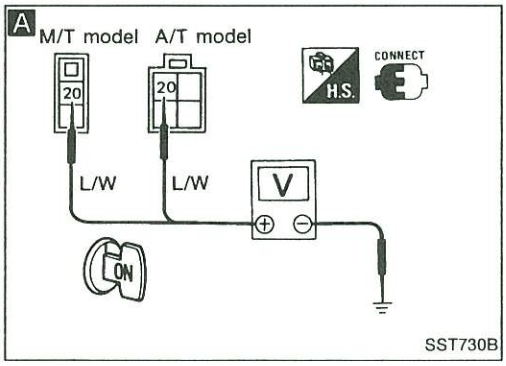


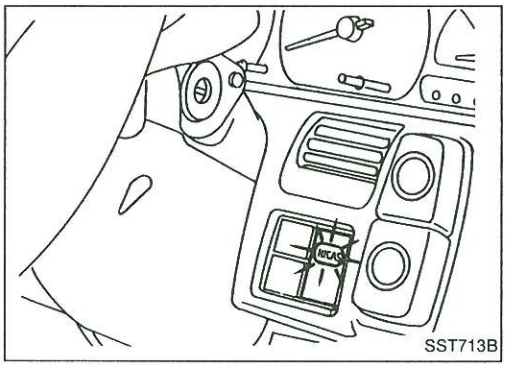


### DIAGNOSTIC PROCEDURE 2

**SYMPTOM (A):**

**Warning lamp comes on during operation.**

START

A

Check in self-diagnosis test mode.
Refer to page ST-46.

Repair malfunctioning part detected by self-diagnosis.
Refer to Diagnostic Procedures 5 to 11.

O.K. → END

N.G.

Check connectors for improper contact.

O.K. → END

N.G.

Check steering neutral position.
Refer to page ST-37.

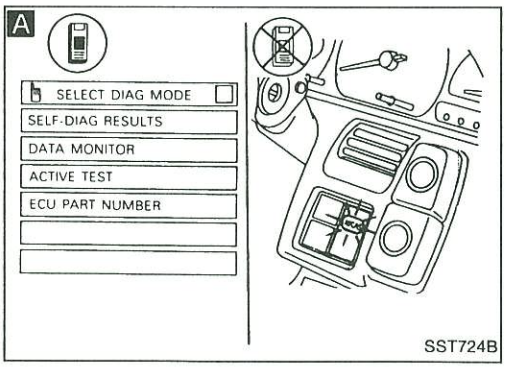

## Trouble Diagnoses (Cont'd)

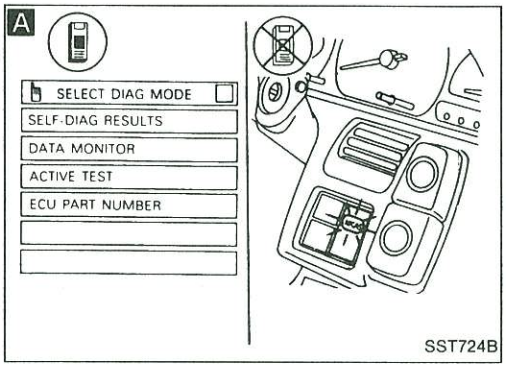


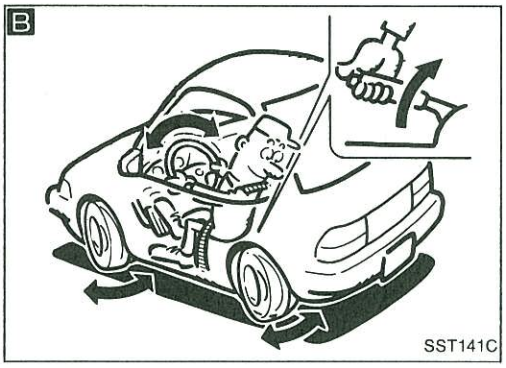


**SYMPTOM (B):**
**Warning lamp comes on when ignition switch is turned ON; however, it does not go out after engine start.**

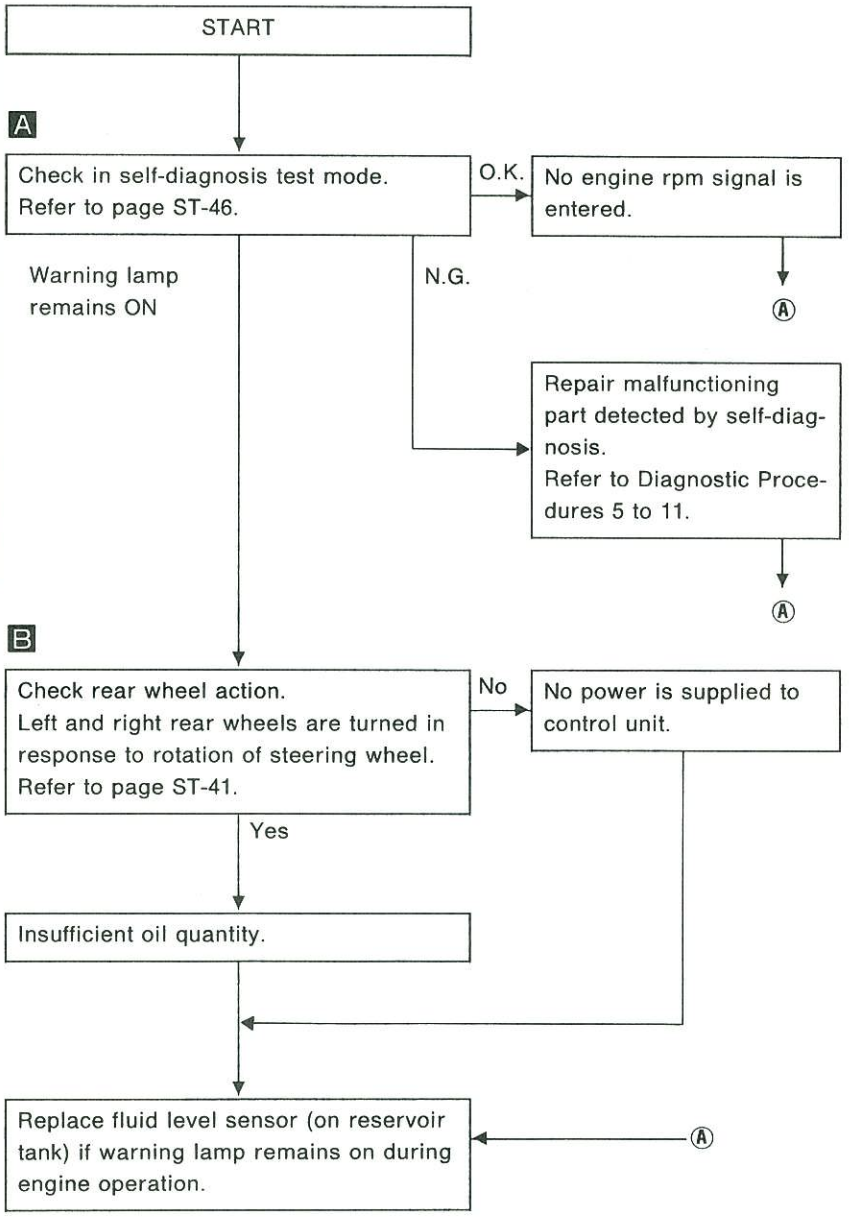

## Trouble Diagnoses (Cont'd)

### DIAGNOSTIC PROCEDURE 3

**SYMPTOM:**
**Abnormal noise occurs.**

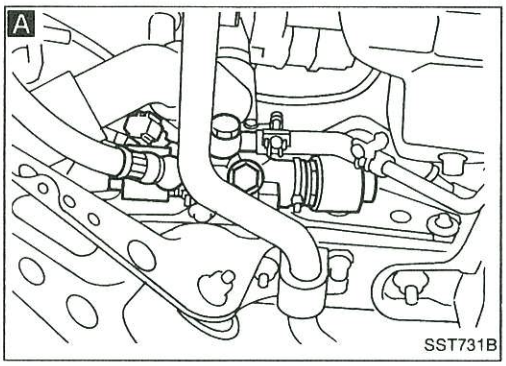


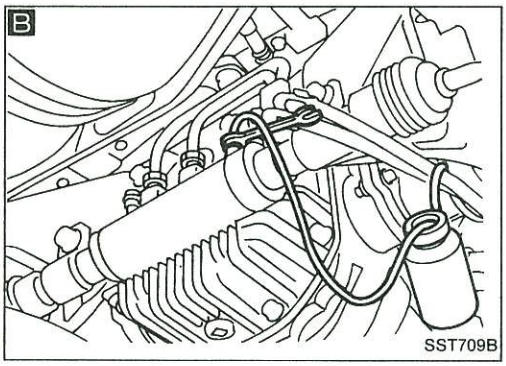


START

A

Disconnect HICAS solenoid connector and check noise for changes.

Yes → Noise stops.

No → Noise occurs in any system other than HICAS.

Locate and repair.

B

Bleed air from hydraulic system.
Refer to page ST-30.

N.G. → Replace control unit.

O.K. → END

N.G. → Replace HICAS solenoid valve.

O.K. → END

## Trouble Diagnoses (Cont'd)

### DIAGNOSTIC PROCEDURE 4

**SYMPTOM:**
**Vehicle behavior is abnormal. (Vehicle sways or jerks.)**

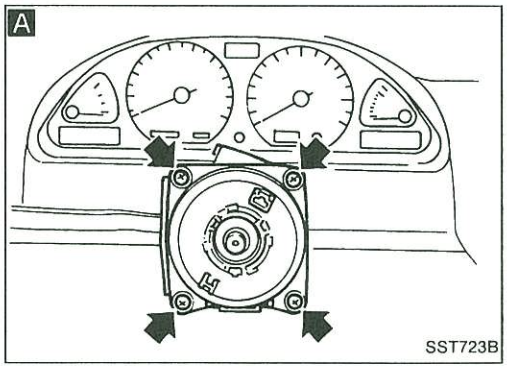


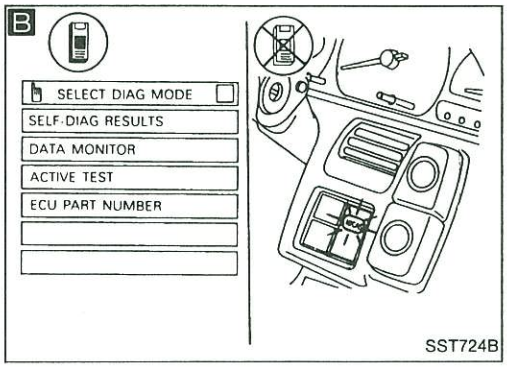


START

A

Check steering wheel neutral position for misalignment and steering angle sensors for looseness.
Refer to page ST-37.

O.K. → END

N.G.

B

Check in self-diagnosis test mode.
Refer to page ST-46.

N.G. → Repair malfunctioning system detected by self-diagnosis.
Refer to Diagnostic Procedures 5 to 11.

O.K.

Check static HICAS characteristic performance.
Refer to flow chart A on page ST-52.

Check dynamic HICAS characteristic performance.
Refer to flow chart B on page ST-55.

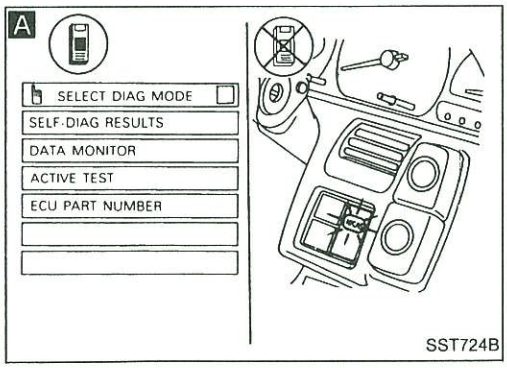


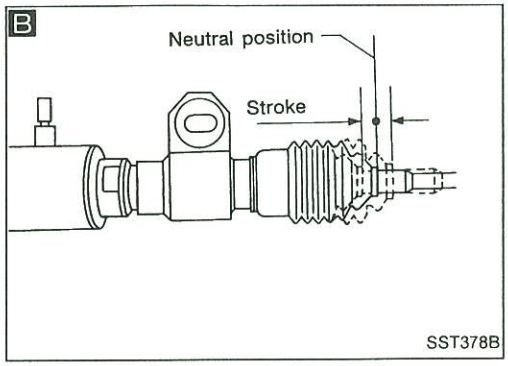


### A. Static HICAS characteristic performance check

START

A

Set CONSULT in ACTIVE TEST mode.

OR

Set self-diagnosis test mode.
Refer to page ST-46.

B

- Run engine at a speed or less than 2,000 rpm.
- Turn steering wheel approximately 180° to the left or right.

Ⓐ

## Trouble Diagnoses (Cont'd)

C

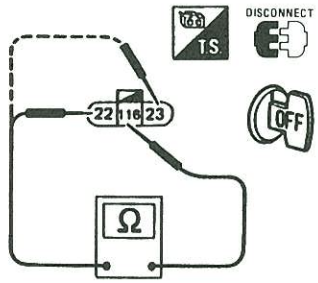


SST441B

D

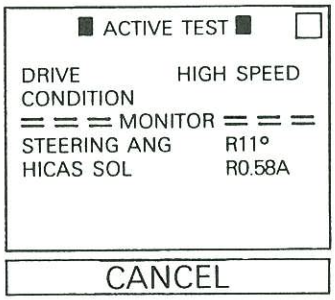


SST708B

D

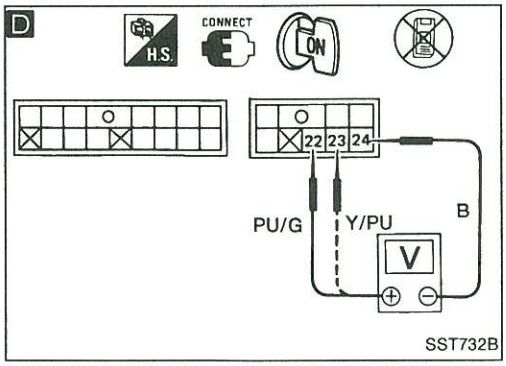


SST732B

E

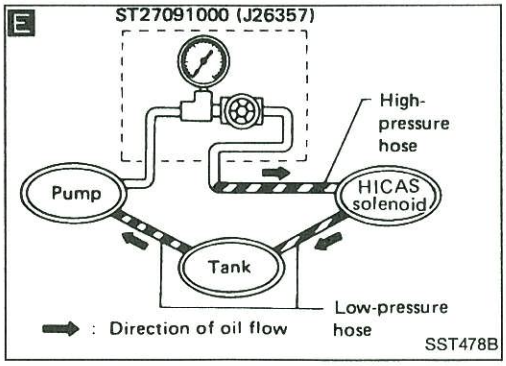


SST478B

Ⓐ

CHECK POWER CYLINDER STROKES.
**Each stroke from neutral position:**
**2.9 - 3.1 mm**
**(0.114 - 0.122 in)**
Refer to page ST-27.

O.K. → END

N.G.

C

CHECK RESISTANCE OF HICAS SOLENOID VALVE.
Stop engine and disconnect HICAS solenoid valve.
Measure resistance between HICAS solenoid connector terminals ㉒ and ㉓, and ⑯.
**Resistance:**
**4 - 6Ω**

N.G. → Replace HICAS solenoid valve. → Ⓑ

O.K.

D

CHECK CONTROL UNIT OUTPUT VOLTAGE.
Set CONSULT in ACTIVE TEST mode.
**HICAS solenoid valve output amperes:**
**1.1 - 1.2A**

OR

Set self-diagnosis test mode.
- Run engine at a speed of more than 2,000 rpm.
- Turn steering wheel approximately 180°.
- Measure voltage across control unit connector terminals ㉒, ㉓ and ㉔.

**Output voltage:**
**More than 4.4V**

N.G. → Replace control unit. → Ⓑ

O.K.

E

CHECK HICAS OIL PUMP RELIEF PRESSURE.
- Cancel self-diagnosis test mode.
- Check HICAS oil pump relief pressure with engine running at a speed of more than 2,000 rpm.

**Relief pressure:**
**More than 5,884 kPa**
**(60 kg/cm², 853 psi)**

N.G. → Replace oil pump. → Ⓑ

O.K.

Ⓒ

GI MA EM LC EF & EC FE CL MT AT PD FA RA BR ST BF HA EL

## Trouble Diagnoses (Cont'd)

F

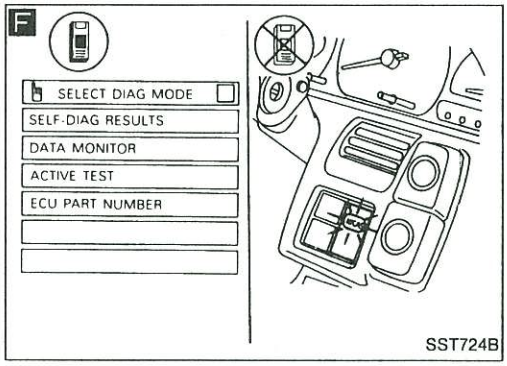


Ⓒ

F

CHECK OIL PRESSURE AT FAIL-SAFE VALVE.

Set CONSULT in ACTIVE TEST mode.

OR

Set self-diagnosis test mode.

G

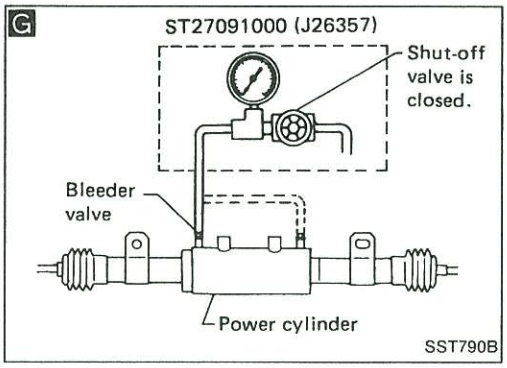


G

- Run engine at a speed of more than 2,000 rpm and turn steering wheel approximately 180° to the left and right.
- Check oil pressure at bleeder valve of power cylinder.

**Oil pressure:**
**More than 5,394 kPa**
**(55 kg/cm², 782 psi)**

N.G. → Replace HICAS solenoid valve.

O.K. → Replace power cylinder.

H

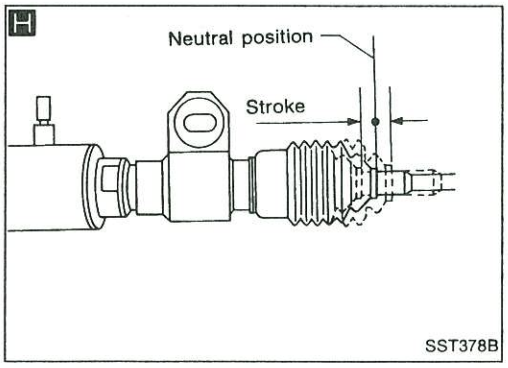


H

CHECK POWER CYLINDER STROKE.

**Each stroke from neutral position:**
**2.9 - 3.1 mm**
**(0.114 - 0.122 in)**
Refer to page ST-27.

N.G. → Replace fail-safe valve.

O.K. → Ⓑ

## Trouble Diagnoses (Cont'd)

### B. Dynamic HICAS characteristic performance check

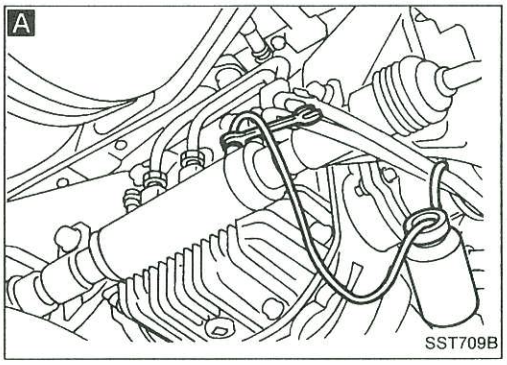


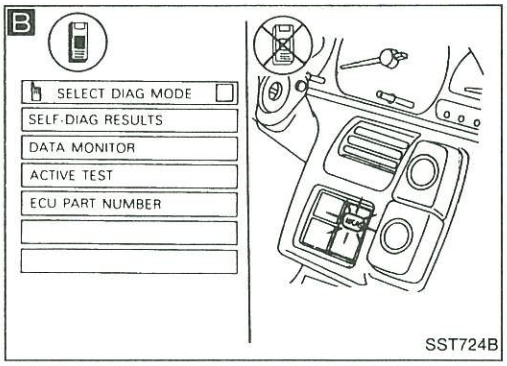


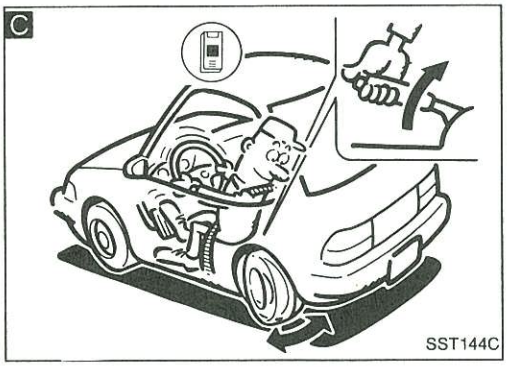


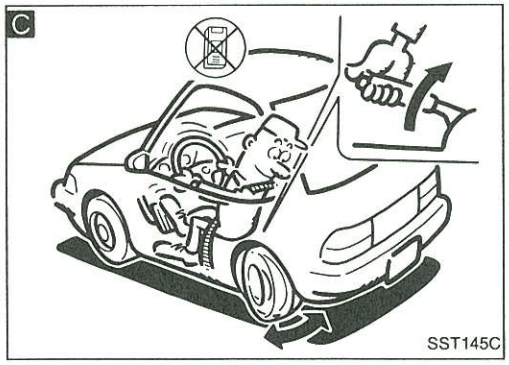


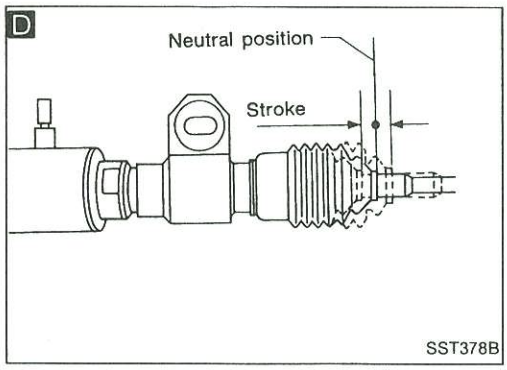


START

A

CHECK PIPING AND CONNECTIONS.
ALSO BLEED AIR FROM HYDRAULIC SYSTEM.
- Replace piping or connectors which are found to be damaged.
- Bleed air from hydraulic system. Refer to page ST-30.

B

Set CONSULT in ACTIVE TEST mode.

OR

Set in self-diagnosis mode. Refer to page ST-46.

Run engine at a speed of more than 2,000 rpm.

C

CHECK REAR WHEELS FOR PROPER MOVEMENT.
Ensure that rear wheel turns to the left or right when steering wheel is turned to the left or right.

OR

Ensure that rear wheels intermittently turn to the left and right when steering wheel is set to the neutral position.

D

CHECK POWER CYLINDER STROKES.
**Each stroke from neutral position:**
**More than 2.0 mm (0.079 in)**

O.K. → END

N.G.

Ⓐ

## Trouble Diagnoses (Cont'd)

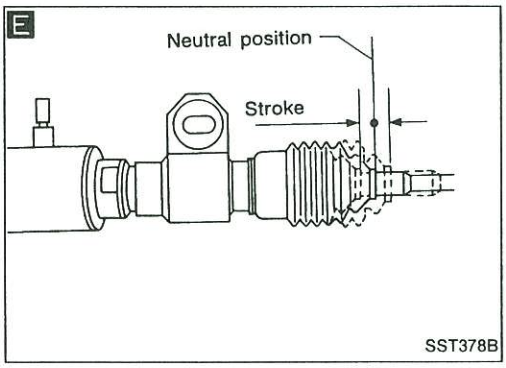


Ⓐ

Replace HICAS solenoid valve.

E

CHECK POWER CYLINDER STROKE.
- After replacing HICAS solenoid valve, check power cylinder stroke.
  **Each stroke from neutral position:**
  **More than 2.0 mm (0.079 in)**

O.K. → END

N.G.

Replace power cylinder.

## Trouble Diagnoses (Cont'd)

### DIAGNOSTIC PROCEDURE 5

**SYMPTOM:**

**System is not set in self-diagnosis test mode.**

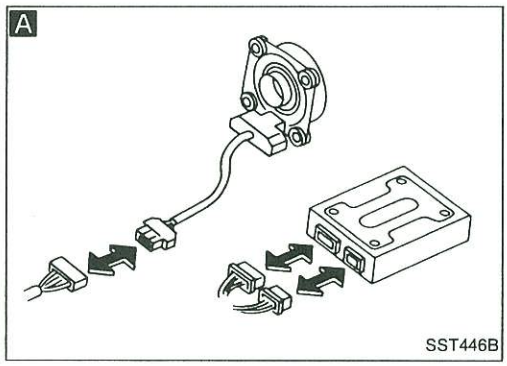


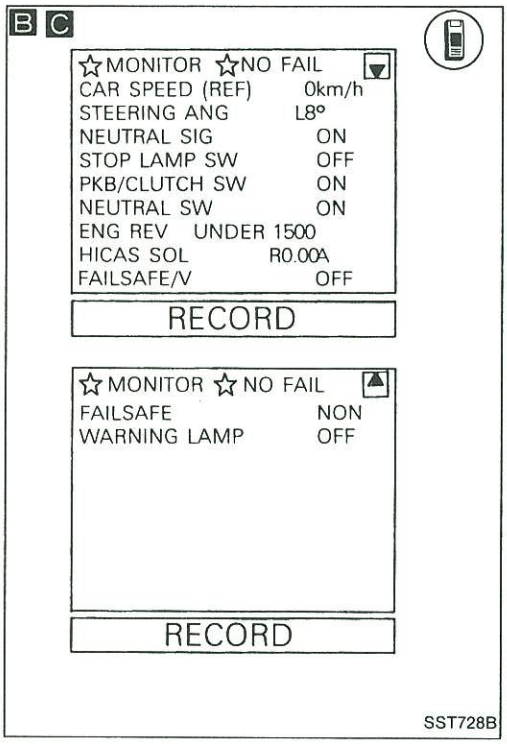


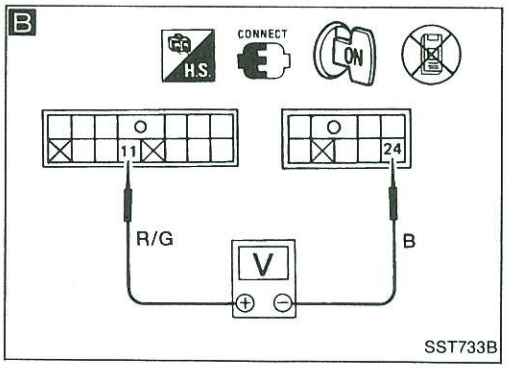


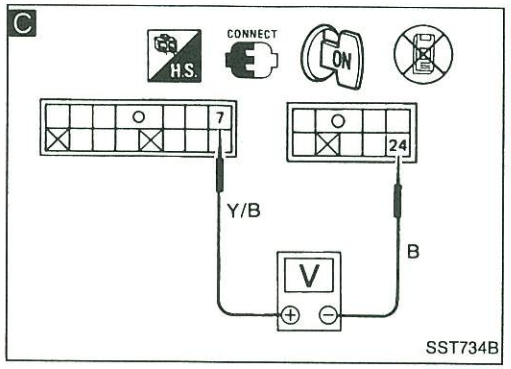


START

A

CHECK CONNECTOR CONTINUITY.
Disconnect steering angle sensor connector and control unit connector, and reconnect them firmly. Conduct self-diagnosis.

O.K. → Poor connector connection

N.G.

B

CHECK STOP LAMP INPUT SIGNAL.
Set CONSULT in DATA MONITOR mode.
ON-OFF display

OR

Check that stop lamp input is present at control unit.
**Brake ON:**
**Approximately 12V**
**Brake OFF:**
**0V**

N.G. → Malfunctioning stop lamp switch system

O.K.

C

CHECK STEERING NEUTRAL POSITION SENSOR INPUT SIGNAL.
Set CONSULT in DATA MONITOR mode.
ON-OFF display

OR

Check that steering neutral input is present at control unit when steering wheel is turned to the left and right at least 20° from the neutral position.
**Neutral position:**
**Approximately 5V**
**When turned at least 20°:**
**0V**

O.K. → Replace control unit.

N.G.

Ⓐ

GI MA EM LC EF & EC FE CL MT AT PD FA RA BR ST BF HA EL

## Trouble Diagnoses (Cont'd)

D

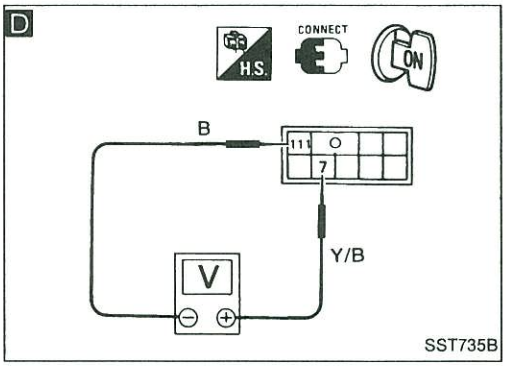


E

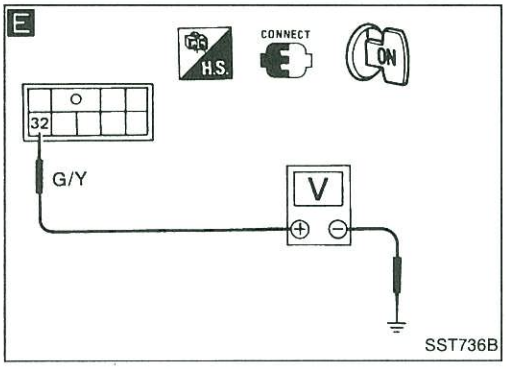


F

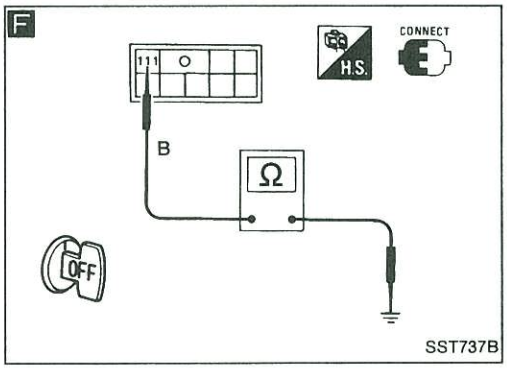


Ⓐ

D

CHECK STEERING NEUTRAL POSITION SENSOR OUTPUT SIGNAL.
Check that steering neutral output is present when steering wheel is turned to the left and right at least 20° from the neutral position.
**Neutral position:**
**Approximately 5V**
**When turned at least 20°:**
**0V**

O.K. → Repair or replace harness between control unit and steering angle sensor.

N.G. ↓

E CHECK STEERING ANGLE SENSOR POWER SUPPLY.
1) Turn ignition switch "ON".
2) Measure voltage across steering angle sensor connector terminal IGN and ground.
**Voltage:**
**Approximately 12V**

O.K. → Replace steering angle sensor.

F CHECK STEERING ANGLE SENSOR GROUND CIRCUIT.
Check continuity between steering angle sensor terminal GND and body metal (ground).
**Continuity should exist.**

N.G. ↓

Check and repair power supply harness or ground harness.

## Trouble Diagnoses (Cont'd)

### DIAGNOSTIC PROCEDURE 6

**SYMPTOM:**

**HICAS solenoid (left and right) output is not present.**

A

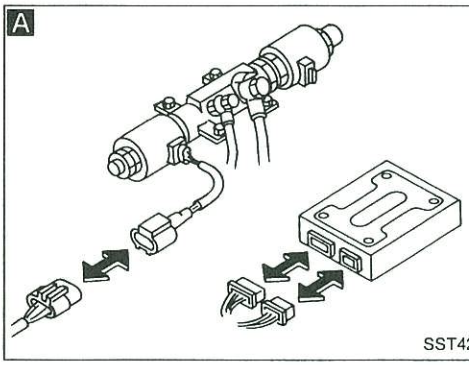

SST421B

B

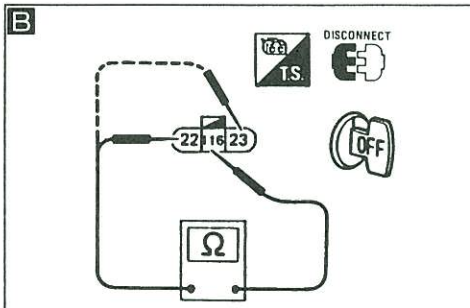


SST422B

C

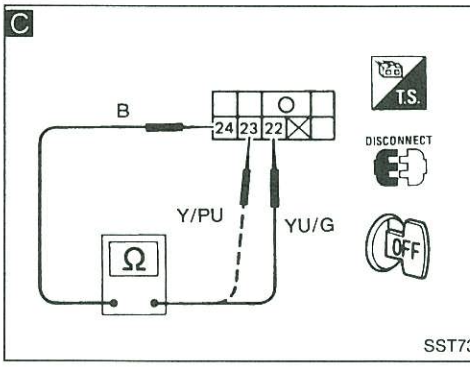


SST739B

START

A

CHECK CONNECTOR CONTINUITY.
Disconnect HICAS solenoid connector and control unit connector, and reconnect them firmly. Conduct self-diagnosis.

O.K. → Poor connector connection

N.G.

B

CHECK RESISTANCE OF LEFT AND RIGHT HICAS SOLENOIDS (on solenoid side).

1) Disconnect HICAS solenoid connector.
2) Measure resistance between HICAS solenoid connector terminals ㉒, ㉓ and (116).

**Resistance:**
**4 - 6Ω**

N.G. → Replace HICAS solenoid.

O.K.

C

CHECK RESISTANCE OF LEFT AND RIGHT HICAS SOLENOIDS (on control unit side).

1) Disconnect control unit connector.
2) Measure resistance between body connector terminals ㉒, ㉓ and ㉔.

**Resistance:**
**4 - 6Ω**

O.K. → Replace control unit.

N.G.

Repair or replace harness between control unit and HICAS solenoid.

## Trouble Diagnoses (Cont'd)

### DIAGNOSTIC PROCEDURE 7

**SYMPTOM:**

**Fail-safe valve output is not present.**

A

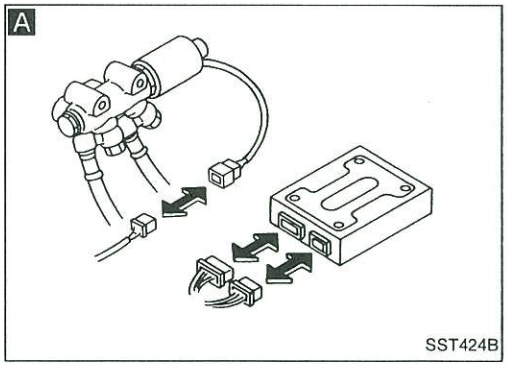

SST424B

B

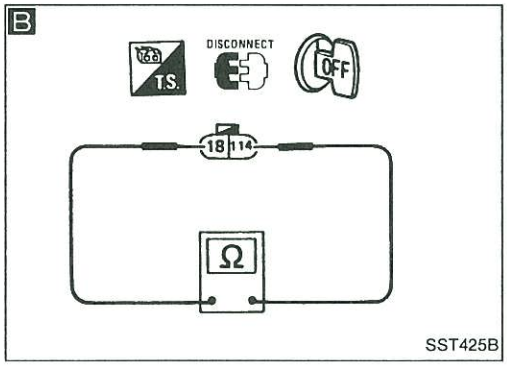


SST425B

C

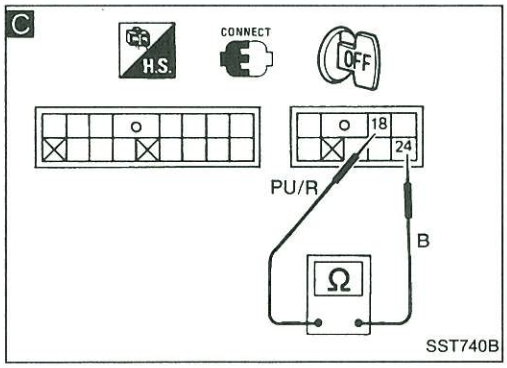


SST740B

START

A

CHECK CONNECTOR CONTINUITY.
Disconnect fail-safe valve connector and control unit connector, and reconnect them firmly. Conduct self-diagnosis.

O.K. → Poor connector connection

N.G.

B

CHECK RESISTANCE OF FAIL- SAFE VALVE (on fail-safe valve side).
1) Disconnect fail-safe valve connector.
2) Measure resistance between connector terminals ⑱ and ⑭ .
**Resistance:**
**13 - 17Ω**

N.G. → Replace fail-safe valve.

O.K.

C

CHECK RESISTANCE OF FAIL- SAFE VALVE (on control unit side).
1) Disconnect control unit connector.
2) Measure resistance between body connector terminals ⑱ and ㉔.
**Resistance:**
**13 - 17Ω**

O.K. → Replace control unit.

N.G.

Repair or replace harness between control unit and fail-safe valve.

## Trouble Diagnoses (Cont'd)

### DIAGNOSTIC PROCEDURE 8

**SYMPTOM:**

**Vehicle speed signal is not present.**

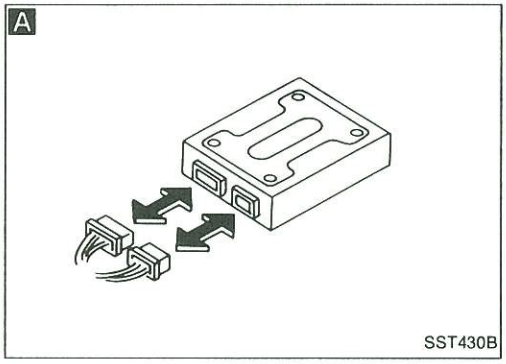


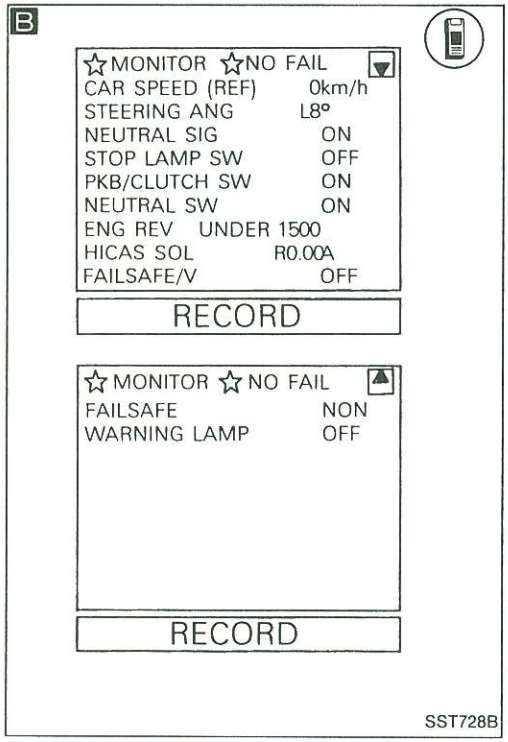


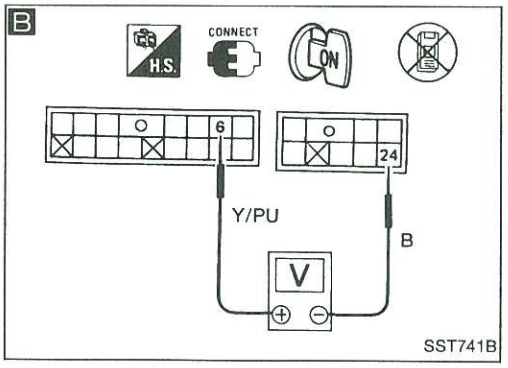


START

A

CHECK CONNECTOR CONTINUITY.
Disconnect control unit connector and reconnect it firmly. Conduct self-diagnosis.

O.K. → Poor connector connection

N.G.

B

CHECK CONTROL UNIT INPUT SIGNAL.

1) Raise rear end of vehicle so that rear wheels rotate freely.
2) Set CONSULT in DATA MONITOR mode.
   Vehicle speed display (km/h)

O.K. → Replace control unit.

OR

Measure voltage variations between control unit connector terminals ⑥ and ㉔ while slowly rotating rear wheels by hand.
**Voltage must change between 0 and 5V.**

N.G.

Repair or replace harness between speed sensor or control unit and speedometer.

## Trouble Diagnoses (Cont'd)

### DIAGNOSTIC PROCEDURE 9

**SYMPTOM:**
**Steering angle sensor input is not present.**

A

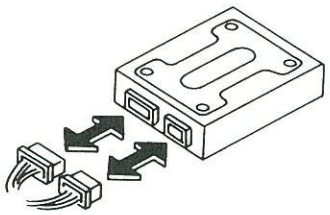

SST430B

B

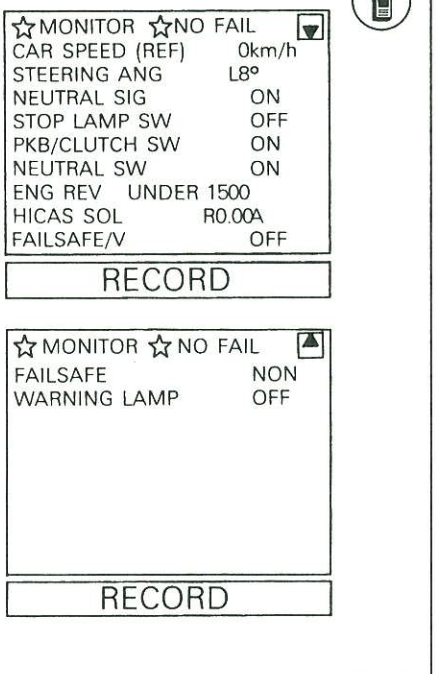


SST728B

B

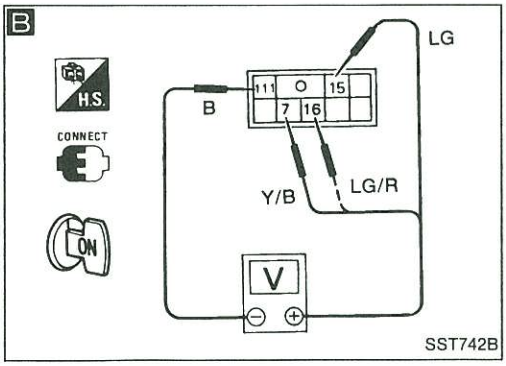


SST742B

C

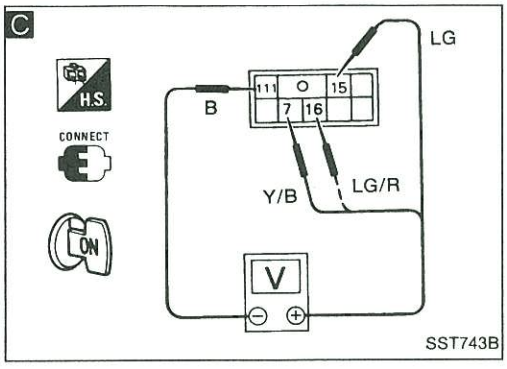


SST743B

START

A

CHECK CONNECTOR CONTINUITY.
Disconnect control unit connector and reconnect it firmly. Conduct self-diagnosis.

O.K. → Poor connector connection

N.G.

B

CHECK CONTROL UNIT INPUT SIGNAL.
1) Turn ignition switch "ON".
2) Set CONSULT in DATA MONITOR mode.
Steering angle deg.
Neutral signal ON-OFF

OR

Measure voltage variations between control unit terminals ⑦, ⑮, ⑯ and ㉔ when steering wheel is slowly turned to the left and right at least 20° from the neutral position.
**Do not turn steering wheel quickly.**
**Voltage must change from 0 to at least 5V.**

O.K. → Replace control unit.

N.G.

C

CHECK STEERING ANGLE SENSOR OUTPUT SIGNAL.
1) Turn signal switch "ON".
2) Measure voltage variations between steering angle sensor connector terminals ⑦, ⑮, ⑯ and ⑪⑪ .
**Voltage must change from 0 to at least 5V.**

O.K. → Repair or replace harness between control unit and steering angle sensor.

N.G.

Ⓐ

## Trouble Diagnoses (Cont'd)

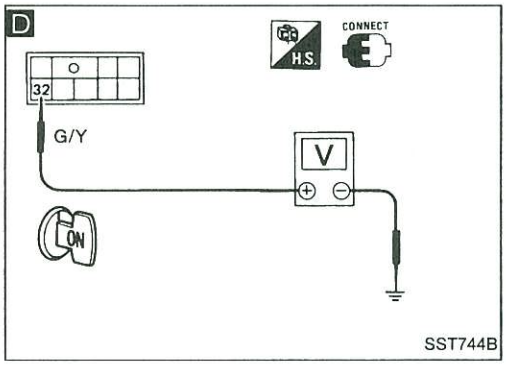


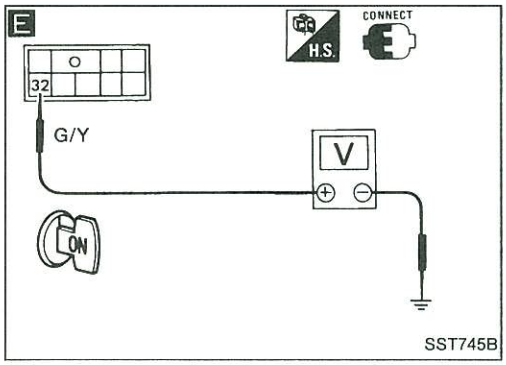


Ⓐ

**D** CHECK STEERING ANGLE SENSOR POWER SUPPLY.

1) Turn ignition switch "ON".
2) Measure voltage across steering angle sensor connector terminal ㉜ and ground.

**Voltage:**
**Approximately 12V**

O.K. → Replace steering angle sensor.

**E** CHECK STEERING ANGLE SENSOR GROUND CIRCUIT.

Check continuity between steering angle sensor terminal ⑪① and body metal (ground).

**Continuity should exist.**

N.G. →

Repair or replace power supply harness or ground harness.

## Trouble Diagnoses (Cont'd)

### DIAGNOSTIC PROCEDURE 10

**SYMPTOM:**

**Parking brake position (A/T) or clutch position switch (M/T) input is not present.**

A

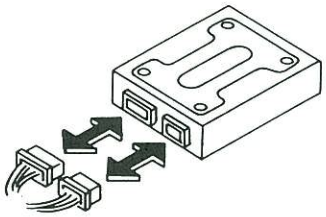

SST430B

B

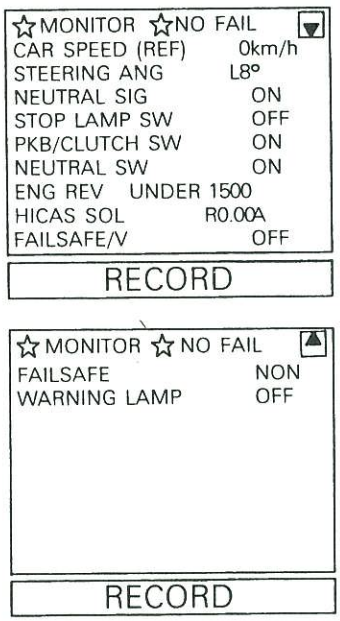


SST728B

B

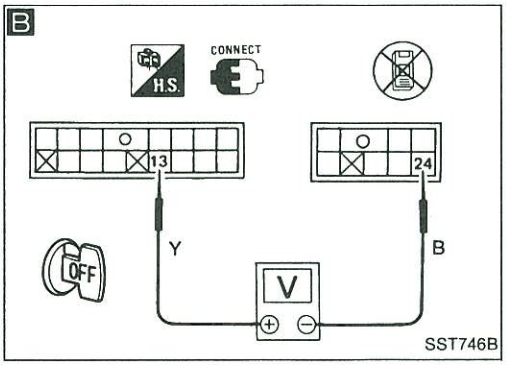


SST746B

START

A

CHECK CONNECTOR CONTINUITY.
Disconnect control unit connector and reconnect it firmly. Conduct self-diagnosis.

O.K. → Poor connector connection

N.G.

B

CHECK CONTROL UNIT INPUT SIGNAL.
Set CONSULT in DATA MONITOR mode.
ON-OFF display

OR

Measure voltage variations between control unit terminals ⑬ and ㉔ when parking brake is pulled (A/T) or clutch is depressed (M/T).
**Voltage:**
**0V → Approximately 12V**

O.K. → Replace control unit.

N.G.

Check parking brake position switch or clutch position switch and harness.

## Trouble Diagnoses (Cont'd)

### DIAGNOSTIC PROCEDURE 11

**SYMPTOM:**

**Inhibitor position switch (A/T) or neutral position switch (M/T) input is not present.**

A

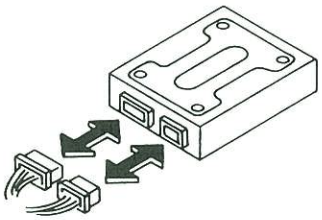

SST430B

B

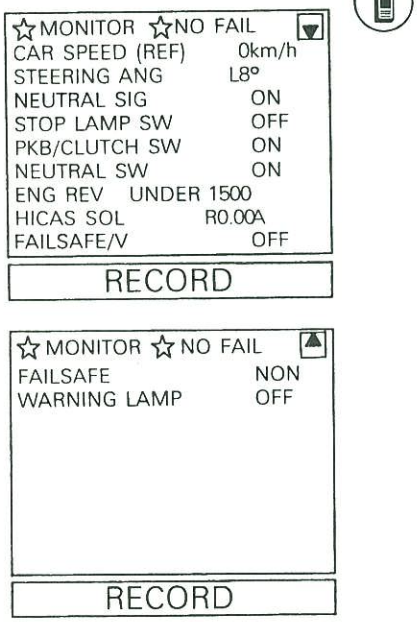


SST728B

C

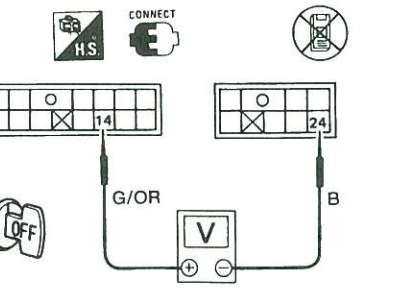


SST747B

START

A

CHECK CONNECTOR CONTINUITY.
Disconnect control unit connector and reconnect it firmly. Conduct self-diagnosis.

O.K. → Poor connector connection

N.G.

B

CHECK CONTROL UNIT INPUT SIGNAL.
Set CONSULT in DATA MONITOR mode.
ON-OFF display

OR

Measure voltage variations between control unit terminals ⑭ and ㉔ when shift lever is moved from P to any other position (A/T) or shift lever is moved from neutral to any other position (M/T).
**Voltage:**
**0V → Approximately 12V**

O.K. → Replace control unit.

N.G.

Check inhibitor switch or neutral switch and harness.

## Trouble Diagnoses (Cont'd)

### CONTROL UNIT INSPECTION TABLE

The standard values (voltage) measured with an analog tester, in contact with the control unit terminal, are shown below:

| Terminal No. | Application | Standard value |
|---|---|---|
| 1 | Service support CLK input | Pulse wave (153.6 KHz Approximately 7V) |
| 2 | Service support RX output (Reception from Consult) | (Not specified serial pulse data) |
| 3 | IGN power supply | Key switch ON: Approximately 12V<br>Key switch in other position: 0V |
| 4 | Battery | Approximately 12V |
| 5 | ECM revolution signal | Refer to "Electrical components inspection" Trouble diagnosis EF & EC section |
| 6 | Vehicle speed signal | Rear wheel rotating<br>0V ←→ greater than 5V (approx.), intermittent |
| 7 | Steering neutral position sensor | Approximately 5V (Neutral position) |
| 9 | Service support TX output (Transmission for Consult) | (Not specified serial pulse data) |
| 10 | Ground | 0V |
| 11 | Stop lamp switch signal | Brake ON: Approximately 12V<br>Brake OFF: 0V |
| 13 | Parking brake signal (A/T), Clutch signal (M/T) | Parking brake engaged (A/T)/<br>clutch disengaged (M/T): Approximately 12V |
| 14 | Inhibitor signal (A/T), Neutral signal (M/T) | Shift lever in any position other than<br>Parking (A/T) or neutral (M/T): Approximately 12V |
| 15 | Steering angle sensor-1 signal | Steering wheel turned<br>0 ←→ Approximately 5V, intermittent |
| 16 | Steering angle sensor-2 signal | Steering wheel turned<br>0 ←→ Approximately 5V, intermittent |
| 17 | Ground | 0V |
| 18 | Resistance of fail-safe valve | 13 - 17Ω |
| 19 | IGN power supply | Ignition switch ON: Approximately 12V<br>Ignition switch in other position: 0V |
| 20 | HICAS warning lamp | Lamp OFF: Approximately 12V Lamp ON: 0V |
| 22 | Resistance of HICAS solenoid (R.H.) | 4 - 6Ω (Voltage varies with steering operation) |
| 23 | Resistance of HICAS solenoid (L.H.) | 4 - 6Ω (Voltage varies with steering operation) |
| 24 | Ground | 0V |

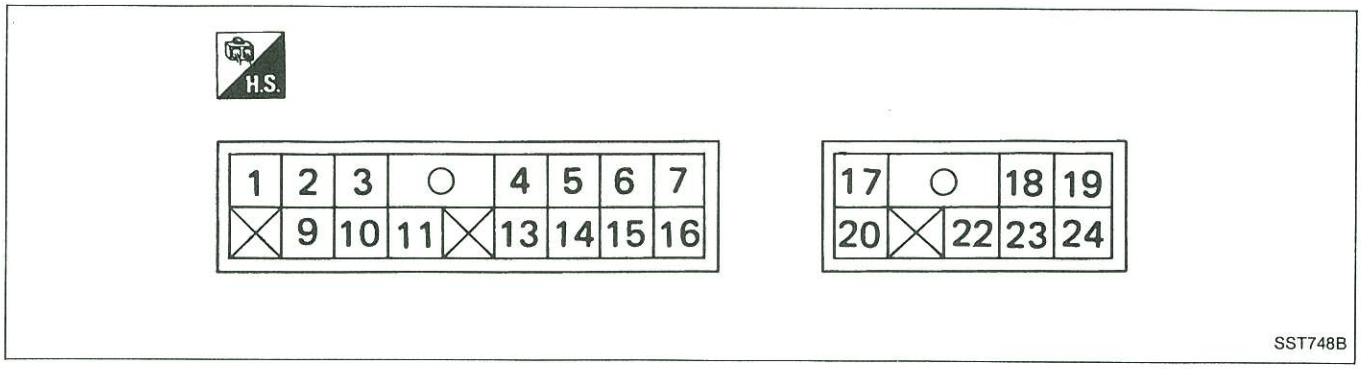

## General Specifications

| Applied model | Without HICAS | With HICAS |
|---|---|---|
| Steering model | Power steering | |
| Steering gear type | PR24SC | |
| Steering overall gear ratio | 17.1 | 14.9 |
| Turns of steering wheel (Lock to lock) | 3.1 | 2.6 |
| Steering column type | Collapsible, tilt | |

## Inspection and Adjustment

### GENERAL

| | |
|---|---|
| Steering wheel axial play mm (in) | 0 (0) |
| Steering wheel play mm (in) | 0 - 35 (0 - 1.38) |
| Allowable movement of gear housing mm (in) | ±2 (±0.08) |

### STEERING COLUMN

| | |
|---|---|
| Steering column length "$L_1$" mm (in) | 652.9 - 654.5 (25.70 - 25.77) |
| Steering column lower shaft length "$L_2$" mm (in) | 323.9 - 325.5 (12.75 - 12.81) |

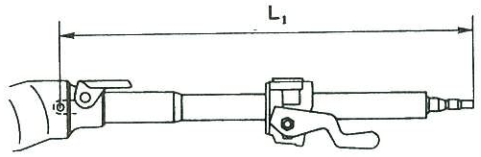


SST900B

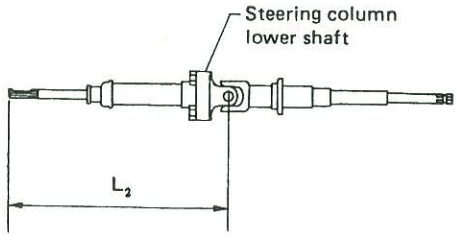


SST137C

### STEERING GEAR AND LINKAGE

| | |
|---|---|
| Steering gear type | PR24SC |
| Tie-rod outer ball joint | |
| Swinging force at cotter pin hole N (kg, lb) | 6.9 - 64.7 (0.7 - 6.6, 1.5 - 14.6) |
| Rotating torque N·m (kg-cm, in-lb) | 0.29 - 2.94 (3.0 - 30.0, 2.6 - 26.0) |
| Axial end play mm (in) | 0 (0) |
| Tie-rod inner ball joint | 7.8 - 110.8 |
| Swinging force* N (kg, lb) | (0.8 - 11.3, 1.8 - 24.9) |
| Rotating torque N·m (kg-cm, in-lb) | 7.4 (75, 65) or less |
| Axial end play mm (in) | 0 (0) |
| Tie-rod standard length "L" mm (in) | 174.8 (6.88) |

*: Measuring point

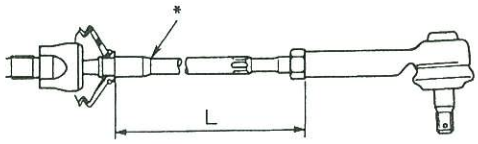


SST487B

| | |
|---|---|
| Rack stroke "L" mm (in) | 68.5 (2.697) |

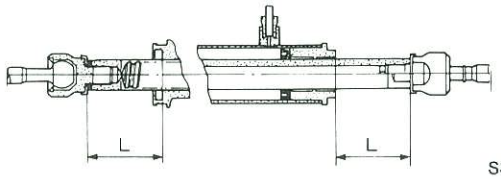


SST086B

## Inspection and Adjustment (Cont'd)

### STEERING GEAR AND LINKAGE (Cont'd)

| | |
|---|---|
| Pinion gear preload without gear oil<br>N·m (kg-cm, in-lb) | |
| Within ±100° from the neutral position | |
| Average rotating torque | 0.8 - 1.3<br>(8 - 13, 6.9 - 11.3) |
| Maximum torque deviation | 0.4 (4, 3.5) |
| Except above range | |
| Maximum rotating torque | 1.9 (19, 16) |
| Maximum torque deviation | 0.6 (6, 5.2) |
| Rack sliding force without gear oil<br>N (kg, lb) | |
| Within ±5.5 mm (±0.217 in) from the neutral position | 122.6 - 166.7<br>(12.5 - 17, 27.6 - 37.5) |
| Except above range | 122.6 - 186.3<br>(12.5 - 19, 27.6 - 41.9) |

### POWER STEERING

| | |
|---|---|
| Rack sliding force N (kg, lb) | |
| Under normal operating oil pressure | |
| Range within ±11.5 mm (±0.453 in) from the neutral position | 167 - 226<br>(17 - 23, 37 - 51) |
| Retainer adjustment | |
| Adjusting screw | |
| Initial tightening torque N·m (kg-cm, in-lb) | 4.9 - 5.9<br>(50 - 60, 43 - 52) |
| Retightening torque after loosening | 0.2 (2, 1.7) |
| Tightening torque after gear has settled | 4.9 (50, 43) |
| Returning angle degree | 70° - 110° |
| Steering wheel turning force (Measured at one full turn from the neutral position)<br>N (kg, lb) | 39 (4, 9) or less |
| Fluid capacity (Approximate)<br>ℓ (US qt, Imp qt) | 0.9 (1, 3/4) |
| Oil pump maximum pressure<br>kPa (kg/cm$^2$, psi) | |
| Without HICAS | 7,159 - 7,748<br>(73 - 79, 1,038 - 1,123) |
| With HICAS | |
| Main (For power steering) | 7,159 - 7,748<br>(73 - 79, 1,038 - 1,123) |
| Sub (For HICAS) | 6,375 - 6,865<br>(65 - 70, 924 - 995) |

### POWER CYLINDER LOWER LINK (SUPER HICAS)

| | |
|---|---|
| Power cylinder lower link ball joint | |
| Swinging force* N (kg, lb) | 2.9 - 41.2<br>(0.3 - 4.2, 0.7 - 9.3) |
| Axial end play mm (in) | 0 (0) |
| Power cylinder lower link standard length "L" mm (in) | 309.5 (12.19) |
| Stroke mm (in) | 3.0 (0.118) |

*: Measuring point

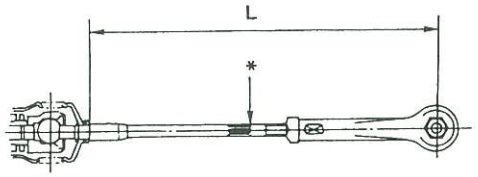


SST486B

# SECTION BF



## CONTENTS


**GENERAL SERVICING** ..... 2
- Precautions ..... 2
- Circuit Breaker Inspection ..... 2
- Clip and Fastener ..... 2

**BODY END** ..... 5
- Body Front End ..... 5
- Body Rear End and Opener ..... 6

**DOOR** ..... 9
- Power Window ..... 11
- Power Door Lock ..... 13

**INSTRUMENT PANEL** ..... 15

**INTERIOR AND EXTERIOR** ..... 17
- Interior ..... 17
- Exterior ..... 21

**SEAT** ..... 26
- Front Seat ..... 26
- Rear Seat ..... 27

**AUTOMATIC SEAT BELT SYSTEM** ..... 28
- Unit Location ..... 28
- Replacement of Rear Switch Assembly ..... 30
- Wiring Diagram ..... 32
- Description ..... 34

**TROUBLE DIAGNOSES — Automatic seat belt system** ..... 36
- Contents ..... 36

**SUN ROOF** ..... 56
- Electrical Sun Roof ..... 56
- Wiring Diagram ..... 58
- Manual Sun Roof ..... 59

**WINDSHIELD AND WINDOWS** ..... 60
- Windshield ..... 60
- Back Window — Coupe ..... 61
- Back Door Window — Fastback ..... 62
- Side Window ..... 63

**MIRROR** ..... 65
- Door Mirror ..... 65

**REAR COMBINATION LAMP** ..... 66

**FRONT AND REAR AIR SPOILER** ..... 67

**BODY ALIGNMENT** ..... 69
- Engine Compartment ..... 69
- Underbody ..... 71


**When you read wiring diagrams:**
- **Read GI section, "HOW TO READ WIRING DIAGRAMS".**
- **See EL section, "POWER SUPPLY ROUTING" for power distribution circuit.**

**When you perform trouble diagnoses, read GI section, "HOW TO FOLLOW FLOW CHART IN TROUBLE DIAGNOSES".**

★ **For conventional seat belt, refer to MA section.**

## Precautions

- When removing or installing various parts, place a cloth or padding onto the vehicle body to prevent scratches.
- Handle trim, molding, instruments, grille, etc. carefully during removing or installing. Be careful not to soil or damage them.
- Apply sealing compound where necessary when installing parts.
- When applying sealing compound, be careful that the sealing compound does not protrude from parts.
- When replacing any metal parts (for example body outer panel, members, etc.), be sure to take rust prevention measures.

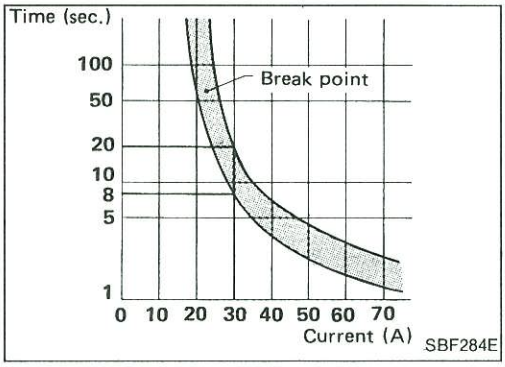


## Circuit Breaker Inspection

For example, when current is 30A, the circuit is broken within 8 to 20 seconds.

Circuit breakers are used in the following systems.

- Power window & power door lock
- Automatic seat belt
- Power sun roof

## Clip and Fastener

- Clips and fasteners in BF section correspond to the following numbers and symbols.
- Replace any clips and/or fasteners which are damaged during removal or installation.

| Symbol No. | Shapes | Removal & Installation |
|---|---|---|
| C101 | SBF256G | **Removal:** Remove by bending up with flat-bladed screwdrivers. SBF367B |
| C102 | SBF114B SBF137B | 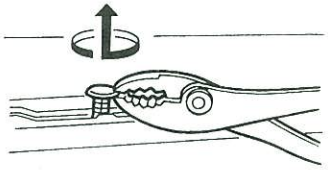 **Removal:** Pull up by rotating. SBF115B |

## Clip and Fastener (Cont'd)

| Symbol No. | Shapes | Removal & Installation |
|---|---|---|
| C103 | 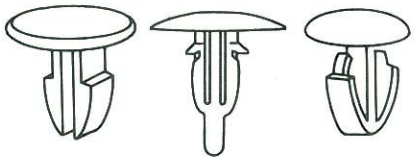 SBF257G | **Removal:** Remove with a flat-bladed screwdriver or pliers. 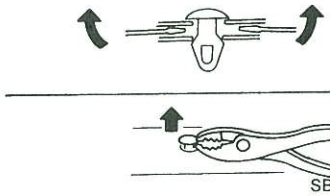 SBF292C |
| C203 | 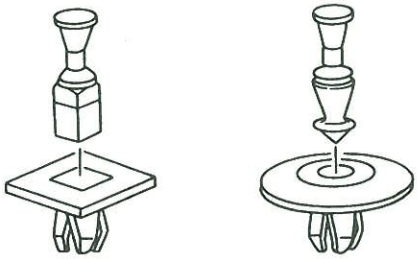 SBF258G | Push center pin to catching position. (Do not remove center pin by hitting it.) 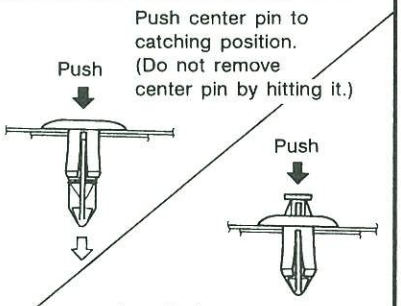 **Installation:** SBF708E |
| CE103 | 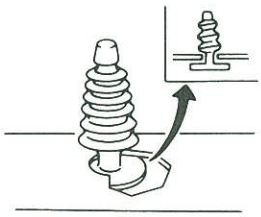 SBF104B | **Removal:** 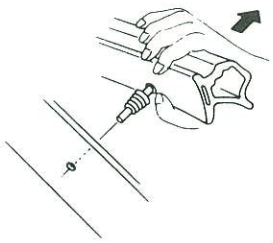 SBF147B |
| CE106 | 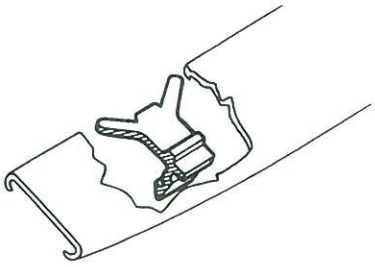 SBF653B | **Removal:** **Type 1** 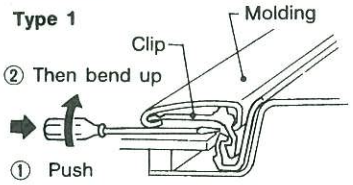 SBF654B |
| | | **Type 2** 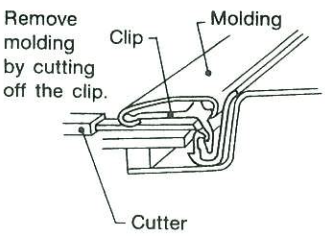 SBF914B |

## Clip and Fastener (Cont'd)

| Symbol No. | Shapes | Removal & Installation |
|---|---|---|
| CF109 | 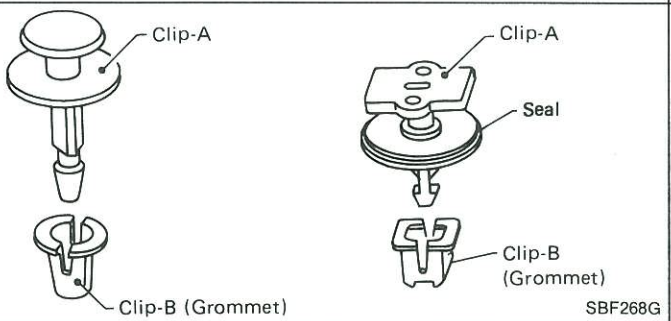 SBF268G | **Removal:**<br> 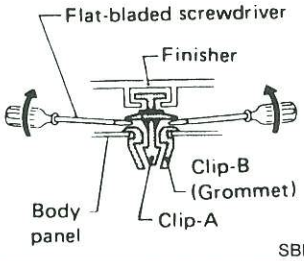 SBF652B |
| CF118 | 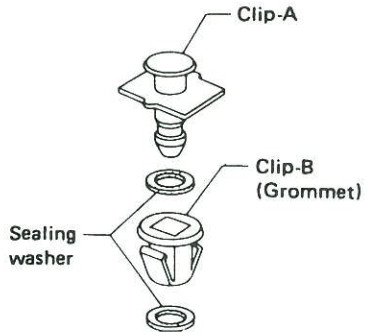 SBF151D | **Removal:**<br> 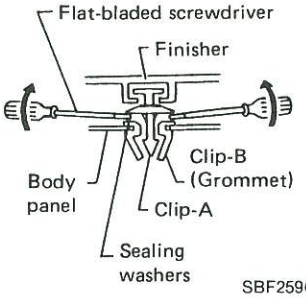 SBF259G |
| CR103 | SBF768B | **Removal:**<br>Holder portion of clip must be spread out to remove rod.<br> 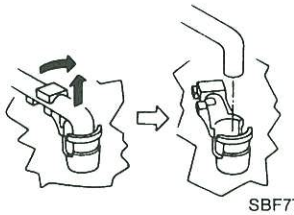 SBF770B |
| CS101 | 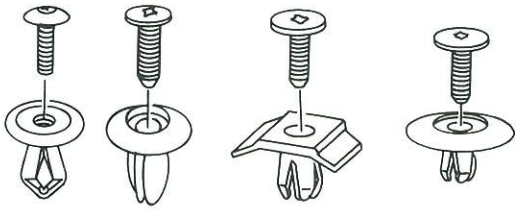 SBF260G | **Removal:**<br>Screw out with a Phillips screwdriver.<br> 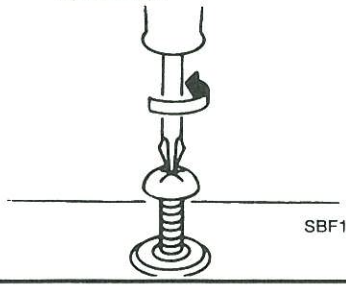 SBF140B |

## Body Front End

- Hood adjustment: Adjust at hinge portion.
- Hood lock adjustment: After adjusting, check hood lock control operation. Apply a coat of grease to hood locks engaging mechanism.
- Hood opener: Do not attempt to bend cable forcibly.

**Hood lock adjustment**

- Adjust lock so that hood primary lock meshes at a position where hood is 1 to 1.5 mm (0.039 to 0.059 in) lower than fender.
- After hood lock adjustment, adjust bumper rubber.
- When securing hood lock, ensure it does not tilt. Striker must be positioned at the center of hood primary lock.
- After adjustment, ensure that hood primary and secondary lock operate properly.

**Hood lock secondary latch hooking length**




**Bumper rubber adjustment**

- Adjust so that hood is aligned with fender. [Bumper rubber free height is approx. 20 mm (0.79 in).]

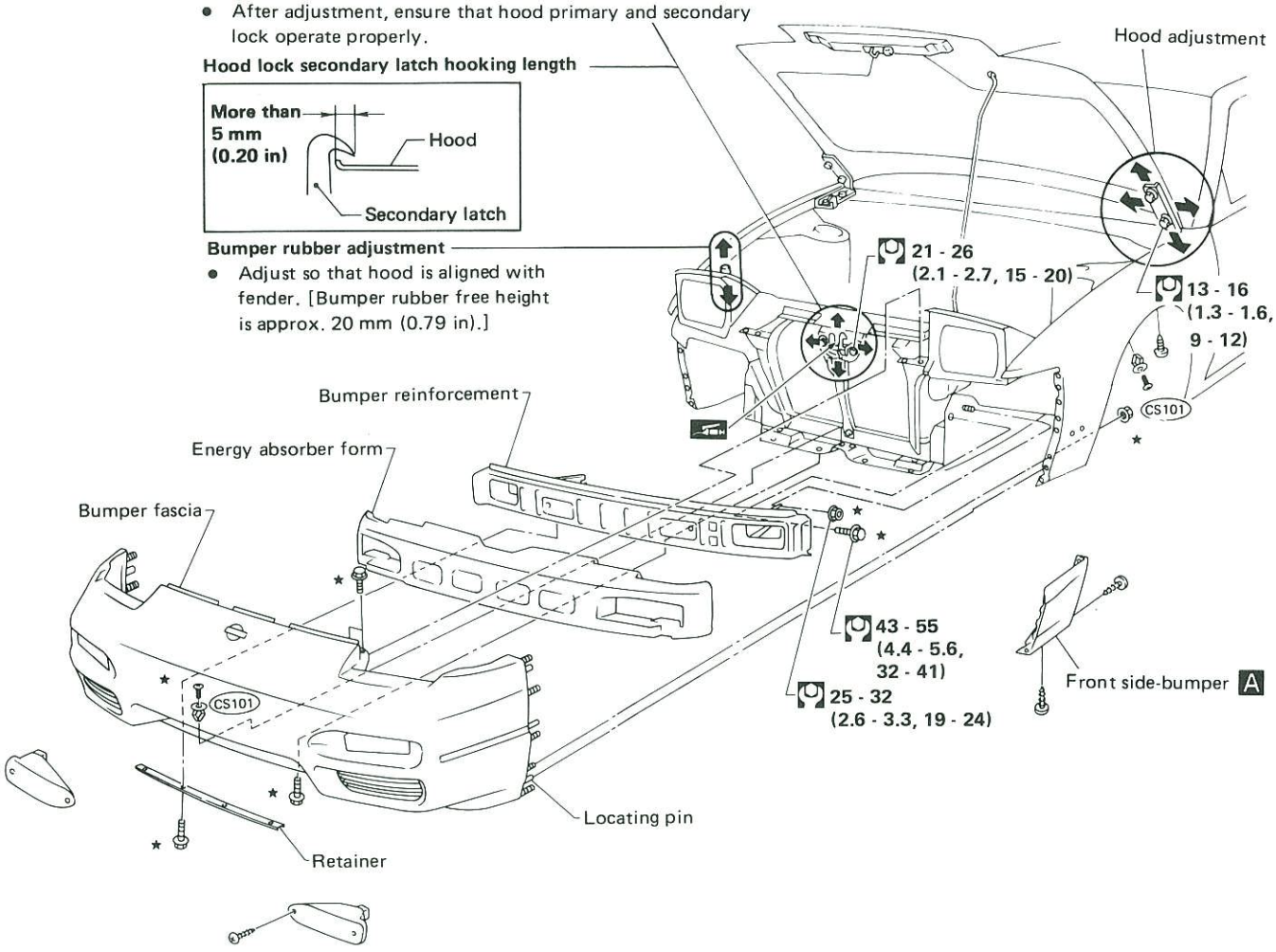


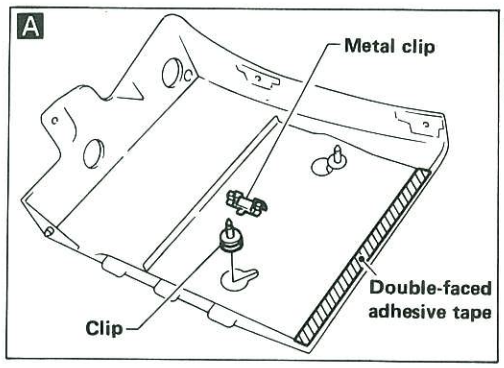


★ : Bumper assembly mounting bolts, nuts and clips
: N·m (kg-m, ft-lb)

MBF452A

## Body Rear End and Opener

- Back door adjustment: Adjust at hinge-body portion for proper back door fit.
- Back door lock system adjustment: Adjust lock & striker so that they are in the center. After adjustment, check back door lock operation.
- Trunk lid adjustment: Adjust at hinge-trunk lid portion for proper trunk lid fit.
- Trunk lid lock system adjustment: Adjust striker so that it is in the center of the lock. After adjustment, check trunk lid lock operation.

**WARNING:**

a. **Be careful not to scratch back door stay when installing back door. A scratched stay may cause gas leakage.**
b. **The contents of the back door stay are under pressure. Do not take apart, puncture, apply heat or allow fire near it.**

- Opener cable: do not attempt to bend cable using excessive force.
- After installation, make sure that trunk lid/back door and fuel filler lid open smoothly.

### FASTBACK

- Before removing rear bumper, remove right drafter which is secured with two upper nuts and butyl seal.

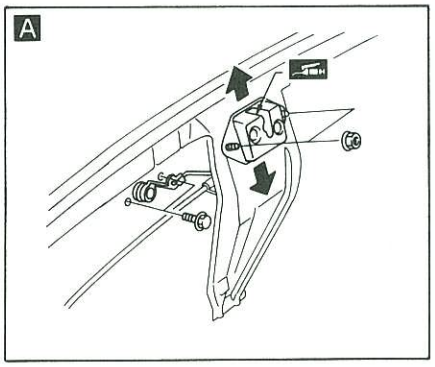


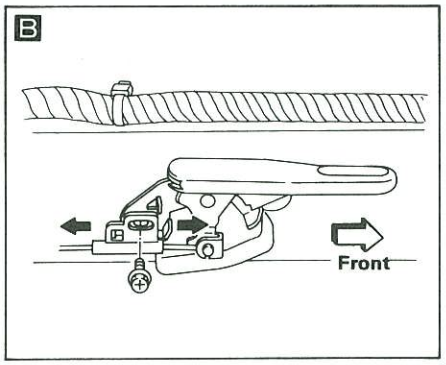


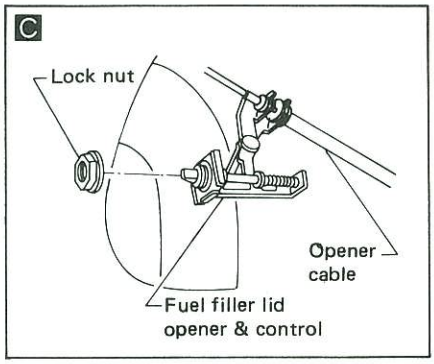


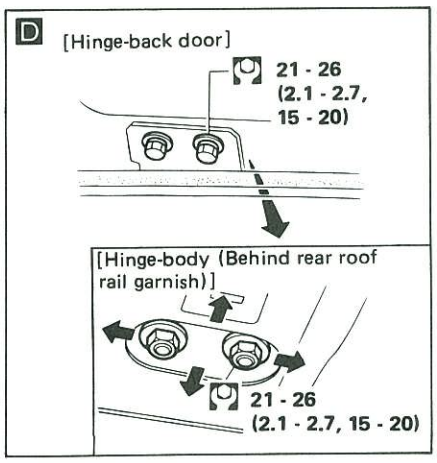

## Body Rear End and Opener (Cont'd)

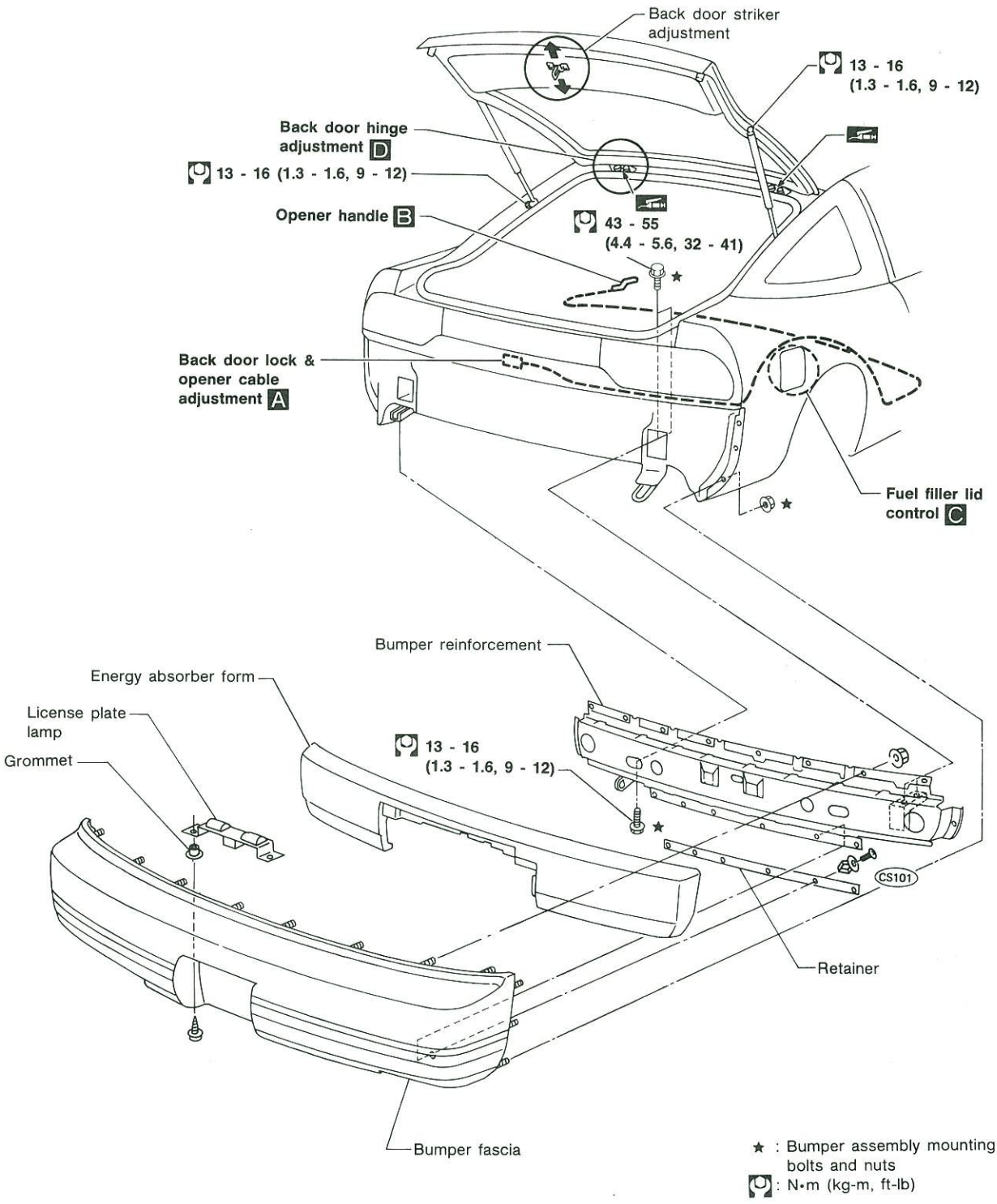


MBF774A

## Body Rear End and Opener (Cont'd)

### COUPE

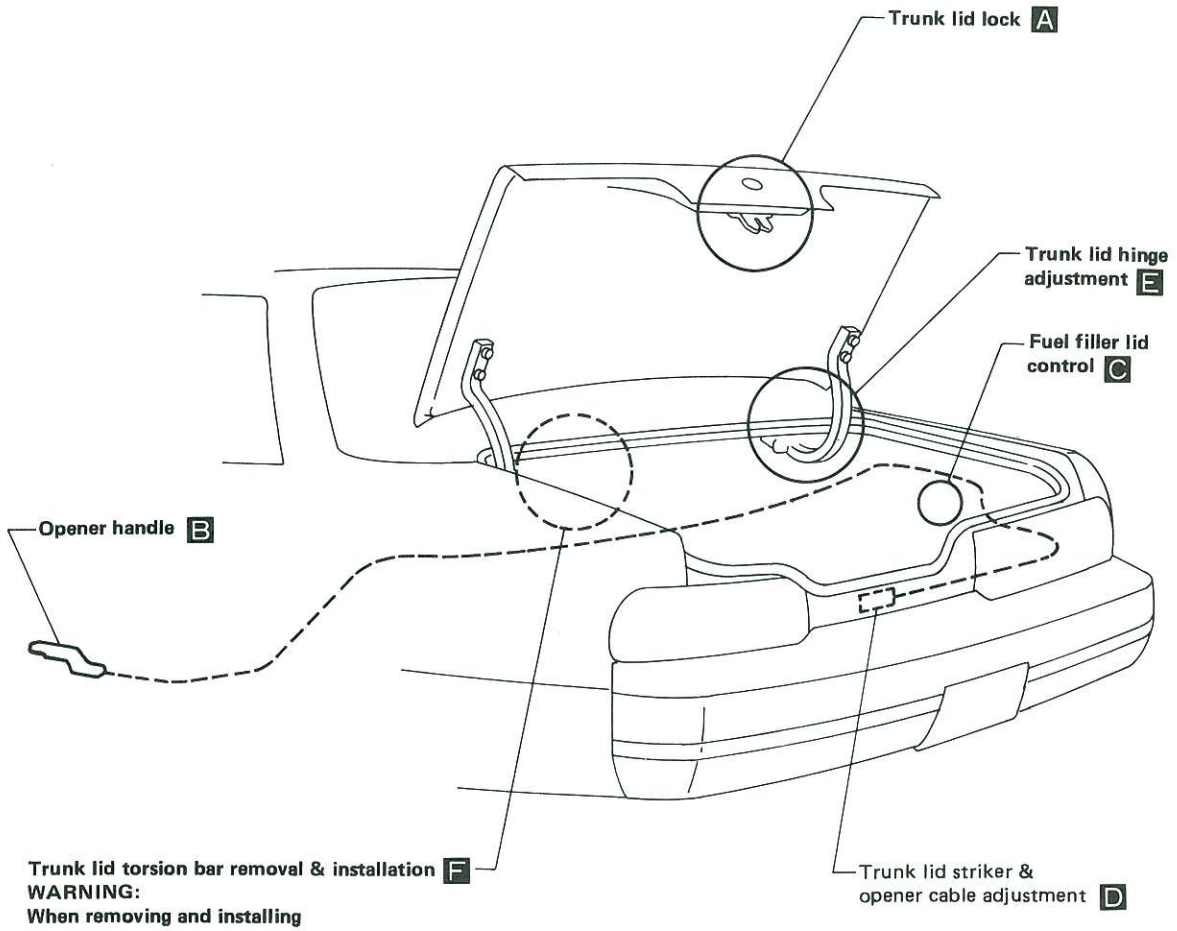


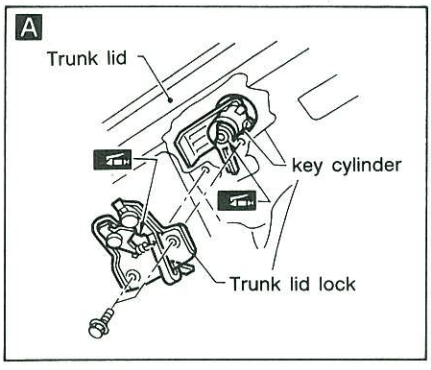


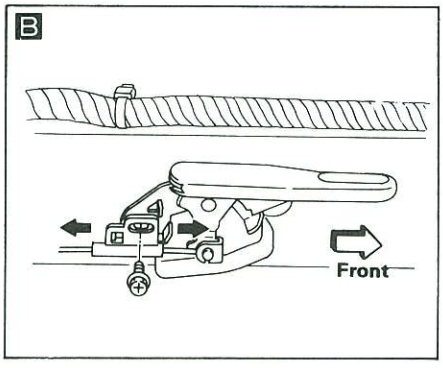


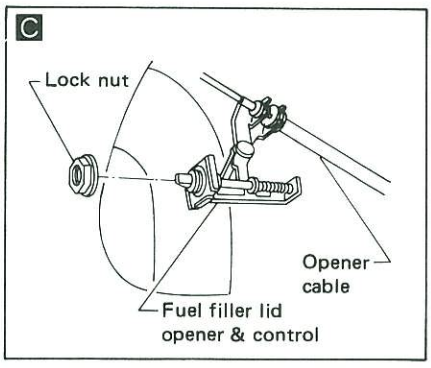


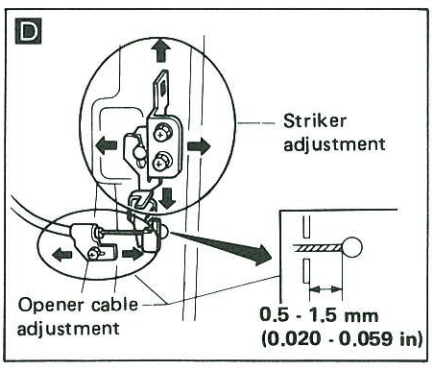


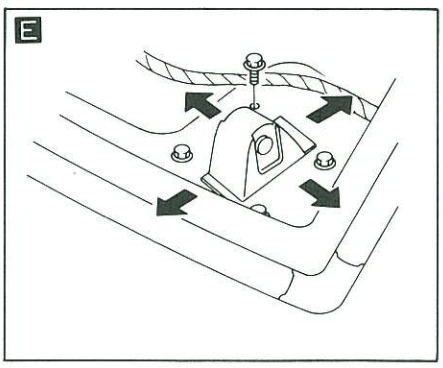


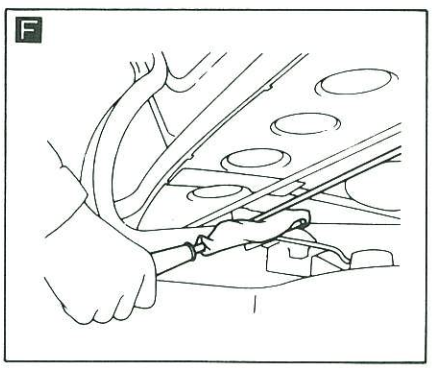


MBF500A

- After adjusting door or door lock, check door lock operation.

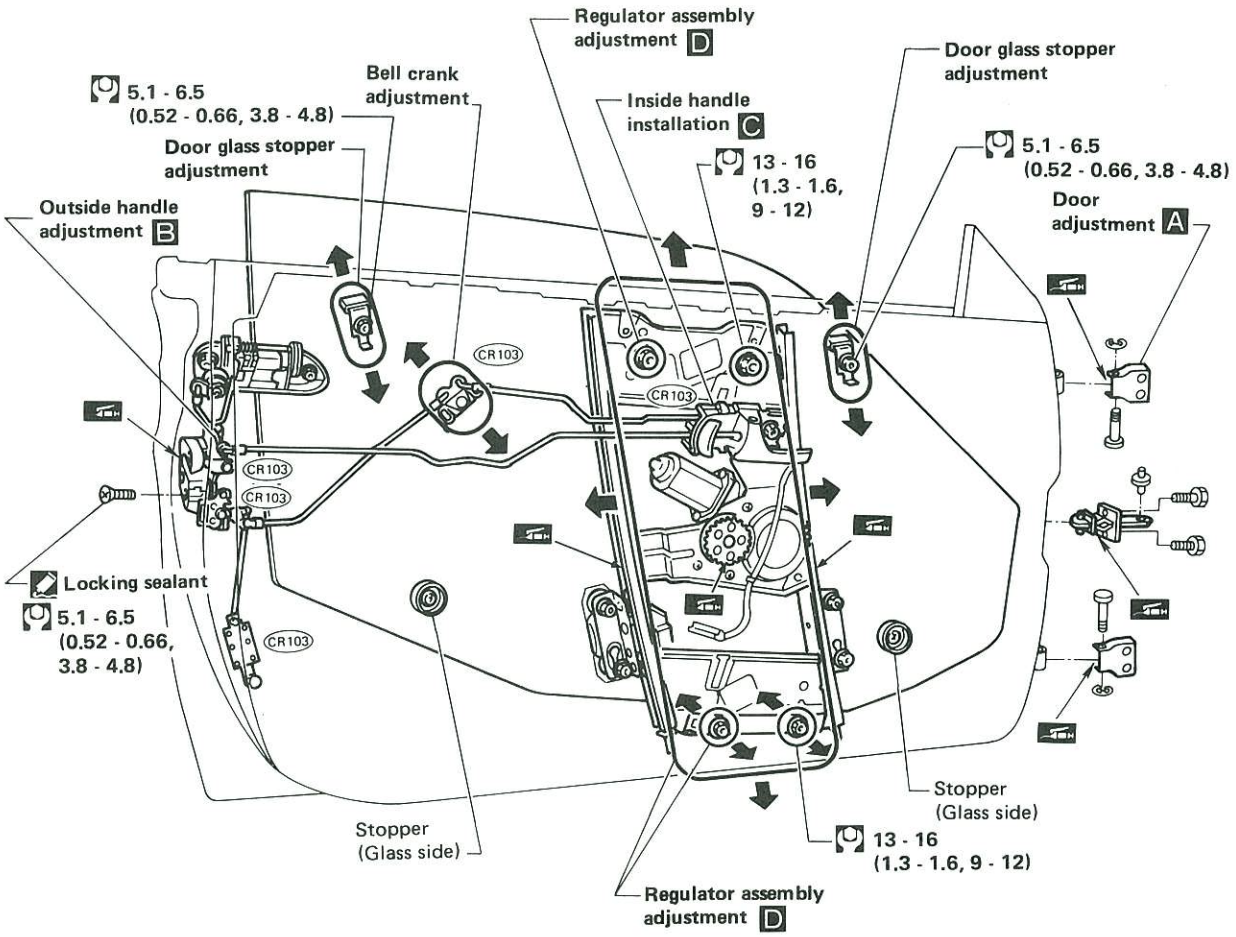


: N·m (kg-m, ft-lb)

A

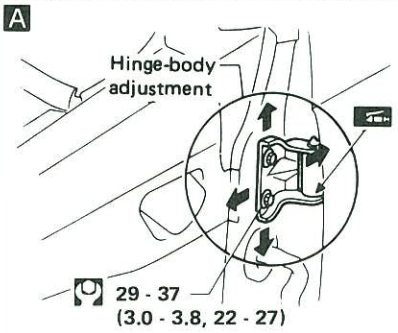


B

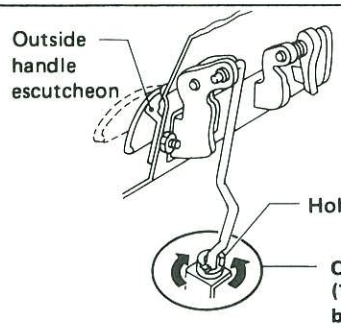


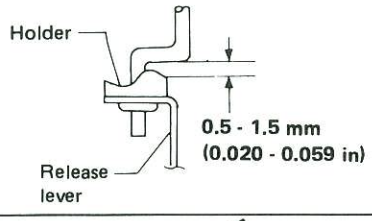


**Outside handle adjustment (Turn holder as the clearance between holder and rod is specified value.)**

C

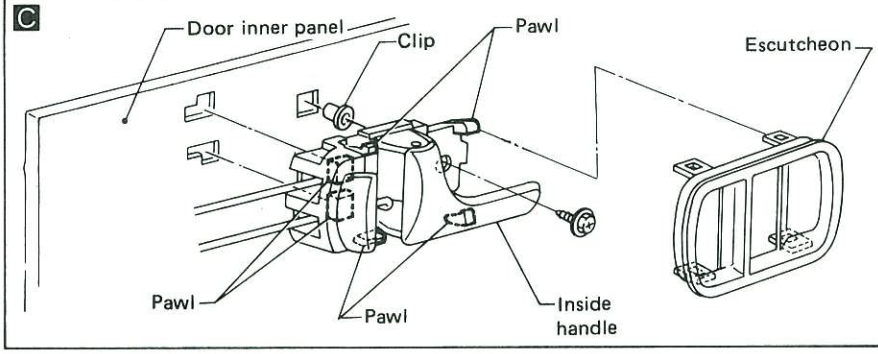


**Striker adjustment**

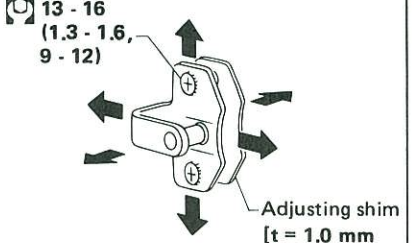


D

- **Remove weatherstrip from retainer.**

- **Door glass-to-retainer clearances A and B**
  Adjust so that clearances A and B are equal.
- **Ensure door glass is not tilted.**

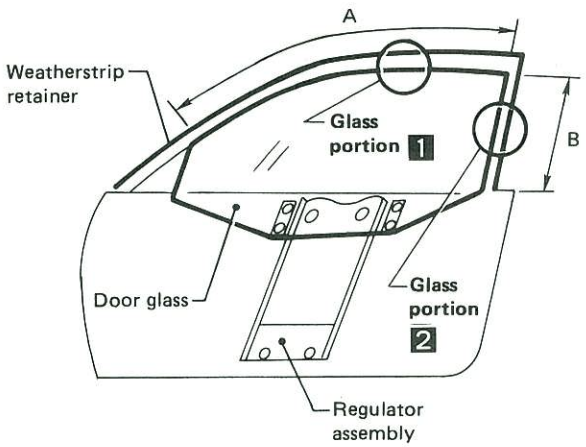


**Glass portion 1**

- **Adjust to provide proper light surface contact of glass and retainer.**

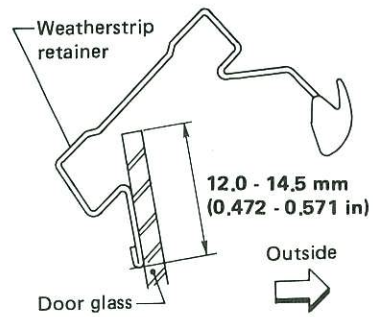


**Glass portion 2**

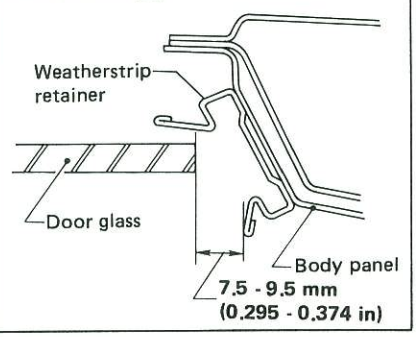


MBF445A

## Power Window

### WIRING DIAGRAM

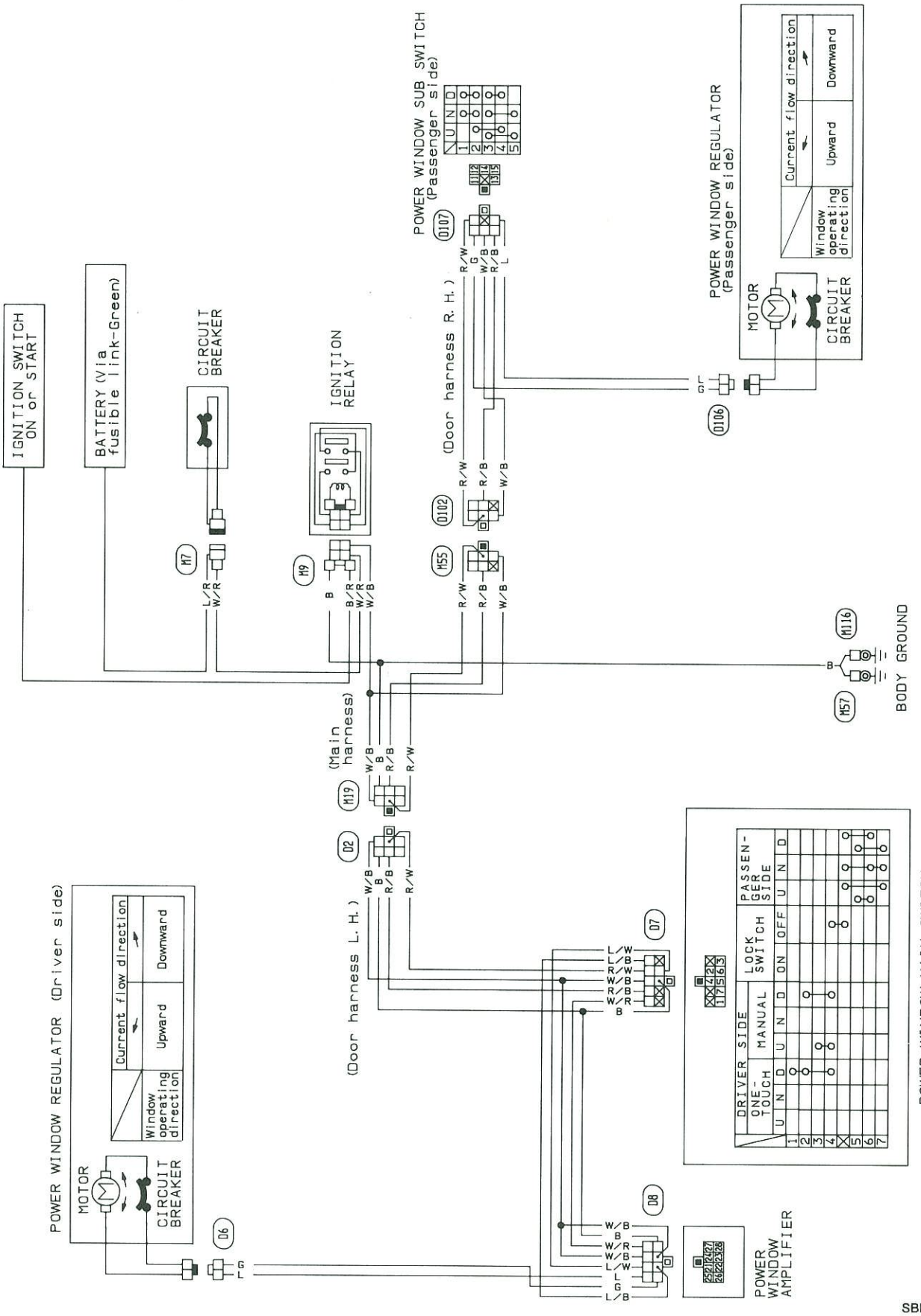

## Power Window (Cont'd)

### POWER WINDOW AMP. INSPECTION

Carry out the inspections below.

(1) Power source and ground: Battery voltage should exist between terminals ㉔ and ㉗.

(2) Input signals: Battery voltage should exist between terminal ㉓ and ground (IGN "ON" or "ST"). Continuity should exist between terminal ㉘, ㉑, ㉒ and ground in "ON" condition, and should not exist in "OFF" condition.

(3) Output signals: Battery voltage shown in the chart should exist.

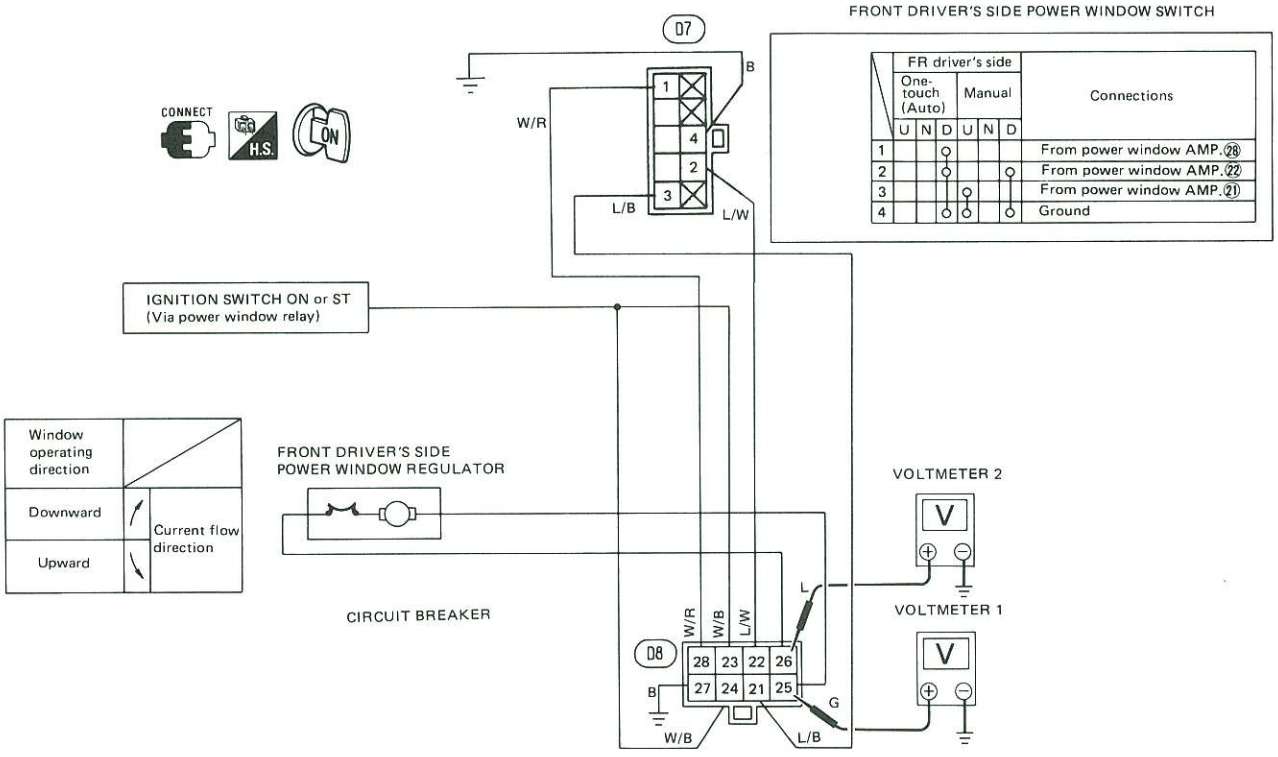


| | FR driver's side | | | | | | Connections |
|---|---|---|---|---|---|---|---|
| | One-touch (Auto) | | | Manual | | | |
| | U | N | D | U | N | D | |
| 1 | | | ○ | | | | From power window AMP. ㉘ |
| 2 | | | ○ | | | ○ | From power window AMP. ㉒ |
| 3 | | | | ○ | | | From power window AMP. ㉑ |
| 4 | | | ○ | ○ | | ○ | Ground |

AMP. OPERATION

| | | Connections | Operations | | | | | |
|---|---|---|---|---|---|---|---|---|
| | | | Manual operation | | | One-touch (Auto) operation | | |
| | | | N | UP | Down | N | Down → | N |
| 24 | | Power source (IGN) | 12V | 12V | 12V | 12V | 12V | 12V |
| 27 | | Ground | Ground | Ground | Ground | Ground | Ground | Ground |
| 23 | Input signal | From ignition SW(ON or ST) | 12V | 12V | 12V | 12V | 12V | 12V |
| 28 | Input signal | To FR driver's side power window SW (AUTO) ① | OFF | OFF | OFF | OFF | ON | OFF |
| 21 | Input signal | To FR driver's side power window SW (UP) ③ | OFF | ON | OFF | OFF | OFF | OFF |
| 22 | Input signal | To FR driver's side power window SW (DOWN) ② | OFF | OFF | ON | OFF | ON | OFF |
| 25 | Output signal | FR driver's side regulator (Upward power source) VOLTMETER 1 | Approx. 0V | Approx. over 9V | Approx. 0V | Approx. 0V | Approx. 0V | Approx. 0V |
| 26 | Output signal | FR driver's side regulator (Downward power source) VOLTMETER 2 | Approx. 0V | Approx. 0V | Approx. over 9V | Approx. 0V | Approx. over 9V | Approx. over 9V |

| Regulator Operating Condition | Stop | Upward operation | Downward operation | Stop | Starting | Keeping operation until fully open, then stops automatically. |
|---|---|---|---|---|---|---|
| | | | | | Downward operation | |

Carry out the operation check in this chart from left to right continuously

POWER WINDOW AMP – Driver's side door

SBF971F

## Power Door Lock

### WIRING DIAGRAM

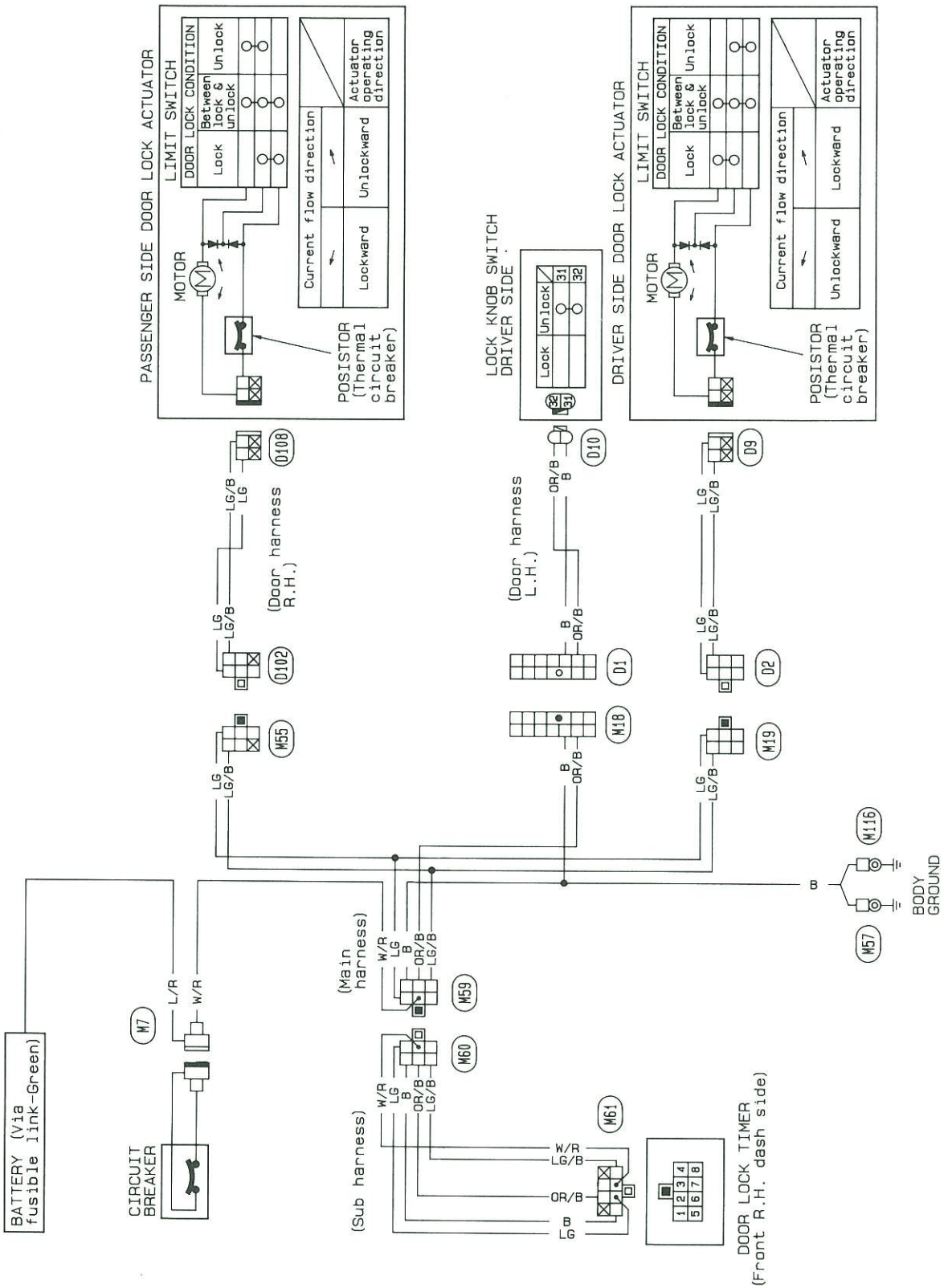


MBF419A

## Power Door Lock (Cont'd)

### DOOR LOCK TIMER INSPECTION

Door lock timer

- Carry out the inspections below.

(1) Power source and ground: Battery voltage should exist between terminals ③ and ①.
(2) Input signals: Continuity should exist between terminal ⑥ and ground in "ON" condition, and should not exist in "OFF" condition.
(3) Output signals: Voltage shown in the chart should exist.

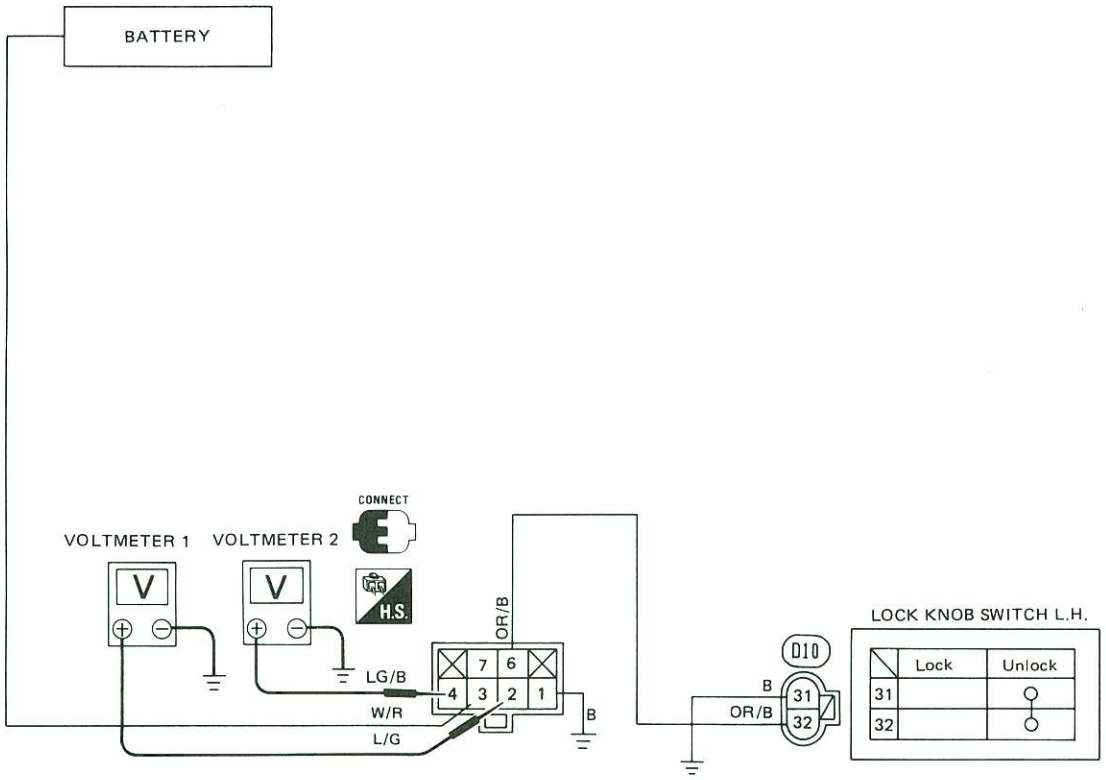


DOOR LOCK TIMER

| | | Connections | Operations | | |
|---|---|---|---|---|---|
| | | | Lock knob switch L.H. | | |
| | | | Lock → | Unlock → | Lock |
| 3 | | Power source | 12V | 12V | 12V |
| 1 | | Ground | Ground | Ground | Ground |
| 6 | Input signal | Lock knob switch ㉜ L.H. | OFF | ON | OFF |
| 7 | Input signal | Lock knob switch ㊷ R.H. | – | – | – |
| 2 | Output signal | Door lock actuator (Lock power source) VOLTMETER 1 | 0V | 0V | 12V (Approx. 1.0 sec.) → 0V |
| 4 | Output signal | Door lock actuator (Unlock power source) VOLTMETER 2 | 0V | 12V (Approx. 1.0 sec.) → 0V | 0V |

SBF332G

- When removing instrument panel assembly, remove defroster grille, combination meter, A/C or heater control, cluster lid C and S.M.J. first.

## HEAD-UP DISPLAY (H.U.D.)

- When removing H.U.D. finisher, be extremely careful not to scratch H.U.D.'s reflective surface. To avoid scratching, cover H.U.D.'s reflective surface or finisher with a cloth or vinyl sheet. L

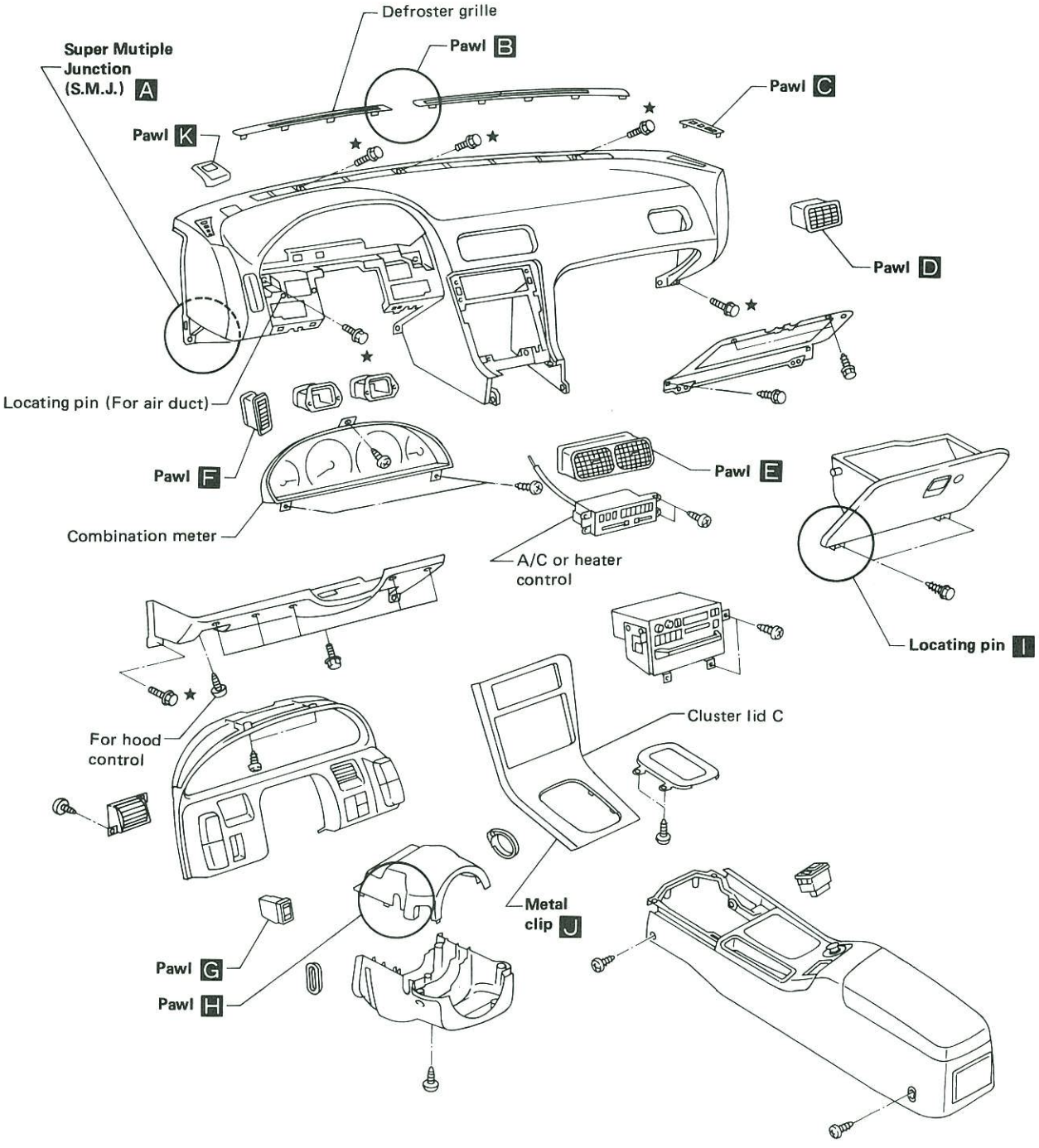


★ : Instrument panel assembly mounting bolts

A

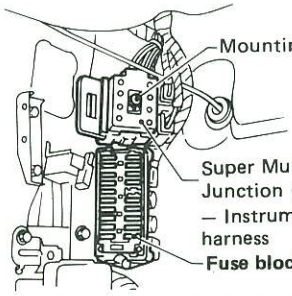


B

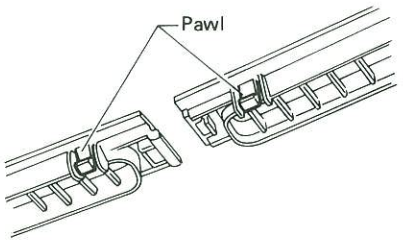


C

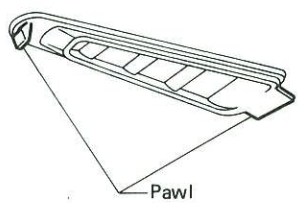


D

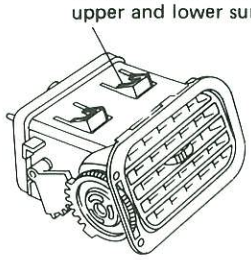


E

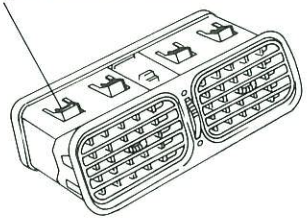


F

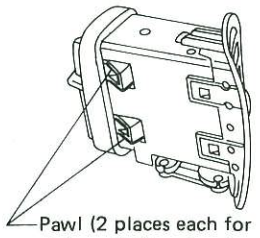


G

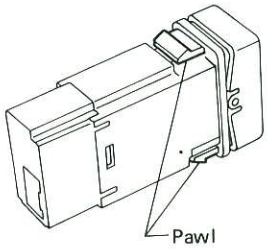


H

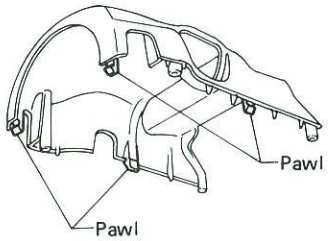


I

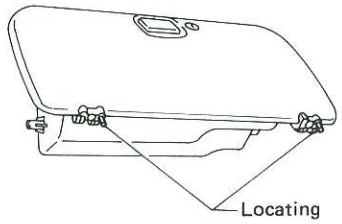


J

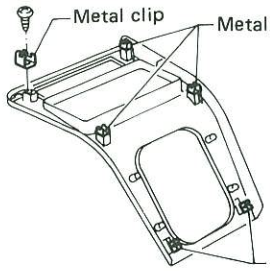


K

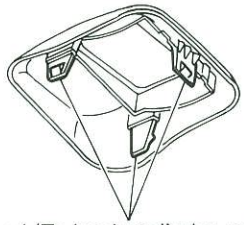


L

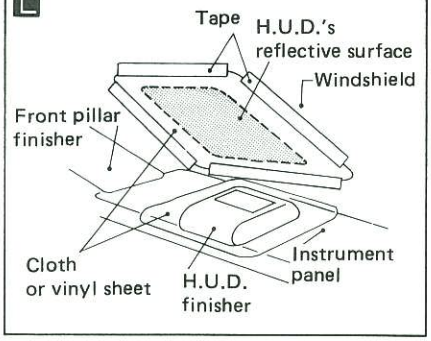


SBF178E

## Interior

### SIDE, LUGGAGE AND FLOOR TRIM — Fastback

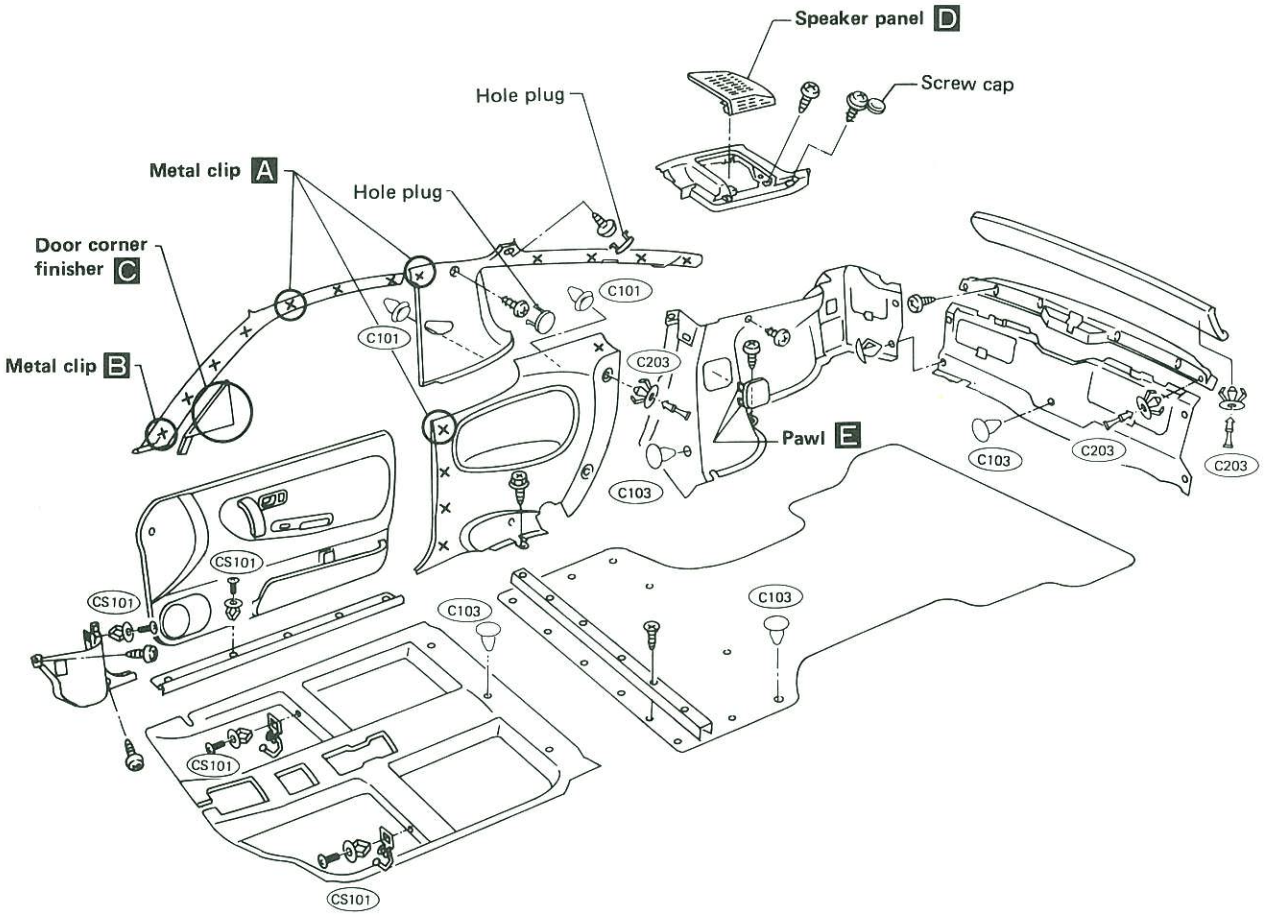


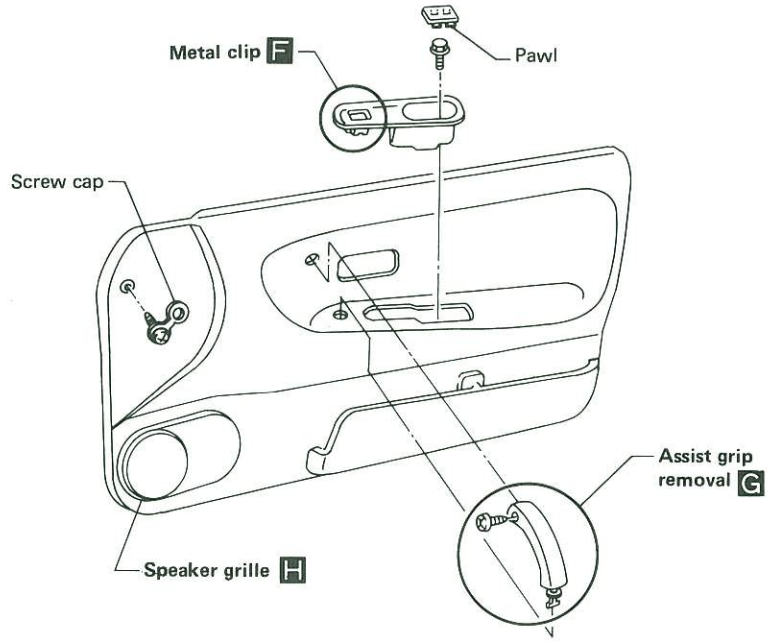

## Interior (Cont'd)

A

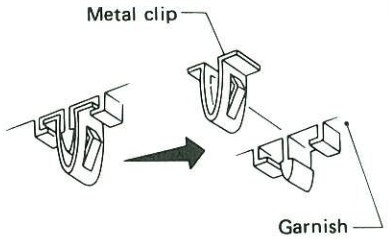


B

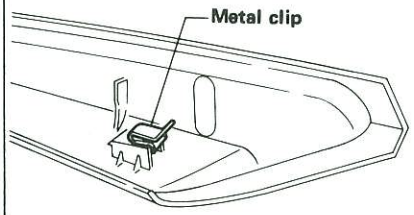


C

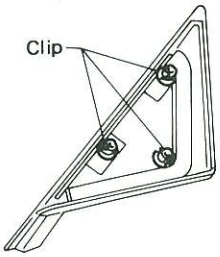


D

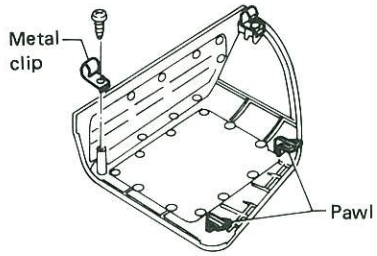


E

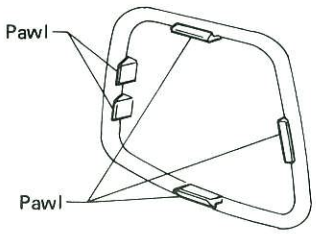


F

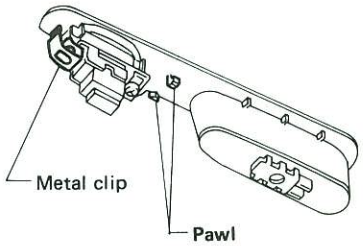


G

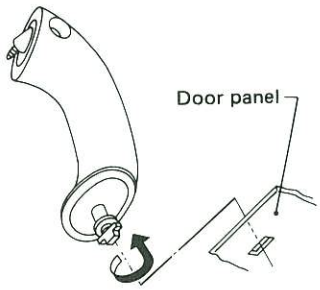


H

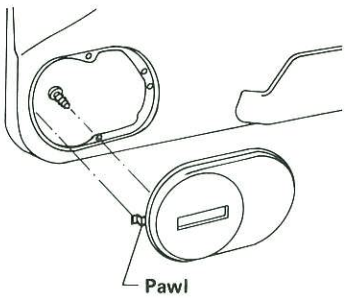


MBF454A

## Interior (Cont'd)

### SIDE TRIM — Coupe

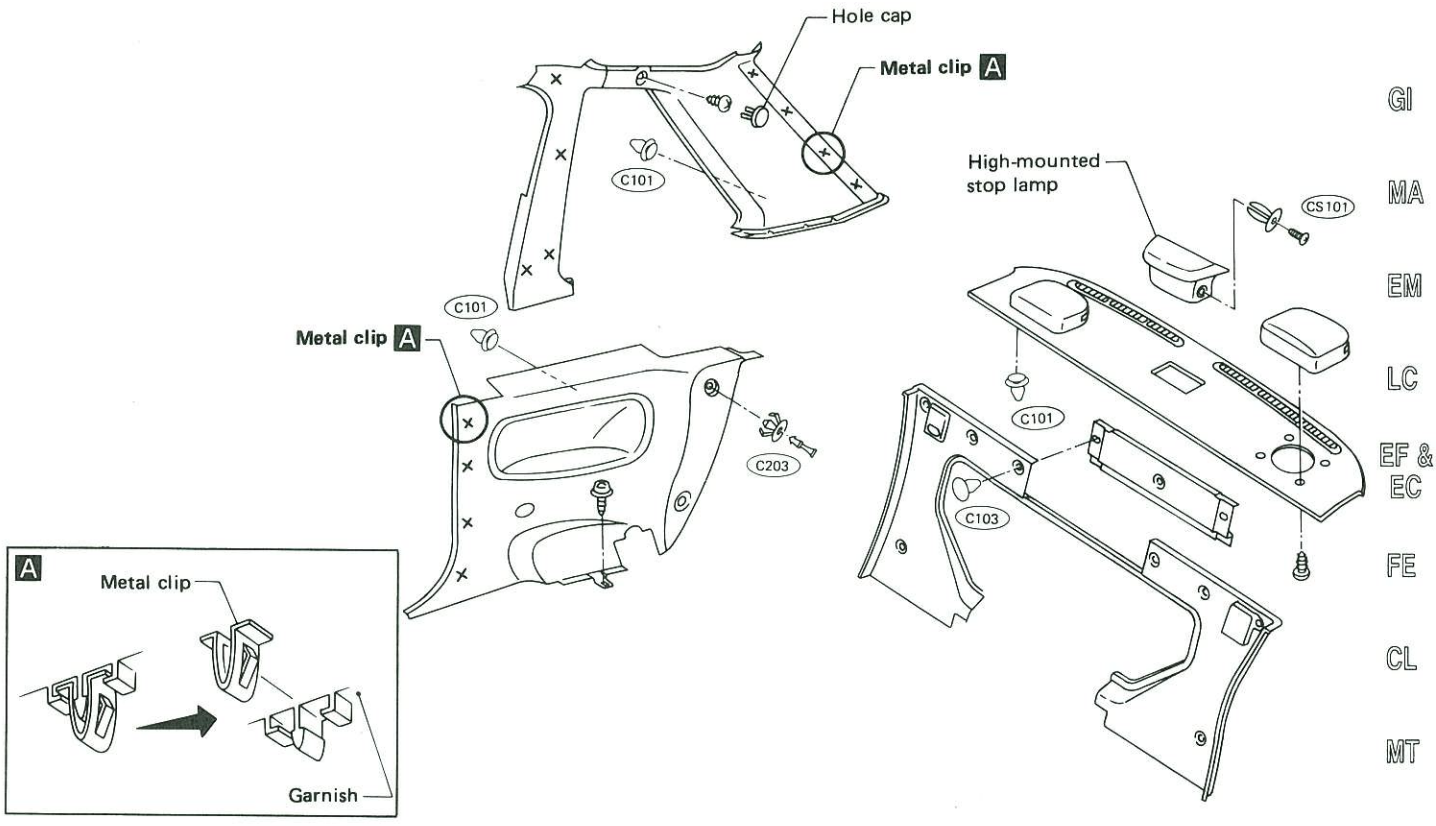


MBF462A

### LUGGAGE ROOM TRIM — Coupe

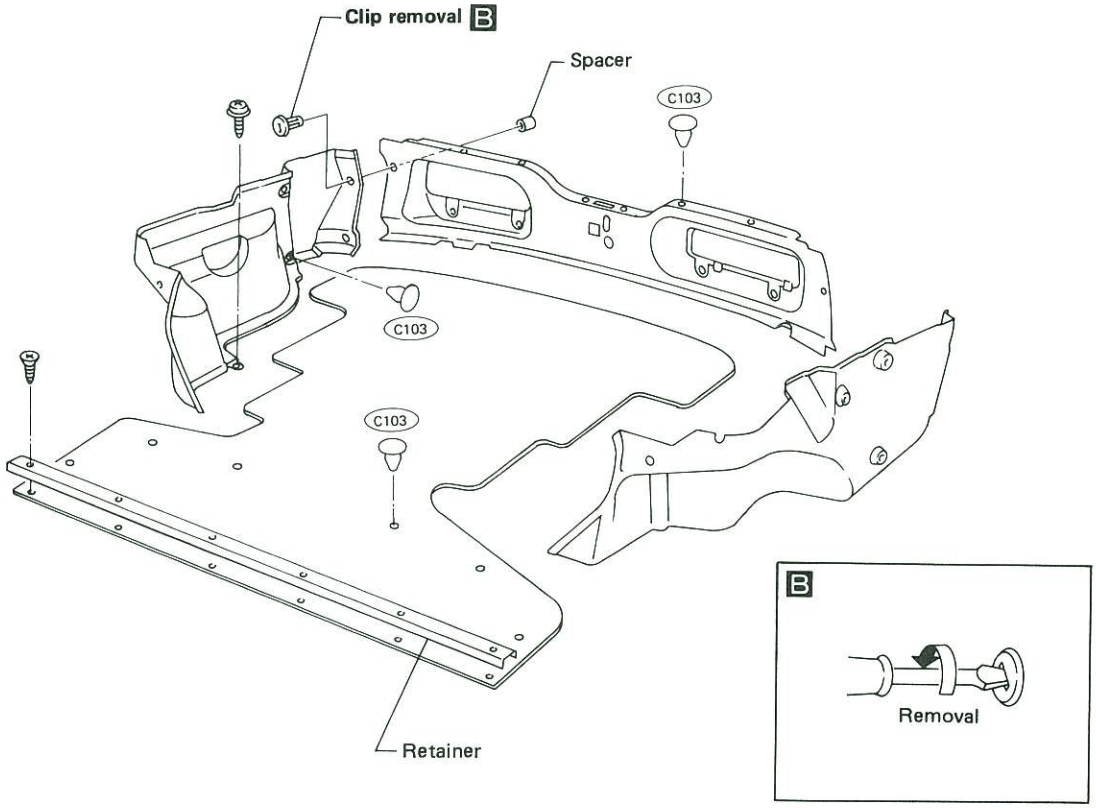


MBF455A

## ROOF TRIM

### Fastback

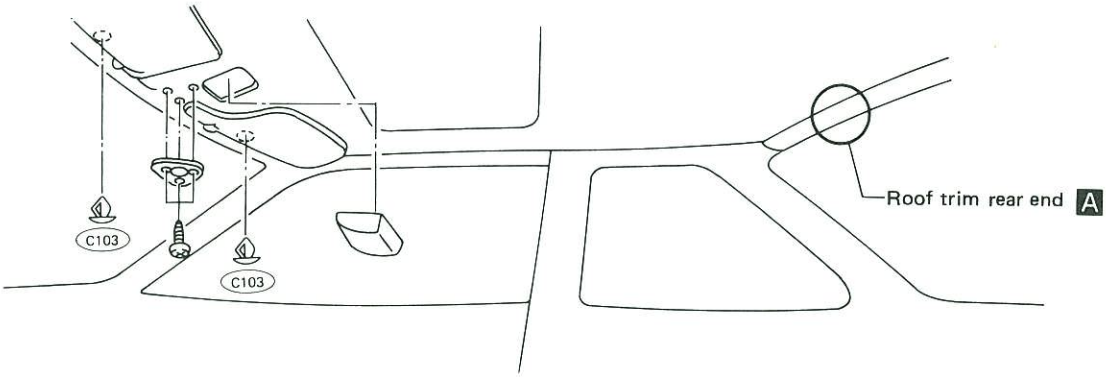


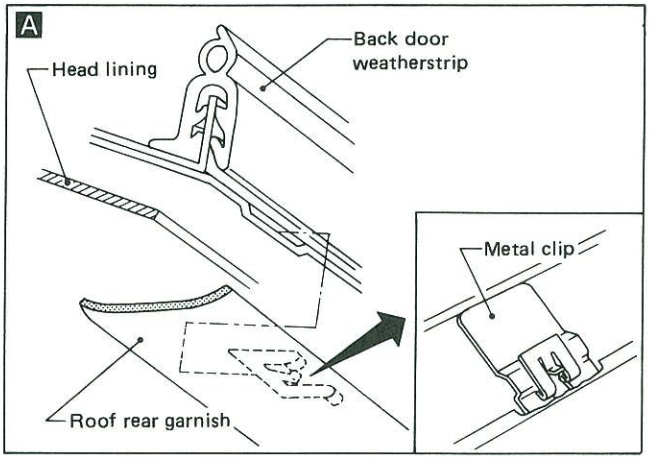


### Coupe

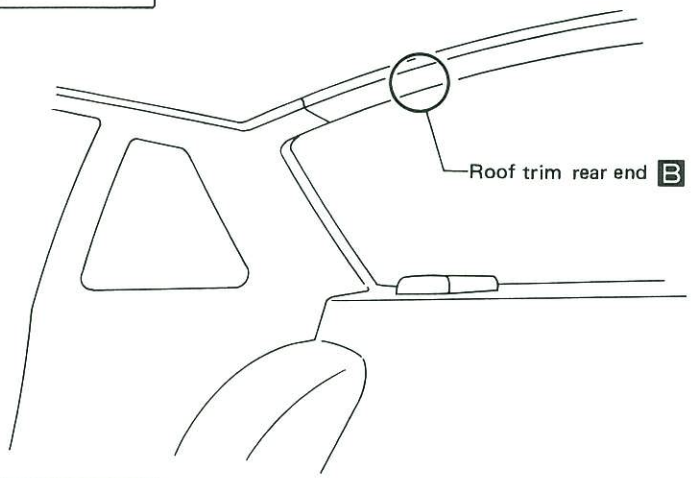


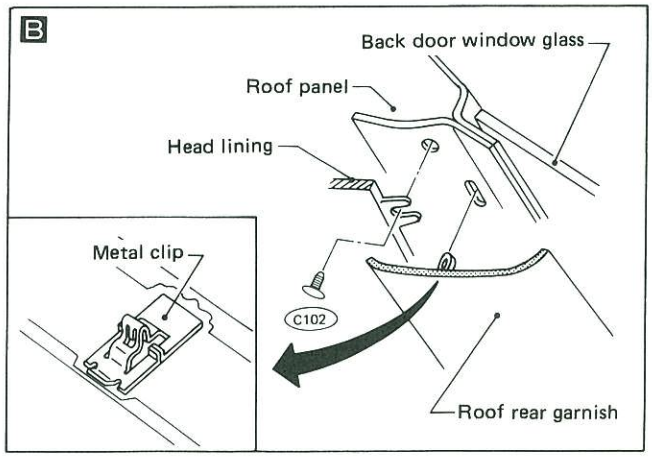


MBF456A

## Exterior

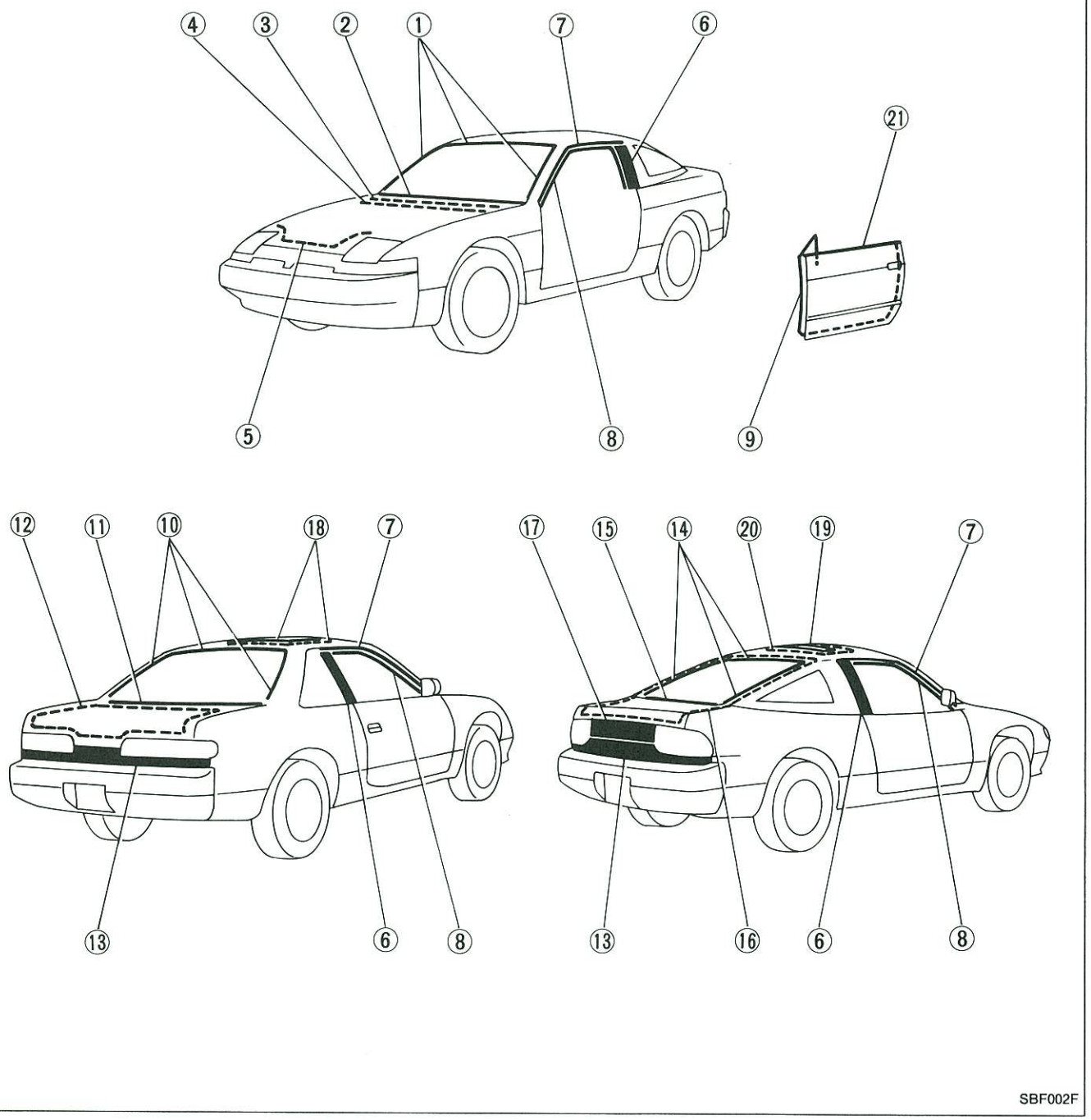


SBF002F

## Exterior (Cont'd)

### ① Windshield upper and side molding

**Method 1**

Cut off top portion of molding and clean glass and panel surfaces.

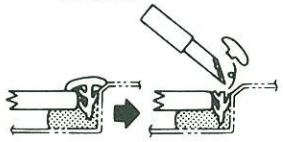

Apply sealant to top portion of molding.

Cut off lower portion of new molding.

Finish well to give it a good appearance.

**Method 2**

1. Cut off sealant at glass end.
2. Clean the side on which panel was mounted.
3. Set molding fastener and apply sealant & primer to body panel, and apply primer to molding.

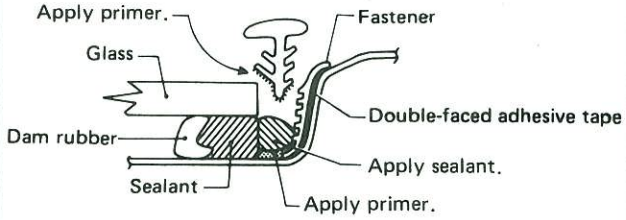


4. Install molding by aligning the molding mark located on center with vehicle center. Be sure to install tightly so that there is no gap around the corner.

SBF519B

### ② Windshield lower molding

It is mounted with screws.

### ③, ④ Cowl top grille and hood rear sealing rubber

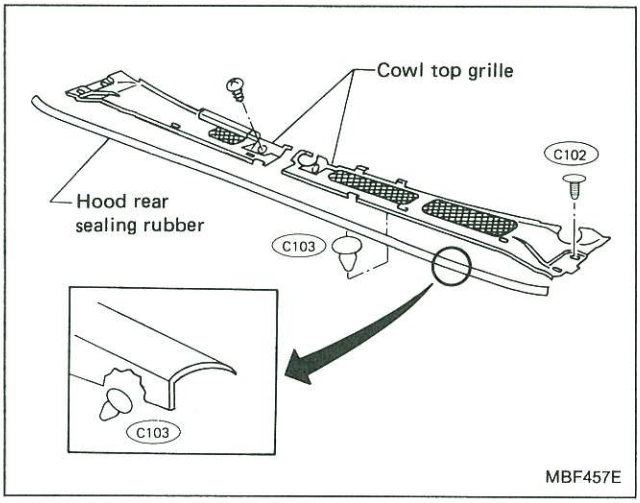


MBF457E

### ⑤ Hood front sealing rubber

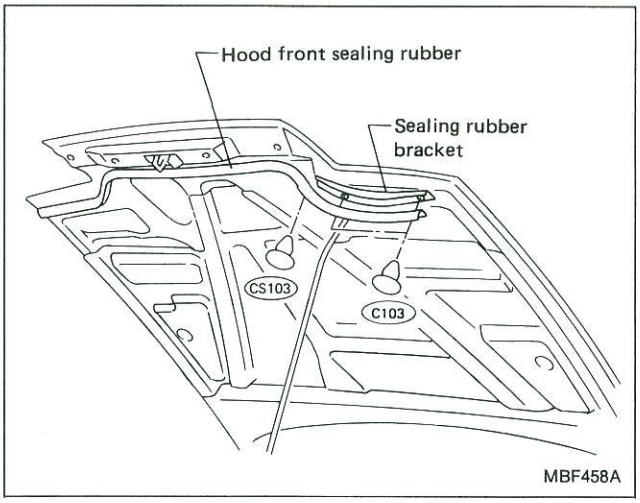


MBF458A

### ⑥ Center pillar finisher

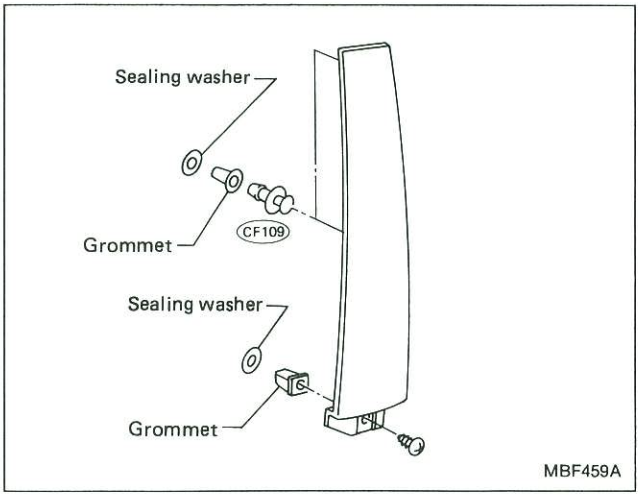


MBF459A

## Exterior (Cont'd)

### ⑦, ⑧ Body side weatherstrip and weatherstrip retainer

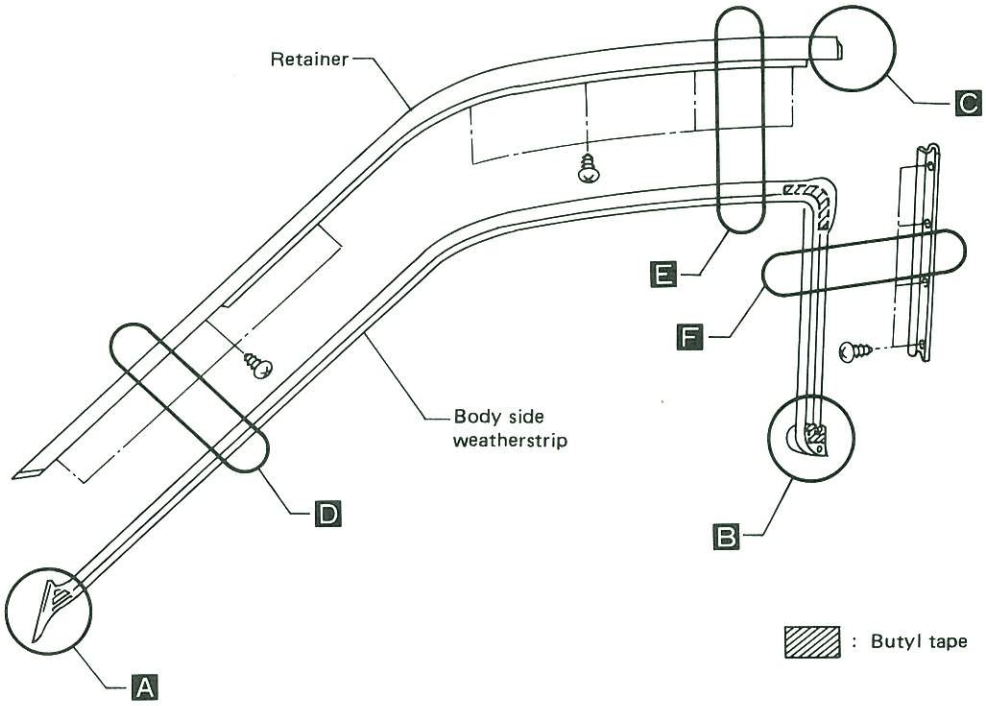


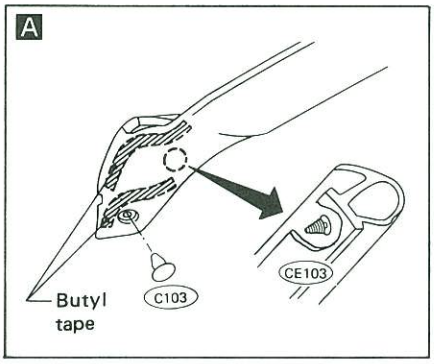


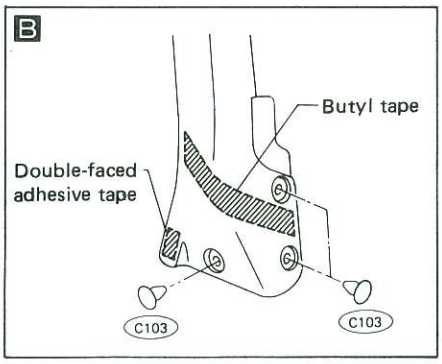


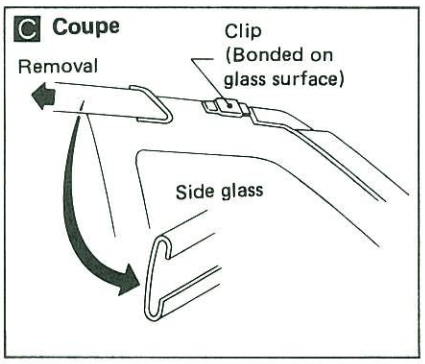


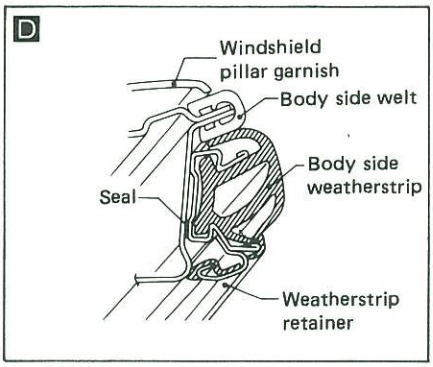


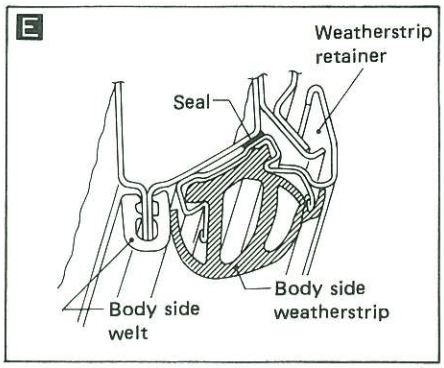


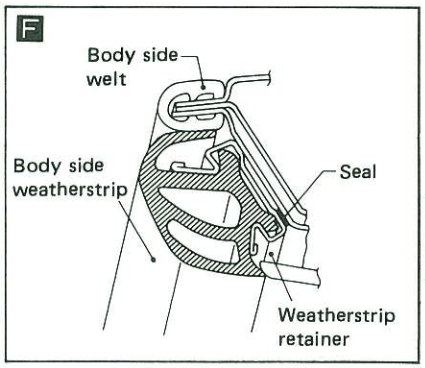


MBF460A

## Exterior (Cont'd)

### ⑨ Door weatherstrip

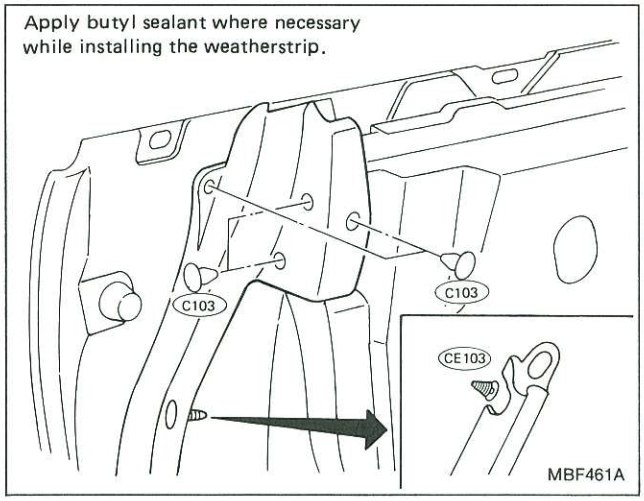


### ⑩ Back window upper and side molding (Coupe)

Basically the same as windshield upper and side molding.

### ⑪ Back window lower molding (Coupe)

It is mounted with screws.

### ⑫ Trunk lid weatherstrip

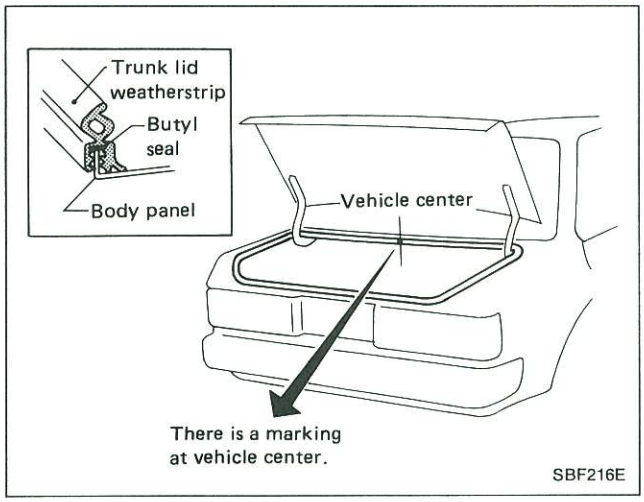


### ⑬ Rear sight shield

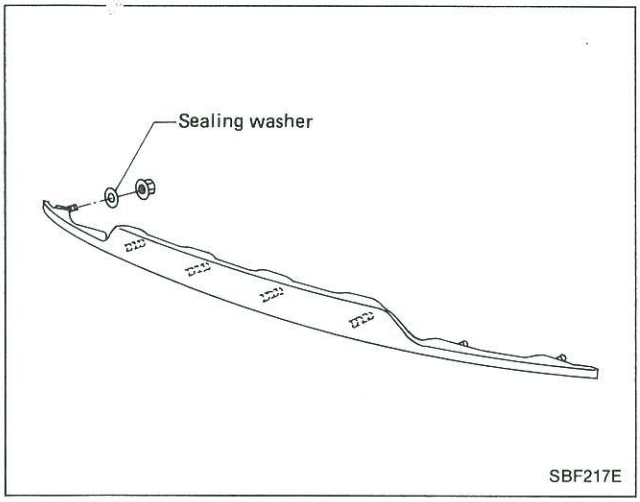


### ⑭ Back door window upper and side molding (Fastback)

Bonded on back door glass side.

### ⑮ Back door window lower molding (Fastback)

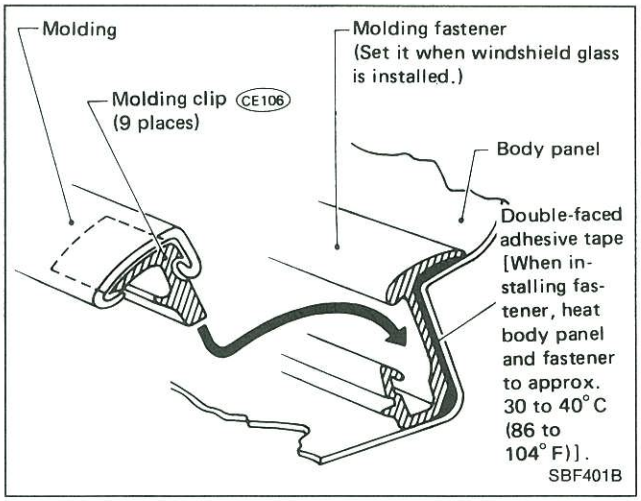

## Exterior (Cont'd)

### ⑯ Back door weatherstrip

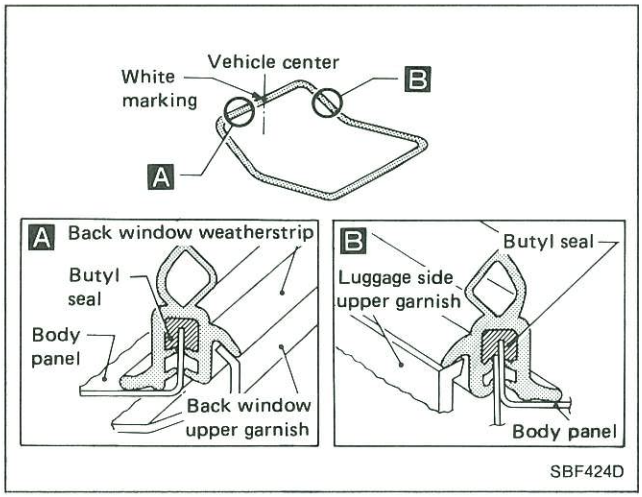


### ⑰ Rear panel finisher (Fastback)

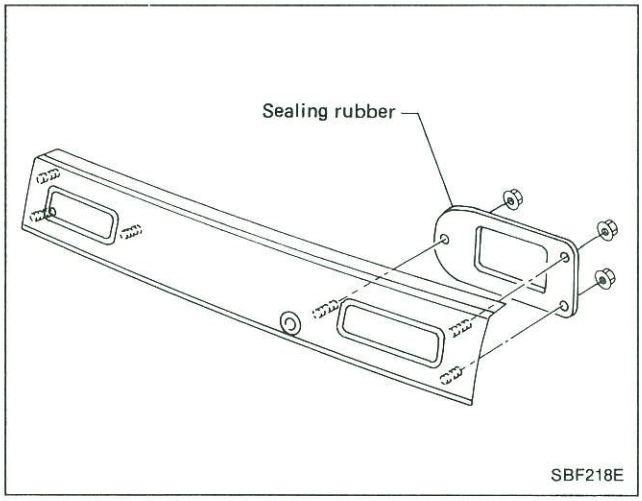


### ⑱ Sun roof lid weatherstrip and sun roof frame weatherstrip (Coupe)

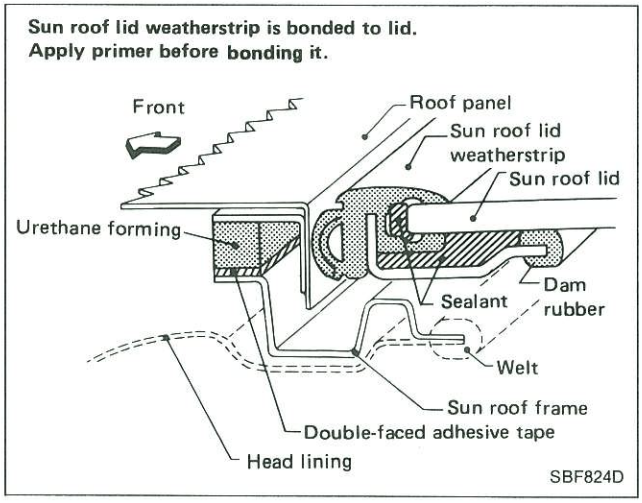


### ⑲ Sun roof lid weatherstrip

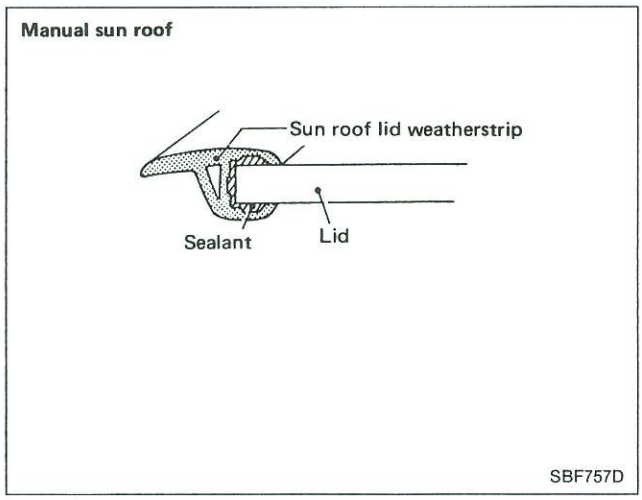


### ⑳ Sun roof weatherstrip

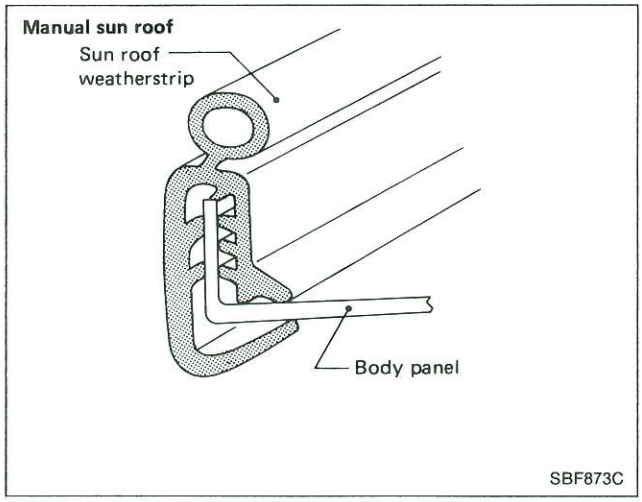


### ㉑ Door waist outside molding

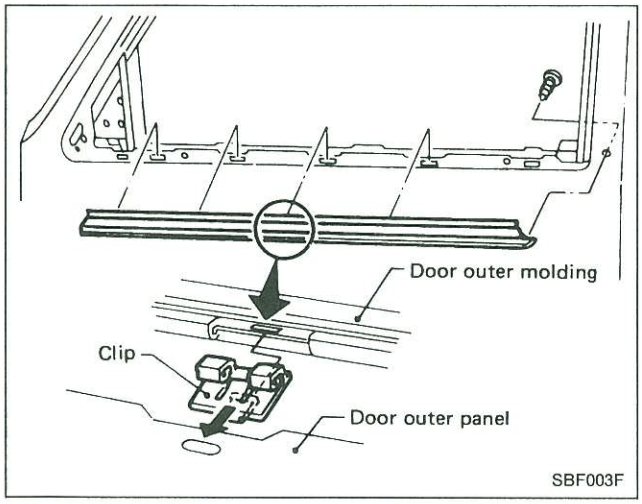

## Front Seat

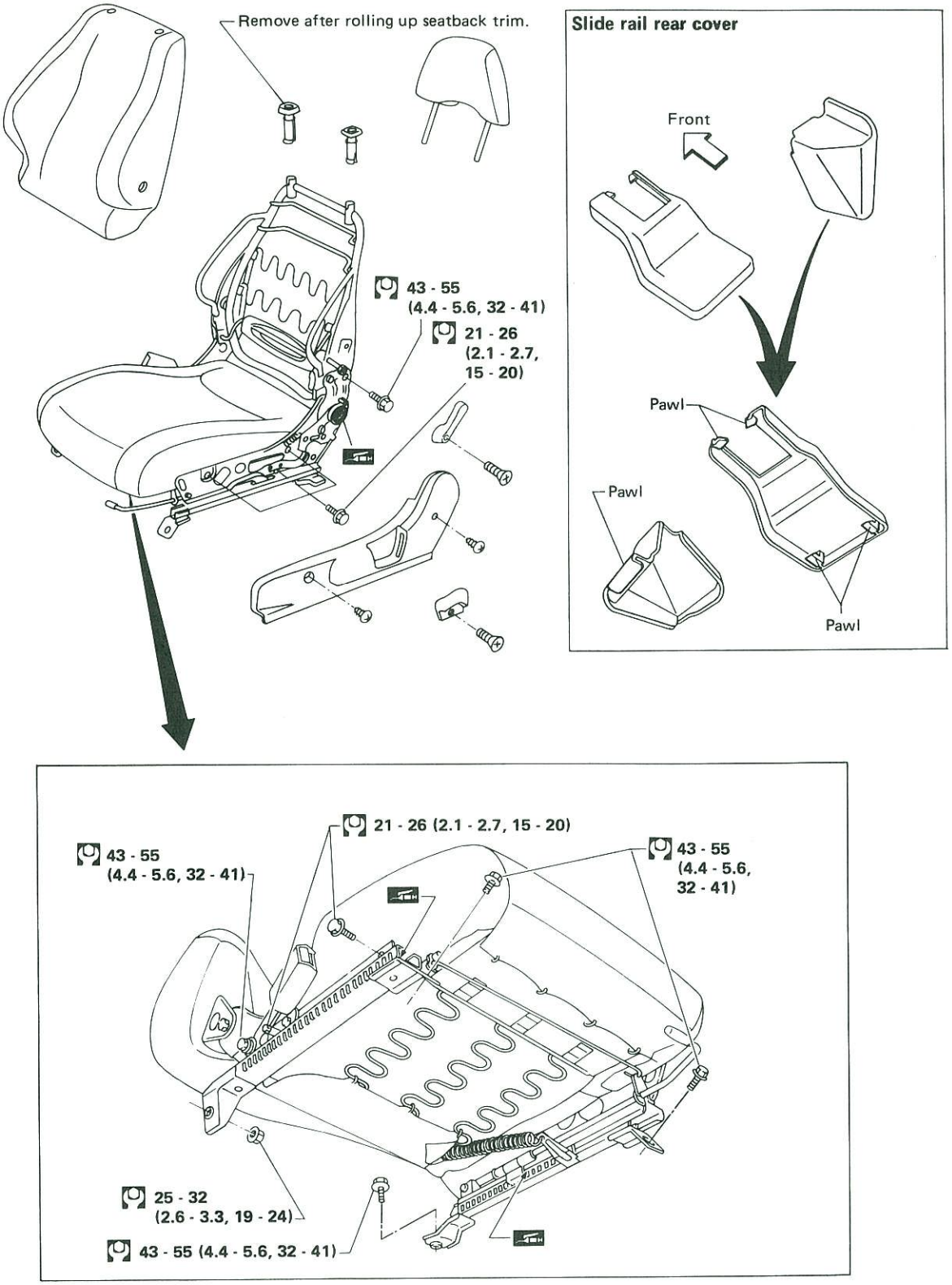


: N·m (kg-m, ft-lb)

MBF218A

## Rear Seat

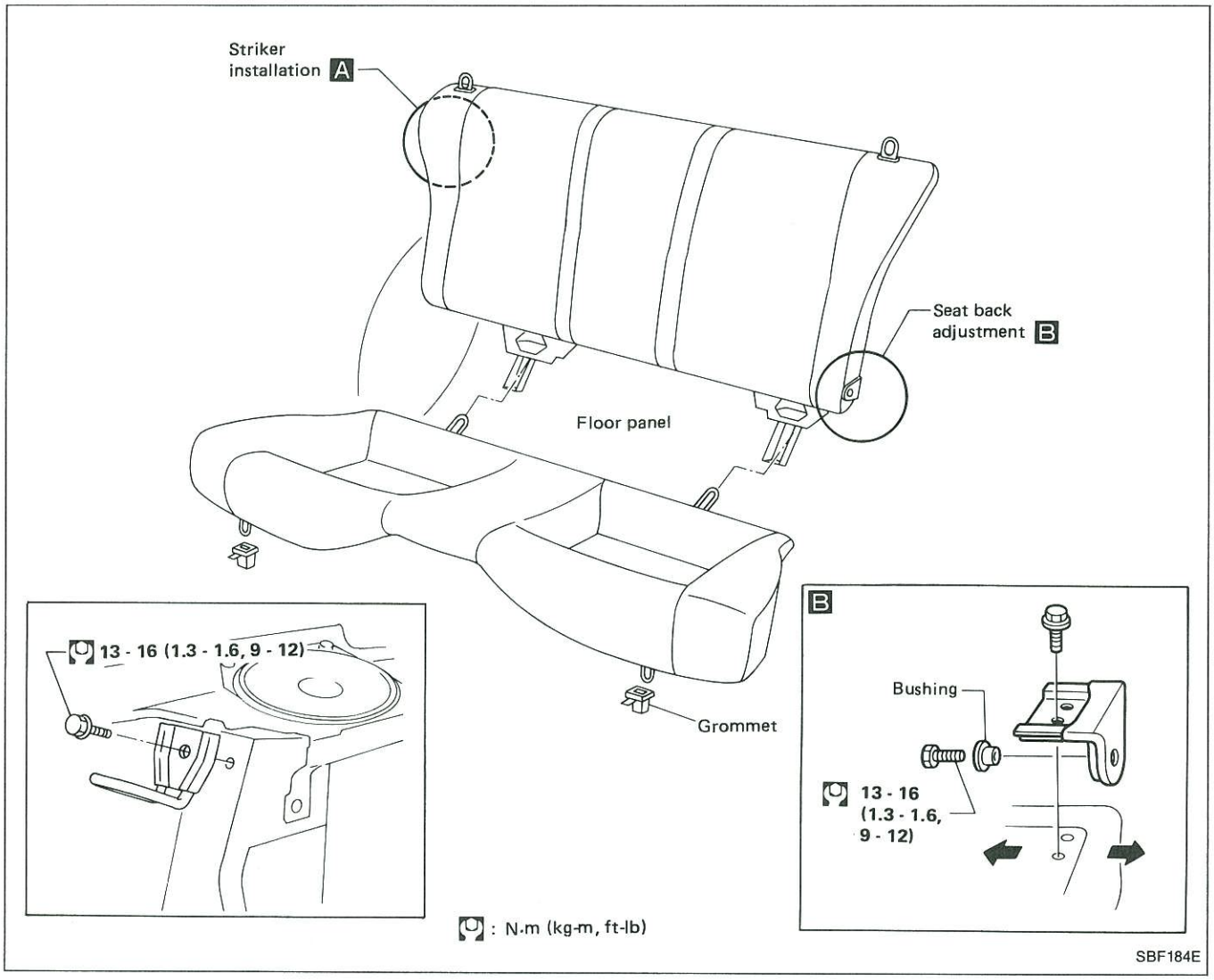
Striker installation A
Seat back adjustment B
Floor panel
Grommet
13 - 16 (1.3 - 1.6, 9 - 12)
B
Bushing
13 - 16 (1.3 - 1.6, 9 - 12)
: N·m (kg-m, ft-lb)
SBF184E

## Unit Location

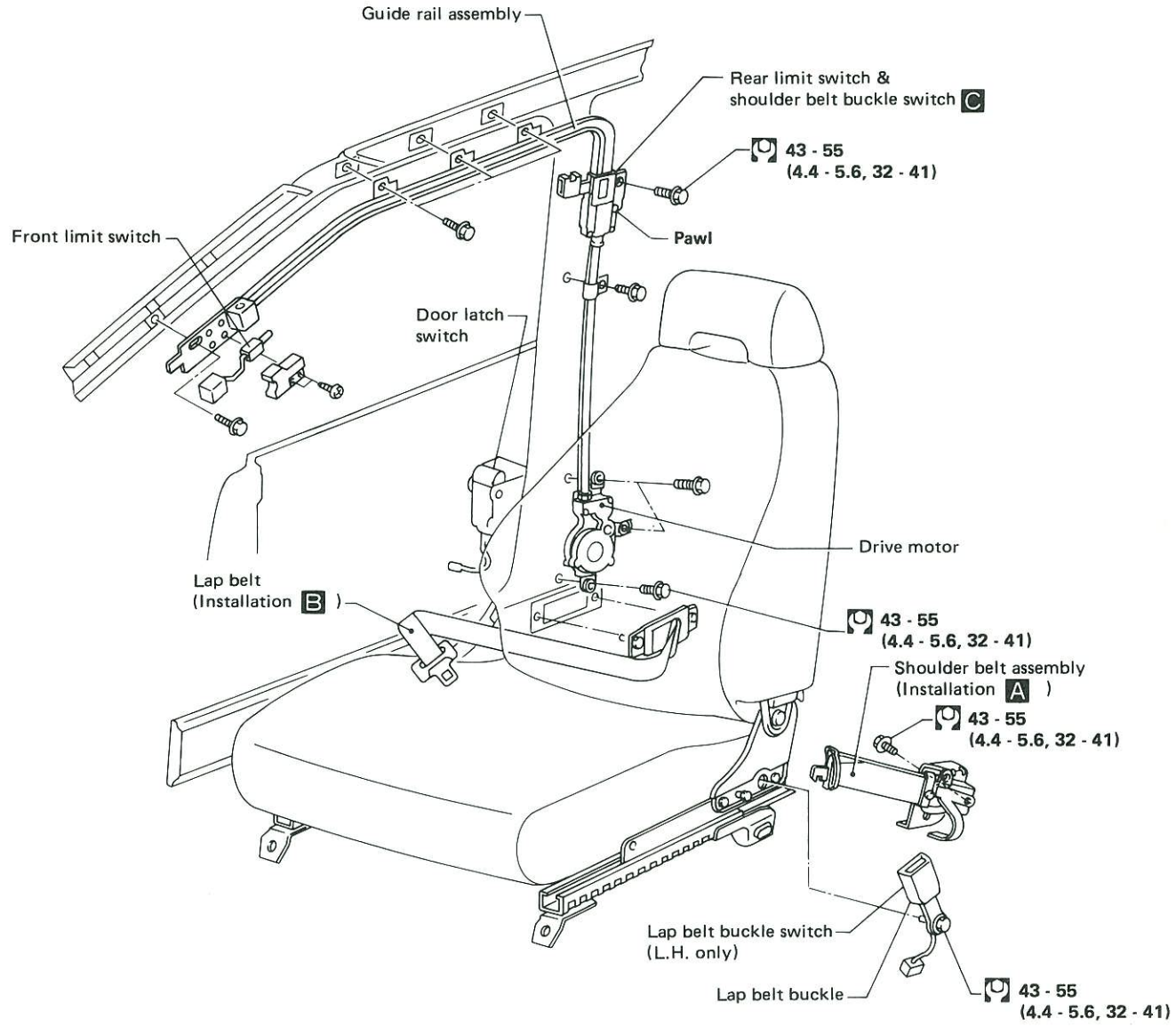


**Control unit**

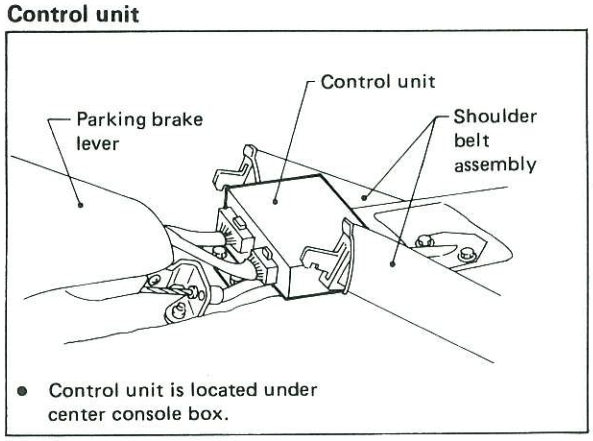


MBF219A

## Unit Location (Cont'd)

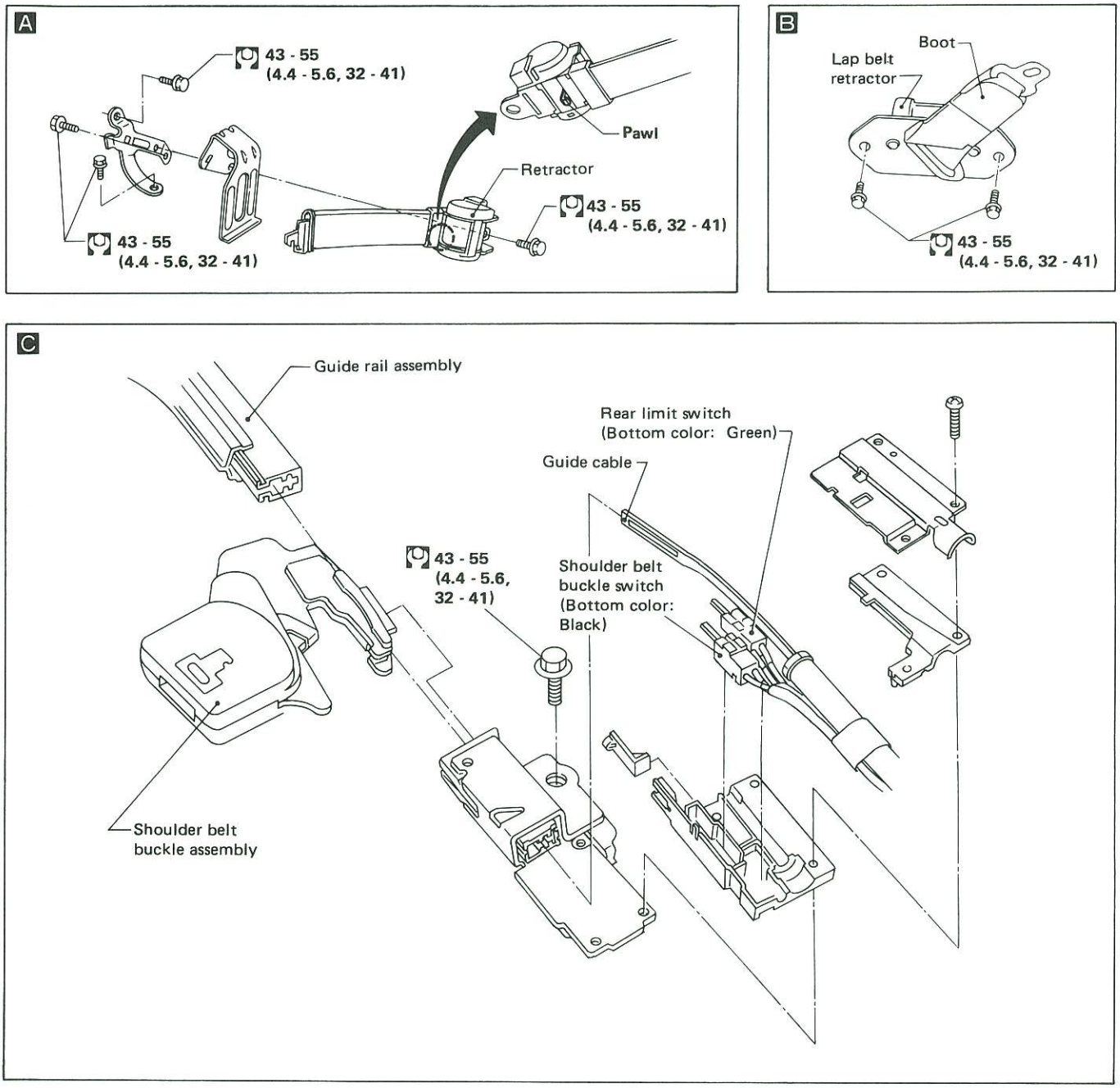


: N·m (kg-m, ft-lb)



SBF185E

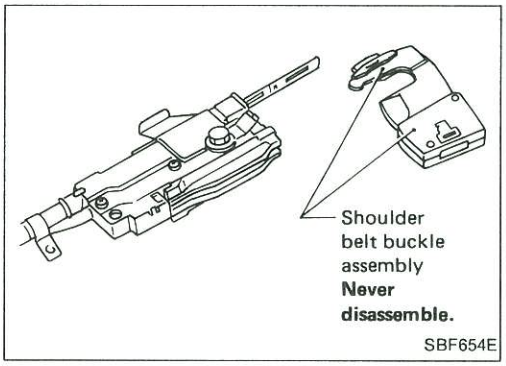


## Replacement of Rear Switch Assembly

**CAUTION:**

- **Never disassemble shoulder belt buckle assembly.**
- **Keep dirt out.**

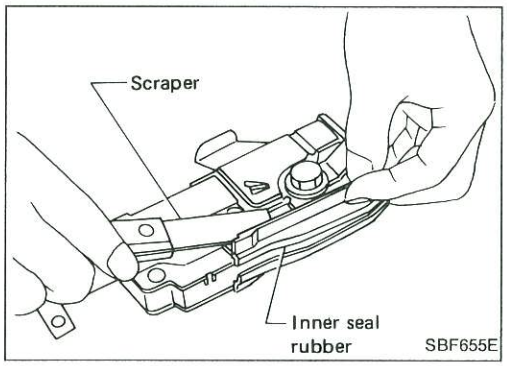


### DISASSEMBLY

1. Remove inner seal rubber from locking device assembly with scraper.

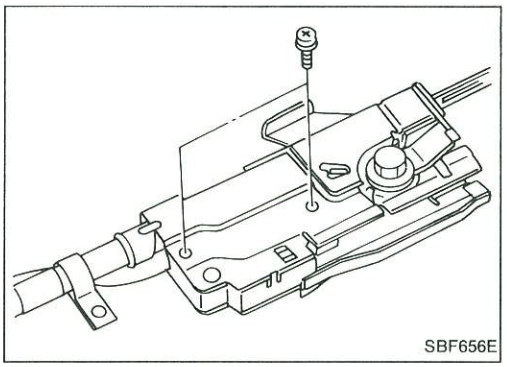


2. Remove screws from locking device assembly.

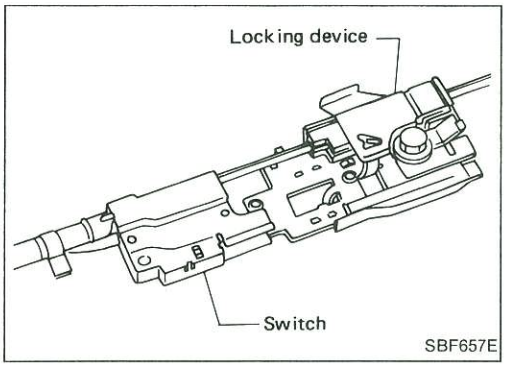


3. Slide locking device up and remove it from switch holders.

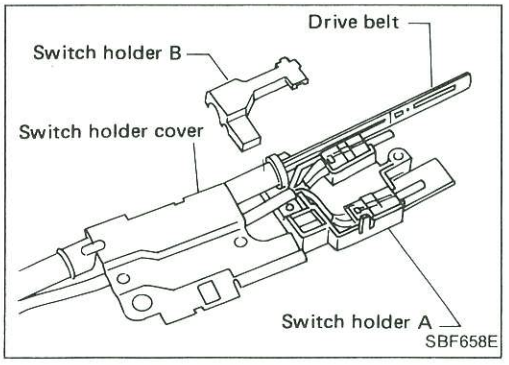


4. Slide switch holder cover down and remove it from switch holders A and B.
5. Remove switch holder B.
6. Remove rear switch assembly.

**Never turn drive belt.**

## Replacement of Rear Switch Assembly (Cont'd)

### ASSEMBLY

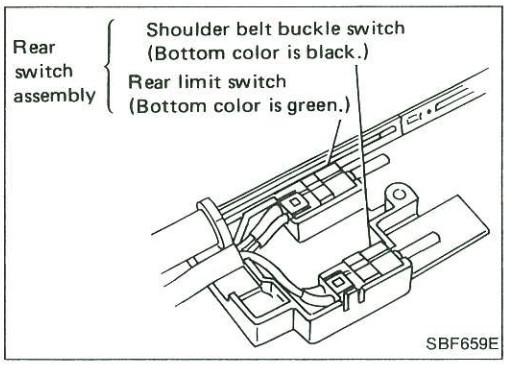


1. Set rear switch assembly to switch holder A.

**Be sure to set rear limit switch and shoulder belt buckle switch to appropriate position.**

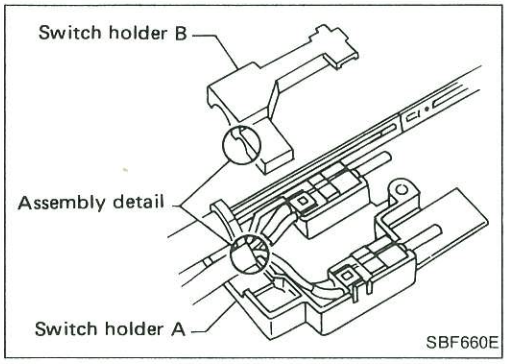


2. Cover switch holder A by switch holder B.

**Take care not to catch harness between holders A and B.**

3. Slide switch holder cover up until it is aligned with switch holders A and B.
4. Slide locking device down until it is aligned with switch holders.

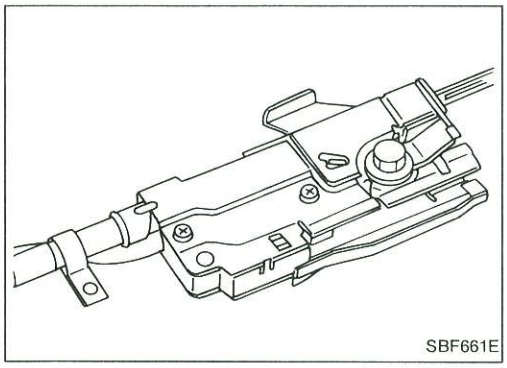


5. Secure screws to locking device assembly.
   **: 0.6 - 0.9 N·m (0.06 - 0.09 kg-m, 0.4 - 0.7 ft-lb)**

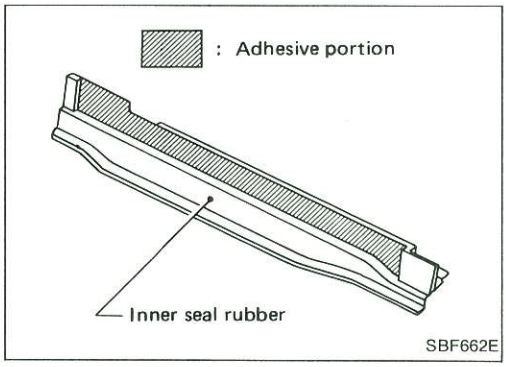


6. Apply adhesive on adhesive surface of inner seal rubber.

**Do not apply too much adhesive.**

7. Fix inner seal rubber to locking device assembly.

## Wiring Diagram

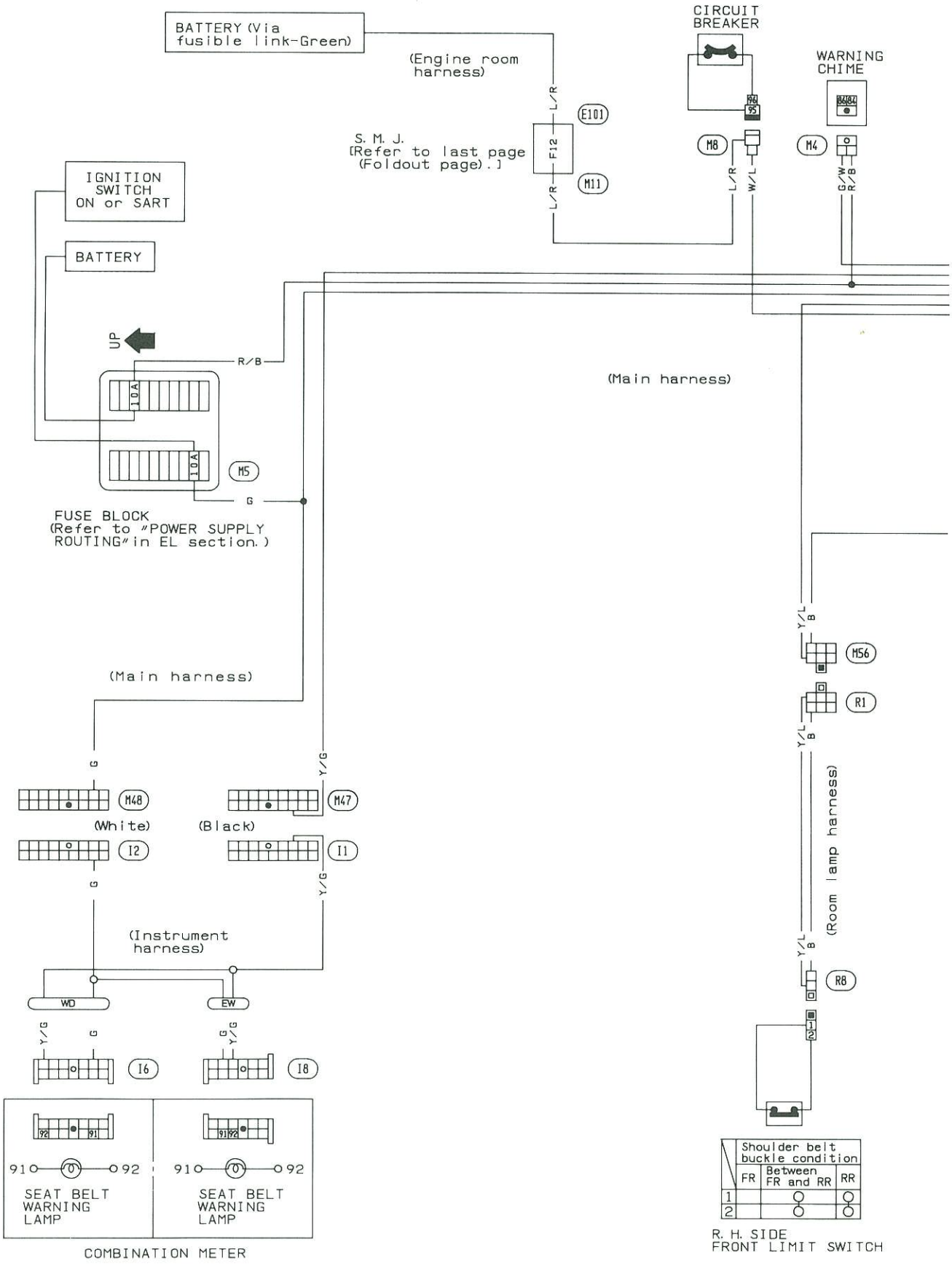

## Wiring Diagram (Cont'd)

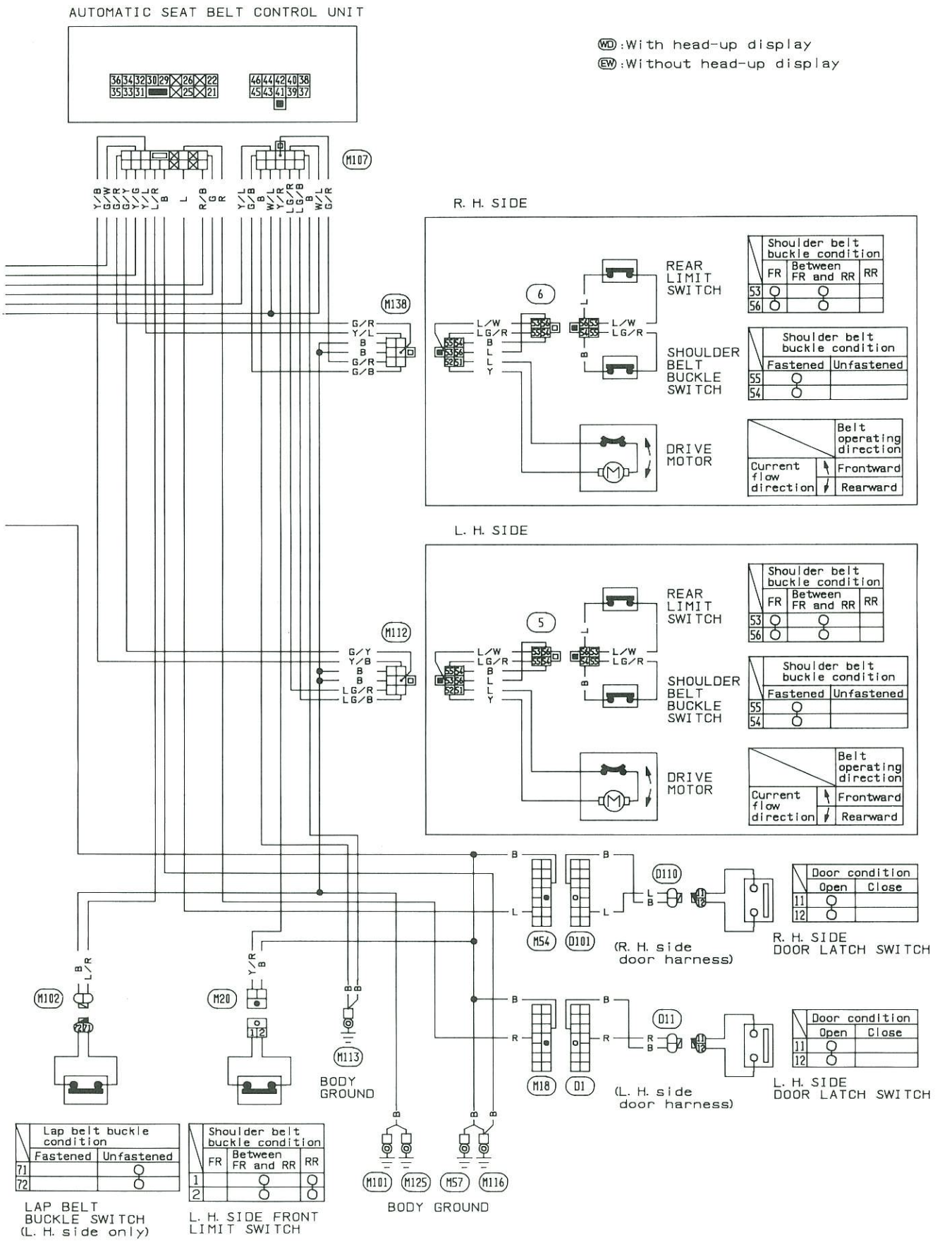


SBF784E

## Description

### FUNCTION

Shoulder belt buckle is mainly operated while ignition switch is "ON".

Condition (A): Ignition switch is "ON".

When door is opened, shoulder belt buckle is moved frontward and when door is closed, buckle is moved rearward.

Condition (B): Ignition switch is "OFF".

When door is opened, shoulder belt buckle is moved frontward. When the door is closed, buckle will remain in this position.

(Voltage of output signal is approximate value.)

| | | | | | | | | | | | | | |
|---|---|---|---|---|---|---|---|---|---|---|---|---|---|
| Input signal | Ignition switch | | OFF | OFF | ON | ON | ON | ON | ON | ON | OFF | OFF | OFF |
| | Door latch switch | | OFF | ON | OFF | OFF | OFF | ON | ON | ON | OFF | ON | ON |
| | Front limit switch | | OFF | OFF | OFF | ON | ON | ON | ON | OFF | ON | ON | ON |
| | Rear limit switch | | ON | ON | ON | ON | OFF | OFF | ON | ON | OFF | OFF | ON |
| Output signal | Drive motor power source for frontward operation | | 0V | 0V | 0V | 0V | 0V | 12V | 12V | 0V | 0V | 12V | 12V |
| | Drive motor power source for rearward operation | | 0V | 0V | 12V | 12V | 0V | 0V | 0V | 0V | 0V | 0V | 0V |
| Shoulder belt buckle | | Function | Stop | Stop | Start to move | Moving | Stop | Start to move | Moving | Stop | Stop | Start to move | Moving |
| | | Position | Front | Front | Front | Between Front & Rear | Rear | Rear | Between Front & Rear | Front | Rear | Rear | Between Front & Rear |

### TIMER (Ignition switch either "ON" or "OFF")

If limit switch does not operate (when accomplishing frontward operation, front limit switch can not be turned "OFF" or when accomplishing rearward operation, rear limit switch can not be turned "OFF"), control unit will continue to supply power to drive motor for 15 seconds.

### QUICK WARNING (Ignition switch "ON")

If front limit switch is not turned "OFF" after accomplishing frontward operation, control unit will stop supplying power 15 seconds later and warning lamp will flash and chime will operate rapidly for approximately 6 seconds.

### REAR LOCK (Fail safe operation)

If quick warning functions twice successively while ignition switch is "ON", shoulder belt buckle will move to rear position when the door is closed as normal but will remain in rear position even if door is opened. This operation is canceled when ignition switch is "OFF".

## Description (Cont'd)

### WARNING

| Priority | Warning item | Ignition switch | Indication of warning (Indicating time is approximately value.) |
|---|---|---|---|
| 1 | Shoulder anchors are not at rear lock position. | ON | 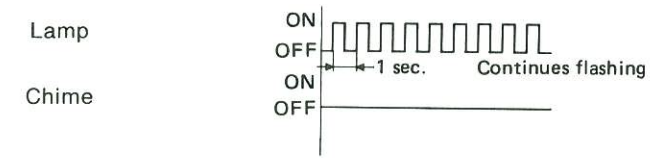 |
| | | OFF → ON | 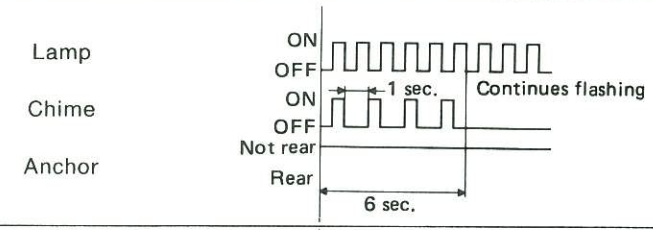 |
| | | | 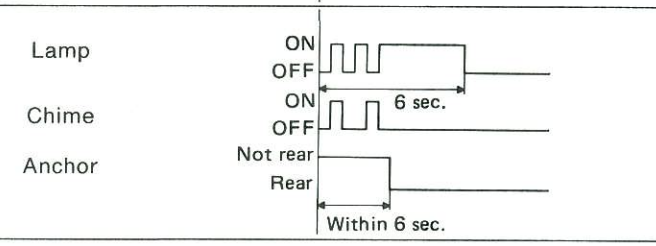 |
| 2 | Shoulder belts are not fastened. | ON | 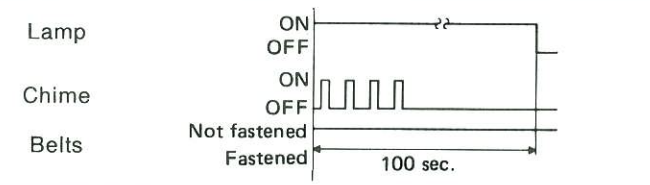 |
| | | | 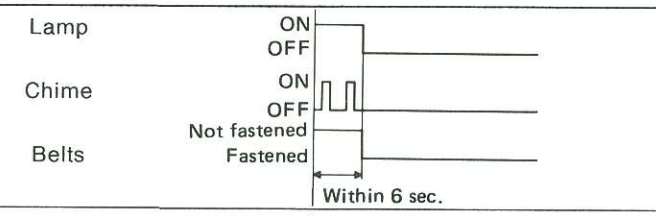 |
| 3 | Driver side lap belt is not fastened. | OFF → ON | 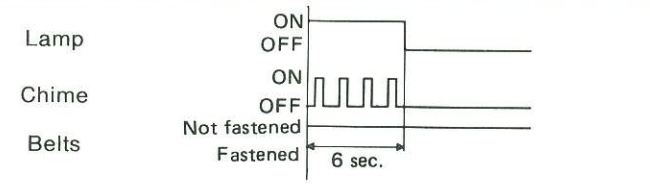 |
| | | | 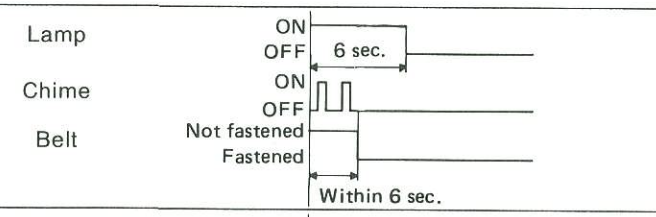 |
| 4 | Normal (All belts are fastened and shoulder anchors are in rear lock position.) | OFF → ON | 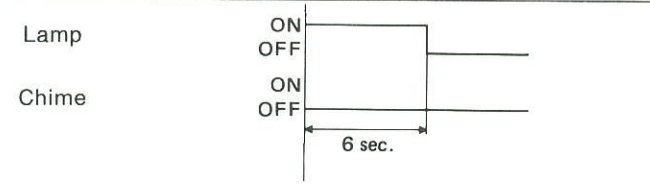 |

## Contents

**Symptom Chart** ..... BF-37
**Preliminary Check** ..... BF-38
**Main Power Supply and Ground Circuit Check** ..... BF-40
**Harness Layout** ..... BF-41
**Circuit Diagram for Quick Pinpoint Check** ..... BF-42
**Diagnostic Procedure 1**
(Check motor circuit and stop signals.) ..... BF-43
**Diagnostic Procedure 2**
(Check door switch circuit.) ..... BF-46
**Diagnostic Procedure 3**
(Check front limit switch circuit.) ..... BF-47
**Diagnostic Procedure 4**
(Check rear limit switch circuit.) ..... BF-48
**Diagnostic Procedure 5**
(Check shoulder belt switch circuit.) ..... BF-50
**Diagnostic Procedure 6**
(Check lap belt switch circuit.) ..... BF-51
**Diagnostic Procedure 7**
(Check warning chime circuit.) ..... BF-52
**Diagnostic Procedure 8**
(Check warning lamp circuit.) ..... BF-53
**Electrical Components Inspection** ..... BF-54

Since left and right component parts are basically the same, harness layout and methods for electronic components inspection are shown for one side only.
For those methods enclosed by double rectangles, component parts on both sides must be checked.

## Symptom Chart

| Procedure | Reference page | | SYMPTOM | No operation has made. (No warning indicated and no buckles movement performed) | Shoulder belt buckle in L.H. or R.H. side does not move. | Shoulder belt buckle moves frontwards only. (not rearwards) | Shoulder belt buckle moves rearwards only. (not frontwards) | Warnings indicate incorrectly or do not function. | Quick warning operates. |
|---|---|---|---|---|---|---|---|---|---|
| Preliminary Check | BF-38 | | Procedure 1 | | ○ | ○ | ○ | | |
| | BF-39 | | Procedure 2 | | | | | ○ | |
| Main Power Supply and Ground Circuit Check | BF-40 | | Procedure 1 | ○ | | | | | |
| | BF-40 | | Procedure 2 | | ○ | | | | |
| Diagnostic Procedure | BF-43 | | Procedure 1 | ○ | ○ | | | | |
| | BF-46 | | Procedure 2 | | | ○ | ○ | | |
| | BF-47 | | Procedure 3 | ○ | ○ | | ○ | | ○ |
| | BF-48 | | Procedure 4 | ○ | ○ | ○ | | ○ | |
| | BF-50 | | Procedure 5 | | | | | ○ | |
| | BF-51 | | Procedure 6 | | | | | ○ | |
| | BF-52 | | Procedure 7 | | | | | ○ | |
| | BF-53 | | Procedure 8 | | | | | ○ | |
| Electrical Components Inspection | — | | Warning lamp | ○ | | | | ○ | |
| | BF-55 | | Warning chime | ○ | | | | ○ | |
| | BF-54 | L.H. side | Front limit switch | ○ | ○ | | ○ | | ○ |
| | BF-54 | | Rear limit switch | ○ | ○ | ○ | | ○ | |
| | BF-54 | | Door latch switch | ○ | | ○ | ○ | | |
| | BF-54 | | Shoulder belt buckle switch | ○ | | | | ○ | |
| | BF-54 | | Motor | ○ | ○ | | | | |
| | BF-55 | | Lap belt switch | ○ | | | | ○ | |
| | BF-54 | R.H. side | Front limit switch | ○ | ○ | | ○ | | ○ |
| | BF-54 | | Rear limit switch | ○ | ○ | ○ | | ○ | |
| | BF-54 | | Door latch switch | ○ | | ○ | ○ | | |
| | BF-54 | | Shoulder belt buckle switch | ○ | | | | ○ | |
| | BF-54 | | Motor | ○ | ○ | | | | |

## Preliminary Check

### PROCEDURE 1

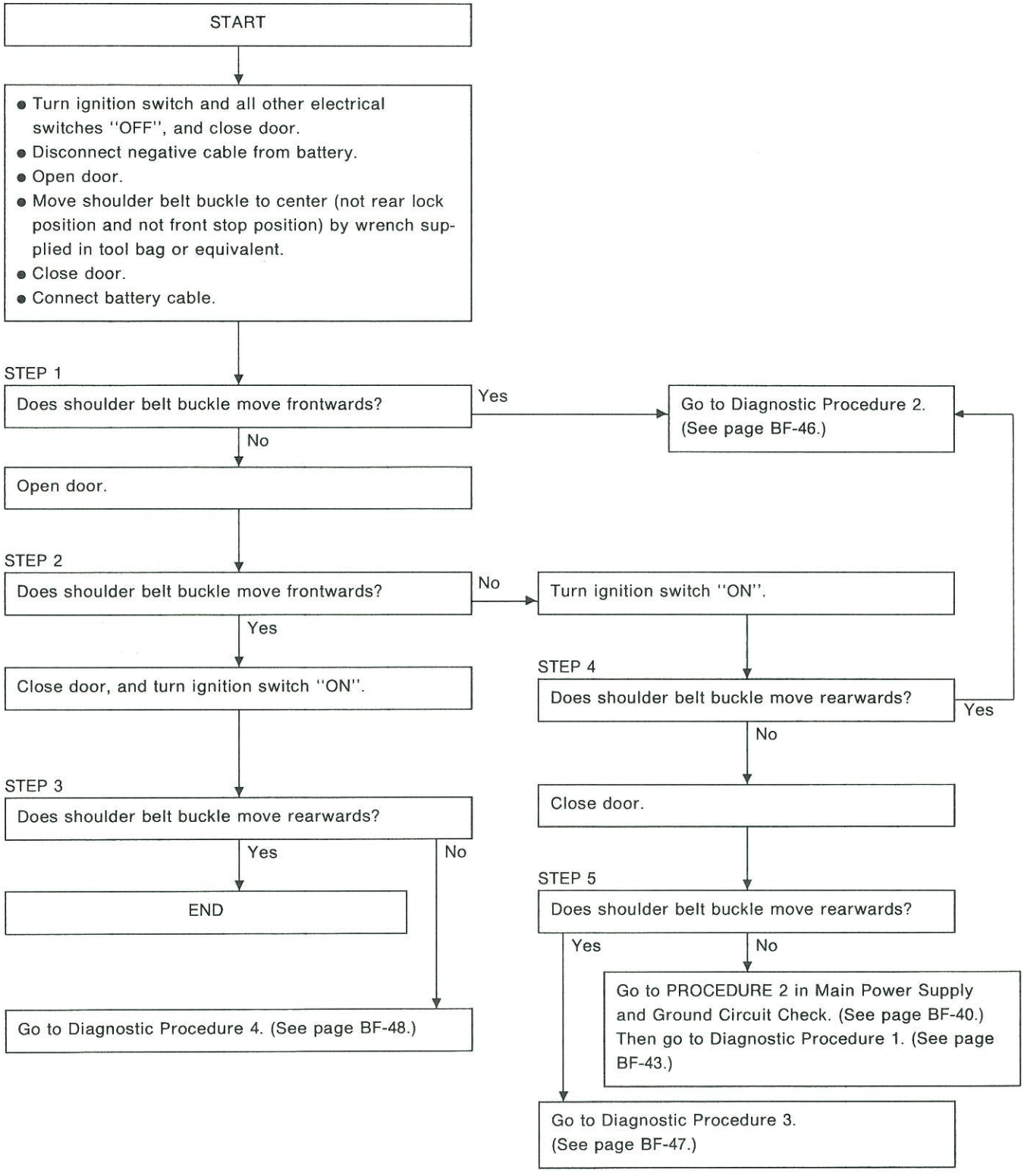

## Preliminary Check (Cont'd)

### PROCEDURE 2

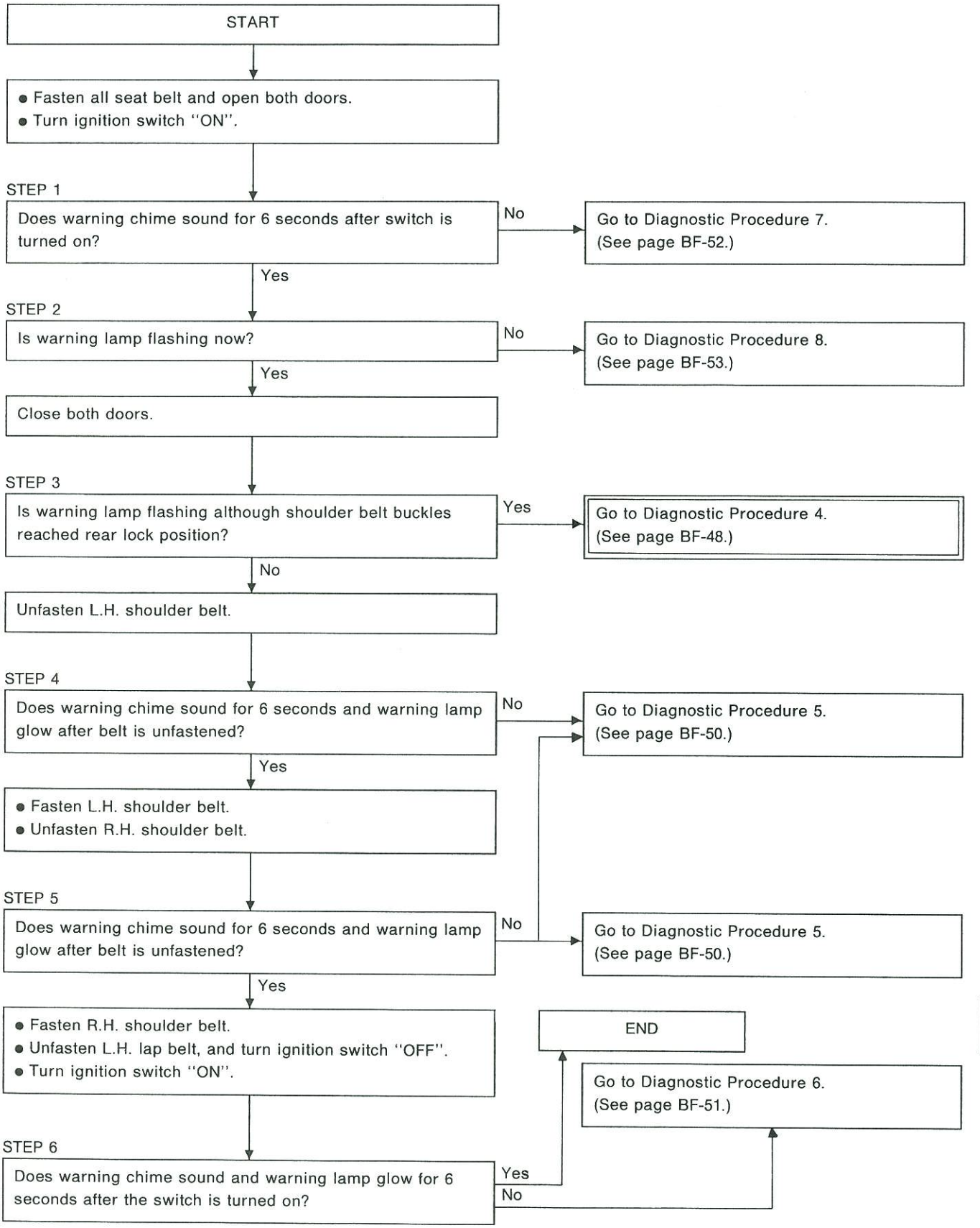

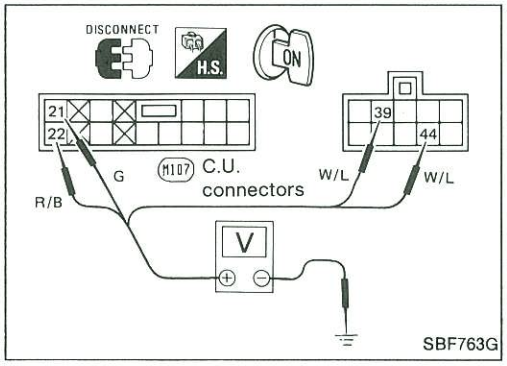


## Main Power Supply and Ground Circuit Check

### PROCEDURE 1

### Main power supply

| Terminals | Battery voltage existence condition | |
|---|---|---|
| | Ignition switch "ON" | Other than ignition switch "ON" |
| ㉑ - Ground | Yes | No |
| ㉒ - Ground | Yes | Yes |
| ㊴ - Ground | Yes | Yes |
| ㊹ - Ground | Yes | Yes |

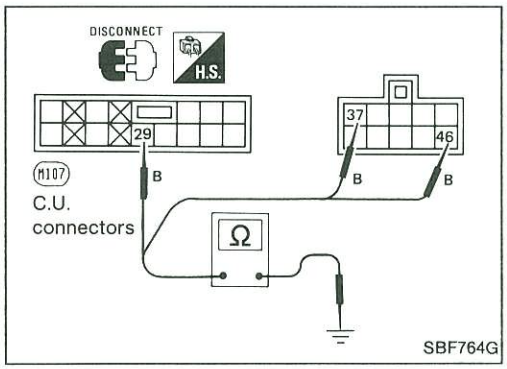


### Ground circuit

| Terminals | Continuity |
|---|---|
| ㉙ - Ground | Yes |
| ㊲ - Ground | Yes |
| ㊻ - Ground | Yes |

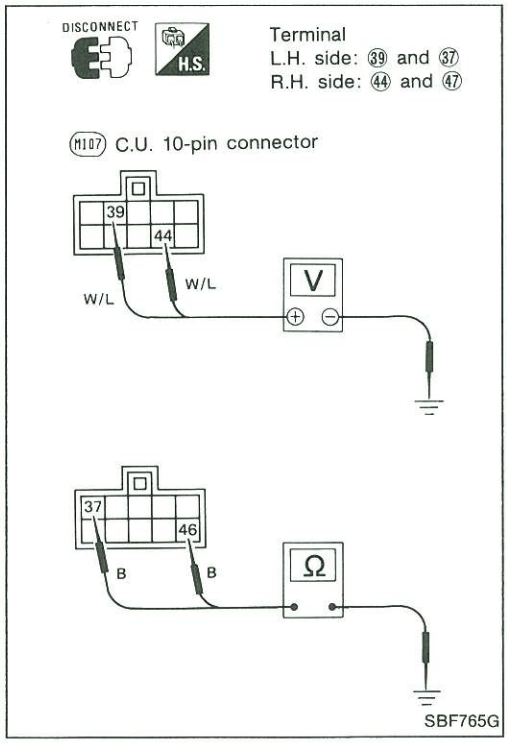


### PROCEDURE 2

### Power supply for motor drive

| | Terminals | Battery voltage existence |
|---|---|---|
| L.H. side | ㊴ - Ground | Yes |
| R.H. side | ㊹ - Ground | Yes |

### Ground circuit for motor drive

| | Terminals | Continuity |
|---|---|---|
| L.H. side | ㊲ - Ground | Yes |
| R.H. side | ㊻ - Ground | Yes |

## Harness Layout

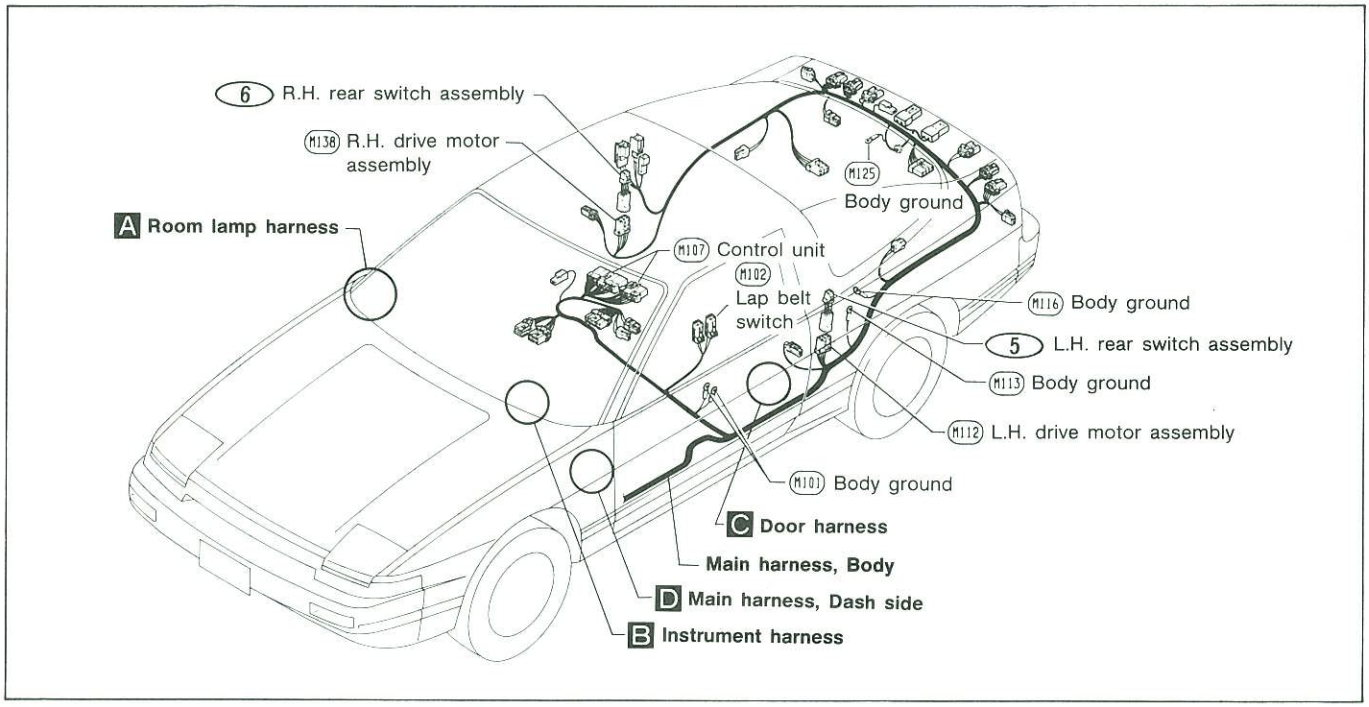


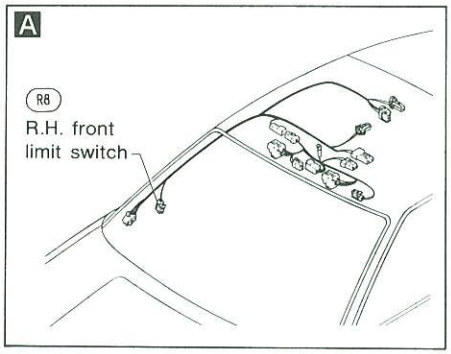


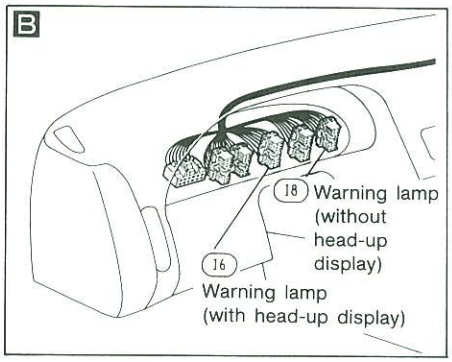


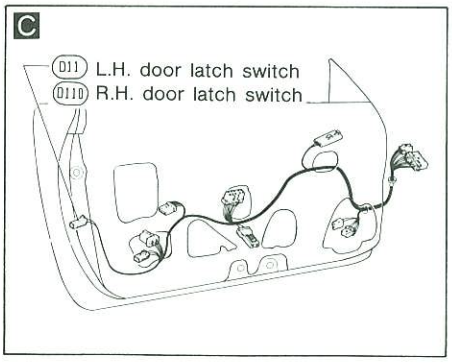


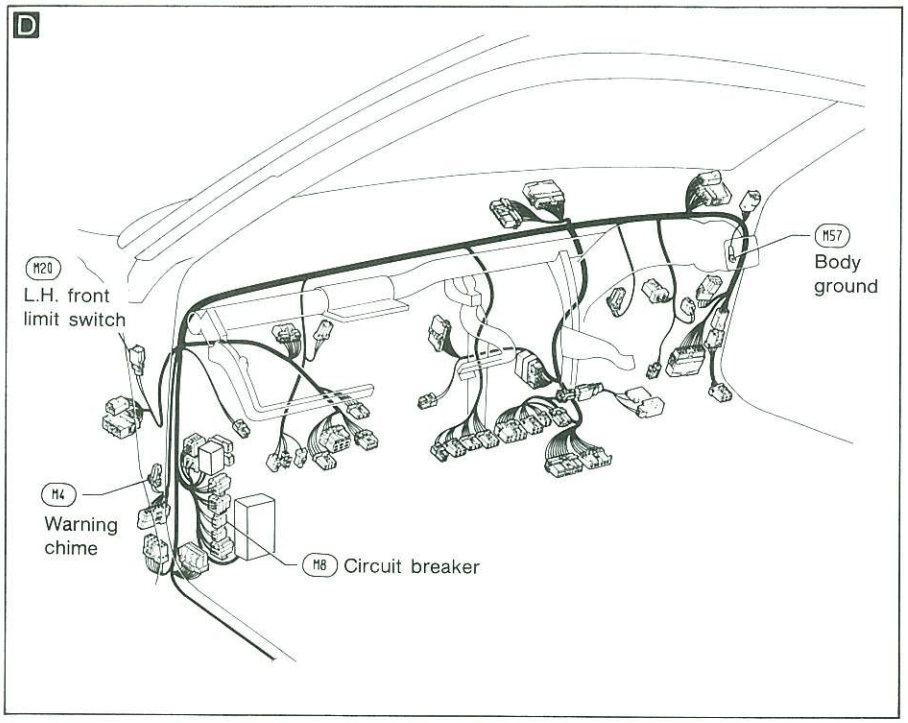


SBF713G

## Circuit Diagram for Quick Pinpoint Check

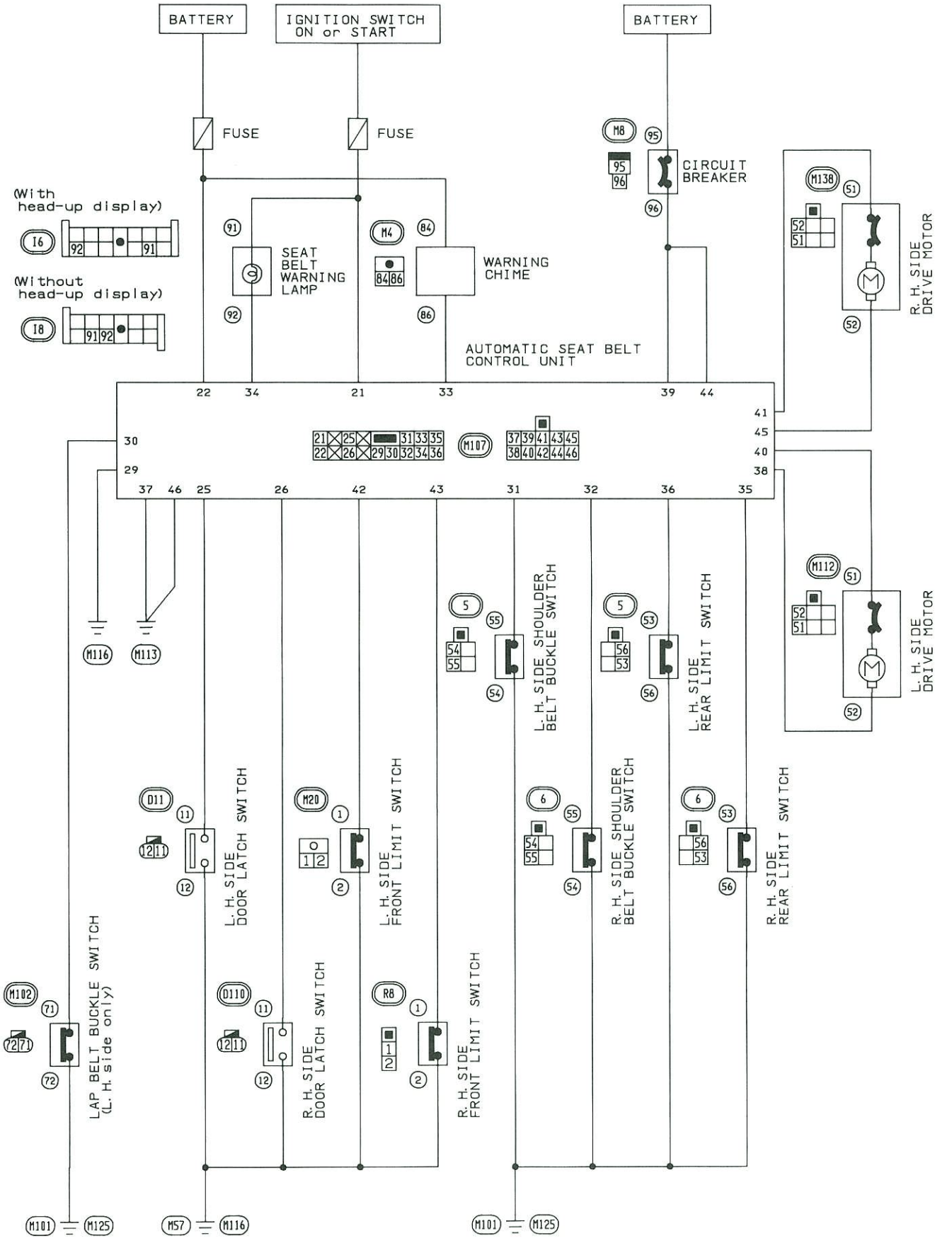


SBF785E

A

(M107) C.U. 10-pin connector

DISCONNECT

R.H. side

L.H. side

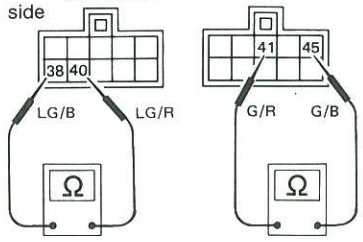


SBF766G

B

(M107) C.U. 10-pin connector

DISCONNECT

H.S.

Terminal
L.H. side: (38)
R.H. side: (41)

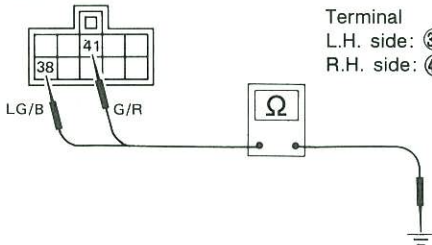


SBF767G

C

(M107) C.U. 10-pin connector

DISCONNECT

H.S.

L.H. side

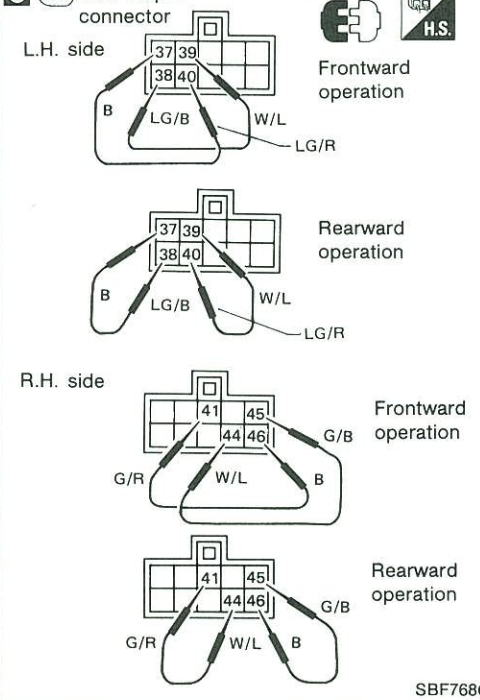


SBF768G

## Diagnostic Procedure 1

START

A

CHECK MOTOR CIRCUIT.
1) Disconnect 10-pin connector from control unit.
2) Check continuity.

| | Terminals |
|---|---|
| L.H. side | (38) - (40) |
| R.H. side | (41) - (45) |

**Continuity should exist.**

N.G. → (Go to Ⓐ on next page.)

O.K.

B

Does continuity exist?

| | Terminals |
|---|---|
| L.H. side | (38) - Ground |
| R.H. side | (41) - Ground |

Yes → (Go to Ⓑ on next page.)

No

C

CHECK MOTOR OPERATION.
Check shoulder belt buckle movement.

O.K. → (Go to Ⓒ on page BF-45.)

N.G.

Go to DRIVE MOTOR ASSEMBLY of Electrical Components Inspection. (See page BF-54.)

N.G. → Replace drive motor assembly.

O.K.

Replace guide rail assembly.

## Diagnostic Procedure 1 (Cont'd)

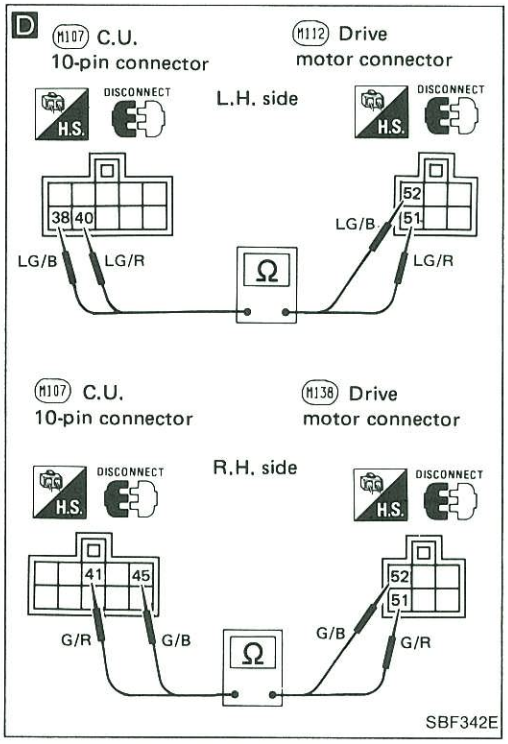


SBF342E

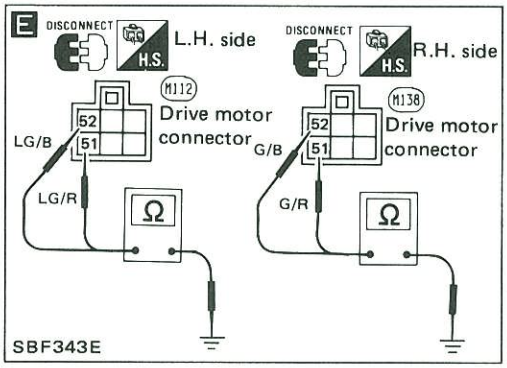


SBF343E

Ⓐ

D

1) Disconnect connector from drive motor assembly.
2) Check continuity.

N.G. → Repair harness.

| | Terminals |
|---|---|
| L.H. side | ㊳ - ㊷ |
| | ㊵ - ㊶ |
| R.H. side | ㊶ - ㊶ |
| | ㊺ - ㊷ |

**Continuity should exist.**

O.K.

Check drive motor harness for open circuit.

N.G. → Repair drive motor harness.

O.K.

Replace drive motor.

Ⓑ

E

1) Disconnect connector from drive motor assembly.
2) Does continuity exist in at least one point?

Yes → Repair harness. There will be incorrect grounding.

| | Terminals |
|---|---|
| L.H. side | ㊶ - Ground |
| | ㊷ - Ground |
| R.H. side | ㊶ - Ground |
| | ㊷ - Ground |

No

Check drive motor harness for incorrect grounding.

N.G. → Repair drive motor harness.

O.K.

Replace drive motor assembly.

## Diagnostic Procedure 1 (Cont'd)

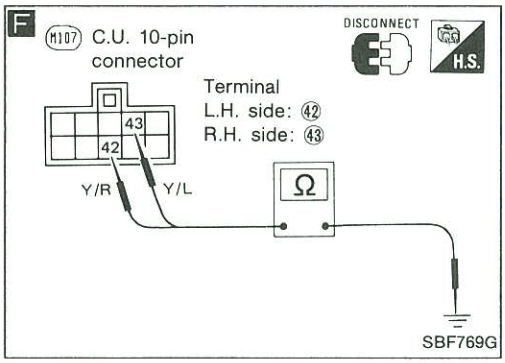


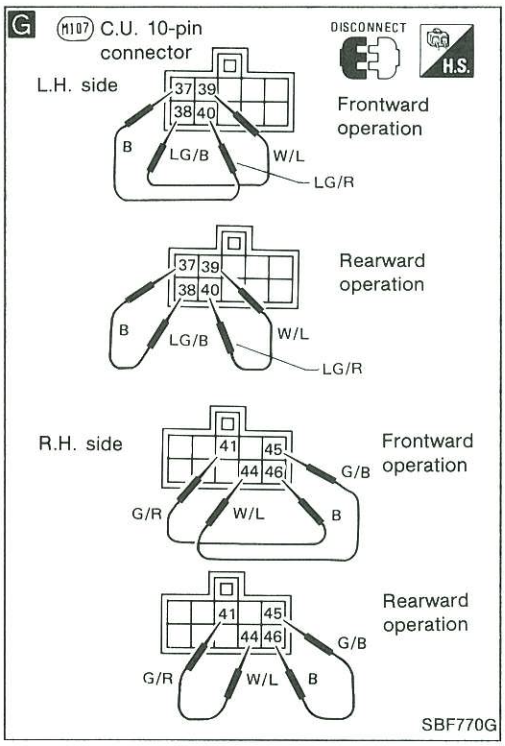


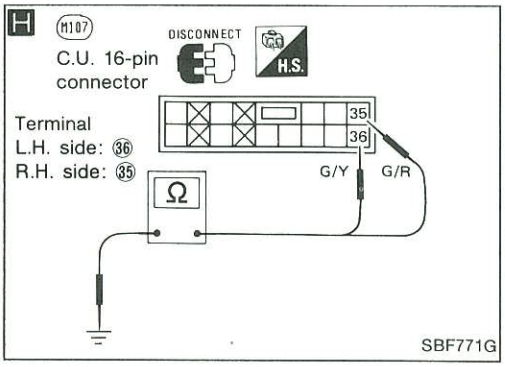


Ⓒ

**F**

CHECK STOP SIGNAL.
1) Move shoulder belt buckle to center (not rear lock position and not front).
2) Check continuity.

| | Terminals |
|---|---|
| L.H. side | 42 - Ground |
| R.H. side | 43 - Ground |

**Continuity should exist.**
**G Refer to figure G to move shoulder belt buckle.**

N.G. → Go to Diagnostic Procedure 3 and return to next step.

O.K.

**H**

1) Disconnect 16-pin connector from control unit.
2) Check continuity.

| | Terminals |
|---|---|
| L.H. side | 36 - Ground |
| R.H. side | 35 - Ground |

**Continuity should exist.**

N.G. → Go to Diagnostic Procedure 4 and return to next step.

O.K.

Is this the second time?

Yes → Replace control unit.

No

Reinstall any part removed.

Go to PROCEDURE 1 (START) of Preliminary Check.
(See page BF-38.)

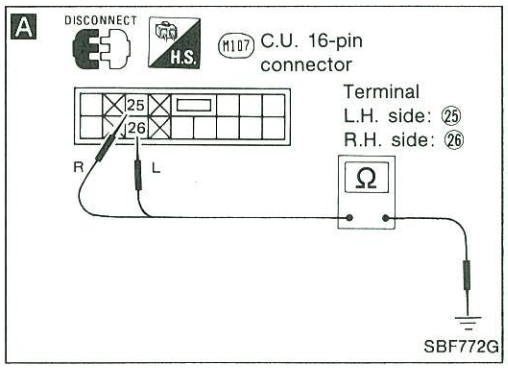


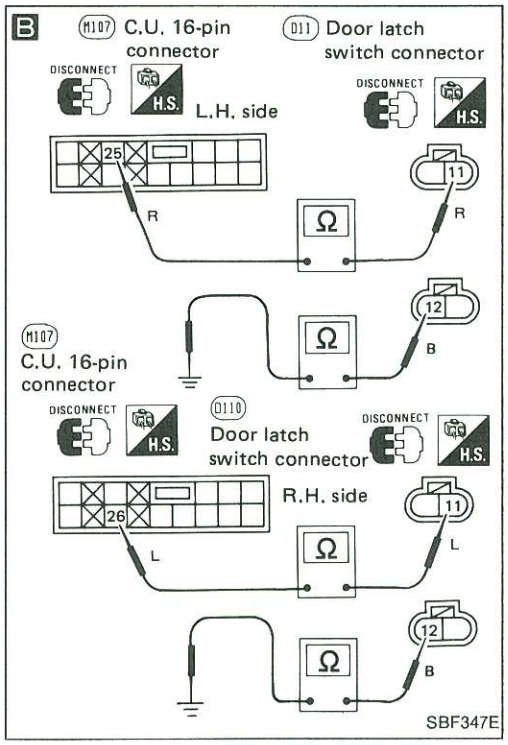


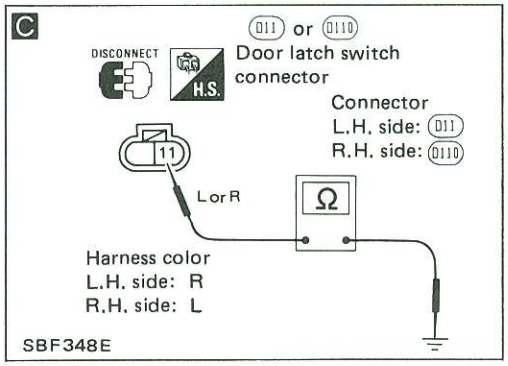


## Diagnostic Procedure 2

START

**A**

CHECK DOOR SWITCH CIRCUIT.
1) Disconnect 16-pin connector from control unit.
2) Check continuity.

| | Terminals | Door condition | Continuity |
|---|---|---|---|
| L.H. side | 25 - Ground | Open | Yes |
| | | Close | No |
| R.H. side | 26 - Ground | Open | Yes |
| | | Close | No |

O.K. → Is this the second time?
- No → Reinstall any part removed.
- Yes → Replace control unit.

N.G. → Go to PROCEDURE 1 (START) of Preliminary Check. (See page BF-38.)

**B**

1) Disconnect door latch switch connector.
2) Check continuity.

| | Terminals |
|---|---|
| L.H. side | 25 - 11<br>12 - Ground (M57, M116) |
| R.H. side | 26 - 11<br>12 - Ground (M57, M116) |

**Continuity should exist.**

N.G. → Repair harness.

O.K.

**C**

Does continuity exist?

| | Connector | Terminals |
|---|---|---|
| L.H. side | D11 | 11 - Ground |
| R.H. side | D110 | 11 - Ground |

Yes → Repair harness. There will be incorrect grounding between terminals 25 and 11 or 26 and 11.

No

Go to DOOR LATCH SWITCH of Electrical Components Inspection. (See page BF-54.)

O.K. → Reinstall any part removed.

N.G. → Go to PROCEDURE 1 (START) of Preliminary Check. (See page BF-38.)

Check door latch switch harness for open and short circuit.

N.G. → Repair door latch switch harness.

O.K.

Replace door lock assembly.

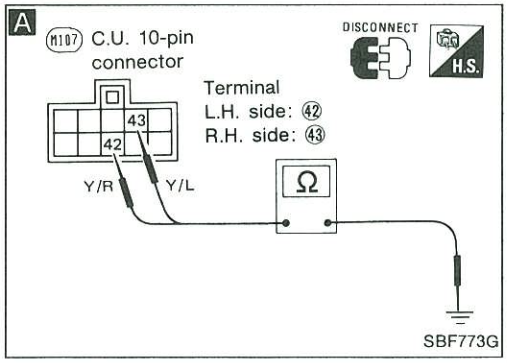


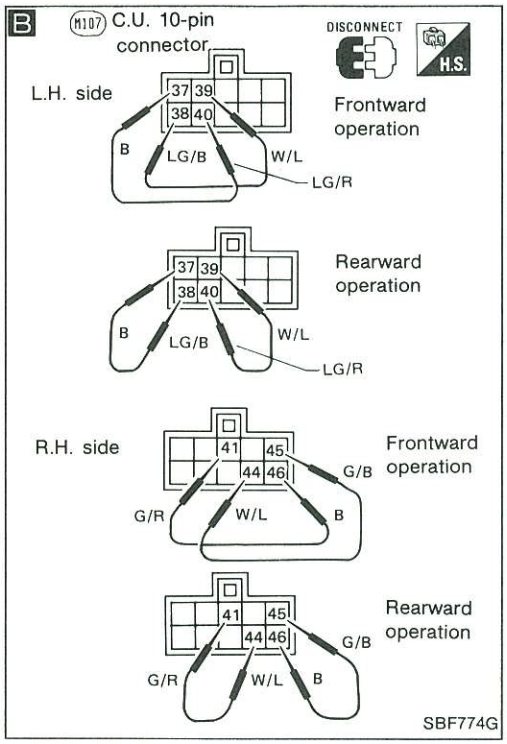


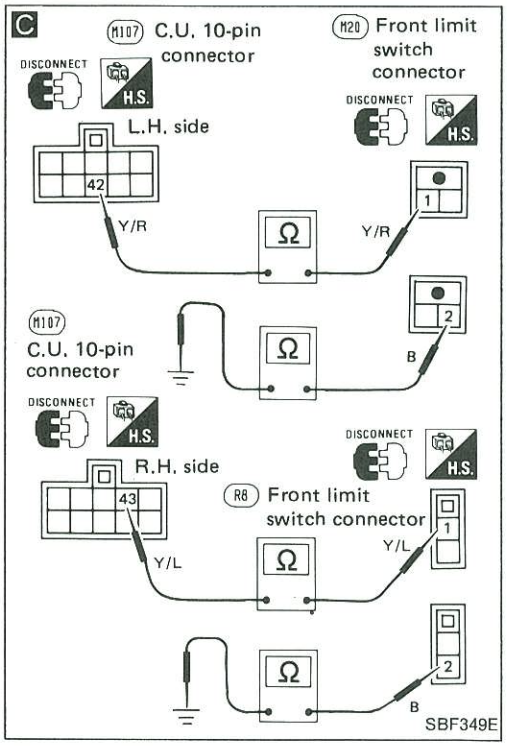


## Diagnostic Procedure 3

START

**A**

CHECK FRONT LIMIT SWITCH CIRCUIT.
1) Disconnect 10-pin connector from control unit.
2) Check continuity.

| | Terminals | Shoulder belt buckle position | Continuity |
|---|---|---|---|
| L.H. side | ㊷ - Ground | At front | No |
| | | Not at front | Yes |
| R.H. side | ㊸ - Ground | At front | No |
| | | Not at front | Yes |

**B Refer to figure B to move shoulder belt buckle.**

O.K. → Is this the second time?

Yes → Replace control unit.

No → Reinstall any part removed.

Go to PROCEDURE 1 (START) of Preliminary Check.
(See page BF-38.)

N.G.

**C**

1) Disconnect connector from front limit switch.
2) Check continuity.

| | Terminals |
|---|---|
| L.H. side | ㊷ - ①<br>② - Ground ( M57 , M116 ) |
| R.H. side | ㊸ - ①<br>② - Ground ( M57 , M116 ) |

**Continuity should exist.**

N.G. → Repair harness.

O.K.

(Go to Ⓐ on next page.)

## Diagnostic Procedure 3 (Cont'd)

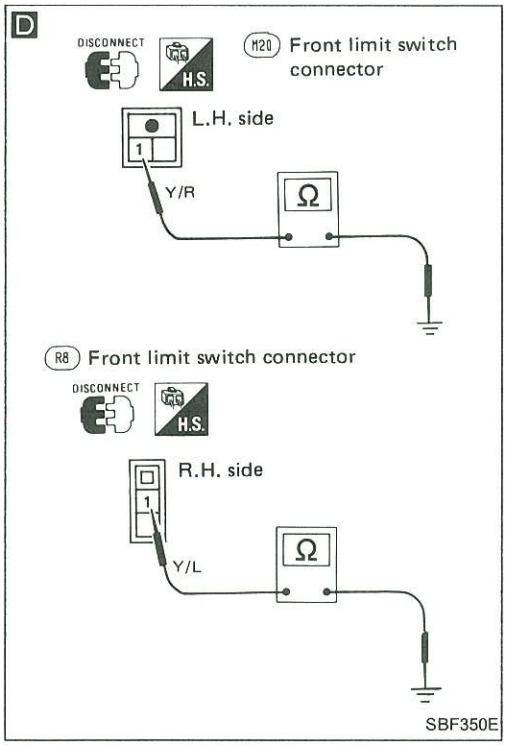


Ⓐ

**D**

Does continuity exist?

| | Connector | Terminals |
|---|---|---|
| L.H. side | M20 | ① - Ground |
| R.H. side | R8 | ① - Ground |

Yes → Repair harness. There will be incorrect grounding between terminals ㊷ and ① or ㊸ and ①.

No

Go to FRONT LIMIT SWITCH of Electrical Components Inspection. (See page BF-54.)

O.K. → Replace guide rail assembly.

N.G.

Check front limit switch harness for open and short circuit.

N.G. → Repair front limit switch harness.

O.K.

Replace front limit switch.

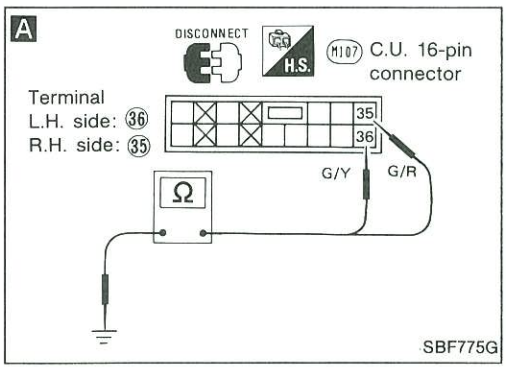


## Diagnostic Procedure 4

START

**A**

CHECK REAR LIMIT SWITCH CIRCUIT.
1) Disconnect 16-pin connector from control unit.
2) Check continuity.

| | Terminals | Shoulder belt buckle position | Continuity |
|---|---|---|---|
| L.H. side | 36 - Ground | At rear | No |
| | | Not at rear | Yes |
| R.H. side | 35 - Ground | At rear | No |
| | | Not at rear | Yes |

**B Refer to figure B to move shoulder belt buckle.**

O.K. → (Go to Ⓑ on next page.)

N.G.

Ⓒ

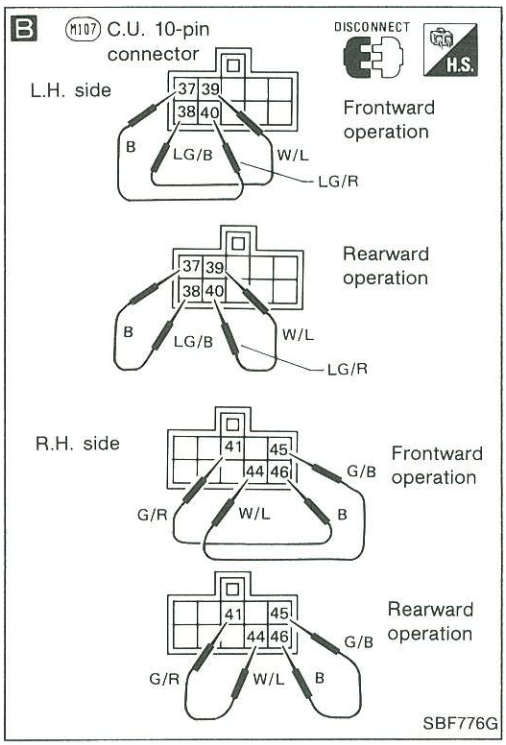

## Diagnostic Procedure 4 (Cont'd)

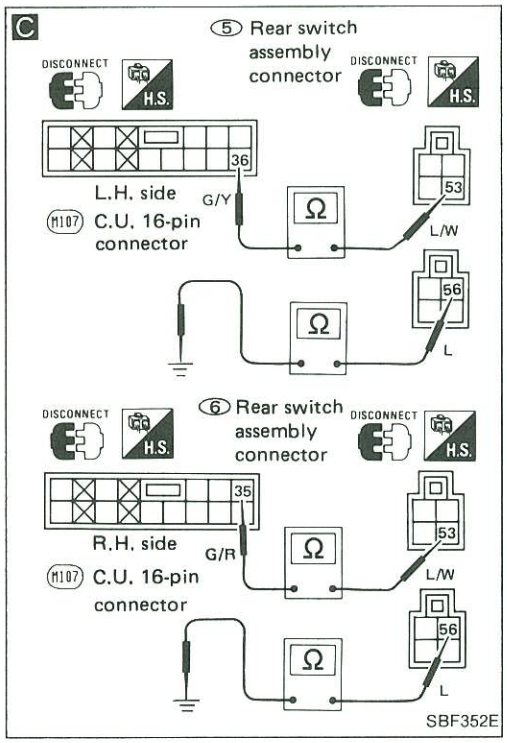


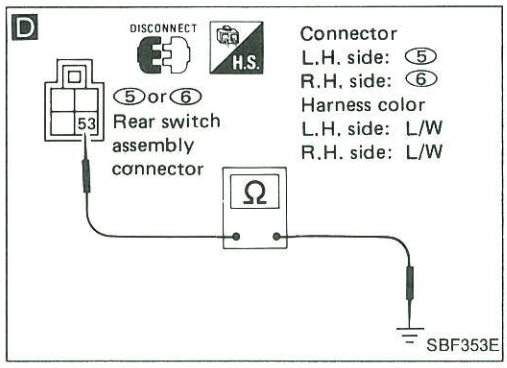


Ⓒ

**C**

1) Disconnect connector from rear switch assembly.
2) Check continuity.

| | Terminals |
|---|---|
| L.H. side | ㊱ - ㊸<br>㊻ - Ground ( M101 , M125 ) |
| R.H. side | ㉟ - ㊸<br>㊻ - Ground ( M101 , M125 ) |

**Continuity should exist.**

N.G. → Repair harness.

O.K. ↓

**D**

Does continuity exist?

| | Connector | Terminals |
|---|---|---|
| L.H. side | ⑤ | ㊸ - Ground |
| R.H. side | ⑥ | ㊸ - Ground |

Yes → Repair harness. There will be incorrect grounding between terminals ㊱ and ㊸ or ㉟ and ㊸.

No ↓

Go to REAR LIMIT SWITCH of Electrical Components Inspection. (See page BF-54.)

O.K. → (Go to below.)

N.G. ↓

Check rear limit switch harness for open or short circuit.

N.G. → Repair rear limit switch harness.

O.K. ↓

Replace rear switch assembly.

Ⓑ

Is this the second time?

Yes → Replace control unit.

No ↓

Reinstall any part removed.

Go to PROCEDURE 1 (STEP 3) (See page BF-38.) or PROCEDURE 2 (STEP 3) (See page BF-39.) of Preliminary Check.

## Diagnostic Procedure 5

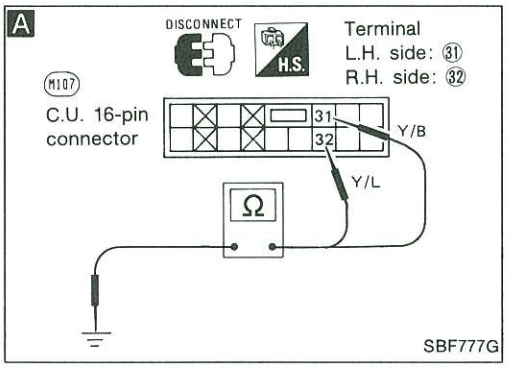


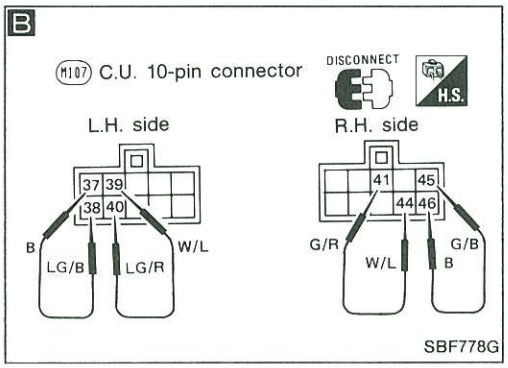


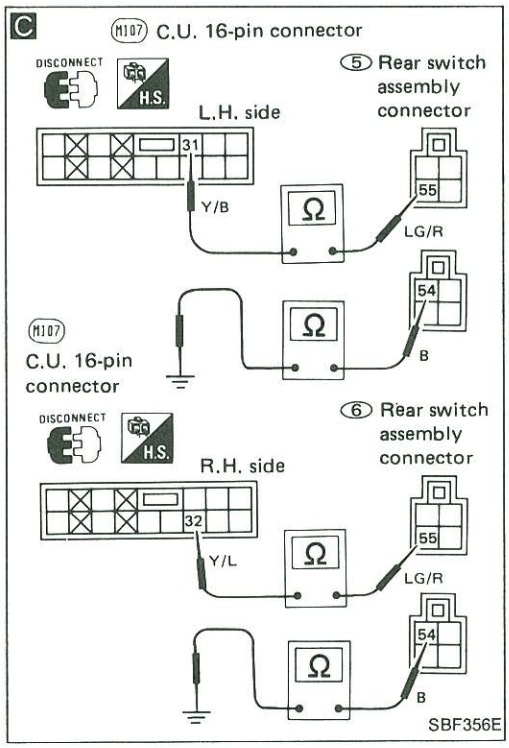


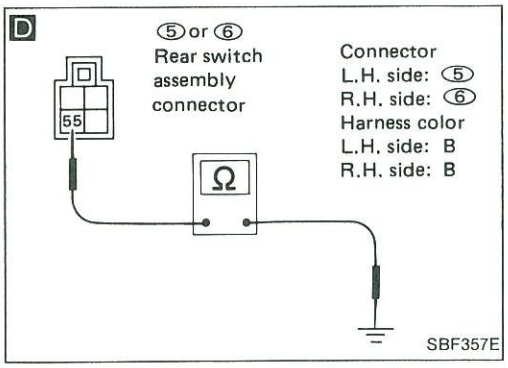


START

A

CHECK SHOULDER BELT BUCKLE SWITCH CIRCUIT.
1) Disconnect 16-pin connector from control unit.
2) Check continuity when shoulder belt buckle is at rear lock position.

| | Terminals | Shoulder belt | Continuity |
|---|---|---|---|
| L.H. side | 31 - Ground | Fasten | Yes |
| | | Unfasten | No |
| R.H. side | 32 - Ground | Fasten | Yes |
| | | Unfasten | No |

**B If shoulder belt buckle is not rear lock position, do as figure B to move it to rear.**

O.K. → Is this the second time?
- Yes → Replace control unit.
- No → Reinstall any part removed. → Go to PROCEDURE 2 (STEP 4) of Preliminary Check. (See page BF-39.)

N.G.

C

1) Disconnect connector from rear switch assembly.
2) Check continuity.

| | Terminals |
|---|---|
| L.H. side | 31 - 55<br>54 - Ground (M101, M125) |
| R.H. side | 32 - 55<br>54 - Ground (M101, M125) |

**Continuity should exist.**

N.G. → Repair harness.

O.K.

D

Does continuity exist?

| | Connector | Terminals |
|---|---|---|
| L.H. side | 5 | 55 - Ground |
| R.H. side | 6 | 55 - Ground |

Yes → Repair harness. There will be incorrect grounding between terminals 31 and 55 or 32 and 55.

No

Go to SHOULDER BELT BUCKLE SWITCH of Electrical Components Inspection. (See page BF-54.)

O.K. → (Go to above.)

N.G.

Check shoulder belt buckle switch harness for open or short circuit.

N.G. → Repair shoulder belt buckle switch harness.

O.K.

Replace rear switch assembly.

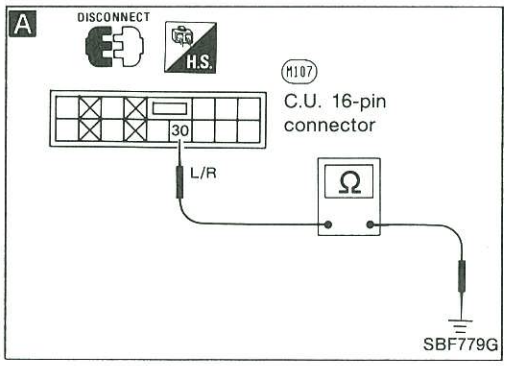


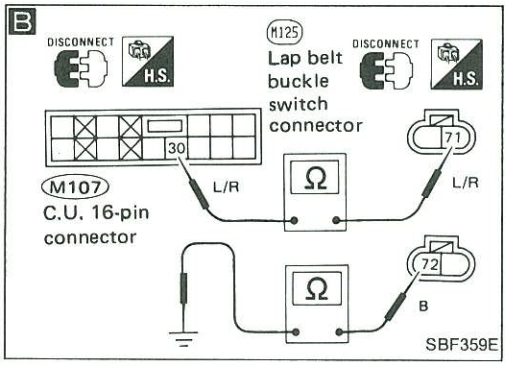


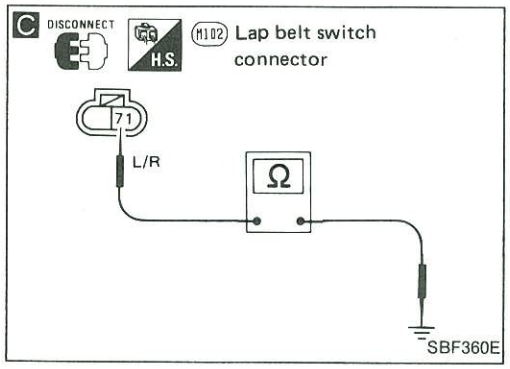


## Diagnostic Procedure 6

START

A

CHECK LAP BELT BUCKLE SWITCH CIRCUIT (L.H. only).
1) Disconnect 16-pin connector from control unit.
2) Check continuity.

| Terminals | Lap belt | Continuity |
|---|---|---|
| 30 - Ground | Fasten | No |
| | Unfasten | Yes |

O.K. → Is this the second time?
- Yes → Replace control unit.
- No → Reinstall any part removed. → Go to PROCEDURE 2 (STEP 6) of Preliminary Check. (See page BF-39.)

N.G.

B

1) Disconnect lap belt switch connector.
2) Check continuity.

| Terminals |
|---|
| 30 - 71 |
| 72 - Ground (M101, M125) |

**Continuity should exist.**

N.G. → Repair harness.

O.K.

C

Does continuity exist?

| Terminals |
|---|
| 71 - Ground |

Yes → Repair harness. There will be incorrect grounding.

No

Go to LAP BELT BUCKLE SWITCH of Electrical Components Inspection. (See page BF-55.)

O.K. → (Go to above.)

N.G.

Check lap belt buckle switch harness for open and short circuit.

N.G. → Repair lap belt buckle switch harness.

O.K.

Replace shoulder belt buckle assembly.

## Diagnostic Procedure 7

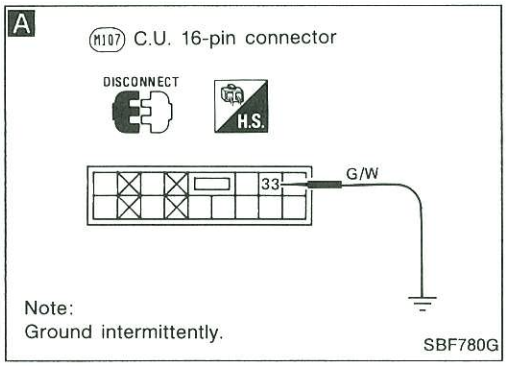


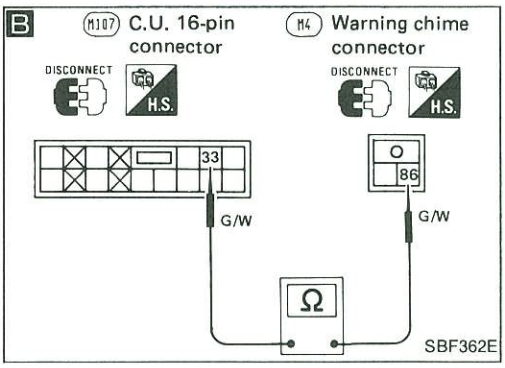


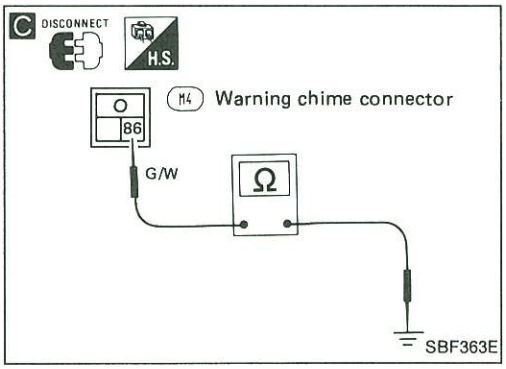


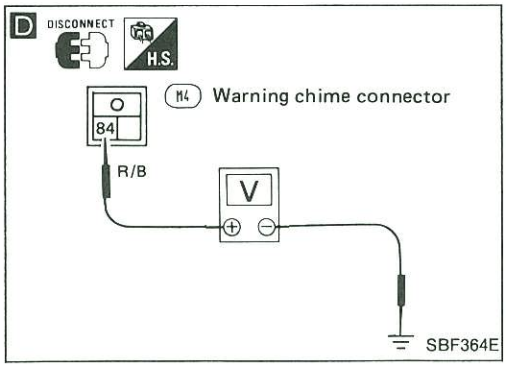


START

A

CHECK WARNING CHIME CIRCUIT.
1) Disconnect 16-pin connector from control unit.
2) Check warning chime.

| Terminals | Method | Result |
|---|---|---|
| 33 - Ground | Ground intermittently. | Sound |

O.K. → (Go to below.)

N.G.

B

1) Disconnect connector from warning chime.
2) Check continuity.

| Terminals |
|---|
| 33 - 86 |

**Continuity should exist.**

N.G. → Repair harness.

O.K.

C

Does continuity exist?

| Terminals |
|---|
| 86 - Ground |

Yes → Repair harness. There will be incorrect grounding.

No

D

Check battery voltage existence.

| Terminals |
|---|
| 84 - Ground |

**Battery voltage should exist.**

N.G. → Repair harness. For details, refer to POWER SUPPLY ROUTING in EL section.

O.K.

Go to WARNING CHIME of Electrical Components Inspection. (See page BF-55.)

N.G. → Replace warning chime.

O.K.

Ⓐ

Is this the second time?

Yes → Replace control unit.

No

Reinstall any part removed.

Go to PROCEDURE 2 (START) of Preliminary Check. (See page BF-39.)

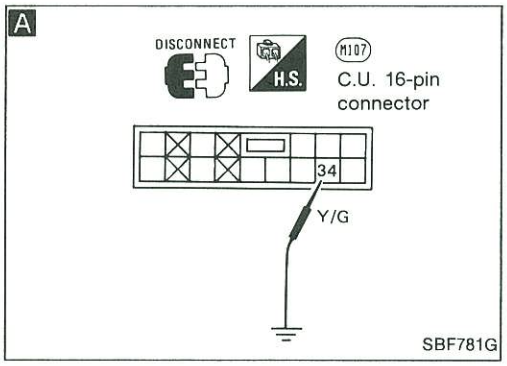


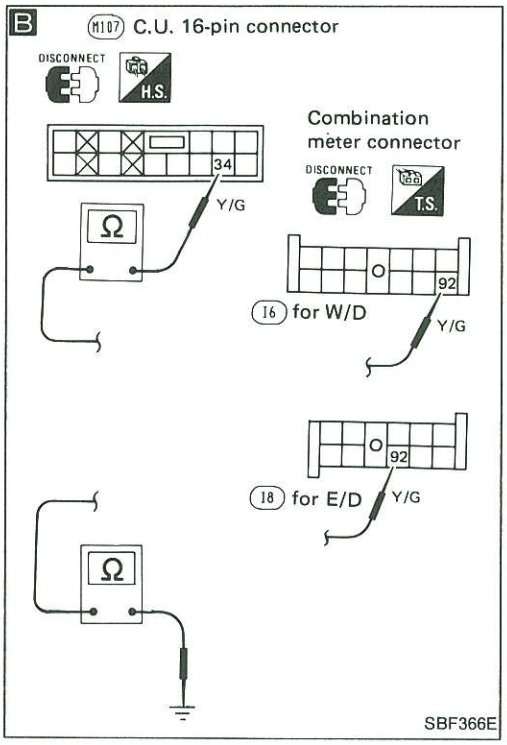


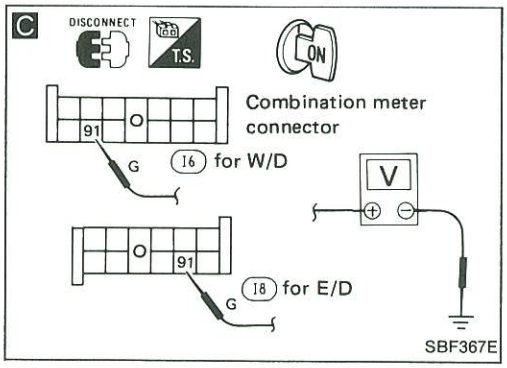


**W/D : With head-up Display**
**E/D : Without Head-up Display**

## Diagnostic Procedure 8

START

**A**

CHECK WARNING LAMP CIRCUIT.
1) Disconnect 16-pin connector from control unit.
2) Check warning lamp.

| Terminals | Result |
|---|---|
| 34 - Ground | Glow |

O.K. → (Go to Ⓐ below.)

N.G.

**B**

1) Disconnect connector from combination meter.
2) Check continuity.

| Terminals |
|---|
| 34 - 92 |

**Continuity should exist.**

N.G. → Repair harness.

O.K.

**B**

Does continuity exist?

| Terminals |
|---|
| 92 - Ground |

Yes → Repair harness. There will be incorrect grounding.

No

**C**

Check battery voltage existence.

| Terminals |
|---|
| 91 - Ground |

**Battery voltage should exist.**

N.G. → Repair harness. For details, refer to POWER SUPPLY ROUTING in EL section.

O.K.

Is warning lamp bulb burn out?

Yes → Replace bulb.

No

Ⓐ

Is this the second time?

Yes → Replace control unit.

No

Reinstall any part removed.

Go to PROCEDURE 2 (START) of Preliminary Check.
(See page BF-39.)

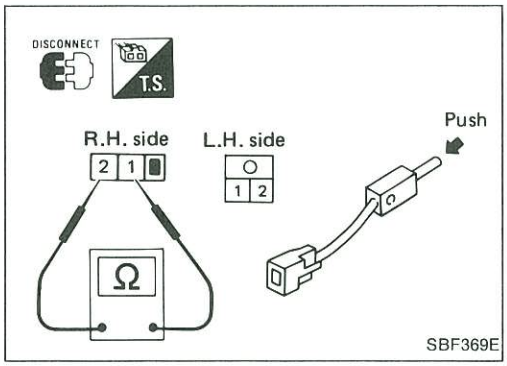


## Electrical Components Inspection

### FRONT LIMIT SWITCH

| Condition | Continuity |
|---|---|
| Pushed | No |
| Released | Yes |

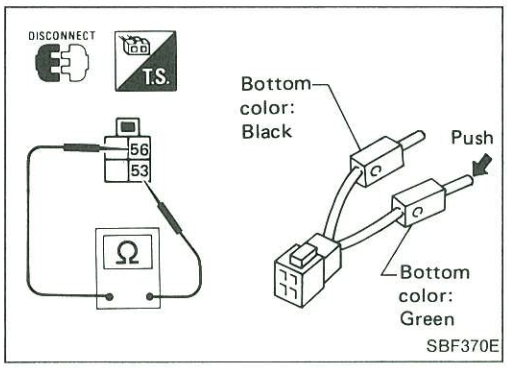


### REAR LIMIT SWITCH

| Condition | Continuity |
|---|---|
| Pushed | No |
| Released | Yes |

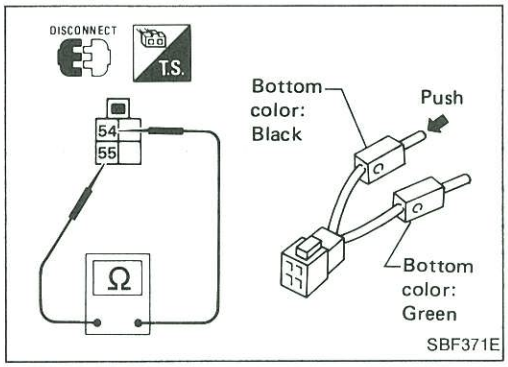


### SHOULDER BELT BUCKLE SWITCH

| Condition | Continuity |
|---|---|
| Pushed | Yes |
| Released | No |

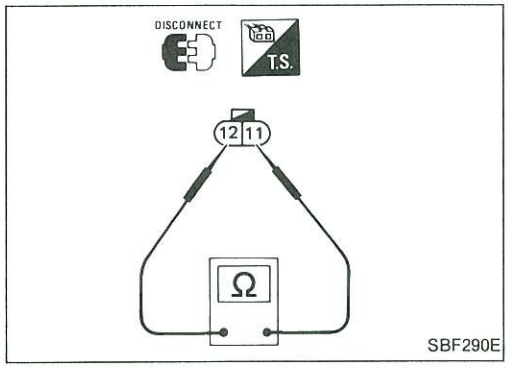


### DOOR LATCH SWITCH (Built-in door lock assembly)

| Door condition | Continuity |
|---|---|
| Open | Yes |
| Closed | No |

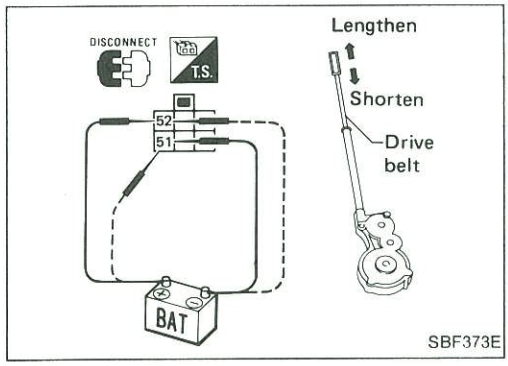


### DRIVE MOTOR ASSEMBLY

| Terminals | | Drive belt operation |
|---|---|---|
| ⊕ | ⊖ | |
| ⑫ | ⑪ | Lengthen |
| ⑪ | ⑫ | Shorten |

## Electrical Components Inspection (Cont'd)

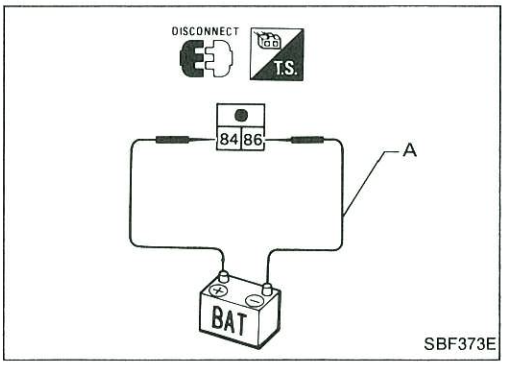

SBF373E

### WARNING CHIME

| Condition | Operation |
|---|---|
| Connect and disconnect harness A as shown at left | Sounds |

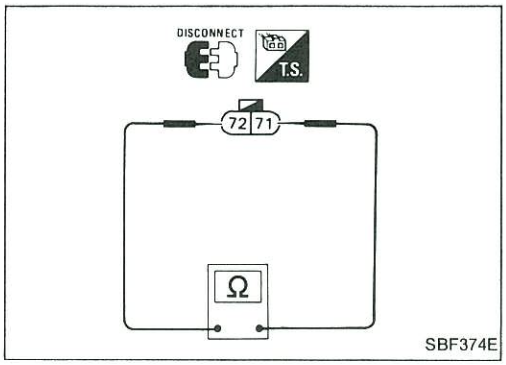

SBF374E

### LAP BELT BUCKLE SWITCH (Built-in lap belt buckle for L.H. side)

| Condition | Continuity |
|---|---|
| Fastened | No |
| Unfastened | Yes |

## Electrical Sun Roof

- Do not move or remove limit switch unless it is necessary.
- After any adjustment, check sun roof operation and lid alignment.

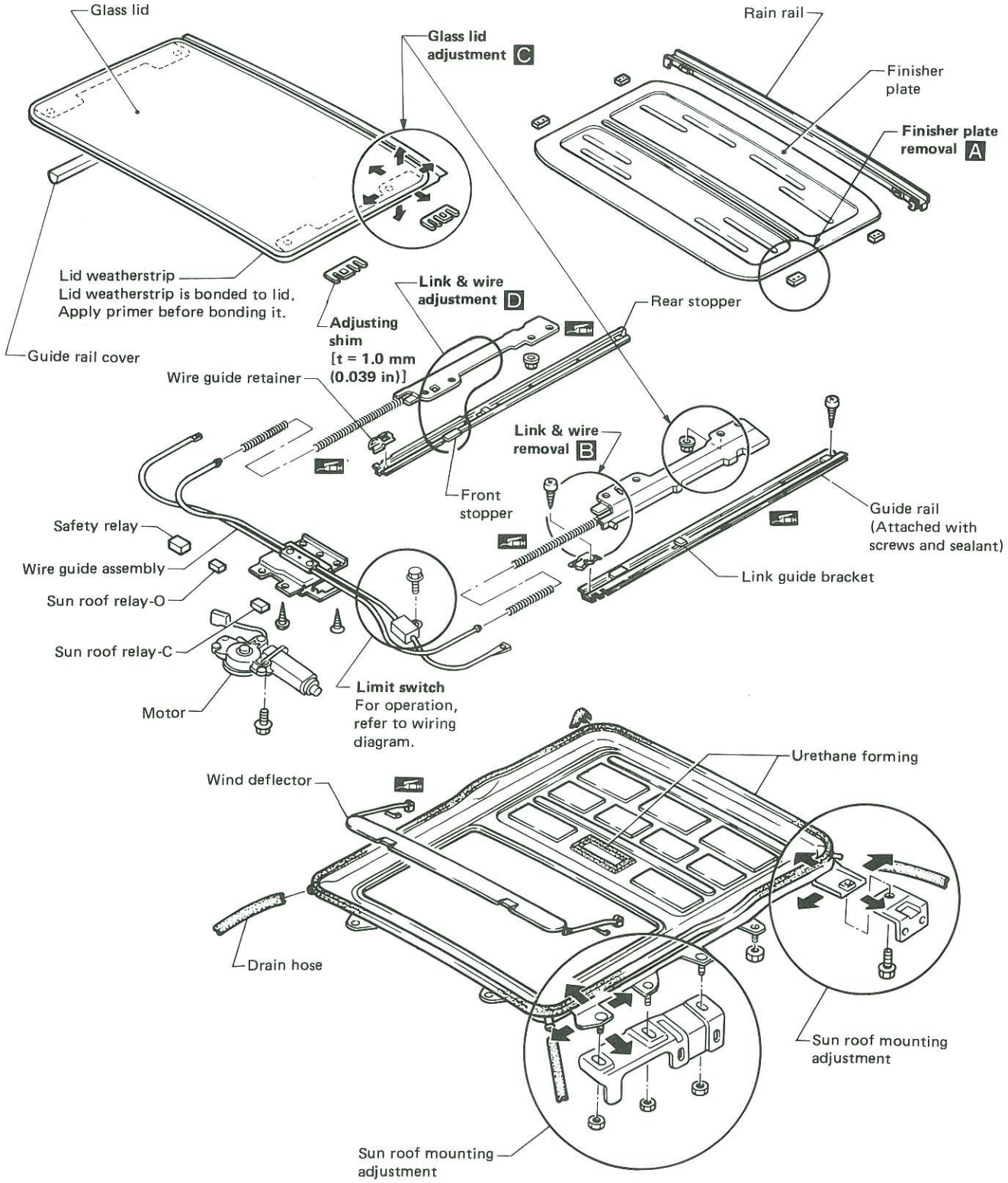


: Grease-up points

## Electrical Sun Roof (Cont'd)

### Finisher plate removal & installation

A Remove guide rail cover and pull up pawl, then draw out finisher plate with sun roof lid open.

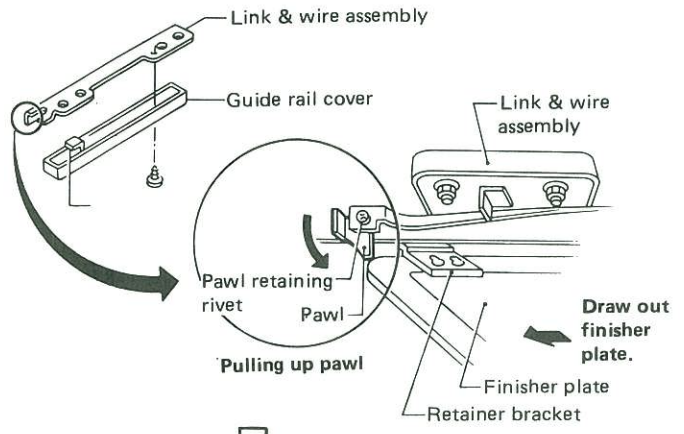


**Removal:**
**Raise pawl of retainer bracket, shift finisher plate and remove locating pins from retainer bracket.**
**Then remove finisher plate.**

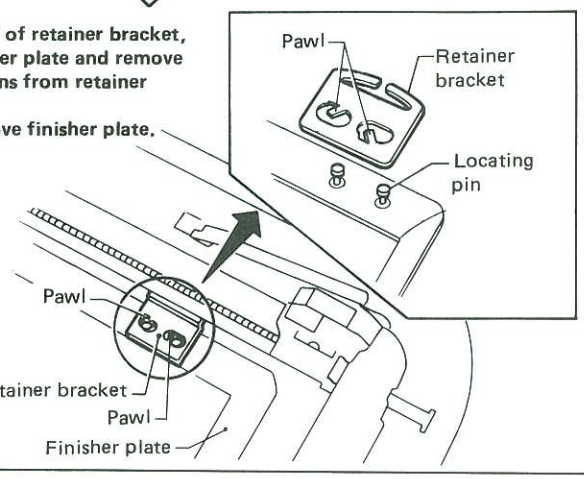


### Link & wire removal & installation

B
- When replacing wire, remove rail first and then link & wire assembly.
- Be sure to lubricate.

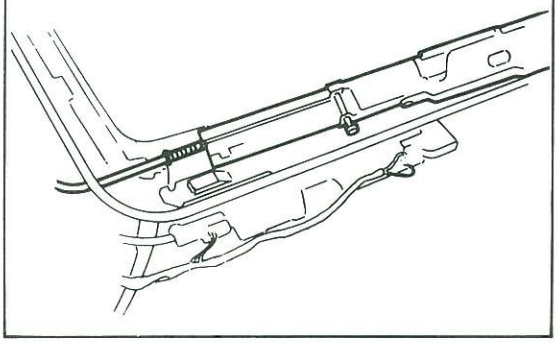

### Glass lid adjustment

C

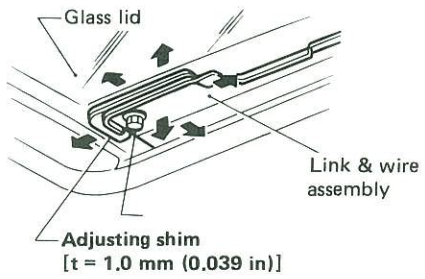


### Link & wire adjustment

D **Move link & wire assembly to closed lid position and after closing fully (as shown in figure below), install motor.**

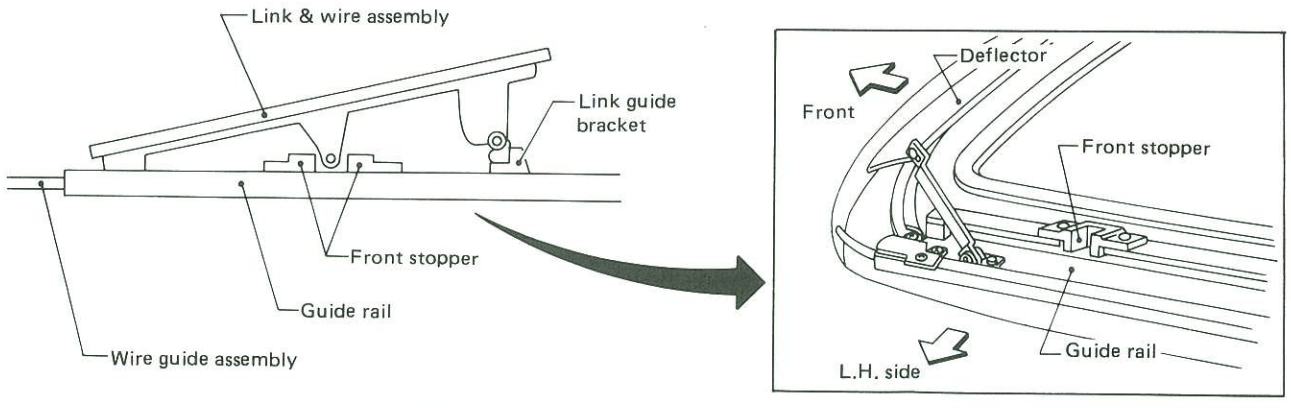


SBF187E

## Wiring Diagram

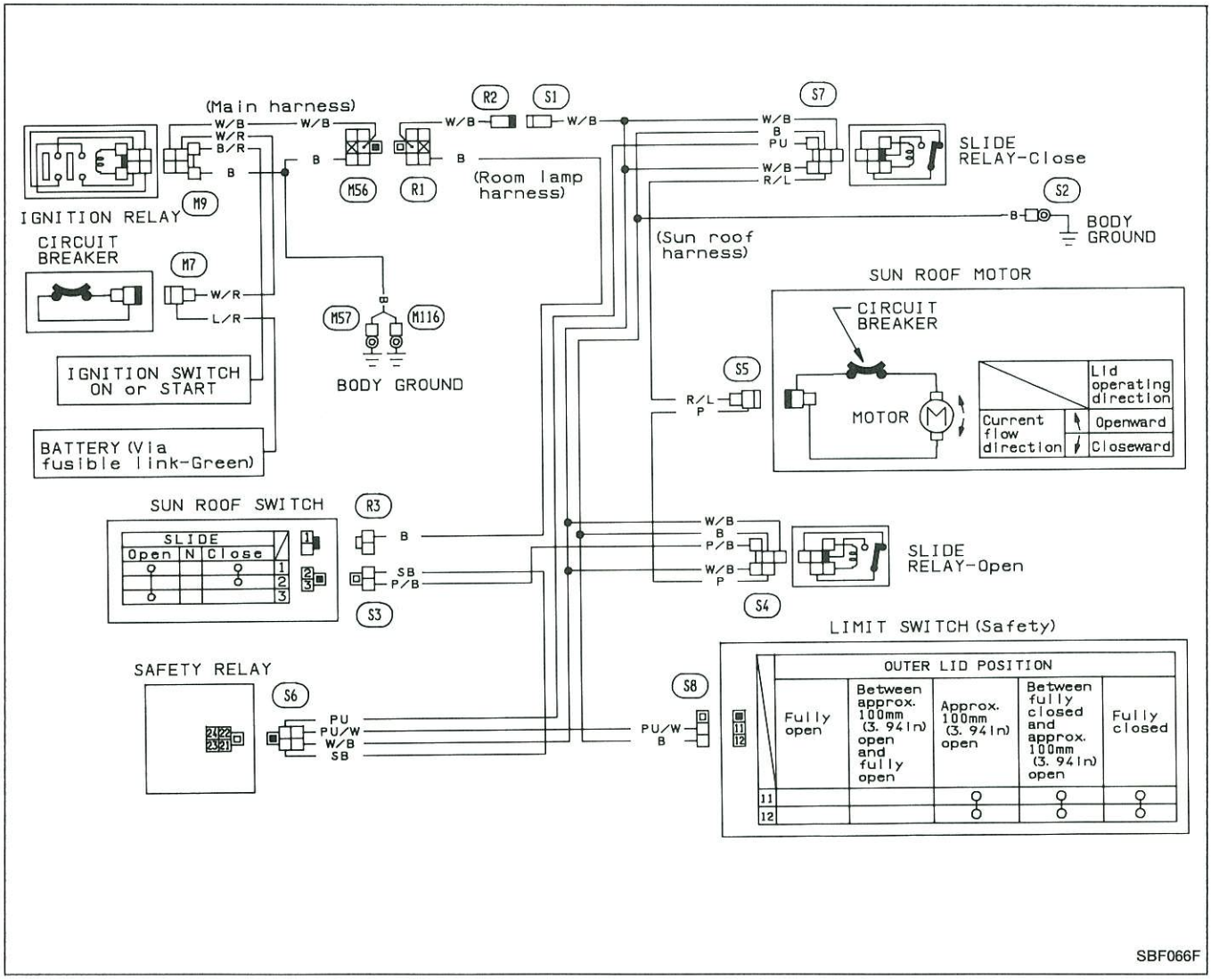

## Manual Sun Roof

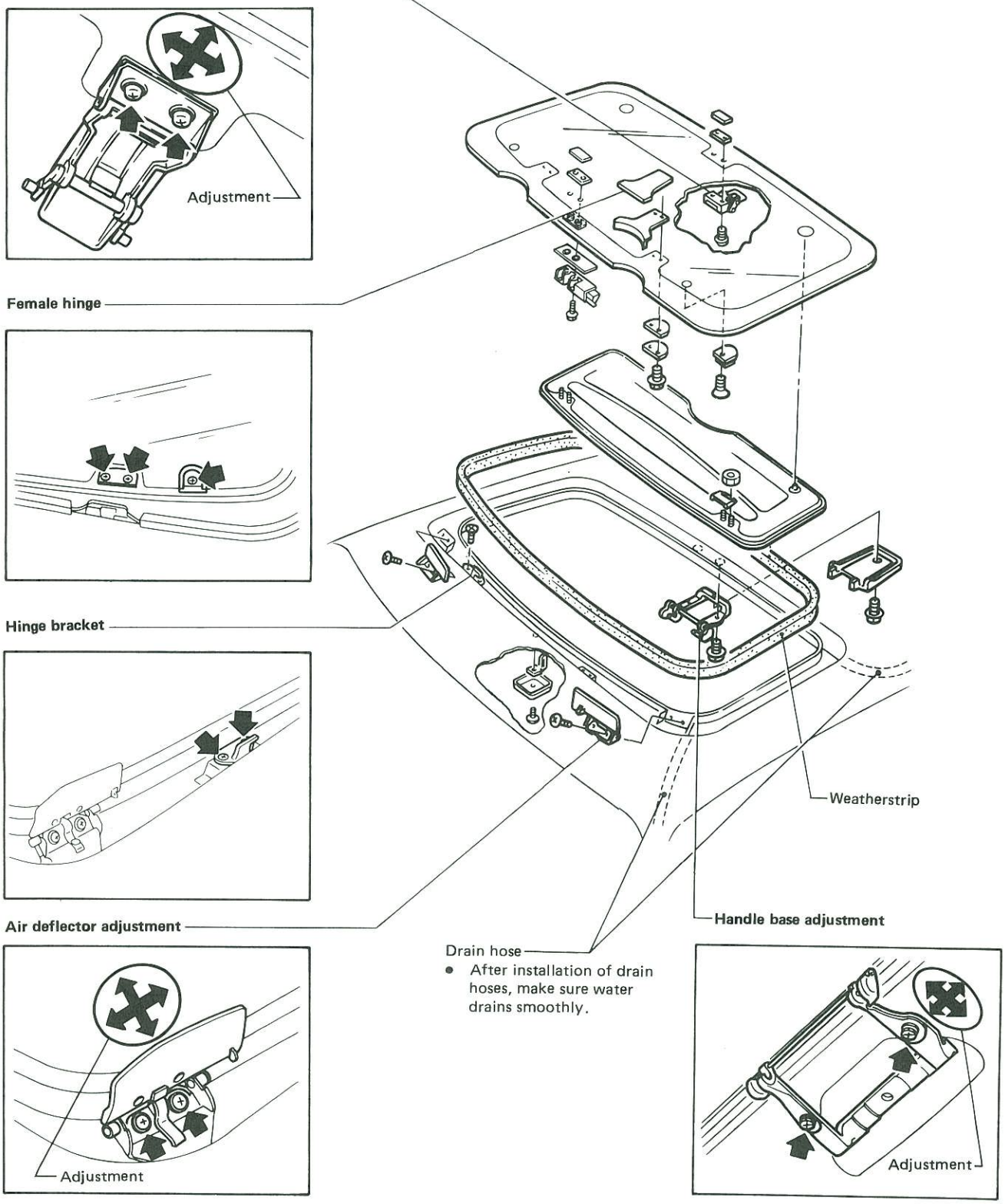


SBF186E

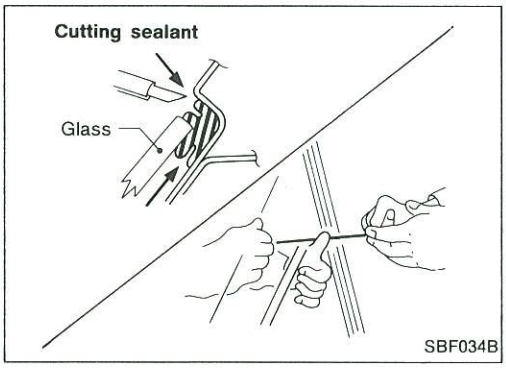


## REMOVAL

After removing moldings, remove glass.

**CAUTION:**

**Be careful not to scratch glass when removing.**

## INSTALLATION

- **Use genuine Nissan Sealant kit or equivalent. Follow instructions furnished with it.**
- **After installation, the vehicle should remain stationary until the sealant hardens.**

**WARNING:**

**Keep heat and open flames away as primers are flammable.**

**CAUTION:**

**Advise the user of the fact that vehicle should not be driven on rough roads or surfaces until sealant has properly vulcanized.**

- **Do not use sealant which is past its usable term.**
- **Do not leave cartridge unattended with its cap open.**
- **Keep primers and sealant in a cool, dry place. Ideally, they should be stored in a refrigerator.**
- **Molding must be installed securely so that it is in position and leaves no gap.**

## Windshield

**Body side**

**Install spacers to panel with double-faced tape.**

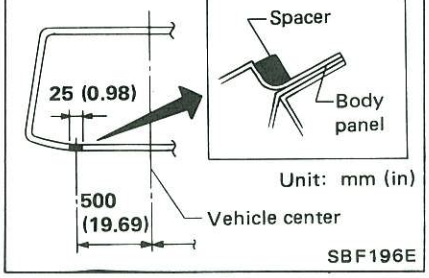


**Install molding fastener.**

When installing it, heat body panel and fastener to approx. 30 to 40°C (86 to 104°F).

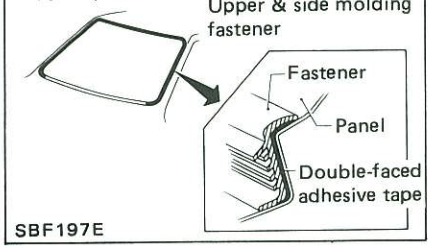


**Glass side**

**Install dam rubber & spacers with double-faced adhesive tape.**

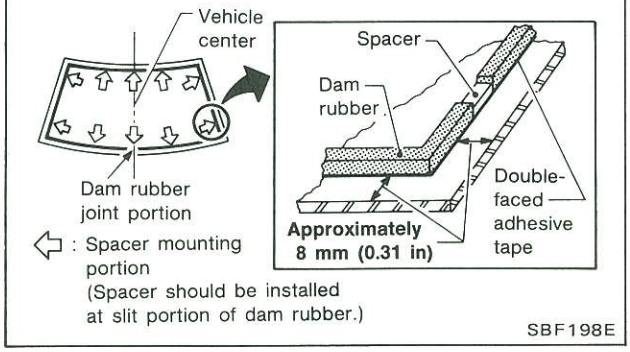


Apply sealant evenly.

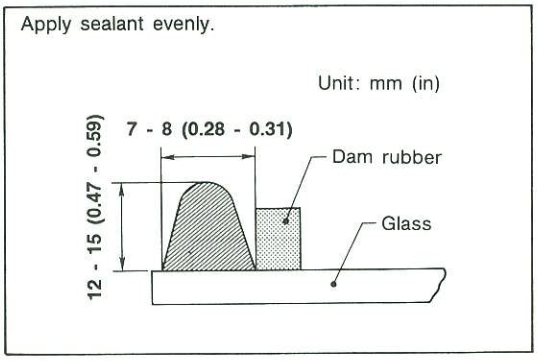


## REPAIRING WATER LEAKS FOR WINDSHIELD AND WINDOWS

Leaks can be repaired without removing and reinstalling glass.

**If water is leaking between caulking material and body or between glass and caulking material, determine the extent of the leak by applying water while pushing glass outward.**

To stop the leak, apply primer (if necessary) and then sealant to the leak point.

## Back Window — Coupe

- Construction and removal/reinstallation methods of back window are basically the same as those of windshield.
  For details of service procedures, refer to "Windshield".
- The difference between windshield and back window is as follows:
- For sealant drying period, refer to "Drying Time for Sealant".
- For details of moldings, refer to "Exterior".

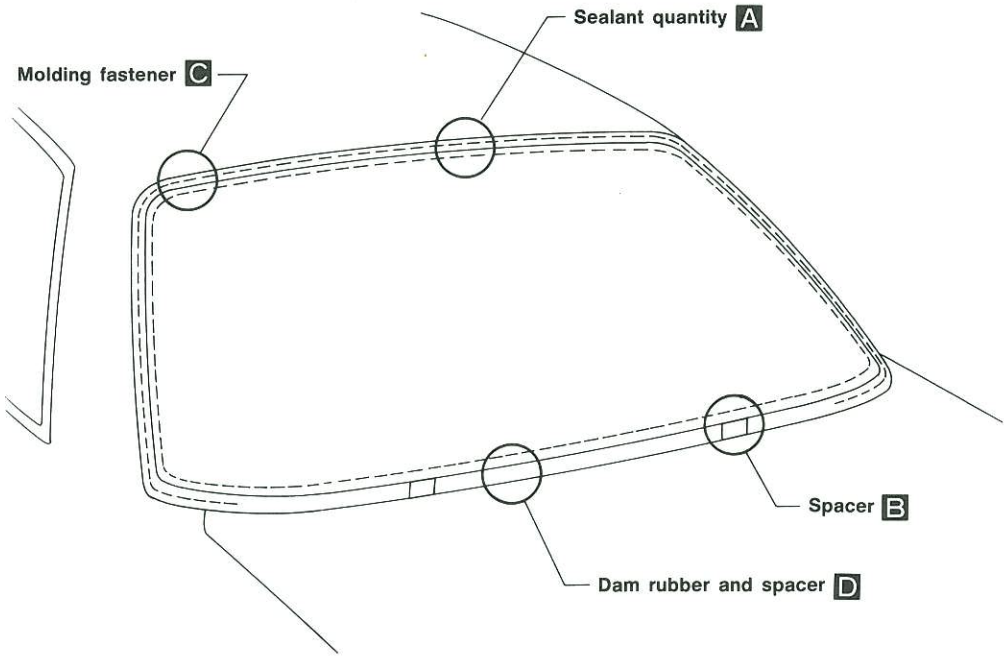


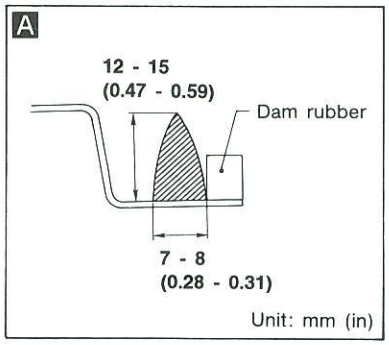


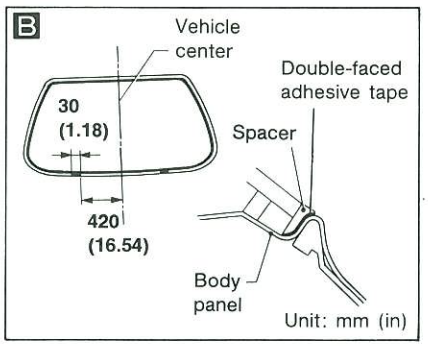


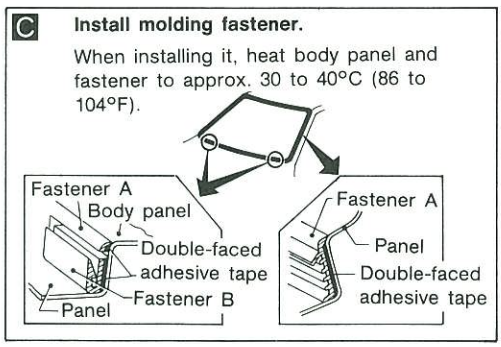


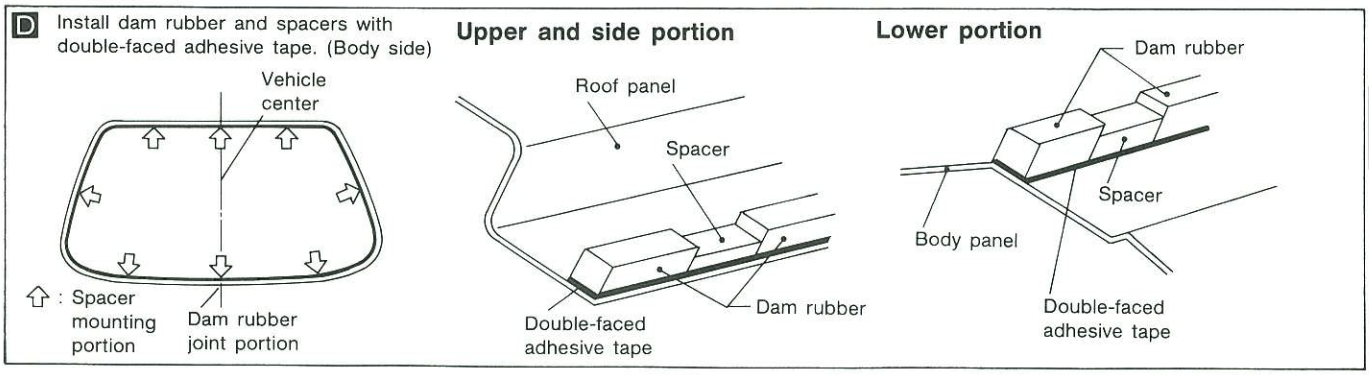


MBF776A

## Back Door Window — Fastback

- Construction and removal/reinstallation method of back door window are basically the same as those of windshield.
- Major differences are that sealant & dam rubber are installed to back door panel instead of glass surface. Spacer position is also changed. Moreover, there are locating pins in lower portion of glass. For details, refer to following figure.
- For sealant drying period, refer to "Drying Time for Sealant".
- For details of moldings, refer to "Exterior".

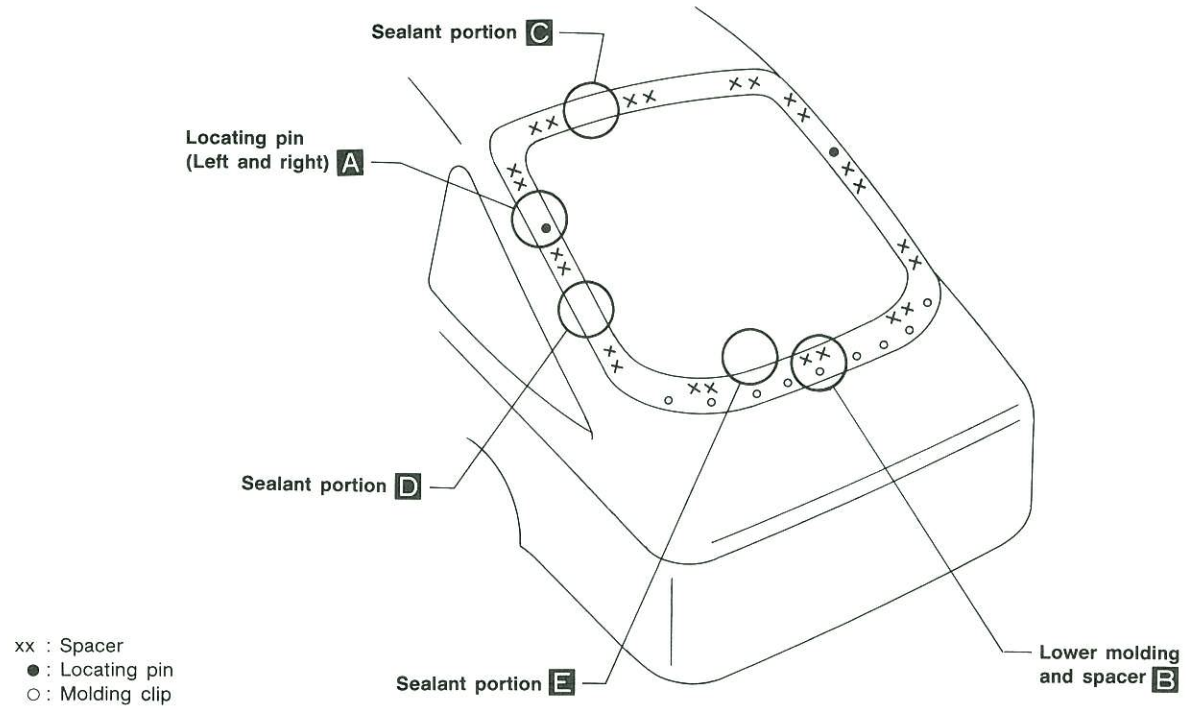


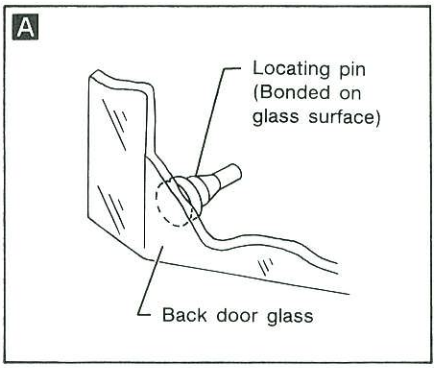


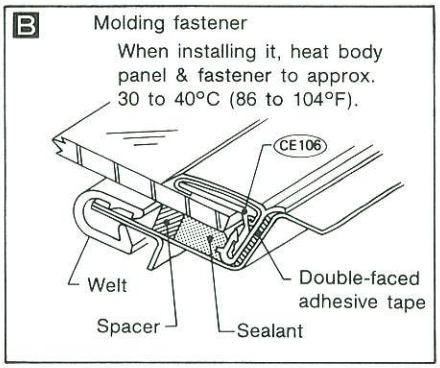


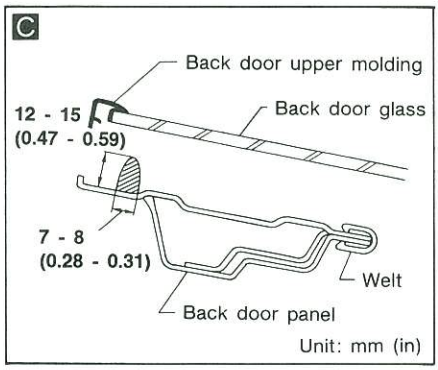


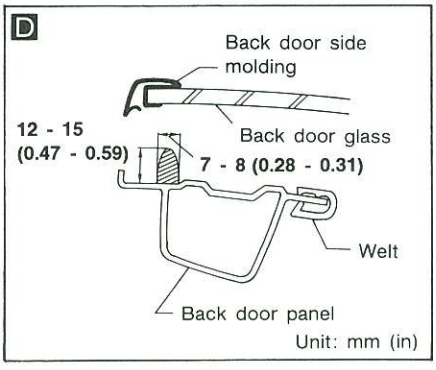


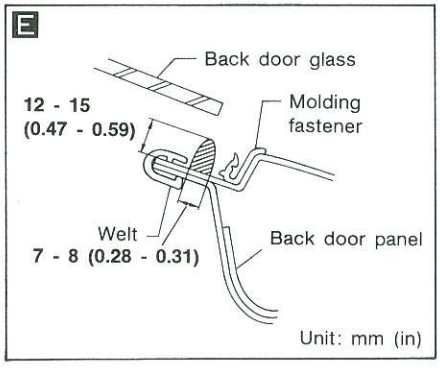


MBF777A

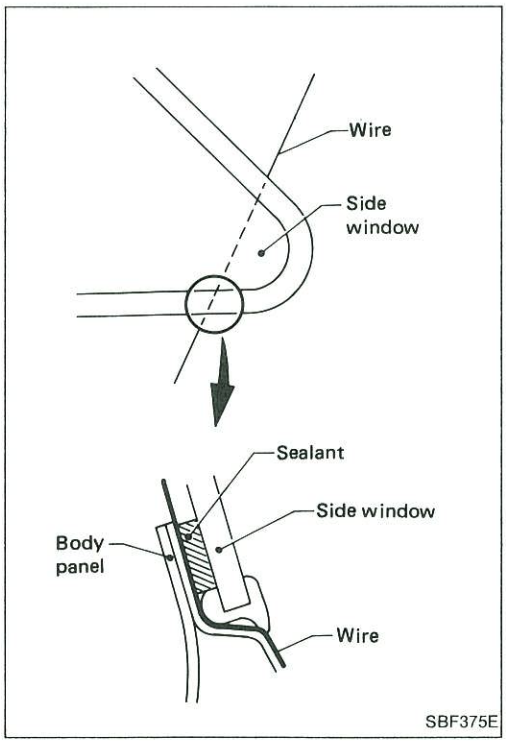


## Side Window

Side window is a molded type. During removal or installation, observe the following instructions.

1. Cut sealant in the same manner as that outlined under "Windshield".
2. Be careful not to scratch molding when cutting sealant. If molding is scratched, repair.
3. Remove clips and locating pins which have been exposed from vehicle body.



### FASTBACK

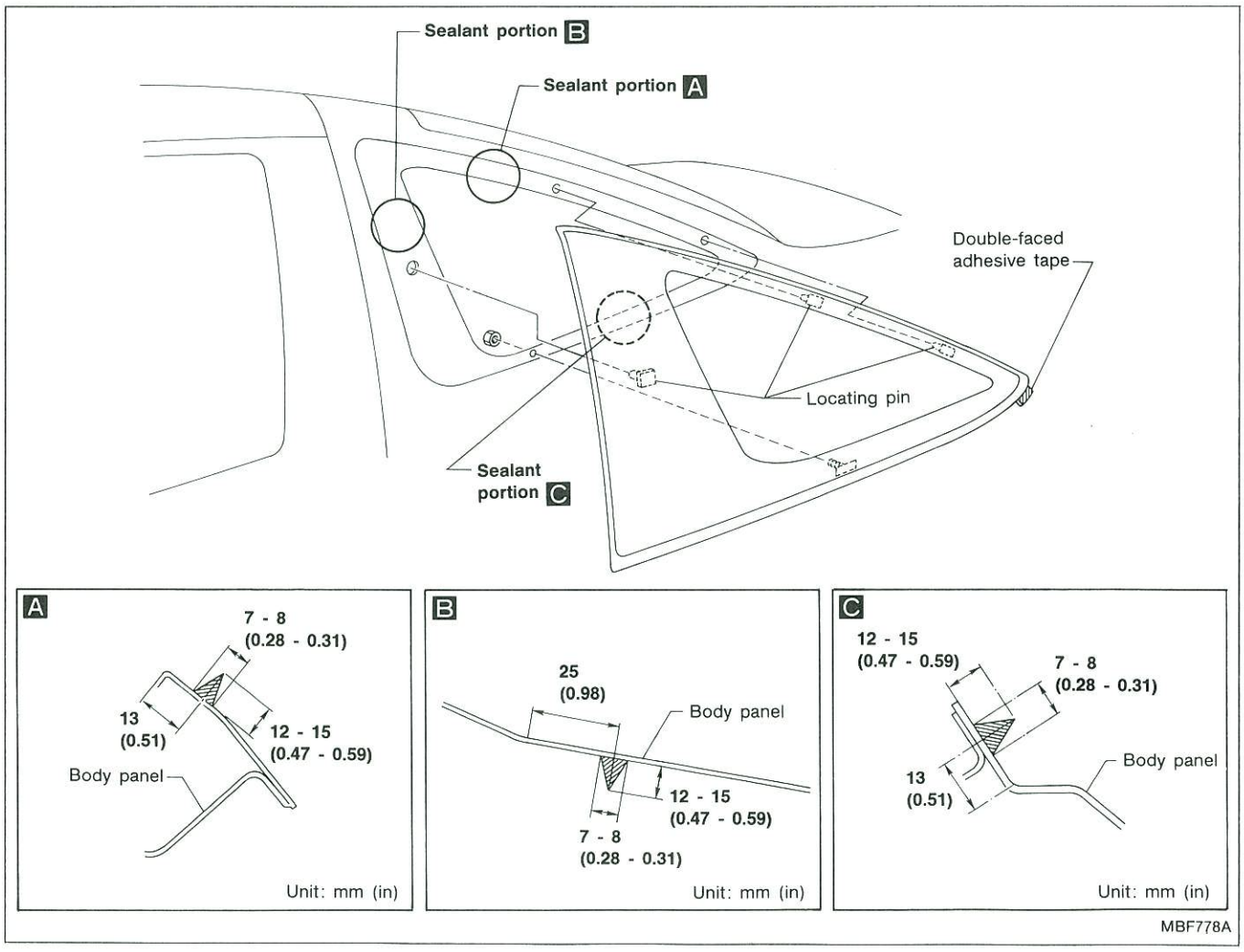

## Side Window (Cont'd)

### COUPE

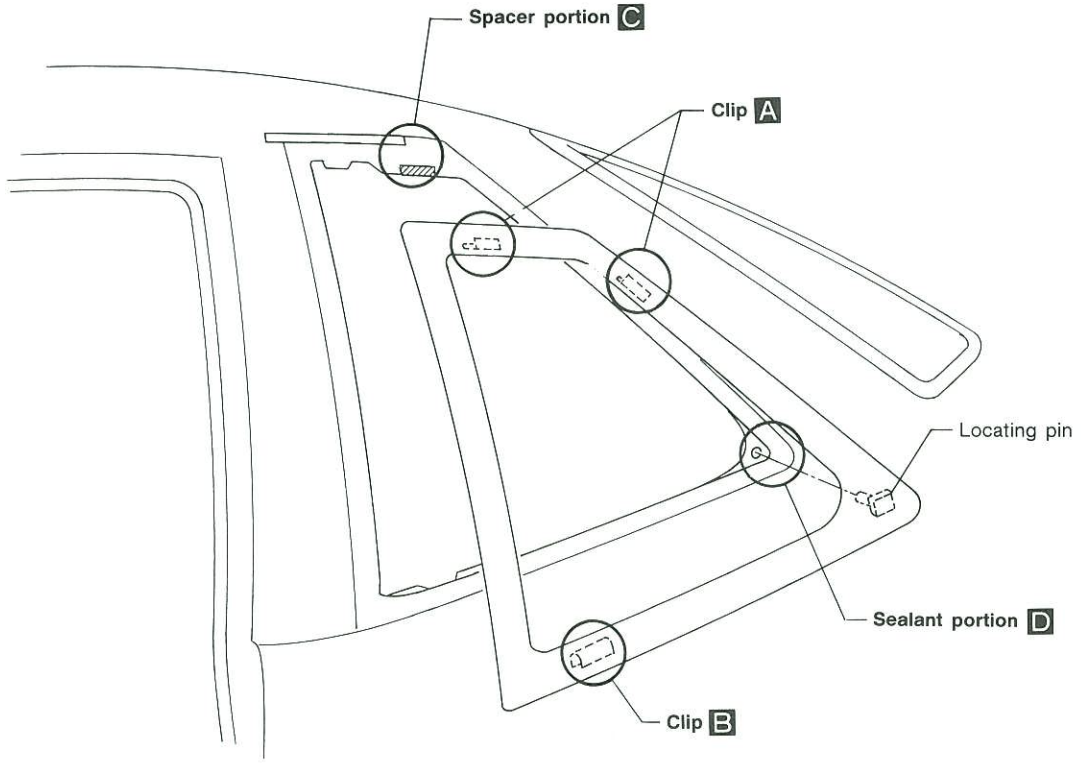


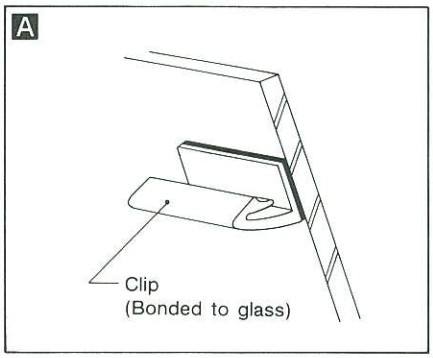


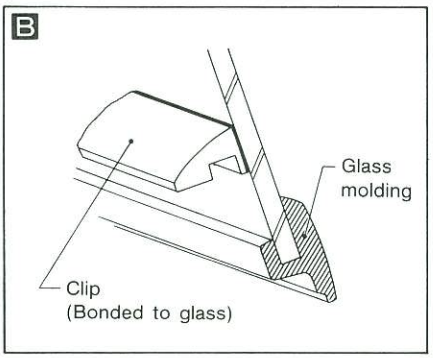


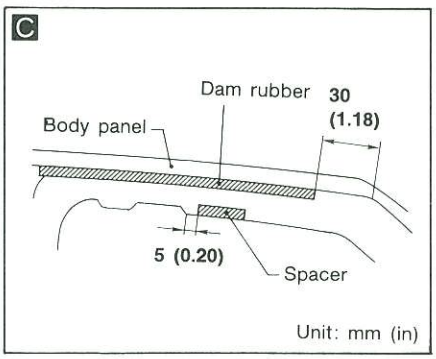


**Sealant quantity**

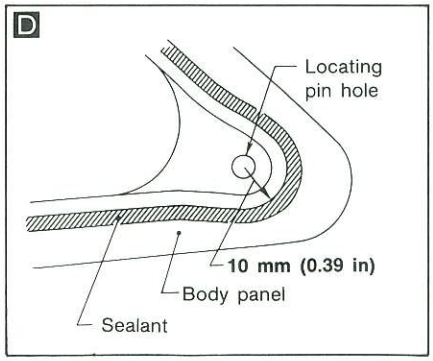


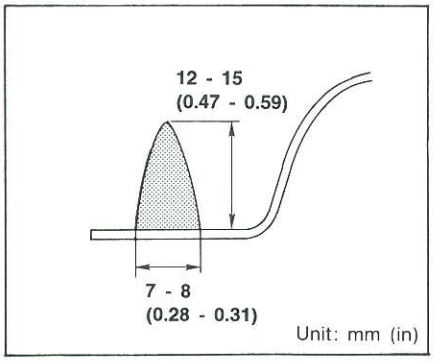


MBF779A

## Door Mirror

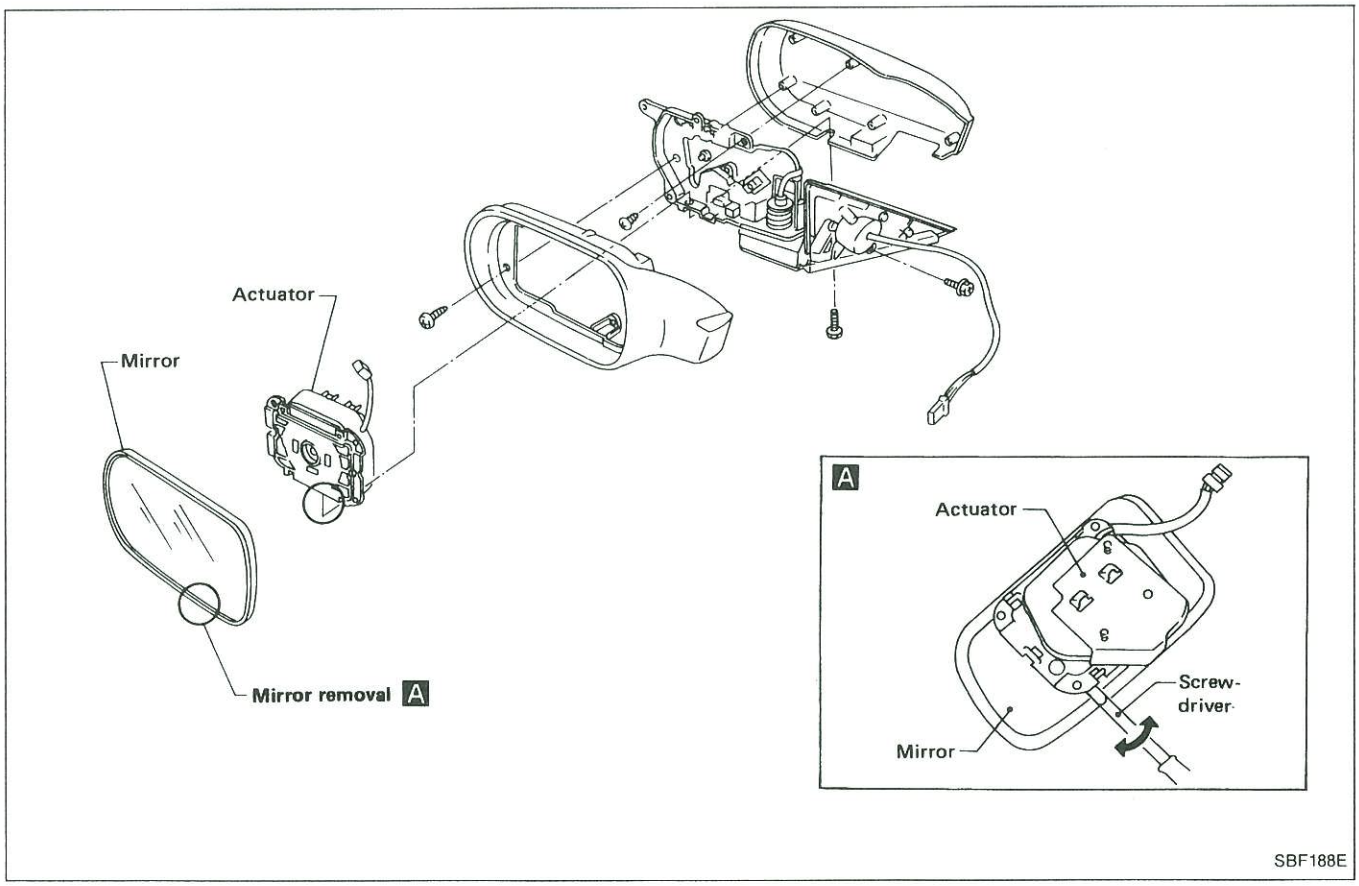


## WIRING DIAGRAM

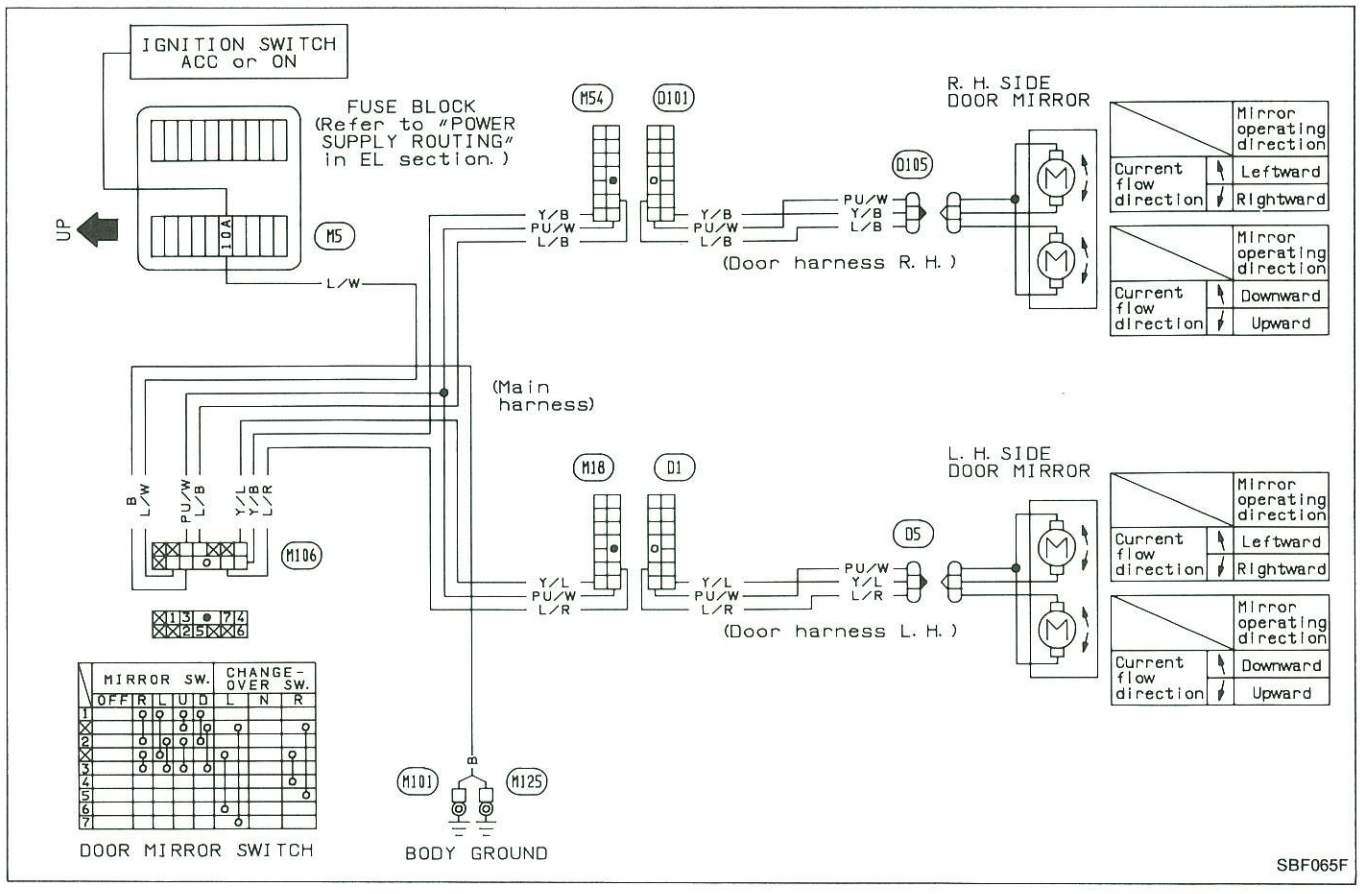

- Rear combination lamps are installed with nuts and butyl sealant.

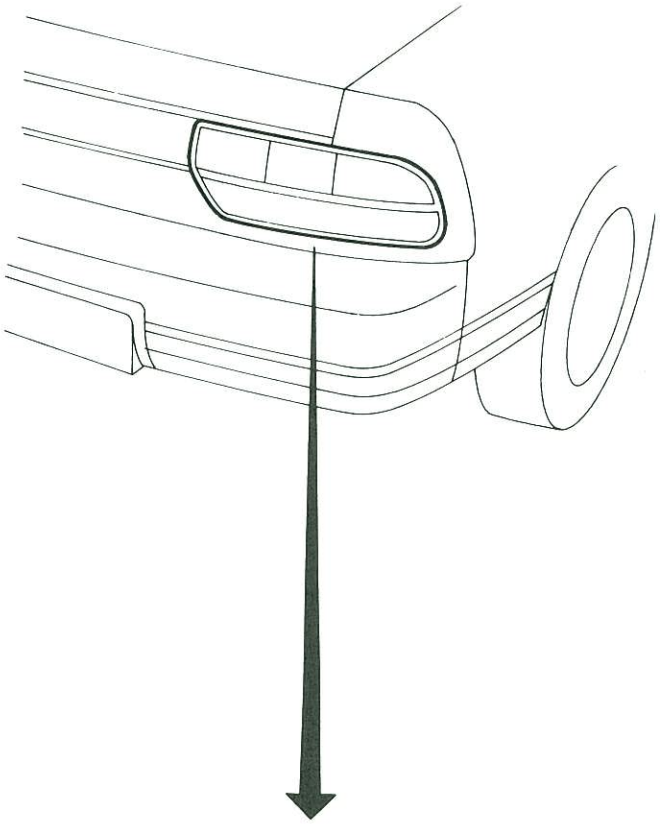

**Removal**

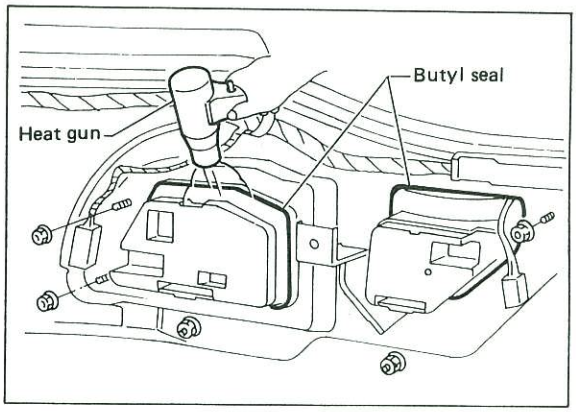


- **Warm up lamp assembly area to a temperature of a little below 60°C (140°F).**

**Installation**

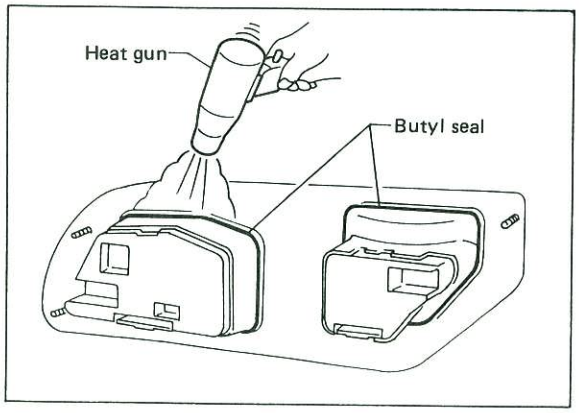


- **Apply butyl seal evenly as it tends to become thin in the corners.**
- **Warm up lamp assembly area to a temperature of a little below 60°C (140°F).**

SBF189E

- When installing, make sure that there are not gaps or waves at ends of air spoiler.
- Before installing spoiler, clean and remove oil from surface where spoiler will be mounted.

**FRONT AIR SPOILER**

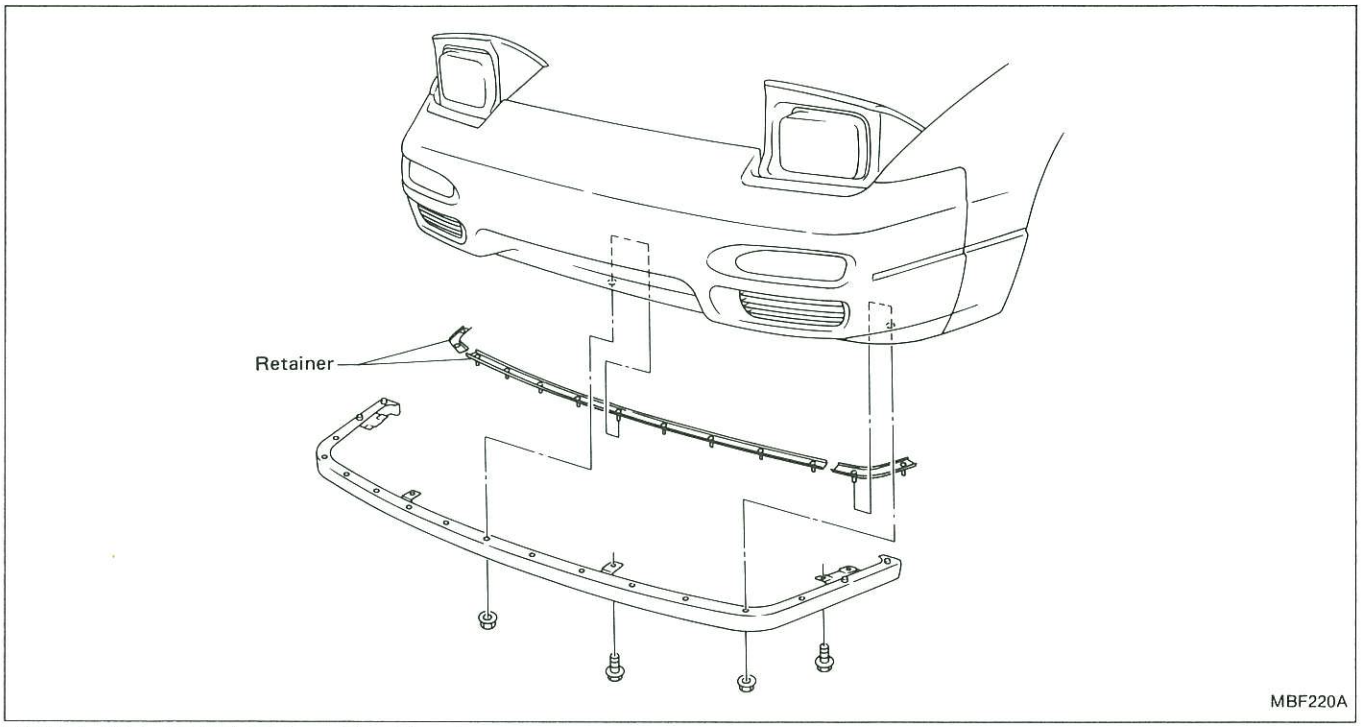


**REAR AIR SPOILER — Fastback**

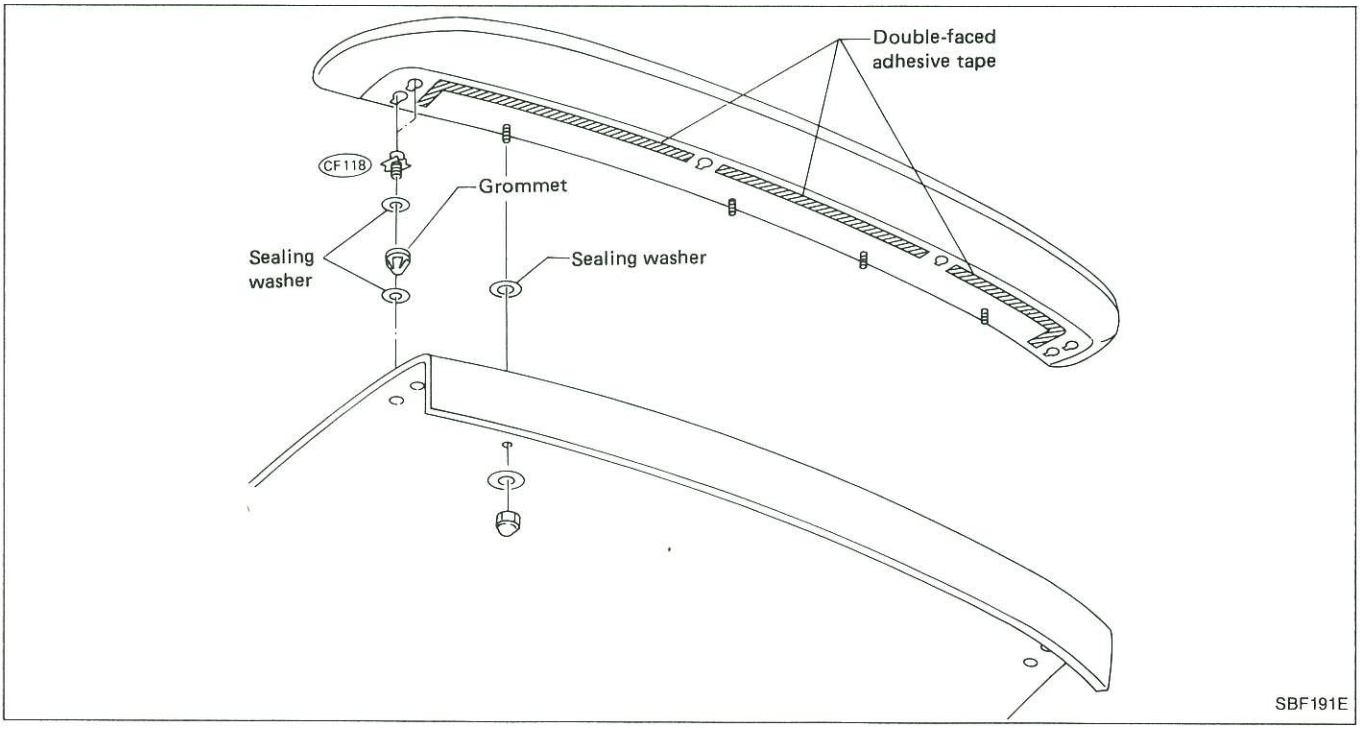

## REAR AIR SPOILER — Coupe

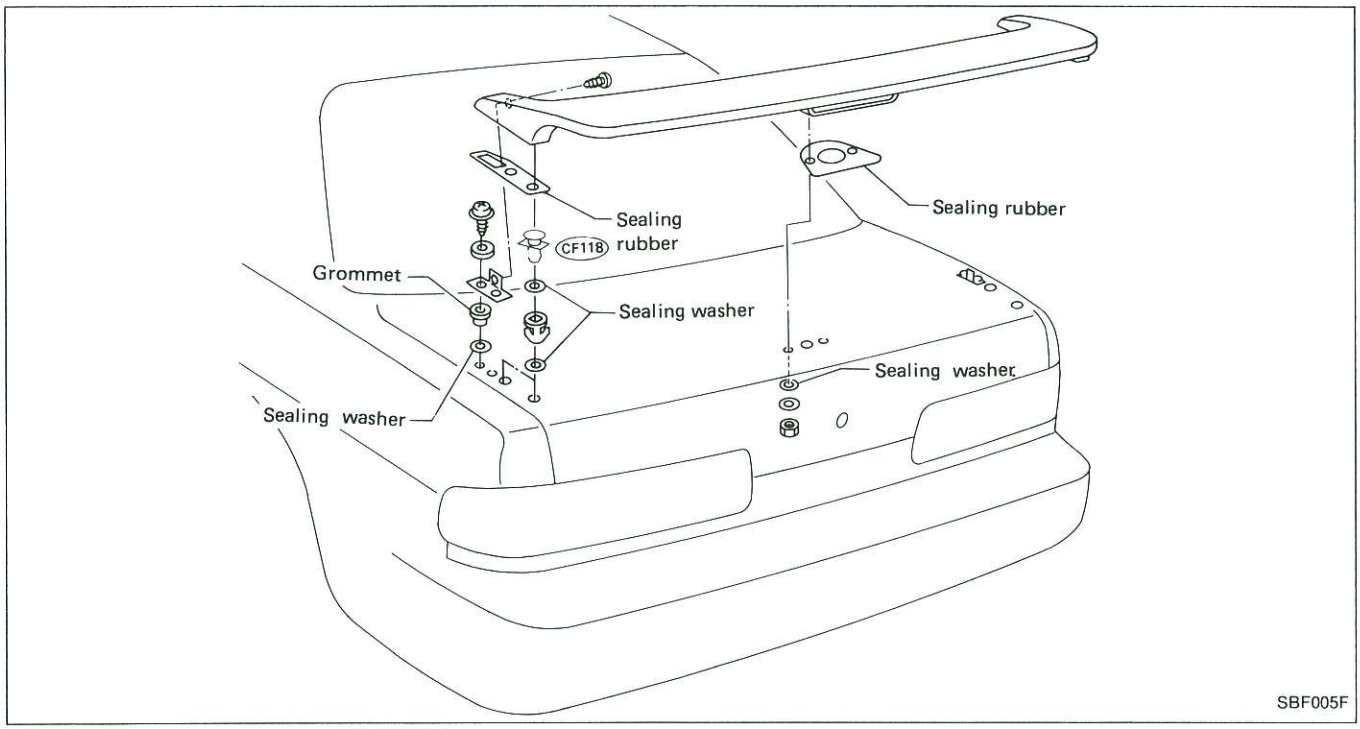

- All dimensions indicated in figures are actual ones.
- When a tram tracking gauge is used, adjust both pointers to equal length and check the pointers and gauge itself to make sure there is no free play.
- When a measuring tape is used, check to be sure there is no elongation, twisting or bending.
- Measurements should be taken at the center of the mounting holes.
- An asterisk (*) following the value at the measuring point indicates that the measuring point on the other side is symmetrically the same value.
- The coordinates of the measurement points are the distances measured from the standard line of "X", "Y" and "Z".

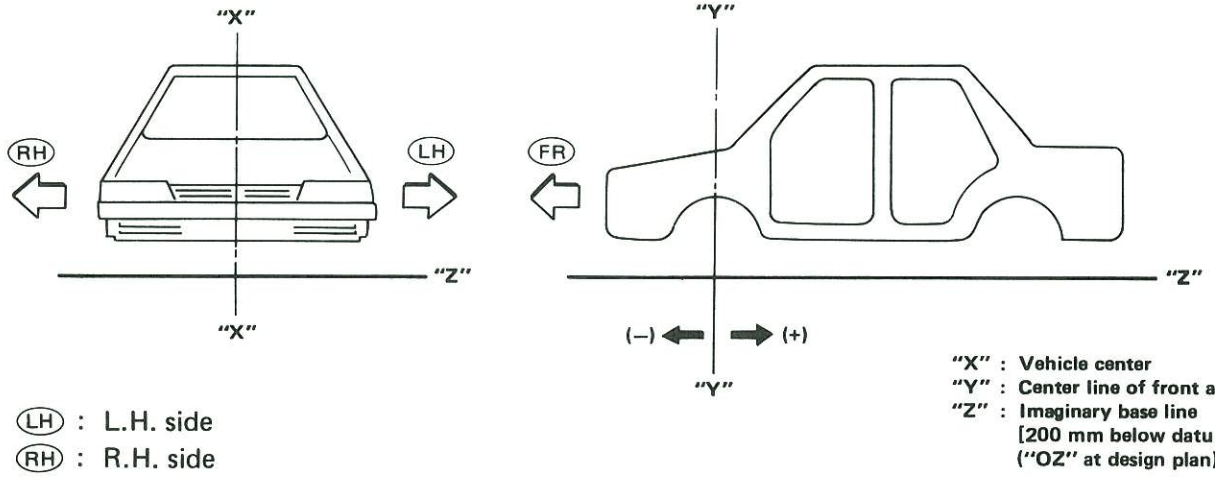


(LH) : L.H. side
(RH) : R.H. side

**"X" : Vehicle center**
**"Y" : Center line of front axle**
**"Z" : Imaginary base line [200 mm below datum line ("OZ" at design plan)]**

## Engine Compartment

### MEASUREMENT

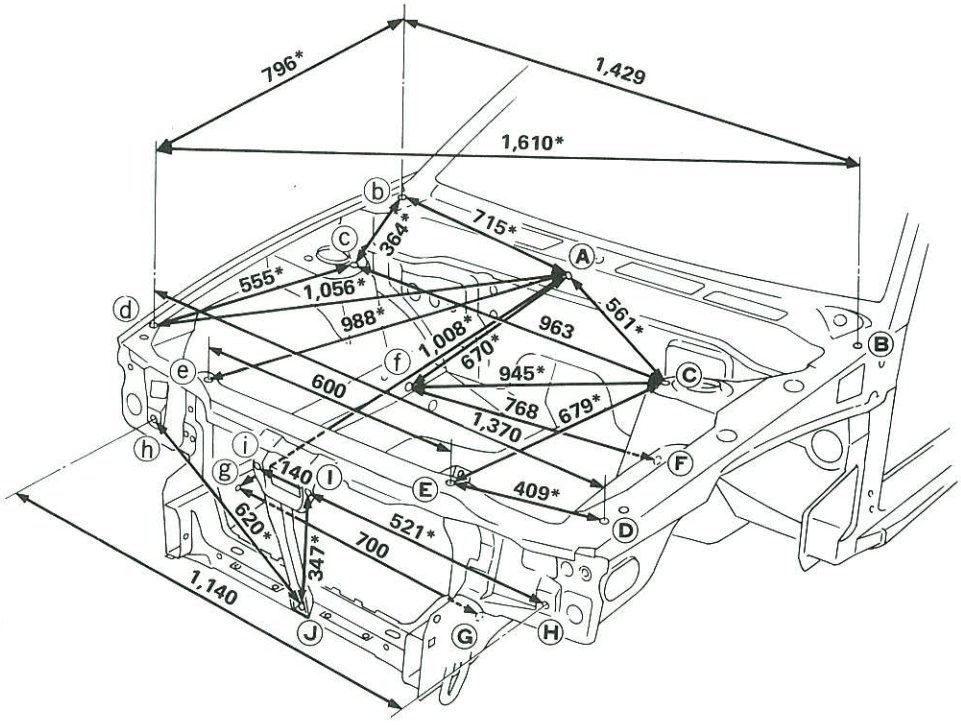

## Engine Compartment (Cont'd)

### MEASUREMENT POINTS

Unit: mm

Cowl top

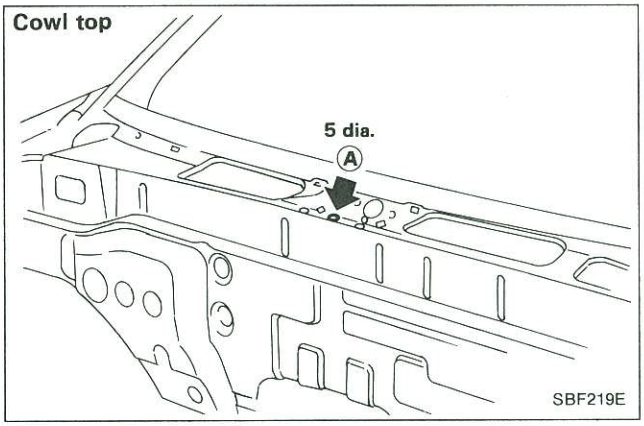


Front side member

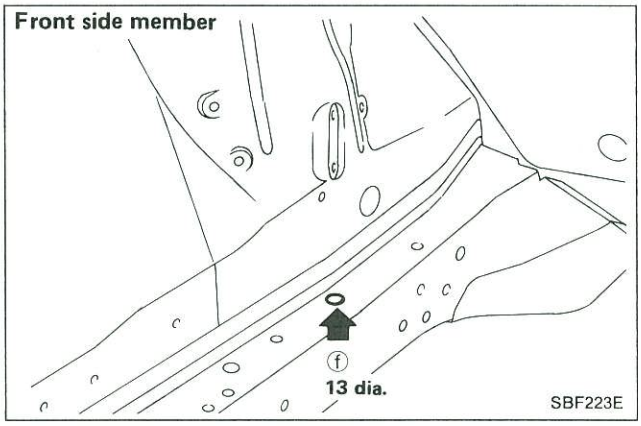


Cowl top side

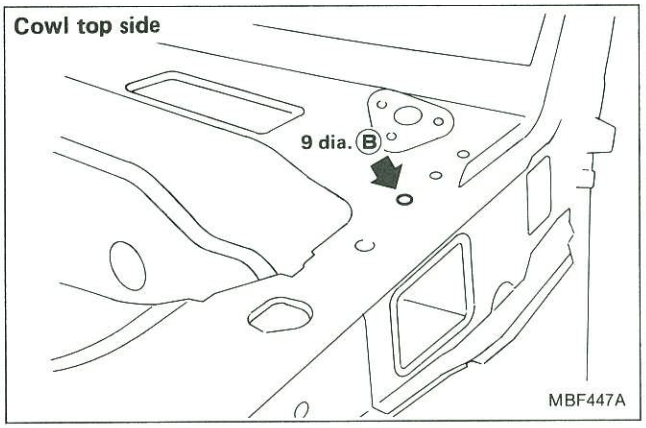


Front side member

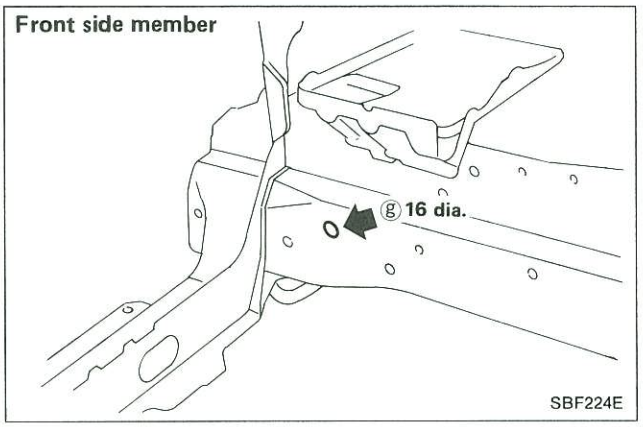


Strut tower

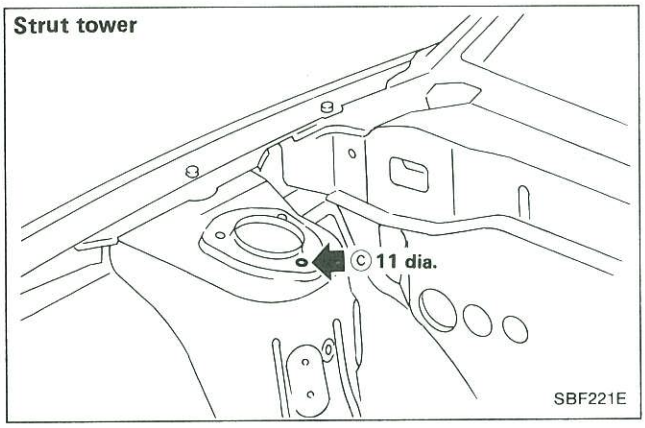


Radiator core center

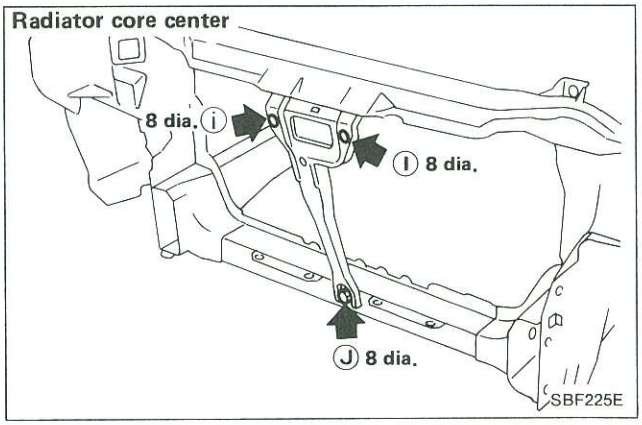


Radiator core side

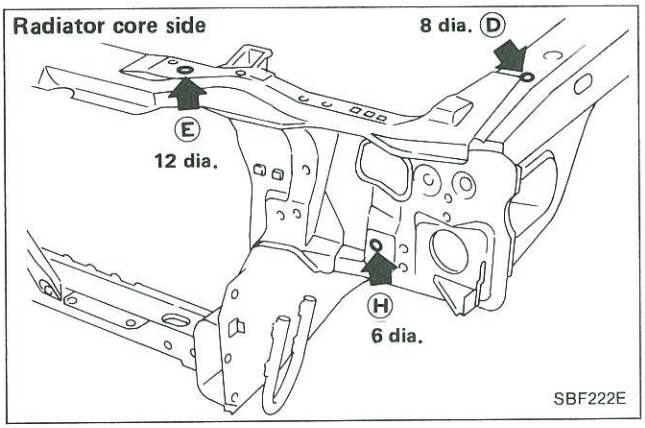

## Underbody

### MEASUREMENT

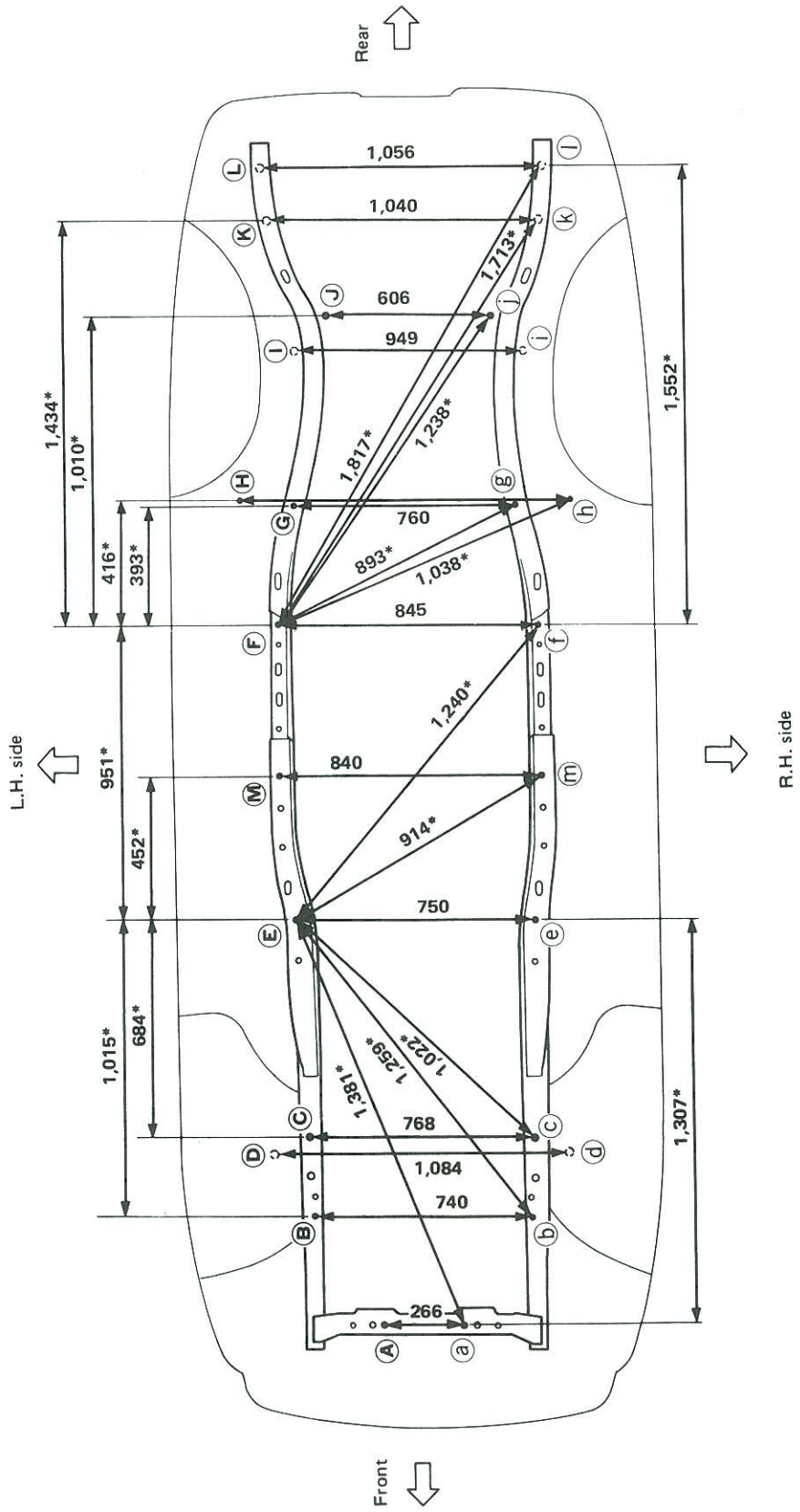


All dimensions indicated in this figure are actual ones.
(There are no projected dimensions.)

Unit: mm

MBF448A

## Underbody (Cont'd)

### MEASUREMENT POINTS

Coordinates:
Ⓐ, ⓐ
X : 132.9
Y : –582
Z : 189
Ⓑ, ⓑ
X : 370
Y : –304
Z : 255
Ⓒ, ⓒ
X : 384.2
Y : 32
Z : 255
Ⓔ, ⓔ
X : 375
Y : 700
Z : 106.2
Ⓕ, ⓕ
X : 422.5
Y : 1,650
Z : 104
Ⓖ, ⓖ
X : 380
Y : 2,030
Z : 195.8
Ⓗ, ⓗ
X : 535
Y : 2,050
Z : 116.3
Ⓙ, ⓙ
X : 303
Y : 2,640
Z : 265.8
Ⓚ, ⓚ
X : 520
Y : 3,050
Z : 398.8
Ⓛ, ⓛ
X : 528
Y : 3,170
Z : 400
Ⓜ, ⓜ
X : 420
Y : 1,150
Z : 106.2

**Front and rear strut tower centers**

Coordinates:
Ⓓ, ⓓ
X : 542.2
Y : 63.5
Z : 725.7
Ⓘ, ⓘ
X : 474.5
Y : 2,500
Z : 658.9

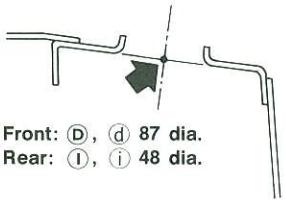

**Front: Ⓓ, ⓓ 87 dia.**
**Rear: Ⓘ, ⓘ 48 dia.**

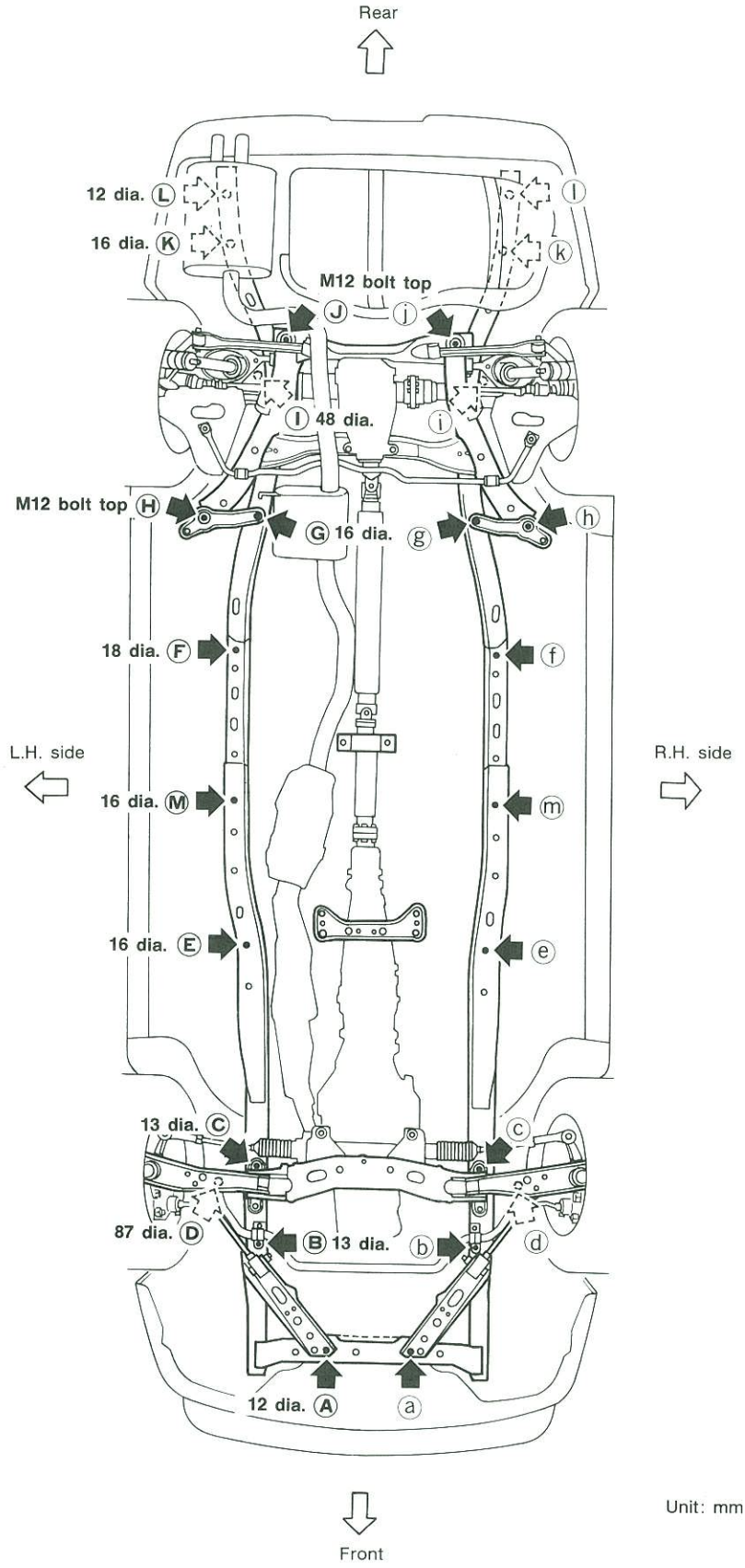


Unit: mm

SBF712G

# HEATER & AIR CONDITIONER

# SECTION HA

## CONTENTS


**PRECAUTIONS** ..... 2
- Precautions for the Handling of Refrigerant ..... 2
- Precautions for Refrigerant Connection ..... 3
- Precautions for Servicing Compressor ..... 4

**DESCRIPTION — Overall System** ..... 5
- Control Operation ..... 5
- Component Layout ..... 6
- Air Flow ..... 7
- Air Flow — Max. Cold Door Operation System ..... 8

**DESCRIPTION — Refrigeration System** ..... 9
- Refrigeration Cycle ..... 9
- Refrigerant Lines ..... 10
- V-5 Variable Displacement Compressor ..... 11
- Acceleration Cut System ..... 16

**PREPARATION** ..... 17
- Special Service Tools ..... 17
- Service Tools ..... 18

**DISCHARGING, EVACUATING, CHARGING AND CHECKING** ..... 24
- Work Procedure ..... 24
- Setting of Service Tools ..... 25
- Discharging ..... 26
- Evacuation ..... 27
- Charging Refrigerant ..... 28
- Inspection for Refrigerant Leaks ..... 30
- Removal of Service Tools ..... 31
- Sight Glass Inspection for System ..... 32

**SERVICE PROCEDURES** ..... 34
- Refrigerant Lines ..... 34
- Compressor Mounting ..... 35
- Thermo Control Amp. ..... 35
- Belt Tension ..... 35
- Fast Idle Control Device (F.I.C.D.) ..... 35
- Condenser and Condenser Fan Motor ..... 36

**LUBRICATION OIL — Checking and Adjusting** ..... 39
- Lubrication oil ..... 39
- Maintenance of Oil Quantity in Compressor ..... 39
- Checking and Adjusting ..... 39

**COMPRESSOR — Model V-5 (CALSONIC make)** ..... 41
- Removing Magnet Clutch Assembly ..... 41
- Installation of Magnet Clutch Assembly ..... 42
- Gap Adjusting Procedure ..... 45

**DIAGNOSES — Overall System** ..... 46
- How to Perform Trouble Diagnoses for Quick and Accurate Repair ..... 46
- Operational Check ..... 47
- Performance Chart ..... 49
- Performance Test Diagnoses ..... 50

**TROUBLE DIAGNOSES** ..... 55
- Contents ..... 55

**SYSTEM DESCRIPTION — Push Control** ..... 88
- Push Control System ..... 88
- Intake Door Motor ..... 89
- Mode Door Motor ..... 89
- Removal and Installation ..... 89
- Overhaul — Push control unit assembly ..... 90

**SERVICE DATA AND SPECIFICATIONS (S.D.S.)** ..... 92
- General Specifications ..... 92
- Inspection and Adjustment ..... 92


**When you read wiring diagrams:**
- **Read GI section, "HOW TO READ WIRING DIAGRAMS".**
- **See EL section, "POWER SUPPLY ROUTING" for power distribution circuit.**

**When you perform trouble diagnoses, read GI section, "HOW TO FOLLOW FLOW CHART IN TROUBLE DIAGNOSES".**

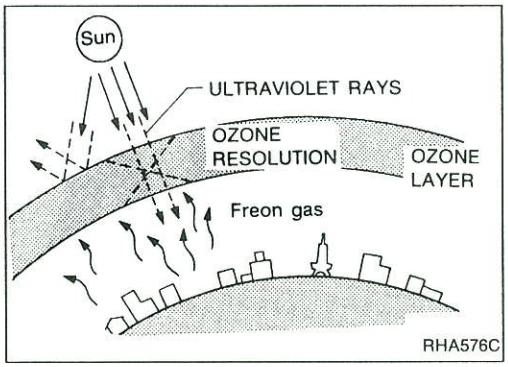


## Precautions for the Handling of Refrigerant

- **Do not release refrigerant into the air. Use your refrigerant recycling equipment to capture the refrigerant every time you need to discharge an air conditioning system.**

  **The release of refrigerant into the air can cause damage to the Earth's ozone layer.**

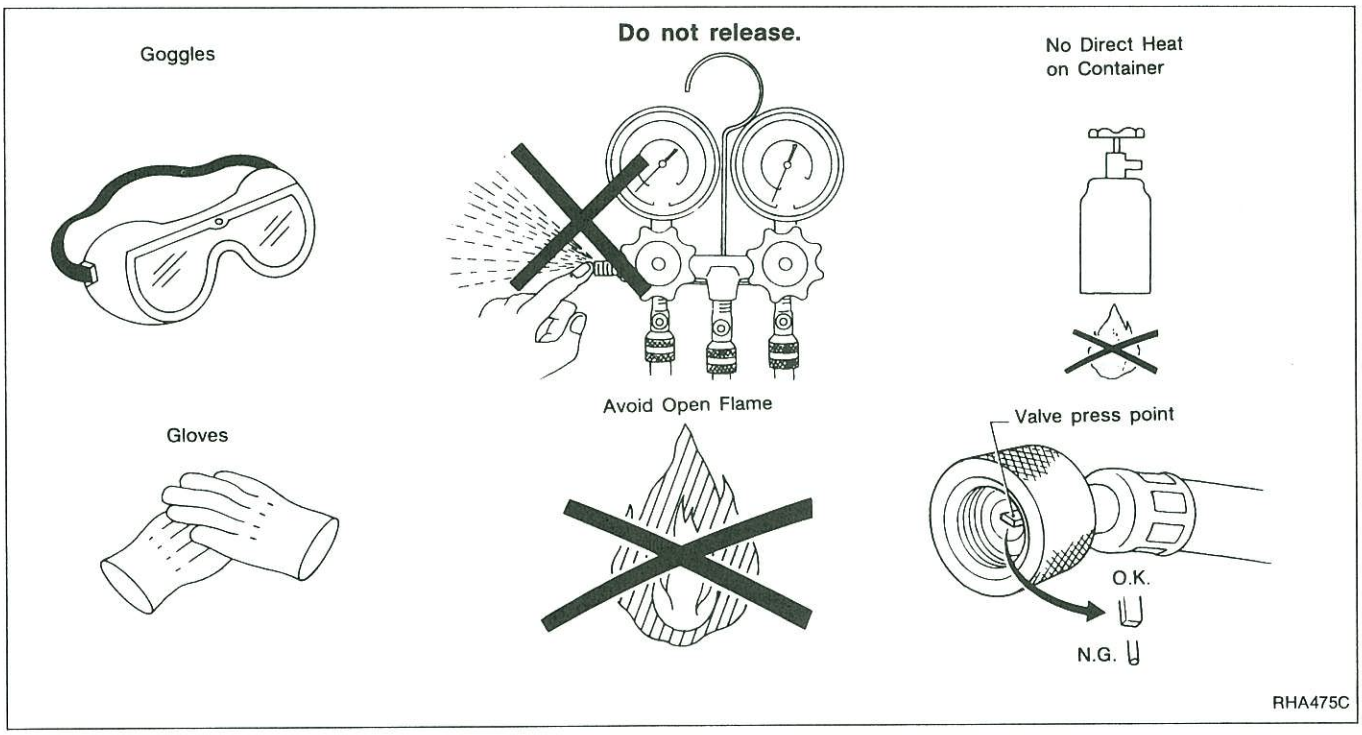


- **Always wear eye protection when working around the system.**
- **Always be careful that refrigerant does not come in contact with your skin.**
- **Keep refrigerant containers stored below 40°C (104°F) and never drop from high places.**
- **Work in well-ventilated area because refrigerant gas evaporates quickly and breathing may become difficult due to the lack of oxygen.**
- **Keep refrigerant away from open flames because poisonous gas will be produced if it burns.**
- **Do not increase can temperature beyond 40°C (104°F) in charging.**
- **Do not heat refrigerant container with an open flame. There is a danger that container will explode.**

**CAUTION:**

- **Do not use steam to clean surface of condenser or evaporator. Be sure to use cold water or compressed air.**
- **Do not use compressed air to clean out a contaminated A/C tube or hose. Shake the line over a clean, white paper towel. If it contains obvious moisture or contaminants, replace it. Do not blow out the line with refrigerant.**

## Precautions for Refrigerant Connection

**WARNING:**
**Make sure all refrigerant is discharged into the recycling equipment and the pressure in the system is less than atmospheric. Then gradually loosen the discharge side hose fitting and remove it.**
**CAUTION:**
**When replacing or cleaning refrigerant cycle components, observe the following.**

- **Do not leave compressor on its side or upside down for more than 10 minutes, as compressor oil will enter low pressure chamber.**
- **When connecting tubes, always use a torque wrench and a back-up wrench.**
- **After disconnecting tubes, plug all openings immediately to prevent entrance of dirt and moisture.**
- **When installing an air conditioner in the vehicle, the pipes must be connected as the final stage of the operation. The seal caps of the pipes and other components must not be removed until their removal is required for connection.**
- **Before installing any air conditioner component that has been stored in a cool location to a vehicle that has been exposed to the hot sun, leave the component as it is for some time in a hot location with its seal cap unremoved. This step is necessary to prevent condensation of moisture inside the cold component.**
- **Thoroughly remove moisture from the refrigeration system before charging the refrigerant.**
- **Always replace used O-rings.**
- **When connecting tube, apply lubrication oil to portions shown in illustration. Be careful not to apply oil to threaded portion.**
- **O-ring must be closely attached to inflated portion of tube.**
- **After inserting tube into union until O-ring is no longer visible, tighten nut to specified torque.**
- **After connecting line, conduct leak test and make sure that there is no leakage from connections. When the gas leaking point is found, disconnect that line and replace the O-ring. Then tighten connections of seal seat to the specified torque.**

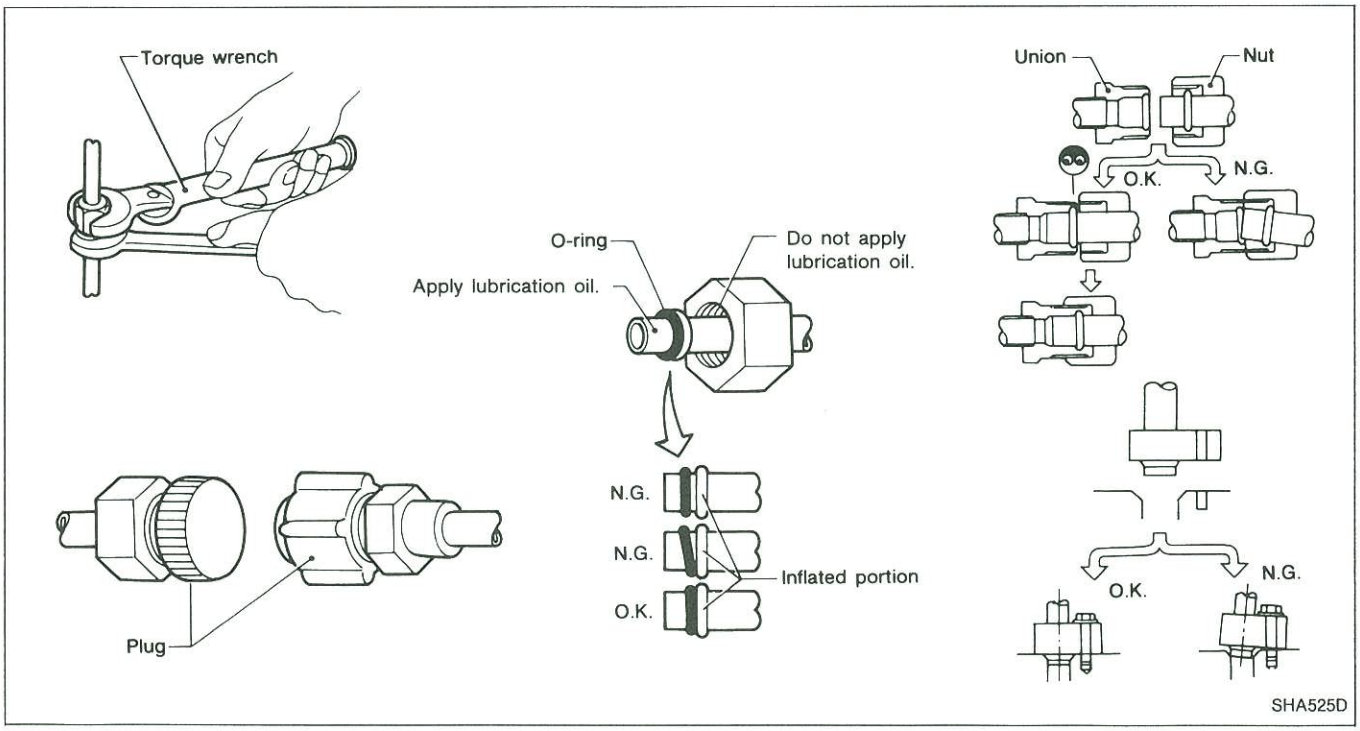

## Precautions for Servicing Compressor

- Attach a blind plug to the suction port (low pressure) and discharge port (high pressure) of the compressor to prevent oil from leaking out and dust from getting inside.
- Do not keep the compressor in the upside down position or laid on its side for more than 10 minutes.
- When replacing or repairing compressor, be sure to remove oil from the compressor and check the oil quantity extracted.
- When replacing with a new compressor, be sure to remove oil from the new compressor so that the quantity of oil remaining in the new compressor is equal to the quantity collected from the removed compressor. See the section "LUBRICATION OIL".
- Pay attention so as not to allow dirt and oil to attach on the friction surfaces between clutch and pulley. If the surface is contaminated, with oil, wipe it off by using a clean waste cloth moistened with thinner.
- After completing the compressor service operation, be sure to rotate the compressor shaft more than five turns in both directions by hand to equalize oil distribution inside the compressor, then run the compressor for about one hour by idling the engine.
- When the compressor magnet clutch has been replaced, be sure to check the magnet clutch for normal operation by applying voltage to the clutch.

## Control Operation

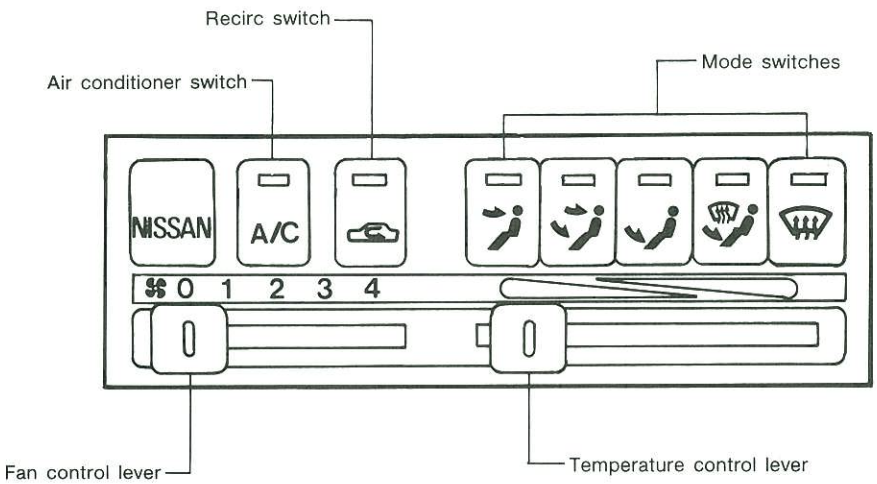


### FAN CONTROL LEVER

This lever turns the fan ON and OFF, and controls fan speed.

### MODE SWITCHES

These switches allow you to select the outlet air flow.
When the MODE is set to "DEF" or "F/D", the push control unit sets the intake door to "FRE". The compressor turns on when the MODE is set to "DEF".

### TEMPERATURE CONTROL LEVER

This lever allows you to adjust the temperature of the outlet air.

### RECIRC SWITCH

OFF position:
Outside air is drawn into the passenger compartment when this switch is OFF.
ON position:
Interior air is recirculated inside the vehicle.
"RECIRC" is canceled when "DEF" or "F/D" are selected. "RECIRC" resumes when another mode is chosen.

### AIR CONDITIONER SWITCH

Start the engine, move the fan control lever to the desired (1 to 4) position and push the air conditioner switch to turn ON the air conditioner. The indicator light will come on when the air conditioner is ON. To stop the air conditioner, push the switch again to return it to the original position.

**The air conditioner cooling function operates only when the engine is running.**

## Component Layout

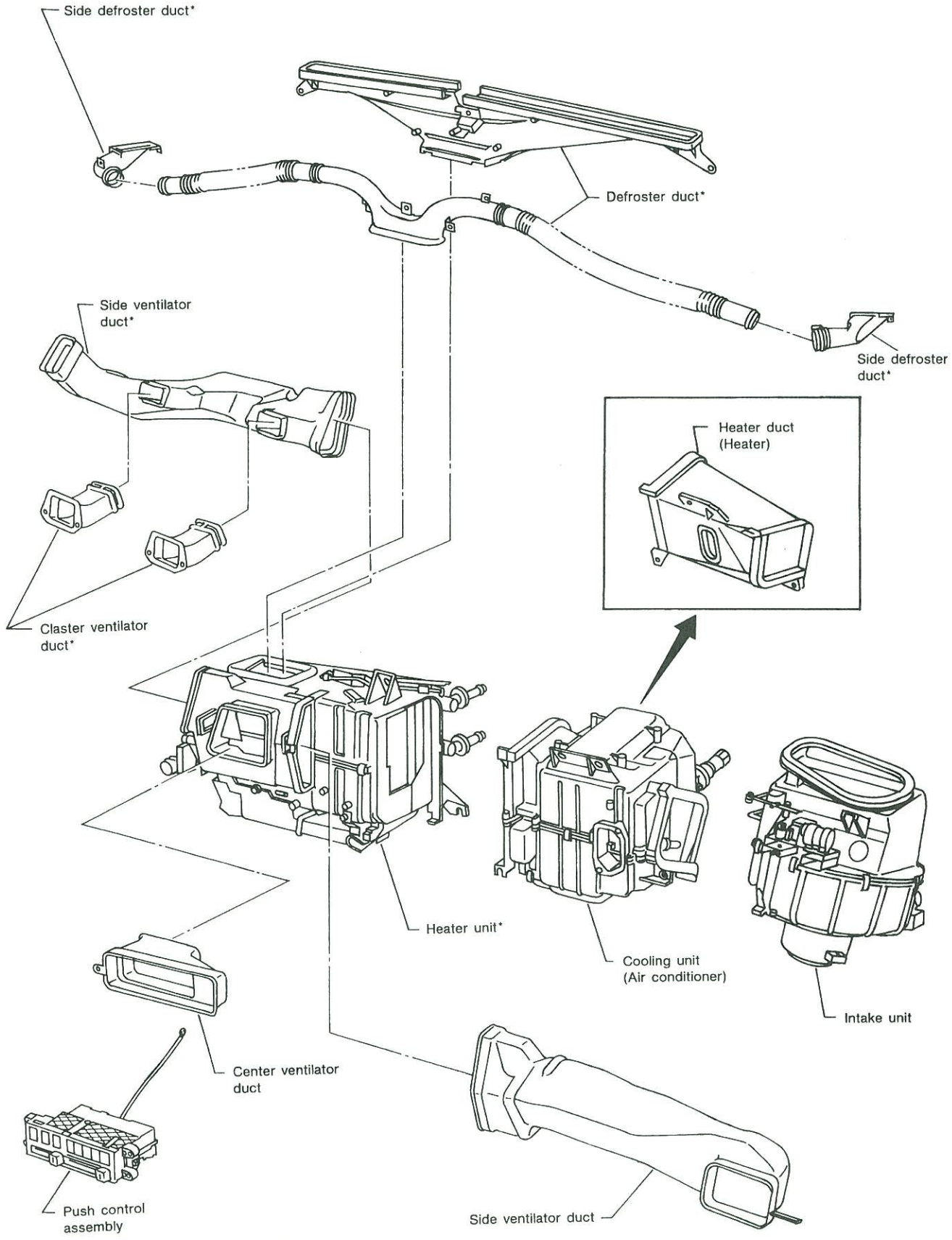


*: For removal, it is necessary to remove instrument assembly.

RHA135C

## Air Flow

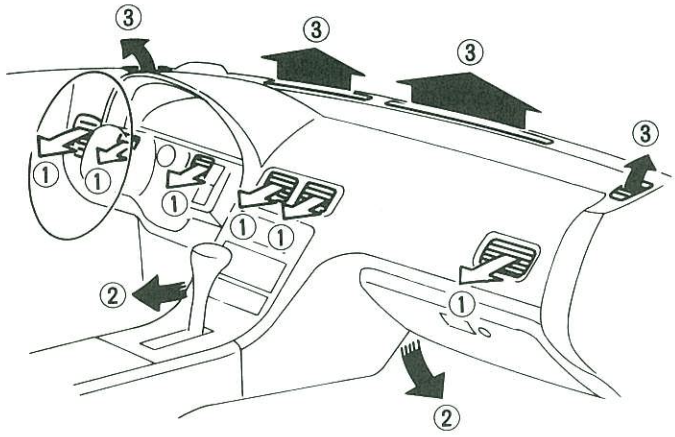


### Ventilation (REC switch "ON")

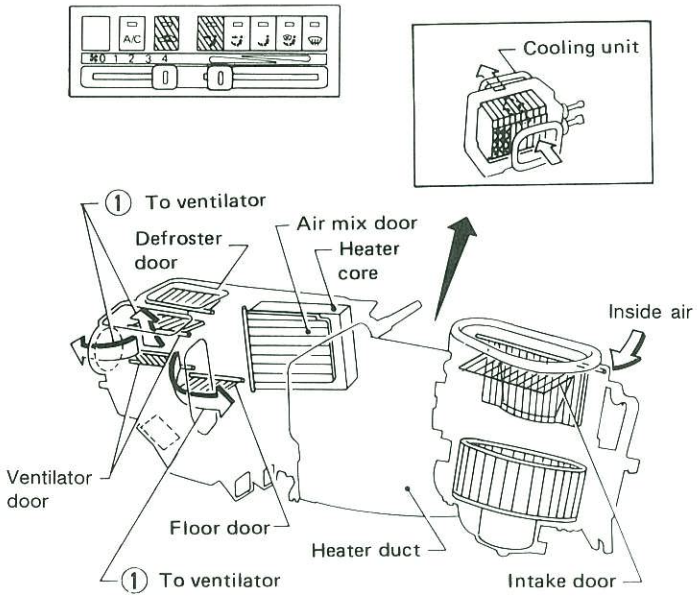


### Bi-level

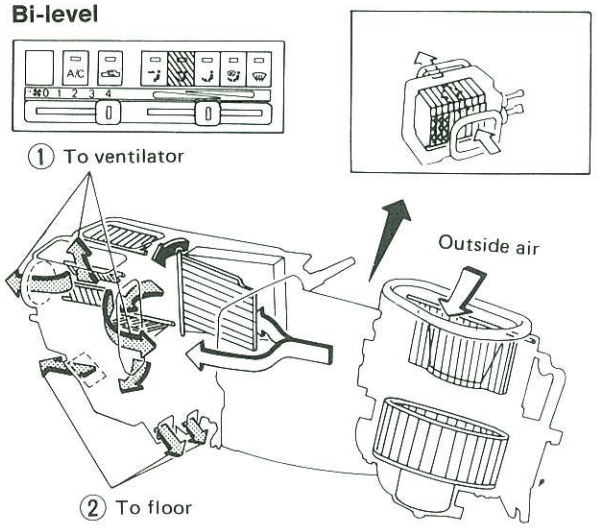


### Floor

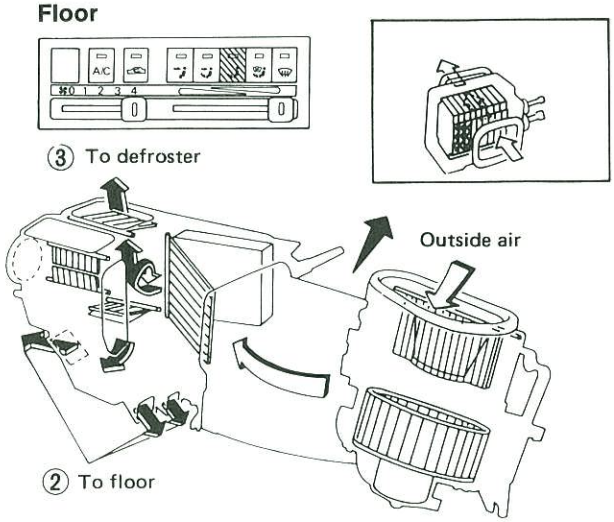


### Floor and defroster

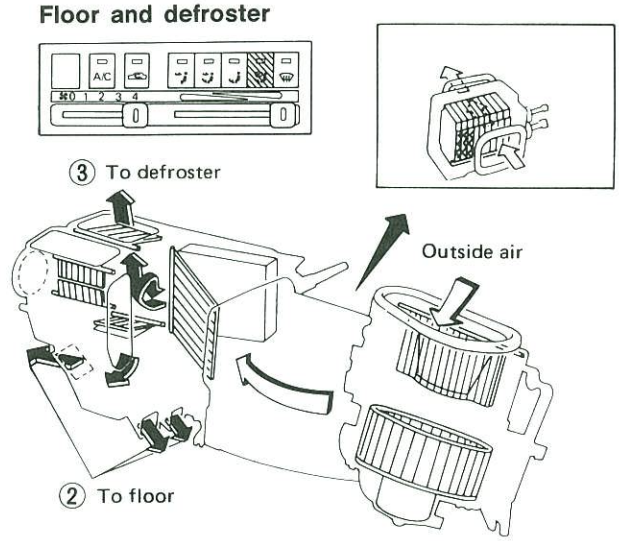


### Defroster

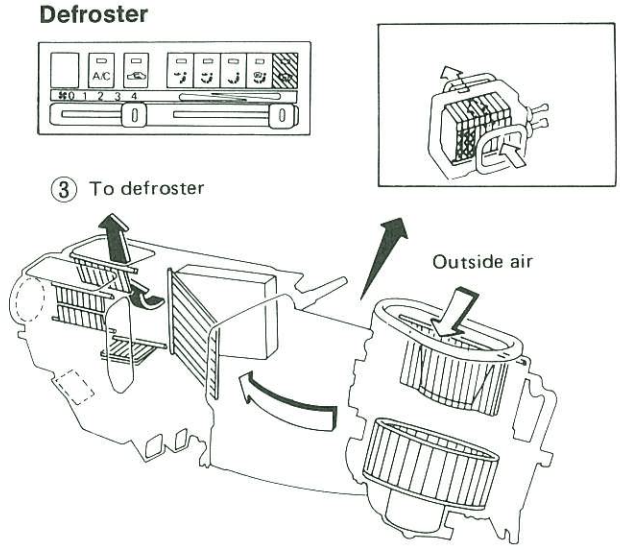


: Air passed through heater core

: Mixed air ( + )

: Air not passed through heater core

RHA371A

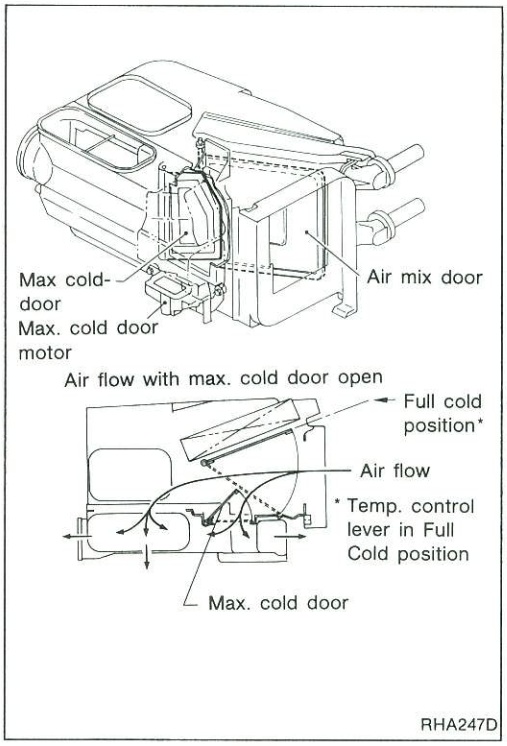


## Air Flow — Max. Cold Door Operation System

In the FULL COOL mode (in VENT mode and with temp. control lever in FULL COOL position), max. cold door system reduces resistance of vent air flowing through interior of heater unit. The max. cold door system reduces noise during FULL COOL mode by allowing cold air which has just passed through the cooling unit to blow out from ventilators through both the max. cold door and the heater unit vent door.

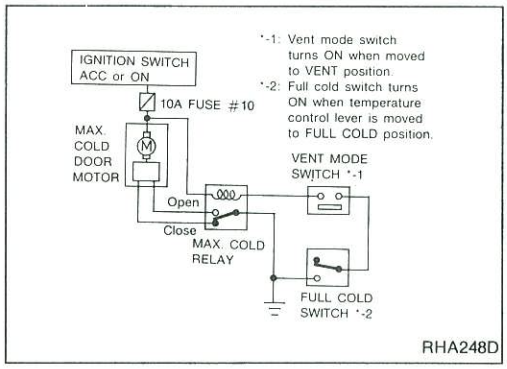


Max. cool door system is set to operate during FULL COOL mode. When the temp. control lever is moved to FULL COOL position and mode switch is turned to VENT position, both vent mode switch and full cold are turned ON. Therefore, max. cold relay coil is energized and the relay switch is turned ON for OPEN side, and the max. cold door motor starts to rotate to open the door. The door is kept closed unless this operation is performed.

| Vent mode switch operation | Max. cold switch operation | Max. cold door operation |
|---|---|---|
| ON | ON | OPEN |
| | OFF | CLOSE |
| OFF | ON | |
| | OFF | |

## Refrigeration Cycle

### REFRIGERANT FLOW

The refrigerant flows in the standard pattern, that is, through the compressor, the condenser, the liquid tank, through the evaporator, and the compressor.
The refrigerant evaporation through the evaporator coil is controlled by an externally equalized expansion valve, located inside evaporator case.

### FREEZE PROTECTION

Under normal operating conditions, when the A/C is switched on, the compressor runs continuously, and the evaporator pressure, and therefore temperature, is controlled by the V-5 variable displacement compressor.
If evaporator coil temperature falls below a specified point, the thermo-control amplifier interrupts compressor operation. When evaporator coil temperature rises above the specification, compressor operation will resume. This condition (compressor cycling) indicates a malfunction in the system.

### REFRIGERANT SYSTEM PROTECTION

#### Dual-pressure switch

The refrigerant system is protected against excessively high or low pressure by the dual-pressure switch, located on the liquid tank. If the system pressure rises above, or falls below the specifications, the dual-pressure switch opens to interrupt compressor operation.

#### Fusible plug

Open at temperatures above 105°C (221°F), thereby discharging refrigerant to the atmosphere. If this plug is melted and opened, check the refrigerant line and replace the liquid tank.

#### Pressure relief valve

The refrigerant system is also protected by a pressure relief valve, located on the end of compressor. When the pressure of the refrigerant in the system increases to an abnormal level [more than 3,727 kPa (38 kg/cm$^2$, 540 psi)], the release port on the pressure relief valve automatically opens and releases refrigerant into the atmosphere.

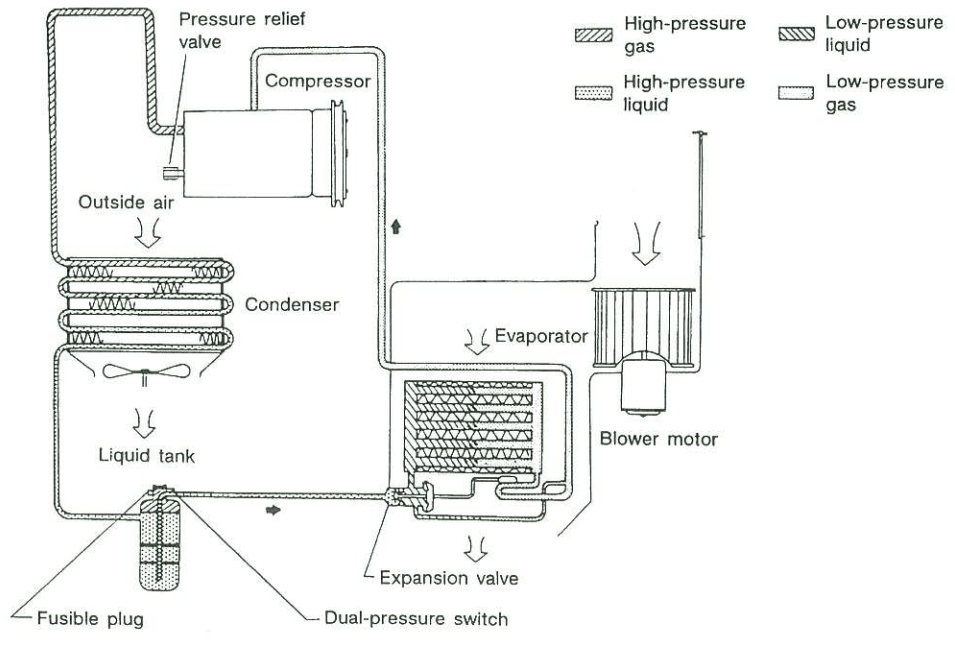


SHA459D

## Refrigerant Lines

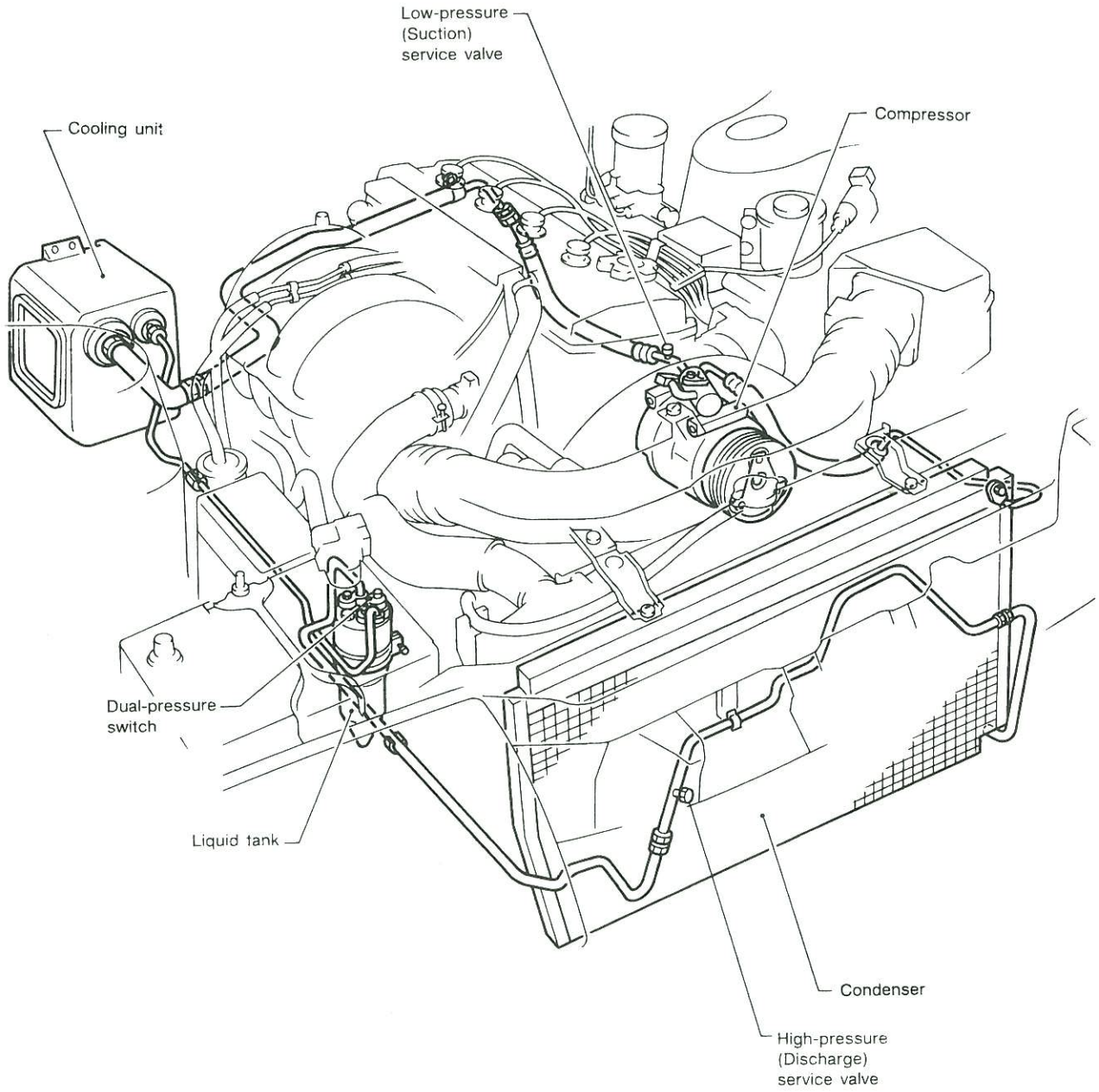


SHA460D

## V-5 Variable Displacement Compressor

### GENERAL INFORMATION

1. The V-5 variable compressor differs from previous units in that the vent temperatures do not drop too far below 5°C (41°F) at a evaporator intake air temperature of less than 20°C (68°F) while the engine is running at speeds less than 1,500 rpm. This is because the V-5 compressor provides a means of "capacity" control.
2. The V-5 variable compressor provides refrigerant control under varying conditions. During the winter season when ambient temperatures are low, it sometimes does not produce high refrigerant pressure discharge (compared to previous units) when used with automobile air conditioning systems. Vapor bubbles in the sight glass also may not disappear. However, these are not symptoms of a problem. When charging the refrigerant, always use an accurate refrigerant measuring device. Extreme care should be taken not to charge the refrigerant excessively. Do not charge the system by the sight glass.
3. A "clanking" sound may occasionally be heard during refrigerant charge. The sound indicates that the tilt angle of the swash plate has changed and is not a problem.
4. In air conditioning systems which are equipped with the V-5 compressor, the clutch remains engaged unless the system main switch, fan switch or ignition switch is turned OFF. When the acceleration cut system is operating or when the amount of refrigerant is insufficient, the clutch is disengaged to protect the compressor.
5. A constant range of suction pressure is maintained when engine speed is greater than a certain value. It normally ranges from 147 to 177 kPa (1.5 to 1.8 kg/cm$^2$, 21 to 26 psi) under varying conditions. In previous compressors, however, suction pressure was reduced with increases in engine speed.
6. If the ambient temperature drops below approx. 22°C (72°F), the ambient temperature switch turns OFF and F.I.C.D. operation stops. The reason is that the variable displacement compressor is controlling the volume of refrigerant, and when the ambient temperature is low and refrigerating load becomes small, the compressor requires less torque, which eliminates the need for the F.I.C.D., idling r.p.m. increase.

## V-5 Variable Displacement Compressor (Cont'd)

### DESCRIPTION

#### General

The variable compressor is basically a swash plate type that changes piston stroke in response to the required cooling capacity.

The tilt of the swash plate allows the piston's stroke to change so that refrigerant discharge can be continuously changed from 3 to 146 $cm^3$ (0.18 to 8.91 cu in).

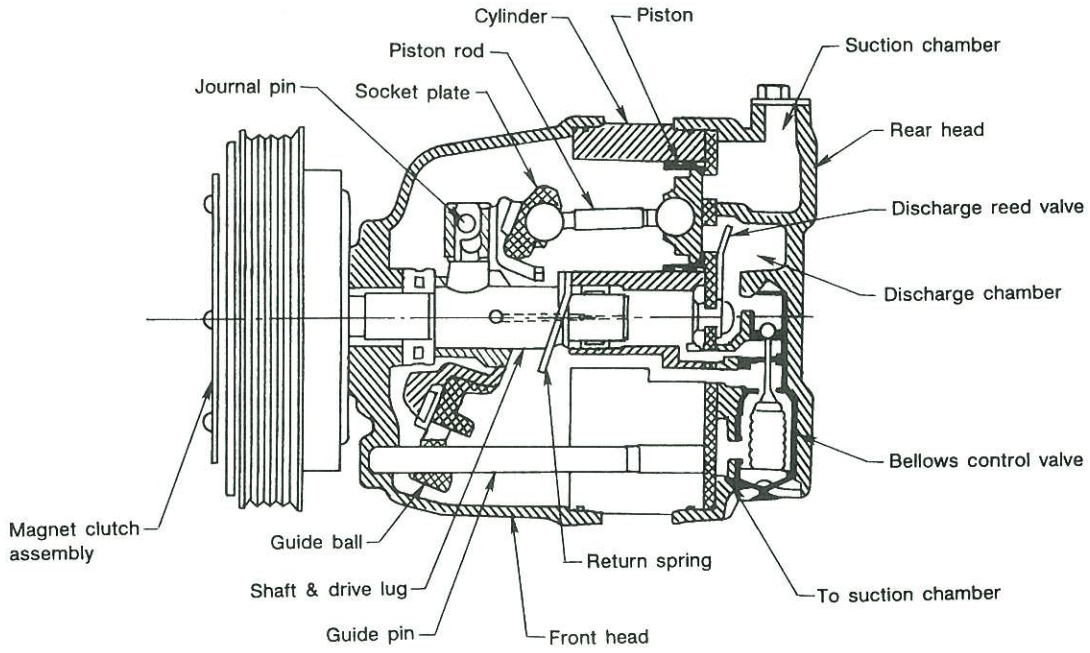


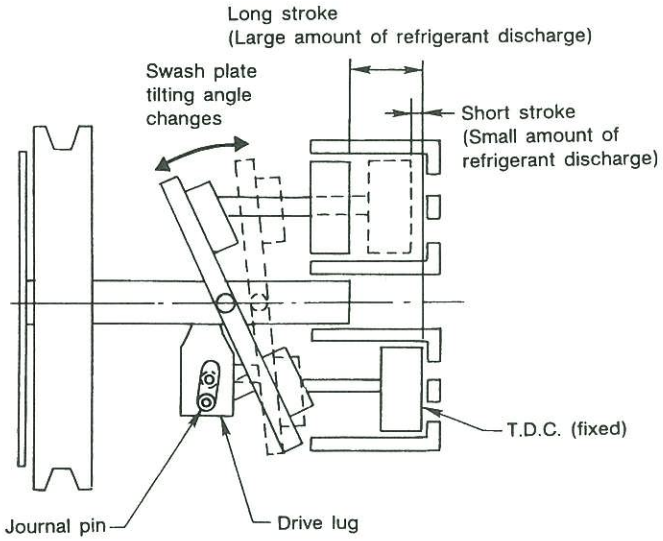


| Discharge control | Discharge capacity $cm^3$ (cu in)/rev. | Piston stroke length mm (in) |
|---|---|---|
| Minimum | 3 (0.18) | 0.6 (0.024) |
| Maximum | 146 (8.91) | 28.6 (1.126) |

RHA257B

## V-5 Variable Displacement Compressor (Cont'd)

### Operation

**1. Operation control valve**

Operation control valve is located in the suction port (low-pressure) side, and opens or closes in response to changes in refrigerant suction pressure.
Operation of the valve controls the internal pressure of the crankcase.
The angle of the swash plate is controlled between the crankcase's internal pressure and the piston cylinder pressure.

**2. Maximum cooling**

Refrigerant pressure on the low-pressure side increases with an increase in heat loads.
When this occurs, the control valve's bellows compress to open the low-pressure side valve and close the high-pressure side valve.
This causes the crankcase's internal pressure to equal the pressure on the low-pressure side and the cylinder's internal pressure to be greater than the crankcase's internal pressure. Under this condition, the swash plate is set to the maximum stroke position.

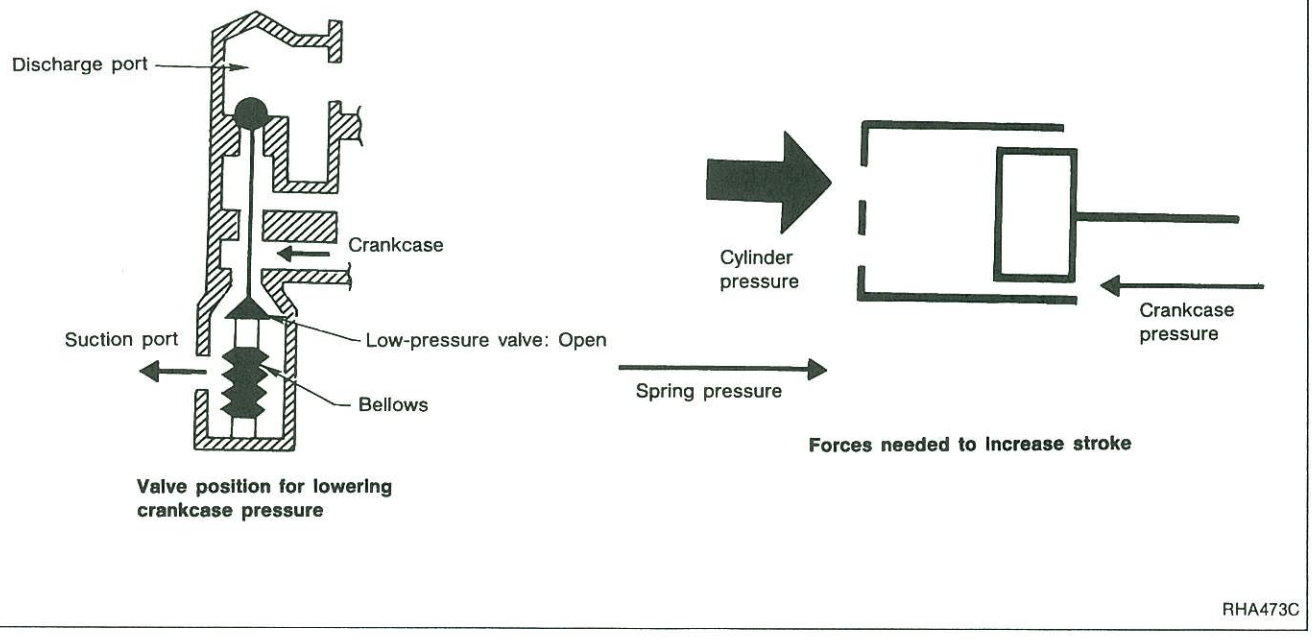

## V-5 Variable Displacement Compressor (Cont'd)

**3. Capacity control**

- Refrigerant pressure on suction side is low during high speed driving or when ambient or interior temperature is low.
- The bellows expands when refrigerant pressure on the suction pressure side drops below approximately 177 kPa (1.8 kg/cm$^2$, 26 psi).
  Since suction pressure is low, it makes the suction port close and the discharge port open. Thus, crankcase pressure becomes high as high pressure enters the crankcase.
- The force acts around the journal pin near the swash plate, and is generated by the pressure difference before and behind the piston.
  The drive lug and journal pin are located where the piston generates the highest pressure. Piston pressure is between suction pressure Ps and discharge pressure Pd, which is near suction pressure Ps. If crankcase pressure Pc rises due to capacity control, the force around the journal pin makes the swash plate angle decrease and also the piston stroke decrease. In other words, the pressure difference between the piston and the crankcase according to crankcase pressure increase changes the angle of the swash plate.

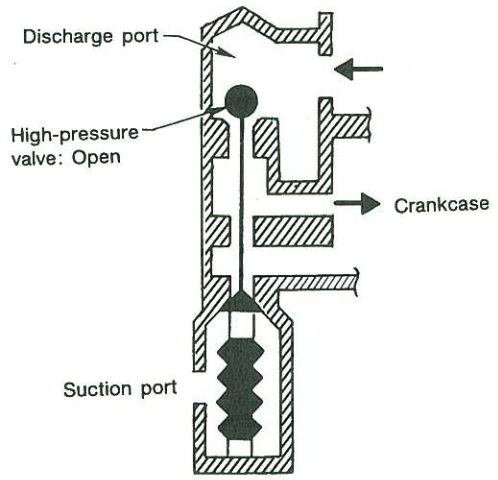


**Valve position for raising crankcase pressure**

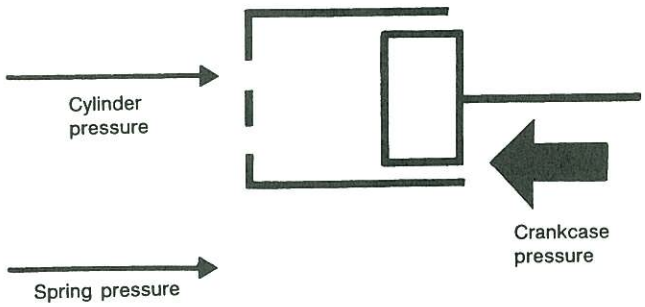


**Forces needed to decrease stroke**

RHA474C

## F.I.C.D. CONTROL SYSTEM

### General

With the variable displacement compressor, the compressor power requirements differ from when the ambient temperature is high and maximum cooling effect is required (i.e., when refrigerating load is large and the tilt angle of the compressor swash plate is large) to when the ambient temperature is low and less cooling effect is required (i.e., when refrigerating load is small and the tilt angle of the swash plate is small). To correspond correctly to this change in compressor power requirements, it is also necessary to control the operation of the F.I.C.D. according to the refrigerating load. Thus, an ambient air temperature switch is provided on the front face of the condenser so that the F.I.C.D. can be controlled depending on the ambient temperature.

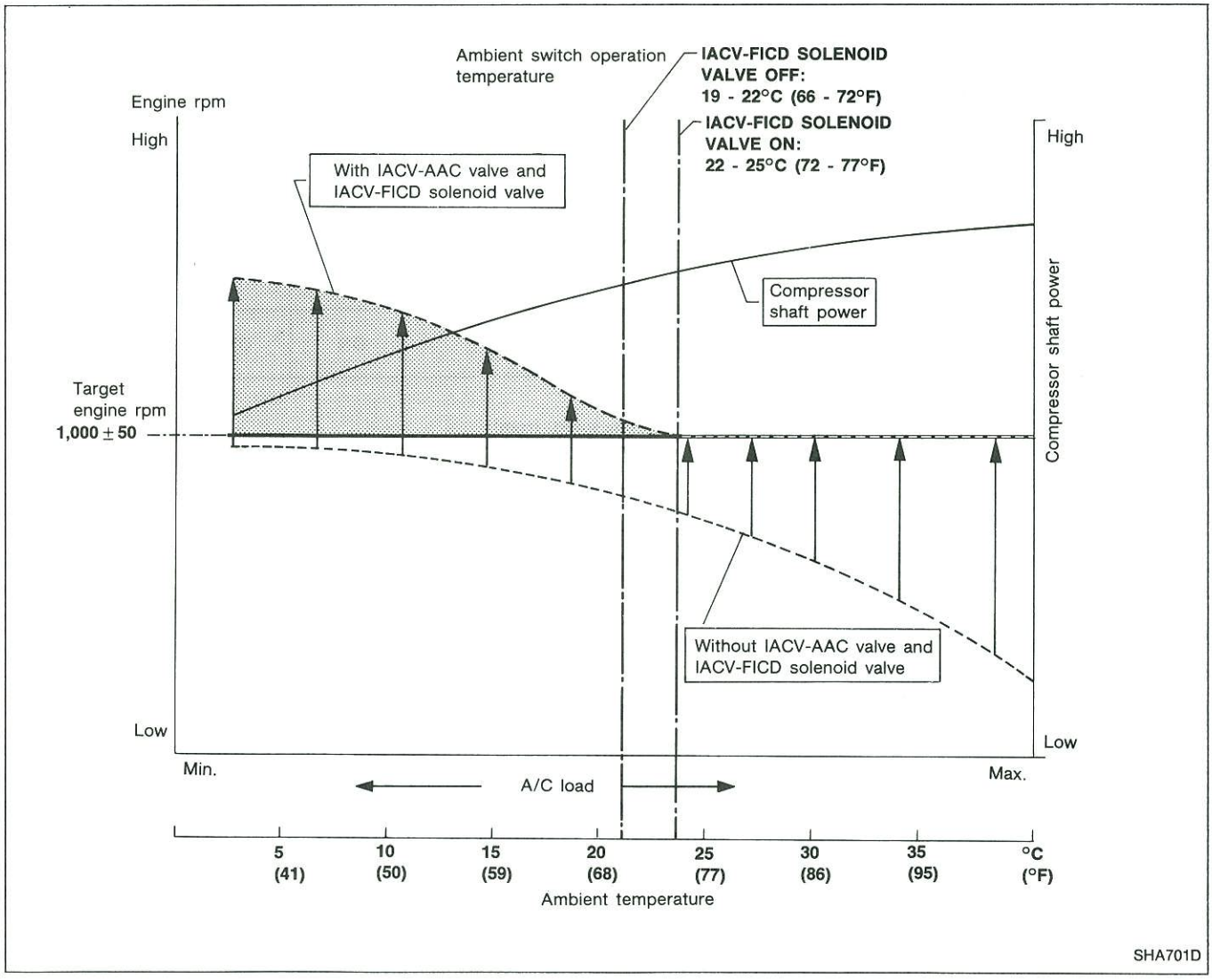

## V-5 Variable Displacement Compressor (Cont'd)

### Operation

When the air conditioner is OFF, the ECM detects the load applied to the engine, and controls the IACV-AAC valve to adjust the engine idling speed to the appropriate rpm by supplying additional air from the IACV-AAC valve.

When the air conditioner is ON (A/C relay is ON), and when the ambient temperature switch is ON (this switch turns ON automatically when the ambient temperature rises to approx. 25°C (77°F) or higher), the IACV-FICD solenoid valve is energized and additional air is supplied to the engine.

If the appropriate engine speed is not reached, the IACV-AAC valve supplies the additional air required to increase the engine speed.

If the ambient temperature switch is OFF (this switch turns OFF when the ambient temperature is below 22°C (72°F) even when the air conditioner is ON (A/C relay is ON), the IACV-FICD solenoid valve is deenergized, and the idling speed is controlled so that the appropriate rpm can be achieved by operation of the IACV-AAC valve only.

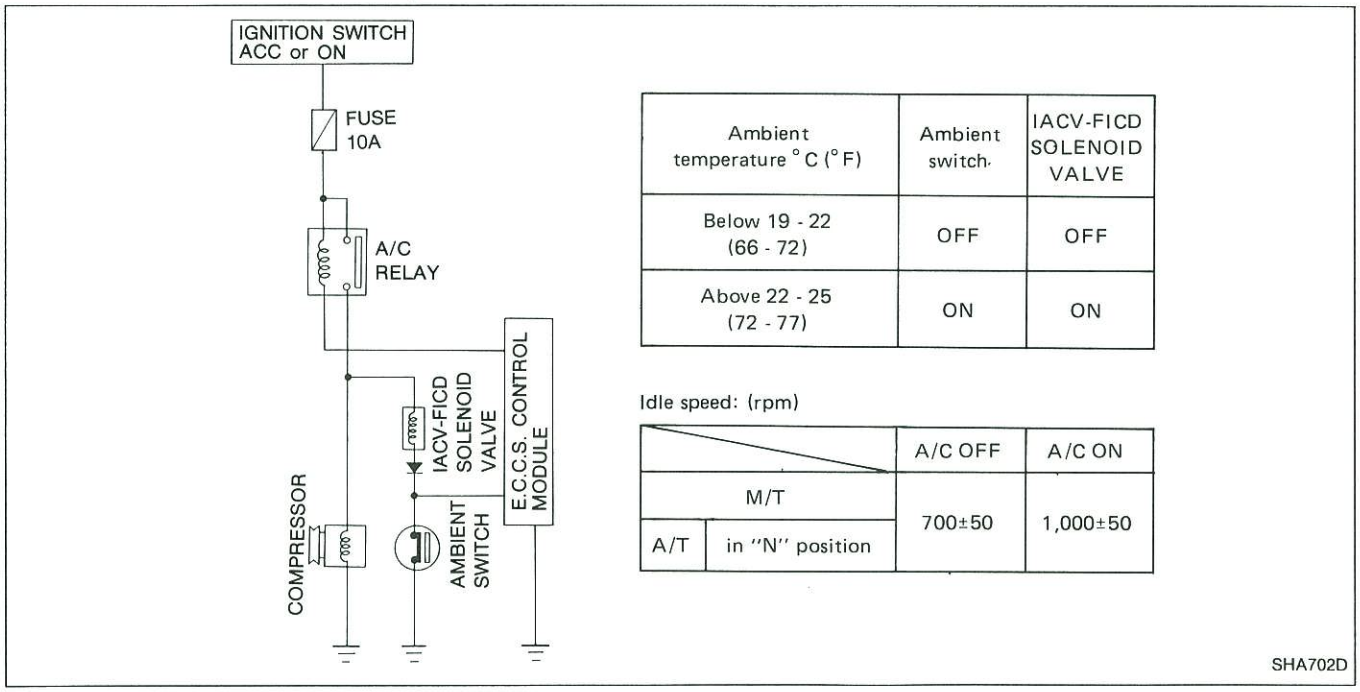


| Ambient temperature °C (°F) | Ambient switch | IACV-FICD SOLENOID VALVE |
|---|---|---|
| Below 19 - 22 (66 - 72) | OFF | OFF |
| Above 22 - 25 (72 - 77) | ON | ON |

Idle speed: (rpm)

| | | A/C OFF | A/C ON |
|---|---|---|---|
| M/T | | 700±50 | 1,000±50 |
| A/T | in "N" position | | |

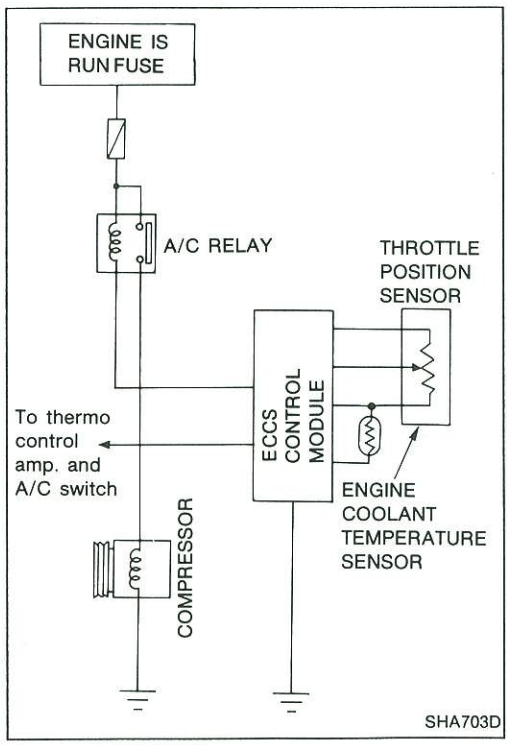


## Acceleration Cut System

This system is controlled by the ECM (ECCS control module).

When the engine is heavily over loaded (throttle position sensor judges that throttle valve is at full throttle position), the compressor is turned off for approx. 4 seconds to reduce overloading.

Additionally when the temperature of engine coolant rises above approx. 113°C (235°F), the compressor is turned off.

## Special Service Tools

| Tool number<br>(Kent-Moore number)<br>Tool name | Description | |
|---|---|---|
| (J39072)<br>Clutch disc wrench | 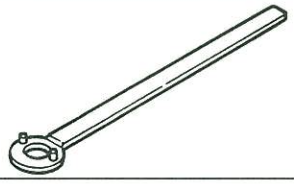 | Removing center nut |
| (J39073-3)<br>Clutch disc puller set*<br><br>(J39073-4)<br>Clutch jig (1)<br>(J33013-1)<br>Clutch jig (2)<br>(J33013-3)<br>Bolt<br>(J33013-1)<br>Bearing | 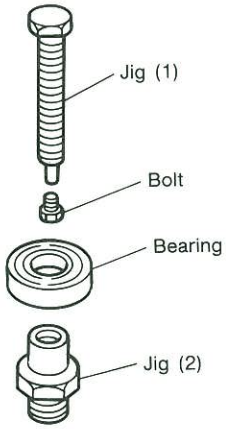 | Removing/Installing clutch disc |
| (J39073-2)<br>Pulley pressing jig* | | Installing pulley |
| (J39073-1)<br>Coil pressing jig* | | Installing magnet clutch coil |

* Coil pressing jig (J39073-1), Pulley pressing jig (J39073-2) and Clutch disc puller set (J39073-3) are provided as Clutch and coil Service set (J39073).

## Service Tools

| Tool name | Description | |
|---|---|---|
| Manifold gauge | 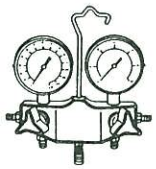 SHA899C | Discharging, evacuating and charging refrigerant |
| Additional valve | 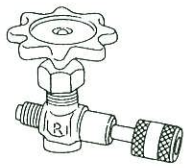 SHA898C | Discharging, evacuating and charging refrigerant |
| Charging hose | SHA897C | Discharging, evacuating and charging refrigerant |
| Adapter valve | 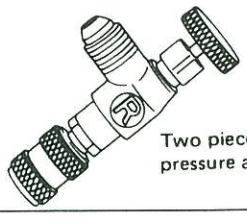 Two pieces on each high pressure and low pressure line RHA573B | Discharging, evacuating and charging refrigerant |
| Thermometer and hygrometer | 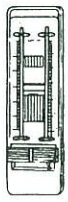 Etched-stem type thermometer SHA900C | Checking temperature and humidity |
| Vacuum pump | 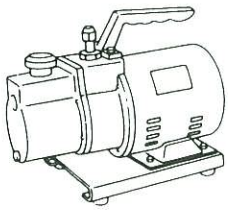 RHA575B | Evacuating |
| Gas leak detector | 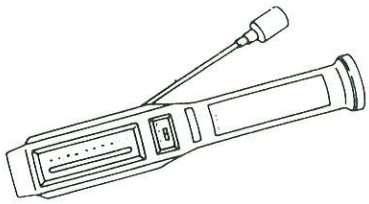 RHA577B | Checking refrigerant leaks |

## Service Tools (Cont'd)

| Tool name | Description | |
|---|---|---|
| Charging cylinder | 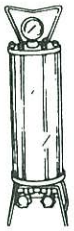 RHA578B | Checking amount of refrigerant and charging refrigerant |
| Weight scale | 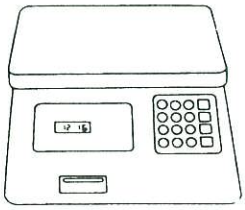 RHA579B | Checking amount of refrigerant |
| Refrigerant recycling equipment | 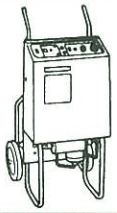 SHA732C | Capturing and recycling refrigerant |

**For details of such handling methods, refer to the Instruction Manual attached to each of the service tools.**

## Service Tools (Cont'd)

### HANDLING METHOD AND STRUCTURE

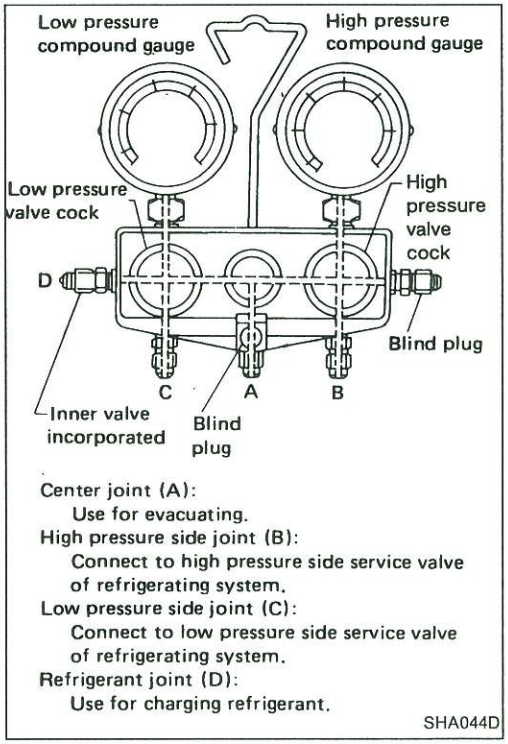


Center joint (A):
Use for evacuating.
High pressure side joint (B):
Connect to high pressure side service valve of refrigerating system.
Low pressure side joint (C):
Connect to low pressure side service valve of refrigerating system.
Refrigerant joint (D):
Use for charging refrigerant.

SHA044D

### Manifold gauge

The manifold gauge is used to measure the operating pressure accurately in the high pressure and low pressure lines of the refrigerating system.
The high pressure gauge measures from –101.3 kPa (–760 mmHg, –29.92 inHg) to 2,942 kPa (30 kg/cm$^2$, 427 psi), and the low pressure gauge measures generally from –101.3 kPa (–760 mmHg, –29.92 inHg) to 1,471 kPa (15 kg/cm$^2$, 213 psi).

**CAUTION:**

- **When installing the gauge to the refrigerating system, use utmost care not to mistake high pressure and low pressure line connections. (Wrong connections will lead to a damaged gauge.)**
- **Before evacuating, confirm that the gauge has a negative pressure scale. (If not, the gauge will be damaged.)**

### Charging hose

1. Completely tighten the high pressure valve, low pressure valve and vacuum pump valve cocks of the gauge manifold.
2. Connect the charging hoses to the high and low pressure lines.
3. Connect the charging hose fitted with a valve core to the refrigerant canister.
4. Connect the charging hose to the vacuum pump.

**The high and low pressure hoses are color coded to prevent wrong connection.**

| | |
|---|---|
| High pressure line hose | Red |
| Low pressure line hose | Yellow |
| Refrigerant canister hose | Blue or green (with valve core) |
| Vacuum pump hose | Blue or green |

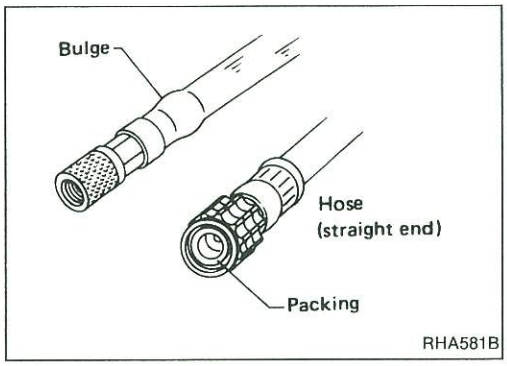


RHA581B

**CAUTION:**

- **Check each hose for cracks. If found, discard the hose.**
- **Do not use any hose if bulges are found.**
- **Check the rubber packing. If any deterioration or cracks are found, replace it with a new one.**

## Service Tools (Cont'd)

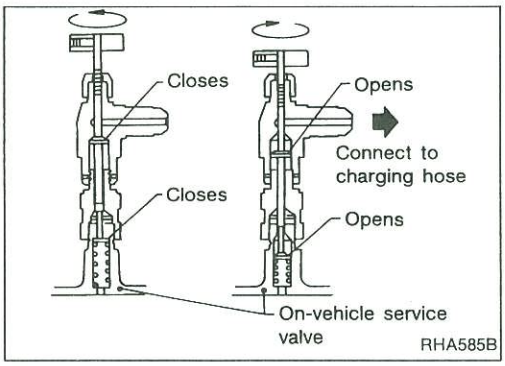


### Installing the adapter valve

Install the adapter valve to each of the high pressure and low pressure service valves so that air purging from the charging hose can be omitted. This also ensures that refrigerant leakage upon disconnection of the hose can be prevented.

1. Before connecting the adapter valve to the on-vehicle service valve, turn the adapter valve handle fully counterclockwise to retract the pin.

**CAUTION:**

**Check the packing for any sign of deterioration or cracks. If any abnormality is found, replace it with a new one.**

2. Connect the charging hose to the adapter valve.

**Turning the handle clockwise will cause the on-vehicle service valve pin to be pushed open by the adapter valve pin, thus opening the refrigerant passage.**

**Turning the handle counterclockwise will close the passage. Before removing the adapter valve from the on-vehicle service valve, be sure to fully turn the handle counterclockwise to shut off the refrigerant passage.**

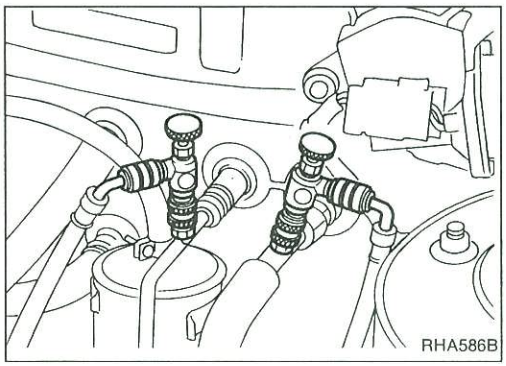


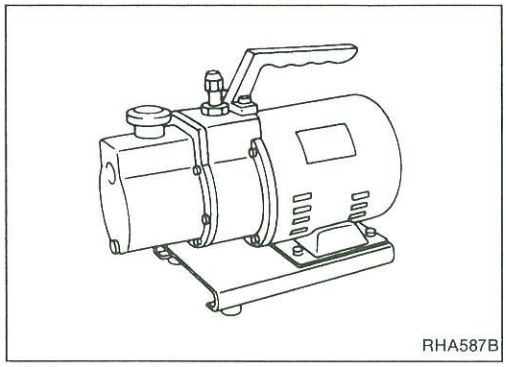


### Vacuum pump

The vacuum pump is used to purge air and moisture from the inside of the refrigeration system by evacuation, thereby ensuring proper functioning of the air conditioner system.

**Check the vacuum pump to see that the vacuum pump capacity is greater than –100.0 kPa (–750 mmHg, –29.53 inHg).**

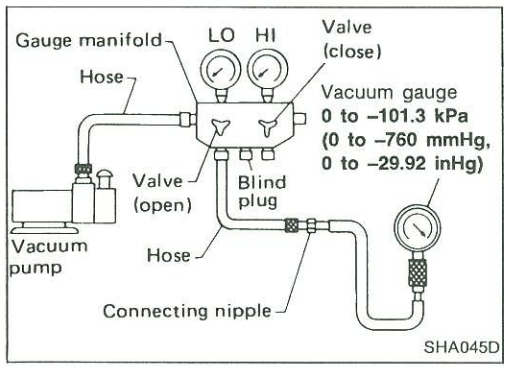


### Vacuum pump performance check procedure

1. Connect the vacuum gauge to the system.
2. Run the vacuum pump, and check to see that the needle pointers of the gauge manifold and vacuum gauge move smoothly, indicating a similar value.
3. After running the vacuum pump for two or three minutes, read the vacuum gauge. The measured value indicates the capacity of the vacuum pump.

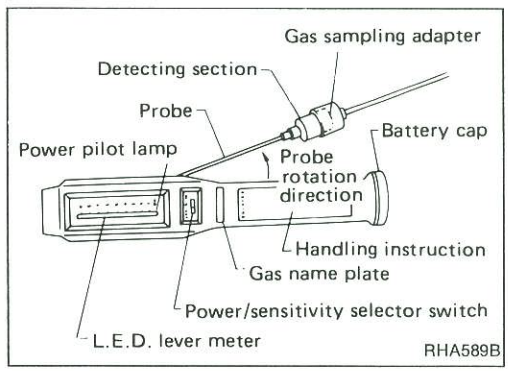


### Gas leak detector

The gas leak detector is used to check whether the refrigeration system is leaking. The features of this gas leak detector are listed on the next page.

## Service Tools (Cont'd)

| Type | | Detection ability | Features |
|---|---|---|---|
| Electrical | Discharge type (Suction type) | 3 - 50 g (0.11 - 1.76 oz)/year | • Easy handling<br>• Medium sensitivity<br>• Each point needs tow or more seconds for detection. |
| | Positive ion emission type (Suction type) | 2 g (0.07 oz)/year | • High sensitivity<br>• High price<br>• Warm-up time is needed because a heater is incorporated. |
| Other simple checking method: Change in vacuum when evacuating | | 1 kg (2 lb)/month; if 13.3 kPa (100 mmHg, 3.94 inHg) change in vacuum is detected in 10 minutes. | • Can be used easily in refrigerant charging operation.<br>• Detection ability is very low with vacuum gauge in gauge manifold. |

- **Leakage inspection of a refrigeration system needs a sensitivity greater than 20 g (0.71 oz)/year.**
- **The actual amount of leak is estimated at 5 to 10 times the detected amount.**
- **Insufficient cooling may be felt if leakage exceeds 150 to 200 g (5.29 to 7.05 oz).**

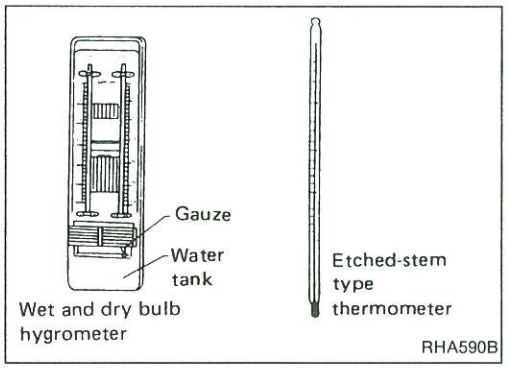


### Temperature gauge

Use to check the air conditioner performance. An etched stem type thermometer may be used. A hygrometer must also be used because the air conditioner performance depends on the humidity.

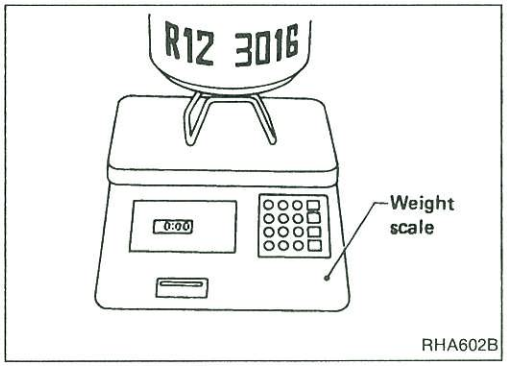


### Scale

Measure the weight of the refrigerant to determine how much the refrigerant is charged.

## Service Tools (Cont'd)

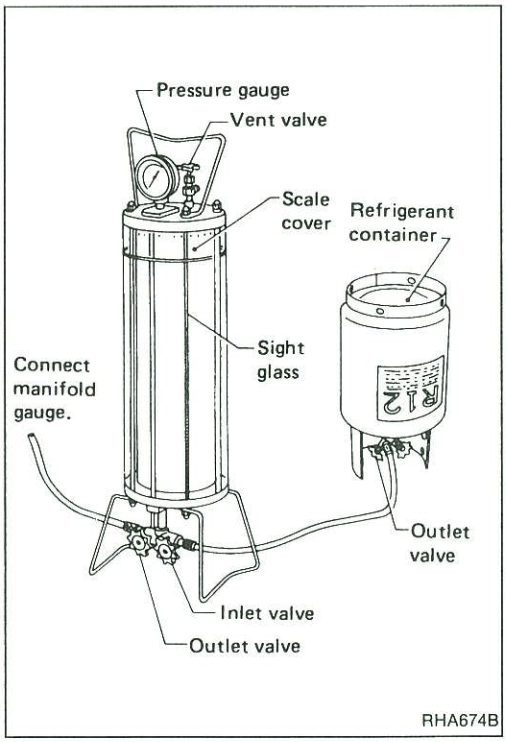


### Charging cylinder

The charging cylinder is used to correctly measure the amount of refrigerant to be charged.

**Features**

- With the charging cylinder, the operator can measure correctly the amount of refrigerant to be charged into the system.
- Change in the refrigerant volume due to a change in temperature and pressure can be supplemented, and this ensures correct charging of refrigerant.

**CAUTION:**

- **Never attempt to carry the charging cylinder containing refrigerant.**
- **Do not put the charging cylinder in a hot place. If the temperature and pressure of the refrigerant in the cylinder increase, the safety valve will be pushed open and the refrigerant will be released into the atmosphere.**
- **Do not expose the cylinder to the direct sunlight.**
- **Do not over-charge the refrigerant so that it exceeds the maximum limit of the cylinder.**
- **Do not charge the cylinder with more refrigerant than is needed.**

## Work Procedure

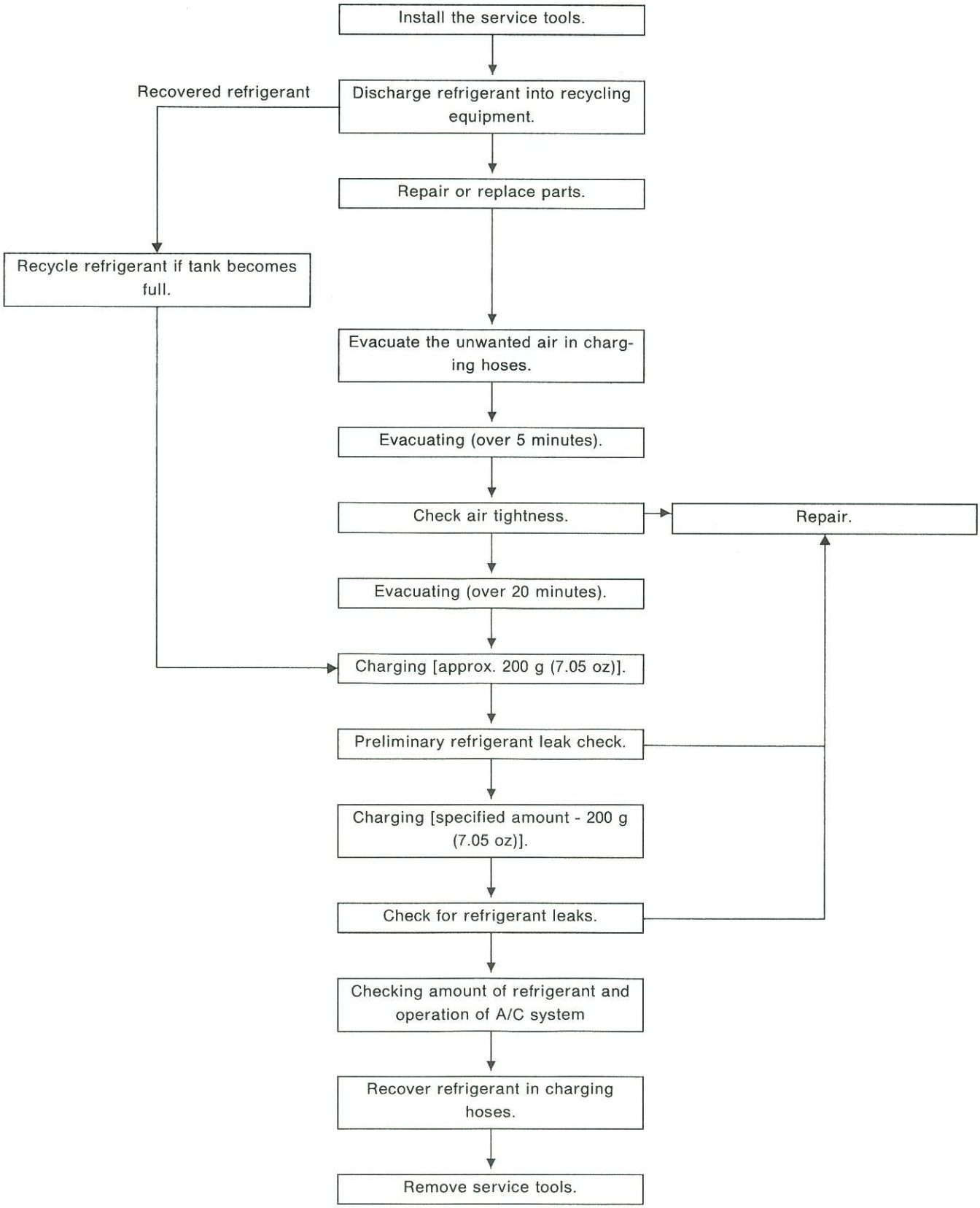

## Setting of Service Tools

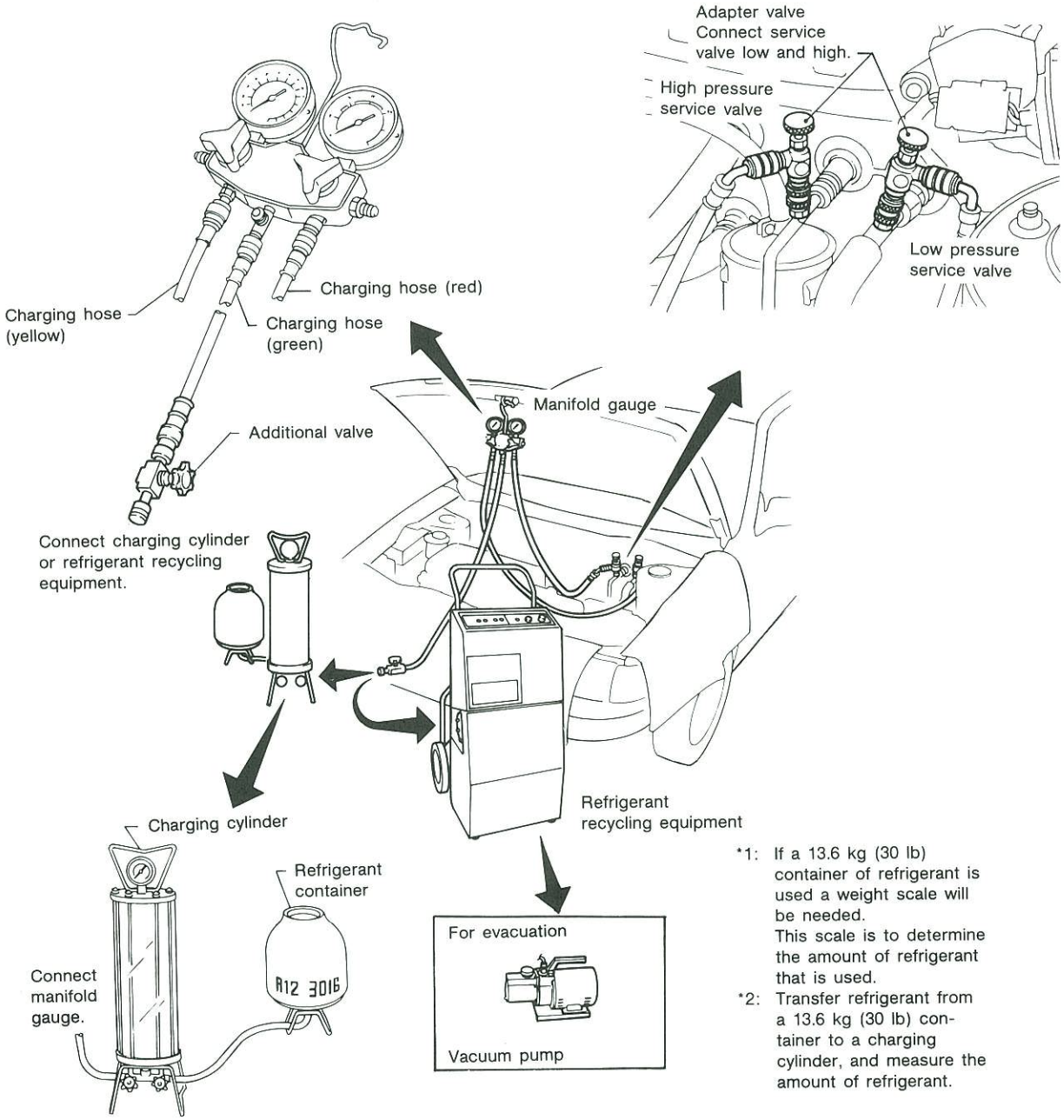


**WARNING:**
**Discharge only into your recycling equipment. Do not release refrigerant into the air.**

## Setting of Service Tools (Cont'd)

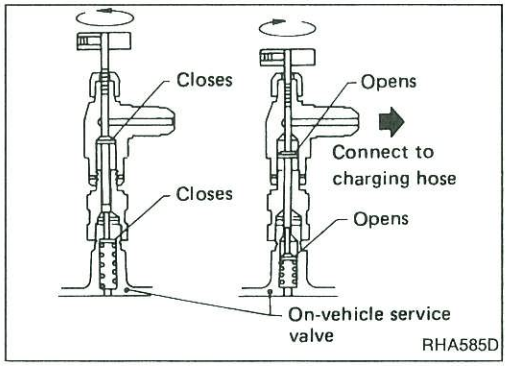


1. Install adapter valve to each of high pressure and low pressure service valves.

**Before connecting adapter valve, turn adapter valve handle fully counterclockwise to retract pin.**

2. Connect charging hoses to adapter valves and connect vacuum hose to vacuum pump.
3. Run vacuum pump and open additional valve and both valves on gauge manifold set.
4. After evacuating unwanted air in gauge set, close additional valve and stop vacuum pump.
5. Disconnect vacuum hose from vacuum pump and connect it to refrigerant recycling equipment.

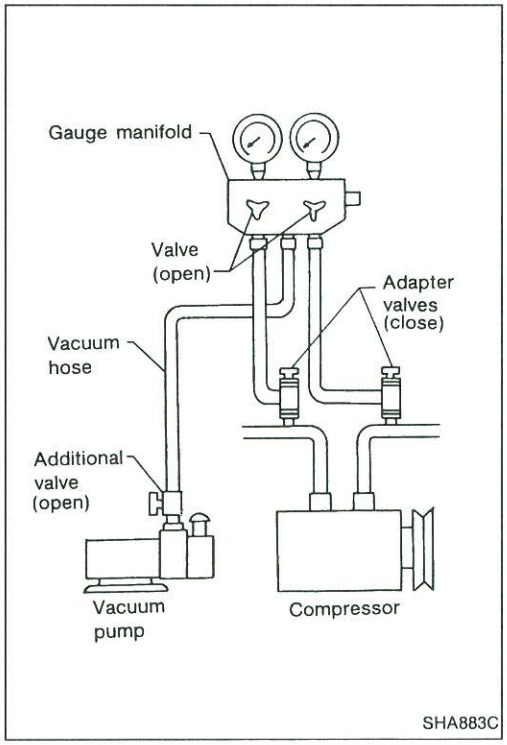


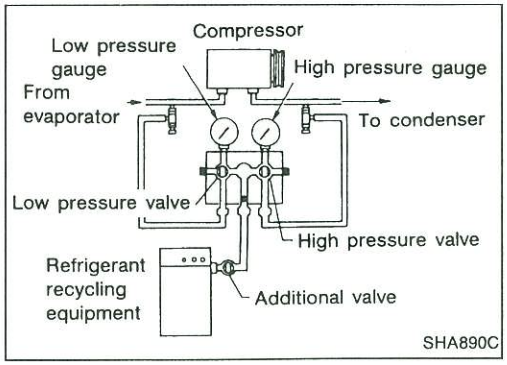


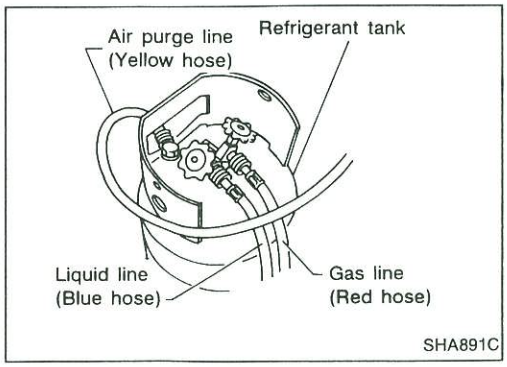


## Discharging

**WARNING:**

**Discharge only into your recycling equipment. Do not release refrigerant into the air.**

**Use only authorized refillable refrigerant tanks for your recycling equipment. Use of other tanks could cause personal injury.**

### REFRIGERANT RECOVERY

1. Connect vacuum hose to refrigerant recycling equipment and open additional valve and adapter valves.
2. Open both valves of manifold gauge set. Make certain refrigerant tank "Gas" and "Liquid" valves are open.
3. Plug unit's power cord into a suitable AC outlet and turn on "Main Power" switch.
4. Turn on "Recovery" switch.
5. Depress "Start" switch. Compressor will start. Compressor will shut off automatically when recovery is complete. Watch for pressure rise to above 0 kPa (0 kg/cm$^2$, 0 psi) within two minutes. If this occurs, repeat this step.

## Discharging (Cont'd)

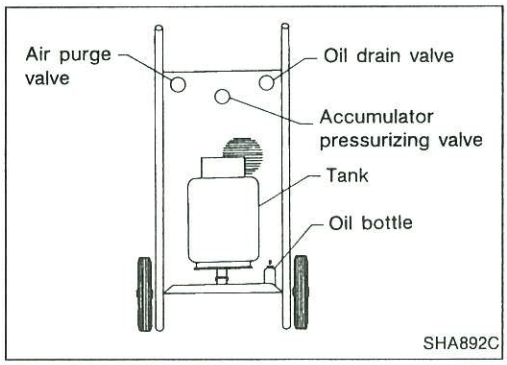


6. To drain A/C system oil accumulator, open "Accumulator Pressurizing" valve for approximately 15 seconds to allow some compressor discharge pressure back into accumulator. Close "Accumulator Pressurizing" valve and open "Oil Drain" valve slowly and drain accumulator. Do not allow accumulator to completely depressurize. When oil stops draining, close "Oil Drain" valve. Be sure to replace oil in A/C system before servicing.
7. Turn off "Recovery" switch.
8. When recovery tank is full, trip switch at the bottom of weight platform will de-energize compressor and "Tank Full" light will come on. Recycle refrigerant in tank before removing.

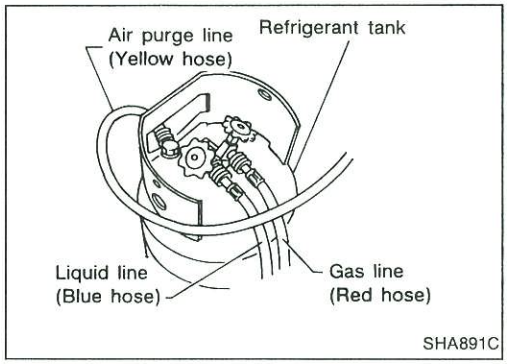


### REFRIGERANT RECYCLING

**The recycling of reclaimed refrigerant is essential in order to assure that the refrigerant which meets the standards is re-used.**

For maximum efficiency, full tanks of recovered refrigerant should be recycled. As required, tanks containing a minimum of 3.6 kg (8 lb) of refrigerant can be recycled.

**For greatest efficiency, recycling full tanks of refrigerant is recommended.**

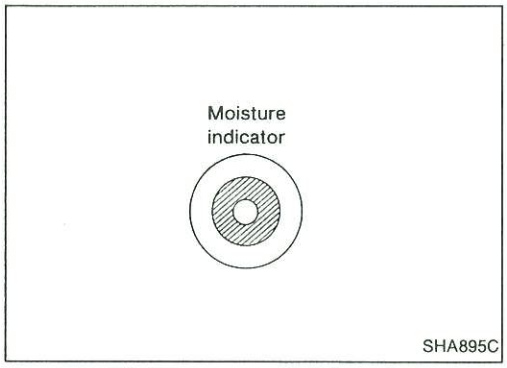


1. Make certain both valves on recovery tank are open.
2. Turn on "Recycling" switch. Recycling solenoid will be energized.
3. Depress start switch. Compressor will start, and "Recycling On" light will come. Refrigerant will be seen going through moisture indicator at start up. The sightglass will not completely fill with refrigerant.
4. Allow the station to operate until moisture indicator turns green. If moisture indicator does not turn green after 40 minutes, remove and replace filter.
5. After recycling for approximately 5 minutes, check air purge indicator. If green pointer on air purge indicator leads red pointer by more than 10 psi (2 small divisions), bleed tank through air purge valve on the back of unit until both pointers are equal. Repeat as necessary.

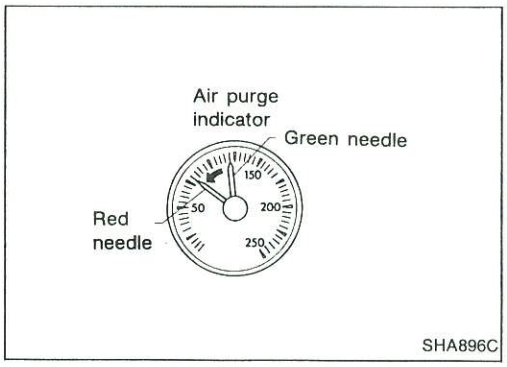


## Evacuation

### EVACUATION PROCEDURE

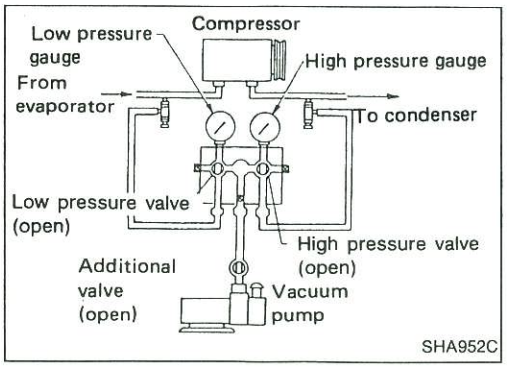


1. Connect vacuum hose to vacuum pump.
2. Open high and low pressure valves of manifold gauge set and additional valve.
3. Run vacuum pump.

## Evacuation (Cont'd)

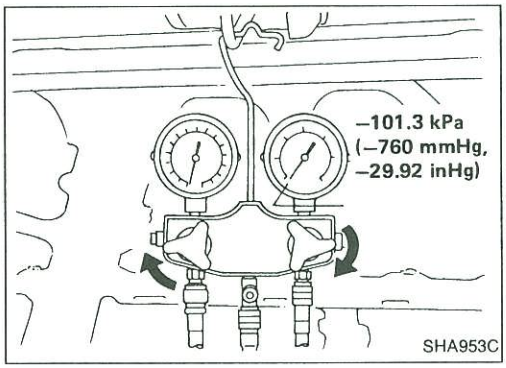


4. Perform evacuation for more than five minutes to stabilize the vacuum inside the system. Check to ensure that the low pressure gauge indicates –98.6 to –101.3 kPa (–740 to –760 mmHg, –29.13 to –29.92 inHg).
5. Shut off the high and low pressure valves and additional valve.

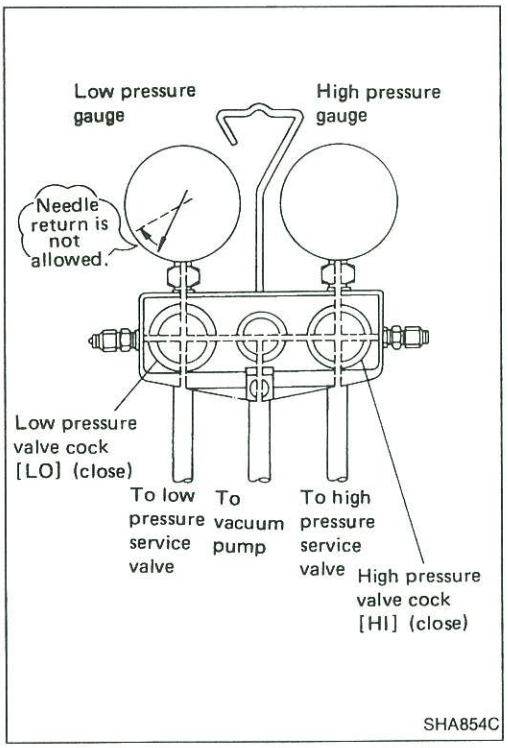


### CHECKING AIRTIGHTNESS

1. Shut off high and low pressure valves and additional valve, and leave the system as it is for 5 to 10 minutes.
2. Make sure that the needle of low pressure gauge will not move back toward the atmospheric pressure side (gauge pressure 0).

**If any reverse movement is noted, it indicates poor system airtightness. Service the system until airtightness is complete. If pressure changes approx. 13.3 kPa (100 mmHg, 3.94 inHg) in 10 minutes, the refrigerant in the system will be exhausted in about one month.**

### EVACUATION

If no abnormality is found during airtightness check, perform evacuation again for more than 20 minutes.

1. Run vacuum pump.
2. Open high and low pressure valve and additional valve.
3. Evacuate for more than 20 minutes.
4. Close high and low pressure valves and additional valve.

## Charging Refrigerant

### SETTING OF CHARGING CYLINDER

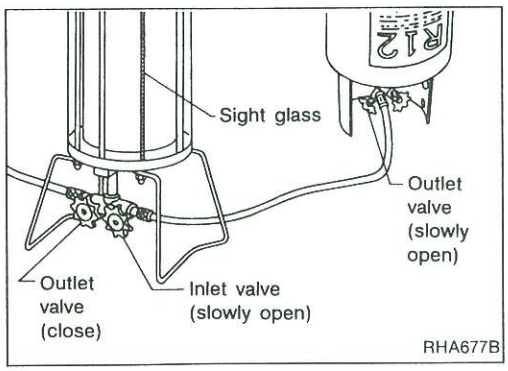


1. Make sure that inlet and outlet valves of charging cylinder are closed.
2. Slowly open liquid line valve of refrigerant tank.
3. Slowly open inlet valve of charging cylinder.

**The refrigerant will flow into the sight glass of charging cylinder as inlet valve is opened.**

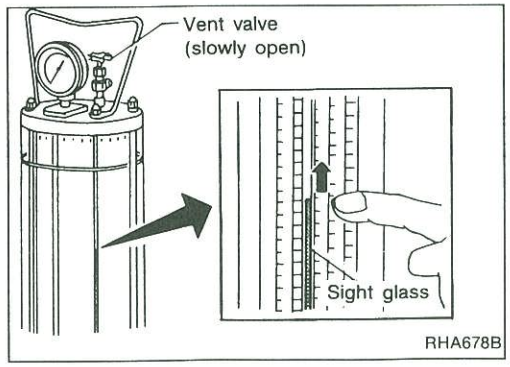


4. Slowly open upper vent valve to release pressure from charging cylinder. While doing so, continue charging until required amount of refrigerant is reached.

**The refrigerant volume changes with temperature and pressure. It is necessary to charge refrigerant with a little more than required amount (indicated on sight glass).**

5. Close inlet valve and upper vent valve of charging cylinder.

## Charging Refrigerant (Cont'd)

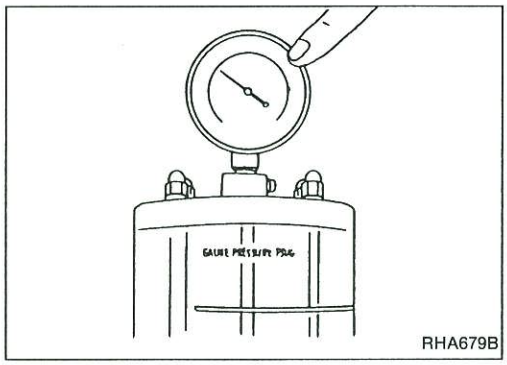
RHA679B

6. Turn on heater switch (charging cylinder is provided with a heater.)

**The refrigerant charging time can be reduced by heating refrigerant to increase its pressure. In this case, do not allow the pressure in cylinder to rise higher than 1,030 kPa (10.5 kg/cm$^2$, 150 psi). (If pressure rises above this level, turn off the heater.) The pressure in the charging cylinder can be measured by upper pressure gauge.**

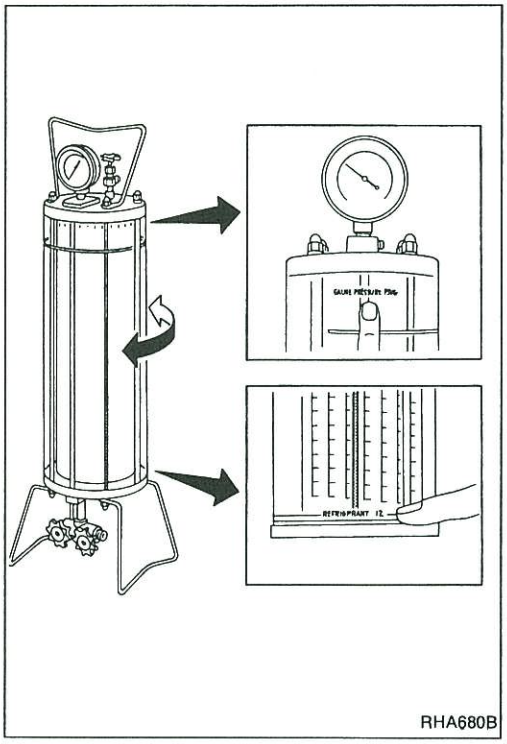
RHA680B

### SETTING OF FLOW METER

1. Rotate charging cylinder main body until scale for R12 is at the correct position on sight glass.
2. Read charging cylinder pressure gauge.
3. Rotate charging cylinder so that scale of charging cylinder agrees with pressure value indicated on pressure gauge.

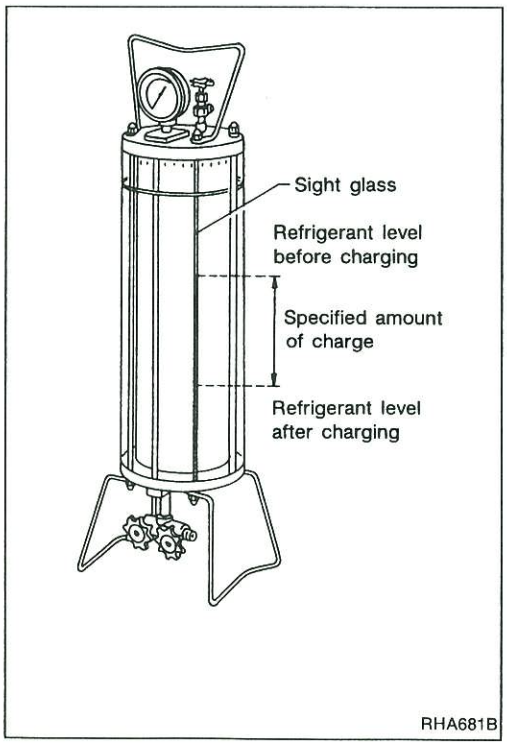

RHA681B

### CALCULATING CHARGING AMOUNT OF REFRIGERANT

1. Record the amount of refrigerant in the sight glass before charging.
2. Subtract the required amount of refrigerant (charge quantity specified for the vehicle) from the amount of refrigerant recorded in step 1. Charge refrigerant into the system until the remaining value equals to the value indicated on the sight glass.

**Example:**

Level in sight glass: 3 lb 8 oz
Charge specification (from Service Manual) 2.0 - 2.4 lb.
Calculate charge quantity into lb and oz as follows: 1 lb = 16 oz, and 0.1 lb = 1.6 oz, so that 2.0 lb = 32 oz, 2.4 lb = 32 + (4 x 1.6) = 32 + 6.4 = 38.4, round off to 38. Therefore our charge quantity will be between 32 and 38 oz, or 2 lb 0 oz to 2 lb 6 oz.
Subtract 2 lb 6 oz from level in sight glass (3 lb 8 oz) = 1 lb 2 oz.
This will be our ending point.

## Charging Refrigerant (Cont'd)

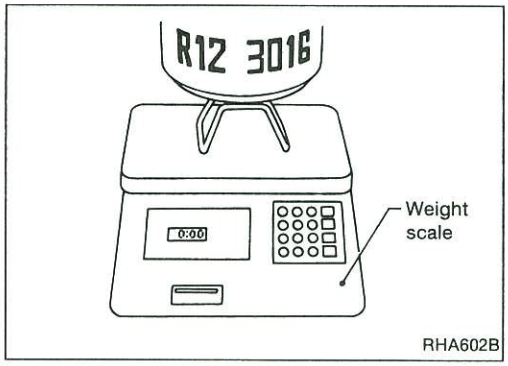


If a flow meter is not available, the amount of charged refrigerant also can be determined by subtracting the weight of the container measured after charging from its weight measured before charging.

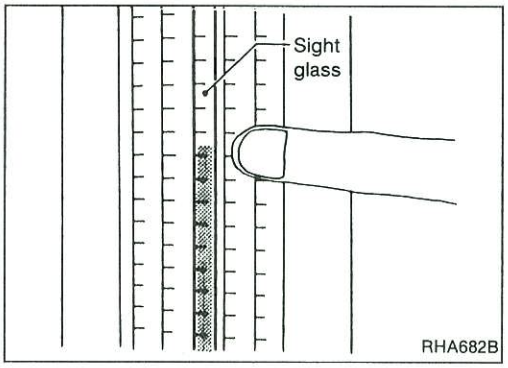


### PRELIMINARY CHARGING OF REFRIGERANT

1. Open outlet valve of charging cylinder.
2. Slowly open high pressure side valve of manifold gauge to charge refrigerant from the high pressure side.
3. Close high pressure valve after charging approx. 200 g (7.05 oz) refrigerant.

**CAUTION:**

**The refrigerant in charging cylinder is kept in liquid state, so the refrigerant should be charged from high pressure side. Do not start engine with high pressure valve kept open.**

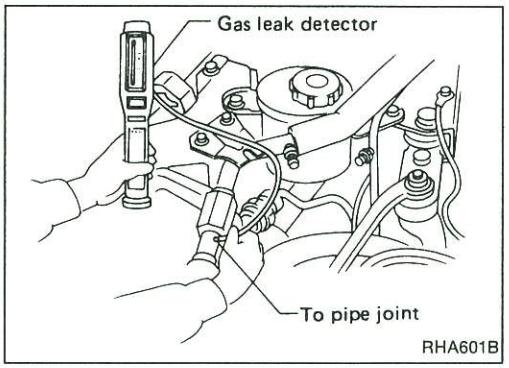


### PRELIMINARY CHECK FOR REFRIGERANT LEAKS

1. Make sure that the gauge manifold valve is closed.
2. Check for refrigerant leak from each connector in the system using the leak detector.

**At this point, the pressure in the system is not high. Only large amounts of refrigerant leak due to loose pipe joints, etc. can be detected.**

### CHARGING REFRIGERANT

1. Slowly open high pressure valve of manifold gauge, and charge calculated amount of refrigerant in "CALCULATING CHARGING AMOUNT OF REFRIGERANT".

**CAUTION:**

**The refrigerant in charging cylinder is kept in liquid state, so the refrigerant should be charged from high pressure side. Do not start engine with high pressure valve kept open.**

2. Close high pressure valve of manifold gauge.
3. Make sure that the calculated amount of refrigerant remains in sight glass.
4. Close charging cylinder outlet valve.
5. Turn off heater if it is on (when using heater equipped type).

## Inspection for Refrigerant Leaks

### WORK PROCEDURE

To facilitate inspection for refrigerant leaks, establish the following conditions:

- Start engine.
- Run air conditioner.
- Set blower fan control to MAX.
- Set temperature control to FULL COLD.
- Run the refrigerant system for more than 5 minutes after setting the above-mentioned conditions (to circulate refrigerant through the system).

## Inspection for Refrigerant Leaks (Cont'd)

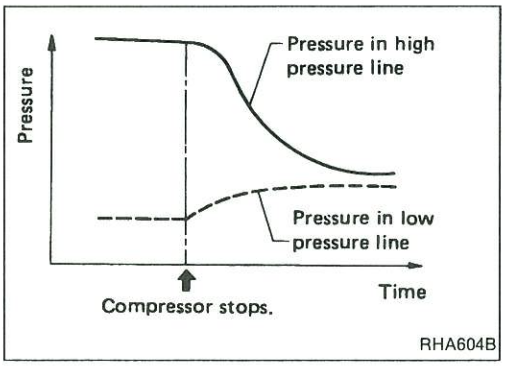


**Refrigerant leaks should be checked immediately after stopping engine, beginning with high pressure line, using a gas leak detector. This is because the pressure in high pressure line drops gradually after refrigerant circulation stops while the pressure in low pressure line rises gradually as shown in the graph at left. Leaks can be detected easily when pressure is high.**

**To prevent detecting errors, make sure that there is no refrigerant vapor or tobacco smoke in the vicinity of vehicle. It is also necessary to shield vehicle from wind so that leaking refrigerant is not blown away.**

### INSPECTION POINTS

Check carefully each of tube joints. To check, wipe the portion to be checked with waste cloth, and move tester probe all around the joint.

**Compressor**

Check shaft seals and bolt holes, and also around magnet clutch.

**Liquid tank**

Check pressure valve, safety valve and fusible plug mounts.

**Service valve**

Check all around service valves.
Ensure that valve core is not loose.
Service valve caps must be attached to valves (to prevent leak).
Also check that there are no foreign objects inside the cap.

**Inside of cooling unit**

To check, insert leak tester probe into drain hose immediately after stopping engine. (Keep probe inserted for more than 10 seconds.)

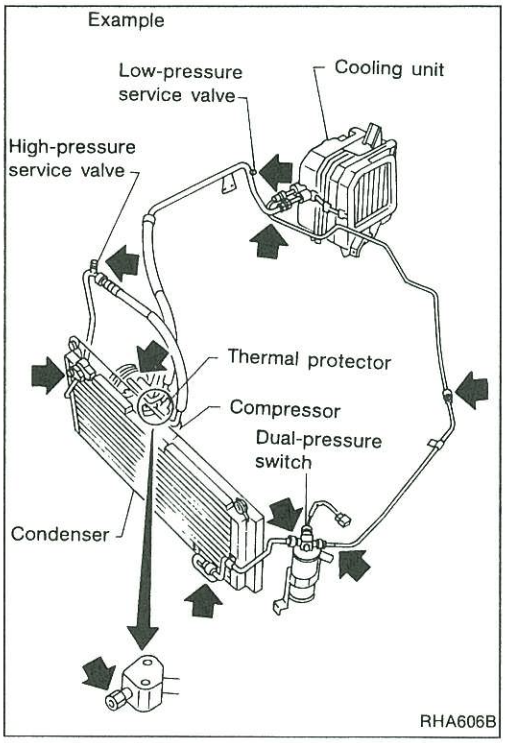


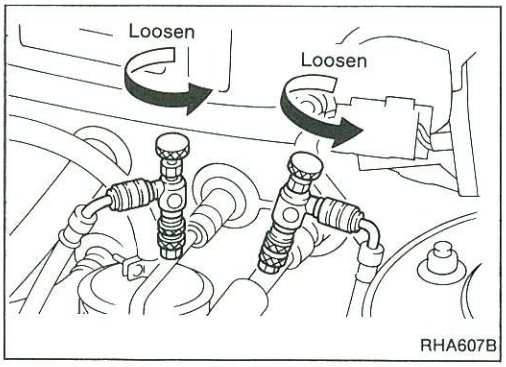


## Removal of Service Tools

1. Completely loosen adapter valve of low pressure and high pressure lines.
2. Close additional valve and remove hose from charging cylinder .
3. Connect center hose to refrigerant recycling equipment.
4. Open additional valve and both valves on gauge manifold.
5. Capture refrigerant in charging system.
6. After recovering refrigerant,remove adapter valves from on-car service valves.

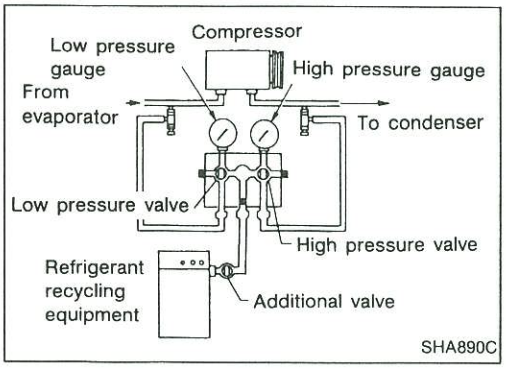

## Sight Glass Inspection for System

As previously stated, the inspection characteristics of the sight glass on a system equipped with the V-5 compressor are different from a system using a fixed displacement compressor. Refer to the information below:

**Inspection conditions**

1. Operate the engine at approximately 1,500 rpm.
2. Open the door windows.
3. Set the fan switch to the "MAX" position.
4. Turn the air conditioner switch "ON".
5. Ensure that compressor discharge pressure is at least 588 kPa (6 kg/cm$^2$, 85 psi).

**When discharge pressure does not reach 588 kPa (6 kg/cm$^2$, 85 psi) in areas where outside air temperature is low, proceed as follows:**

- Set the TEMP. LEVER to the "full-hot" position.
- Set the intake lever/switch to the recirculation position.
- Close the door windows completely.
- Increase the compartment temperature so that discharge pressure reaches at least 588 kPa (6 kg/cm$^2$, 85 psi).

### WORK PROCEDURE

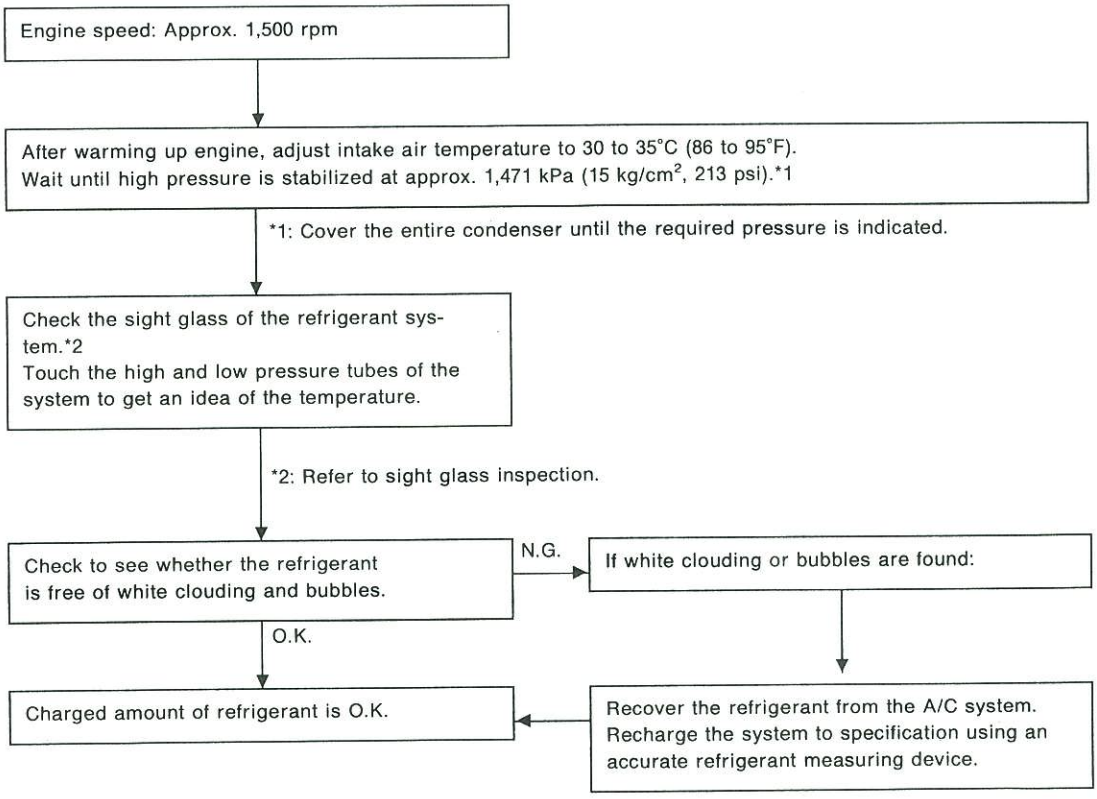

## Sight Glass Inspection for System (Cont'd)

### Refrigerant charge amount checking

Check the refrigerant charge amount using the following table as a guide.

| Item to check | Adequate | Insufficient | Almost no refrigerant | Too much refrigerant |
|---|---|---|---|---|
| State in sight glass | CLEAR<br>Air bubbles sometimes appear when engine speed is increased or decreased.<br> 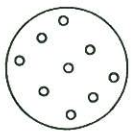 | FOAMY or BUBBLY<br>Air bubbles always appear.<br> 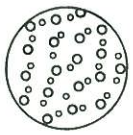 | FROSTY<br>Frost appears.<br> 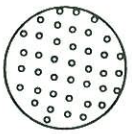 | NO FOAM<br>No air bubbles appear.<br> |
| Temperature of high and low pressure lines | High-pressure side is hot while low-pressure side is cold. (A big temperature difference between high and low-pressure side.) | High-pressure side is warm and low-pressure side is slightly cold. (Not so large a temperature difference between high and low-pressure side.) | There is almost no temperature difference between high and low-pressure side. | High-pressure is hot and low-pressure side is slightly warm. (Slight temperature difference between high and low-pressure side.) |
| Pressure of system | Both pressures on high and low-pressure sides are normal. | Both pressures on high and low-pressure sides are slightly low. | High-pressure side is abnormally low. | Both pressure on high and low-pressure sides are abnormally high. |

RHA264B

**Note: The condition of the bubbles in the sight glass, temperatures, and pressure are affected by ambient temperature and relative humidity.**

**CAUTION:**
**The condition of bubbles seen through the sight glass as well as the intake and discharge pressures are influenced by the ambient temperature, wind velocity, weather, and by the air temperature in front of the condenser, etc.**

## Refrigerant Lines

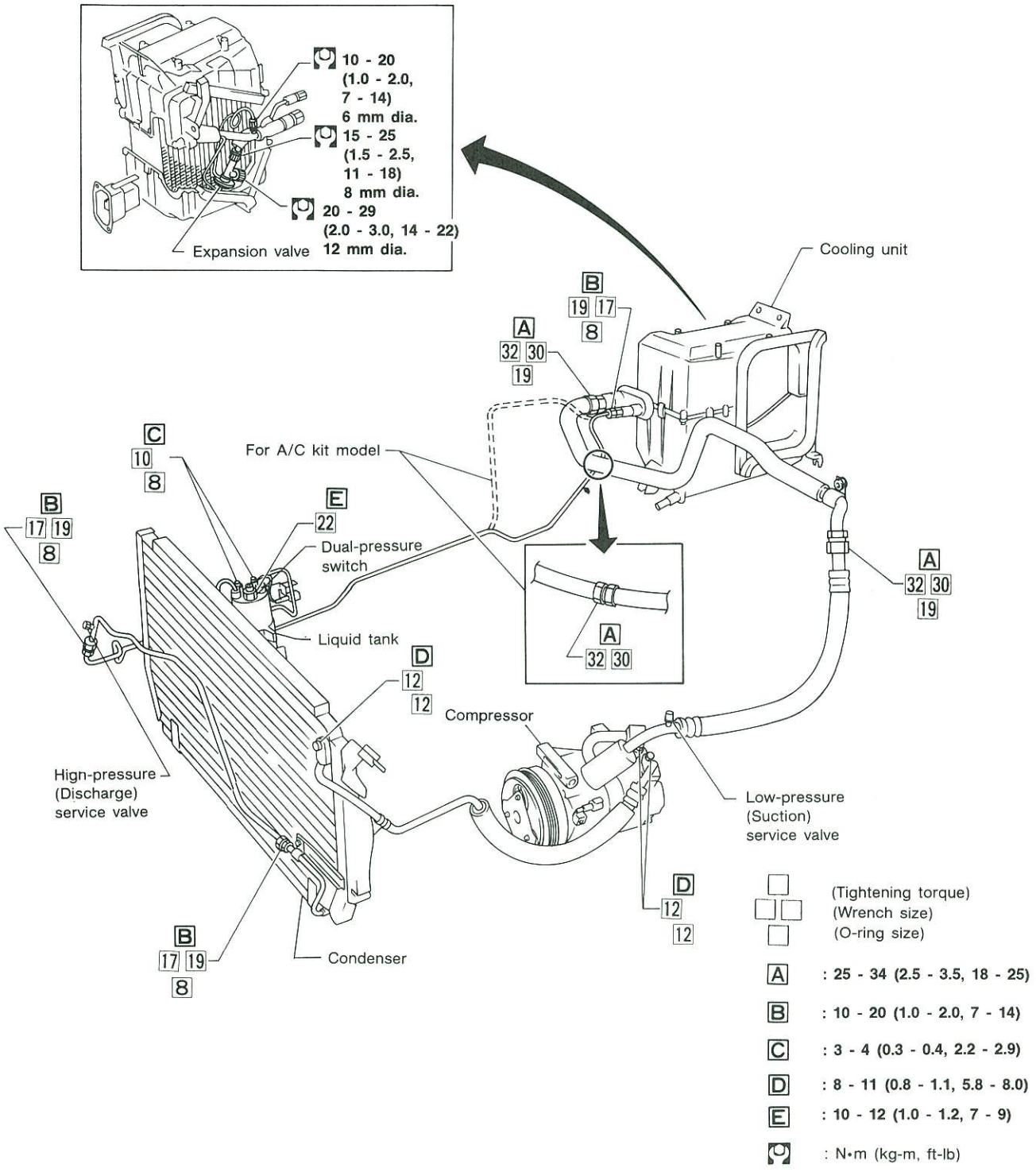


SHA046D

## Compressor Mounting

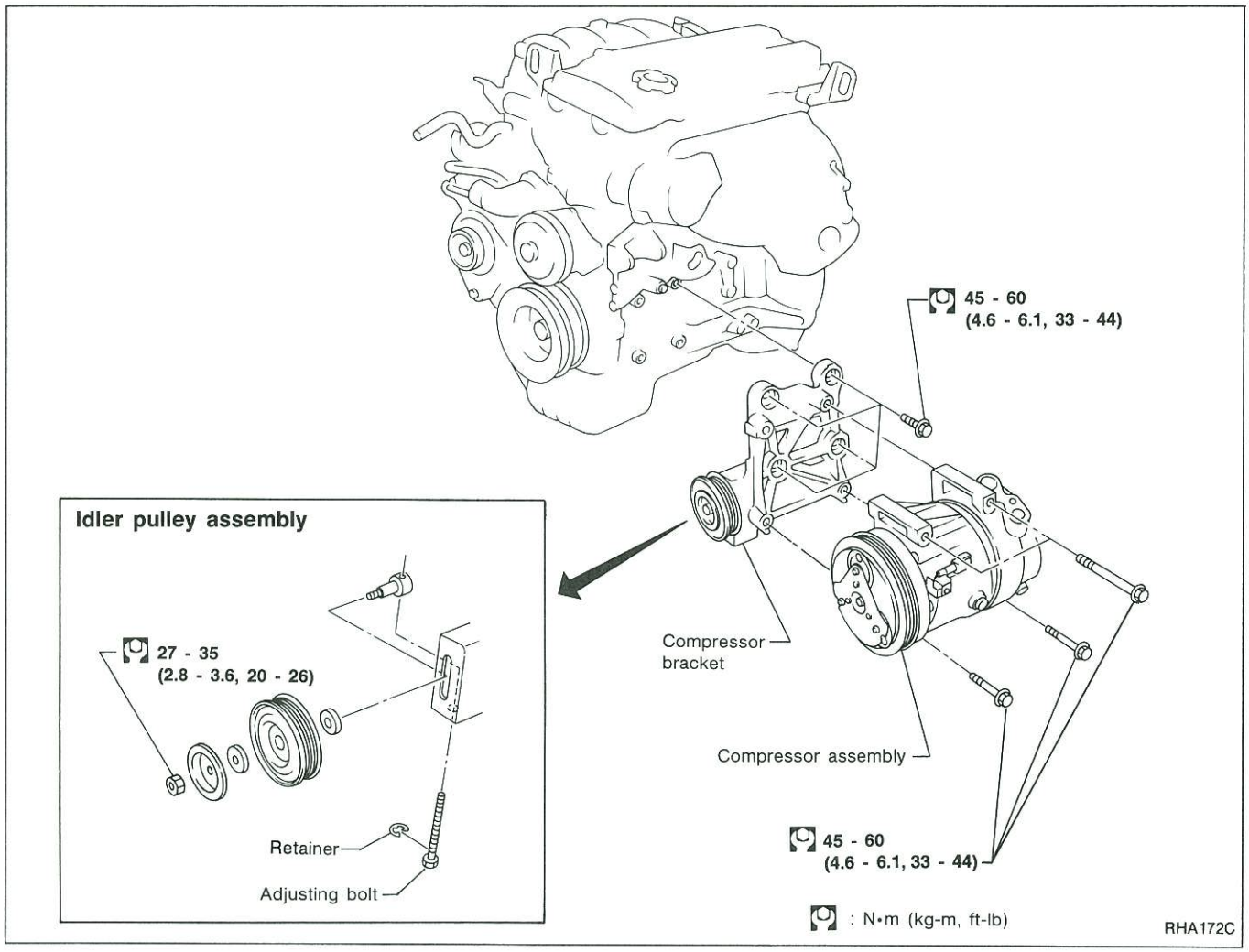


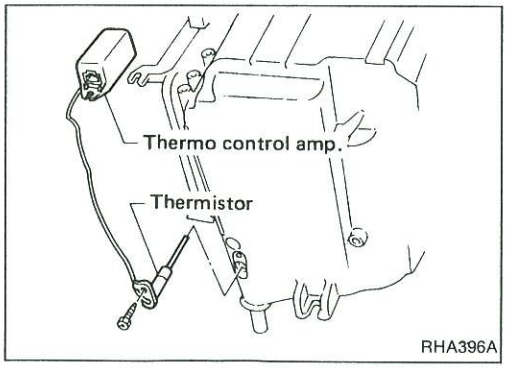


## Thermo Control Amp.

### REPLACEMENT

Remove screws, which secure thermistor locating stay, from front of cooling unit. Replace thermo control amp. assembly with a new one. (Without removing cooling unit, thermo control amp. can be replace.)

## Belt Tension

- **Refer to MA section.**

## Fast Idle Control Device (F.I.C.D.)

- **Refer to EF & EC section.**

## Condenser and Condenser Fan Motor

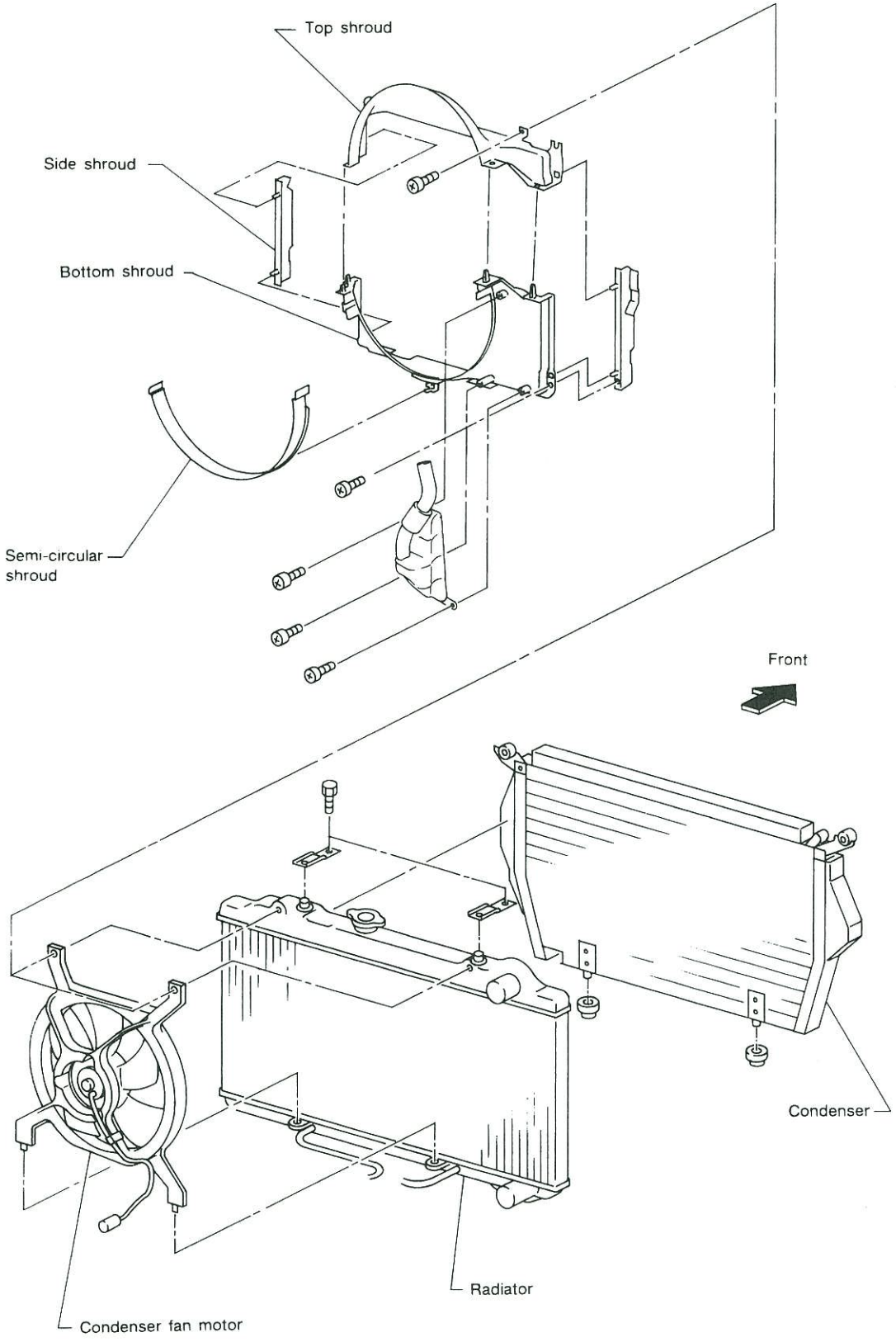


RHA173C

## Condenser and Condenser Fan Motor (Cont'd)

### REMOVAL

1. Remove engine air inlet duct.
2. Remove air filter assembly.
3. Remove radiator top mounting bracket.
4. Remove harness clips from top shroud.
5. Move vacuum hoses and harness behind the back edge of shroud.
6. Remove radiator reservoir hose.
7. Remove undercover.

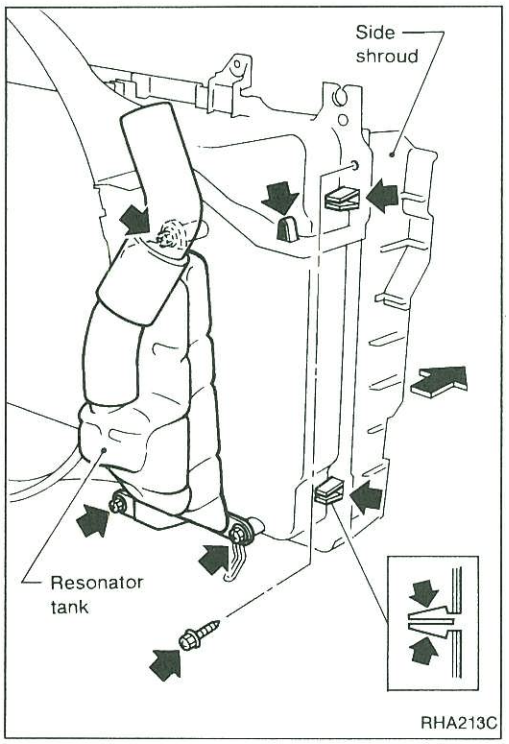


8. Remove the two bottom shroud mounting screws.
9. Remove the two top shroud mounting screws.
10. Disassemble top shroud from bottom shroud (two clips each side), and from side shroud pieces (one clip each side), then remove top shroud.
11. Remove resonator tank from bottom shroud.
12. Disassemble side shroud pieces from bottom shroud (one clip each side) and remove the two side shroud pieces.
13. Disconnect condenser fan motor harness connector.
14. Remove condenser fan motor from bottom of radiator.

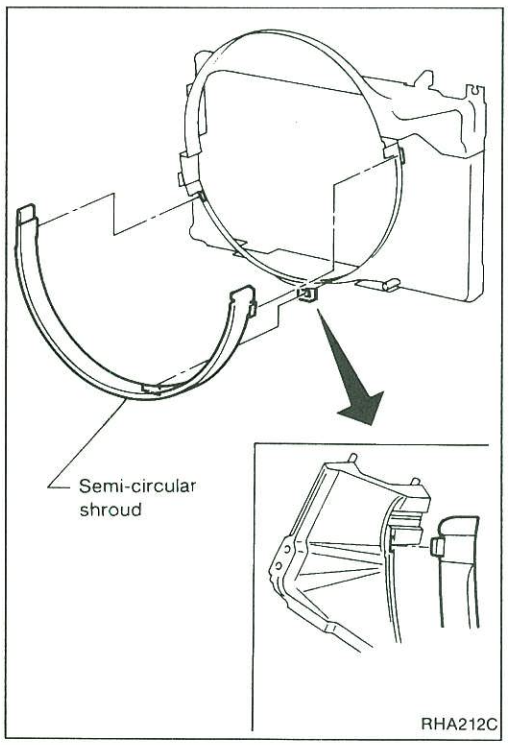


15. Unhoock (by pressing on the tabs) and remove narrow semi- circle lower part of shroud.
16. Remove bottom shroud.

**CAUTION:**
**Be careful not to damage radiator.**

## Condenser and Condenser Fan Motor (Cont'd)

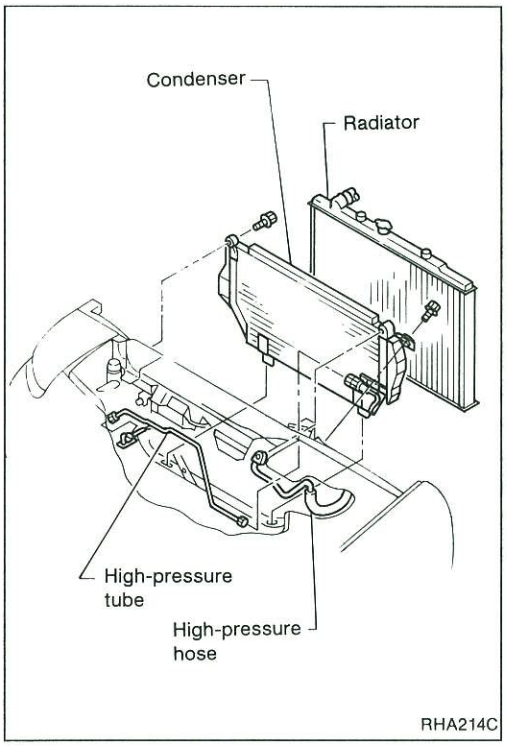


17. Disconnect high pressure tube from condenser outlet tube.
18. Disconnect high pressure hose from condenser.
19. Remove condenser mounting bolts.
20. Push top of radiator back toward engine.
21. Remove condenser assembly.

**CAUTION:**

**Be careful not to damage condenser.**

## Lubrication oil

**SUNISO 5GS or equivalent**

## Maintenance of Oil Quantity in Compressor

The oil used to lubricate the compressor circulates through the system with the refrigerant. Whenever any component of the system is replaced or a large amount of gas leakage occurs, add oil to the compressor to maintain the specified amount.
If oil quantity is not maintained properly, the following malfunctions may result:

- Lack of oil: May lead to a seized compressor
- Excessive oil: Inadequate cooling (thermal exchange impeded)

## Checking and Adjusting

Adjust the oil quantity according to the flowchart shown below.

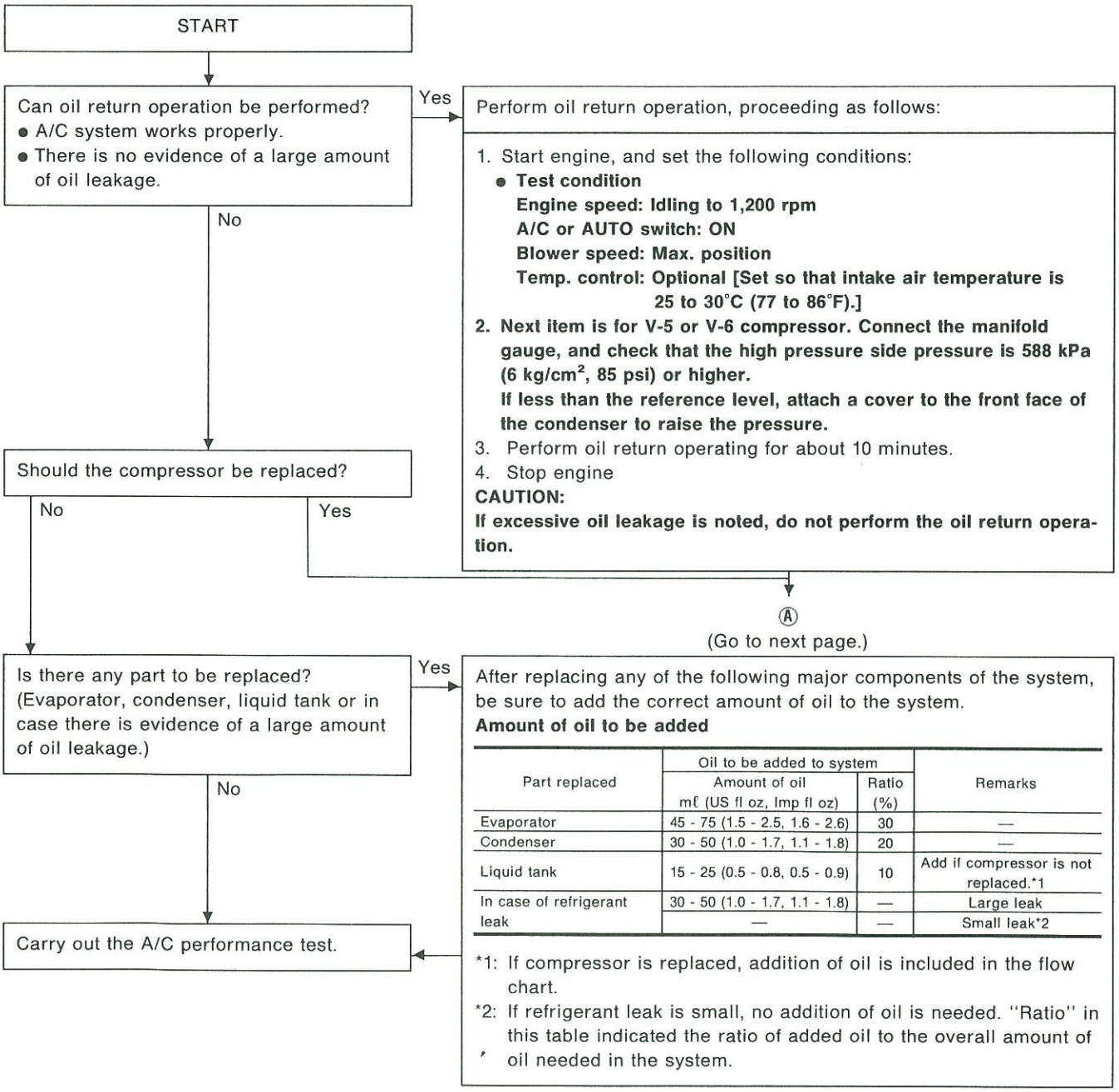


| Part replaced | Oil to be added to system | | Remarks |
|---|---|---|---|
| | Amount of oil mℓ (US fl oz, Imp fl oz) | Ratio (%) | |
| Evaporator | 45 - 75 (1.5 - 2.5, 1.6 - 2.6) | 30 | — |
| Condenser | 30 - 50 (1.0 - 1.7, 1.1 - 1.8) | 20 | — |
| Liquid tank | 15 - 25 (0.5 - 0.8, 0.5 - 0.9) | 10 | Add if compressor is not replaced.*1 |
| In case of refrigerant leak | 30 - 50 (1.0 - 1.7, 1.1 - 1.8) | — | Large leak |
| | — | — | Small leak*2 |

*1: If compressor is replaced, addition of oil is included in the flow chart.
*2: If refrigerant leak is small, no addition of oil is needed. "Ratio" in this table indicated the ratio of added oil to the overall amount of oil needed in the system.

## Checking and Adjusting (Cont'd)

Ⓐ

1. Discharge refrigerant into the refrigerant recovery/recycling equipment. Measure oil discharged into the recovery/recycling equipment.
2. Remove the drain plug (for V-5, V-6 or DKS-16H compressor) and drain the oil from the "old" (removed) compressor into a graduated container, and record the amount of oil drained.
3. Remove the drain plug and drain the oil from the "new" compressor into a separate, clean container.
4. Measure an amount of the new oil equivalent to that drained from the "old" compressor, and add this oil to the "new" compressor through the drain plug or suction port opening.
5. Measure an amount of the "new" oil equivalent to that recovered during discharging, and add this oil to the "new" compressor through the drain plug or suction port opening.
6. Torque the drain plug.
   **V-5 or V-6 compressor: 18 - 19 N·m (1.8 - 1.9 kg-m, 13 - 14 ft-lb)**
   **DKS-16H compressor: 14 - 16 N·m (1.4 - 1.6 kg-m, 10 - 12 ft-lb)**
7. If the liquid tank also needs to be replaced, add an additional 20 mℓ (0.7 US fl oz, 0.7 Imp fl oz) of oil at this time.
   **Do not add this 20 mℓ (0.7 US fl oz, 0.7 Imp fl oz) of oil if only replacing the compressor.**

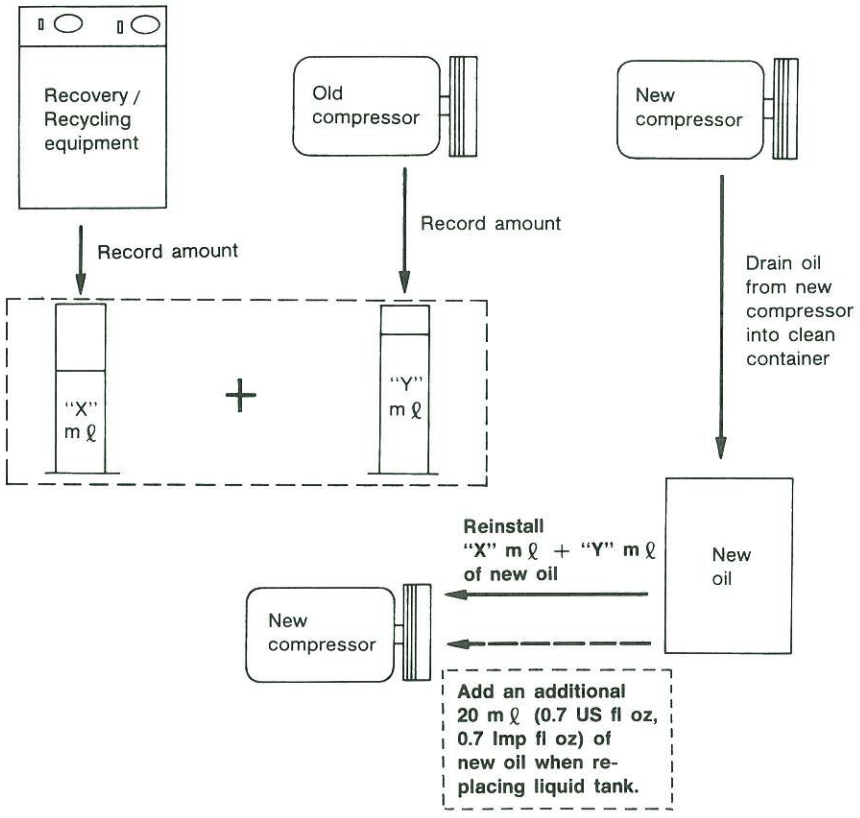


SHA856D

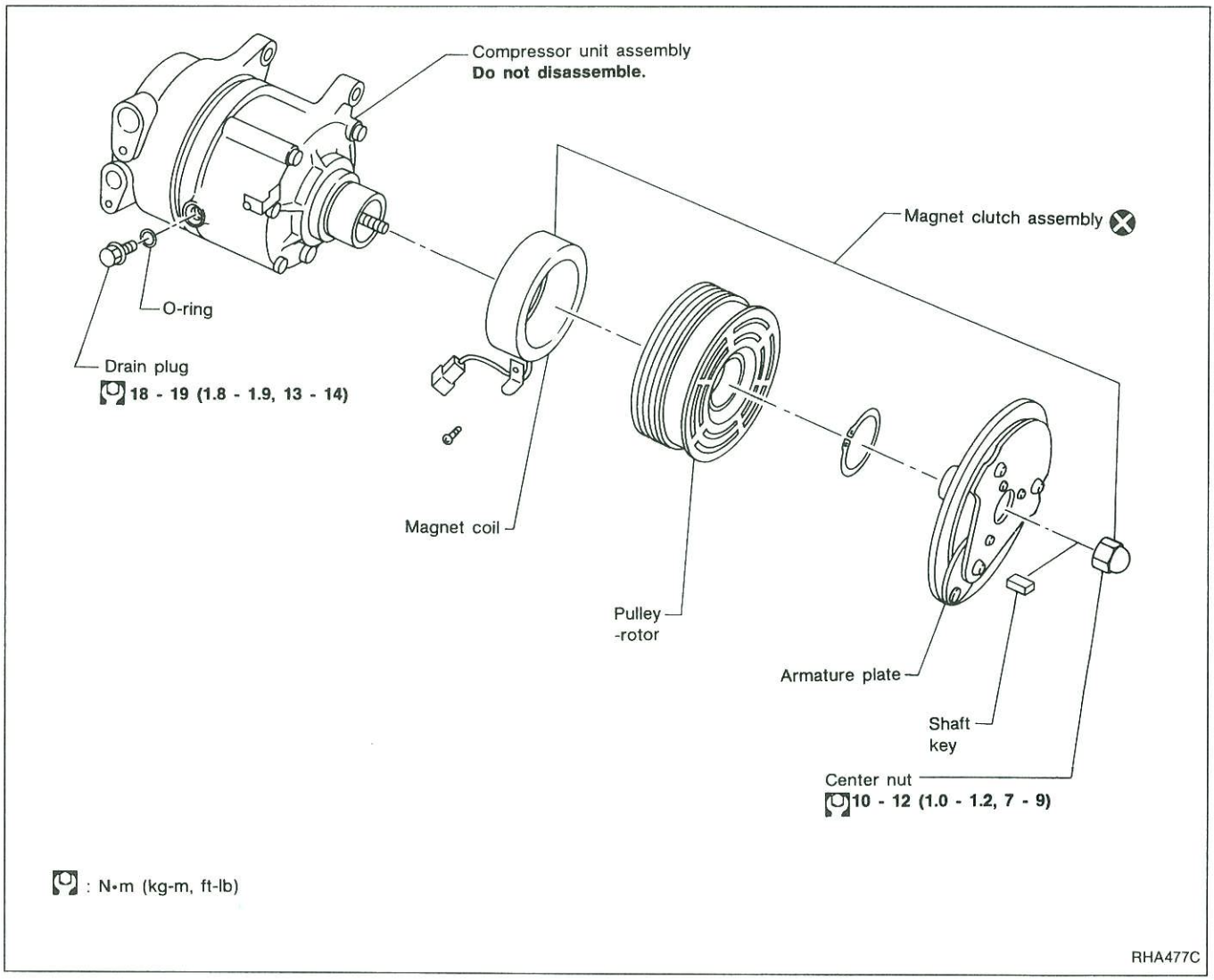


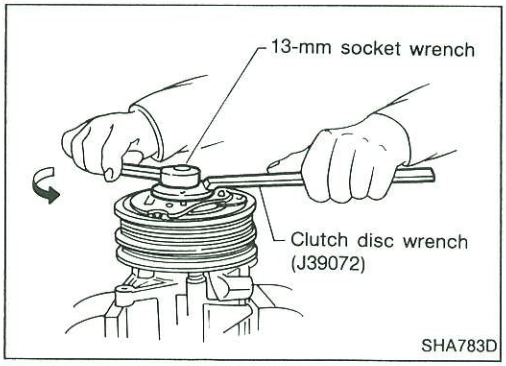


## Removing Magnet Clutch Assembly

- Remove center nut while holding armature plate with clutch disc wrench.

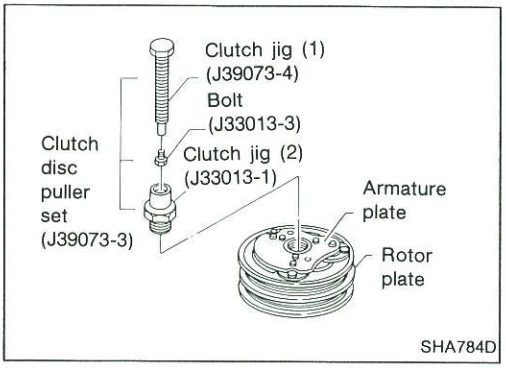


- Install jigs in the sequence shown, and tighten clutch jig (1) while holding clutch jig (2) with wrench. This will cause armature plate to be removed.

**Fit a bolt to the tip of the clutch jig, and attach the jig to the clutch.**

## Removing Magnet Clutch Assembly (Cont'd)

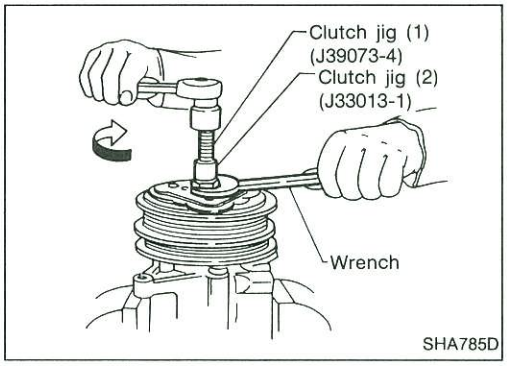


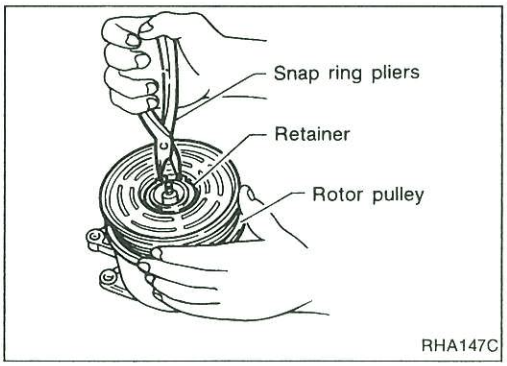


- Remove retainer using snap ring pliers.

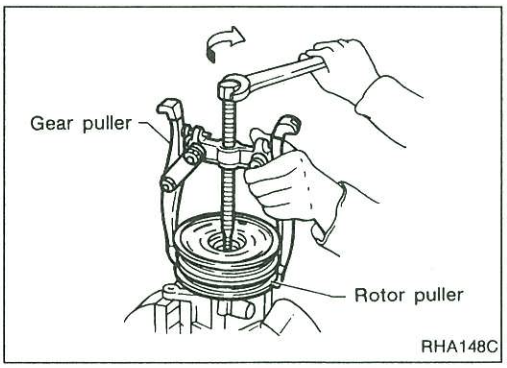


- Remove pulley using gear puller.

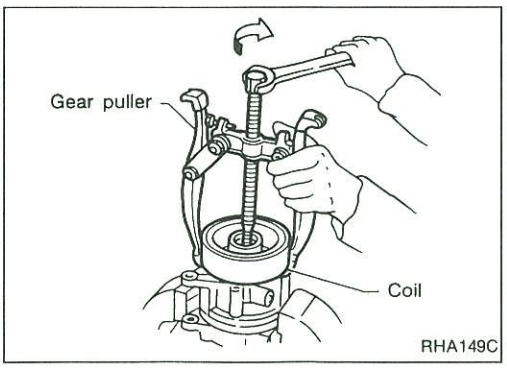


- Remove lead wire fixing screw, and remove coil.

**When removing the coil, pay attention so as not to damage the lead and grounding wire with gear puller jaws.**

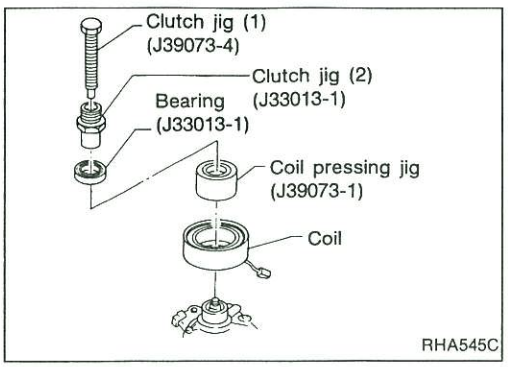


## Installation of Magnet Clutch Assembly

- Remove bolt from the tip of the clutch jig (1), and attach jigs in the sequence shown.

**Tighten clutch jig (1) to shaft securely.**

## Installation of Magnet Clutch Assembly (Cont'd)

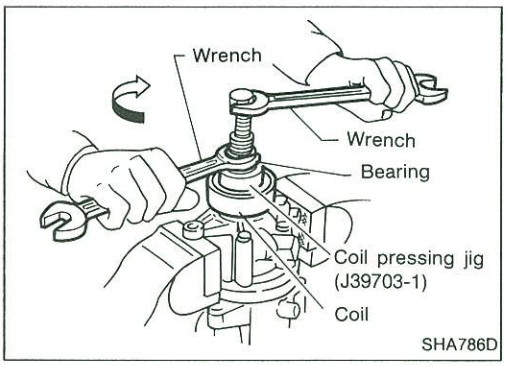


- Press fit the coil into compressor main body by tightening clutch jig (2) while holding clutch jig (1) with wrench.

**Arrange coil lead and lead (connector) of compressor on the same side before press fitting the coil.**

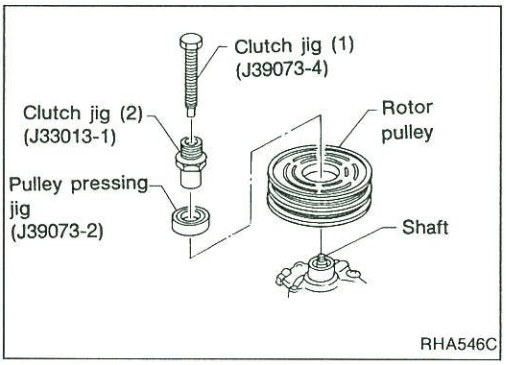


- Install jigs in the sequence shown.

**Tighten clutch jig (1) to shaft.**

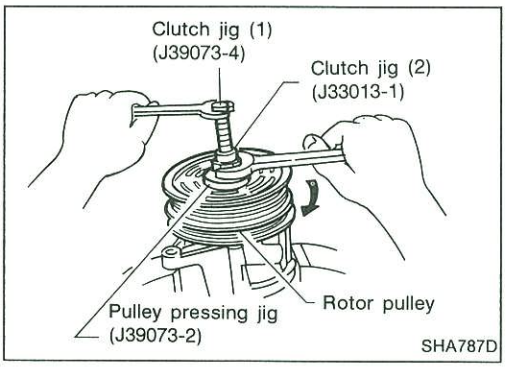


- Press fit the rotor pulley by tightening clutch jig (2) while holding clutch jig (1) with wrench.

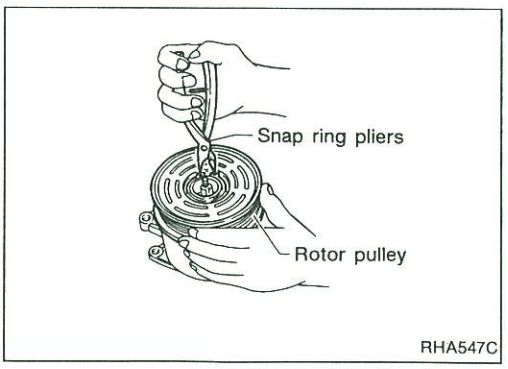


- Fit retainer using snap ring pliers.
- **Do not reuse retainer. Be sure to use a new one.**
- **Pay attention so as not to damage the bearing seal when fitting the retainer.**
- **Fit the retainer with its taper facing up.**

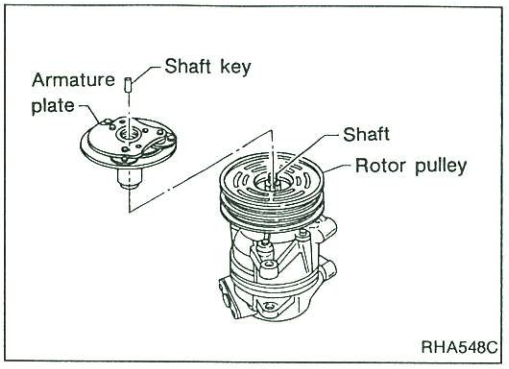


- Insert shaft key by aligning shaft key groove with groove of armature plate.

**Do not reuse a shaft key. Be sure to use a new one.**

## Installation of Magnet Clutch Assembly (Cont'd)

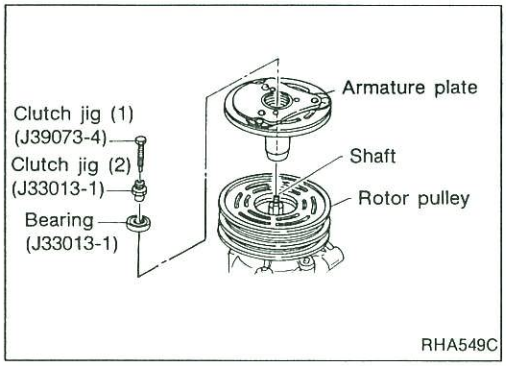


- Install jigs in the sequence shown. Press fit armature plate while observing the gap from rotor pulley. To press fit, tighten clutch jig (2) while holding clutch jig (1) with wrench.

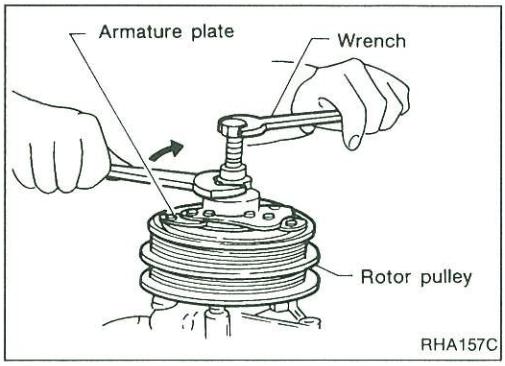


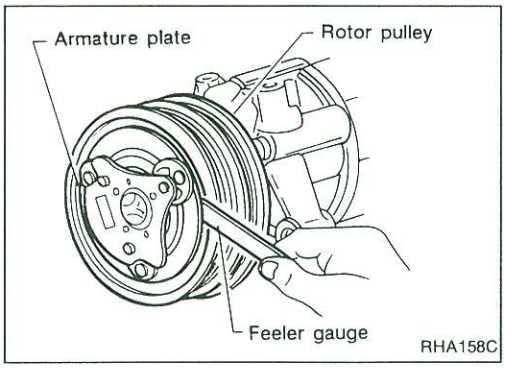


**Standard gap: 0.3 - 0.6 mm (0.012 - 0.024 in)**

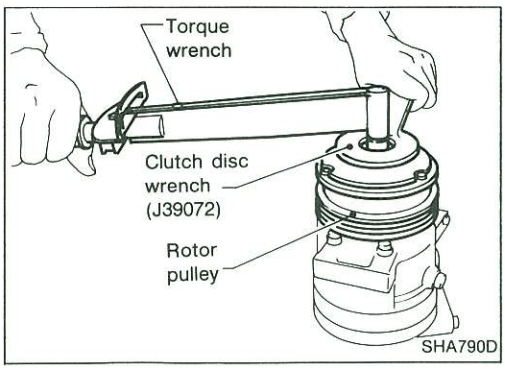


- Install center nut using clutch disc wrench.

**Do not reuse the nut. Be sure to use a new one.**

**Nut tightening torque:**

**[O]: 0.10 - 0.12 N·m**

**(1.0 - 1.2 kg-cm, 0.87 - 1.04 in-lb)**

**After assembling, rotate rotor pulley by hand, and check for smooth rotation without interference noise.**

- Operation check procedure:
  Apply battery voltage to magnet clutch coil, and check several times for normal clutch ON/OFF operation.
- Rotate compressor shaft more than five turns in both directions by hand to equalize oil distribution inside compressor, then run compressor for about one hour by idling engine.

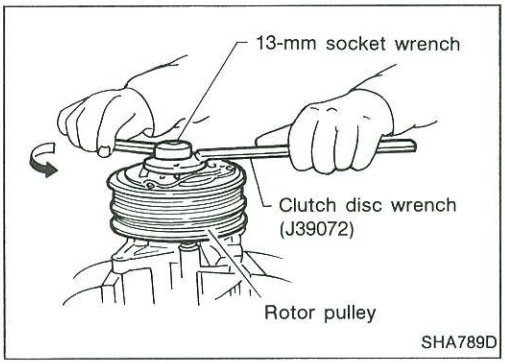


## Gap Adjusting Procedure

### WHEN GAP IS LARGE

- Remove center nut while holding armature plate.

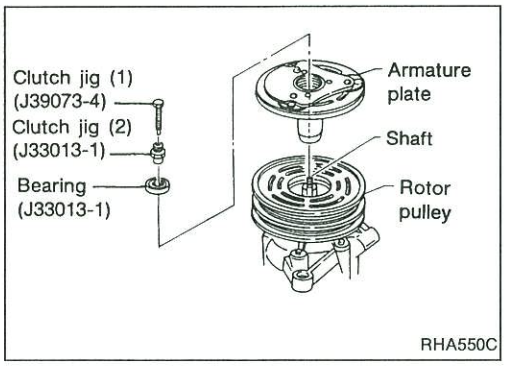


- Install clutch jigs in the sequence shown.

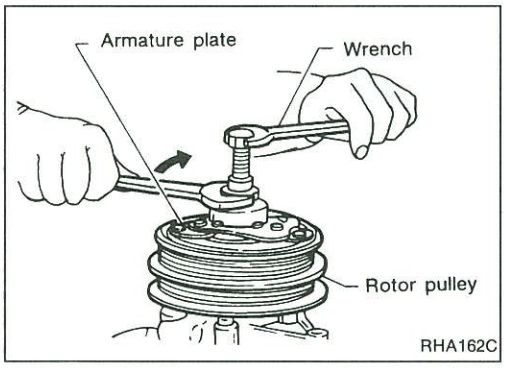


- Press fit the armature plate by tightening clutch jig (2) while holding clutch jig (1) with wrench.

**Tighten clutch jig (1) into shaft.**

- Measure the gap again.
  After achieving the specified gap, install center nut using clutch disc wrench.

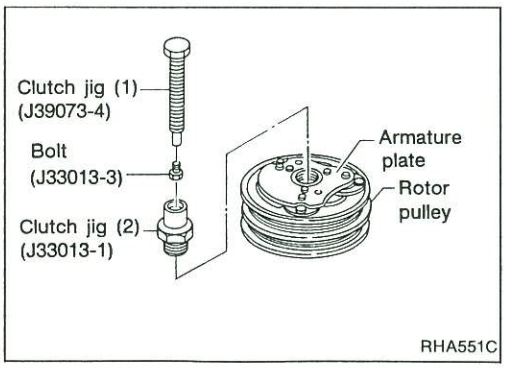


### WHEN GAP IS SMALL

- Install jigs as shown.

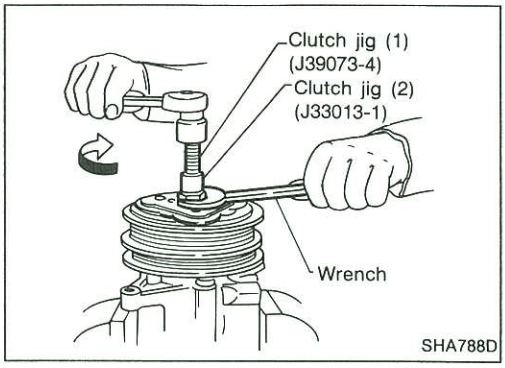


- Expand the gap by lifting up armature plate. To lift up armature plate, tighten clutch jig (1) while holding clutch jig (2) with wrench.

**Center nut need not be removed when expanding the gap.**

## How to Perform Trouble Diagnoses for Quick and Accurate Repair

### WORK FLOW

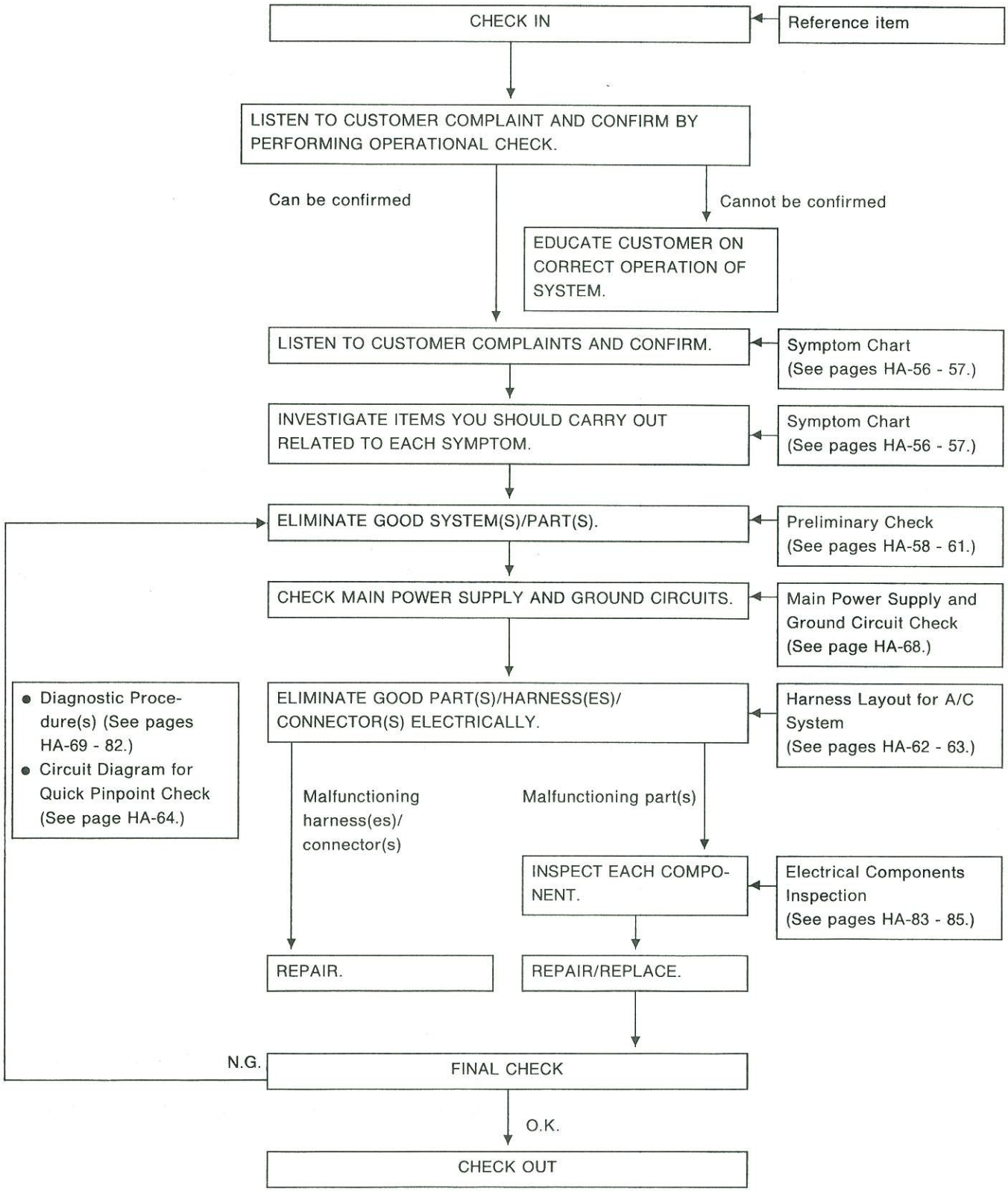

## Operational Check

The purpose of the operational check is to confirm that the system operates as it should. The systems which are checked are the blower, mode (discharge air), intake air, temperature decrease, temperature increase.

**CONDITIONS:**

**Engine running at normal operating temperature.**

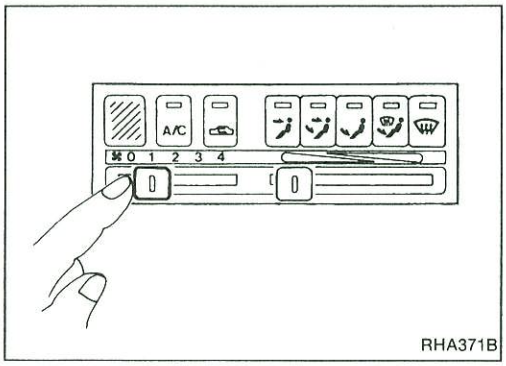

RHA371B

**PROCEDURE:**

### 1. Check blower

1) Slide Fan lever to 1-speed.
   Blower should operate on 1-speed.
2) Then slide Fan Lever to 2-speed.
3) Continue checking blower speed until all four speeds are checked.
4) Leave blower on 4-speed.

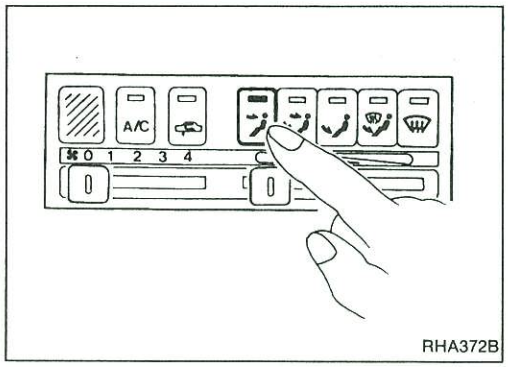

RHA372B

### 2. Check discharge air

1) Press the VENT button.
   VENT indicator should light.
2) Confirm that all discharge air comes out of face vents.
3) Press the B/L button.
   B/L indicator should light.
4) Confirm that discharge air comes out of face vents and foot vents.
5) Press the FOOT button.
   FOOT indicator should light.
6) Confirm that discharge air comes out of foot vents, with some air from defroster vents.
7) Press the F/D button.
   F/D indicator should light.
8) Confirm that discharge air comes out of foot vents, with some air from defroster vents, and that intake door position is at FRE.
9) Press the DEF button.
   DEF indicator should light.
10) The discharge air should be coming only from defroster vents. At the same time compressor should turn ON and intake door position be at FRE.

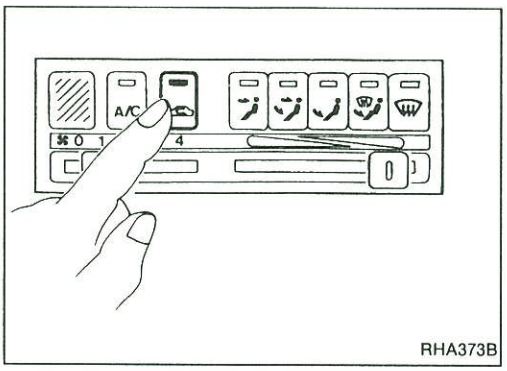

RHA373B

### 3. Check recirc

1) Press RECIRC button.
   RECIRC indicator should light.
2) Listen for intake door position change (you should hear blower sound change slightly).

## Operational Check (Cont'd)

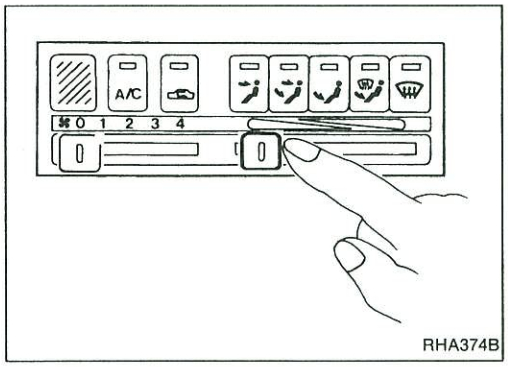

RHA374B

### 4. Check temperature decrease

1) Slide temperature control lever to full cold.
2) Check for cold air at discharge air outlets.

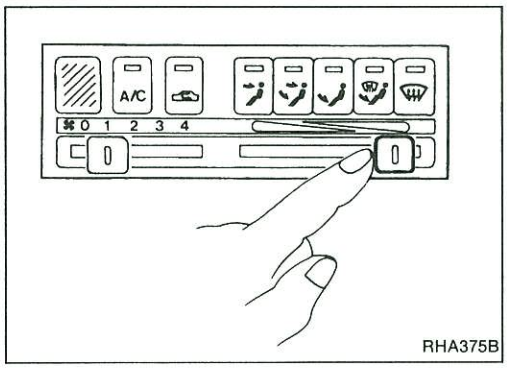

RHA375B

### 5. Check temperature increase

1) Slide temperature control lever to full hot.
2) Check for hot air at discharge air outlets.

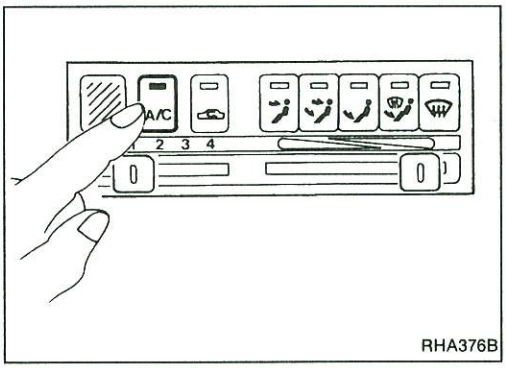

RHA376B

### 6. Check air conditioner switch

Move the fan control lever to the desired (1 to 4-speed) position and push the air conditioner button to turn ON the air conditioner.
The indicator light should come on when air conditioner is ON.

## Performance Chart

### TEST CONDITION

Testing must be performed as follows:

Vehicle location: Indoors or in the shade (in a well ventilated place)
Doors: Closed
Door window: Open (Front driver side only)
Hood: Open
Temperature control lever: Max. COLD set
Mode switch: (Ventilation) set
REC switch: (Recirculation) set
Fan switch: Max. speed set
Engine speed: 1,500 rpm
Time required before starting testing after air conditioner starts operating: More than 10 minutes

### TEST READING

**Recirculating-to-discharge air temperature table**

| Inside air (Recirculating air) at blower assembly inlet | | Discharge air temperature at center ventilator °C (°F) |
|---|---|---|
| Relative humidity % | Air temperature °C (°F) | |
| 50 - 60 | 25 (77) | 6.5 - 8.7 (44 - 48) |
| | 30 (86) | 10.0 - 12.4 (50 - 54) |
| | 35 (95) | 13.4 - 16.1 (56 - 61) |
| | 40 (104) | 17.7 - 20.7 (64 - 69) |
| 60 - 70 | 25 (77) | 8.7 - 11.0 (48 - 52) |
| | 30 (86) | 12.4 - 14.8 (54 - 59) |
| | 35 (95) | 16.1 - 18.7 (61 - 66) |
| | 40 (104) | 20.7 - 23.4 (69 - 74) |

**Ambient air temperature-to-compressor pressure table**

| Ambient air | | High-pressure (Discharge side) kPa (kg/cm$^2$, psi) | Low-pressure (Suction side) kPa (kg/cm$^2$, psi) |
|---|---|---|---|
| Relative humidity % | Air temperature °C (°F) | | |
| 50 - 70 | 25 (77) | 745 - 912 (7.6 - 9.3, 108 - 132) | 177 - 216 (1.8 - 2.2, 26 - 31) |
| | 30 (86) | 883 - 1,089 (9.0 - 11.1, 128 - 158) | 157 - 196 (1.6 - 2.0, 23 - 28) |
| | 35 (95) | 1,040 - 1,275 (10.6 - 13.0, 151 - 185) | 167 - 216 (1.7 - 2.2, 24 - 31) |
| | 40 (104) | 1,196 - 1,451 (12.2 - 14.8, 173 - 210) | 177 - 255 (1.8 - 2.6, 26 - 37) |

# Performance Test Diagnoses

## INSUFFICIENT COOLING

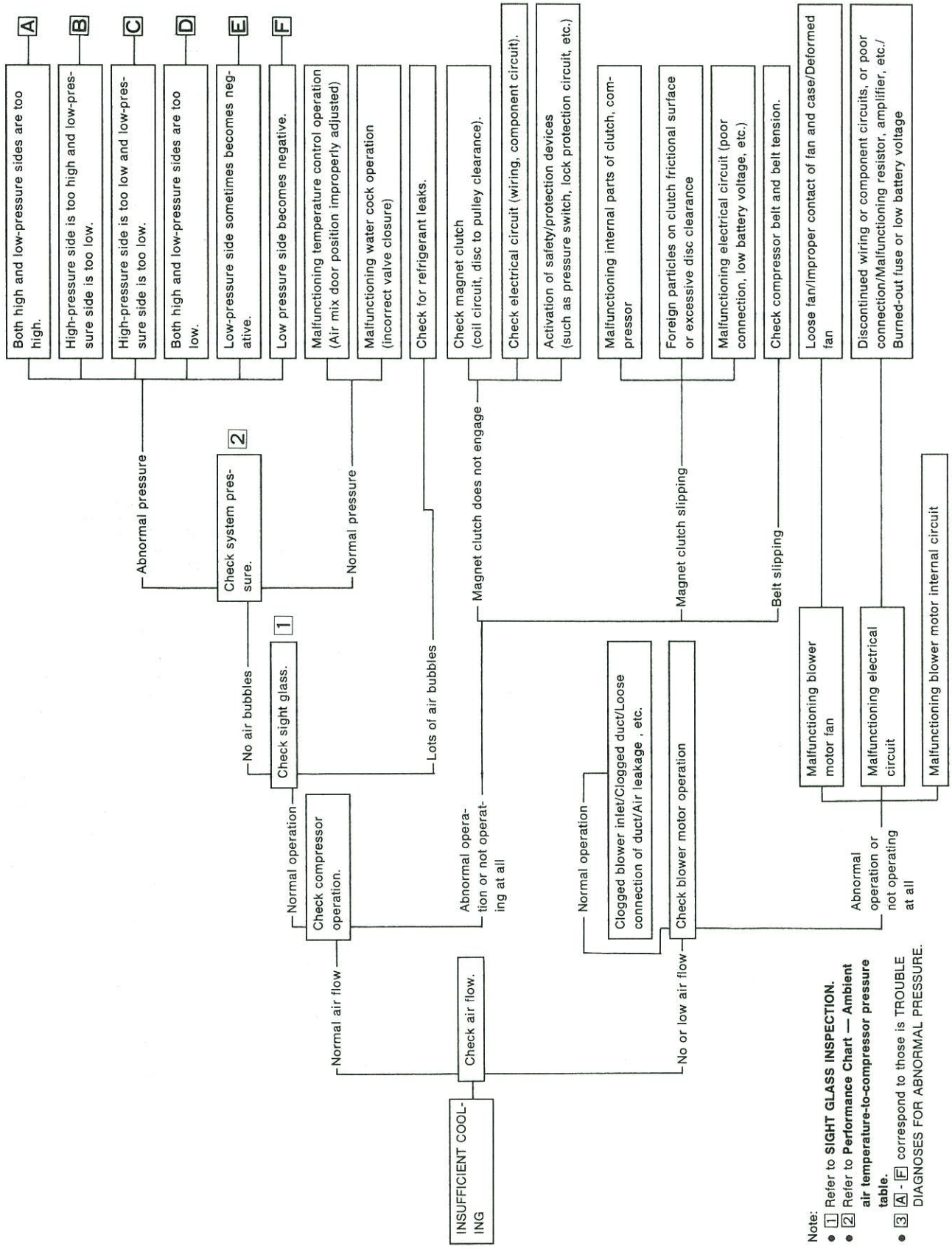


Note:
- 1 Refer to **SIGHT GLASS INSPECTION.**
- 2 Refer to **Performance Chart — Ambient air temperature-to-compressor pressure table.**
- 3 A - F correspond to those is TROUBLE DIAGNOSES FOR ABNORMAL PRESSURE.

## Performance Test Diagnoses

### TROUBLE DIAGNOSES FOR ABNORMAL PRESSURE

Whenever abnormal pressure of high and/or low sides of the system is noted, diagnosis must be conducted by using a manifold gauge. The large-line zone on the gauge scale (see illustrations.) shown in the following table refers to the standard (normal) pressure range for the corresponding pressure side (high or low). Since the standard (normal) pressure, however, differs from vehicle to vehicle, refer to the "Ambient Temperature-Pressure Characteristics" chart.

| Gauge indication | Refrigerant cycle | Probable cause | Corrective action |
|---|---|---|---|
| Both high and low-pressure sides are too high.<br>A<br> 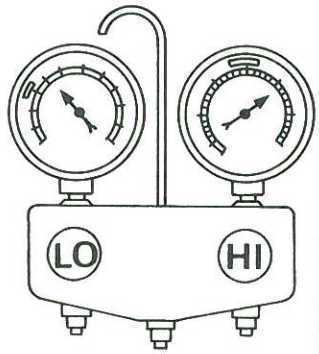 <br><br>AC359A | • Pressure is reduced soon after water is splashed on condenser.<br>• No bubbles appear in sight glass when pressure is reduced. | Excessive refrigerant charge in refrigeration cycle | Reduce refrigerant until specified pressure is obtained. |
| | Air suction by radiator or condenser fan is insufficient. | Insufficient condenser cooling performance<br>↓<br>① Condenser fins are clogged.<br>② Improper rotation of radiator fan or condenser fan | • Clean condenser.<br>• Check and repair radiator or condenser fan as necessary. |
| | • Low-pressure pipe is not cold.<br>• When compressor is stopped high-pressure value quickly drops by approximately 196 kPa (2 kg/cm$^2$, 28 psi). It then decreases gradually thereafter. | Poor heat exchange in condenser<br>(After compressor operation stops, high pressure decreases too slowly.)<br>↓<br>Air in refrigeration cycle | Evacuate repeatedly and recharge system. |
| | Engine tends to overheat. | Engine cooling systems malfunction. | Check and repair each engine cooling system. |
| | • Areas near low-pressure pipe connection and service valves are considerably cold compared with areas near expansion valve outlet or evaporator.<br>• Plates are sometimes covered with frost. | • Excessive liquid refrigerant on low-pressure side<br>• Excessive refrigerant discharge flow<br>• Expansion valve is open a little compared with the specification.<br>↓<br>① Improper thermal valve installation<br>② Improper expansion valve adjustment | Replace expansion valve. |

## Performance Test Diagnoses (Cont'd)

| Gauge indication | Refrigerant cycle | Probable cause | Corrective action |
|---|---|---|---|
| High-pressure side is too high and low-pressure side is too low.<br>B<br> 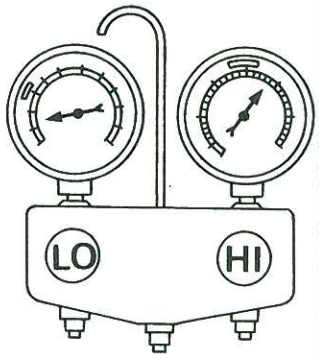 <br><br>AC360A | Upper side of condenser and high-pressure side are hot, however, liquid tank is not so hot. | High-pressure tube or parts located between compressor and condenser are clogged or crushed. | • Check and repair or replace malfunctioning parts.<br>• Check compressor oil for contamination. |
| High-pressure side is too low and low-pressure side is too high.<br>C<br> 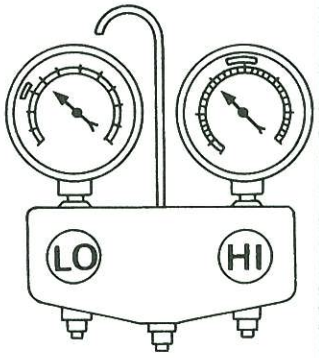 <br><br>AC356A | High and low-pressure sides become equal soon after compressor operation stops. | Compressor pressure operation is improper.<br>↓<br>Damaged inside compressor packings | Replace compressor. |
| | No temperature difference between high and low-pressure sides | Compressor discharge capacity does not change. (Compressor stroke is set at maximum.) | Replace compressor. |

## Performance Test Diagnoses (Cont'd)

| Gauge indication | Refrigerant cycle | Probable cause | Corrective action |
|---|---|---|---|
| Both high-and low-pressure sides are too low.<br>D<br> 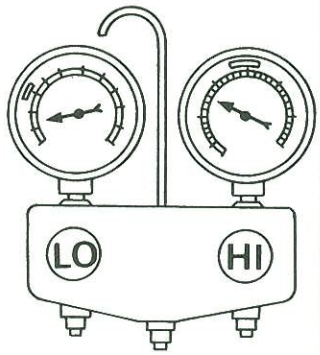 <br><br>AC353A | • There is a big temperature difference between liquid tank outlet and inlet. Outlet temperature is extremely low.<br>• Liquid tank inlet and expansion valve are frosted. | Liquid tank inside is clogged a little. | • Replace liquid tank.<br>• Check compressor oil for contamination. |
| | • Temperature of expansion valve inlet is extremely low as compared with areas near liquid tank.<br>• Expansion valve inlet may be frosted.<br>• Temperature difference occurs somewhere in high-pressure side | High-pressure pipe located between liquid tank and expansion valve is clogged. | • Check and repair malfunctioning parts.<br>• Check compressor oil for contamination. |
| | There is a big temperature difference between expansion valve inlet and outlet while the valve itself is frosted. | Expansion valve closes a little compared with the specification.<br>↓<br>① Improper expansion valve adjustment<br>② Malfunctioning thermal valve<br>③ Outlet and inlet may be clogged. | • Remove foreign particles by using compressed air.<br>• Check compressor oil for contamination. |
| | Areas near low-pressure pipe connection and service valve are extremely cold as compared with areas near expansion valve outlet and evaporator. | Low-pressure pipe is clogged or crushed. | • Check and repair malfunctioning parts.<br>• Check compressor oil for contamination. |
| | Air flow volume is not enough or is too low. | Evaporator is frozen.<br>↓<br>Compressor discharge capacity does not change. (Compressor stroke is set at maximum length.) | Replace compressor. |

## Performance Test Diagnoses (Cont'd)

| Gauge indication | Refrigerant cycle | Probable cause | Corrective action |
|---|---|---|---|
| Low-pressure side sometimes becomes negative.<br>E<br> 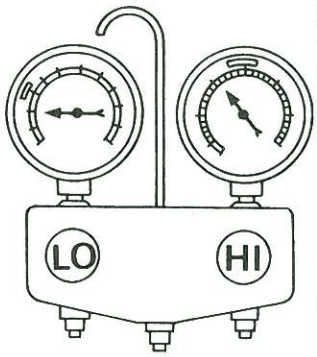 <br><br>AC354A | • Air conditioning system does not function and does not cyclically cool the compartment air.<br>• The system constantly functions for a certain period of time after compressor is stopped and restarted. | Refrigerant does not discharge cyclically.<br>↓<br>Moisture is frozen at expansion valve outlet and inlet.<br>↓<br>Water is mixed with refrigerant. | • Drain water from refrigerant or replace refrigerant.<br>• Replace liquid tank. |
| Low-pressure side becomes negative.<br>F<br> 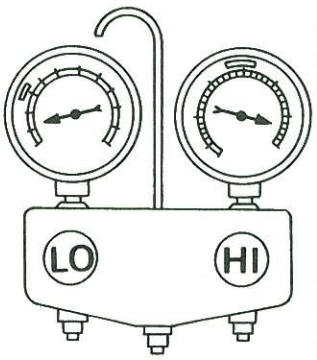 <br><br>AC362A | Liquid tank or front/rear side of expansion valve's pipe is frosted or dewed. | High-pressure side is closed and refrigerant does not flow.<br>↓<br>Expansion valve or liquid tank is frosted. | After the system is left at rest, start it again in order to confirm whether or not problem is caused by water or foreign particles.<br>• If the problem is due to water, drain water from refrigerant or replace refrigerant.<br>• If it is due to foreign particles, remove expansion valve and remove them with dry and compressed air.<br>• If either of the above methods cannot correct the problem, replace expansion valve.<br>• Replace liquid tank.<br>• Check compressor oil for contamination. |

## Contents

**Symptom Chart** ..... HA-56
**Preliminary Check** ..... HA-58
PRELIMINARY CHECK 1
(Intake door is not set at "FRESH" in DEF or FOOT mode.) ..... HA-58
PRELIMINARY CHECK 2
(A/C does not blow cold air.) ..... HA-59
PRELIMINARY CHECK 3
(Magnet clutch does not engage in DEF mode.) ..... HA-60
PRELIMINARY CHECK 4
(Air outlet does not change.) ..... HA-60
PRELIMINARY CHECK 5
(Noise) ..... HA-61
**Harness Layout for A/C System** ..... HA-62
**Circuit Diagram for Quick Pinpoint Check** ..... HA-64
**Wiring Diagram** ..... HA-65
**Main Power Supply and Ground Circuit Check** ..... HA-68
**Diagnostic Procedure 1**
(SYMPTOM: Blower motor does not rotate.) ..... HA-69
**Diagnostic Procedure 2**
(SYMPTOM: Air outlet does not change.) ..... HA-72
**Diagnostic Procedure 3**
(SYMPTOM: Intake door does not change in VENT, B/L or FOOT mode.) ..... HA-74
**Diagnostic Procedure 4**
(SYMPTOM: Magnet clutch does not engage when A/C switch and fan switch are ON.) ..... HA-75
**Diagnostic Procedure 5**
(SYMPTOM: Illumination or indicators of push control unit do not come on.) ..... HA-80
**Electrical Components Inspection** ..... HA-83
**Control Linkage Adjustment** ..... HA-86

## Symptom Chart

### DIAGNOSTIC TABLE

| PROCEDURE | Preliminary Check | | | | | Diagnostic Procedure | | | | | Main Power Supply and Ground Circuit Check | | | |
|---|---|---|---|---|---|---|---|---|---|---|---|---|---|---|
| SYMPTOM | Preliminary check 1 | Preliminary check 2 | Preliminary check 3 | Preliminary check 4 | Preliminary check 5 | Diagnostic procedure 1 | Diagnostic procedure 2 | Diagnostic procedure 3 | Diagnostic procedure 4 | Diagnostic procedure 5 | 15A Fuses | 10A Fuse | Push control unit | Thermo control amp. |
| A/C does not blow cold air. | | ❶ | | | | ○ | | | ○ | | ○ | ○ | | ○ |
| Blower motor does not rotate. | | ❶ | | | | ❷ | | | | | ○ | | | |
| Air outlet does not change. | | | | ❶ | | | ❷ | | | | | ○ | ○ | |
| Intake door does not change in VENT, B/L or FOOT mode. | | | | | | | | ❶ | | | | ○ | ○ | |
| Intake door is not set at "FRESH" in DEF or FOOT mode. | ❶ | | | | | | | ○ | | | | ○ | ○ | |
| Magnet clutch does not engage when A/C switch and fan switch are ON. | | ❶ | | | | | | | ❷ | | | ○ | | ○ |
| Magnet clutch does not engage in DEF mode. | | ❶ | ❷ | | | | | | ○ | | | ○ | | ○ |
| Illumination or indicators of push control unit do not come on. | | | | | | | | | | ❶ | | ○ | | |
| Noise | | | | | ❶ | | | | | | | | | |

❶, ❷: The number means checking order.
○: As for checking order, refer to each flow chart. (It depends on malfunctioning portion.)

## Symptom Chart (Cont'd)

Electrical Components Inspection

| Blower relay | Blower motor | Resistor | Push control unit | | | | | | | | Motor door motor | Intake door motor | A/C relay | Thermo control amp. | Dual-pressure switch | Compressor | | ECM (ECCS control module) | Illumination system | Knob illumination | Harness |
|---|---|---|---|---|---|---|---|---|---|---|---|---|---|---|---|---|---|---|---|---|---|
| | | | A/C switch | REC switch | VENT switch | B/L switch | FOOT switch | F/D switch | DEF switch | Fan switch | | | | | | Compressor (Magnet clutch) | | | | | |
| ○ | ○ | ○ | ○ | | | | | | | ○ | | | ○ | ○ | ○ | ○ | | ○ | | | ○ |
| ○ | ○ | ○ | | | | | | | | ○ | | | | | | | | | | | ○ |
| | | | | | ○ | ○ | ○ | ○ | ○ | | ○ | | | | | | | | | | ○ |
| | | | | ○ | | | | | | | | ○ | | | | | | | | | ○ |
| | | | | ○ | | | | | | | | ○ | | | | | | | | | ○ |
| ○ | | | ○ | | | | | | | ○ | | | ○ | ○ | ○ | ○ | | ○ | | | ○ |
| ○ | | | | | | | | | ○ | ○ | | | ○ | ○ | ○ | ○ | | ○ | | | ○ |
| ○ | | | ○ | ○ | ○ | ○ | ○ | ○ | ○ | ○ | | | | | ○ | | | | ○ | ○ | ○ |
| | | | | | | | | | | | | | | | | | | | | | |

## Preliminary Check

### PRELIMINARY CHECK 1

**Intake door is not set at "FRESH" in DEF or FOOT mode.**

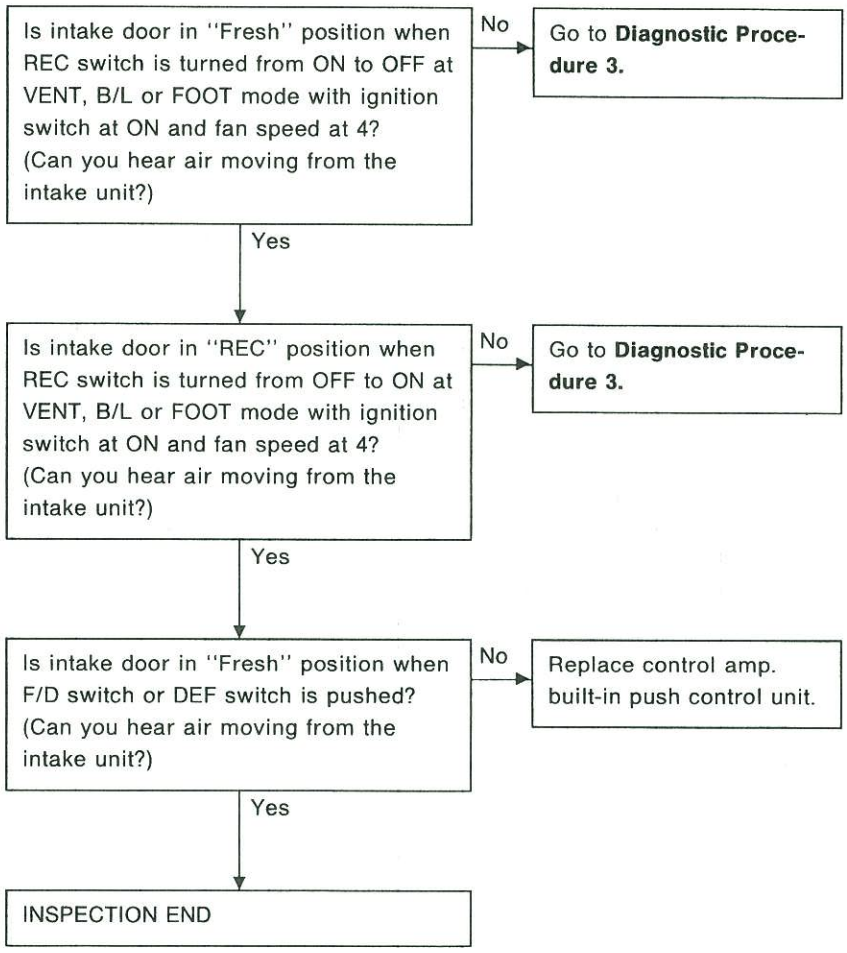

## PRELIMINARY CHECK 2

**A/C does not blow cold air.**

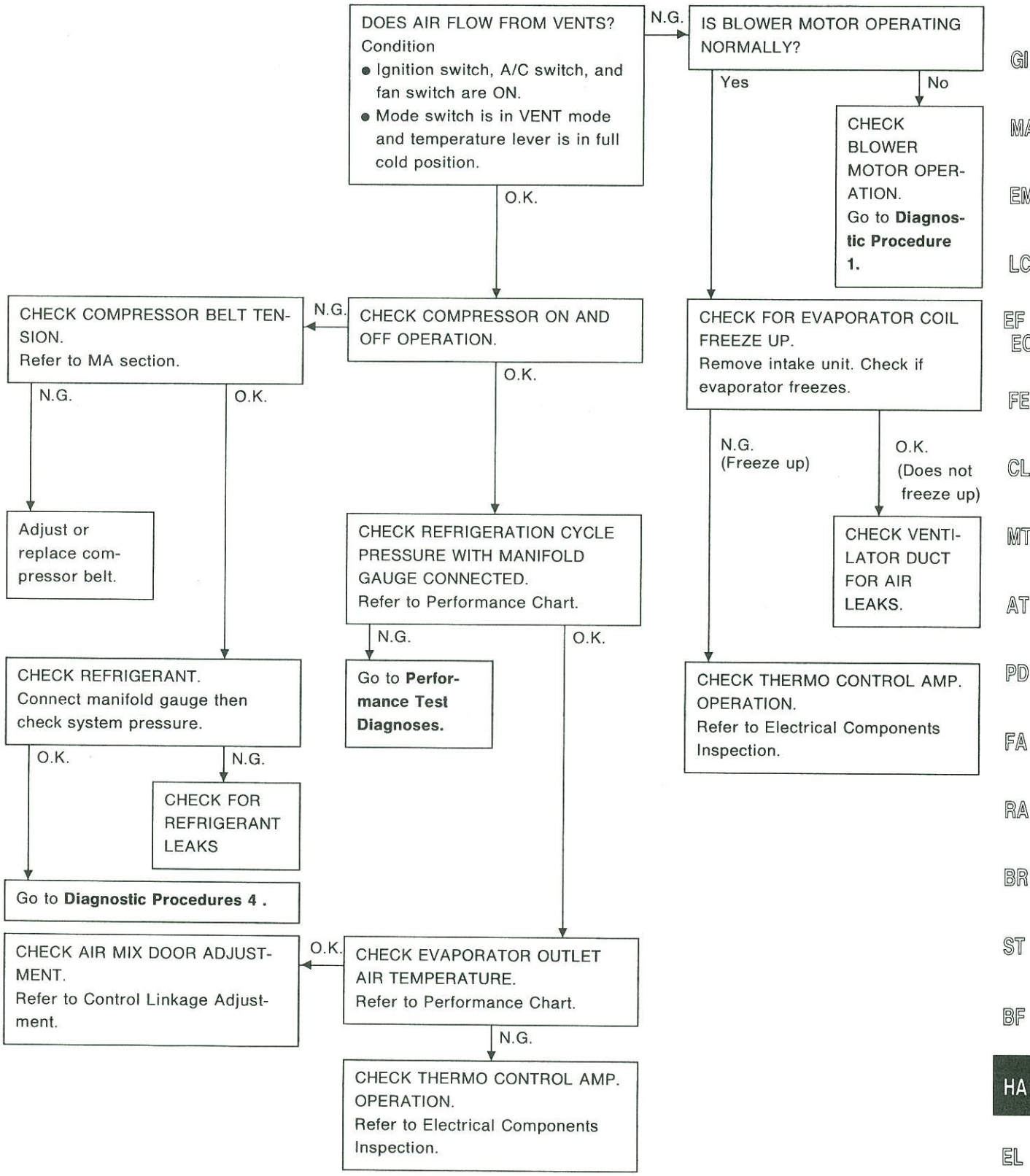

## Preliminary Check (Cont'd)

### PRELIMINARY CHECK 3

**Magnet clutch does not engage in DEF mode.**

- Perform PRELIMINARY CHECK 2 before referring to the following flow chart.

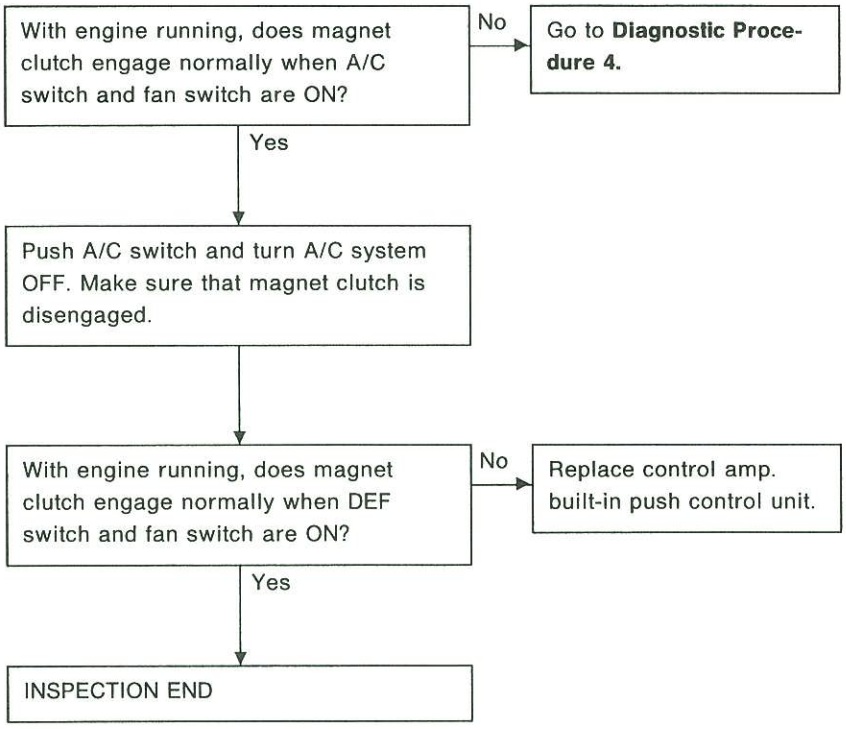


### PRELIMINARY CHECK 4

**Air outlet does not change.**

DOES AIR COME OUT FROM EACH DUCT NORMALLY WHEN EACH MODE SWITCH IS PUSHED WITH IGNITION SWITCH AT ON?

| Switch | | Indicator illuminates | | | | | Air outlet |
|---|---|---|---|---|---|---|---|
| Mode | | | | | | | |
| | | ○ | | | | | VENT |
| | | | ○ | | | | FOOT & VENT |
| | | | | ○ | | | FOOT & DEF |
| | | | | | ○ | | FOOT & DEF |
| | | | | | | ○ | DEF |

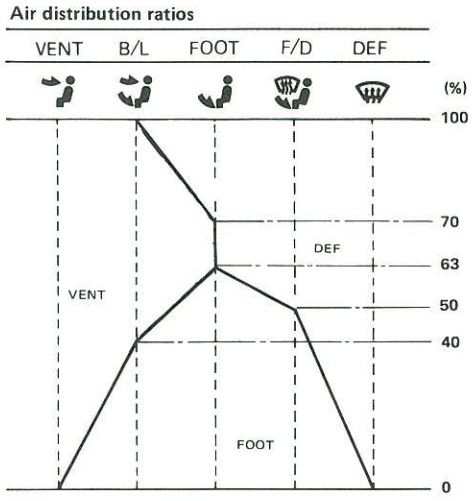


Yes

INSPECTION END

No

Go to **Diagnostic Procedure 2.**

## PRELIMINARY CHECK 5

**Noise**

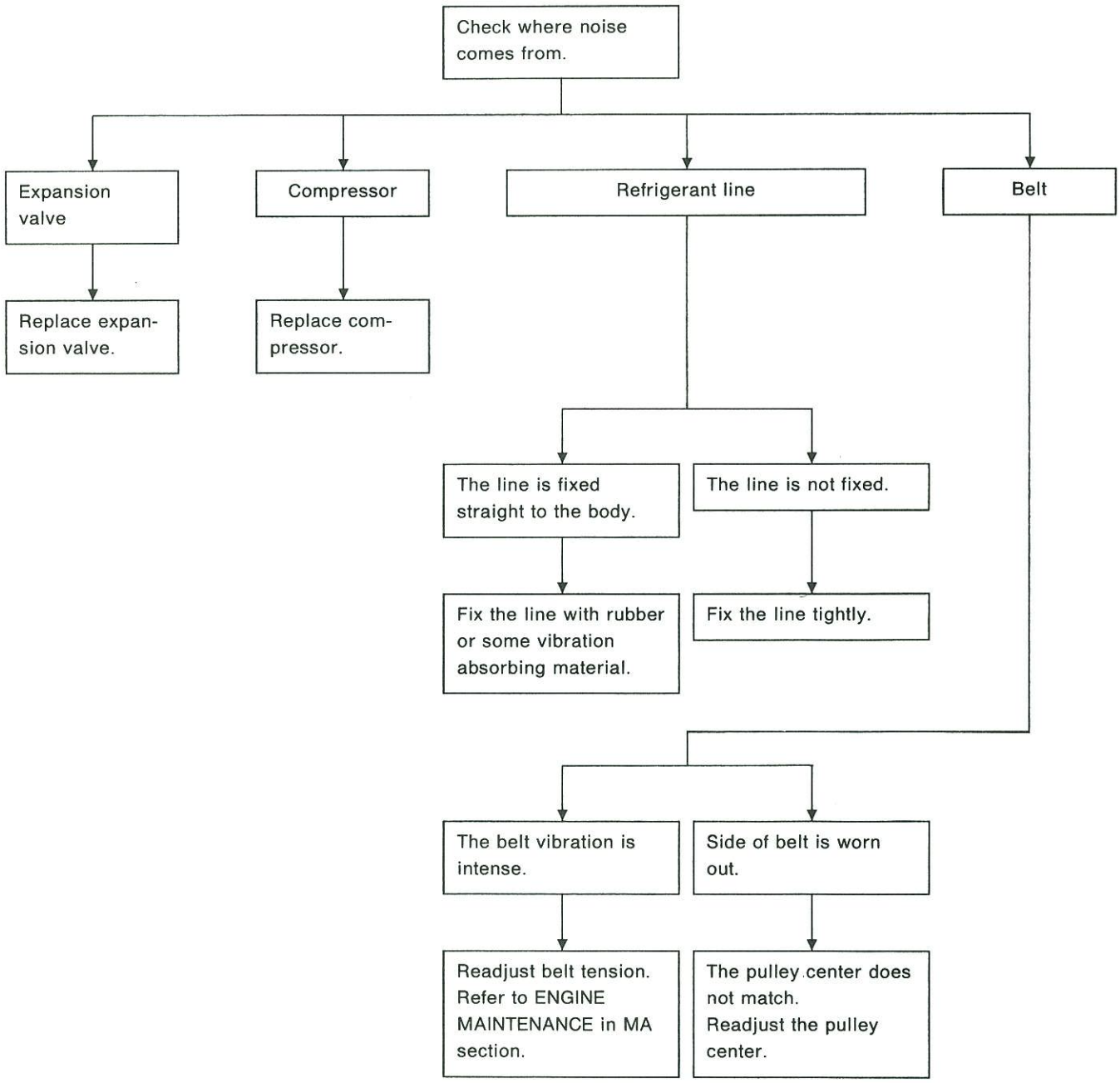

## Harness Layout for A/C System

### Engine compartment

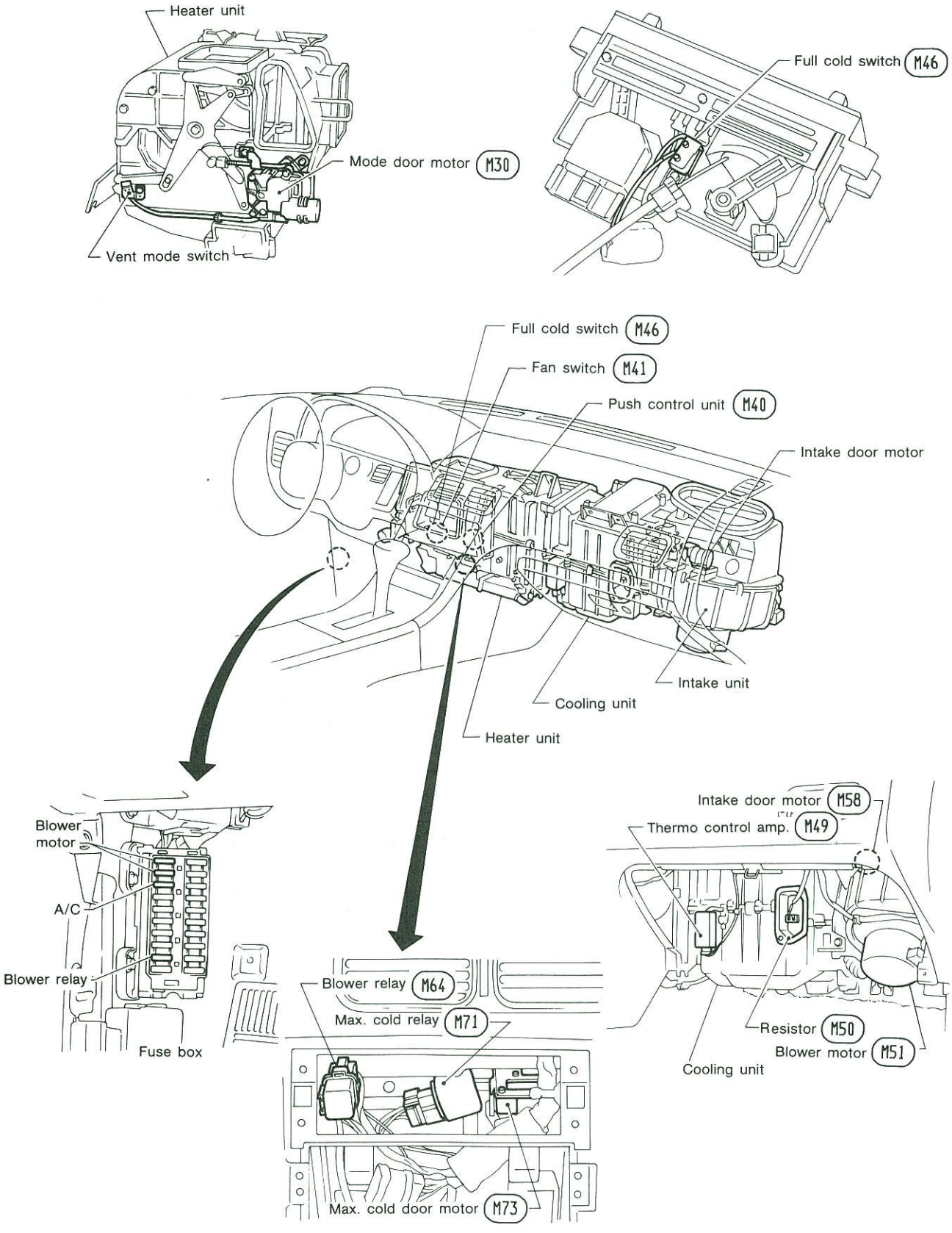


RHA396D

## Harness Layout for A/C System (Cont'd)

**Engine compartment**

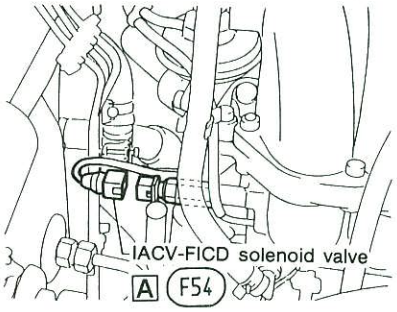


**Fuse and relay box B**

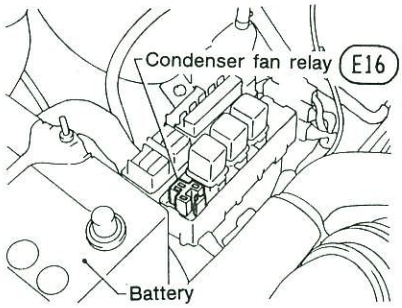


**Relay box C**

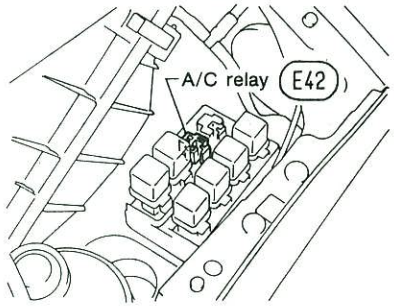


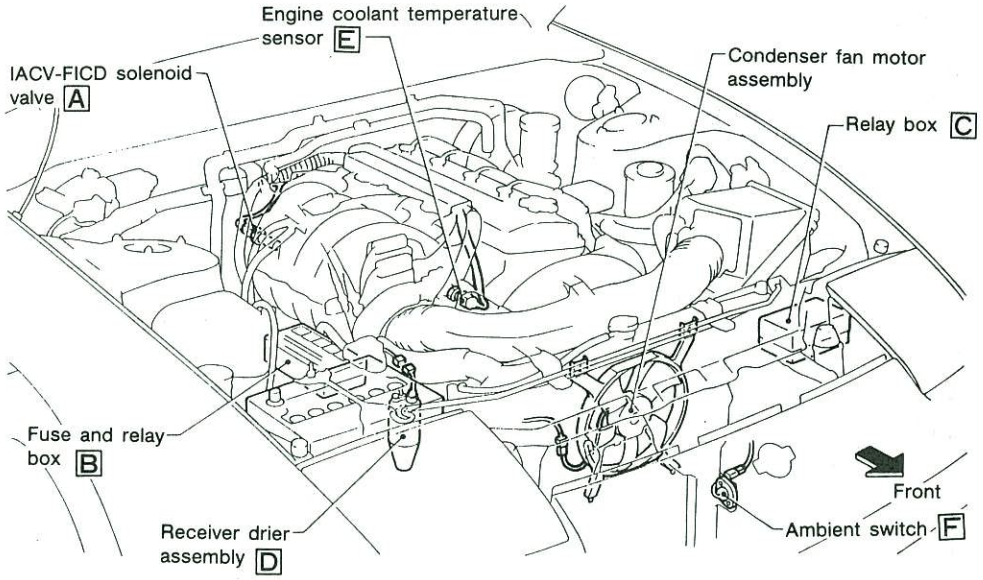


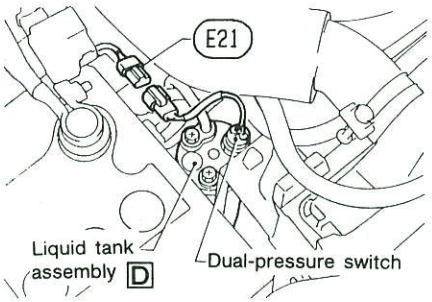


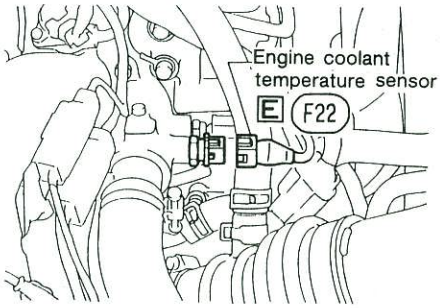


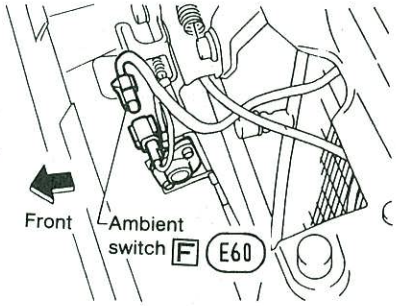


SHA704D

## Circuit Diagram for Quick Pinpoint Check

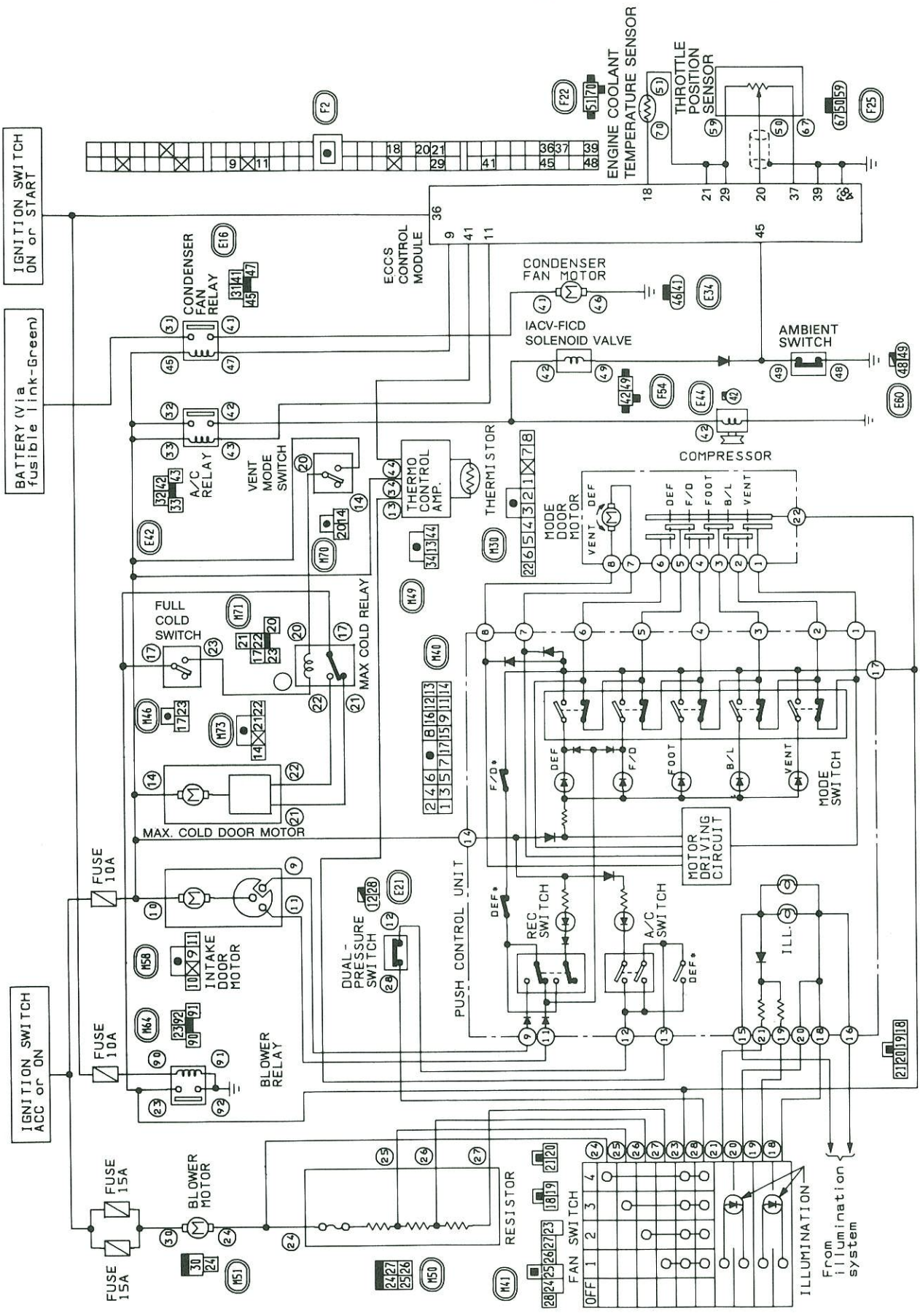


- All connectors shown in this illustration are unit side connectors.
- The unit side connectors with a double circle " ◯ " are connected to the harness side connectors shown in the "Harness Layout for A/C System". (See pages HA-62, HA-63.)
- The terminal numbers in the connector coincide with the circuit numbers surrounded by a single circle " ○ ".

*: These switches are built into push control unit and mechanically linked to corresponding switches.

SHA705D

## Wiring Diagram

### HEATER ELECTRICAL CIRCUIT

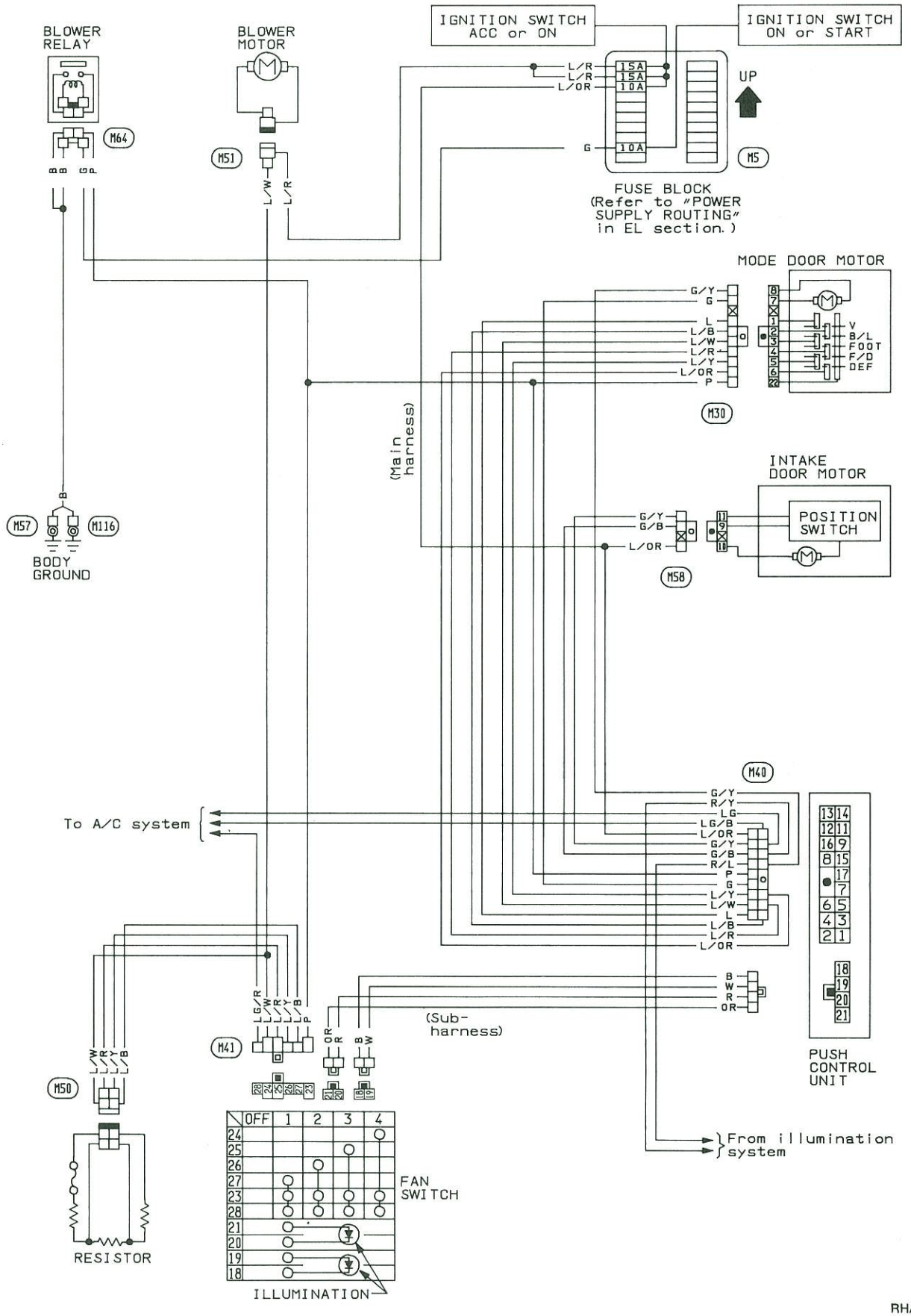


RHA215B

## Wiring Diagram (Cont'd)

### A/C ELECTRICAL CIRCUIT

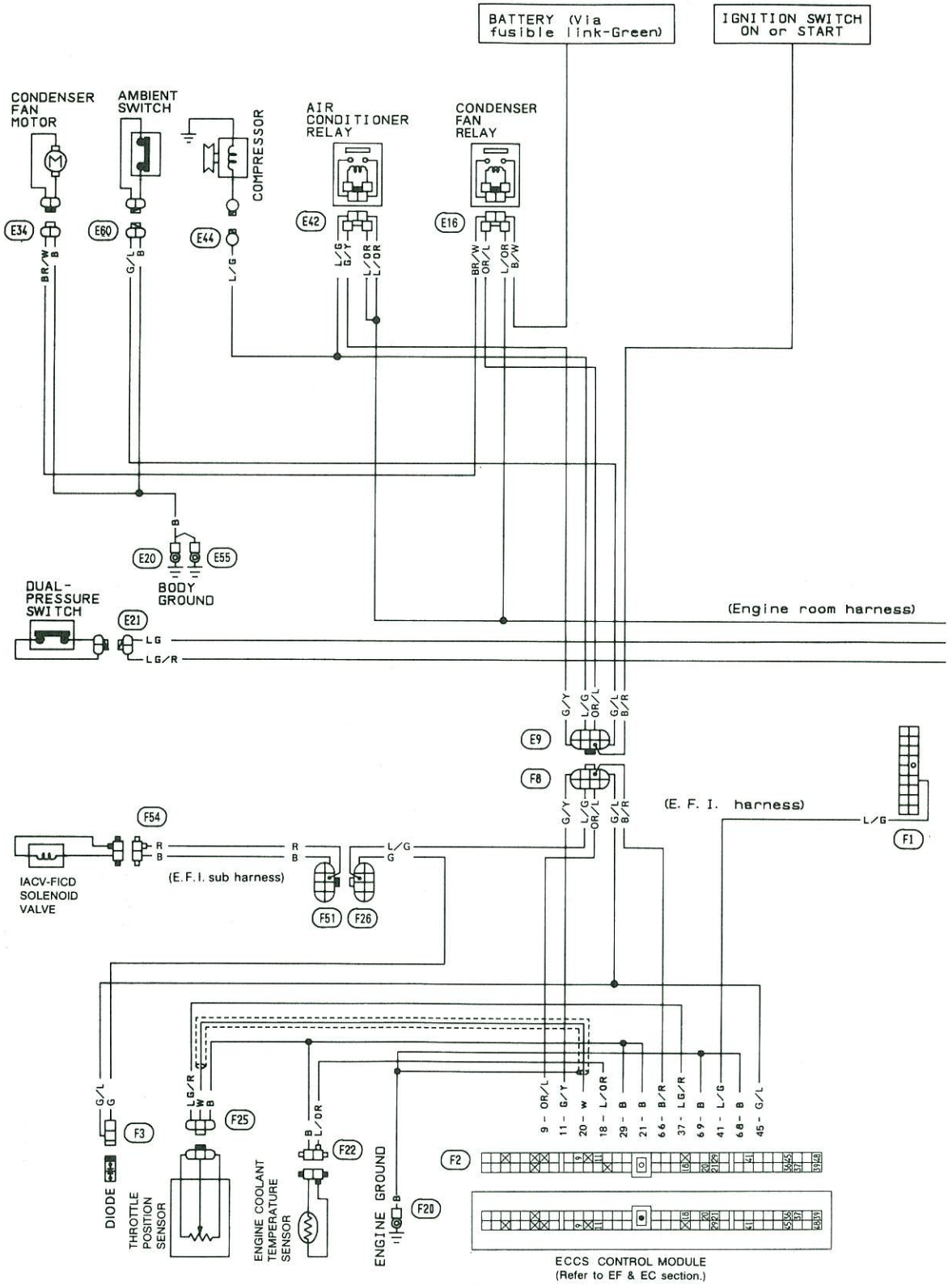

## Wiring Diagram (Cont'd)

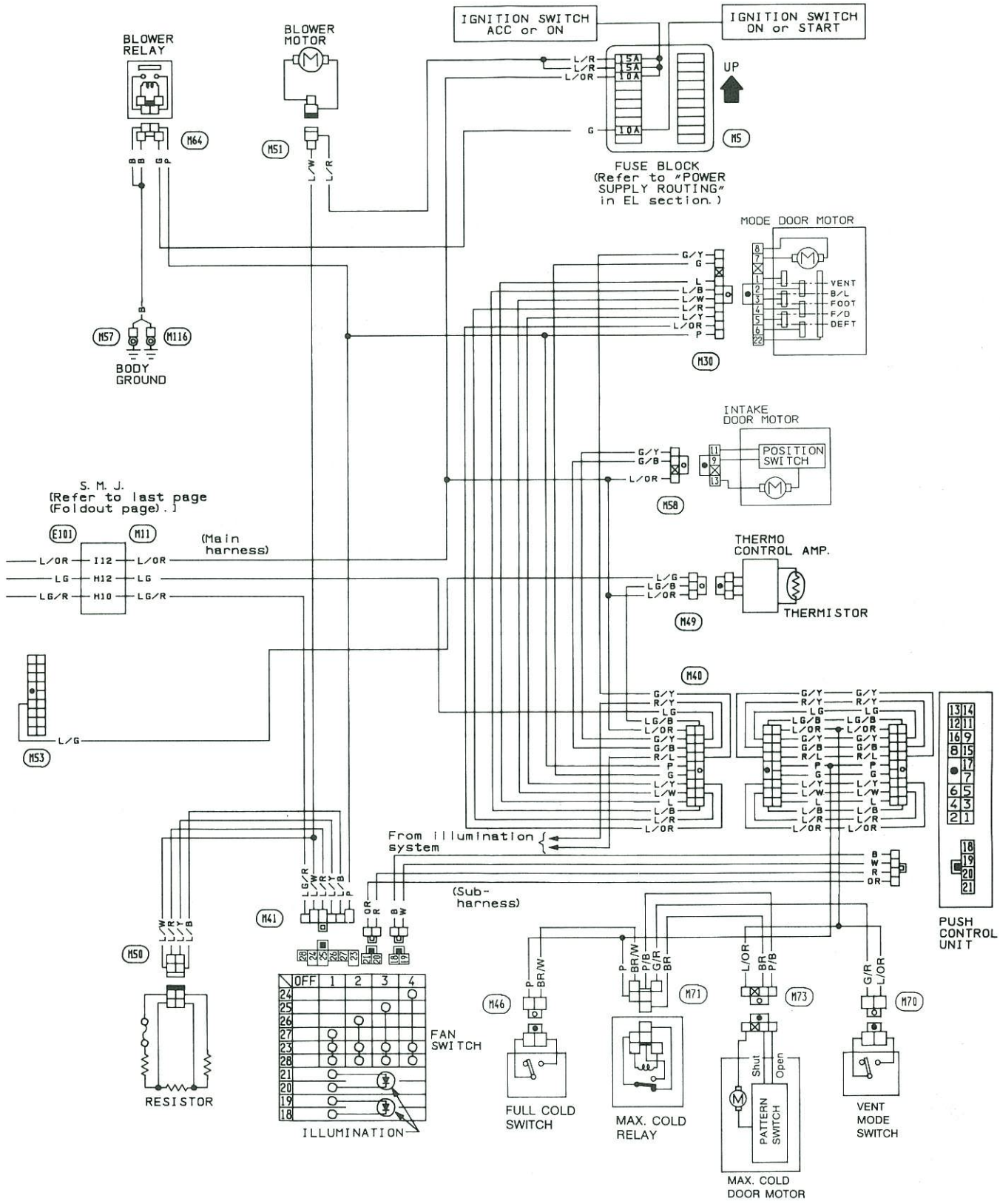


SHA706D

## Main Power Supply and Ground Circuit Check

### POWER SUPPLY CIRCUIT CHECK FOR A/C SYSTEM

Check power supply circuit for air conditioning system.

**Refer to "POWER SUPPLY ROUTING" in EL section and A/C ELECTRICAL CIRCUIT.**

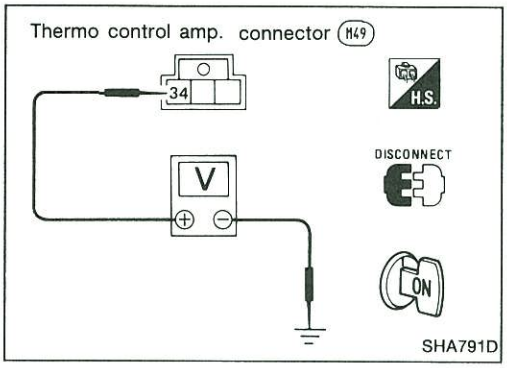


### THERMO CONTROL AMP. CHECK

Check power supply circuit for thermo control amp. with ignition switch ON.

1. Disconnect thermo control amp. harness connector.
2. Connect voltmeter from harness side.
3. Measure voltage across terminal No. ㉞ and body ground.

| Voltmeter terminal | | Voltage |
|---|---|---|
| ⊕ | ⊖ | |
| ㉞ | Body ground | Approx. 12V |

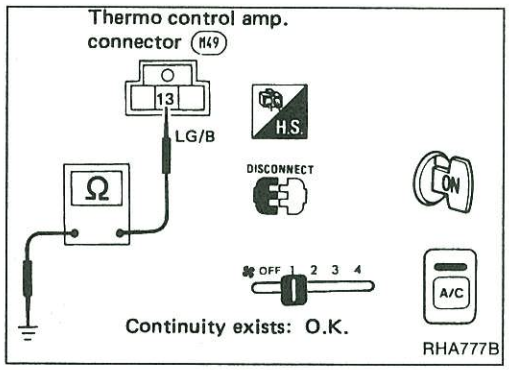


Check body ground circuit for thermo control amp. with ignition switch ON, A/C switch ON and fan switch ON.

1. Disconnect thermo control amp. harness connector.
2. Connect ohmmeter from harness side.
3. Check for continuity between terminal No. ⑬ and body ground.

| Ohmmeter terminal | | Continuity |
|---|---|---|
| ⊕ | ⊖ | |
| ⑬ | Body ground | Yes |

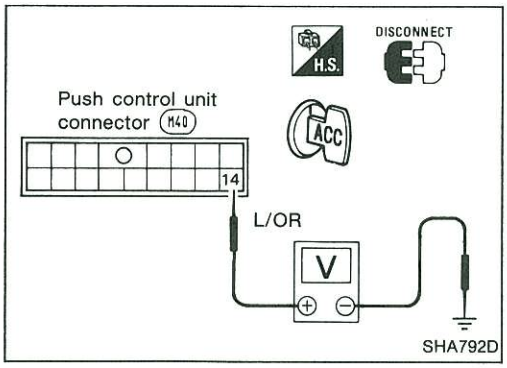


### PUSH CONTROL UNIT CHECK

Check power supply circuit for push control unit with ignition switch at ACC.

1. Disconnect push control unit harness connector.
2. Connect voltmeter from harness side.
3. Measure voltage across terminal No. ⑭ and body ground.

| Voltmeter terminal | | Voltage |
|---|---|---|
| ⊕ | ⊖ | |
| ⑭ | Body ground | Approx. 12V |

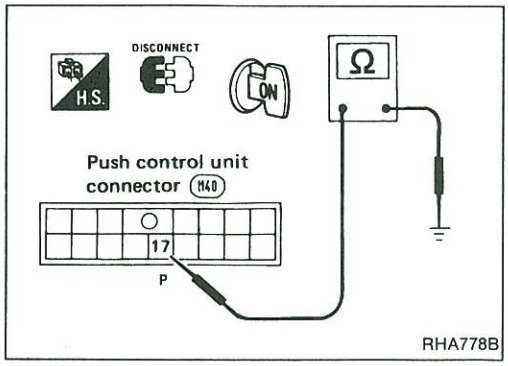


Check body ground circuit for push control unit with ignition switch ON.

1. Disconnect push control unit harness connector.
2. Connect ohmmeter from harness side.
3. Check for continuity between terminal No. ⑰ and body ground.

| | INCIDENT | Flow chart No. |
|---|---|---|
| 1 | Fan fails to rotate. | 1 |
| 2 | Fan does not rotate at 1-speed. | 2 |
| 3 | Fan does not rotate at 2-speed. | 3 |
| 4 | Fan does not rotate at 3-speed. | 4 |
| 5 | Fan does not rotate at 4-speed. | 5 |

## Diagnostic Procedure 1

**SYMPTOM: Blower motor does not rotate.**

- **Perform PRELIMINARY CHECK 2 before referring to the following flow chart.**

Check if blower motor rotates properly at each fan speed.
Conduct checks as per flow chart at left.

5 → Ⓔ
4 → Ⓓ
3 → Ⓒ
2 → Ⓑ

1 → (Go to next page.)

**A**

CHECK POWER SUPPLY FOR BLOWER MOTOR.
Disconnect blower motor harness connector.
Do approx. 12 volts exist between blower motor harness terminal No. (30) and body ground?

N.G. → Check 15A fuses at fuse block.
(Refer to "POWER SUPPLY ROUTING" in EL section and A/C ELECTRICAL CIRCUIT.)

O.K.

**B**

Check circuit continuity between blower motor harness terminal No. (24) and body ground.

N.G. → Reconnect blower motor harness connector.

O.K.

CHECK BLOWER MOTOR.
(Refer to Electrical Components Inspection.)

N.G.

Replace blower motor.

**C**

CHECK BLOWER MOTOR CIRCUIT BETWEEN BLOWER MOTOR AND RESISTOR.
Do approx. 12 volts exist between resistor harness terminal No. (24) and body ground?

N.G. → Disconnect blower motor and resistor harness connectors.

**D**

Note: Check circuit continuity between blower motor harness terminal No. (24) and resistor harness terminal No. (24).

O.K.

Ⓐ (Go to next page.)

**Note:**
**If the result is N.G. after checking circuit continuity, repair harness or connector.**

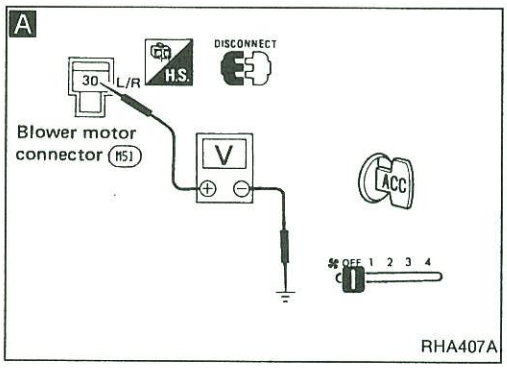


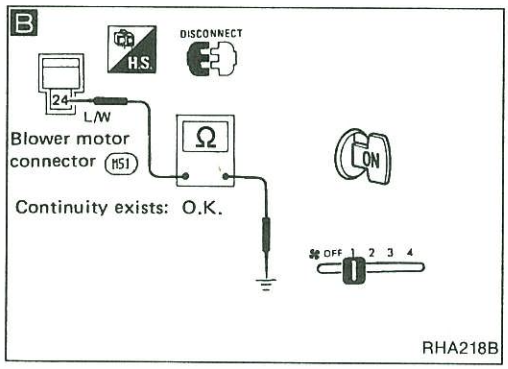


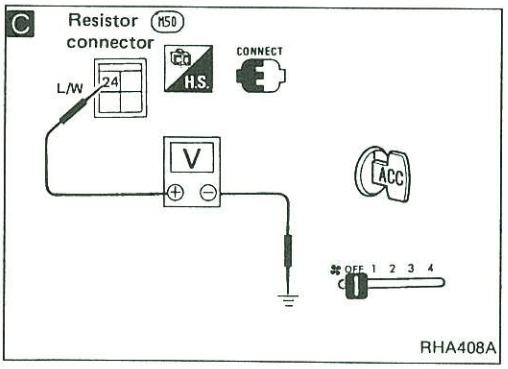


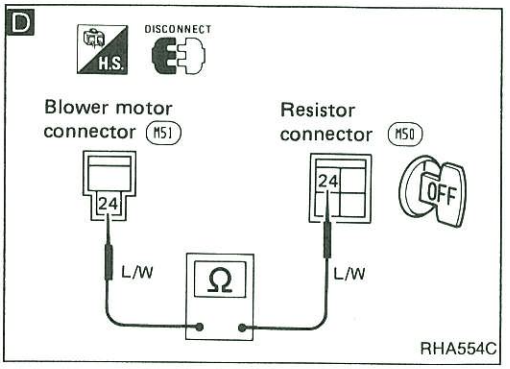

## Diagnostic Procedure 1 (Cont'd)

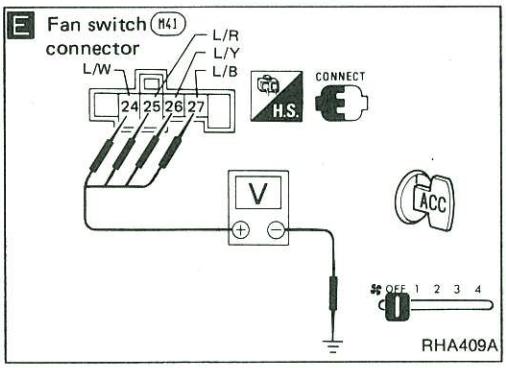


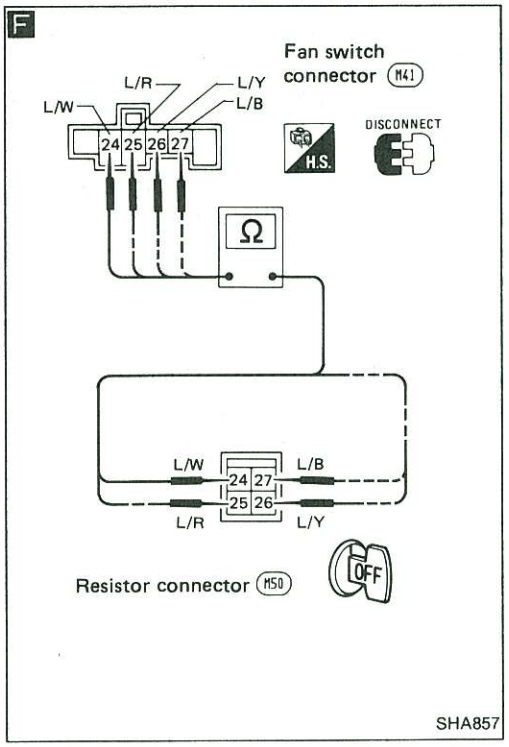


Ⓐ 1 Ⓑ 2 3 Ⓒ Ⓓ 4 Ⓔ

CHECK RESISTOR AFTER DISCONNECTING IT.
(Refer to Electrical Components Inspection.)

O.K. / N.G.

N.G. → Replace resistor.

Reconnect resistor harness connector.

1 2 3 4 5

E

CHECK FAN SWITCH CIRCUIT.
Do approx. 12 volts exist between each fan switch harness terminal and body ground?

| Flow chart No. | Terminal No. ⊕ | Terminal No. ⊖ | Voltage |
|---|---|---|---|
| 2 | ㉗ | Body ground | Approx. 12V |
| 3 | ㉖ | | |
| 4 | ㉕ | | |
| 5 | ㉔ | | |

O.K.
2
3
4
5

N.G. → F

Note: Check circuit continuity between fan switch and resistor.

CHECK FAN SWITCH AFTER DISCONNECTING IT.
(Refer to Electrical Components Inspection.)

N.G. → Replace fan switch.

O.K.

Ⓕ

(Go to next page.)

**Note:**
**If the result is N.G. after checking circuit continuity, repair harness or connector.**

## Diagnostic Procedure 1 (Cont'd)

G Blower relay connector (M64)

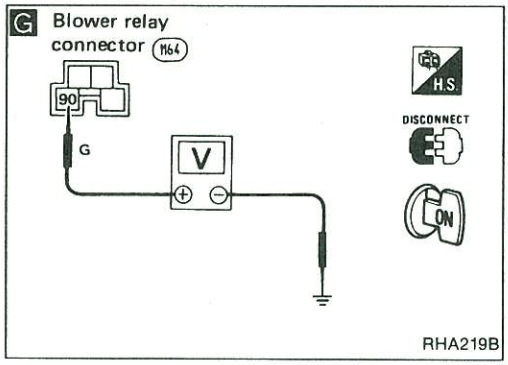


RHA219B

H Blower relay connector (M64)

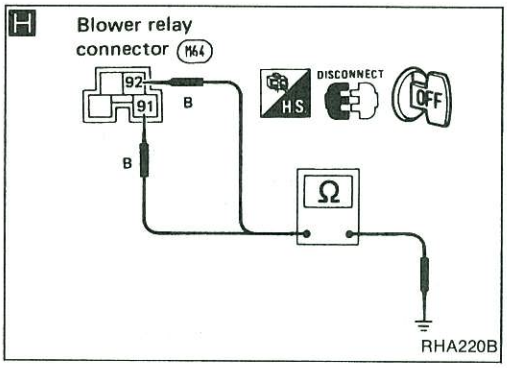


RHA220B

I

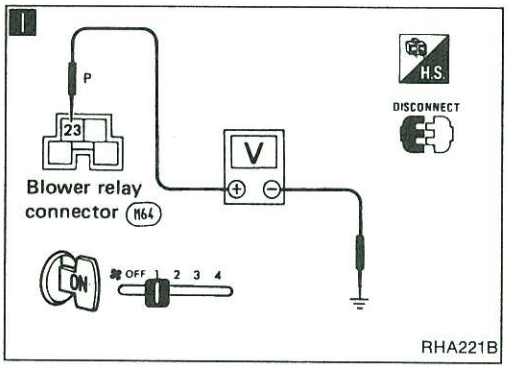


RHA221B

J

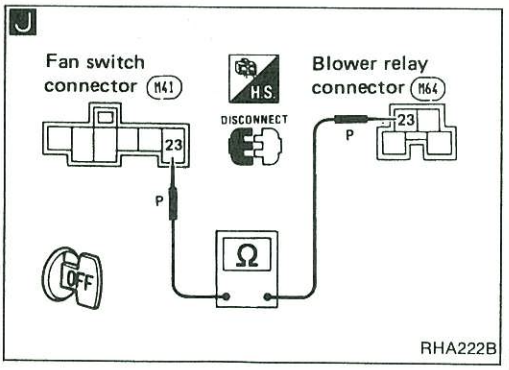


RHA222B

Ⓕ

G

CHECK POWER SUPPLY FOR BLOWER RELAY.
Disconnect blower relay harness connector.
Do approx. 12 volts exist between blower relay harness terminal No. ⑨⓪ and body ground?

N.G. → Check 10A fuses at fuse block.
(Refer to "POWER SUPPLY ROUTING" in EL section and A/C ELECTRICAL CIRCUIT.)

O.K.

H

Note

Check circuit continuity between blower relay harness terminal No. ⑨①, ⑨② and body ground.

O.K.

Reconnect fan switch harness connector.

I

CHECK FAN SWITCH CIRCUIT BETWEEN FAN SWITCH AND BLOWER RELAY.
Do approx. 12 volts exist between blower relay harness terminal No. ㉓ and body ground?

N.G. → Disconnect fan switch harness connector.

J

Note

Check circuit continuity between fan switch harness terminal No. ㉓ and blower relay harness terminal No. ㉓.

O.K.

CHECK BLOWER RELAY AFTER DISCONNECTING IT.
(Refer to Electrical Components Inspection.)

N.G.

Replace blower relay.

**Note:**
**If the result is N.G. after checking circuit continuity, repair harness or connector.**

A

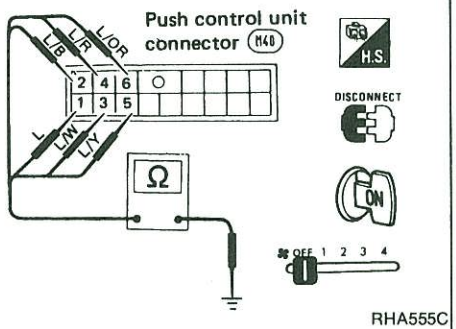


RHA555C

B

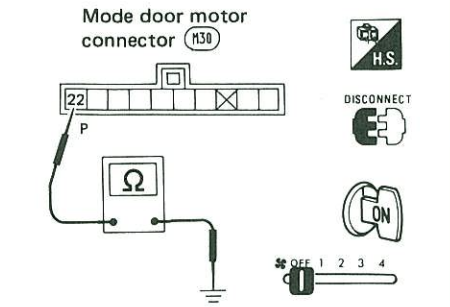


SHA858D

C

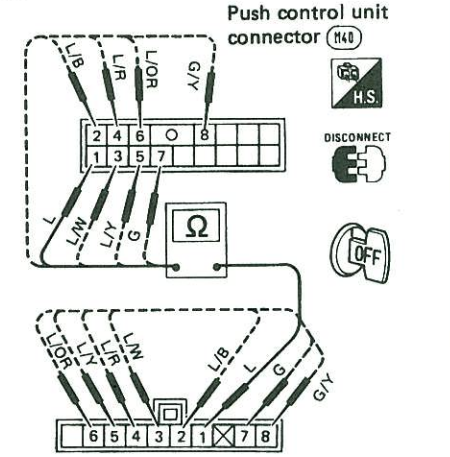


SHA297C

## Diagnostic Procedure 2

### SYMPTOM: Air outlet does not change.

- **Perform PRELIMINARY CHECK 4 and Main Power Supply and Ground Circuit Check before referring to the following flow chart.**

A

CHECK MODE DOOR MOTOR POSITION SWITCH.
1. Turn VENT switch ON with ignition switch at ON position.
2. Turn ignition switch OFF. Disconnect push control unit connector.
3. Check if continuity exists between terminal No. ① or ② of push control unit harness connector and body ground.
4. Using above procedures, check for continuity in any other mode, as indicated in chart.

| Mode switch | Terminal No. ⊕ | Terminal No. ⊖ | Continuity |
|---|---|---|---|
| VENT | ① or ② | Body ground | Yes |
| B/L | ② or ③ | | |
| FOOT | ③ or ④ | | |
| F/D | ④ or ⑤ | | |
| DEF | ⑤ or ⑥ | | |

N.G. → Disconnect mode door motor harness connector.

O.K. ↓

CHECK SIDE LINK.
Refer to Control Linkage Adjustment.

B

Note

CHECK BODY GROUND CIRCUIT FOR MODE DOOR MOTOR.
Does continuity exist between mode door motor harness terminal No. ㉒ and body ground?

O.K. ↓

C

Note

Check circuit continuity between each terminal on push control unit and on mode door motor.

| Terminal No. ⊕ Push control unit | Terminal No. ⊖ Mode door motor | Continuity |
|---|---|---|
| ① | ① | Yes |
| ② | ② | |
| ③ | ③ | |
| ④ | ④ | |
| ⑤ | ⑤ | |
| ⑥ | ⑥ | |
| ⑦ | ⑦ | |
| ⑧ | ⑧ | |

Ⓐ
(Go to next page.)

**Note:**
**If the result is N.G. after checking circuit continuity, repair harness or connector.**

## Diagnostic Procedure 2 (Cont'd)

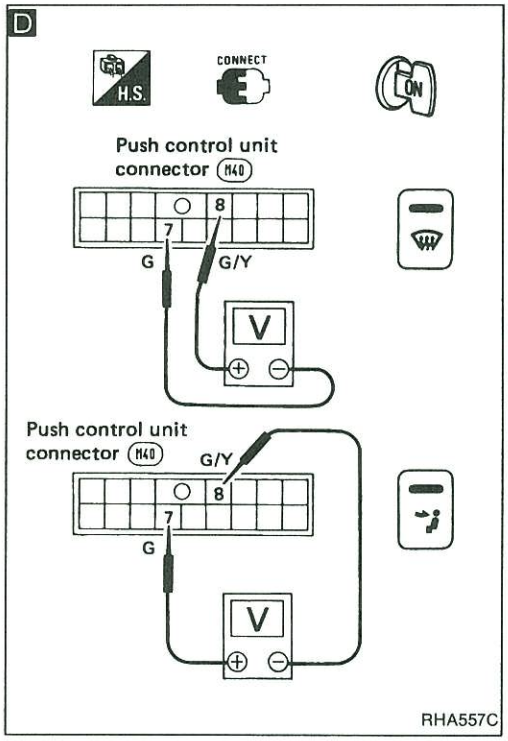


Ⓐ

Reconnect push control unit and mode door motor harness connectors.

D

CHECK FOR OUTPUT OF PUSH CONTROL UNIT.
Do approx. 12 volts exist between push control unit harness terminal No. ⑦ and ⑧ when mode is switched from "VENT" to "DEF" or when mode is switched from "DEF" to "VENT"?

N.G. → Replace control amp. built-in push control unit.

| Terminal No. | | Mode door motor | |
|---|---|---|---|
| ⑦ | ⑧ | Mode door operation | Direction of linkage rotation |
| ⊖ | ⊖ | Stop | Stop |
| ⊖ | ⊕ | VENT → DEF | Clockwise |
| ⊕ | ⊖ | DEF → VENT | Counterclockwise |

O.K.

Replace mode door motor.

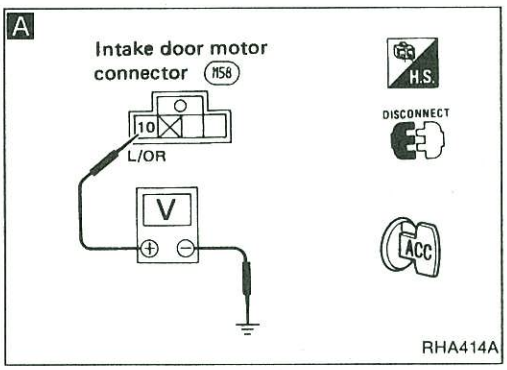


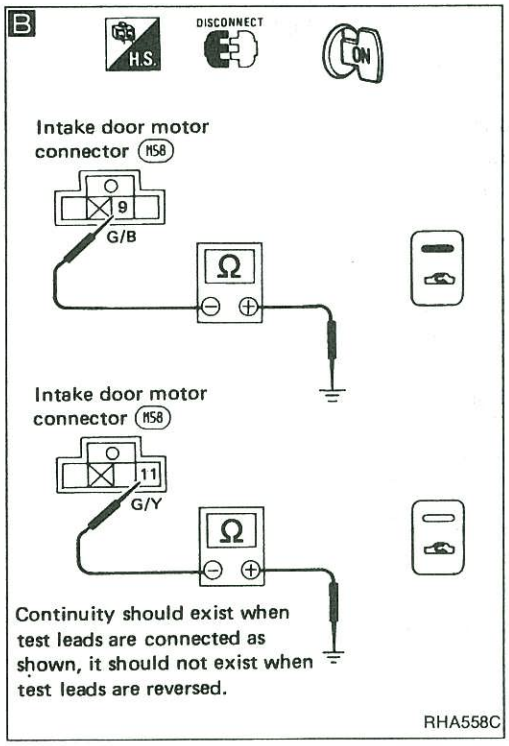


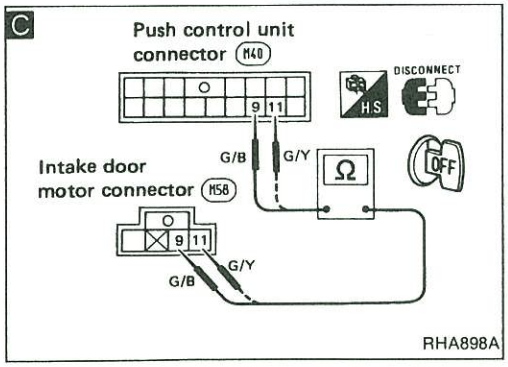


## Diagnostic Procedure 3

**SYMPTOM: Intake door does not change in VENT, B/L or FOOT mode.**

- **Perform PRELIMINARY CHECK 1 and Main Power Supply and Ground Circuit Check before referring to the following flow chart.**

A

CHECK POWER SUPPLY FOR INTAKE DOOR MOTOR.
Disconnect intake door motor harness connector.
Do approx. 12 volts exist between intake door motor harness terminal No. ⑩ and body ground?

N.G. → Check 10A fuses at fuse block.
(Refer to "POWER SUPPLY ROUTING" in EL section and A/C ELECTRICAL CIRCUIT.)

O.K. ↓

B

CHECK BODY GROUND CIRCUIT FOR INTAKE DOOR MOTOR.
Does continuity exist between intake door motor harness terminal No. ⑨ and body ground when REC switch is ON?
Does continuity exist between intake door motor harness terminal No. ⑪ and body ground when REC switch is OFF?

N.G. → Disconnect push control unit harness connector.

C

Note

Check circuit continuity between push control unit harness terminal No. ⑨ (⑪) and intake door motor harness terminal No. ⑨ (⑪).

O.K. ↓

Replace control amp. built-in push control unit.

O.K. ↓

Replace intake door motor.

**Note:**
**If the result is N.G. after checking circuit continuity, repair harness or connector.**

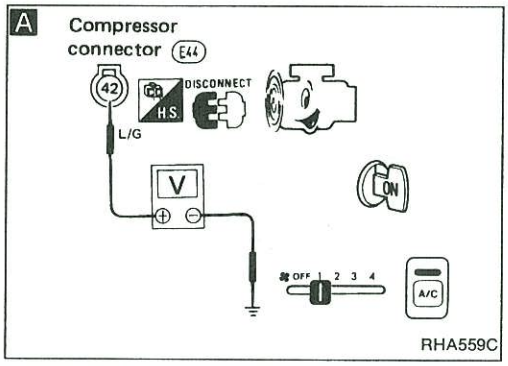


## Diagnostic Procedure 4

**SYMPTOM: Magnet clutch does not engage when A/C switch and fan switch are ON.**

- **Perform PRELIMINARY CHECK 2 before referring to the following flow chart.**

A

CHECK POWER SUPPLY FOR COMPRESSOR.
Disconnect compressor harness connector.
Do approx. 12 volts exist between compressor harness terminal No. 42 and body ground?

N.G. → Ⓐ (Go to next page.)

O.K. ↓

Check magnet clutch coil.

O.K. ↓

Replace magnet clutch.
Refer to COMPRESSOR — Model V-5 (CALSONIC make).

## Diagnostic Procedure 4 (Cont'd)

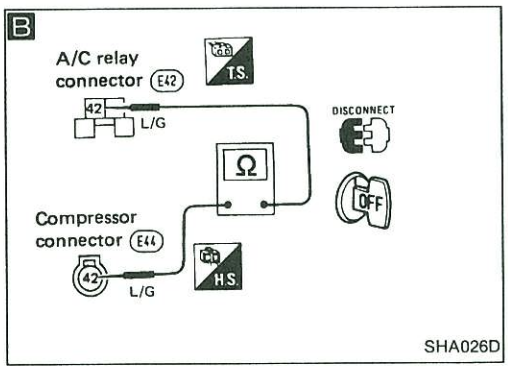


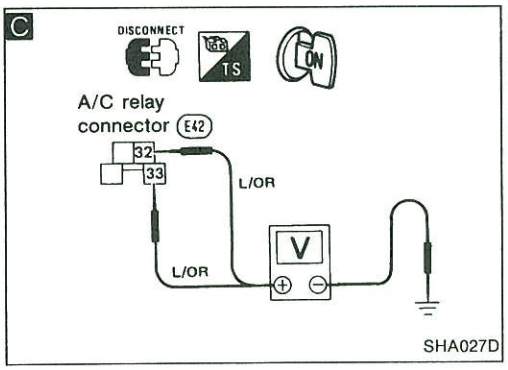


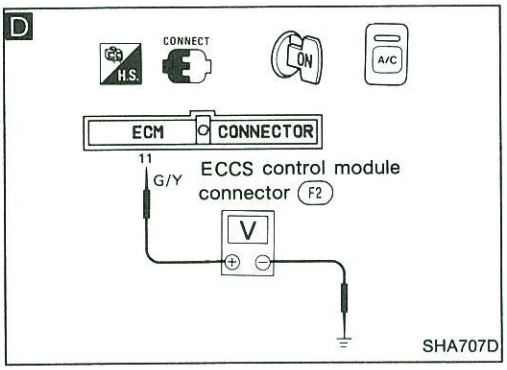


Ⓐ

Disconnect A/C relay harness connector.

B

Check circuit continuity between A/C relay harness terminal No. ㊷ and compressor harness terminal No. ㊷.

Note O.K.

C

CHECK POWER SUPPLY FOR A/C RELAY.
Disconnect A/C relay.
Do approx. 12 volts exist between A/C relay harness terminal No. ㉜, ㉝ and body ground?

O.K.

N.G.

CHECK POWER SUPPLY CIRCUIT AND 10A FUSE AT FUSE BLOCK.
(Refer to "Power Supply ROUTING" in EL section and A/C ELECTRICAL CIRCUIT.)

CHECK A/C RELAY AFTER DISCONNECTING IT. (Refer to Electrical Components Inspection.)

N.G.

Replace A/C relay.

O.K.

Reconnect A/C relay.

D

CHECK COIL SIDE CIRCUIT OF A/C RELAY.
Do approx. 12 volts exist between ECM (ECCS control module) harness terminal No. ⑪ and body ground?

N.G.

Ⓒ (Go to next page.)

O.K.

Ⓑ

**Note:**
**If the result is N.G. after checking circuit continuity, repair harness or connector.**

## Diagnostic Procedure 4 (Cont'd)

E

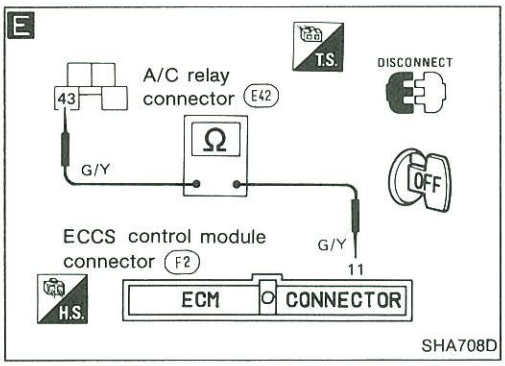


SHA708D

F

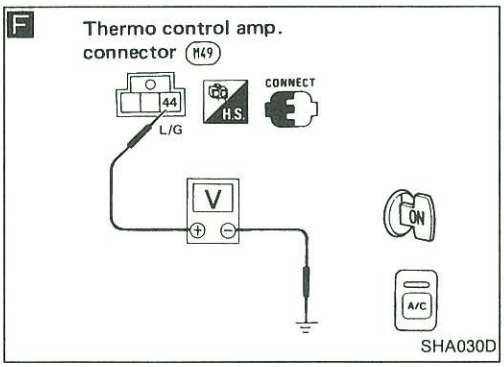


SHA030D

G

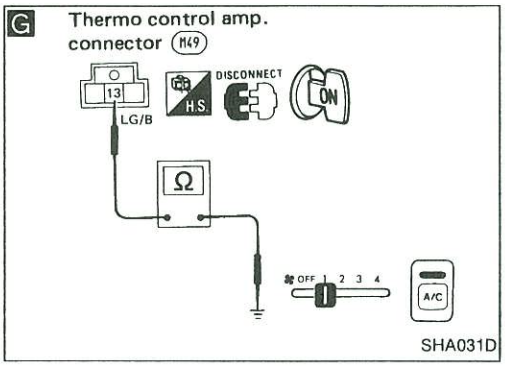


SHA031D

H

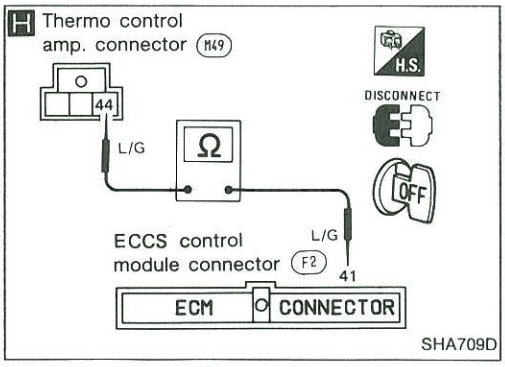


SHA709D

I

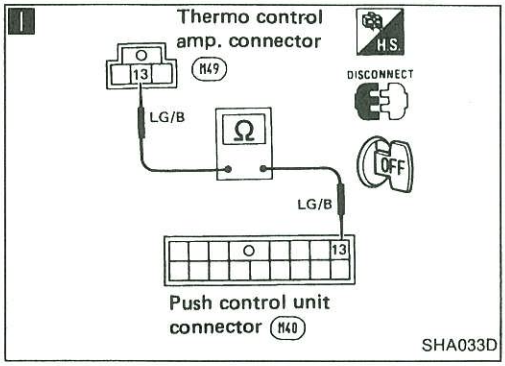


SHA033D

Ⓑ

F

CHECK VOLTAGE FOR THERMO CONTROL AMP.
Do more than 8 volts exist between thermo control amp. harness terminal No. ㊹ and body ground?

N.G. → H

O.K. ↓

CHECK POWER SUPPLY FOR THERMO CONTROL AMP.
Go to Main Power Supply and Ground Circuit Check.

G

CHECK BODY GROUND CIRCUIT FOR THERMO CONTROL AMP.
Disconnect thermo control amp. harness connector.
Does continuity exist between thermo control amp. harness terminal No. ⑬ and body ground?

N.G. → Disconnect push control unit harness connector.

O.K. ↓

Replace thermo control amp.

Ⓒ

E

Check circuit continuity between A/C relay harness terminal No. ㊸ and ECM (ECCS control module) harness terminal No. ⑪.

H

Note

Check circuit continuity between ECM (ECCS control module) harness terminal No. ㊶ and thermo control amp. harness terminal No. ㊹.

O.K. ↓

CHECK ECM (ECCS CONTROL MODULE).
Refer to EF & EC section.

I

Note

Check circuit continuity between thermo control amp. harness terminal No. ⑬ and push control unit harness terminal No. ⑬.

O.K. ↓

Ⓓ

(Go to next page.)

**Note:**
**If the result is N.G. after checking circuit continuity, repair harness or connector.**

## Diagnostic Procedure 4 (Cont'd)

J

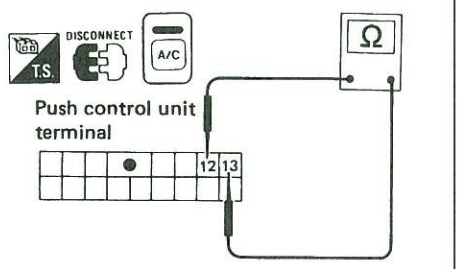


SHA034D

K

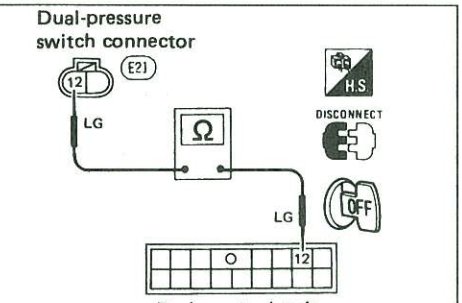


SHA035D

L

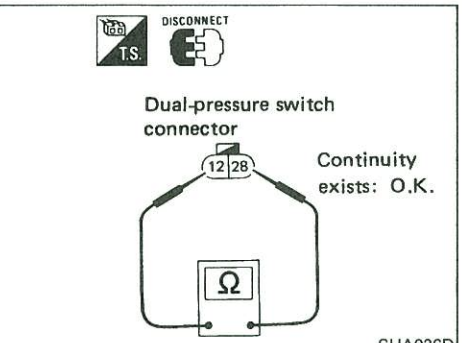


SHA036D

M

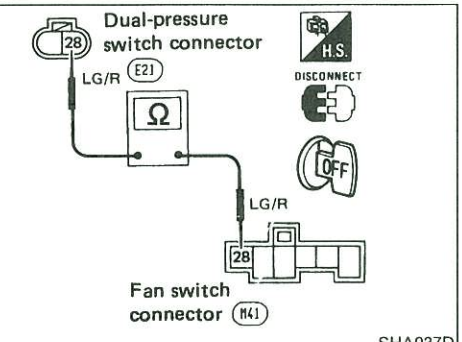


SHA037D

N

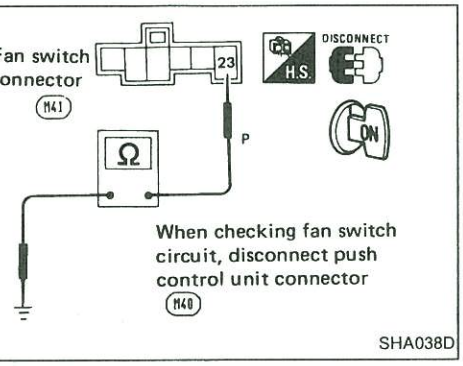


SHA038D

Ⓓ

J

CHECK PUSH CONTROL UNIT.
Does continuity exist between push control unit terminals No. ⑫ and ⑬?

N.G. → Replace control amp. built-in push control unit.

O.K.

Disconnect dual-pressure switch.

K Note

Check circuit continuity between dual-pressure switch harness terminal No. ⑫ and push control unit harness terminal No. ⑫.

O.K.

L

CHECK DUAL-PRESSURE SWITCH.
Does continuity exist between dual-pressure switch terminals?

N.G. → Replace dual-pressure switch.

O.K.

Disconnect fan switch harness connector.

M Note

Check circuit continuity between dual-pressure switch harness terminal No. ㉘ and fan switch harness terminal No. ㉘.

O.K.

N Note

CHECK BODY GROUND CIRCUIT FOR FAN SWITCH.
Does continuity exist between fan switch harness terminal No. ㉓ and body ground?

N.G. → Ⓔ (Go to next page.)

O.K.

CHECK FAN SWITCH.
(Refer to Electrical Components Inspection.)

O.K.

Replace fan switch.

**Note:**
**If the result is N.G. after checking circuit continuity, repair harness or connector.**

## Diagnostic Procedure 4 (Cont'd)

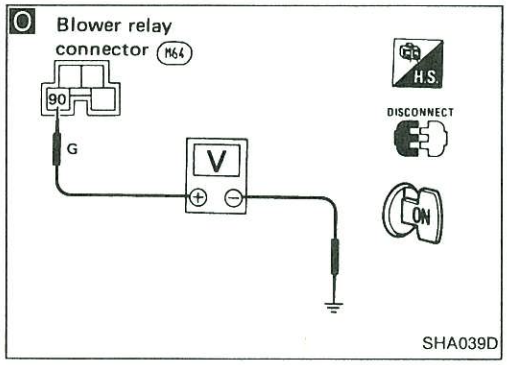


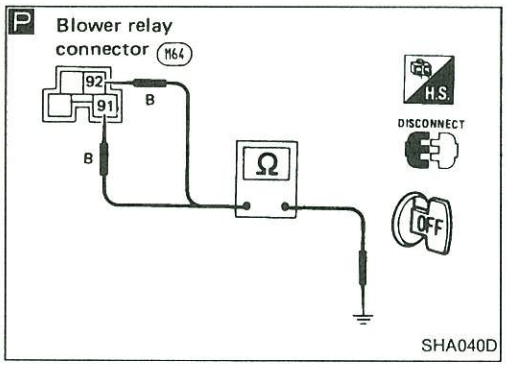


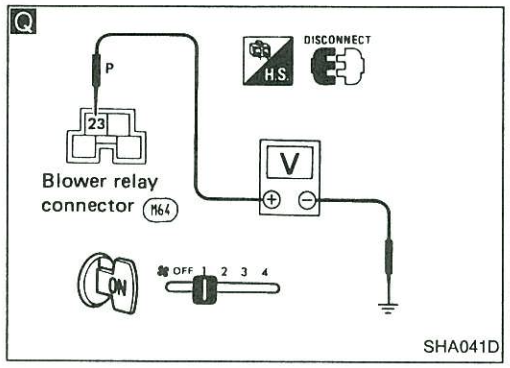


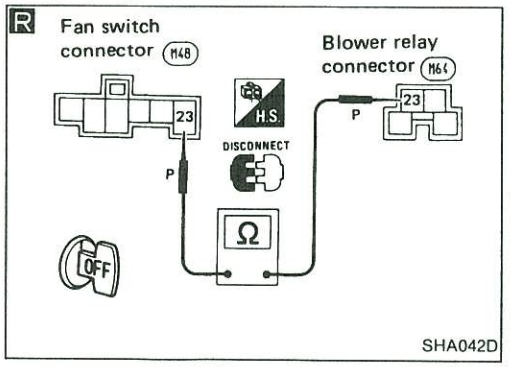


Ⓔ

O

CHECK POWER SUPPLY FOR BLOWER RELAY.
Disconnect blower relay harness connector.
Do approx. 12 volts exist between blower relay harness terminal No. 90 and body ground?

N.G. → Check 10A fuse at fuse block.
(Refer to "POWER SUPPLY ROUTING" in EL section and A/C ELECTRICAL CIRCUIT.)

O.K. ↓

P

Note

Check circuit continuity between blower relay harness terminal No. 91, 92 and body ground.

O.K. ↓

Q

Reconnect fan switch harness connector.

CHECK FAN SWITCH CIRCUIT BETWEEN FAN SWITCH AND BLOWER RELAY.
Do approx. 12 volts exist between blower relay harness terminal No. 23 and body ground?

N.G. → Disconnect fan switch harness connector.

R

Note

Check circuit continuity between fan switch harness terminal No. 23 and blower relay harness terminal No. 23.

O.K. ↓

CHECK BLOWER RELAY AFTER DISCONNECTING IT.
(Refer to Electrical Components Inspection.)

N.G. ↓

Replace blower relay.

**Note:**
**If the result is N.G. after checking circuit continuity, repair harness or connector.**

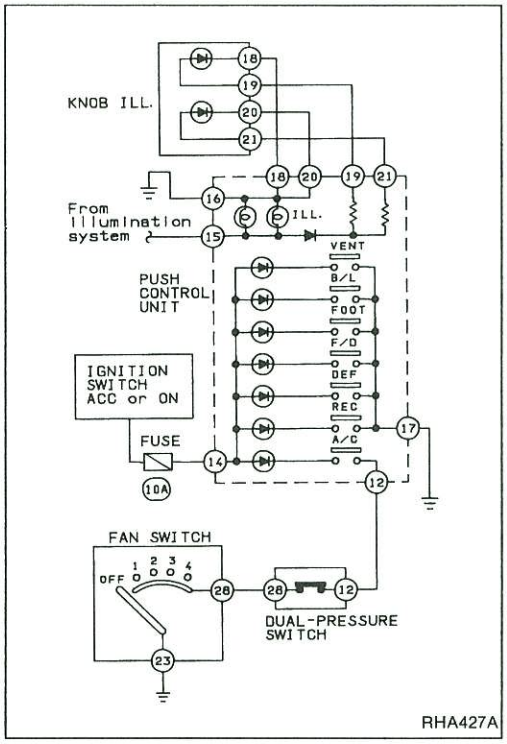


## Diagnostic Procedure 5

**SYMPTOM: Illumination or indicators of push control unit do not come on.**

- **Perform Main Power Supply and Ground Circuit Check before referring to the following flow chart.**

Turn ignition switch and lighting switch ON.

↓

CHECK ILLUMINATION AND INDICATORS.
- Turn A/C, REC and fan switches ON.
- Push VENT, B/L, FOOT, F/D and DEF switches in order.
- Check for incidents and follow the repairing methods as shown:

| INCIDENTS | | | | | | | | "How to repair" |
|---|---|---|---|---|---|---|---|---|
| ILL. | VENT | B/L | FOOT | F/D | DEF | REC | A/C | |
| X | ○ | ○ | ○ | ○ | ○ | ○ | — | Go to DIAGNOSTIC PROCEDURE 5-1. |
| — | ○ | ○ | ○ | ○ | ○ | ○ | X | Go to DIAGNOSTIC PROCEDURE 5-2. |
| ○ | X | X | X | X | X | X | — | Go to DIAGNOSTIC PROCEDURE 5-3. |
| — | △ | | | | | | — | Replace control amp. built-in push control unit. |
| ○ | X | X | X | X | X | X | ○ | Replace control amp. built-in push control unit. |
| — | X | X | X | X | X | X | ○ | Go to DIAGNOSTIC PROCEDURE 5-4. |

○ : Illumination or indicator comes on.
X : Illumination or indicator does not come on.
△ : Some indicators for VENT, B/L, FOOT, F/D, DEF or REC come on.

## DIAGNOSTIC PROCEDURE 5-1

CHECK THE OTHER ILLUMINATION SYSTEMS EXCEPT FOR A/C SYSTEM.
Do the other illumination come on with ignition switch and lighting switch ON?

N.G. → CHECK ILLUMINATION SYSTEM.
Refer to illumination/ Wiring Diagram in EL section.

O.K. ↓

Turn ignition switch and lighting switch OFF.

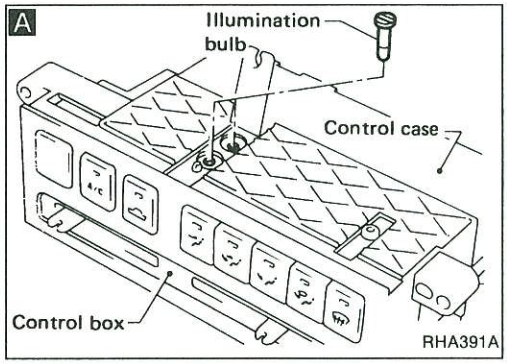


A

CHECK ILLUMINATION BULB.
Remove push control unit and disconnect harness connectors.
Remove illumination bulb(s) and check them.

N.G. → Replace illumination bulb(s).

O.K. → Ⓐ (Go to next page.)

## Diagnostic Procedure 5 (Cont'd)

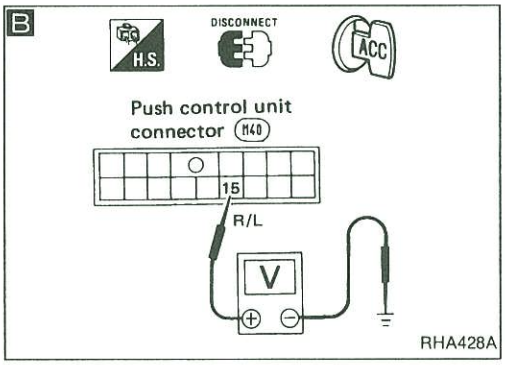


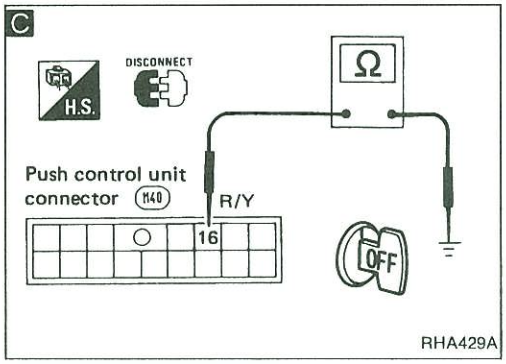


Ⓐ

B

CHECK POWER SUPPLY FOR ILLUMINATION WITH LIGHTING SWITCH ON.
Do approx. 12 volts exist between push control unit harness terminal No. ⑮ and body ground?

N.G. → CHECK POWER SUPPLY FOR A/C ILLUMINATION SYSTEM.
Refer to Illumination/ Wiring Diagram in EL section.

O.K. ↓

C

Note

CHECK BODY GROUND CIRCUIT FOR ILLUMINATION.
Does continuity exist between push control unit harness terminal No. ⑯ and body ground?

O.K. ↓

Replace control amp. built-in push control unit.

### DIAGNOSTIC PROCEDURE 5-2

CHECK MAGNET CLUTCH OPERATION.
Does magnet clutch operate normally when engine ON, A/C switch, fan switch are ON?

N.G. → Go to **Diagnostic Procedure 4.**

O.K. ↓

Replace control amp. built-in push control unit.

**Note:**
**If the result is N.G. after checking circuit continuity, repair harness or connector.**

## Diagnostic Procedure 5 (Cont'd)

### DIAGNOSTIC PROCEDURE 5-3

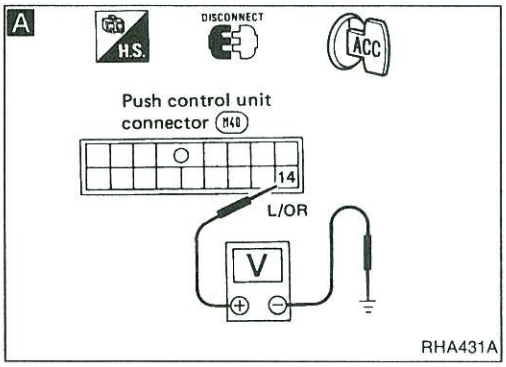


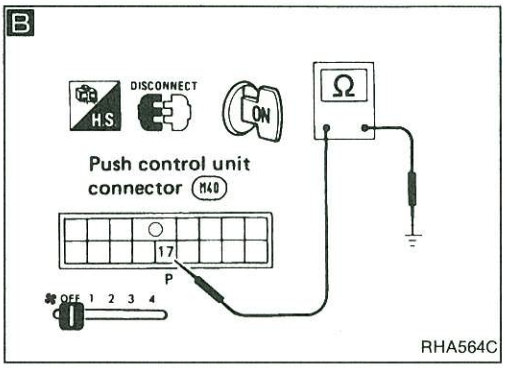


Turn ignition switch and lighting switch OFF.

↓

Disconnect push control unit harness connector.

↓

A

CHECK POWER SUPPLY FOR PUSH CONTROL UNIT.
Do approx. 12 volts exist between push control unit harness terminal No. ⑭ and body ground?

N.G. → Check 10A fuse at fuse block.
(Refer to "POWER SUPPLY ROUTING" in EL section and A/C ELECTRICAL CIRCUIT.)

O.K.

↓

B

Note

CHECK BODY GROUND CIRCUIT FOR PUSH CONTROL UNIT.
Does continuity exist between push control unit harness terminal No. ⑰ and body ground?

O.K.

↓

Replace control amp. built-in push control unit.

### DIAGNOSTIC PROCEDURE 5-4

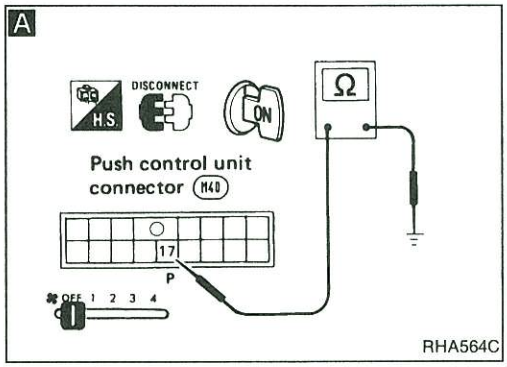


Turn ignition switch and lighting switch OFF.

↓

Disconnect push control unit harness connector.

↓

A

Note

CHECK BODY GROUND CIRCUIT FOR PUSH CONTROL UNIT.
Does continuity exist between push control unit harness terminal No. ⑰ and body ground?

O.K.

↓

Replace control amp. built-in push control unit.

**Note:**
**If the result is N.G. after checking circuit continuity, repair harness or connector.**

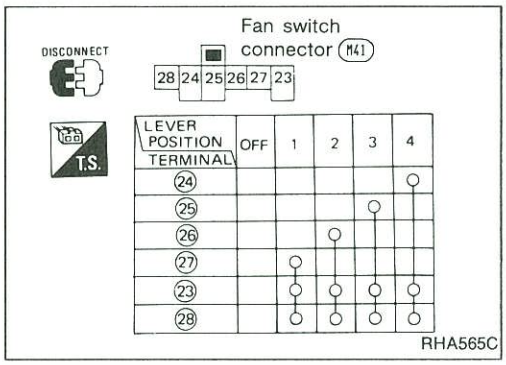


## Electrical Components Inspection

### FAN SWITCH

Check continuity between terminals at each switch position.

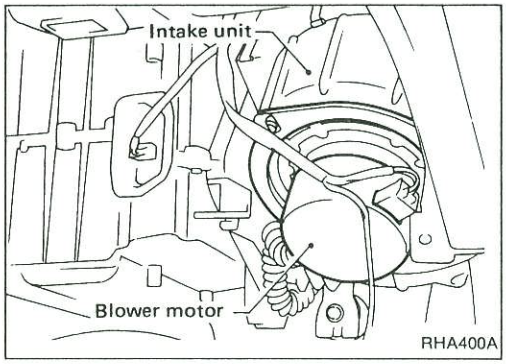


### BLOWER MOTOR

Confirm smooth rotation of the blower motor.

- Ensure that there are no foreign particles inside the intake unit.

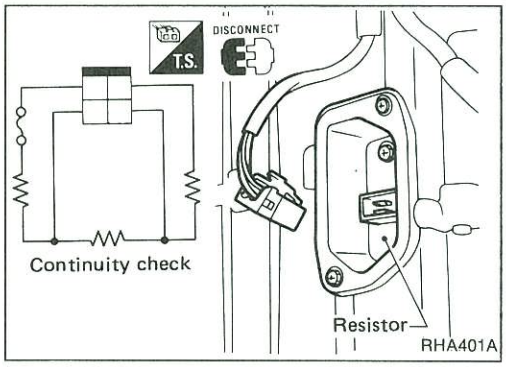


### BLOWER RESISTOR

Check continuity between terminals.

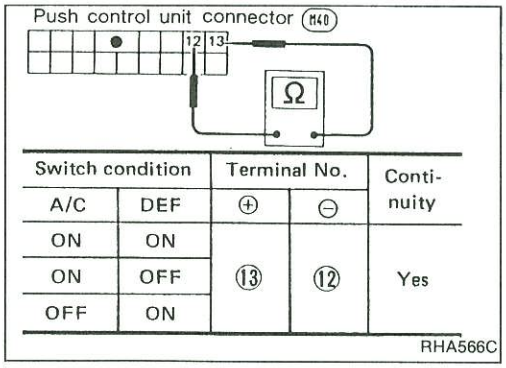


| Switch condition | | Terminal No. | | Continuity |
|---|---|---|---|---|
| A/C | DEF | ⊕ | ⊖ | |
| ON | ON | ⑬ | ⑫ | Yes |
| ON | OFF | | | |
| OFF | ON | | | |

### A/C SWITCH

Check continuity between terminals at each switch position.

## Electrical Components Inspection (Cont'd)

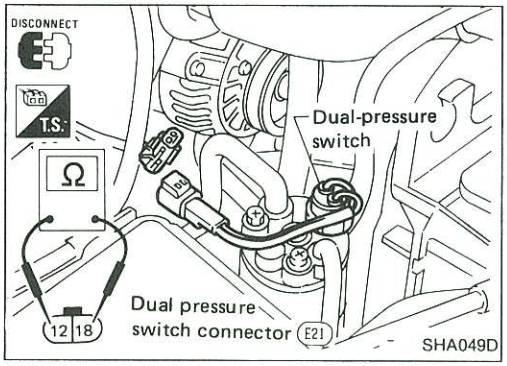


### DUAL-PRESSURE SWITCH

| High-pressure side line pressure kPa (kg/cm$^2$, psi) | Operation | Continuity |
|---|---|---|
| Decreasing to 177 - 216 (1.8 - 2.2, 26 - 31) Increasing to 2,452 - 2,844 (25 - 29, 356 - 412) | Turn OFF | Does not exist |
| Increasing to 177 - 235 (1.8 - 2.4, 26 - 34) Decreasing to 1,863 - 2,256 (19 - 23, 270 - 327) | Turn ON | Exists |

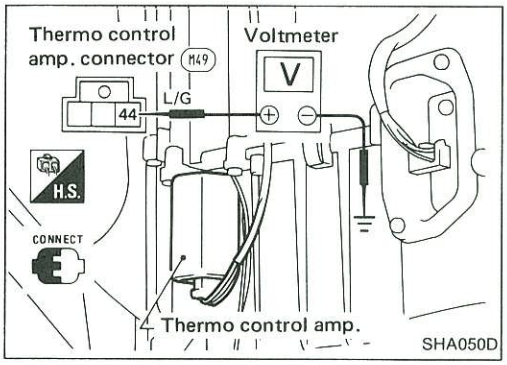


### THERMO CONTROL AMP.

1. Run engine, and operate A/C system.
2. Connect the voltmeter from harness side.
3. Check thermo control amp. operation shown in the table.

| Evaporator outlet air temperature °C (°F) | Thermo amp. operation | Tester |
|---|---|---|
| Decreasing to 1.5 - 2.5 (35 - 37) | Turn OFF | Approx. 12V |
| Increasing to 3.0 - 4.0 (37 - 39) | Turn ON | Approx. 0V |

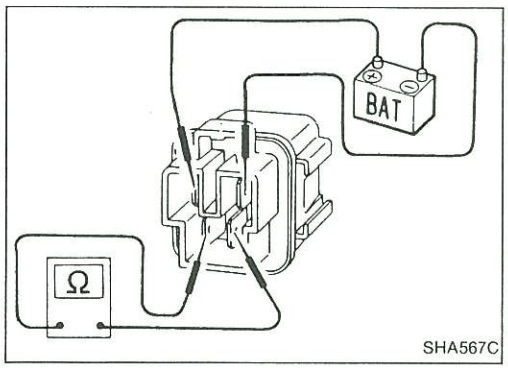


### A/C RELAY AND BLOWER RELAY

Check circuit continuity between terminals by supplying 12 volts to coil side terminal of relay.

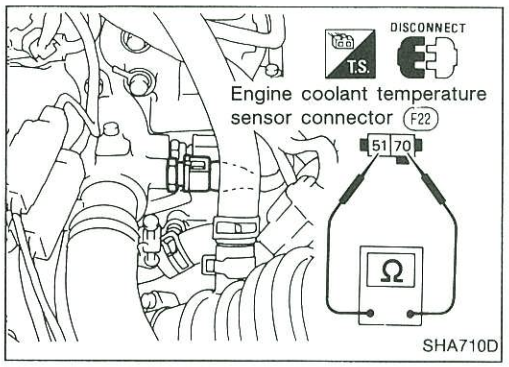


### ENGINE COOLANT TEMPERATURE SENSOR

| Water temperature °C (°F) | Operation | Continuity |
|---|---|---|
| Decreasing to 85 - 91 (185 - 196) | Turn OFF | Does not exist |
| Increasing to 92 - 98 (198 - 208) | Turn ON | Exists |

## Electrical Components Inspection (Cont'd)

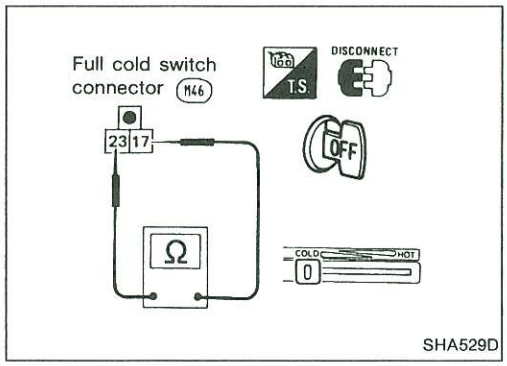


### FULL COLD SWITCH

Check continuity between terminals with temperature control lever set at full cold position.

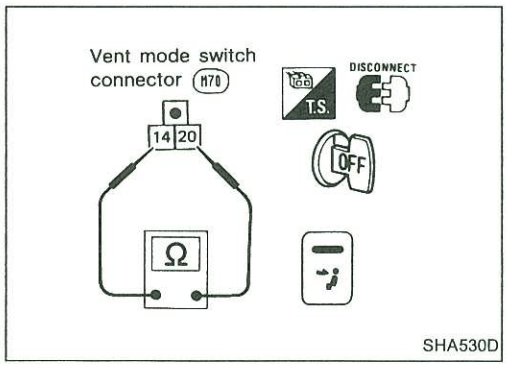


### VENT MODE SWITCH

Check continuity between terminals with mode switch set at VENT mode.

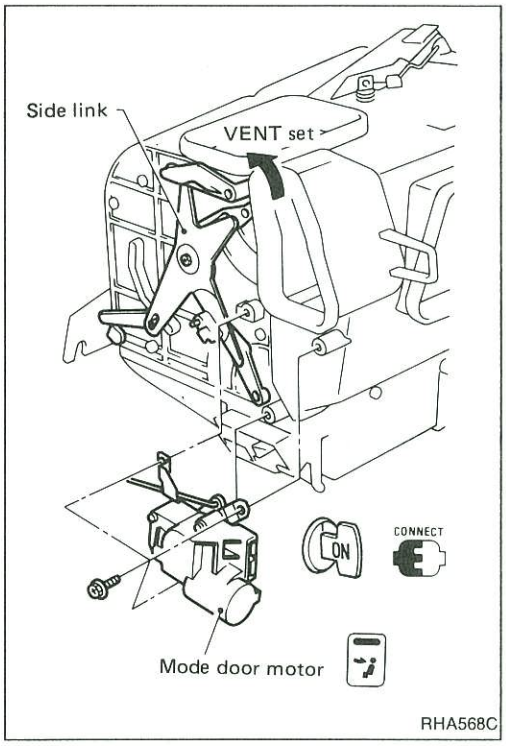


## Control Linkage Adjustment

### MODE DOOR

1. Move side link with hand and hold mode door in VENT mode.
2. Install mode door motor on heater unit and connect it to body harness.
3. Turn ignition switch to ON.
4. Turn VENT switch ON.
5. Attach mode door motor rod to side link rod holder.
6. Turn DEF switch ON. Check that side link operates at the fully-open position. Also turn VENT switch ON to check that side link operates at the fully-open position.

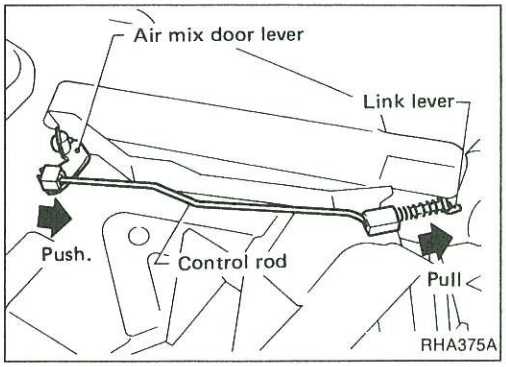


### WATER COCK CONTROL ROD

- **When adjusting water cock control rod, first disconnect temperature control cable from air mix door lever. Reconnect and readjust temperature control cable.**

1. Push air mix door lever in direction of arrow.
2. Pull control rod of water cock in direction of arrow so as to give a clearance of about 2 mm (0.08 in) between ends of rod and link lever. Connect control rod to door lever.

**After connecting control rod, check it operates properly.**

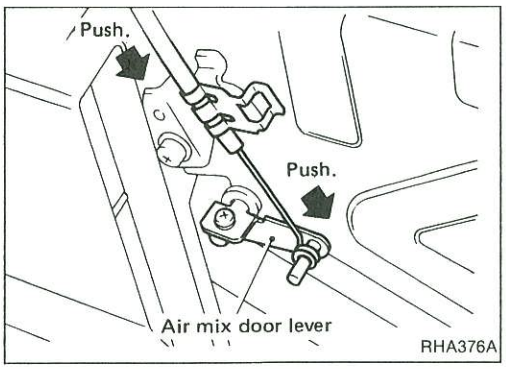


### TEMPERATURE CONTROL CABLE

- **When disconnecting control cable, remove E-ring and take off cable while pushing cable outer.**
- Move temperature control lever to full cold position. Push air mix door lever in direction of arrow. Push on outer cable in direction of arrow and then clamp it.

**After positioning control cable, check it operates properly.**

## Control Linkage Adjustment (Cont'd)

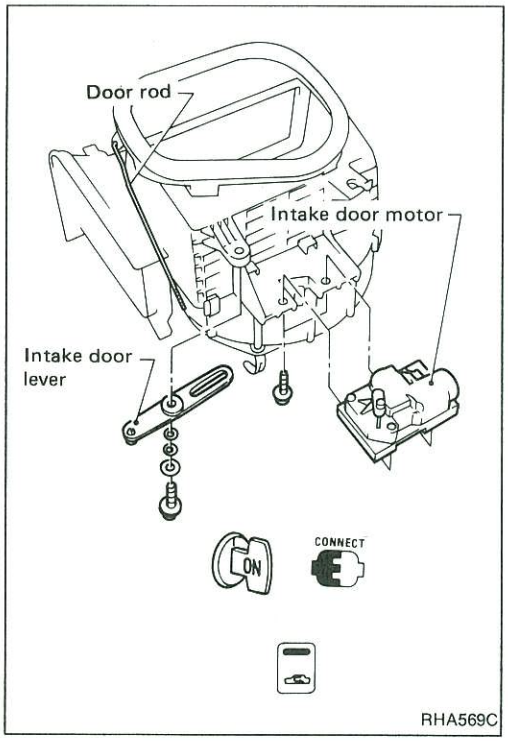


### INTAKE DOOR

1. Connect intake door motor harness connector before installing on intake door motor.
2. Turn ignition switch to ON.
3. Turn REC switch ON.
4. Install intake door lever and intake door motor.
5. Set intake door rod in REC and secure door rod to holder.
6. Check that intake door operates properly when REC switch is turned ON and OFF.

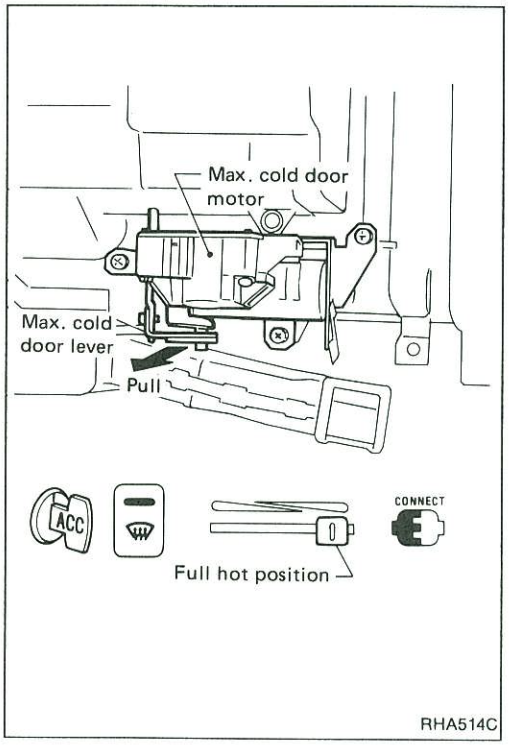


### MAX. COLD DOOR

1. Connect max. cold door motor harness connector before installing max. cold door motor.
2. Turn ignition switch to ACC.
3. Turn DEF switch ON.
4. Set temperature control lever to full hot position.
5. Install max. cold door motor on heater unit.
6. Attach max. cold door lever to rod holder.
7. Check that max. cold door operates properly when mode switch is turned to VENT and DEF.

## Push Control System

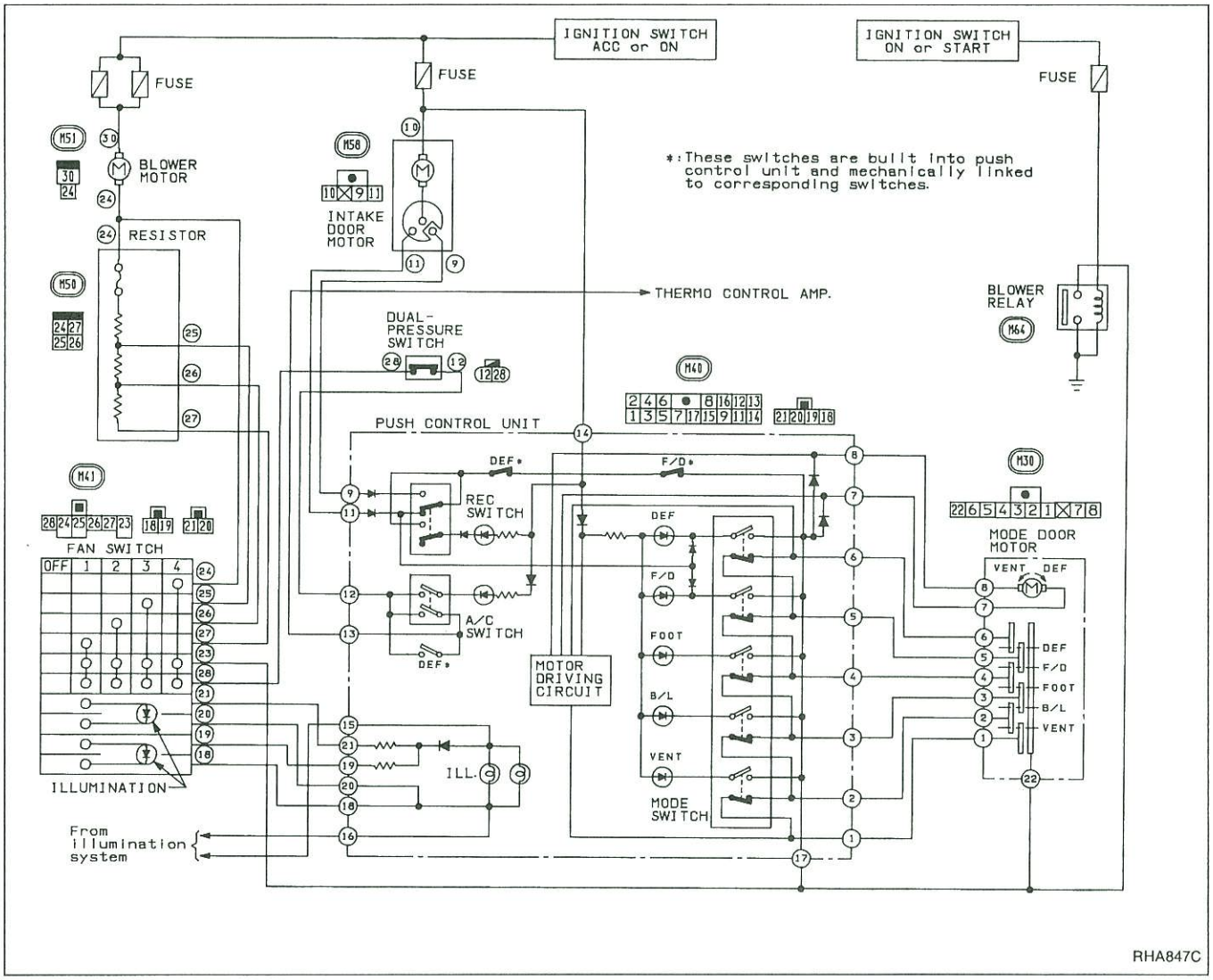


This push control system operates the intake and mode door motors to activate their corresponding doors.

### SWITCHES AND THEIR CONTROL FUNCTIONS

| Switch | | Indicator illuminates | | | | | | | Air outlet | Intake air | Compressor |
|---|---|---|---|---|---|---|---|---|---|---|---|
| | | A/C | | | | | | | | | |
| A/C | | ○ | | | | | | | — | — | ON*1 |
| Mode | | | ○ | | | | | | VENT | — | — |
| | | | | ○ | | | | | B/L | — | — |
| | | | | | ○ | | | | FOOT | — | — |
| | | | | | | ○ | | | F/D | FRE | — |
| | | | | | | | ○ | | DEF | FRE | ON*1 |
| | | | | | | | | ○*2 | — | REC | — |

*1: Compressor is operated by thermo control amp.

*2: It depends on mode switch position.

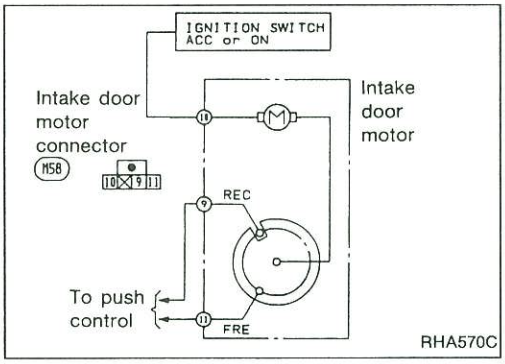


## Intake Door Motor

The intake door motor is installed on the front portion of the intake unit. Using a rod and link it opens and closes the intake door.

When the REC switch is ON (OFF), the ground line of the intake door motor is switched from terminal ⑪ to ⑨ (⑨ to ⑪). This causes the motor to start because the position switch contacts built into it are set to the current flow position. The contacts turn along with the motor. When they reach the non-current flow position, the motor will stop. The motor always turns in the same direction.

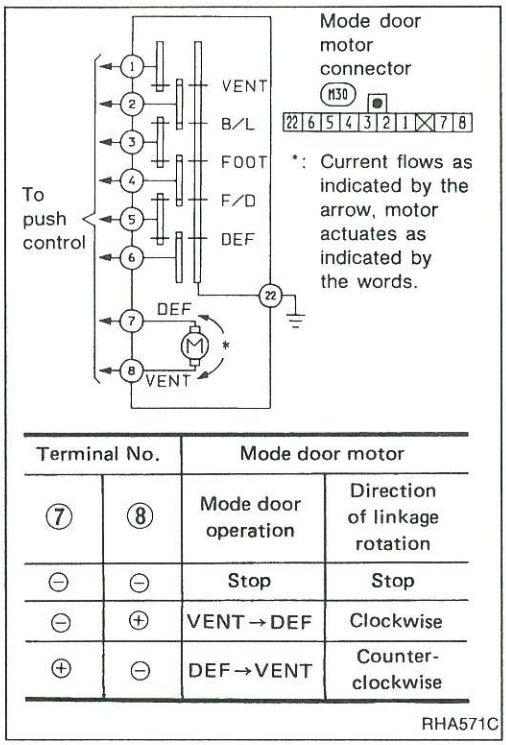


| Terminal No. | | Mode door motor | |
|---|---|---|---|
| ⑦ | ⑧ | Mode door operation | Direction of linkage rotation |
| ⊖ | ⊖ | Stop | Stop |
| ⊖ | ⊕ | VENT→DEF | Clockwise |
| ⊕ | ⊖ | DEF→VENT | Counter-clockwise |

RHA571C

## Mode Door Motor

The mode door motor is located on the left side of the heater unit. Through the side link it opens and closes the vent, foot and defroster door.

When one mode switch is pushed, the position switch built into it reads the corresponding mode to determine the direction of motor rotation. As soon as the desired mode is set, the position switch stops the motor.

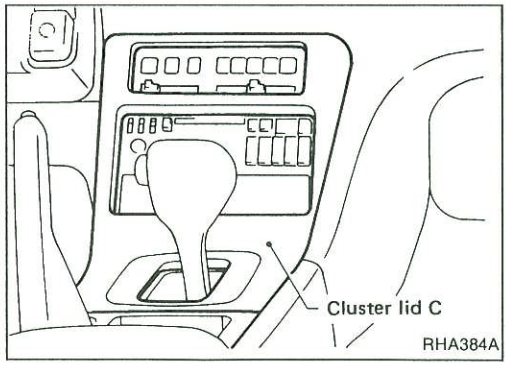


## Removal and Installation

1. Remove cluster lid C.

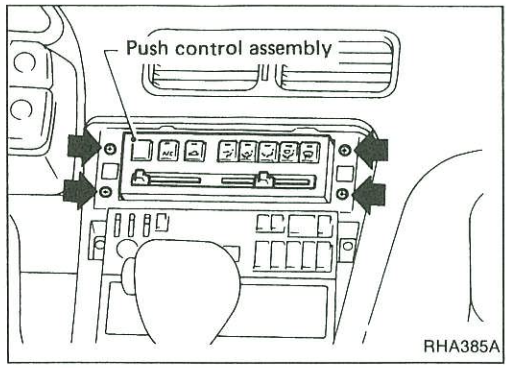


2. Remove audio (radio).
3. Remove four screws of push control unit.
4. Remove temperature control cable.
5. Disconnect push control unit harness connectors.
6. Remove push control unit.
7. Installation is in the reverse order of removal.

**Refer to Control Linkage Adjustment for temperature control cable.**

## Overhaul — Push control unit assembly

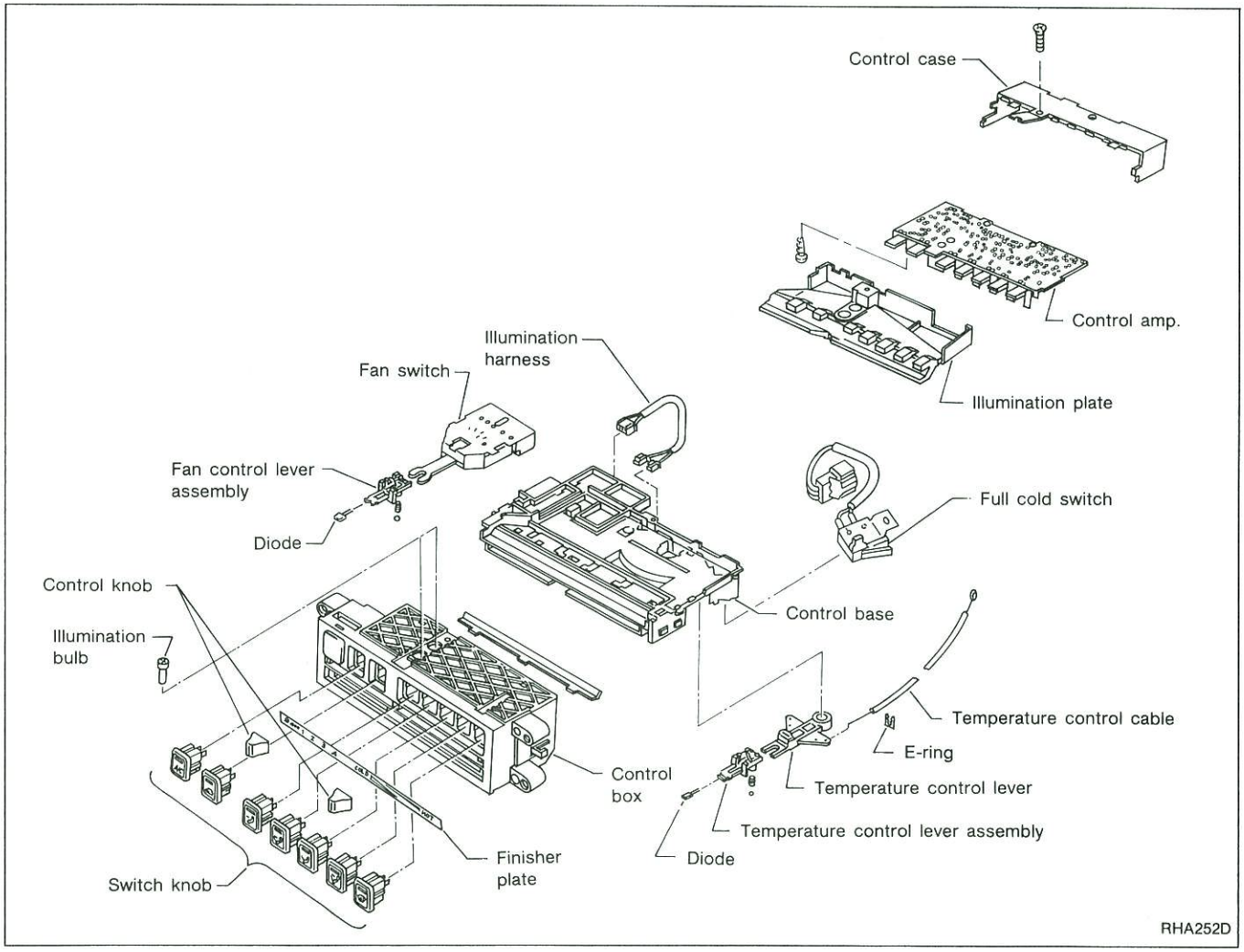


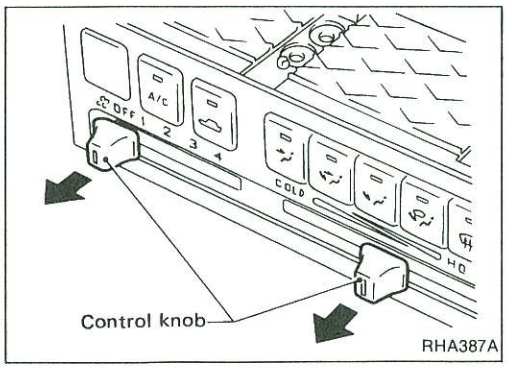


1. Remove control knobs.

**Wrap knobs with a cloth and pull in direction indicated by arrow as shown in figure at left. Be careful not to scratch knobs during removal.**

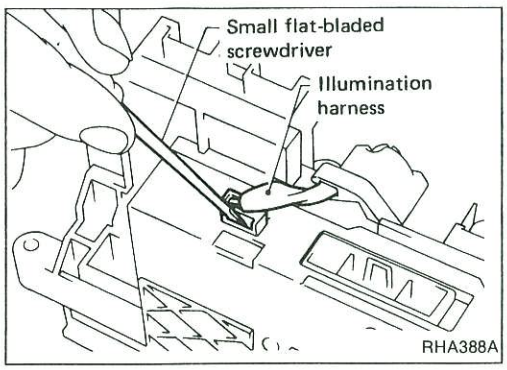


2. Disconnect illumination harness connectors.

## Overhaul — Push control unit assembly (Cont'd)

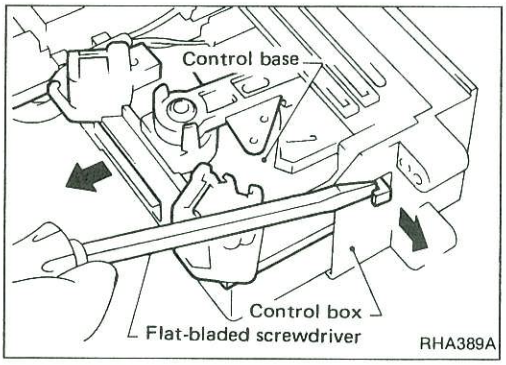


3. Remove control base.

**Undo hook at each end of control box and remove control base from control box by moving it in direction indicated by arrow.**

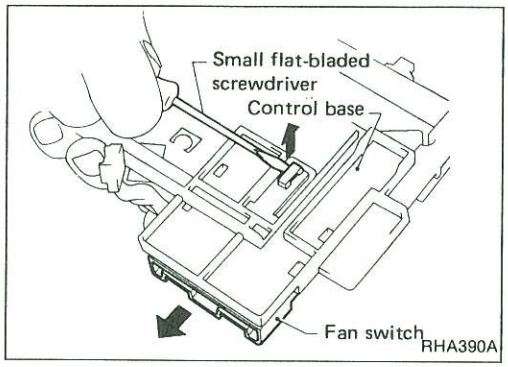


4. Remove fan switch.

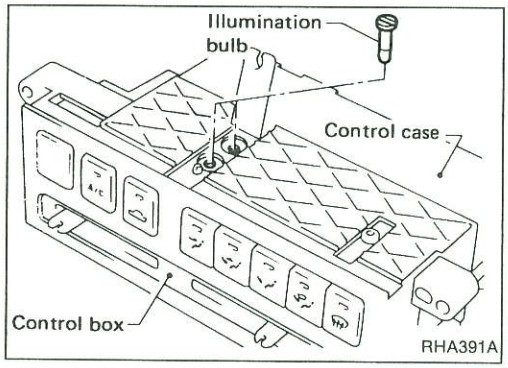


5. Remove illumination bulb.

6. Remove control knobs.

**Wrap finisher with a cloth and remove knobs using pliers or similar tool. Be careful not to scratch finisher's surface.**

7. Remove control case.
8. Remove illumination plate.

**Be careful not to scratch control amp. when removing illumination plate.**

9. Remove finisher plate.
10. Remove control amp.

**Be careful not to damage substrate when removing.**

11. Disconnect temperature control cable.
12. Installation is in reverse order of removal.

## General Specifications

### COMPRESSOR

| | |
|---|---|
| Model | CALSONIC make V-5 |
| Type | V-5 variable displacement |
| Displacement $cm^3$ (cu in)/rev. | |
| Max. | 146 (8.91) |
| Min. | 3 (0.18) |
| Cylinder bore x stroke mm (in) | 36.1 (1.421) x [0.6 - 28.6 (0.024 - 1.126)] |
| Direction of rotation | Clockwise (viewed from drive end) |
| Drive belt | Poly V |

### LUBRICATION OIL

| | |
|---|---|
| Model | CALSONIC make V-5 |
| Type | SUNISO 5GS or equivalent |
| Capacity mℓ (US fl oz, Imp fl oz) | |
| Total in system | 236 (8.0, 8.3) |
| Compressor (Service part) charging amount | 236 (8.0, 8.3) |

### REFRIGERANT

| | | |
|---|---|---|
| Type | | R-12 |
| Capacity | kg (lb) | 0.8 - 0.9 (1.8 - 2.0) |

## Inspection and Adjustment

### ENGINE IDLING SPEED (When A/C is ON)

- Refer to EF & EC section.

### BELT TENSION

- Refer to Checking Drive Belts (MA section).

### COMPRESSOR

| | |
|---|---|
| Model | CALSONIC make V-5 |
| Clutch disc-pulley clearance mm (in) | 0.3 - 0.6 (0.012 - 0.024) |

# ELECTRICAL SYSTEM

## SECTION EL

**When you read wiring diagrams:**
- **Read GI section, "HOW TO READ WIRING DIAGRAMS".**

# CONTENTS


**HARNESS CONNECTOR** ..... 3
Description ..... 3
**STANDARDIZED RELAY** ..... 4
Description ..... 4
**POWER SUPPLY ROUTING** ..... 6
Wiring Diagram ..... 6
Fuse ..... 7
Fusible Link ..... 7
**BATTERY** ..... 8
How to Handle Battery ..... 8
Service Data and Specifications (S.D.S.) ..... 11
**STARTING SYSTEM** ..... 12
Wiring Diagram ..... 12
Construction ..... 13
Service Data and Specifications (S.D.S.) ..... 13
**CHARGING SYSTEM** ..... 14
Wiring Diagram ..... 14
Construction ..... 15
Service Data and Specifications (S.D.S.) ..... 16
**COMBINATION SWITCH** ..... 17
Combination Switch/Check ..... 17
Replacement ..... 18
Steering Switch/Check ..... 19
**HEADLAMP** ..... 20
Schematic ..... 20
Wiring Diagram ..... 21
Description ..... 22
Constructions ..... 26
Assembly ..... 27
Installation and Adjustment ..... 27
Headlamp Motor Check ..... 28
Aiming Adjustment ..... 29
**EXTERIOR LAMP** ..... 30
Daytime Light/Description & Schematic ..... 30
Daytime Light/Wiring Diagram ..... 31
Clearance, License, Tail and Stop Lamps/Wiring Diagram ..... 32
Back-up Lamp/Wiring Diagram ..... 34
Turn Signal and Hazard Warning Lamps/Wiring Diagram ..... 35
Combination Flasher Unit Check ..... 36
Bulb Specifications ..... 36
**INTERIOR LAMP** ..... 37
Illumination/Wiring Diagram ..... 37
Interior Lamp/Wiring Diagram ..... 38
**METER AND GAUGES** ..... 39
Combination Meter ..... 39
Combination Meter/Wiring Diagram ..... 42
Speedometer, Tachometer, Temp. and Fuel Gauges/Wiring Diagram ..... 43
Inspection/Fuel Gauge and Water Temperature Gauge ..... 44
Fuel Tank Gauge Unit Check ..... 45
Thermal Transmitter Check ..... 45
Oil Pressure Switch Check ..... 45
Speed Sensor Signal Check ..... 45
**WARNING LAMPS AND CHIME** ..... 46
Warning Lamps/Schematic ..... 46
Warning Lamps/Wiring Diagram ..... 47
Warning Chime/Wiring Diagram ..... 48
Diode Check ..... 49
Warning Chime Check ..... 49
**TIME CONTROL SYSTEM** ..... 50
Schematic ..... 50
Wiring Diagram ..... 51
Description ..... 52
Trouble-shooting ..... 53
**WIPER AND WASHER** ..... 59

# CONTENTS (Cont'd.)


Front Wiper and Washer/Wiring Diagram ..... 59
Rear Wiper and Washer/Wiring Diagram ..... 60
Wiper and Washer Adjustment ..... 61
Washer Nozzle Adjustment ..... 62
Check Valve ..... 62
Wiper Amplifier Check ..... 63
**HORN, CIGARETTE LIGHTER AND CLOCK** ..... 64
Wiring Diagram ..... 64
**REAR WINDOW DEFOGGER** ..... 65
Wiring Diagram ..... 65
Filament Check ..... 66
Filament Repair ..... 67
**AUDIO AND POWER ANTENNA** ..... 68
Audio/Wiring Diagram ..... 68
Power Antenna/Wiring Diagram ..... 69
Radio Fuse Check ..... 69
Location of Antenna ..... 70
Antenna Rod Replacement ..... 70
Window Antenna Repair ..... 71
**AUTOMATIC SPEED CONTROL DEVICE (A.S.C.D.)** ..... 72
Wiring Diagram ..... 72
Schematic ..... 74
Trouble Diagnoses ..... 75
A.S.C.D. Wire Adjustment ..... 83
**LOCATION OF ELECTRICAL UNITS** ..... 87
Engine Compartment ..... 87
Passenger Compartment ..... 88
**HARNESS LAYOUT** ..... 90
Outline ..... 90
Instrument Harness ..... 91
Back Door Harness ..... 91
Main Harness ..... 92
Engine Room Harness ..... 98
Engine Room Harness No. 2 ..... 101
E.F.I. Harness ..... 102
Room Lamp and Sun Roof Harness ..... 103
Door Harness L.H. ..... 104
Door Harness R.H. ..... 104
**SUPER MULTIPLE JUNCTION (S.M.J.)** ..... 105
Disconnecting and Connecting ..... 105
Terminal Arrangement ..... 106


**WIRING DIAGRAM REFERENCE CHART**


ECCS ..... FOLDOUT PAGE
A/T CONTROL, SHIFT LOCK CONTROL ..... AT SECTION
ANTI-LOCK BRAKING SYSTEM ..... BR SECTION
SUPER HICAS SYSTEM ..... ST SECTION
ELECTRIC DOOR MIRROR, SUN ROOF, DOOR LOCK, POWER WINDOW AND AUTOMATIC SEAT BELT ..... BF SECTION
HEATER AND AIR CONDITIONER ..... HA SECTION

## Description

### HARNESS CONNECTOR

- All harness connectors have been modified to prevent accidental looseness or disconnection.
- The connector can be disconnected by pushing or lifting the locking section.

**CAUTION:**
**Do not pull the harness when disconnecting the connector.**

[Example]

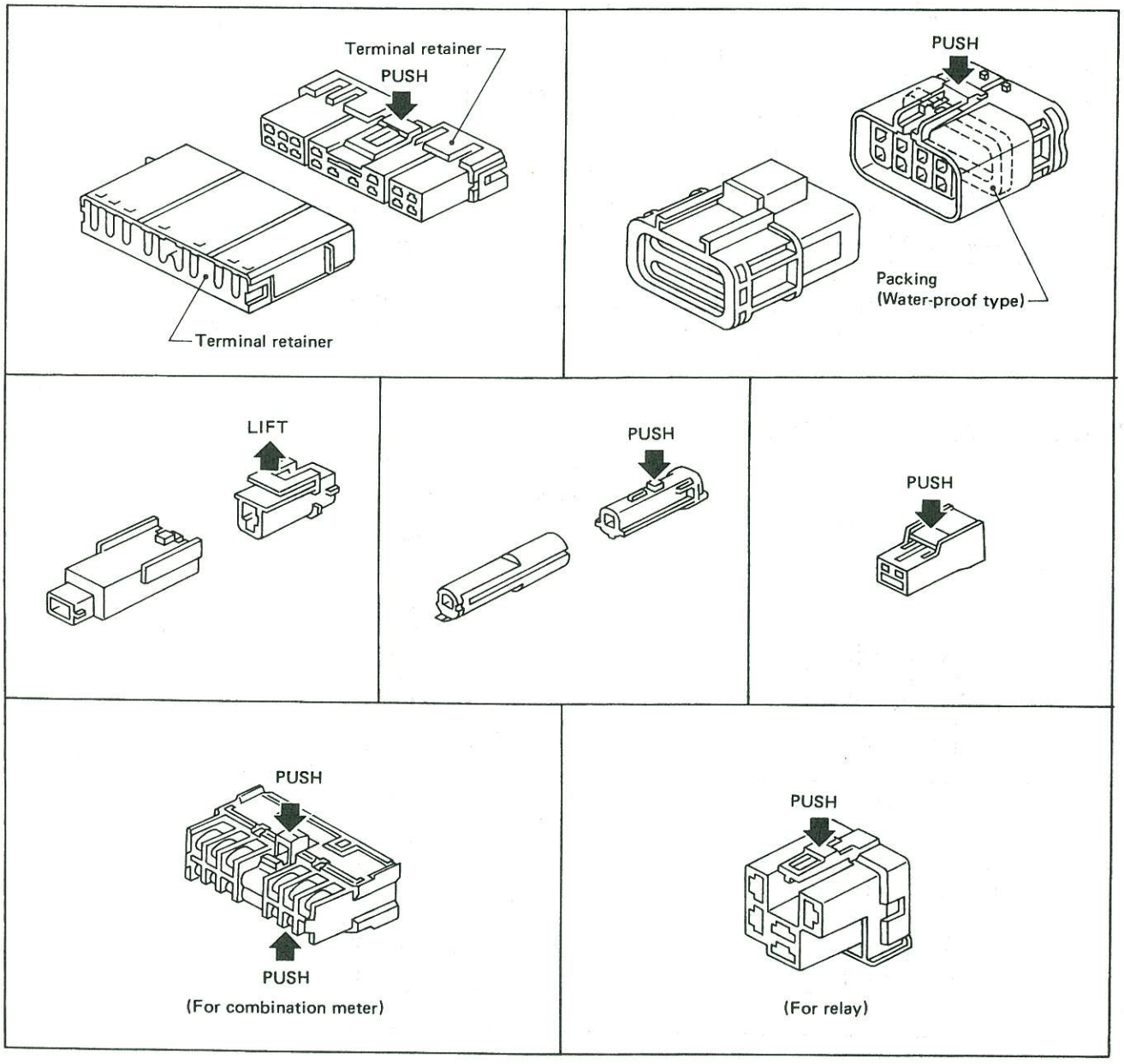


SEL769D

## Description

### NORMAL OPEN, NORMAL CLOSED AND MIXED TYPE RELAYS

Relays can mainly be divided into three types: normal open, normal closed and mixed type relays.

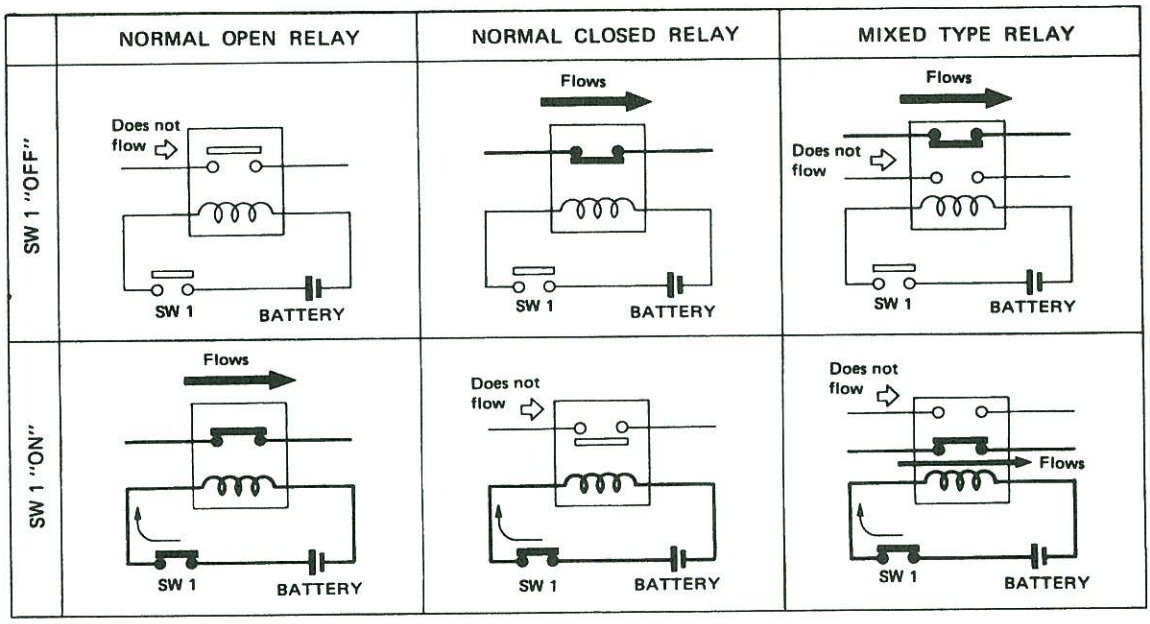


SEL881H

### TYPE OF STANDARDIZED RELAY

1M ... 1 Make
2M ... 2 Make
1T ... 1 Transfer
1M·1B ... 1 Make 1 Break

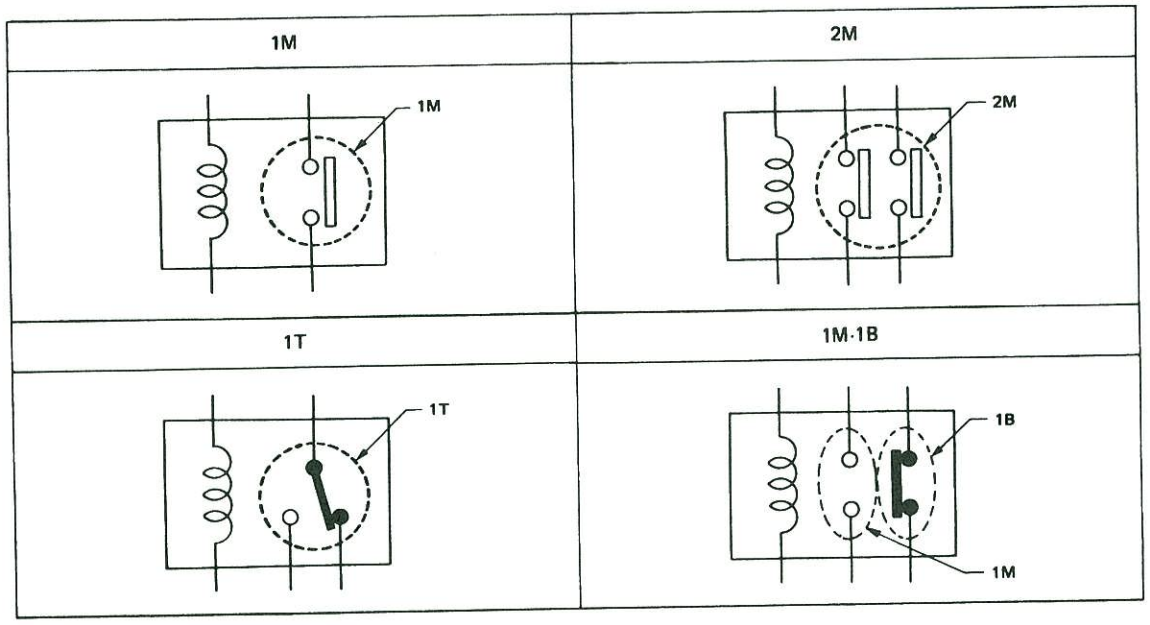


SEL882H

## Description (Cont'd)

| Type | Outer view | Circuit | Connector symbol and connection | Case color |
|---|---|---|---|---|
| 1T | 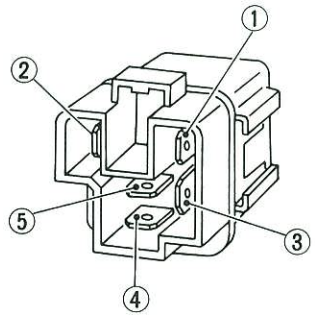 | 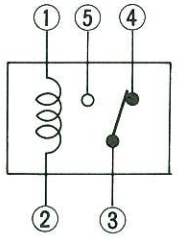 | 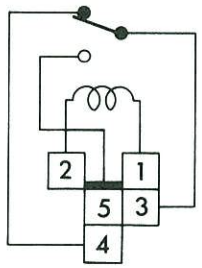 | BLACK |
| 1M | 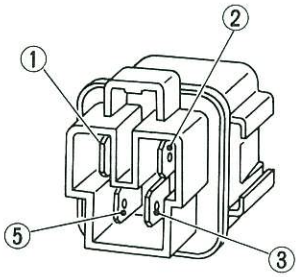 | 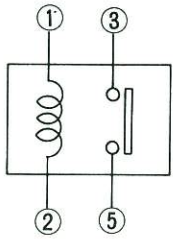 | 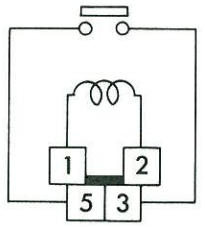 | BLUE or GREEN |
| 2M | 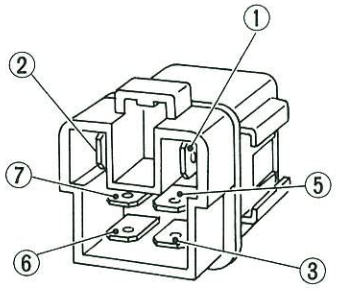 | 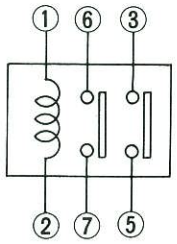 | 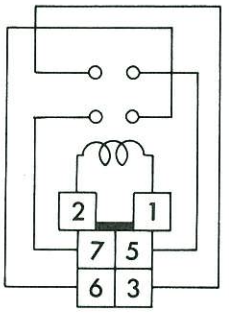 | BROWN |
| 1M·1B | 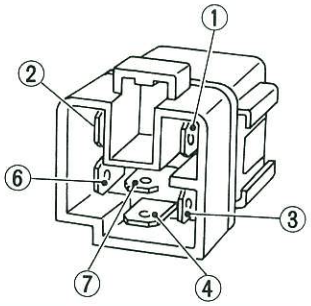 | 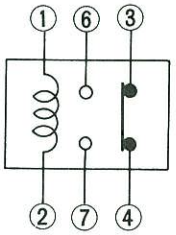 | 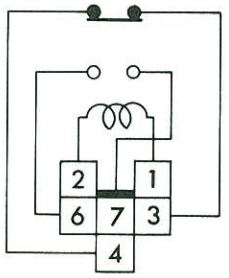 | GRAY |

SEL883H

## Wiring Diagram

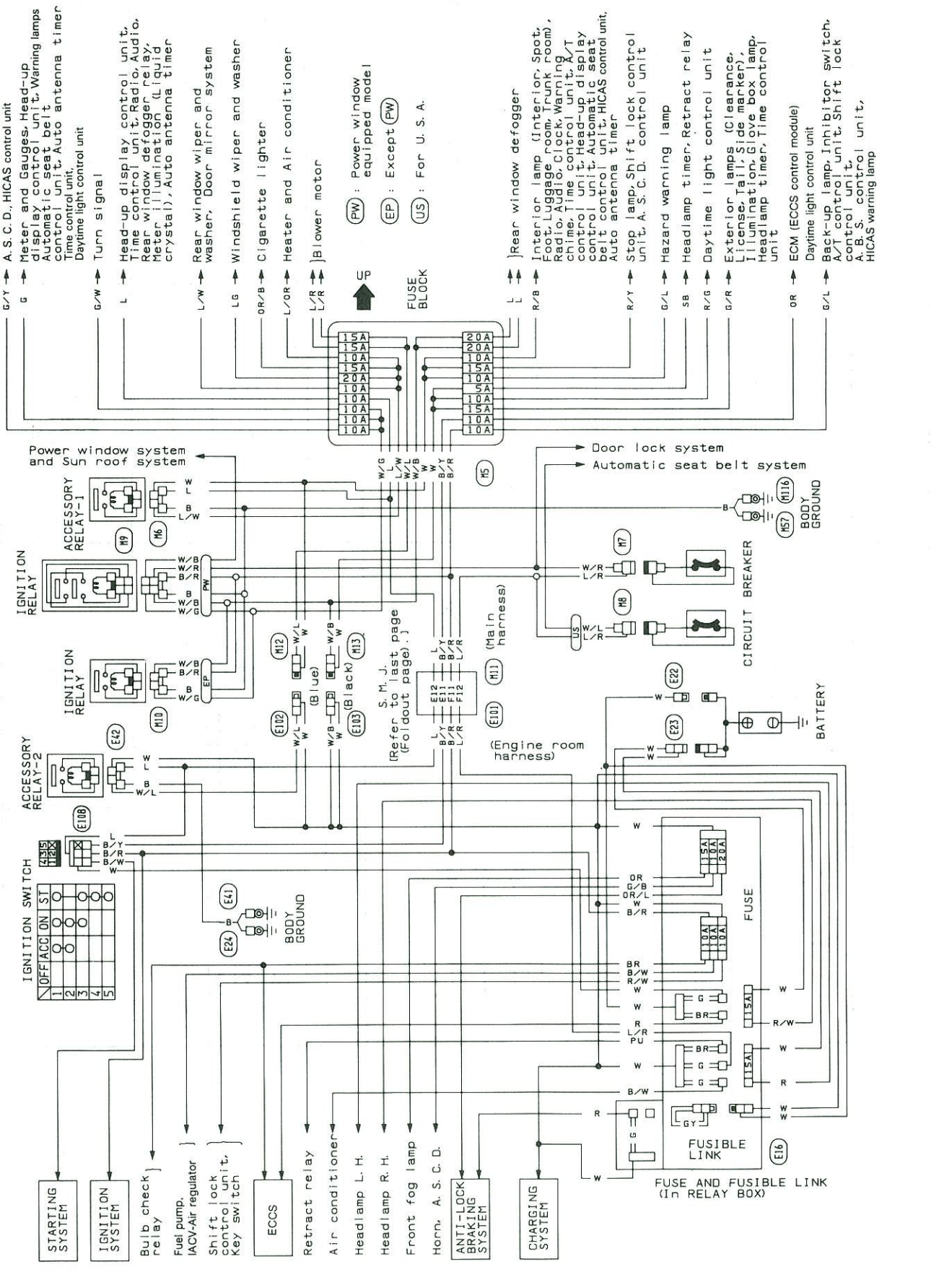


MEL712B

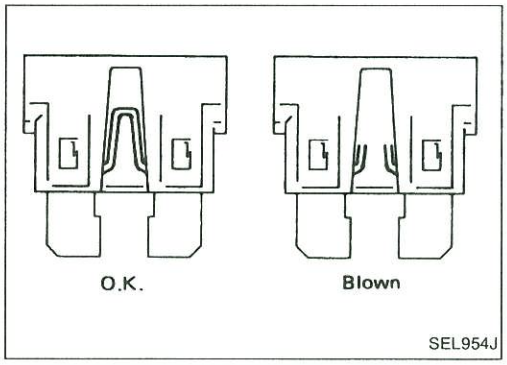


## Fuse

a. **If fuse is blown, be sure to eliminate cause of problem before installing new fuse.**
b. **Use fuse of specified rating. Never use fuse of more than specified rating.**
c. **Do not install fuse in oblique direction; always insert it into fuse holder properly.**
d. **Remove fuse for clock if vehicle is not used for a long period of time.**

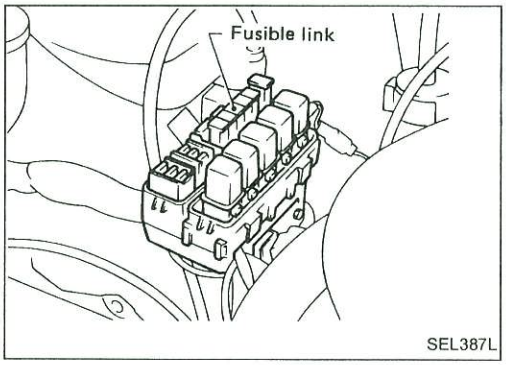


## Fusible Link

A melted fusible link can be detected either by visual inspection or by feeling with finger tip. If its condition is questionable, use circuit tester or test lamp.

**CAUTION:**

a. **If fusible link should melt, it is possible that critical circuit (power supply or large current carrying circuit) is shorted. In such a case, carefully check and eliminate cause of problem.**
b. **Never wrap periphery of fusible link with vinyl tape. Extreme care should be taken with this link to ensure that it does not come into contact with any other wiring harness or vinyl or rubber parts.**

**CAUTION:**

a. **If it becomes necessary to start the engine with a booster battery and jumper cables, use a 12-volt booster battery.**
b. **After connecting battery cables, ensure that they are tightly clamped to battery terminals for good contact.**
c. **Never add distilled water through the hole used to check specific gravity.**

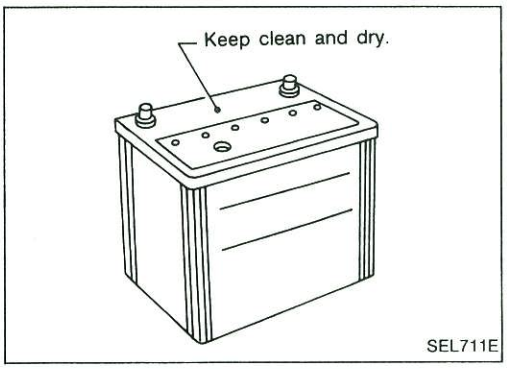


## How to Handle Battery

### METHODS OF PREVENTING OVER-DISCHARGE

The following precautions must be taken to prevent over-discharging a battery.

- The battery surface (particularly its top) should always be kept clean and dry.
- The terminal connections should be clean and tight.
- At every routine maintenance, check the electrolyte level.

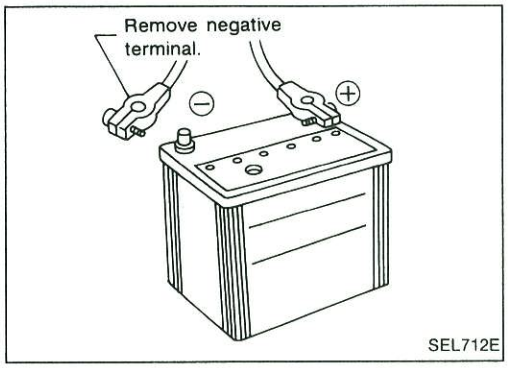


- When the vehicle is not going to be used over a long period of time, disconnect the negative battery terminal. (If the vehicle has an extended storage switch, turn it off.)

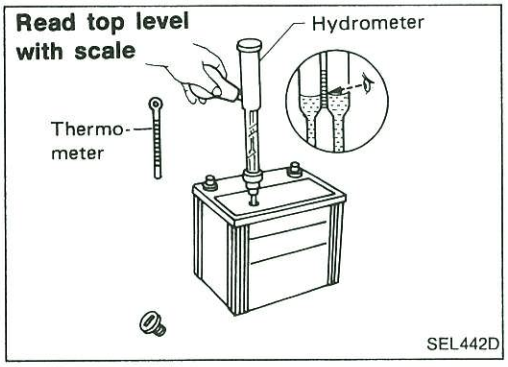


- Check the charge condition of the battery.
  Periodically check the specific gravity of the electrolyte. Keep a close check on charge condition to prevent over-discharge.

### CHECKING ELECTROLYTE LEVEL

**WARNING:**

**Do not allow battery fluid to come in contact with skin, eyes, fabrics, or painted surfaces. After touching a battery, do not touch or rub your eyes until you have thoroughly washed your hands. If the acid contacts the eyes, skin or clothing, immediately flush with water for 15 minutes and seek medical attention.**

## How to Handle Battery (Cont'd)

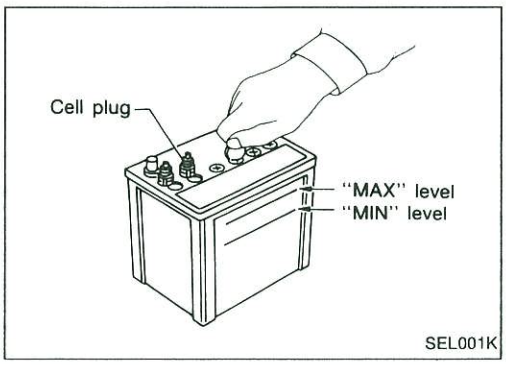


- Remove the cell plug using a suitable tool.
- Add distilled water up to the MAX level.

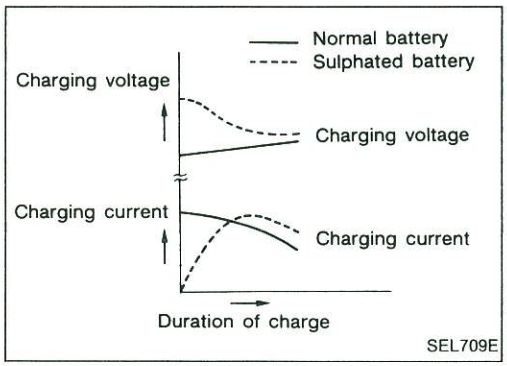


### SULPHATION

**When a battery has been left unattended for a long period of time and has a specific gravity of less than 1.100, it will be completely discharged, resulting in sulphation on the cell plates.**

**Compared with a battery discharged under normal conditions, the current flow in a "sulphated" battery is not as smooth although its voltage is high during the initial stage of charging, as shown in the figure at the left.**

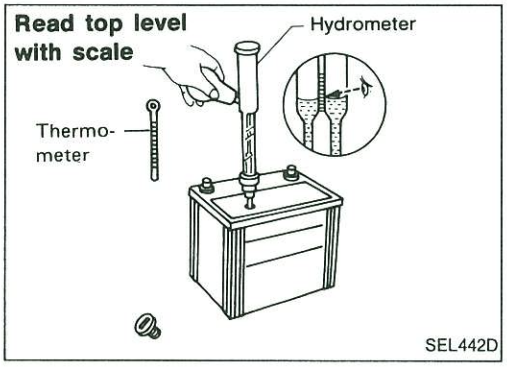


### SPECIFIC GRAVITY CHECK

1. Read hydrometer and thermometer indications at eye level.

## How to Handle Battery (Cont'd)

- Use the chart below to correct your hydrometer reading according to electrolyte temperature.

**Hydrometer temperature correction**

| Battery electrolyte temperature °C (°F) | Add to specific gravity reading |
|---|---|
| 71 (160) | 0.032 |
| 66 (150) | 0.028 |
| 60 (140) | 0.024 |
| 54 (129) | 0.020 |
| 49 (120) | 0.016 |
| 43 (110) | 0.012 |
| 38 (100) | 0.008 |
| 32 (90) | 0.004 |
| 27 (80) | 0 |
| 21 (70) | –0.004 |
| 16 (60) | –0.008 |
| 10 (50) | –0.012 |
| 4 (39) | –0.016 |
| –1 (30) | –0.020 |
| –7 (20) | –0.024 |
| –12 (10) | –0.028 |
| –18 (0) | –0.032 |

| Corrected specific gravity | Approximate charge condition |
|---|---|
| 1.260 - 1.280 | Fully charged |
| 1.230 - 1.250 | 3/4 charged |
| 1.200 - 1.220 | 1/2 charged |
| 1.170 - 1.190 | 1/4 charged |
| 1.140 - 1.160 | Almost discharged |
| 1.110 - 1.130 | Completely discharged |

### CHARGING THE BATTERY

**CAUTION:**

a. **Do not "quick charge" a fully discharged battery.**
b. **Keep the battery away from open flame while it is being charged.**
c. **When connecting the charger, connect the leads first, then turn on the charger. Do not turn on the charger first, as this may cause a spark.**
d. **If battery electrolyte temperature rises above 60°C (140°F), stop charging. Always charge battery at a temperature below 60°C (140°F).**

**Charging rates:**

| Amps | Time |
|---|---|
| 50 | 1 hour |
| 25 | 2 hours |
| 10 | 5 hours |
| 5 | 10 hours |

## How to Handle Battery (Cont'd)

**Do not charge at more than 50 ampere rate.**

**Note: The ammeter reading on your battery charger will automatically decrease as the battery charges. This indicates that the voltage of the battery is increasing normally as the state of charge improves. The charging amps indicated above refer to initial charge rate.**

- If, after charging, the specific gravity of any two cells varies more than .050, the battery should be replaced.

## Service Data and Specifications (S.D.S.)

| Applied area | | U.S.A. | Canada |
|---|---|---|---|
| Type | | 55D23R | 65D26R |
| Capacity | V-AH | 12-60 | 12-65 |
| Cold cranking current (For reference value) | A | 356 | 413 |

## M/T MODEL

## Wiring Diagram

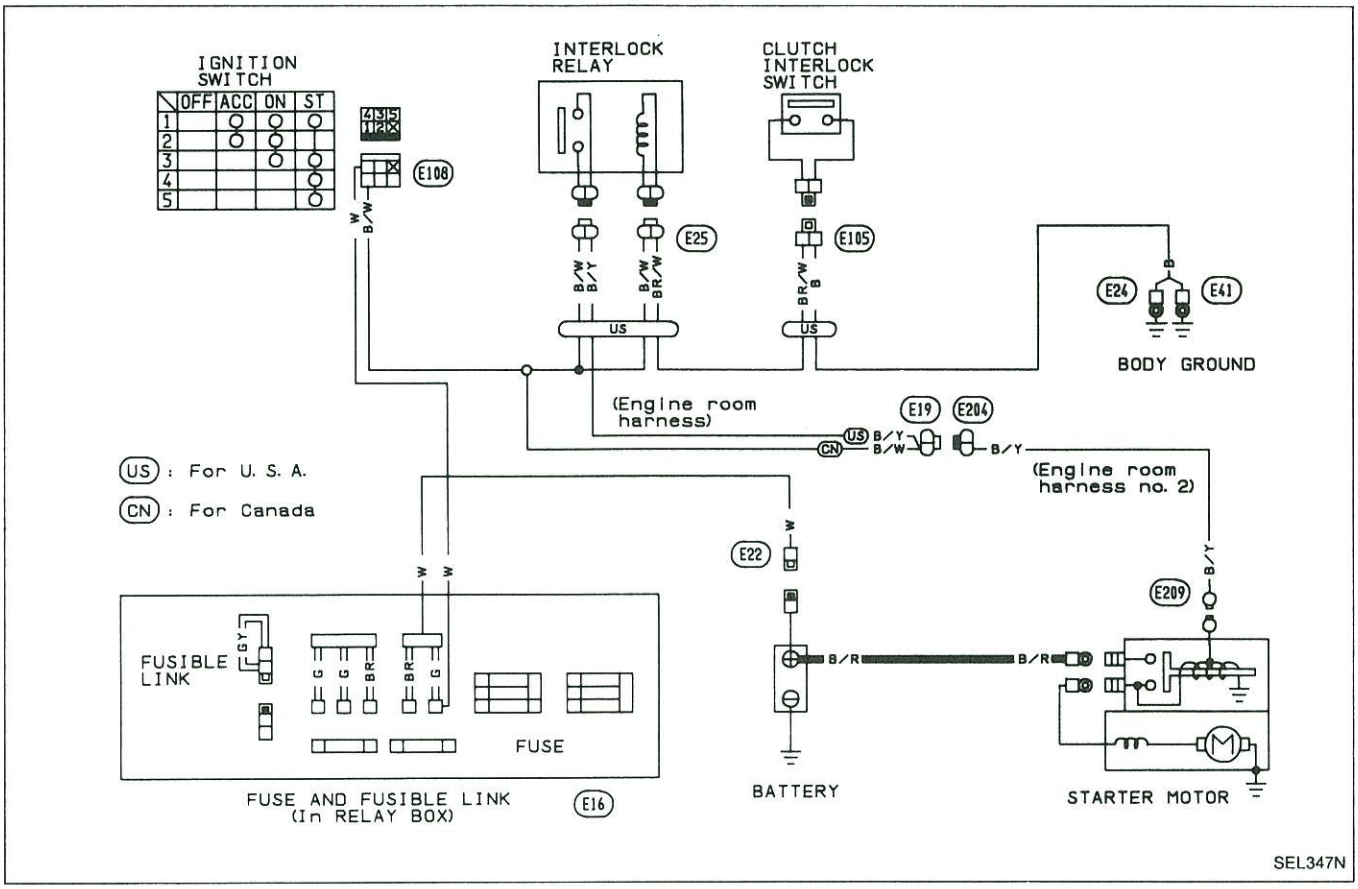


## A/T MODEL

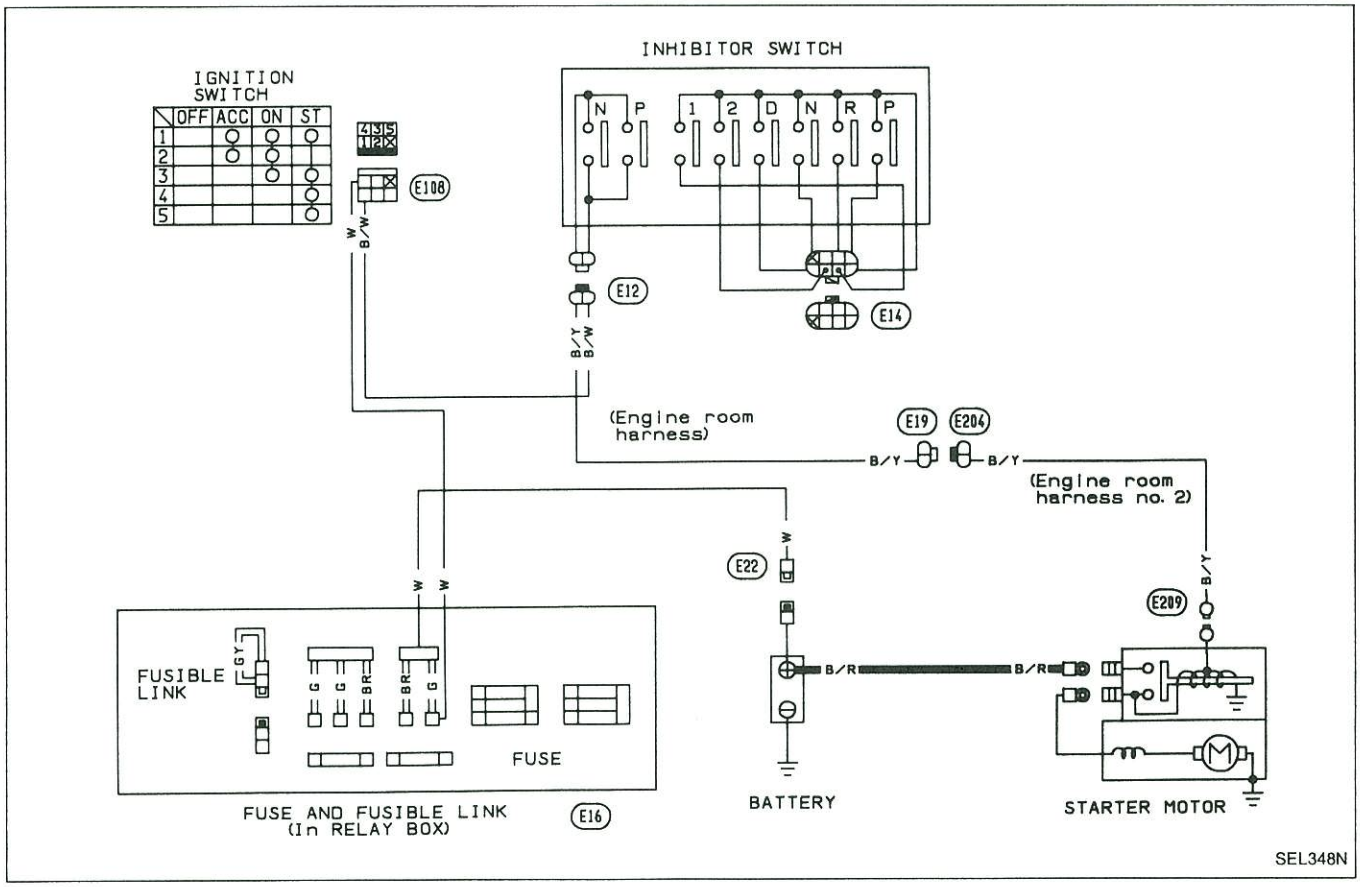

## Construction

**M1T72781A**

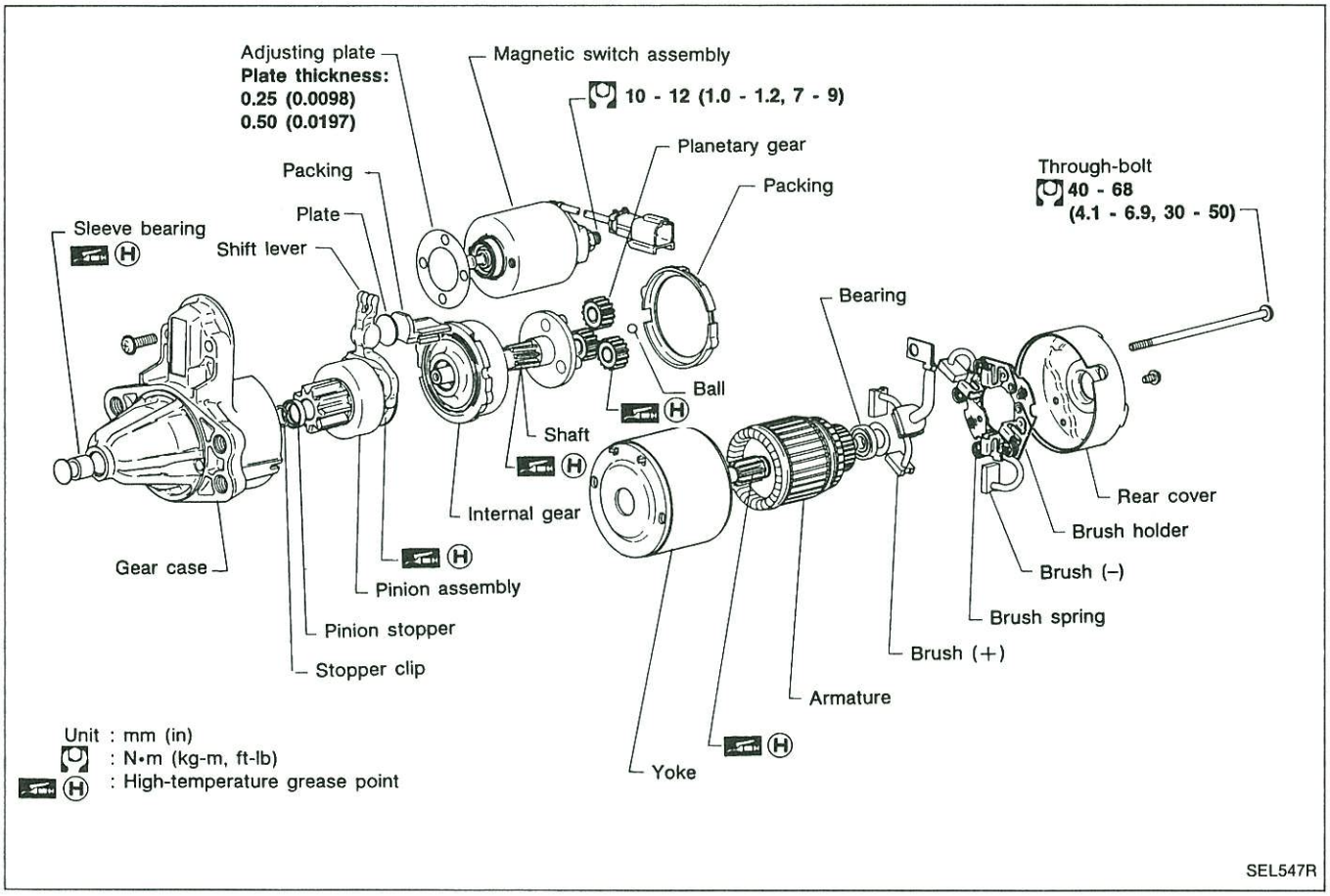


## Service Data and Specifications (S.D.S.)

### STARTER

| | | M1T72781A |
|---|---|---|
| Type | | MITSUBISHI make |
| | | Reduction gear type |
| System voltage | V | 12 |
| No-load | | |
| Terminal voltage | V | 11.0 |
| Current | A | 50 - 75 |
| Revolution | rpm | 3,000 - 4,000 |
| Minimum diameter of commutator | mm (in) | 28.8 (1.134) |
| Minimum length of brush | mm (in) | 12.0 (0.472) |
| Brush spring tension | N (kg, lb) | 13.7 - 25.5 (1.4 - 2.6, 3.1 - 5.7) |
| Clearance between pinion front edge and pinion stopper | mm (in) | 0.5 - 2.0 (0.020 - 0.079) |

## Wiring Diagram

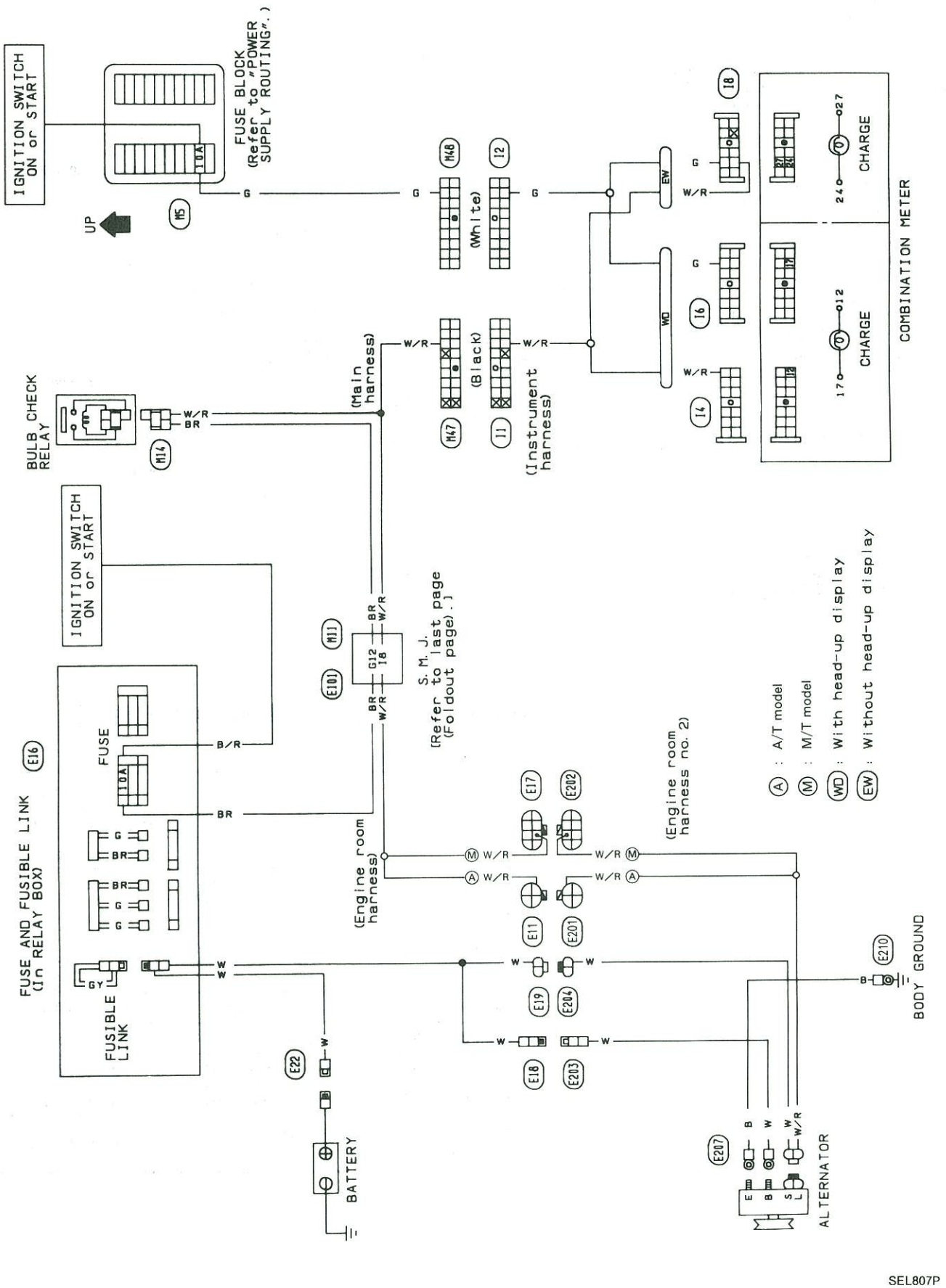


SEL807P

## Construction

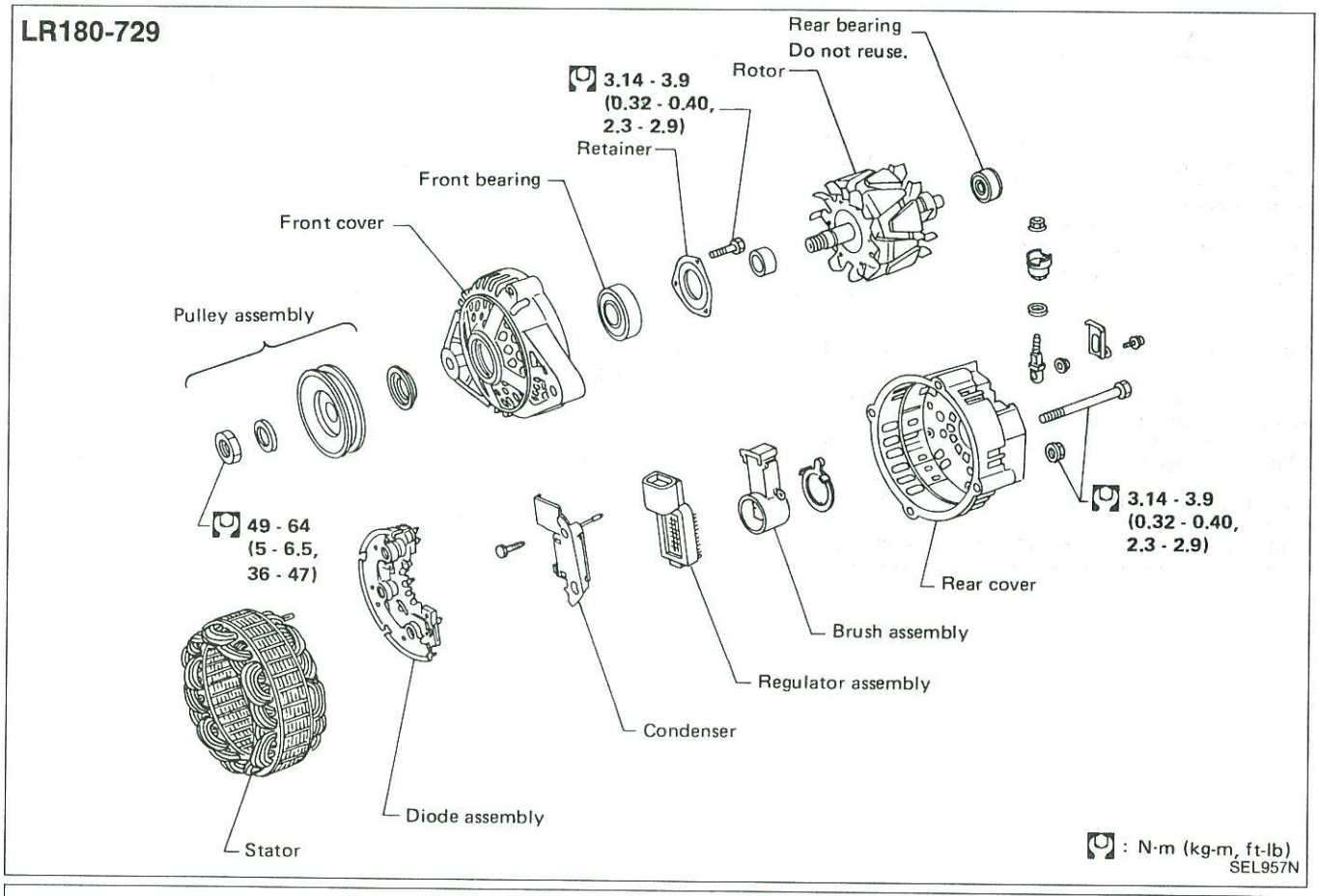


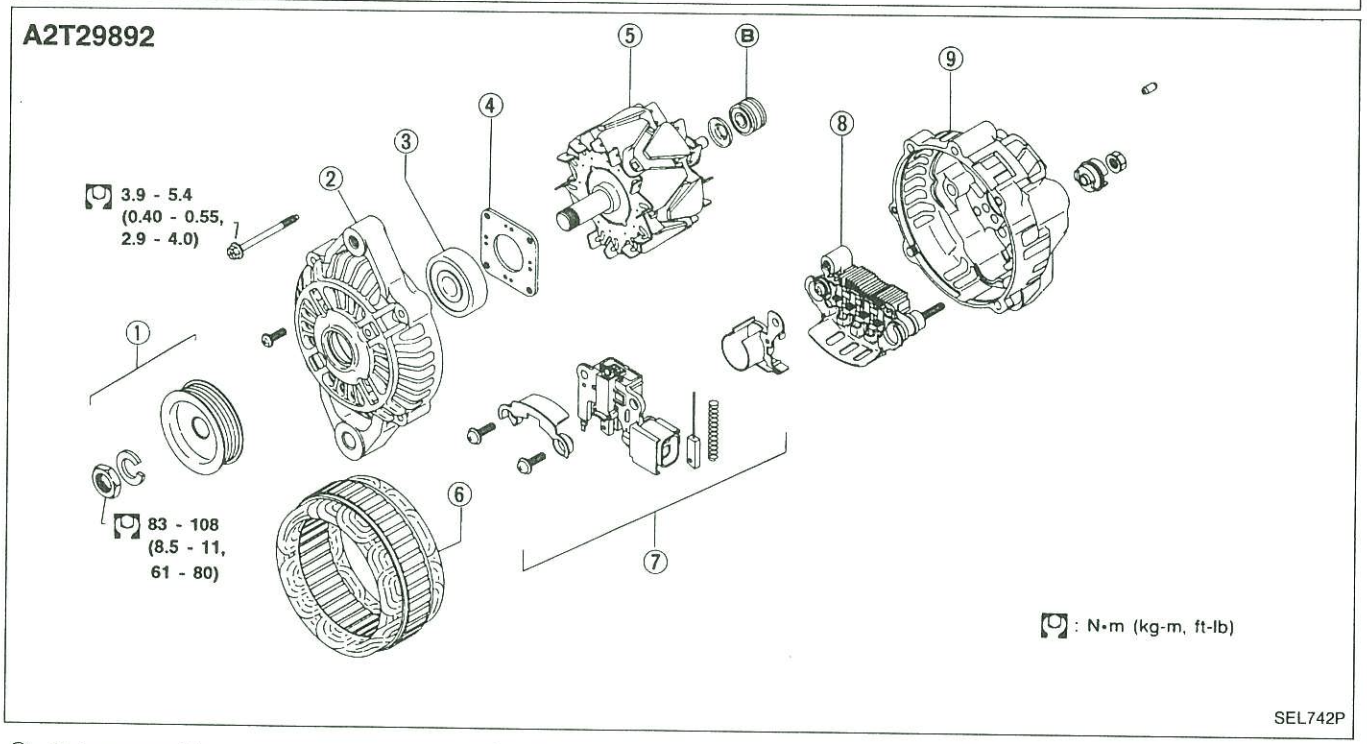


① Pulley assembly
② Front cover
③ Front bearing
④ Bearing retainer
⑤ Rotor
⑥ Stator
⑦ I.C. regulator
⑧ Diode assembly
⑨ Rear cover
Ⓐ Brush holder assembly
Ⓑ Rear bearing

## Service Data and Specifications (S.D.S.)

### ALTERNATOR

| Type | | LR180-729 | A2T29892 |
|---|---|---|---|
| | | HITACHI make | MITSUBISHI make |
| Nominal rating | V-A | 12 - 80 | |
| Ground polarity | | Negative | |
| Minimum revolution under no-load (When 13.5 volts is applied) | rpm | Less than 950 | 1,100 |
| Hot output current | A/rpm | More than 23/1,300<br>More than 63/2,500<br>More than 77/5,000 | More than 21/1,300<br>More than 60/2,500 |
| Regulated output voltage | V | 14.1 - 14.7 | |
| Minimum length of brush | mm (in) | 6.0 (0.236) | 8 (0.31) |
| Brush spring pressure | N (g, oz) | 1.000 - 3.432 (102 - 350, 3.60 - 12.34) | 3.138 - 4.315 (320 - 440, 11.29 - 15.52) |
| Slip ring minimum outer diameter | mm (in) | 26.0 (1.024) | 22.1 (0.870) |

## Combination Switch/Check

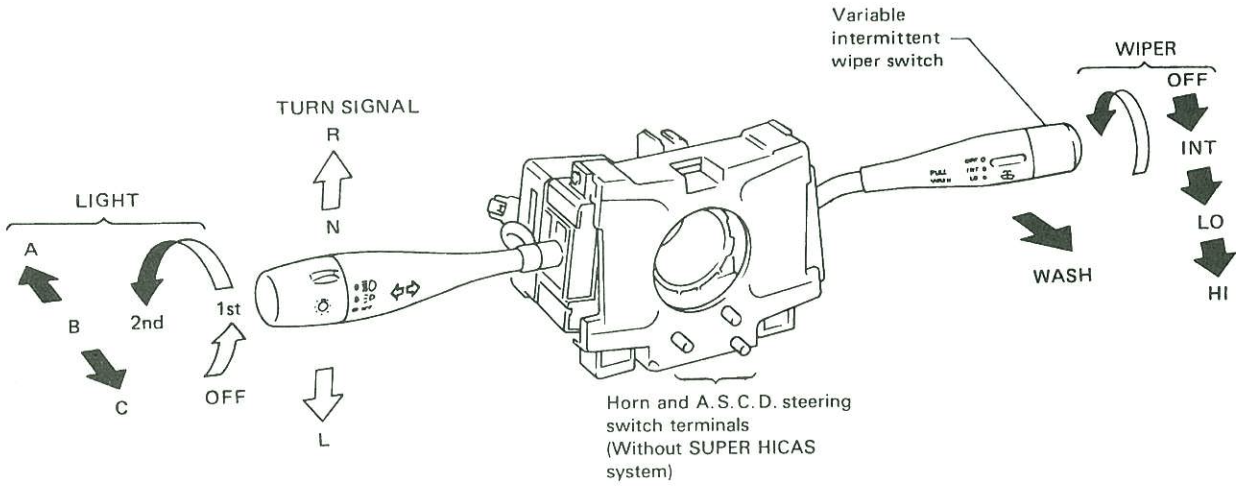


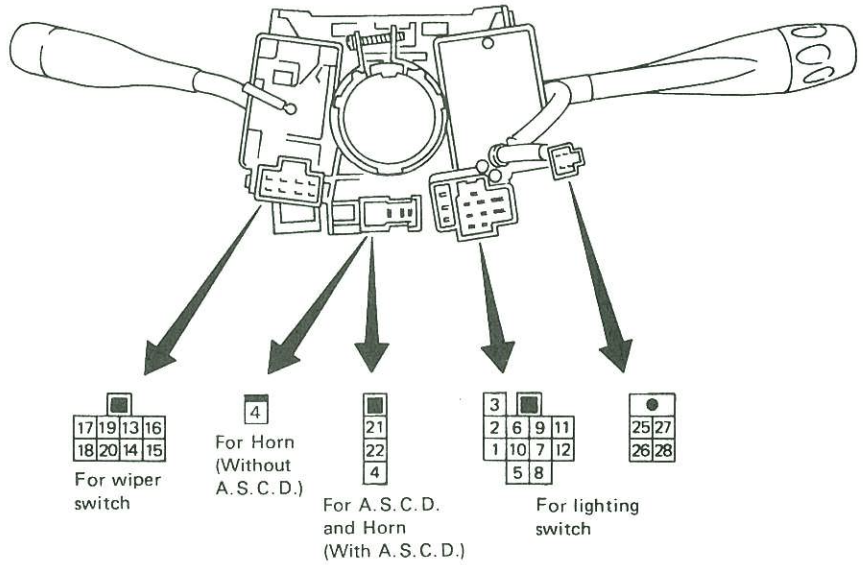


LIGHTING SWITCH

| | OFF | | | 1 | | | 2 | | |
|---|---|---|---|---|---|---|---|---|---|
| | A | B | C | A | B | C | A | B | C |
| 5 | | | ○ | | | ○ | ○ | ○ | ○ |
| 6 | | | ○ | | | ○ | ○ | | ○ |
| 7 | | | | | | | ○ | | |
| 8 | | | ○ | | | ○ | ○ | ○ | ○ |
| 9 | | | ○ | | | ○ | ○ | | ○ |
| 10 | | | | | | | | ○ | |
| 11 | | | | ○ | ○ | ○ | ○ | ○ | ○ |
| 12 | | | | ○ | ○ | ○ | ○ | ○ | ○ |
| 25 | | | | | | | ○ | ○ | ○ |
| 26 | | | | | | | ○ | ○ | ○ |
| 27 | ○ | ○ | ○ | ○ | ○ | ○ | | | |
| 28 | ○ | ○ | ○ | ○ | ○ | ○ | | | |

WIPER SWITCH

| | OFF | INT | LO | HI | WASH |
|---|---|---|---|---|---|
| 13 | ○ | ○ | | | |
| 14 | ○ | ○ | ○ | | |
| 15 | | ○ | | | |
| 16 | | | ○ | ○ | |
| 17 | | ○ | ○ | ○ | ○ |
| 18 | | | | | ○ |

TURN SIGNAL SWITCH

| | R | N | L |
|---|---|---|---|
| 1 | ○ | | ○ |
| 2 | ○ | | |
| 3 | | | ○ |

INTERMITTENT WIPER VOLUME

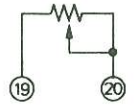


HORN SWITCH

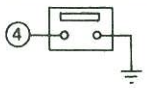


A.S.C.D. STEERING SWITCH

| | RESUME ACCEL | N | SET COAST | OFF | CANCEL |
|---|---|---|---|---|---|
| 4 | ○ | | ○ | | ○ |
| 22 | | | ○ | | |
| 21 | ○ | | | | ○ |

SEL884P

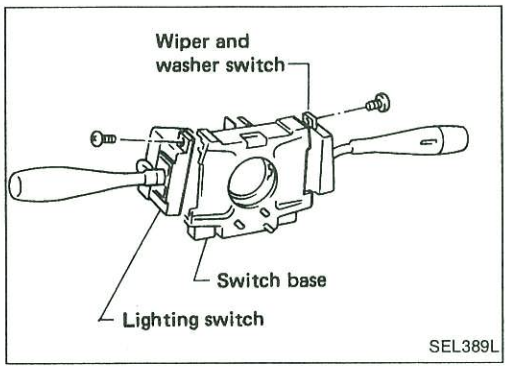


## Replacement

- Each switch can be replaced without removing combination switch base.

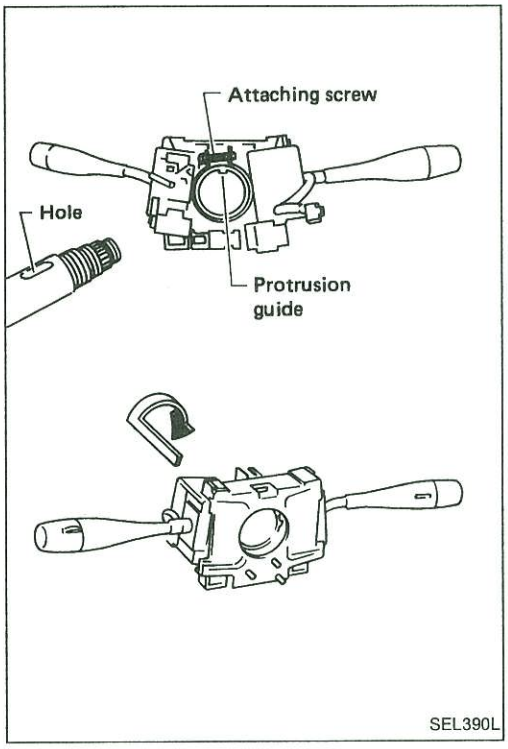


- To remove combination switch base, remove base attaching screw and turn after pushing on it.

## Steering Switch/Check

### WITH SUPER HICAS SYSTEM

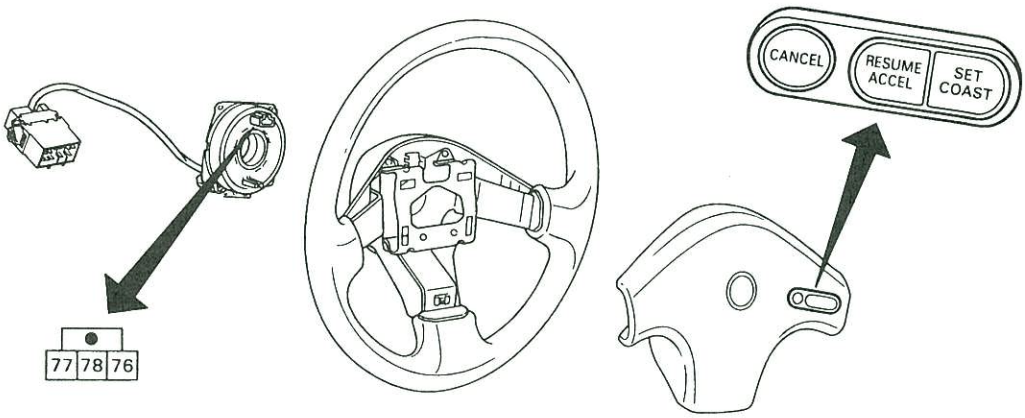


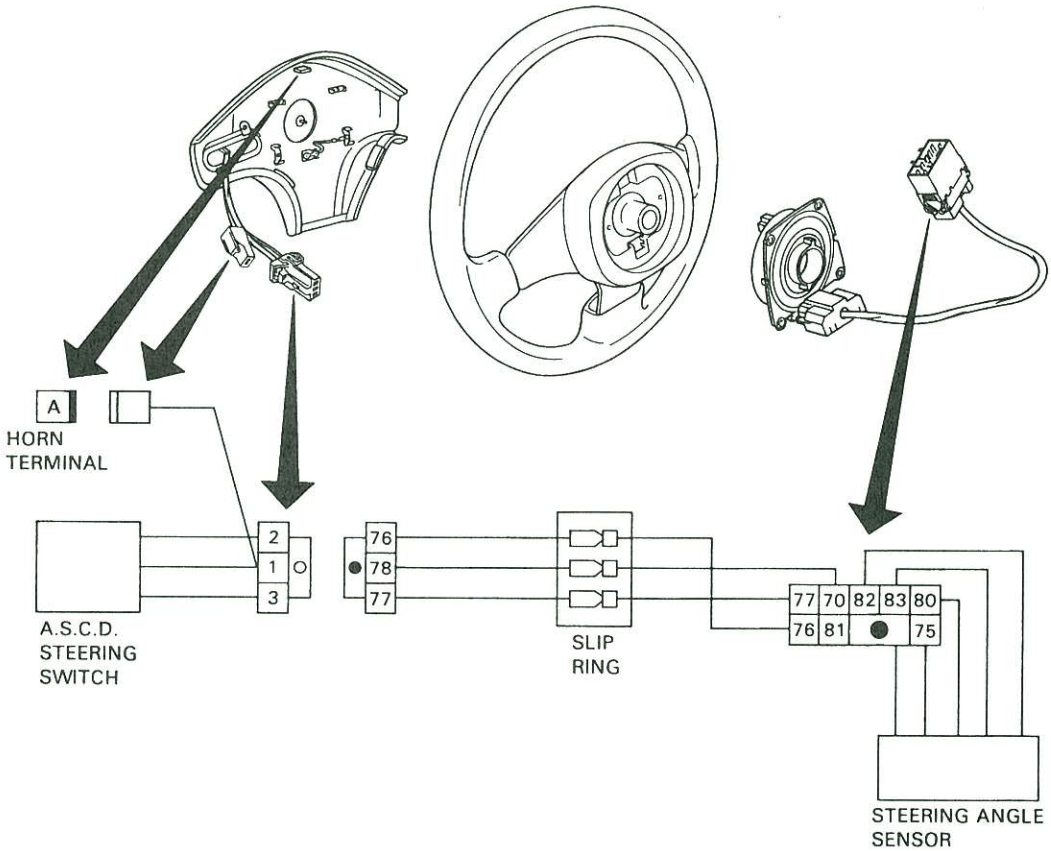


A.S.C.D. STEERING SWITCH

| | RESUME ACCEL | N | SET COAST | OFF | CANCEL |
|---|---|---|---|---|---|
| 1 | ○ | | ○ | | ○ |
| 2 | | | ○ | | ○ |
| 3 | ○ | | | | ○ |

HORN SWITCH

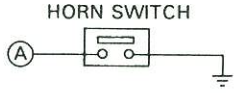


SEL885P

## Schematic

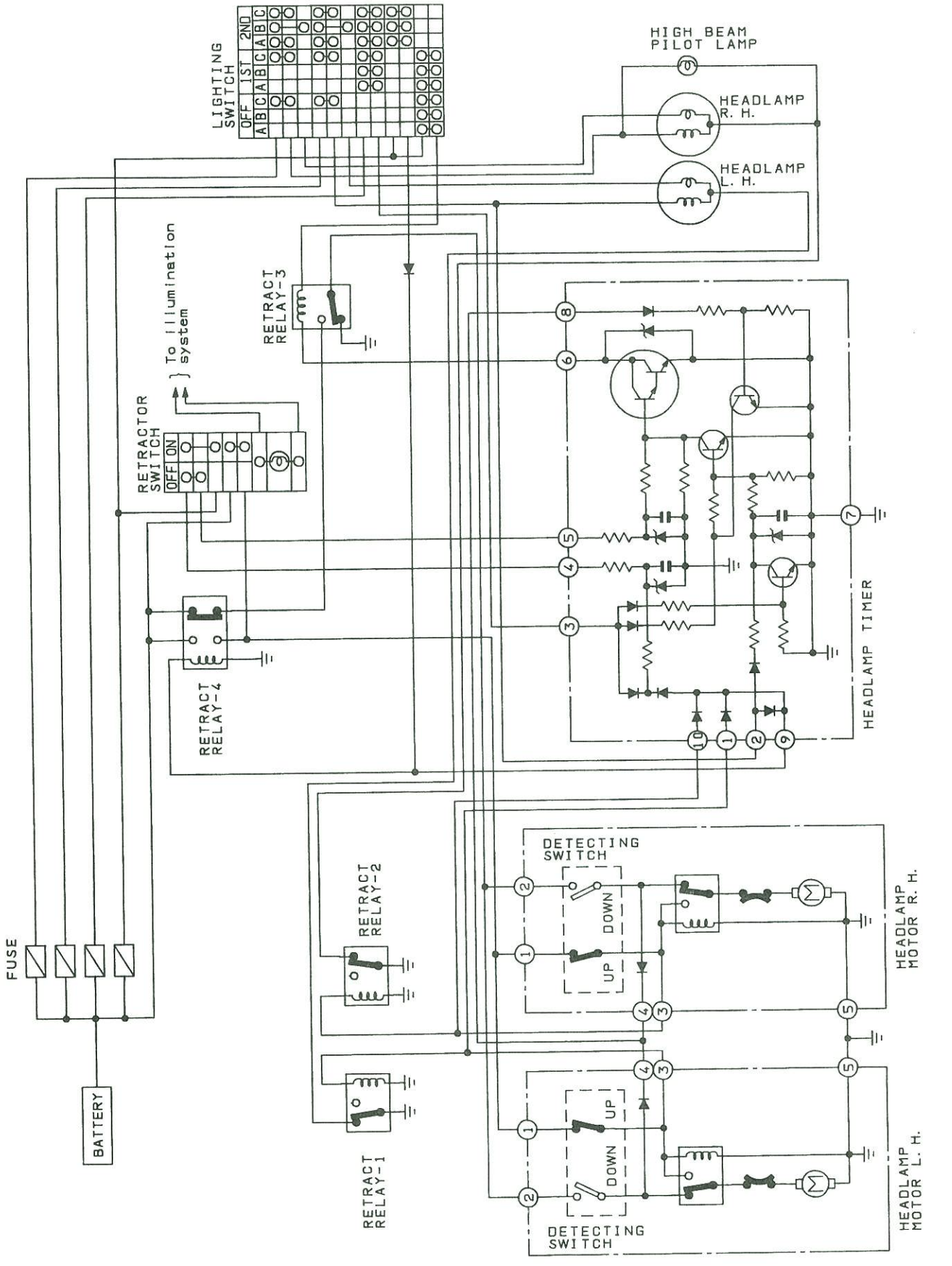


SEL469L

## Wiring Diagram

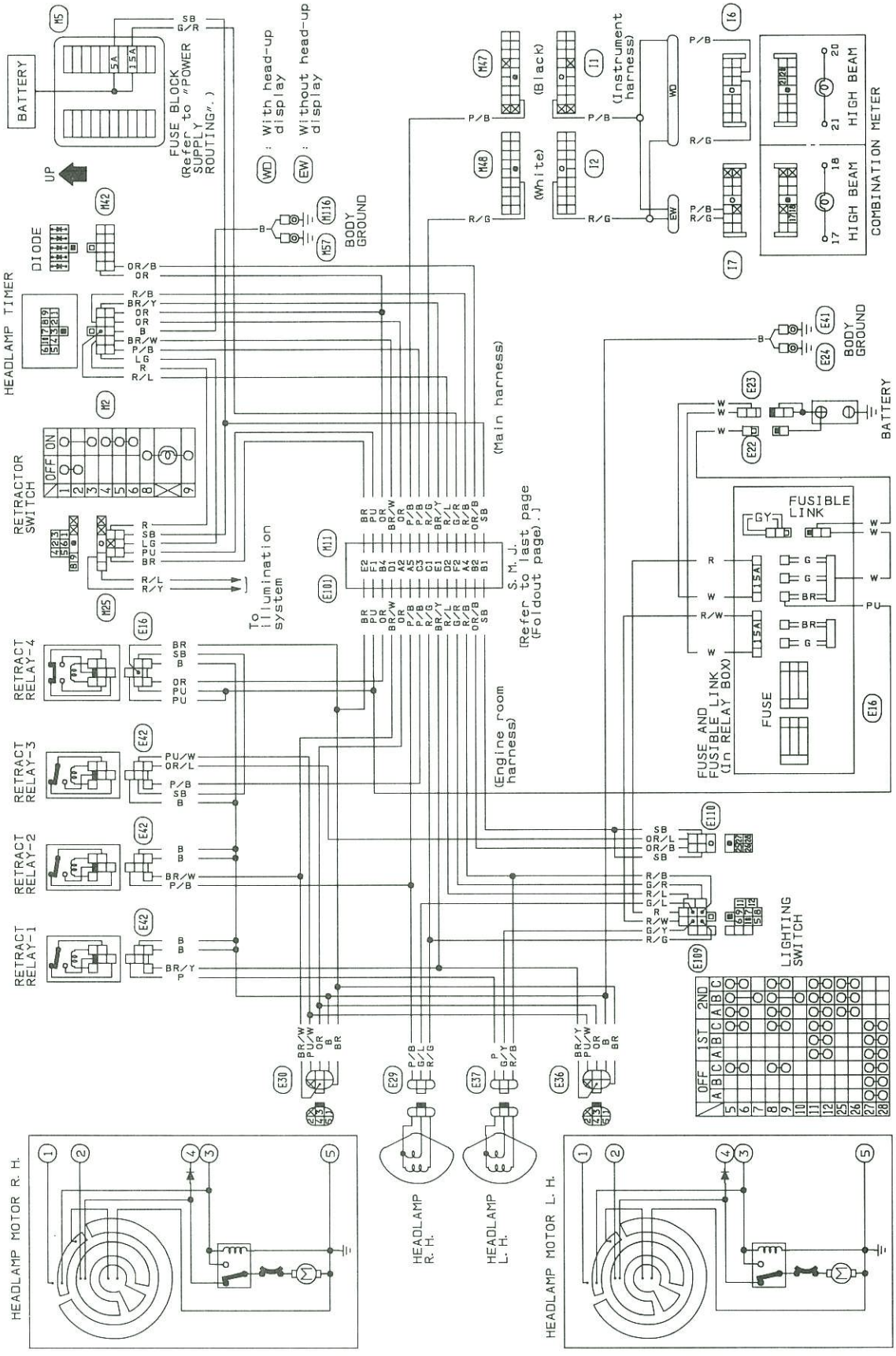


SEL349N

# Description

## BASIC OPERATION

| Condition | | Operation | | |
|---|---|---|---|---|
| Lighting switch | Retractor switch | C/O* | Headlamp motor | Headlamps |
| OFF → 1ST | OFF | | No operation | OFF |
| 1ST → 2ND | OFF | [A] | Open | ON after headlamp motor reaches fully open position. |
| 2ND → 1ST | OFF | | Held to open position | OFF |
| 1ST → OFF | OFF | [B] | Closed | OFF |
| Momentarily turned to PASSING | OFF | [C] | Opened and closed after headlamps go off. | Momentarily ON after headlamp motor reaches fully open position, and go off. |
| OFF | ON | [D] | Open | OFF |

*: Refer to CIRCUIT OPERATION.

## Description (Cont'd)

### CIRCUIT OPERATION

**[A] When lighting switch is switched from "1ST" → "2ND"**

**A-1: While operating the headlamp motor to open position**

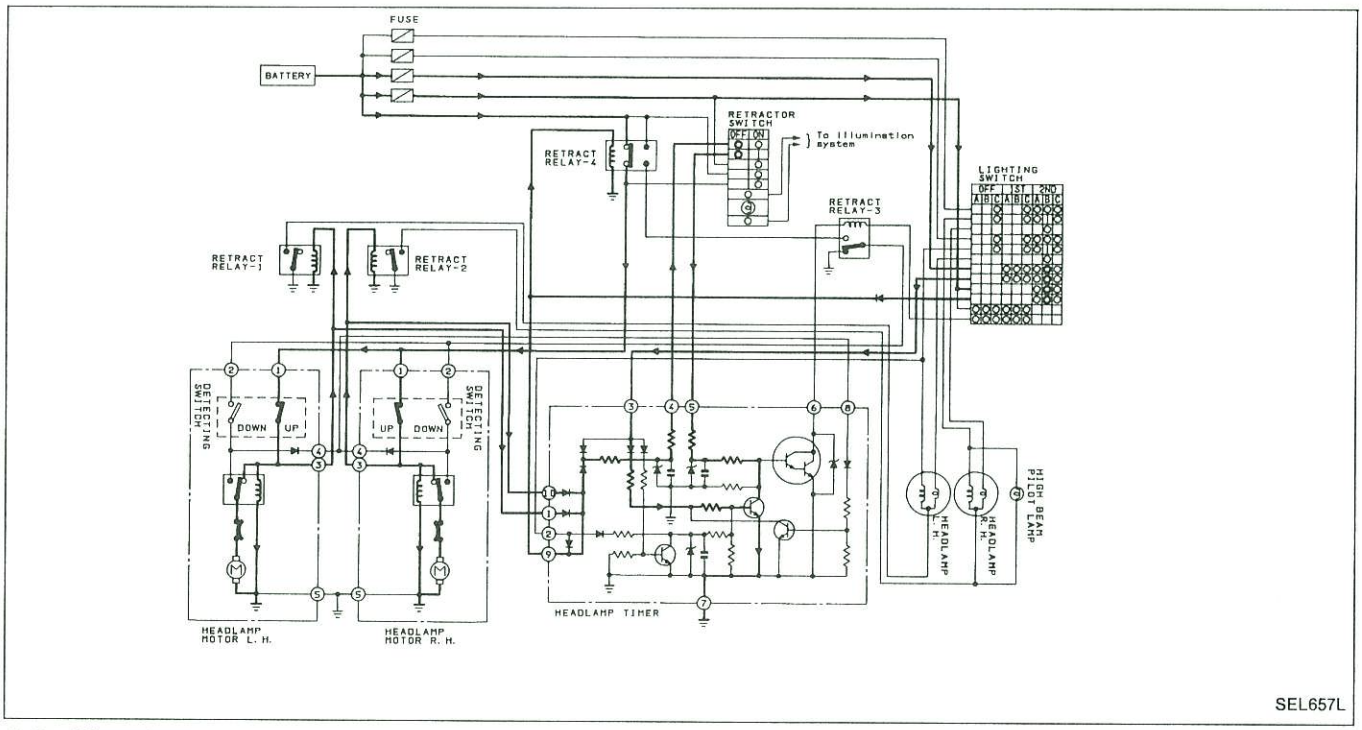


SEL657L

**A-2: After the headlamp motor reaches fully open position**

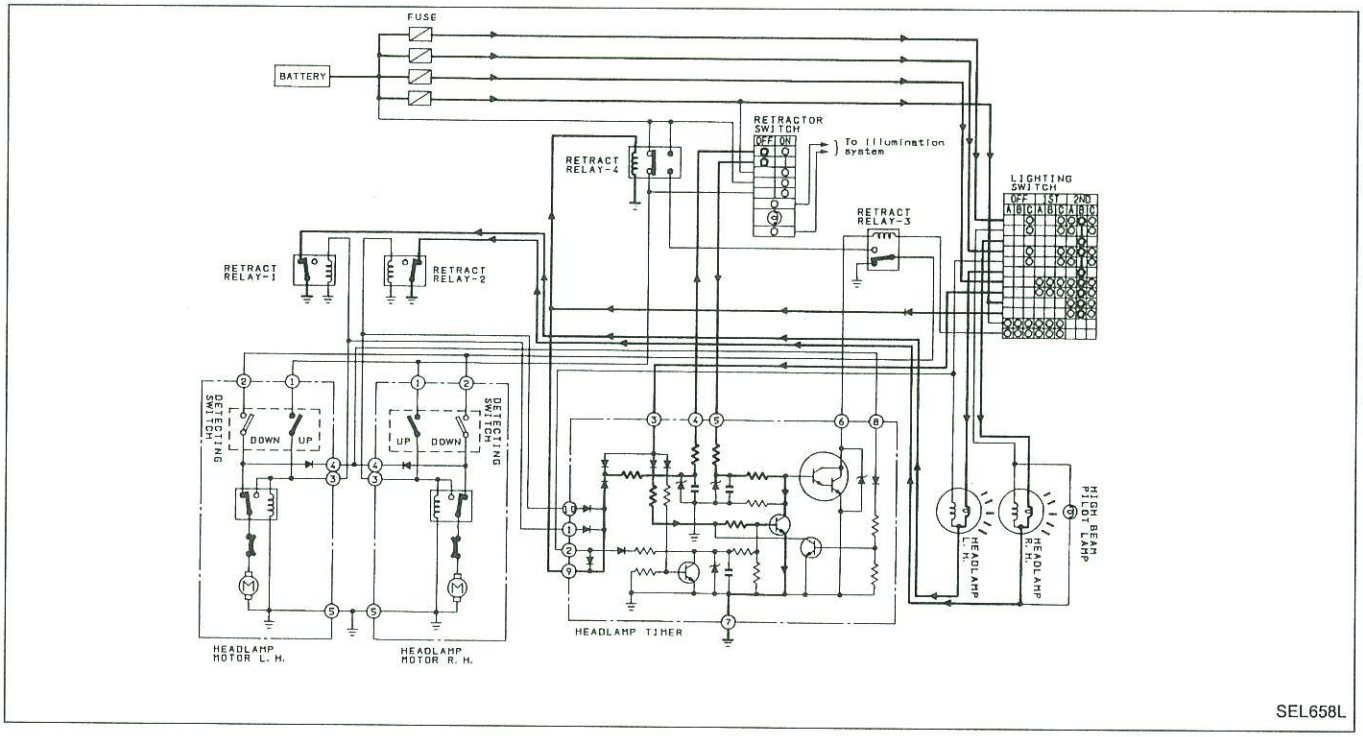


SEL658L

## Description (Cont'd)

**[B] When lighting switch is switched from "1ST" → "OFF"**
**(While operating the headlamp motor to closed position)**

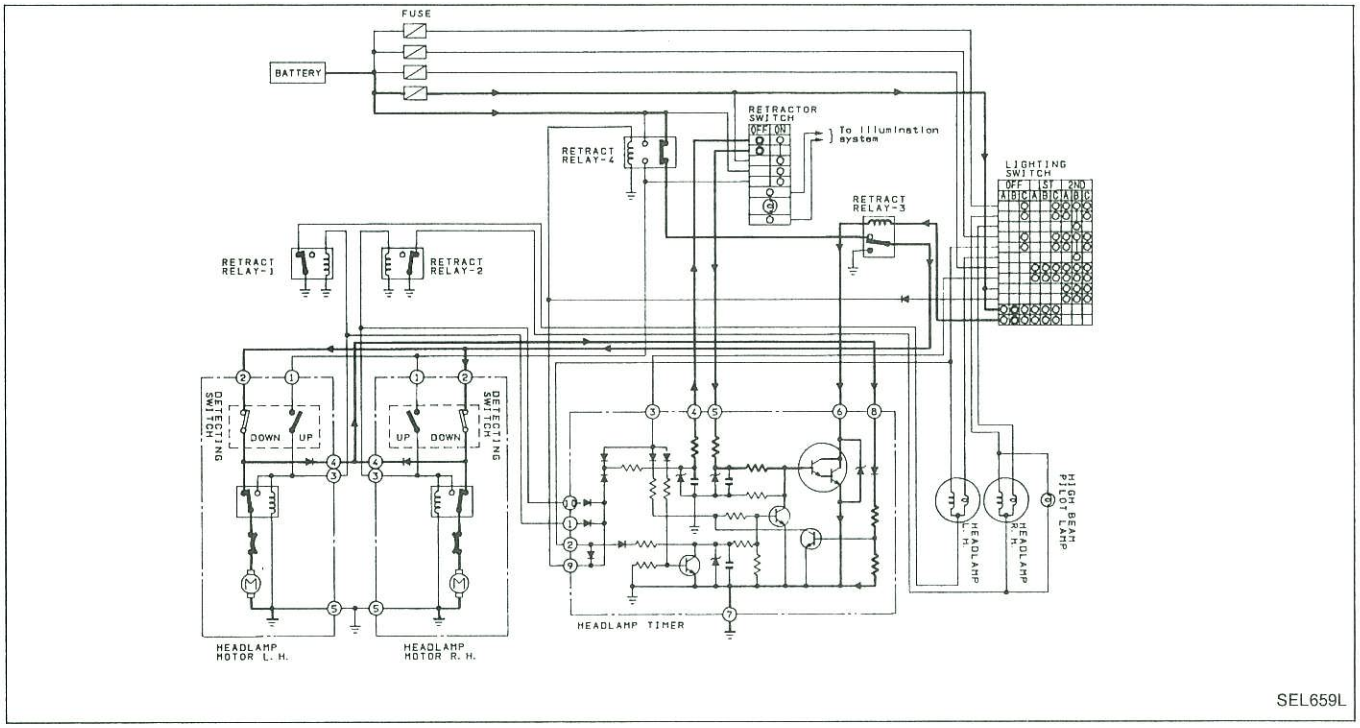


SEL659L

**[C] When lighting switch is switched to "PASSING"**
**C-1: While operating the headlamp motor to open position**

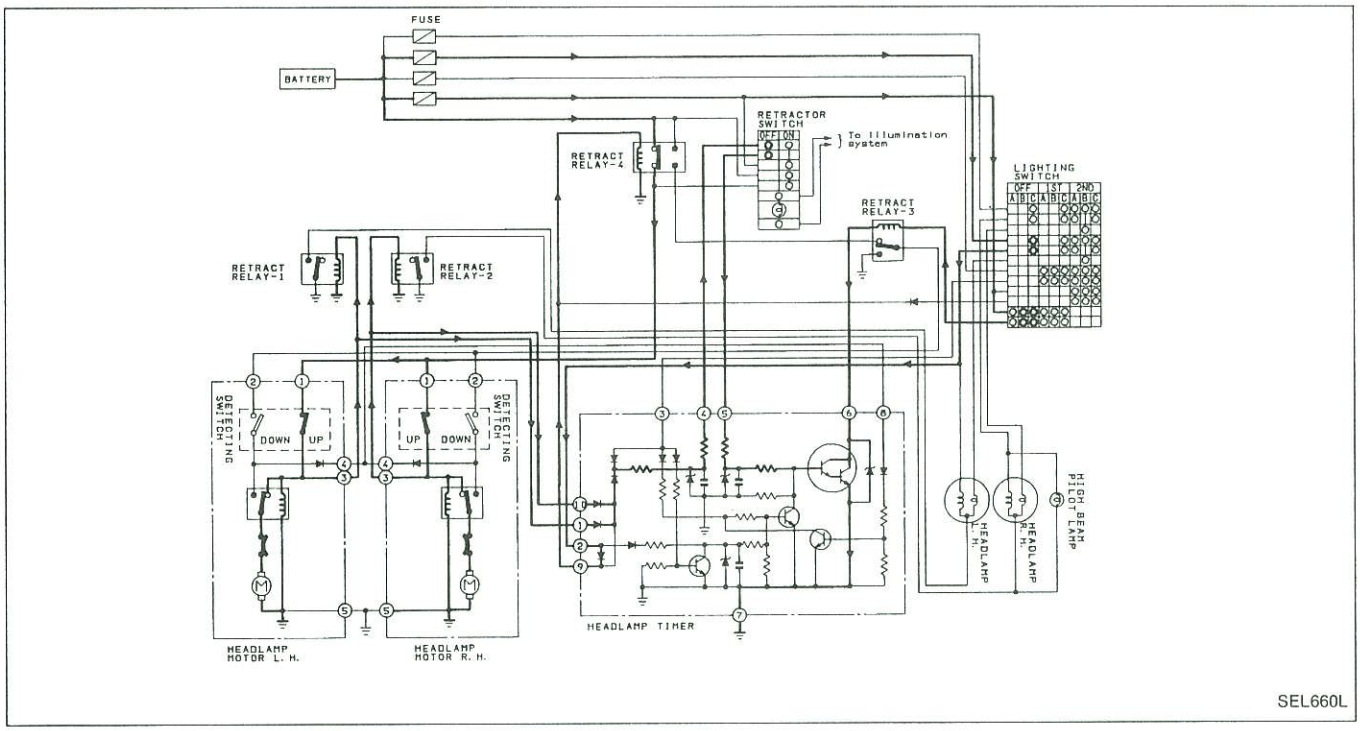


SEL660L

## Description (Cont'd)

### C-2: After the headlamp reaches fully open position

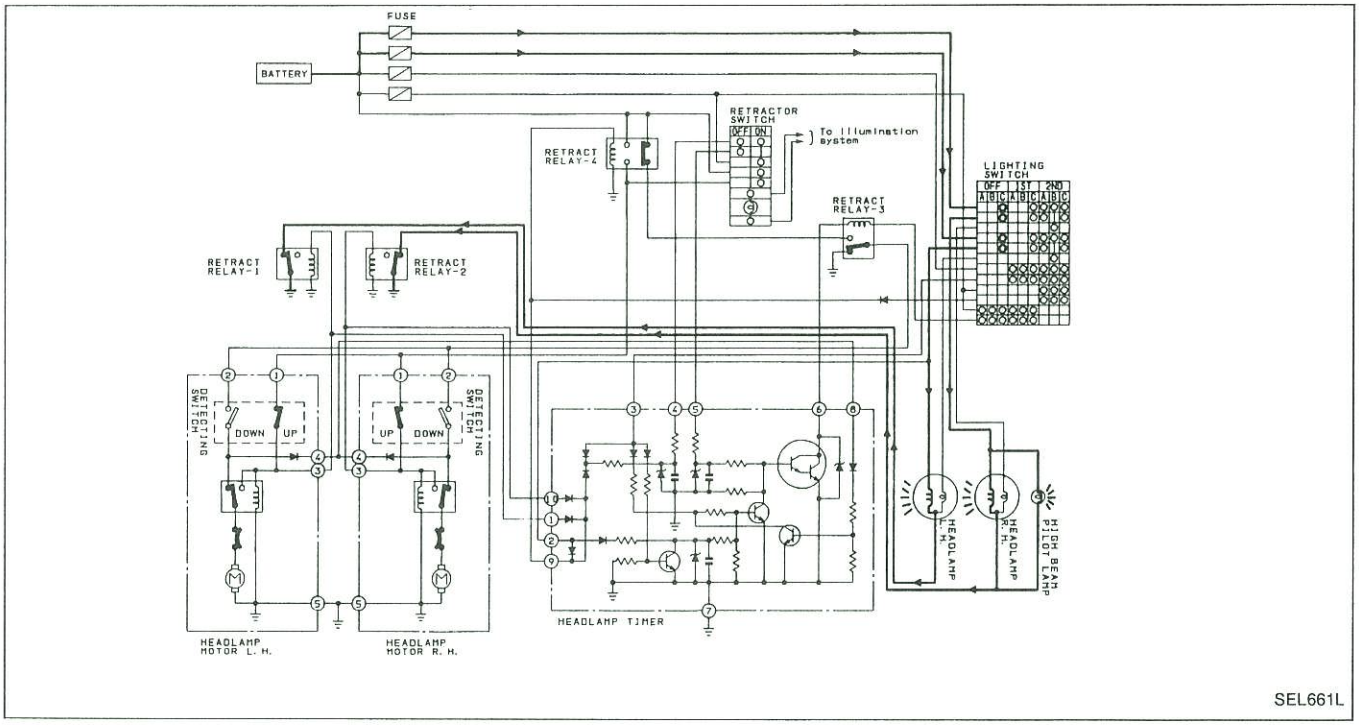


SEL661L

### [D] When retractor switch is turned ON (While operating the headlamp motor to open position)

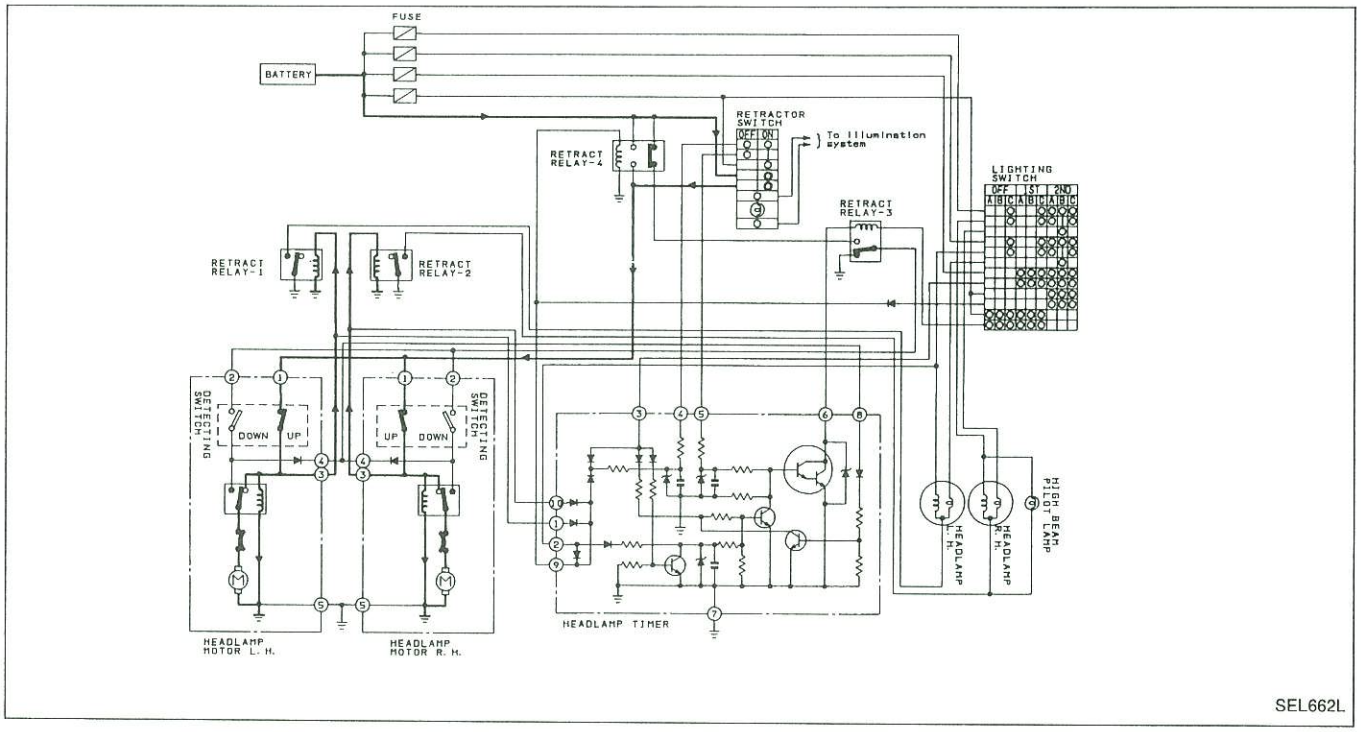


SEL662L

## Constructions

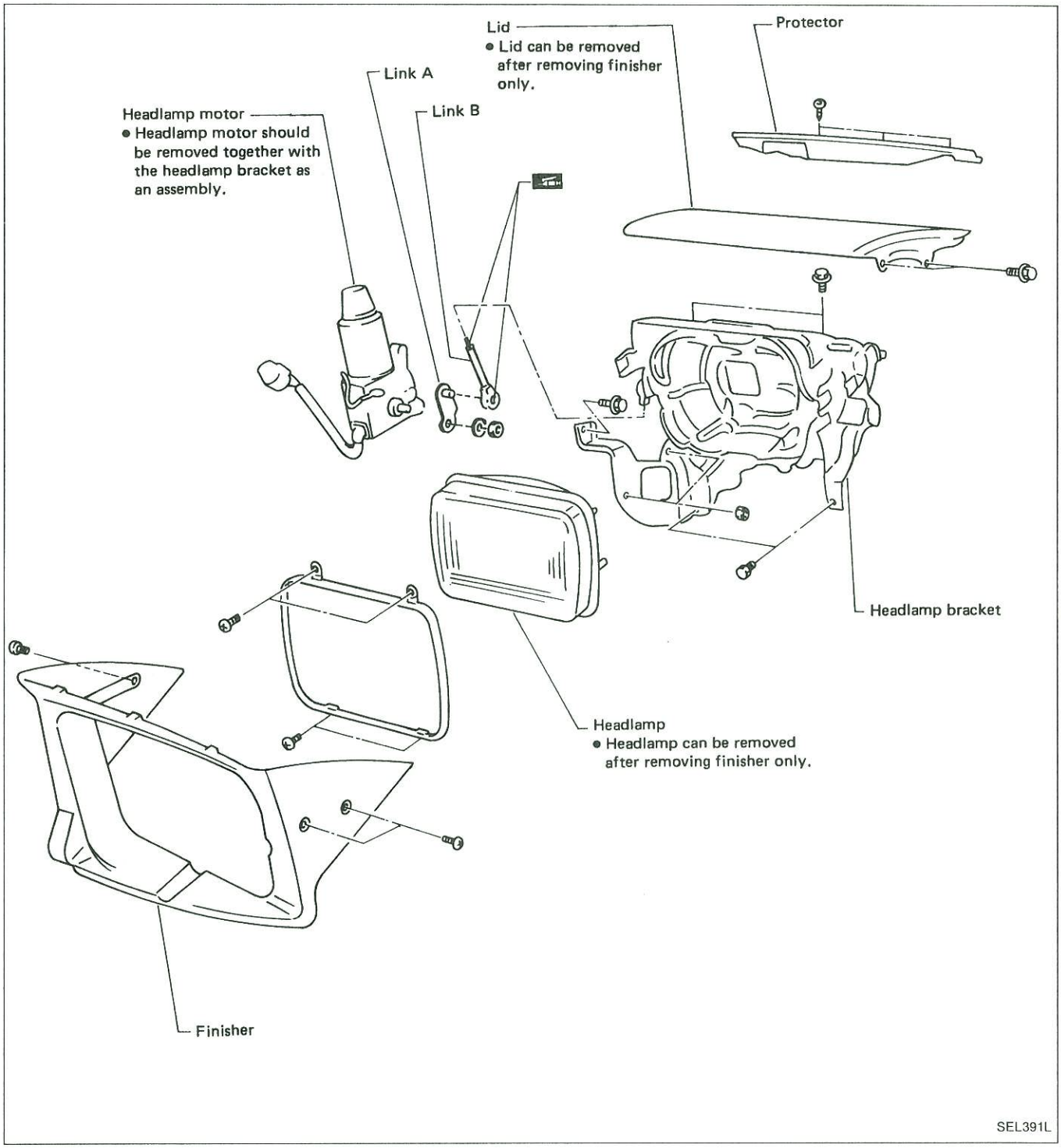

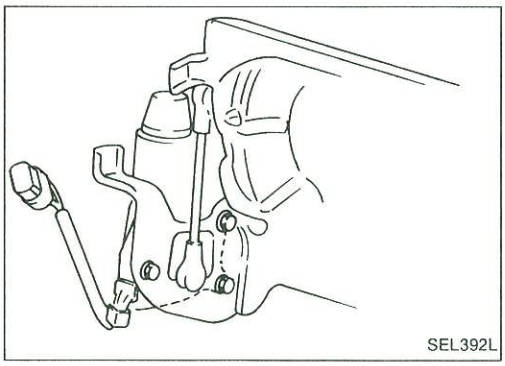
SEL392L

## Assembly

1. Install headlamp motor, ball joint and link A (as one unit) on headlamp bracket.
2. While turning link B, install link A's ball joint on headlamp housing's ball joint.
3. Set distance between centers of upper and lower ball joints as shown in figure at left, and tighten lock nuts.
4. Assemble headlamp, finisher and lid.

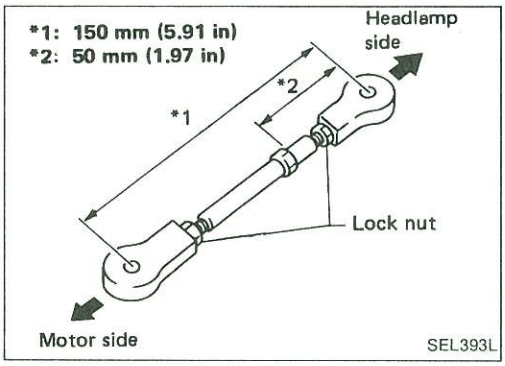

SEL393L

## Installation and Adjustment

**Before doing this, be sure to disconnect battery ground cable.**

1. Install headlamp bracket to body temporarily.
1) Determine headlamp bracket location on body so that alignment between lid, hood, and fender looks straight.
2) After adjusting alignment, tighten headlamp bracket to body.

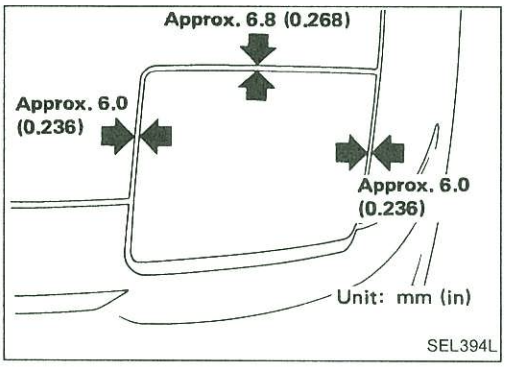

SEL394L

2. Adjust lid alignment.

- Adjust lid, hood and fender for alignment while opening and closing headlamp with motor manual knob.

  **Use motor manual knob to open and close headlamp, and adjust alignment while checking that lid is not interfering with hood.**

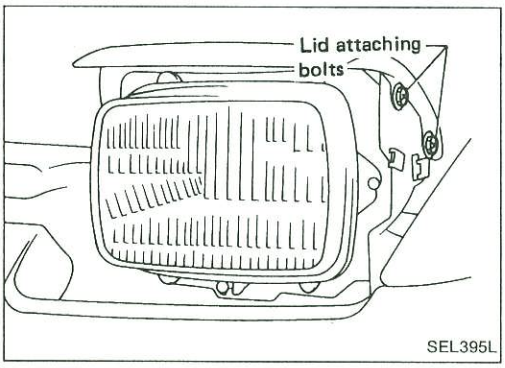

SEL395L

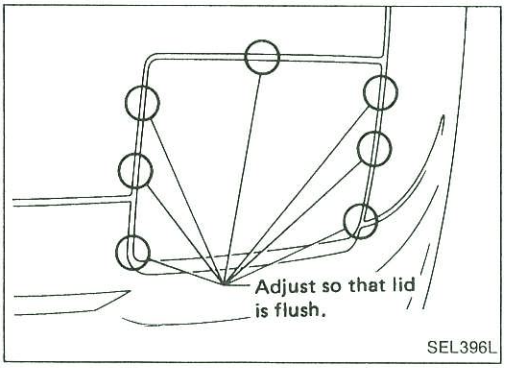

SEL396L

## Installation and Adjustment (Cont'd)

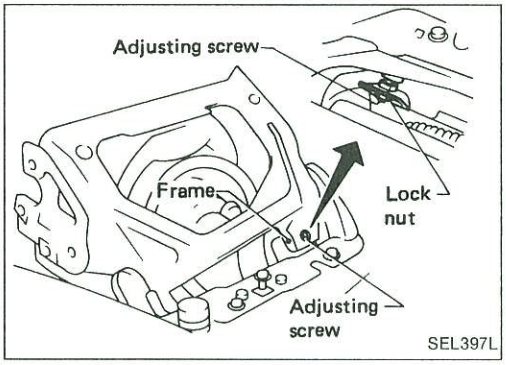


3. Adjust stopper.
1) Loosen lock nut on stopper.
2) Turn motor manual knob to open headlamp assembly completely.
3) Adjust stopper screw.

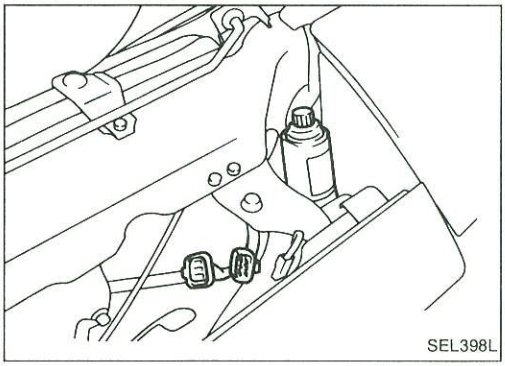


## Headlamp Motor Check

1. Disconnect battery ground cable.
2. Disconnect the headlamp motor connector.
3. Use an ohmmeter to check for continuity in headlamp motor circuit while rotating motor with manual knob.

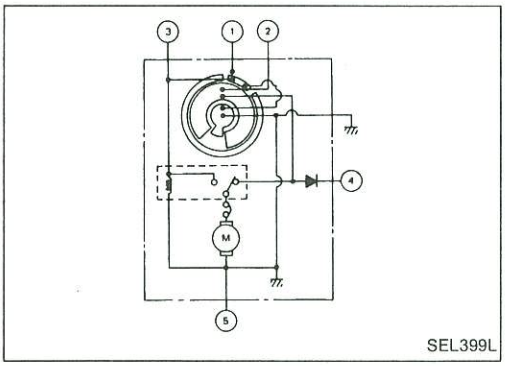


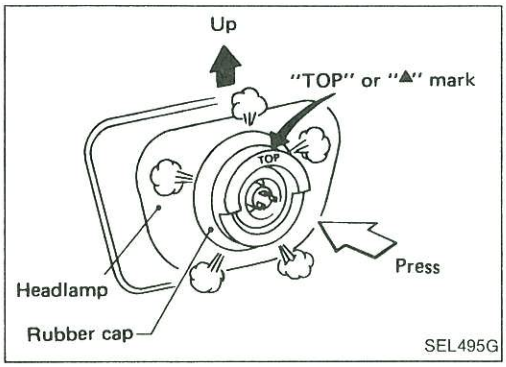


### INSTALLING HEADLAMP RUBBER CAP

When installing the rubber cap, set the "TOP" or "▲" mark so that it is facing up.

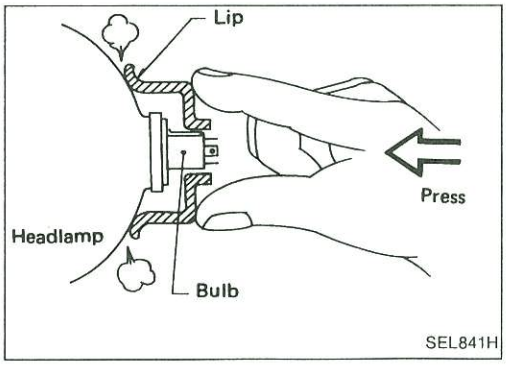


Press the rubber cap firmly so that the lip makes contact with the headlamp body.

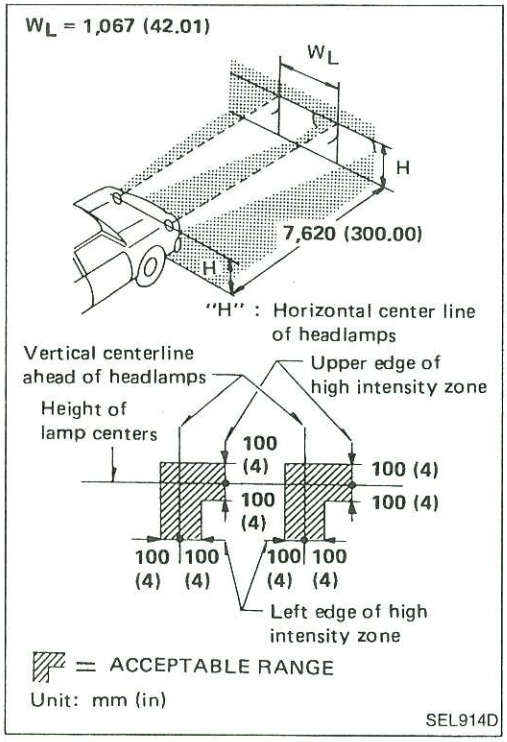


## Aiming Adjustment

When performing headlamp aiming adjustment, use an aiming machine, aiming wall screen or headlamp tester. For operating instructions of any aimer, it should be in good repair, calibrated and used according to respective operation manuals supplied with the unit.

If any aimer is not available, aiming adjustment can be done as follows:

**For details, refer to the regulations in your own country.**

**CAUTION:**

**a. Keep all tires inflated to correct pressures.**

**b. Place vehicle and tester on one and same flat surface.**

**c. See that there is no-load in vehicle (coolant, engine oil filled up to correct level and full fuel tank) other than the driver (or equivalent weight placed in driver's position).**

- **Adjust headlamps so that upper edge and left edge of high intensity zone are within the acceptable range as shown.**
- **Dotted lines in illustration show center of headlamp.**

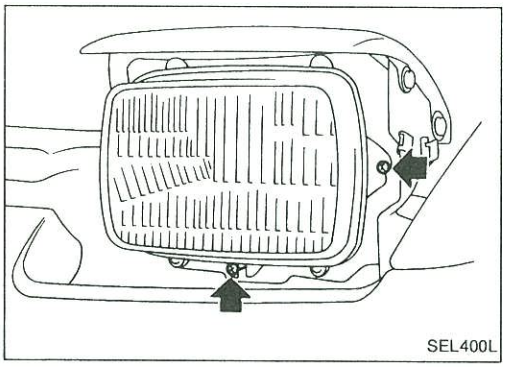


### ADJUSTING SCREWS

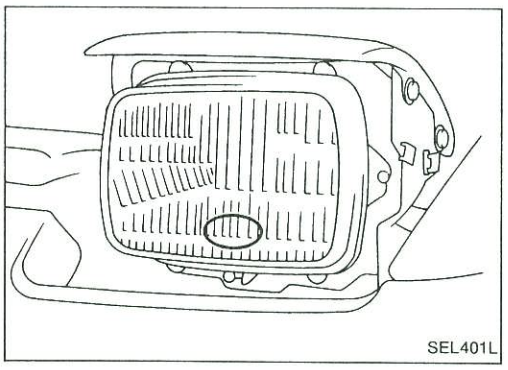


### AIMER ADJUSTMENT MARK

When using a mechanical aimer, adjust adapter legs to the data marked on the headlamps.

Example:

4H 2V

- Horizontal side: 4
- Vertical side: 2

## Daytime Light/Description & Schematic

### OPERATION

After starting the engine with the lighting switch in the "OFF" or "1ST" position, the daytime light automatically turns on. With the lighting switch in the "2ND" position, the daytime light turns on while the headlamp motor is operating the headlamps to the open position and turns off after the headlamps reach the fully open position. Lighting switch operations other than the above are the same as in conventional systems.

| Engine | | With engine stopped | | | | | | | | | With engine running | | | | | | | | |
|---|---|---|---|---|---|---|---|---|---|---|---|---|---|---|---|---|---|---|---|
| Lighting switch | | OFF | | | 1ST | | | 2ND | | | OFF | | | 1ST | | | 2ND | | |
| | | A | B | C | A | B | C | A | B | C | A | B | C | A | B | C | A | B | C |
| Headlamp | High beam | X | X | ○ | X | X | ○ | ○ | X | ○ | X | X | ○ | X | X | ○ | ○ | X | ○ |
| | Low beam | X | X | X | X | X | X | X | ○ | X | X | X | X | X | X | X | X | ○ | X |
| Clearance and tail lamp | | X | X | X | ○ | ○ | ○ | ○ | ○ | ○ | X | X | X | ○ | ○ | ○ | ○ | ○ | ○ |
| License and instrument illumination lamp | | X | X | X | ○ | ○ | ○ | ○ | ○ | ○ | X | X | X | ○ | ○ | ○ | ○ | ○ | ○ |
| Daytime light | | X | X | X | X | X | X | X | X | X | ○* | ○* | ○* | ○ | ○ | ○ | X | X | X |

○ : Lamp "ON"
X : Lamp "OFF"
* : When starting the engine with the parking brake released, the Daytime lamp will come ON.
When starting the engine with the parking brake pulled, the Daytime lamp won't come ON.

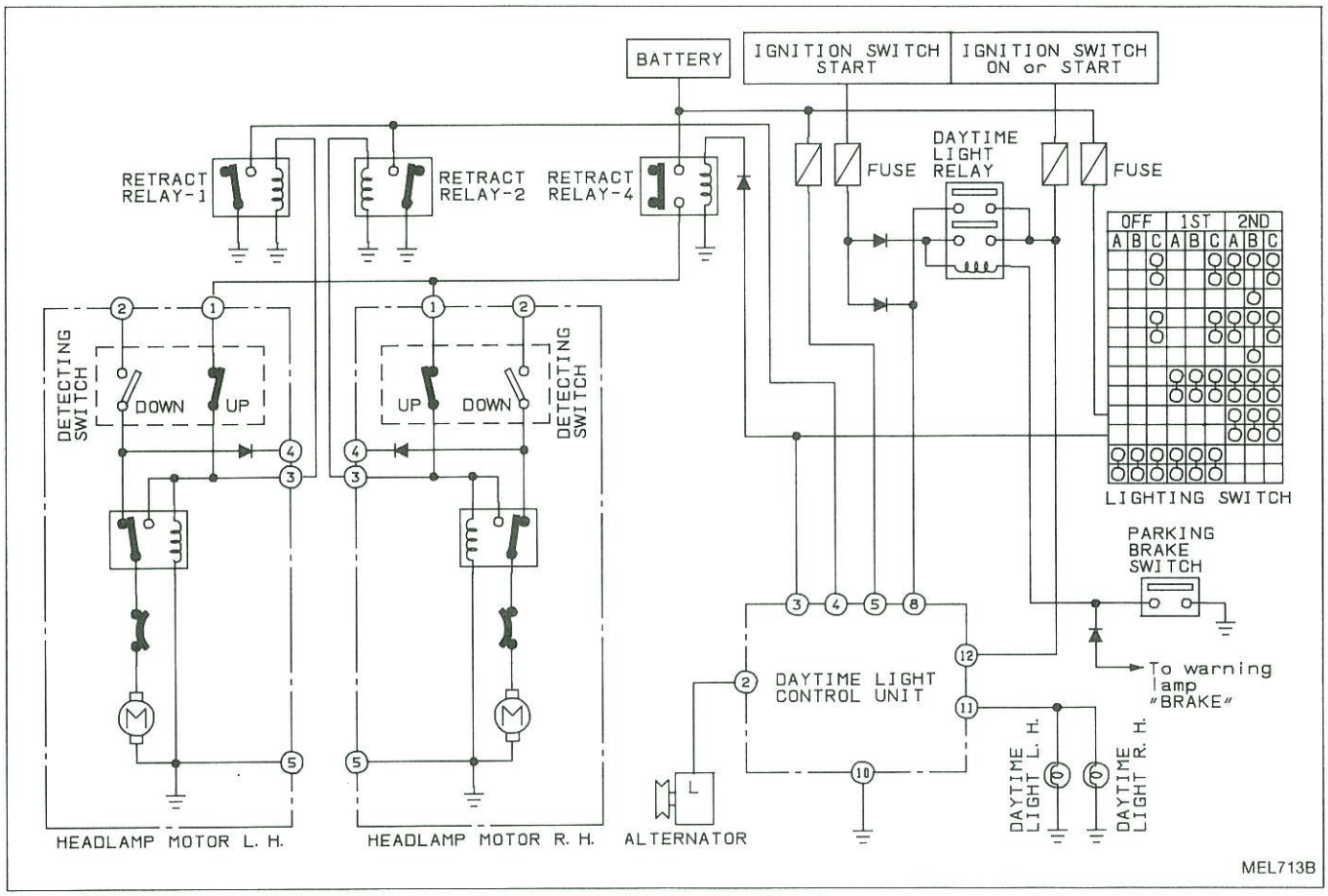

## Daytime Light/Wiring Diagram

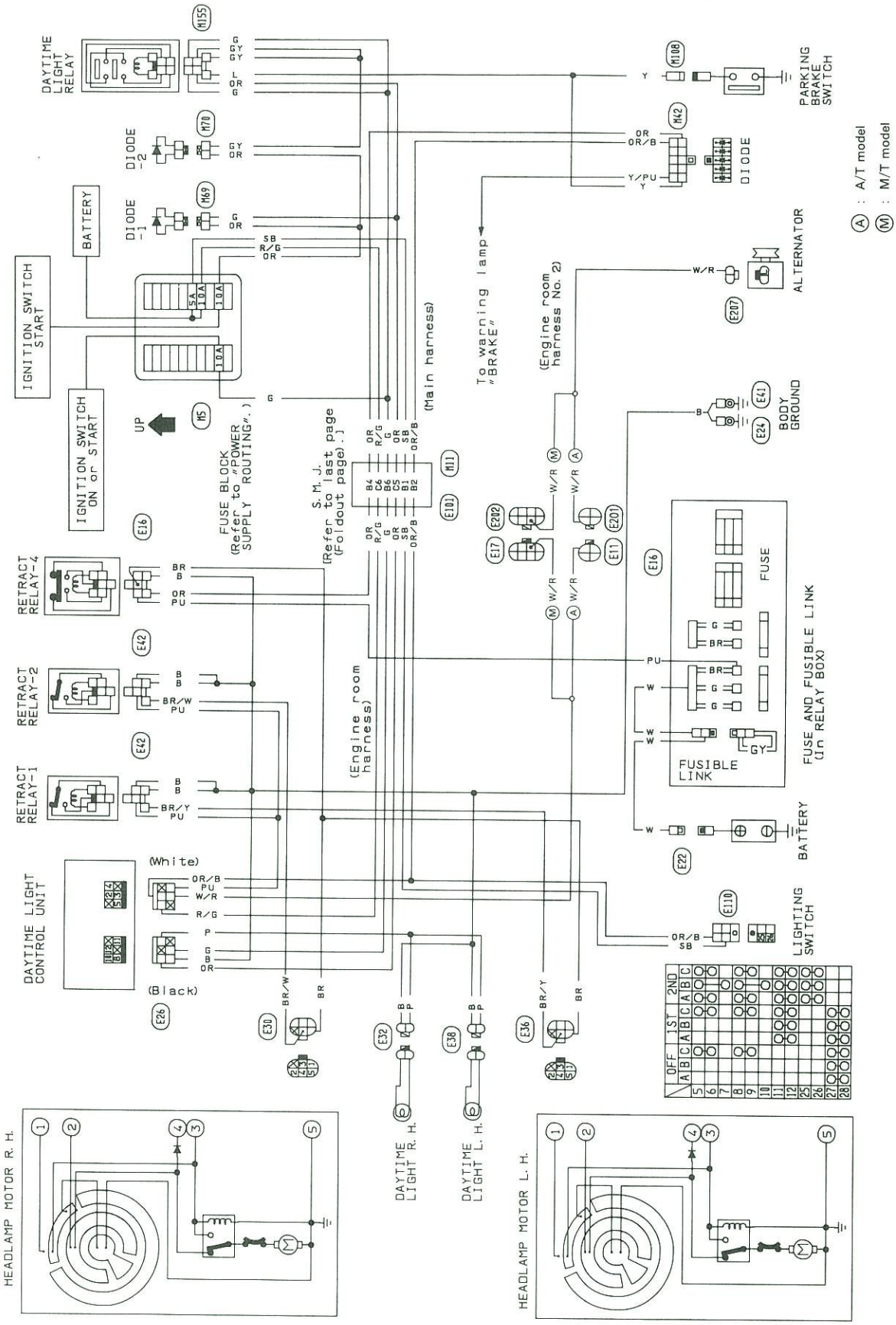


MEL714B

## Clearance, License, Tail and Stop Lamps/Wiring Diagram

### FASTBACK

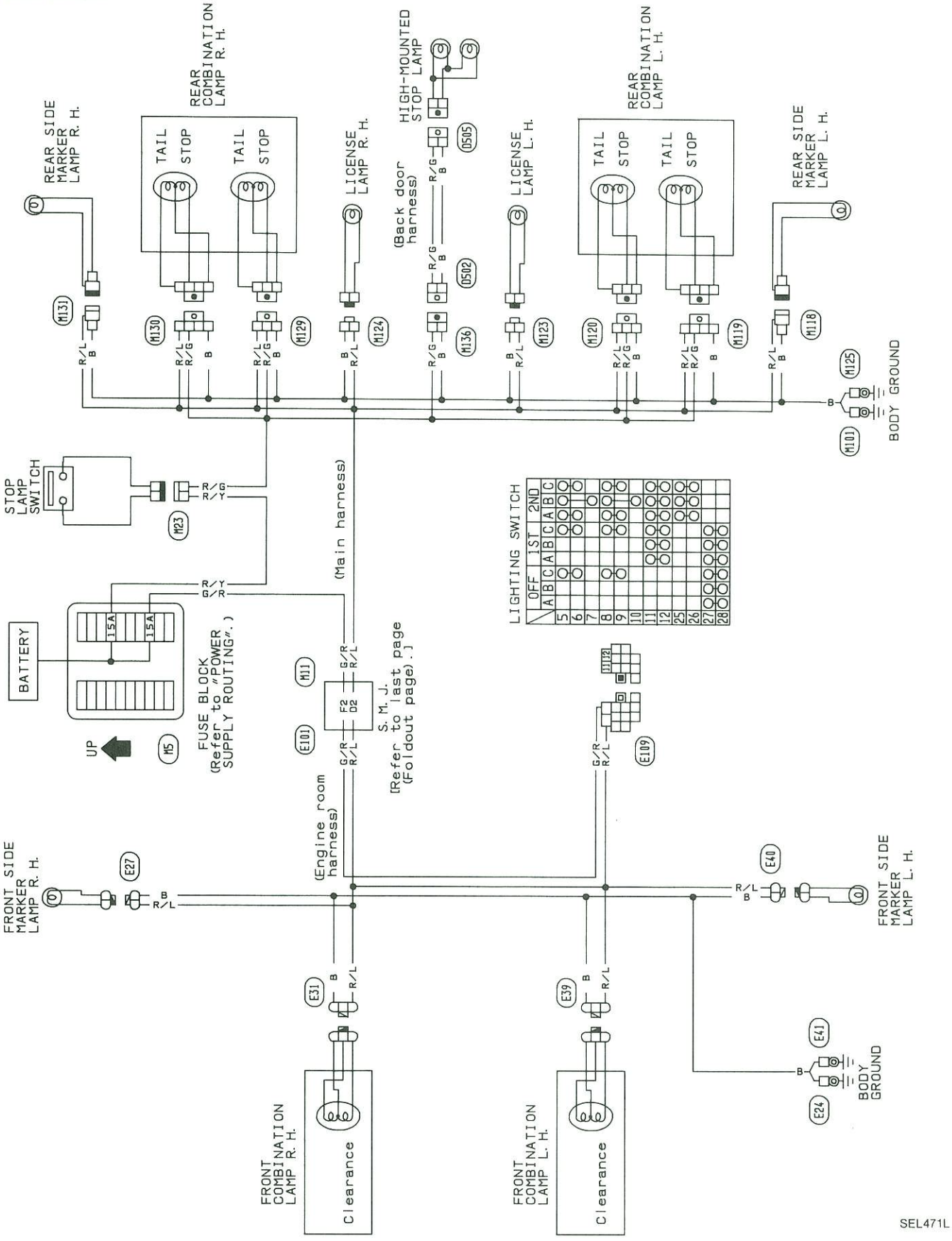

## Clearance, License, Tail and Stop Lamps/Wiring Diagram (Cont'd)

**COUPE**

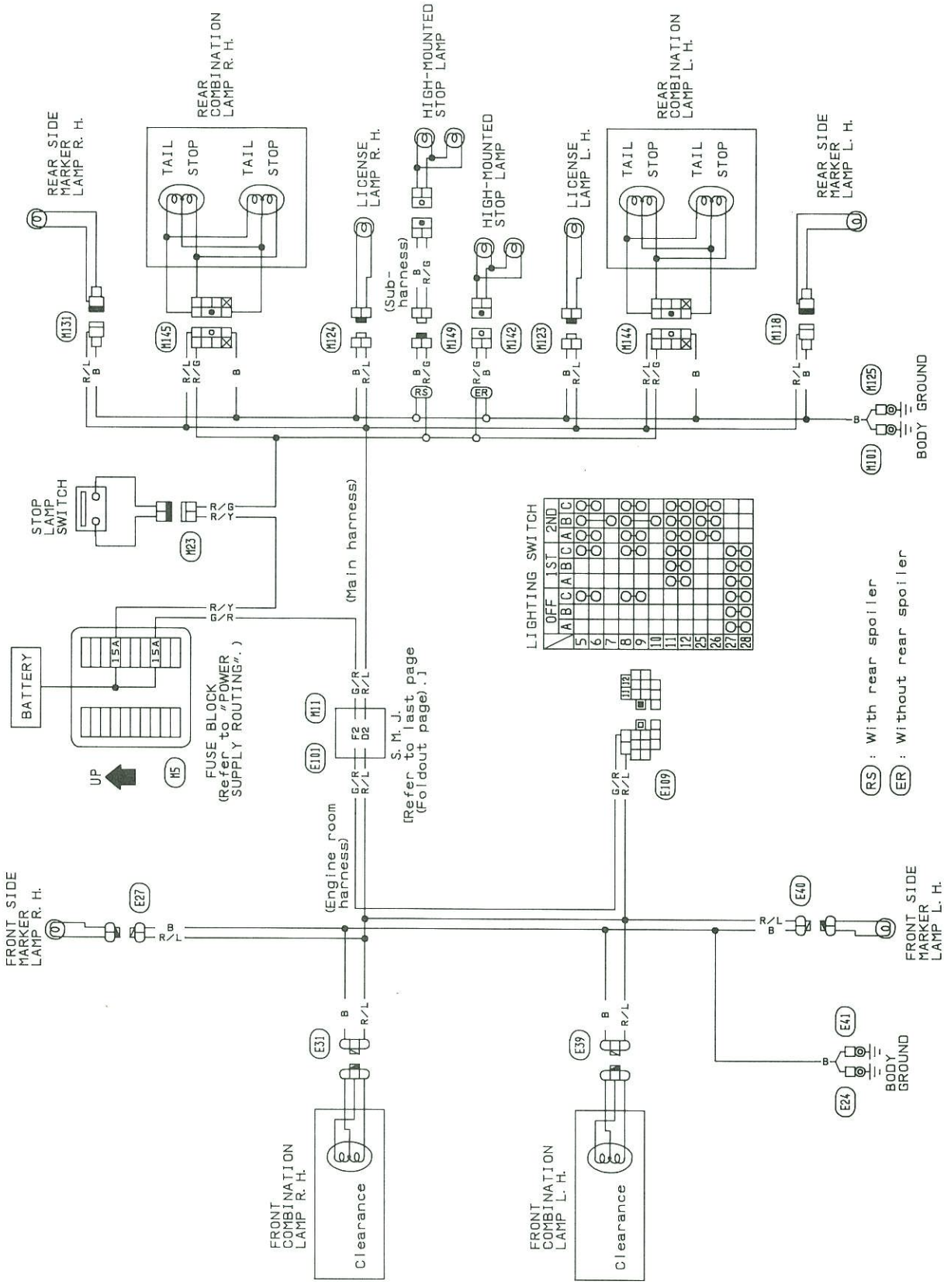


SEL352N

## Back-up Lamp/Wiring Diagram

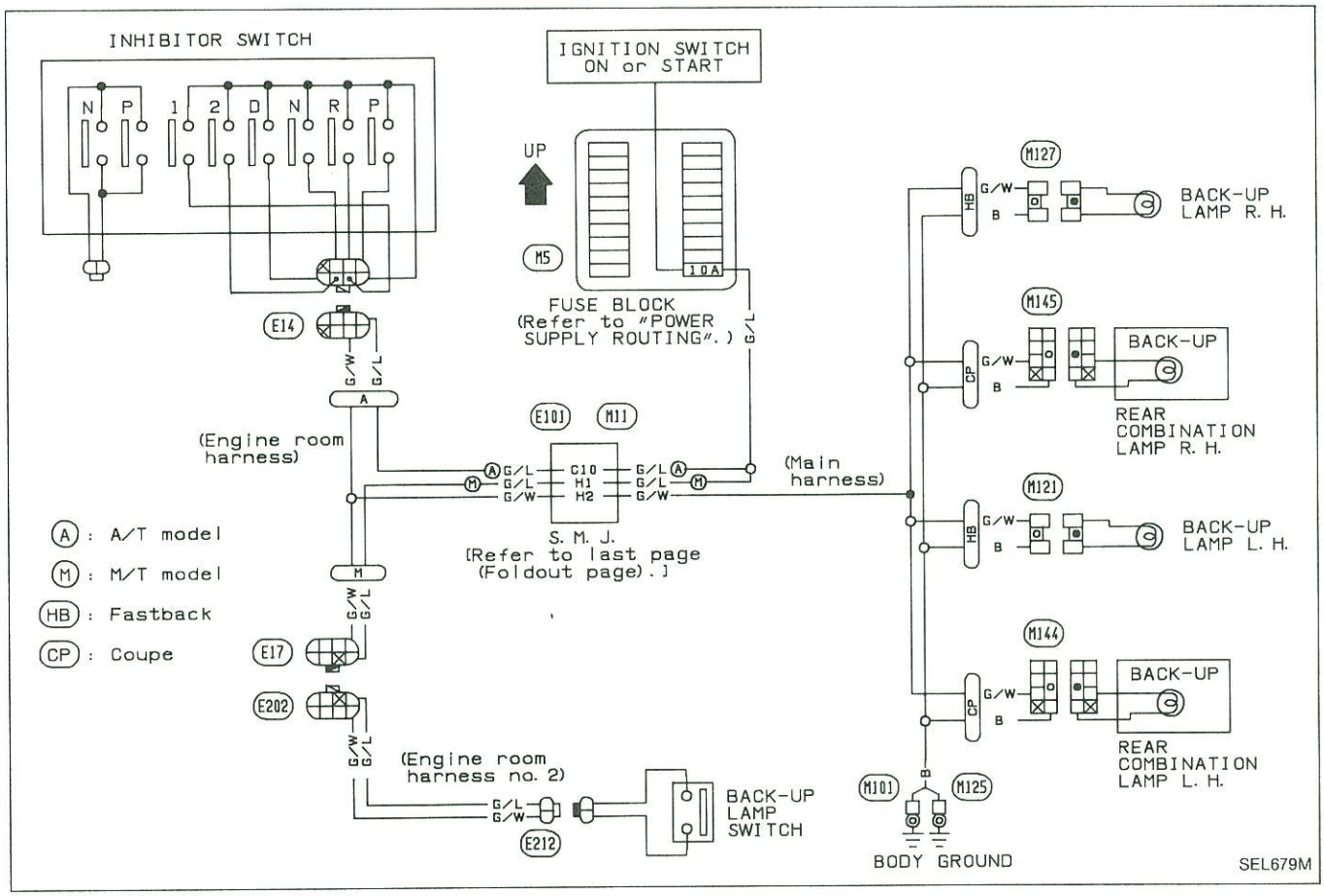

## Turn Signal and Hazard Warning Lamps/Wiring Diagram

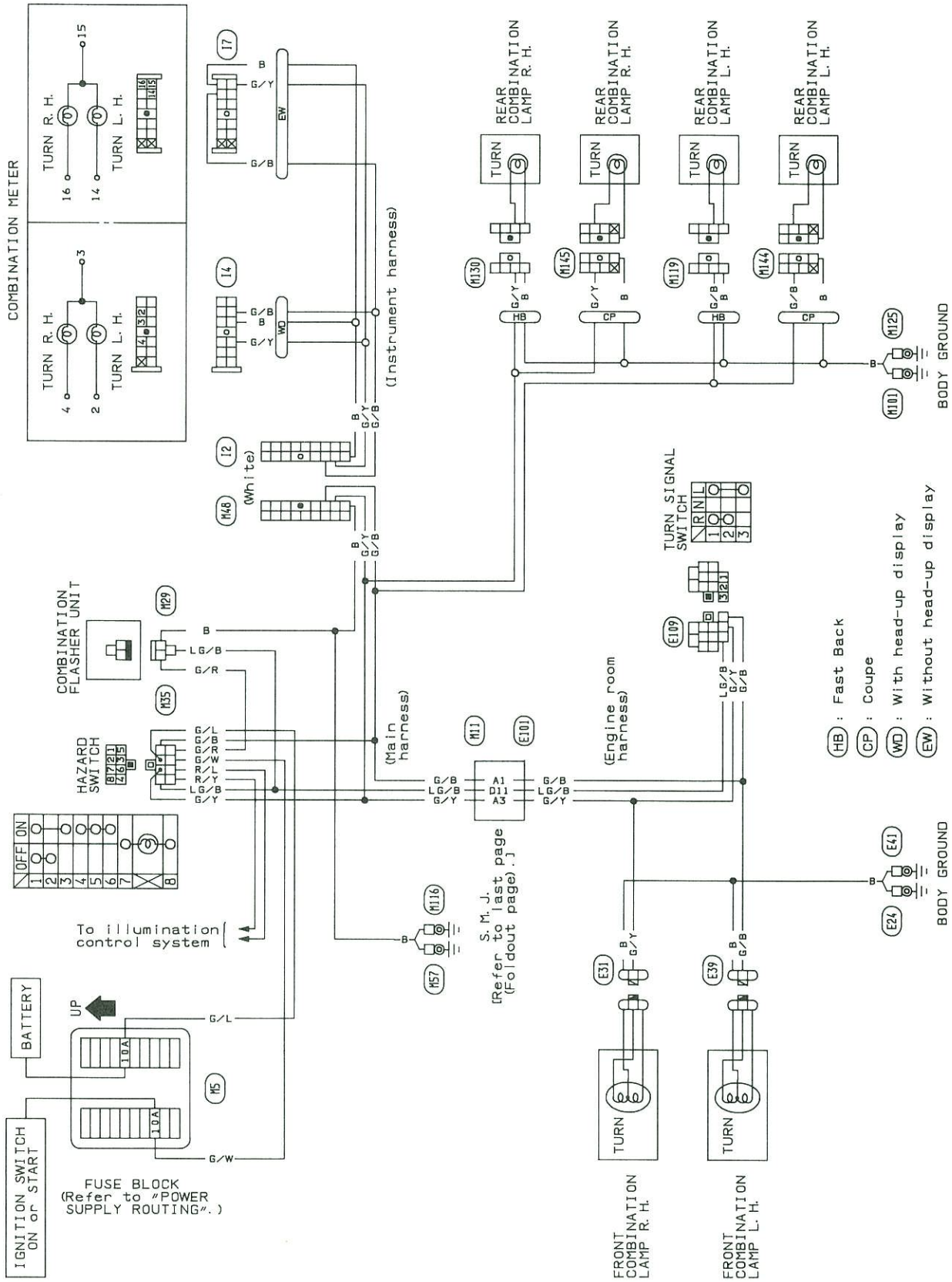


SEL354N

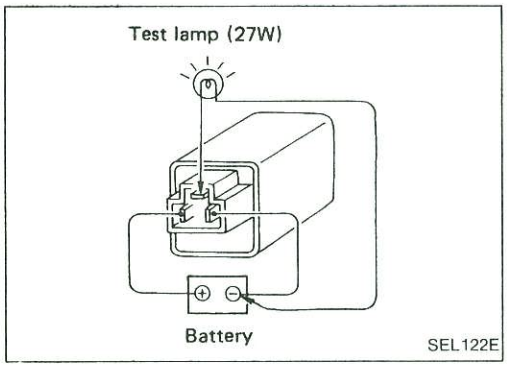


## Combination Flasher Unit Check

- Before checking, ensure that bulbs meet specifications.
- Connect a battery and test lamp to the combination flasher unit, as shown. Combination flasher unit is properly functioning if it blinks when power is supplied to the circuit.

## Bulb Specifications

| Item | Wattage (W) |
|---|---|
| Headlamp (Sealed) | 65/35 |
| Daytime light | 27 |
| Front combination lamp | |
| Front turn signal/Clearance | 27/8 |
| Front side marker lamp | 3.8 |
| Rear side marker lamp | 3.8 |
| Rear combination lamp | |
| Turn signal lamp | 27 |
| Stop/Tail lamp | 27/8 |
| Back-up lamp | 27 |
| License plate lamp | 7.5 |
| Interior lamp | 10 |
| Spot lamp | 8 |
| Trunk room lamp (Coupe) | 3.4 |
| Foot well lamp | 3 |
| Luggage compartment lamp (Fastback) | 5 |
| High-mounted stop lamp | 18 |

## Illumination/Wiring Diagram

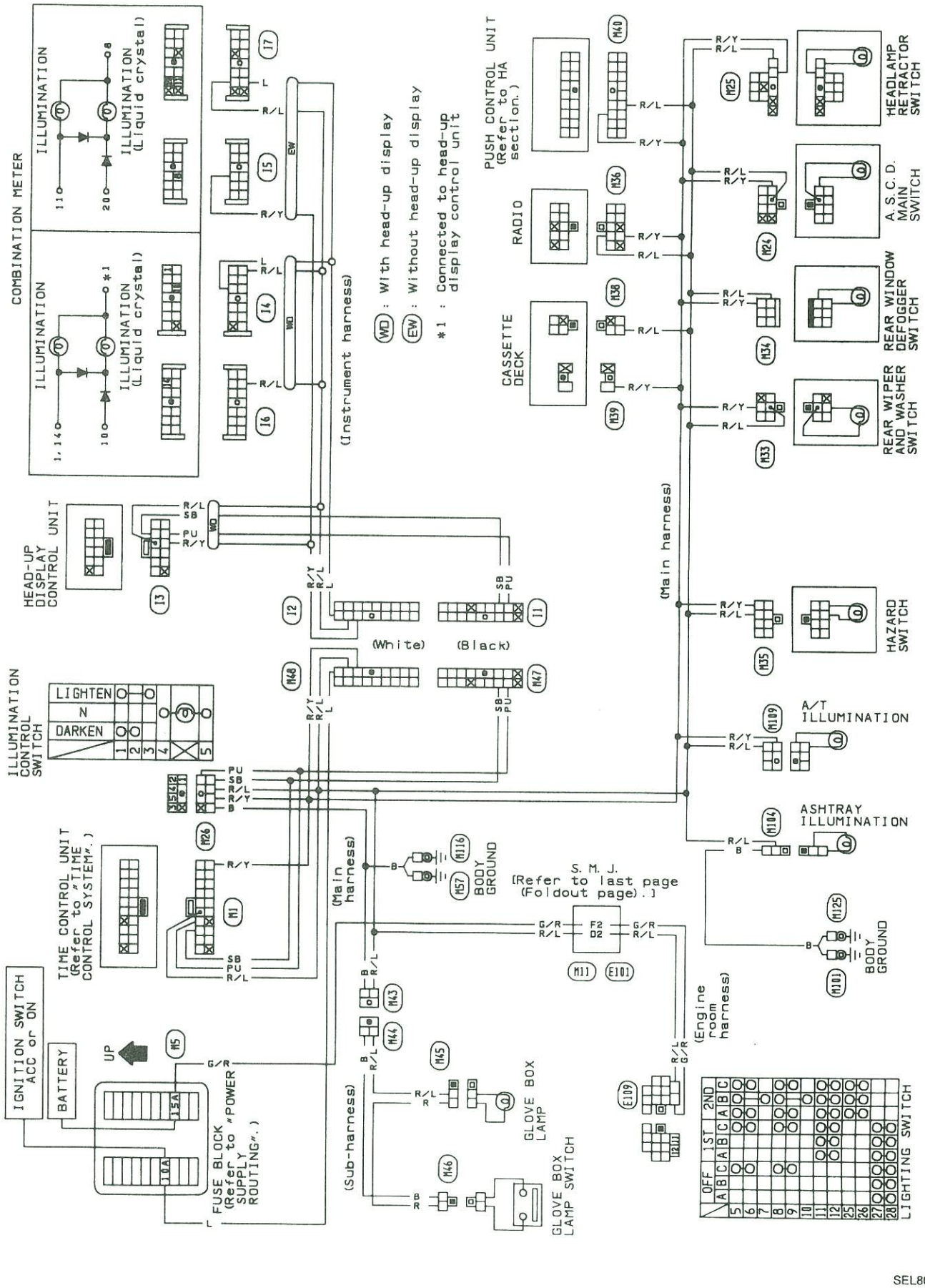


SEL809P

## Interior Lamp/Wiring Diagram

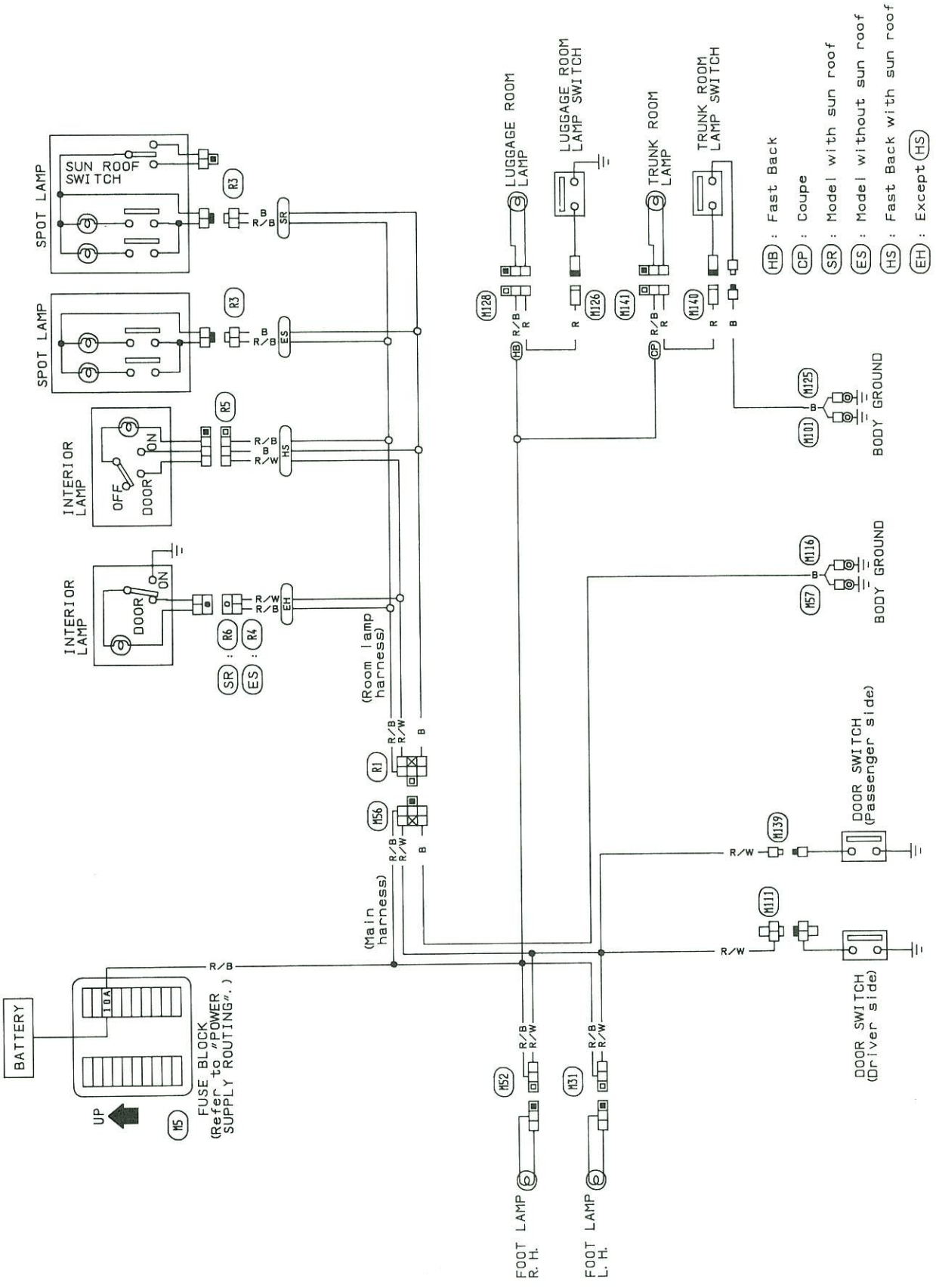


SEL356N

## Combination Meter

### NEEDLE TYPE

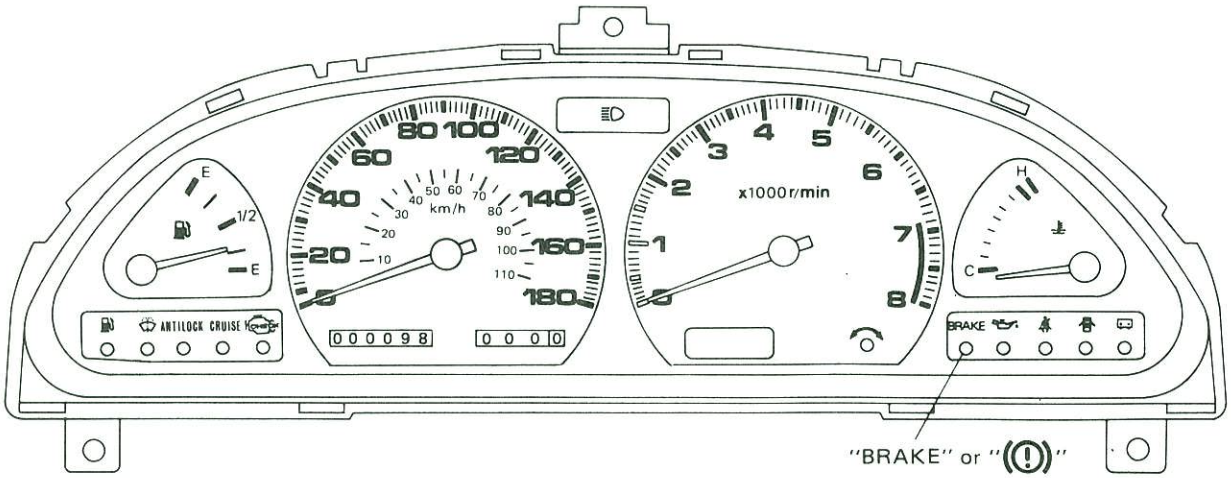


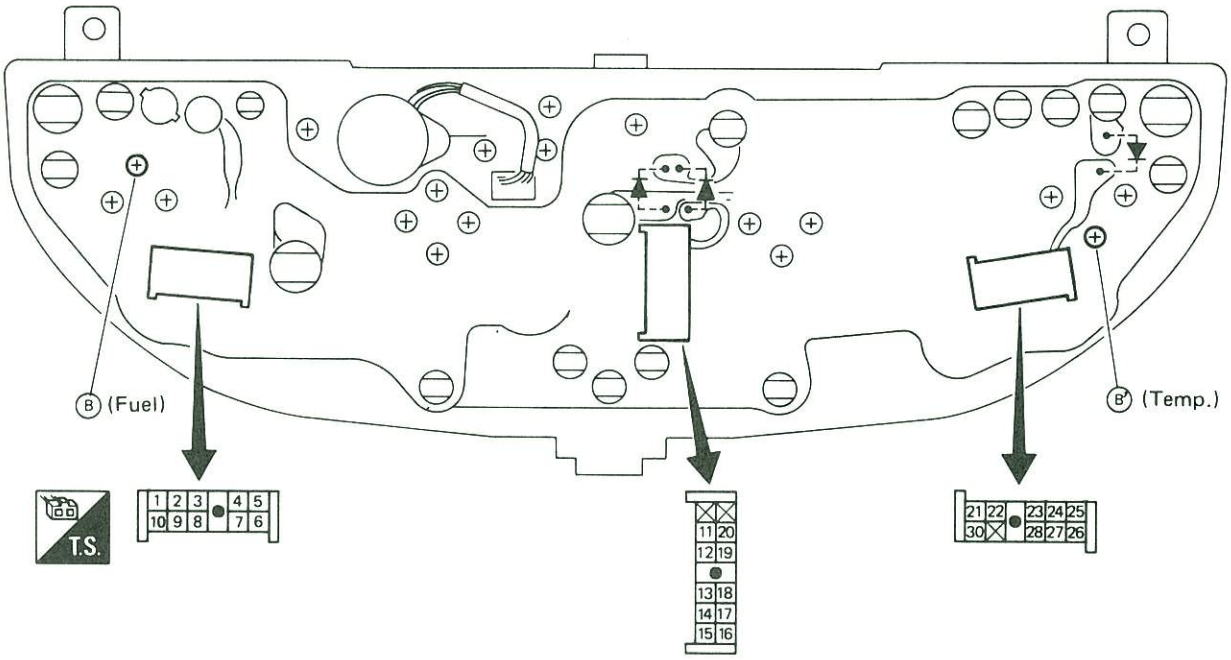


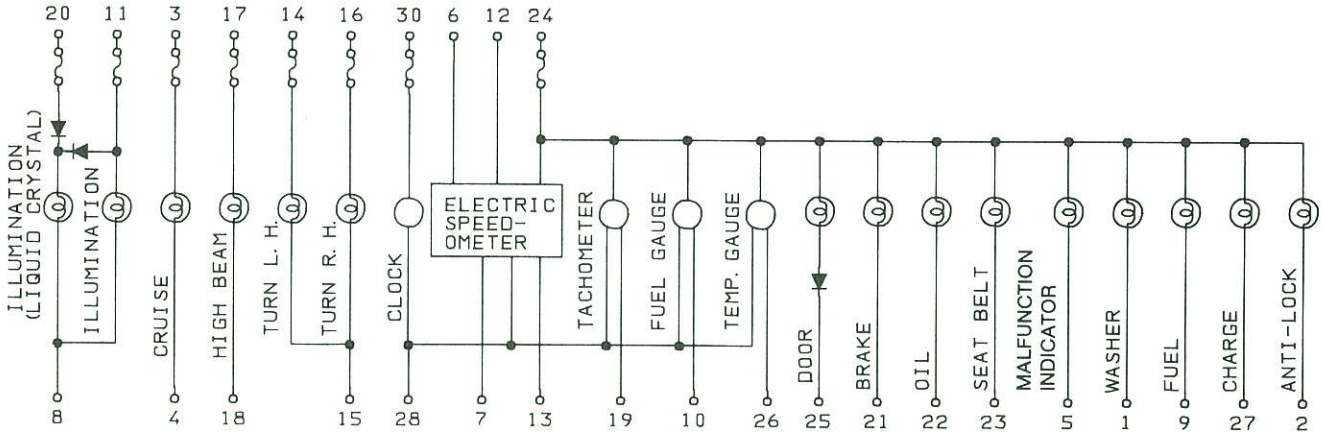


MEL725B

## Combination Meter (Cont'd)

### DIGITAL TYPE

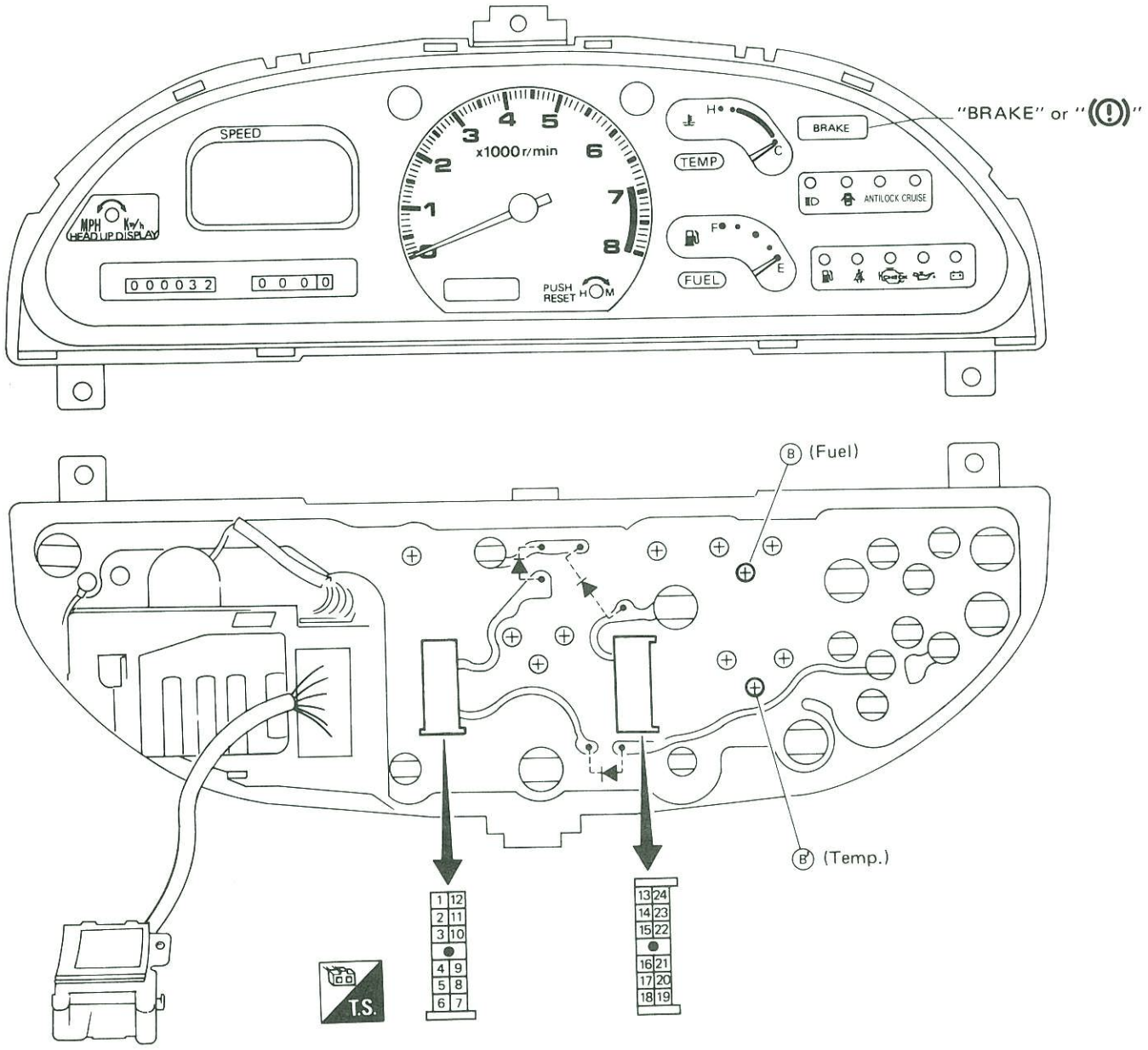


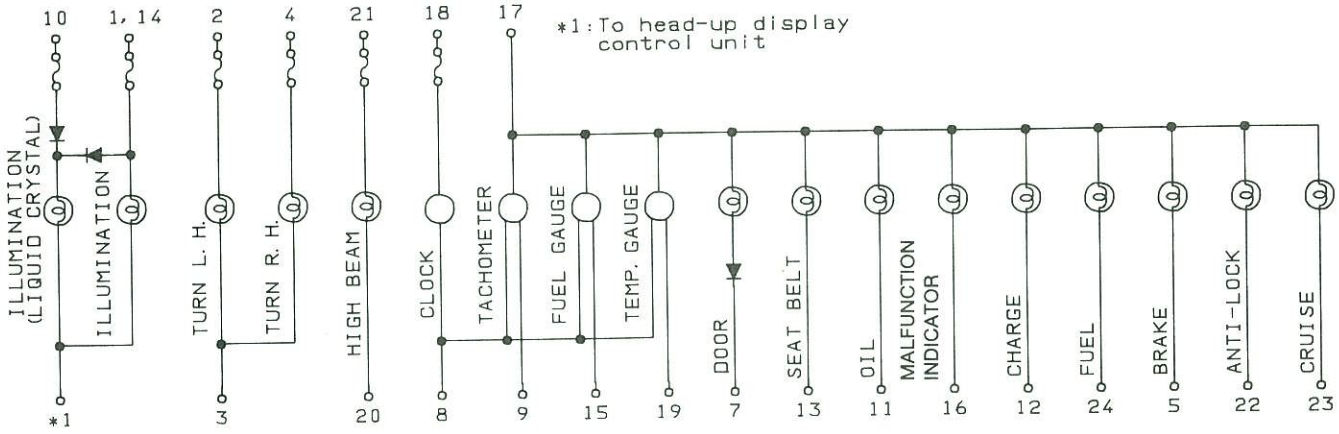


MEL726B

## Combination Meter (Cont'd)

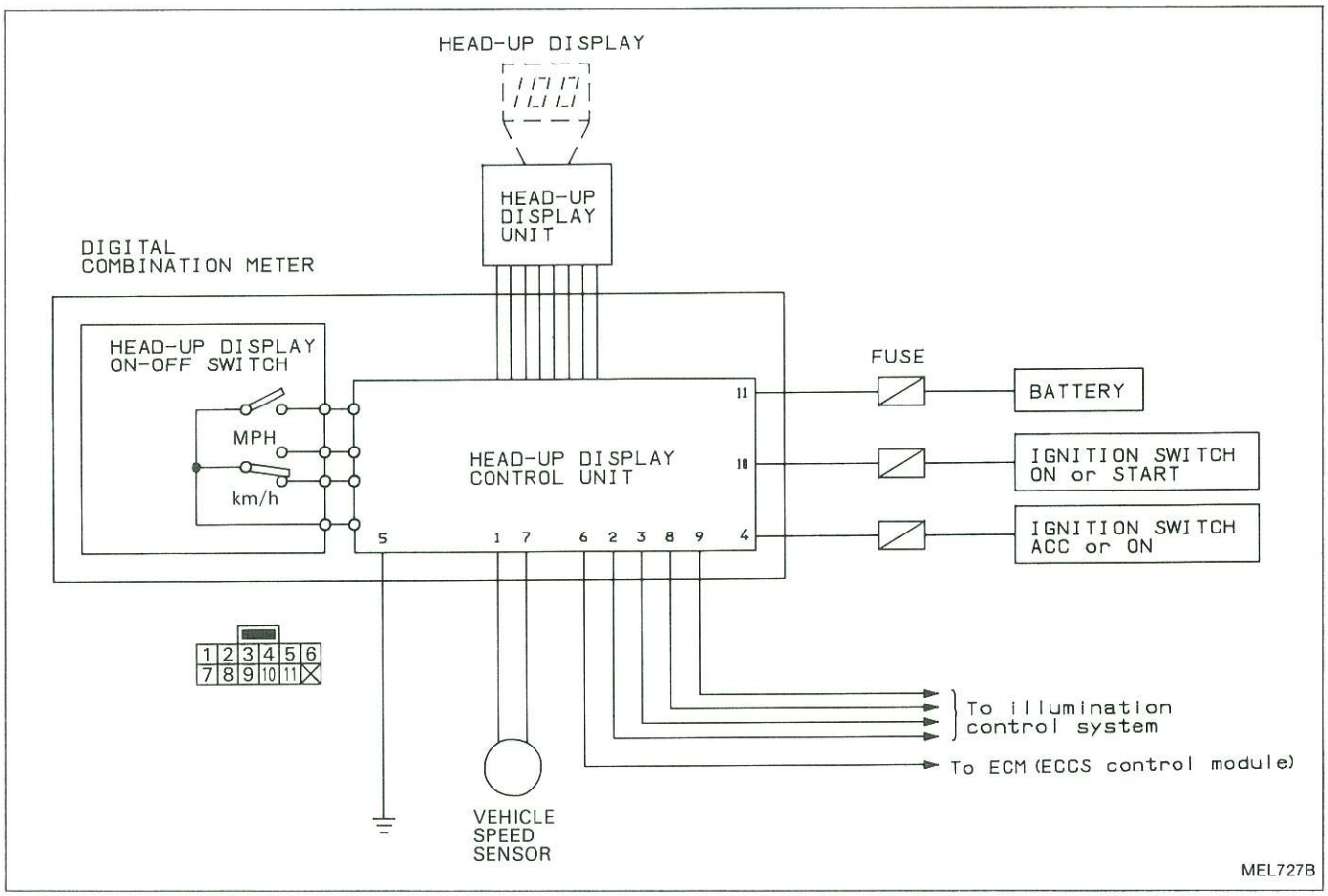

## Combination Meter/Wiring Diagram

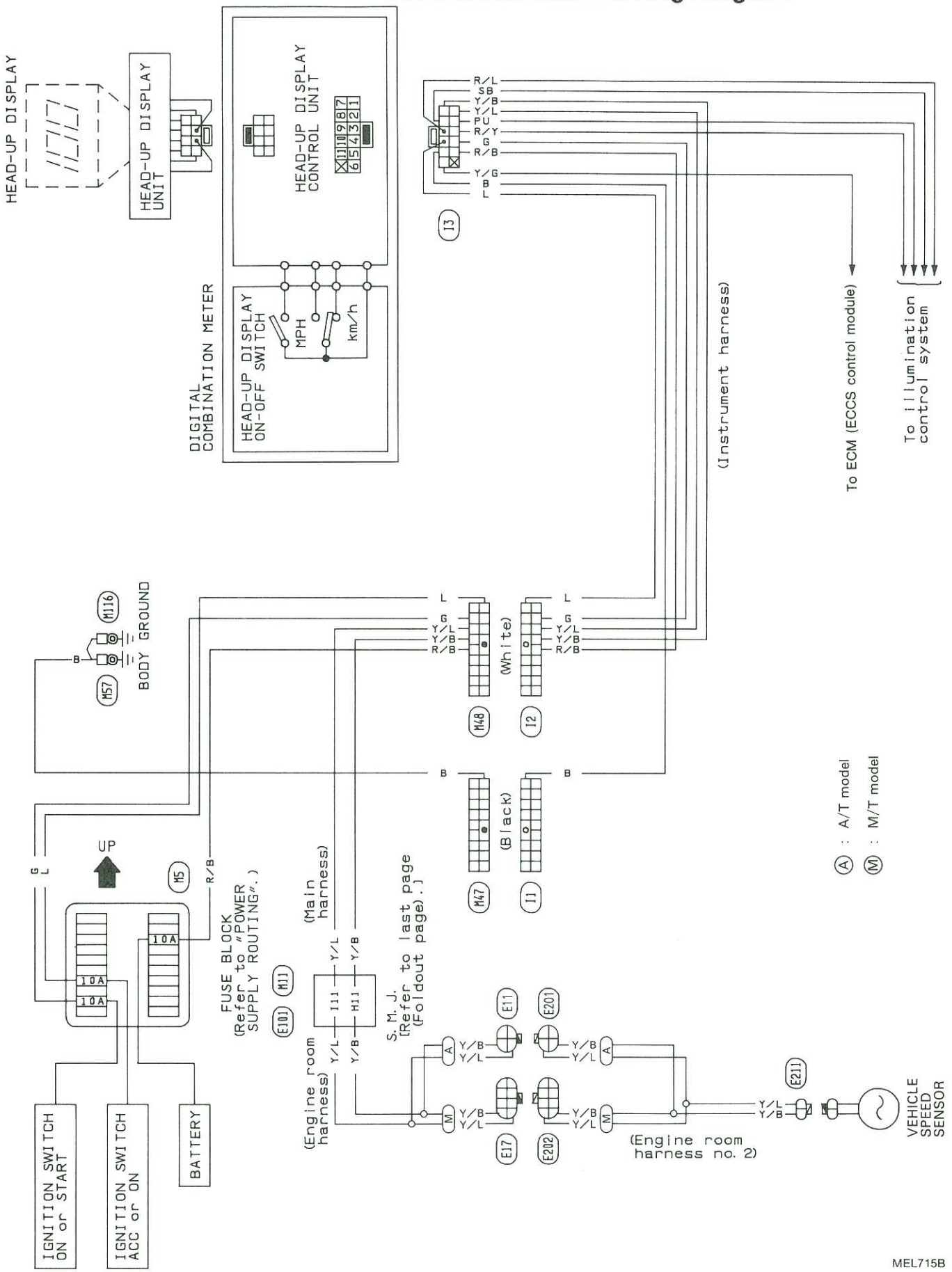

## Speedometer, Tachometer, Temp. and Fuel Gauges/Wiring Diagram

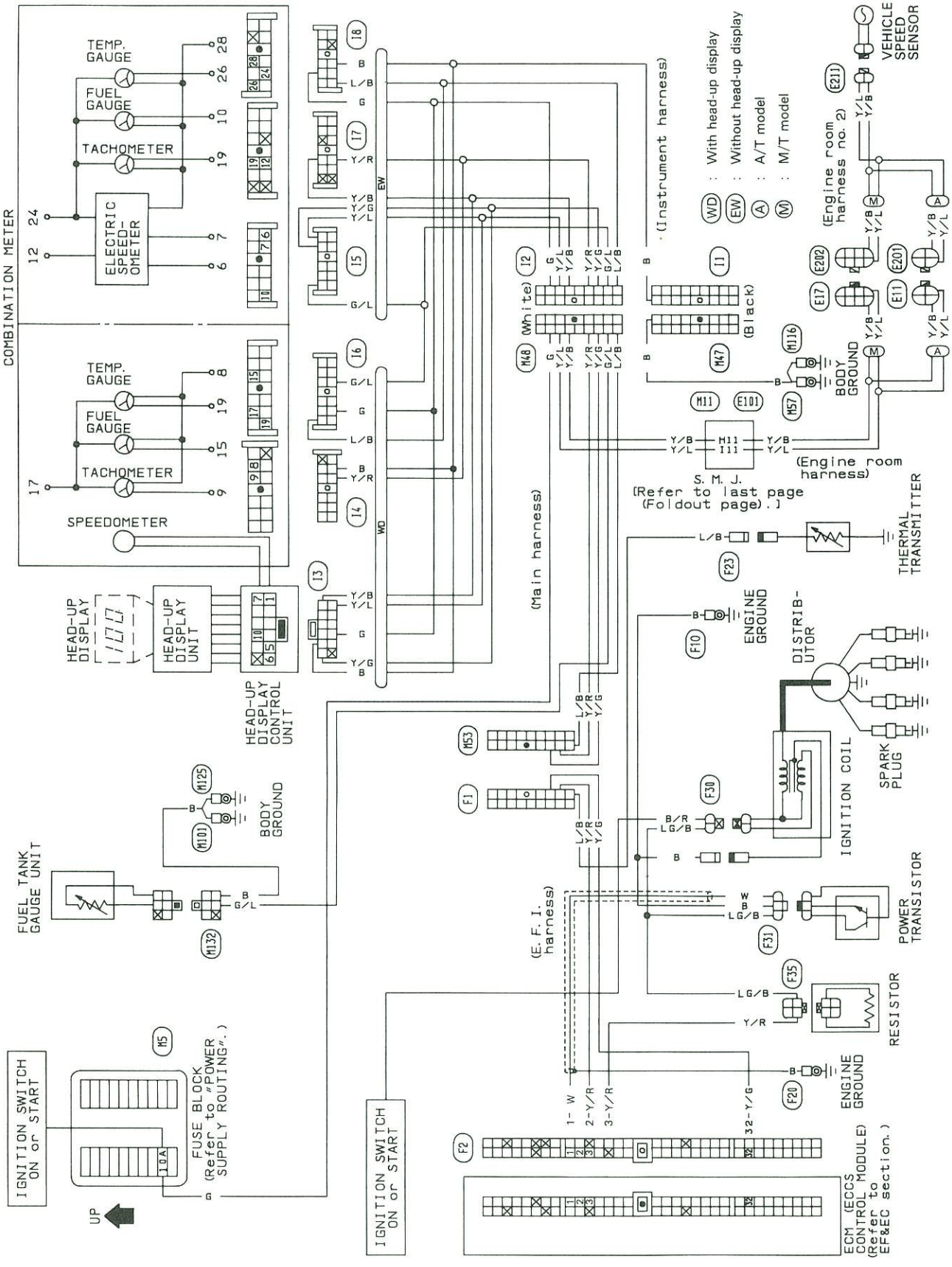


MEL716B

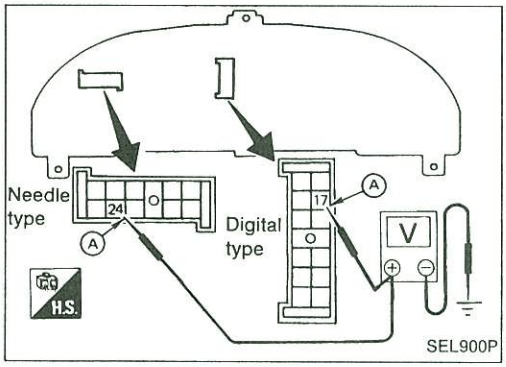


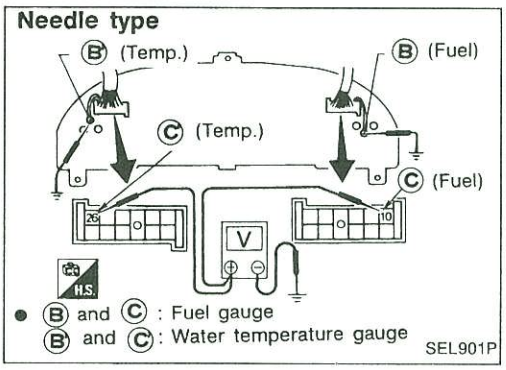


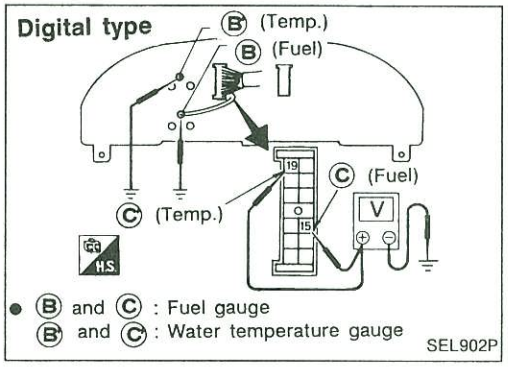


## Inspection/Fuel Gauge and Water Temperature Gauge

INSPECTION START

↓

CHECK POWER SOURCE.
1) Turn ignition switch "ON".
2) Check voltage between terminal Ⓐ and ground.
**Battery voltage should exist.**

N.G. → Check the following items.
1) Harness continuity between battery terminal and combination meter
2) Ignition relay
3) Fusible link and fuse
4) Ignition switch

O.K. ↓

CHECK GAUGE OPERATION.
1) Turn ignition switch "ON".
2) Connect terminals Ⓑ (Fuel), Ⓑ' (Temp.) and ground with wire for **less than 10 seconds.**
3) Check operation of gauge.
**Gauge should move smoothly to full scale.**

N.G. → Repair or replace gauge.

O.K. ↓

Check harness continuity between component and combination meters Ⓒ (Fuel), Ⓒ' (Temp.).

N.G. → Repair or replace.

O.K. ↓

CHECK COMPONENT.
Check gauge units and harness.
**Refer to "Fuel Tank Gauge Unit Check" or "Thermal Transmitter Check".**

N.G. → Repair or replace.
**Refer to FE section. (Fuel gauge)**

O.K. ↓

Reinstall any part removed.

↓

INSPECTION END

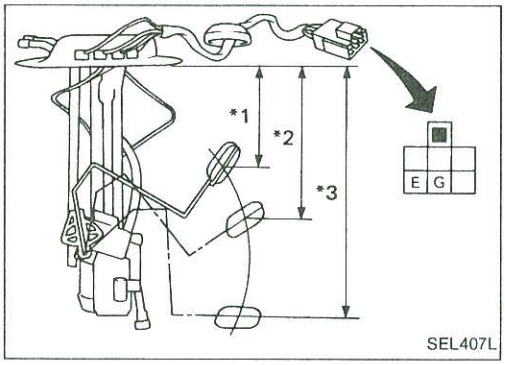


## Fuel Tank Gauge Unit Check

- For removal, refer to FE section.

Check the resistance between terminals Ⓖ and Ⓔ.

| Ohmmeter (+) | Ohmmeter (–) | Float position mm (in) | | | Resistance Ω | Fuel value ℓ (US gal, Imp gal) |
|---|---|---|---|---|---|---|
| G | E | *1 | Full | Approx. 92 (3.62) | 4.3 - 5.8 | 57.6 (15-1/4, 12-5/8) |
| | | *2 | 1/2 | Approx. 154 (6.06) | 27.7 - 34.3 | 32.9 (8-3/4, 7-1/4) |
| | | *3 | Empty | Approx. 226 (8.90) | 78.3 - 84.8 | 6.6 (1-3/4, 1-1/2) |

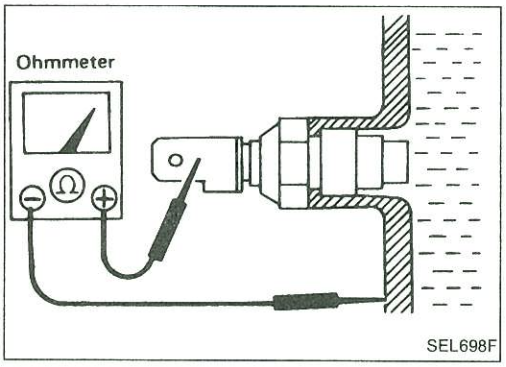


## Thermal Transmitter Check

Check the resistance between the terminals of thermal transmitter and body ground.

| Water temperature | Resistance |
|---|---|
| 60°C (140°F) | Approx. 70 - 90Ω |
| 100°C (212°F) | Approx. 21 - 24Ω |

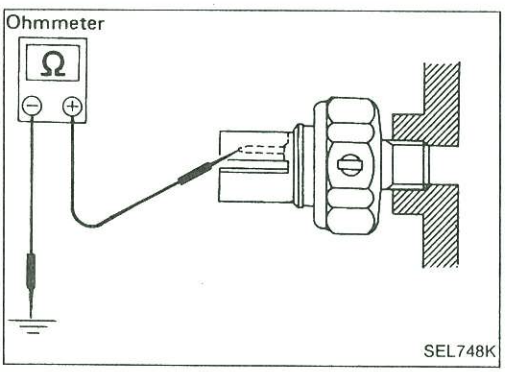


## Oil Pressure Switch Check

Check the continuity between the terminals of oil pressure switch and body ground.

| | Oil pressure kPa (kg/cm², psi) | Continuity |
|---|---|---|
| Engine start | More than 10 - 20 (0.1 - 0.2, 1.4 - 2.8) | NO |
| Engine stop | Less than 10 - 20 (0.1 - 0.2, 1.4 - 2.8) | YES |

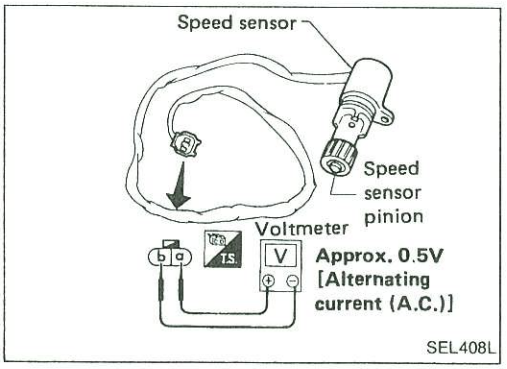


## Speed Sensor Signal Check

1. Remove speed sensor from transmission.
   Location: Refer to "Location of Electrical Units".
2. Turn speedometer pinion quickly and measure voltage across ⓐ and ⓑ.

## Warning Lamps/Schematic

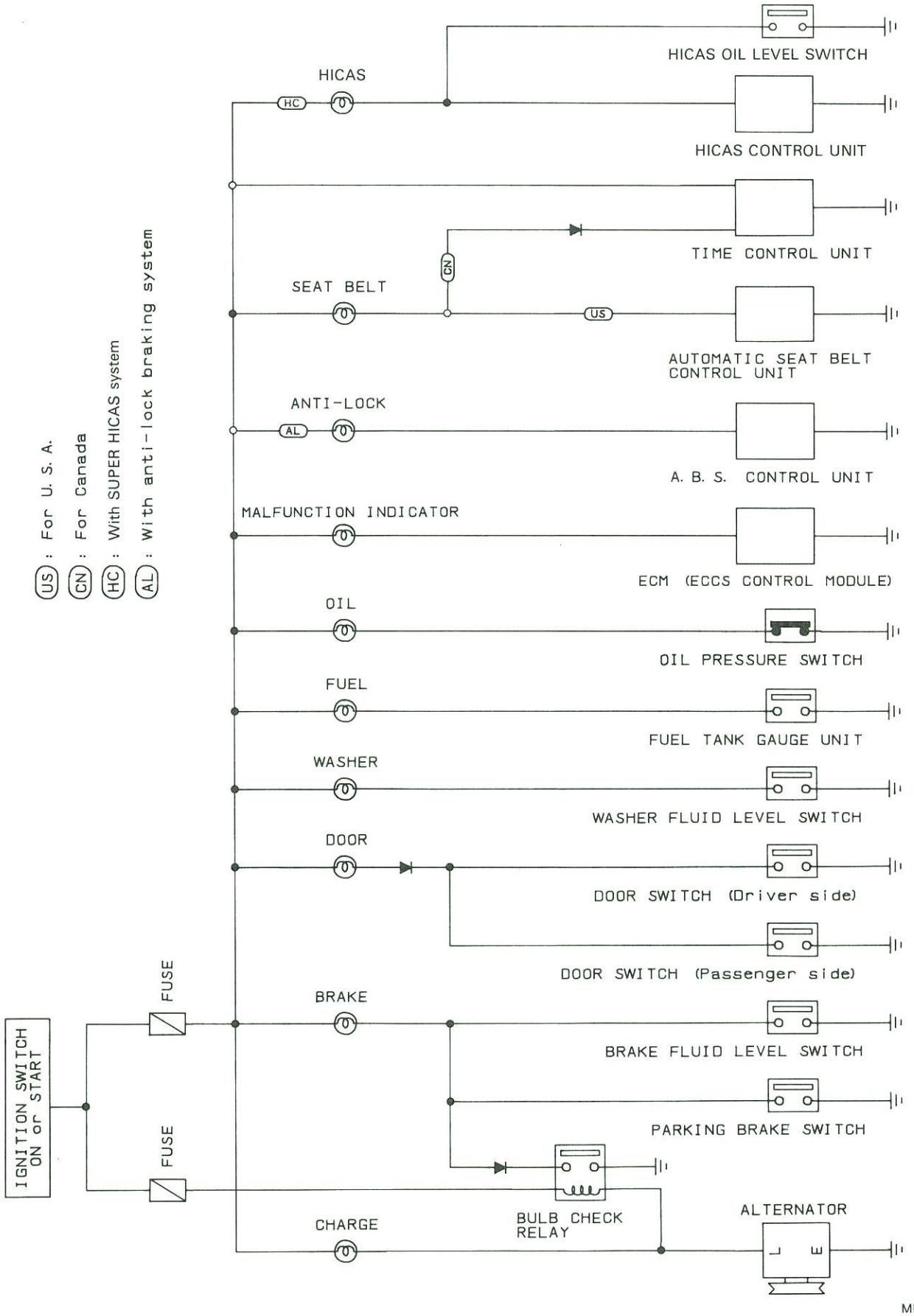

## Warning Lamps/Wiring Diagram

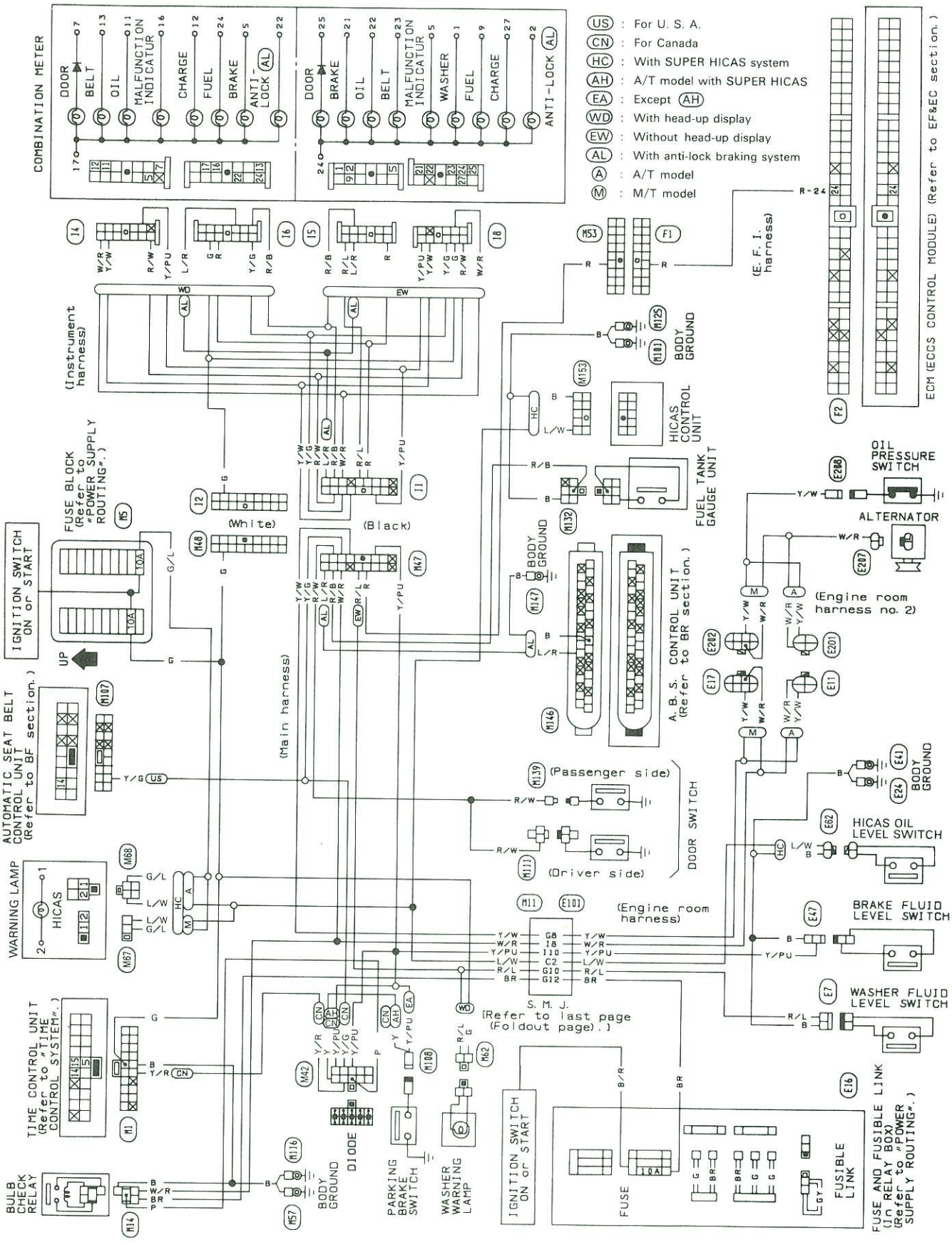


MEL718B

## Warning Chime/Wiring Diagram

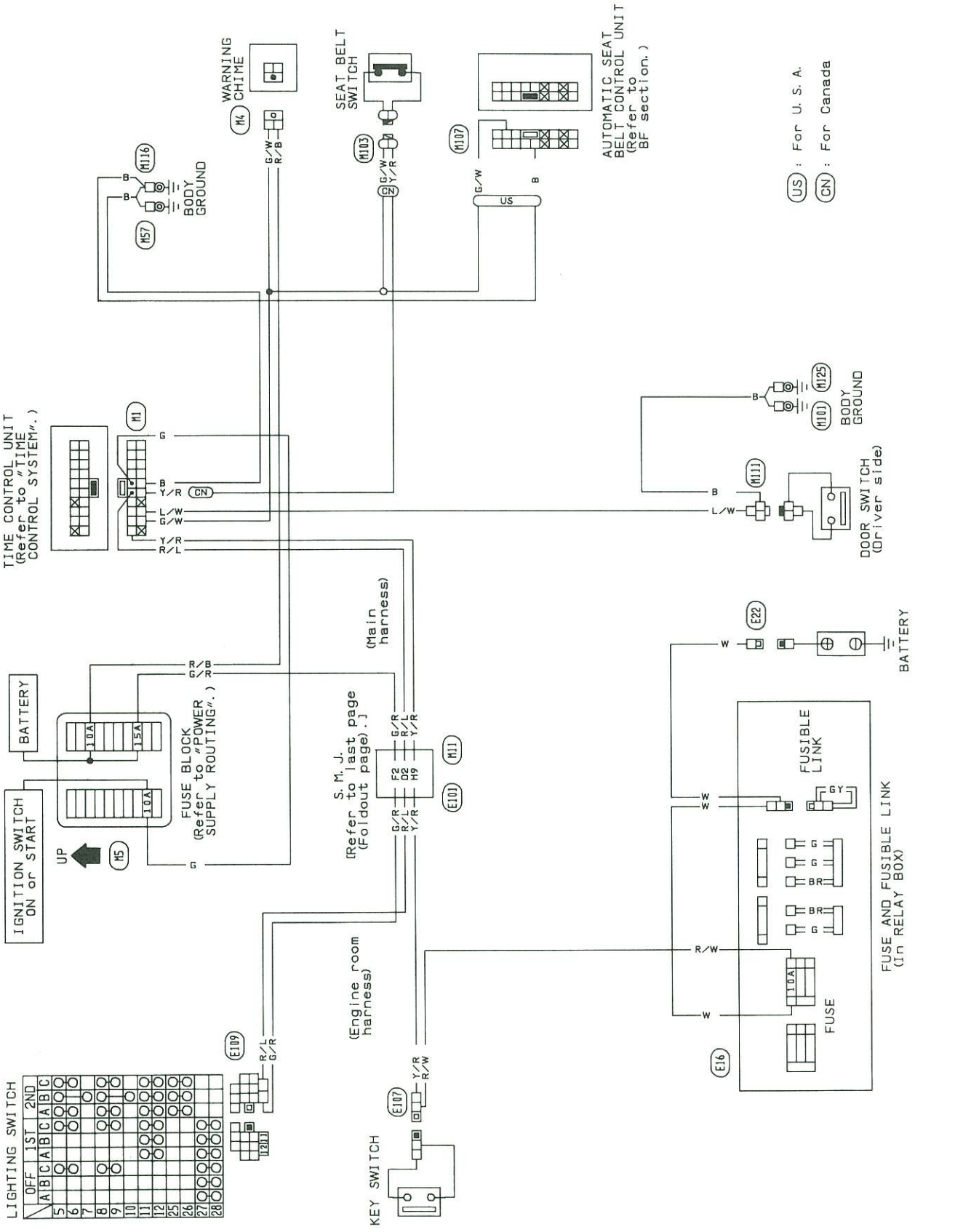


SEL361N

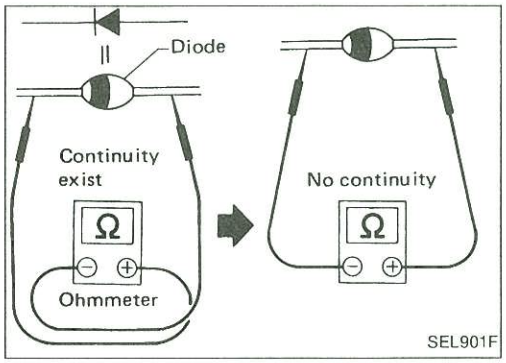


## Diode Check

- Check continuity using an ohmmeter.
- Diode is functioning properly if test results are as shown in the figure at left.

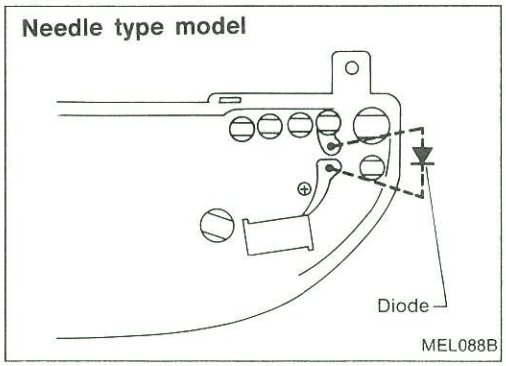


- Diodes for warning lamps are built into the combination meter printed circuit.

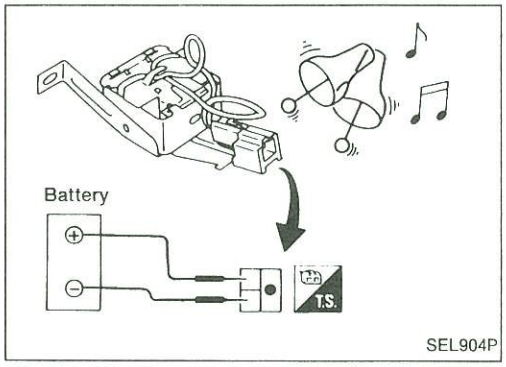


## Warning Chime Check

## Schematic

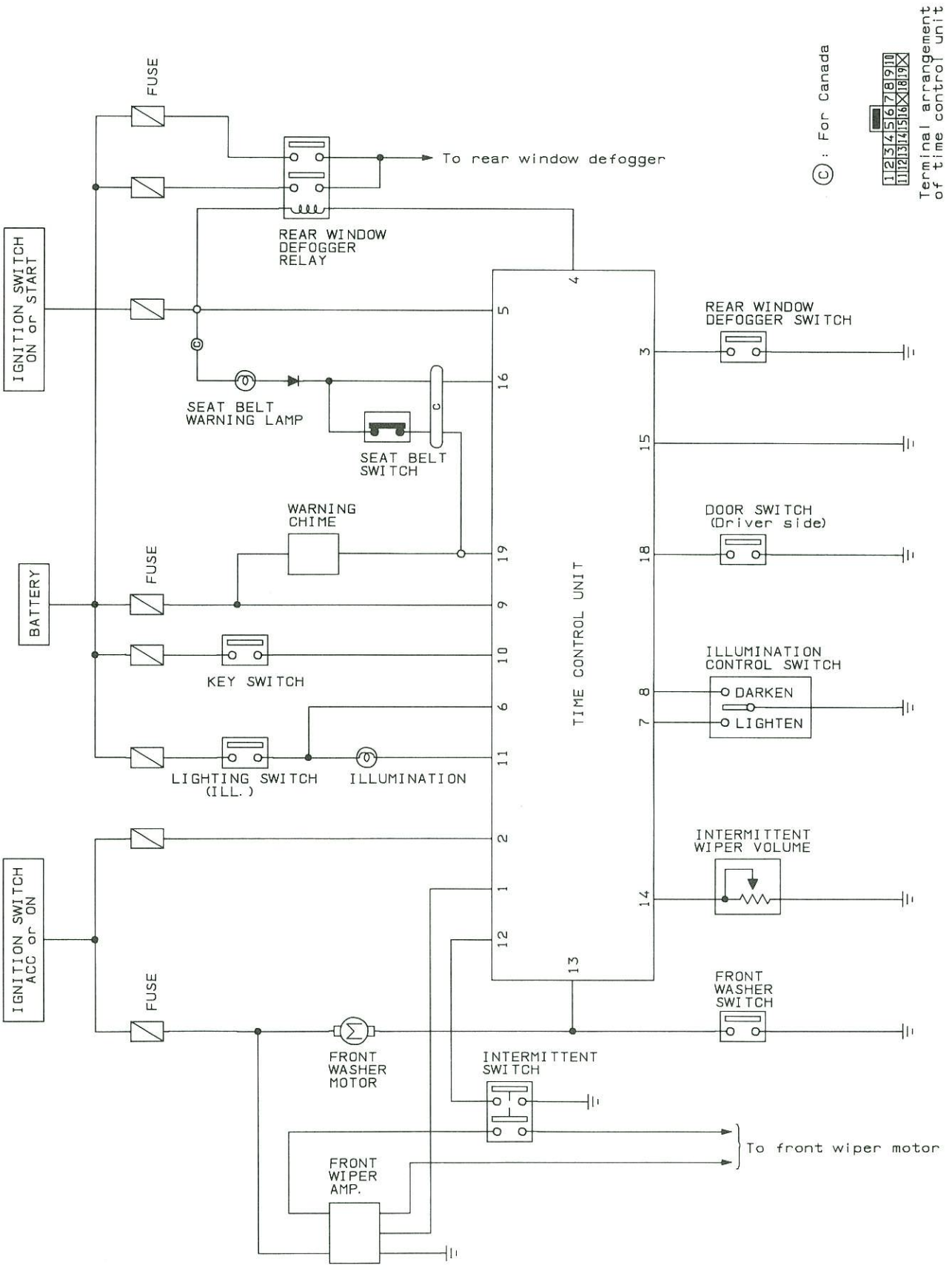


SEL486L

## Wiring Diagram

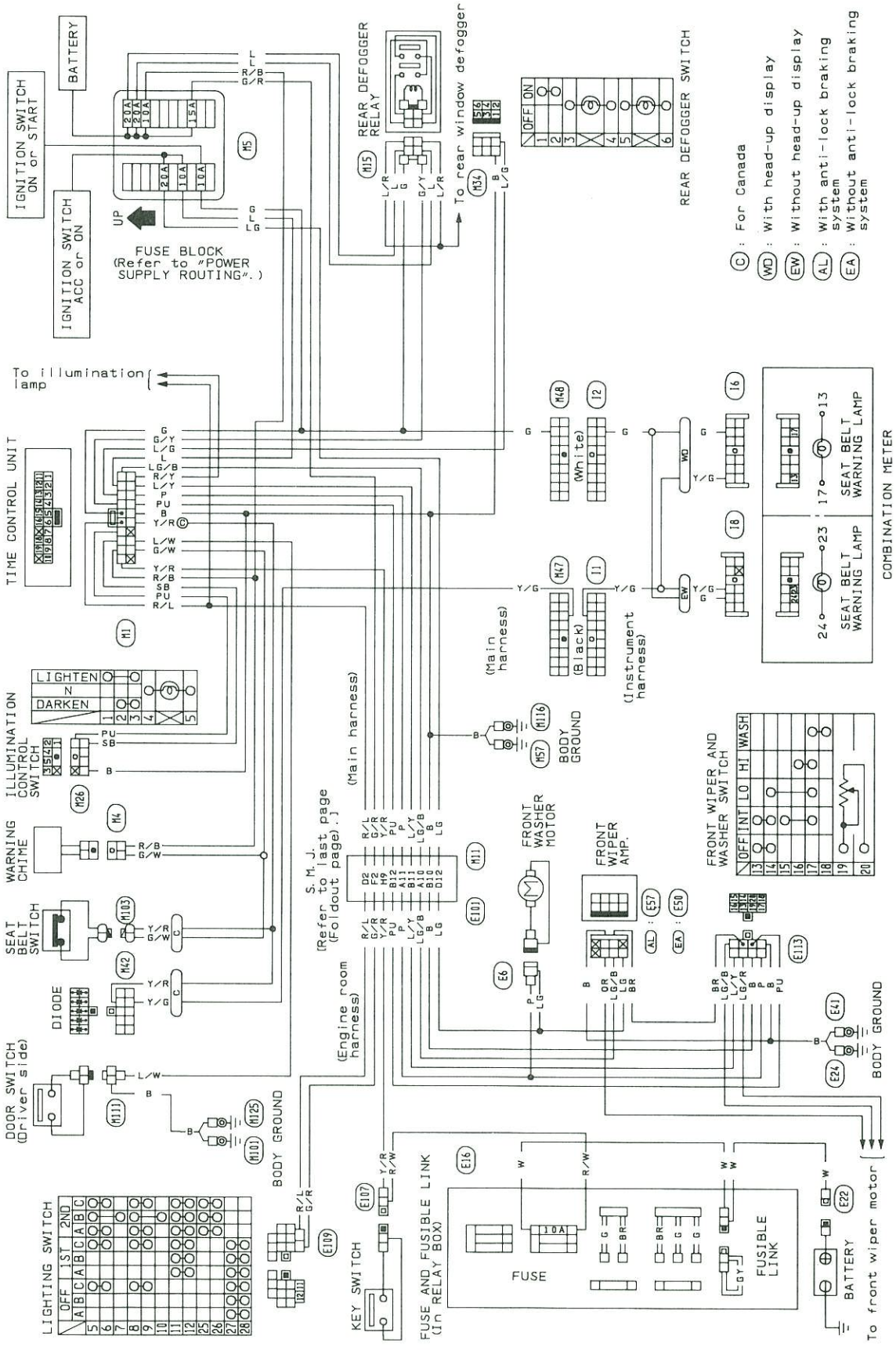


SEL587M

## Description

### FUNCTION

- Time control unit has the following functions.

| | Item | Details of control |
|---|---|---|
| 1 | Intermittent wiper control | Regulates intermittent time from approximately 3 to 12 seconds depending on the intermittent wiper volume setting. |
| 2 | Washer and wiper combination control | Wiper is operated in conjunction with washer switch. |
| 3 | Illumination control | Regulates brightness of illumination in 16 stages depending on the illumination control switch setting. |
| 4 | Light warning chime timer | When driver's door is opened with light switch ON and ignition switch OFF, warning chime sounds. |
| 5 | Seat belt warning lamp timer | Seat-belt warning lamp blinks for about 7 seconds when ignition switch is turned to "ON". |
| 6 | Seat belt warning chime timer | Sounds warning chime for about 7 seconds if ignition switch is turned "ON" when seat belt switch is "ON" (seat belt is unfastened). |

### OPERATING CONDITIONS

| Input signal / Input terminal / Output terminal / Item | | Power source from battery | Ignition switch | Light switch | Wiper switch "INT" | Washer switch | Driver's side door switch *1 | Seat belt switch *2 | Illumination control switch |
|---|---|---|---|---|---|---|---|---|---|
| | | ⑨ | ② or ⑤ | ⑥ | ⑫ | ⑬ | ⑱ | ⑯ | ⑦ or ⑧ |
| Intermittent wiper control | ① | ON | ACC or ON | | ON | | | | |
| Washer and wiper combination control | ⑫ | ON | ACC or ON | | | ON | | | |
| Illumination control | ⑪ | ON | | ON | | | | | ON |
| Light warning chime timer | ⑲ | ON | OFF or ACC | ON | | | ON | | |
| Seat belt warning lamp timer | ⑯ | ON | OFF or ACC → ON | | | | | | |
| Seat belt warning chime timer | ⑲ | ON | OFF or ACC → ON | | | | | ON | |

*1 Door switch is turned ON when door is opened.

*2 Seat belt switch is turned ON when driver's side seat belt is unfastened.

## Trouble-shooting

| Symptom | | DIAGNOSTIC PROCEDURE |
|---|---|---|
| Wiper & washer | Intermittent wiper does not operate. | 1 |
| | Intermittent time of wiper cannot be adjusted. | 2 |
| | Wiper and washer activate individually but not in combination | 3 |
| Illumination | Illumination control system does not actuate. | 4 |
| Warning | Light warning chime does not activate. | 5 |
| | Seat belt warning chime does not activate. | 6 |
| | Seat belt warning lamp does not go off nor | 7 |
| | Ignition key waABing chime does not activate. | 9 |
| Rear defogger | Rear defogger does not activate, or does not go off. | 8 |



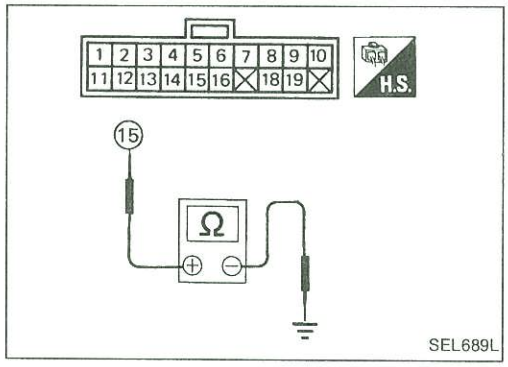


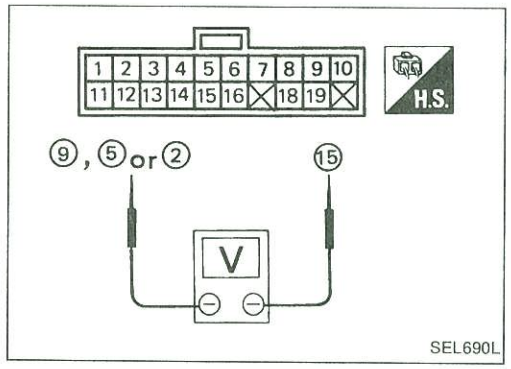


### PREPARATION FOR TROUBLE-SHOOTING

1. Remove driver's side dash side cover.
2. Remove time control unit with harness connected.

### POWER SUPPLY CIRCUIT CHECK

1. Connect ohmmeter from harness side.
2. Check continuity between terminal ⑮ and body ground.

| Ohmmeter terminals | | Continuity |
|---|---|---|
| (+) | (–) | |
| ⑮ | Body ground | Yes |

3. Connect voltmeter from harness side.
4. Measure voltage across terminal ⑮ and terminals ②, ⑤ or ⑨.

| Voltmeter terminals | | Ignition switch position | | |
|---|---|---|---|---|
| (+) | (–) | OFF | ACC | ON |
| ⑨ | ⑮ | Approx. 12V | Approx. 12V | Approx. 12V |
| ⑤ | ⑮ | 0V | 0V | Approx. 12V |
| ② | ⑮ | 0V | Approx. 12V | Approx. 12V |

## Trouble-shooting (Cont'd)

### DIAGNOSTIC PROCEDURE-1

**Intermittent wiper does not operate.**

**A** T.C.U. OUTPUT FOR WIPER RELAY CIRCUIT CHECK

Measure voltage across ① and ⑮.

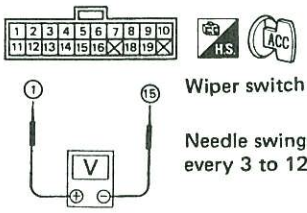


Wiper switch → "INT"

Needle swings from 0 to 12V every 3 to 12 seconds.

SEL652L

**B** WIPER SWITCH CIRCUIT CHECK

Check continuity between ⑫ and ⑮.

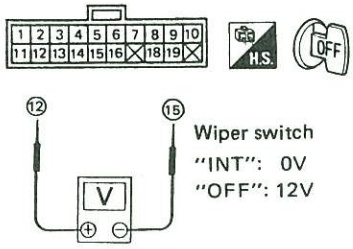


Wiper switch
"INT": 0V
"OFF": 12V

SEL653L

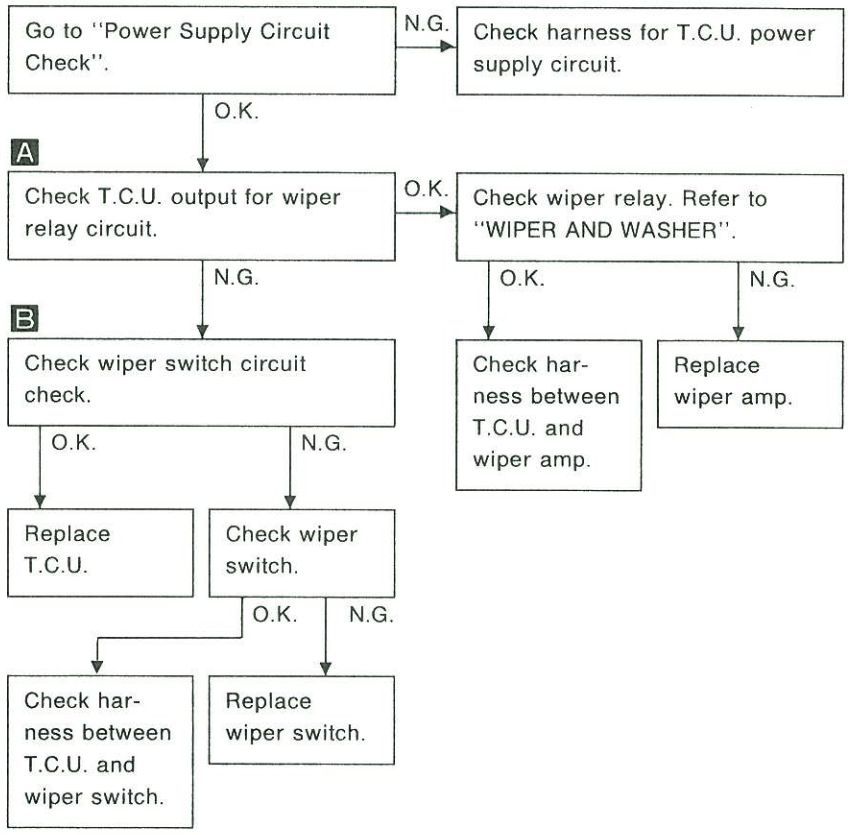


### DIAGNOSTIC PROCEDURE-2

**Intermittent time of wiper cannot be adjusted.**

**A** INTERMITTENT WIPER VOLUME CIRCUIT CHECK

Measure resistance between ⑭ and ⑮ while turning intermittent wiper volume.

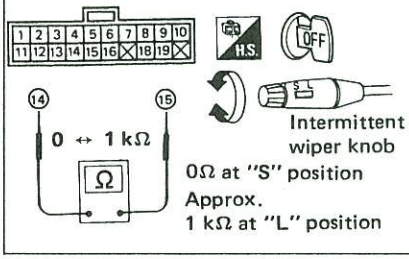


Intermittent wiper knob
0Ω at "S" position
Approx. 1 kΩ at "L" position

SEL654L

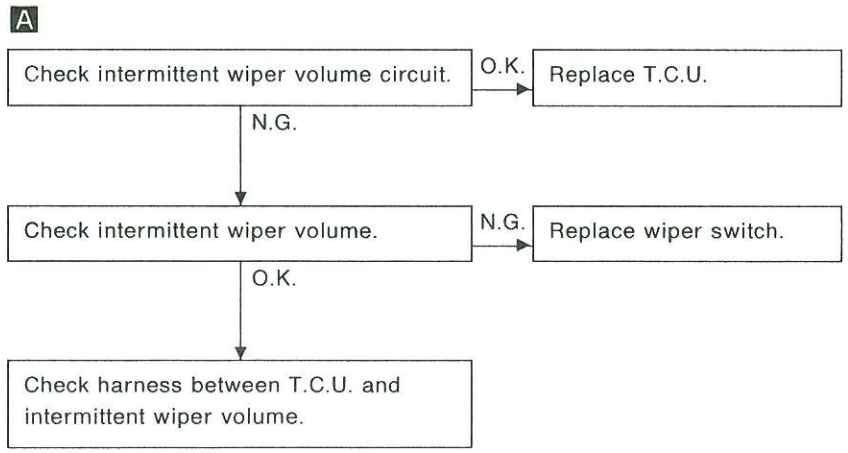

## Trouble-shooting (Cont'd)

### DIAGNOSTIC PROCEDURE-3

**Wiper and washer activate individually but not in combination.**

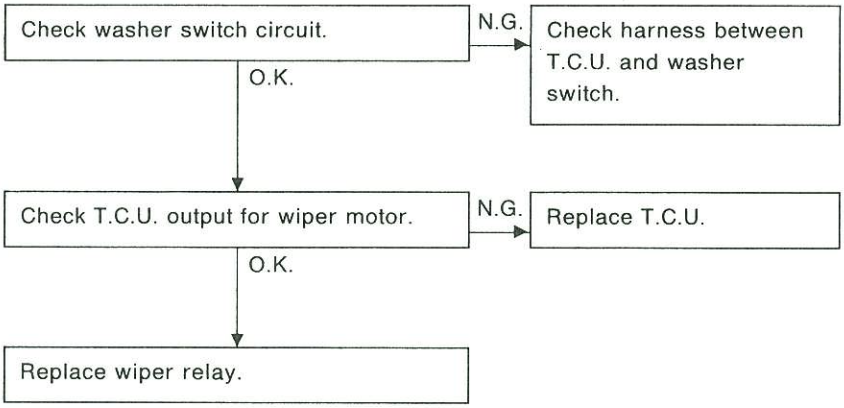




**A** T.C.U. OUTPUT FOR LIGHT SWITCH CIRCUIT CHECK

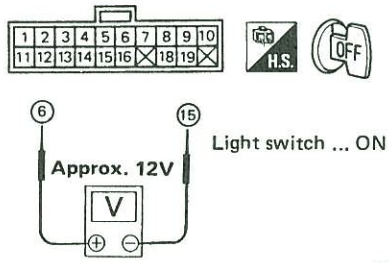


**B** ILLUMINATION CIRCUIT CHECK

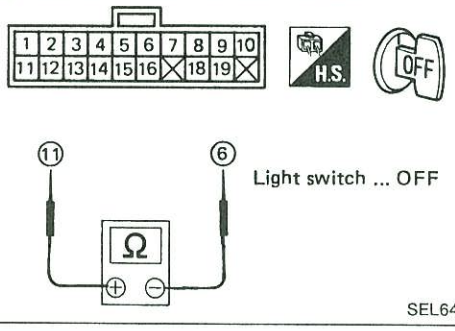


**C** ILLUMINATION CONTROL CIRCUIT CHECK

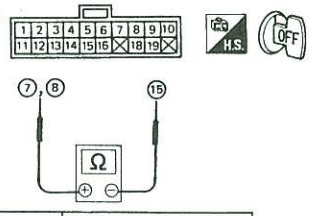


| Ohmmeter (+) | Ohmmeter (−) | Illumination control switch: DARK | Illumination control switch: BRIGHT |
|---|---|---|---|
| ⑧ | ⑮ | 0Ω | Except 0Ω |
| ⑦ | ⑮ | Except 0Ω | 0Ω |

SEL650L

### DIAGNOSTIC PROCEDURE-4

**Illumination control system does not actuate.**

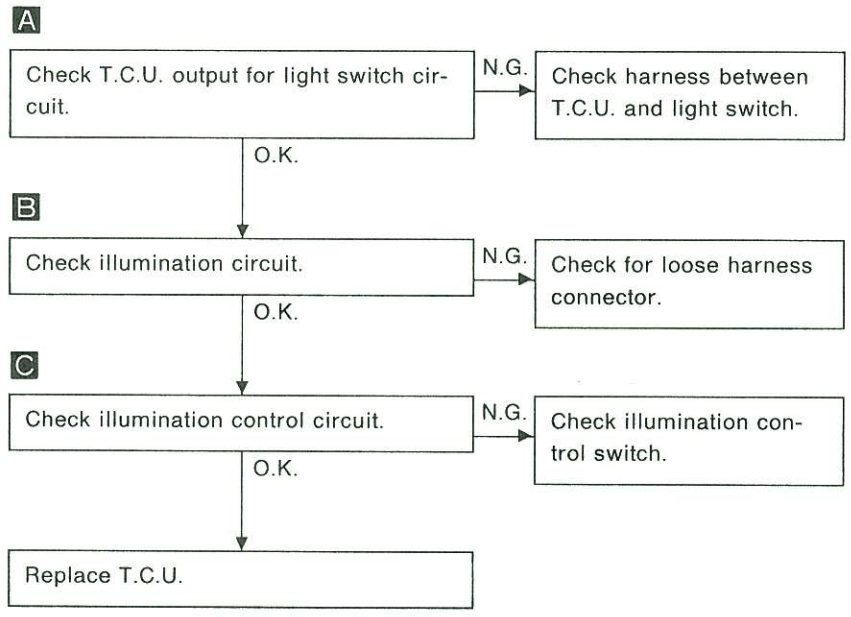

## Trouble-shooting (Cont'd)

### DIAGNOSTIC PROCEDURE-5

**Light warning chime does not activate.**

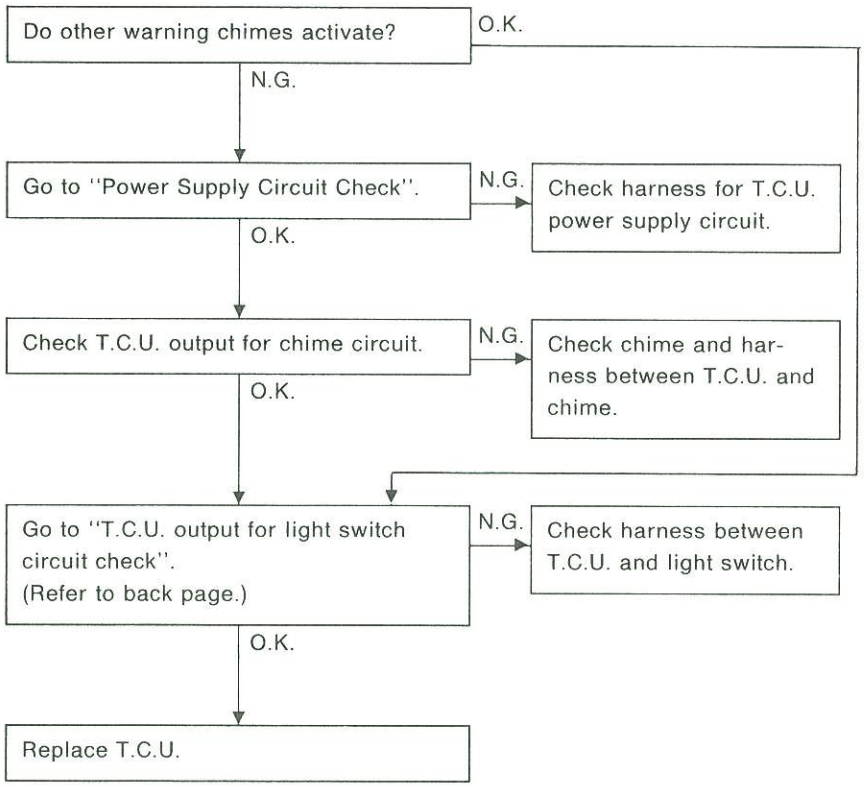


**A** **T.C.U. OUTPUT FOR CHIME CIRCUIT CHECK**

Measure voltage across ⑲ and ⑮ when driver's door is opened and closed.

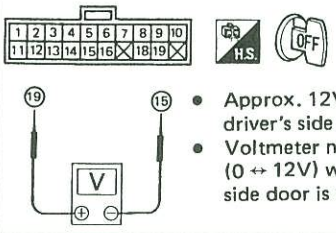


- Approx. 12V when driver's side door is closed.
- Voltmeter needle swings (0 ↔ 12V) when driver's side door is opened.

SEL642L

**B** **SEAT BELT SWITCH CIRCUIT CHECK**

1. Unfasten driver's seat belt.
2. Check continuity between ⑲ and ⑯.
3. Fasten driver's seat belt.
4. Check to determine if continuity does not exist between ⑲ and ⑯.

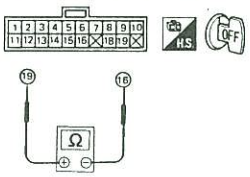


SEL643L

### DIAGNOSTIC PROCEDURE-6

**Seat belt warning chime does not activate.**

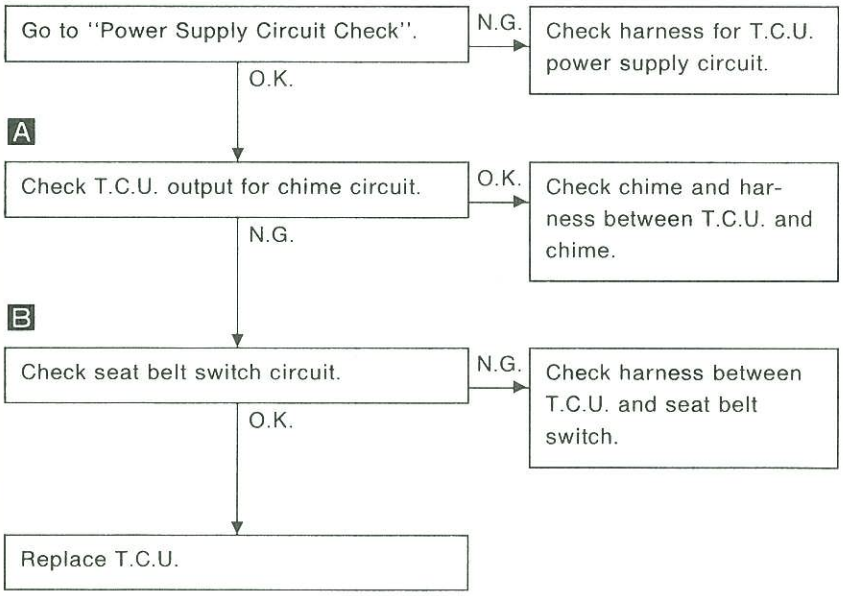

## Trouble-shooting (Cont'd)

**T.C.U. OUTPUT FOR BELT WARNING LAMP CIRCUIT CHECK**

Measure voltage across ⑯ and ⑮ when ignition switch is "ON".

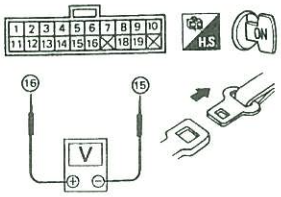


SEL651L

### DIAGNOSTIC PROCEDURE-7

**Seat belt warning lamp does not go off nor comes on.**

Go to "Power Supply Circuit Check". — N.G. → Check harness for T.C.U. power supply circuit.

O.K. ↓

Check T.C.U. output for belt warning lamp circuit. — N.G. → Replace T.C.U.

Voltmeter needle keeps swinging (approx. 0 ↔ 12V) for about 7 seconds after ignition switch is turned ON.

O.K. ↓

Check warning lamp, and harness between T.C.U. and warning lamp.

**A T.C.U. OUTPUT FOR REAR DEFOGGER CIRCUIT CHECK**

Measure voltage across ④ and ⑮ while operating rear defogger switch.

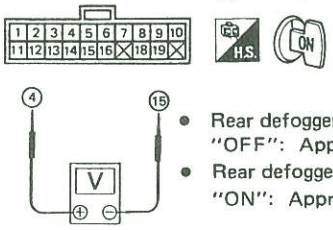


- Rear defogger switch "OFF": Approx. 12V
- Rear defogger switch "ON": Approx. 0V

SEL644L

**B DEFOGGER SWITCH CIRCUIT CHECK**

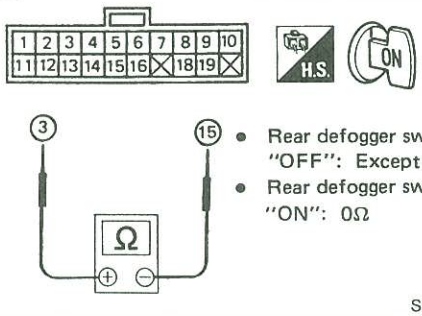


- Rear defogger switch "OFF": Except 0Ω
- Rear defogger switch "ON": 0Ω

SEL645L

### DIAGNOSTIC PROCEDURE-8

**Rear defogger does not activate, or does not go off.**

Go to "Power Supply Circuit Check". — N.G. → Check harness for T.C.U. power supply circuit.

O.K. ↓

A

Check T.C.U. output for rear defogger circuit. — O.K. → Check rear defogger relay, and harness between T.C.U. and rear defogger relay.

N.G. ↓

B

Check defogger switch circuit. — N.G. → Check defogger switch, and harness between T.C.U. and defogger switch.

O.K. ↓

Replace T.C.U.

GI MA EM LC EF & EC FE CL MT AT PD FA RA BR ST BF HA EL

## Trouble-shooting (Cont'd)

### DIAGNOSTIC PROCEDURE-9

**Ignition key warning chime does not activate.**

Go to "Power Supply Circuit Check". — N.G. → Check harness for T.C.U. power supply circuit.

O.K.

A

Check key switch circuit. — N.G. → Check key switch or harness.

O.K.

B

Check T.C.U. output for chime circuit. — O.K. → Check chime and harness between T.C.U. and chime.

N.G.

C

Check driver's door switch circuit. — N.G. → Check harness between T.C.U. and driver's door switch.

O.K.

Replace T.C.U.

**A** **KEY SWITCH CIRCUIT CHECK**

Measure voltage across ⑩ and ⑮.

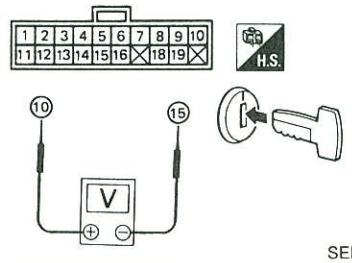


SEL773R

**B** **T.C.U. OUTPUT FOR CHIME CIRCUIT CHECK**

Measure voltage across ⑲ and ⑮ when driver's door is opened and closed.

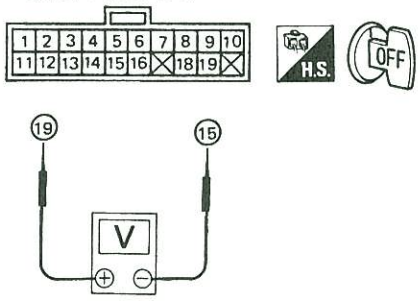


- Approx. 12V when driver's side door is opened.

SEL639L

**C** **DRIVER'S DOOR SWITCH CIRCUIT CHECK**

Check continuity between ⑱ and ⑮.

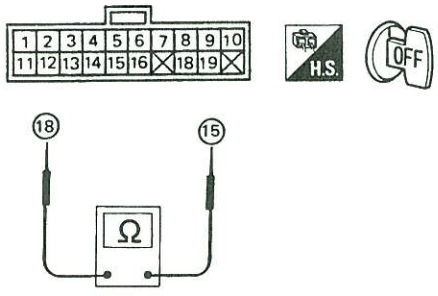


Driver's side door ... Open

SEL640L

## Front Wiper and Washer/Wiring Diagram

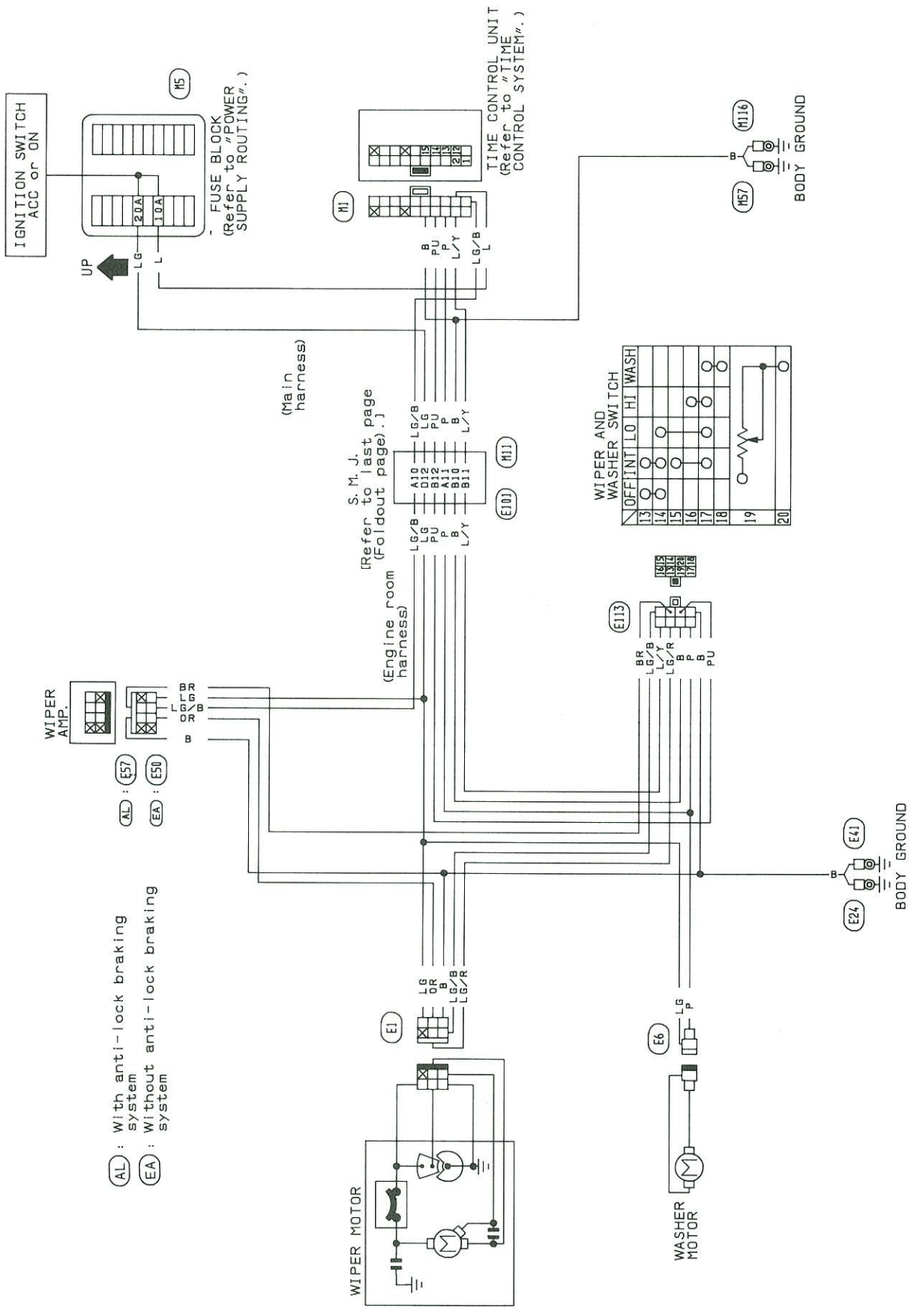


SEL588M

## Rear Wiper and Washer/Wiring Diagram

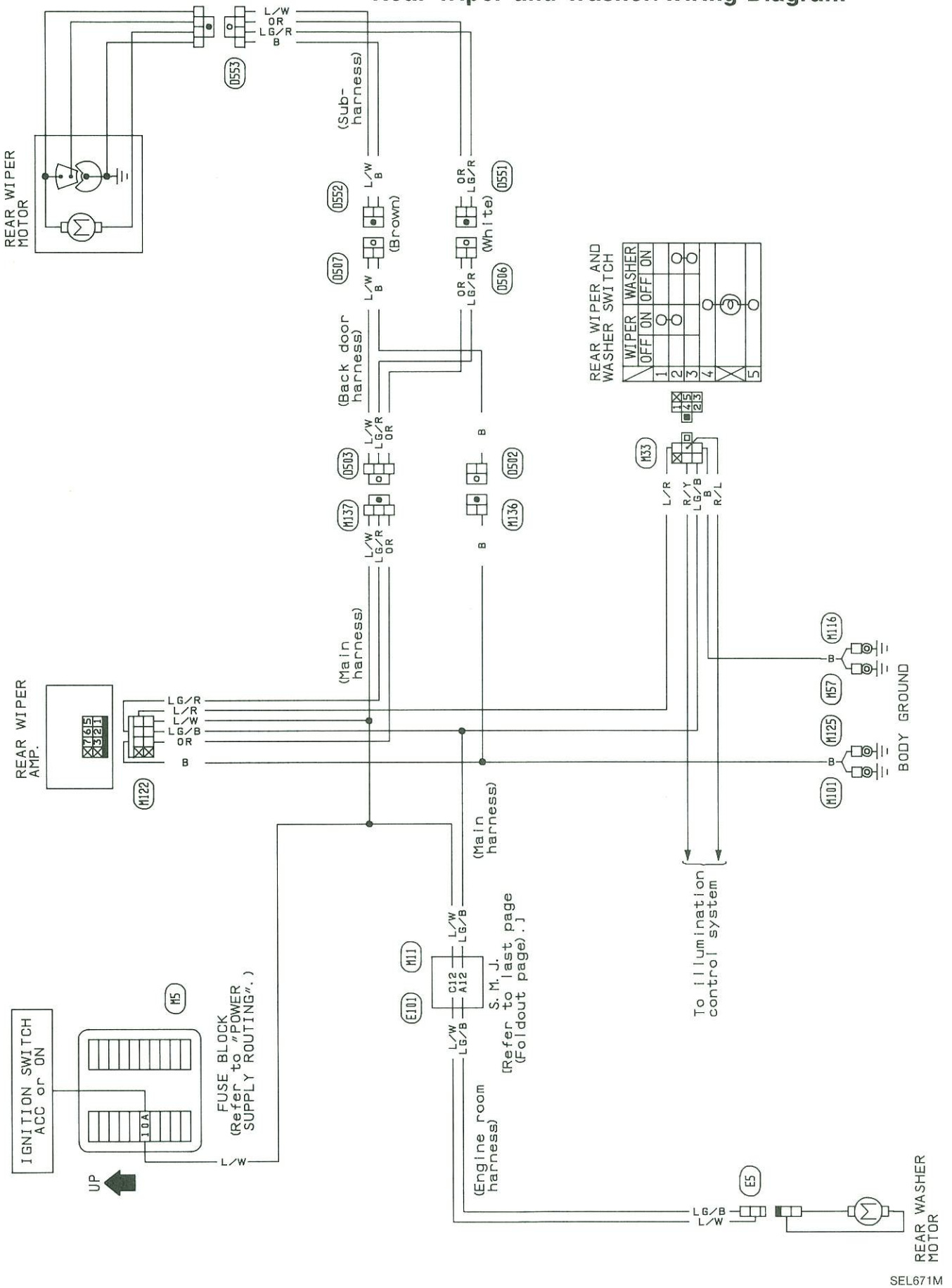


SEL671M

## Wiper and Washer Adjustment

### INSTALLATION

1. Prior to wiper arm installation, turn on wiper switch to operate wiper motor and then turn it "OFF" (Auto Stop).
2. Lift the blade up and then set it down onto glass surface to set the blade center to clearance "$L_1$" & "$L_2$" immediately before tightening nut.
3. Eject washer fluid. Turn on wiper switch to operate wiper motor and then turn it "OFF".
4. Ensure that wiper blades stop within clearance "$L_1$" & "$L_2$".

   **Clearance "$L_1$": 17.5 - 32.5 mm (0.689 - 1.280 in)**
   **Clearance "$L_2$": 25 - 35 mm (0.98 - 1.38 in)**

- Tighten wiper arm nuts to specified torque.

  **Front wiper: 17 - 23 N·m (1.7 - 2.3 kg-m, 12 - 17 ft-lb)**
  **Rear wiper: 13 - 18 N·m (1.3 - 1.8 kg-m, 9 - 13 ft-lb)**

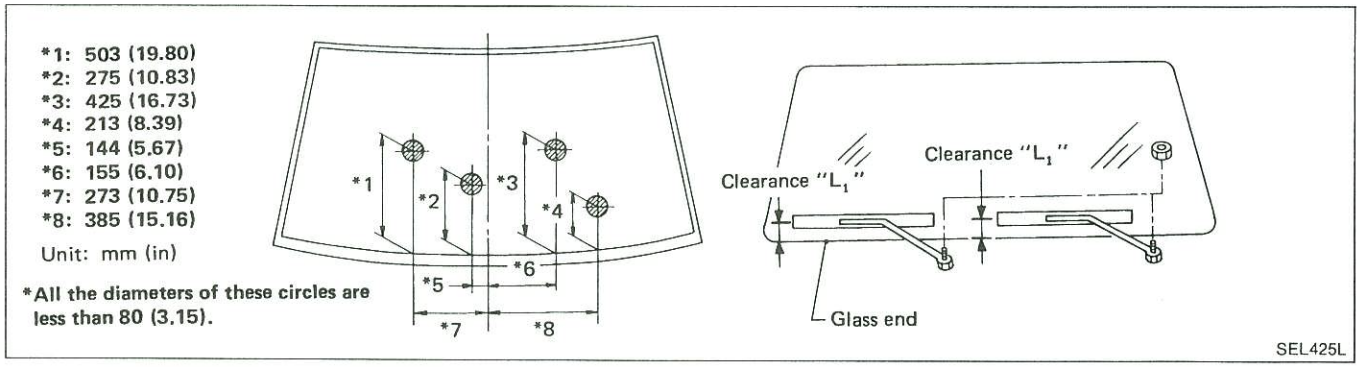


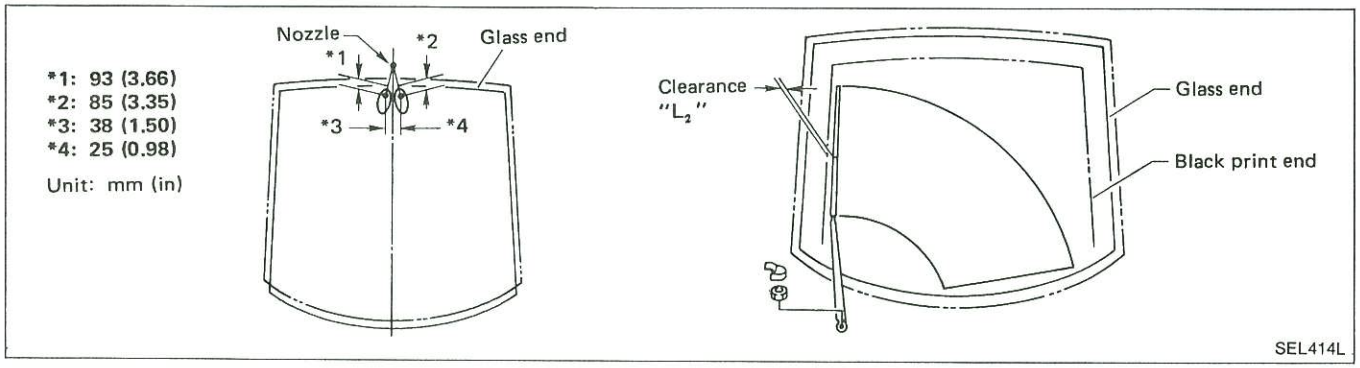

## Wiper and Washer Adjustment (Cont'd)

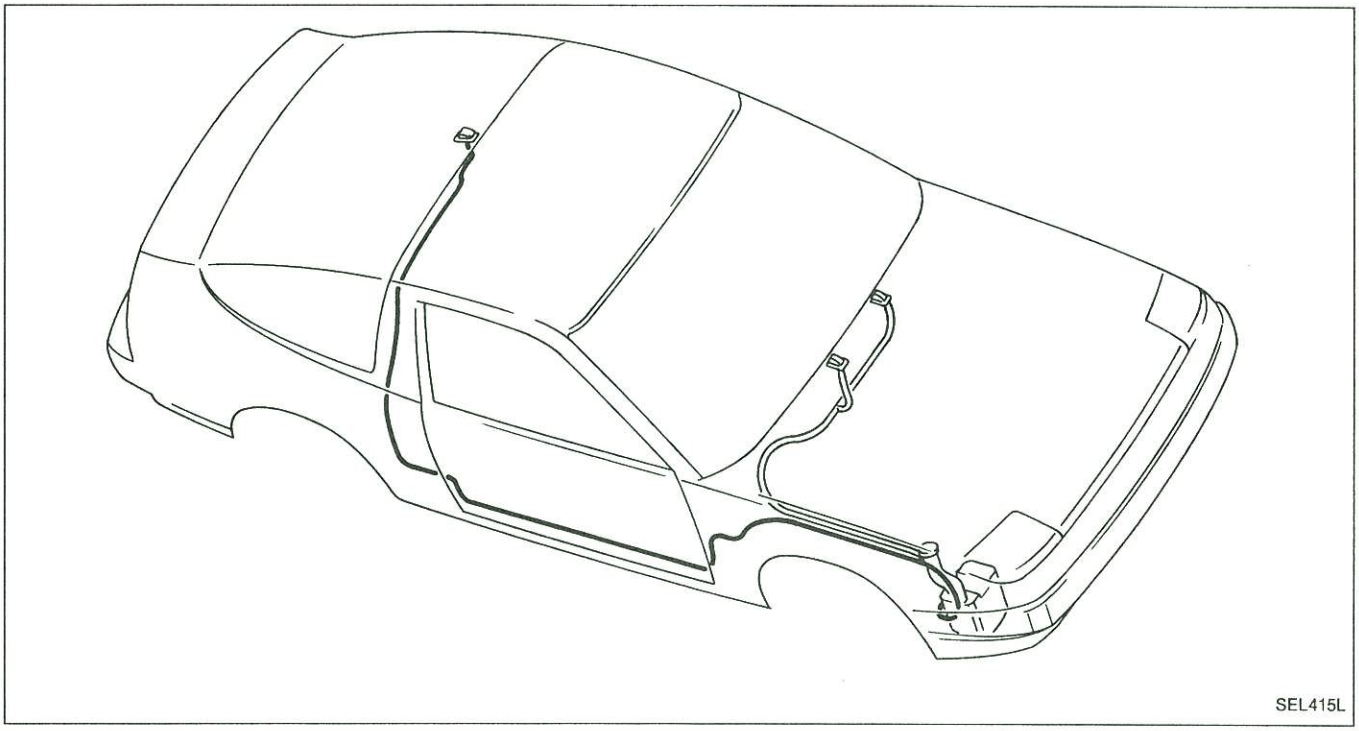
SEL415L

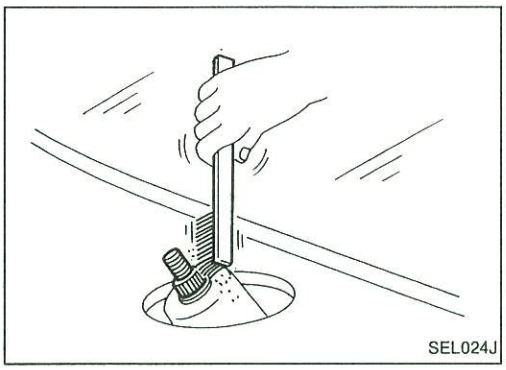
SEL024J

- **Before reinstalling wiper arm, clean up the pivot area as illustrated. This will reduce possibility of wiper arm looseness.**

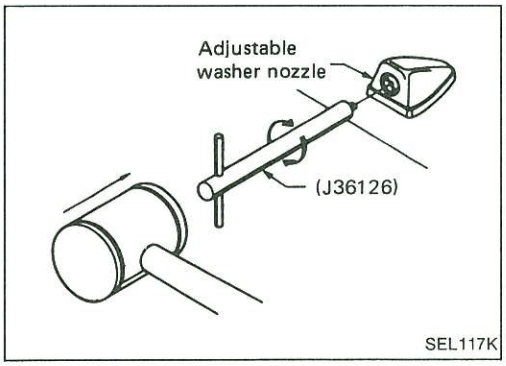

SEL117K

### Washer Nozzle Adjustment

- Using Tool (J36126), adjust windshield washer nozzle to correct its spray pattern.

**Special Service Tool:**
**Tool number: J36126**
**Tool name: Washer nozzle adjusting tool**

**Before attempting to turn the nozzle, gently tap the end of the tool to free the nozzle.**
**This will prevent "rounding out" the small female square in the center of the nozzle.**

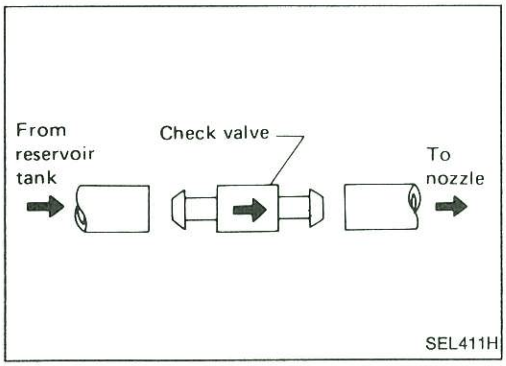

SEL411H

### Check Valve

- A check valve is provided in the washer fluid line. Be careful not to connect check valve to washer tube in the wrong direction.

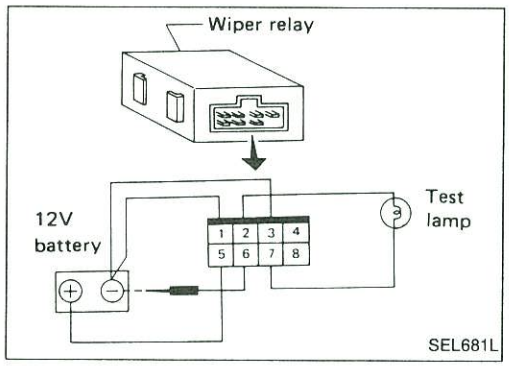


## Wiper Amplifier Check

1. Connect as shown in the figure at left.
2. If test lamp comes on when connected to terminal ⑥ and battery ground, wiper relay is normal.

## Wiring Diagram

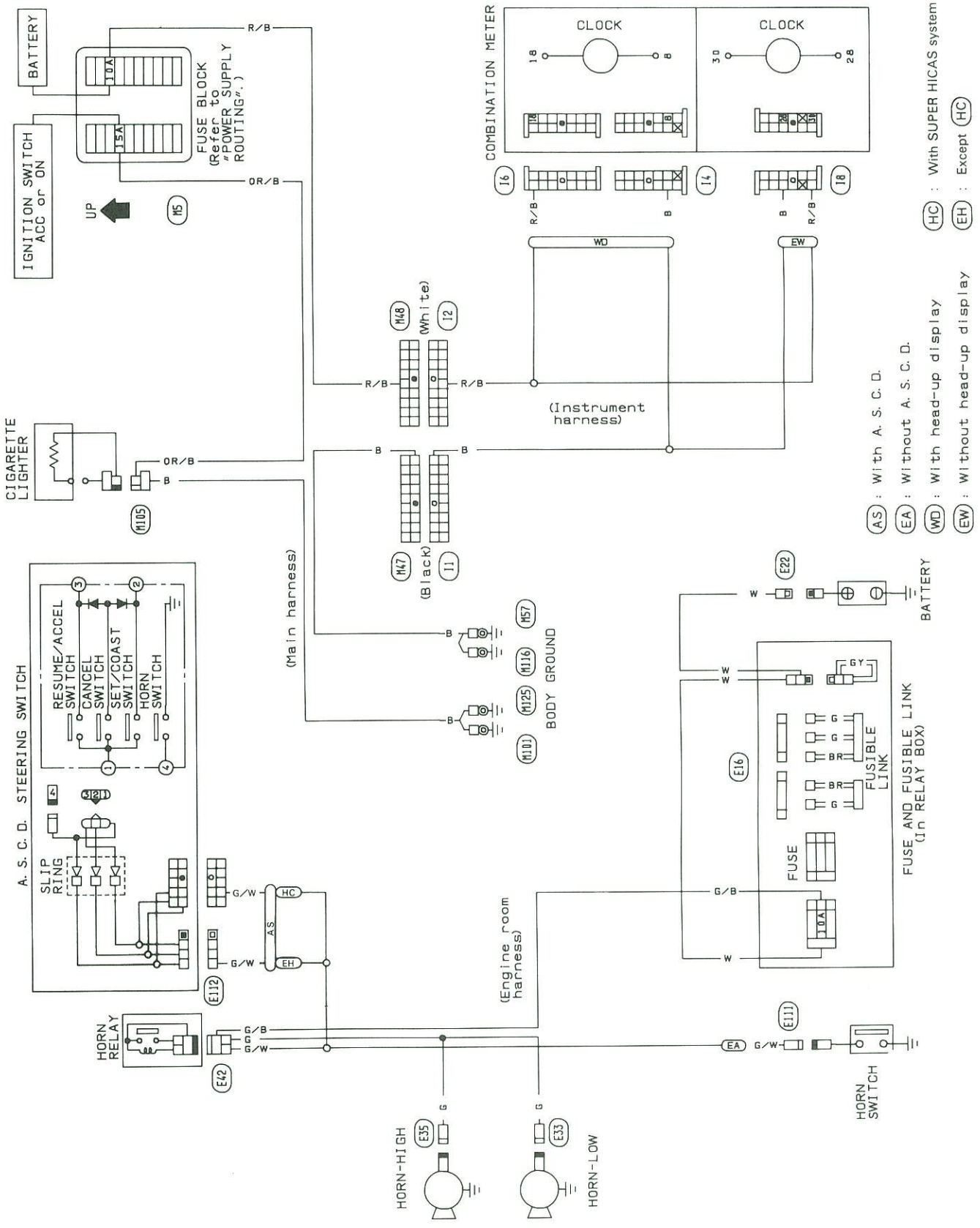


SEL817P

## Wiring Diagram

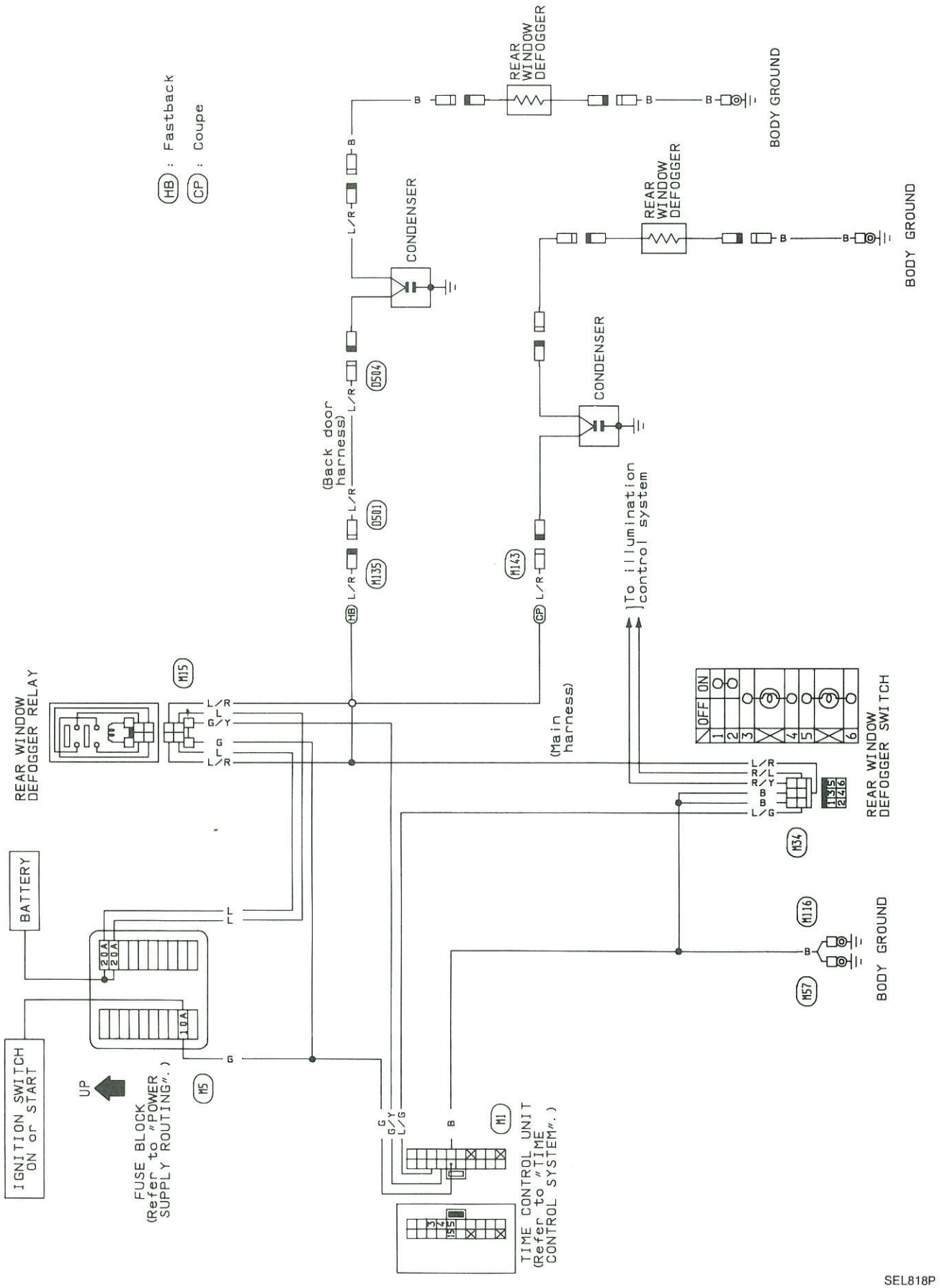


SEL818P

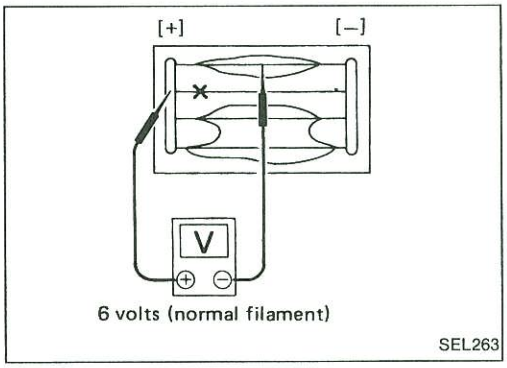


## Filament Check

1. Attach probe circuit tester (in volt range) to middle portion of each filament.

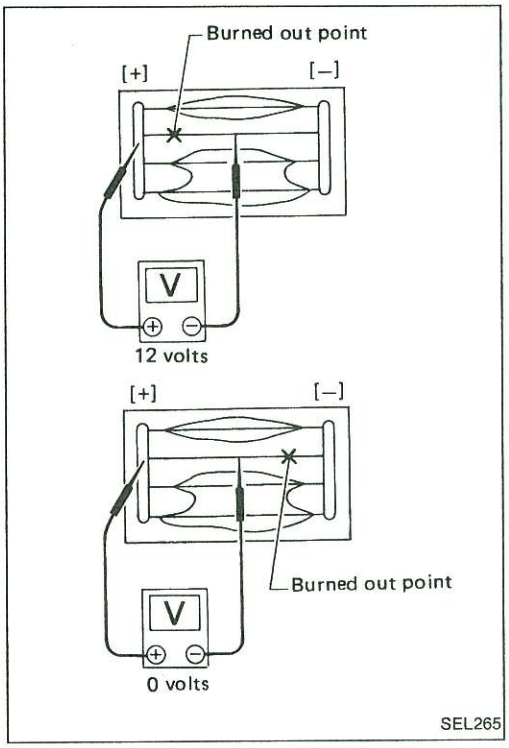


2. If a filament is burned out, circuit tester registers 0 or 12 volts.

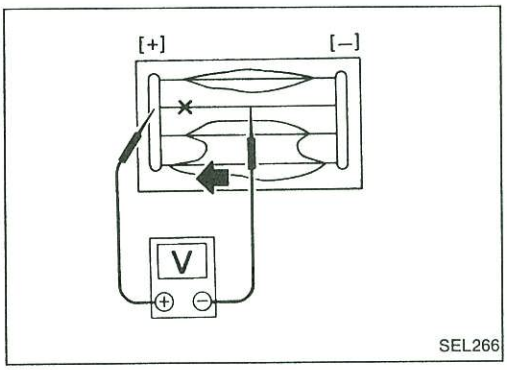


3. To locate burned out point, move probe to left and right along filament to determine point where tester needle swings abruptly.

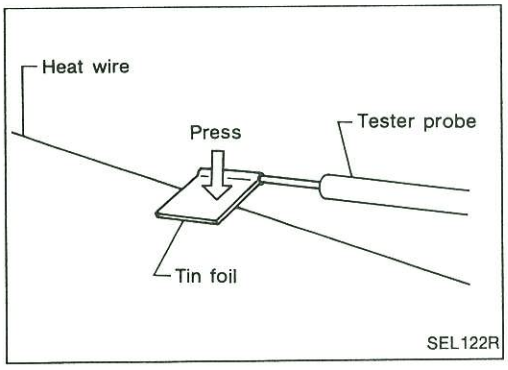


- **When measuring voltage, wind a piece of tin foil around the top of the negative probe and press the foil against the wire with your finger as shown.**

## Filament Repair

### REPAIR EQUIPMENT

1. Conductive silver composition (Dupont No. 4817 or equivalent)
2. Ruler 30 cm (11.8 in) long
3. Drawing pen
4. Heat gun
5. Alcohol
6. Cloth

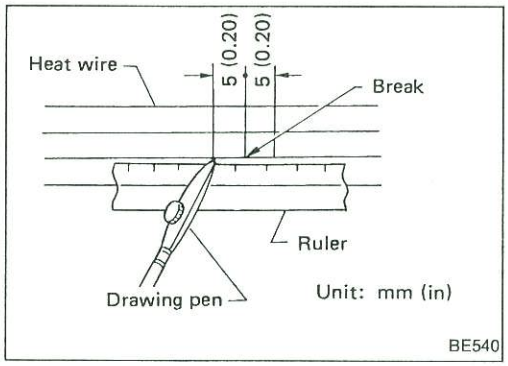


### REPAIRING PROCEDURE

1. Wipe broken heat wire and its surrounding area clean with a cloth dampened in alcohol.
2. Apply a small amount of conductive silver composition to tip of drawing pen.

**Shake silver composition container before use.**

3. Place ruler on glass along broken line. Deposit conductive silver composition on break with drawing pen. Slightly overlap existing heat wire on both sides [preferably 5 mm (0.20 in)] of the break.

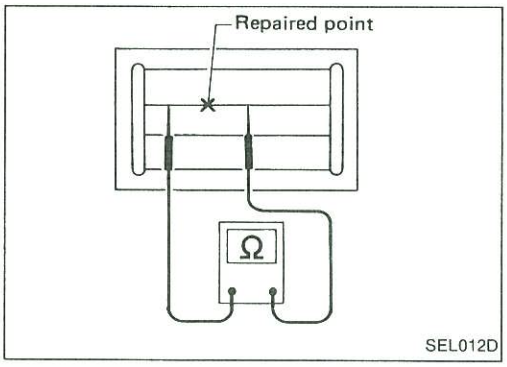


4. After repair has been completed, check repaired wire for continuity. This check should be conducted 10 minutes after silver composition is deposited.

**Do not touch repaired area while test is being conducted.**

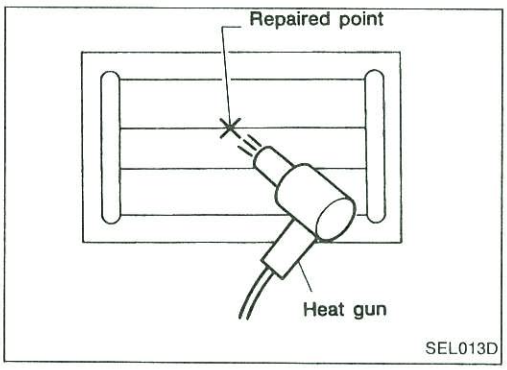


5. Apply a constant stream of hot air directly to the repaired area for approximately 20 minutes with a heat gun. A minimum distance of 3 cm (1.2 in) should be kept between repaired area and hot air outlet. If a heat gun is not available, let the repaired area dry for 24 hours.

## Audio/Wiring Diagram

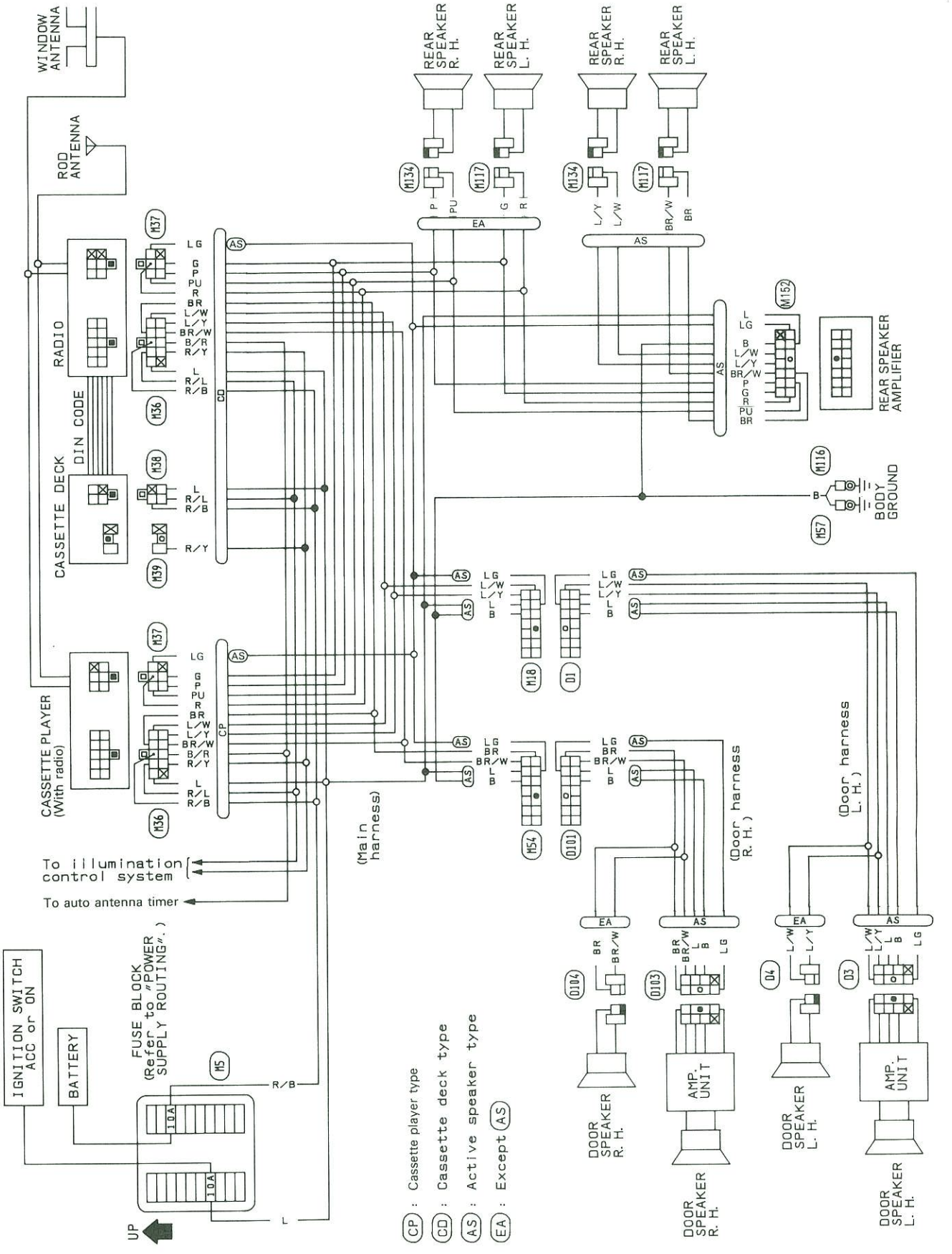


SEL819P

## Power Antenna/Wiring Diagram

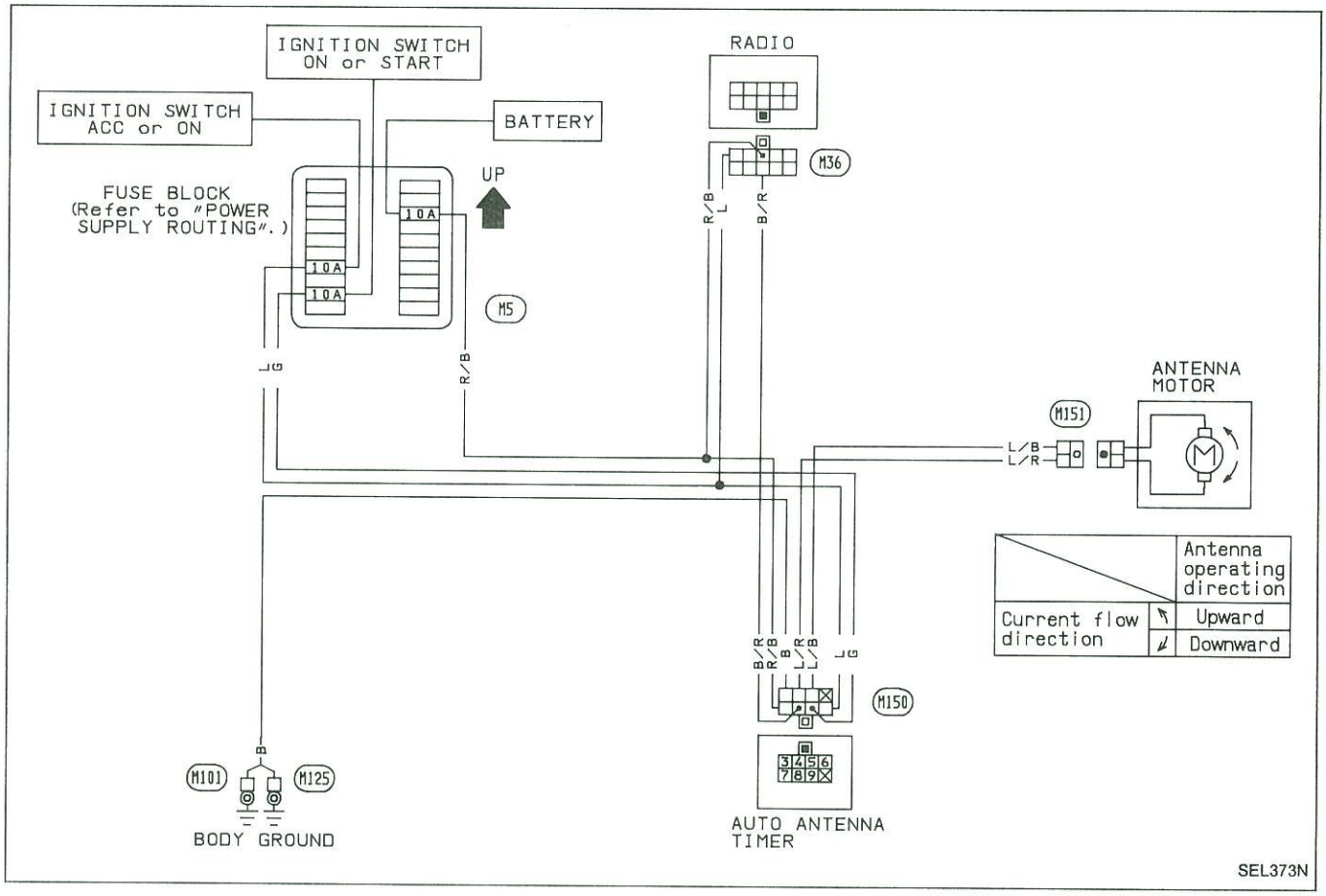


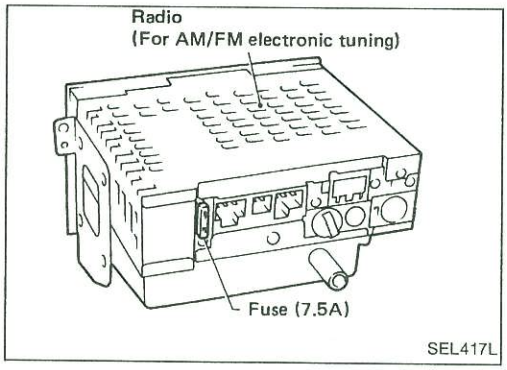


## Radio Fuse Check

## Location of Antenna

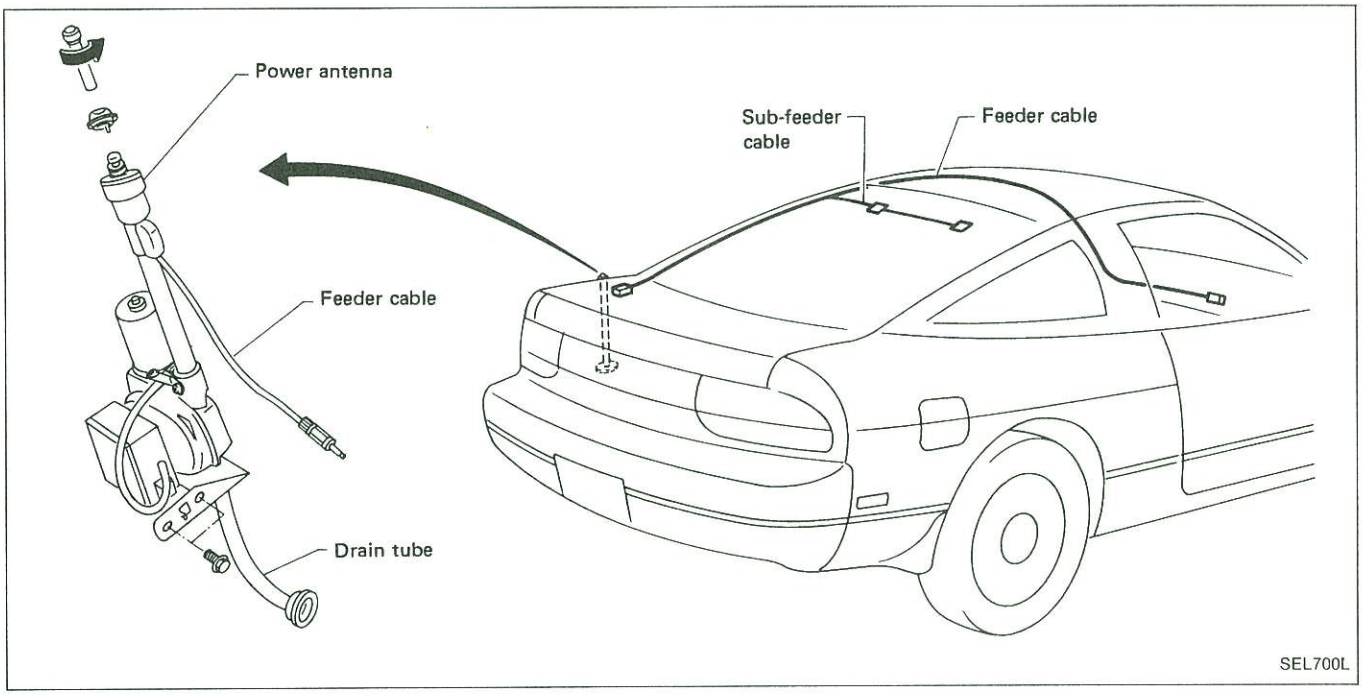


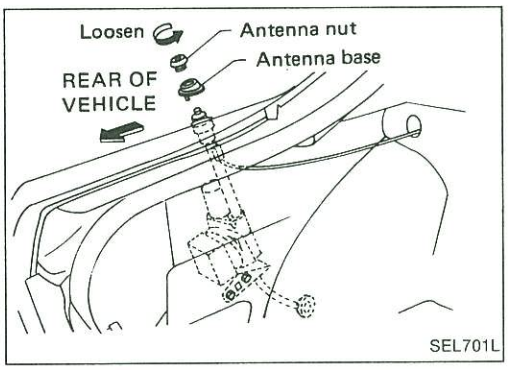


## Antenna Rod Replacement

### REMOVAL

1. Remove antenna nut and antenna base.

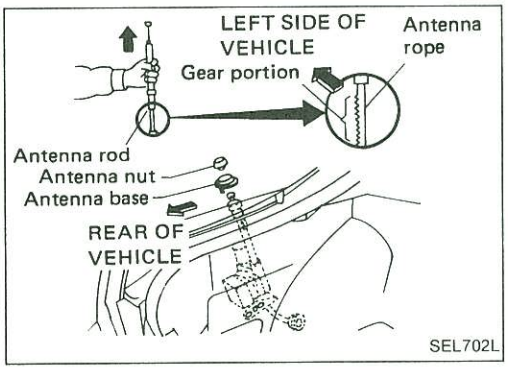


2. Withdraw antenna rod while raising it by operating antenna motor.
   (Turn radio switch from "OFF" to "ON" to operate antenna motor.)

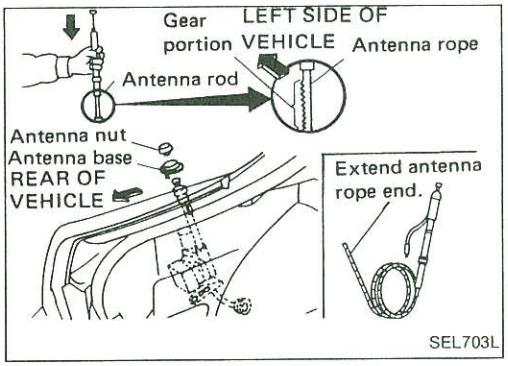


### INSTALLATION

1. Lower antenna rod by operating antenna motor.
   (Turn radio switch from "ON" to "OFF".)
2. Insert gear section of antenna rope into place with it facing toward antenna motor.
3. As soon as antenna rope is wound on antenna motor, stop antenna motor. Insert antenna rod lower end into antenna motor pipe.

## Antenna Rod Replacement (Cont'd)

4. Retract antenna rod completely by operating antenna motor.
   (If the antenna motor stops before antenna has fully retracted, turn radio switch to "ON" and immediately turn to "OFF" again.)
5. Install antenna nut and base.

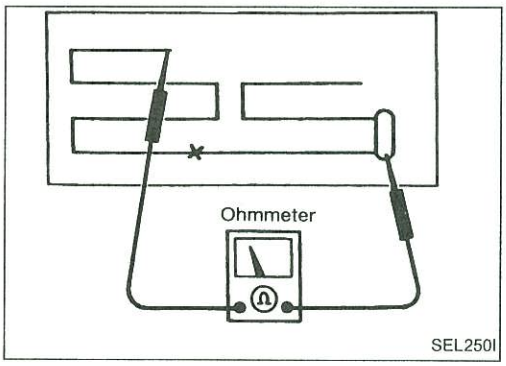


## Window Antenna Repair

### ELEMENT CHECK

1. Attach probe circuit tester (in ohm range) to antenna terminal on each side.

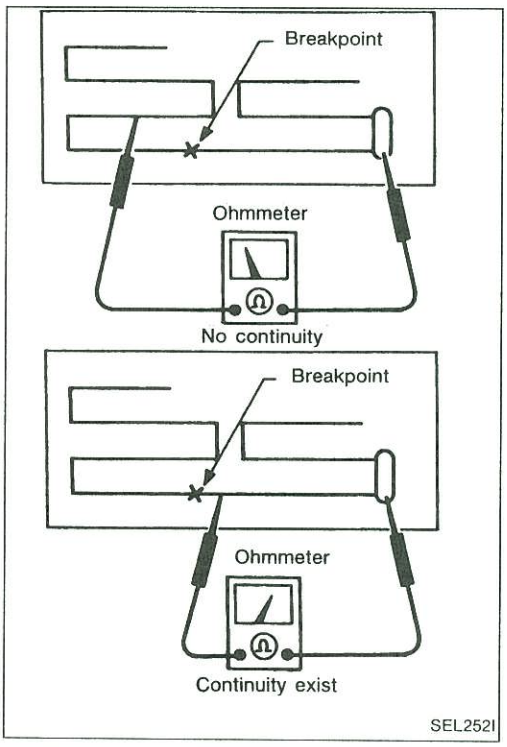


2. If an element is broken, no continuity will exist.

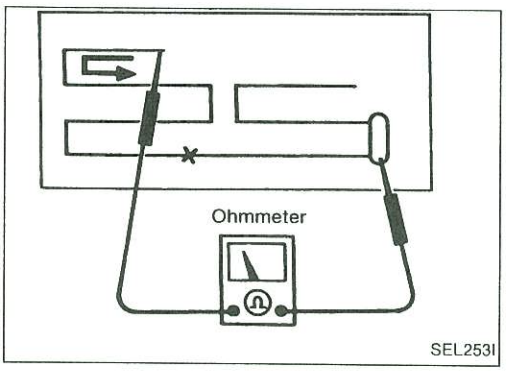


3. To locate broken point, move probe to left and right along element to determine point where tester needle swings abruptly.

- **Refer to REAR WINDOW DEFOGGER "Filament Repair" for Element Repair.**

## Wiring Diagram

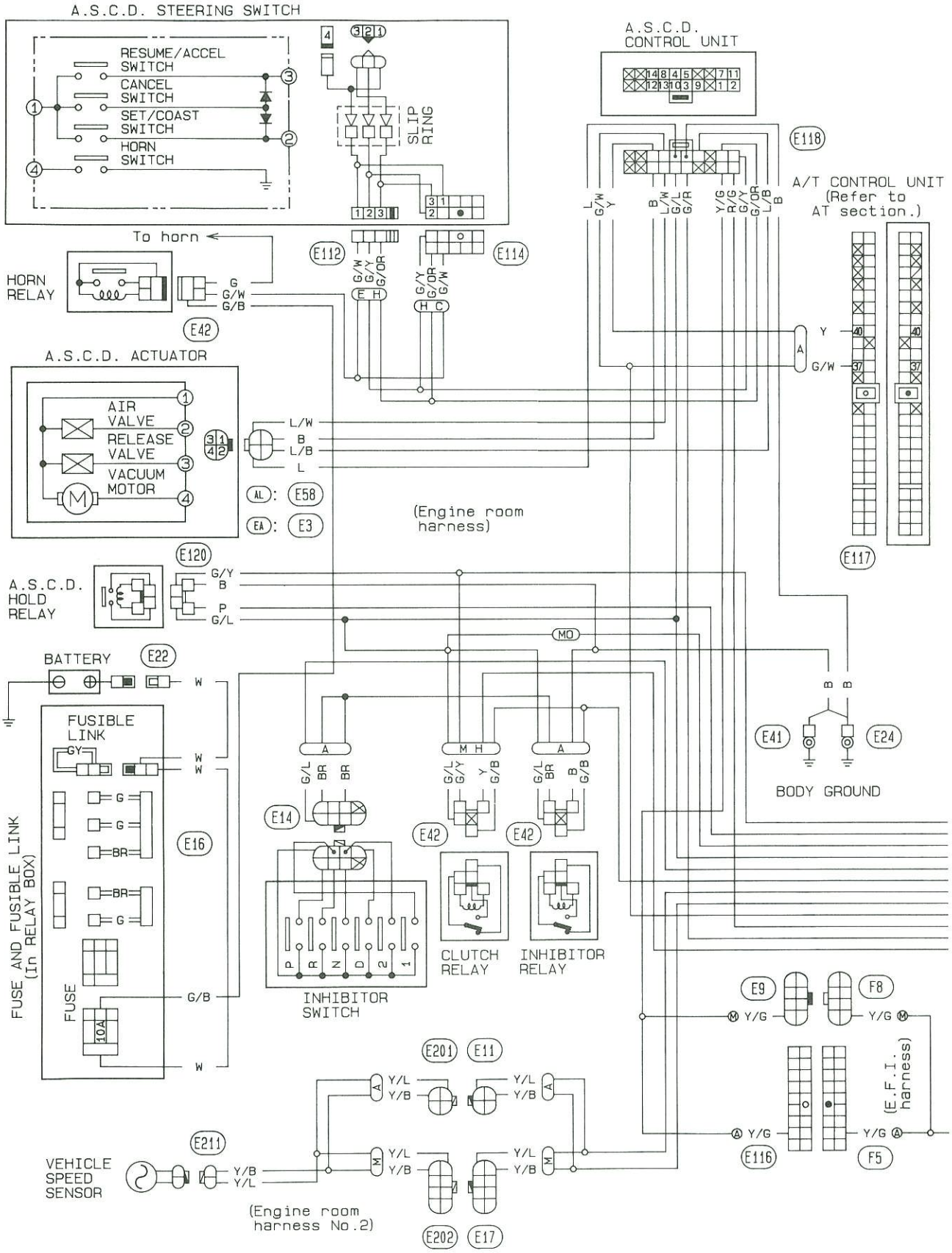

## Wiring Diagram (Cont'd)

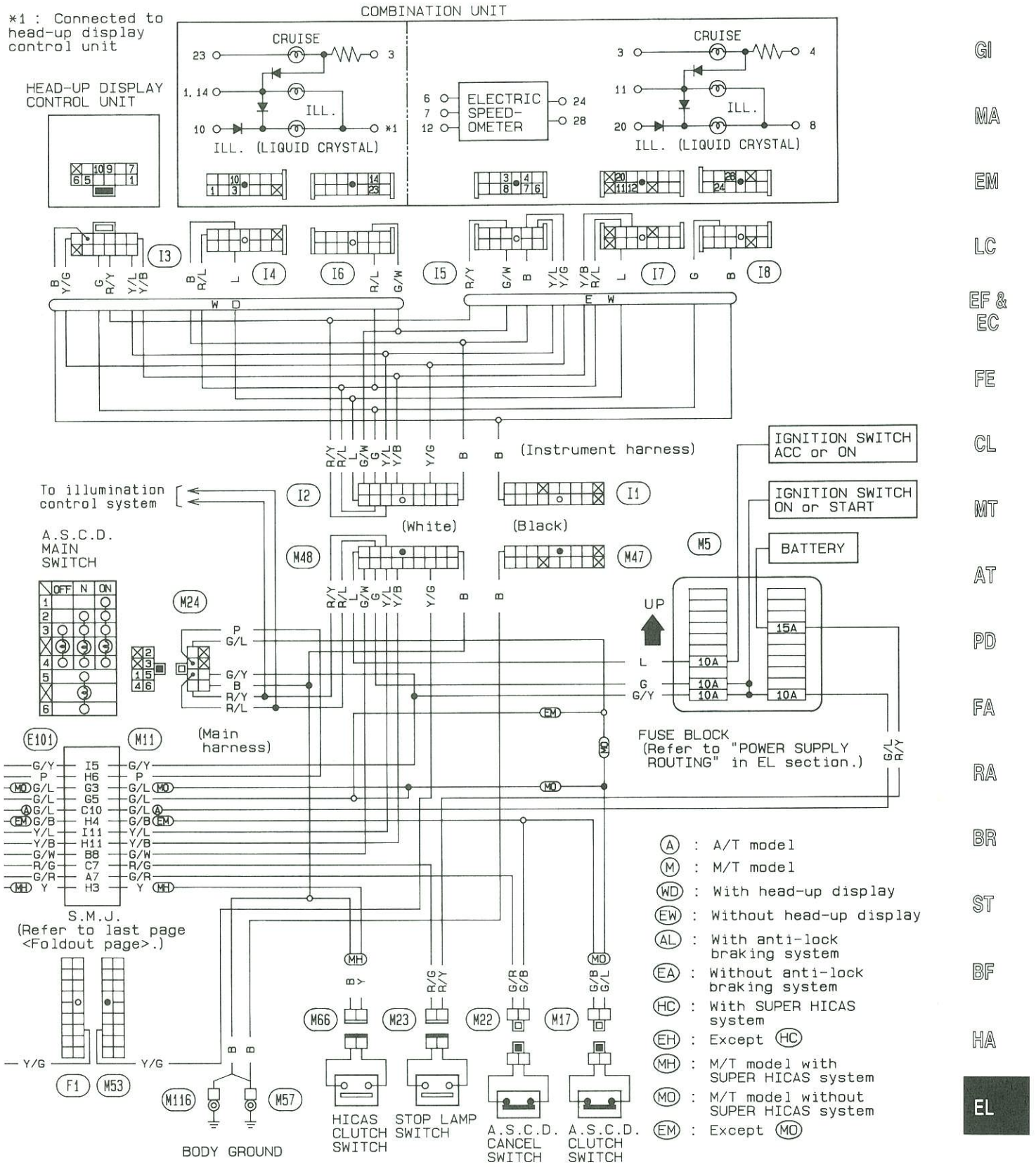


MEL053B

## Schematic

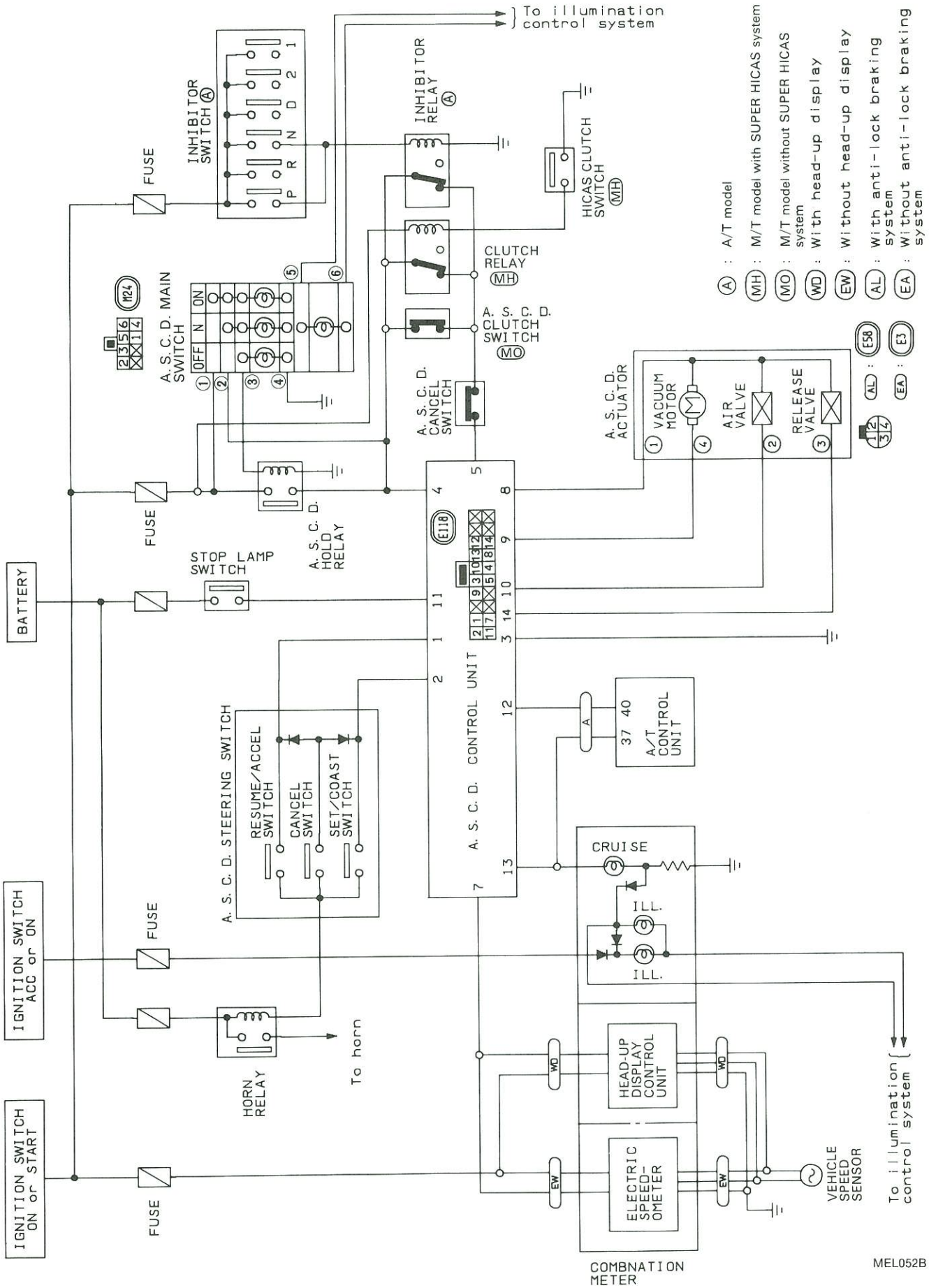
To illumination control system
INHIBITOR SWITCH (A)
P R N D 2 1
INHIBITOR RELAY (A)
HICAS CLUTCH SWITCH (MH)
FUSE
CLUTCH RELAY (MH)
A. S. C. D. CLUTCH SWITCH (MO)
A. S. C. D. MAIN SWITCH
OFF N ON
A. S. C. D. CANCEL SWITCH
A. S. C. D. ACTUATOR
VACUUM MOTOR
AIR VALVE
RELEASE VALVE
A. S. C. D. HOLD RELAY
STOP LAMP SWITCH
BATTERY
A. S. C. D. CONTROL UNIT
A. S. C. D. STEERING SWITCH
RESUME/ACCEL SWITCH
CANCEL SWITCH
SET/COAST SWITCH
A/T CONTROL UNIT
CRUISE
IGNITION SWITCH ACC or ON
IGNITION SWITCH ON or START
HORN RELAY
To horn
HEAD-UP DISPLAY CONTROL UNIT
ELECTRIC SPEEDOMETER
VEHICLE SPEED SENSOR
To illumination control system
COMBNATION METER
Ⓐ : A/T model
(MH) : M/T model with SUPER HICAS system
(MO) : M/T model without SUPER HICAS system
(WD) : With head-up display
(EW) : Without head-up display
(AL) : With anti-lock braking system
(EA) : Without anti-lock braking system
MEL052B

## Trouble Diagnoses

### SYMPTOM CHART

| PROCEDURE | Diagnostic Procedure | | | | | | | | Electrical Components Inspection | | | | | | | |
|---|---|---|---|---|---|---|---|---|---|---|---|---|---|---|---|---|
| REFERENCE PAGE | EL-76 | EL-78 | EL-78 | EL-78 | EL-79 | EL-80 | EL-81 | EL-82 | EL-83 | EL-84 | EL-85 | EL-85 | EL-85 | EL-85 | EL-86 | EL-86 |
| SYMPTOM | Diagnostic Procedure 1 | Diagnostic Procedure 2 | Diagnostic Procedure 3 | Diagnostic Procedure 4 | Diagnostic Procedure 5 | Diagnostic Procedure 6 | Diagnostic Procedure 7 | Diagnostic Procedure 8 | A.S.C.D. wire adjustment | A.S.C.D. actuator/A.S.C.D. pump | A.S.C.D. main switch | A.S.C.D. steering switch | A.S.C.D. cancel switch and stop lamp switch | A.S.C.D. clutch switch (For M/T models) | Inhibitor switch (For A/T models) | Speed sensor |
| A.S.C.D. control unit cannot be set properly. | ○ | | | | | | | | | ○ | ○ | ○ | ○ | ○ | ○ | ○ |
| Engine hunts | | ○ | | | | | | | ○ | ○ | | | | | | |
| Large difference between set speed and actual vehicle speed. | | | ○ | | | | | | ○ | ○ | | | | | | |
| Deceleration is greatest immediately after A.S.C.D. has been set. | | | | ○ | | | | | ○ | ○ | | | | | | |
| ACCEL switch will not operate. | ○ | | | | ○ | | | | | | | ○ | | | | |
| RESUME switch will not operate. | ○ | | | | | ○ | | | | | | ○ | ○ | ○ | | |
| Set speed cannot be cancelled. | | | | | | | ○ | | ○ | ○ | | | ○ | ○ | | |
| "CRUISE" indicator lamp blinks. | | | | | | | | ○ | | ○ | | ○ | ○ | | | |

## Trouble Diagnoses (Cont'd)

### DIAGNOSTIC PROCEDURE 1

**SYMPTOM: A.S.C.D. control cannot be set.**

A

A.S.C.D. main switch connector (M24)

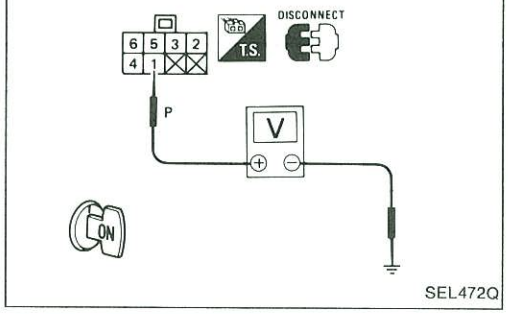


SEL472Q

B

A.S.C.D. control unit connector (E118)

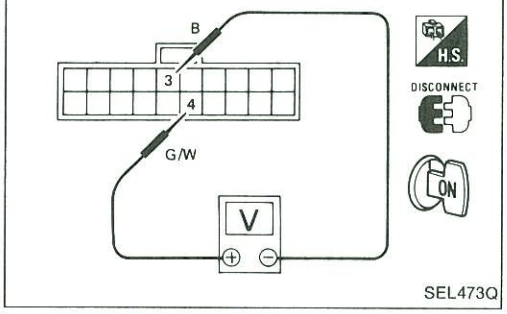


SEL473Q

C

A.S.C.D. control unit connector (E118)

A/T shift lever → Except "N" and "P" (A/T models)

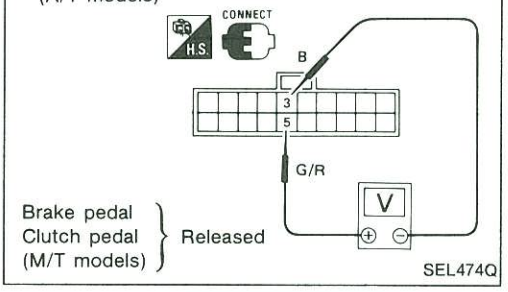


SEL474Q

D

A.S.C.D. control unit connector (E118)

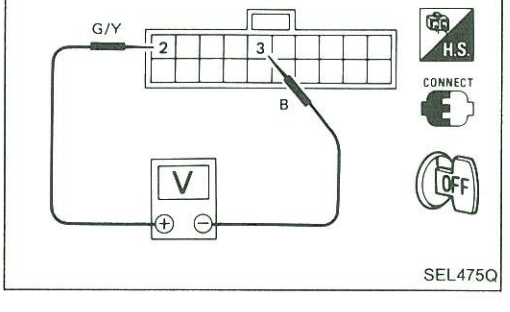


SEL475Q

A

Turn A.S.C.D. main switch "OFF" and "ON" to make sure indicator illuminates.

N.G. → CHECK POWER SUPPLY FOR A.S.C.D. MAIN SWITCH.
1. Disconnect main switch harness connector.
2. Do approx. 12 volts exist between main switch harness terminal ① and body ground?

No → Check fuse and harness.

Yes → CHECK A.S.C.D. MAIN SWITCH.
Refer to "Electrical Components Inspection".
CHECK A.S.C.D. HOLD RELAY.

O.K.

B

CHECK POWER SUPPLY CIRCUIT FOR A.S.C.D. CONTROL UNIT.
1. Turn A.S.C.D. main switch "ON".
2. Check voltage between control unit harness terminals ④ and ③.
**Battery voltage should exist.**

N.G. → Check continuity between control unit harness terminal ④ and A.S.C.D. hold relay.

O.K.

C

CHECK CUT-OFF CIRCUIT FOR A.S.C.D. CONTROL UNIT.
Check voltage between control unit harness terminals ⑤ and ③.
**Battery voltage should exist.**

N.G. → CHECK A.S.C.D. CANCEL SWITCH, A.S.C.D. CLUTCH SWITCH (M/T models) AND INHIBITOR SWITCH (A/T models).
Refer to "Electrical Components Inspection".
CHECK INHIBITOR RELAY (A/T models).

O.K.

D

CHECK SET/COAST SWITCH CIRCUIT FOR A.S.C.D. CONTROL UNIT.
1. Turn and keep on SET/COAST switch of A.S.C.D. combination (steering) switch.
2. Check voltage between control unit harness terminals ② and ③.
**Battery voltage should exist.**

N.G. → Does horn work?

No → Check fuse and horn relay.

Yes → CHECK A.S.C.D. COMBINATION (STEERING) SWITCH.
Refer to "Electrical Components Inspection".

O.K.

Ⓐ
(Next page)

## Trouble Diagnoses (Cont'd)

E

A.S.C.D. control unit connector (E118)

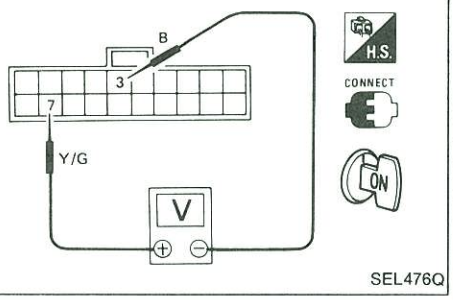


F

A.S.C.D. control unit connector (E118)

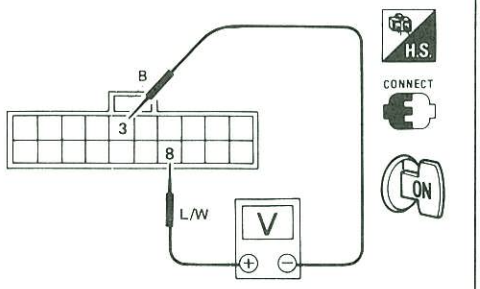


A.S.C.D. control unit connector (E118)

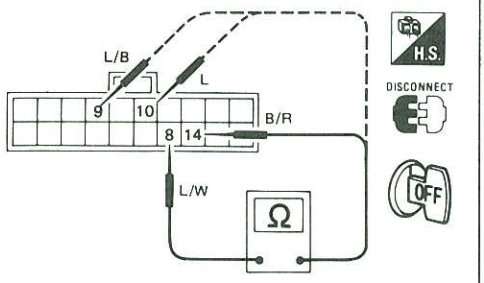


Ⓐ

E

CHECK SPEED SENSOR CIRCUIT.
1. Apply wheel chocks and jack up rear of vehicle.
2. Connect voltmeter between control unit harness terminals ⑦ and ③.
3. Slowly turn rear wheel.
4. Check deflection of voltmeter pointer.

N.G. → CHECK SPEED SENSOR. Refer to "Electrical Components Inspection".

O.K. ↓

CHECK A.S.C.D. ACTUATOR/A.S.C.D. PUMP.
Refer to "Electrical Components Inspection".

N.G. → Replace A.S.C.D. actuator assembly.

O.K. ↓

F

CHECK A.S.C.D. ACTUATOR/A.S.C.D. PUMP CIRCUIT.
1. Check voltage between control unit harness terminals ⑧ and ③.
**Voltage is 0V.**
2. Disconnect A.S.C.D. control unit connector.
3. Measure resistance between control unit harness terminals ⑧ and ⑨, ⑩, ⑭.

N.G. → Repair short or open circuit in A.S.C.D. actuator assembly.

| Terminals | | Resistance [Ω] |
|---|---|---|
| ⑧ | ⑨ | Approx. 8 - 45 |
| | ⑩ | Approx. 65 |
| | ⑭ | Approx. 65 |

O.K. ↓

Replace A.S.C.D. control unit.

## Trouble Diagnoses (Cont'd)

### DIAGNOSTIC PROCEDURE 2

**SYMPTOM: Engine hunts.**

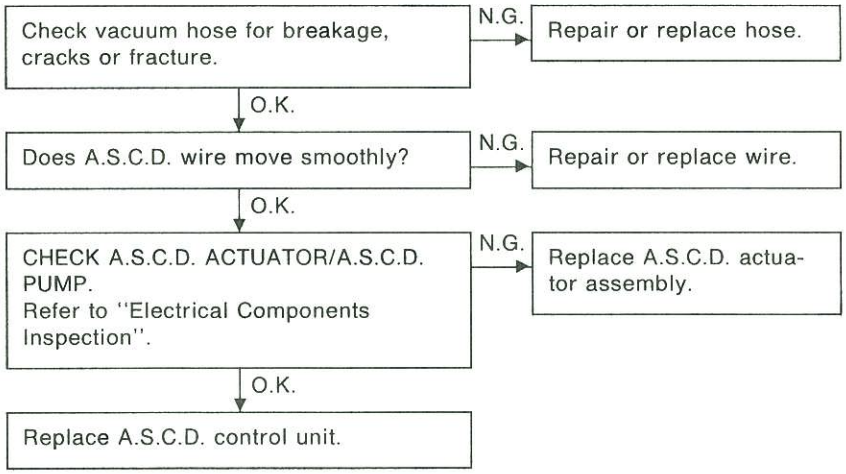


### DIAGNOSTIC PROCEDURE 3

**SYMPTOM: Large difference between set vehicle speed and actual speed.**

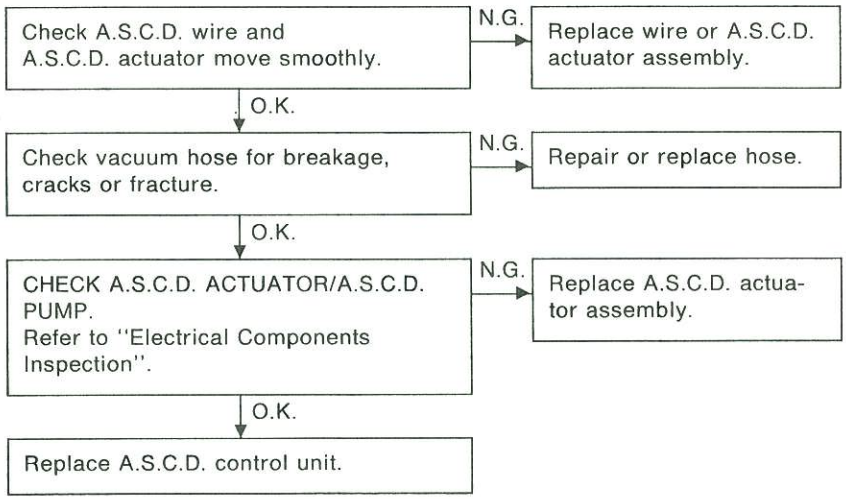


### DIAGNOSTIC PROCEDURE 4

**SYMPTOM: Deceleration is greatest immediately after A.S.C.D. has been set.**

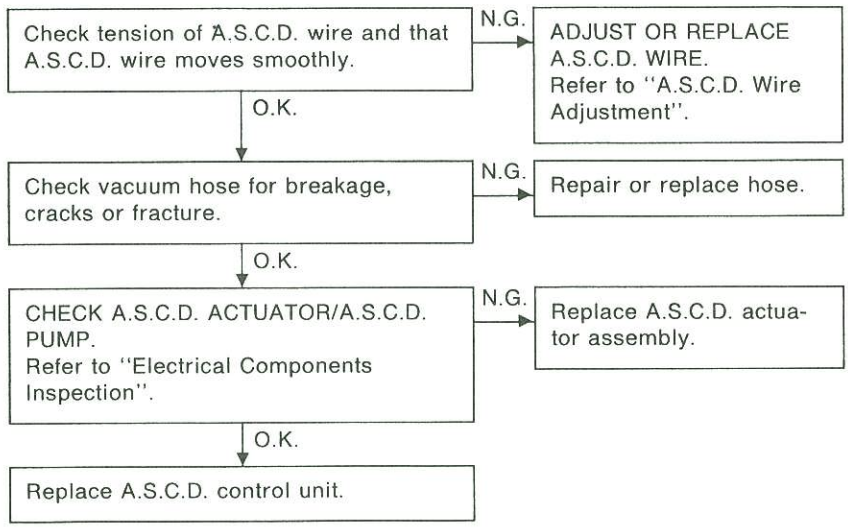

## Trouble Diagnoses (Cont'd)

### DIAGNOSTIC PROCEDURE 5

**SYMPTOM: ACCEL switch will not operate.**

A

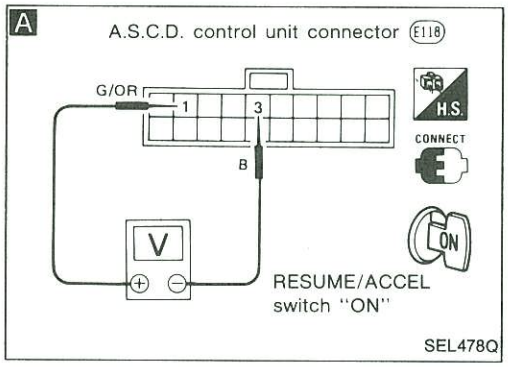


B

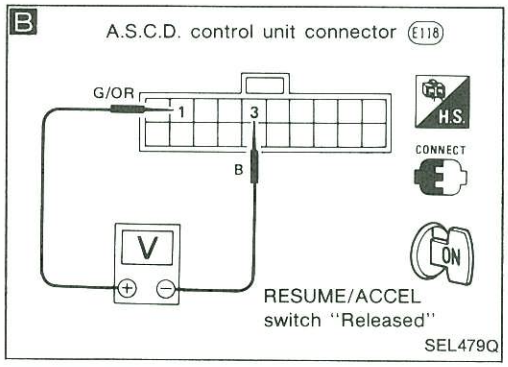


C

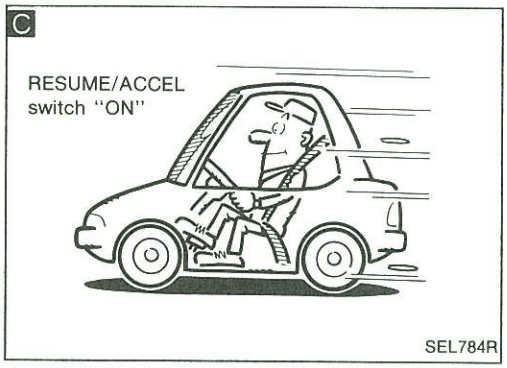


Check constant-speed function for operating using SET/COAST switch.
- N.G. → Go to "DIAGNOSTIC PROCEDURE 1".
- O.K. ↓

A

Check voltage between control unit harness terminals ① and ③ after turning on and holding RESUME/ACCEL switch.
**Battery voltage should exist.**
- N.G. → CHECK A.S.C.D. COMBINATION (STEERING) SWITCH. Refer to "Electrical Components Inspection".
- O.K. ↓

B

Check voltage between control unit harness terminals ① and ③ after releasing RESUME/ACCEL switch.
**Voltage is 0V.**
- N.G. → CHECK A.S.C.D. COMBINATION (STEERING) SWITCH. Refer to "Electrical Components Inspection".
- O.K. ↓

C

Does vehicle accelerate when RESUME/ACCEL switch is turned on?
- No → Replace control unit.
- Yes ↓

Does vehicle maintain the new (faster) speed when RESUME/ACCEL switch is released?
- No → Replace control unit.
- Yes ↓

System is O.K.

## Trouble Diagnoses (Cont'd)

### DIAGNOSTIC PROCEDURE 6

**SYMPTOM: RESUME switch will not operate.**

A

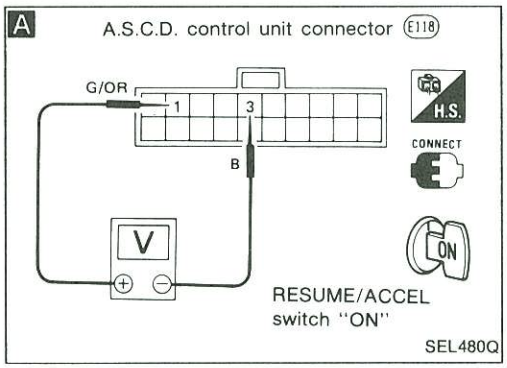


B

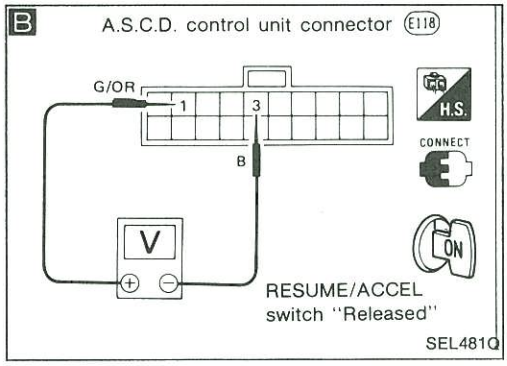


C

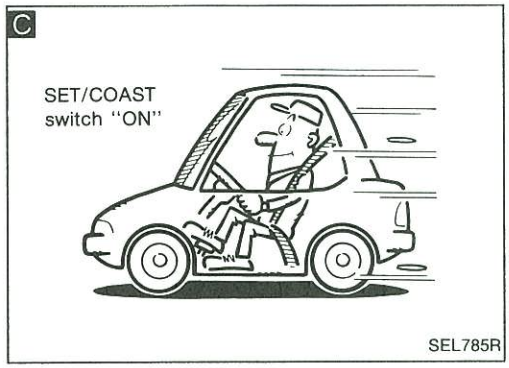


D

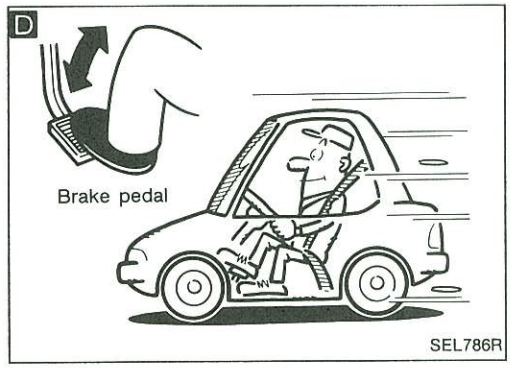


E

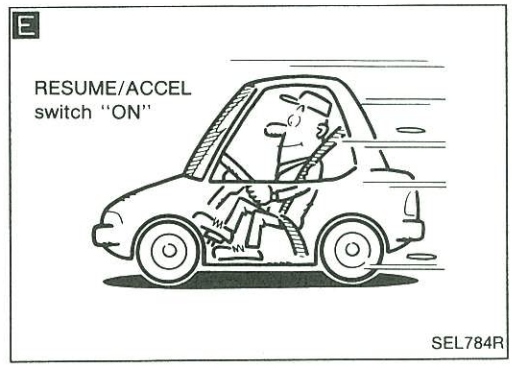


Check constant-speed function for operation using SET/COAST switch.
- N.G. → Go to "DIAGNOSTIC PROCEDURE 1".
- O.K. ↓

A

Check voltage between control unit harness terminals ① and ③ after turning on and holding RESUME/ACCEL switch.
**Battery voltage should exist.**
- N.G. → CHECK A.S.C.D. COMBINATION (STEERING) SWITCH. Refer to "Electrical Components Inspection".
- O.K. ↓

B

Check voltage between control unit harness terminals ① and ③ after releasing RESUME/ACCEL switch.
**Voltage is 0V.**
- O.K. ↓

C

Set vehicle speed at 80 km/h (50 MPH) by turning on SET/COAST switch.
- O.K. ↓

D

While cruising at set speed, depress and release brake pedal.
- O.K. ↓

Does speed control disengage and "CRUISE" lamp turn off?
- No → CHECK STOP LAMP SWITCH, A.S.C.D. CANCEL SWITCH AND A.S.C.D. CLUTCH SWITCH (M/T models). Refer to "Electrical Components Inspection".
- Yes ↓

E

Above 48 km/h (30 MPH), press and release "RESUME/ACCEL" switch.
- O.K. ↓

Does vehicle return to previously set speed [80 km/h (50 MPH)]?
- No → Replace control unit.
- Yes ↓

System is O.K.

## Trouble Diagnoses (Cont'd)

### DIAGNOSTIC PROCEDURE 7

**SYMPTOM: Set speed cannot be cancelled.**

A

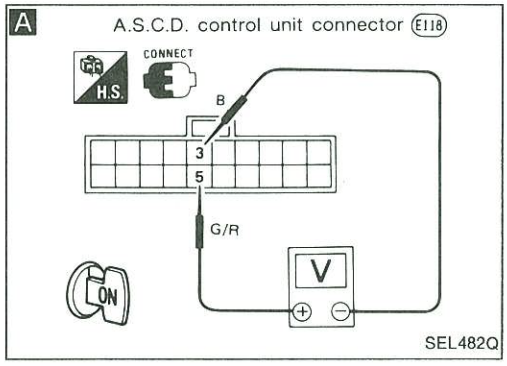


A

CHECK A.S.C.D. CANCEL, CLUTCH, INHIBITOR SWITCH CIRCUIT.
1. Turn A.S.C.D. main switch on.
2. Check voltage between control unit harness terminals ⑤ and ③.

| Conditions | | | Voltage [V] |
|---|---|---|---|
| M/T | A.S.C.D. cancel switch | Depressed | 0 |
| | | Released | Approx. 12 |
| | A.S.C.D. clutch switch | Depressed | 0 |
| | | Released | Approx. 12 |
| A/T | A/T shift lever position is at any position except N or P. | | Approx. 12 |
| | A/T shift lever position is at N or P. | | 0 |

N.G. → CHECK A.S.C.D. CANCEL, CLUTCH, and INHIBITOR SWITCH. Refer to "Electrical Components Inspection".

O.K.

B

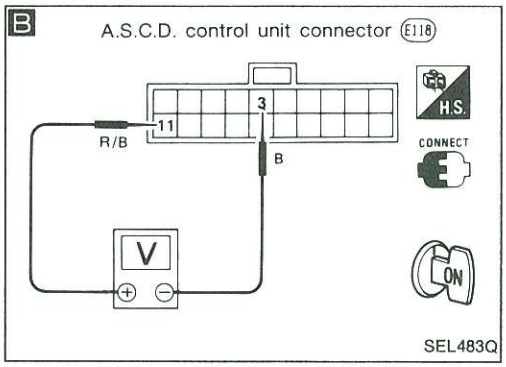


B

CHECK STOP LAMP SWITCH CIRCUIT.
Check voltage between control unit harness terminals ⑪ and ③.

| Condition | | Voltage [V] |
|---|---|---|
| Stop lamp switch | Depressed | Approx. 12 |
| | Released | 0 |

N.G. → CHECK STOP LAMP SWITCH. Refer to "Electrical Components Inspection.

O.K.

Check A.S.C.D. wire moves smoothly.

N.G. → Replace A.S.C.D. wire.

O.K.

CHECK A.S.C.D. ACTUATOR/A.S.C.D. PUMP.
Refer to "Electrical Components Inspection".

N.G. → Replace A.S.C.D. actuator assembly.

O.K.

Replace A.S.C.D. control unit.

## Trouble Diagnoses (Cont'd)

### DIAGNOSTIC PROCEDURE 8

**SYMPTOM: "CRUISE" indicator lamp blinks.**

Does indicator lamp blink when A.S.C.D. main switch is turned to "ON" again?

Yes → Does indicator lamp blink when brake pedal is depressed slowly?

No → CHECK A.S.C.D. ACTUATOR/A.S.C.D. PUMP.
Refer to "Electrical Components Inspection".

N.G. → Replace A.S.C.D. actuator assembly.

O.K. → CHECK A.S.C.D. ACTUATOR/A.S.C.D. PUMP CIRCUIT.

1. Check voltage between control unit harness terminals ⑧ and ③.
   **Voltage is 0V.**
2. Disconnect A.S.C.D. control unit connector.
3. Measure resistance between control unit harness terminals ⑧ and ⑨, ⑩, ⑭.

| Terminals | | Resistance [Ω] |
|---|---|---|
| ⑧ | ⑨ | Approx. 8 - 45 |
| | ⑩ | Approx. 65 |
| | ⑭ | Approx. 65 |

N.G. → Repair short or open circuit in A.S.C.D. actuator/ A.S.C.D. pump harness.

O.K. → Replace A.S.C.D. control unit.

Yes → Adjust installation of stop lamp switch and A.S.C.D. cancel switch. Refer to BR section.

No → CHECK A.S.C.D. COMBINATION (STEERING) SWITCH.
Refer to "Electrical Components Inspection".

N.G. → Replace A.S.C.D. combination (steering) switch.

O.K. → Replace control unit.

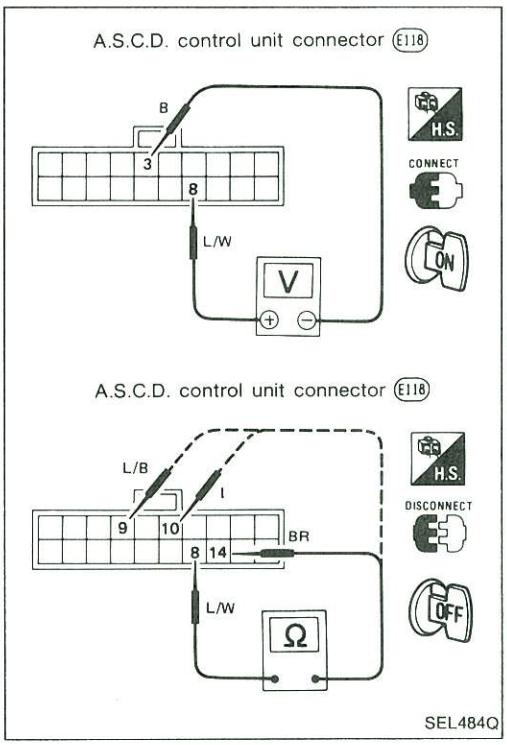

## A.S.C.D. Wire Adjustment

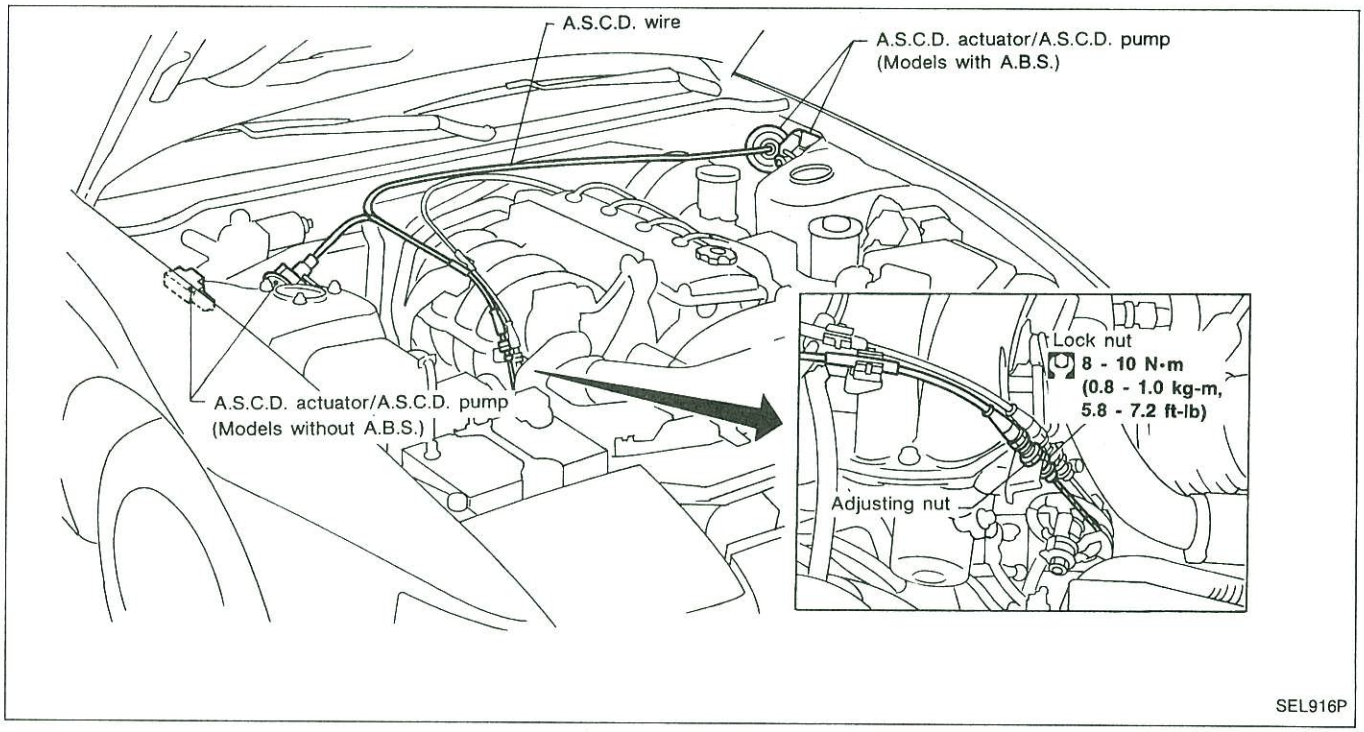


**CAUTION:**

- **Be careful not to twist A.S.C.D. wire when removing it.**
- **Do not tense A.S.C.D. wire excessively during adjustment.**

After confirming that accelerator wire is properly adjusted, adjust the tension of A.S.C.D. wire in the following manner.

(1) After adjusting the length of the accelerator wire, turn a securing nut by 1/2 to 1 turn from throttle open starting position to the wire loosening direction to fix. (Must be securing carried out to prevent response delay of operation of the A.S.C.D.)

(2) Securely tighten lock nut to hold adjusting nut in place.

- For A.S.C.D. cancel switch and clutch switch adjustment, refer to BR and CL sections.

## A.S.C.D. Wire Adjustment (Cont'd)

### ELECTRICAL COMPONENTS INSPECTION

**A.S.C.D. actuator/A.S.C.D. pump**

1. Disconnect A.S.C.D. actuator/A.S.C.D. pump connector.
2. Check A.S.C.D. actuator/A.S.C.D. pump operations as shown.

A

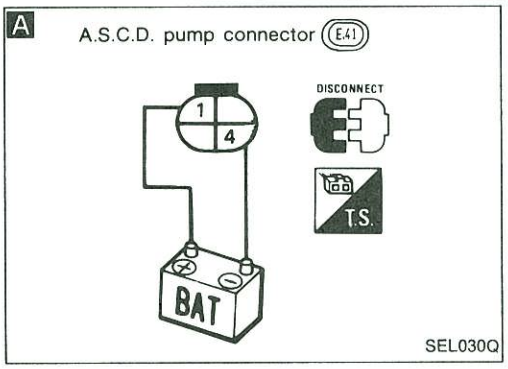


Check to see if motor starts when 12V D.C. is applied across ① and ④.

N.G. → Replace A.S.C.D. actuator assembly.

O.K.

B

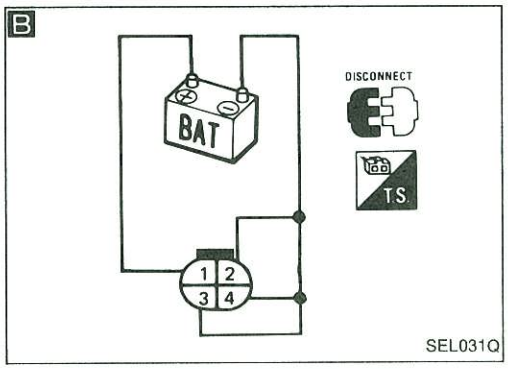


Check to see if A.S.C.D. wire is pulled when 12V D.C. is applied across ①, ②, ③ and ④.

N.G.

O.K. (Wire is pulled.)

C

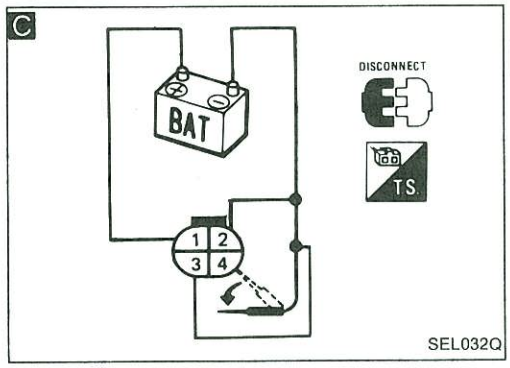


Check to see if A.S.C.D. wire returns to original position 50 to 60 seconds after disconnecting lead from ④.

N.G. → Replace A.S.C.D. actuator assembly.

O.K. (Wire does not return.)

D

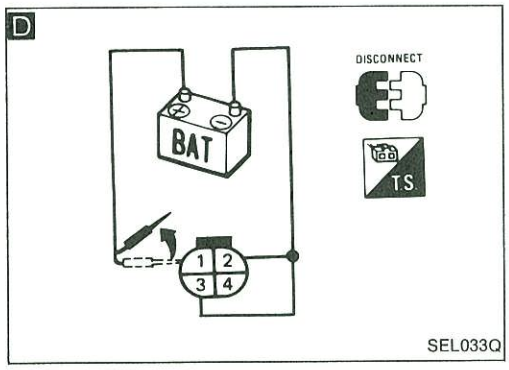


Disconnect lead from ① to see if A.S.C.D. wire returns immediately.

N.G. → Replace A.S.C.D. actuator assembly.

O.K. (Wire returns.)

A.S.C.D. actuator/A.S.C.D. pump are O.K.

## A.S.C.D. Wire Adjustment (Cont'd)

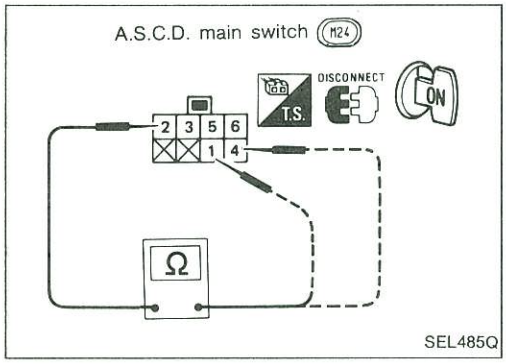


### A.S.C.D. main switch

Check continuity between terminals by pushing switch to each position.

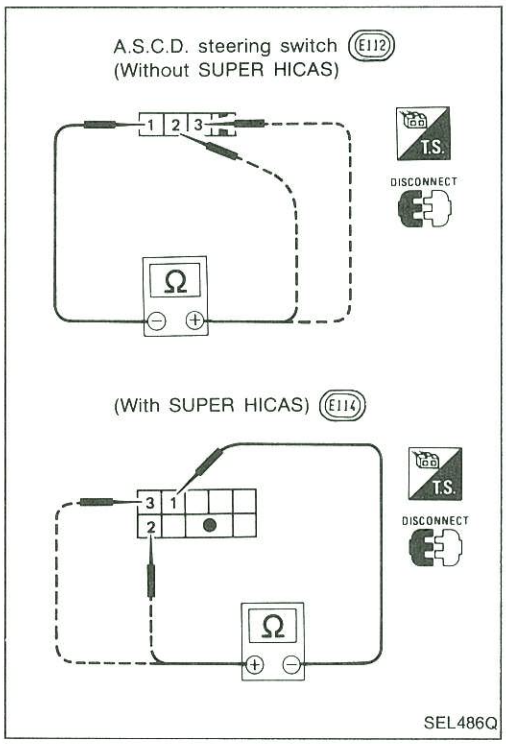


### A.S.C.D. steering switch

Check continuity between terminals by pushing each button.

| Button \ Terminal | 1 | 2 | 3 |
|---|---|---|---|
| SET/COAST | ○ | ○ | |
| RESUME/ACCEL | ○ | | ○ |
| CANCEL | ○ | ▶○ | |
| | ○ | ▶ | ○ |

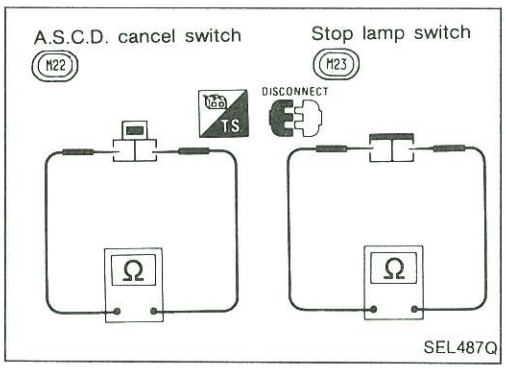


### A.S.C.D. cancel switch and stop lamp switch

| Condition | Continuity | |
|---|---|---|
| | A.S.C.D. cancel switch | Stop lamp switch |
| When brake pedal is depressed | No | Yes |
| When brake pedal is released | Yes | No |

**Check each switch after adjusting brake pedal — refer to BR section.**

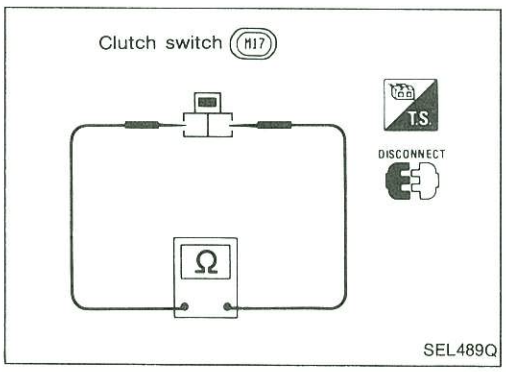


### Clutch switch (For M/T models)

| Condition | Continuity |
|---|---|
| When clutch pedal is depressed | No |
| When clutch pedal is released | Yes |

**Check switch after adjusting clutch pedal — refer to CL section.**

## A.S.C.D. Wire Adjustment (Cont'd)

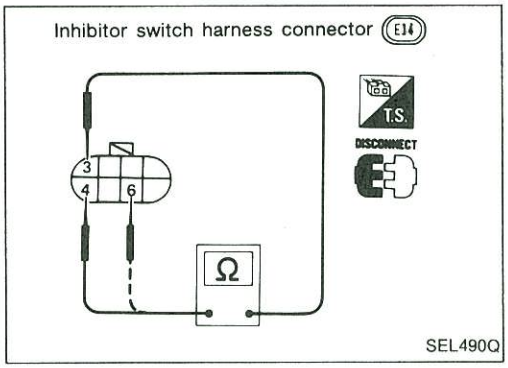


### Inhibitor switch (For A/T models)

| Shift lever position \ Terminal | 3 | 4 | 6 |
|---|---|---|---|
| "P" | ○ | ○ | |
| "N" | ○ | | ○ |
| Except "N" or "P" | | | |

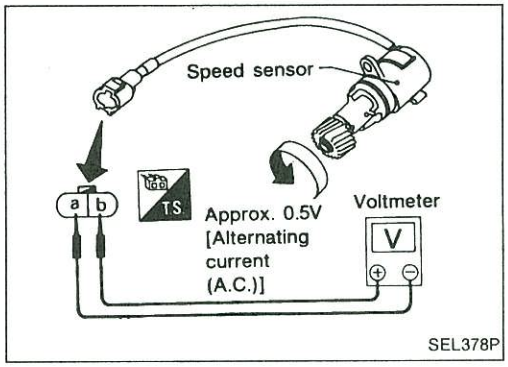


### Speed sensor

1. Remove speed sensor from transaxle.
2. Turn speedometer pinion quickly and measure voltage across ⓐ and ⓑ.

## Engine Compartment

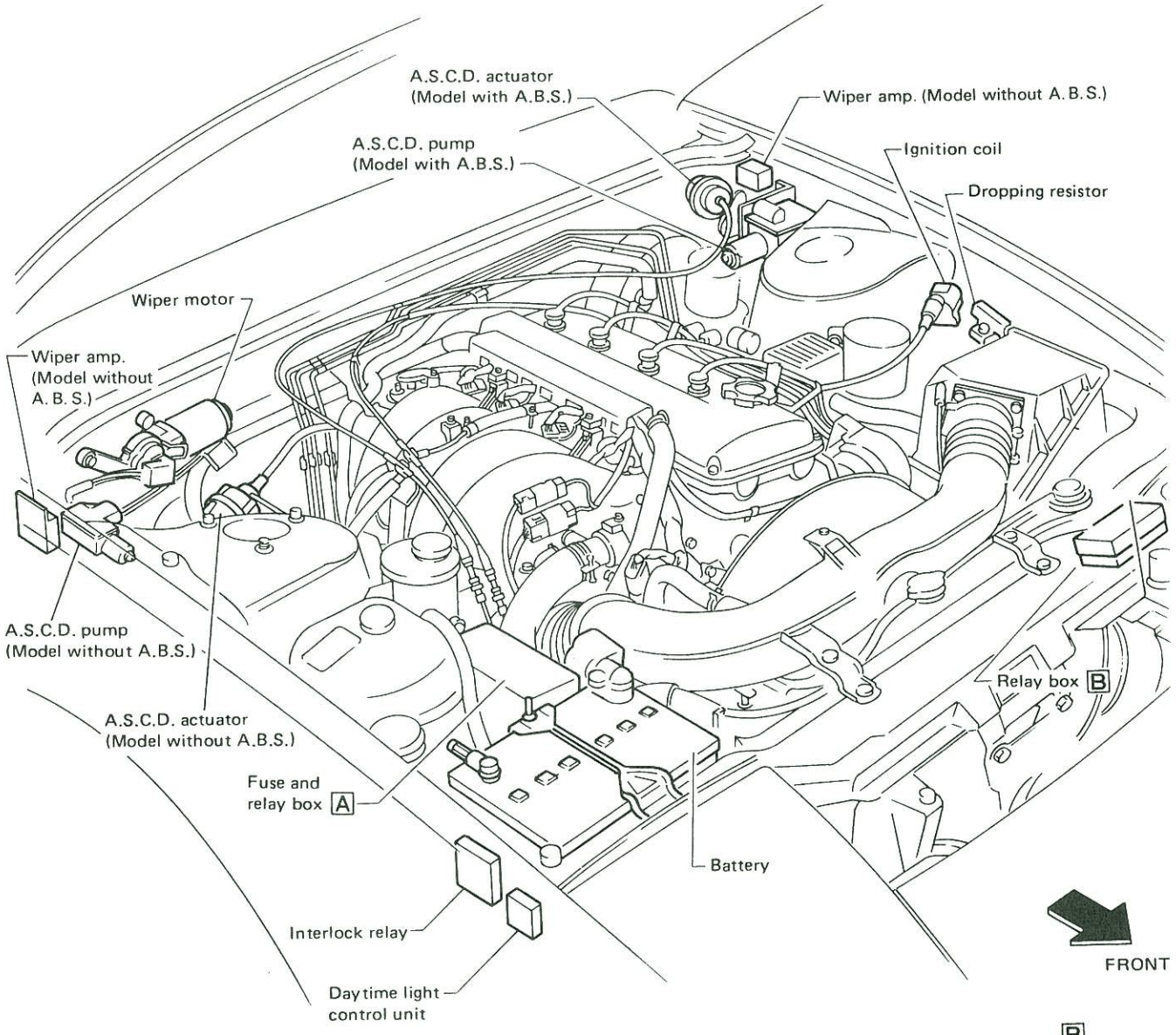


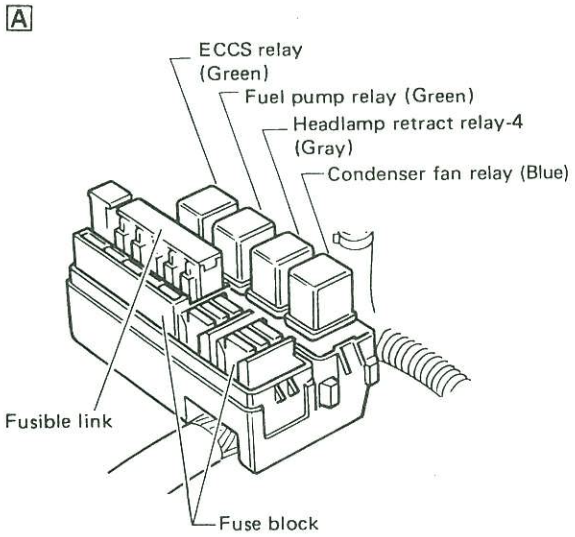


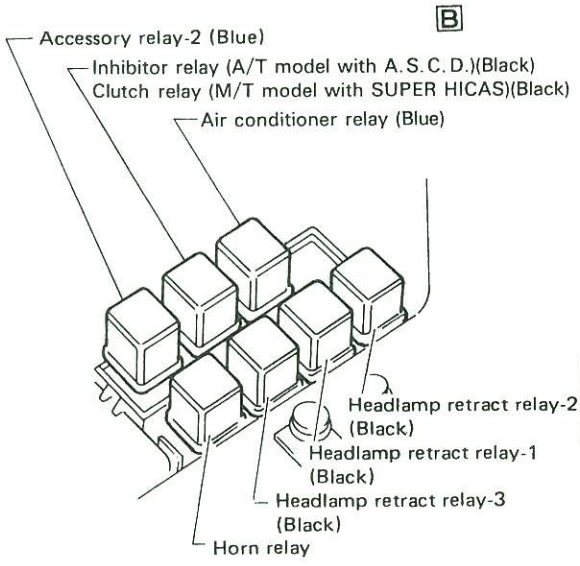


MEL728B

## Passenger Compartment

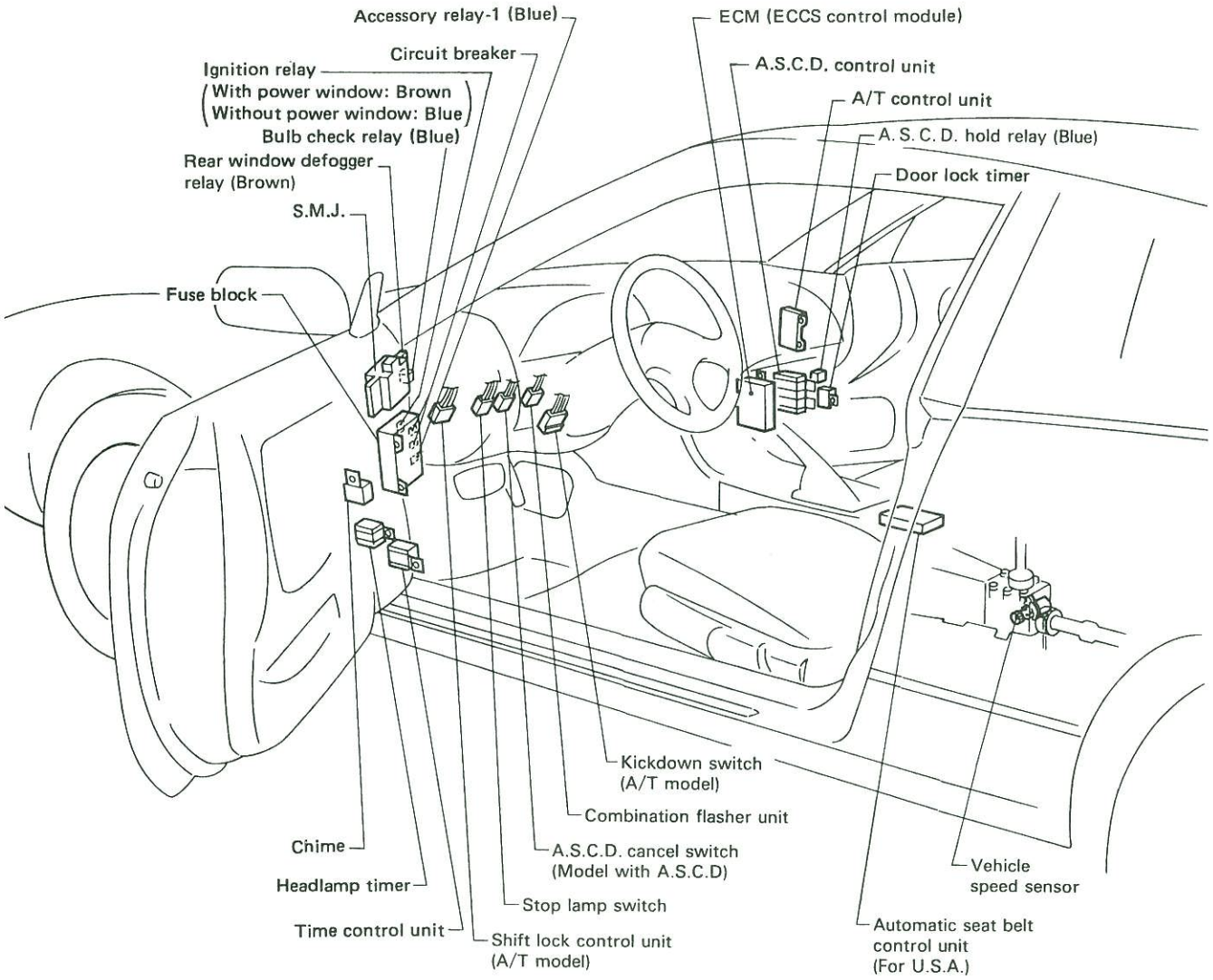


MEL729B

## Passenger Compartment (Cont'd)

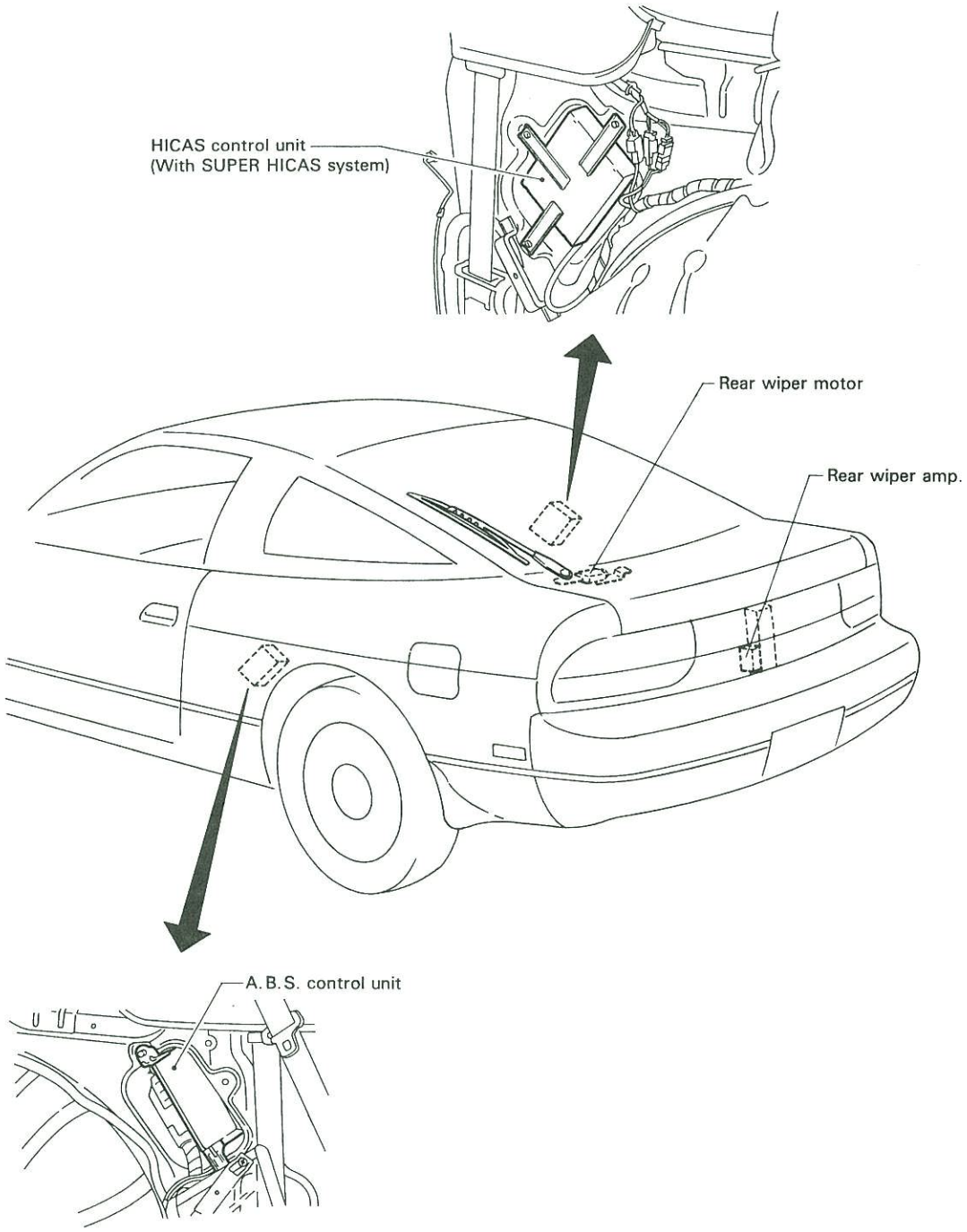




SEL905P

## Outline

**FASTBACK**

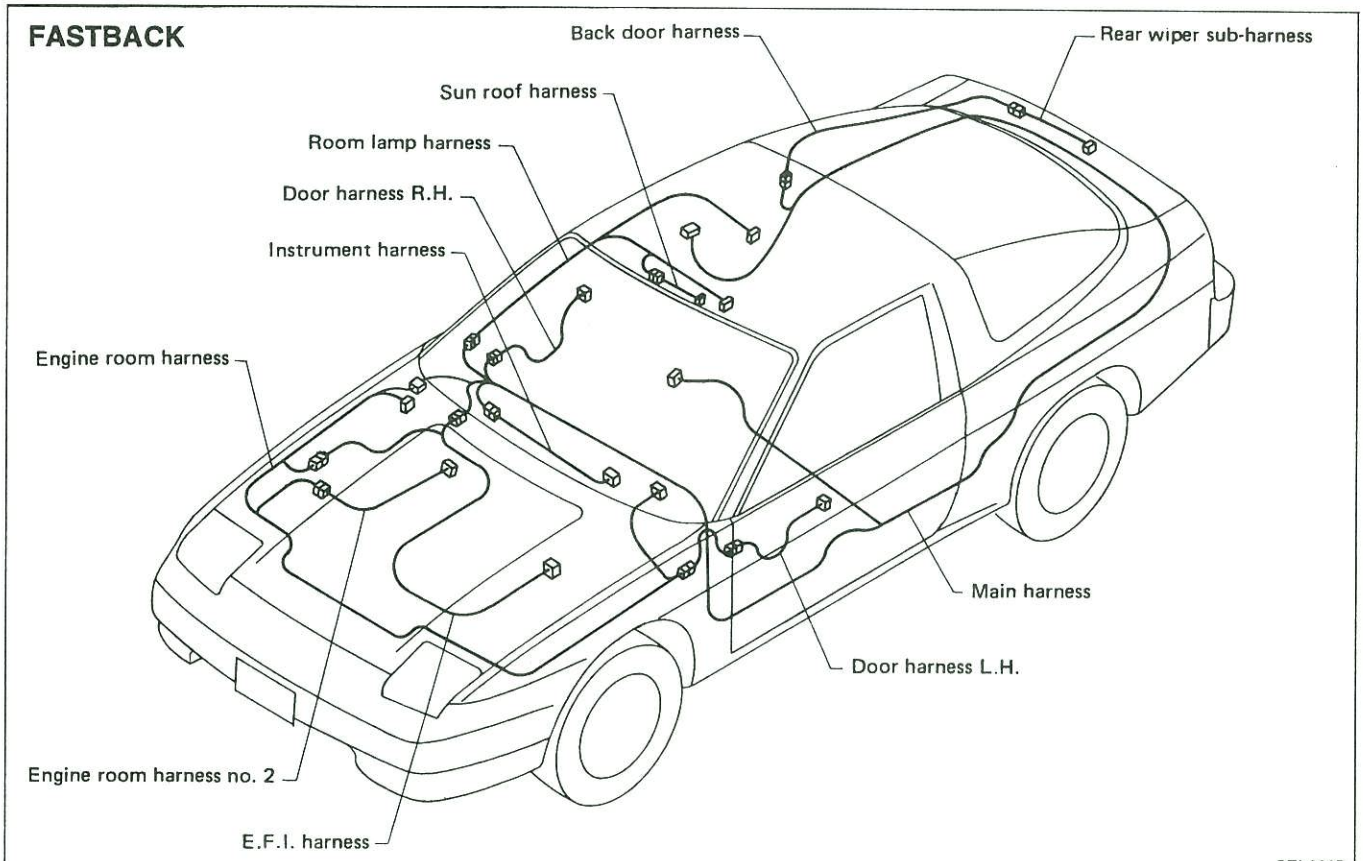


SEL888P

**COUPE**

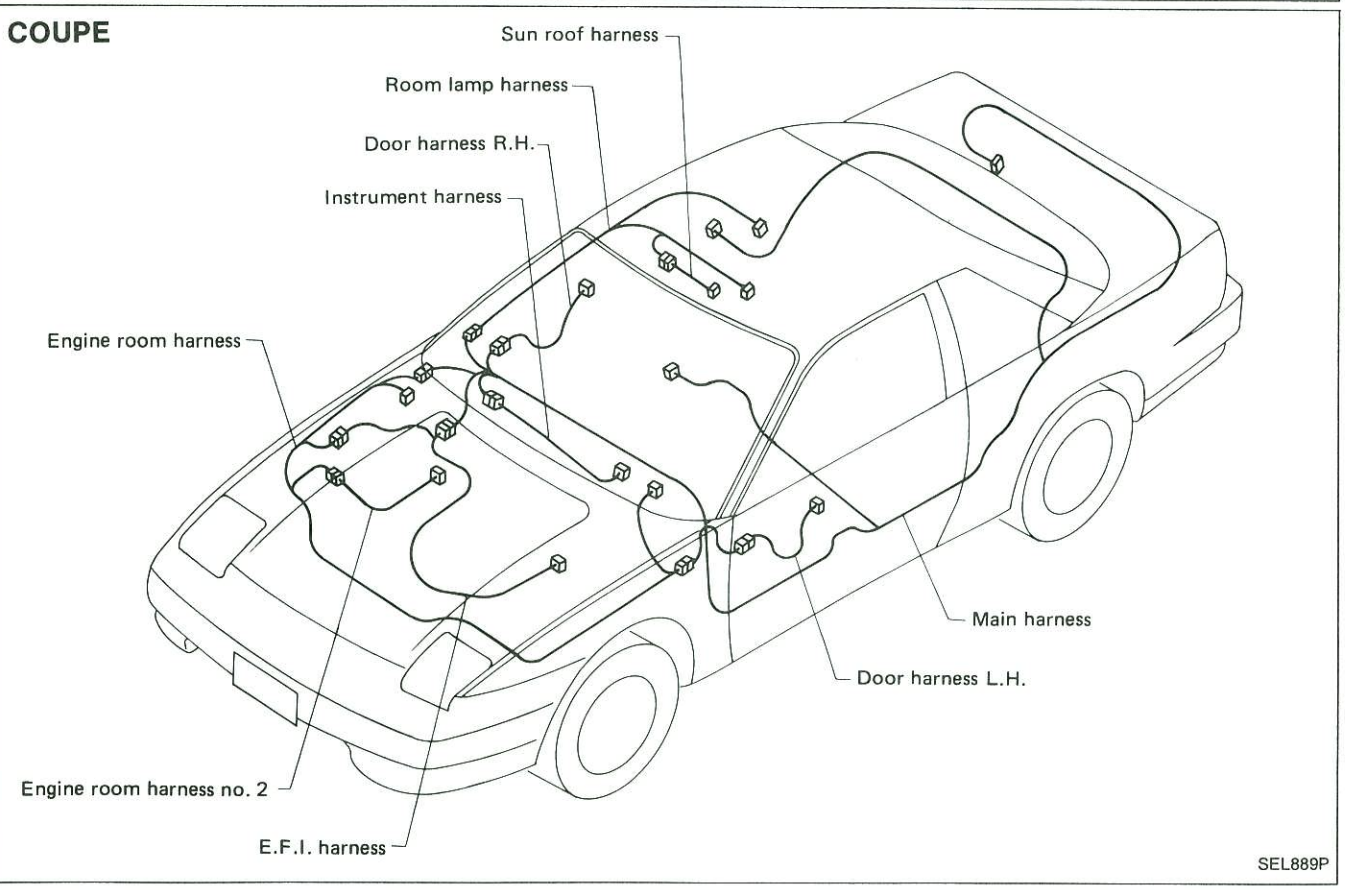


SEL889P

## Instrument Harness

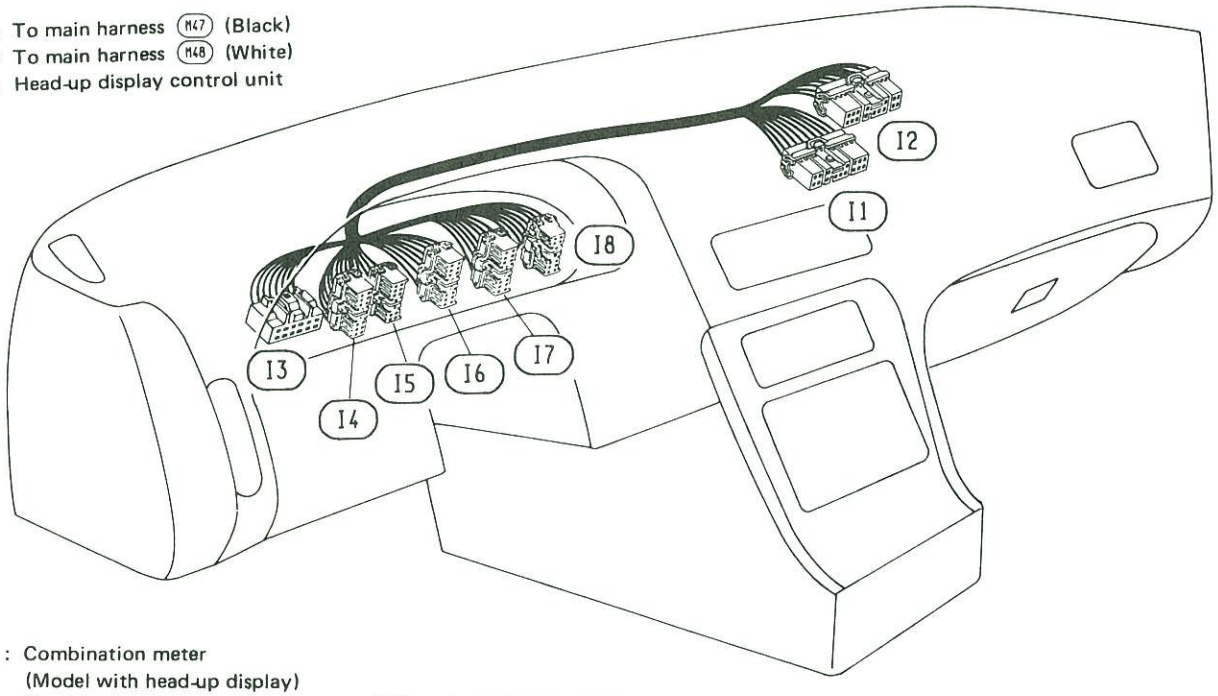


I1 : To main harness M47 (Black)
I2 : To main harness M48 (White)
I3 : Head-up display control unit

I4 : Combination meter (Model with head-up display)
I5 : Combination meter (Model without head-up display)
I6 : Combination meter (Model with head-up display)
I7 : Combination meter (Model without head-up display)
I8 : Combination meter (Model without head-up display)

SEL893P

## Back Door Harness

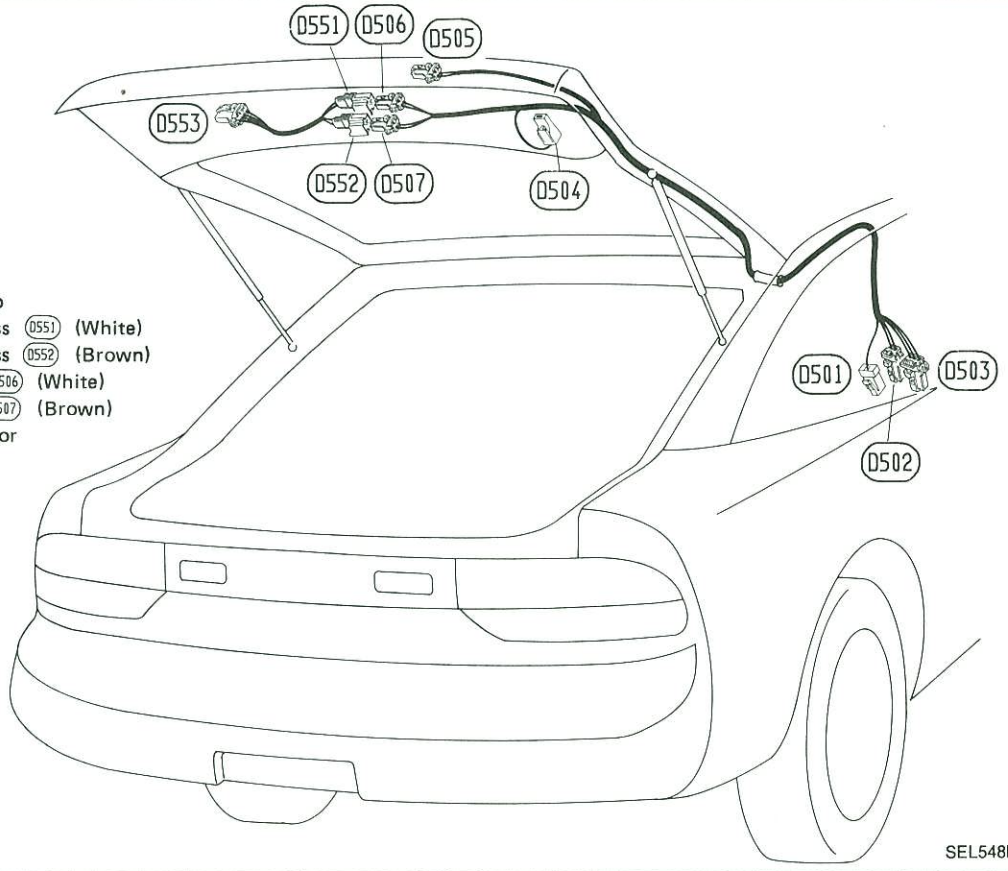


D501 : To main harness M135
D502 : To main harness M136
D503 : To main harness M137
D504 : Rear window defogger
D505 : High-mounted stop lamp
D506 : To rear wiper sub-harness D551 (White)
D507 : To rear wiper sub-harness D552 (Brown)
D551 : To back door harness D506 (White)
D552 : To back door harness D507 (Brown)
D553 : Rear window wiper motor

SEL548R

## Main Harness

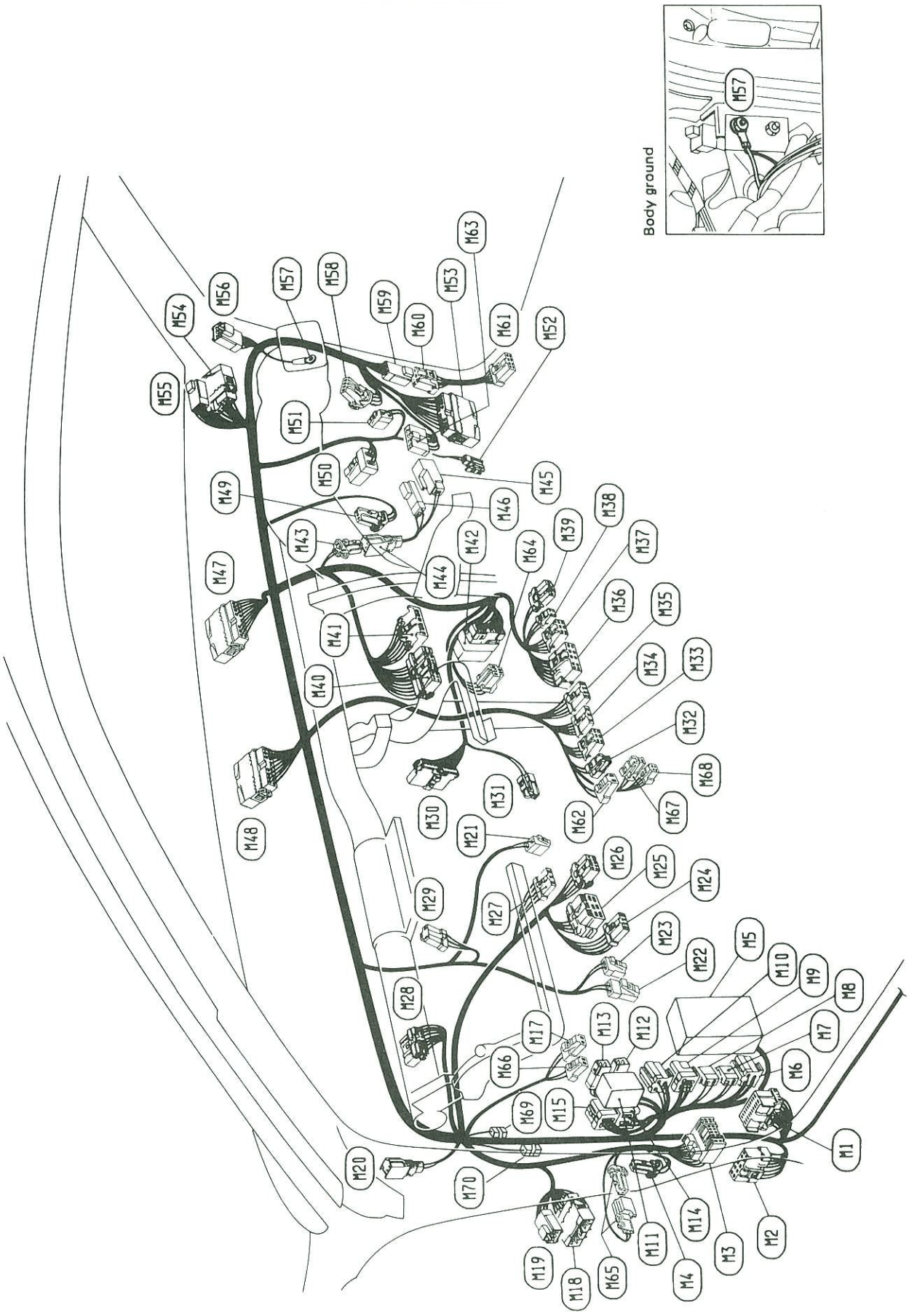

(M1) : Time control unit
(M2) : Headlamp timer
(M3) : Data link connector for CONSULT
(M4) : Warning chime
(M5) : Fuse block
(M6) : Accessory relay-1
(M7) : Circuit breaker (Model with power window system)
(M8) : Circuit breaker (For U.S.A.)
(M9) : Ignition relay (Model with power window system)
(M10) : Ignition relay (Model without power window system)
(M11) : To engine room harness (E101) (S.M.J.)
(M12) : To engine room harness (E102) (Blue)
(M13) : To engine room harness (E103) (Black)
(M14) : Bulb check relay
(M15) : Rear window defogger relay
(M17) : A.S.C.D. clutch switch (M/T model with A.S.C.D.)
(M18) : To door harness L.H. (D1)
(M19) : To door harness L.H. (D2)
(M20) : Driver side front limit switch (For U.S.A.)
(M21) : Kickdown switch (A/T model)
(M22) : A.S.C.D. cancel switch (Model with A.S.C.D.)
(M23) : Stop lamp switch
(M24) : A.S.C.D. main switch (Model with A.S.C.D.)
(M25) : Headlamp retractor switch
(M26) : Illumination control switch
(M27) : Not used
(M28) : Shift lock control unit (A/T model)
(M29) : Combination flasher unit
(M30) : Mode door motor
(M31) : Foot lamp L.H.
(M32) : O.D. off indicator lamp (A/T model without SUPER HICAS system)
(M33) : Rear wiper and washer switch
(M34) : Rear window defogger switch
(M35) : Hazard switch
(M36) : Radio
(M37) : Radio
(M38) : Cassette deck
(M39) : Cassette deck
(M40) : Push control unit
(M41) : Fan switch
(M42) : Diode
(M43) : To sub-harness (M44)
(M44) : To main harness (M43)
(M45) : Glove box lamp
(M46) : Glove box lamp switch
(M47) : To instrument harness (I1) (Black)
(M48) : To instrument harness (I2) (White)
(M49) : Thermo control amplifier
(M50) : Heater resistor
(M51) : Blower motor
(M52) : Foot lamp R.H.
(M53) : To E.F.I. harness (F1)
(M54) : To door harness R.H. (D101)
(M55) : To door harness R.H. (D102)
(M56) : To room lamp harness (R1)
(M57) : Body ground
(M58) : Intake door motor
(M59) : To sub-harness (M60)
(M60) : To main harness (M59)
(M61) : Door lock timer
(M62) : Washer warning lamp (Model with A.S.C.D.)
(M63) : To engine room harness (E119)
(M64) : Blower relay
(M65) : Joint connector (Model with SUPER HICAS system)
(M66) : HICAS clutch switch (M/T model with SUPER HICAS system)
(M67) : HICAS warning lamp (M/T model with SUPER HICAS system)
(M68) : O.D. off indicator and HICAS warning lapp (A/T model with SUPER HICAS system)
(M69) : Diode (For Canada)
(M70) : Diode (For Canada)

Diode (M42)

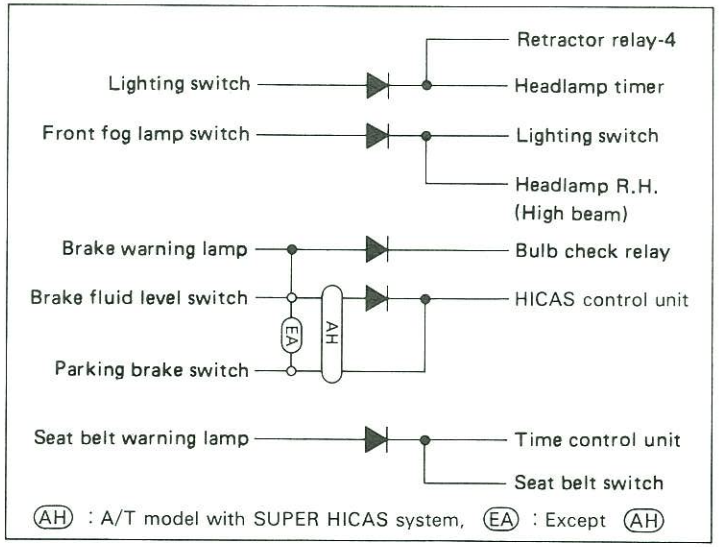


(AH) : A/T model with SUPER HICAS system, (EA) : Except (AH)

Diode (M69)

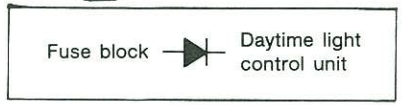


Diode (M70)

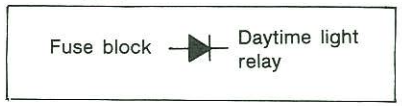




MEL719B

## Main Harness (Cont'd)

**FASTBACK**

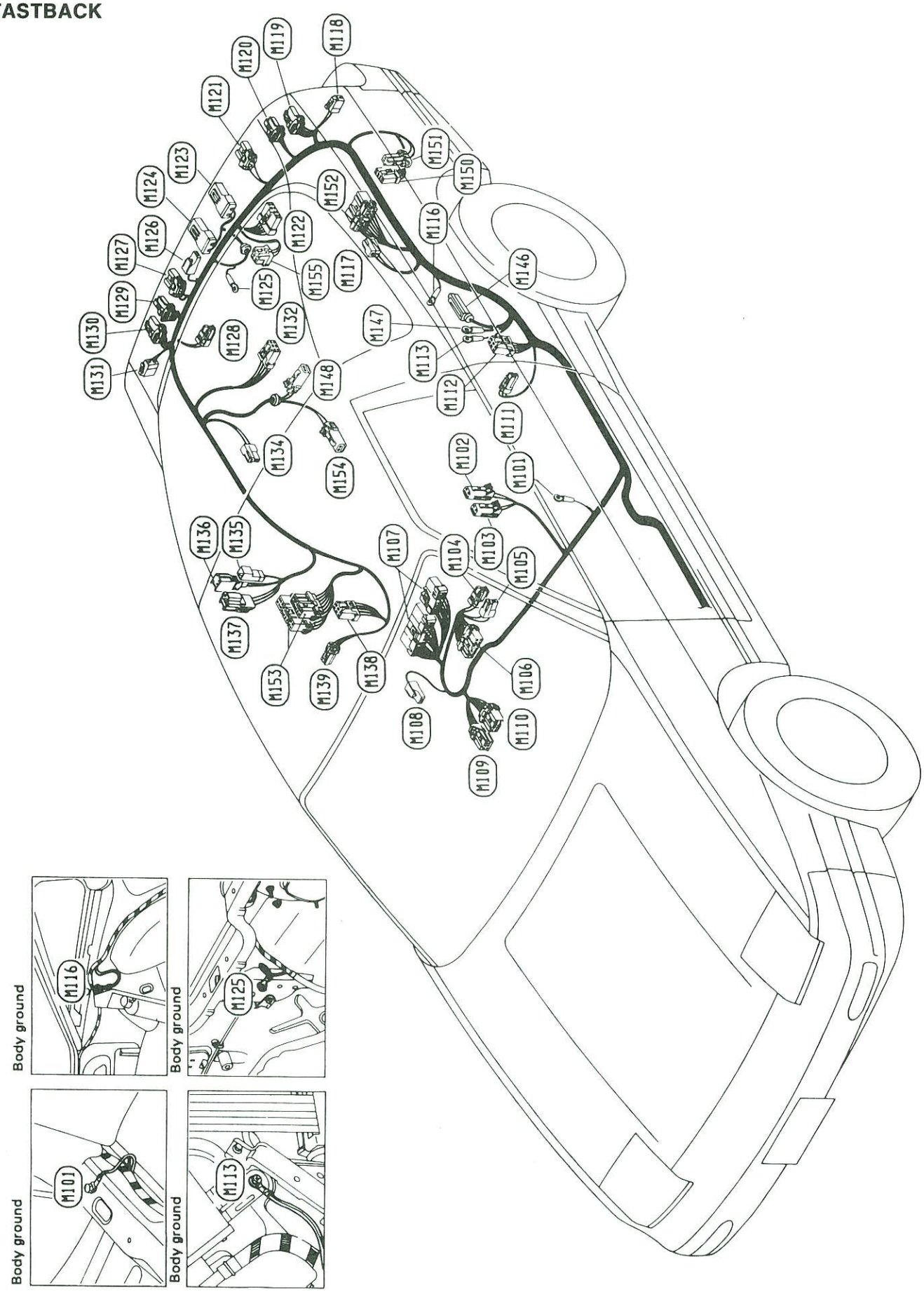

(M101) : Body ground
(M102) : Lap belt buckle switch (For U.S.A.)
(M103) : Seat belt switch (For Canada)
(M104) : Ash tray illumination
(M105) : Cigarette lighter
(M106) : Door mirror control switch
(M107) : Automatic seat belt control unit (For U.S.A.)
(M108) : Parking brake switch
(M109) : A/T device (A/T illumination and O.D. control switch) (A/T model)
(M110) : Shift lock solenoid (A/T model)
(M111) : Door switch L.H.
(M112) : Automatic seat belt motor assembly L.H. (For U.S.A.)
(M113) : Body ground (For U.S.A.)
(M116) : Body ground
(M117) : Rear speaker L.H.
(M118) : Rear side marker lamp L.H.
(M119) : Rear combination lamp L.H.

(M120) : Rear combination lamp L.H.
(M121) : Back-up lamp L.H.
(M122) : Rear wiper amplifier
(M123) : License lamp L.H.
(M124) : License lamp R.H.
(M125) : Body ground
(M126) : Luggage room lamp switch
(M127) : Back-up lamp R.H.
(M128) : Luggage room lamp
(M129) : Rear combination lamp R.H.
(M130) : Rear combination lamp R.H.
(M131) : Rear side marker lamp R.H.
(M132) : Fuel tank gauge unit
(M134) : Rear speaker R.H.
(M135) : To back door harness (D501)
(M136) : To back door harness (D502)
(M137) : To back door harness (D503)
(M138) : Automatic seat belt motor assembly R.H. (For U.S.A.)
(M139) : Door switch R.H.
(M146) : A.B.S. control unit (For Anti-lock Braking System)
(M147) : Body ground (For Anti-lock Braking System)
(M148) : Rear sensor (For Anti-lock Braking System)
(M150) : Auto antenna timer
(M151) : Auto antenna motor
(M152) : Rear speaker amplifier (Active speaker type)
(M153) : HICAS control unit (With SUPER HICAS system)
(M154) : HICAS fail safe solenoid valve (With SUPER HICAS system)
(M155) : Daytime light relay (For Canada)



MEL720B

## Main Harness (Cont'd)

**COUPE**

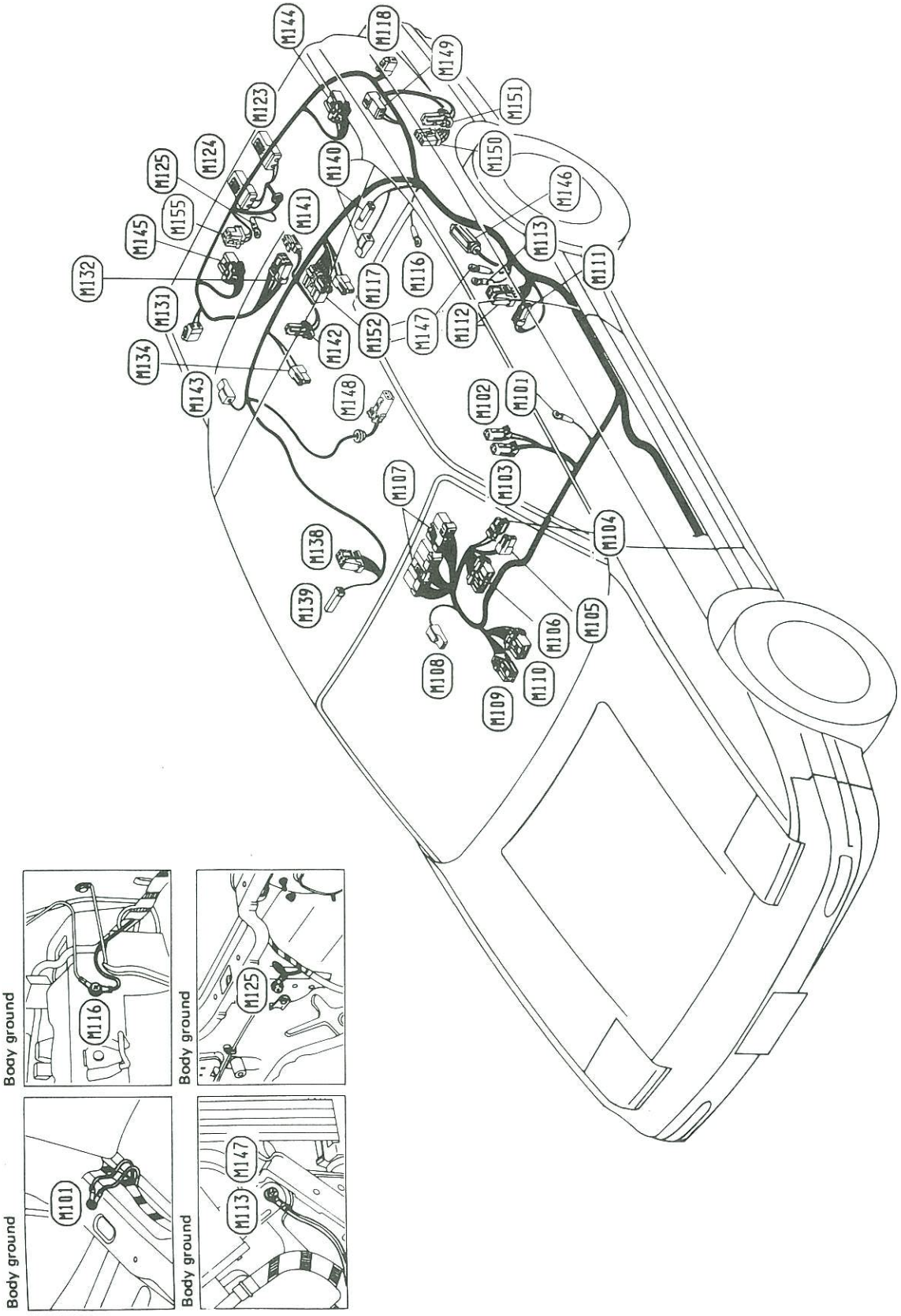

M101 : Body ground
M102 : Lap belt buckle switch (For U.S.A.)
M103 : Seat belt switch (For Canada)
M104 : Ash tray illumination
M105 : Cigarette lighter
M106 : Door mirror control switch
M107 : Automatic seat belt control unit (For U.S.A.)
M108 : Parking brake switch
M109 : A/T device (A/T illumination and O.D. control switch) (A/T model)
M110 : Shift lock solenoid (A/T model)
M111 : Door switch L.H.
M112 : Automatic seat belt motor assembly L.H. (For U.S.A)
M113 : Body ground (For U.S.A.)
M116 : Body ground
M117 : Rear speaker L.H.
M118 : Rear side marker lamp L.H.
M123 : License lamp L.H.
M124 : License lamp R.H.
M125 : Body ground
M131 : Rear side marker lamp R.H.
M132 : Fuel tank gauge unit
M134 : Rear speaker R.H.
M138 : Automatic seat belt motor assembly R.H. (For U.S.A.)
M139 : Door switch R.H.
M140 : Trunk room lamp switch
M141 : Trunk room lamp
M142 : High-mounted stop lamp (Model without rear spoiler)
M143 : Rear window defogger
M144 : Rear combination lamp L.H.
M145 : Rear combination lamp R.H.
M146 : A.B.S. control unit (For Anti-lock Braking System)
M147 : Body ground (For Anti-lock Braking System)
M148 : Rear sensor (For Anti-lock Braking System)
M149 : To high-mounted stop lamp sub-harness (Model with rear spoiler)
M150 : Auto antenna timer
M151 : Auto antenna motor
M152 : Rear speaker amplifier (Active speaker type)
M155 : Daytime light relay (For Canada)



MEL721B

## Engine Room Harness

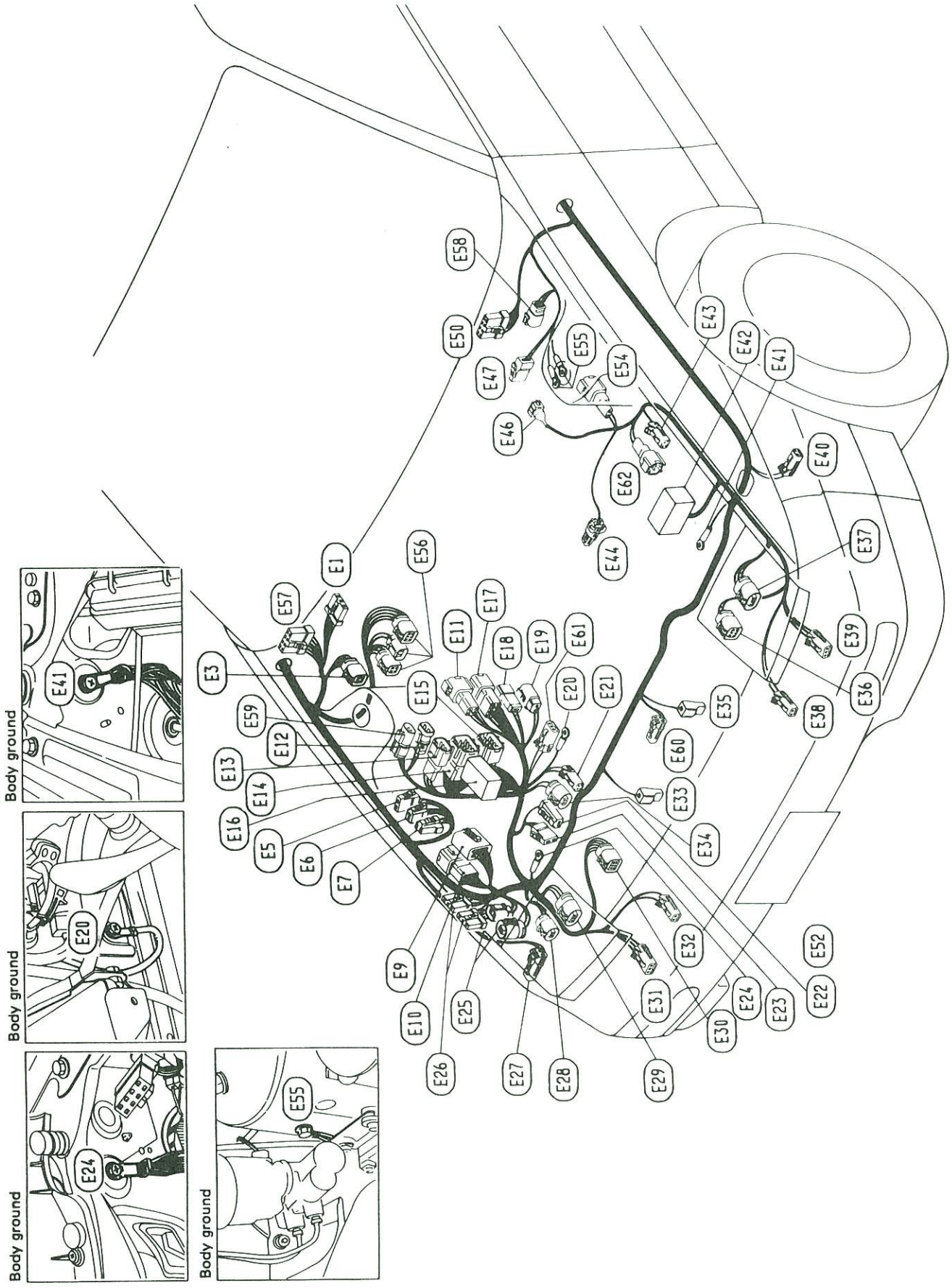

## Engine Room Harness (Cont'd)

E1 : Windshield wiper motor
E3 : A.S.C.D. actuator (Model without Anti-lock Braking System)
E5 : Rear washer motor
E6 : Front washer motor
E7 : Washer fluid level switch
E9 : To E.F.I. harness F8 (White)
E10 : To E.F.I. harness F9 (Brown)
E11 : To engine room harness no. 2 E201 (A/T model)
E12 : Inhibitor switch (A/T model)
E13 : Revolution sensor (A/T model)
E14 : Inhibitor switch (A/T model) (Gray)
E15 : To solenoid valve sub-harness (A/T model) (Brown)
E16 : Relay box (Refer to page EL-97.)
E17 : To engine room harness no. 2 E202
E18 : To engine room harness no. 2 E203
E19 : To engine room harness no. 2 E204
E20 : Body ground
E21 : Dual-pressure switch
E22 : Battery
E23 : Battery
E24 : Body ground
E25 : Interlock relay (M/T model for U.S.A.) U.S.A.)
E26 : Daytime light control unit (For Canada)
E27 : Front side marker lamp R.H.
E28 : Not used
E29 : Headlamp R.H.
E30 : Headlamp motor R.H.
E31 : Front combination lamp R.H.
E32 : Daytime light R.H. (For Canada)
E33 : Horn-low
E34 : Condenser fan motor
E35 : Horn-high
E36 : Headlamp motor L.H.
E37 : Headlamp L.H.
E38 : Daytime light L.H. (For Canada)
E39 : Front combination lamp L.H.
E40 : Front side marker lamp L.H.
E41 : Body ground
E42 : Relay box (Refer to page EL-97.)
E43 : Dropping resistor (A/T model.)
E44 : Compressor
E46 : PAIRC-solenoid valve
E47 : Brake fluid level switch
E50 : Windshield wiper amplifier (Model without Anti-lock Braking System)
E54 : Front wheel sensor L.H. (For Anti-lock Braking System)
E55 : Body ground
E56 : Actuator (For Anti-lock Braking System)
E57 : Windshield wiper amplifier (Model with Anti-lock Braking System)
E58 : A.S.C.D. actuator (Model with Anti-lock Braking System)
E59 : To engine room harness no. 2 E206 (M/T model)
E60 : Ambient switch
E61 : HICAS solenoid valve (With SUPER HICAS system)
E62 : HICAS oil level switch (With SUPER HICAS system)



MEL722B

## Engine Room Harness (Cont'd)

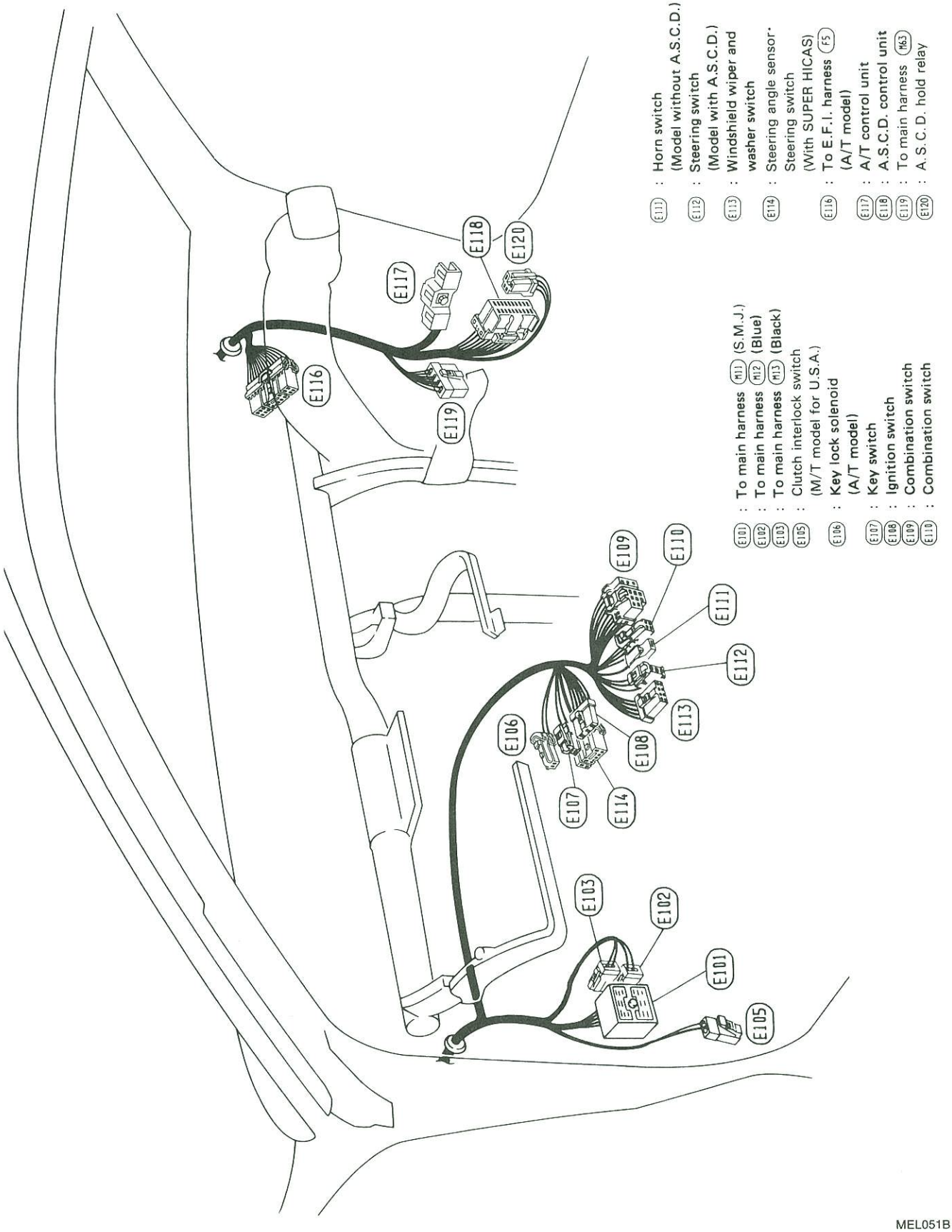


MEL051B

## Engine Room Harness No. 2

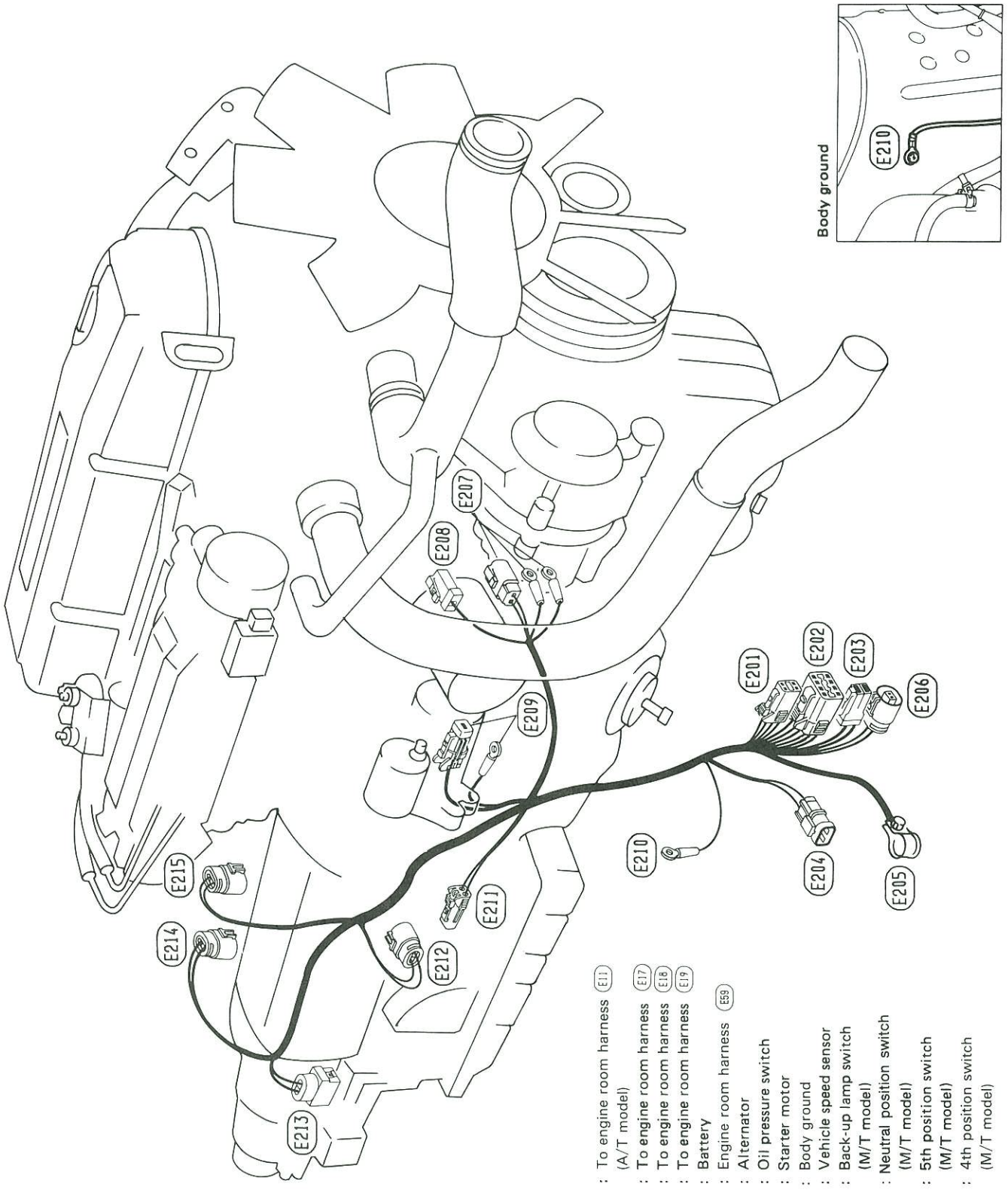


MEL724B

## E.F.I. sub harness

(F51) : To E.F.I. harness (F26)
(F52) : EGR temperature sensor (For California)
(F53) : IACV-Air regulator
(F54) : IACV-FICD solenoid valve
(F55) : IACV-AAC valve

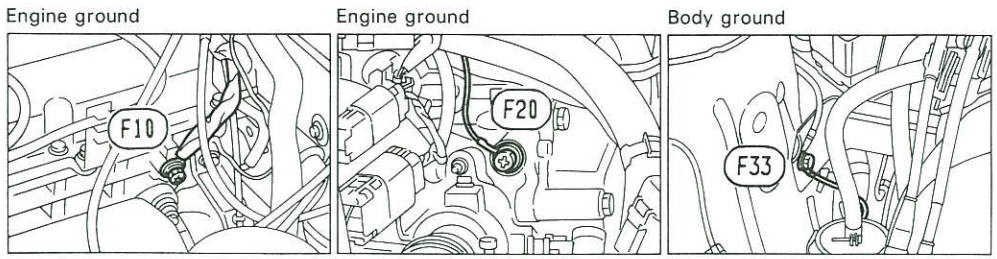


Diode (F3)

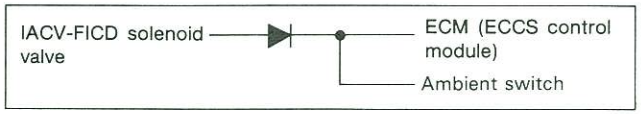


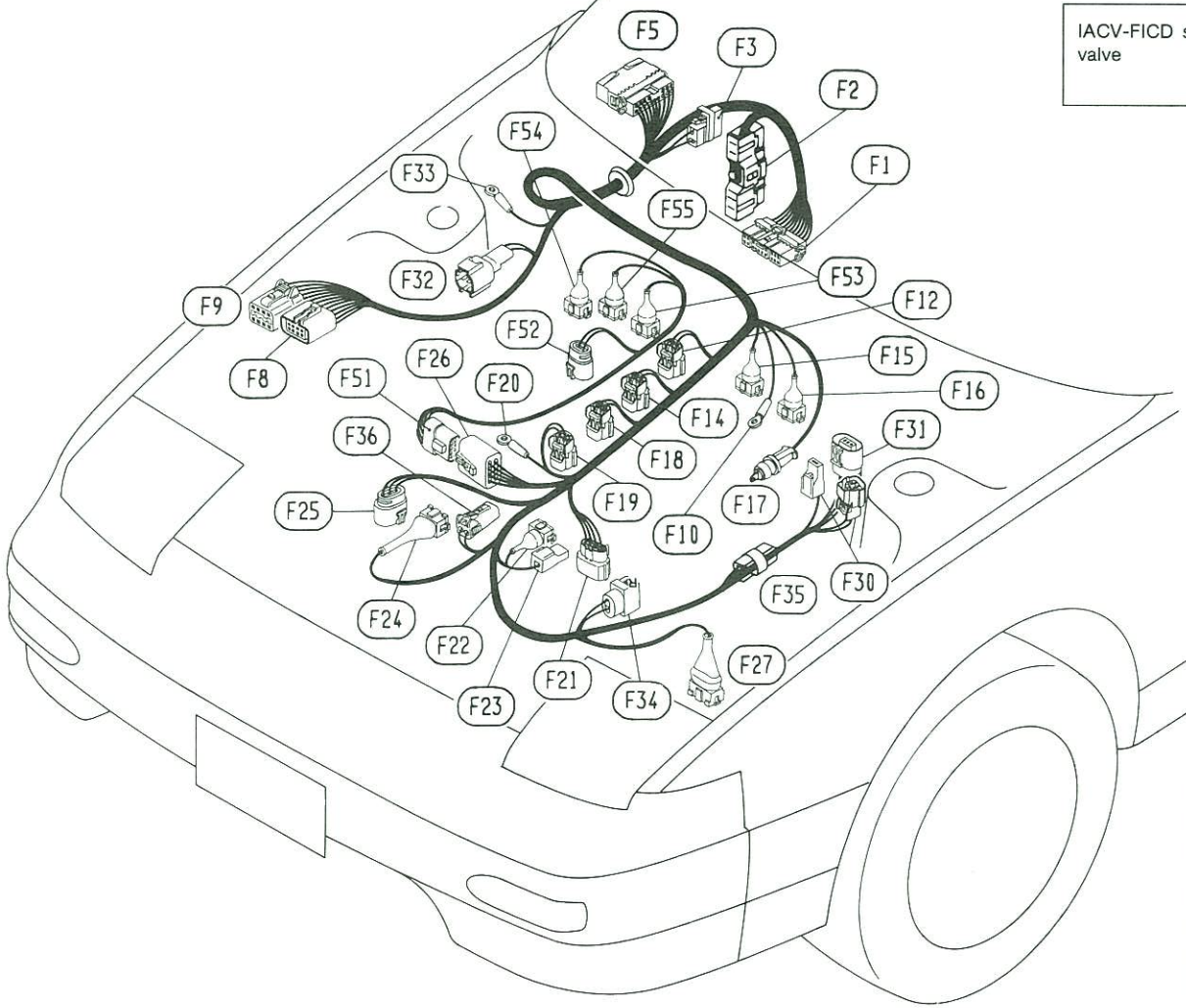


(F1) : To main harness (M53)
(F2) : ECM (ECCS control module)
(F3) : Diode
(F5) : To engine room harness (E116) (A/T model)
(F8) : To engine room harness (E9) (White)
(F9) : To engine room harness (E10) (Brown)
(F10) : Engine ground
(F12) : Injector no. 4
(F14) : Injector no. 3
(F15) : E.G.R. control solenoid valve
(F16) : S.C.V. control solenoid valve
(F17) : Exhaust gas sensor
(F18) : Injector no. 2
(F19) : Injector no. 1
(F20) : Engine ground
(F21) : Crankshaft position sensor
(F22) : Engine coolant temperature sensor
(F23) : Thermal transmitter
(F24) : Throttle position switch
(F25) : Throttle position sensor
(F26) : To E.F.I. sub harness (F51)
(F27) : Mass air flow sensor
(F30) : Ignition coil
(F31) : Power transistor
(F32) : Front wheel sensor R.H. (For Anti-lock Braking System)
(F33) : Body ground (For Anti-lock Braking System)
(F34) : Power steering oil pressure switch
(F35) : Resistor and condenser
(F36) : To knock sensor sub harness

## Room Lamp and Sun Roof Harness

**Sun roof harness**

- (S1) : To room lamp harness (R2)
- (S2) : Body ground
- (S3) : Sun roof switch
- (S4) : Slide relay — open
- (S5) : Sun roof motor
- (S6) : Safety relay
- (S7) : Slide relay — close
- (S8) : Safety limit switch

**Room lamp harness**

- (R1) : To main harness (M56)
- (R2) : To sun roof harness (S1)
- (R3) : Spot lamp (Model with sun roof)
- (R4) : Interior lamp (Model without sun roof)
- (R5) : Interior lamp (Fastback with sun roof)
- (R6) : Interior lamp (Coupe with sun roof)
- (R8) : Automatic seat belt front limit switch (For U.S.A.)

SEL502L

## Door Harness L.H.

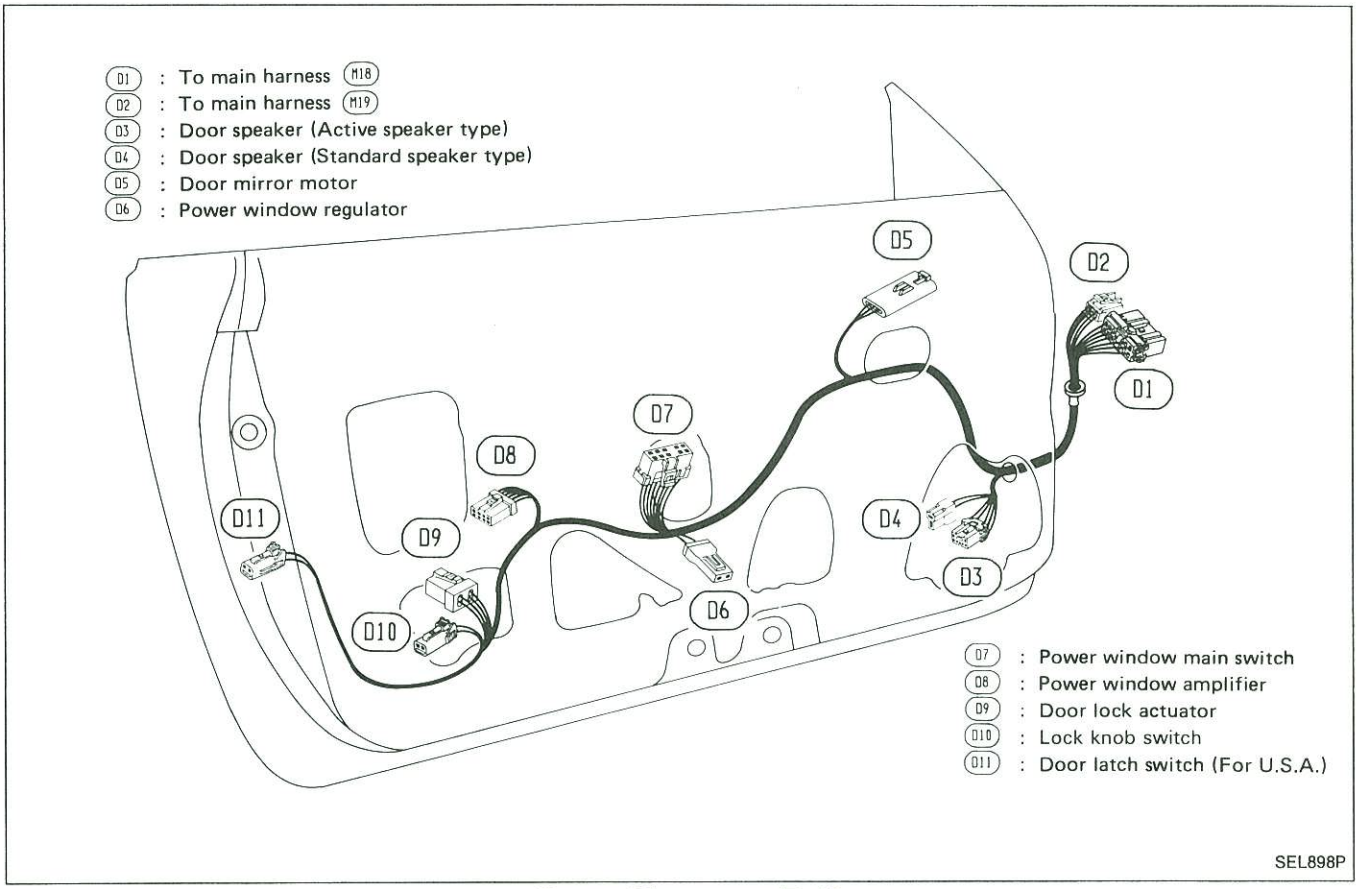


SEL898P

## Door Harness R.H.

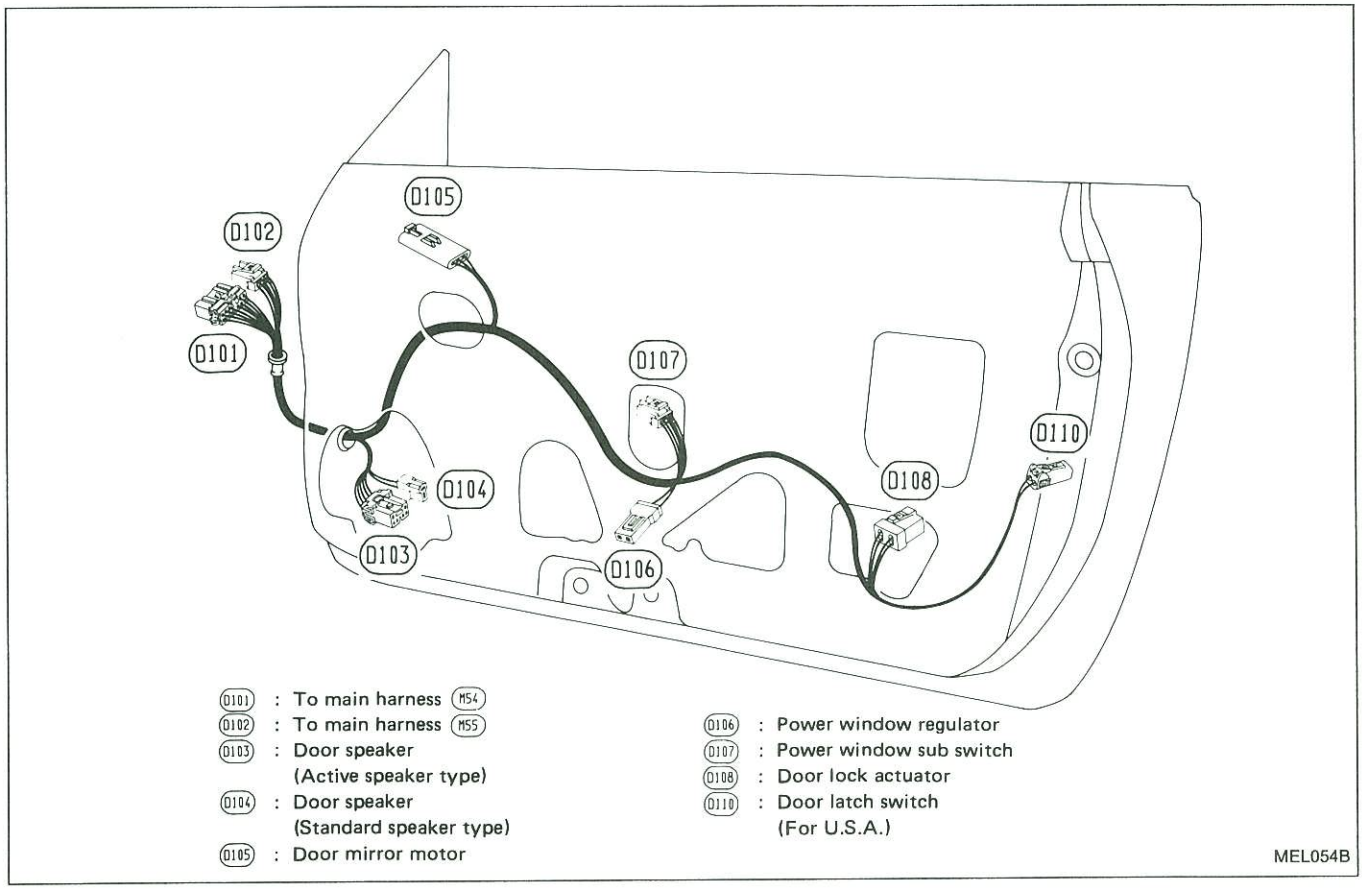


MEL054B

## Disconnecting and Connecting

- S.M.J. is located on left side of dash.
- To disconnect S.M.J., loosen fixing bolt.

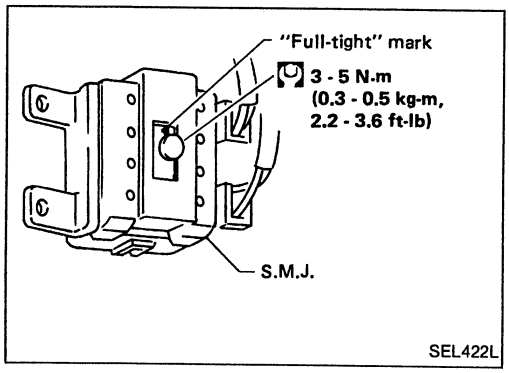


- To install S.M.J., tighten bolts until orange "full-tight" mark appears and then retighten to specified torque as required.
  **: 3 - 5 N·m**
  **(0.3 - 0.5 kg-m, 2.2 - 3.6 ft-lb)**

**CAUTION:**
**Do not overtighten bolts, otherwise, they may be damaged.**

## Terminal Arrangement

MAIN HARNESS

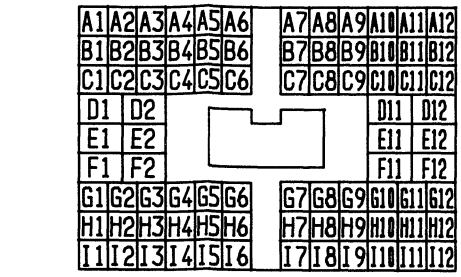


T.S.

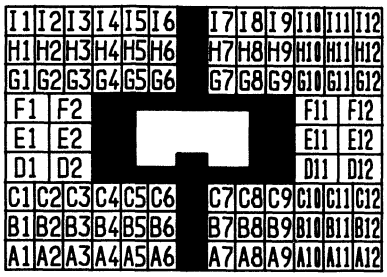


ENGINE ROOM HARNESS

### ECM (ECCS CONTROL MODULE)

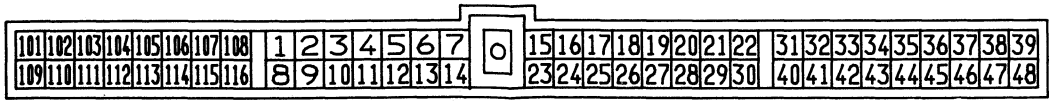


H.S.

View from harness side

### A/T CONTROL UNIT

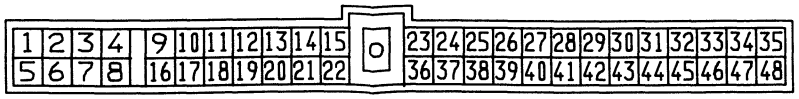


H.S.

View from harness side

MEL730B

# 1993 NISSAN 240SX
# ECCS WIRING DIAGRAM

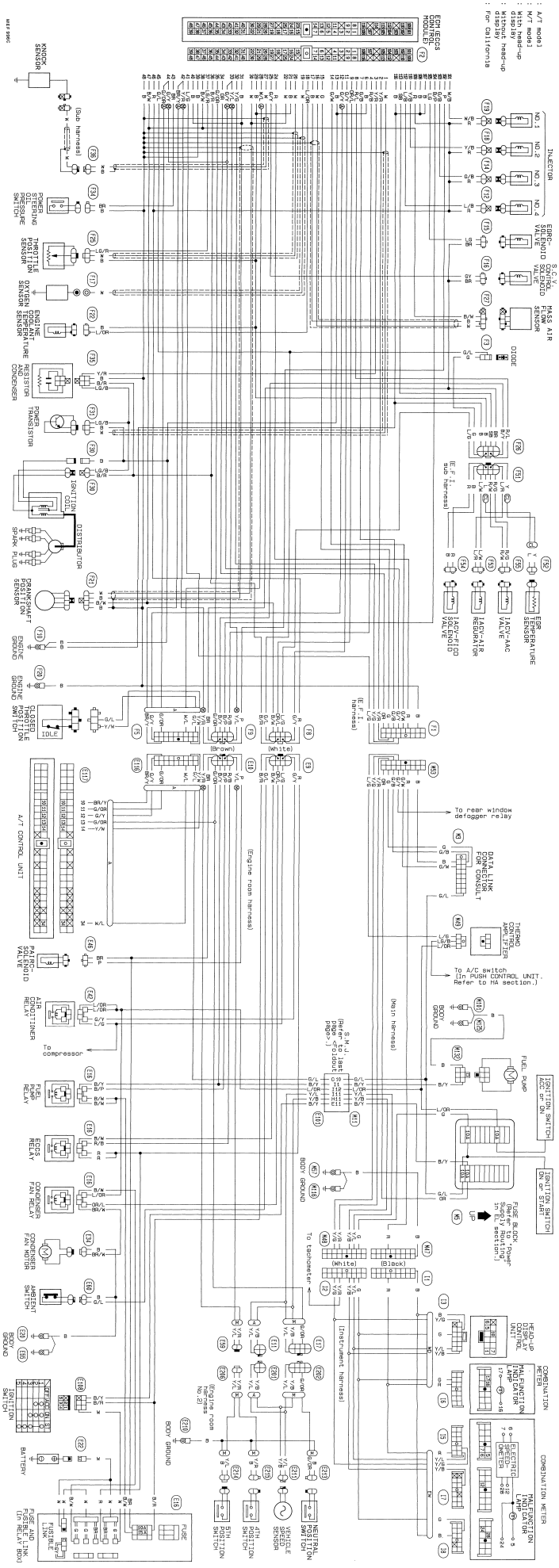

# 1993 NISSAN 240SX
# CIRCUIT DIAGRAM

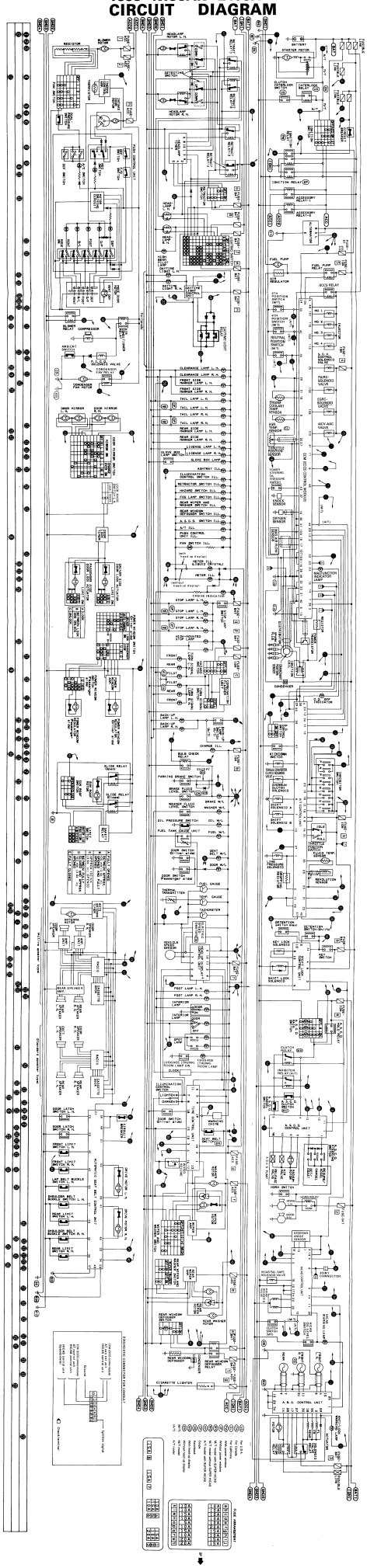

# INCH TO METRIC CONVERSION TABLE

(Rounded-off for automotive use)

| inches | mm | inches | mm |
|---|---|---|---|
| .100 | 2.54 | .610 | 15.49 |
| .110 | 2.79 | .620 | 15.75 |
| .120 | 3.05 | .630 | 16.00 |
| .130 | 3.30 | .640 | 16.26 |
| .140 | 3.56 | .650 | 16.51 |
| .150 | 3.81 | .660 | 16.76 |
| .160 | 4.06 | .670 | 17.02 |
| .170 | 4.32 | .680 | 17.27 |
| .180 | 4.57 | .690 | 17.53 |
| .190 | 4.83 | .700 | 17.78 |
| .200 | 5.08 | .710 | 18.03 |
| .210 | 5.33 | .720 | 18.29 |
| .220 | 5.59 | .730 | 18.54 |
| .230 | 5.84 | .740 | 18.80 |
| .240 | 6.10 | .750 | 19.05 |
| .250 | 6.35 | .760 | 19.30 |
| .260 | 6.60 | .770 | 19.56 |
| .270 | 6.86 | .780 | 19.81 |
| .280 | 7.11 | .790 | 20.07 |
| .290 | 7.37 | .800 | 20.32 |
| .300 | 7.62 | .810 | 20.57 |
| .310 | 7.87 | .820 | 20.83 |
| .320 | 8.13 | .830 | 21.08 |
| .330 | 8.38 | .840 | 21.34 |
| .340 | 8.64 | .850 | 21.59 |
| .350 | 8.89 | .860 | 21.84 |
| .360 | 9.14 | .870 | 22.10 |
| .370 | 9.40 | .880 | 22.35 |
| .380 | 9.65 | .890 | 22.61 |
| .390 | 9.91 | .900 | 22.86 |
| .400 | 10.16 | .910 | 23.11 |
| .410 | 10.41 | .920 | 23.37 |
| .420 | 10.67 | .930 | 23.62 |
| .430 | 10.92 | .940 | 23.88 |
| .440 | 11.18 | .950 | 24.11 |
| .450 | 11.43 | .960 | 24.38 |
| .460 | 11.68 | .970 | 24.64 |
| .470 | 11.94 | .980 | 24.89 |
| .480 | 12.19 | .990 | 25.15 |
| .490 | 12.45 | 1.000 | 25.40 |
| .500 | 12.70 | 2.000 | 50.80 |
| .510 | 12.95 | 3.000 | 76.20 |
| .520 | 13.21 | 4.000 | 101.60 |
| .530 | 13.46 | 5.000 | 127.00 |
| .540 | 13.72 | 6.000 | 152.40 |
| .550 | 13.97 | 7.000 | 177.80 |
| .560 | 14.22 | 8.000 | 203.20 |
| .570 | 14.48 | 9.000 | 228.60 |
| .580 | 14.73 | 10.000 | 254.00 |
| .590 | 14.99 | 20.000 | 508.00 |
| .600 | 15.24 | | |

# METRIC TO INCH CONVERSION TABLE

(Rounded-off for automotive use)

| mm | inches | mm | inches |
|---|---|---|---|
| 1 | .0394 | 51 | 2.008 |
| 2 | .079 | 52 | 2.047 |
| 3 | .118 | 53 | 2.087 |
| 4 | .157 | 54 | 2.126 |
| 5 | .197 | 55 | 2.165 |
| 6 | .236 | 56 | 2.205 |
| 7 | .276 | 57 | 2.244 |
| 8 | .315 | 58 | 2.283 |
| 9 | .354 | 59 | 2.323 |
| 10 | .394 | 60 | 2.362 |
| 11 | .433 | 61 | 2.402 |
| 12 | .472 | 62 | 2.441 |
| 13 | .512 | 63 | 2.480 |
| 14 | .551 | 64 | 2.520 |
| 15 | .591 | 65 | 2.559 |
| 16 | .630 | 66 | 2.598 |
| 17 | .669 | 67 | 2.638 |
| 18 | .709 | 68 | 2.677 |
| 19 | .748 | 69 | 2.717 |
| 20 | .787 | 70 | 2.756 |
| 21 | .827 | 71 | 2.795 |
| 22 | .866 | 72 | 2.835 |
| 23 | .906 | 73 | 2.874 |
| 24 | .945 | 74 | 2.913 |
| 25 | .984 | 75 | 2.953 |
| 26 | 1.024 | 76 | 2.992 |
| 27 | 1.063 | 77 | 3.031 |
| 28 | 1.102 | 78 | 3.071 |
| 29 | 1.142 | 79 | 3.110 |
| 30 | 1.181 | 80 | 3.150 |
| 31 | 1.220 | 81 | 3.189 |
| 32 | 1.260 | 82 | 3.228 |
| 33 | 1.299 | 83 | 3.268 |
| 34 | 1.339 | 84 | 3.307 |
| 35 | 1.378 | 85 | 3.346 |
| 36 | 1.417 | 86 | 3.386 |
| 37 | 1.457 | 87 | 3.425 |
| 38 | 1.496 | 88 | 3.465 |
| 39 | 1.535 | 89 | 3.504 |
| 40 | 1.575 | 90 | 3.543 |
| 41 | 1.614 | 91 | 3.583 |
| 42 | 1.654 | 92 | 3.622 |
| 43 | 1.693 | 93 | 3.661 |
| 44 | 1.732 | 94 | 3.701 |
| 45 | 1.772 | 95 | 3.740 |
| 46 | 1.811 | 96 | 3.780 |
| 47 | 1.850 | 97 | 3.819 |
| 48 | 1.890 | 98 | 3.858 |
| 49 | 1.929 | 99 | 3.898 |
| 50 | 1.969 | 100 | 3.937 |

# QUICK REFERENCE CHART : 240SX [ ] 1993

## ENGINE TUNE-UP DATA

| | | | |
|---|---|---|---|
| Engine model | | KA24DE | |
| Firing order | | 1-3-4-2 | |
| Idle speed rpm | | | |
| M/T | | 700±50 | |
| A/T (in "N" position) | | 700±50 | |
| Ignition timing (degree B.T.D.C. at idle speed) | | 20°±2° | |
| Idle "CO" (% at idle speed) | | idle mixture screw is preset and sealed at factory. | |
| Valve clearance (Hot) mm (in) | | | |
| Intake | | 0.31 - 0.39 (0.012 - 0.015) | |
| Exhaust | | 0.33 - 0.41 (0.013 - 0.016) | |
| High tension cable resistance kΩ | | Less than 30 | |
| Spark plug | Standard | BKR5E-11 | |
| Type | Cold | BKR6E-11 | |
| | | BKR7E-11 | |
| Gap mm (in) | | 1.0 - 1.1 (0.039 - 0.043) | |
| Drive belt deflection (Cold) mm (in) | | Used belt deflection | Deflection of new belt |
| | | Limit / Deflection after adjustment | |
| Alternator | | 11 (0.43) / 7 - 8 (0.28 - 0.31) | 6 - 7 (0.24 - 0.28) |
| Air conditioner compressor | | 12 (0.47) / 7.5 - 8.5 (0.295 - 0.335) | 6.5 - 7.5 (0.256 - 0.295) |
| Power steering pump | | | |
| with super HICAS | | 9 (0.35) / 6.5 - 7.5 (0.256 - 0.295) | 5.5 - 6.5 (0.217 - 0.256) |
| without super HICAS | | 13 (0.51) / 7.5 - 8.5 (0.295 - 0.335) | 6.5 - 7.5 (0.256 - 0.295) |
| Applied pressed force N (kg, lb) | | 98 (10, 22) | |
| Tightening torque | | N-m | kg-m / ft-lb |
| Spark plug | | 20 - 29 | 2.0 - 3.0 / 14 - 22 |
| Oil pan drain plug | | 29 - 39 | 3.0 - 4.0 / 22 - 29 |

## CLUTCH PEDAL

Unit: mm (in)

| | |
|---|---|
| Pedal height | 186 - 196 (7.32 - 7.72) |
| Pedal free play | 1 - 3 (0.04 - 0.12) |

## FRONT WHEEL ALIGNMENT (Unladen*)

| | | |
|---|---|---|
| Camber | degree | −1°30′ to 0° |
| Caster | degree | 6°00′ - 7°30′ |
| Toe-in | | |
| A– B | mm (in) | 0.3 - 2.3 (0.012 - 0.091) |
| Total angle 2θ | degree | 2′ - 13′ |
| Full turns | | |
| Inner wheel | | 39° - 43° |
| Outer wheel | | 33° |

* Fuel, radiator coolant and engine oil full.
Spare tire, jack, hand tools and mats in designated positions.

## REAR WHEEL ALIGNMENT (Unladen*)

| | | |
|---|---|---|
| Camber | degree | −1°36′ to −0°36′ |
| Toe-in | | |
| A–B | mm (in) | 0.5 - 4.5 (0.020 - 0.177) |
| Total angle 2θ | degree | 3′ - 25′ |

* Fuel, radiator coolant and engine oil full.
Spare tire, jack, hand tools and mats in designated positions.

## BRAKE

Unit: mm (in)

| | | |
|---|---|---|
| Disc brake | | |
| Pad repair limit | | 2.0 (0.079) |
| Rotor thickness repair limit | Front side | CL22VB: 18.0 (0.709), CL25VA: 20.0 (0.787)*3 |
| | Rear side | 8.0 (0.315) |
| Pedal free height | | |
| M/T model | | 177 - 187 (6.97 - 7.36) |
| A/T model | | 186 - 196 (7.32 - 7.72) |
| Pedal depressed height*1 | | 100 (3.94) or more |
| Parking brake Number of notches*2 | | 6 - 8 |

*1: Under force of 490 N (50 kg, 110 lb) with engine running
*2: At pulling force: 196 N (20 kg, 44 lb)
*3: Models with A.B.S.

## REFILL CAPACITIES

| Unit | | Liter | US measure |
|---|---|---|---|
| Engine model | | KA24DE | |
| Fuel tank | | 60 | 15-7/8 gal |
| Coolant | With reservoir tank | 6.7 | 7-1/8 qt |
| Engine | With oil filter | 3.5 | 3-3/4 qt |
| | Without oil filter | 3.2 | 3-3/8 qt |
| Transmission | M/T | 2.4 | 5-1/8 pt |
| | A/T | 8.3 | 8-3/4 qt |
| Differential carrier | R200 | 1.3 | 2-3/4 pt |
| | R200V | 1.5 | 3-1/8 pt |
| Power steering system | | 0.9 | 1 qt |
| Air conditioning system | Compressor oil | 0.236 | 8.0 fl oz |
| | Refrigerant | 0.8 - 0.9 kg | 1.8 - 2.0 lb |

NISSAN MOTOR CO., LTD.
Overseas Service Department
Tokyo, Japan

Edition: June 1992
Printing: June 1992 (09)
Publication No. SM3E-0S13U0
Printed in Japan