SECTION EM

ENGINE MECHANICAL

CONTENTS

ENGINE COMPONENTS

1 Rocker cover
2 Camshaft
3 Timing gear
4 Front cover
5 Oil pump
6 Piston
7 Connecting rod
8 Crankshaft
9 Oil pan
10 Flywheel
11 Thermostat
12 Cylinder block
13 Cylinder head
14 Valve mechanism

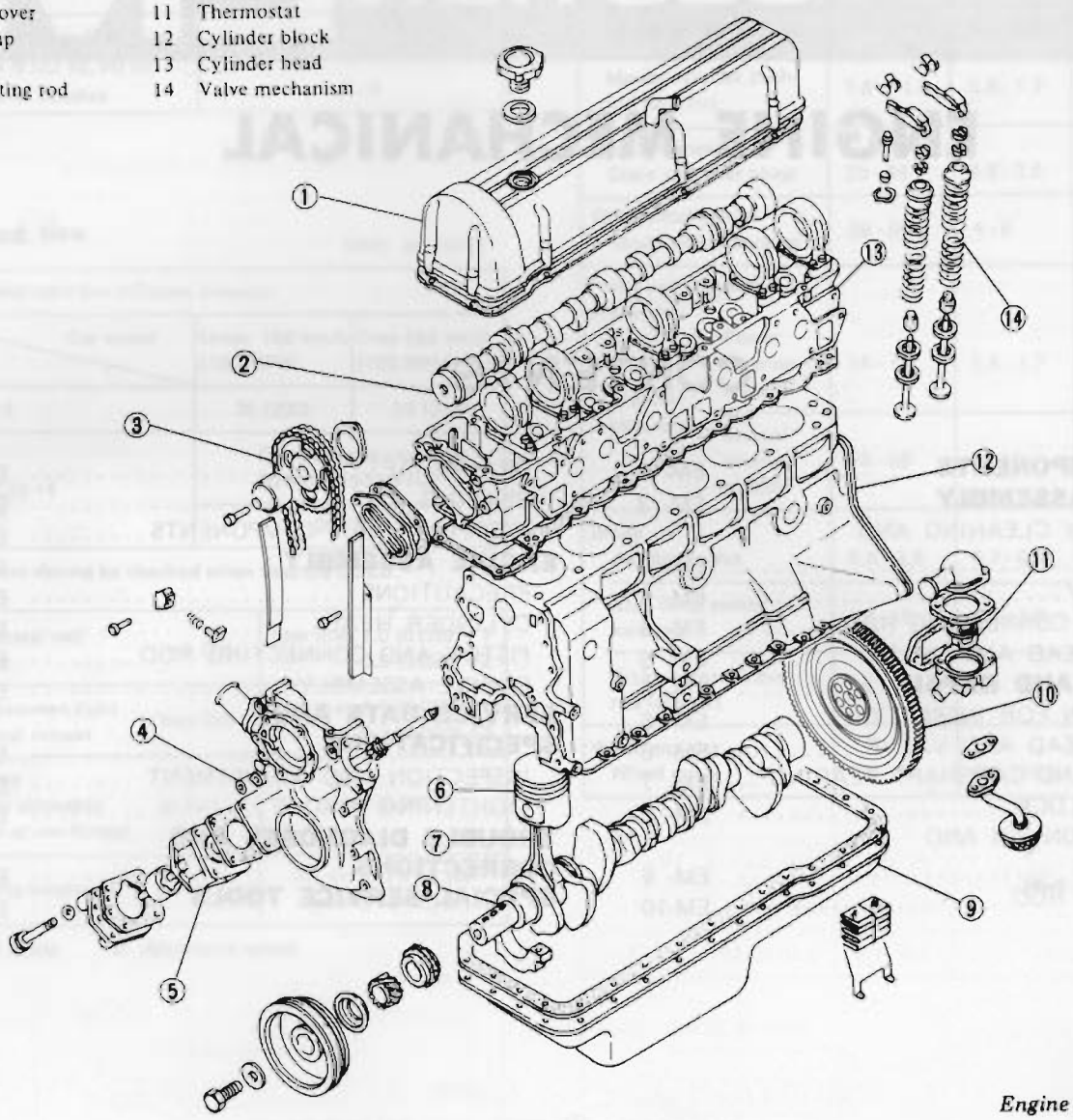

EM704

Engine Components

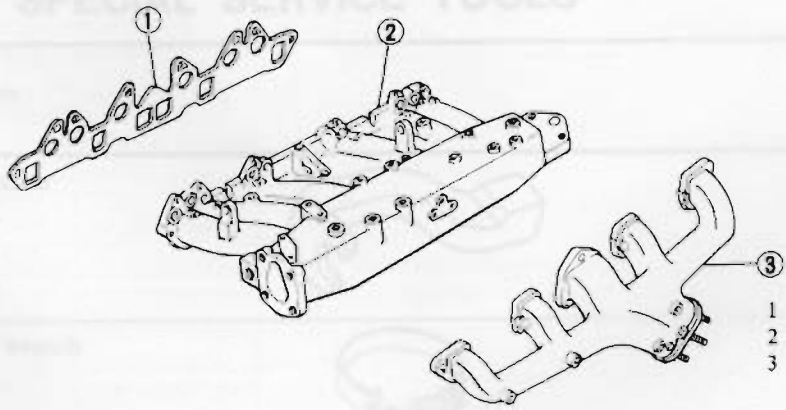

1 Manifold gasket
2 Exhaust manifold
3 Intake manifold

EM759

Manifold

ENGINE DISASSEMBLY

PRELIMINARY CLEANING AND INSPECTION

Before disassembling engine, observe the following items:

1. Prior to disassembling, check outer parts for sign of leak past their gasketed surfaces.
2. Check fuel hoses for deterioration, cracks or otherwise leakage of fuel past their jointed or connected surfaces.
3. Wipe dust and mud off engine.
4. Inspect outer parts for visual faults and broken or missing parts such as bolts and nuts.
5. Check piping and electrical circuits for deterioration, breakage, fittings, discontinuity or insulation.

DISASSEMBLY

To remove engine from car, refer to Section ER.

1. Remove starting motor and transmission from engine.
2. Remove clutch assembly, using Clutch Aligning Bar KV30100100 to support weight of clutch disc.
3. Remove auxiliary cooling fan assembly (if so equipped).
4. Remove alternator and alternator bracket.
5. Place engine assembly on the engine stand.

(1) Remove engine mounting bracket R.H.

(2) Remove oil filter using Oil Filter Wrench ST19320000.

(3) Install engine attachment to cylinder block using bolt holes securing alternator bracket and engine mounting.

(4) Remove oil pressure switch.

(5) Set engine on the stand.

Engine Attachment ST05340001
Engine Stand Assembly ST0501S000

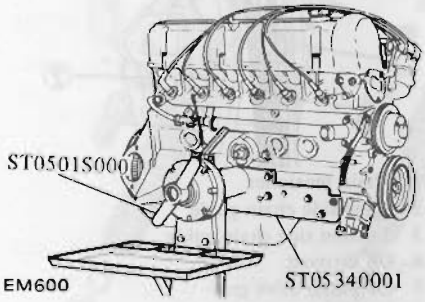

Engine on Engine Stand

6. Thoroughly drain engine oil and coolant by removing drain plugs.
7. Remove the following outer parts and electrical parts.
   - Distributor cap and high tension cable.
   - Distributor
   - Hose and pipe connected to engine
   - Fuel line
   - Intake manifold

Note: Remove intake manifold as an assembly of fuel pipe, injector, air regulator, etc. as follows:

a. **Disconnect hose connecting rocker cover to throttle chamber at rocker cover.**
b. **Disconnect water pipe connecting heater housing to water inlet at water inlet.**
   Remove bolt which secures water pipe and fuel pipe to cylinder head.
c. **Remove tube connecting heater housing to thermostat housing.**
d. **Remove bolt which secures intake manifold to cylinder head and remove intake manifold as an assembly.**
e. **Remove P.C.V. valve hose, sub heat shield plate and E.G.R. tube (if so equipped).**

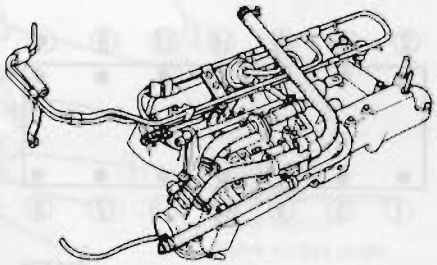

Intake Manifold Assembly

- Exhaust manifold
- Thermostat housing
- Crank pulley using Puller Crank Pulley ST16540000.

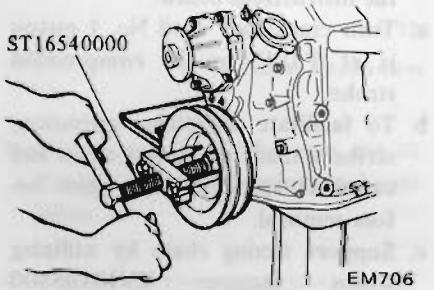

Removing Crank Pulley

- Water pump
- Oil pump and oil pump drive spindle.
- Rocker cover
- Oil level gauge
- Spark plugs, etc.

8. Remove cylinder head assembly.

(1) Remove camshaft sprocket and slowly lower timing chain.

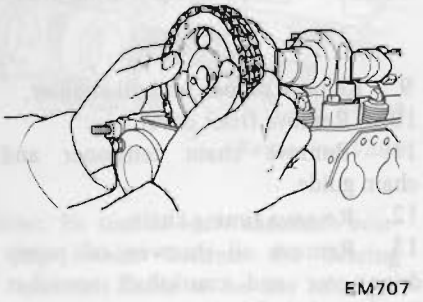

Removing Camshaft Sprocket

(2) Loosen cylinder head bolts in the sequence using Cylinder Head Bolt Wrench ST10120000.

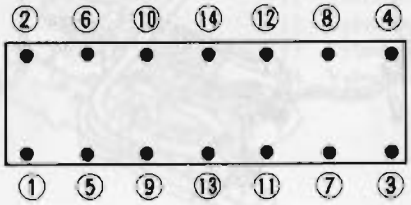

EM708

Cylinder Head Bolt Loosening Sequence

(3) Remove bolts securing cylinder head to front cover.

Note: When removing cylinder head from engine installed on car, follow the instructions below.

a. Turn crankshaft until No. 1 piston is at T.D.C. on its compression stroke.
b. To facilitate assembling operation, scribe a mark on timing chain and camshaft sprocket with paint before removal.
c. Support timing chain by utilizing Chain Stopper KV10105800 (ST17420001) between timing chains.

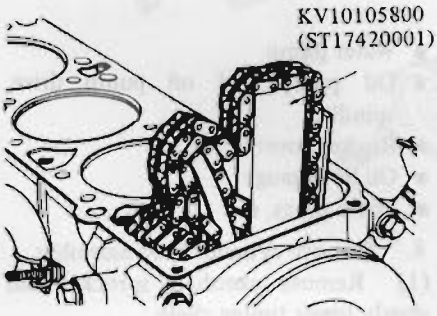

SEM132

Supporting Timing Chain

9. Remove oil pan and oil strainer.
10. Remove front cover.
11. Remove chain tensioner and chain guide.
12. Remove timing chain.
13. Remove oil thrower, oil pump drive gear and crankshaft sprocket from crankshaft.

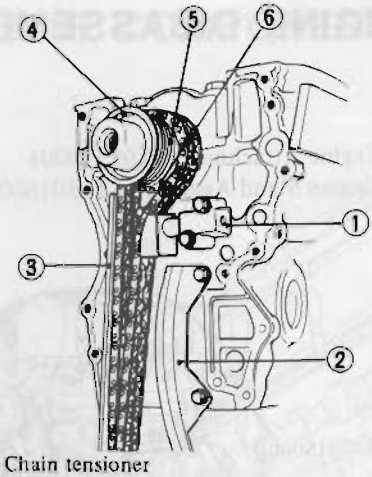

1 Chain tensioner
2 Slack side chain guide
3 Tension side chain guide
4 Oil thrower
5 Oil pump drive gear
6 Crankshaft sprocket

EM709

Removing Chain Tensioner and Timing Chain

Note: If it is hard to extract crankshaft sprocket, use a suitable puller.

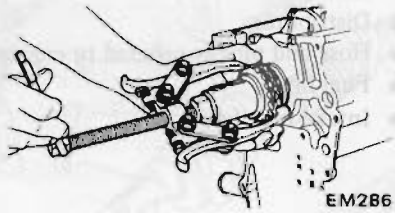

EM286

Removing Crankshaft Sprocket

14. Remove piston and connecting rod assembly.

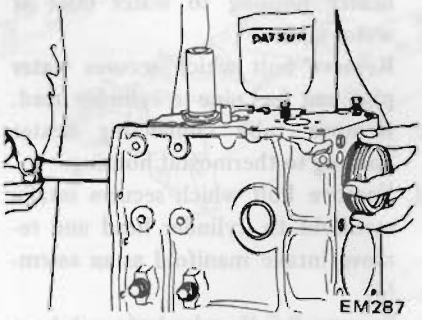

EM287

Removing Piston and Connecting Rod Assembly

Note: Numbers are stamped on connecting rod and cap corresponding to each cylinder. Care should be taken to avoid wrong combination including bearing.

15. Remove crankshaft.

(1) Remove flywheel and end plate.

WARNING:
When removing flywheel, be careful not to drop it.

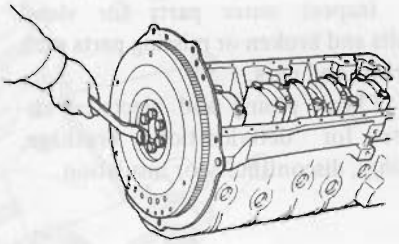

EM710

Removing Flywheel

(2) Remove main bearing cap.

Note:

a. When loosening main bearing cap bolt, loosen from outside in sequence.
b. Use Crankshaft Main Bearing Cap Puller KV10104150 to remove center and rear main bearing caps. Keep them in order.

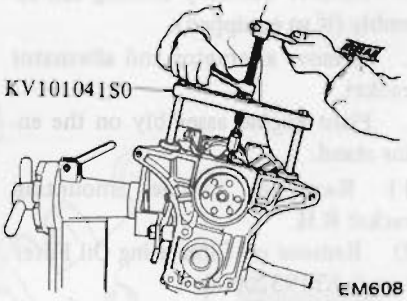

EM608

Removing Rear Main Bearing Cap

(3) Remove rear oil seal.
(4) Remove crankshaft.

16. Remove baffle plate and steel net.

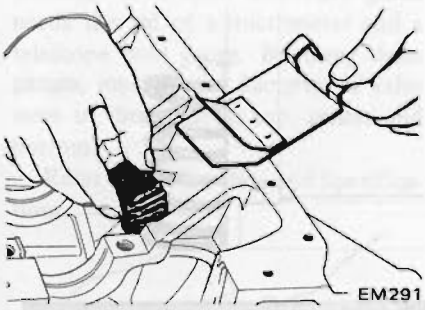

Removing Baffle Plate and Net

PISTON AND CONNECTING ROD

1. Remove piston rings with a ring remover.

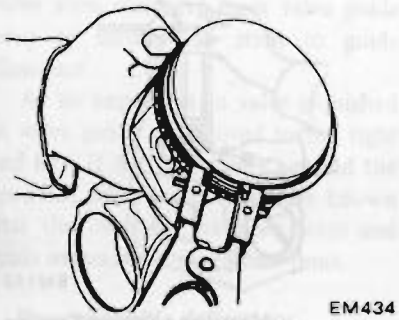

Removing Piston Rings

2. Press piston pin out. Using press and Piston Pin Press Stand ST13030001.

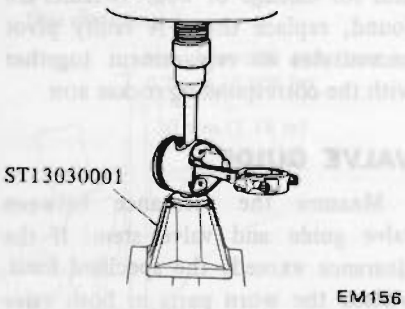

Removing Piston Pin

Note: Keep the disassembled parts in order.

CYLINDER HEAD AND VALVE

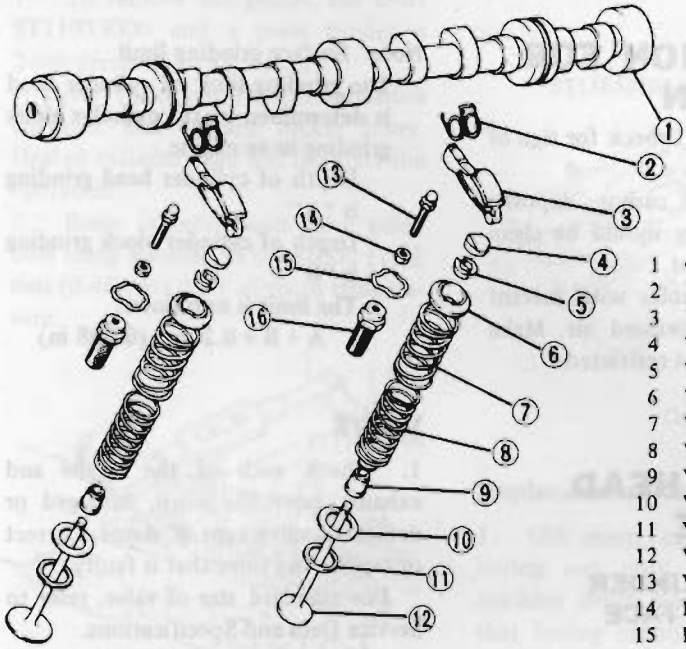

1 Camshaft
2 Valve rocker spring
3 Valve rocker
4 Valve rocker guide
5 Valve spring collet
6 Valve spring retainer
7 Valve outer spring
8 Valve inner spring
9 Valve oil seal
10 Valve outer spring seat
11 Valve inner spring seat
12 Valve
13 Valve rocker pivot
14 Rocker pivot rock nut
15 Rocker spring retainer
16 Rocker pivot bushing

EM712

Valve Mechanism

1. Remove valve rocker spring.
2. Loosen valve rocker pivot lock nut and remove rocker arm by pressing down valve spring.

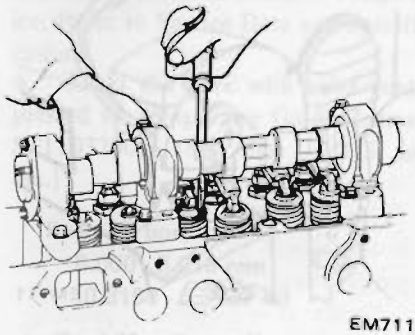

Removing Rocker Arm

3. Remove camshaft.

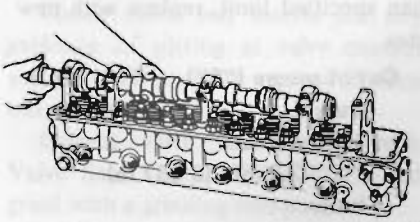

Removing Camshaft

Note: At this time, take care not to damage camshaft bearings and cam lobes.

4. Remove valve rocker pivot, rocker pivot lock nut and rocker spring retainer.

Note: Do not remove rocker pivot bushing.

5. Remove valves using Valve Lifter ST12070000.

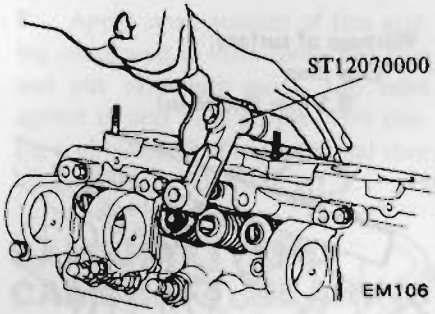

Removing Valve

Note: Be sure to leave camshaft bearing intact. Because the bearing center is liable to be out of alignment.

INSPECTION AND REPAIR

PREPARATION FOR INSPECTION

1. Before cleaning, check for sign of water and oil leaks.
2. Clean oil and carbon deposits from all parts. They should be clean from gasket or sealant.
3. Clean all oil holes with solvent and dry with compressed air. Make sure that they are not restricted.

CYLINDER HEAD AND VALVE

CHECKING CYLINDER HEAD MATING FACE

CAUTION:
Never remove camshaft bearings unless you have a suitable machine for boring camshaft bearing in line. If you once remove camshaft bearings, bearing centers will be out of alignment and reconditioning is very difficult without center borings.

1. Make a visual check for cracks and flaws.
2. Measure the surface of cylinder head (on cylinder block side) for warpage.

If beyond the specified limit, correct with a surface grinder.

Warpage of surface:
Less than
0.1 mm (0.004 in)

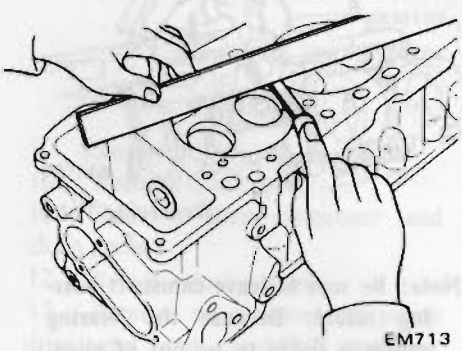

Measuring Cylinder Head Surface

Note: Surface grinding limit
The grinding limit of cylinder head is determined by the cylinder block grinding in an engine.
Depth of cylinder head grinding is "A"
Depth of cylinder block grinding is "B"
The limit is as follows:
A + B = 0.2 mm (0.008 in)

VALVE

1. Check each of the intake and exhaust valve for worn, damaged or deformed valve caps or stems. Correct or replace the valve that is faulty.

For standard size of valve, refer to Service Data and Specifications.

2. Valve face or valve stem end surface should be refaced by using a valve grinder.

Note: **When valve head has been worn down to 0.5 mm (0.020 in) in thickness, replace the valve.**
Grinding allowance for valve stem end surface is 0.5 mm (0.020 in) or less.

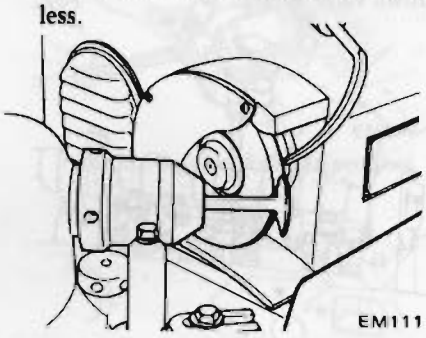

Regrinding Valve Face

VALVE SPRING

1. Check valve spring for squareness using a steel square and surface plate. If spring is out of square "S" more than specified limit, replace with new ones.

Out of square ("S")
Outer:
Less than
2.2 mm (0.087 in)
Inner:
Less than
1.2 mm (0.047 in)

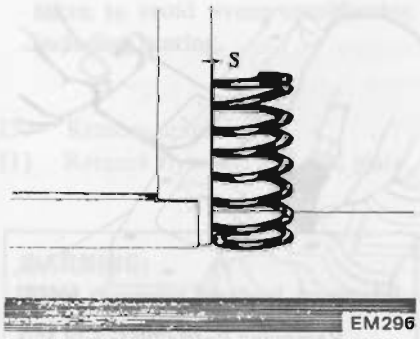

Measuring Spring Squareness

2. Measure the free length and the tension of each spring. If the measured value exceeds the specified limit, replace spring.

Refer to Service Data and Specifications.

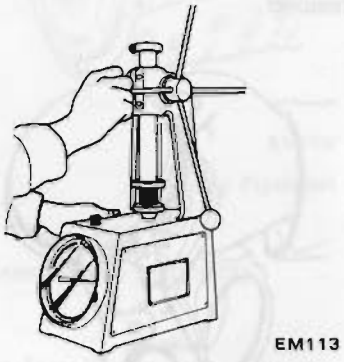

Measuring Spring Tension

ROCKER ARM AND VALVE ROCKER PIVOT

Check pivot head and cam contact and pivot contact surfaces of rocker arm for damage or wear. If faults are found, replace them. A faulty pivot necessitates its replacement together with the corresponding rocker arm.

VALVE GUIDE

Measure the clearance between valve guide and valve stem. If the clearance exceeds the specified limit, replace the worn parts or both valve and valve guide. In this case, it is essential to determine if such a clearance has been caused by a worn or bent valve stem or by a worn valve guide.

Determining clearance

Precise measurement of clearance between valve stem and valve guide needs the aid of a micrometer and a telescope hole gauge. By using these gauges, measure the diameter of valve stem in three places; top, center and bottom.

Refer to Service Data and Specifications.

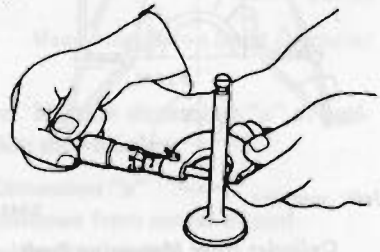

EM030

Measuring Valve Stem Diameter Diameter

Insert telescope hole gauge in valve guide bore, measuring at center.

Subtract the highest reading of valve stem diameter from valve guide bore to obtain the stem to guide clearance.

As an expedient, a valve is pushed in valve guide and moved to the right and left. If its tip deflects beyond the specified limit there, it will be known that the clearance between stem and guide exceeds the maximum limit.

Max. allowable deflection:
0.2 mm (0.008 in)
Max. tolerance:
Stem to guide clearance
0.1 mm (0.004 in)

Note: Valve should be moved in parallel with rocker arm. (Generally, a large amount of wear occurs in this direction.)

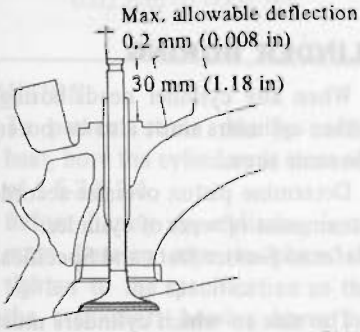

EM115

Measuring deflection between Valve Stem and Valve Guide

Replacement of valve guide

1. To remove old guides, use Drift ST11033000 and a press (under a 2-ton pressure) or a hammer.

Drive them out from combustion chamber side toward rocker cover. Heated cylinder head will facilitate the operation.

2. Ream cylinder head valve guide hole using Reamer ST11081000 [12.2 mm (0.480 in) dia.] at room temperature.

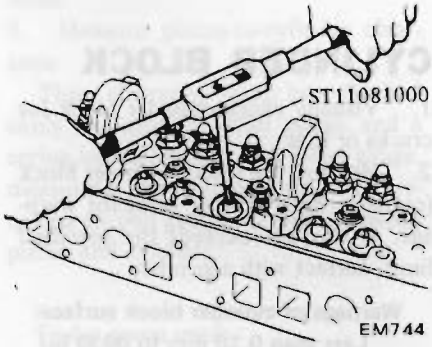

EM744

Reaming Valve Guide

3. Press new valve guide into head carefully so that it will fit smoothly after heating cylinder head to 150 to 200°C (302 to 392°F).

Valve guide of 0.2 mm (0.008 in) oversize diameter is available for service. Refer to Service Data and Specifications.

4. Ream the bore with valve guide pressed in, using Valve Guide Reamer ST11032000 [8.0 mm (0.315 in) dia.].

Reaming bore:
8.000 - 8.018 mm
(0.3150 - 0.3157 in)

5. Correct valve seat surface with new valve guide as the axis.

VALVE SEAT INSERTS

Check valve seat inserts for any evidence of pitting at valve contact surface, and reseat or replace if worn out excessively.

Correct valve seat surface with Valve Seat Cutter ST11650001 and grind with a grinding compound.

Valve seat insert of 0.5 mm (0.020 in) oversize is available for service.

Refer to Service Data and Specifications.

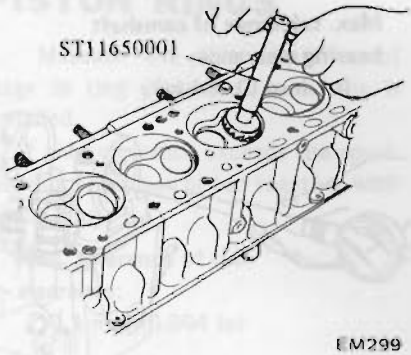

EM299

Correcting Valve Seat

Replacement valve seat insert

1. Old insert can be removed by boring out until it collapses. The machine depth stop should be set so that boring cannot continue beyond the bottom face of the insert recess in cylinder head.
2. Select a suitable valve seat insert and check its outside diameter.
3. Machine cylinder head recess to the concentric circles to valve guide center so that insert will have the correct fit.
4. Ream the cylinder head recess at room temperature.
5. Heat cylinder head to a temperature of 150 to 200°C (302 to 392°F).
6. Fit insert ensuring that it beds on the bottom face of its recess, and caulk more than 4 points.
7. Valve seats newly fitted should be cut or ground using Valve Seat Cutter ST11650001 at the specified dimensions as shown in Service Data and Specifications.
8. Apply small amount of fine grinding compound to valve contacting face and put valve into guide. Lap valve against its seat until proper valve seating is obtained. Remove valve and then clean valve and valve seat.

CAMSHAFT AND CAMSHAFT BEARING

CAMSHAFT BEARING CLEARANCE

Measure the inside diameter of camshaft bearing with an inside dial gauge and the outside diameter of camshaft

journal with a micrometer. If any malfunction is found, replace camshaft or cylinder head assembly.

Max. tolerance of camshaft bearing clearance:
0.1 mm (0.004 in)

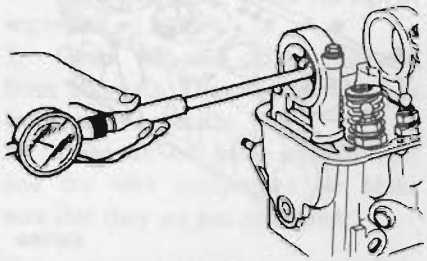

EM119
Measuring Camshaft Bearing

CAMSHAFT ALIGNMENT

1. Check camshaft, camshaft journal and cam surface for bend, wear or damage. If problems are beyond the limits, replace the parts.
2. Camshaft can be checked for bend by placing it on V-blocks and using a dial gauge with its indicating finger resting on center journal.

Camshaft bend
(Total indicator reading):
Less than 0.10 mm (0.0039 in)

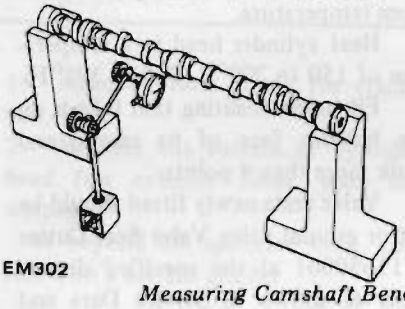

EM302
Measuring Camshaft Bend

3. Measure camshaft end play. If beyond the specified limit, replace locating plate.

Camshaft end play:
0.08 - 0.38 mm
(0.0031 - 0.0150 in)

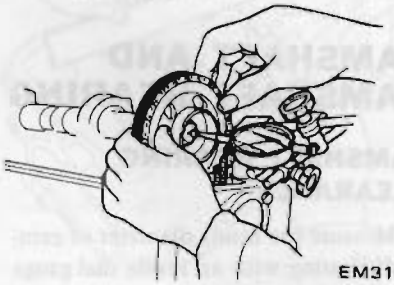

EM310
Measuring Camshaft End Play

4. Measure camshaft cam height. If beyond the specified limit, replace camshaft.

Refer to Service Data and Specifications.

VALVE TIMING

If any valve is found out of specifications (refer to Service Data and Specifications), one possibility is that cam lobe is worn or damaged, calling for replacement of camshaft.

CYLINDER BLOCK

1. Visually check cylinder block for cracks or flaws.
2. Measure the top of cylinder block (cylinder head mating face) for warpage. If warpage exceeds the specified limit, correct with a grinder.

Warpage of cylinder block surface:
Less than 0.10 mm (0.0039 in)

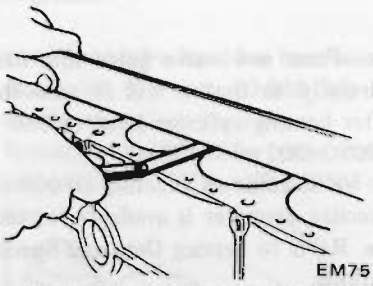

EM751
Measuring Cylinder Block Surface

Note: Surface grinding limit;
The grinding limit of cylinder block is determined by the cylinder head grinding in an engine.
Depth of cylinder head grinding is "A"
Depth of cylinder block grinding is "B"
The limit is as follows:
A + B = 0.2 mm (0.008 in)

3. Using a bore gauge, measure cylinder bore for out-of-round or taper. If, out-of-round or taper is excessive, rebore the cylinder walls by means of a boring machine. Measurement should be taken along bores for taper and around bores for out-of-round.

Refer to Service Data and Specifications.

Out-of-round X-Y
Taper A-B

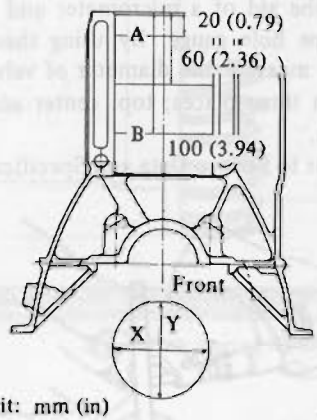

Unit: mm (in)

EM125
Cylinder Bore Measuring Positions

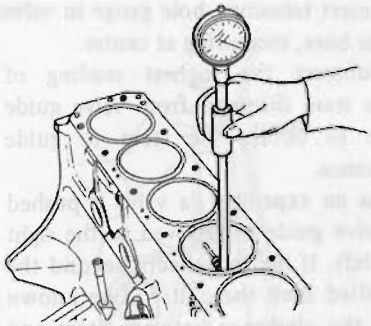

EM304
Measuring Cylinder Bore Diameter

4. When wear, taper or out-of-round is minor and within the limit, remove the step at the topmost portion of cylinder using a ridge reamer or other similar tool.

CYLINDER BORING

1. When any cylinder needs boring, all other cylinders must also be bored at the same time.
2. Determine piston oversize according to amount of wear of cylinder.

Refer to Service Data and Specifications.

3. The size to which cylinders must be honed is determined by adding piston-to-cylinder clearance to the piston skirt diameter "A".

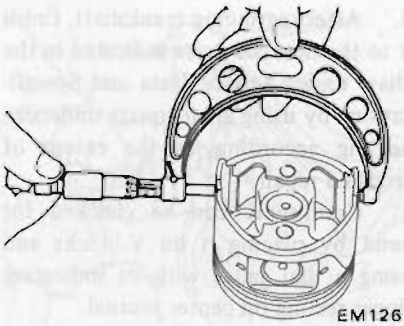

Measuring Piston Skirt Diameter

Note: Measure dimension "a" at position shown below.

Dimension "a"
(distance from center of pin):
Approximately
20 mm (0.79 in)

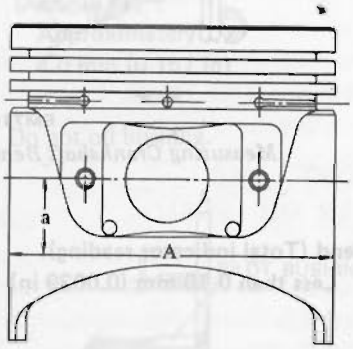

Measuring Position of Piston Skirt Diameter

Rebored size calculation

D = A + B − C = A + [0.005 to 0.025 mm (0.0002 to 0.0010 in)]

where,

D : Honed diameter
A : Skirt diameter as measured
B : Piston-to-wall clearance
C : Machining allowance 0.02 mm (0.0008 in)

CAUTION:

a. To prevent strain due to cutting heat, bore the cylinders in the order of 1-5-3-6-2-4.

b. Before boring any cylinder, install main bearing caps in place and tighten to the specification so that the crankshaft bearing bores will not become distorted from the boring operation.

4. Do not cut too much out of cylinder bore at a time. Cut only 0.05 mm (0.0020 in) or so in diameter at a time.

5. Measurement of a just machined cylinder bore requires utmost care since it is expanded by cutting heat.

6. As a final step, cylinders should be honed to size.

7. Measure the finished cylinder bore for out-of-round or tapered part.

Refer to Service Data and Specifications.

8. Measure piston-to-cylinder clearance.

This clearance can be checked easily by using a feeler gauge and a spring balance hooked on feeler gauge, measuring the amount of force required to pull gauge out from between piston and cylinder.

Feeler gauge used:
0.04 mm (0.0016 in)
Extracting force:
2.0 - 14.7 N
(0.2 - 1.5 kg,
0.4 - 3.3 lb)

Note:

a. When measuring clearance, slowly pull feeler gauge straight upward.

b. It is recommended that piston and cylinder be heated to 20°C (68°F).

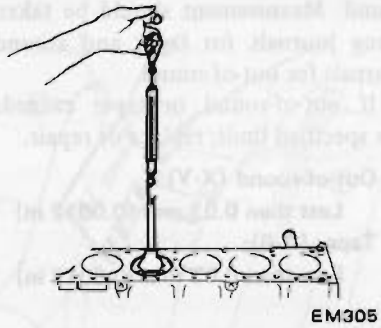

Measuring Piston Fit in Cylinder

Note: If cylinder bore has worn beyond the wear limit, use-cylinder liner.

Undersize cylinder liners are available for service.

Interference fit of cylinder liner in cylinder block should be 0.08 to 0.09 mm (0.0031 to 0.0035 in).

PISTON, PISTON PIN AND PISTON RINGS

1. Measure the side clearance of rings in ring grooves as each ring is installed.

If side clearance exceeds the specified limit, replace piston together with piston ring.

Max. tolerance of side clearance:
0.1 mm (0.004 in)

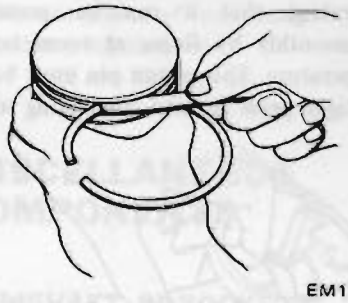

Measuring Piston Ring Side Clearance

2. Measure ring gap with a feeler gauge, placing ring squarely in cylinder.

Ring should be placed to diameter at upper or lower limit of ring travel.

If ring gap exceeds the specified limit, replace ring.

Max. tolerance of ring gap:
1.0 mm (0.039 in)

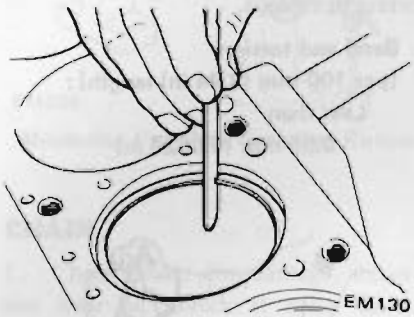

Measuring Ring Gap

Note:

a. When piston ring only is to be replaced, without cylinder bore being corrected, measure the gap at the bottom of cylinder where the wear is minor.

b. **Oversize piston rings are available for service. [0.5 mm (0.020 in), 1.0 mm (0.039 in) oversize].**

3. Measure piston pin hole in relation to the outer diameter of pin. If wear exceeds the limit, replace such piston pin together with piston on which it is installed.

Piston pin to piston clearance:
0.006 - 0.013 mm
(0.0002 - 0.0005 in)

Note: Determine the fitting of piston pin into piston pin hole to such an extent that it can be pressed smoothly by finger at room temperature. This piston pin must be a tight press fit into connecting rod.

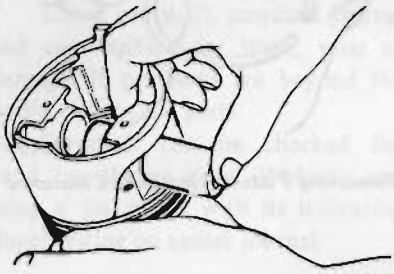

EM131

Piston Pin Fitting

CONNECTING ROD

1. Check connecting rod for bend or torsion using a connecting rod aligner. If bend or torsion exceeds the limit, correct or replace.

Bend and torsion
[per 100 mm (3.94 in) length]:
Less than
0.05 mm (0.0020 in)

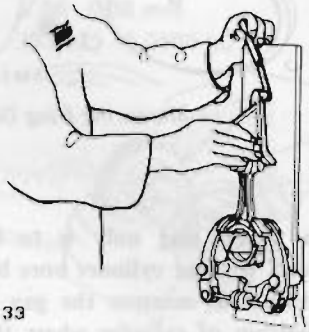

EM133

Measuring Rod Alignment

2. When replacing connecting rod, select rod so that weight difference between new and old ones is within 7 gr (0.25 oz).
3. Install connecting rods with bearings on to corresponding crank pins and measure the thrust clearance. If the measured value exceeds the limit, replace such connecting rod.

Max. tolerance of big end play:
0.6 mm (0.024 in)

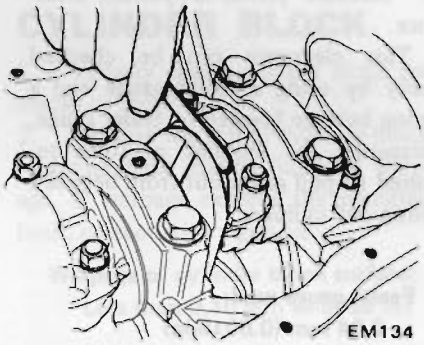

EM134

Measuring Big End Play

CRANKSHAFT

1. Repair or replace as required. If faults are minor, correct with fine crocus cloth.
2. Check with a micrometer journals and crank pins for taper and out-of-round. Measurement should be taken along journals for taper and around journals for out-of-round.

If out-of-round or taper exceeds the specified limit, replace or repair.

Out-of-round (X-Y):
Less than 0.03 mm (0.0012 in)
Taper (A-B):
Less than 0.03 mm (0.0012 in)

Out-of-round X-Y
Taper A-B

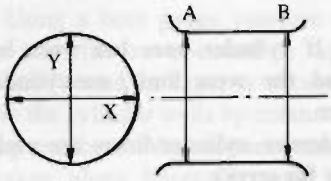

EM715

Measurement Point

3. After regrinding crankshaft, finish it to the necessary size indicated in the chart under Service Data and Specifications by using an adequate undersize bearing according to the extent of required repair.
4. Crankshaft can be checked for bend by placing it on V-blocks and using a dial gauge with its indicating finger resting on center journal.

If bend exceeds the specified limit, replace or repair.

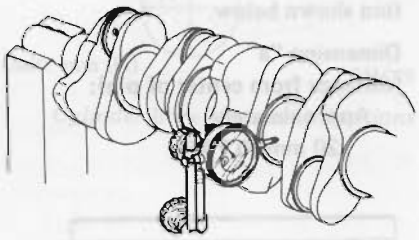

EM716

Measuring Crankshaft Bend

Bend (Total indicator reading):
Less than 0.10 mm (0.0039 in)

5. Measure crankshaft end play. If beyond the specified limit, replace main bearing.

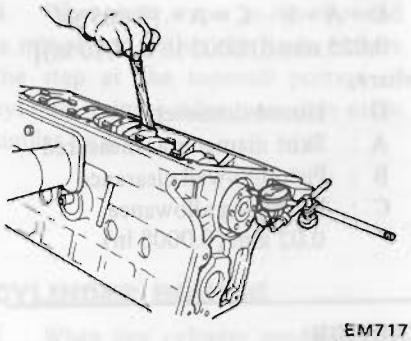

EM717

Measuring Crankshaft End Play

Max. tolerance of end play:
0.3 mm (0.012 in)

6. To replace crankshaft rear pilot bushing, proceed as follows:
(1) Pull out bushing using Pilot Bushing Puller ST16610001.

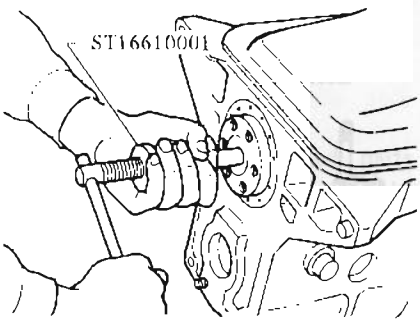

EM718

Pulling Out Pilot Bushing

(2) Before installing a new bushing, thoroughly clean bushing hole.

(3) Insert pilot bushing until distance between flange end and pilot bushing is the specified distance "A".

Distance "A":
Approximately
4.0 mm (0.157 in)

Do not oil bushing.

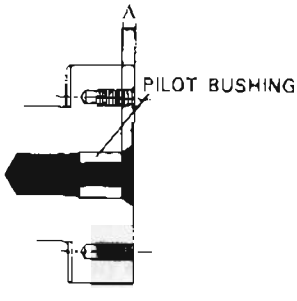

EM719

Installing Pilot Bushing

Note: When installing pilot bushing, be careful not to damage edge of pilot bushing and not to insert excessively.

BEARING

MEASUREMENT OF MAIN BEARING CLEARANCE

1. Thoroughly clean all bearings and check for scratches, melt, score or wear.

Replace bearings, if any fault is detected.

2. Crankshaft journals and bearings should be clean and free from dust and dirt before oil clearance is measured.
3. Set main bearing on cap block.
4. Cut a plastigage to the width of bearing and place it in parallel with crank journal, getting clear of the oil hole. Install cap on the assembly and tighten them together to the specified torque.

Ⓣ : Main bearing cap
44 - 54 N·m
(4.5 - 5.5 kg-m,
33 - 40 ft-lb)

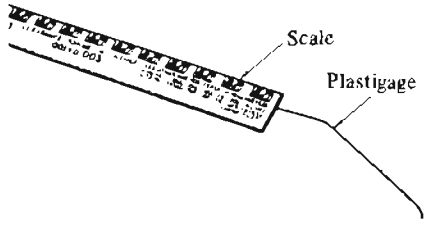

EM141

Fig. EM-49 Plastigage

Note: Do not turn crankshaft while the plastigage is being inserted.

5. Remove cap, and compare width of the plastigage at its widest part with the scale printed in the plastigage envelope.

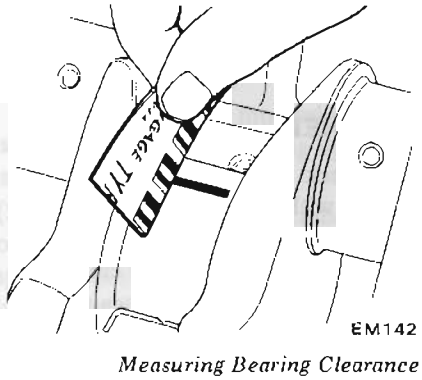

EM142

Measuring Bearing Clearance

6. If clearance exceeds the specified value, replace bearing with an undersize bearing and grind crankshaft journal adequately.

Max. tolerance of main bearing clearance:
0.12 mm (0.0047 in)

MEASUREMENT OF CONNECTING ROD BEARING

1. Measure connecting rod bearing clearance in the same manner as above.

Ⓣ : Connecting rod bearing cap
44 - 54 N·m
(4.5 - 5.5 kg-m,
33 - 40 ft-lb)

2. If clearance exceeds the specified value, replace bearing with an undersize bearing and grind the crankshaft journal adequately.

Max. tolerance of connecting rod bearing clearance:
0.12 mm (0.0047 in)

MISCELLANEOUS COMPONENTS

CAMSHAFT SPROCKET

Install camshaft sprocket in position and check for runout.

If runout exceeds the specified limit, replace camshaft sprocket.

Runout:
(Total indicator reading)
Less than 0.1 mm (0.004 in)

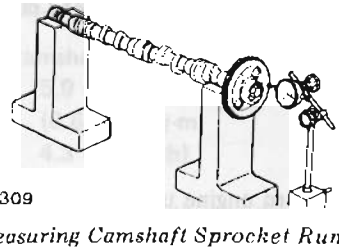

EM309

Measuring Camshaft Sprocket Runout

CHAIN

1. Check chain for damage, excessive wear or stretch at roller links. Replace if faulty.
2. To properly adjust chain tension (or valve timing), camshaft sprocket has a cam locating plate and three location holes (Nos. 1, 2 and 3).

Camshaft sprocket is preset at No. 1 hole at the factory. If chain becomes loose, adjust it by setting camshaft sprocket at No. 2 or No. 3 hole.

To check and adjust stretch of chain, proceed as follows:

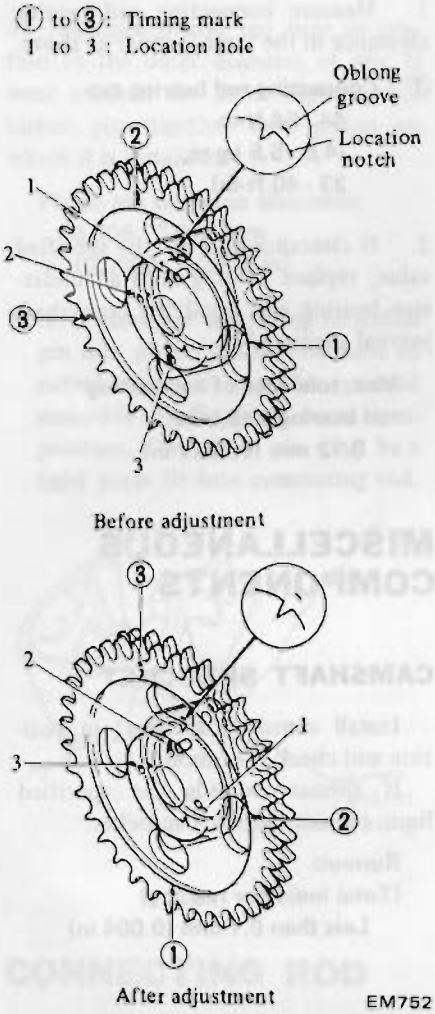

Adjusting Camshaft Sprocket Location

(1) Turn engine until No. 1 piston is at T.D.C. on its compression stroke. Determine whether camshaft sprocket location notch comes off the left end of the oblong groove on camshaft locating plate.

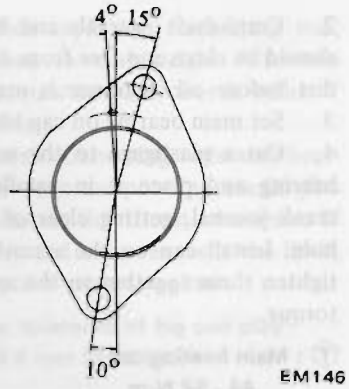

Camshaft Location Plate

(2) If the location notch is off the left end of the oblong groove, chain stretch is beyond limits and No. 2 location hole of camshaft sprocket is set on camshaft pin. This No. 2 notch should then be on the oblong groove. When No. 2 hole is used, No. 2 timing mark must also be used. The amount of the modification is a 4° rotation of crankshaft.

(3) If the valve timing cannot be corrected by using No. 2 hole, use No. 3 hole in the same procedure as above. The amount of modification by using No. 3 hole is an 8° rotation of crankshaft.

(4) When modification becomes impossible even by transferring camshaft location hole, replace chain assembly.

CHAIN TENSIONER AND CHAIN GUIDE

Check for wear and breakage. Replace if necessary.

FLYWHEEL

1. Check the clutch disc contact surface with flywheel for damage or wear. Repair or replace if necessary.
2. Measure runout of the clutch disc contact surface with a dial gauge. If it exceeds the specified limit, replace it.

Runout:
(Total indicator reading)
Less than 0.15 mm (0.0059 in)

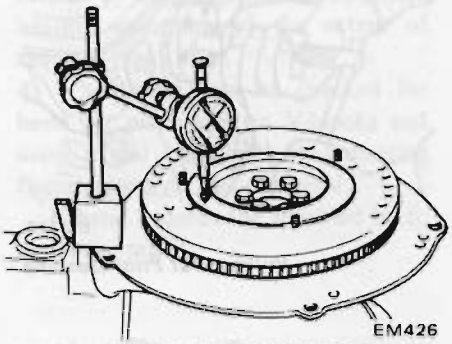

Measuring Flywheel Deviation

3. Check tooth surfaces of ring gear for flaws or wear.
   Replace if necessary.

Note: Replace ring gear at about 180 to 220°C (356 to 428°F).

FRONT AND REAR OIL SEAL

First check front and rear oil seals for worn or folded over sealing lip or oil leakage. If necessary, replace with a new seal. When installing a new seal, pay attention to its mounting direction.

Note: It is good practice to renew oil seal whenever engine is overhauled.

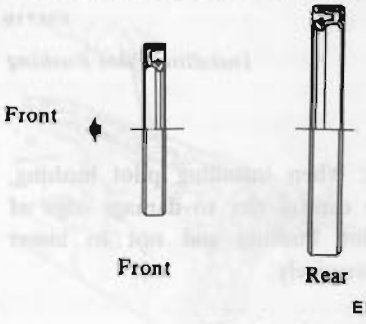

Oil Seal of Crankshaft

ENGINE ASSEMBLY

PRECAUTIONS

1. Use thoroughly cleaned parts. Particularly, make sure that oil holes are clear of foreign matter.
2. When installing sliding parts such as bearings, be sure to apply engine oil to them.
3. Use new packings and oil seals.
4. Do not reuse lock washers that have been removed.
5. Keep tools and work benches clean.
6. Keep the necessary parts and tools ready near at hand.
7. Be sure to follow specified tightening torque and order.
8. Applying sealant

Use sealant to eliminate water and oil leaks. Parts requiring sealant are:

(1) Front cover gasket: Front side of cylinder block and cover gasket.

(2) Front cover: Top of front cover.

(3) Main bearing cap and cylinder block: Each side of rear main bearing cap and each corner of cylinder block.

(4) Cylinder block: Step portions at four mating surfaces (cylinder block to front chain cover and cylinder block to rear main bearing cap).

Note: Do not apply sealant too much.

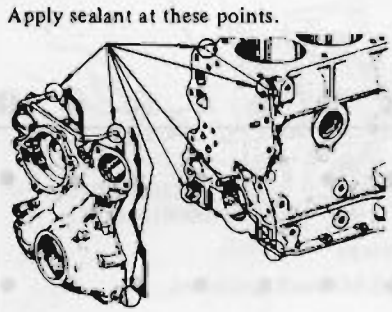

Applying Sealant (Front cover and gasket)

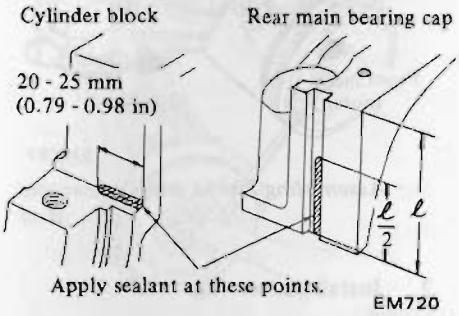

Applying Sealant (Main bearing cap and cylinder block)

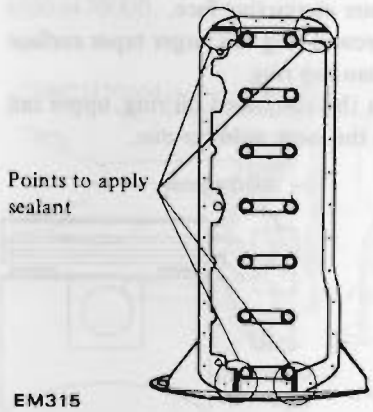

Applying Sealant (Cylinder block)

CYLINDER HEAD

1. To install valve, proceed as follows:

(1) Set valve spring inner and outer seat and valve oil seal.

Then insert valve into valve guide smoothly without scratching lip of oil seal.

(2) Install valve spring inner and outer, valve spring retainer, valve spring collet and valve rocker guide by using Valve Lifter ST12070000.

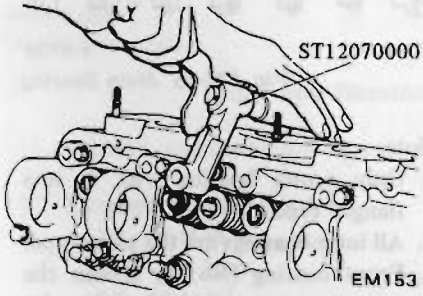

Installing Valve

Note:

a. Check whether the valve face is free from foreign matter.

b. Outer valve spring is of an uneven pitch type. Install valve spring with its narrow pitch side (painted) at cylinder head side.

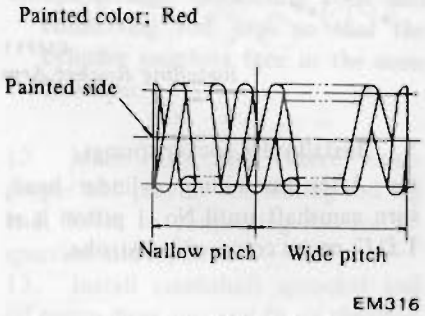

Installing Valve Spring

2. Valve rocker pivot assembly

Screw valve rocker pivots joined with lock nuts into pivot bushing.

Install valve rocker spring retainer.

Note: Fully screw in valve rocker pivot.

3. Camshaft assembly

Note:

a. Set locating plate and install camshaft in cylinder head carefully.

Ⓣ : Camshaft locating plate
5.9 - 9.8 N·m
(0.6 - 1.0 kg-m,
4.3 - 7.2 ft-lb)

b. Do not damage the bearing inside.

c. The oblong groove of locating plate must be directed toward the front side of engine.

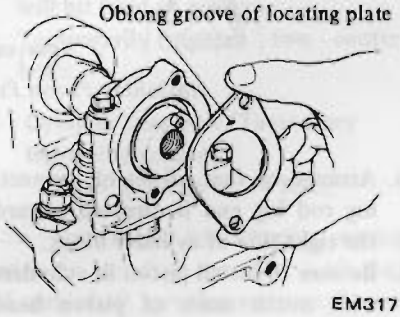

Installing Camshaft Locating Plate

4. Install rocker arms by pressing down valve springs with a screwdriver, etc.

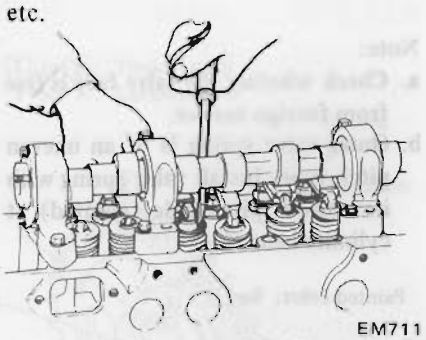

EM711

Installing Rocker Arm

5. Install valve rocker springs.
6. After assembling cylinder head, turn camshaft until No. 1 piston is at T.D.C. on its compression stroke.

PISTON AND CONNECTING ROD

1. Assemble pistons, piston pins and connecting rods on the designated cylinder.

Note:
a. Piston is pressed into connecting rod, and fitting force is from 4.9 to 14.7 KN (0.5 to 1.5 t, 0.6 to 1.7 US ton, 0.5 to 1.5 Imp ton) and the aid of Piston Pin Press Stand ST13030001 is necessary.
When pressing piston pin in connecting rod, apply engine oil to pin and small end of connecting rod.

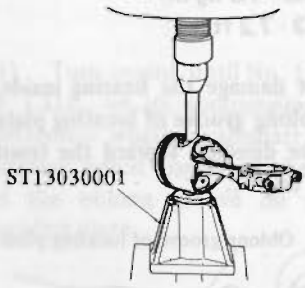

EM156

Installing Piston Pin

b. Arrange so that oil jet of connecting rod big end is directed toward the right side of cylinder block.
c. Be sure to install piston in cylinders with notch mark of piston head toward the front of engine.

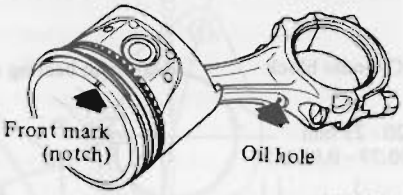

EM157

Assembling Piston and Connecting Rod

2. Install piston ring.

Note:
a. Install so that marks stamped on top and 2nd rings face upward.
b. Top ring is chromium-plated on liner contacting face.
c. Second ring has larger taper surface than top ring.
d. In the combined oil ring, upper rail is the same as lower one.

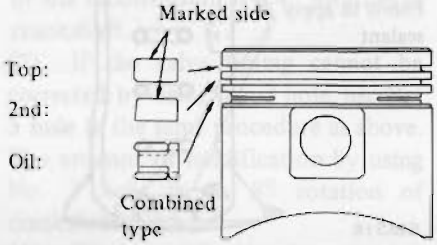

EM722

Installing Piston Ring

ENGINE ASSEMBLY

1. Install baffle plate including steel net.
2. Set main bearings at the proper portion of cylinder block.

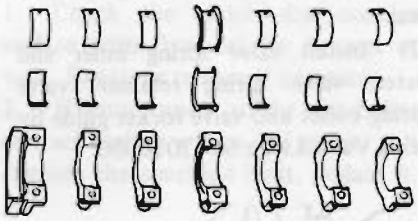

EM739

Fig. EM-66 Main Bearing

Note:
a. Only center bearing (No. 4) is a flanged type.
b. All inter-bearings are the same type.
c. Front bearing (No. 1) is also the same type as rear bearing (No. 7).

CAUTION:
Use care when installing main bearings. Side with oil groove should be at cylinder block side and side without oil groove should be at main cap side.

3. Apply engine oil to main bearing surfaces on both sides of cylinder block and cap.
Install crankshaft.
4. Install main bearing cap and tighten bolts to specified torque.

Ⓣ : **Main bearing cap**
44 - 54 N·m
(4.5 - 5.5 kg·m,
33 - 40 ft·lb)

Note:
a. Apply sealant to each side of rear main bearing cap and each corner of cylinder block.
b. Arrange the parts so that the arrow mark on bearing cap faces toward the front of engine.
c. Prior to tightening bearing cap bolts, place bearing cap in proper position by shifting crankshaft in the axial direction.
d. Tighten bearing cap bolts gradually in separating two to three stages and outwardly from center bearing in sequence.
e. After securing bearing cap bolts, ascertain that crankshaft turn smoothly.

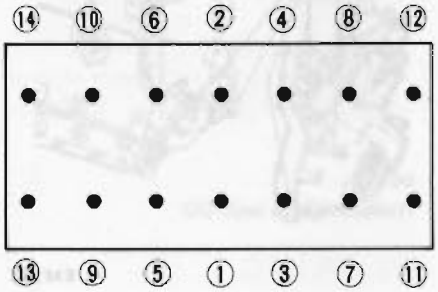

EM723

Torque Sequence of Cap Bolts

5. Install side oil seals into rear main bearing cap. Prior to installing, apply sealant to these seals.

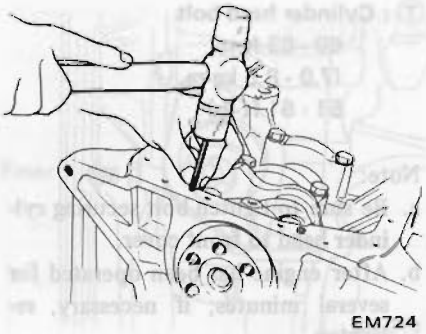

EM724

Driving Side Oil Seal

Note: Install oil seal with its core at bearing cap side.

6. Make sure that there exists proper end play at crankshaft.

Max. tolerance of end play: 0.3 mm (0.012 in)

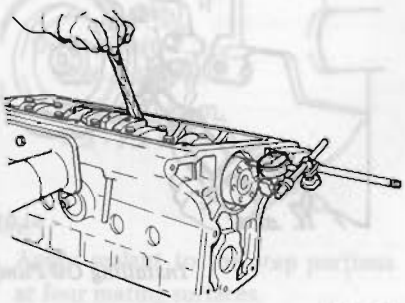

EM717

Checking Crankshaft End Play

7. Install rear oil seal using Crankshaft Rear Oil Seal Drift KV10105500 (ST15310000)

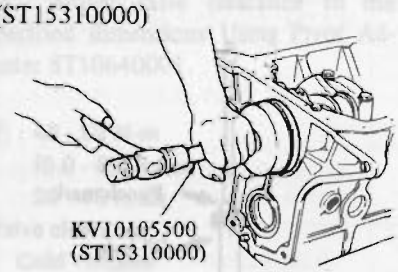

SEM133

Installing Rear Oil Seal

Note: When installing oil seal, give coating of engine oil to mating shaft to prevent scratches and folded lip. Also apply coating of oil to periphery of oil seal.

8. Install rear end plate.
9. Install flywheel securely, and tighten bolts to specified torque.

Ⓣ : Flywheel fixing bolts
127 - 147 N·m
(13.0 - 15.0 kg-m,
94 - 108 ft-lb)

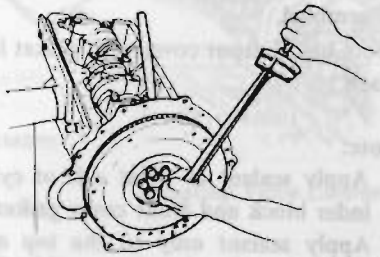

EM327

Installing Flywheel

10. Insert pistons in corresponding cylinder using Piston Ring Compressor EM03470000.

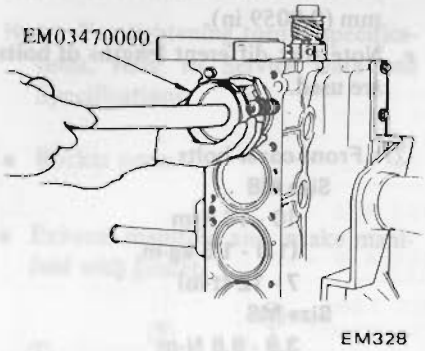

EM328

Installing Piston-Rod Assembly

Note:
a. **Apply engine oil to sliding parts.**
b. **Arrange so that the front mark on piston head faces to the front of engine.**
c. **Install piston ring as shown below.**

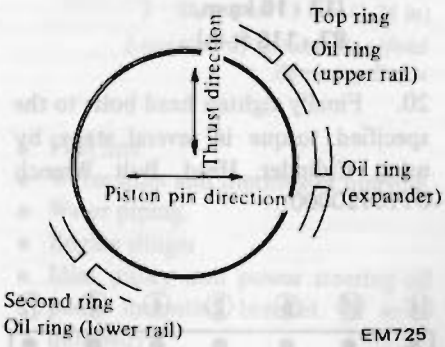

EM725

Piston Ring Direction

11. Install connecting rod caps.

Ⓣ : Connecting rod cap nut
44 - 54 N·m
(4.5 - 5.5 kg-m,
33 - 40 ft-lb)

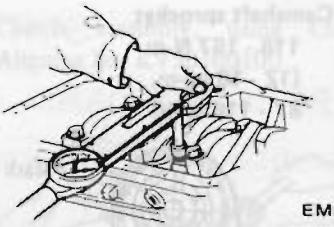

EM329

Installing Connecting Rod Cap

Note: Arrange connecting rods and connecting rod caps so that the cylinder numbers face in the same direction.

12. Make sure that there exists proper end play at connecting rod big end. Refer to connecting rod for inspection and repair.
13. Install crankshaft sprocket and oil pump dirve gear and fit oil thrower.

Note:
a. **Make sure that the mating marks of crankshaft sprocket faces to the front.**
b. **Install oil pump drive gear so that large chamfered inner side faces rearward.**

14. Install cylinder head assembly through gasket by accommodating knock pin of cylinder block.

Note:
a. **Thoroughly clean cylinder block and head surface.**
Do not apply sealant to any other part of cylinder block and head surface.
b. **Turn crankshaft until No. 1 piston is at T.D.C. on its compression stroke.**
c. **When installing cylinder head, make sure that all valves are apart from head of pistons.**
d. **Do not rotate crankshaft and camshaft separately, because valves will hit head of pistons.**
e. **Temporarily tighten two center bolts.**

Ⓣ : Cylinder head bolt (Temporary tightening torque)
20 N·m (2 kg-m, 14 ft-lb)

15. Set chain by aligning mating mark on camshaft sprocket with that of crankshaft sprocket and install camshaft sprocket to camshaft.

Ⓣ : **Camshaft sprocket**
118 - 157 N·m
(12 - 16 kg-m,
87 - 116 ft-lb)

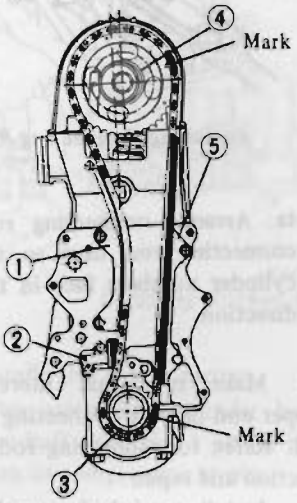

1 Chain guide (Slack side)
2 Chain tensioner
3 Crank sprocket
4 Cam sprocket
5 Chain guide (Tension side)

Installing Timing Chain

Note:

a. Set timing chain by making its mating marks align with those of crankshaft sprocket and camshaft sprocket the right hand side.

b. No. 1 hole is factory adjusted. When chain stretches excessively, adjust camshaft sprocket at No. 2 or No. 3 hole.
For adjustment, refer to Inspection and Repair of Chain.

16. Install chain guide and chain tensioner.

Ⓣ : **5.9 - 9.8 N·m**
(0.6 - 1.0 kg-m,
4.3 - 7.2 ft-lb)

Note: Adjust the protrusion of chain tensioner spindle to 0 mm (0 in) with slack side chain guide.

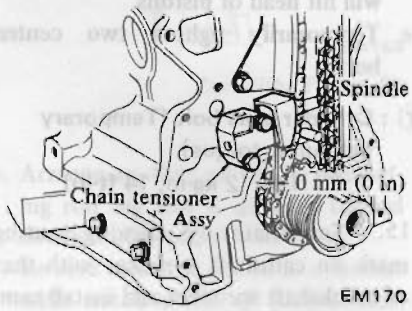

Installing Chain Tensioner

17. Press new oil seal in front cover.

Note: Front cover oil seal should be replaced when front cover is disassembled.

18. Install front cover with gasket in place.

Note:

a. Apply sealant to front side of cylinder block and front cover gasket.

b. Apply sealant only to the top of front cover.

c. Install front cover with head gasket in place.

d. Check the height difference between cylinder block upper face and front cover upper face. Its difference must be less than 0.15 mm (0.0059 in).

e. Note that different lengths of bolts are used.

Ⓣ : **Front cover bolts**
Size M8
10 - 16 N·m
(1.0 - 1.6 kg-m,
7 - 12 ft-lb)
Size M6
3.9 - 9.8 N·m
(0.4 - 1.0 kg-m,
2.9 - 7.2 ft-lb)

19. Install crankshaft pulley and water pump.

Ⓣ : **Crankshaft pulley nut**
118 - 157 N·m
(12 - 16 kg-m,
87 - 116 ft-lb)

20. Finally tighten head bolts to the specified torque in several steps, by using Cylinder Head Bolt Wrench ST10120000.

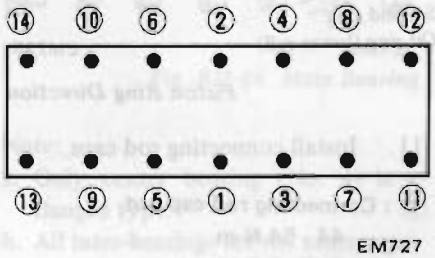

Tightening Sequence

Ⓣ : **Cylinder head bolt**
69 - 83 N·m
(7.0 - 8.5 kg-m,
51 - 61 ft-lb)

Note:

a. Be sure to tighten bolt securing cylinder head to front cover.

b. After engine has been operated for several minutes; if necessary, retighten.

21. Install oil pump and distributor driving spindle in front cover.

Ⓣ : **Oil pump bolts**
11 - 15 N·m
(1.1 - 1.5 kg-m,
8 - 11 ft-lb)

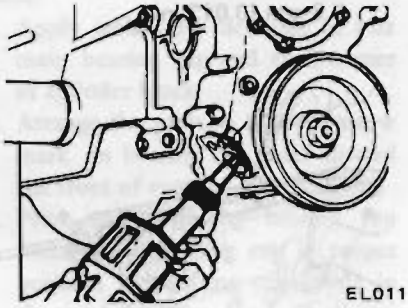

Installing Oil Pump

Note:

a. Assemble oil pump and drive spindle, aligning driving spindle face with oil pump hole.

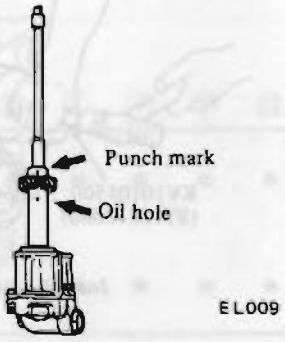

Setting Distributor Driving Spindle

b. Install oil pump together with drive spindle so that the projection on its top is located at the 11:25 a.m. position. At this point, the smaller bow-shape will be facing toward the front.

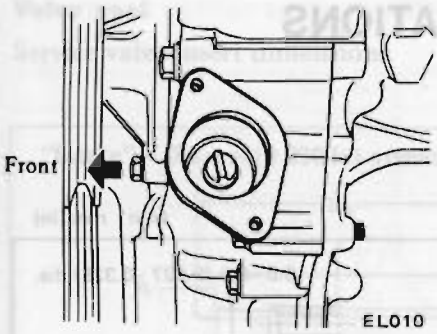

Setting Distributor Drive Spindle

c. Be sure to install gasket.

22. Install oil strainer and oil pan with gasket in place.

Ⓣ : **Oil strainer bolts**
10 - 16 N·m
(1.0 - 1.6 kg-m,
7 - 12 ft-lb)
Oil pan bolts
5.9 - 9.8 N·m
(0.6 - 1.0 kg-m,
4.3 - 7.2 ft-lb)

Note:
a. Apply sealant to the step portions at four mating surfaces.
b. Oil pan should be tightened in criss-cross pattern.

23. Adjust valve clearance to the specified dimensions Using Pivot Adjuster ST10640001.

Ⓣ : **49 - 59 N·m**
(5.0 - 6.0 kg-m,
36 - 43 ft-lb)
Valve clearance:
Cold - Intake
0.17 mm (0.007 in)*
Cold - Exhaust
0.24 mm (0.009 in)*
Hot - Intake
0.25 mm (0.010 in)
Hot - Exhaust
0.30 mm (0.012 in)

*: **Ambient temperature at 20°C (68°F)**

Note:
a. First set clearance to the cold specifications.

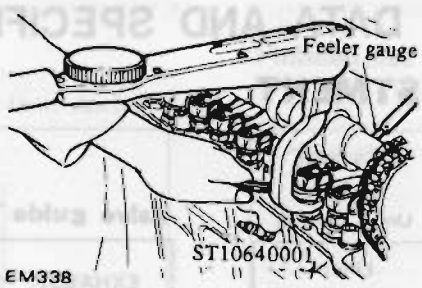

Adjusting Valve Clearance

b. After engine has been assembled, run it for at least several minutes, finally adjust the clearance to the hot specifications.

24. Install the following outer parts and electrical parts.

Note: For tightening torque specifications, refer to Service Data and Specifications.

- Rocker cover
- Exhaust manifold and intake manifold with gasket.

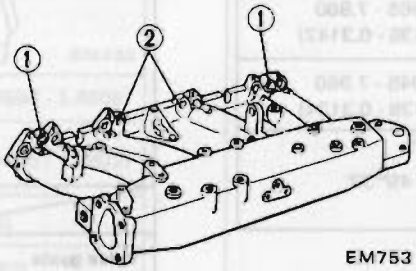

1 Long bolt 40 mm (1.57 in)
2 Short bolt 32 mm (1.26 in)

Location of Intake Manifold Securing Bolts

- Fuel line
- Water inlet and thermostat housing.
- Water piping.
- Engine slinger
- Idler pulley and power steering oil pump mounting bracket. (if so equipped)
- Idler pulley and air conditioning compressor mounting bracket. (if so equipped)
- Distributor
- High tension cable
- Engine mounting bracket L.H.
- Auxiliary cooling fan assembly (if so equipped)
- Clutch assembly, using Clutch Aligning Bar KV30100100

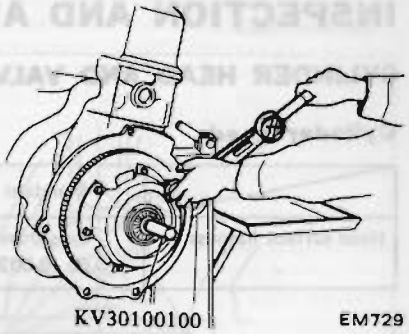

Installing Clutch Assembly

25. Using an overhead hoist and lifting cable, hoist engine away from engine stand and remove engine attachment.

26. Install alternator bracket adjusting bar, alternator, cooling fan and belt.

Be sure that belt deflection is held within specified range when moderate force is applied midway between pulleys.

Belt deflection:
8 - 12 mm
(0.31 - 0.47 in)
Pushing force:
98 N (10 kg, 22 lb)

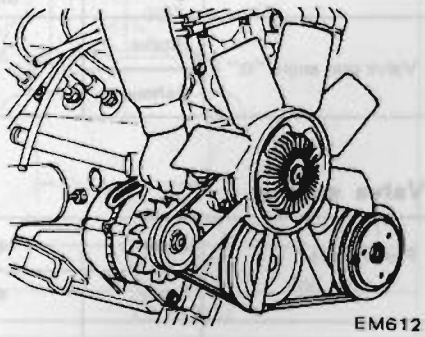

Fan Belt Tension

27. Install engine mounting bracket R.H., oil filter, oil pressure sending unit and oil level gauge. When installing oil filter, fasten it to cylinder block by hand.

Note: Do not overtighten filter, otherwise oil leakage may occur.

28. Fill engine oil up to specified level.

SERVICE DATA AND SPECIFICATIONS

INSPECTION AND ADJUSTMENT

CYLINDER HEAD AND VALVE

Cylinder head

Unit: mm (in)

	Standard	Limit
Head surface flatness	Less than 0.05 (0.0020)	0.1 (0.004)

Valve

Unit: mm (in)

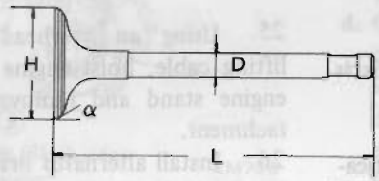

EM109

Valve head diameter "H"	Intake	44.0 (1.732)
	Exhaust	35.0 (1.378)
Valve length "L"	Intake	114.9 - 115.2 (4.52 - 4.54)
	Exhaust	115.7 - 116.0 (4.56 - 4.57)
Valve stem diameter "D"	Intake	7.965 - 7.980 (0.3136 - 0.3142)
	Exhaust	7.945 - 7.960 (0.3128 - 0.3134)
Valve seat angle "α"	Intake	45°30'
	Exhaust	

Valve spring

Free height mm (in)	Outer-	49.98 (1.9677)
	Inner-	44.85 (1.7657)
Pressure height mm/N (mm/kg, in/lb)	Outer-	29.5/480.5 (29.5/49.0, 1.161/108.0)
	Inner-	24.5/250.1 (24.5/25.5, 0.965/56.2)
Assembled height mm/N (mm/kg, in/lb)	Outer-	40.0/208.9 (40.0/21.3, 1.575/47.0)
	Inner-	35.0/120.6 (35.0/12.3, 1.378/27.1)
Out of square ("S") mm (in)	Outer-	2.2 (0.087)
	Inner-	1.2 (0.047)

Valve guide

Unit: mm (in)

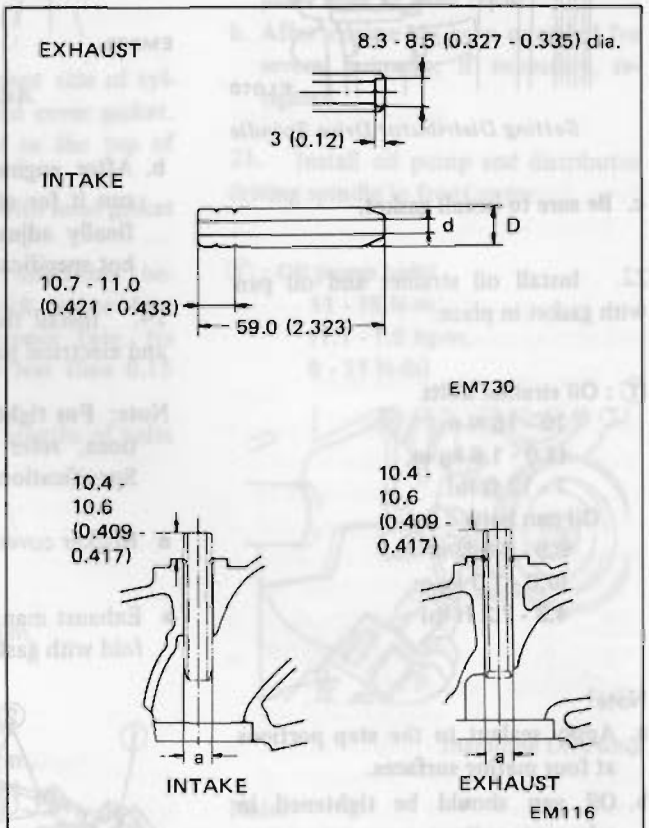

	Standard	Service
Valve guide Outer diameter "D"	12.023 - 12.034 (0.4733 - 0.4738)	12.223 - 12.234 (0.4812 - 0.4817)
Valve guide Inner diameter "d" [Finished size]	8.000 - 8.018 (0.3150 - 0.3157)	
Cylinder head valve guide hole diameter "a"	11.985 - 11.996 (0.4718 - 0.4723)	12.185 - 12.196 (0.4797 - 0.4802)
Interference fit of valve guide	0.027 - 0.049 (0.0011 - 0.0019)	

		Standard	Max. tolerance
Stem to guide clearance	Intake	0.020 - 0.053 (0.0008 - 0.0021)	0.1 (0.004)
	Exhaust	0.040 - 0.073 (0.0016 - 0.0029)	

Valve seat

Service valve insert dimensions

Unit: mm (in)

"Intake" – 0.5 mm (0.020 in) oversize

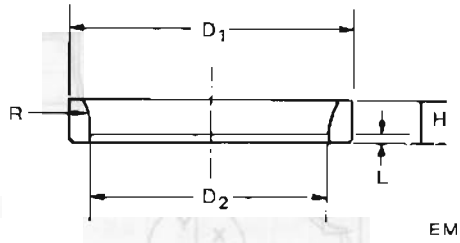

D_1	45.597 - 45.613 (1.7952 - 1.7958)
D_2	39 (1.54)
H	6.7 - 6.8 (0.264 - 0.268)
L	1.0 - 2.0 (0.039 - 0.079)
R	9 (0.35)

"Exhaust" – STD and 0.5 mm (0.020 in) oversize

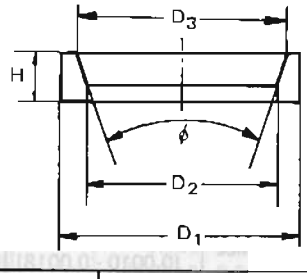

D_1	STD	37.080 - 37.096 (1.4598 - 1.4605)
	0.5 (0.020) oversize	37.580 - 37.596 (1.4795 - 1.4802)
D_2		30 (1.18)
D_3		32.6 (1.283)
H		7.4 - 7.5 (0.291 - 0.295)
φ		30°

Cylinder head recess diameter

Unit: mm (in)

Intake	0.5 (0.020) oversize	45.500 - 45.516 (1.7913 - 1.7920)
Exhaust	STD	37.000 - 37.016 (1.4567 - 1.4573)
	0.5 (0.020) oversize	37.500 - 37.516 (1.4764 - 1.4770)

Finished size of service valve insert cutter

Unit: mm (in)

"Intake"

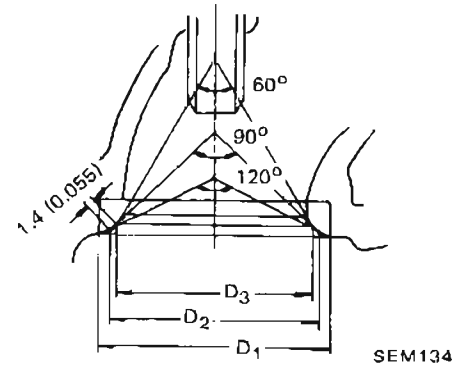

D_1	45.5 (1.791)
D_2	43.8 (1.724)
D_3	41.6 (1.638)

"Exhaust"

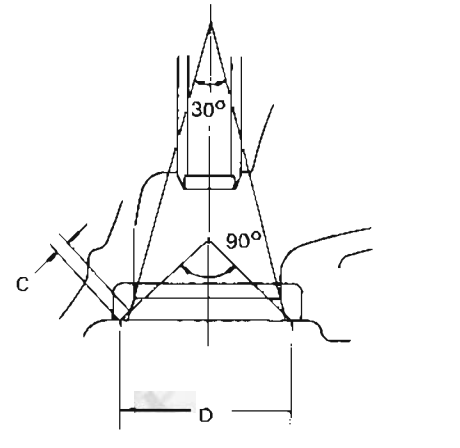

D	34.6 (1.362)
C	1.9 (0.075)

Interference fit

Unit: mm (in)

Intake	0.081 - 0.113 (0.0032 - 0.0044)
Exhaust	0.064 - 0.096 (0.0025 - 0.0038)

CAMSHAFT AND CAMSHAFT BEARING

Unit: mm (in)

	Standard	Max. tolerance
Camshaft journal to bearing clearance	0.038 - 0.067 (0.0015 - 0.0026)	0.1 (0.004)
Inner diameter of camshaft bearing	48.000 - 48.016 (1.8898 - 1.8904)	—
Outer diameter of camshaft journal	47.949 - 47.962 (1.8878 - 1.8883)	—
Camshaft bend [Total indicator reading]	Less than 0.02 (0.0008)	0.05 (0.0020)
Camshaft end play	0.08 - 0.38 (0.0031 - 0.0150)	

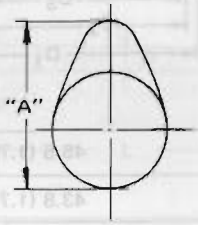

EM671

Cam height "A"	Intake	40.30 - 40.35 (1.5866 - 1.5886)
	Exhaust	
Wear limit of cam height		0.15 (0.0059)

Valve timing

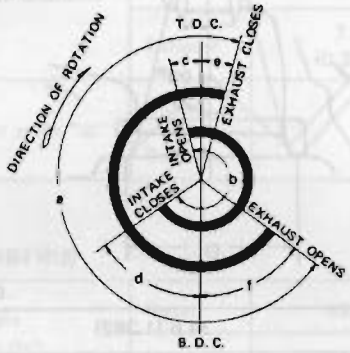

EM120

Unit: degree

a	b	c	d	e	f
248	248	16	52	14	54

CYLINDER BLOCK

Unit: mm (in)

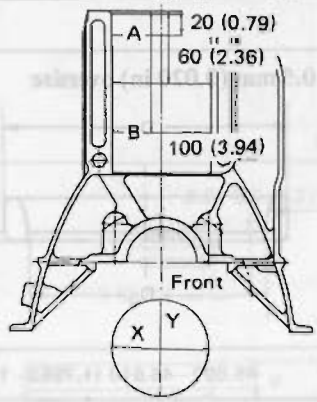

EM125

		Standard	Wear limit
Surface flatness		Less than 0.05 (0.0020)	0.10 (0.0039)
Cylinder bore	Inner diameter	86.000 - 86.050 (3.3858 - 3.3878)	0.2 (0.008)
	Out-of-round (X-Y)	Less than 0.02 (0.0008)	—
	Taper (A-B)	Less than 0.02 (0.0008)	—
Difference in inner diameter between cylinders		Less than 0.05 (0.0020)	0.2 (0.008)
Piston to cylinder clearance		0.025 - 0.045 (0.0010 - 0.0018)	—
		Outer diameter	Remarks
Cylinder liner for service	4.0 (0.157) Undersize	90.00 - 90.05 (3.5433 - 3.5453)	Interference fit cylinder liner to cylinder block 0.075 - 0.085 (0.0030 - 0.0033)
	4.5 (0.177) Undersize	90.50 - 90.55 (3.5630 - 3.5650)	
	5.0 (0.197) Undersize	91.00 - 91.05 (3.5827 - 3.5846)	

PISTON, PISTON RING AND PISTON PIN

Piston

Unit: mm (in)

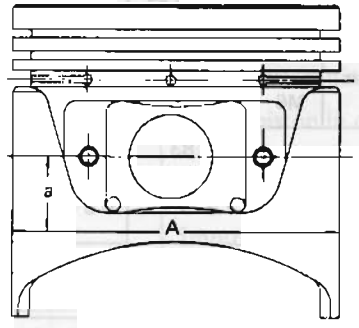

EM714

Piston skirt diameter "A"	STD	85.985 - 86.035 (3.3852 - 3.3872)
	0.5 (0.0197) oversize	86.465 - 86.515 (3.4041 - 3.4061)
	1.0 (0.0394) oversize	86.965 - 87.015 (3.4238 - 3.4258)
"a" dimension		About 20 (0.79)

Piston ring

Unit: mm (in)

		Standard	Limit
Side clearance	Top	0.040 - 0.073 (0.0016 - 0.0029)	0.1 (0.004)
	2nd	0.030 - 0.063 (0.0012 - 0.0025)	
	Oil	Combined	–
Ring gap	Top	0.25 - 0.40 (0.0098 - 0.0157)	1.0 (0.039)
	2nd	0.30 - 0.50 (0.0118 - 0.0197)	
	Oil (rail ring)	0.3 - 0.9 (0.012 - 0.035)	

Piston pin

Unit: mm (in)

Piston pin outer diameter	20.993 - 20.998 (0.8265 - 0.8267)
Piston pin hole diameter	21.001 - 21.008 (0.8268 - 0.8271)
Piston pin to piston clearance	0.006 - 0.013 (0.0002 - 0.0005)
Interference fit of piston pin to connecting rod	0.015 - 0.033 (0.0006 - 0.0013)

CONNECTING ROD

Unit: mm (in)

	Standard	Limit
Connecting rod bend or torsion [per 100 mm (3.94 in) length]	Less than 0.025 (0.0010)	0.05 (0.0020)
Big end play	0.2 - 0.3 (0.008 - 0.012)	0.6 (0.024)

CRANKSHAFT

Unit: mm (in)

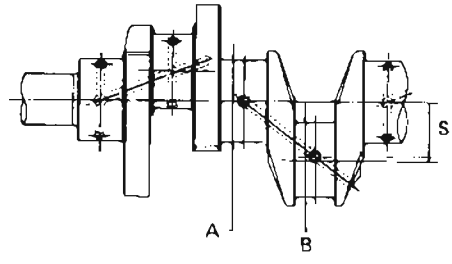

EM737

Journal diameter "A"	54.942 - 54.955 (2.1631 - 2.1636)
Pin diameter "B"	49.961 - 49.974 (1.9670 - 1.9675)
"S"	39.5 (1.555)
Pilot bushing inserting distance	4.0 (0.157)

Out-of-round X-Y
Taper A-B

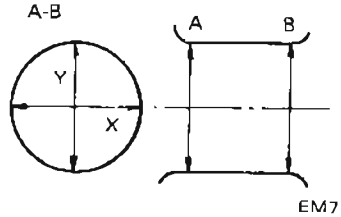

EM715

	Standard	Limit
Taper of journal and pin "A-B"	Less than 0.01 (0.0004)	0.03 (0.0012)
Out-of-round of journal and pin "X-Y"	Less than 0.01 (0.0004)	0.03 (0.0012)
Crankshaft bend	Less than 0.05 (0.0020)	0.10 (0.0039)
Crankshaft free end play	0.05 - 0.18 (0.0020 - 0.0071)	0.30 (0.0118)

BEARING

Bearing clearance

Unit: mm (in)

	Standard	Limit
Main bearing clearance	0.020 - 0.066 (0.0008 - 0.0026)	0.12 (0.0047)
Connecting rod bearing clearance	0.024 - 0.066 (0.0009 - 0.0026)	0.12 (0.0047)

Main bearing undersize

Unit: mm (in)

	Crank journal diameter
STD	54.942 - 54.955 (2.1631 - 2.1636)
0.25 (0.0098) Undersize	54.692 - 54.705 (2.1532 - 2.1537)
0.50 (0.0197) Undersize	54.442 - 54.455 (2.1434 - 2.1439)
0.75 (0.0295) Undersize	54.192 - 54.205 (2.1335 - 2.1341)
1.00 (0.0394) Undersize	53.942 - 53.955 (2.1237 - 2.1242)

Connecting rod bearing undersize

Unit: mm (in)

	Crank journal diameter
STD	49.961 - 49.974 (1.9670 - 1.9675)
0.06 (0.0024) Undersize	49.901 - 49.914 (1.9646 - 1.9651)
0.12 (0.0047) Undersize	49.841 - 49.854 (1.9622 - 1.9628)
0.25 (0.0098) Undersize	49.711 - 49.724 (1.9571 - 1.9576)
0.50 (0.0197) Undersize	49.461 - 49.474 (1.9473 - 1.9478)
0.75 (0.0295) Undersize	49.211 - 49.224 (1.9374 - 1.9379)
1.00 (0.0394) Undersize	48.961 - 48.974 (1.9276 - 1.9281)

MISCELLANEOUS COMPONENTS

Unit: mm (in)

Camshaft sprocket

Runout (Total indicator reading) ..... Less than 0.1 (0.004)

Flywheel

Runout (Total indicator reading) ..... Less than 0.15 (0.0059)

TIGHTENING TORQUE

Unit	N·m	kg·m	ft·lb
Main bearing cap bolt	44 - 54	4.5 - 5.5	33 - 40
Connecting rod big end nut	44 - 54	4.5 - 5.5	33 - 40

Unit		N·m	kg·m	ft·lb
Flywheel bolt (M/T)		127 - 147	13.0 - 15.0	94 - 108
Drive plate bolt (A/T)		127 - 147	13.0 - 15.0	94 - 108
Front cover bolt	M8	10 - 16	1.0 - 1.6	7 - 12
	M6	3.9 - 9.8	0.4 - 1.0	2.9 - 7.2
Cylinder head		69 - 83	7.0 - 8.5	51 - 61
Cylinder head to front cover bolt		7.8 - 13.7	0.8 - 1.4	5.8 - 10.1
Camshaft locating plate bolt		5.9 - 9.8	0.6 - 1.0	4.3 - 7.2
Pivot bushing bolt		78 - 118	8.0 - 12.0	58 - 87
Pivot lock nut		49 - 59	5.0 - 6.0	36 - 43
Camshaft sprocket bolt		127 - 147	13.0 - 15.0	94 - 108
Chain guide bolt		5.9 - 9.8	0.6 - 1.0	4.3 - 7.2
Chain tensioner bolt		5.9 - 9.8	0.6 - 1.0	4.3 - 7.2
Oil pump bolt		11 - 15	1.1 - 1.5	8 - 11
Water pump bolt	M6	3.9 - 9.8	0.4 - 1.0	2.9 - 7.2
	M8	10 - 16	1.0 - 1.6	7 - 12
Water pump pulley stud		5.9 - 9.8	0.6 - 1.0	4.3 - 7.2
Water inlet bolt		10 - 16	1.0 - 1.6	7 - 12
Crank pulley bolt		137 - 157	14.0 - 16.0	101 - 116
Oil strainer bolt		10 - 16	1.0 - 1.6	7 - 12
Oil pan bolt		5.9 - 9.8	0.6 - 1.0	4.3 - 7.2
Oil pan drain plug		20 - 29	2.0 - 3.0	14 - 22
Clutch cover bolt		20 - 29	2.0 - 3.0	14 - 22
Rocker cover bolt		10 - 16	1.0 - 1.6	7 - 12
Spark plug		15 - 20	1.5 - 2.0	11 - 14
Manifold Bolt and Nut	M8 Bolt	15 - 25	1.5 - 2.5	11 - 18
	M10 Bolt	34 - 44	3.5 - 4.5	25 - 33
	M8 Nut	12 - 16	1.2 - 1.6	9 - 12
Water outlet bolt		10 - 16	1.0 - 1.6	7 - 12
Thermostat housing		12 - 20	1.2 - 2.0	9 - 14
Distributor support bolt		3.9 - 7.8	0.4 - 0.8	2.9 - 5.8
Oil pressure sending unit		10 - 16	1.0 - 1.6	7 - 12
Alternator bracket		39 - 59	4.0 - 6.0	29 - 43
Alternator to adjusting bar bolt		20 - 29	2.0 - 3.0	14 - 22
Engine mounting bracket		29 - 39	3.0 - 4.0	22 - 29

TROUBLE DIAGNOSES AND CORRECTIONS

Condition	Probable cause	Corrective action
I. Noisy engine		
Piston and connecting rod knocking.	Seized piston pin.	Replace piston with pin.
	Seized piston in cylinder.	Recondition cylinder and replace piston with pin.
	Broken piston ring.	Replace ring and/or recondition cylinder.
	Improper connecting rod alignment.	Realign rod or replace rod.
	Seized on loose connecting rod bearing.	Replace.
Knocking of crankshaft and bearing.	Sized or loose main bearing.	Replace.
	Bent crankshaft.	Repair or replace.
	Uneven wear of journal.	Correct.
	Excessive crankshaft end play.	Replace center bearing.
Timing chain noise.	Improper chain tension.	Adjust.
	Worn and/or damaged chain.	Replace.
	Worn sprocket.	Replace.
	Worn and/or broken chain guide and/or tension adjusting mechanism.	Replace.
Camshaft and valve mechanism knocking.	Improper valve clearance.	Adjust.
	Worn rocker pivot.	Replace.
	Worn rocker face.	Replace.
	Loose valve stem in guide.	Replace guide.
	Weakened valve spring.	Replace.
	Seized valve.	Replace.
Camshaft knocking.	Excessive camshaft clearance.	Replace.
	Excessive axial play.	Replace thrust plate.
	Worn cam gear.	Replace.
Water pump knocking.	Improper shaft end play.	Replace water pump assembly.
	Broken impeller.	Replace water pump assembly.
II. Other mechanical troubles		
Stuck valve.	Improper valve clearance.	Adjust.
	Insufficient clearance between valve stem and guide.	Clean stem or ream guide.
	Weakened or broken valve spring.	Replace.
	Seized or damage of valve stem.	Replace or clean.
	Poor quality fuel.	Use good fuel.

Condition	Probable cause	Corrective action
Seized valve seat.	Improper valve clearance.	Adjust.
	Weakened valve spring.	Replace.
	Thin valve head edge.	Replace valve.
	Narrow valve seat.	Reface.
	Overheating.	Repair or replace.
	Over speeding.	Drive at proper speed.
	Stuck valve guide.	Repair.
Excessively worn cylinder and piston.	Shortage of engine oil.	Add or replace oil.
	Dirty engine oil.	Clean crankcase, replace oil and oil filter element.
	Poor quality of oil.	Use proper oil.
	Overheating	Repair or replace.
	Wrong assembly of piston with connecting rod.	Repair or replace.
	Improper piston ring clearance.	Adjust.
	Broken piston ring.	Replace.
	Dirty air cleaner.	Clean.
	Mixture too rich.	Adjust.
	Engine over run.	Drive at proper speeds.
Faulty connecting rod.	Shortage of engine oil.	Add oil.
	Low oil pressure.	Correct.
	Poor quality engine oil.	Use proper oil.
	Rough surface of crankshaft.	Grind and replace bearing.
	Clogged oil passage.	Clean.
	Bearing worn or eccentric.	Replace.
	Bearing improperly assembled.	Correct.
	Loose bearing.	Replace.
	Incorrect connecting rod alignment.	Repair or replace.
Faulty crankshaft bearing.	Shortage of engine oil.	Add or replace.
	Low oil pressure.	Correct.
	Poor quality engine oil.	Use specified oil.
	Crankshaft journal worn or out-of-round.	Repair.
	Clogged oil passage in crankshaft.	Clean.
	Bearing worn or eccentric.	Replace.
	Bearing improperly assembled.	Correct.
	Eccentric crankshaft or bearing.	Replace.

SPECIAL SERVICE TOOLS

Tool number & tool name	Kent-Moore No. / Reference page
ST19320000 Oil filter wrench 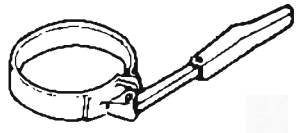	J25664 Page EM-3
ST05340001 Engine attachment 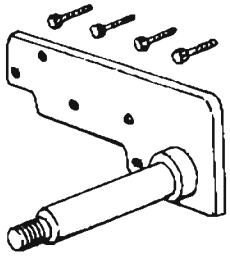	J26032 Page EM-3
ST0501S000 Engine stand assembly ① ST05011000 Engine stand ② ST05012000 Base 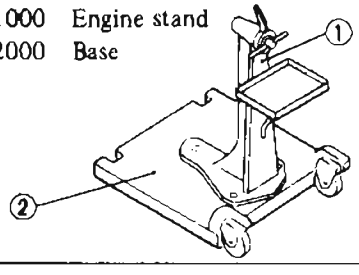	J26023 ① J26023-2 ② J26023-1 Page EM-3
ST16540000 Puller crank pulley 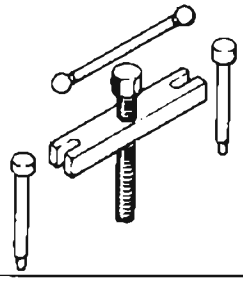	— Page EM-3
KV10105800 Chain stopper (ST17420001) 	J25660-1 Page EM-4
ST10120000 Cylinder head bolt wrench 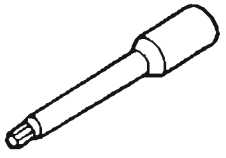	J25613 Page EM-4 Page EM-16
KV101041S0 Crankshaft main bearing cap puller ① KV10104110 Crankshaft main bearing puller ② ST16512001 Adapter ③ ST16701001 Adapter 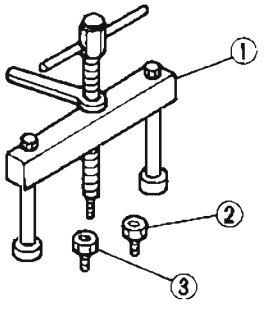	J25647 Page EM-4
ST13030001 Piston pin press stand 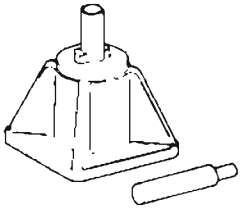	J25634 Page EM-5 Page EM-14
ST12070000 Valve lifter 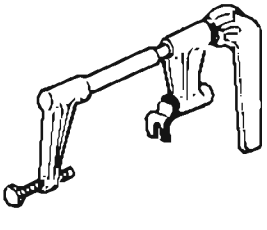	J25631 Page EM-5 Page EM-13

Tool number & tool name		Kent-Moore No. / Reference page
KV101039S0	Valve guide reamer set	J25618
① ST11081000	Reamer [12.2 mm (0.480 in) dia.]	① J25618-3
② ST11032000	Reamer [8.0 mm (0.31 in) dia.]	② J24618-2
③ ST11033000	Drift	③ J25618-1
		Page EM-7

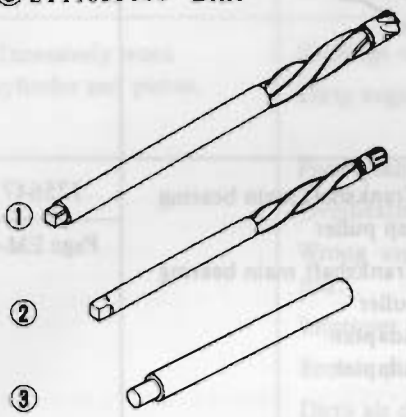

Tool number & tool name		Kent-Moore No. / Reference page
KV10105500 (ST15310000)	Crankshaft rear oil seal drift	J25640-1
		Page EM-15

EM03470000	Piston ring compressor	——
		Page EM-15

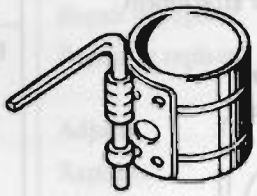

ST11650001	Valve seat cutter set	——
		Page EM-7

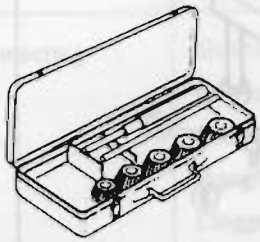

ST10640001	Pivot adjuster	J25615-1
		Page EM-17

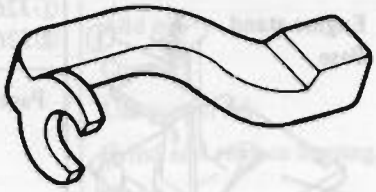

ST16610001	Pilot bushing puller	J23907
		Page EM-11

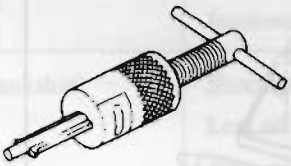

KV30100100	Clutch aligning bar	——
		Page EM-3 Page EM-17