SECTION MWI

METER, WARNING LAMP & INDICATOR

CONTENTS

REGULAR GRADE

Nismo 370Z

BASIC INSPECTION

DIAGNOSIS AND REPAIR WORKFLOW

Work flow

INFOID:0000000004528722

OVERALL SEQUENCE

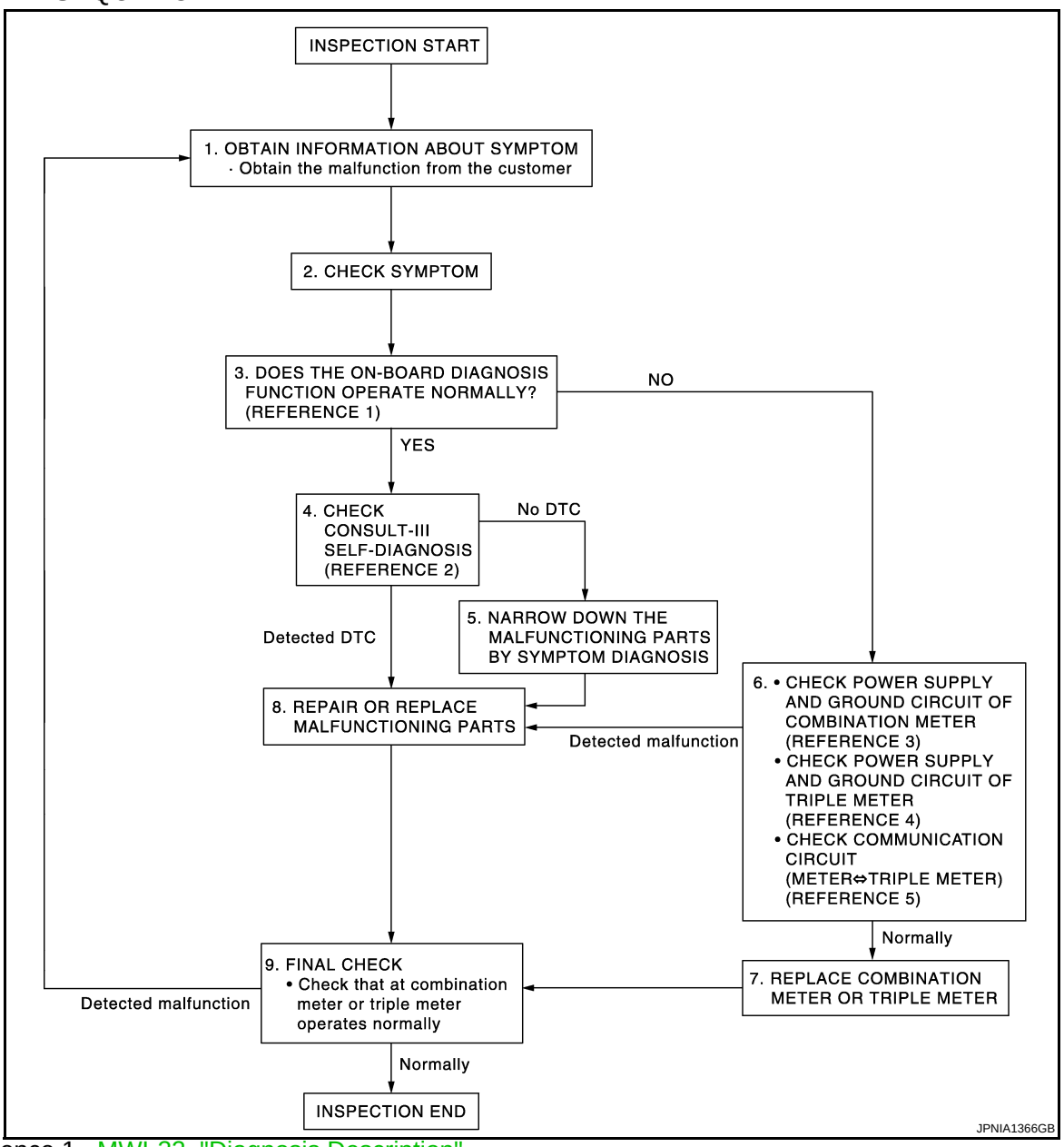

- Reference 1···MWI-32, "Diagnosis Description".
- Reference 2···MWI-71, "DTC Index".
- Reference 3···.MWI-44, "COMBINATION METER : Diagnosis Procedure".
- Reference 4···MWI-44, "TRIPLE METER : Diagnosis Procedure".
- Reference 5···MWI-39, "Diagnosis Procedure".

DETAILED FLOW

1.OBTAIN INFORMATION ABOUT SYMPTOM

Interview the customer to obtain as much information as possible about the conditions and environment under which the malfunction occurred.

>> GO TO 2.

2. CHECK SYMPTOM

- Check the symptom based on the information obtained from the customer.
- Check that any other malfunctions are present.

>> GO TO 3.

3. CHECK ON BOARD DIAGNOSIS OPERATION

Check that the on board diagnosis function operates. Refer to MWI-32, "Diagnosis Description".

Does the on board diagnosis function operate normally?

YES >> GO TO 4.
NO >> GO TO 6.

4. CHECK CONSULT-III SELF-DIAGNOSIS RESULTS

Connect CONSULT-III and perform self-diagnosis. Refer to MWI-33, "CONSULT-III Function (METER/M&A)".

Are self-diagnosis results normal?

YES >> GO TO 5.
NO >> GO TO 8.

5. NARROW DOWN THE MALFUNCTIONING PARTS BY SYMPTOM DIAGNOSIS

Perform symptom diagnosis and narrow down the malfunctioning parts.

>> GO TO 8.

6. CHECK POWER SUPPLY AND GROUND CIRCUITS OR COMMUNICATION CIRCUIT

- Inspect combination meter or power supply and ground circuits. Refer to MWI-44, "COMBINATION METER : Diagnosis Procedure".
- Inspect triple meter power supply and ground circuits. Refer to MWI-44, "TRIPLE METER : Diagnosis Procedure".
- Inspect communication circuits. Refer to MWI-39, "Diagnosis Procedure".

Is inspection result OK?

YES >> GO TO 7.
NO >> GO TO 8.

7. REPLACE COMBINATION METER OR TRIPLE METER

Replace combination meter or triple meter.

>> GO TO 9.

8. REPAIR OR REPLACE MALFUNCTIONING PARTS

Repair or replace the malfunctioning parts.

NOTE:
If DTC is displayed, erase DTC after repair or replace malfunctioning parts.

>> GO TO 9.

9. FINAL CHECK

Check that the combination meter and the triple meter operates normally.

Do they operate normally?

YES >> INSPECTION END
NO >> GO TO 1.

SYSTEM DESCRIPTION

METER SYSTEM

METER SYSTEM

METER SYSTEM : System Diagram

INFOID:0000000004528723

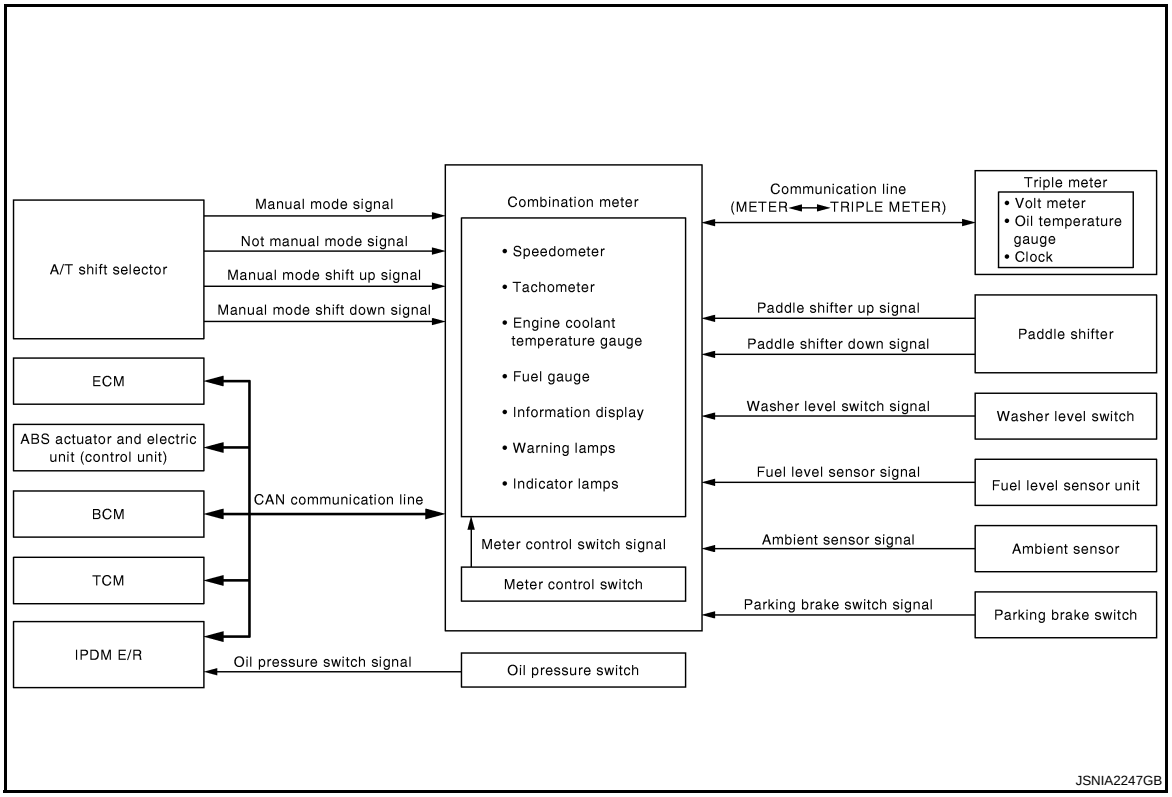

METER SYSTEM : System Description

INFOID:0000000004528724

COMBINATION METER

- The combination meter receives the information required to control the operation of each gauge, indicator/warning lamp, triple meter, and information display via CAN communication from each unit, each switch, and sensor.
- The combination meter incorporates a trip computer that displays, warnings and messages on the information display according to the information received from various units.
- The combination meter incorporates a buzzer function that sounds an audible alarm with the integrated buzzer device. Refer to WCS-5, "WARNING CHIME SYSTEM : System Description" for further details.
- The combination meter integrates the meter circuit check function and the segment check function that checks the information display operation.

IPDM E/R

- IPDM E/R reads the ON/OFF signals of the oil pressure switch and transmits the oil pressure switch signal to the combination meter via BCM with the CAN communication line.
- IPDM E/R is equipped with the diagnosis function. It can perform the operation check of oil pressure warning lamp with the auto active test and the diagnosis with CONSULT-III.

METER CONTROL FUNCTION LIST

System		Description	Signal source
Meter/gauge	Speedometer	Receives vehicle speed signal and indicates vehicle speed.	ABS actuator and electric unit (control unit) ⇒ Combination meter
	Tachometer	Receives engine speed signal and indicates engine speed.	ECM ⇒ Combination meter
	Fuel gauge	Receives fuel level sensor signal and indicates fuel level.	Fuel level sensor unit ⇒ Combination meter
	Engine coolant temperature gauge	Receives engine coolant temperature signal and indicates coolant temperature.	ECM ⇒ Combination meter
Warning lamp/ indicator lamp	Oil pressure warning lamp	Receives oil pressure warning lamp signal and illuminates warning lamp.	IPDM E/R ⇒ BCM ⇒ Combination meter
	Up-shift indicator lamp	Receives engine speed signal and indicates up-shift indicator lamp.	ECM ⇒ Combination meter
	Master warning lamp	Illuminates according to warning output on information display.	—
Information display	Door open warning	Receives door switch signals and displays warning.	BCM ⇒ Combination meter
	Parking brake release warning	Receives parking brake switch signal and vehicle speed signal and displays warnings.	Parking brake switch ⇒ Combination meter ABS actuator and electric unit (control unit) ⇒ Combination meter
	Low fuel warning	Receives fuel gauge signal and displays warning if fuel level decreases to approx.11.4 ℓ (3 US gal, 2-4/8 Imp gal) or less.	Fuel level sensor unit ⇒ Combination meter
	Low washer fluid warning	Receives washer level switch signal and displays warning.	Washer level switch ⇒ Combination meter
	Low outside temperature warning	Monitors ambient sensor signal and displays warning if ambient temperature decreases to 3°C (37°F) or less. (If enabled)	Ambient sensor ⇒ Combination meter
	Instantaneous fuel consumption	Calculates instantaneous fuel consumption based on received vehicle speed signals and fuel consumption monitor signal and displays it.	ECM ⇒ Combination meter ABS actuator and electric unit (control unit) ⇒ Combination meter
	Average fuel consumption	Calculates average fuel consumption in a reset-to-reset interval based on received vehicle speed signals and fuel consumption monitor signal and displays it.	ECM ⇒ Combination meter ABS actuator and electric unit (control unit) ⇒ Combination meter
	Average vehicle speed	Calculates average vehicle speed in a reset-to-reset interval based on received vehicle speed signals and displays it.	ABS actuator and electric unit (control unit) ⇒ Combination meter
	Travel time	Displays accumulated key switch ON time from reset to reset.	—
	Travel distance	Calculates accumulated travel distance in a reset-to-reset interval based on received vehicle speed signals and displays it.	ABS actuator and electric unit (control unit) ⇒ Combination meter
	Possible driving distance	Calculates possible driving distance based on received fuel consumption monitor signal, vehicle speed signals and fuel level sensor signal and displays it.	ABS actuator and electric unit (control unit) ⇒ Combination meter ECM ⇒ Combination meter Fuel level sensor unit ⇒ Combination meter
	Ambient air temperature	Corrects ambient air temperature value based on received ambient sensor signals and displays it.	Ambient sensor ⇒ Combination meter

System		Description	Signal source
Triple meter	Volt meter	Receives ignition signal and indicates battery voltage.	Ignition power supply ⇒ Triple meter
	Oil temperature gauge	Receives oil temperature signal and indicates engine oil temperature.	ECM ⇒ Combination meter ⇒ Triple meter
	Clock	Receives clock signal and displays the time on clock.	Combination meter ⇒ Triple meter

ARRANGEMENT OF COMBINATION METER

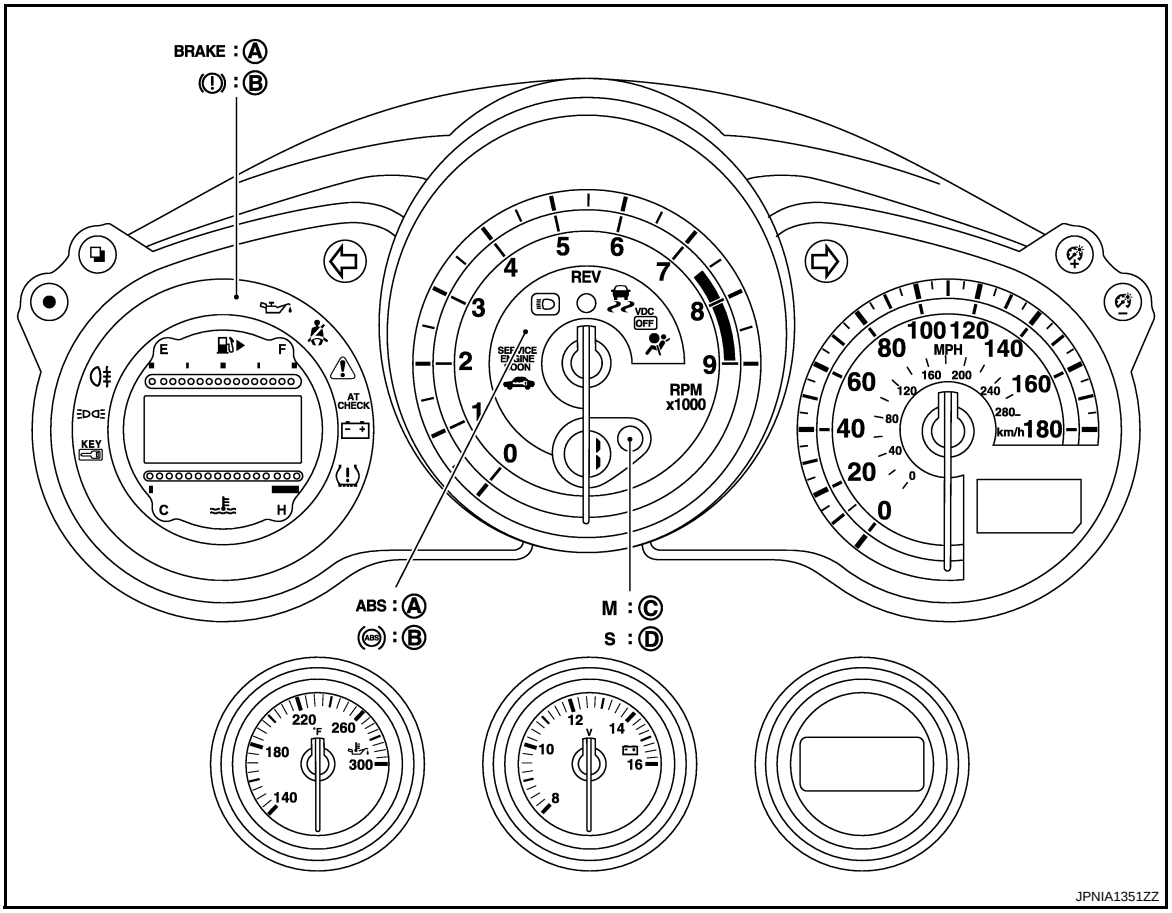

A. For USA
B. Except for USA
C. A/T models
D. With SynchroRev Match mode (S-MODE) models

METER SYSTEM : Component Parts Location

INFOID:0000000004528725

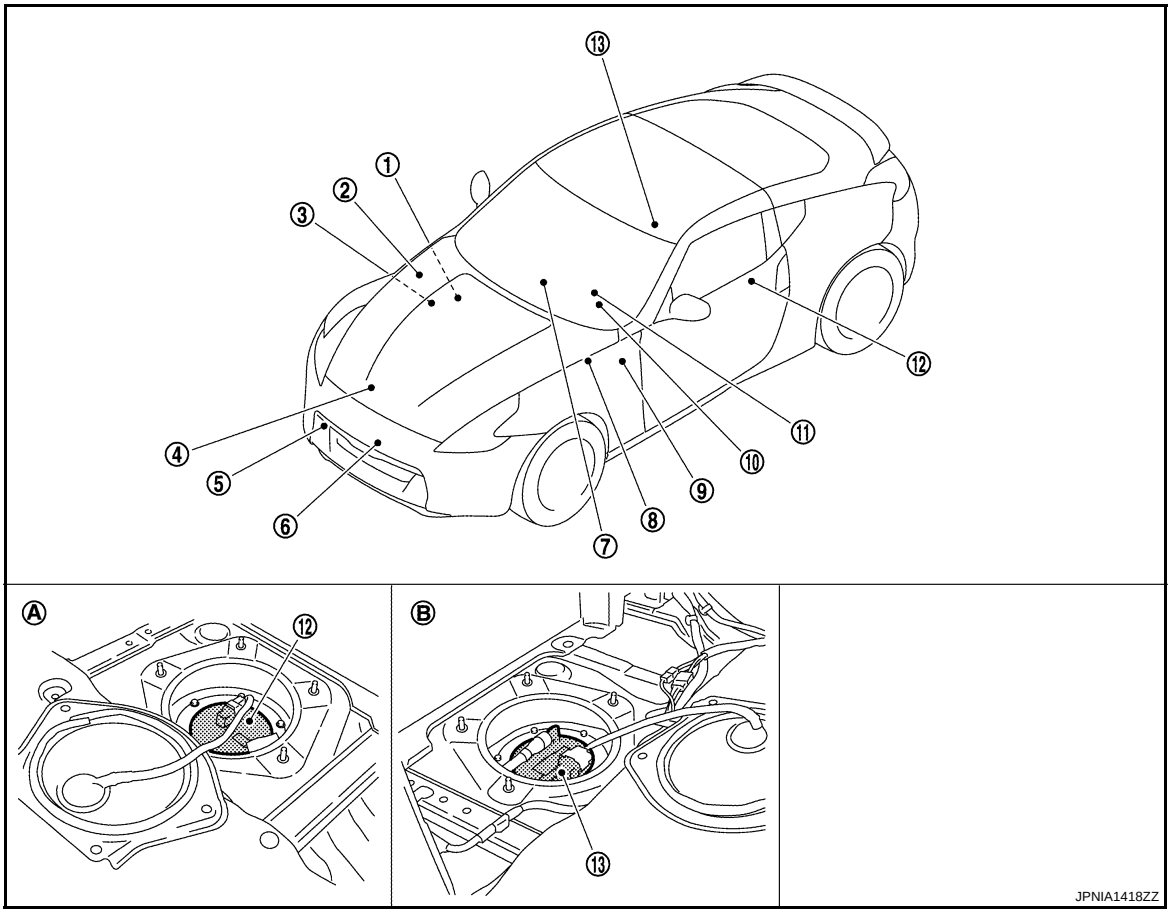

1.	BCM Refer to BCS-8, "Component Parts Location".	2.	IPDM E/R Refer to PCS-5, "Component Parts Location".	3.	ECM Refer to EC-26, "Component Parts Location".
4.	Oil pressure switch Refer to EM-44, "Exploded View".	5.	Washer level switch	6.	Ambient sensor
7.	Triple meter	8.	ABS actuator and electric unit (control unit) Refer to BRC-11, "Component Parts Location".	9.	TCM Refer to TM-146, "Component Parts Location".
10.	Combination meter	11.	Parking brake switch	12.	Fuel level sensor unit (sub)
13.	Fuel level sensor unit and fuel pump (main)				
A.	Rear parcel shelf cover LH (bottom)	B.	Rear parcel shelf cover RH (bottom)		

METER SYSTEM : Component Description

INFOID:0000000004528726

Unit	Description
Combination meter	Controls the following with the signals received from each unit via CAN communication and the signals from switches and sensors. • Speedometer • Tachometer • Engine coolant temperature gauge • Fuel gauge • Warning lamps • Indicator lamps • Information display • Triple meter

Unit	Description
Triple meter	Indicate the following with the signals received from combination meter via communication line and the signal from ignition power supply. • Volt meter • Oil temperature gauge • Clock
IPDM E/R	IPDM E/R reads the ON/OFF signals of the oil pressure switch and transmits the oil pressure switch signal to the combination meter via BCM with CAN communication line.
Fuel level sensor unit	Refer to MWI-47, "Description".
Oil pressure switch	Refer to MWI-50, "Description".
ECM	Transmits the following signals to the combination meter with CAN communication line. • Engine speed signal • Engine coolant temperature signal • Fuel consumption monitor signal • Oil temperature signal • Shift position signal [with SyncroRev match mode (S-MODE) models]
ABS actuator and electric unit (control unit)	Transmits the vehicle speed signal to the combination meter with CAN communication line.
BCM	Transmits signals provided by various units to the combination meter with CAN communication line.
A/T shift selector	Transmits the following signal to the combination meter. • Manual mode signal • Not manual mode signal • Manual mode shift up signal • Manual mode shift down signal
Paddle shifter	Transmits paddle shifter up signal and paddle shifter down signal to the combination meter.
TCM	Transmits the shift position signal to the combination meter with CAN communication line.
Washer level switch	Transmits the washer level signal to the combination meter.
Ambient sensor	Transmits the ambient sensor signal to the combination meter.
Brake fluid level switch	Transmits the brake fluid level switch signal to the combination meter.
Parking brake switch	Refer to MWI-52, "Description".

SPEEDOMETER

SPEEDOMETER : System Diagram

INFOID:0000000004528727

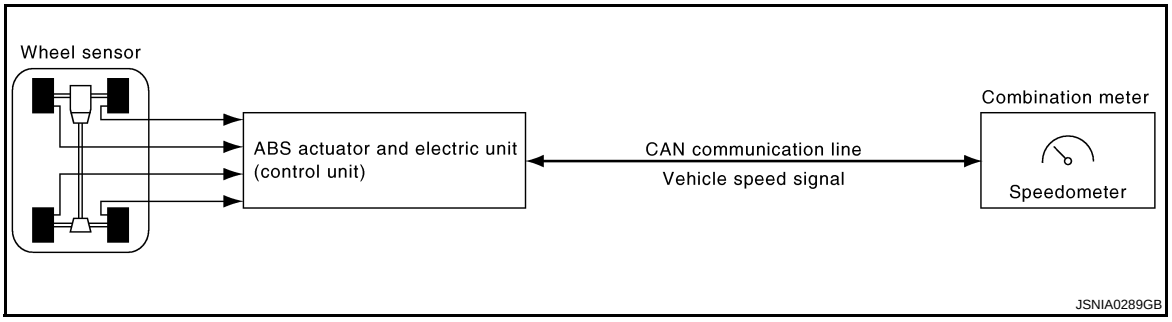

SPEEDOMETER : System Description

INFOID:0000000004528728

- The ABS actuator and electric unit (control unit) converts the rectangular wave signal provided by the wheel sensor to a vehicle speed signal and transmits it to the combination meter via CAN communication.
- The combination meter indicates the vehicle speed to the speedometer according to the vehicle speed signal received via CAN communication.

SPEEDOMETER : Component Parts Location

INFOID:0000000004553744

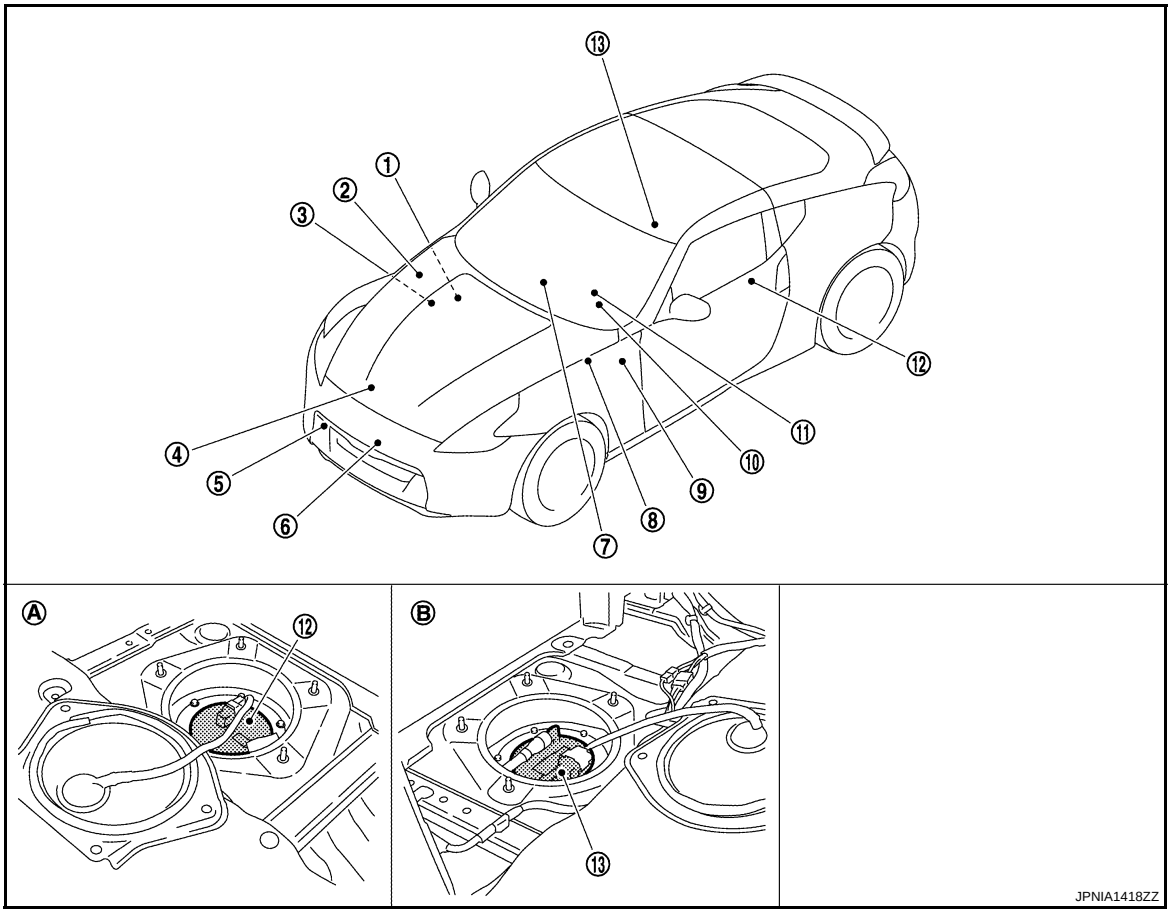

1.	BCM Refer to BCS-8, "Component Parts Location".	2.	IPDM E/R Refer to PCS-5, "Component Parts Location".	3.	ECM Refer to EC-26, "Component Parts Location".
4.	Oil pressure switch Refer to EM-44, "Exploded View".	5.	Washer level switch	6.	Ambient sensor
7.	Triple meter	8.	ABS actuator and electric unit (control unit) Refer to BRC-11, "Component Parts Location".	9.	TCM Refer to TM-146, "Component Parts Location".
10.	Combination meter	11.	Parking brake switch	12.	Fuel level sensor unit (sub)
13.	Fuel level sensor unit and fuel pump (main)				
A.	Rear parcel shelf cover LH (bottom)	B.	Rear parcel shelf cover RH (bottom)		

SPEEDOMETER : Component Description

INFOID:0000000004528730

Unit	Description
Combination meter	Indicates the vehicle speed to the speedometer according to the vehicle speed signal received from ABS actuator and electric unit (control unit) via CAN communication.
ABS actuator and electric unit (control unit)	Transmits the vehicle speed signal to the combination meter with CAN communication line.

TACHOMETER

TACHOMETER : System Diagram

INFOID:0000000004528731

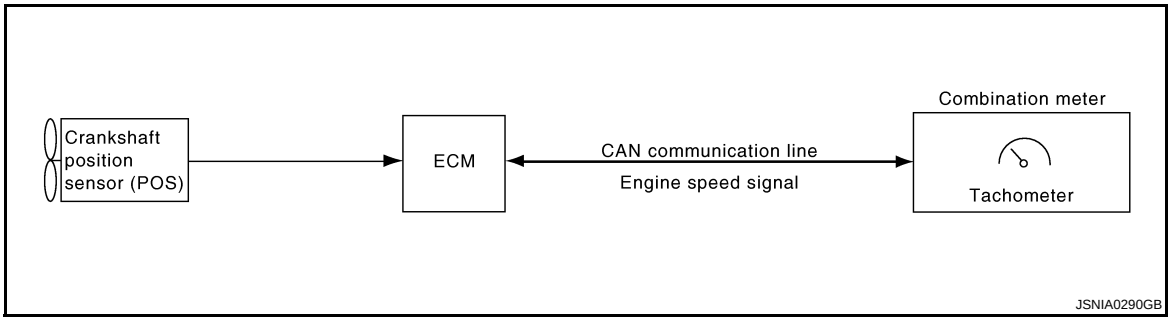

TACHOMETER : System Description

INFOID:0000000004528732

- ECM converts the pulse signal provided by the crankshaft position sensor to an engine speed signal and transmits it to the combination meter with CAN communication line.
- The combination meter indicates the engine speed to the tachometer according to the engine speed signal received via CAN communication.

TACHOMETER : Component Parts Location

INFOID:0000000004553745

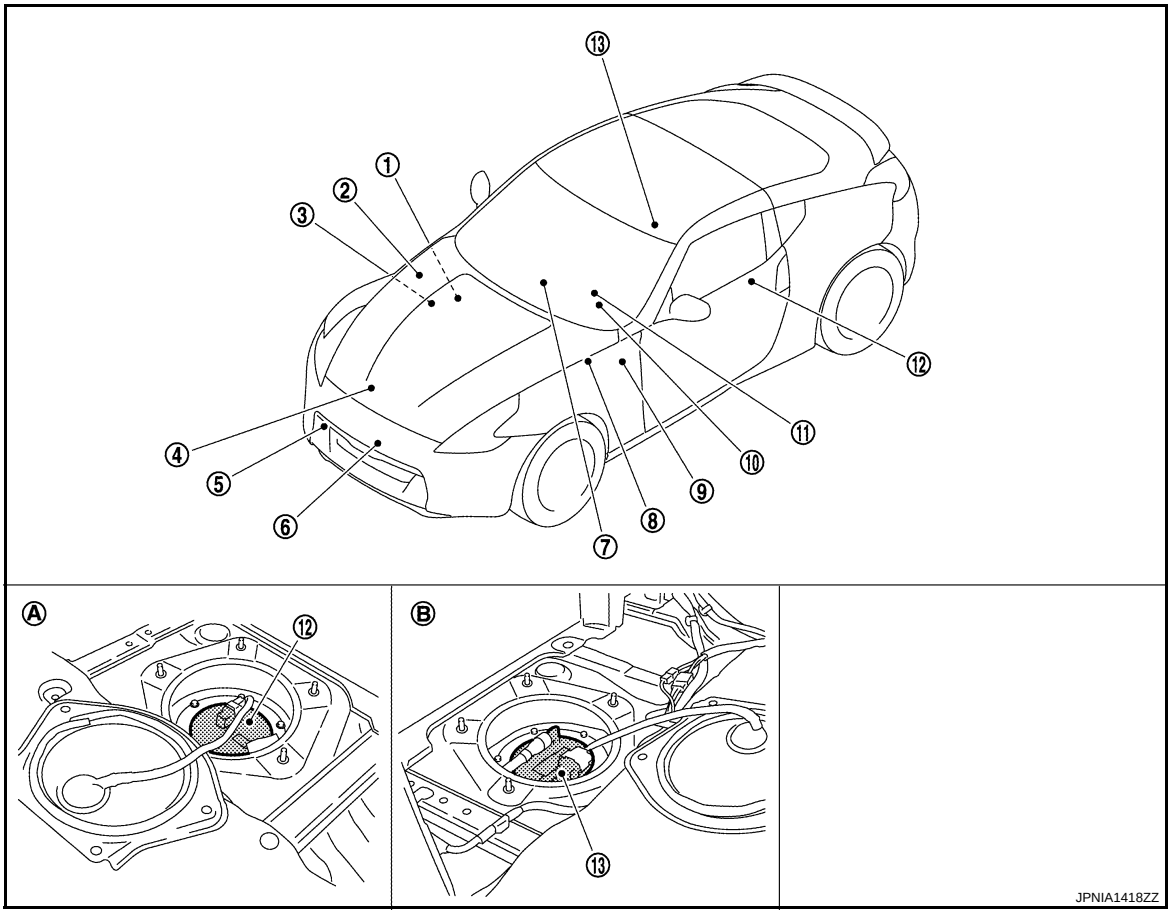

1.	BCM Refer to BCS-8, "Component Parts Location".	2.	IPDM E/R Refer to PCS-5, "Component Parts Location".	3.	ECM Refer to EC-26, "Component Parts Location".
4.	Oil pressure switch Refer to EM-44, "Exploded View".	5.	Washer level switch	6.	Ambient sensor
7.	Triple meter	8.	ABS actuator and electric unit (control unit) Refer to BRC-11, "Component Parts Location".	9.	TCM Refer to TM-146, "Component Parts Location".
10.	Combination meter	11.	Parking brake switch	12.	Fuel level sensor unit (sub)

13. Fuel level sensor unit and fuel pump (main)

A. Rear parcel shelf cover LH (bottom) B. Rear parcel shelf cover RH (bottom)

TACHOMETER : Component Description

INFOID:0000000004528734

Unit	Description
Combination meter	Indicates the engine speed to the tachometer according to the engine speed signal received from ECM via CAN communication.
ECM	Transmits the engine speed signal to the combination meter with CAN communication line.

ENGINE COOLANT TEMPERATURE GAUGE

ENGINE COOLANT TEMPERATURE GAUGE : System Diagram

INFOID:0000000004528735

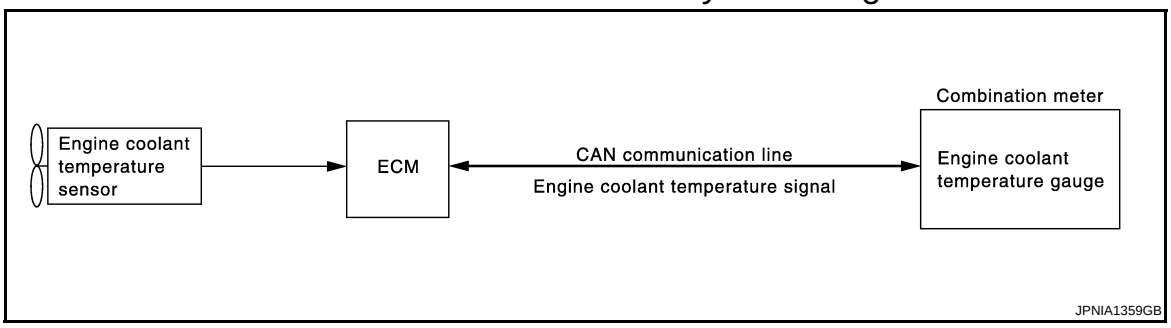

ENGINE COOLANT TEMPERATURE GAUGE : System Description

INFOID:0000000004528736

- ECM reads the engine coolant temperature signal from the engine coolant temperature sensor and transmits the signal to the combination meter via CAN communication.
- The combination meter indicates the engine coolant temperature to the water temperature gauge according to the engine coolant temperature signal received via CAN communication.

ENGINE COOLANT TEMPERATURE GAUGE : Component Parts Location

INFOID:0000000004553746

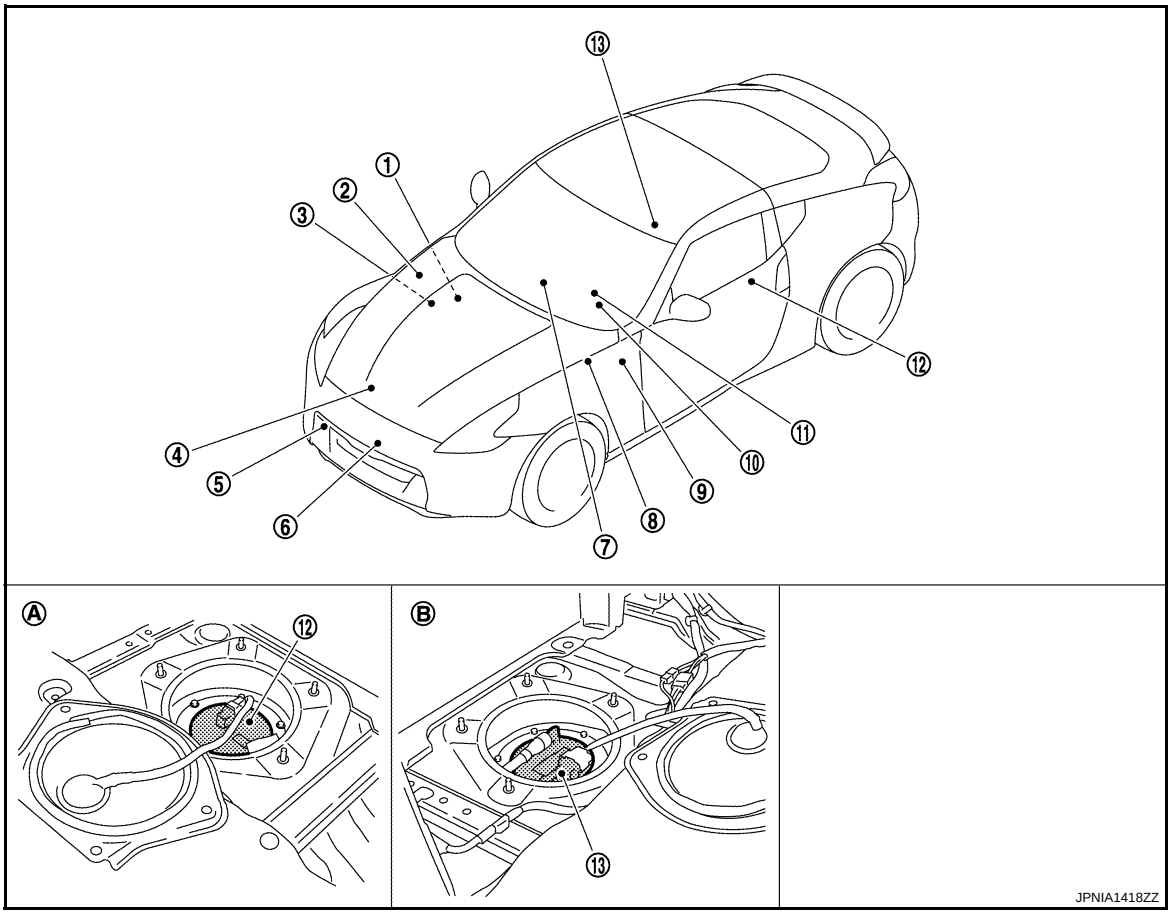

1.	BCM Refer to BCS-8, "Component Parts Location".	2.	IPDM E/R Refer to PCS-5, "Component Parts Location".	3.	ECM Refer to EC-26, "Component Parts Location".
4.	Oil pressure switch Refer to EM-44, "Exploded View".	5.	Washer level switch	6.	Ambient sensor
7.	Triple meter	8.	ABS actuator and electric unit (control unit) Refer to BRC-11, "Component Parts Location".	9.	TCM Refer to TM-146, "Component Parts Location".
10.	Combination meter	11.	Parking brake switch	12.	Fuel level sensor unit (sub)
13.	Fuel level sensor unit and fuel pump (main)				
A.	Rear parcel shelf cover LH (bottom)	B.	Rear parcel shelf cover RH (bottom)		

ENGINE COOLANT TEMPERATURE GAUGE : Component Description

INFOID:0000000004528738

Unit	Description
Combination meter	Indicates the engine coolant temperature to the water temperature gauge according to the engine coolant temperature signal received from ECM via CAN communication.
ECM	Transmits the engine coolant temperature signal to the combination meter via CAN communication.

FUEL GAUGE

FUEL GAUGE : System Diagram

INFOID:0000000004528739

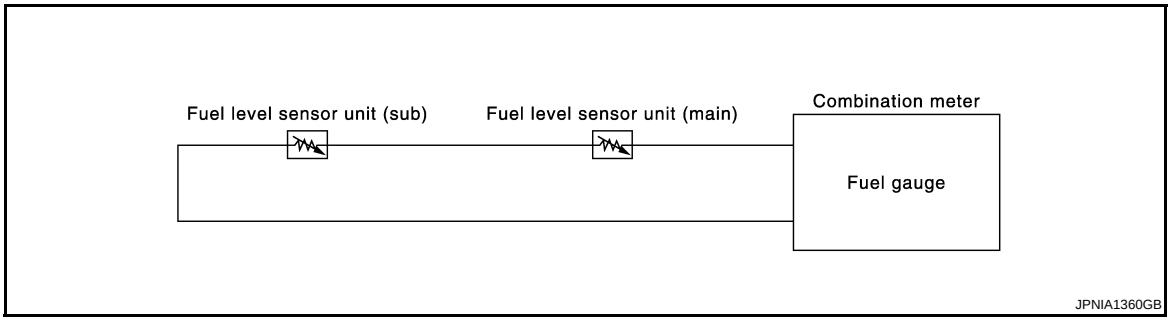

FUEL GAUGE : System Description

INFOID:0000000004528740

CONTROL OUTLINE

The combination meter reads the fuel level sensor signal from the fuel level sensor unit and indicates the fuel level to the fuel gauge.

REFUEL CONTROL

The combination meter accelerates the fuel gauge segment if the all conditions listed below are met, or the ignition switch is ON from OFF.

- Ignition switch is ON position.
- The vehicle is not moving.
- The fuel level change by 15 ℓ (4 US gal, 3-1/4 Imp gal) or more.

FUEL GAUGE : Component Parts Location

INFOID:0000000004553747

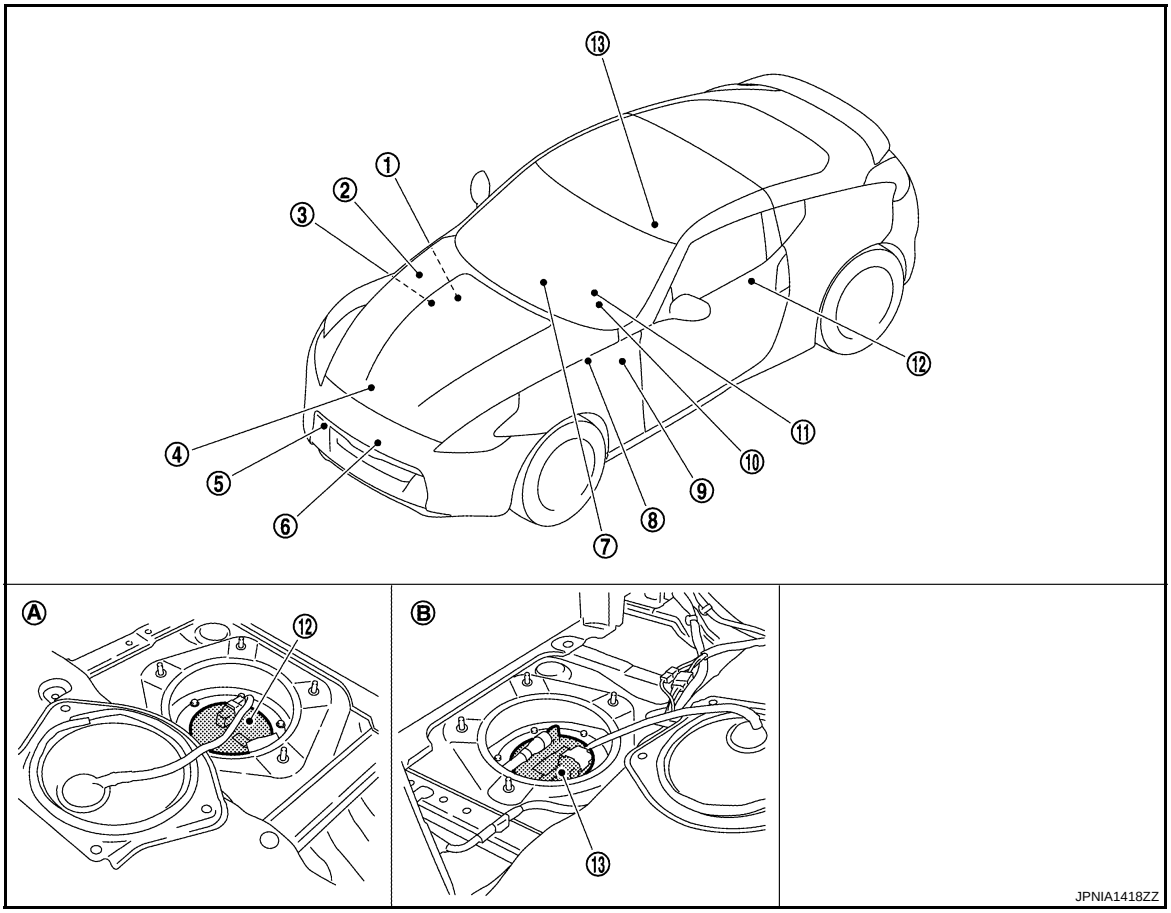

1.	BCM Refer to BCS-8, "Component Parts Location".	2.	IPDM E/R Refer to PCS-5, "Component Parts Location".	3.	ECM Refer to EC-26, "Component Parts Location".
4.	Oil pressure switch Refer to EM-44, "Exploded View".	5.	Washer level switch	6.	Ambient sensor
7.	Triple meter	8.	ABS actuator and electric unit (control unit) Refer to BRC-11, "Component Parts Location".	9.	TCM Refer to TM-146, "Component Parts Location".
10.	Combination meter	11.	Parking brake switch	12.	Fuel level sensor unit (sub)
13.	Fuel level sensor unit and fuel pump (main)				
A.	Rear parcel shelf cover LH (bottom)	B.	Rear parcel shelf cover RH (bottom)		

FUEL GAUGE : Component Description

INFOID:0000000004528742

Unit	Description
Combination meter	Indicates the fuel gauge according to the fuel level sensor signal received from the fuel level sensor unit.
Fuel level sensor unit	Refer to MWI-47, "Description".

ODO/TRIP METER

ODO/TRIP METER : System Diagram

INFOID:0000000004528743

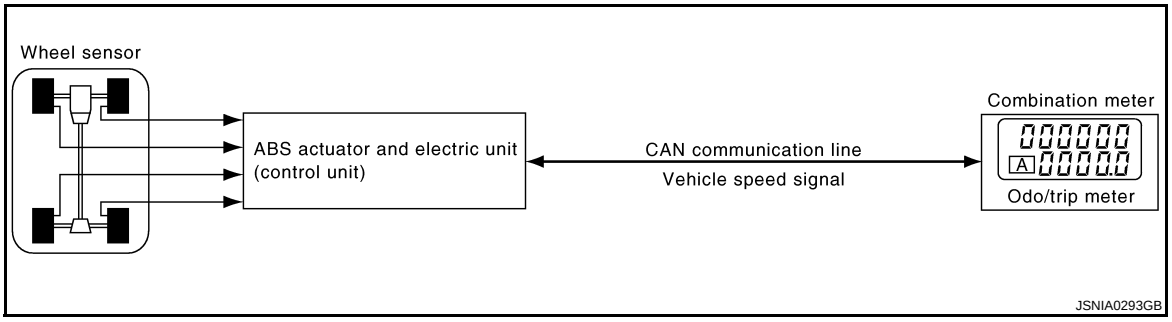

ODO/TRIP METER : System Description

INFOID:0000000004528744

- The ABS actuator and electric unit (control unit) reads the rectangular wave signal provided by the wheel sensor and transmits the vehicle speed signal to the combination meter via CAN communication.
- The combination meter converts the vehicle speed signal received via CAN communication to mileage, and it displays the accumulated mileage to the odo/trip meter.

ODO/TRIP METER : Component Parts Location

INFOID:0000000004553751

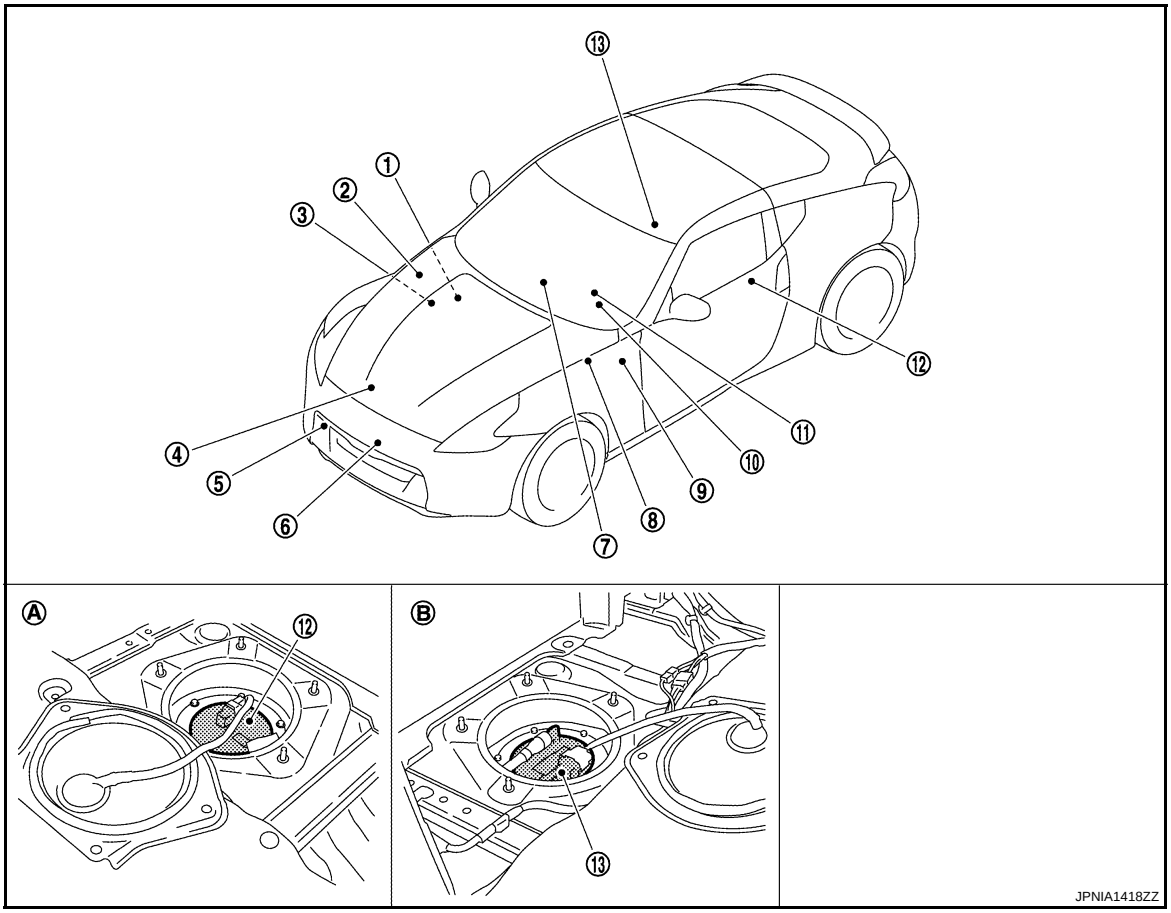

1.	BCM Refer to BCS-8, "Component Parts Location".	2.	IPDM E/R Refer to PCS-5, "Component Parts Location".	3.	ECM Refer to EC-26, "Component Parts Location".
4.	Oil pressure switch Refer to EM-44, "Exploded View".	5.	Washer level switch	6.	Ambient sensor
7.	Triple meter	8.	ABS actuator and electric unit (control unit) Refer to BRC-11, "Component Parts Location".	9.	TCM Refer to TM-146, "Component Parts Location".
10.	Combination meter	11.	Parking brake switch	12.	Fuel level sensor unit (sub)
13.	Fuel level sensor unit and fuel pump (main)				
A.	Rear parcel shelf cover LH (bottom)	B.	Rear parcel shelf cover RH (bottom)		

ODO/TRIP METER : Component Description

INFOID:0000000004528746

Unit	Description
Combination meter	Converts the vehicle speed signal received from the ABS actuator and electric unit (control unit) via CAN communication to mileage, and it displays the accumulated mileage to the odo/trip meter.
ABS actuator and electric unit (control unit)	Transmits the vehicle speed signal to the combination meter via CAN communication.

SHIFT POSITION INDICATOR

SHIFT POSITION INDICATOR : System Diagram

INFOID:0000000004528747

A/T MODELS

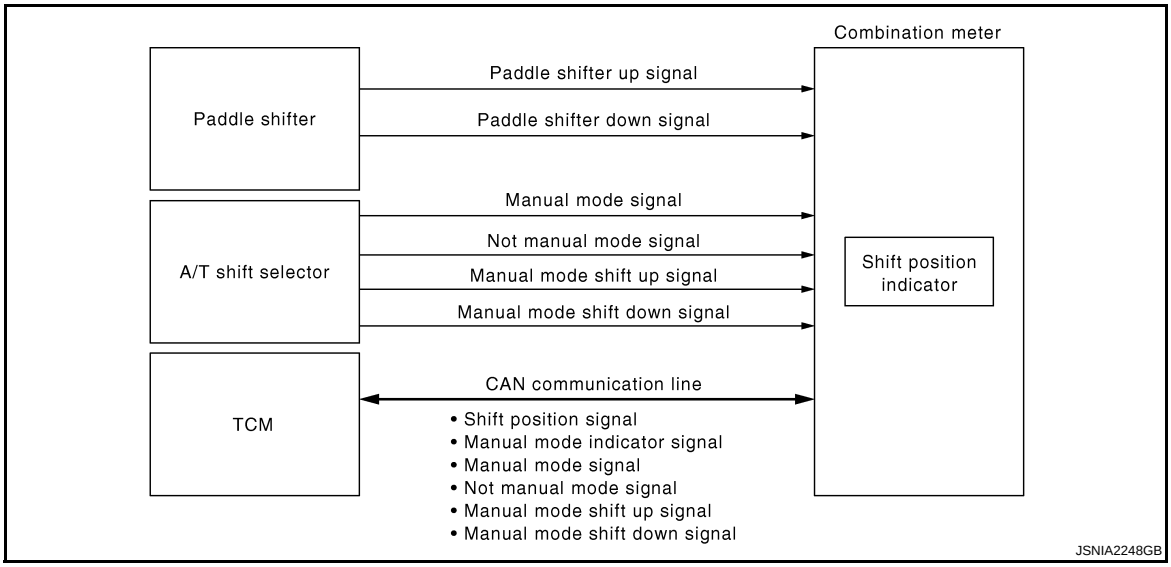

WITH SynchroRev Match mode (S-MODE) MODELS

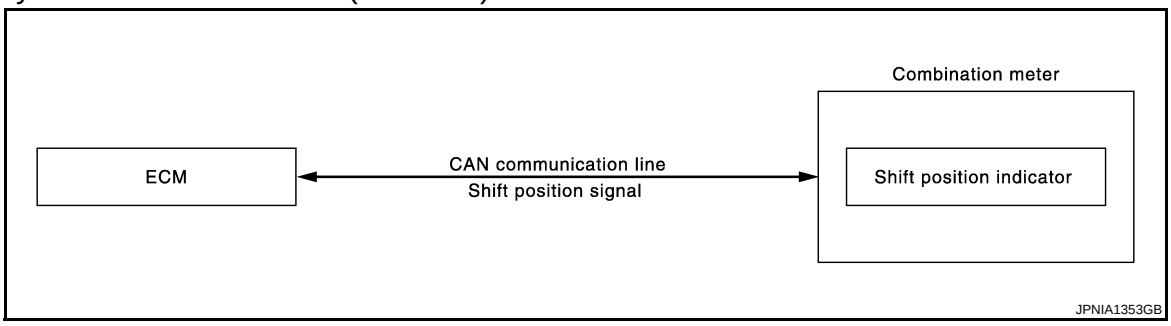

SHIFT POSITION INDICATOR : System Description

INFOID:0000000004528748

A/T MODELS

Manual Mode

When operated with A/T shift selector

- The combination meter receives the manual mode signal, manual mode shift up signal, and manual mode shift down signal from A/T shift selector and transmits them to TCM via CAN communication.
- TCM recognizes the manual mode operation status according to the manual mode signal, manual mode shift up signal, and manual mode shift down signal received via CAN communication and transmits the shift position signal to the combination meter via CAN communication.
- The combination meter indicates shift position according to the shift position signal via CAN communication.

When operated with paddle shifter

- The combination meter receives the manual mode signal from A/T shift selector, paddle shifter up signal and paddle shifter down signal from paddle shifter and transmits them to TCM via CAN communication.
- TCM recognizes the manual mode operation status according to the manual mode signal, manual mode shift up signal, and manual mode shift down signal received via CAN communication and transmits the shift position signal to the combination meter via CAN communication.
- The combination meter indicates shift position according to the shift position signal via CAN communication.

Not Manual Mode

- Combination meter inputs not manual mode signal from A/T shift selector and transmits the signals to TCM with CAN communication line.
- TCM transmits shift position signal to combination meter with CAN communication line.
- Combination meter indicates shift position when receiving shift position signal.

WITH SynchroRev Match mode (S-MODE) MODELS

- ECM transmits the shift position signal to the combination meter via CAN communication.
- The combination meter indicates shift position according to the shift position signal received via CAN communication.

SHIFT POSITION INDICATOR : Component Parts Location

INFOID:0000000004553752

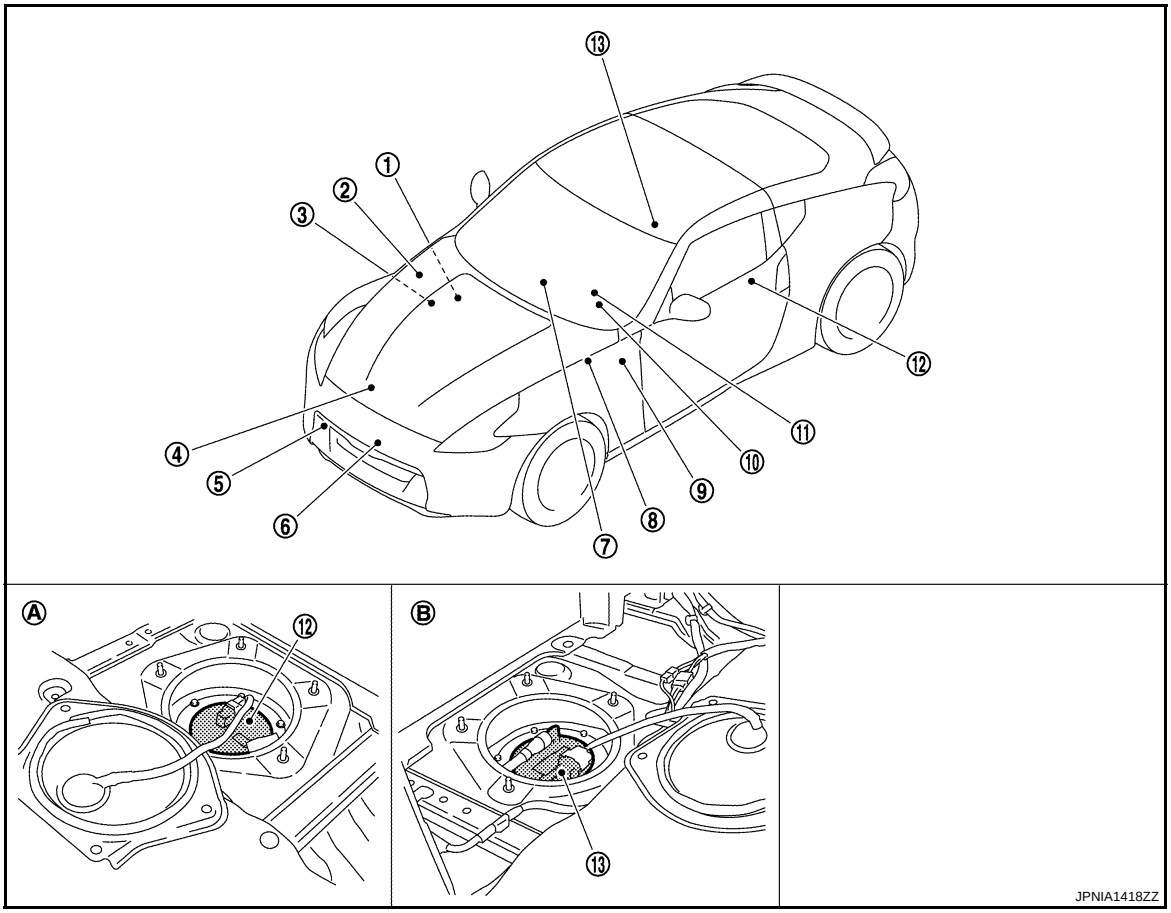

1.	BCM Refer to BCS-8, "Component Parts Location".	2.	IPDM E/R Refer to PCS-5, "Component Parts Location".	3.	ECM Refer to EC-26, "Component Parts Location".
4.	Oil pressure switch Refer to EM-44, "Exploded View".	5.	Washer level switch	6.	Ambient sensor
7.	Triple meter	8.	ABS actuator and electric unit (control unit) Refer to BRC-11, "Component Parts Location".	9.	TCM Refer to TM-146, "Component Parts Location".
10.	Combination meter	11.	Parking brake switch	12.	Fuel level sensor unit (sub)
13.	Fuel level sensor unit and fuel pump (main)				
A.	Rear parcel shelf cover LH (bottom)	B.	Rear parcel shelf cover RH (bottom)		

SHIFT POSITION INDICATOR : Component Description

INFOID:0000000004528750

Unit	Description
Combination meter	Displays the shift position on the shift position indicator with shift position signal received from TCM*1 or ECM*2 via CAN communication.
A/T shift selector	Transmits the following signals to the combination meter. • Manual mode signal • Not manual mode signal • Manual mode shift up signal • Manual mode shift down signal

Unit	Description
Paddle shifter	Transmits the paddle shifter up signal and paddle shifter down signal to the combination meter.
TCM*1	Transmits shift position signal to the combination meter with CAN communication.
ECM*2	Transmits shift position signal to the combination meter with CAN communication.

*1: A/T models

*2: With SynchroRev Match mode (S-MODE) models

OIL PRESSURE WARNING LAMP

OIL PRESSURE WARNING LAMP : System Diagram

INFOID:0000000004528751

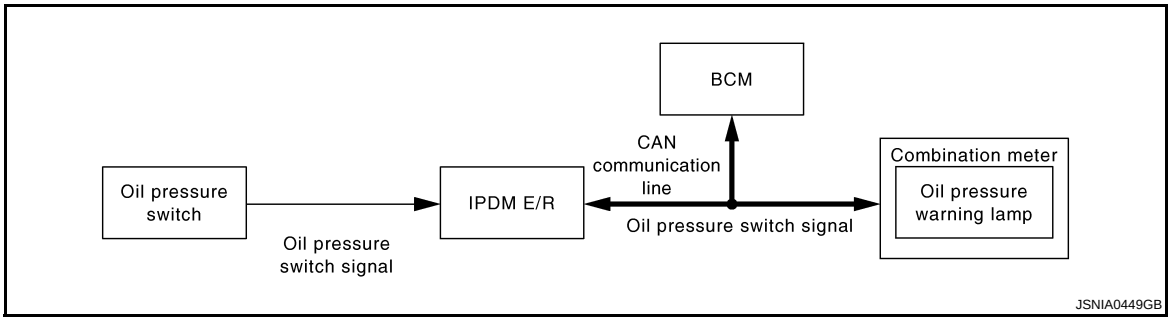

OIL PRESSURE WARNING LAMP : System Description

INFOID:0000000004528752

OIL PRESSURE WARNING LAMP

- IPDM E/R reads the ON/OFF signals from the oil pressure switch and transmits the oil pressure switch signal to the combination meter via BCM with the CAN communication line.
- The combination meter turns the oil pressure warning lamp ON/OFF according to the oil pressure switch signal received via CAN communication.

OIL PRESSURE WARNING LAMP : Component Parts Location

INFOID:0000000004553757

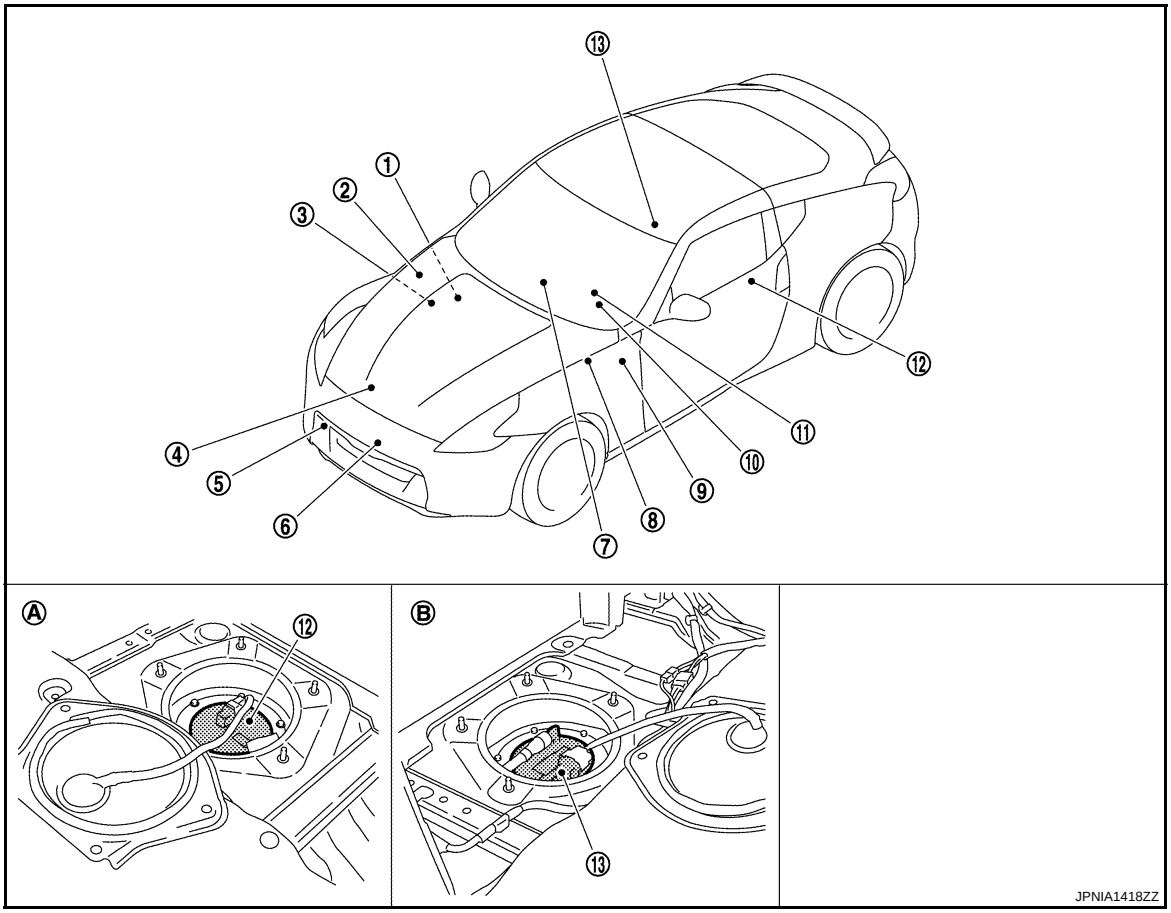

1.	BCM Refer to BCS-8, "Component Parts Location".	2.	IPDM E/R Refer to PCS-5, "Component Parts Location".	3.	ECM Refer to EC-26, "Component Parts Location".
4.	Oil pressure switch Refer to EM-44, "Exploded View".	5.	Washer level switch	6.	Ambient sensor
7.	Triple meter	8.	ABS actuator and electric unit (control unit) Refer to BRC-11, "Component Parts Location".	9.	TCM Refer to TM-146, "Component Parts Location".
10.	Combination meter	11.	Parking brake switch	12.	Fuel level sensor unit (sub)
13.	Fuel level sensor unit and fuel pump (main)				
A.	Rear parcel shelf cover LH (bottom)	B.	Rear parcel shelf cover RH (bottom)		

OIL PRESSURE WARNING LAMP : Component Description

INFOID:0000000004528754

Unit	Description
Combination meter	Turns the oil pressure warning lamp ON/OFF according to the oil pressure switch signal received from BCM via CAN communication.
IPDM E/R	Reads the ON/OFF signals from the oil pressure switch and transmits the oil pressure switch signal to the combination meter via BCM and CAN communication.
Oil pressure switch	Refer to MWI-50, "Description".
BCM	Transmits the oil pressure switch signal received from IPDM E/R via CAN communication to the combination meter via CAN communication.

UP-SHIFT INDICATOR

UP-SHIFT INDICATOR : System Diagram

INFOID:0000000004553740

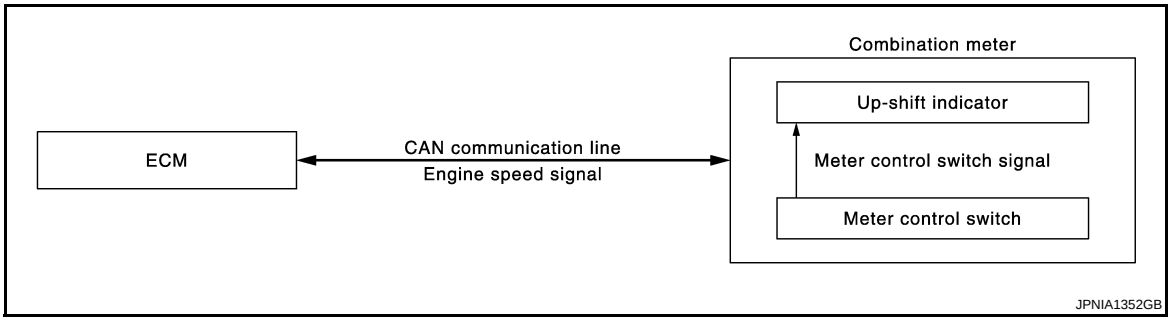

UP-SHIFT INDICATOR : System Description

INFOID:0000000004553741

Combination meter receives the engine speed signal from ECM via CAN communication line, and then turns up-shift indicator ON, OFF or blinking.

Combination meter turns up-shift indicator ON, OFF or Blinking under the following conditions

Up-shift indicator status	Engine speed	Setting range
ON	Set value* or more	No setting - 9,000 rpm
Blinking	From (Set value* minus 500 rpm)	—
OFF	(Set value* minus 600 rpm) or less	—

*: Value set by the setting function in information display.

UP-SHIFT INDICATOR : Component Parts Location

INFOID:0000000004553758

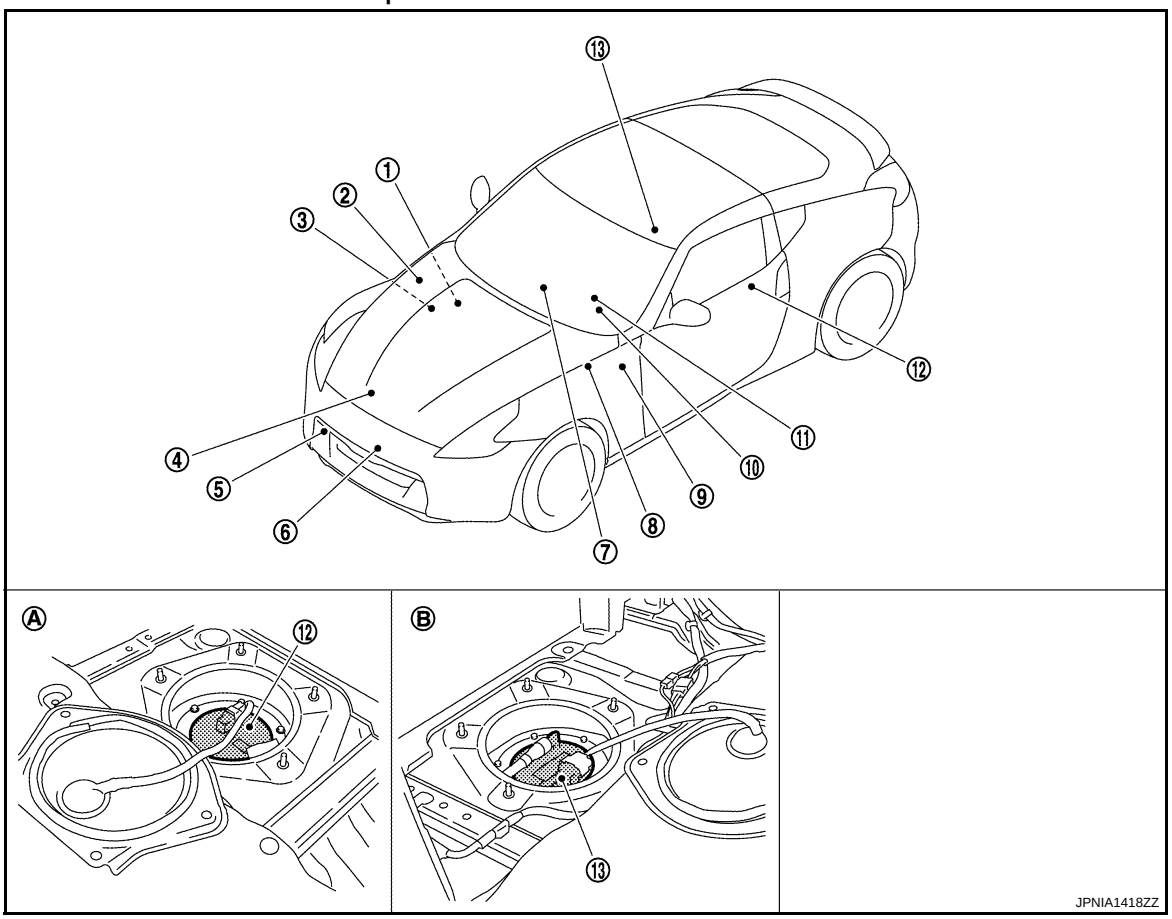

1.	BCM Refer to BCS-8, "Component Parts Location".	2.	IPDM E/R Refer to PCS-5, "Component Parts Location".	3.	ECM Refer to EC-26, "Component Parts Location".
4.	Oil pressure switch Refer to EM-44, "Exploded View".	5.	Washer level switch	6.	Ambient sensor
7.	Triple meter	8.	ABS actuator and electric unit (control unit) Refer to BRC-11, "Component Parts Location".	9.	TCM Refer to TM-146, "Component Parts Location".
10.	Combination meter	11.	Parking brake switch	12.	Fuel level sensor unit (sub)
13.	Fuel level sensor unit and fuel pump (main)				
A.	Rear parcel shelf cover LH (bottom)	B.	Rear parcel shelf cover RH (bottom)		

UP-SHIFT INDICATOR : Component Description

INFOID:0000000004553743

Unit	Description
Combination meter	• Receives the engine speed signal from ECM via CAN communication line. • Receives the meter control switch signal from meter control switch.
ECM	Transmits the engine speed signal to the combination meter via CAN communication.

METER ILLUMINATION CONTROL

METER ILLUMINATION CONTROL : System Diagram

INFOID:0000000004528755

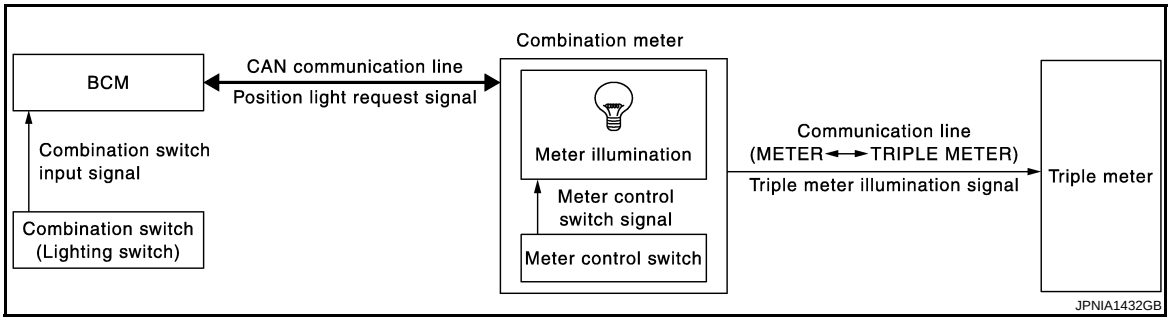

METER ILLUMINATION CONTROL : System Description

INFOID:0000000004528756

SYSTEM DESCRIPTION

Combination Meter

The combination meter controls the meter illumination and triple meter illumination by the illumination control switch signal from the meter control switch and the position light request signal transmitted by the BCM via CAN communication.

Triple Meter

The triple meter illuminates the triple meter illumination by the triple meter illumination signal from the combination meter via communication line.

Nighttime Mode

- Combination meter changes the meter illumination to the nighttime mode by the position light request signal from BCM via CAN communication.
- Meter illumination and triple meter illumination can be adjusted in 22 steps using the illumination control switch in nighttime mode.

METER ILLUMINATION CONTROL : Component Parts Location

INFOID:0000000004553759

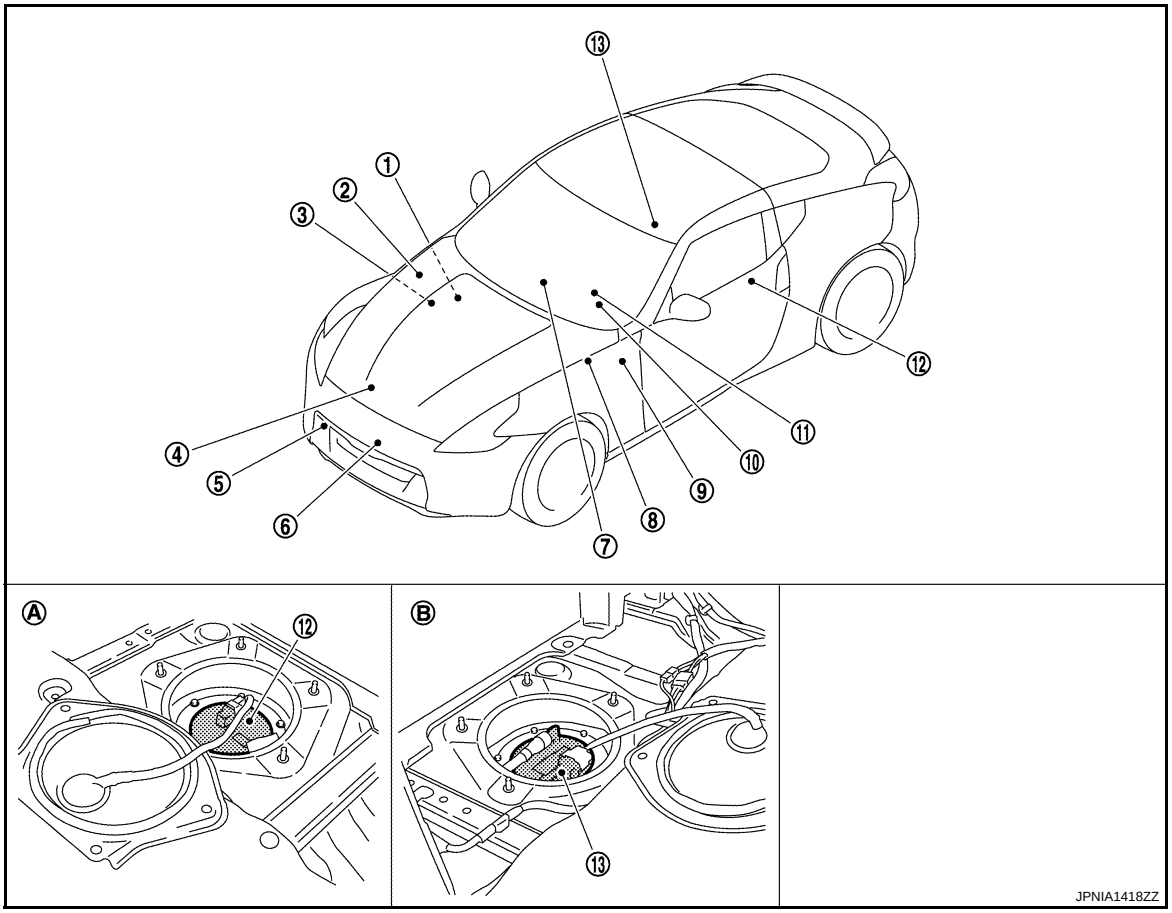

1.	BCM Refer to BCS-8, "Component Parts Location".	2.	IPDM E/R Refer to PCS-5, "Component Parts Location".	3.	ECM Refer to EC-26, "Component Parts Location".
4.	Oil pressure switch Refer to EM-44, "Exploded View".	5.	Washer level switch	6.	Ambient sensor
7.	Triple meter	8.	ABS actuator and electric unit (control unit) Refer to BRC-11, "Component Parts Location".	9.	TCM Refer to TM-146, "Component Parts Location".
10.	Combination meter	11.	Parking brake switch	12.	Fuel level sensor unit (sub)
13.	Fuel level sensor unit and fuel pump (main)				
A.	Rear parcel shelf cover LH (bottom)	B.	Rear parcel shelf cover RH (bottom)		

METER ILLUMINATION CONTROL : Component Description

INFOID:0000000004528758

Unit	Description
Combination meter	Controls the meter illumination and triple meter illumination with the meter control switch signal from the meter control switch and the position light request signal from BCM via CAN communication.
Triple meter	Receives the triple meter illumination signal from the combination meter via communication line.
BCM	Transmits the position light request signal to the combination meter via CAN communication.

METER EFFECT FUNCTION

METER EFFECT FUNCTION : System Diagram

INFOID:0000000004553716

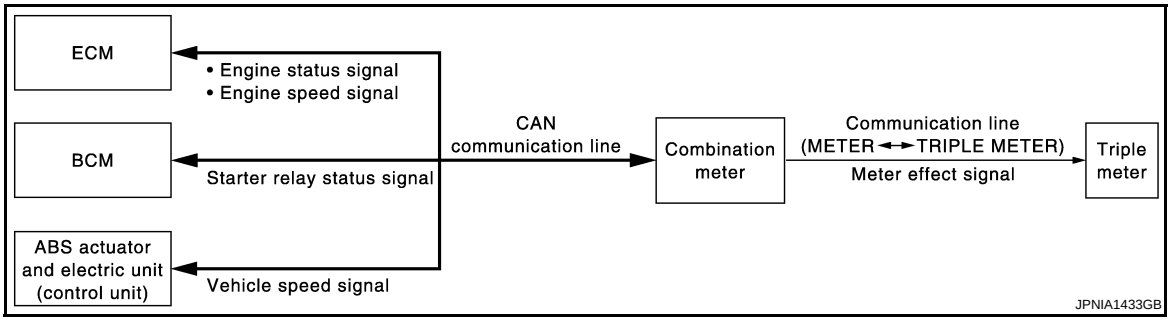

METER EFFECT FUNCTION : System Description

INFOID:0000000004553717

SYSTEM DESCRIPTION

Engine-start Effect Function

- The combination meter receives engine speed signal and engine status signal from ECM, starter relay status signal from BCM, vehicle speed signal from ABS actuator and electric unit (control unit) via CAN communication.
- The triple meter receives meter effect signal from combination meter via communication line.
- After the end of cranking and recognition of engine revolution, the combination meter illuminates the meter light in stages and sweeps the needles of the speedometer, tachometer, volt meter and oil temperature gauge.

NOTE:
The engine-start effect function enables ON/OFF with an operation of information display.

Cancel Condition

- When vehicle speed is more than 1 km/h (0.6 MPH).

METER EFFECT FUNCTION : Component Parts Location

INFOID:0000000004553761

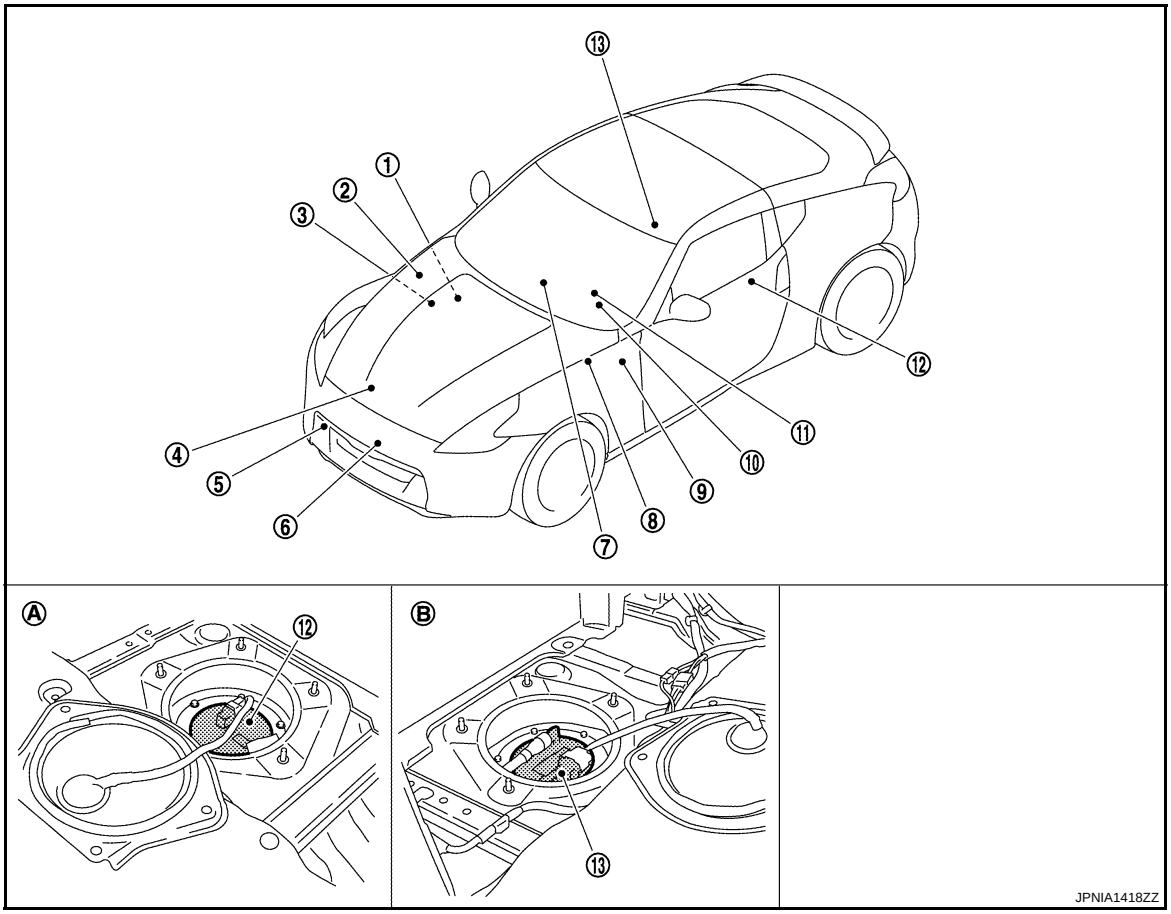

1.	BCM Refer to BCS-8, "Component Parts Location".	2.	IPDM E/R Refer to PCS-5, "Component Parts Location".	3.	ECM Refer to EC-26, "Component Parts Location".
4.	Oil pressure switch Refer to EM-44, "Exploded View".	5.	Washer level switch	6.	Ambient sensor
7.	Triple meter	8.	ABS actuator and electric unit (control unit) Refer to BRC-11, "Component Parts Location".	9.	TCM Refer to TM-146, "Component Parts Location".
10.	Combination meter	11.	Parking brake switch	12.	Fuel level sensor unit (sub)
13.	Fuel level sensor unit and fuel pump (main)				
A.	Rear parcel shelf cover LH (bottom)	B.	Rear parcel shelf cover RH (bottom)		

METER EFFECT FUNCTION : Component Description

INFOID:0000000004553719

Unit	Description
Combination meter	• Receives signals from each unit with the CAN communication and performs meter effect. • Transmits meter effect signal to the triple meter via communication line.
Triple meter	Receives signals from combination meter via communication line and performs meter effect.
ECM	Transmits engine speed signal and engine status signal to the combination meter via CAN communication.
BCM	Transmits starter relay status signal to the combination meter via CAN communication.
ABS actuator and electric unit (control unit)	Transmits vehicle speed signal to the combination meter via CAN communication.

INFORMATION DISPLAY

INFORMATION DISPLAY : System Diagram

INFOID:0000000004528759

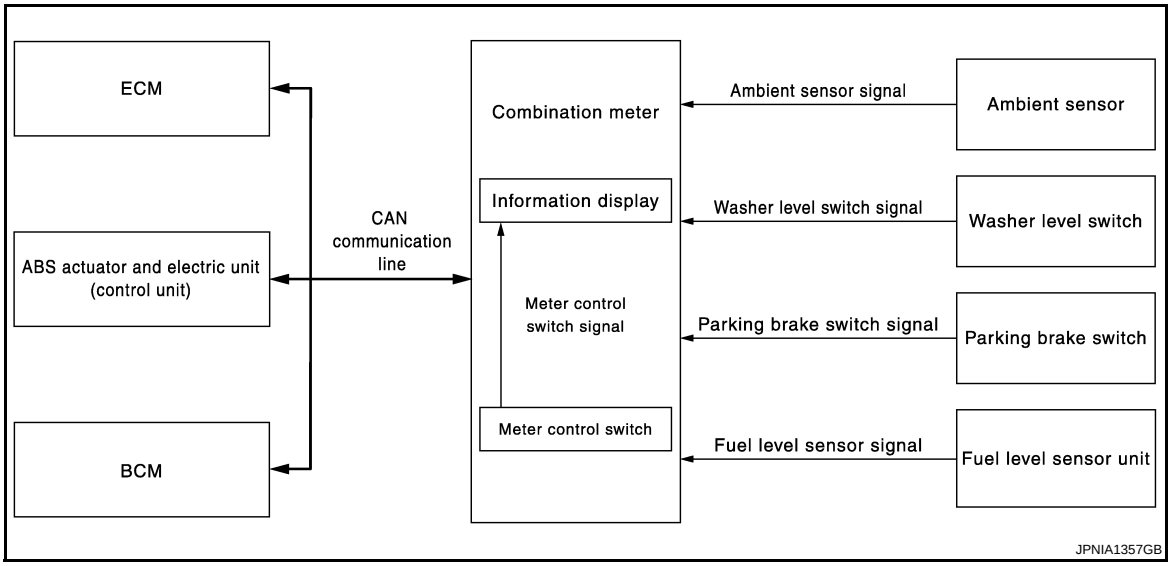

INFORMATION DISPLAY : System Description

INFOID:0000000004528760

DESCRIPTION

- The combination meter receives the information required for controlling the operations of the information display from the various units via CAN communication.
- The combination meter incorporates a trip computer that displays the warning/information according to the information received from various units.

PARKING BRAKE RELEASE WARNING

The combination meter indicates the parking brake release warning judged by the vehicle speed signal received from the ABS actuator and electric unit (control unit) via CAN communication and the parking brake switch signal from the parking brake switch.

Warning Operation Condition

Parking brake release warning is judged if all of the following conditions are fulfilled.

- Vehicle speed is 7 km/h (4.3 MPH) or higher
- Parking brake switch ON

LOW FUEL WARNING

The combination meter indicates the low fuel warning judged by the fuel level sensor signal received from the fuel level sensor unit.

Warning Operation Condition

- Fuel level: Approx. 11.4 ℓ (3 US gal, 2-4/8 Imp gal) or less

LOW WASHER FLUID WARNING

The combination meter indicates the low washer fluid warning judged by the signal from the washer level switch.

Warning Operation Condition

- Indicates the warning when the washer level switch is ON for 180 seconds or more. Stops indicating the warning when the washer level switch is OFF for 30 seconds or more.

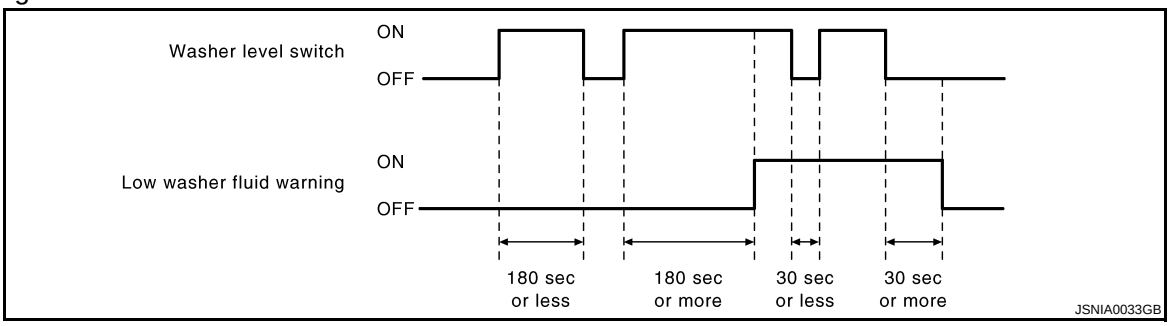

DOOR OPEN WARNING

The combination meter indicates the door open warning judged by each door switch signal received from the BCM via CAN communication line.

INSTANTANEOUS FUEL CONSUMPTION (MPG)

- The combination meter receives the fuel consumption monitor signal from the ECM and the vehicle speed signal from the ABS actuator and electric unit (control unit) via CAN communication.
- The combination meter calculates instantaneous fuel consumption according to the fuel consumption monitor signal and the vehicle speed signal received via CAN communication.

AVERAGE FUEL CONSUMPTION (MPG)

- The combination meter receives the fuel consumption monitor signal from the ECM and the vehicle speed signal from the ABS actuator and electric unit (control unit) via CAN communication.
- The combination meter calculates the average fuel consumption according to the fuel consumption monitor signal and the vehicle speed signal received via CAN communication.
- The average fuel consumption displayed on the information display is uploaded in approximately 30-second intervals.

NOTE:

"——" is displayed for approximately 30 seconds just after the reset operation or after the ignition switch is OFF → ON. It is displayed continuously until the vehicle drives approximately 500 m (0.31 mile).

AVERAGE VEHICLE SPEED (MPH)

- The combination meter receives the vehicle speed signal from the ABS actuator and electric unit (control unit) via CAN communication.
- Measures the time while the ignition switch is ON through the combination meter.
- The combination meter the average vehicle speed according to the above signals.
- The average vehicle speed displayed on the information display is uploaded in approximately 30-second intervals.

NOTE:

"–––" is displayed for 30 seconds just after the reset operation or after the ignition switch is OFF → ON. It is displayed continuously until the vehicle drives approximately 500 m (0.31 mile).

TRAVEL TIME (TIME)

Measures the time while the ignition switch is ON through the combination meter.

TRAVEL DISTANCE (MILES)

- The combination meter receives the vehicle speed signal from the ABS actuator and electric unit (control unit) via CAN communication.
- The combination meter calculates the vehicle distance according to the vehicle speed signal. The vehicle distance is displayed.

POSSIBLE DRIVING DISTANCE (RANGE)

The combination meter calculates possible driving distance according to the vehicle speed signal and fuel consumption monitor signal transmitted via CAN communication and the fuel level sensor signal transmitted from the fuel level sensor.

NOTE:

- "–––" is displayed for 30 seconds after the ignition switch is OFF → ON. It is displayed continuously until the vehicle drives approximately 500 m (0.31 mile).
- The indicated values may not match each other when refueling with the ignition switch ON. Refer to MWI-92, "INFORMATION DISPLAY : Description".

AMBIENT AIR TEMPERATURE

- The combination meter receives the ambient sensor signal from the ambient sensor.
- The combination meter calculates the ambient temperature according to the ambient sensor signal.
- The indicated temperature does not increase if the vehicle speed is less than 20 km/h (12 MPH).

NOTE:

- The ambient sensor input value that is displayed on "Data Monitor" of CONSULT-III is the value before the correction. It may not match the indicated temperature on the information display.
- The ambient temperature may be indicated higher than the actual temperature, depending on heat in the engine, the road surface temperature, and so on.

SETTING

Setting item list

Items		Setting range	Setting unit	Description
ALERT	UP SHIFT	No setting - 9,000 rpm	100 rpm [500 rpm]*	The engine speed signal received from ECM via CAN communication, and the up-shift indicator can be set to ON/OFF depending on the engine speed.
	TIMER	No setting - 6 hours	30 minutes, [60 minutes]*	Time to rest is displayed on the information display if the vehicle reached the set travel distance.
	ICY	ON/OFF	—	Low outside temp is displayed on the information display if the ambient temperature is 3°C (37°F) or less.
MAINTENANCE	OIL	No setting - 18,500 miles, (No setting - 30,000 km)	250 miles (500 km), [500 miles (1,000 km)]*	The engine oil replacement interval is displayed on the information display if the vehicle reached the set distance.
	FILTER	No setting - 18,500 miles, (No setting - 30,000 km)	250 miles (500 km), [500 miles (1,000 km)]*	The oil filter replacement interval is displayed on the information display if the vehicle reached the set distance.
	TIRE	No setting - 18,500 miles, (No setting - 30,000 km)	250 miles (500 km), [500 miles (1,000 km)]*	The tire replacement interval is displayed on the information display if the vehicle reached the set distance.
	OTHER	No setting - 18,500 miles, (No setting - 30,000 km)	250 miles (500 km), [500 miles (1,000 km)]*	The other replacement interval is displayed on the information display if the vehicle reached the set distance.

Items		Setting range	Setting unit	Description
OPTIONS	LANGUAGE	ENGLISH/FRANCAIS	—	The language setting can be changed.
	EFFECTS	ON/OFF	—	The engine-start effect function setting can be changed.
	UNIT	US/METRIC	—	The unit setting can be changed.
CLOCK	SETTING	1:00 - 12:59	Hour : Minutes	Can set the time of the clock.
	RESET	—	Reset	Minutes indication be comes zero.

* : Press and hold the switch (1 second or more).

INFORMATION DISPLAY : Component Parts Location

INFOID:0000000004553762

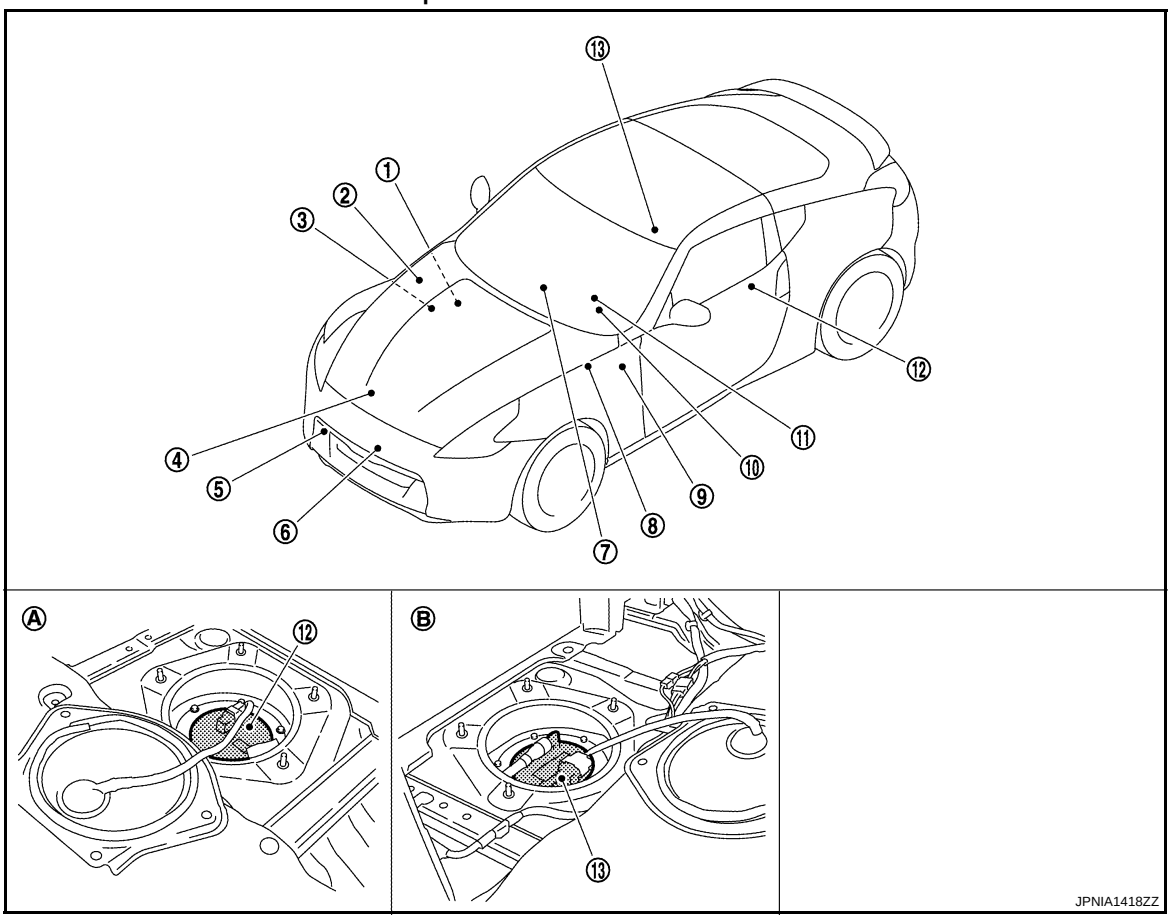

1. BCM
Refer to BCS-8, "Component Parts Location".
2. IPDM E/R
Refer to PCS-5, "Component Parts Location".
3. ECM
Refer to EC-26, "Component Parts Location".
4. Oil pressure switch
Refer to EM-44, "Exploded View".
5. Washer level switch
6. Ambient sensor
7. Triple meter
8. ABS actuator and electric unit (control unit)
Refer to BRC-11, "Component Parts Location".
9. TCM
Refer to TM-146, "Component Parts Location".
10. Combination meter
11. Parking brake switch
12. Fuel level sensor unit (sub)
13. Fuel level sensor unit and fuel pump (main)

A. Rear parcel shelf cover LH (bottom)
B. Rear parcel shelf cover RH (bottom)

INFORMATION DISPLAY : Component Description

INFOID:0000000004528762

Unit	Description
Combination meter	Controls the information display according to the signal received from each unit.
Fuel level sensor unit	Refer to MWI-47, "Description".
ECM	Transmits the following signals to the combination meter via CAN communication. • Engine speed signal • Fuel consumption monitor signal
ABS actuator and electric unit (control unit)	Transmits the vehicle speed signal to the combination meter via CAN communication.
BCM	Transmits signals provided by various units to the combination meter via CAN communication.
Washer level switch	Transmits the washer level signal to the combination meter.
Parking brake switch	Refer to MWI-52, "Description".
Door switch	Transmits the door switch signals to BCM.
Ambient sensor	Detects the ambient air temperature and transmits the ambient sensor signal to the combination meter.

TRIPLE METER

TRIPLE METER : System Diagram

INFOID:0000000004553726

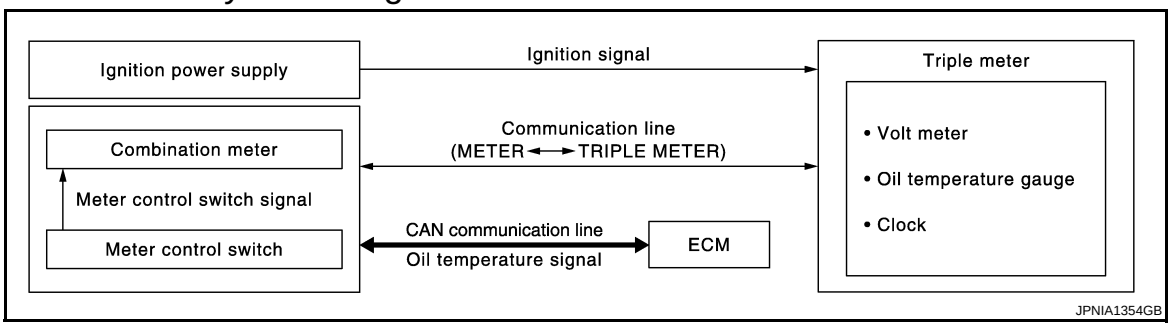

TRIPLE METER : System Description

INFOID:0000000004553727

VOLT METER

Triple meter indicates the battery voltage on volt meter, when triple meter receives the ignition signal (from ignition power supply)

OIL TEMPERATURE GAUGE

Triple meter receives the oil temperature signal from combination meter via communication line, and then indicates the engine oil temperature on oil temperature gauge.

CLOCK

Triple meter receives the clock signal from combination meter, and then displays the time on clock.

TRIPLE METER : Component Parts Location

INFOID:0000000004553763

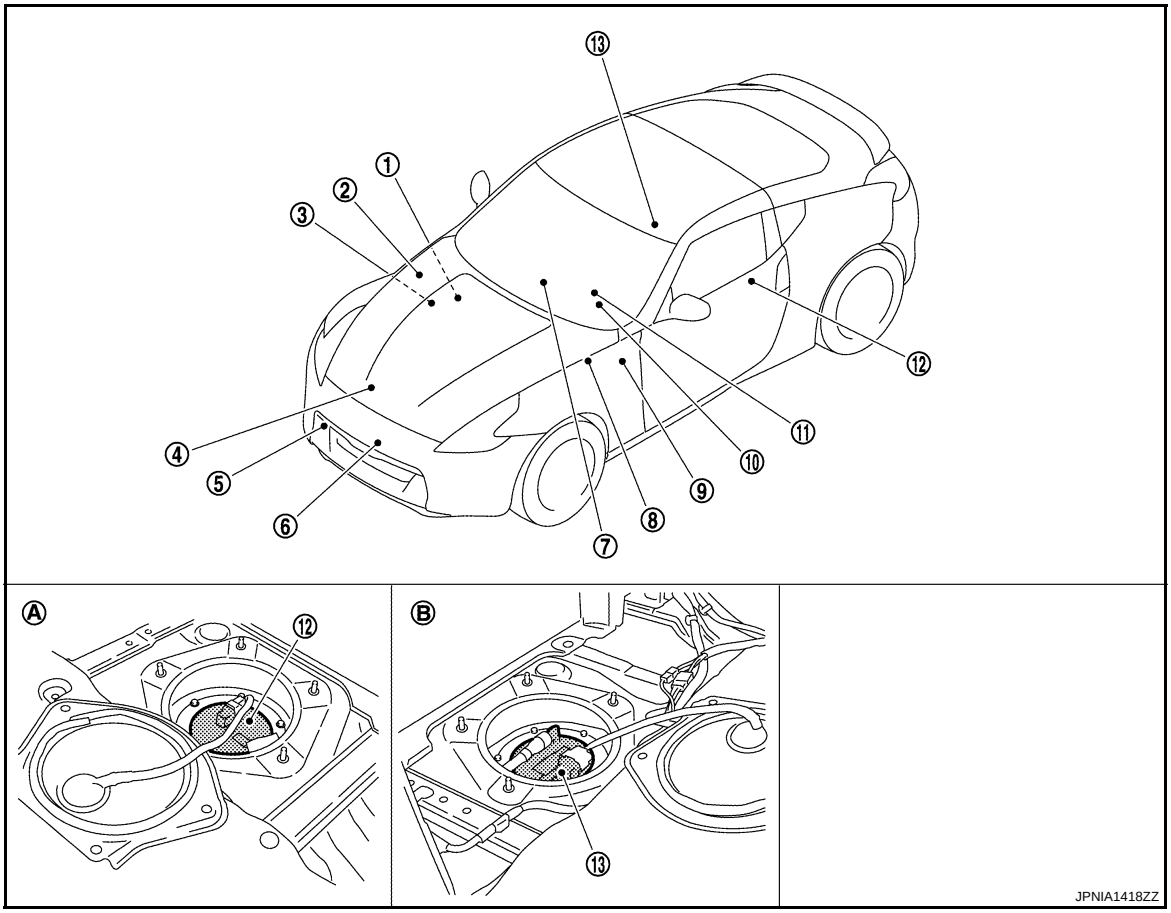

1.	BCM Refer to BCS-8, "Component Parts Location".	2.	IPDM E/R Refer to PCS-5, "Component Parts Location".	3.	ECM Refer to EC-26, "Component Parts Location".
4.	Oil pressure switch Refer to EM-44, "Exploded View".	5.	Washer level switch	6.	Ambient sensor
7.	Triple meter	8.	ABS actuator and electric unit (control unit) Refer to BRC-11, "Component Parts Location".	9.	TCM Refer to TM-146, "Component Parts Location".
10.	Combination meter	11.	Parking brake switch	12.	Fuel level sensor unit (sub)
13.	Fuel level sensor unit and fuel pump (main)				
A.	Rear parcel shelf cover LH (bottom)	B.	Rear parcel shelf cover RH (bottom)		

TRIPLE METER : Component Description

INFOID:0000000004553729

Unit	Description
Triple meter	Controls the triple meter according to the signals received from combination meter.
Combination meter	• Receives the oil temperature signal from ECM via CAN communication line, and then transmits the signal to triple meter via communication line (METER⇔TRIPLE METER). • Receives the meter control switch signal from meter control switch, and then transmits those signals to triple meter via communication line (METER⇔TRIPLE METER).
ECM	Transmits the oil temperature signal to combination meter via CAN communication line.

DIAGNOSIS SYSTEM (METER)

Diagnosis Description

INFOID:0000000004528766

SELF-DIAGNOSIS MODE

- Information display LCD segment operation can be checked in self-diagnosis mode.
- Meters/gauges can be checked in self-diagnosis mode.

OPERATION PROCEDURE

1. Turn ignition switch OFF.
2. While pressing the trip reset switch (1), turn ignition switch ON.
3. Make sure that the trip meter displays “0000.0”.
4. Press the trip reset switch at least 3 times. (Within 7 seconds after the ignition switch is turned ON.)

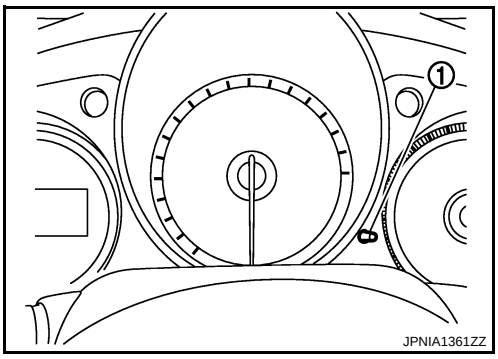

5. The unified meter control unit is turned to self-diagnosis mode.
   - The segment dots of the information display LCD (1) blink alternately.
   - Water temperature gauge and fuel gauge return to zero, simultaneously.

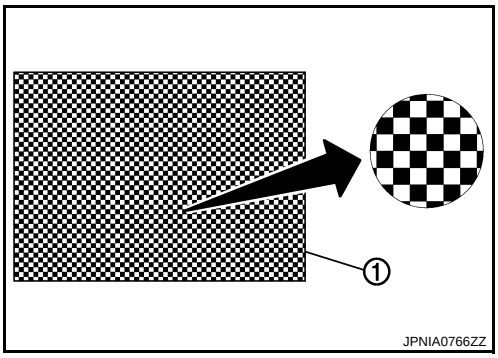

   - The fuel gauge (1) blink alternately.
   - The engine coolant temperature gauge (2) blink alternately.

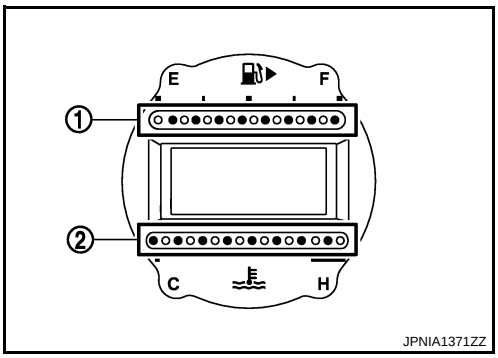

NOTE:
- Check combination meter power supply and ground circuit when the self-diagnosis mode of the combination meter does not start. Replace combination meter if abnormal.
- If any of the segments are not displayed, replace combination meter.

6. Each meter activates by pressing the trip reset switch.

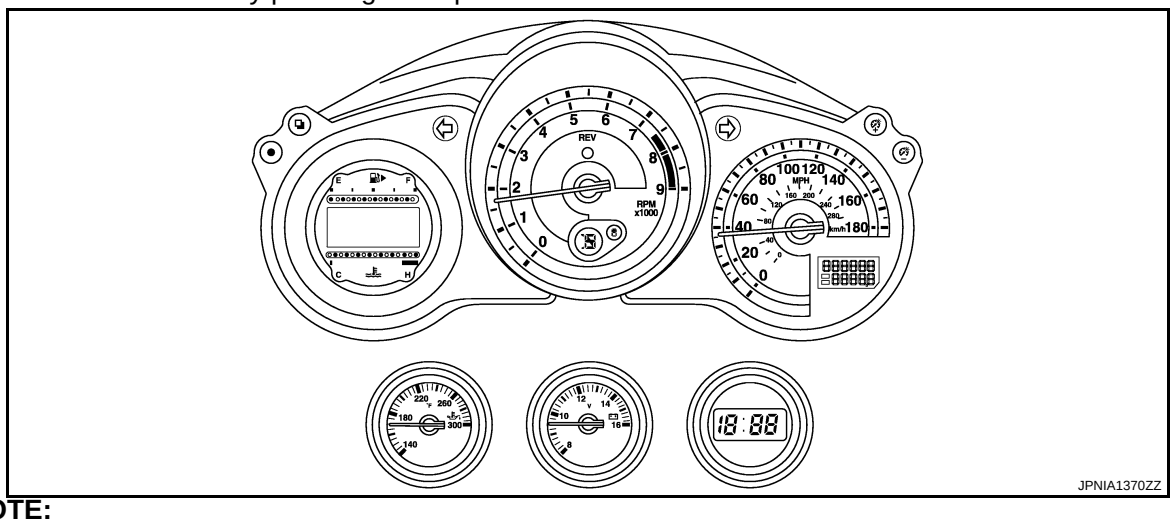

NOTE:
- If any of the meters or gauges are not activated, replace combination meter.
- The figure is reference.

CONSULT-III Function (METER/M&A)

INFOID:0000000004528767

CONSULT-III APPLICATION ITEMS

CONSULT-III can perform the following diagnosis modes via CAN communication and the combination meter.

System	Diagnosis mode	Description
METER/M&A	Self Diagnostic Result	The combination meter checks the conditions and displays memorized errors.
	Data Monitor	Displays the combination meter input/output data in real time.
	Special function	Lighting history of the warning lamp and indicator lamp can be checked.

SELF DIAG RESULT

Refer to MWI-71, "DTC Index".

DATA MONITOR

Display Item List

X: Applicable

Display item [Unit]	MAIN SIGNALS	Description
SPEED METER [km/h]	X	Value of vehicle speed signal received from ABS actuator and electric unit (control unit) via CAN communication. **NOTE:** 655.35 is displayed when the malfunction signal is received.
SPEED OUTPUT [km/h]	X	Vehicle speed signal value transmitted to other units via CAN communication. **NOTE:** 655.35 is displayed when the malfunction signal is received.
ODO OUTPUT [km/h or mph]		Odometer signal value transmitted to other units via CAN communication.
TACHO METER [rpm]	X	Value of the engine speed signal received from ECM via CAN communication. **NOTE:** 8191.875 is displayed when the malfunction signal is received.
FUEL METER [L]	X	Fuel level indicated on combination meter.
W TEMP METER [°C]	X	Value of engine coolant temperature signal is received from ECM via CAN communication. **NOTE:** 215 is displayed when the malfunction signal is input.

Display item [Unit]	MAIN SIGNALS	Description
ABS W/L [On/Off]		Status of ABS warning lamp detected from ABS warning lamp signal is received from ABS actuator and electric unit (control unit) via CAN communication.
VDC/TCS IND [On/Off]		Status of VDC OFF indicator lamp detected from VDC OFF indicator lamp signal is received from ABS actuator and electric unit (control unit) via CAN communication.
SLIP IND [On/Off]		Status of SLIP indicator lamp detected from slip indicator lamp signal received from ABS actuator and electric unit (control unit) via CAN communication.
BRAKE W/L [On/Off]		Status of brake warning lamp detected from brake warning lamp signal is received from ABS actuator and electric unit (control unit) via CAN communication. **NOTE:** Displays “Off” if the brake warning lamp is illuminated when the valve check starts, the parking brake switch is turned ON or the brake fluid level switch is turned ON.
DOOR W/L [On/Off]		Status of door warning detected from door switch signal received from BCM via CAN communication.
HI-BEAM IND [On/Off]		Status of high beam indicator lamp detected from high beam request signal is received from BCM via CAN communication.
TURN IND [On/Off]		Status of turn indicator lamp detected from turn indicator signal is received from BCM via CAN communication.
RR FOG IND [On/Off]		Status of rear fog lamp indicator lamp detected from rear fog lamp status signal is received from BCM via CAN communication.
LIGHT IND [On/Off]		Status of light indicator lamp detected from position light request signal is received from BCM via CAN communication.
OIL W/L [On/Off]		Status of oil pressure warning lamp detected from oil pressure switch signal is received from BCM via CAN communication.
MIL [On/Off]		Status of malfunction indicator lamp detected from malfunctioning indicator lamp signal is received from ECM via CAN communication.
CRUISE IND [On/Off]		Status of CRUISE indicator lamp detected from CRUISE indicator lamp signal is received from ECM via CAN communication.
ATC/T-AMT W/L [On/Off]		A/T CHECK indicator lamp status judged by the transmission check warning lamp signal received from TCM via CAN communication.
FUEL W/L [On/Off]		Low-fuel warning lamp status detected by the identified fuel level.
WASHER W/L [On/Off]		Status of washer warning lamp judged from washer level switch input to combination meter.
AIR PRES W/L [On/Off]		Status of low tire pressure warning lamp detected from tire pressure signal is received from BCM via CAN communication.
KEY G/Y W/L [On/Off]		Status of key warning lamp (yellow) detected from key warning signal is received from BCM via CAN communication.
MT SYNC REV IND [On/Off]		Status of S-MODE indicator judged from S-MODE indicator signal received from ECM with CAN communication line.
LCD [C&P N, C&P I, B&P N, B&P I, ID NG, ROTAT, SFT P, INSRT, BATT, NO KY, OUTKY, LK WN]		Displays status of Intelligent Key system warning detected from meter display signal is received from BCM via CAN communication.
SHIFT IND [P, R, N, D, L, M1, M2, M3, M4, M5, M6, M7]		• Status of shift position indicator detected from shift position signal and manual mode indicator signal is received from TCM via CAN communication. (A/T models) • Status of shift position indicator detected from shift position signal is received from ECM via CAN communication. (with SynchroRev Match mode models)
AT S MODE SW [Off]		This item is displayed, but cannot be monitored.
M RANGE SW [On/Off]		Status of manual mode switch.

Display item [Unit]	MAIN SIGNALS	Description
NM RANGE SW [On/Off]		Status of not manual mode switch.
AT SFT UP SW [On/Off]		Status of position select switch (up).
AT SFT DWN SW [On/Off]		Status of position select switch (down).
ST SFT UP SW [On/Off]		Status of paddle shifter up switch.
ST SFT DWN SW [On/Off]		Status of paddle shifter down switch.
PKB SW [On/Off]		Status of parking brake switch.
BUCKLE SW [On/Off]		Status of seat belt buckle switch (driver side).
BRAKE OIL SW [On/Off]		Status of brake fluid level switch.
A/C AMP CONN [On/Off]		Status of A/C auto amp. connection recognition signal.
ENTER SW [On/Off]		Status of ❑ (ENTER) switch.
SELECT SW [On/Off]		Status of ● (SELECT) switch.
MT SYNC REV SW [On/Off]		Status of S-MODE switch.
DISTANCE [km]		Value of possible driving distance calculated by combination meter.
OUTSIDE TEMP [°C or °F]		Ambient air temperature value converted from ambient sensor signal received from ambient sensor. **NOTE:** This may not match with the temperature value indicated on the information display. (Because the information display value is a corrected value from the ambient sensor input value.)
FUEL LOW SIG [On/Off]		Status of fuel level low warning signal to output to AV control unit via CAN communication.
CRANKING SIG [On/Off]		Cranking status judged by the engine status signal received from ECM via CAN communication.
ST CNT SIG [On/Off]		Starter relay status judged by the starter relay status signal received from BCM via CAN communication.
BUZZER [On/Off]	X	Buzzer status (in the combination meter) is detected from the buzzer output signal received from each unit via CAN communication and the warning output condition of the combination meter.

NOTE:

Some items are not available according to vehicle specification.

SPECIAL FUNCTION

Special menu

Display item	Description
W/L ON HISTORY	Lighting history of warning lamp and indicator lamp can be checked.

W/L ON HISTORY

- Stores histories when warning/indicator lamp is turned on.
- “W/L ON HISTORY” indicates the “TIME” when the warning/ indicator lamp is turned on.
- The “TIME” above is :

- 0 : The condition that the warning/indicator lamp has been turned on 1 or more times after starting the engine and waiting for 30 seconds.
- 1 - 39 : The number of times the engine was restarted after the 0 condition.
- NO W/L ON HISTORY : Stores NO (0) turning on history of warning/indicator lamp.

NOTE:

- W/L ON HISTORY is not stored for approximately 30 seconds after the engine starts.
- Brake warning lamp does not store any history when the parking brake is applied or the brake fluid level gets low.

Display Item

Display item	Description
ABS W/L	Lighting history of ABS warning lamp.
VDC/TCS IND	Lighting history of VDC OFF indicator lamp.
SLIP IND	Lighting history of SLIP indicator lamp.
BRAKE W/L	Lighting history of brake warning lamp.
DOOR W/L	Lighting history of door warning.
TRUNK/GLAS-H	This item is displayed, but cannot be monitored.
OIL W/L	Lighting history of oil pressure warning lamp.
C-ENG W/L	Lighting history of malfunction indicator lamp.
C-ENG2 W/L	This item is displayed, but cannot be monitored.
CRUISE IND	Lighting history of CRUISE indicator lamp.
SET IND	This item is displayed, but cannot be monitored.
CRUISE W/L	This item is displayed, but cannot be monitored.
BA W/L	This item is displayed, but cannot be monitored.
O/D OFF IND	This item is displayed, but cannot be monitored.
ATC/T-AMT W/L	Lighting history of A/T CHECK ingicator lamp.
ATF TEMP W/L	This item is displayed, but cannot be monitored.
CVT IND	This item is displayed, but cannot be monitored.
SPORT IND	This item is displayed, but cannot be monitored.
4WD W/L	This item is displayed, but cannot be monitored.
FUEL W/L	Lighting history of low fuel level warning.
WASHER W/L	Lighting history of low washer fluid warning
AIR PRES W/L	Lighting history of low tire pressure warning lamp.
KEY G/Y W/L	Lighting history of key warning lamp (yellow).
KEY R W/L	Lighting history of key warning lamp (red).
KEY KNOB W/L	This item is displayed, but cannot be monitored.
SYS FAIL W/L	This item is displayed, but cannot be monitored.
SFT POSI W/L	This item is displayed, but cannot be monitored.
HV BAT W/L	This item is displayed, but cannot be monitored.
HEV BRAKE W/L	This item is displayed, but cannot be monitored.
SFT OPER W/L	This item is displayed, but cannot be monitored.
CHAGE W/L	Lighting history of charge warning lamp.
OIL LEV LOW	This item is displayed, but cannot be monitored.
DPF W/L	This item is displayed, but cannot be monitored.

DTC/CIRCUIT DIAGNOSIS

U1000 CAN COMM CIRCUIT

Description

INFOID:0000000004528768

CAN (Controller Area Network) is a serial communication system for real time application. It is an on-vehicle multiplex communication system with high data communication speed and excellent error detectability. Many electronic control units are equipped onto vehicles, and each control unit shares information and links with other control units during operation (not independent). In CAN communication, control units are connected with two communication lines (CAN-H line, CAN-L line) allowing a high rate of information transmission with less wiring. Each control unit transmits/receives data but selectively reads required data only.
CAN Communication Signal Chart. Refer to LAN-13, "How to Use CAN Communication Signal Chart".

DTC Logic

INFOID:0000000004528769

DTC DETECTION LOGIC

DTC	Display contents of CONSULT-III	Diagnostic item is detected when ...	Probable malfunction location
U1000	CAN COMM CIRCUIT	When combination meter is not transmitting or receiving CAN communication signal for 2 seconds or more.	CAN communication system

Diagnosis Procedure

INFOID:0000000004528770

1. PERFORM SELF DIAGNOSTIC

1. Turn ignition switch ON and wait for 2 seconds or more.
2. Check “Self Diagnostic Result” of “METER/M&A”.

Is “CAN COMM CIRCUIT” displayed?

YES >> Refer to LAN-14, "Trouble Diagnosis Flow Chart".
NO >> Refer to GI-39, "Intermittent Incident".

U1010 CONTROL UNIT (CAN)

Description

INFOID:0000000004528771

Initial diagnosis of combination meter.

DTC Logic

INFOID:0000000004528772

DTC DETECTION LOGIC

DTC	Display contents of CONSULT-III	Diagnostic item is detected when ...	Probable malfunction location
U1010	CONTROL UNIT (CAN)	If any malfunction is detected during initial diagnosis of combination meter CAN controller	Combination meter

Diagnosis Procedure

INFOID:0000000004528773

1. REPLACE COMBINATION METER

When DTC “U1010” is detected, replace combination meter.

>> INSPECTION END

B2201 COMMUNICATION ERROR 1

Description

INFOID:0000000004553713

The communication line (METER <-> TRIPLE METER) is used to communicate signals between the combination meter and the triple meter in order to control the triple meter.

DTC Logic

INFOID:0000000004553714

DTC DETECTION LOGIC

DTC	Display contents of CONSULT-III	Diagnostic item is detected when ...	Probable malfunction location
B2201	COMM ERROR 1	If a communication error is present in the communication line (METER⇔TRIPLE METER) for 2 seconds or more	Communication line (METER⇔TRIPLE METER) circuit

Diagnosis Procedure

INFOID:0000000004553715

1. CHECK CONNECTOR

Check combination meter, triple meter and terminals (combination meter side, triple meter side, and harness side) for looseness or bent.

Is the inspection result normal?

YES >> GO TO 2.
NO >> Repair terminal or connector.

2. CHECK CONTINUITY COMMUNICATION CIRCUIT

1. Turn ignition switch OFF.
2. Disconnect combination meter connector and triple meter connector.
3. Check continuity between combination meter harness connector and triple meter harness connector.

Combination meter		Triple meter		Continuity
Connector	Terminal	Connector	Terminal	
M53	9	M242	4	Existed
	10		5	

4. Check continuity between combination meter harness connector and ground.

Combination meter		Ground	Continuity
Connector	Terminal		
M53	9		Not existed
	10		

Is the inspection result normal?

YES >> GO TO 3.
NO >> Repair harness or connector.

3. CHECK COMBINATION METER OUTPUT VOLTAGE

1. Connect combination meter connector.
2. Turn ignition switch ON.
3. Check voltage between combination meter harness connector and ground.

Terminals			Voltage (Approx.)
(+)		(–)	
Combination meter			
Connector	Terminal	Ground	
M53	10		5 V

Is the inspection result normal?

YES >> GO TO 4.
NO >> Replace combination meter.

4. CHECK TRIPLE METER OUTPUT VOLTAGE

1. Turn ignition switch OFF.
2. Disconnect combination meter connector.
3. Connect triple meter connector.
4. Turn ignition switch ON.
5. Check voltage between triple meter harness connector and ground.

Terminals			Voltage (Approx.)
(+)		(–)	
Triple meter			
Connector	Terminal	Ground	
M242	4		5 V

Is the inspection result normal?

YES >> INSPECTION END
NO >> Replace triple meter.

B2205 VEHICLE SPEED

Description

INFOID:0000000004528774

Vehicle speed signal is transmitted from ABS actuator and electric unit (control unit) via CAN communication to combination meter.

DTC Logic

INFOID:0000000004528775

DTC DETECTION LOGIC

DTC	Display contents of CONSULT-III	Diagnostic item is detected when ...	Probable malfunction location
B2205	VEHICLE SPEED	An abnormal vehicle speed signal is input from ABS actuator and electric unit (control unit) for 2 seconds or more	• Wheel sensor • ABS actuator and electric unit (control unit)

Diagnosis Procedure

INFOID:0000000004528776

1. PERFORM SELF-DIAGNOSIS OF ABS ACTUATOR AND ELECTRIC UNIT (CONTROL UNIT)

Perform “Self Diagnostic Result” of ABS actuator and electric unit (control unit), and repair or replace malfunctioning parts.

>> Refer to BRC-22, "CONSULT-III Function".

B2267 ENGINE SPEED

Description

INFOID:0000000004528777

The engine speed signal is transmitted from ECM to the combination meter via CAN communication.

DTC Logic

INFOID:0000000004528778

DTC DETECTION LOGIC

DTC	Display contents of CONSULT-III	Diagnostic item is detected when ...	Probable malfunction location
B2267	ENGINE SPEED	ECM continuously transmits abnormal engine speed signals for 2 seconds or more	• Crankshaft position sensor (POS) • ECM

Diagnosis Procedure

INFOID:0000000004528779

1. PERFORM SELF-DIAGNOSIS OF ECM

Perform “Self Diagnostic Result” of ECM, and repair or replace malfunctioning parts.

>> Refer to EC-123, "CONSULT-III Function".

B2268 WATER TEMP

Description

INFOID:0000000004528780

The engine coolant temperature signal is transmitted from ECM to the combination meter via CAN communication.

DTC Logic

INFOID:0000000004528781

DTC DETECTION LOGIC

DTC	Display contents of CONSULT-III	Diagnostic item is detected when ...	Probable malfunction location
B2268	WATER TEMP	ECM continuously transmits abnormal engine coolant temperature signals for 60 seconds or more	• Engine coolant temperature sensor • ECM

Diagnosis Procedure

INFOID:0000000004528782

1. PERFORM SELF-DIAGNOSIS OF ECM

Perform “Self Diagnosis Result” of ECM, and repair or replace malfunctioning parts.

>> Refer to EC-123, "CONSULT-III Function".

POWER SUPPLY AND GROUND CIRCUIT

COMBINATION METER

COMBINATION METER : Diagnosis Procedure

INFOID:0000000004528783

1.CHECK FUSE

Check for blown fuses.

Power source	Fuse No.
Battery	11
Ignition switch ON or START	4

Is the inspection result normal?

YES >> GO TO 2.
NO >> Be sure to eliminate cause of malfunction before installing new fuse.

2.CHECK POWER SUPPLY CIRCUIT

Check voltage between combination meter harness connector terminals and ground.

Terminals			Ignition switch position	Voltage (Approx.)
(+)		(–)		
Combination meter		Ground		
Connector	Terminal			
M53	1		OFF	Battery voltage
	2		ON	

Is the inspection result normal?

YES >> GO TO 3.
NO >> Check harness between combination meter and fuse.

3.CHECK GROUND CIRCUIT

1. Turn ignition switch OFF.
2. Disconnect combination meter connector.
3. Check continuity between combination meter harness connector terminals and ground.

Combination meter		Ground	Continuity
Connector	Terminal		
M53	17		Existed
	23		

Is the inspection result normal?

YES >> INSPECTION END
NO >> Repair harness or connector.

TRIPLE METER

TRIPLE METER : Diagnosis Procedure

INFOID:0000000004553737

1.CHECK FUSE

Check for blown fuses.

Power source	Fuse No.
Battery	11
Ignition switch ON or START	4

Is the inspection result normal?

YES >> GO TO 2.
NO >> Be sure to eliminate cause of malfunction before installing new fuse.

2. CHECK POWER SUPPLY CIRCUIT

Check voltage between combination meter harness connector terminals and ground.

Terminals			Ignition switch position	Voltage (Approx.)
(+)		(–)		
Triple meter		Ground		
Connector	Terminal			
M242	2		OFF	Battery voltage
	3		ON	

Is the inspection result normal?

YES >> GO TO 3.
NO >> Check harness between triple meter and fuse.

3. CHECK GROUND CIRCUIT

1. Turn ignition switch OFF.
2. Disconnect triple meter connector.
3. Check continuity between triple meter harness connector terminals and ground.

Triple meter		Ground	Continuity
Connector	Terminal		
M242	1		Existed

Is the inspection result normal?

YES >> INSPECTION END
NO >> Repair harness or connector.

IPDM E/R (INTELLIGENT POWER DISTRIBUTION MODULE ENGINE ROOM)

IPDM E/R (INTELLIGENT POWER DISTRIBUTION MODULE ENGINE ROOM) : Diagnosis Procedure

INFOID:0000000004732340

1. CHECK FUSES AND FUSIBLE LINK

Check that the following IPDM E/R fuses or fusible links are not blown.

Signal name	Fuses and fusible link No.
Battery power supply	C
	50
	51

Is the fuse fusing?

YES >> Replace the blown fuse or fusible link after repairing the affected circuit if a fuse or fusible link is blown.
NO >> GO TO 2.

2. CHECK POWER SUPPLY CIRCUIT

1. Turn the ignition switch OFF.
2. Disconnect IPDM E/R connector.
3. Check voltage between IPDM E/R harness connector and the ground.

Terminals			Voltage (Approx.)
(+)		(–)	
IPDM E/R			
Connector	Terminal	Ground	
E4	1		Battery voltage

Is the measurement value normal?

YES >> GO TO 3.
NO >> Repair the harness or connector.

3. CHECK GROUND CIRCUIT

Check continuity between IPDM E/R harness connectors and the ground.

IPDM E/R		Ground	Continuity
Connector	Terminal		
E5	12		Existed
E6	41		

Does continuity exist?

YES >> INSPECTION END
NO >> Repair the harness or connector.

FUEL LEVEL SENSOR SIGNAL CIRCUIT

Description

INFOID:0000000004528786

The fuel level sensor unit and fuel pump (main) and the fuel level sensor unit (sub) detect the fuel level in the fuel tank and transmit the fuel gauge signal to the combination meter.

Component Function Check

INFOID:0000000004528787

1. CHECK COMBINATION METER OUTPUT SIGNAL

Select the “Data Monitor” for the “METER/M&A” and compare the “FUEL METER” monitor value with the fuel gauge reading on the combination meter.

Fuel gauge indication position	Reference value of data monitor [L]
Full (16/16)	Approx. 68.0
Three quarters (12/16)	Approx. 54.4
Half (8/16)	Approx. 36.8
A quarter (4/16)	Approx. 18.4
Empty (1/16)	Approx. 6.4

Does monitor value match fuel gauge reading?

YES >> INSPECTION END
NO >> Replace combination meter.

Diagnosis Procedure

INFOID:0000000004528788

1. CHECK COMBINATION METER INPUT SIGNAL

1. Turn ignition switch ON.
2. Check voltage between combination meter harness connector terminal and ground.

Terminals			Voltage (Approx.)
(+)		(–)	
Combination meter			
Connector	Terminal		
M54	34	Ground	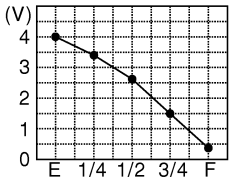 JPNIA0740ZZ

Does it match fuel gauge reading?

YES >> GO TO 2.
NO >> Replace the combination meter.

2. CHECK FUEL LEVEL SENSOR CIRCUIT

1. Turn ignition switch OFF.
2. Disconnect combination meter connector and fuel level sensor unit (sub) connector.
3. Check continuity between combination meter harness connector terminal and fuel level sensor unit (sub) harness connector terminal.

Combination meter		Fuel level sensor unit (sub)		Continuity
Connector	Terminal	Connector	Terminal	
M54	34	B21	1	Existed

4. Check continuity between combination meter harness connector terminal and ground.

Combination meter		Ground	Continuity
Connector	Terminal		
M54	34		Not existed

Is the inspection result normal?

YES >> GO TO 3.
NO >> Repair harness or connector.

3. CHECK FUEL LEVEL SENSOR UNIT (MAIN-SUB) CIRCUIT

1. Disconnect fuel level sensor unit (main) connector.
2. Check for continuity between the fuel level sensor unit (sub) harness connector and the fuel level sensor unit (main) harness connector.

Fuel level sensor unit (sub)		Fuel level sensor unit (main)		Continuity
Connector	Terminal	Connector	Terminal	
B21	2	B22	2	Existed

3. Check for continuity between the fuel level sensor unit (sub) harness connector and the ground.

Combination meter		Ground	Continuity
Connector	Terminal		
B21	2		Not existed

Is the inspection result normal?

YES >> GO TO 4.
NO >> Repair harness or connector.

4. CHECK FUEL LEVEL SENSOR GROUND CIRCUIT

Check continuity between fuel level sensor unit (main) harness connector terminal and combination meter harness connector terminal.

Fuel level sensor unit (main)		Combination meter		Continuity
Connector	Terminal	Connector	Terminal	
B22	5	M54	24	Existed

Is the inspection result normal?

YES >> INSPECTION END
NO >> Repair harness or connector.

Component Inspection

INFOID:0000000004528789

1. REMOVE FUEL LEVEL SENSOR UNIT

Remove the fuel level sensor unit. Refer to FL-5, "Removal and Installation".

>> GO TO 2.

2. CHECK FUEL LEVEL SENSOR UNIT AND FUEL PUMP (MAIN)

Check the resistance between fuel level sensor unit and fuel pump (main).

Terminals		Condition	Resistance (Ω) (Approx.)	Height [mm (in)]
Fuel level sensor unit (main)				
2	5	Full (A)	3.0	229.7 (9.04)
		Empty (B)	80.0	38.5 (1.52)

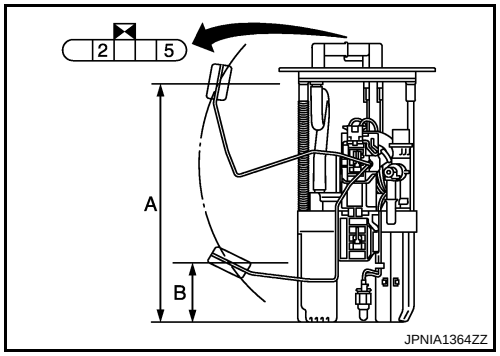

Is inspection result OK?

YES >> GO TO 3.
NO >> Replace fuel level sensor unit and fuel pump (main).

3. CHECK FUEL LEVEL SENSOR UNIT (SUB)

Inspect the resistance of fuel level sensor unit (sub).

Terminals		Condition	Resistance (Ω) (Approx.)	Height [mm (in)]
Fuel level sensor unit (sub)				
1	2	Full (A)	3.0	32.8 (1.29)
		Empty (B)	40.9	241.1 (9.49)

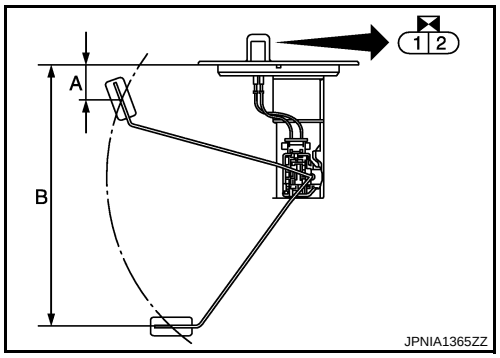

Is inspection result OK?

YES >> INSPECTION END
NO >> Replace fuel level sensor unit (sub).

OIL PRESSURE SWITCH SIGNAL CIRCUIT

Description

INFOID:0000000004528793

Detects the engine oil pressure and transmits the oil pressure switch signal to IPDM E/R.

Component Function Check

INFOID:0000000004528794

1. CHECK COMBINATION METER INPUT SIGNAL

Select the “Data Monitor” for the “METER/M&A” and check the “OIL W/L” monitor value.

“OIL W/L”	
Ignition switch ON	: On
Engine running	: Off

>> INSPECTION END

Diagnosis Procedure

INFOID:0000000004528795

1. CHECK OIL PRESSURE SWITCH CIRCUIT

1. Turn ignition switch OFF.
2. Disconnect IPDM E/R connector and oil pressure switch connector.
3. Check continuity between IPDM E/R harness connector terminal and oil pressure switch harness connector terminal.

Terminals				Continuity
(+)		(–)		
IPDM E/R		Oil pressure switch		
Connector	Terminal	Connector	Terminal	
E7	75	F37	1	Existed

4. Check continuity between IPDM E/R harness connector terminal and ground.

Terminals			Continuity
(+)		(–)	
IPDM E/R		Ground	
Connector	Terminal		
E7	75		Not existed

Is the inspection result normal?

YES >> INSPECTION END
NO >> Repair harness or connector.

Component Inspection

INFOID:0000000004528796

1. CHECK OIL PRESSURE SWITCH

Check continuity between oil pressure switch and ground.

Condition	Continuity
Engine stopped	Existed
Engine running	Not existed

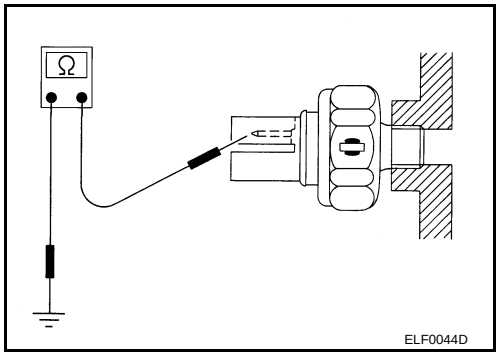

Is the inspection result normal?

YES >> INSPECTION END
NO >> Replace oil pressure switch.

PARKING BRAKE SWITCH SIGNAL CIRCUIT

Description

INFOID:0000000004528797

Transmits the parking brake switch signal to the combination meter.

Diagnosis Procedure

INFOID:0000000004528798

1. CHECK COMBINATION METER INPUT SIGNAL

1. Start the engine.
2. Check the voltage between combination meter harness connector terminal and ground.

Terminals			Condition		Voltage (Approx.)
(+)		(–)			
Combination meter		Ground			
Connector	Terminal				
M54	26		Engine idling	When parking brake is applied	0 V
				When parking brake is released	12 V

Is the inspection result normal?

YES >> INSPECTION END
NO >> GO TO 2.

2. CHECK PARKING BRAKE SWITCH SIGNAL CIRCUIT

1. Turn ignition switch OFF.
2. Disconnect combination meter connector and parking brake switch connector.
3. Check continuity between combination meter harness connector terminal and parking brake switch harness connector terminal.

Terminals				Continuity
Combination meter		Parking brake switch		
Connector	Terminal	Connector	Terminal	
M54	26	M68	1	Existed

4. Check continuity between combination meter harness connector terminal and ground.

Terminals			Continuity
Combination meter		Ground	
Connector	Terminal		
M54	26		Not existed

Is the inspection result normal?

YES >> INSPECTION END
NO >> Repair harness or connector.

Component Inspection

INFOID:0000000004528799

1. CHECK PARKING BRAKE SWITCH

Check parking brake switch. Refer to BRC-67, "Component Inspection".

Is the inspection result normal?

YES >> INSPECTION END.
NO >> Replace parking brake switch.

WASHER LEVEL SWITCH SIGNAL CIRCUIT

Description

INFOID:0000000004528800

Transmits the washer level switch signal to the combination meter.

Diagnosis Procedure

INFOID:0000000004528801

1. CHECK WASHER LEVEL SWITCH SIGNAL CIRCUIT

1. Turn ignition switch OFF.
2. Disconnect combination meter connector and washer level switch connector.
3. Check continuity between combination meter harness connector terminal and washer level switch harness connector terminal.

Terminals				Continuity
Combination meter		Washer level switch		
Connector	Terminal	Connector	Terminal	
M54	29	E32	1	Existed

4. Check continuity between combination meter harness connector terminal and ground.

Terminals			Continuity
Combination meter		Ground	
Connector	Terminal		
M54	29		Not existed

Is the inspection result normal?

YES >> GO TO 2.
NO >> Repair harness or connector.

2. CHECK WASHER LEVEL SWITCH GROUND CIRCUIT

Check continuity between washer level switch connector terminal and ground.

Terminals			Continuity
Washer level switch		Ground	
Connector	Terminal		
E32	2		Existed

Is the inspection result normal?

YES >> INSPECTION END
NO >> Repair harness or connector.

Component Inspection

INFOID:0000000004528802

1. CHECK WASHER LEVEL SWITCH

1. Turn ignition switch OFF.
2. Disconnect washer level switch connector.
3. Check washer level switch.

Terminals		Condition	Continuity
Washer level switch			
1	2	Washer level switch ON	Existed
		Washer level switch OFF	Not existed

Is the inspection result normal?

YES >> INSPECTION END

NO >> Replace washer level switch. Refer to WW-88, "Removal and Installation".

A/C AUTO AMP. CONNECTION RECOGNITION SIGNAL CIRCUIT

Description

INFOID:0000000004553730

A/C auto amp. transmits the A/C auto amp. connection recognition signal to the combination meter.

Diagnosis Procedure

INFOID:0000000004553731

1. CHECK A/C AUTO AMP. CONNECTION RECOGNITION SIGNAL

1. Turn ignition switch ON.
2. Check voltage between combination meter harness connector terminal and ground.

Terminals			Voltage (Approx.)
(+)		(–)	
Combination meter		Ground	
Connector	Terminal		
M53	19		5 V

Is the inspection result normal?

YES >> INSPECTION END
NO >> GO TO 2.

2. CHECK A/C AUTO AMP. CONNECTION RECOGNITION SIGNAL CIRCUIT

1. Turn ignition switch OFF.
2. Disconnect combination meter connector and A/C auto amp. connector.
3. Check continuity between combination meter harness connector terminal and A/C auto amp. harness connector terminal.

Combination meter		A/C auto amp.		Continuity
Connector	Terminal	Connector	terminal	
M53	19	M66	34	Existed

4. Check continuity between combination meter harness connector and ground.

Combination meter		Ground	Continuity
Connector	Terminal		
M53	19		Not existed

Is the inspection result normal?

YES >> INSPECTION END
NO >> Repair harness or connector.

ECU DIAGNOSIS INFORMATION

COMBINATION METER

Reference Value

INFOID:0000000004529081

VALUES ON THE DIAGNOSIS TOOL

Monitor Item	Condition		Value/Status
SPEED METER [km/h]	Ignition switch ON	While driving	Equivalent to speedometer reading **NOTE:** 655.35 is displayed when the malfunction signal is received
SPEED OUTPUT [km/h]	Ignition switch ON	While driving	Equivalent to speedometer reading **NOTE:** 655.35 is displayed when the malfunction signal is received
ODO OUTPUT [km/h or mph]	Ignition switch ON	—	Equivalent to odometer reading in combination meter
TACHO METER [rpm]	Ignition switch ON	While driving	Equivalent to tachometer reading **NOTE:** 8191.875 is displayed when the malfunction signal is received
FUEL METER [L]	Ignition switch ON	—	Values according to fuel level
W TEMP METER [°C]	Ignition switch ON	—	Values according to engine coolant temperature **NOTE:** 215 is displayed when the malfunction signal is input
ABS W/L	Ignition switch ON	ABS warning lamp ON	On
		ABS warning lamp OFF	Off
VDC/TCS IND	Ignition switch ON	VDC OFF indicator lamp ON	On
		VDC OFF indicator lamp OFF	Off
SLIP IND	Ignition switch ON	SLIP Indicator lamp ON	On
		SLIP indicator lamp OFF	Off
BRAKE W/L	Ignition switch ON	Brake warning lamp ON	On
		Brake warning lamp OFF	Off
DOOR W/L	Ignition switch ON	Door warning lamp ON	On
		Door warning lamp OFF	Off
HI-BEAM IND	Ignition switch ON	High-beam indicator lamp ON	On
		High-beam indicator lamp OFF	Off
TURN IND	Ignition switch ON	Turn signal indicator lamp ON	On
		Turn signal indicator lamp OFF	Off
RR FOG IND	Ignition switch ON	Rear fog lamp indicator lamp ON	On
		Rear fog lamp indicator lamp	Off
LIGHT IND	Ignition switch ON	Tail lamp indicator lamp ON	On
		Tail lamp indicator lamp OFF	Off
OIL W/L	Ignition switch ON	Oil pressure warning lamp ON	On
		Oil pressure warning lamp OFF	Off
MIL	Ignition switch ON	Malfunction indicator lamp ON	On
		Malfunction indicator lamp OFF	Off

Monitor Item	Condition		Value/Status
CRUISE IND	Ignition switch ON	Cruise indicator lamp ON	On
		Cruise indicator lamp OFF	Off
ATC/T-AMT W/L	Ignition switch ON	A/T CHECK indicator lamp ON	On
		A/T CHECK indicator lamp OFF	Off
FUEL W/L	Ignition switch ON	Low-fuel warning displayed	On
		Low-fuel warning not displayed	Off
WASHER W/L	Ignition switch ON	Washer warning displayed	On
		Washer warning not displayed	Off
AIR PRES W/L	Ignition switch ON	Low tire pressure lamp ON	On
		Low tire pressure lamp OFF	Off
KEY G/Y W/L	Ignition switch ON	KEY warning lamp (yellow) ON	On
		KEY warning lamp (yellow) OFF	Off
MT SYNC REV IND	Ignition switch ON	S-MODE indicator ON	On
		S-MODE indicator OFF	Off
LCD	Ignition switch ON	Engine start information display (A/T models)	B&P I
		Engine start information display (M/T models)	C&P I
	Ignition switch LOCK or ACC	Engine start information display (A/T models)	B&P N
		Engine start information display (M/T models)	C&P N
	Ignition switch LOCK	Key ID warning display	ID NG
	Ignition switch LOCK	Steering lock information display	ROTAT
	Ignition switch LOCK	P position warning display	SFT P
	Ignition switch LOCK	Intelligent Key insert information display	INSRT
	Ignition switch LOCK	Intelligent Key low battery warning display	BATT
	Ignition switch ON	Take away warning display	NO KY
	Ignition switch LOCK	Key warning display	OUTKY
	Ignition switch ON	ACC warning display	LK WN

Monitor Item	Condition		Value/Status
SHIFT IND	Ignition switch ON	Shift position indicator P display	P
		Shift position indicator R display	R
		Shift position indicator N display	N
		Shift position indicator D display	D
		Shift position indicator L display	L
		Shift position indicator M1 display	M1
		Shift position indicator M2 display	M2
		Shift position indicator M3 display	M3
		Shift position indicator M4 display	M4
		Shift position indicator M5 display	M5
		Shift position indicator M6 display	M6
		Shift position indicator M7 display	M7
AT S MODE SW	Ignition switch ON	**NOTE:** This item is displayed, but cannot be monitored.	Off
M RANGE SW	Ignition switch ON	Selector lever manual mode position	On
		Other than the above	Off
NM RANGE SW	Ignition switch ON	Selector lever manual mode position	Off
		Other than the above	On
AT SFT UP SW	Ignition switch ON	Selector lever + position	On
		Other than the above	Off
AT SFT DWN SW	Ignition switch ON	Selector lever – position	On
		Other than the above	Off
ST SFT UP SW	Ignition switch ON	Paddle shifter switch up operation	On
		Other than above	Off
ST SFT DWN SW	Ignition switch ON	Paddle shifter switch down operation	On
		Other than above	Off
PKB SW	Ignition switch ON	Parking brake switch ON	On
		Parking brake switch OFF	Off
BUCKLE SW	Ignition switch ON	Seat belt not fastened	On
		Seat belt fastened	Off
BRAKE OIL SW	Ignition switch ON	Brake fluid level switch ON	On
		Brake fluid level switch OFF	Off
A/C AMP CONN	Ignition switch ON	Other than the following	On
		Receives A/C auto amp. connection recognition signal	Off
ENTER SW	Ignition switch ON	When ❑ is pressed	On
		Other than the above	Off
SELECT SW	Ignition switch ON	When ● is pressed	On
		Other than the above	Off
MT SYNC REV SW	Ignition switch ON	S-MODE switch ON	On
		S-MODE switch OFF	Off
DISTANCE [km]	Ignition switch ON	—	Possible driving distance calculated by combination meter

Monitor Item	Condition		Value/Status
OUTSIDE TEMP [°C or °F]	Ignition switch ON	—	Equivalent to ambient temperature **NOTE:** This may not match the indicated value on the information display.
FUEL LOW SIG	Ignition switch ON	Low fuel warning displayed	On
		Low fuel warning not displayed	Off
CRANKING SIG	Ignition switch ON		On
	At engine cranking		Off
ST CNT SIG	Ignition switch ON		On
	At engine cranking		Off
BUZZER	Ignition switch ON	Buzzer ON	On
		Buzzer OFF	Off

NOTE:
Some items are not available according to vehicle specification.

TERMINAL LAYOUT

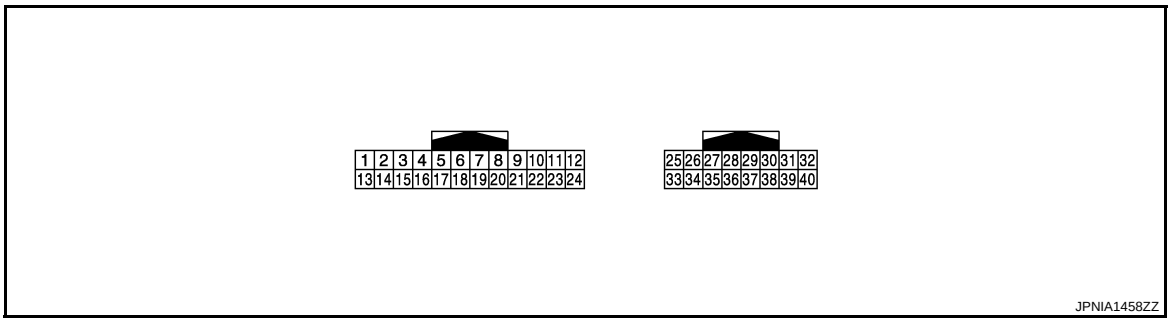

PHYSICAL VALUES

Terminal No. (Wire color)		Description		Condition		Value (Approx.)
+	–	Signal name	Input/ Output			
1 (V)	Ground	Battery power supply	Input	Ignition switch OFF	—	Battery voltage
2 (O)	Ground	Ignition signal	Input	Ignition switch ON	—	Battery voltage
3 (L)	Ground	Vehicle speed signal (2-pulse)	Output	Ignition switch ON	Speedometer operated [When vehicle speed is approx. 40 km/h (25 MPH)]	**NOTE:** The maximum voltage varies depending on the specification (destination unit). 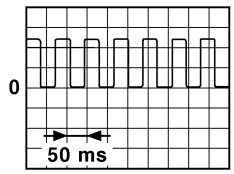 JSNIA0015GB

Terminal No. (Wire color)		Description		Condition		Value (Approx.)
+	–	Signal name	Input/ Output			
4 (Y)	Ground	Vehicle speed signal (8-pulse)	Output	Ignition switch ON	Speedometer operated [When vehicle speed is approx. 40 km/h (25 MPH)]	**NOTE:** The maximum voltage varies depending on the specification (destination unit). 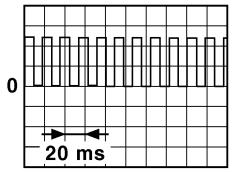 JSNIA0012GB
5 (B)	Ground	Illumination control signal	Output	Ignition switch ON	• Lighting switch 1ST • When meter illumination is maximum	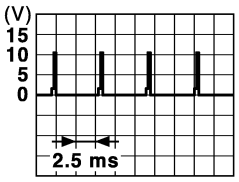 JPNIA1363GB
					• Lighting switch 1ST • When meter illumination is step 12	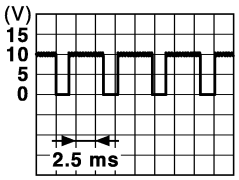 JPNIA1362GB
					• Lighting switch 1ST • When meter illumination is minimum	10 V
9 (BR)	Ground	Communication signal (METER⇒TRIPLE METER)	Output	Ignition switch ON	—	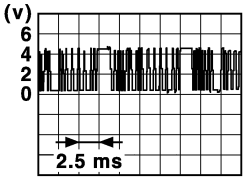 JPNIA1425GB
10 (L)	Ground	Communication signal (TRIPLE METER⇒METER)	Input	Ignition switch ON	—	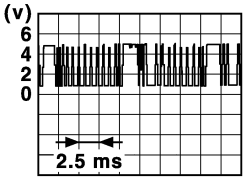 JPNIA1426GB
12 (G)	Ground	S-MODE switch signal	Input	Ignition switch ON	S-MODE switch operation	12 V
					Other than the above	0 V
15 (L)	Ground	ACC power supply	Input	Ignition switch ACC	—	Battery voltage

Terminal No. (Wire color)		Description		Condition		Value (Approx.)
+	–	Signal name	Input/ Output			
16 (R)	Ground	Air bag signal	Input	Ignition switch ON	Air bag warning lamp ON	4 V
					Air bag warning lamp OFF	0 V
17 (B)	Ground	Ground	—	Ignition switch ON	—	0 V
18 (V)	Ground	Ambient sensor signal	Input	Ignition switch ON	Changes depending to ambient temperature.	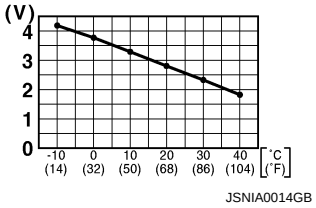
19 (G)	Ground	A/C auto amp. connection recognition signal	Input	Ignition switch ON	—	5 V
20 (GR)	Ground	Ambient sensor ground	Input	Ignition switch ON	—	0 V
21 (L)	—	CAN-H	—	—	—	—
22 (P)	—	CAN-L	—	—	—	—
23 (B)	Ground	Ground	—	Ignition switch ON	—	0 V
24 (Y)	Ground	Fuel level sensor signal ground	—	Ignition switch ON	—	0 V
25 (W)	Ground	Alternator signal	Input	Ignition switch ON	Charge warning lamp ON	2 V
					Charge warning lamp OFF	12 V
26 (O)	Ground	Parking brake switch signal	Input	Engine idling	Parking brake ON	0 V
					Parking brake OFF	12 V
27 (LG)	Ground	Brake fluid level switch signal	Input	Ignition switch ON	Brake fluid level is normal	12 V
					Brake fluid level is less than LOW level	0 V
28 (Y)	Ground	Security signal	Input	Ignition switch ON	Security warning lamp ON	0 V
					Security warning lamp OFF	12 V
29 (GR)	Ground	Washer level switch signal	Input	Ignition switch ON	Washer level switch ON	0 V
					Washer level switch OFF	5 V
32 (G)	Ground	Paddle shifter down signal	Input	Ignition switch ON	Paddle shifter down operation	0 V
					Other than the above	5 V
33 (O)	Ground	Paddle shifter up signal	Input	Ignition switch ON	Paddle shifter up operation	0 V
					Other than the above	5 V

Terminal No. (Wire color)		Description		Condition		Value (Approx.)
+	–	Signal name	Input/ Output			
34 (BR)	Ground	Fuel level sensor signal	Input	Ignition switch ON	—	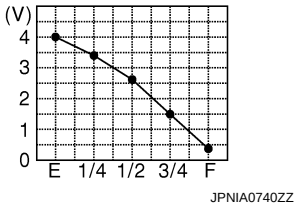
35 (L)	Ground	Seat belt buckle switch signal (driver side)	Input	Ignition switch ON	When driver seat belt is fastened.	12 V
					When driver seat belt is unfastened.	0 V
36 (P)	Ground	Passenger seat belt warning signal	Input	Ignition switch ON	• When getting in the passenger seat. • When passenger seat belt is fastened.	12 V
					• When getting in the passenger seat. • When passenger seat belt is unfastened.	0 V
37 (G)	Ground	Not manual mode signal	Input	Ignition switch ON	Manual mode	12 V
					Other than the above	0 V
38 (V)	Ground	Manual mode shift down signal	Input	Ignition switch ON	Selector lever down operation	0 V
					Other then the above	12 V
39 (L)	Ground	Manual mode shift up signal	Input	Ignition switch ON	Selector lever up operation	0 V
					Other then the above	12 V
40 (W)	Ground	Manual mode signal	Input	Ignition switch ON	Manual mode	0 V
					Other than the above	12 V

Wiring Diagram - METER -

INFOID:0000000004529082

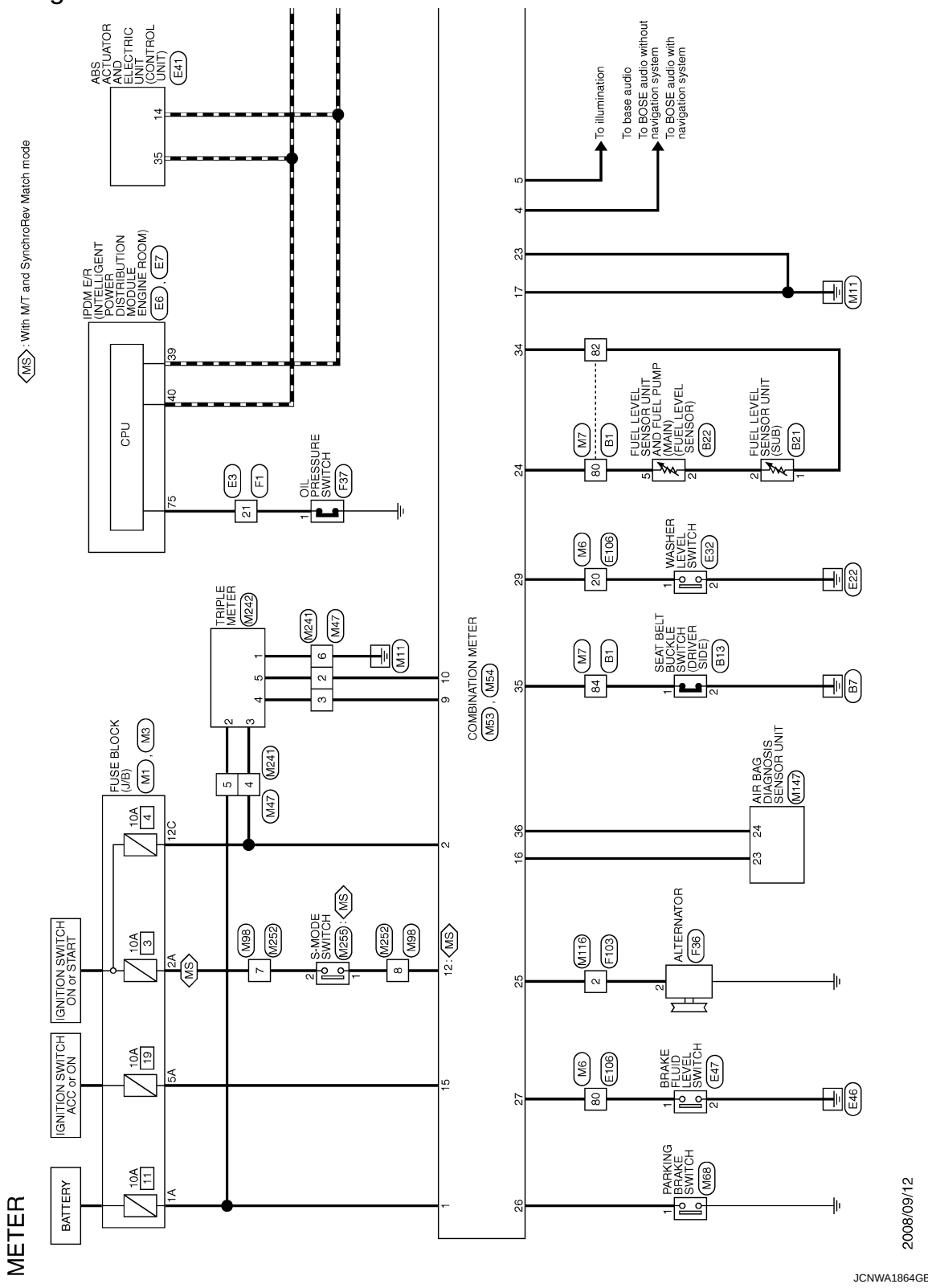

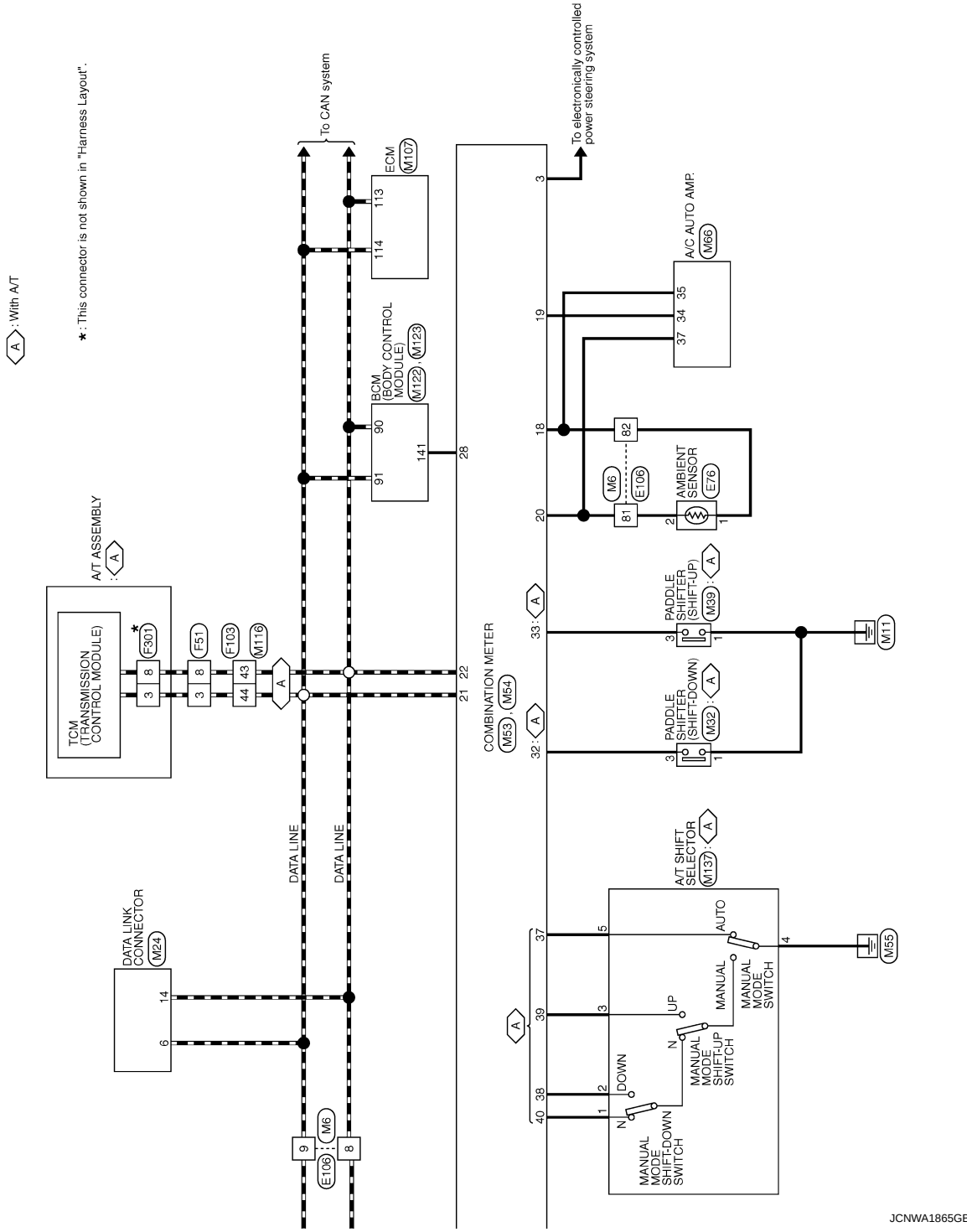
A : With A/T
* : This connector is not shown in "Harness Layout".
A/T ASSEMBLY
TCM (TRANSMISSION CONTROL MODULE)
F301
F51
E103
M116
DATA LINK CONNECTOR
M24
DATA LINE
DATA LINE
To CAN system
ECM
M107
BCM (BODY CONTROL MODULE)
M122, M123
COMBINATION METER
M53, M54
To electronically controlled power steering system
A/C AUTO AMP.
M66
M6
E106
AMBIENT SENSOR
E76
PADDLE SHIFTER (SHIFT-UP)
M39
PADDLE SHIFTER (SHIFT-DOWN)
M32
M11
A/T SHIFT SELECTOR
M137
AUTO
MANUAL
MANUAL MODE SWITCH
UP
DOWN
N
MANUAL MODE SHIFT-UP SWITCH
MANUAL MODE SHIFT-DOWN SWITCH
M55
JCNWA1865GE

METER

Connector No.	B1
Connector Name	WIRE TO WIRE
Connector Type	TH80FW-CS16-TM4

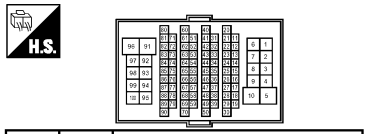

Terminal No.	Color of Wire	Signal Name [Specification]
80	Y	–
82	B	–
84	G	–

Connector No.	B13
Connector Name	SEAT BELT BUCKLE SWITCH (DRIVER SIDE)
Connector Type	A03FW

Terminal No.	Color of Wire	Signal Name [Specification]
1	G	–
2	B	–

Connector No.	B21
Connector Name	FUEL LEVEL SENSOR UNIT (SUB)
Connector Type	E02FGY-RS

Terminal No.	Color of Wire	Signal Name [Specification]
1	B	–
2	W	–

Connector No.	B22
Connector Name	FUEL LEVEL SENSOR UNIT AND FUEL PUMP (MAIN)
Connector Type	E05FGY-RS

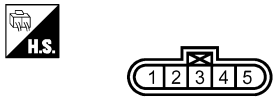

Terminal No.	Color of Wire	Signal Name [Specification]
2	W	–
5	Y	–

Connector No.	E3
Connector Name	WIRE TO WIRE
Connector Type	SAA36MB-RS8-SHZ8

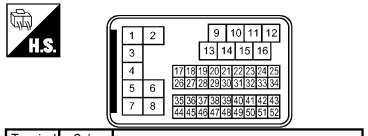

Terminal No.	Color of Wire	Signal Name [Specification]
21	SB	–

Connector No.	E6
Connector Name	IPDM E/R (INTELLIGENT POWER DISTRIBUTION MODULE ENGINE ROOM)
Connector Type	TH08FW-NH

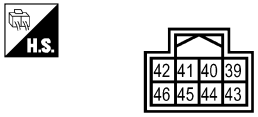

Terminal No.	Color of Wire	Signal Name [Specification]
39	P	–
40	L	–

Connector No.	E7
Connector Name	IPDM E/R (INTELLIGENT POWER DISTRIBUTION MODULE ENGINE ROOM)
Connector Type	TH20FW-CS12-M4

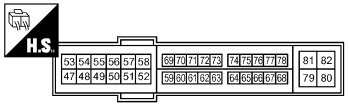

Terminal No.	Color of Wire	Signal Name [Specification]
75	SB	–

Connector No.	E32
Connector Name	WASHER LEVEL SWITCH
Connector Type	Z02FBR

Terminal No.	Color of Wire	Signal Name [Specification]
1	LG	–
2	B	–

JCNWA1866GE

METER

Connector No.	E41
Connector Name	ABS ACTUATOR AND ELECTRIC UNIT (CONTROL UNIT)
Connector Type	BAA42FB-AHZ4-LH

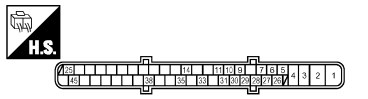

Terminal No.	Color of Wire	Signal Name [Specification]
14	P	CAN-L
35	L	CAN-H

Connector No.	E47
Connector Name	BRAKE FLUID LEVEL SWITCH
Connector Type	YV02FGY

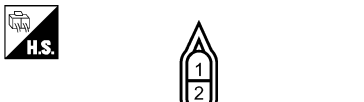

Terminal No.	Color of Wire	Signal Name [Specification]
1	W	–
2	B	–

Connector No.	E76
Connector Name	AMBIENT SENSOR
Connector Type	RS02FB

Terminal No.	Color of Wire	Signal Name [Specification]
1	G	AMBIENT SENSOR SIGNAL
2	P	SENSOR GROUND

Connector No.	E106
Connector Name	WIRE TO WIRE
Connector Type	TH80FW-CS16-TM4

Terminal No.	Color of Wire	Signal Name [Specification]
8	P	–
9	L	–
20	LG	–
80	W	–
81	P	–
82	G	–

Connector No.	F1
Connector Name	WIRE TO WIRE
Connector Type	SAA36FB-RS8-SHZ8

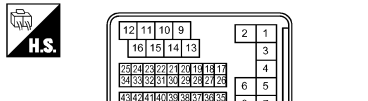

Terminal No.	Color of Wire	Signal Name [Specification]
21	BR	–

Connector No.	F36
Connector Name	ALTERNATOR
Connector Type	HS03FB

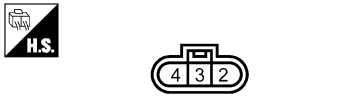

Terminal No.	Color of Wire	Signal Name [Specification]
2	G	L

Connector No.	F37
Connector Name	OIL PRESSURE SWITCH
Connector Type	E01FGY-RS-AR

Terminal No.	Color of Wire	Signal Name [Specification]
1	BR	–

Connector No.	F51
Connector Name	A/T ASSEMBLY
Connector Type	RK10FG-DGY

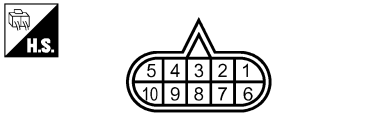

Terminal No.	Color of Wire	Signal Name [Specification]
3	L	–
8	P	–

JCNWA1867GE

METER

Connector No.	F103
Connector Name	WIRE TO WIRE
Connector Type	TK36FW-NS10

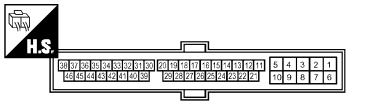

Terminal No.	Color of Wire	Signal Name [Specification]
2	G	–
43	P	–
44	L	–

Connector No.	F301
Connector Name	TCM (TRANSMISSION CONTROL MODULE)
Connector Type	SP10FG

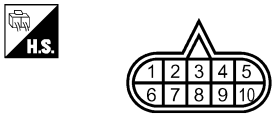

Terminal No.	Color of Wire	Signal Name [Specification]
3	R	CAN-H
8	BR	CAN-L

Connector No.	M1
Connector Name	FUSE BLOCK (J/B)
Connector Type	NS06FW-M2

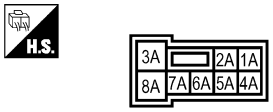

Terminal No.	Color of Wire	Signal Name [Specification]
1A	V	–
2A	G	–
5A	L	–

Connector No.	M3
Connector Name	FUSE BLOCK (J/B)
Connector Type	NS12FW-CS

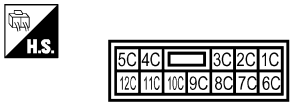

Terminal No.	Color of Wire	Signal Name [Specification]
12C	O	–

Connector No.	M6
Connector Name	WIRE TO WIRE
Connector Type	TH80MW-CS16-TM4

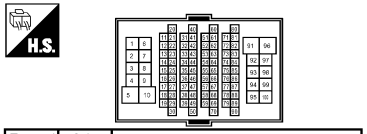

Terminal No.	Color of Wire	Signal Name [Specification]
8	P	–
9	L	–
20	GR	–
80	LG	–
81	GR	–
82	V	–

Connector No.	M7
Connector Name	WIRE TO WIRE
Connector Type	TH80MW-CS16-TM4

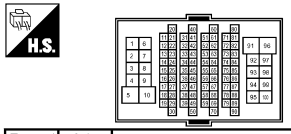

Terminal No.	Color of Wire	Signal Name [Specification]
80	Y	–
82	BR	–
84	L	–

Connector No.	M24
Connector Name	DATA LINK CONNECTOR
Connector Type	BD16FW

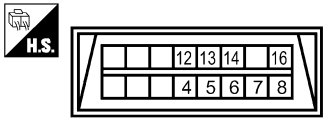

Terminal No.	Color of Wire	Signal Name [Specification]
6	L	–
14	P	–

Connector No.	M32
Connector Name	PADDLE SHIFTER (SHIFT-DOWN)
Connector Type	A03FW

Terminal No.	Color of Wire	Signal Name [Specification]
1	W	–
3	G	–

JCNWA1868GE

METER

Connector No.	M39
Connector Name	PADDLE SHIFTER (SHIFT-UP)
Connector Type	A04FW

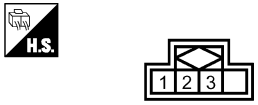

Terminal No.	Color of Wire	Signal Name [Specification]
1	W	–
3	O	–

Connector No.	M47
Connector Name	WIRE TO WIRE
Connector Type	TH12FW-NH

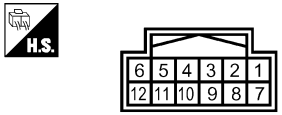

Terminal No.	Color of Wire	Signal Name [Specification]
2	L	–
3	BR	–
4	O	–
5	V	–
6	B	–

Connector No.	M53
Connector Name	COMBINATION METER
Connector Type	TH24FW-NH

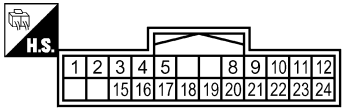

Terminal No.	Color of Wire	Signal Name [Specification]
1	V	BATTERY POWER SUPPLY
2	O	IGNITION SIGNAL
3	L	VEHICLE SPEED SIGNAL (2-PULSE)
4	Y	VEHICLE SPEED SIGNAL (8-PULSE)
5	B	ILLUMINATION CONTROL SIGNAL
9	BR	COMMUNICATION SIGNAL (METER->TRIPLE METER)
10	L	COMMUNICATION SIGNAL (TRIPLE METER->METER)
12	G	S-MODE SWITCH SIGNAL
15	L	ACC POWER SUPPLY
16	R	AIR BAG SIGNAL
17	B	GROUND
18	V	AMBIENT SENSOR SIGNAL
19	G	A/C AUTO AMP. CONNECTION RECOGNITION SIGNAL
20	GR	AMBIENT SENSOR GROUND
21	L	CAN-H
22	P	CAN-L
23	B	GROUND
24	Y	FUEL LEVEL SENSOR GROUND

Connector No.	M54
Connector Name	COMBINATION METER
Connector Type	TH16FW-NH

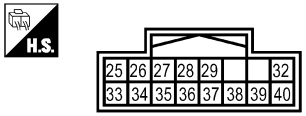

Terminal No.	Color of Wire	Signal Name [Specification]
25	W	ALTERNATOR SIGNAL
26	O	PARKING BRAKE SWITCH SIGNAL
27	LG	BRAKE FLUID LEVEL SWITCH SIGNAL
28	Y	SECURITY SIGNAL
29	GR	WASHER LEVEL SWITCH SIGNAL
32	G	PADDLE SHIFTER DOWN SIGNAL
33	O	PADDLE SHIFTER UP SIGNAL
34	BR	FUEL LEVEL SENSOR SIGNAL
35	L	SEAT BELT BUCKLE SWITCH SIGNAL (DRIVER SIDE)
36	P	PASSENGER SEAT BELT WARNING SIGNAL
37	G	NOT MANUAL MODE SIGNAL
38	V	MANUAL MODE SHIFT DOWN SIGNAL
39	L	MANUAL MODE SHIFT UP SIGNAL
40	W	MANUAL MODE SIGNAL

Connector No.	M66
Connector Name	A/C AUTO AMP.
Connector Type	SAB40FW

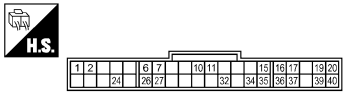

Terminal No.	Color of Wire	Signal Name [Specification]
34	G	A/C AUTO AMP. CONNECTION RECOGNITION SIGNAL
35	V	AMBIENT SENSOR SIGNAL
37	GR	SENSOR GROUND

Connector No.	M68
Connector Name	PARKING BRAKE SWITCH
Connector Type	P01FB-A

Terminal No.	Color of Wire	Signal Name [Specification]
1	O	–

JCNWA1869GE

METER

Connector No.	M98
Connector Name	WIRE TO WIRE
Connector Type	TH08FW-NH

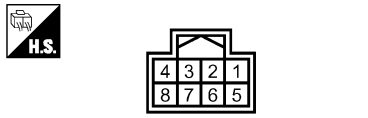

Terminal No.	Color of Wire	Signal Name [Specification]
7	B	–
8	G	–

Connector No.	M107
Connector Name	ECM
Connector Type	RH24FGY-RZ8-R-LH-Z

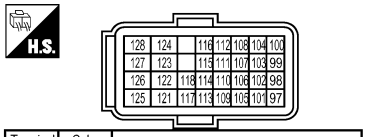

Terminal No.	Color of Wire	Signal Name [Specification]
113	P	VEHCAN-LI
114	L	VEHCAN-HI

Connector No.	M116
Connector Name	WIRE TO WIRE
Connector Type	TK36MW-NS10

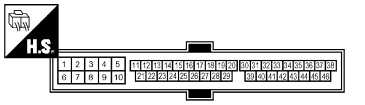

Terminal No.	Color of Wire	Signal Name [Specification]
2	W	–
43	P	–
44	L	–

Connector No.	M122
Connector Name	BCM (BODY CONTROL MODULE)
Connector Type	TH40FB-NH

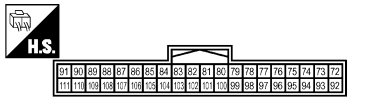

Terminal No.	Color of Wire	Signal Name [Specification]
90	P	CAN-L
91	L	CAN-H

Connector No.	M123
Connector Name	BCM (BODY CONTROL MODULE)
Connector Type	TH40FG-NH

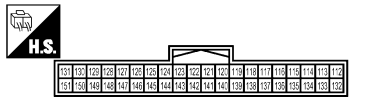

Terminal No.	Color of Wire	Signal Name [Specification]
141	Y	SECURITY INDICATOR

Connector No.	M137
Connector Name	A/T SHIFT SELECTOR
Connector Type	TK10FW

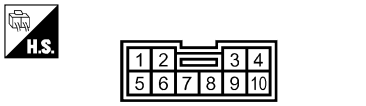

Terminal No.	Color of Wire	Signal Name [Specification]
1	W	–
2	V	–
3	L	–
4	B	–
5	G	–

Connector No.	M147
Connector Name	AIR BAG DIAGNOSIS SENSOR UNIT
Connector Type	NH28FY-EX

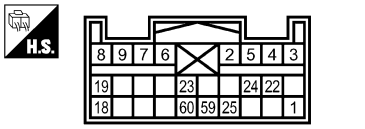

Terminal No.	Color of Wire	Signal Name [Specification]
23	R	AIRBAG W/L
24	P	SEAT BELT

Connector No.	M241
Connector Name	WIRE TO WIRE
Connector Type	TH12MW-NH

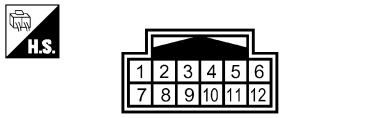

Terminal No.	Color of Wire	Signal Name [Specification]
2	L	–
3	Y	–
4	O	–
5	V	–
6	B	–

JCNWA1870GE

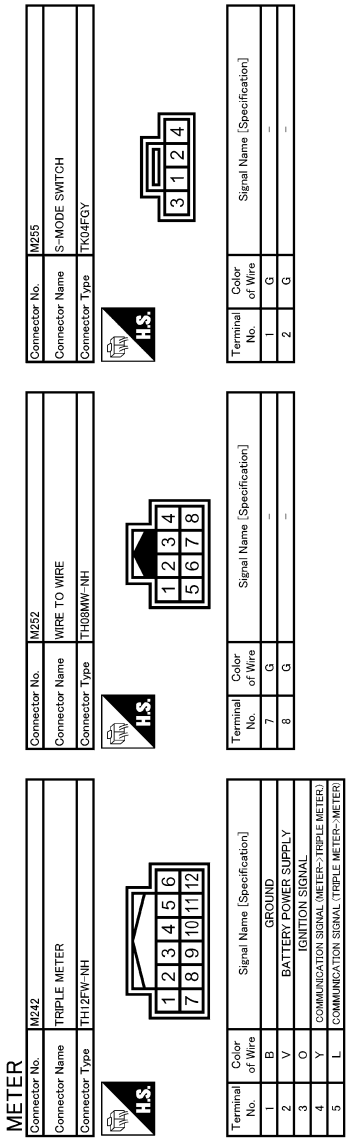

JCNWA1871GE

Fail-Safe

INFOID:0000000004529083

FAIL-SAFE

The combination meter activates the fail-safe control if CAN communication with each unit is malfunctioning.

Function		Specifications
Speedometer		Reset to zero by suspending communication.
Tachometer		
Water temperature gauge		
Illumination control		When suspending communication, changes to nighttime mode.
Information display	Door open warning	The display turns OFF by suspending communication.
	Parking brake release warning	
	Instantaneous fuel warning	• When reception time of an abnormal signal is 2 seconds or less, the last received datum is used for calculation to indicate the result. • When reception time of an abnormal signal is more than two seconds, the last result calculated during normal condition is indicated.
	Average fuel consumption	
	Average vehicle speed	
	Travel distance	
Buzzer		The buzzer turns off by suspending communication.
Warning lamp/indicator lamp	ABS warning lamp	The lamp turns ON by suspending communication.
	VDC OFF indicator lamp	
	SLIP indicator lamp	
	Brake warning lamp	
	Low tire pressure warning lamp	The lamp turns ON after flashing for 1 minute.
	High beam indicator lamp	The lamp turns OFF by suspending communication.
	Turn signal indicator lamp	
	Light indicator lamp	
	Rear fog lamp indicator lamp	
	Oil pressure warning lamp	
	Malfunction indicator lamp	
	CRUISE indicator lamp	
	Key warning lamp	

DTC Index

INFOID:0000000004529084

Display contents of CONSULT-III	Diagnostic item is detected when ...	Refer to
CAN COMM CIRCUIT [U1000]	When combination meter is not transmitting or receiving CAN communication signal for 2 seconds or more.	MWI-37, "Diagnosis Procedure"
CONTROL UNIT (CAN) [U1010]	When detecting error during the initial diagnosis of the CAN controller of combination meter.	MWI-38, "Diagnosis Procedure"
COMM ERROR 1 [B2201]	If a communication error is present in the communication line between combination meter and triple meter for 2 seconds or more.	MWI-39, "Diagnosis Procedure"
VEHICLE SPEED [B2205]	The abnormal vehicle speed signal is input from the ABS actuator and electric unit (control unit) for 2 seconds or more.	MWI-41, "Diagnosis Procedure"
ENGINE SPEED [B2267]	If ECM continuously transmits abnormal engine speed signals for 2 seconds or more.	MWI-42, "Diagnosis Procedure"
WATER TEMP [B2268]	If ECM continuously transmits abnormal engine coolant temperature signals for 60 seconds or more.	MWI-43, "Diagnosis Procedure"

IPDM E/R (INTELLIGENT POWER DISTRIBUTION MODULE ENGINE ROOM)

Reference Value

INFOID:0000000004732341

VALUES ON THE DIAGNOSIS TOOL

CONSULT-III MONITOR ITEM

Monitor Item	Condition		Value/Status
RAD FAN REQ	Engine idle speed	Changes depending on engine coolant temperature, air conditioner operation status, vehicle speed, etc.	0 - 100 %
AC COMP REQ	Engine running	A/C switch OFF	Off
		A/C switch ON (Compressor is operating)	On
TAIL&CLR REQ	Lighting switch OFF		Off
	Lighting switch 1ST, 2ND, HI or AUTO (Light is illuminated)		On
HL LO REQ	Lighting switch OFF		Off
	Lighting switch 2ND HI or AUTO (Light is illuminated)		On
	Daytime running light system is operated (With daytime running light system)		
HL HI REQ	Lighting switch OFF		Off
	Lighting switch HI		On
FR FOG REQ	**NOTE:** The item is indicated, but not monitored.		Off
FR WIP REQ	Ignition switch ON	Front wiper switch OFF	Stop
		Front wiper switch INT	1LOW
		Front wiper switch LO	Low
		Front wiper switch HI	Hi
WIP AUTO STOP	Ignition switch ON	Front wiper stop position	STOP P
		Any position other than front wiper stop position	ACT P
WIP PROT	Ignition switch ON	Front wiper operates normally	Off
		Front wiper stops at fail-safe operation	BLOCK
IGN RLY1 -REQ	Ignition switch OFF or ACC		Off
	Ignition switch ON		On
IGN RLY	Ignition switch OFF or ACC		Off
	Ignition switch ON		On
PUSH SW	Release the push-button ignition switch		Off
	Press the push-button ignition switch		On
INTER/NP SW	Ignition switch ON	Selector lever in any position other than P or N (A/T models)	Off
		Release clutch pedal (M/T models)	
	Ignition switch ON	Selector lever in P or N position (A/T models)	On
		Depress clutch pedal (M/T models)	
ST RLY CONT	Ignition switch ON		Off
	At engine cranking		On
IHBT RLY -REQ	Ignition switch ON		Off
	At engine cranking		On

Monitor Item	Condition		Value/Status
ST/INHI RLY	Ignition switch ON		Off
	At engine cranking		INHI ON → ST ON
	The status of starter relay or starter control relay cannot be recognized by the battery voltage malfunction, etc. when the starter relay is ON and the starter control relay is OFF		UNKWN
DETENT SW	Ignition switch ON	• Press the selector button with selector lever in P position • Selector lever in any position other than P	Off
	Release the selector button with selector lever in P position **NOTE:** Fixed On for M/T models		On
S/L RLY -REQ	None of the conditions below are present		Off
	• Open the driver door after the ignition switch is turned OFF (for a few seconds) • Press the push-button ignition switch when the steering lock is activated • Depress the clutch pedal when the steering lock is activated		On
S/L STATE	Steering lock is activated		LOCK
	Steering lock is deactivated		UNLOCK
	[DTC: B210A] is detected		UNKWN
DTRL REQ **NOTE:** This item is monitored only on the vehicle with the daytime running light system.	Daytime running light system is not operated		Off
	Daytime running light system is operated		On
OIL P SW	Ignition switch OFF, ACC or engine running		Open
	Ignition switch ON		Close
HOOD SW	Close the hood		Off
	Open the hood		On
HL WASHER REQ	**NOTE:** The item is indicated, but not monitored.		Off
THFT HRN REQ	Not operation		Off
	• Panic alarm is activated • Horn is activated with VEHICLE SECURITY (THEFT WARNING) SYSTEM		On
HORN CHIRP	Not operating		Off
	Door locking with Intelligent Key (horn chirp mode)		On
CRNRNG LMP REQ	**NOTE:** The item is indicated, but not monitored.		Off

TERMINAL LAYOUT

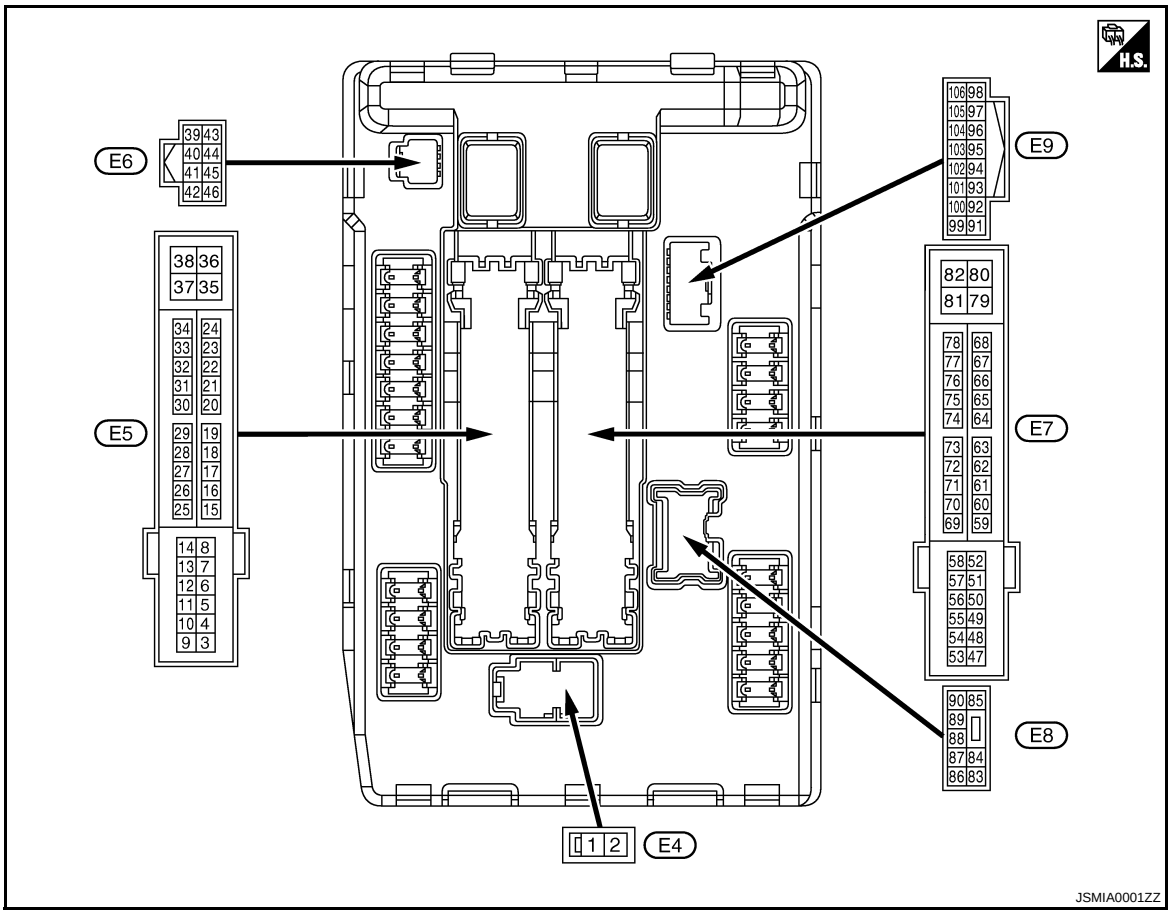

PHYSICAL VALUES

Terminal No. (Wire color)		Description		Condition		Value (Approx.)
+	–	Signal name	Input/ Output			
1 (W)	Ground	Battery power supply	Input	Ignition switch OFF		Battery voltage
2 (L)	Ground	Battery power supply	Input	Ignition switch OFF		Battery voltage
4 (V)	Ground	Front wiper LO	Output	Ignition switch ON	Front wiper switch OFF	0 V
					Front wiper switch LO	Battery voltage
5 (L)	Ground	Front wiper HI	Output	Ignition switch ON	Front wiper switch OFF	0 V
					Front wiper switch HI	Battery voltage
6*1 (R)	Ground	Daytime running light relay	Input	Ignition switch OFF		Battery voltage
7 (R)	Ground	Illuminations*1	Output	Ignition switch ON	Lighting switch OFF	0 V
		Tail, license plate lamps & illuminations*2			Lighting switch 1ST	Battery voltage
11 (BR)	Ground	Steering lock unit power supply	Output	Ignition switch OFF	A few seconds after opening the driver door	Battery voltage
				Ignition switch LOCK	Press the push-button ignition switch	Battery voltage
				Ignition switch ACC or ON		0 V
12 (B/W)	Ground	Ground	—	Ignition switch ON		0 V

Terminal No. (Wire color)		Description		Condition		Value (Approx.)
+	–	Signal name	Input/ Output			
13 (Y)	Ground	Fuel pump power supply	Output	Approximately 1 second or more after turning the ignition switch ON		0 V
				• Approximately 1 second after turning the ignition switch ON • Engine running		Battery voltage
16 (LG)	Ground	Front wiper auto stop	Input	Ignition switch ON	Front wiper stop position	0 V
					Any position other than front wiper stop position	Battery voltage
19 (W)	Ground	Ignition relay power supply	Output	Ignition switch OFF		0 V
				Ignition switch ON		Battery voltage
25 (G)	Ground	Ignition relay power supply	Output	Ignition switch OFF		0 V
				Ignition switch ON		Battery voltage
27 (Y)	Ground	Ignition relay monitor	Input	Ignition switch OFF or ACC		Battery voltage
				Ignition switch ON		0 V
28 (L)	Ground	Push-button ignition switch	Input	Press the push-button ignition switch		0 V
				Release the push-button ignition switch		Battery voltage
30 (GR)	Ground	Starter relay control	Input	A/T models	Selector lever in any position other than P or N (Ignition switch ON)	0 V
					Selector lever P or N (Ignition switch ON)	Battery voltage
				M/T models	Release the clutch pedal	0 V
					Depress the clutch pedal	Battery voltage
32 (L)	Ground	Steering lock unit condition-1	Input	Steering lock is activated		0 V
				Steering lock is deactivated		Battery voltage
33 (P)	Ground	Steering lock unit condition-2	Input	Steering lock is activated		Battery voltage
				Steering lock is deactivated		0 V
36 (G)	Ground	Battery power supply	Input	Ignition switch OFF		Battery voltage
39 (P)	—	CAN-L	Input/ Output	—		—
40 (L)	—	CAN-H	Input/ Output	—		—
41 (B/W)	Ground	Ground	—	Ignition switch ON		0 V
42 (Y)	Ground	Cooling fan relay control	Input	Ignition switch OFF or ACC		0 V
				Ignition switch ON		0.7 V
43*3 (SB)	Ground	A/T shift selector (Detention switch)	Input	Ignition switch ON	• Press the selector button (selector lever P) • Selector lever in any position other than P	Battery voltage
					Release the selector button (selector lever P)	0 V
44 (W)	Ground	Horn relay control	Input	The horn is deactivated		Battery voltage
				The horn is activated		0 V
45 (G)	Ground	Anti theft horn relay control	Input	The horn is deactivated		Battery voltage
				The horn is activated		0 V

Terminal No. (Wire color)		Description		Condition		Value (Approx.)
+	–	Signal name	Input/ Output			
46 (V)	Ground	Starter relay control	Input	A/T models	Selector lever in any position other than P or N (Ignition switch ON)	0 V
					Selector lever P or N (Ignition switch ON)	Battery voltage
				M/T models	Release the clutch pedal	0 V
					Depress the clutch pedal	Battery voltage
48 (L)	Ground	A/C relay power supply	Output	Engine running	A/C switch OFF	0 V
					A/C switch ON (A/C compressor is operating)	Battery voltage
49 (O)	Ground	ECM relay power supply	Output	Ignition switch OFF (More than a few seconds after turning ignition switch OFF)		0 V
				• Ignition switch ON • Ignition switch OFF (For a few seconds after turning ignition switch OFF)		Battery voltage
51 (Y)	Ground	Ignition relay power supply	Output	Ignition switch OFF		0 V
				Ignition switch ON		Battery voltage
53 (W)	Ground	ECM relay power supply	Output	Ignition switch OFF (More than a few seconds after turning ignition switch OFF)		0 V
				• Ignition switch ON • Ignition switch OFF (For a few seconds after turning ignition switch OFF)		Battery voltage
54 (V)	Ground	Throttle control motor relay power supply	Output	Ignition switch OFF (More than a few seconds after turning ignition switch OFF)		0 V
				• Ignition switch ON • Ignition switch OFF (For a few seconds after turning ignition switch OFF)		Battery voltage
55 (SB)	Ground	ECM power supply	Output	Ignition switch OFF		Battery voltage
56 (LG)	Ground	Ignition relay power supply	Output	Ignition switch OFF		0 V
				Ignition switch ON		Battery voltage
57 (G)	Ground	Ignition relay power supply	Output	Ignition switch OFF		0 V
				Ignition switch ON		Battery voltage
58*3 (P)	Ground	Ignition relay power supply	Output	Ignition switch OFF		0 V
				Ignition switch ON		Battery voltage
69 (BR)	Ground	ECM relay control	Output	Ignition switch OFF (More than a few seconds after turning ignition switch OFF)		Battery voltage
				• Ignition switch ON • Ignition switch OFF (For a few seconds after turning ignition switch OFF)		0 - 1.5 V

Terminal No. (Wire color)		Description		Condition		Value (Approx.)
+	–	Signal name	Input/ Output			
70 (O)	Ground	Throttle control motor relay control	Output	Ignition switch ON → OFF		0 -1.0 V ↓ Battery voltage ↓ 0 V
				Ignition switch ON		0 - 1.0 V
73*4 (GR)	Ground	Ignition relay power supply	Output	Ignition switch OFF		0 V
				Ignition switch ON		Battery voltage
74 (G)	Ground	Ignition relay power supply	Output	Ignition switch OFF		0 V
				Ignition switch ON		Battery voltage
75 (SB)	Ground	Oil pressure switch	Input	Ignition switch ON	Engine stopped	0 V
					Engine running	Battery voltage
76 (Y)	Ground	Power generation command signal	Output	Ignition switch ON		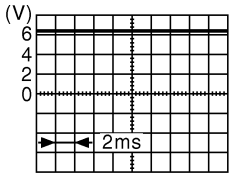 JPMIA0001GB 6.3 V
				40% is set on “ACTIVE TEST”, “ALTERNATOR DUTY” of “ENGINE”		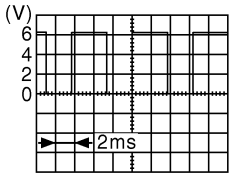 JPMIA0002GB 3.8 V
				80% is set on “ACTIVE TEST”, “ALTERNATOR DUTY” of “ENGINE”		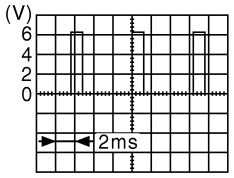 JPMIA0003GB 1.4 V
77 (R)	Ground	Fuel pump relay control	Output	• Approximately 1 second after turning the ignition switch ON • Engine running		0 - 1.0 V
				Approximately 1 second or more after turning the ignition switch ON		Battery voltage
80 (W)	Ground	Starter motor	Output	At engine cranking		Battery voltage
83 (R)	Ground	Headlamp LO (RH)	Output	Ignition switch ON	Lighting switch OFF	0 V
					Lighting switch 2ND	Battery voltage
				Daytime running light system activated*1		

Terminal No. (Wire color)		Description		Condition		Value (Approx.)
+	–	Signal name	Input/ Output			
84 (P)	Ground	Headlamp LO (LH)	Output	Ignition switch ON	Lighting switch OFF	0 V
					Lighting switch 2ND	Battery voltage
				Daytime running light system activated*1		
88 (G)	Ground	Washer pump power supply	Output	Ignition switch ON		Battery voltage
89 (BR)	Ground	Headlamp HI (RH)	Output	Ignition switch ON	Lighting switch OFF	0 V
					• Lighting switch HI • Lighting switch PASS	Battery voltage
90 (LG)	Ground	Headlamp HI (LH)	Output	Ignition switch ON	Lighting switch OFF	0 V
					• Lighting switch HI • Lighting switch PASS	Battery voltage
91*2 (P)	Ground	Parking lamp (RH)	Output	Ignition switch ON	Lighting switch OFF	0 V
					Lighting switch 1ST	Battery voltage
92*2 (O)	Ground	Parking lamp (LH)	Output	Ignition switch ON	Lighting switch OFF	0 V
					Lighting switch 1ST	Battery voltage
97 (V)	Ground	Cooling fan control	Output	Engine idling		0 - 5 V
104 (LG)	Ground	Hood switch	Input	Close the hood		Battery voltage
				Open the hood		0 V
105*1 (SB)	Ground	Daytime running light relay control	Output	• Parking lamp • Side maker lamp • License plate lamp • Tail lamp	Turned OFF	Battery voltage
					Turned ON	0 V

*1: With daytime running light system

*2: Without daytime running light system

*3: A/T models only

*4: M/T models only

Wiring Diagram - IPDM E/R -

INFOID:0000000004732342

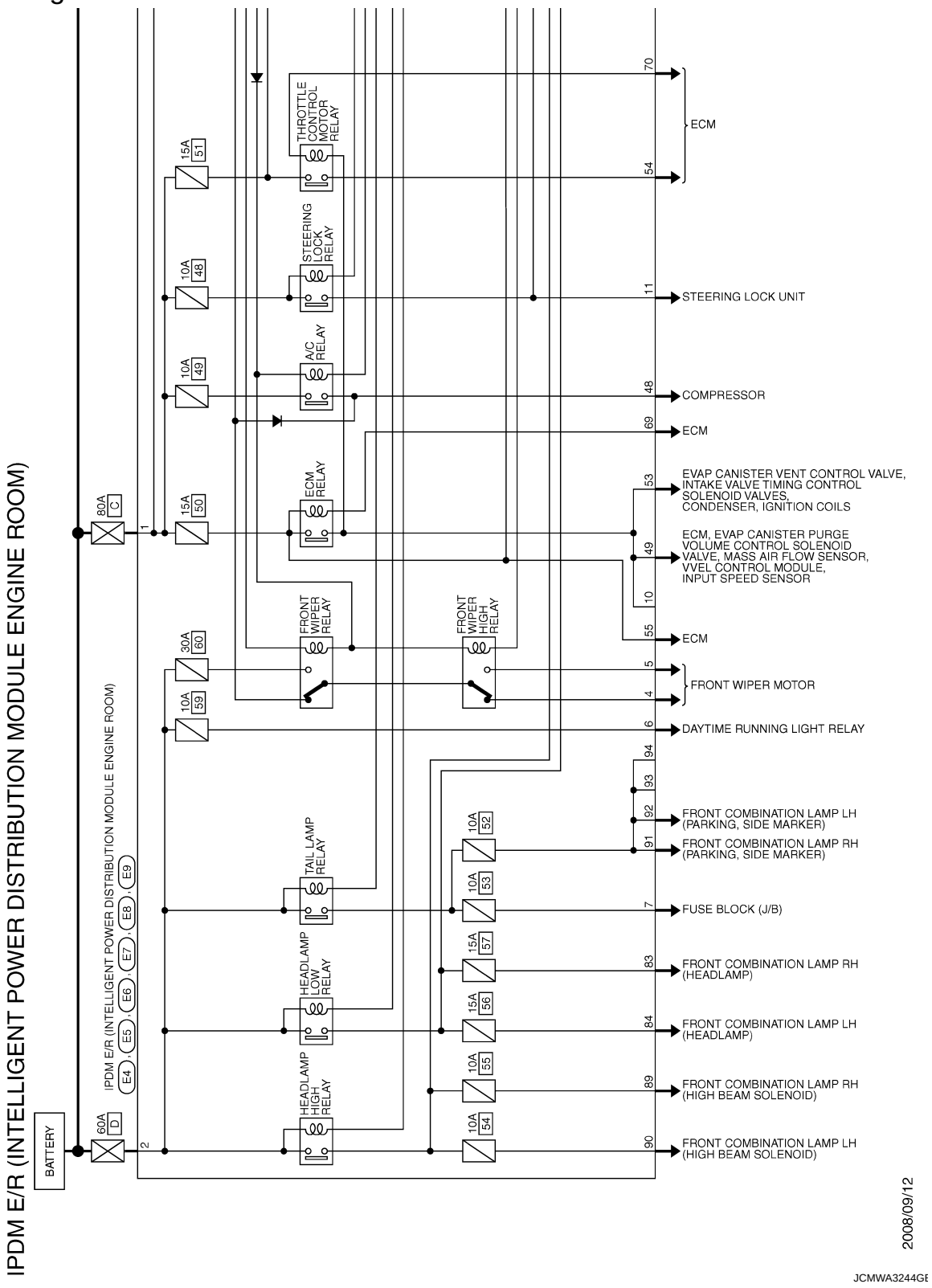

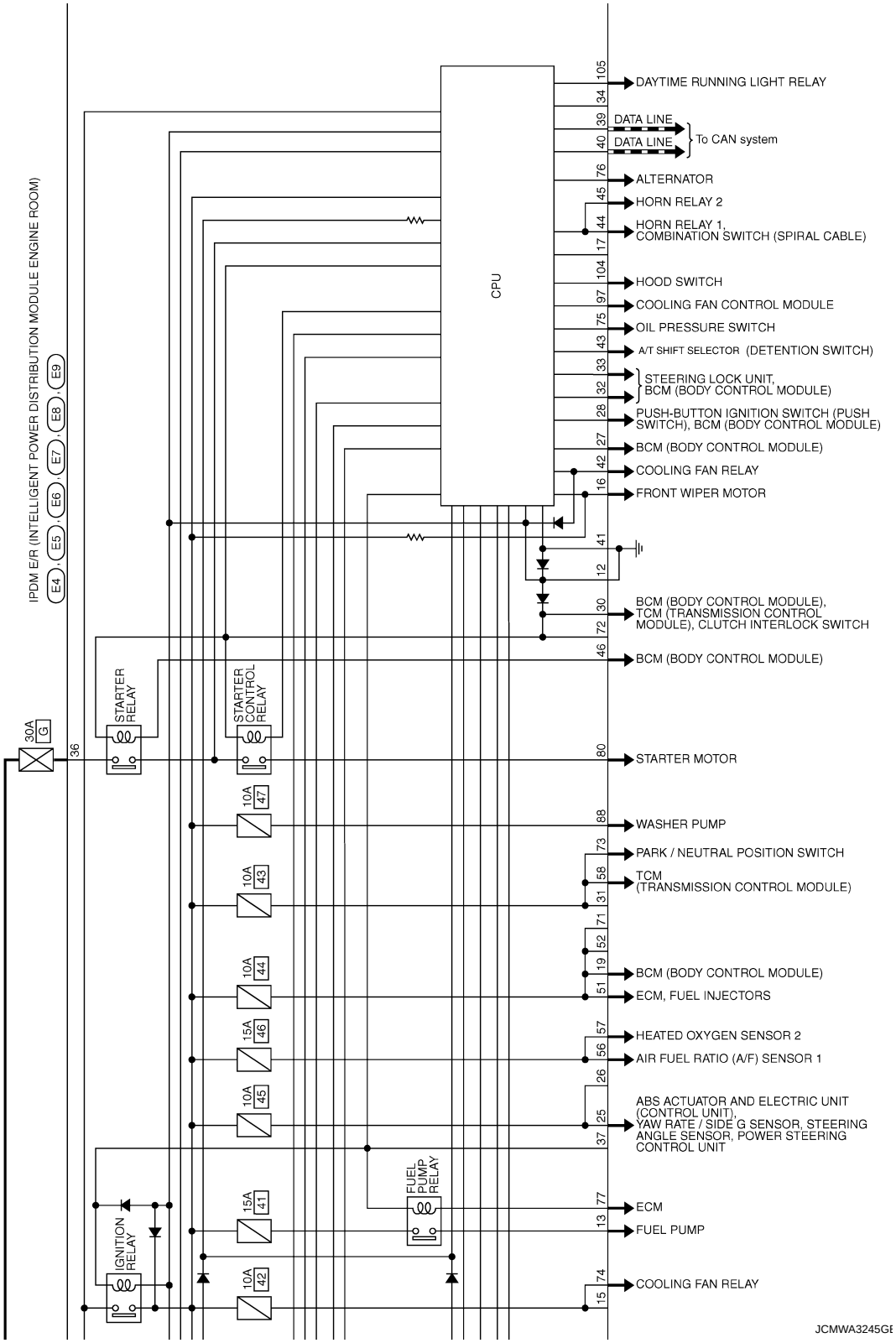
IPDM E/R (INTELLIGENT POWER DISTRIBUTION MODULE ENGINE ROOM)
E4 E5 E6 E7 E8 E9
CPU
DAYTIME RUNNING LIGHT RELAY
DATA LINE
DATA LINE
To CAN system
ALTERNATOR
HORN RELAY 2
HORN RELAY 1, COMBINATION SWITCH (SPIRAL CABLE)
HOOD SWITCH
COOLING FAN CONTROL MODULE
OIL PRESSURE SWITCH
A/T SHIFT SELECTOR (DETENTION SWITCH)
STEERING LOCK UNIT, BCM (BODY CONTROL MODULE)
PUSH-BUTTON IGNITION SWITCH (PUSH SWITCH), BCM (BODY CONTROL MODULE)
BCM (BODY CONTROL MODULE)
COOLING FAN RELAY
FRONT WIPER MOTOR
BCM (BODY CONTROL MODULE), TCM (TRANSMISSION CONTROL MODULE), CLUTCH INTERLOCK SWITCH
BCM (BODY CONTROL MODULE)
STARTER MOTOR
WASHER PUMP
PARK / NEUTRAL POSITION SWITCH
TCM (TRANSMISSION CONTROL MODULE)
BCM (BODY CONTROL MODULE)
ECM, FUEL INJECTORS
HEATED OXYGEN SENSOR 2
AIR FUEL RATIO (A/F) SENSOR 1
ABS ACTUATOR AND ELECTRIC UNIT (CONTROL UNIT), YAW RATE / SIDE G SENSOR, STEERING ANGLE SENSOR, POWER STEERING CONTROL UNIT
ECM
FUEL PUMP
COOLING FAN RELAY
30A G
36
STARTER RELAY
STARTER CONTROL RELAY
IGNITION RELAY
FUEL PUMP RELAY
10A 47
10A 43
10A 44
15A 46
10A 45
15A 41
10A 42
105
34
39
40
76
45
44
17
104
97
75
43
33
32
28
27
42
16
41
12
30
72
46
80
88
73
58
31
71
52
19
51
57
56
26
25
37
77
13
74
15
JCMWA3245GB

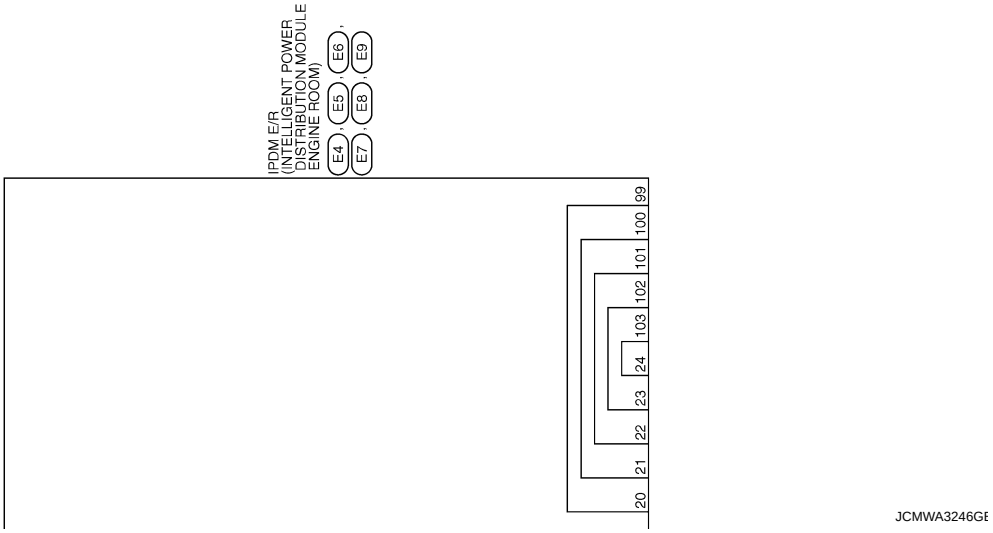
IPDM E/R
(INTELLIGENT POWER
DISTRIBUTION MODULE
ENGINE ROOM)
E4
E5
E6
E7
E8
E9
20
21
22
23
24
103
102
101
100
99
JCMWA3246GB

IPDM E/R (INTELLIGENT POWER DISTRIBUTION MODULE ENGINE ROOM)

Connector No.	E4
Connector Name	IPDM E/R (INTELLIGENT POWER DISTRIBUTION MODULE ENGINE ROOM)
Connector Type	L02FB-MC

Terminal No.	Color of Wire	Signal Name [Specification]
1	W	–
2	L	–

Connector No.	E5
Connector Name	IPDM E/R (INTELLIGENT POWER DISTRIBUTION MODULE ENGINE ROOM)
Connector Type	TH20FW-CS12-M4-1V

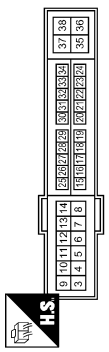

Terminal No.	Color of Wire	Signal Name [Specification]
4	V	–
5	L	–
6	R	–
7	R	–
11	BR	–
12	B/W	–
13	Y	–
16	LG	–
19	W	–
25	G	–
27	Y	–

Terminal No.	Color of Wire	Signal Name [Specification]
28	L	–
30	GR	–
32	L	–
33	P	–
36	G	–

Terminal No.	Color of Wire	Signal Name [Specification]
73	GR	–
74	G	–
75	SB	–
76	Y	–
77	R	–
80	W	–

Connector No.	E7
Connector Name	IPDM E/R (INTELLIGENT POWER DISTRIBUTION MODULE ENGINE ROOM)
Connector Type	TH20FW-CS12-M4

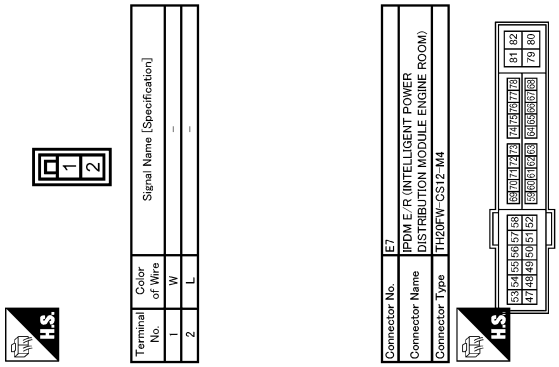

Terminal No.	Color of Wire	Signal Name [Specification]
48	L	–
49	O	–
51	Y	–
53	W	–
54	V	–
55	SB	–
56	LG	–
57	G	–
58	P	–
69	BR	–
70	O	–

Connector No.	E8
Connector Name	IPDM E/R (INTELLIGENT POWER DISTRIBUTION MODULE ENGINE ROOM)
Connector Type	NS08FW-CS

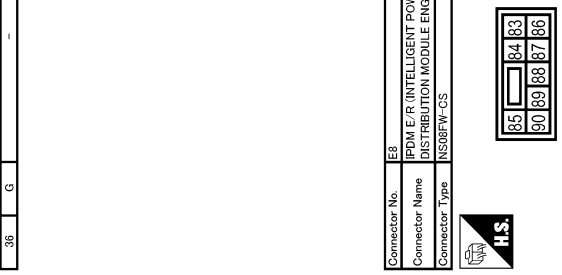

Terminal No.	Color of Wire	Signal Name [Specification]
83	R	–
84	P	–
88	G	–
89	BR	–
90	LG	–

Connector No.	E6
Connector Name	IPDM E/R (INTELLIGENT POWER DISTRIBUTION MODULE ENGINE ROOM)
Connector Type	TH08FW-NH

Terminal No.	Color of Wire	Signal Name [Specification]
39	P	–
40	L	–
41	B/W	–
42	Y	–
43	SB	–
44	W	–
45	G	–
46	V	–

Connector No.	E9
Connector Name	IPDM E/R (INTELLIGENT POWER DISTRIBUTION MODULE ENGINE ROOM)
Connector Type	TH16FW-NH

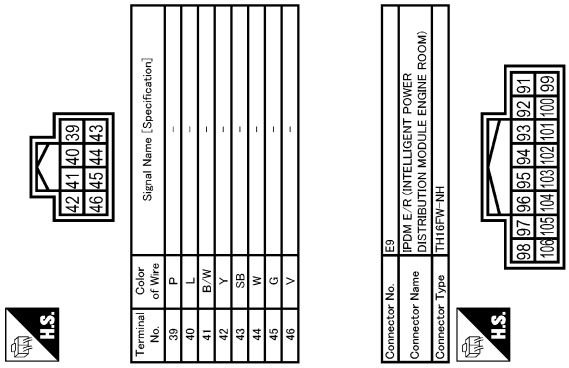

Terminal No.	Color of Wire	Signal Name [Specification]
91	P	–
92	O	–
97	V	–
104	LG	–
105	SB	–

JCMWA3247GE

Fail-safe

INFOID:0000000004732343

CAN COMMUNICATION CONTROL

When CAN communication with ECM and BCM is impossible, IPDM E/R performs fail-safe control. After CAN communication recovers normally, it also returns to normal control.

If No CAN Communication Is Available With ECM

Control part	Fail-safe operation
Cooling fan	• Outputs the pulse duty signal (PWM signal) 100% when the ignition switch is turned ON • Outputs the pulse duty signal (PWM signal) 0% when the ignition switch is turned OFF
A/C compressor	A/C relay OFF
Alternator	Outputs the power generation command signal (PWM signal) 0%

If No CAN Communication Is Available With BCM

Control part	Fail-safe operation
Headlamp	• Turns ON the headlamp low relay when the ignition switch is turned ON • Turns OFF the headlamp low relay when the ignition switch is turned OFF • Headlamp high relay OFF
• Parking lamps • Side maker lamp • License plate lamps • Illuminations • Tail lamps	• Turns ON the tail lamp relay and the daytime running light relay* when the ignition switch is turned ON • Turns OFF the tail lamp relay and the daytime running light relay* when the ignition switch is turned OFF
Front wiper	• The status just before activation of fail-safe control is maintained until the ignition switch is turned OFF while the front wiper is operating at LO or HI speed. • The wiper is operated at LO speed until the ignition switch is turned OFF if the fail-safe control is activated while the front wiper is set in the AUTO mode and the front wiper motor is operating.
Horn	Horn relay OFF
Ignition relay	The status just before activation of fail-safe is maintained.
Starter motor	Starter control relay OFF
Steering lock unit	Steering lock relay OFF

*: With daytime running light system

IGNITION RELAY MALFUNCTION DETECTION FUNCTION

- IPDM E/R monitors the voltage at the contact circuit and excitation coil circuit of the ignition relay inside it.
- IPDM E/R judges the ignition relay error if the voltage differs between the contact circuit and the excitation coil circuit.
- If the ignition relay cannot turn OFF due to contact seizure, it activates the tail lamp relay and the daytime running light relay* for 10 minutes to alert the user to the ignition relay malfunction when the ignition switch is turned OFF.

Voltage judgment		IPDM E/R judgment	Operation
Ignition relay contact side	Ignition relay excitation coil side		
ON	ON	Ignition relay ON normal	—
OFF	OFF	Ignition relay OFF normal	—
ON	OFF	Ignition relay ON stuck	• Detects DTC “B2098: IGN RELAY ON” • Turns ON the tail lamp relay and the daytime running light relay* for 10 minutes
OFF	ON	Ignition relay OFF stuck	Detects DTC “B2099: IGN RELAY OFF”

*: With daytime running light system

FRONT WIPER CONTROL

IPDM E/R detects front wiper stop position by a front wiper stop position signal.
When a front wiper stop position signal is in the conditions listed below, IPDM E/R stops power supply to wiper after repeating a front wiper 10 seconds activation and 20 seconds stop five times.

Ignition switch	Front wiper switch	Front wiper stop position signal
ON	OFF	The front wiper stop position signal (stop position) cannot be input for 10 seconds.
	ON	The front wiper stop position signal does not change for 10 seconds.

NOTE:
This operation status can be confirmed on the IPDM E/R “Data Monitor” that displays “BLOCK” for the item “WIP PROT” while the wiper is stopped.

STARTER MOTOR PROTECTION FUNCTION

IPDM E/R turns OFF the starter control relay to protect the starter motor when the starter control relay remains active for 90 seconds.

DTC Index

INFOID:0000000004732344

NOTE:
- The details of time display are as follows.
- CRNT: A malfunction is detected now.
- PAST: A malfunction was detected in the past.
- IGN counter is displayed on FFD (Freeze Frame data).
- The number is 0 when is detected now.
- The number increases like 1 → 2 ··· 38 → 39 after returning to the normal condition whenever IGN OFF → ON.
- The number is fixed to 39 until the self-diagnosis results are erased if it is over 39.

×: Applicable

CONSULT display	Fail-safe	Refer to
No DTC is detected. further testing may be required.	—	—
U1000: CAN COMM CIRCUIT	×	PCS-15
B2098: IGN RELAY ON	×	PCS-16
B2099: IGN RELAY OFF	—	PCS-17
B2108: STRG LCK RELAY ON	—	SEC-100
B2109: STRG LCK RELAY OFF	—	SEC-102
B210A: STRG LCK STATE SW	—	SEC-103
B210B: START CONT RLY ON	—	SEC-107
B210C: START CONT RLY OFF	—	SEC-108
B210D: STARTER RELAY ON	—	SEC-109
B210E: STARTER RELAY OFF	—	SEC-110
B210F: INTRLCK/PNP SW ON	—	SEC-112
B2110: INTRLCK/PNP SW OFF	—	SEC-114

SYMPTOM DIAGNOSIS

THE FUEL GAUGE INDICATOR DOES NOT OPERATE

Description

INFOID:0000000004529094

Fuel gauge will not indicate from a certain position.

Diagnosis Procedure

INFOID:0000000004529095

1. CHECK COMBINATION METER OUTPUT SIGNAL

1. Connect CONSULT-III.
2. Select the “Data Monitor” for the “METER/M&A” and compare the “FUEL METER” monitor value with the fuel gauge reading on the combination meter. Refer to MWI-47, "Component Function Check".

Does monitor value match fuel gauge reading?

YES >> GO TO 2.
NO >> Replace combination meter.

2. CHECK FUEL LEVEL SENSOR SIGNAL CIRCUIT

Check the fuel level sensor signal circuit. Refer to MWI-47, "Diagnosis Procedure".

Is the inspection result normal?

YES >> GO TO 3.
NO >> Repair harness or connector.

3. CHECK FUEL LEVEL SENSOR UNIT

Perform a unit check for the fuel level sensor unit. Refer to MWI-48, "Component Inspection".

Is the inspection result normal?

YES >> GO TO 4.
NO >> Replace fuel level sensor unit. Refer to FL-5, "Removal and Installation".

4. CHECK FLOAT INTERFERENCE

Check that the float arm interferes with or binds to other components in the fuel tank.

Is the inspection result normal?

YES >> Replace combination meter.
NO >> Repair or replace malfunctioning parts.

THE OIL PRESSURE WARNING LAMP DOES NOT TURN ON

Description

INFOID:0000000004529098

The oil pressure warning lamp stays off when the ignition switch is turned ON.

Diagnosis Procedure

INFOID:0000000004529099

1. CHECK OIL PRESSURE WARNING LAMP

Perform auto active test. Refer to PCS-10, "Diagnosis Description".

Is oil pressure warning lamp blinking?

YES >> GO TO 2.
NO >> GO TO 4.

2. CHECK OIL PRESSURE SWITCH SIGNAL CIRCUIT

Check the oil pressure switch signal circuit. Refer to MWI-50, "Diagnosis Procedure".

Is the inspection result normal?

YES >> GO TO 3.
NO >> Repair harness or connector.

3. CHECK OIL PRESSURE SWITCH

Perform a unit check for the oil pressure switch. Refer to MWI-50, "Component Inspection".

Is the inspection result normal?

YES >> Replace IPDM E/R.
NO >> Replace oil pressure switch.

4. CHECK COMBINATION METER INPUT SIGNAL

Connect CONSULT-III and perform an input signal check for the combination meter. Refer to MWI-50, "Component Function Check".

Is the inspection result normal?

YES >> Replace combination meter.
NO >> Replace IPDM E/R. Refer to PCS-33, "Removal and Installation".

THE OIL PRESSURE WARNING LAMP DOES NOT TURN OFF

Description

INFOID:0000000004529100

The oil pressure warning lamp remains illuminated while the engine is running (normal oil pressure).

Diagnosis Procedure

INFOID:0000000004529101

1. CHECK OIL PRESSURE WARNING LAMP

Perform auto active test. Refer to PCS-10, "Diagnosis Description".

Is oil pressure warning lamp blinking?

YES >> GO TO 2.
NO >> GO TO 5.

2. CHECK IPDM E/R OUTPUT VOLTAGE

1. Turn ignition switch OFF.
2. Disconnect the oil pressure switch connector.
3. Turn ignition switch ON.
4. Check voltage between the oil pressure switch harness connector terminal and ground.

Terminals			Voltage (Approx.)
(+)		(–)	
Oil pressure switch		Ground	
Connector	Terminal		
F37	1		12 V

Is the inspection result normal?

YES >> GO TO 3.
NO >> GO TO 4.

3. CHECK OIL PRESSURE SWITCH

Perform a unit check for the oil pressure switch. Refer to MWI-50, "Component Inspection".

Is the inspection result normal?

YES >> Replace IPDM E/R. Refer to PCS-33, "Removal and Installation".
NO >> Replace oil pressure switch.

4. CHECK OIL PRESSURE SWITCH SIGNAL CIRCUIT

Check the oil pressure switch signal circuit. Refer to MWI-50, "Diagnosis Procedure".

Is the inspection result normal?

YES >> GO TO 5.
NO >> Repair harness or connector.

5. CHECK COMBINATION METER INPUT SIGNAL

Connect CONSULT-III and perform an input signal check for the combination meter. Refer to MWI-50, "Component Function Check".

Is the inspection result normal?

YES >> Replace combination meter.
NO >> Replace IPDM E/R. Refer to PCS-33, "Removal and Installation".

THE PARKING BRAKE RELEASE WARNING CONTINUES DISPLAYING, OR DOES NOT DISPLAY

Description

INFOID:0000000004529102

- The parking brake warning is displayed during vehicle travel even though the parking brake is released.
- The parking brake warning is not displayed even though driving the vehicle with the parking brake applied.

Diagnosis Procedure

INFOID:0000000004529103

1. CHECK PARKING BRAKE WARNING LAMP OPERATION

1. Start the engine.
2. Check the operation of the parking brake warning lamp when operating the parking brake.

Condition	Warning lamp status
When parking brake is applied	ON
When parking brake is released	OFF

Is the inspection result normal?

YES >> Replace combination meter.
NO >> GO TO 2.

2. CHECK PARKING BRAKE SWITCH SIGNAL CIRCUIT

1. Turn ignition switch OFF.
2. Check the parking brake switch signal circuit. Refer to MWI-52, "Diagnosis Procedure".

Is the inspection result normal?

YES >> GO TO 3.
NG >> Repair harness or connector.

3. CHECK PARKING BRAKE SWITCH

Perform a unit check for the parking brake switch. Refer to BRC-67, "Component Inspection".

Is the inspection result normal?

YES >> Replace combination meter.
NO >> Replace parking brake switch.

THE LOW WASHER FLUID WARNING CONTINUES DISPLAYING, OR DOES NOT DISPLAY

Description

INFOID:0000000004529104

- The warning is still displayed even after washer fluid is added.
- The warning is not displayed even though the washer tank is empty.

Diagnosis Procedure

INFOID:0000000004529105

1. CHECK WASHER LEVEL SWITCH SIGNAL CIRCUIT

Check the washer level switch signal circuit. Refer to MWI-53, "Diagnosis Procedure".

Is the inspection result normal?

YES >> GO TO 2.
NO >> Repair harness or connector.

2. CHECK WASHER LEVEL SWITCH

Perform a unit check for the washer level switch. Refer to MWI-53, "Component Inspection".

Is the inspection result normal?

YES >> Replace combination meter.
NO >> Replace washer level switch. Refer to WW-88, "Removal and Installation".

THE DOOR OPEN WARNING CONTINUES DISPLAYING, OR DOES NOT DISPLAY

Description

INFOID:0000000004529106

- The door ajar warning is displayed even though all of the doors are closed.
- The door ajar warning is not displayed even though a door is ajar.

Diagnosis Procedure

INFOID:0000000004529107

1. CHECK BCM INPUT/OUTPUT SIGNAL

Connect CONSULT-III and check the BCM input signals. Refer to DLK-60, "Component Function Check".

Is the inspection result normal?

YES >> GO TO 2.
NO >> GO TO 3.

2. CHECK COMBINATION METER INPUT SIGNAL

Select the “Data Monitor” for the “METER/M&A” and check the “DOOR W/L” monitor value.

“DOOR W/L”	
Door open	: On
Door closed	: Off

Is the inspection result normal?

YES >> Replace combination meter.
NO >> Replace BCM. Refer to BCS-84, "Removal and Installation".

3. CHECK DOOR SWITCH SIGNAL CIRCUIT

Check the door switch signal circuit. Refer to DLK-60, "Diagnosis Procedure".

Is the inspection result normal?

YES >> GO TO 4.
NO >> Repair harness or connector.

4. CHECK DOOR SWITCH

Perform a unit check for the door switch. Refer to DLK-61, "Component Inspection".

Is the inspection result normal?

YES >> Replace combination meter.
NO >> Replace applicable door switch. Refer toDLK-233, "Removal and Installation".

THE AMBIENT TEMPERATURE DISPLAY IS INCORRECT

Description

INFOID:0000000004529108

- The displayed ambient air temperature is higher than the actual temperature.
- The displayed ambient air temperature is lower than the actual temperature.

Diagnosis Procedure

INFOID:0000000004529109

NOTE:
Check that the symptom is not applicable to the normal operating condition before starting diagnosis. Refer to MWI-92, "INFORMATION DISPLAY : Description".

1. CHECK AMBIENT SENSOR SIGNAL CIRCUIT

Check the ambient sensor signal circuit. Refer to HAC-29, "Diagnosis Procedure" (without 7 inch display) or HAC-119, "Diagnosis Procedure" (with 7 inch display).

Is the inspection result normal?

YES >> GO TO 2.
NO >> Repair harness or connector.

2. CHECK A/C AUTO AMP. CONNECTION RECOGNITION SIGNAL CIRCUIT

Check the A/C auto amp. connection recognition signal circuit. Refer to MWI-55, "Diagnosis Procedure".

Is the inspection result normal?

YES >> GO TO 3.
NO >> Repair harness or connector.

3. CHECK AMBIENT SENSOR

Perform the part check for the ambient sensor. Refer to HAC-30, "Component Inspection" (without 7 inch display) or HAC-120, "Component Inspection" (with 7 inch display).

Is the inspection result normal?

YES >> Replace combination meter.
NO >> Replace ambient sensor. Refer to HAC-86, "Removal and Installation" (without 7 inch display) or HAC-173, "Removal and Installation" (with 7 inch display).

NORMAL OPERATING CONDITION
INFORMATION DISPLAY

INFORMATION DISPLAY : Description

INFOID:0000000004529111

AMBIENT AIR TEMPERATURE

The displayed ambient air temperature on the information display may differ from the actual temperature because it is a corrected value calculated from the ambient sensor signal by the combination meter. Refer to MWI-26, "INFORMATION DISPLAY : System Description" for details on the correction process.

POSSIBLE DRIVING DISTANCE

The calculated possible driving distance may differ from the actual distance to empty if the refueling amount is approximately 15 ℓ (4 US gal, 3-1/4 Imp gal) or less. This is because the refuel control (moves the fuel gauge needle quicker than normal judging that the driver is refueling the vehicle) is not performing.

PRECAUTION

PRECAUTIONS

Precaution for Supplemental Restraint System (SRS) "AIR BAG" and "SEAT BELT PRE-TENSIONER"

INFOID:0000000004688883

The Supplemental Restraint System such as “AIR BAG” and “SEAT BELT PRE-TENSIONER”, used along with a front seat belt, helps to reduce the risk or severity of injury to the driver and front passenger for certain types of collision. This system includes seat belt switch inputs and dual stage front air bag modules. The SRS system uses the seat belt switches to determine the front air bag deployment, and may only deploy one front air bag, depending on the severity of a collision and whether the front occupants are belted or unbelted.
Information necessary to service the system safely is included in the “SRS AIR BAG” and “SEAT BELT” of this Service Manual.

WARNING:

- **To avoid rendering the SRS inoperative, which could increase the risk of personal injury or death in the event of a collision which would result in air bag inflation, all maintenance must be performed by an authorized NISSAN/INFINITI dealer.**
- **Improper maintenance, including incorrect removal and installation of the SRS, can lead to personal injury caused by unintentional activation of the system. For removal of Spiral Cable and Air Bag Module, see the “SRS AIR BAG”.**
- **Do not use electrical test equipment on any circuit related to the SRS unless instructed to in this Service Manual. SRS wiring harnesses can be identified by yellow and/or orange harnesses or harness connectors.**

PRECAUTIONS WHEN USING POWER TOOLS (AIR OR ELECTRIC) AND HAMMERS

WARNING:

- **When working near the Air Bag Diagnosis Sensor Unit or other Air Bag System sensors with the ignition ON or engine running, DO NOT use air or electric power tools or strike near the sensor(s) with a hammer. Heavy vibration could activate the sensor(s) and deploy the air bag(s), possibly causing serious injury.**
- **When using air or electric power tools or hammers, always switch the ignition OFF, disconnect the battery, and wait at least 3 minutes before performing any service.**

Precaution for Battery Service

INFOID:0000000004749259

Before disconnecting the battery, lower both the driver and passenger windows. This will prevent any interference between the window edge and the vehicle when the door is opened/closed. During normal operation, the window slightly raises and lowers automatically to prevent any window to vehicle interference. The automatic window function will not work with the battery disconnected.

REMOVAL AND INSTALLATION

COMBINATION METER

Exploded View

INFOID:0000000004501387

REMOVAL
Refer to IP-12, "Exploded View".

DISASSEMBLY

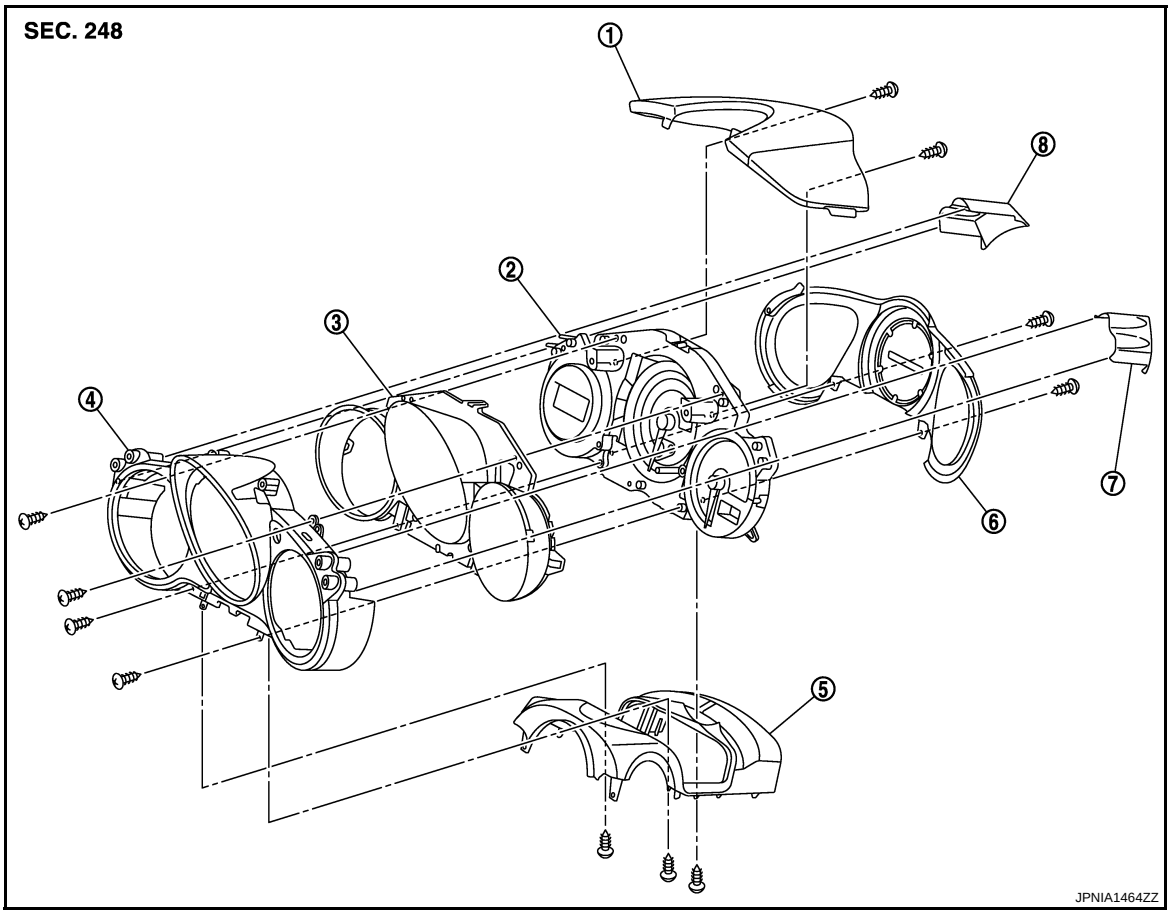

1. Upper cover
2. Combination meter
3. Meter housing
4. Front cover
5. Steering column upper cover
6. Rear cover
7. Meter control switch cover (RH)
8. Meter control switch cover (LH)

Removal and Installation

INFOID:0000000004501388

REMOVAL
1. Remove the steering column lower cover. Refer to IP-13, "Removal and Installation".

2. Remove bolts (A) and clip (B), and remove combination meter.

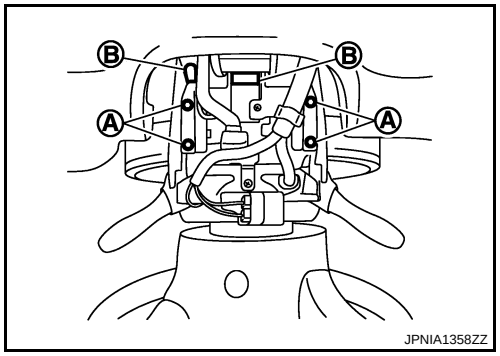

INSTALLATION

Install in the reverse order of removal.

Disassembly and Assembly

INFOID:0000000004704305

DISASSEMBLY

1. Remove screws (A) and remove steering column upper cover (1).

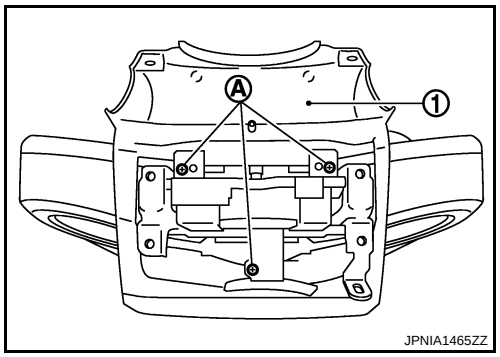

2. Disengage pawl and remove meter control switch cover (1).
3. Remove screws (A) and remove rear cover (2).

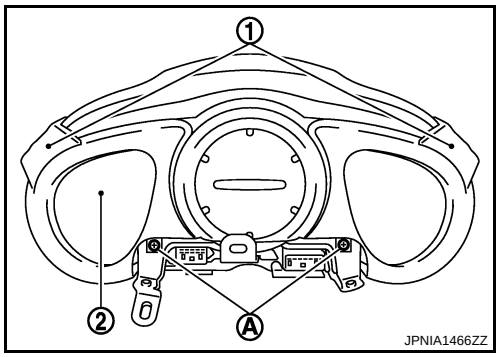

4. Remove screws (A) and remove upper cover (1).

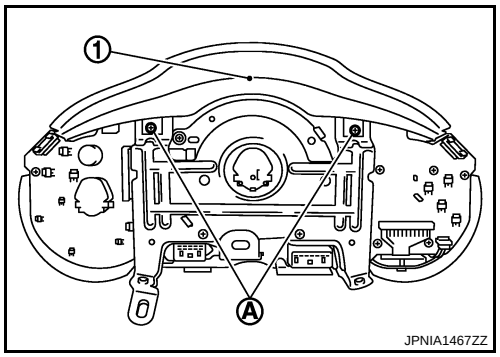

5. Remove screws (A) and remove front cover (1).
6. Disengage the tabs and then remove meter housing (2).

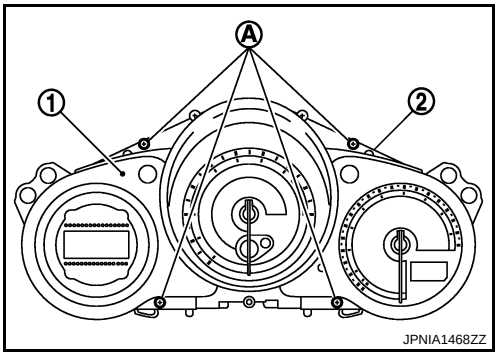

ASSEMBLY

Assemble in the reverse order of disassembly.

TRIPLE METER

Exploded View

INFOID:0000000004546500

REMOVAL

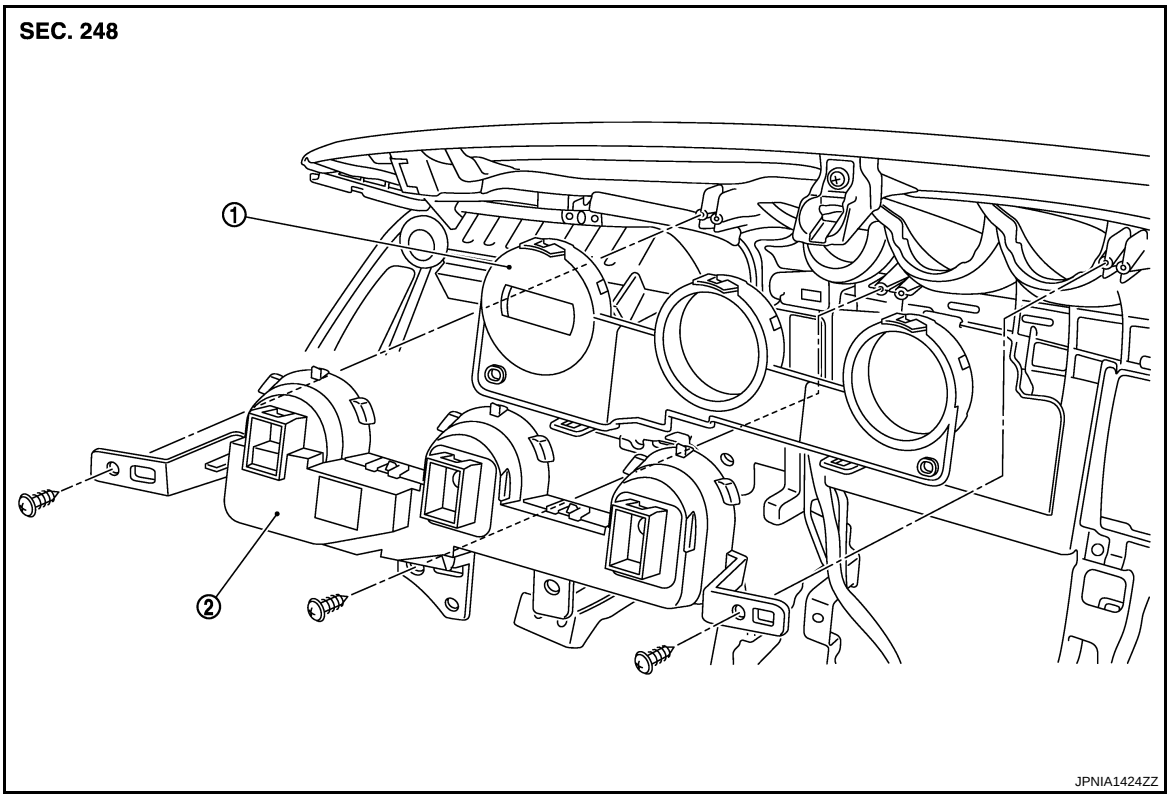

1. Front cover
2. Triple meter

Removal and Installation

INFOID:0000000004546501

REMOVAL

1. Remove triple meter cover. Refer to IP-13, "Removal and Installation".
2. Remove screws (A) and remove triple meter (1).

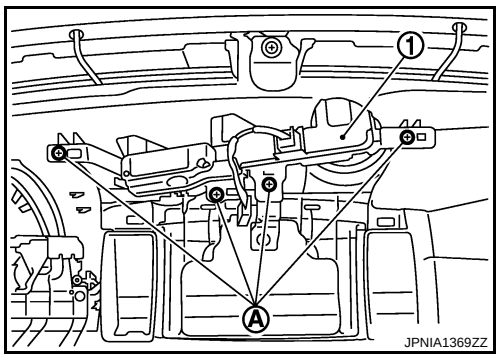

INSTALLATION

Install in the reverse order of removal.

Disassembly and Assembly

INFOID:0000000004704306

DISASSEMBLY

Disengage the tabs to separate front cover.

ASSEMBLY

Assemble in the reverse order of disassembly.

SPEC CHANGE INFORMATION

COMBINATION METER

Combination Meters

INFOID:0000000005390529

Dedicated vehicular combination meter color changed, equipped with nismo logo.