SECTION PG

POWER SUPPLY, GROUND & CIRCUIT ELEMENTS

CONTENTS

POWER SUPPLY&GROUND CIRCUIT

BASIC INSPECTION 3

BATTERY 3
How to Handle Battery 3
Work Flow 3

DTC/CIRCUIT DIAGNOSIS 6

POWER SUPPLY ROUTING CIRCUIT 6
Wiring Diagram - BATTERY POWER SUPPLY - 6
Wiring Diagram - BATTERY POWER SUPPLY FUSE No. 6 - 20
Wiring Diagram - BATTERY POWER SUPPLY FUSE No. 9 - 21
Wiring Diagram - BATTERY POWER SUPPLY FUSE No. 34 - 22
Wiring Diagram - BATTERY POWER SUPPLY FUSE No. 50 - 23
Wiring Diagram - BATTERY POWER SUPPLY FUSE No. 53 - 24
Wiring Diagram - ACCESSORY POWER SUPPLY - 26
Wiring Diagram - ACCESSORY POWER SUPPLY FUSE No. 19 - 30
Wiring Diagram - IGNITION POWER SUPPLY - 31
Wiring Diagram - IGNITION POWER SUPPLY FUSE No. 3 - 43
Wiring Diagram - IGNITION POWER SUPPLY FUSE No. 4 - 44
Wiring Diagram - IGNITION POWER SUPPLY FUSE No. 13 - 45
Wiring Diagram - IGNITION POWER SUPPLY FUSE No. 44 - 46
Wiring Diagram - IGNITION POWER SUPPLY FUSE No. 45 - 47
Fuse 48
Fusible Link 51
Circuit Breaker 51

HARNESS LAYOUT 52
Outline 52
Engine Room Harness 54
Engine Control Harness 56
Main Harness 58
Body Harness 58
Door Harness 63
Room Lamp Harness 67

HARNESS CONNECTOR 69
Description 69

STANDARDIZED RELAY 72
Description 72

FUSE BLOCK - JUNCTION BOX (J/B) 74
Fuse, Connector and Terminal Arrangement 74

FUSE, FUSIBLE LINK AND RELAY BOX 75
Fuse and Fusible Link Arrangement 75

IPDM E/R (INTELLIGENT POWER DISTRIBUTION MODULE ENGINE ROOM) 76
Fuse, Connector and Terminal Arrangement 76

PRECAUTION 77

PRECAUTIONS 77

EXCEPT FOR MEXICO 77
EXCEPT FOR MEXICO : Precaution for Supplemental Restraint System (SRS) "AIR BAG" and "SEAT BELT PRE-TENSIONER" 77
EXCEPT FOR MEXICO : Precaution for Battery Service 77
EXCEPT FOR MEXICO : Precaution for Procedure without Cowl Top Cover 77

FOR MEXICO 77
FOR MEXICO : Precaution for Supplemental Restraint System (SRS) "AIR BAG" and "SEAT BELT PRE-TENSIONER" 78
FOR MEXICO : Precaution for Battery Service 78

FOR MEXICO : Precaution for Procedure without Cowl Top Cover 78

PREPARATION 79

PREPARATION 79
Special Service Tools 79

REMOVAL AND INSTALLATION 80

BATTERY 80
Exploded View 80
Removal and Installation 80

BATTERY TERMINAL WITH FUSIBLE LINK... 81
Exploded View 81
Removal and Installation 81

SERVICE DATA AND SPECIFICATIONS (SDS) 82

SERVICE DATA AND SPECIFICATIONS (SDS) 82
Battery 82

BASIC INSPECTION

BATTERY

How to Handle Battery

INFOID:0000000009358073

CAUTION:
- **If it becomes necessary to start the engine with a booster battery and jumper cables, use a 12-volt booster battery.**
- **After connecting battery cables, ensure that they are tightly clamped to battery terminals for good contact.**
- **Never add distilled water through the hole used to check specific gravity.**

METHODS OF PREVENTING OVER-DISCHARGE

The following precautions must be taken to prevent over-discharging a battery.
- The battery surface (particularly its top) should always be kept clean and dry.
- The terminal connections should be clean and tight.
- At every routine maintenance, check the electrolyte level. This also applies to batteries designated as “low maintenance” and “maintenance-free”.

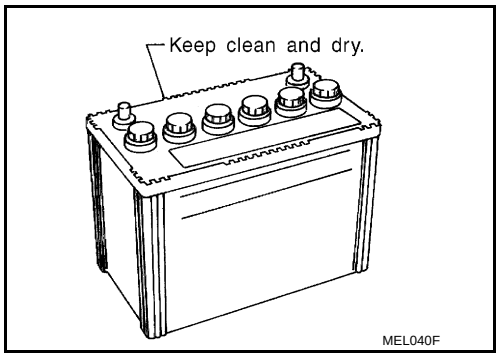

- When the vehicle is not going to be used over a long period of time, disconnect the battery cable from the negative terminal. (If the vehicle has an extended storage switch, turn it off.)

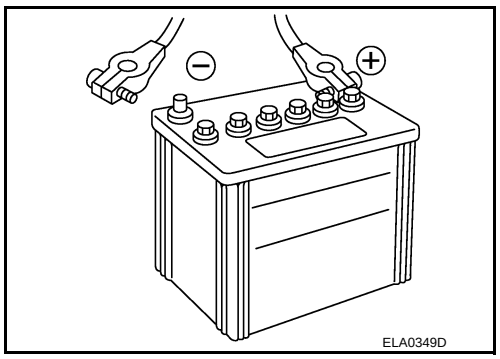

Work Flow

INFOID:0000000009358074

BATTERY DIAGNOSIS WITH EXP-800 NI OR GR8-1200 NI

To diagnose and confirm the condition of the battery, use the following special service tools:
- EXP-800 NI Battery and electrical diagnostic analyzer
- GR8-1200 NI Multitasking battery and electrical diagnostic station

NOTE:
Refer to the applicable instruction manual for proper battery diagnosis procedures.

BATTERY DIAGNOSIS WITHOUT EXP-800 NI OR GR8-1200 NI

Check Electrolyte Level

WARNING:
Never allow battery fluid to come in contact with skin, eyes, fabrics, or painted surfaces. After touching a battery, never touch or rub your eyes until you have thoroughly washed your hands. If acid contacts eyes, skin or clothing, immediately flush with water for 15 minutes and seek medical attention. Failure to do this may cause personal injury or damage to clothing or the painted surfaces.

- Remove the cell plug using a suitable tool.
- Add distilled water up to the MAX level.

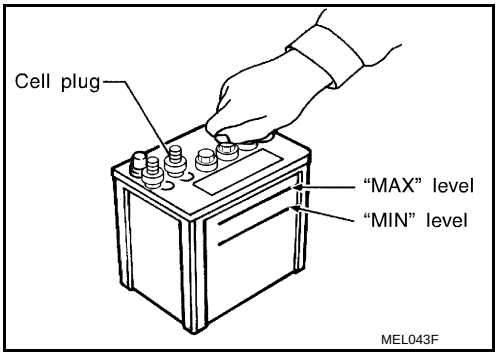

SULPHATION

- **A battery will be completely discharged if it is left unattended for a long time and the specific gravity will become less than 1.100. This may result in sulphation on the cell plates.**
- **To determine if a battery has been "sulphated", note its voltage and current when charging it. As shown in the figure, less current and higher voltage are observed in the initial stage of charging sulphated batteries.**
- **A sulphated battery may sometimes be brought back into service by means of a long, slow charge, 12 hours or more, followed by a battery capacity test.**

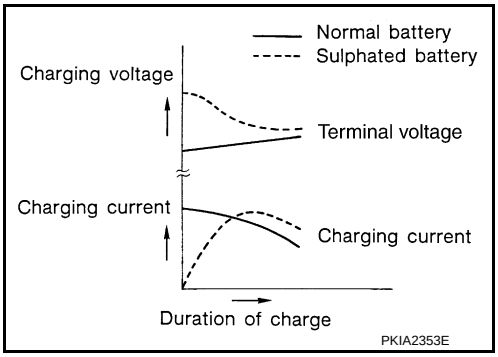

Specific Gravity Check

NOTE:

Check the charge condition of the battery.

Periodically check the specific gravity of the electrolyte. Keep a close check on charge condition to prevent over-discharge.

1. Read hydrometer and thermometer indications at eye level.
2. Use the chart below to correct your hydrometer reading according to electrolyte temperature.

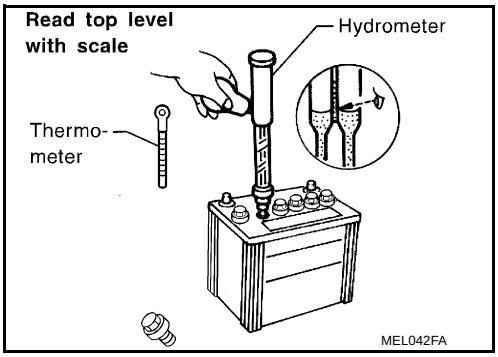

Hydrometer Temperature Correction

Battery electrolyte temperature [°C (°F)]	Add to specific gravity reading
71 (160)	0.032
66 (150)	0.028
60 (140)	0.024
54 (130)	0.020
49 (120)	0.016
43 (110)	0.012
38 (100)	0.008
32 (90)	0.004
27 (80)	0
21 (70)	–0.004
16 (60)	–0.008
10 (50)	–0.012

Battery electrolyte temperature [°C (°F)]	Add to specific gravity reading
4 (40)	–0.016
–1 (30)	–0.020
–7 (20)	–0.024
–12 (10)	–0.028
–18 (0)	–0.032

Corrected specific gravity	Approximate charge condition
1.260 - 1.280	Fully charged
1.230 - 1.250	3/4 charged
1.200 - 1.220	1/2 charged
1.170 - 1.190	1/4 charged
1.140 - 1.160	Almost discharged
1.110 - 1.130	Completely discharged

Charging The Battery

CAUTION:

- **Never “quick charge” a fully discharged battery.**
- **Keep the battery away from open flame while it is being charged.**
- **When connecting the charger, connect the leads first, then turn on the charger. Never turn on the charger first, as this may cause a spark.**
- **If battery electrolyte temperature rises above 55 °C (131 °F), stop charging. Always charge battery at a temperature below 55 °C (131 °F).**

Charging Rates (Standard Charge)

Approximate charge condition	Charge current (A)	Charge time (h)
Fully charged	5	2
3/4 charged		2.5
1/2 charged		5
1/4 charged		7.5
Almost discharged		9
Completely discharged		10

Charging Rates (Quick Charge)

Approximate charge condition	Charge current (A)	Charge time (h)
Fully charged	—	—
3/4 charged	13	0.5
1/2 charged	26	
1/4 charged		
Almost discharged		
Completely discharged	—	—

NOTE:

The ammeter reading on your battery charger will automatically decrease as the battery charges. This indicates that the voltage of the battery is increasing normally as the state of charge improves. The charging amps indicated above refer to initial charge rate.

- If, after charging, the specific gravity of any two cells varies more than 0.050, the battery should be replaced.

DTC/CIRCUIT DIAGNOSIS

POWER SUPPLY ROUTING CIRCUIT

Wiring Diagram - BATTERY POWER SUPPLY -

INFOID:0000000009358075

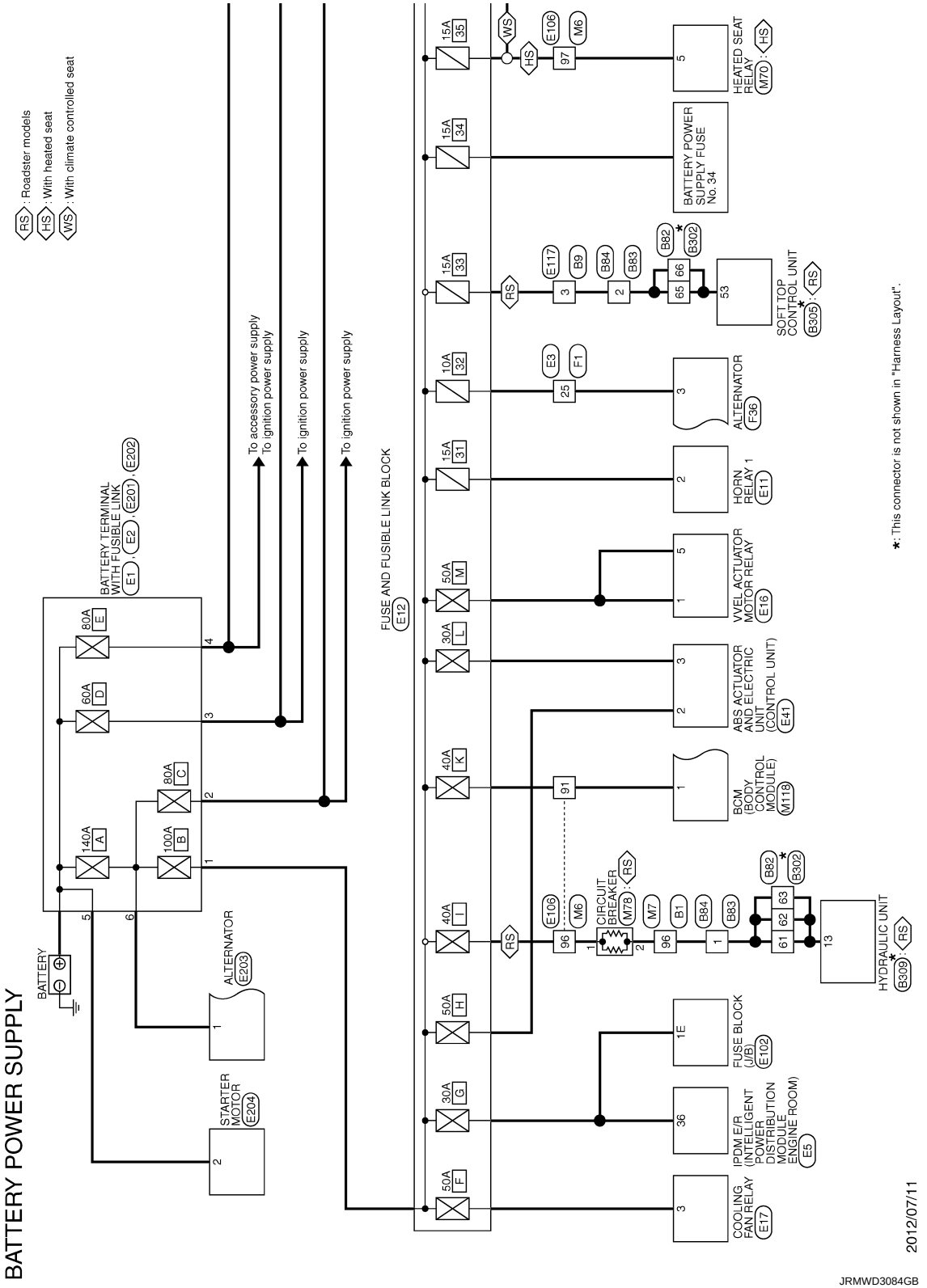

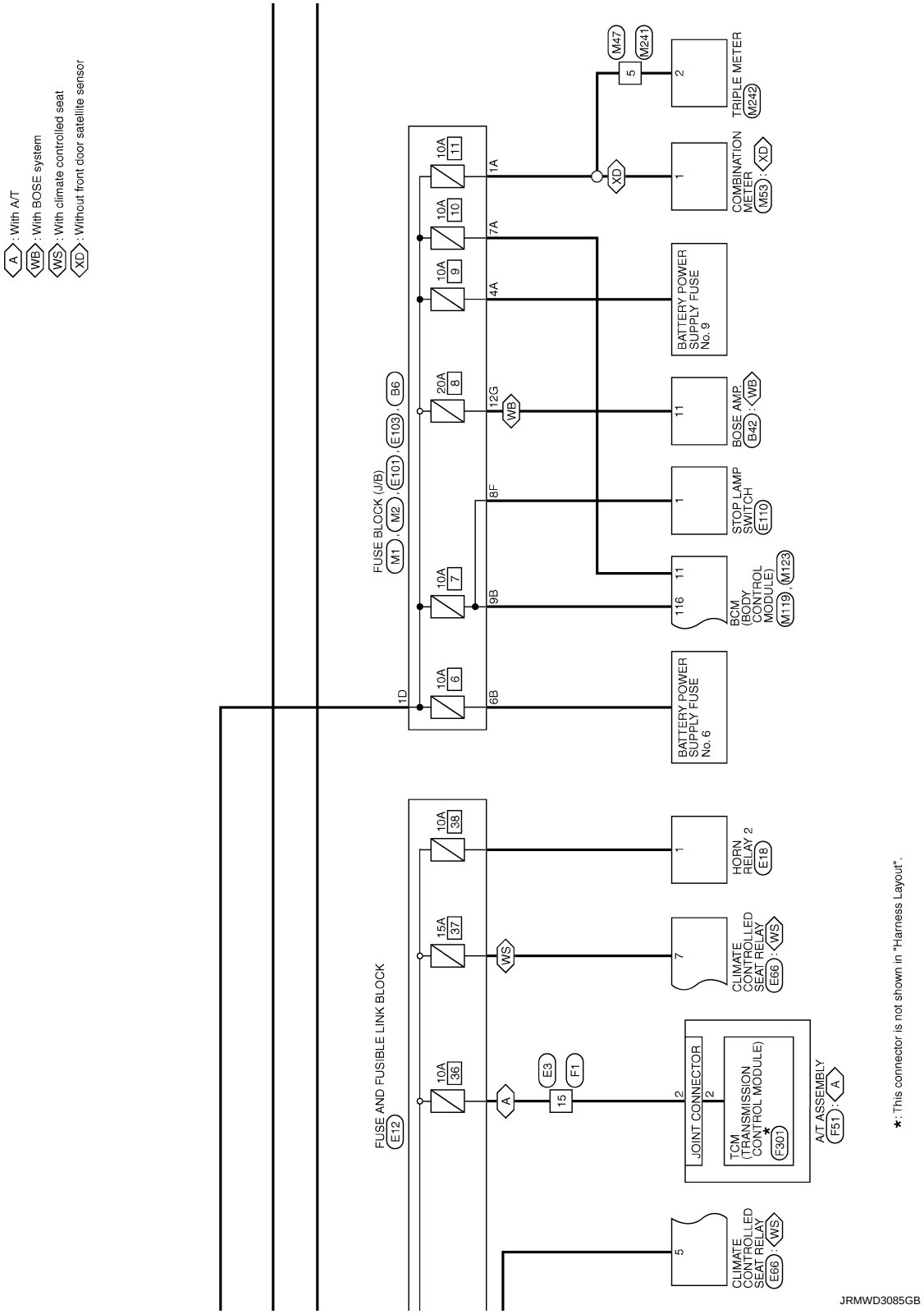
A : With A/T
WB : With BOSE system
WS : With climate controlled seat
XD : Without front door satellite sensor
FUSE BLOCK (J/B)
M1 , M2 , E101 , E103 , B6
1D
10A 6
10A 7
20A 8
10A 9
10A 10
10A 11
6B
9B
12G
8F
4A
7A
1A
BATTERY POWER SUPPLY FUSE No. 6
BCM (BODY CONTROL MODULE)
M119 M123
116 11
STOP LAMP SWITCH E110
BOSE AMP. B42 : WB
BATTERY POWER SUPPLY FUSE No. 9
COMBINATION METER M53 : XD
TRIPLE METER M242
M47 M241
5
2
1
11
1
FUSE AND FUSIBLE LINK BLOCK E12
10A 36
10A 38
15A 37
HORN RELAY 2 E18
CLIMATE CONTROLLED SEAT RELAY E66 : WS
A
E3
F1
15
2
JOINT CONNECTOR
TCM (TRANSMISSION CONTROL MODULE) F301*
A/T ASSEMBLY F51 : A
5
CLIMATE CONTROLLED SEAT RELAY E66 : WS
*: This connector is not shown in "Harness Layout".
JRMWD3085GB

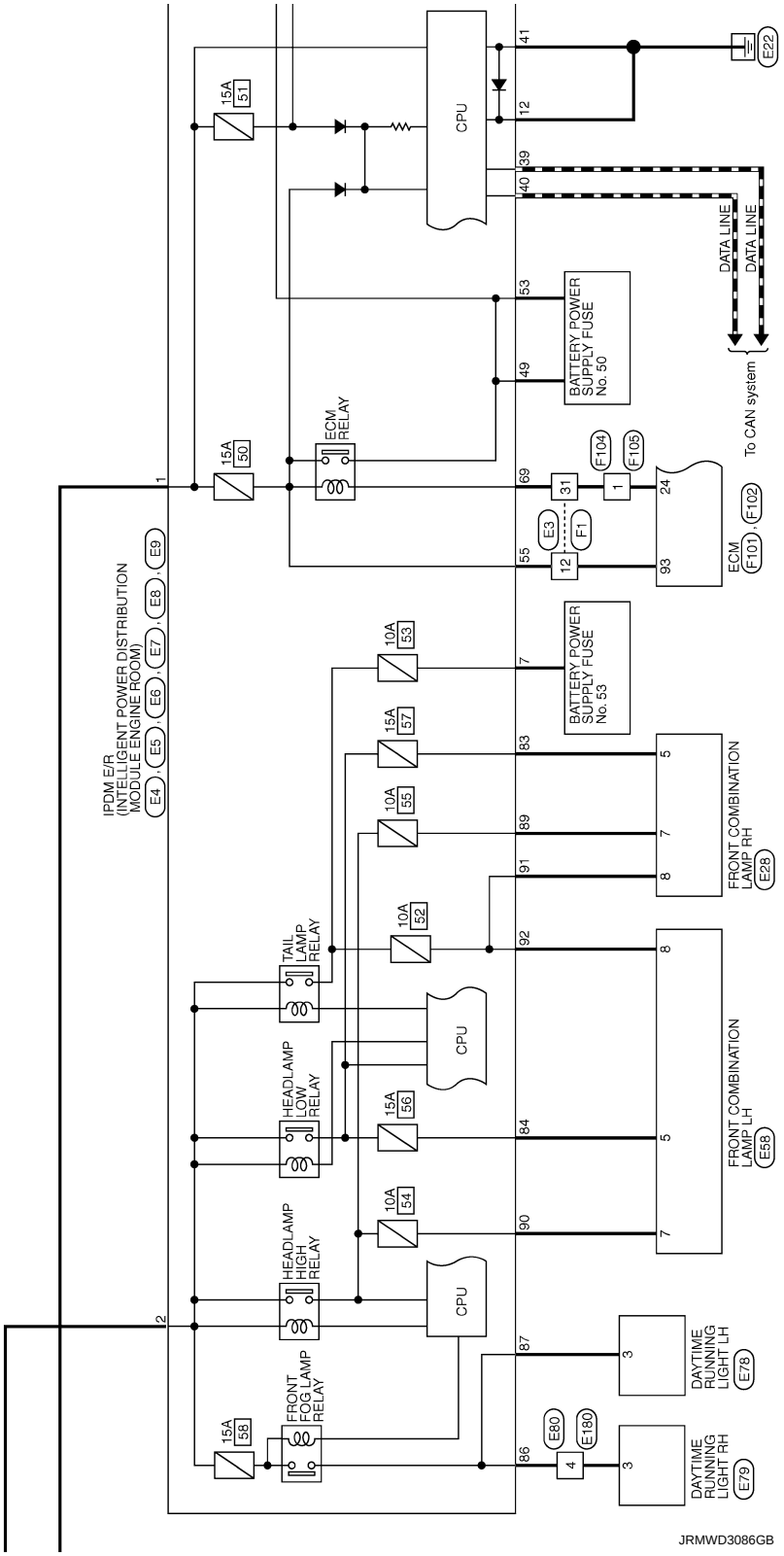
IPDM E/R
(INTELLIGENT POWER DISTRIBUTION
MODULE ENGINE ROOM)
E4, E5, E6, E7, E8, E9
CPU
15A 51
15A 50
ECM RELAY
BATTERY POWER SUPPLY FUSE No. 50
BATTERY POWER SUPPLY FUSE No. 53
10A 53
15A 57
10A 55
10A 52
15A 56
10A 54
15A 58
TAIL LAMP RELAY
HEADLAMP LOW RELAY
HEADLAMP HIGH RELAY
FRONT FOG LAMP RELAY
DATA LINE
DATA LINE
To CAN system
E22
F104
F105
E3
F1
ECM
F101, F102
FRONT COMBINATION LAMP RH
E28
FRONT COMBINATION LAMP LH
E58
DAYTIME RUNNING LIGHT LH
E78
DAYTIME RUNNING LIGHT RH
E79
E80
E180
JRMWD3086GB

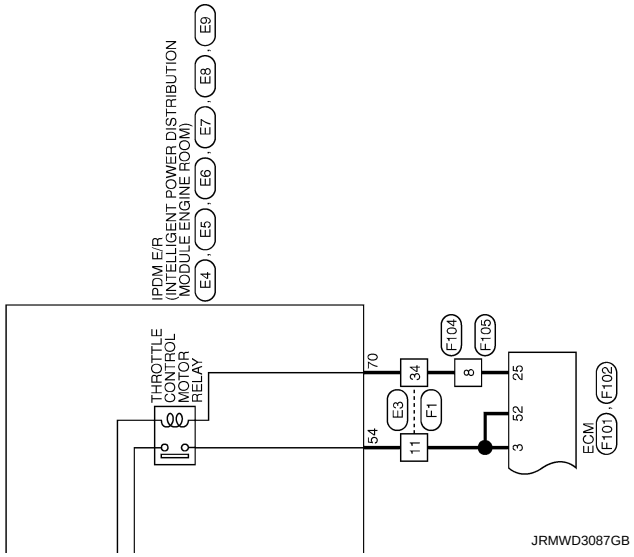
IPDM E/R
(INTELLIGENT POWER DISTRIBUTION
MODULE ENGINE ROOM)
E4
E5
E6
E7
E8
E9
THROTTLE
CONTROL
MOTOR
RELAY
70
54
34
11
E3
F1
F104
F105
8
25
52
3
ECM
F101
F102
JRMWD3087GB

BATTERY POWER SUPPLY

Connector No.	B1
Connector Name	WIRE TO WIRE
Connector Type	TH80FW-CS16-TM4

H.S.

Terminal No.	Color of Wire	Signal Name [Specification]
1	G	–
2	BG	–
3	Y	–
4	W	–
6	V	–
7	LG	–
8	GR	–
9	SB	–
11	Y	–
12	BR	–
13	LG	–
14	B	–
15	B	–
16	V	–
17	R	–
18	B	–
20	SB	–
21	G	–
22	GR	–
23	V	–
24	BG	–
25	L	–
26	P	–
27	W	–
28	SHIELD	–
31	W	–
32	B	–
33	P	– [Coupe models]
33	W	– [Roadster models]
34	R	–
35	W	– [Coupe models]
35	B	– [Roadster models]
36	B	–
40	Y	–
41	L	–
42	GR	–
43	BR	–
44	R	–
45	BG	–
46	SHIELD	– [Coupe models]
46	SB	– [Roadster models]
47	V	–
48	SHIELD	–
51	W	–
52	R	–
57	SHIELD	–
58	B	–
60	V	–
61	SB	–
62	SHIELD	–
63	BR	–
64	Y	–
65	SHIELD	–
66	P	–
67	L	–
68	SHIELD	–
69	R	–
70	G	–
71	V	–
72	P	–
73	BR	–
74	GR	–
75	BG	–
80	Y	–
81	R	–
82	B	–
83	GR	–
84	G	– [Coupe models]
84	L	– [Roadster models]
85	LG	–
86	V	–
87	BR	–
88	GR	–
93	Y	–
94	L	– [Coupe models]
94	G	– [Roadster models]
95	GR	– [Coupe models]
95	LG	– [Roadster models]
96	L	–
97	Y	–
98	W	– [Coupe models]
98	Y/B	– [Roadster models]
99	LG	–
100	B	–

Connector No.	B6
Connector Name	FUSE BLOCK (J/B)
Connector Type	NS12FBR-CS

H.S.

Terminal No.	Color of Wire	Signal Name [Specification]
5G	LG	–
10G	W	– [Coupe models]
10G	P	– [Roadster models]
11G	W	– [Coupe models]
11G	G	– [Roadster models]
12G	Y	–

Connector No.	B9
Connector Name	WIRE TO WIRE
Connector Type	NS10FW-CS

H.S.

Terminal No.	Color of Wire	Signal Name [Specification]
1	P	–
2	R	– [Coupe models]
2	V	– [Roadster models]
3	Y	–
4	G	–
5	GR	–
6	BG	–
7	BR	–
8	LG	–
9	R	–
10	G	–

Connector No.	B42
Connector Name	BOSE AMP.
Connector Type	SGA12FBR-SJA2

H.S.

Terminal No.	Color of Wire	Signal Name [Specification]
1	L	SOUND SIGNAL FRONT DOOR SPEAKER LH (+)
2	BG	SOUND SIGNAL FRONT DOOR SPEAKER RH (+) [Coupe models]
2	LG	SOUND SIGNAL REAR WOOFER RH (+) [Roadster models]
3	G	SOUND SIGNAL FRONT DOOR SPEAKER RH (+) [Coupe models]
3	Y	SOUND SIGNAL REAR WOOFER RH (+) [Roadster models]
4	L	SOUND SIGNAL FRONT DOOR SPEAKER LH (+) [Roadster models]
4	SB	SOUND SIGNAL WOOFER (+) [Coupe models]
5	V	SOUND SIGNAL WOOFER (–)
6	LG	SOUND SIGNAL TWEETER LH (+)
7	GR	SOUND SIGNAL TWEETER LH (–)
8	BG	SOUND SIGNAL FRONT DOOR SPEAKER RH (+)
9	R	SOUND SIGNAL REAR SPEAKER RH (+) [Coupe models]
9	LG	SOUND SIGNAL REAR SPEAKER RH (+) [Roadster models]
10	V	SOUND SIGNAL FRONT DOOR SPEAKER LH (–)
11	Y	BATTERY
12	B	GROUND
13	G	SOUND SIGNAL FRONT DOOR SPEAKER RH (–)
14	BR	SOUND SIGNAL REAR SPEAKER RH (–) [Coupe models]
14	Y	SOUND SIGNAL REAR SPEAKER RH (–) [Roadster models]

JRMWD9635GB

BATTERY POWER SUPPLY

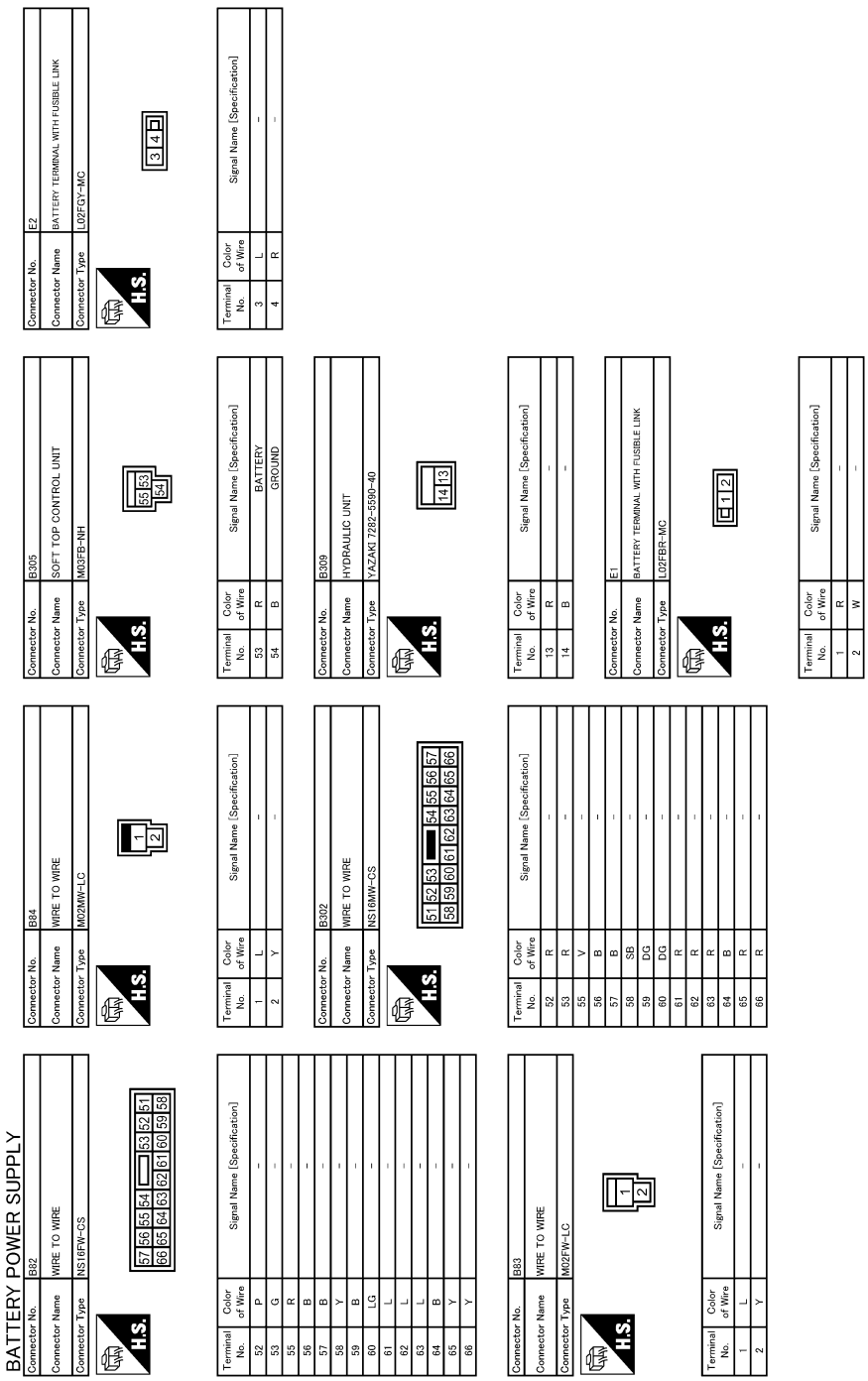

JRMWD9636GB

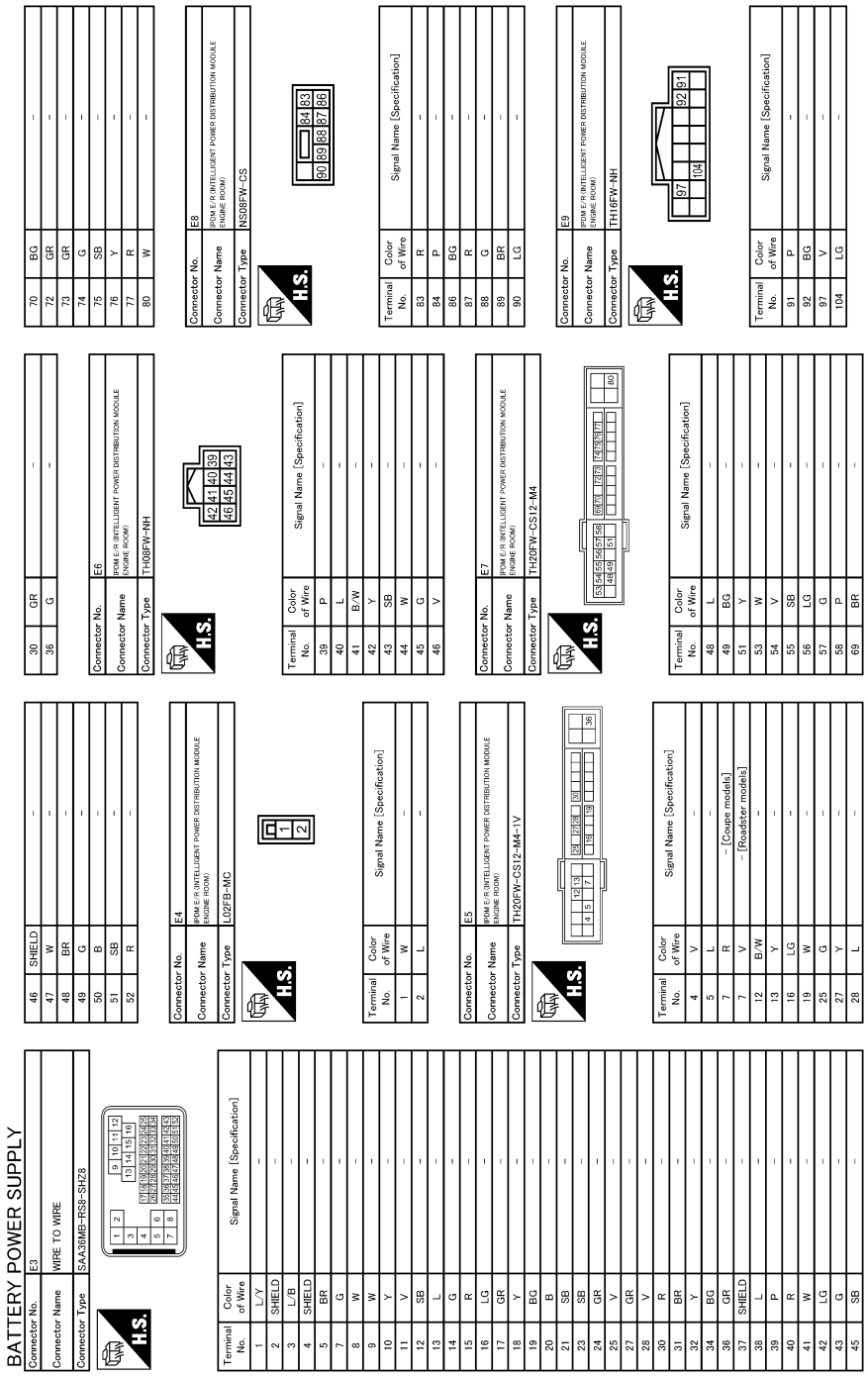

JRMWD9637GB

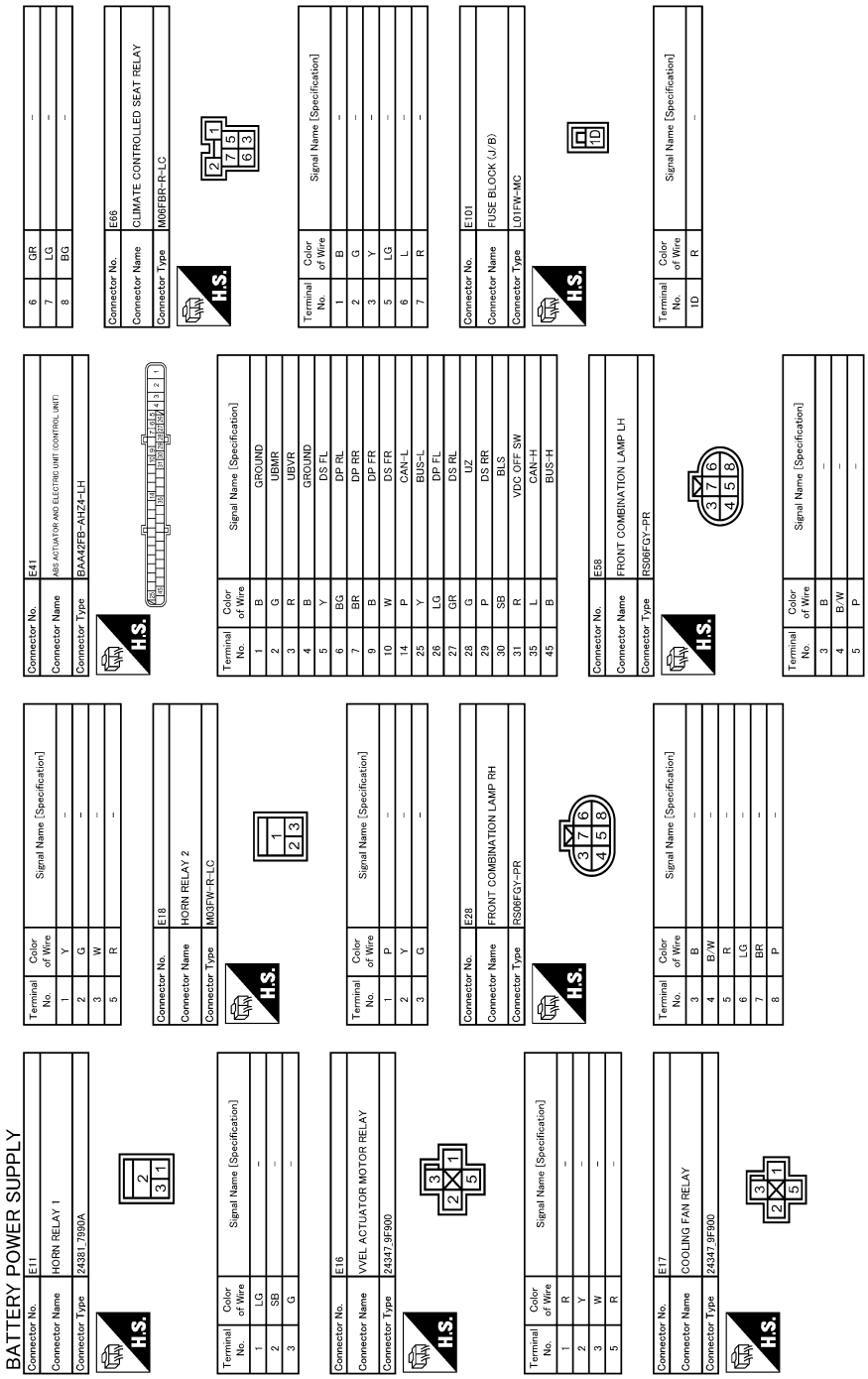

JRMWD9638GB

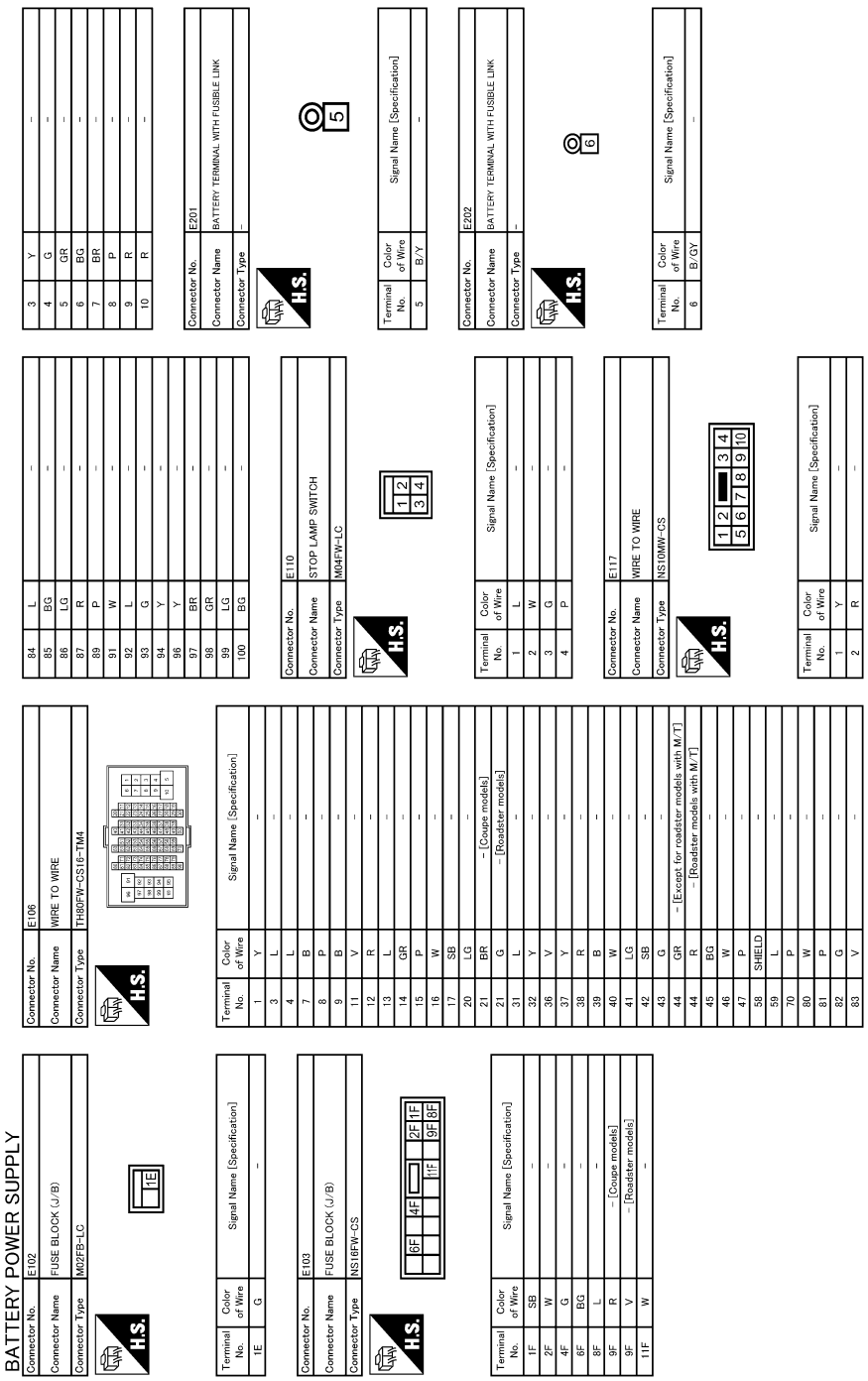

JRMWD9639GB

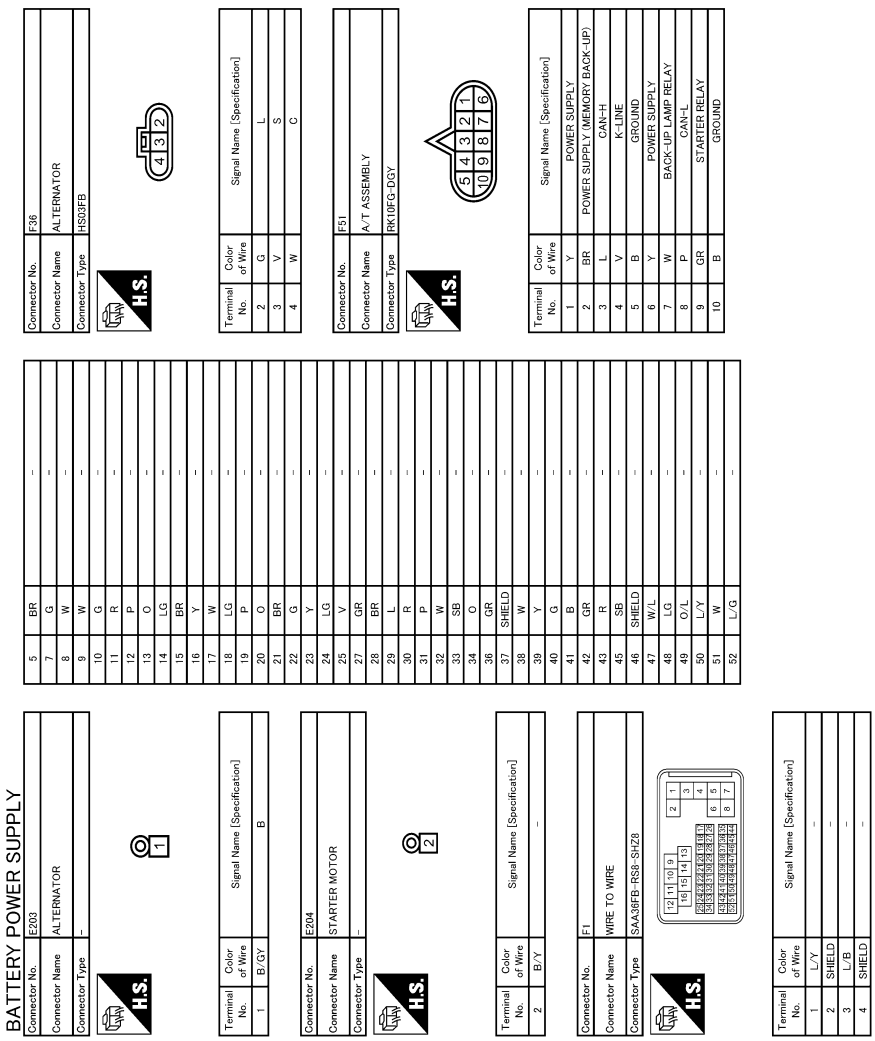

JRMWD9640GB

BATTERY POWER SUPPLY

Connector No.	F101
Connector Name	ECM
Connector Type	RH40FB-RZ8-L-LH-Z

H.S.

48	44	40	36		28	24	20	16	12	8	4
47	43	39	35	31	27		19	15	11		3
46	42	38	34	30	26	22	18				2
45	41	37	33	29	25	21	17			5	1

Terminal No.	Color of Wire	Signal Name [Specification]
1	O	A/F SENSOR 1 HEATER (BANK 1)
2	G	THROTTLE CONTROL MOTOR (OPEN) (BANK 1)
3	R	THROTTLE CONTROL MOTOR RELAY POWER SUPPLY (BANK 1)
4	BR	THROTTLE CONTROL MOTOR (CLOSE) (BANK 1)
5	W	A/F SENSOR 1 HEATER (BANK 2)
8	B	ECM GROUND
11	GR	IGNITION SIGNAL NO. 4
12	L	IGNITION SIGNAL NO. 3
15	V	IGNITION SIGNAL NO. 5
16	G	IGNITION SIGNAL NO. 2
17	P	HEATED OXYGEN SENSOR 2 HEATER (BANK 1)
18	W	INTAKE VALVE TIMING CONTROL SOLENOID VALVE (BANK 1)
19	SB	IGNITION SIGNAL NO. 6
20	Y	IGNITION SIGNAL NO. 1
21	GR	EVAP CANISTER PURGE VOLUME CONTROL SOLENOID VALVE
22	R	FUEL PUMP RELAY
24	P	ECM RELAY (SELF SHUT-OFF)
25	O	THROTTLE CONTROL MOTOR RELAY
26	W	GEAR LEVER POSITION SENSOR X-AXIS
27	G	GEAR LEVER POSITION SENSOR Y-AXIS
28	BR	VVEL ACTUATOR MOTOR RELAY ARMET SIGNAL VVEL CONTROL MODULE
29	G	INTAKE VALVE TIMING CONTROL SOLENOID VALVE (BANK 2)
30	Y	THROTTLE POSITION SENSOR 1 (BANK 1)
31	R	THROTTLE POSITION SENSOR 1 (BANK 2)
33	SB	HEATED OXYGEN SENSOR 2 HEATER (BANK 2)
34	B	THROTTLE POSITION SENSOR 2 (BANK 1)
35	W	THROTTLE POSITION SENSOR 2 (BANK 2)
36	O	SENSOR GROUND
37	W	CRANKSHAFT POSITION SENSOR (POS)
38	O	MANIFOLD ABSOLUTE PRESSURE (MAP) SENSOR
39	P	BRAKE BOOSTER PRESSURE SENSOR
40	R	SENSOR GROUND
41	SB	CLUTCH PEDAL POSITION SENSOR
42	GR	CLUTCH INTERLOCK SWITCH
43	G	SENSOR POWER SUPPLY
44	L	SENSOR POWER SUPPLY
45	LG	SENSOR POWER SUPPLY
46	R	SENSOR POWER SUPPLY
47	Y	SENSOR GROUND
48	B	SENSOR GROUND

Connector No.	F102
Connector Name	ECM
Connector Type	RH40FBR-RZ8-L-LH-Z

H.S.

96	92	88	84	80	76	72	68	64	60		52
95	91	87	83	79	75	71	67	63	59	55	51
94	90	86	82	78	74	70	66	62	58	54	50
93	89	85	81	77	73	69	65	61	57	53	49

Terminal No.	Color of Wire	Signal Name [Specification]
49	GR	THROTTLE CONTROL MOTOR (CLOSE) (BANK 2)
50	V	THROTTLE CONTROL MOTOR (OPEN) (BANK 2)
52	R	THROTTLE CONTROL MOTOR POWER SUPPLY (BANK 2)
53	W	IGNITION SWITCH
54	Y	ENGINE COMMUNICATION LINE
55	LG	ENGINE COMMUNICATION LINE
57	L	A/F SENSOR 1 (BANK 1)
59	O	CAMSHAFT POSITION SENSOR (PHASE) (BANK 1)
60	G	SENSOR POWER SUPPLY
61	R	A/F SENSOR 1 (BANK 1)
63	L	CAMSHAFT POSITION SENSOR (PHASE) (BANK 2)
64	SB	SENSOR POWER SUPPLY
65	LG	A/F SENSOR 1 (BANK 2)
66	V	A/F SENSOR 1 (BANK 2)
67	P	INTAKE AIR TEMPERATURE SENSOR (BANK 1)
68	LG	SENSOR GROUND
69	W	KNOCK SENSOR (BANK 2)
71	Y	ENGINE COOLANT TEMPERATURE SENSOR
72	SHIELD	SENSOR GROUND
73	W	KNOCK SENSOR (BANK 1)
74	L	SENSOR POWER SUPPLY
75	W	INPUT SPEED SENSOR
76	W	HEATED OXYGEN SENSOR 2 (BANK 1)
77	SB	MASS AIR FLOW SENSOR (BANK 1)
78	G	ENGINE OIL TEMPERATURE SENSOR
79	BR	MASS AIR FLOW SENSOR (BANK 2)
80	O	HEATED OXYGEN SENSOR 2 (BANK 2)
81	R	FUEL INJECTOR NO. 3
82	V	FUEL INJECTOR NO. 6
84	B	SENSOR GROUND
85	BR	FUEL INJECTOR NO. 2
86	W	FUEL INJECTOR NO. 5
87	Y	POWER STEERING PRESSURE SENSOR
88	R	SENSOR GROUND
89	GR	FUEL INJECTOR NO. 1
90	O	FUEL INJECTOR NO. 4
91	SB	BATTERY CURRENT SENSOR
92	G	SENSOR GROUND
93	P	POWER SUPPLY FOR ECM (BACK-UP)
94	Y	SENSOR GROUND
95	G	SENSOR GROUND
96	P	SENSOR GROUND

Connector No.	F104
Connector Name	WIRE TO WIRE
Connector Type	TH08FW-NH

H.S.

4	3	2	1	
8	7	6	5	

Terminal No.	Color of Wire	Signal Name [Specification]
1	P	–
2	V	–
3	L	–
4	Y	–
6	GR	–
7	R	–
8	O	–

Connector No.	F105
Connector Name	WIRE TO WIRE
Connector Type	TH08MW-NH

H.S.

1	2	3	4	
5	6	7	8	

Terminal No.	Color of Wire	Signal Name [Specification]
1	P	–
2	V	–
3	L	–
4	Y	–
6	GR	–
7	R	–
8	O	–

Connector No.	F301
Connector Name	TCM (TRANSMISSION CONTROL MODULE)
Connector Type	SP10FG

H.S.

1	2	3	4	5	
6	7	8	9	10	

Terminal No.	Color of Wire	Signal Name [Specification]
1	W	POWER SUPPLY
2	B	POWER SUPPLY (MEMORY BACK-UP)
3	R	CAN-H
4	O	K-LINE
5	G	GROUND
6	GR	POWER SUPPLY
7	L	BACK-UP LAMP RELAY
8	BR	CAN-L
9	Y	STARTER RELAY
10	W/B	GROUND

Connector No.	M1
Connector Name	FUSE BLOCK (J/B)
Connector Type	NS06FW-M2

H.S.

3A		2A	1A		
8A	7A	6A	5A	4A	

Terminal No.	Color of Wire	Signal Name [Specification]
1A	V	–
2A	G	–
3A	L	–
4A	P	–
5A	L	–
6A	Y	–
7A	BR	–
8A	L	–

7	R	–
8	O	–

JRMWD9641GB

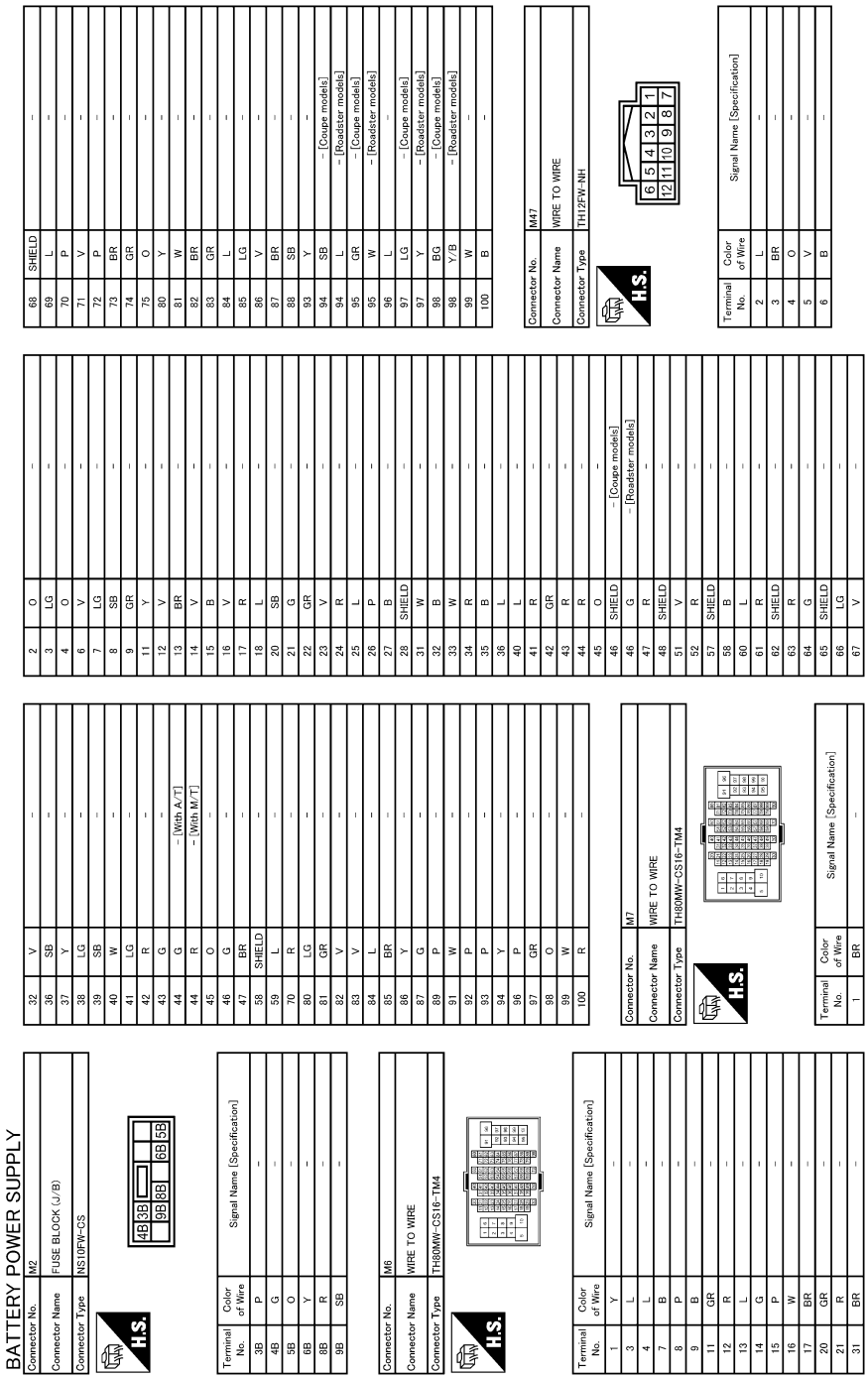

JRMWD9642GB

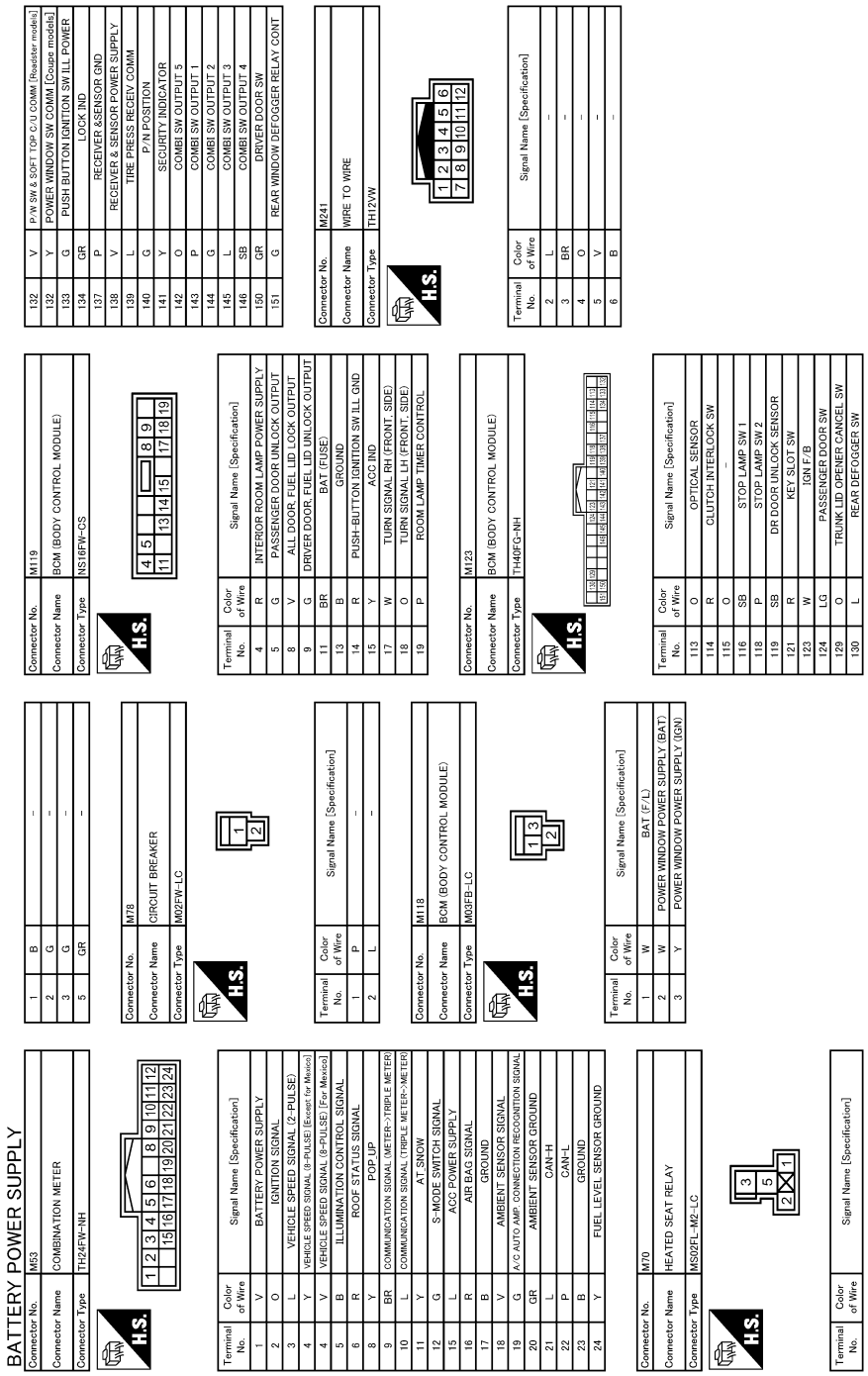

JRMWD9643GB

BATTERY POWER SUPPLY

Connector No.	M242
Connector Name	TRIPLE METER
Connector Type	TH12FW-NH

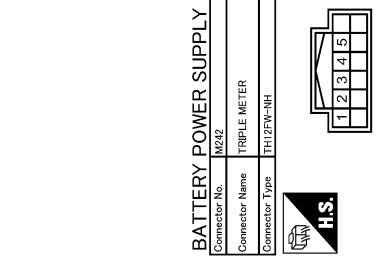

Terminal No.	Color of Wire	Signal Name [Specification]
1	B	GROUND
2	V	BATTERY POWER SUPPLY
3	O	IGNITION SIGNAL
4	BR	COMMUNICATION SIGNAL (METER->TRIPLE METER)
5	L	COMMUNICATION SIGNAL (TRIPLE METER->METER)

JRMWD9644GB

Wiring Diagram - BATTERY POWER SUPPLY FUSE No. 6 -

INFOID:0000000009358076

BATTERY POWER SUPPLY FUSE No. 6

CP : Coupe models
RS : Roadster models
AD : With auto anti-dazzling inside mirror
FD : With Front door satellite sensor

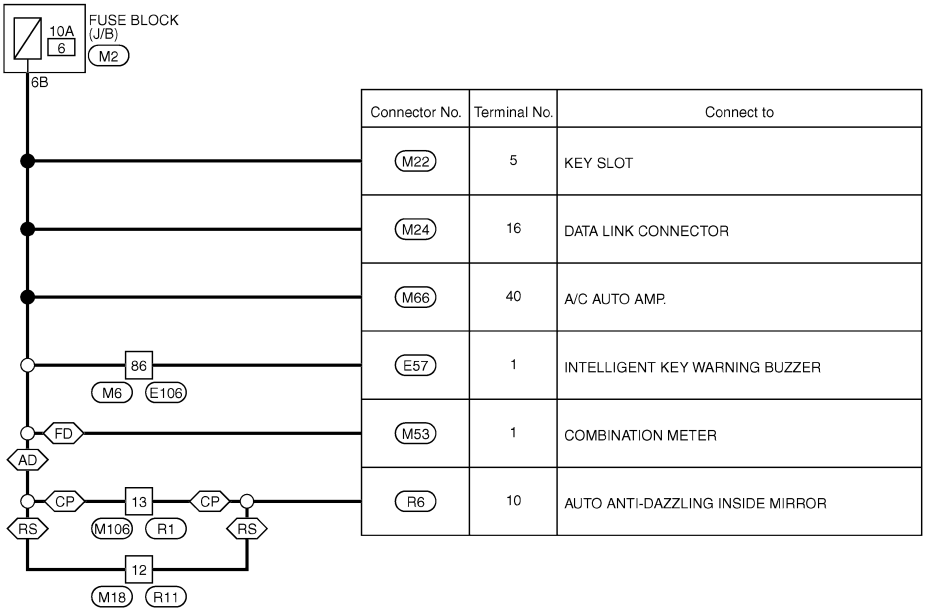

Connector No.	Terminal No.	Connect to
M22	5	KEY SLOT
M24	16	DATA LINK CONNECTOR
M66	40	A/C AUTO AMP.
E57	1	INTELLIGENT KEY WARNING BUZZER
M53	1	COMBINATION METER
R6	10	AUTO ANTI-DAZZLING INSIDE MIRROR

2012/07/11

JRMWD3088GB

Wiring Diagram - BATTERY POWER SUPPLY FUSE No. 9 -

INFOID:0000000009358077

BATTERY POWER SUPPLY FUSE No. 9

M : With M/T

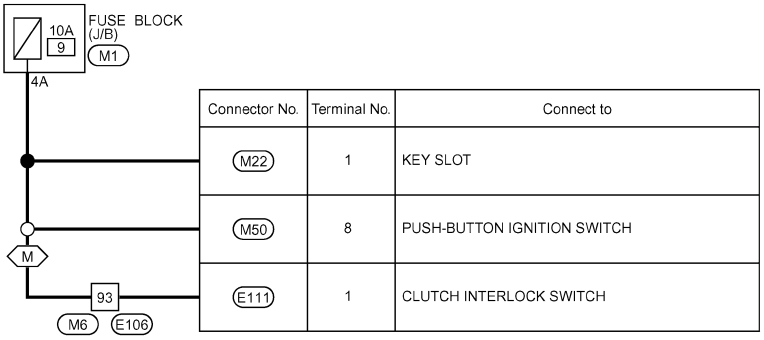

Connector No.	Terminal No.	Connect to
M22	1	KEY SLOT
M50	8	PUSH-BUTTON IGNITION SWITCH
E111	1	CLUTCH INTERLOCK SWITCH

2008/09/12

JCMWA3269GB

Wiring Diagram - BATTERY POWER SUPPLY FUSE No. 34 -

INFOID:0000000009358078

BATTERY POWER SUPPLY FUSE No. 34

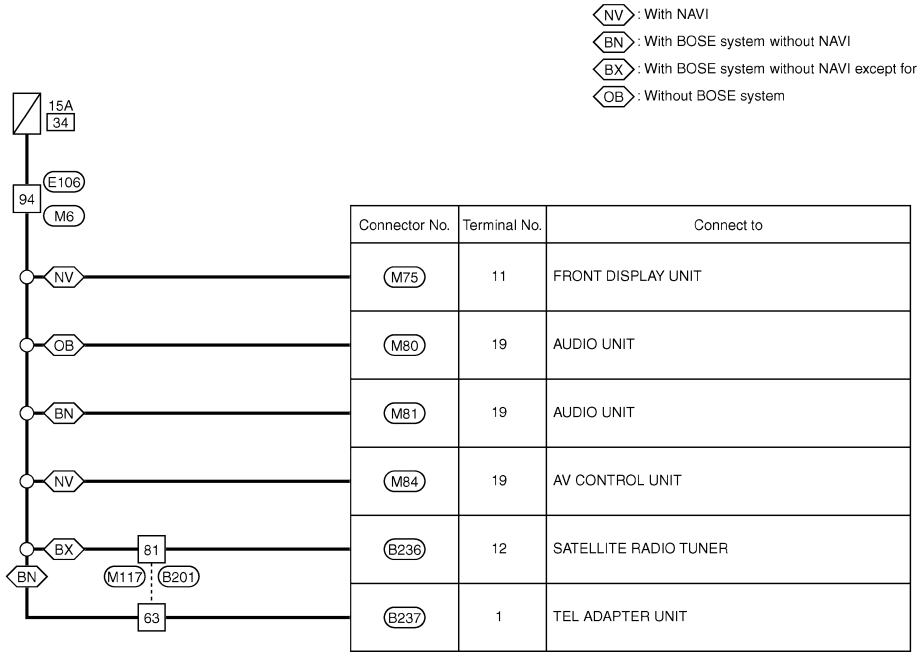

Connector No.	Terminal No.	Connect to
M75	11	FRONT DISPLAY UNIT
M80	19	AUDIO UNIT
M81	19	AUDIO UNIT
M84	19	AV CONTROL UNIT
B236	12	SATELLITE RADIO TUNER
B237	1	TEL ADAPTER UNIT

2012/04/18

JRMWD0792GB

Wiring Diagram - BATTERY POWER SUPPLY FUSE No. 50 -

INFOID:0000000009358079

BATTERY POWER SUPPLY FUSE No. 50

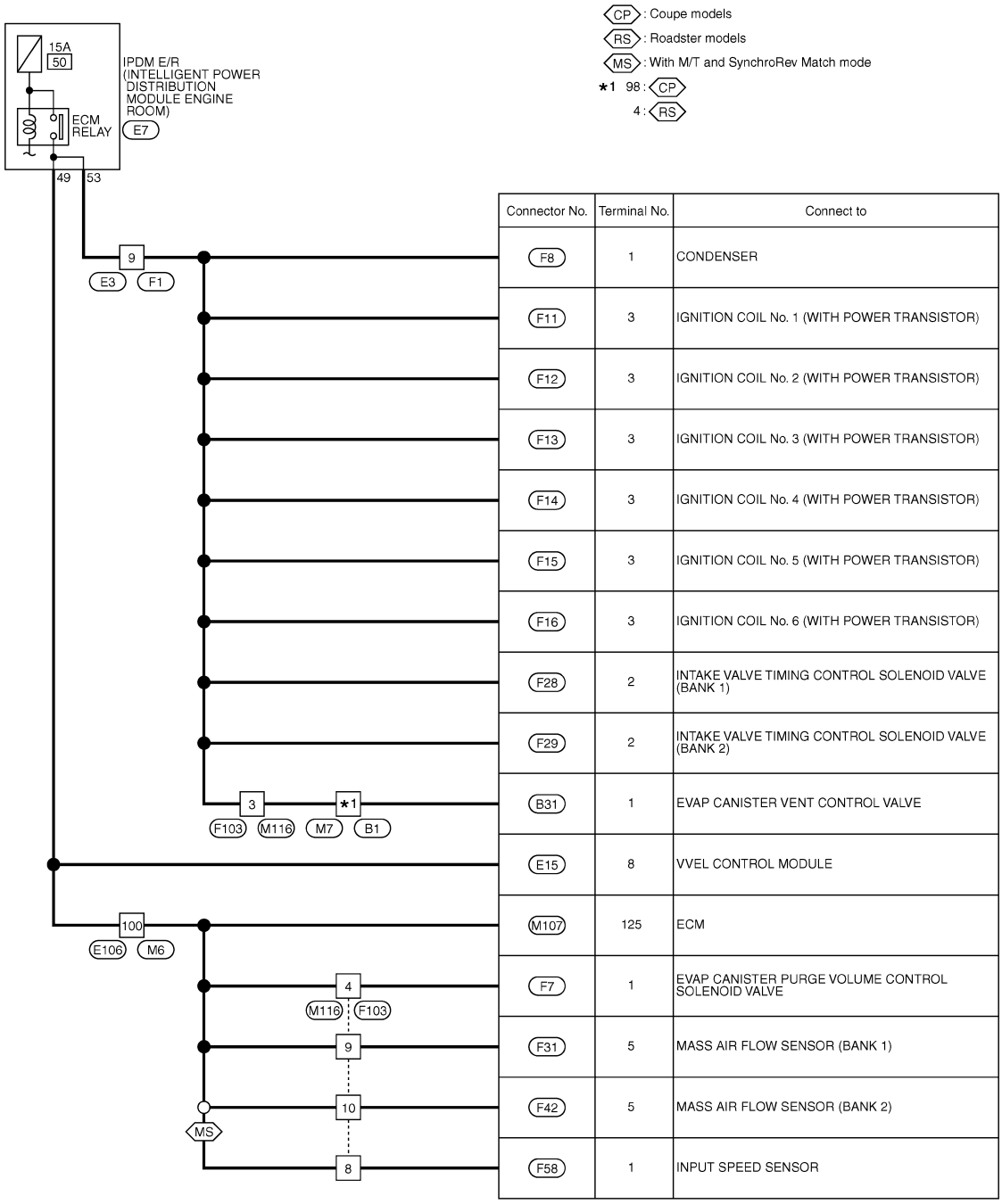

Connector No.	Terminal No.	Connect to
F8	1	CONDENSER
F11	3	IGNITION COIL No. 1 (WITH POWER TRANSISTOR)
F12	3	IGNITION COIL No. 2 (WITH POWER TRANSISTOR)
F13	3	IGNITION COIL No. 3 (WITH POWER TRANSISTOR)
F14	3	IGNITION COIL No. 4 (WITH POWER TRANSISTOR)
F15	3	IGNITION COIL No. 5 (WITH POWER TRANSISTOR)
F16	3	IGNITION COIL No. 6 (WITH POWER TRANSISTOR)
F28	2	INTAKE VALVE TIMING CONTROL SOLENOID VALVE (BANK 1)
F29	2	INTAKE VALVE TIMING CONTROL SOLENOID VALVE (BANK 2)
B31	1	EVAP CANISTER VENT CONTROL VALVE
E15	8	VVEL CONTROL MODULE
M107	125	ECM
F7	1	EVAP CANISTER PURGE VOLUME CONTROL SOLENOID VALVE
F31	5	MASS AIR FLOW SENSOR (BANK 1)
F42	5	MASS AIR FLOW SENSOR (BANK 2)
F58	1	INPUT SPEED SENSOR

2009/07/10

JCMWM4804GB

Wiring Diagram - BATTERY POWER SUPPLY FUSE No. 53 -

INFOID:0000000009358080

BATTERY POWER SUPPLY FUSE No. 53

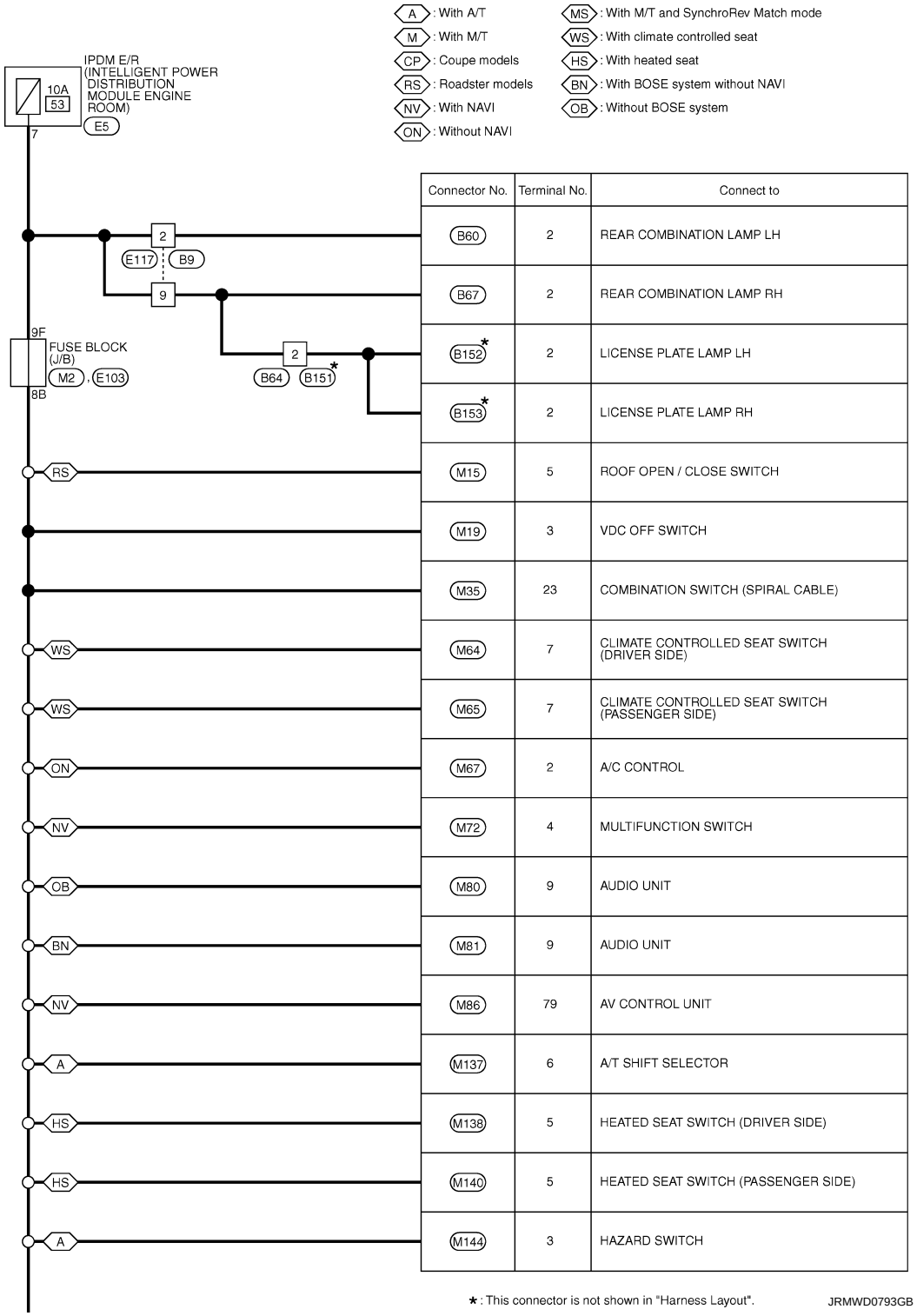

Connector No.	Terminal No.	Connect to
B60	2	REAR COMBINATION LAMP LH
B67	2	REAR COMBINATION LAMP RH
B152*	2	LICENSE PLATE LAMP LH
B153*	2	LICENSE PLATE LAMP RH
M15	5	ROOF OPEN / CLOSE SWITCH
M19	3	VDC OFF SWITCH
M35	23	COMBINATION SWITCH (SPIRAL CABLE)
M64	7	CLIMATE CONTROLLED SEAT SWITCH (DRIVER SIDE)
M65	7	CLIMATE CONTROLLED SEAT SWITCH (PASSENGER SIDE)
M67	2	A/C CONTROL
M72	4	MULTIFUNCTION SWITCH
M80	9	AUDIO UNIT
M81	9	AUDIO UNIT
M86	79	AV CONTROL UNIT
M137	6	A/T SHIFT SELECTOR
M138	5	HEATED SEAT SWITCH (DRIVER SIDE)
M140	5	HEATED SEAT SWITCH (PASSENGER SIDE)
M144	3	HAZARD SWITCH

*: This connector is not shown in "Harness Layout".

JRMWD0793GB

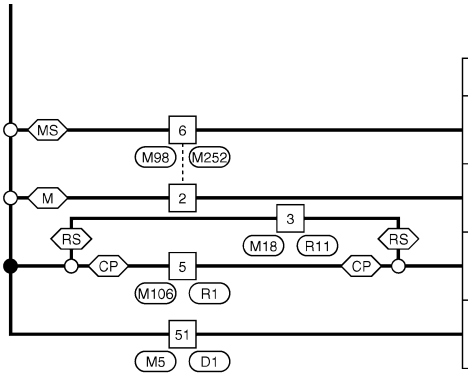

Connector No.	Terminal No.	Connect to
M255	3	S-MODE SWITCH
M256	3	HAZARD SWITCH
R4	6	MAP LAMP
D7	9	DOOR MIRROR REMOTE CONTROL SWITCH

2012/04/18

JRMWD0794GB

Wiring Diagram - ACCESSORY POWER SUPPLY -

INFOID:0000000009358081

ACCESSORY POWER SUPPLY

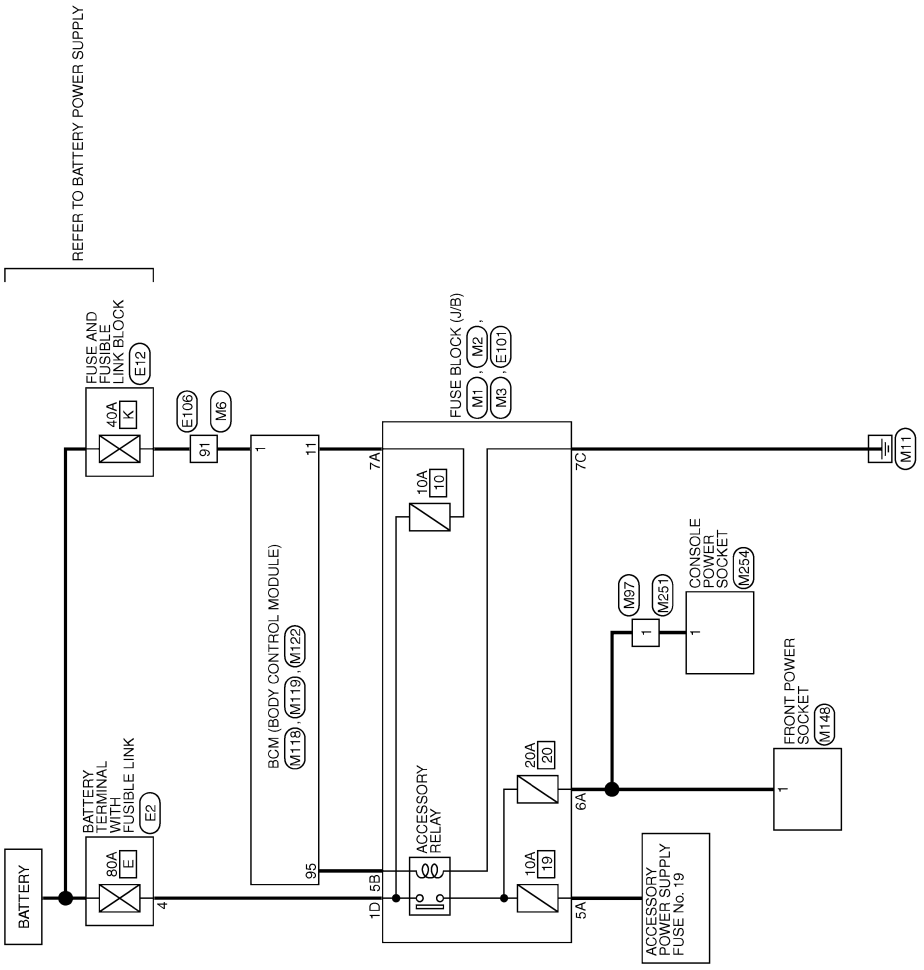

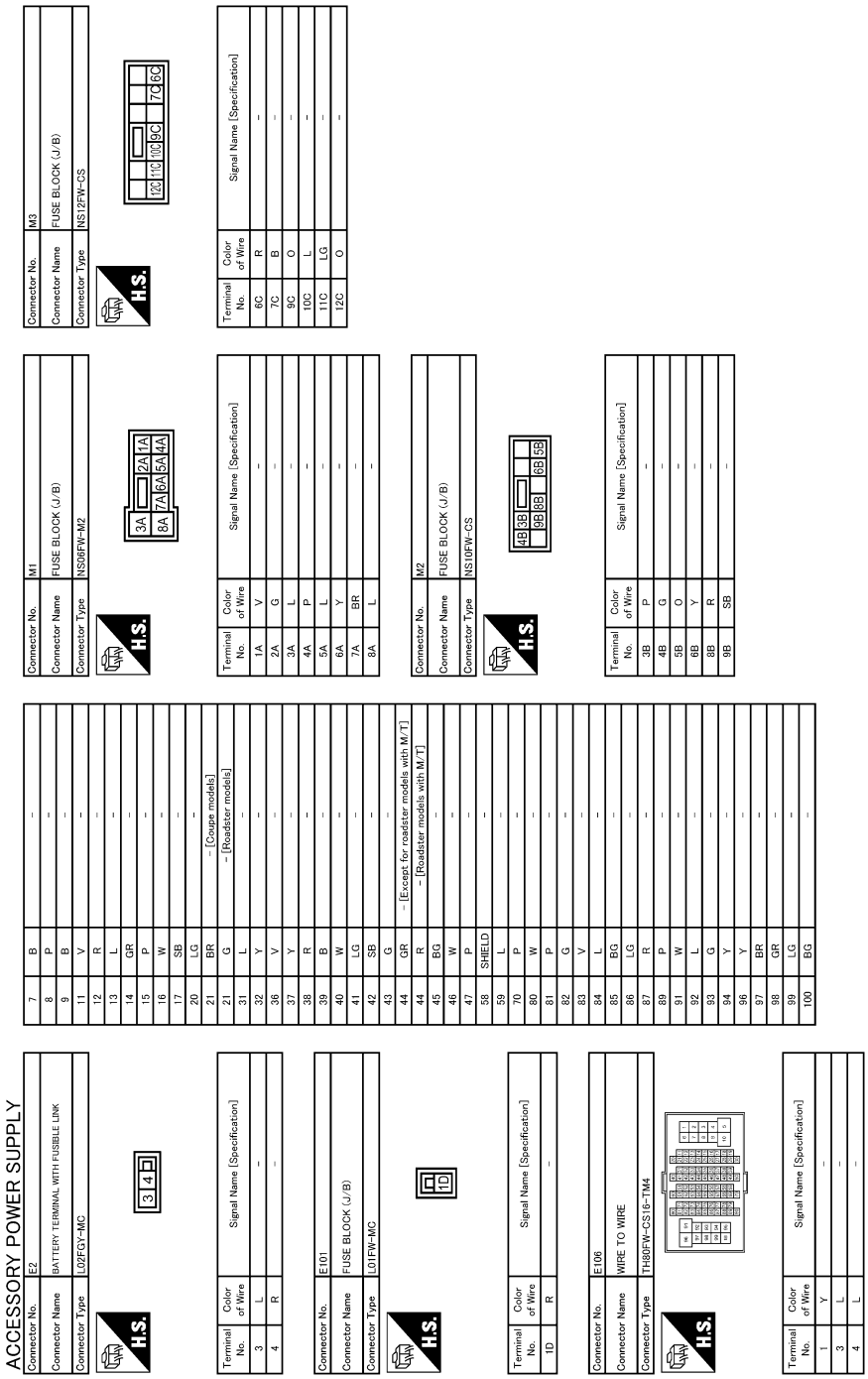

JRMWD9645GB

ACCESSORY POWER SUPPLY

Connector No.	M6
Connector Name	WIRE TO WIRE
Connector Type	TH80MW-CS16-TM4

H.S.

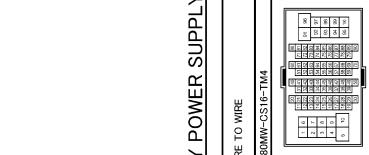

Terminal No.	Color of Wire	Signal Name [Specification]
1	Y	–
3	L	–
4	L	–
7	B	–
8	P	–
9	B	–
11	GR	–
12	R	–
13	L	–
14	G	–
15	P	–
16	W	–
17	BR	–
20	GR	–
21	R	–
31	BR	–
32	V	–
36	SB	–
37	Y	–
38	LG	–
39	SB	–
40	W	–
41	LG	–
42	R	–
43	G	–
44	G	– [With A/T]
44	R	– [With M/T]
45	O	–
46	G	–
47	BR	–
58	SHIELD	–
59	L	–
70	R	–
80	LG	–
81	GR	–
82	V	–
83	V	–
84	L	–
85	BR	–
86	Y	–
87	G	–
89	P	–
91	W	–
92	P	–
93	P	–
94	Y	–
96	P	–
97	GR	–
98	O	–
99	W	–
100	R	–

Connector No.	M97
Connector Name	WIRE TO WIRE
Connector Type	M02MB-P-LC

H.S.

Terminal No.	Color of Wire	Signal Name [Specification]
1	Y	–
2	B	–

Connector No.	M118
Connector Name	BCM (BODY CONTROL MODULE)
Connector Type	M03FB-LC

H.S.

Terminal No.	Color of Wire	Signal Name [Specification]
1	W	BAT (F/L)
2	W	POWER WINDOW POWER SUPPLY (BAT)
3	Y	POWER WINDOW POWER SUPPLY (IGN)

Connector No.	M119
Connector Name	BCM (BODY CONTROL MODULE)
Connector Type	NS16FW-CS

H.S.

Terminal No.	Color of Wire	Signal Name [Specification]
4	R	INTERIOR ROOM LAMP POWER SUPPLY
5	G	PASSENGER DOOR UNLOCK OUTPUT
8	V	ALL DOOR, FUEL LID LOCK OUTPUT
9	G	DRIVER DOOR, FUEL LID UNLOCK OUTPUT
11	BR	BAT (FUSE)
13	B	GROUND
14	R	PUSH-BUTTON IGNITION SW ILL. GND
15	Y	ACC IND
17	W	TURN SIGNAL RH (FRONT, SIDE)
18	O	TURN SIGNAL LH (FRONT, SIDE)
19	P	ROOM LAMP TIMER CONTROL

Connector No.	M122
Connector Name	BCM (BODY CONTROL MODULE)
Connector Type	TH40FB-NH

H.S.

Terminal No.	Color of Wire	Signal Name [Specification]
72	L	ROOM ANT 2-
73	P	ROOM ANT 2+
74	SB	PASSENGER DOOR ANT-
75	BR	PASSENGER DOOR ANT+
76	V	DRIVER DOOR ANT-
77	LG	DRIVER DOOR ANT+
78	L	ROOM ANT 1-
79	R	ROOM ANT 1+
80	GR	NATS ANT AMP.
81	W	NATS ANT AMP.
82	R	IGN RELAY (F/B) CONT
83	GR	KYLS ENT RECEIVER (FRONT) COMM
87	BR	COMBI SW INPUT 5
88	V	COMBI SW INPUT 3
90	P	CAN-L
91	L	CAN-H
92	LG	KEY SLOT ILL
93	V	ON IND
95	O	ACC RELAY CONT
96	Y	A/T SHIFT SELECTOR POWER SUPPLY
99	R	SHIFT P /CLUTCH PEDAL POS SW
100	GR	PASSENGER DOOR REQUEST SW
101	Y	DRIVER DOOR REQUEST SW
102	O	BLOWER FAN MOTOR RELAY CONT
103	LG	KYLS ENT RECEIVER (FRONT) PWR SUPPLY
107	LG	COMBI SW INPUT 1
108	R	COMBI SW INPUT 4
109	Y	COMBI SW INPUT 2
110	P	HAZARD SW

Connector No.	M148
Connector Name	FRONT POWER SOCKET
Connector Type	P02FB-Z

H.S.

Terminal No.	Color of Wire	Signal Name [Specification]
1	Y	–
2	B	–

JRMWD9646GB

ACCESSORY POWER SUPPLY

Connector No.	M251
Connector Name	WIRE TO WIRE
Connector Type	M02FB-LC

H.S.

2 1

Terminal No.	Color of Wire	Signal Name [Specification]
1	Y	–
2	B	–

Connector No.	M254
Connector Name	CONSOLE POWER SOCKET
Connector Type	P02FB-Z

H.S.

2 1

Terminal No.	Color of Wire	Signal Name [Specification]
1	Y	–
2	B	–

JRMWD9647GB

Wiring Diagram - ACCESSORY POWER SUPPLY FUSE No. 19 -

INFOID:0000000009358082

ACCESSORY POWER SUPPLY FUSE No. 19

CP : Coupe models
NV : With NAVI
BN : With BOSE system without NAVI
BX : With BOSE system without NAVI except for Mexico
OB : Without BOSE system

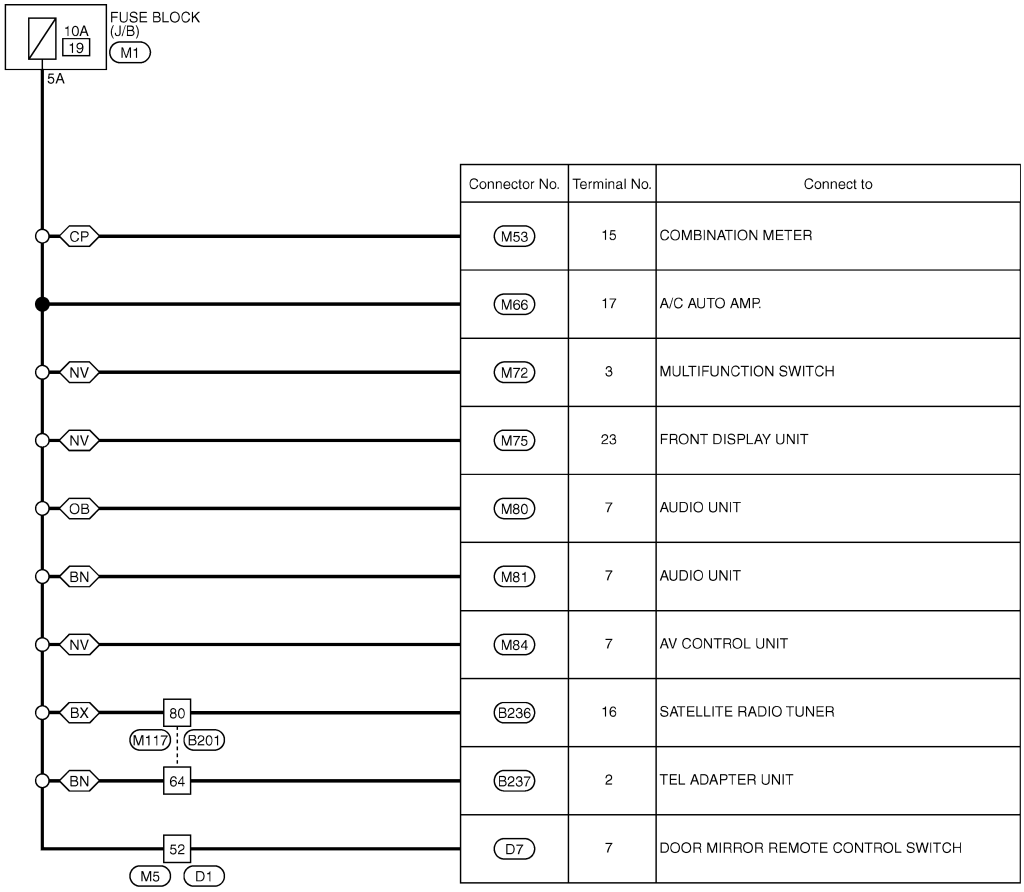

Connector No.	Terminal No.	Connect to
M53	15	COMBINATION METER
M66	17	A/C AUTO AMP.
M72	3	MULTIFUNCTION SWITCH
M75	23	FRONT DISPLAY UNIT
M80	7	AUDIO UNIT
M81	7	AUDIO UNIT
M84	7	AV CONTROL UNIT
B236	16	SATELLITE RADIO TUNER
B237	2	TEL ADAPTER UNIT
D7	7	DOOR MIRROR REMOTE CONTROL SWITCH

2012/04/18

JRMWD0795GB

Wiring Diagram - IGNITION POWER SUPPLY -

INFOID:0000000009358083

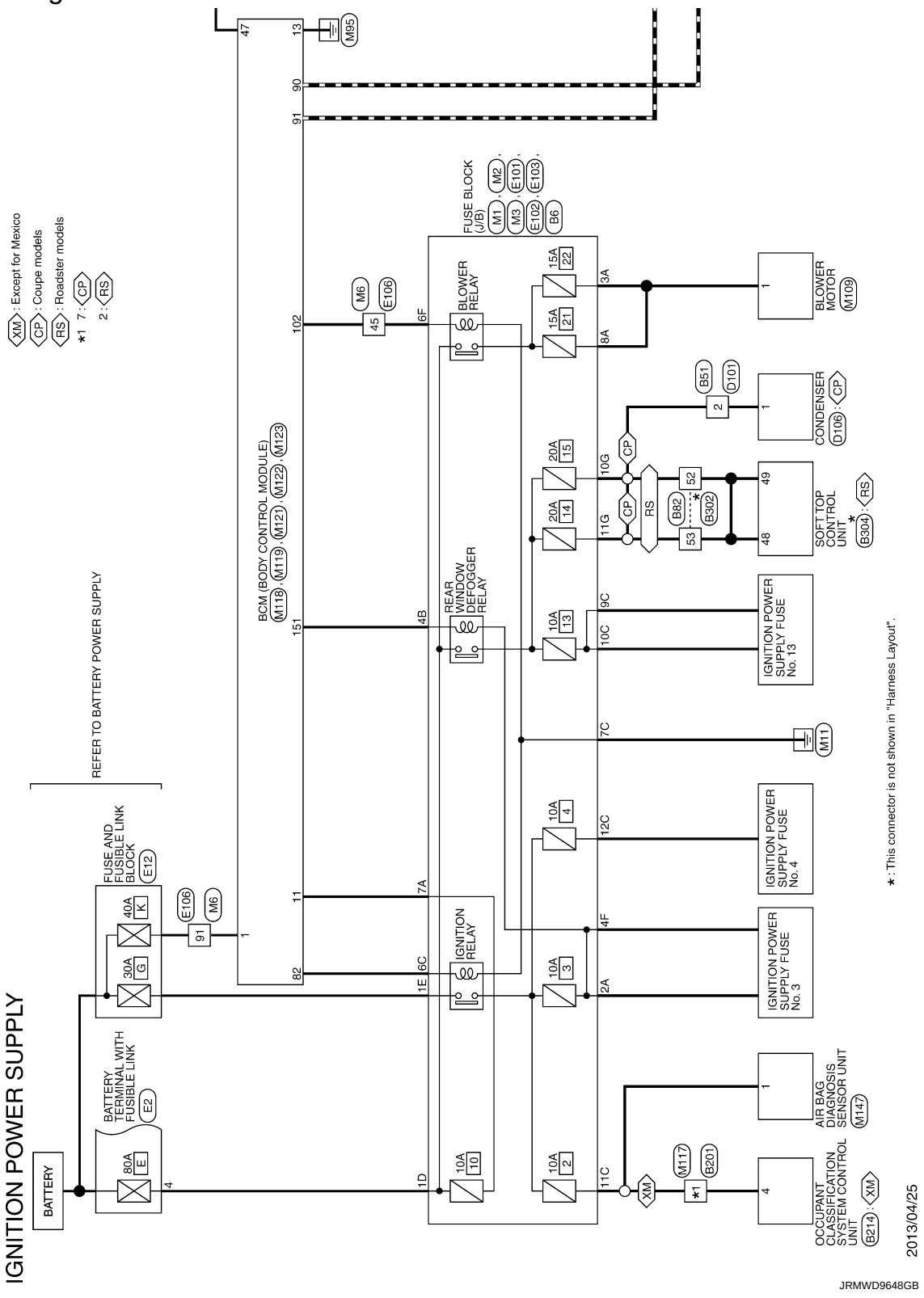

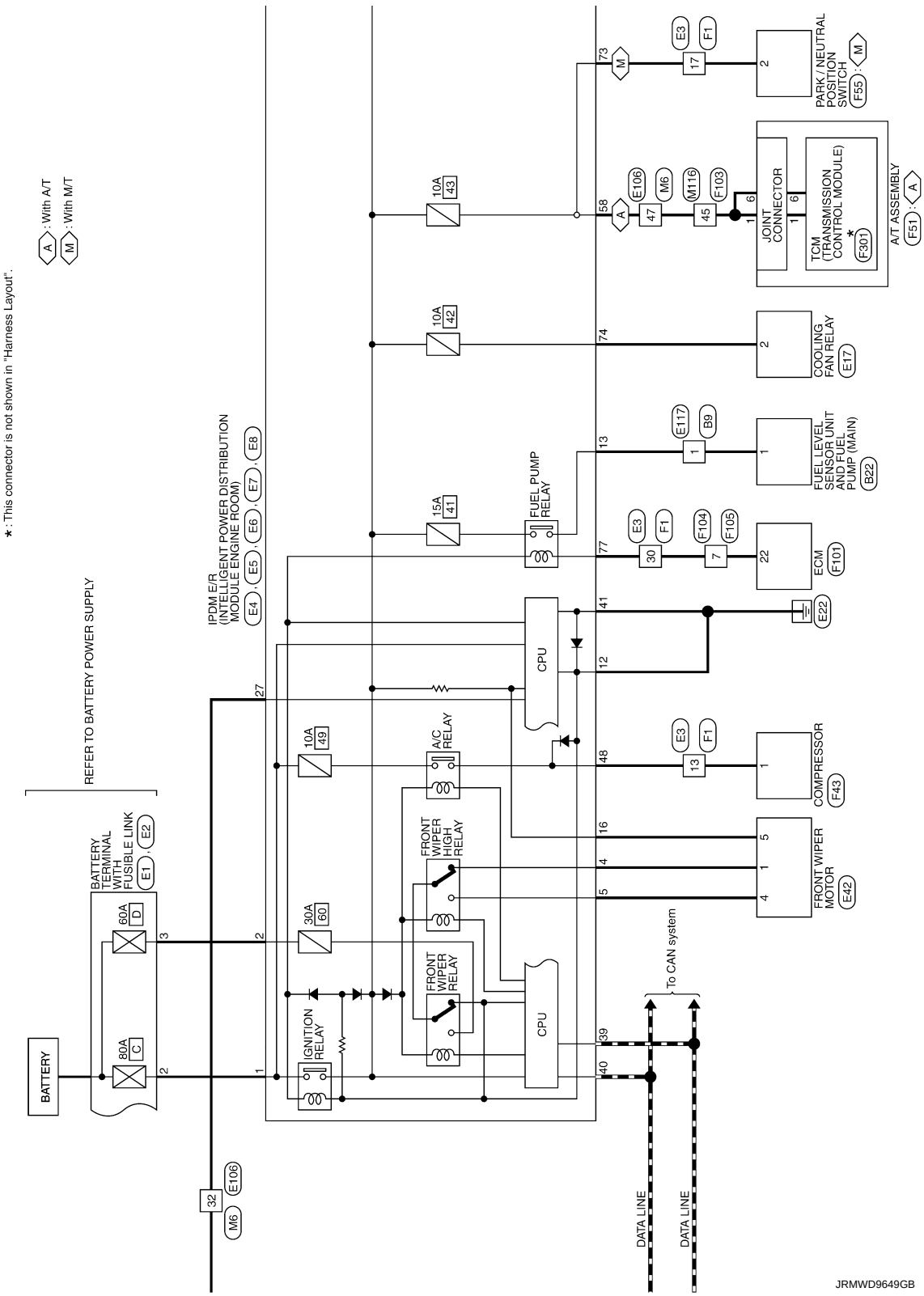
* : This connector is not shown in "Harness Layout".
A : With A/T
M : With M/T
REFER TO BATTERY POWER SUPPLY
BATTERY
BATTERY TERMINAL WITH FUSIBLE LINK
E1 , E2
60A D
80A C
IPDM E/R (INTELLIGENT POWER DISTRIBUTION MODULE ENGINE ROOM)
E4 , E5 , E6 , E7 , E8
IGNITION RELAY
30A 60
10A 49
A/C RELAY
FRONT WIPER HIGH RELAY
FRONT WIPER RELAY
CPU
CPU
15A 41
FUEL PUMP RELAY
10A 42
10A 43
To CAN system
DATA LINE
DATA LINE
E106
M6
32
E3
F1
17
PARK / NEUTRAL POSITION SWITCH
F55
M
E106
M6
M116
F103
47
45
JOINT CONNECTOR
TCM (TRANSMISSION CONTROL MODULE)
F301
A/T ASSEMBLY
F51
A
COOLING FAN RELAY
E17
E117
B9
FUEL LEVEL SENSOR UNIT AND FUEL PUMP (MAIN)
B22
E3
F1
F104
F105
30
7
ECM
F101
E22
E3
F1
13
COMPRESSOR
F43
FRONT WIPER MOTOR
E42
JRMWD9649GB

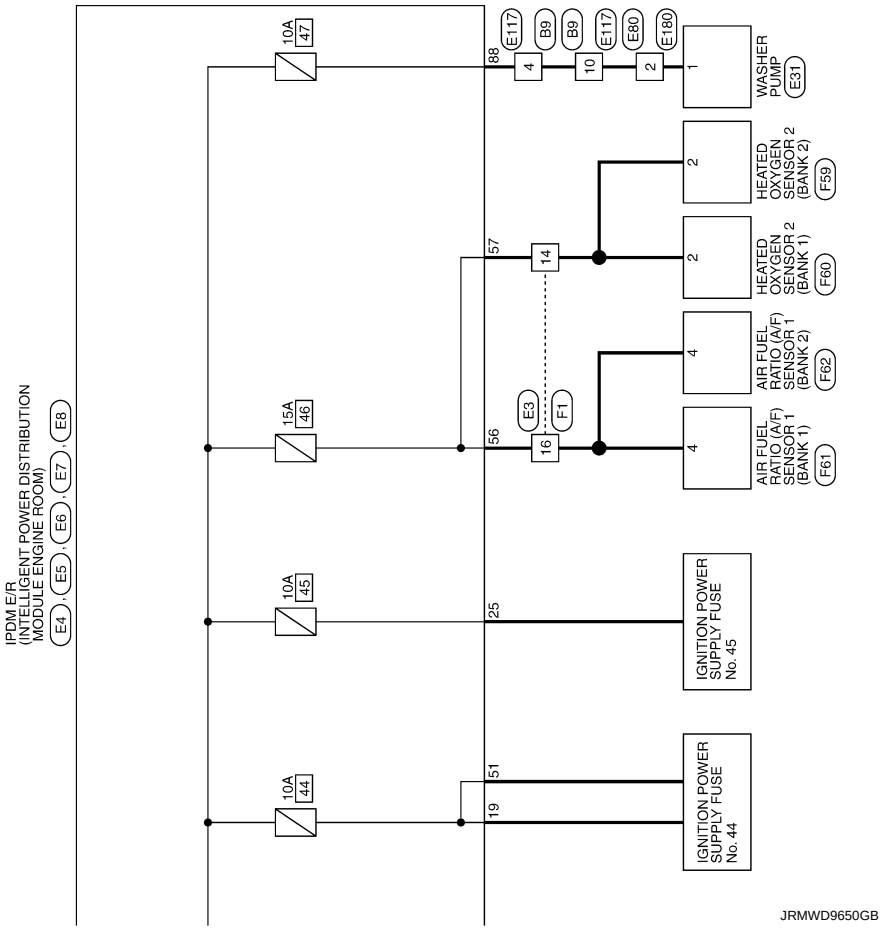
IPDM E/R
(INTELLIGENT POWER DISTRIBUTION MODULE ENGINE ROOM)
E4, E5, E6, E7, E8
10A 47
15A 46
10A 45
10A 44
88
57
56
25
51
19
E117
B9
B9
E117
E80
E180
4
10
2
1
WASHER PUMP E31
2
HEATED OXYGEN SENSOR 2 (BANK 2) F59
2
HEATED OXYGEN SENSOR 2 (BANK 1) F60
14
E3
F1
16
4
AIR FUEL RATIO (A/F) SENSOR 1 (BANK 2) F62
4
AIR FUEL RATIO (A/F) SENSOR 1 (BANK 1) F61
IGNITION POWER SUPPLY FUSE No. 45
IGNITION POWER SUPPLY FUSE No. 44
JRMWD9650GB

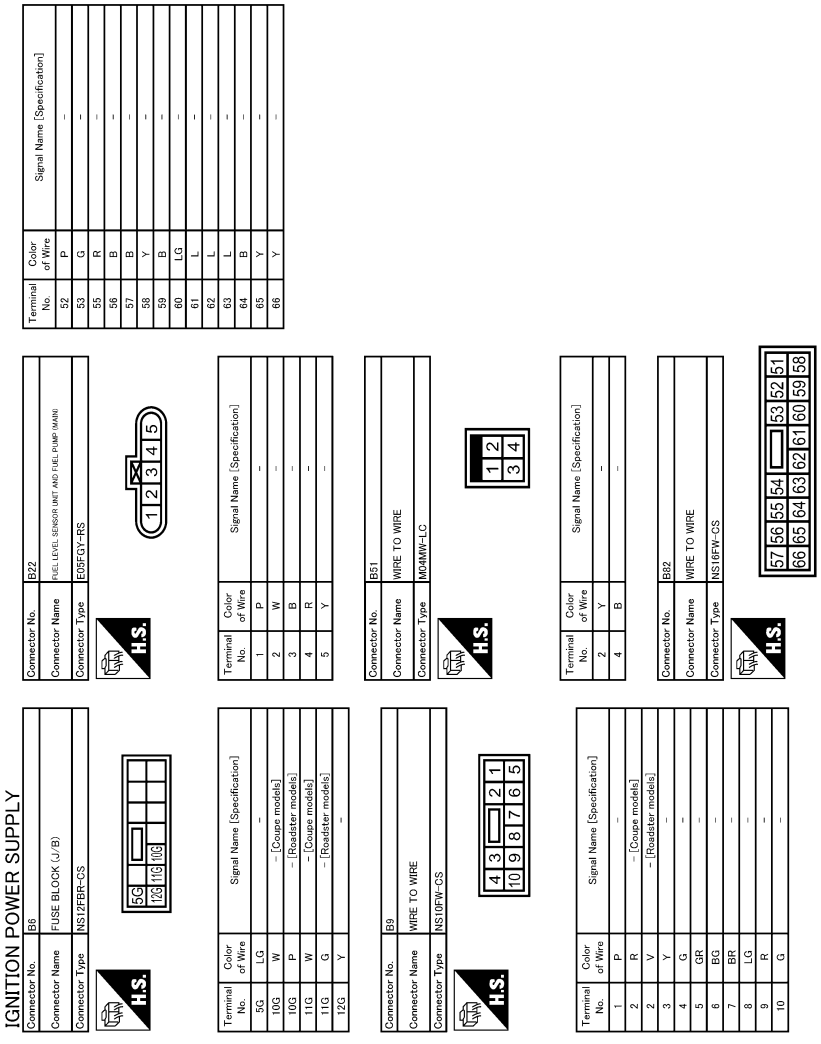

JRMWD9651GB

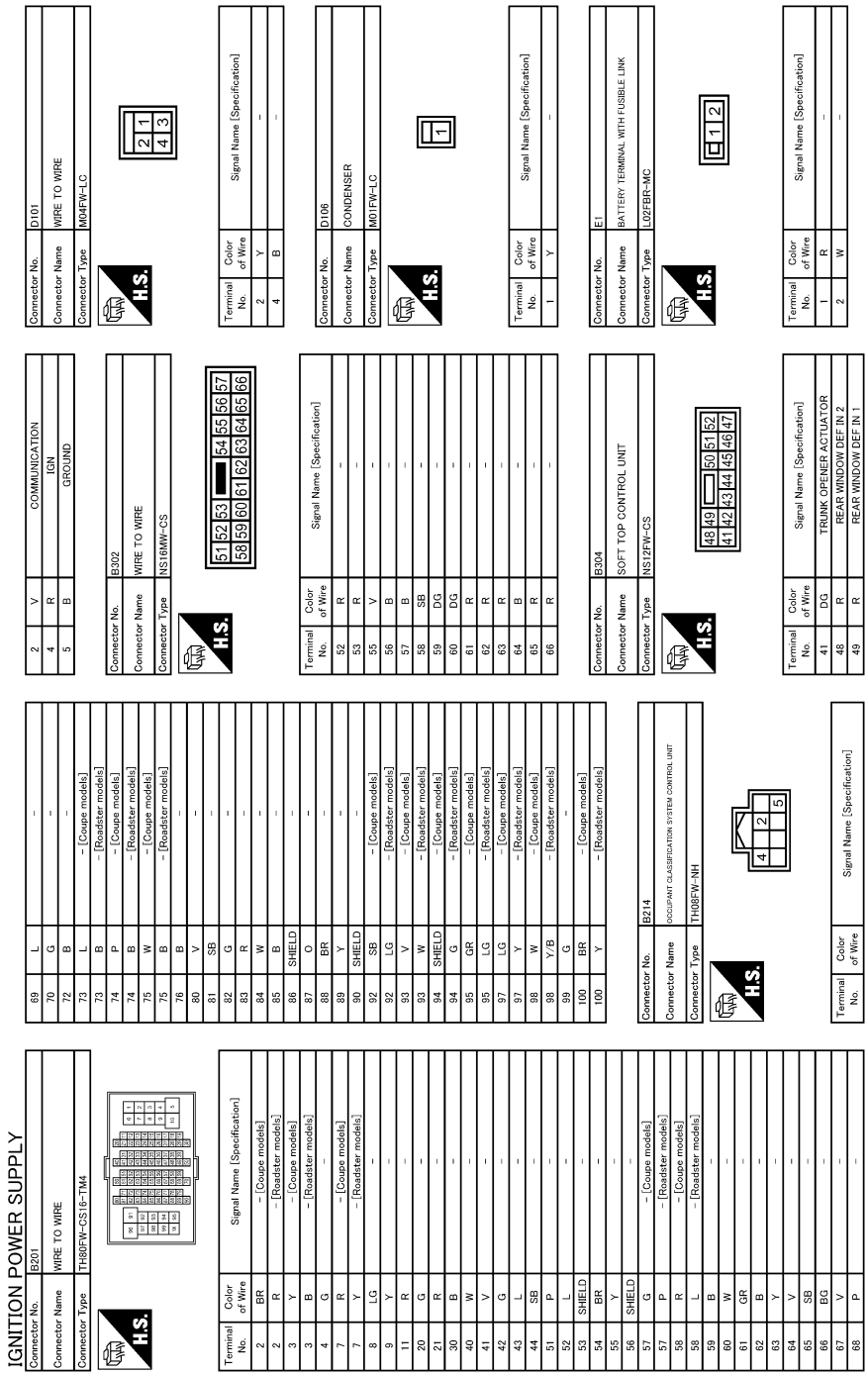

JRMWD9652GB

IGNITION POWER SUPPLY

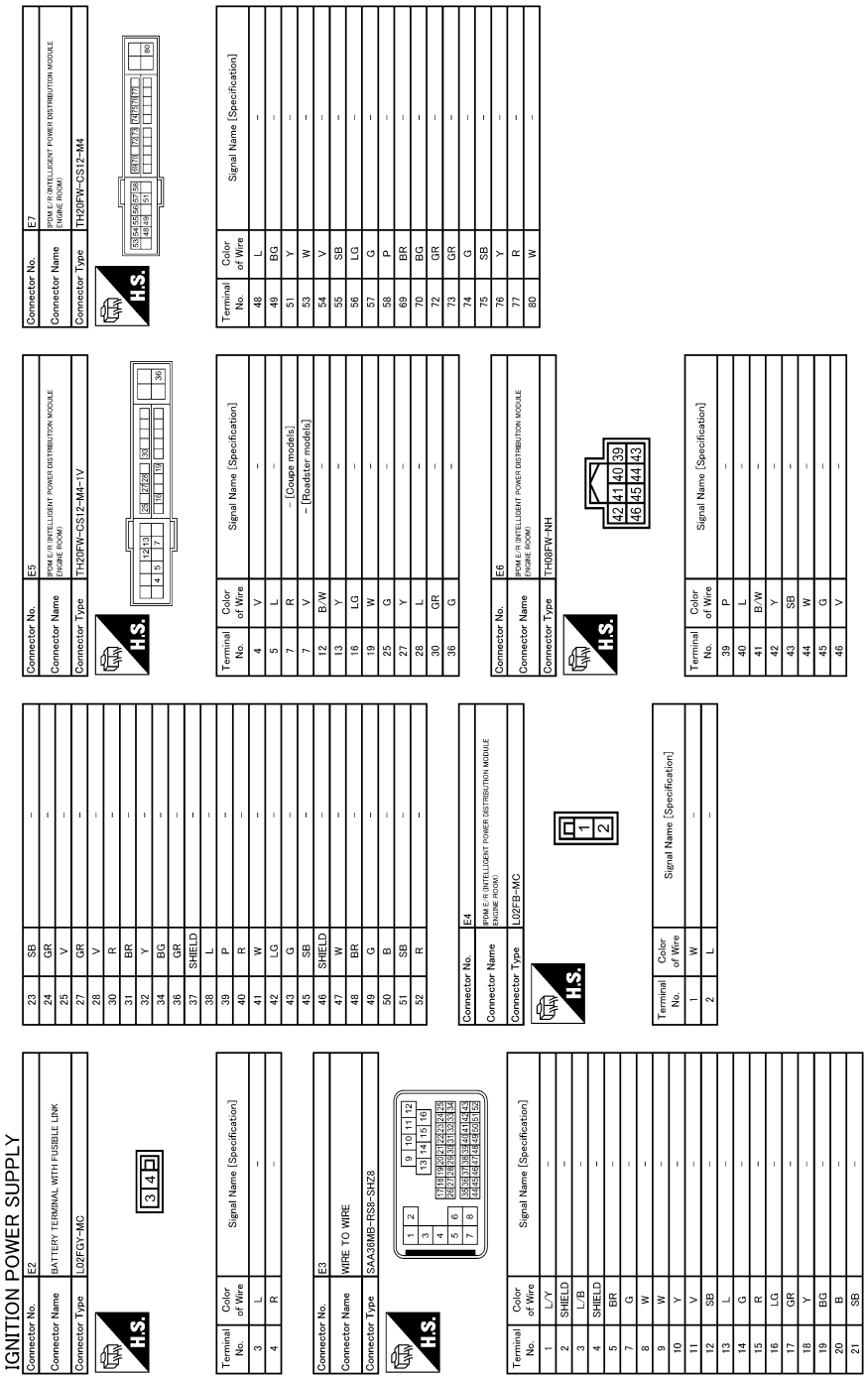

JRMWD9653GB

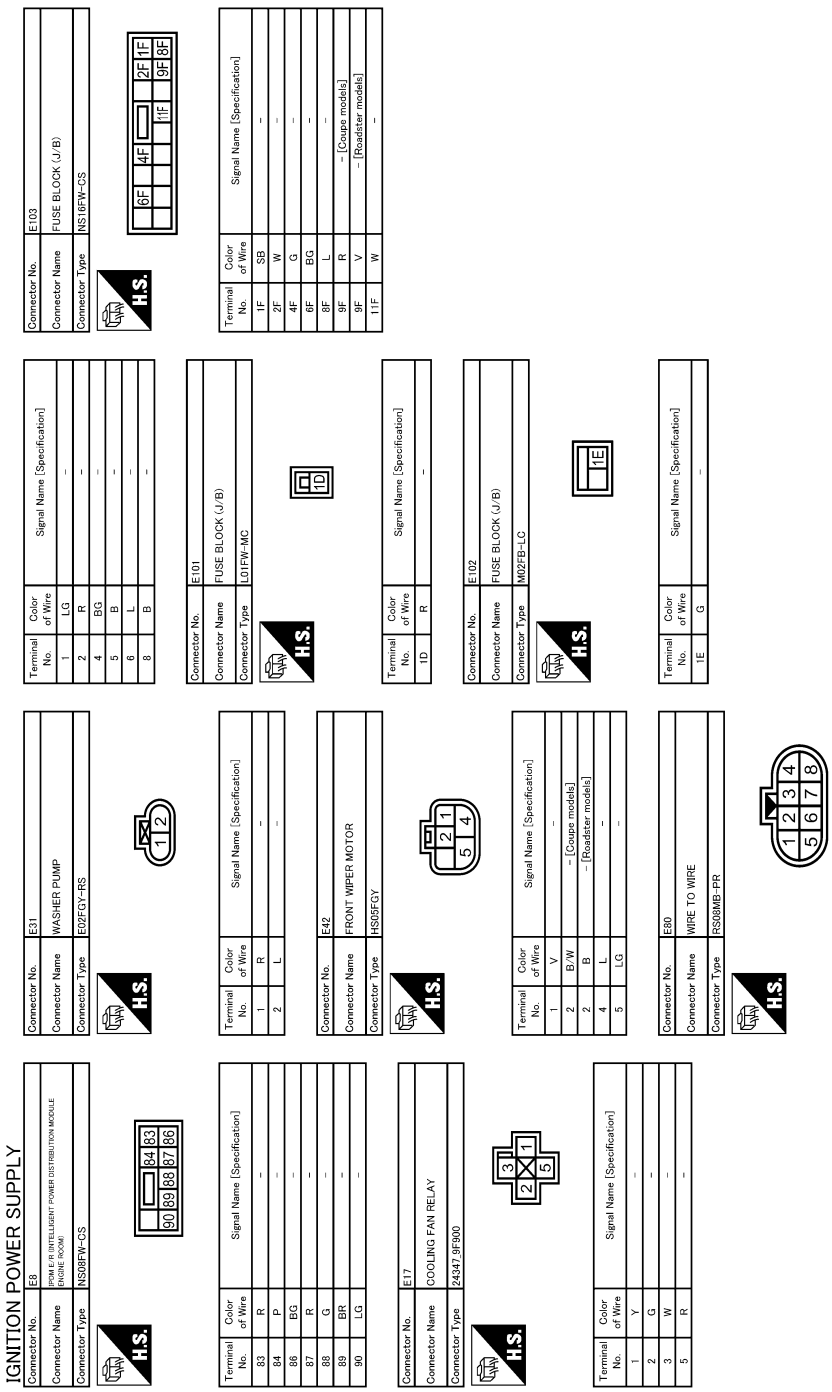

JRMWD9654GB

IGNITION POWER SUPPLY

Connector No.	E106
Connector Name	WIRE TO WIRE
Connector Type	TH80FW-CS16-TM4

H.S.

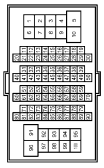

Terminal No.	Color of Wire	Signal Name [Specification]
1	Y	–
3	L	–
4	L	–
7	B	–
8	P	–
9	B	–
11	V	–
12	R	–
13	L	–
14	GR	–
15	P	–
16	W	–
17	SB	–
20	LG	–
21	BR	– [Coupe models]
21	G	– [Roadster models]
31	L	–
32	Y	–
36	V	–
37	Y	–
38	R	–
39	B	–
40	W	–
41	LG	–
42	SB	–
43	G	–
44	GR	– [Except for roadster models with M/T]
44	R	– [Roadster models with M/T]
45	BG	–
46	W	–
47	P	–
58	SHIELD	–
59	L	–
70	P	–
80	W	–
81	P	–
82	G	–
83	V	–
84	L	–
85	BG	–
86	LG	–
87	R	–
89	P	–
91	W	–
92	L	–
93	G	–
94	Y	–
96	Y	–
97	BR	–
98	GR	–
99	LG	–
100	BG	–

Connector No.	E117
Connector Name	WIRE TO WIRE
Connector Type	NS10MW-CS

H.S.

Terminal No.	Color of Wire	Signal Name [Specification]
1	Y	–
2	R	–
3	Y	–
4	G	–
5	GR	–
6	BG	–
7	BR	–
8	P	–
9	R	–
10	R	–

Connector No.	E180
Connector Name	WIRE TO WIRE
Connector Type	RS08FB-PR

H.S.

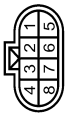

Terminal No.	Color of Wire	Signal Name [Specification]
1	LG	–
2	R	–
4	B/G	–
5	B	–
6	L	–
8	B	–

Connector No.	F1
Connector Name	WIRE TO WIRE
Connector Type	SAA36FB-RS8-SH28

H.S.

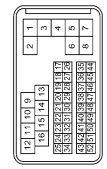

Terminal No.	Color of Wire	Signal Name [Specification]
1	L/Y	–
2	SHIELD	–
3	L/B	–
4	SHIELD	–
5	BR	–
7	G	–
8	W	–
9	W	–
10	G	–
11	R	–
12	P	–
13	O	–
14	LG	–
15	BR	–
16	Y	–
17	W	–
18	LG	–
19	P	–
20	O	–
21	BR	–
22	G	–
23	Y	–
24	LG	–
25	V	–
27	GR	–
28	BR	–
29	L	–
30	R	–
31	P	–
32	W	–
33	SB	–
34	O	–
36	GR	–
37	SHIELD	–
38	W	–
39	Y	–
40	G	–
41	B	–
42	GR	–
43	R	–
45	SB	–
46	SHIELD	–
47	W/L	–
48	LG	–
49	O/L	–
50	L/Y	–
51	W	–
52	L/G	–

Connector No.	F43
Connector Name	COMPRESSOR
Connector Type	RS01FB

H.S.

Terminal No.	Color of Wire	Signal Name [Specification]
1	O	MAGNET CLUTCH POWER SUPPLY

JRMWD9655GB

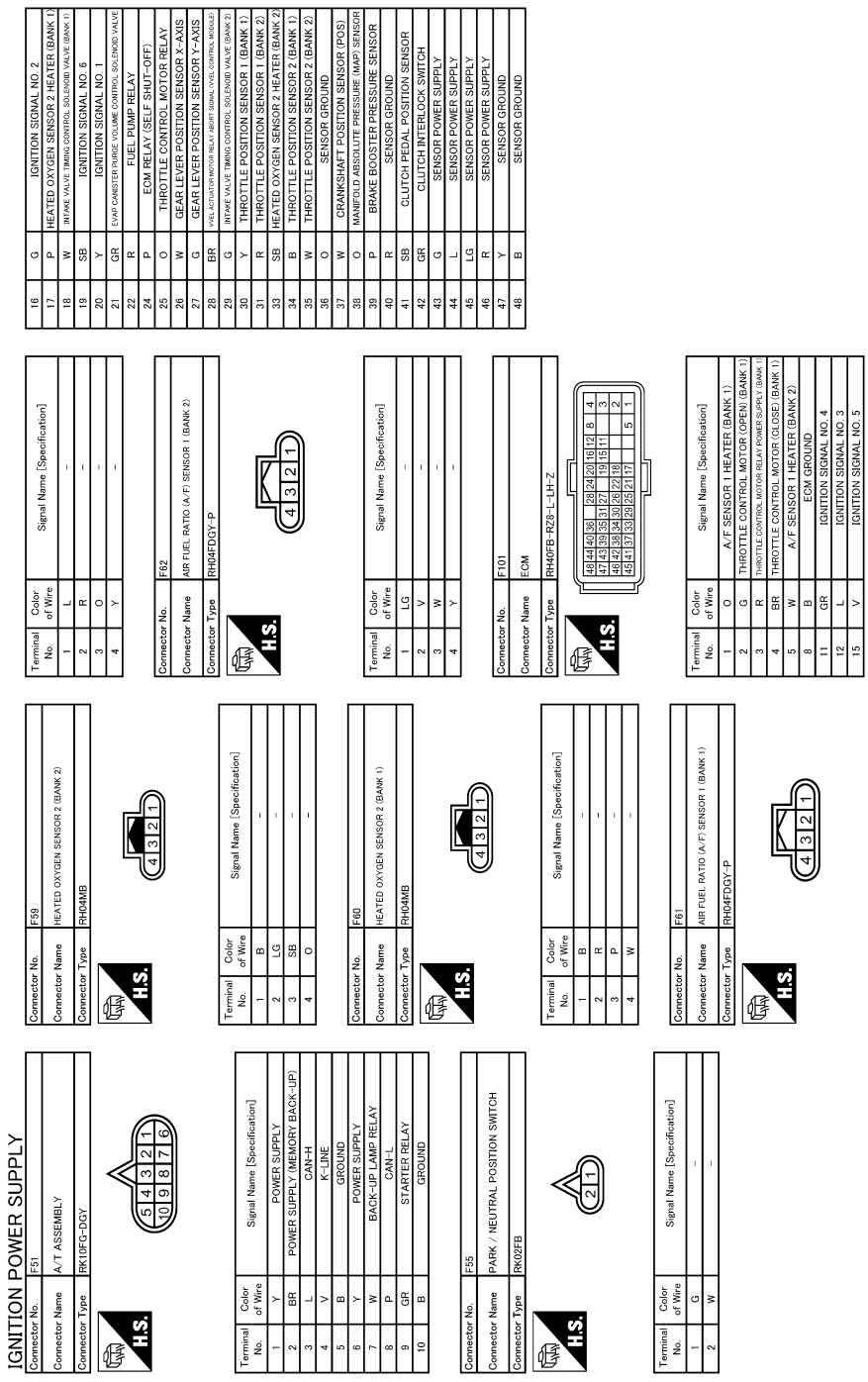

JRMWD9656GB

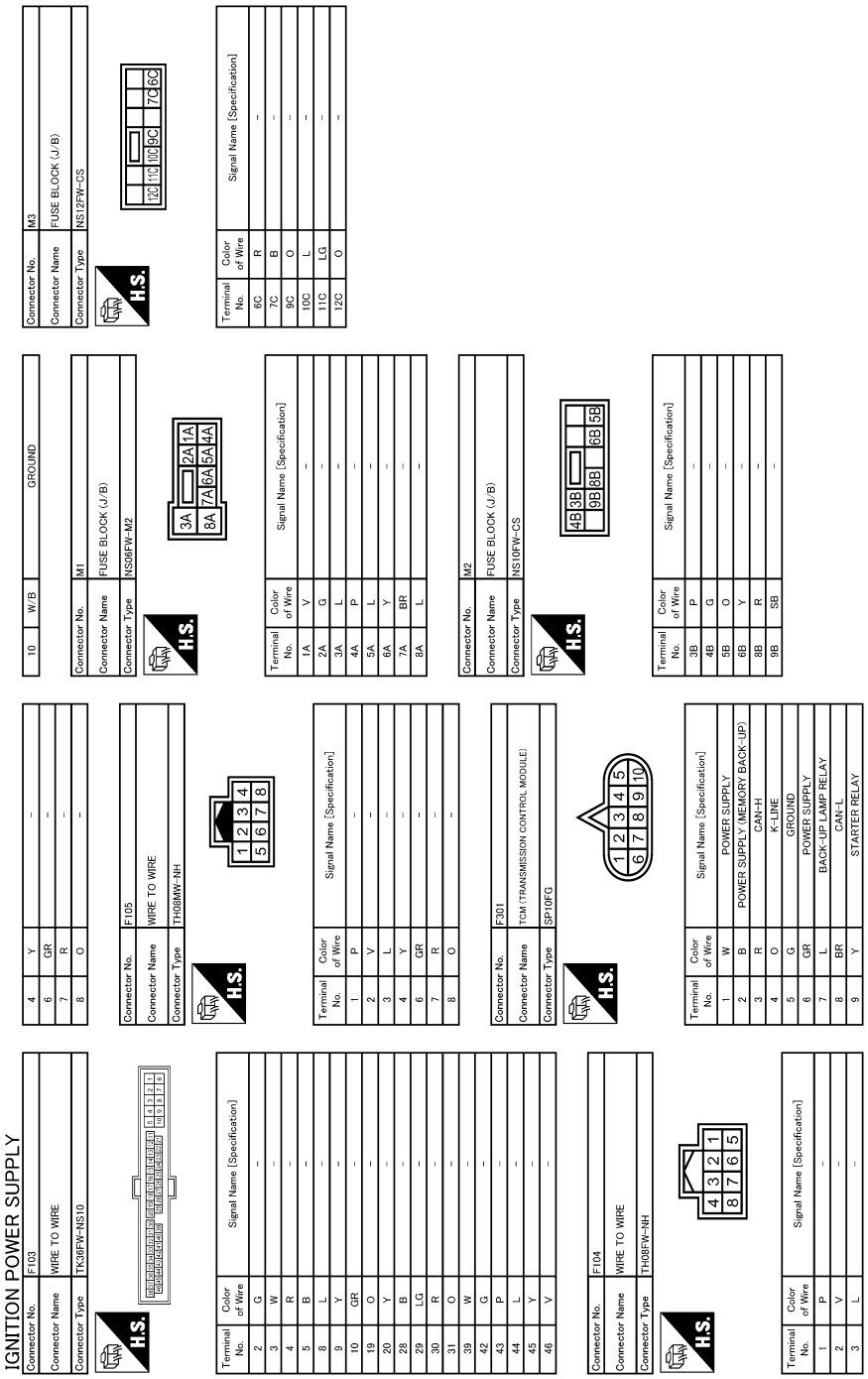

JRMWD9657GB

IGNITION POWER SUPPLY

Connector No.	M6
Connector Name	WIRE TO WIRE
Connector Type	TH80MW-CS16-TM4

H.S.

Terminal No.	Color of Wire	Signal Name [Specification]
1	Y	–
3	L	–
4	L	–
7	B	–
8	P	–
9	B	–
11	GR	–
12	R	–
13	L	–
14	G	–
15	P	–
16	W	–
17	BR	–
20	GR	–
21	R	–
31	BR	–
32	V	–
36	SB	–
37	Y	–
38	LG	–
39	SB	–
40	W	–
41	LG	–
42	R	–
43	G	–
44	G	– [With A/T]
44	R	– [With M/T]
45	O	–
46	G	–
47	BR	–
58	SHIELD	–
59	L	–
70	R	–
80	LG	–
81	GR	–
82	V	–
83	V	–
84	L	–
85	BR	–
86	Y	–
87	G	–
89	P	–
91	W	–
92	P	–
93	P	–
94	Y	–
96	P	–
97	GR	–
98	O	–
99	W	–
100	R	–

Connector No.	M109
Connector Name	BLOWER MOTOR
Connector Type	NS03FW-M3

H.S.

Terminal No.	Color of Wire	Signal Name [Specification]
1	L	BLOWER MOTOR POWER SUPPLY
2	P	BLOWER MOTOR CONTROL SIGNAL
3	B	SENSOR GROUND

Connector No.	M116
Connector Name	WIRE TO WIRE
Connector Type	TK36MW-NS10

H.S.

Terminal No.	Color of Wire	Signal Name [Specification]
2	W	–
3	BG	– [Coupe models]
3	O	– [Roadster models]
4	W	–
5	B	–
8	L	–
9	Y	–
10	R	–
19	O	–
20	G	–
28	B	–
29	LG	–
30	LG	–
31	O	–
39	G	–
42	G	–
43	P	–
44	L	–
45	BR	–
46	V	–

Connector No.	M117
Connector Name	WIRE TO WIRE
Connector Type	TH80MW-CS16-TM4

H.S.

Terminal No.	Color of Wire	Signal Name [Specification]
2	GR	– [Coupe models]
2	LG	– [Roadster models]
3	O	– [Coupe models]
3	B	– [Roadster models]
4	W	–
7	LG	– [Coupe models]
7	Y	– [Roadster models]
8	LG	–
9	Y	–
11	R	–
20	G	–
21	R	–
30	B	–
40	O	–
41	Y	–
42	G	–
43	L	–
44	SB	–
51	R	–
52	G	–
53	SHIELD	–
54	LG	–
55	V	–
56	SHIELD	–
57	G	– [Coupe models]
57	P	– [Roadster models]
58	R	– [Coupe models]
58	L	– [Roadster models]
59	B	–
60	W	–
61	GR	–
62	B	–
63	Y	–
64	L	–
65	G	–
66	O	–
67	V	–
68	P	–
69	L	–
70	L	–
72	B	–
73	B	–
74	B	–
75	B	–
76	B	–
80	L	–
81	Y	–
82	W	–
83	B	–
84	R	–
85	G	–
86	SHIELD	–
87	G	–
88	L	–
89	P	– [Coupe models]
89	Y	– [Roadster models]
90	SHIELD	–
92	G	– [Coupe models]
92	LG	– [Roadster models]
93	R	– [Coupe models]
93	V	– [Roadster models]
94	SHIELD	– [Coupe models]
94	G	– [Roadster models]
95	SB	– [Coupe models]
95	LG	– [Roadster models]
97	LG	– [Coupe models]
97	Y	– [Roadster models]
98	V	– [Coupe models]
98	Y/B	– [Roadster models]
99	G	–
100	BR	– [Coupe models]
100	Y	– [Roadster models]

JRMWD9658GB

IGNITION POWER SUPPLY

Connector No.	M118
Connector Name	BCM (BODY CONTROL MODULE)
Connector Type	M03FB-LC

H.S.

Terminal No.	Color of Wire	Signal Name [Specification]
1	W	BAT (F/L)
2	W	POWER WINDOW POWER SUPPLY (BAT)
3	Y	POWER WINDOW POWER SUPPLY (IGN)

Connector No.	M119
Connector Name	BCM (BODY CONTROL MODULE)
Connector Type	NS16FW-CS

H.S.

Terminal No.	Color of Wire	Signal Name [Specification]
4	R	INTERIOR ROOM LAMP POWER SUPPLY
5	G	PASSENGER DOOR UNLOCK OUTPUT
8	V	ALL DOOR, FUEL LID LOCK OUTPUT
9	G	DRIVER DOOR, FUEL LID UNLOCK OUTPUT
11	BR	BAT (FUSE)
13	B	GROUND
14	R	PUSH-BUTTON IGNITION SW ILL GND
15	Y	ACC IND
17	W	TURN SIGNAL RH (FRONT, SIDE)
18	O	TURN SIGNAL LH (FRONT, SIDE)
19	P	ROOM LAMP TIMER CONTROL

Connector No.	M121
Connector Name	BCM (BODY CONTROL MODULE)
Connector Type	TH40FGY-NH

H.S.

Terminal No.	Color of Wire	Signal Name [Specification]
34	G	LUGGAGE/TRUNK ROOM ANT–
35	R	LUGGAGE/TRUNK ROOM ANT+
38	B	REAR BUMPER ANT–
39	W	REAR BUMPER ANT+
47	V	IGN RELAY (PDM E/R) CONT
52	SB	STARTER RELAY CONT
60	BR	PUSH SW
61	W	BACK DOOR/TRUNK LID DOOR REQUEST SW
64	G	I-KEY WARN BUZZER (ENG ROOM)
66	R	BACK DOOR/TRUNK ROOM LAMP SW
67	GR	BACK DOOR/TRUNK LID OPENER SW

Connector No.	M122
Connector Name	BCM (BODY CONTROL MODULE)
Connector Type	TH40FB-NH

H.S.

Terminal No.	Color of Wire	Signal Name [Specification]
72	L	ROOM ANT 2–
73	P	ROOM ANT 2+
74	SB	PASSENGER DOOR ANT–
75	BR	PASSENGER DOOR ANT+
76	V	DRIVER DOOR ANT–
77	LG	DRIVER DOOR ANT+
78	L	ROOM ANT 1–
79	R	ROOM ANT 1+
80	GR	NATS ANT AMP.
81	W	NATS ANT AMP.
82	R	IGN RELAY (F/B) CONT

83	GR	KYLS ENT RECEIVER (FRONT) COMM
87	BR	COMBI SW INPUT 5
88	V	COMBI SW INPUT 3
90	P	CAN–L
91	L	CAN–H
92	LG	KEY SLOT ILL
93	V	ON IND
95	O	ACC RELAY CONT
96	Y	A/T SHIFT SELECTOR POWER SUPPLY
99	R	SHIFT P/CLUTCH PEDAL POS SW
100	GR	PASSENGER DOOR REQUEST SW
101	Y	DRIVER DOOR REQUEST SW
102	O	BLOWER FAN MOTOR RELAY CONT
103	LG	KYLS ENT RECEIVER (FRONT) PWR SUPPLY
107	LG	COMBI SW INPUT 1
108	R	COMBI SW INPUT 4
109	Y	COMBI SW INPUT 2
110	P	HAZARD SW

Connector No.	M123
Connector Name	BCM (BODY CONTROL MODULE)
Connector Type	TH40FG-NH

H.S.

Terminal No.	Color of Wire	Signal Name [Specification]
113	O	OPTICAL SENSOR
114	R	CLUTCH INTERLOCK SW
115	O	–
116	SB	STOP LAMP SW 1
118	P	STOP LAMP SW 2
119	SB	DR DOOR UNLOCK SENSOR
121	R	KEY SLOT SW
123	W	IGN F/B
124	LG	PASSENGER DOOR SW
129	O	TRUNK LID OPENER CANCEL SW
130	L	REAR DEFOGGER SW
132	V	P/W SW & SOFT TOP C/U COMM [Roadster models]
132	Y	POWER WINDOW SW COMM. [Coupe models]
133	G	PUSH BUTTON IGNITION SW ILL POWER
134	GR	LOCK IND
137	P	RECEIVER &SENSOR GND
138	V	RECEIVER & SENSOR POWER SUPPLY
139	L	TIRE PRESS RECEIV COMM

140	G	P/N POSITION
141	Y	SEGURITY INDICATOR
142	O	COMBI SW OUTPUT 5
143	P	COMBI SW OUTPUT 1
144	G	COMBI SW OUTPUT 2
145	L	COMBI SW OUTPUT 3
146	SB	COMBI SW OUTPUT 4
150	GR	DRIVER DOOR SW
151	G	REAR WINDOW DEFOGGER RELAY CONT

Connector No.	M147
Connector Name	AIR BAG DIAGNOSIS SENSOR UNIT
Connector Type	NH28FY-EX

H.S.

Terminal No.	Color of Wire	Signal Name [Specification]
1	LG	IGN
2	B	GND
3	Y	DR 1 (+)
4	Y	DR 1 (–) DR 2 (–)
5	Y	DR 2 (+)
6	Y	AS 1 (+)
7	Y	AS 1 (–)
8	Y	AS 2 (+)
9	Y	AS 2 (–)
18	R	ECZS (+)
19	L	ECZS (–)
22	SHIELD	GND
23	R	AIRBAG W/L
24	P	SEAT BELT
25	R	CUTOFF TELLTALE
51	W	SATELLITE RH2 (+)
52	B	SATELLITE RH2 (–)
53	Y	SATELLITE LH2 (+)
54	BR	SATELLITE LH2 (–)
57	O	DEPLOYMENT INFORMATION,OUTPUT
59	L	CAN–H
60	P	CAN–L

JRMWD9659GB

Wiring Diagram - IGNITION POWER SUPPLY FUSE No. 3 -

INFOID:0000000009358084

IGNITION POWER SUPPLY FUSE No. 3

A : With A/T
MS : With M/T and SynchroRev Match mode
AM : With A/T or with M/T and SynchroRev Match mode
MO : With M/T without SynchroRev Match mode
CP : Coupe models
RS : Roadster models
WS : With climate controlled seat
HS : With heated seat
AD : With auto anti-dazzling inside mirror
NV : With NAVI
ON : Without NAVI
BN : With BOSE system without NAVI

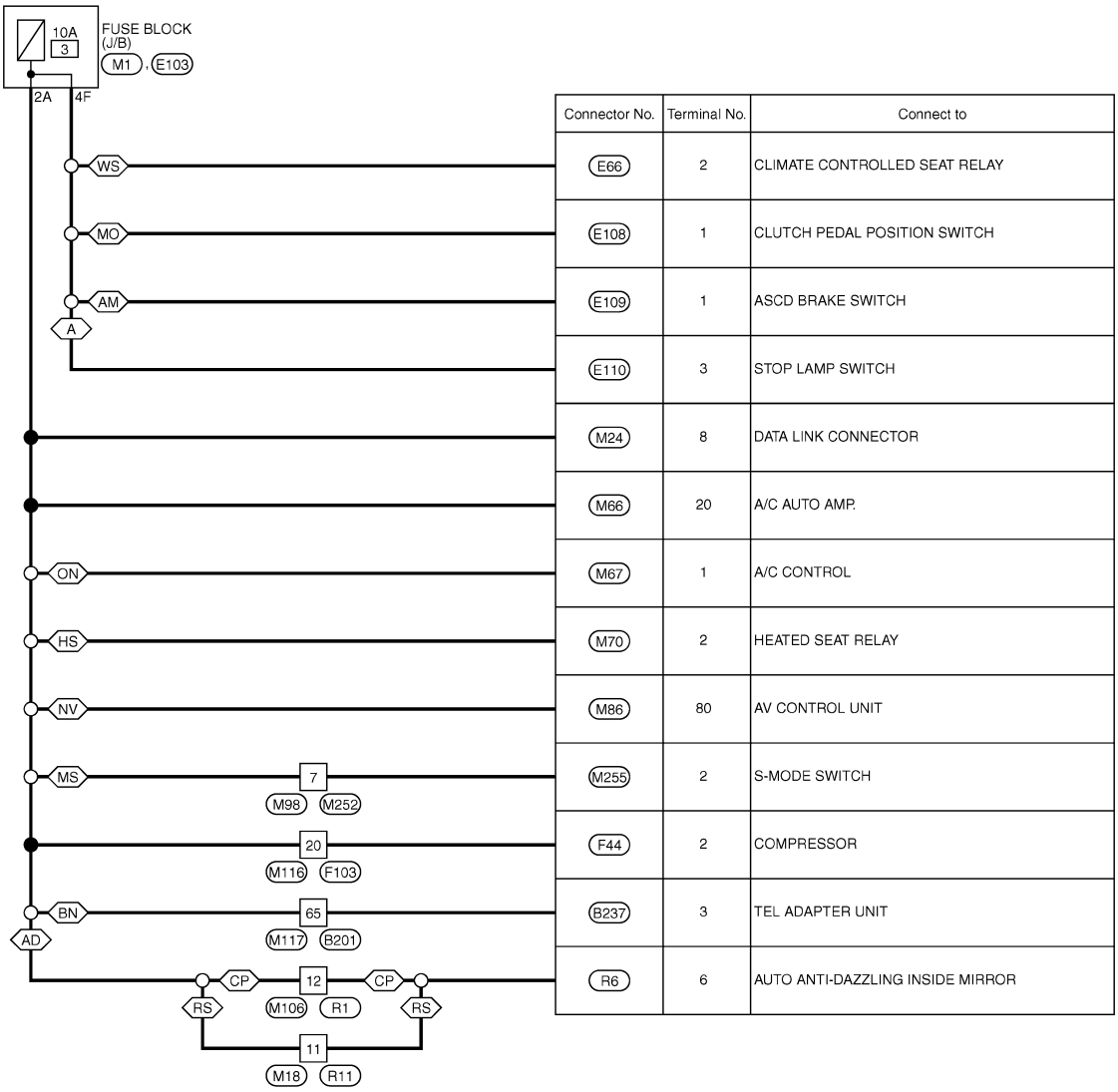

Connector No.	Terminal No.	Connect to
E66	2	CLIMATE CONTROLLED SEAT RELAY
E108	1	CLUTCH PEDAL POSITION SWITCH
E109	1	ASCD BRAKE SWITCH
E110	3	STOP LAMP SWITCH
M24	8	DATA LINK CONNECTOR
M66	20	A/C AUTO AMP.
M67	1	A/C CONTROL
M70	2	HEATED SEAT RELAY
M86	80	AV CONTROL UNIT
M255	2	S-MODE SWITCH
F44	2	COMPRESSOR
B237	3	TEL ADAPTER UNIT
R6	6	AUTO ANTI-DAZZLING INSIDE MIRROR

2012/04/18

JRMWD0799GB

Wiring Diagram - IGNITION POWER SUPPLY FUSE No. 4 -

INFOID:0000000009358085

IGNITION POWER SUPPLY FUSE No. 4

A : With A/T
M : With M/T

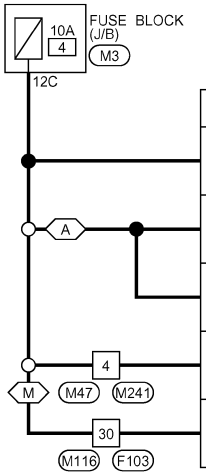

Connector No.	Terminal No.	Connect to
M53	2	COMBINATION METER
M69	1	BACK-UP LAMP RELAY
M69	3	BACK-UP LAMP RELAY
M242	3	TRIPLE METER
F56	1	BACK-UP LAMP SWITCH

2008/09/12

JCMWA3306GB

Wiring Diagram - IGNITION POWER SUPPLY FUSE No. 13 -

INFOID:0000000009358086

IGNITION POWER SUPPLY FUSE No. 13

ON : Without NAVI

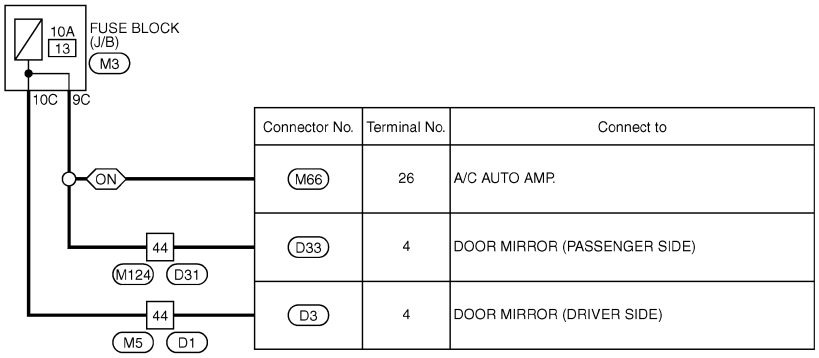

Connector No.	Terminal No.	Connect to
M66	26	A/C AUTO AMP.
D33	4	DOOR MIRROR (PASSENGER SIDE)
D3	4	DOOR MIRROR (DRIVER SIDE)

2010/09/22

JCMWA6379GB

Wiring Diagram - IGNITION POWER SUPPLY FUSE No. 44 -

INFOID:0000000009358087

IGNITION POWER SUPPLY FUSE No. 44

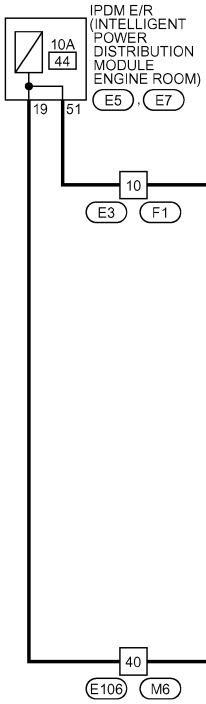

Connector No.	Terminal No.	Connect to
F102	53	ECM
F121	1	FUEL INJECTOR No. 1
F122	1	FUEL INJECTOR No. 2
F123	1	FUEL INJECTOR No. 3
F124	1	FUEL INJECTOR No. 4
F125	1	FUEL INJECTOR No. 5
F126	1	FUEL INJECTOR No. 6
M123	123	BCM (BODY CONTROL MODULE)

2008/09/12

JCMWA3309GB

Wiring Diagram - IGNITION POWER SUPPLY FUSE No. 45 -

INFOID:0000000009358088

IGNITION POWER SUPPLY FUSE No. 45

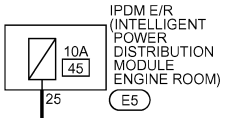

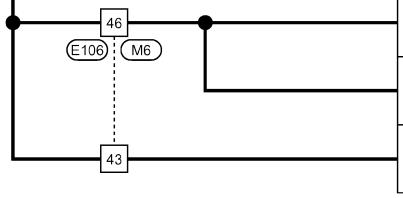

Connector No.	Terminal No.	Connect to
E41	28	ABS ACTUATOR AND ELECTRIC UNIT (CONTROL UNIT)
M37	8	STEERING ANGLE SENSOR
M143	4	YAW RATE / SIDE G SENSOR
M108	3	POWER STEERING CONTROL UNIT

2008/09/12

JCMWA3312GB

Fuse

INFOID:0000000009358089

- If fuse is blown, be sure to eliminate cause of malfunction before installing new fuse.
- Use fuse of specified rating. Never use fuse of more than specified rating.
- Do not partially install fuse; always insert it into fuse holder properly.
- Remove fuse for “ELECTRICAL PARTS (BAT)” if vehicle is not used for a long period of time.

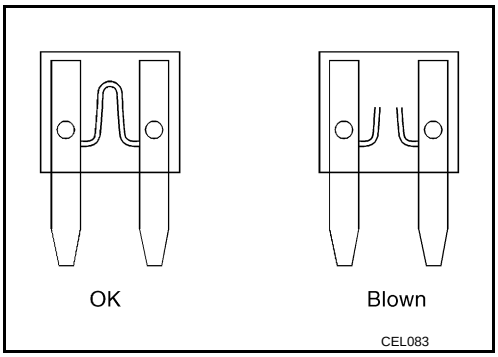

EXTENDED STORAGE FUSE SWITCH (IF EQUIPPED)

The following switch may be mounted on the fuse block (Junction Box) for transportation and storage.

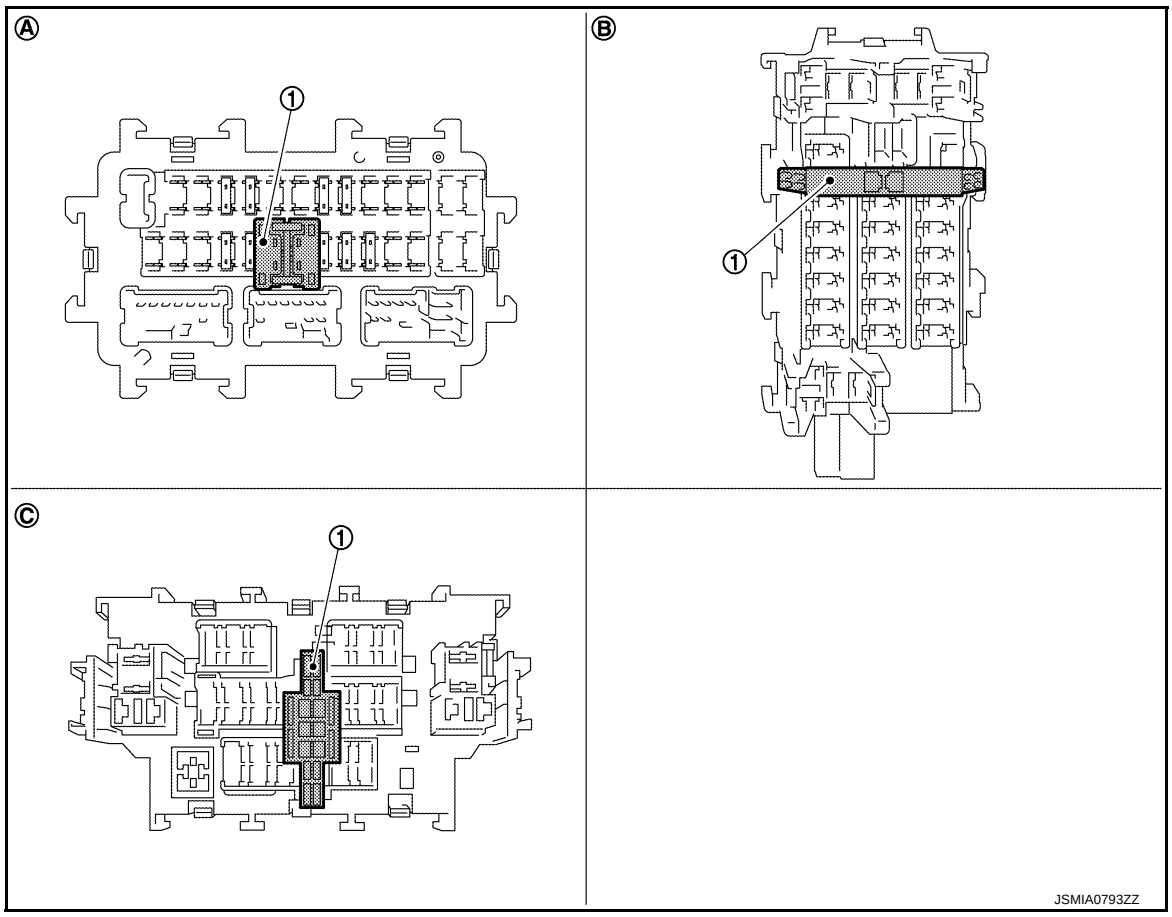

1. Extended storage fuse switch

A. Type A B. Type B C. Type C

- Remove the extended storage fuse switch when replacing the fuse of extended storage fuse switch.
- Remove the extended storage fuse switch if it causes the interference when the fuse or the other fuses is checked.

How To Extended Storage Fuse Switch ON/OFF

CAUTION:

- **Turn the ignition switch OFF when operating the extended storage fuse switch.**
- **Under normal conditions, keep the extended storage fuse switch in ON state. Never operate the extended storage fuse switch except when necessary.**

• Type A

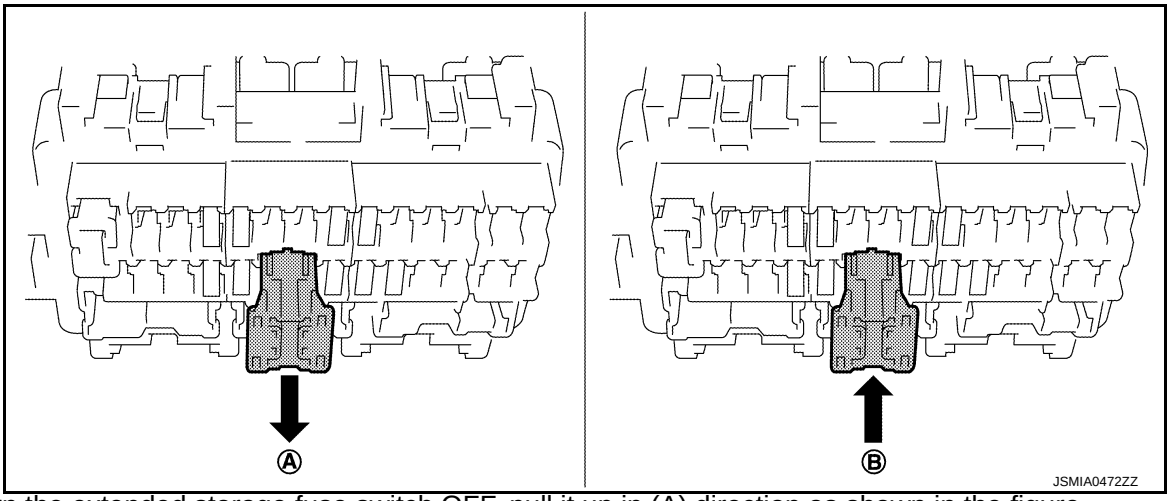

- To turn the extended storage fuse switch OFF, pull it up in (A) direction as shown in the figure.
- To turn the extended storage fuse switch ON, press it in (B) direction as shown in the figure.

• Type B

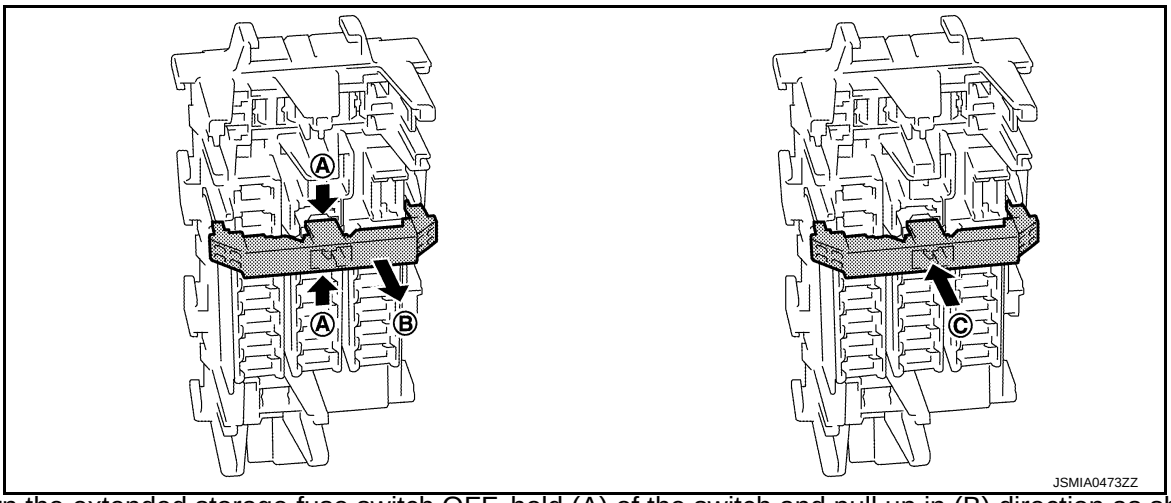

- To turn the extended storage fuse switch OFF, hold (A) of the switch and pull up in (B) direction as shown in the figure.
- To turn the extended storage fuse switch ON, press it in (C) direction as shown in the figure.

• Type C

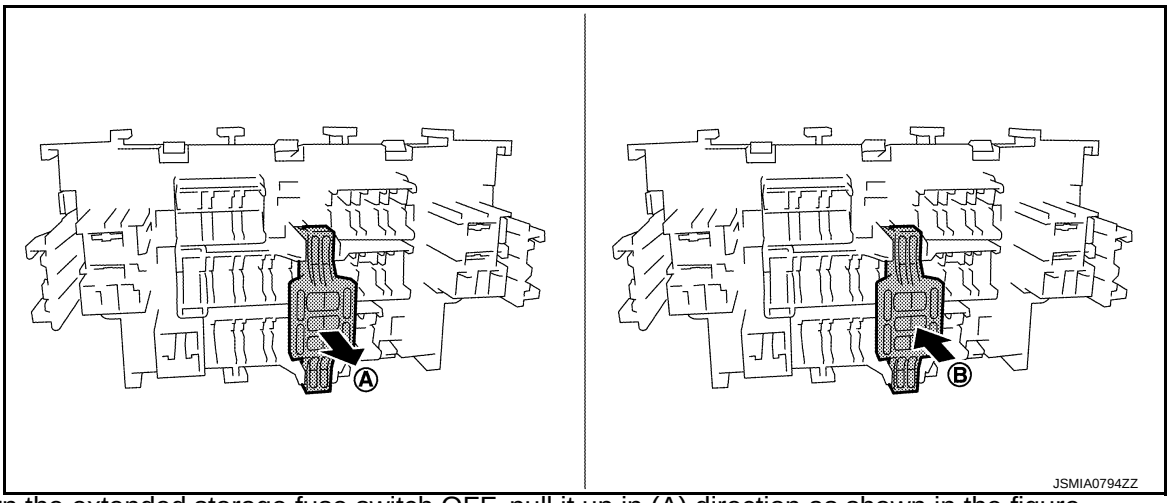

- To turn the extended storage fuse switch OFF, pull it up in (A) direction as shown in the figure.
- To turn the extended storage fuse switch ON, press it in (B) direction as shown in the figure.

How To Remove Extended Storage Fuse Switch

Type A

1. Turn the ignition switch OFF.
2. Turn the extended storage fuse switch OFF.
3. Press pawl (A) and tilt to disengage the extended storage fuse switch. Press pawl (B) and tilt to remove the extended storage fuse switch.

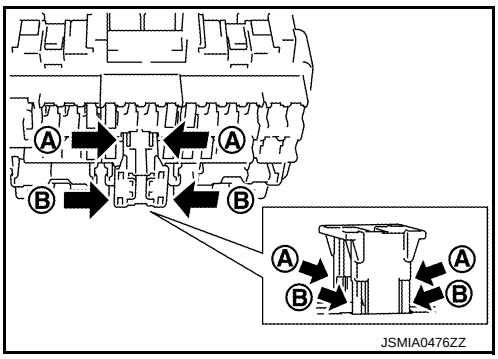

NOTE:
- Extended storage fuse switch and fuse are removed together. Remove fuse from extended storage fuse switch, if necessary.
- Extended storage fuse switch is for transportation and storage. Reinstallation is not required after the removal.

Type B
1. Turn the ignition switch OFF.
2. Turn the extended storage fuse switch OFF.
3. Hold (A) and pull up the extended storage fuse switch hard in (B) direction.

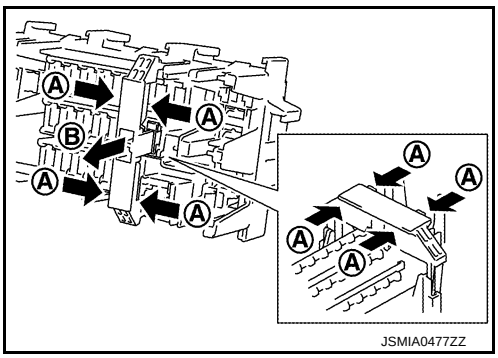

NOTE:
- Extended storage fuse switch and fuse may be removed together. Remove fuse from extended storage fuse switch, if necessary.
- Extended storage fuse switch is for transportation and storage. Reinstallation is not required after the removal.

Type C
1. Turn the ignition switch OFF.
2. Turn the extended storage fuse switch OFF.
3. Hold (A) and pull up the extended storage fuse switch hard in (B) direction.

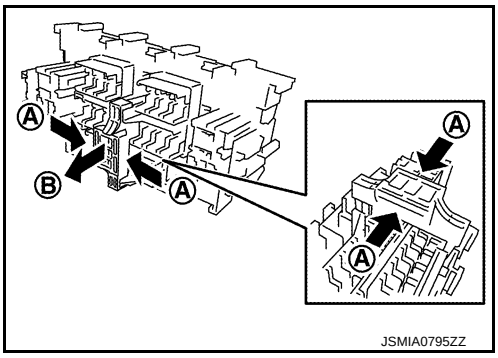

NOTE:
- Extended storage fuse switch and fuse are removed together. Remove fuse from extended storage fuse switch, if necessary.

- Extended storage fuse switch is for transportation and storage. Reinstallation is not required after the removal.

Fusible Link

INFOID:0000000009358090

A melted fusible link can be detected either by visual inspection or by feeling with finger tip. If its condition is questionable, use circuit tester or test lamp.

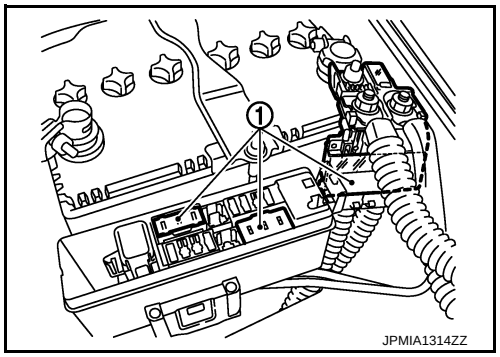

1 : Fusible link

CAUTION:

- **If fusible link should melt, it is possible that critical circuit (power supply or large current carrying circuit) is shorted. In such a case, carefully check and eliminate cause of malfunction.**
- **Never wrap outside of fusible link with vinyl tape. Important: Never let fusible link touch any other wiring harness, vinyl or rubber parts.**

Circuit Breaker

INFOID:0000000009358091

The PTC thermistor generates heat in response to current flow. The temperature (and resistance) of the thermistor element varies with current flow. Excessive current flow will cause the element's temperature to rise. When the temperature reaches a specified level, the electrical resistance will rise sharply to control the circuit current. Reduced current flow will cause the element to cool. Resistance falls accordingly and normal circuit current flow is allowed to resume.

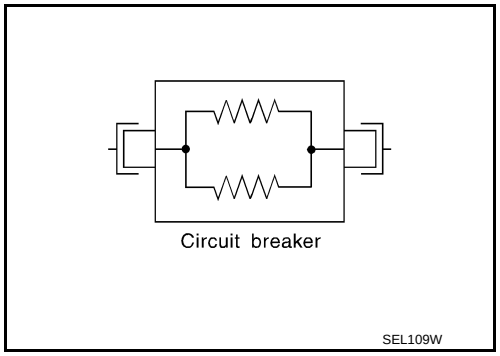

HARNESS LAYOUT

Outline

INFOID:0000000009358093

COUPE MODELS

OUTLINE (COUPE MODELS)

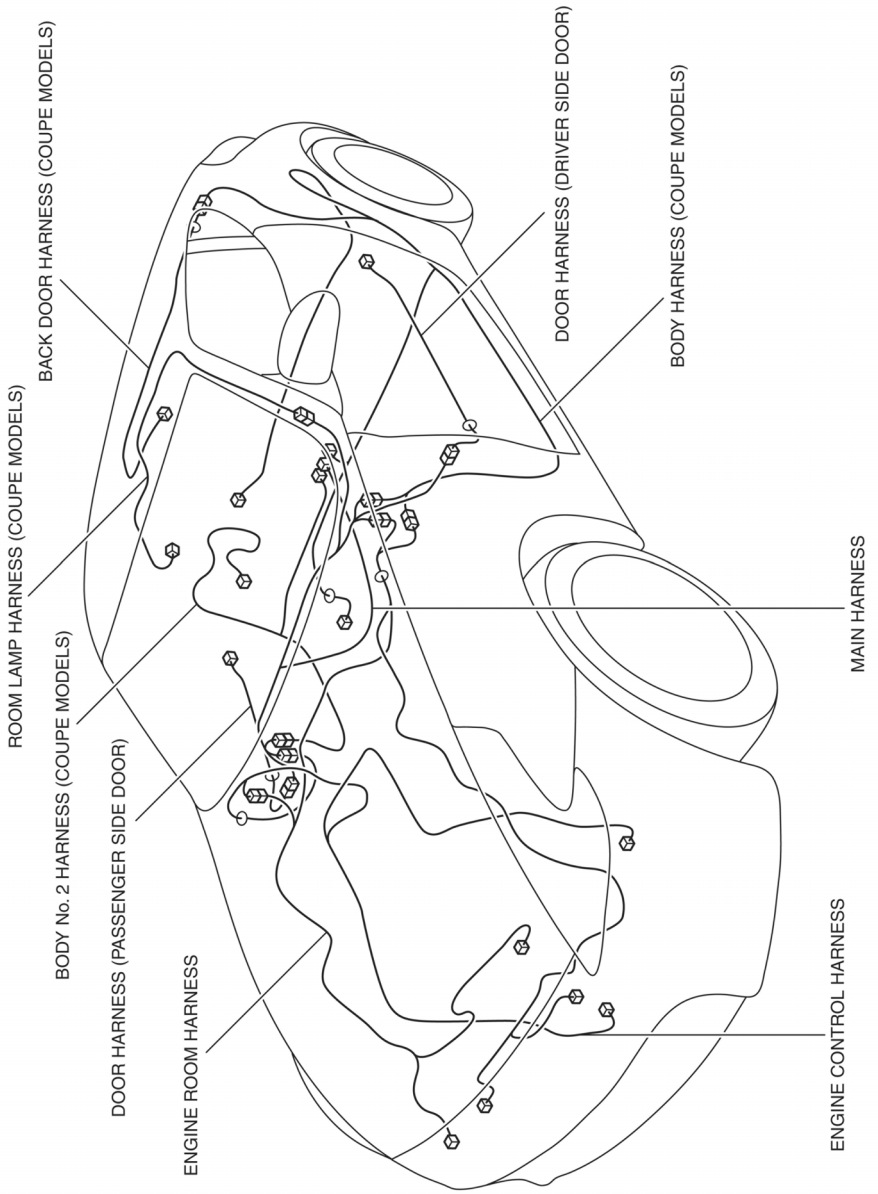

ROADSTER MODELS

OUTLINE (ROADSTER MODELS)

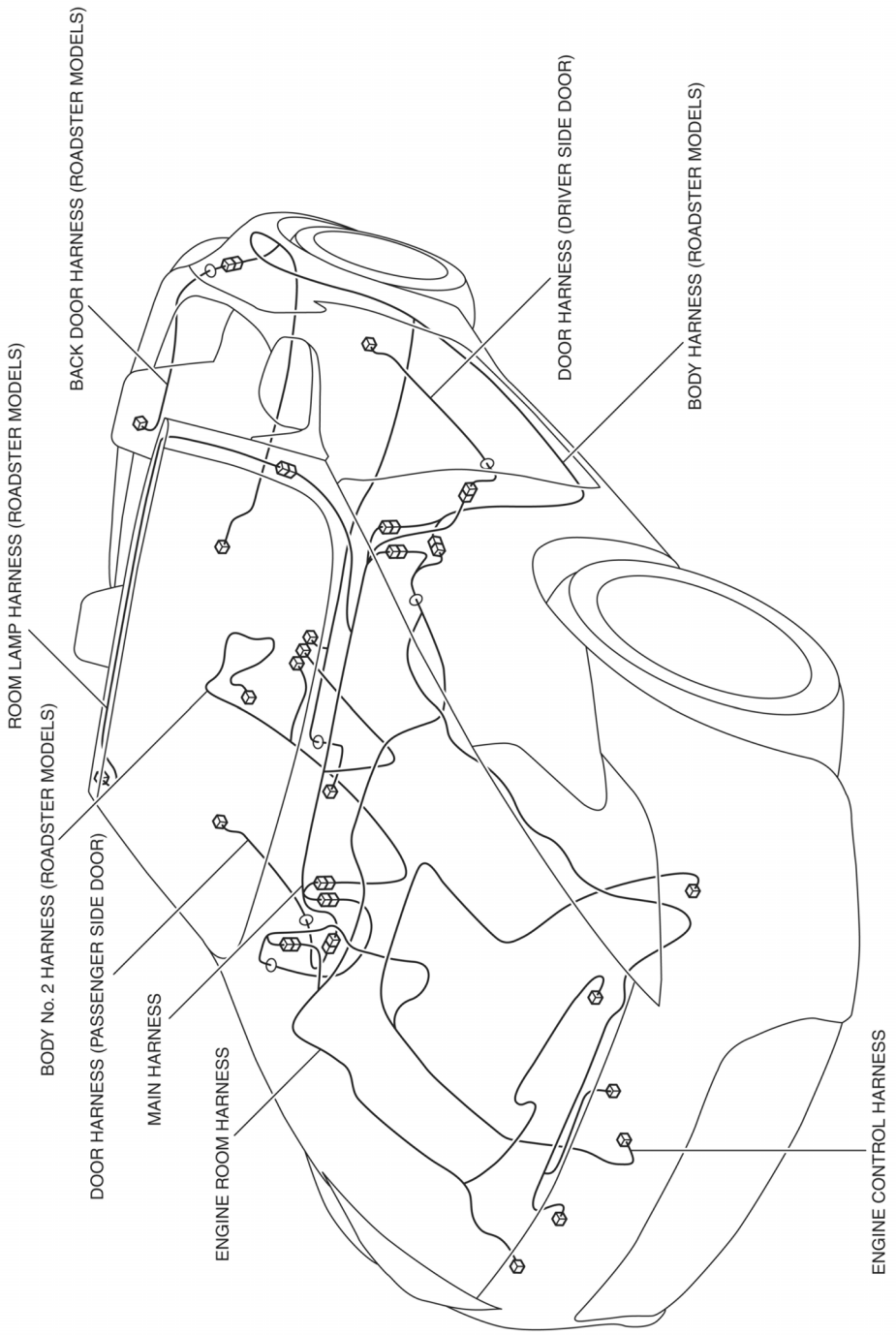

Engine Room Harness

INFOID:0000000009358094

ENGINE COMPARTMENT

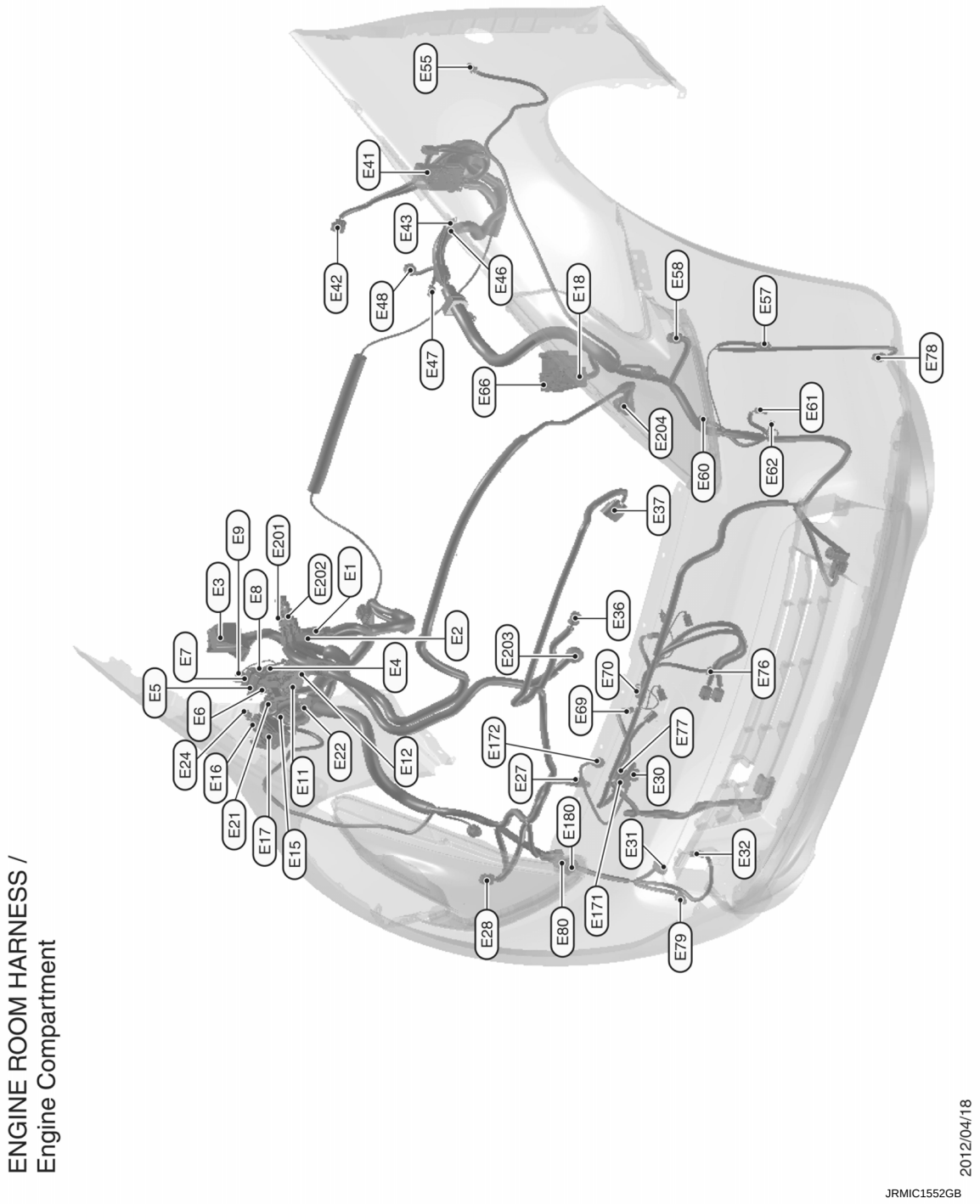

ENGINE ROOM HARNESS /
Engine Compartment

2012/04/18

JRMIC1552GB

PASSENGER COMPARTMENT

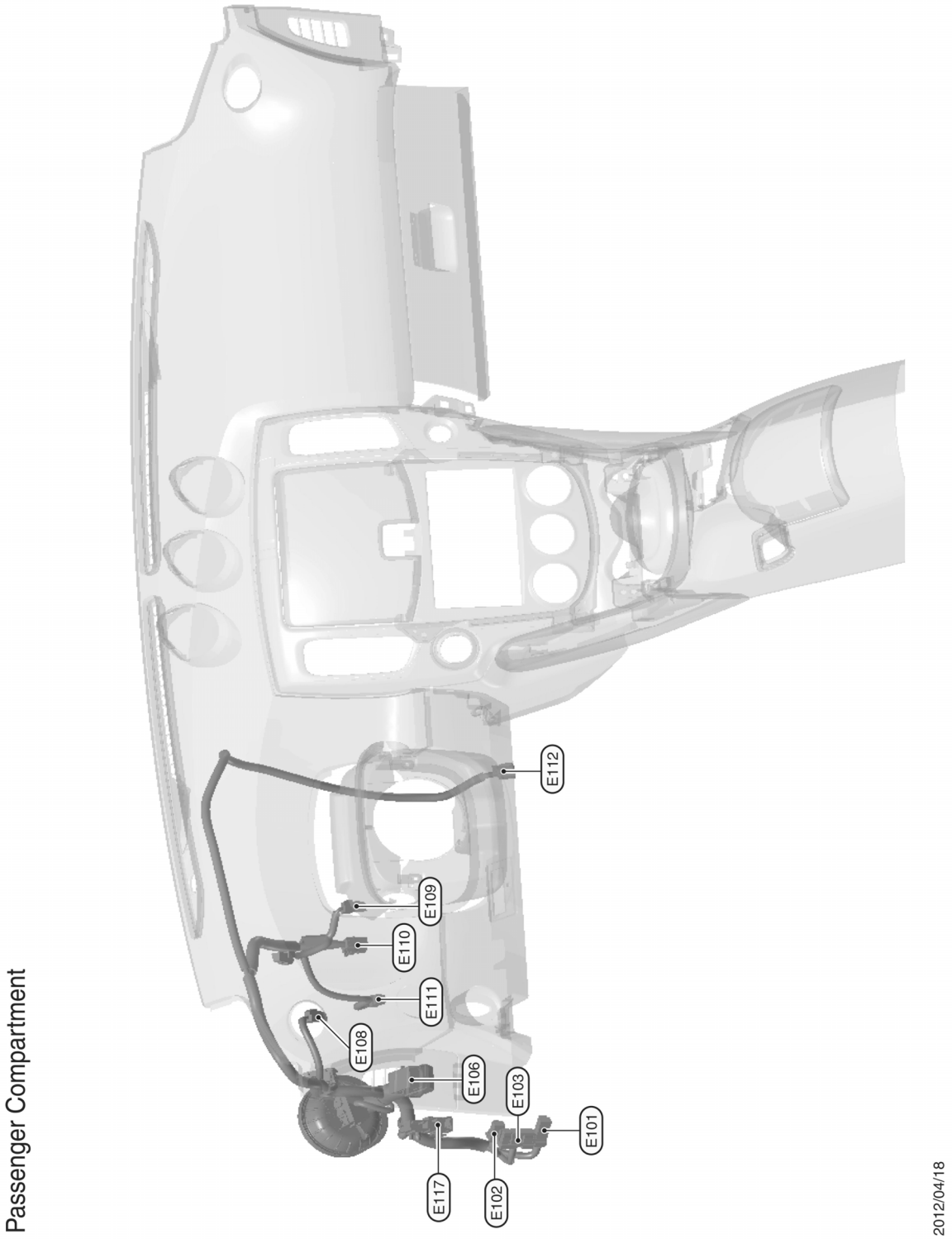

Engine Control Harness

INFOID:0000000009358095

ENGINE COMPARTMENT

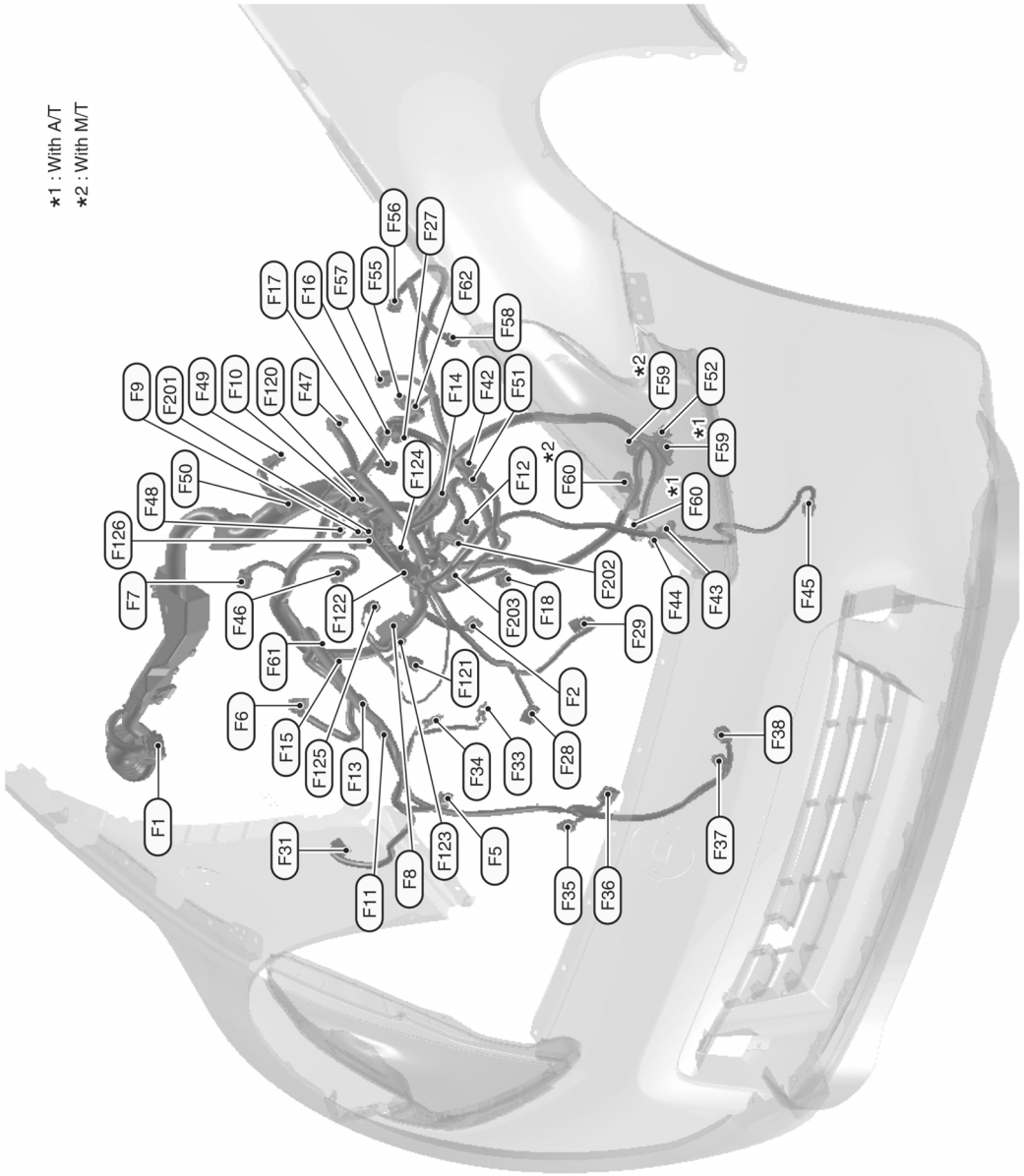

ENGINE CONTROL HARNESS / Engine Compartment

2013/04/25

JRMIC2912GB

PASSENGER COMPARTMENT

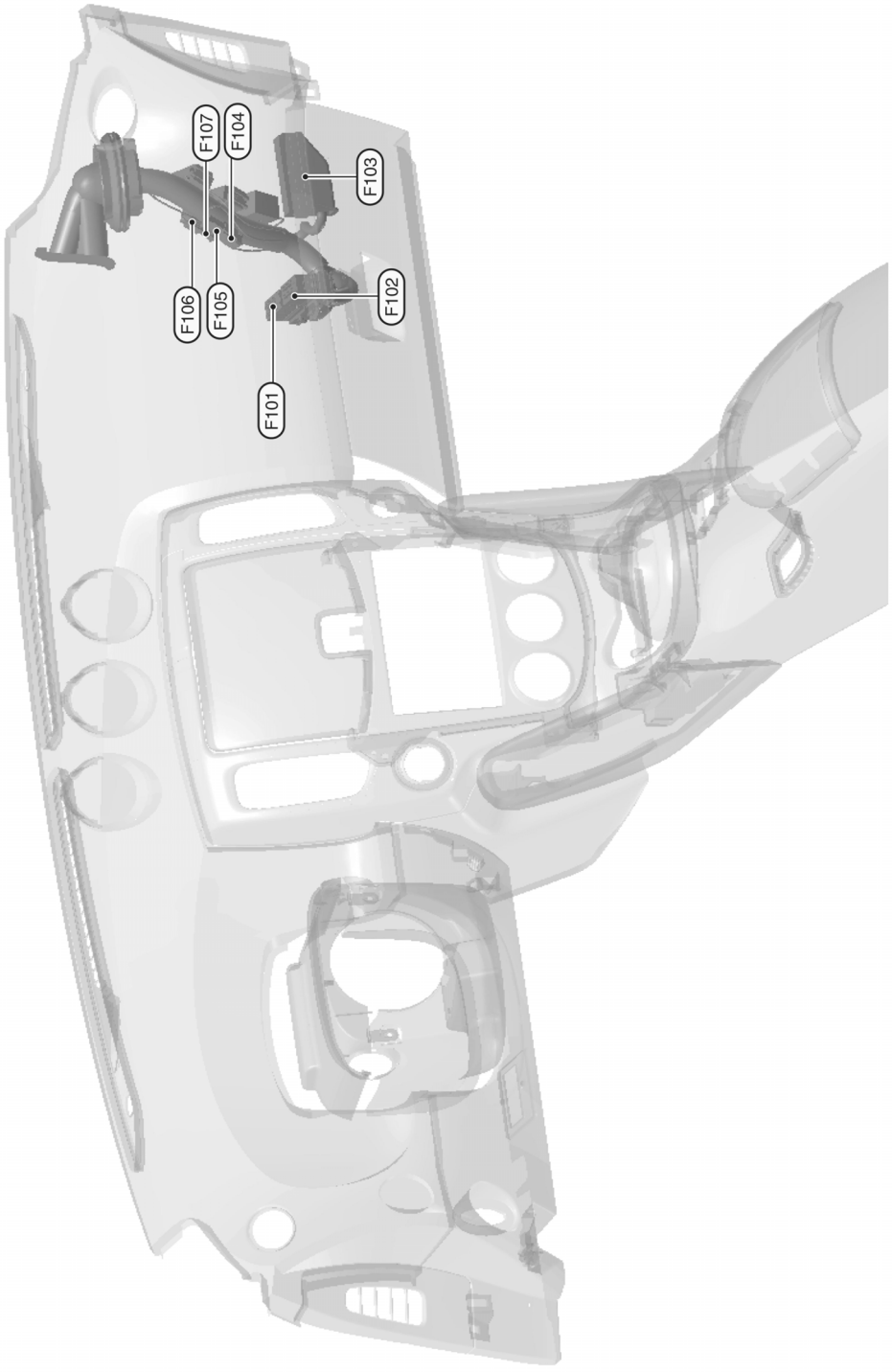

Main Harness

INFOID:0000000009358096

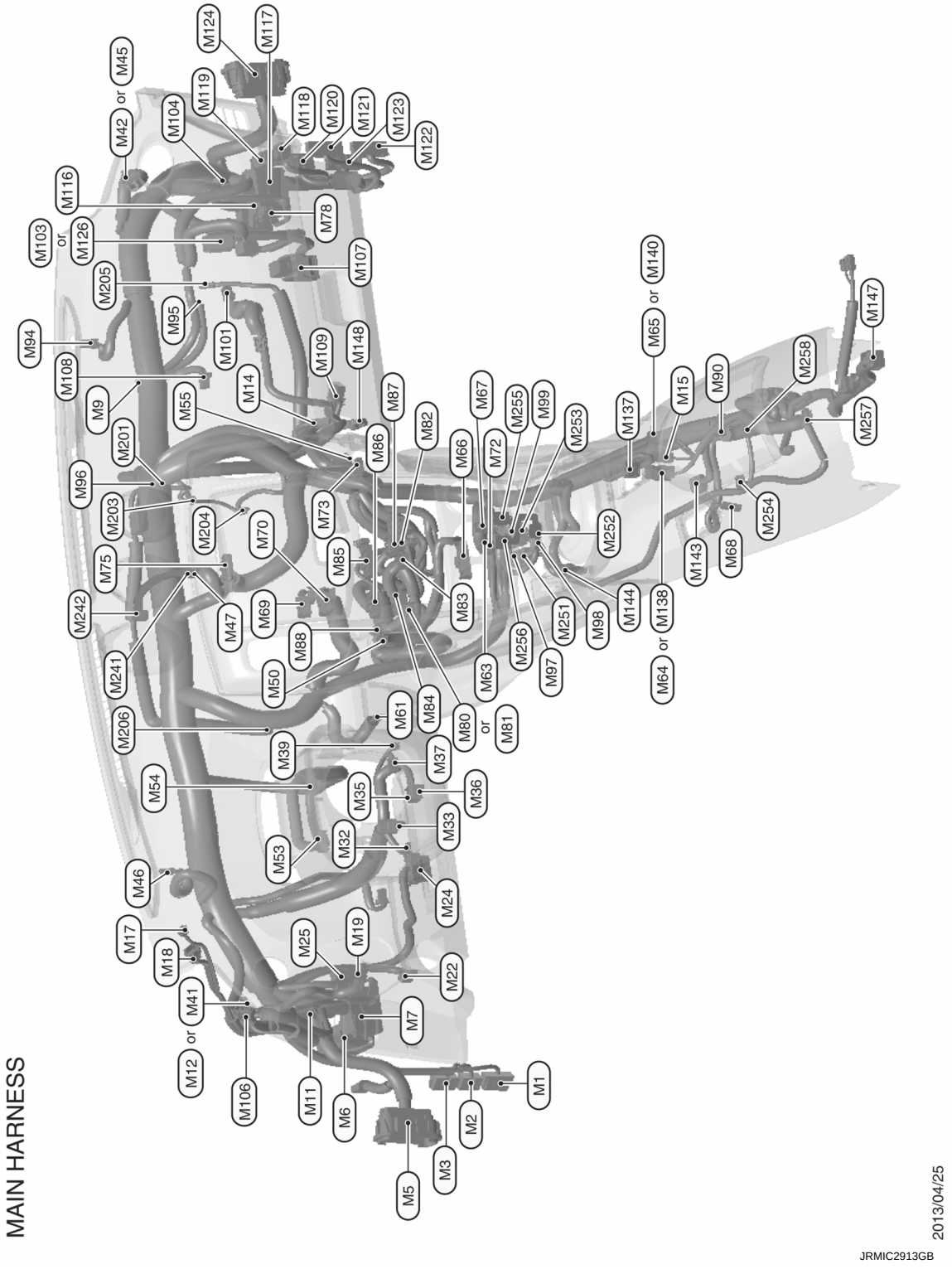

Body Harness

INFOID:0000000009358097

BODY HARNESS

BODY HARNESS (COUPE MODELS)

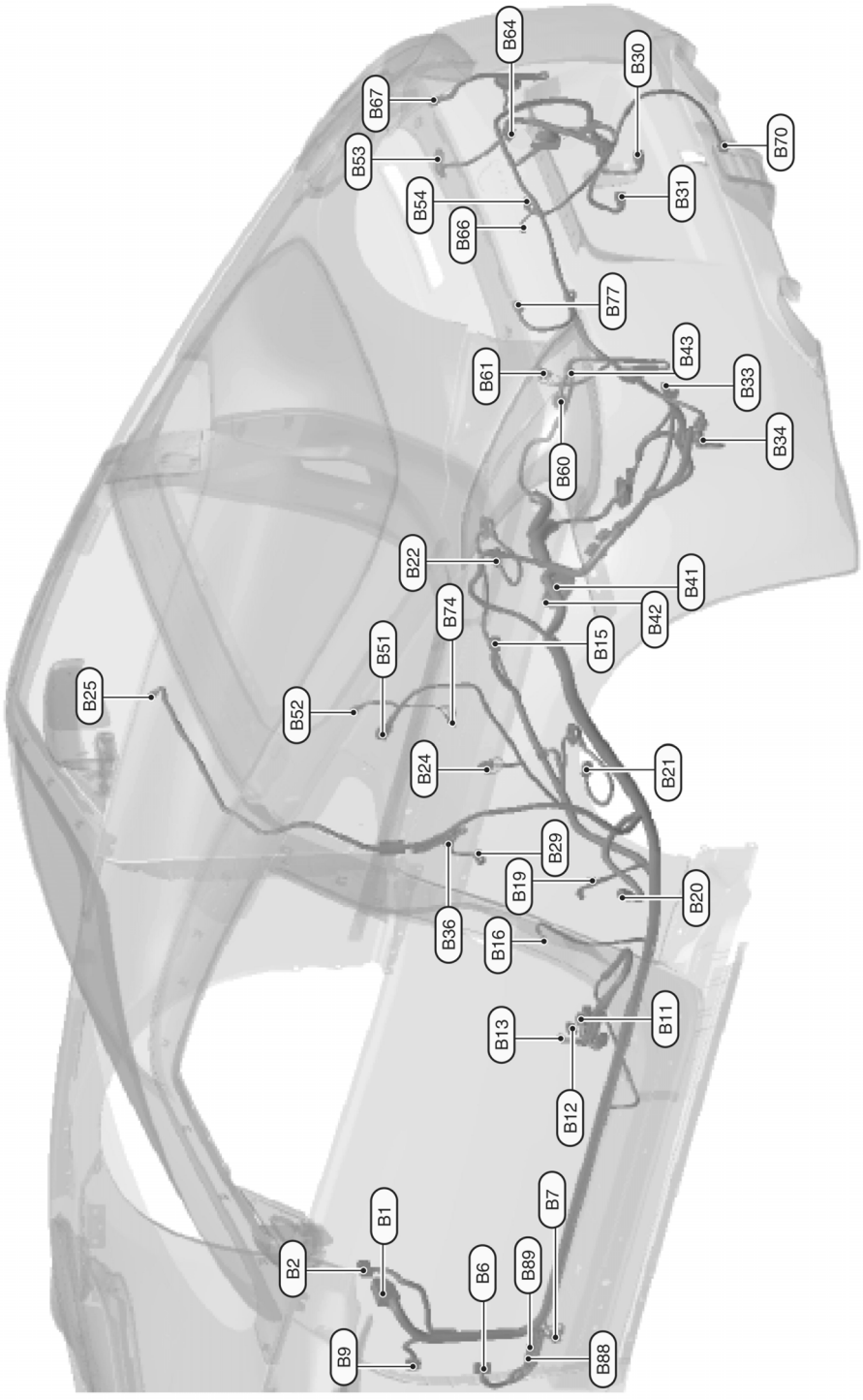

2012/04/18

JRMIC1557GB

BODY HARNESS (ROADSTER MODELS)

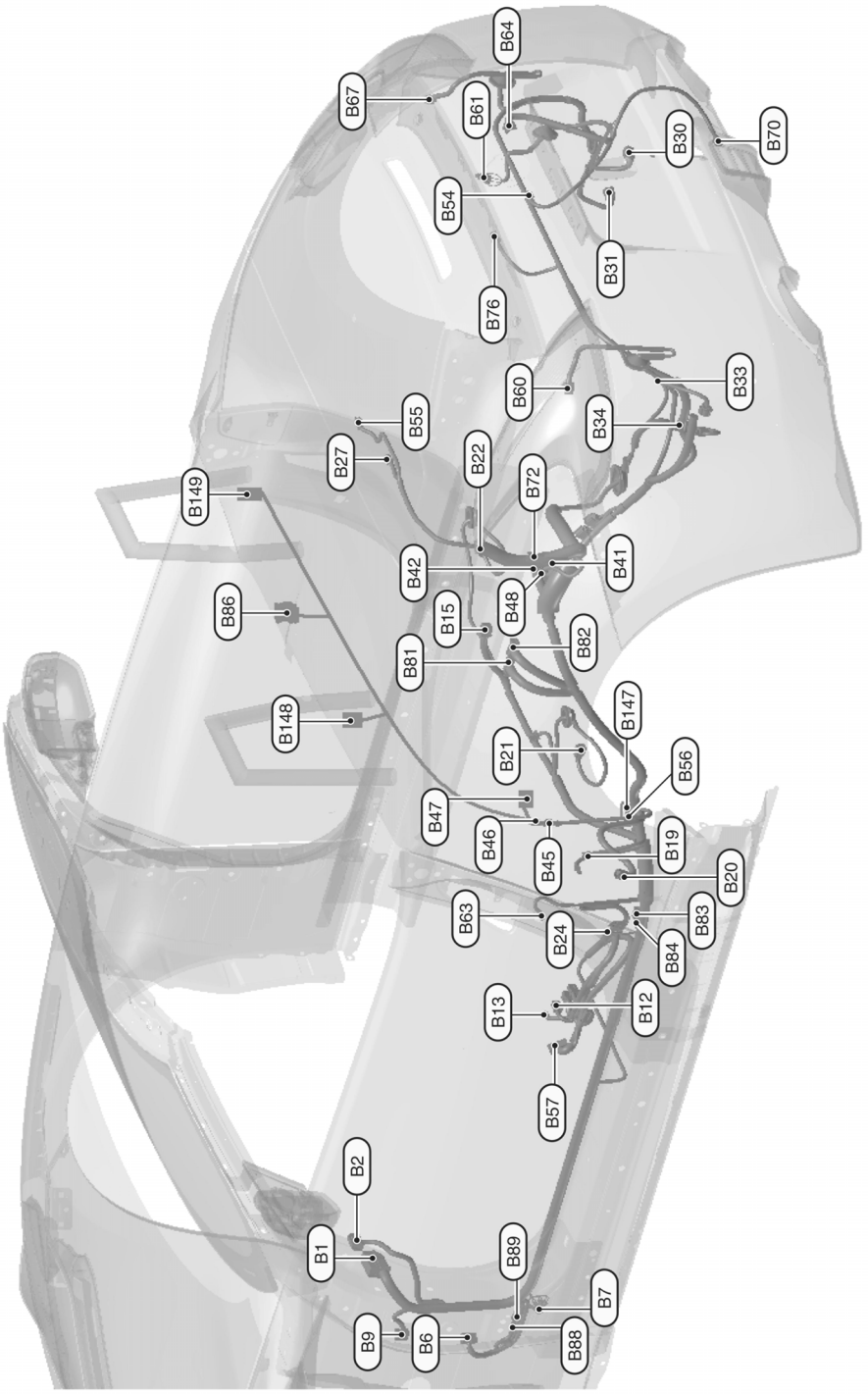

2012/04/18

JRMIC1558GB

BODY No. 2 HARNESS

BODY No. 2 HARNESS (COUPE MODELS)

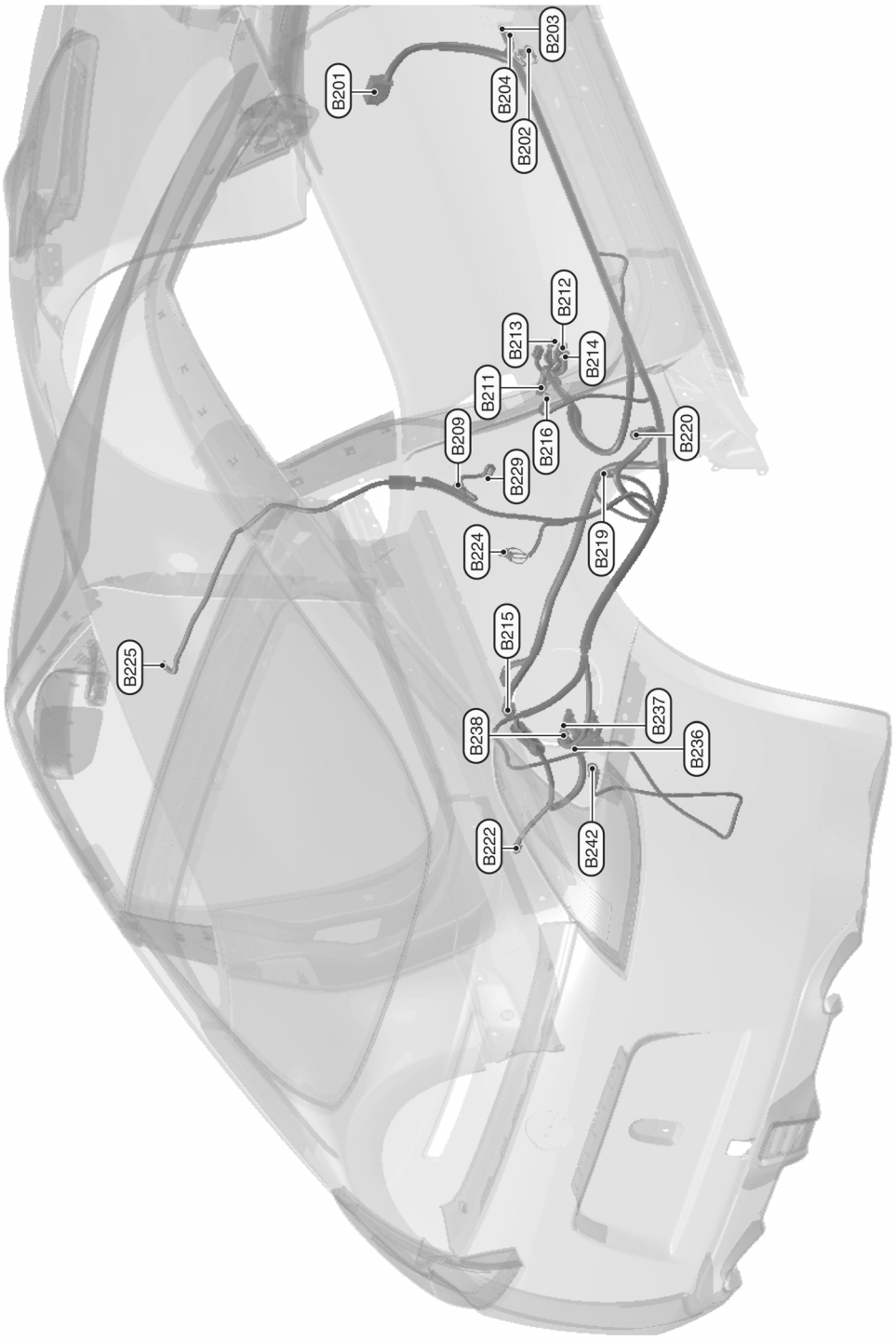

2012/04/18
JRMIC1559GB

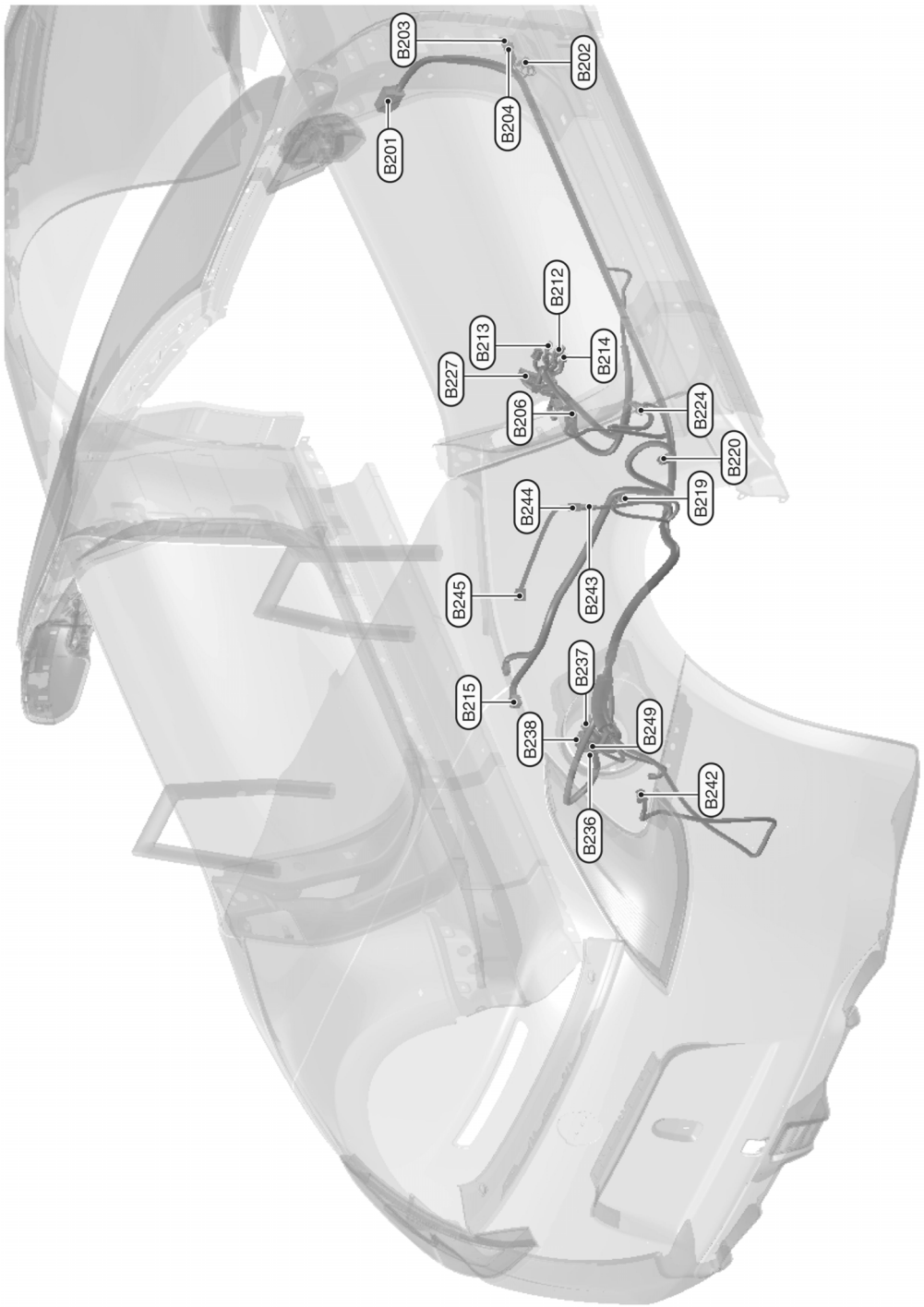
B203
B202
B204
B201
B212
B213
B214
B227
B206
B224
B220
B219
B244
B245
B243
B237
B215
B238
B249
B242
B236
BODY No. 2 HARNESS (ROADSTER MODELS)
2012/04/18
JRMIC1560GB

Door Harness

INFOID:0000000009358098

DOOR HARNESS (DRIVER SIDE DOOR)

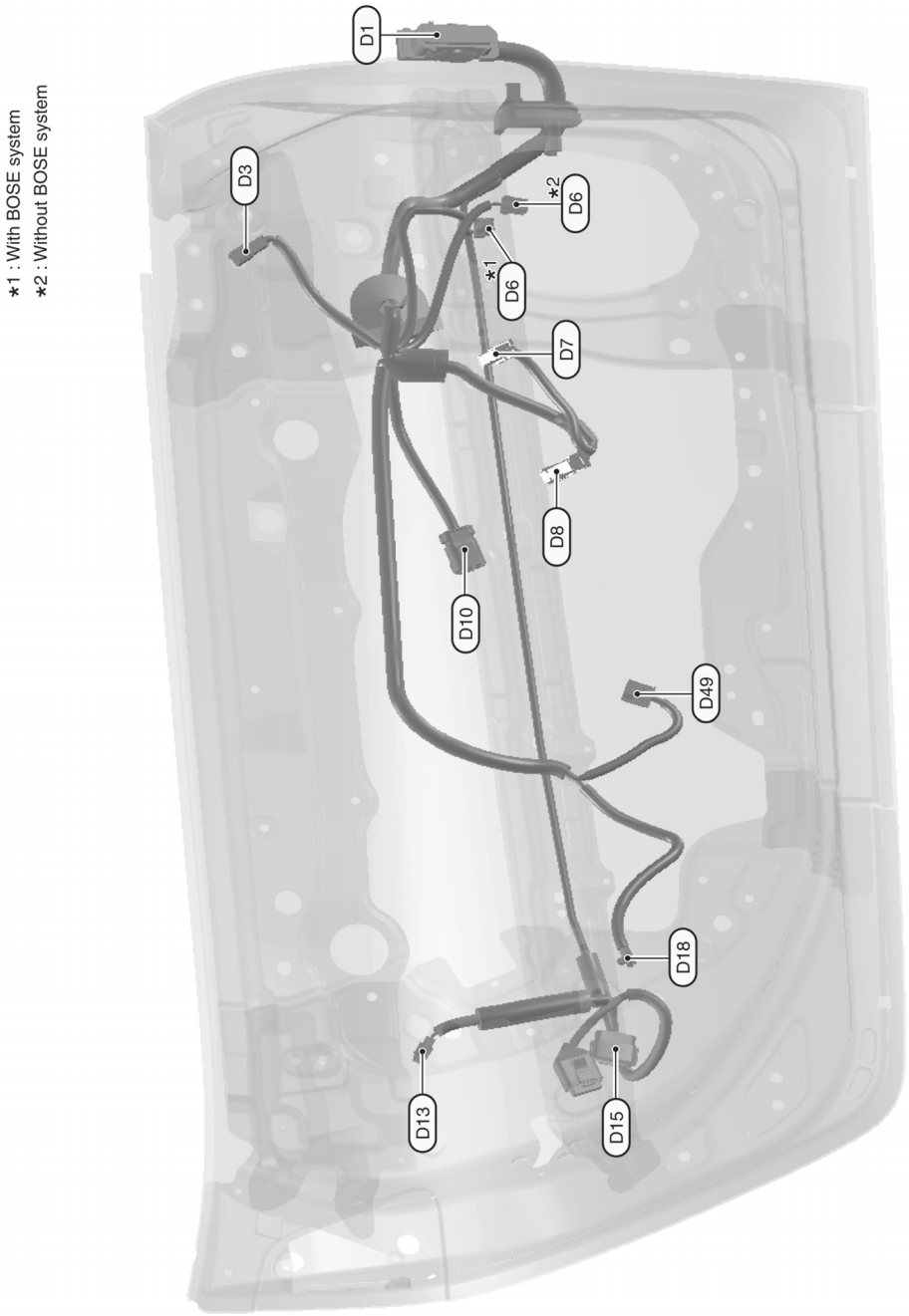

DOOR HARNESS (PASSENGER SIDE DOOR)

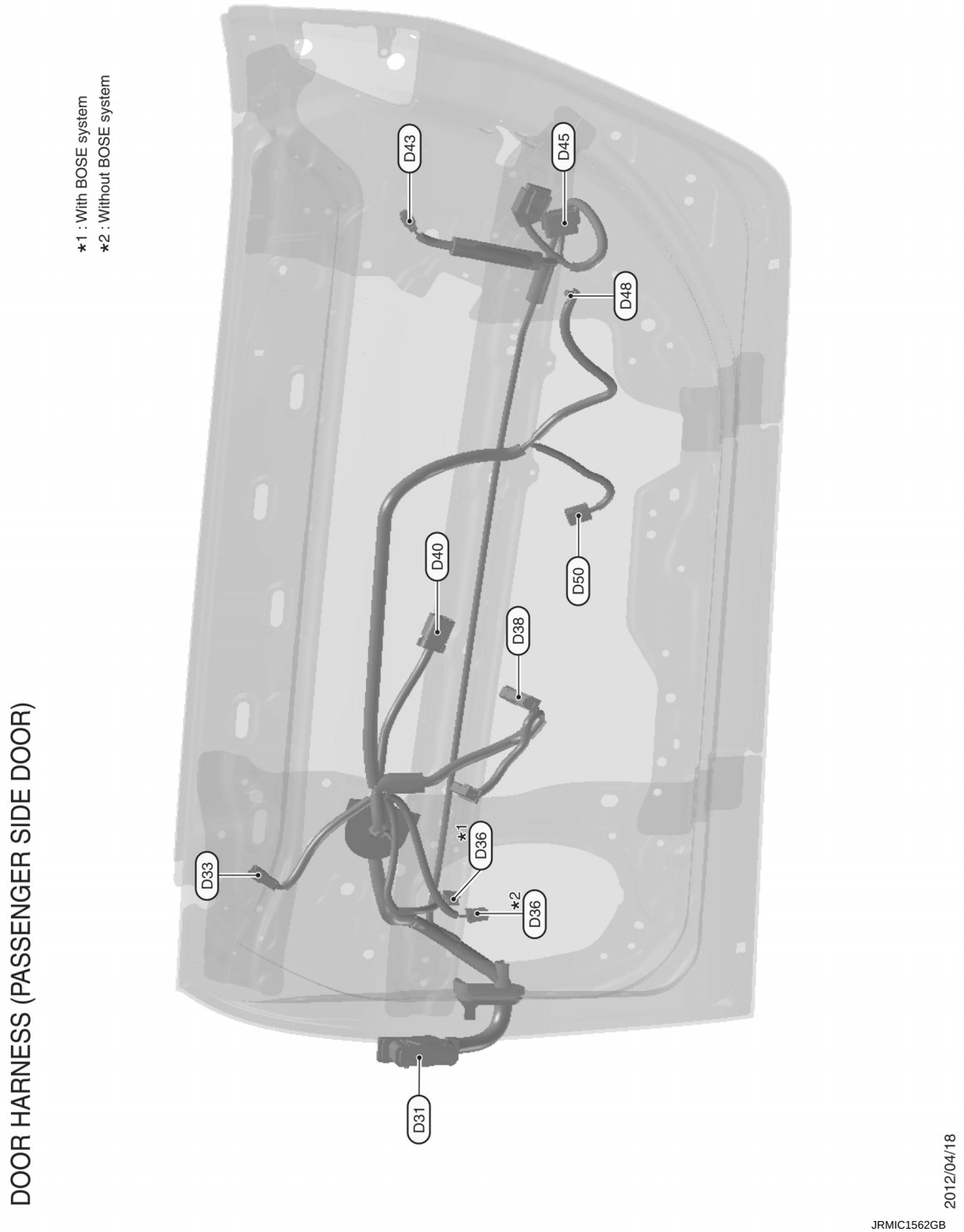

BACK DOOR HARNESS

BACK DOOR HARNESS (COUPE MODELS)

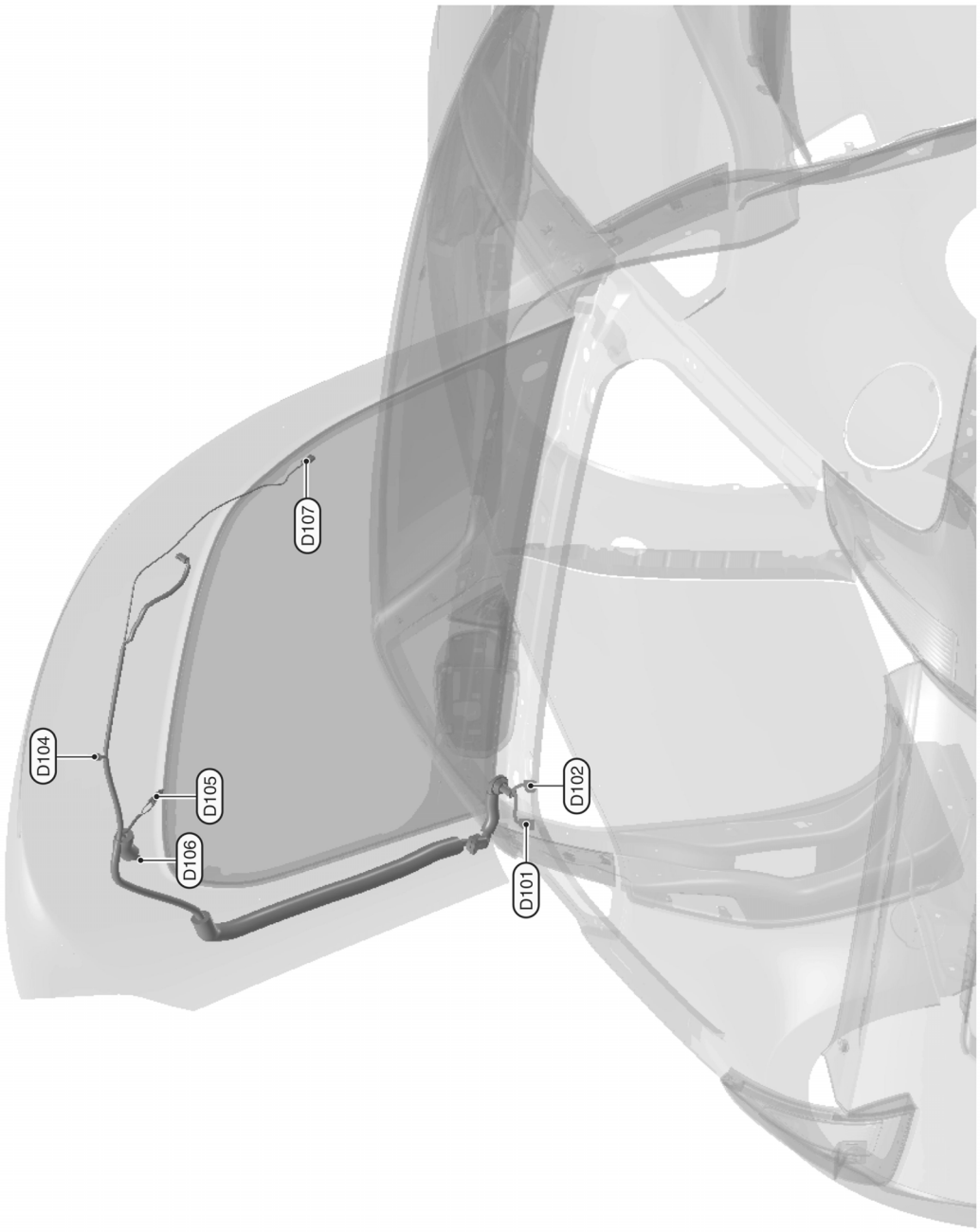

2012/04/18

JRMIC1563GB

BACK DOOR HARNESS (ROADSTER MODELS)

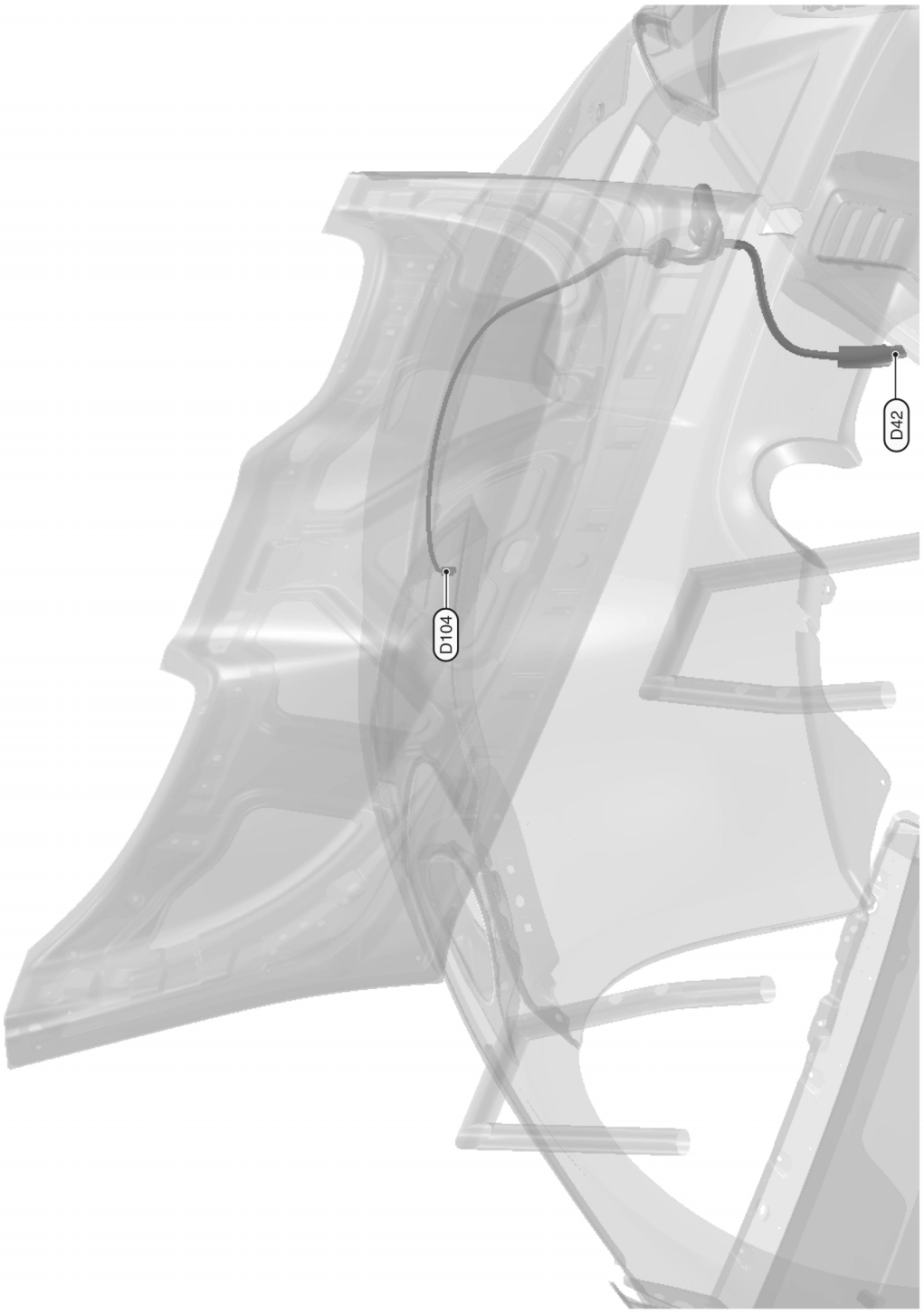

2012/04/18

JRMIC1564GB

Room Lamp Harness

INFOID:0000000009358099

COUPE MODELS

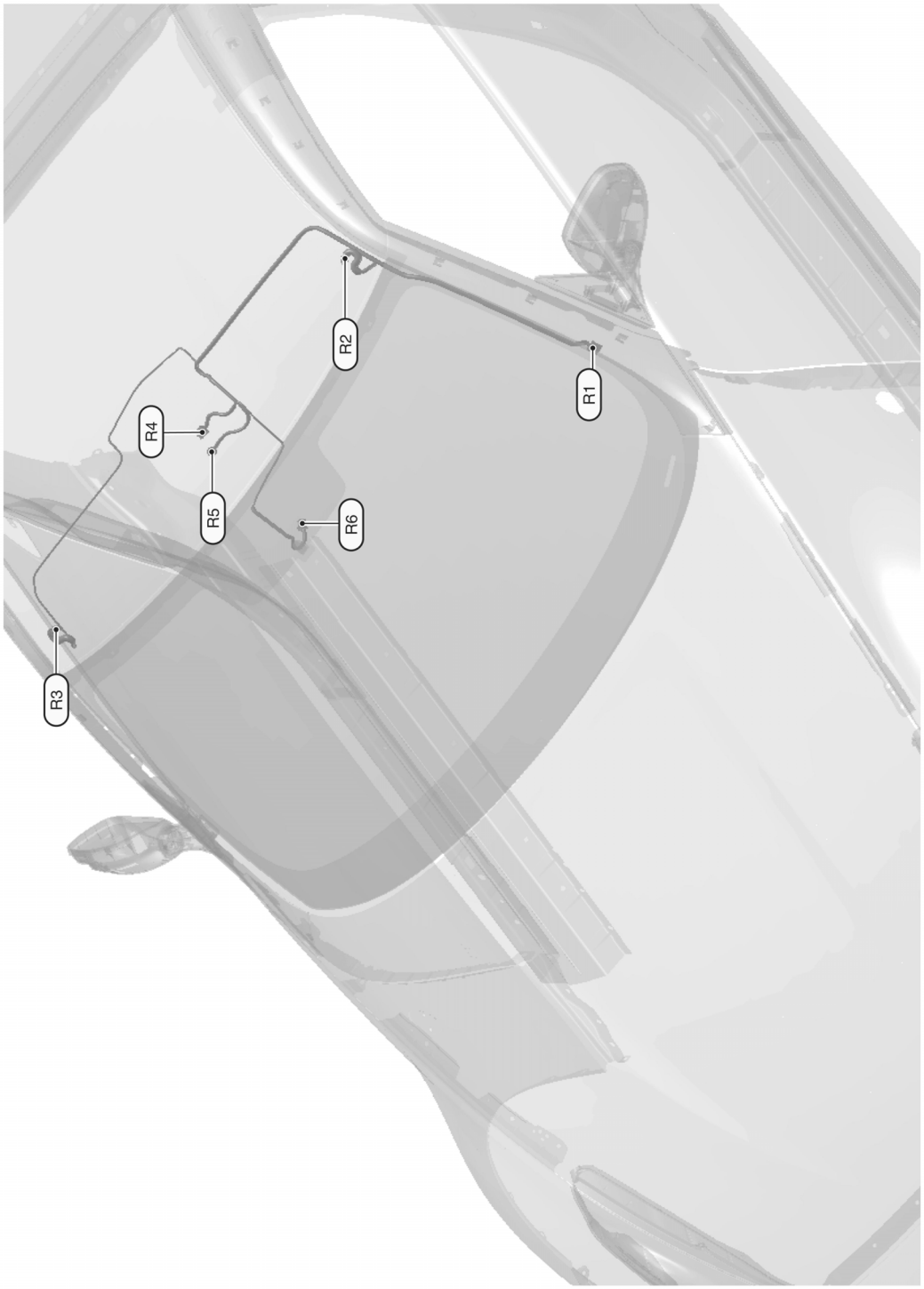

ROOM LAMP HARNESS (COUPE MODELS)

2012/04/18

JRMIC1565GB

ROOM LAMP HARNESS (ROADSTER MODELS)

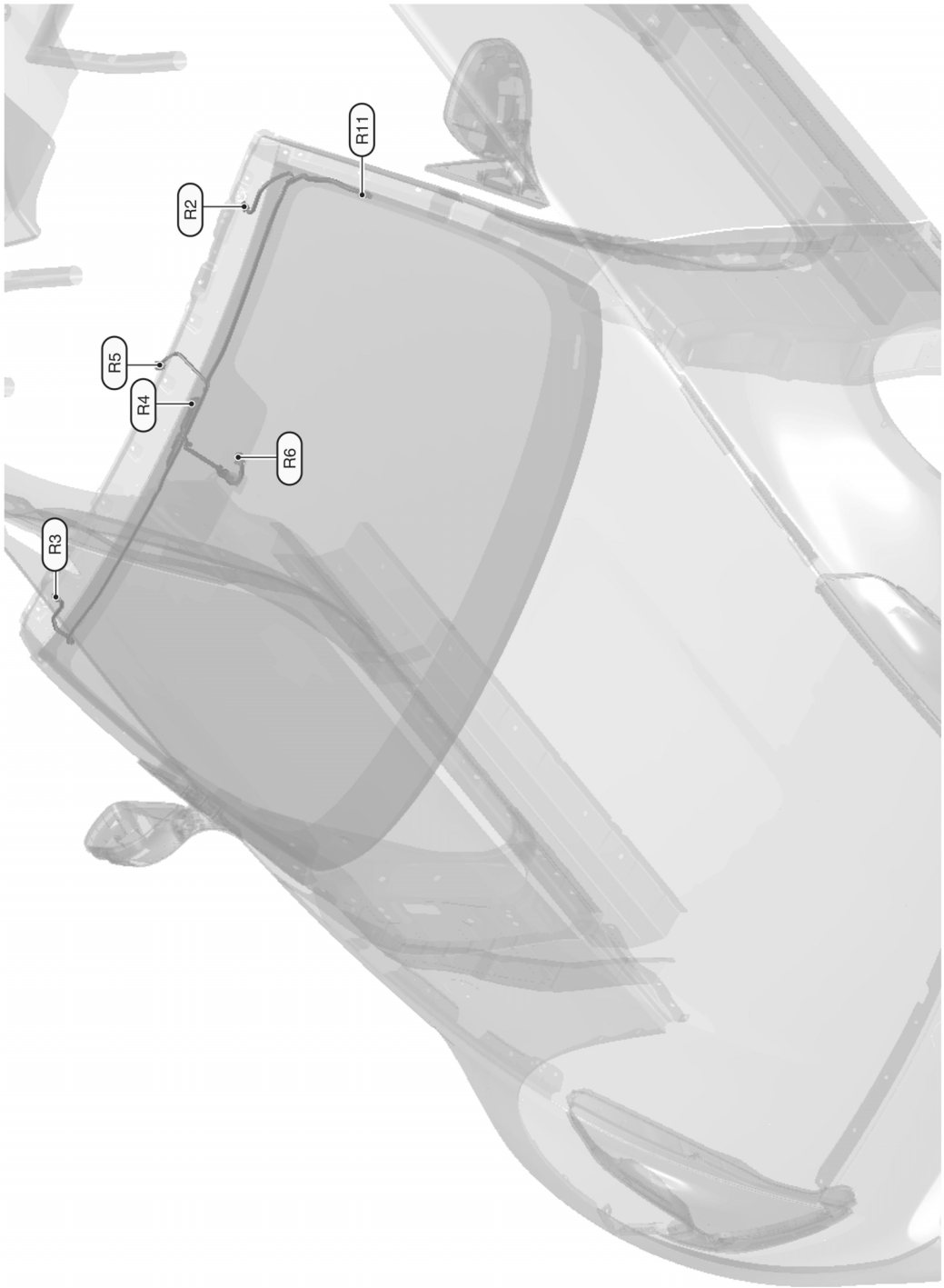

HARNESS CONNECTOR

Description

INFOID:0000000009358107

HARNESS CONNECTOR (TAB-LOCKING TYPE)

- The tab-locking type connectors help prevent accidental looseness or disconnection.
- The tab-locking type connectors are disconnected by pushing or lifting the locking tab(s). Refer to the figure below.

CAUTION:

Never pull the harness or wires when disconnecting the connector.

[Example]

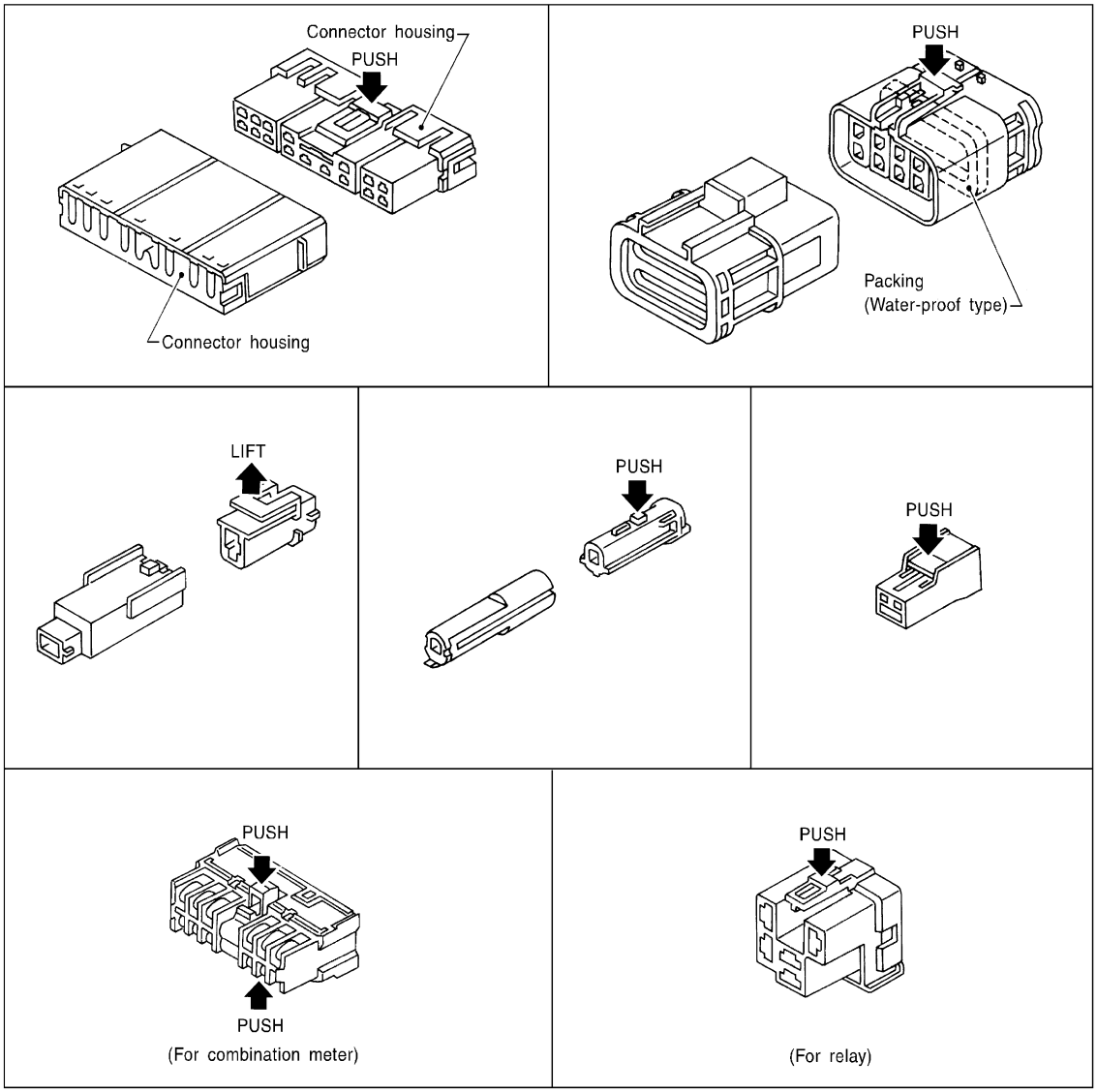

SEL769DA

HARNESS CONNECTOR (SLIDE-LOCKING TYPE)

- A new style slide-locking type connector is used on certain systems and components, especially those related to OBD.
- The slide-locking type connectors help prevent incomplete locking and accidental looseness or disconnection.
- The slide-locking type connectors are disconnected by pushing or pulling the slider. Refer to the figure below.

CAUTION:

- **Never pull the harness or wires when disconnecting the connector.**
- **Be careful not to damage the connector support bracket when disconnecting the connector.**

[Example]

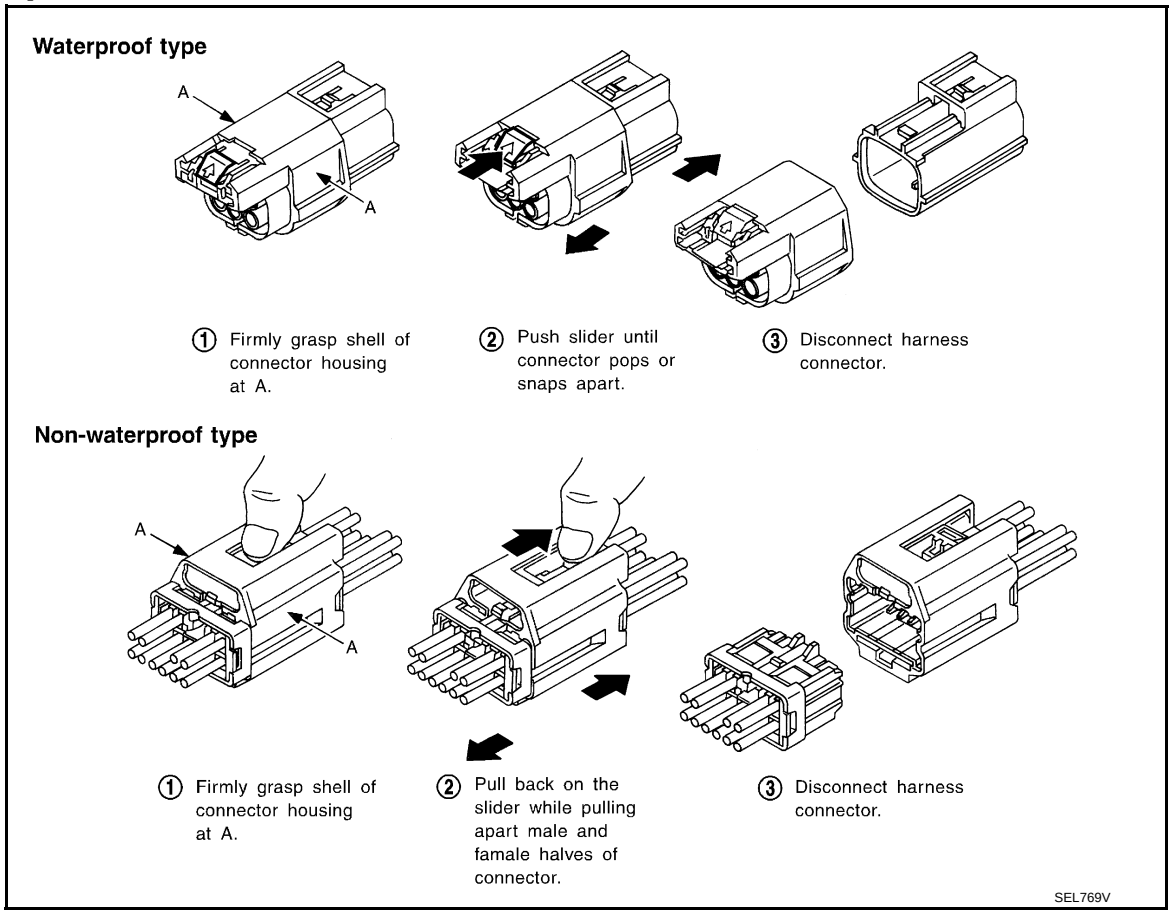

HARNESS CONNECTOR (LEVER LOCKING TYPE)

- Lever locking type harness connectors are used on certain control units and control modules such as ECM, ABS actuator and electric unit (control unit), etc.
- Lever locking type harness connectors are also used on super multiple junction (SMJ) connectors.
- Always confirm the lever is fully locked in place by moving the lever as far as it will go to ensure full connection.

CAUTION:

Always confirm the lever is fully released (loosened) before attempting to disconnect or connect these connectors to avoid damage to the connector housing or terminals.

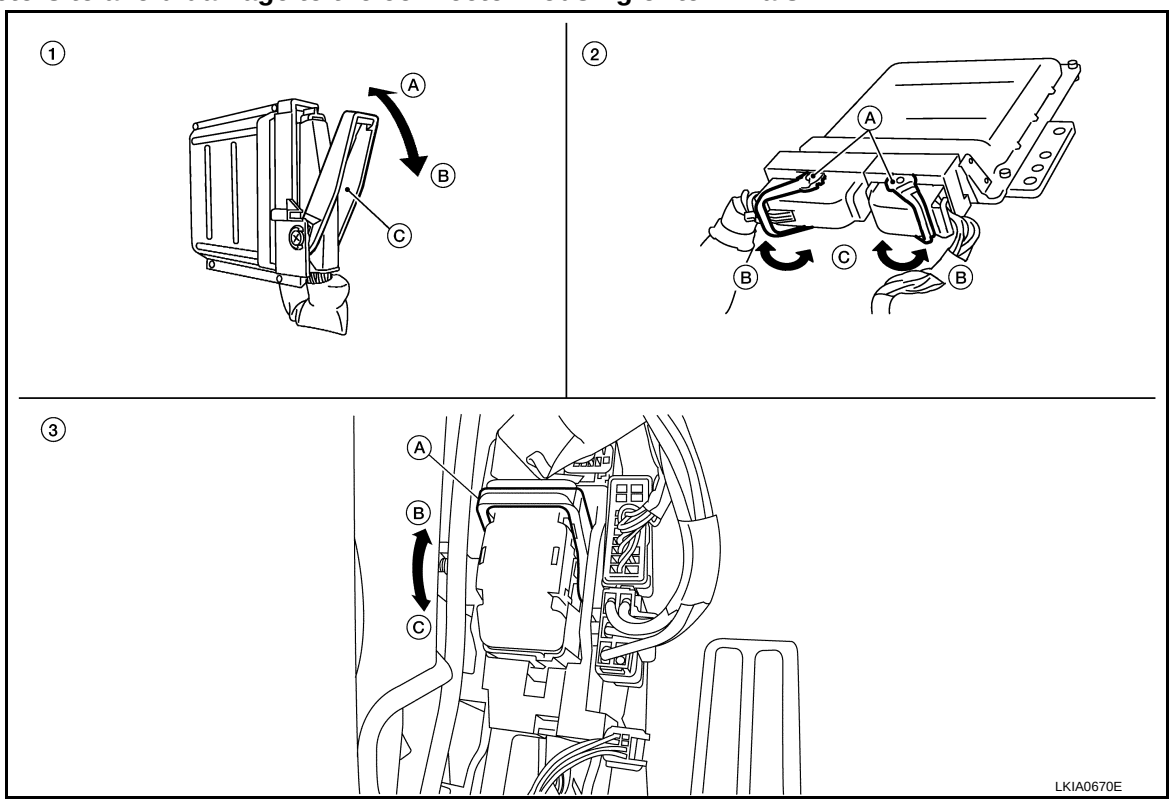

1. Control unit with single lever
   A. Fasten
   B. Loosen
   C. Lever
2. Control unit with dual levers
   A. Levers
   B. Fasten
   C. Loosen
3. SMJ connector
   A. Lever
   B. Fasten
   C. Loosen

STANDARDIZED RELAY

Description

INFOID:0000000009358108

NORMAL OPEN, NORMAL CLOSED AND MIXED TYPE RELAYS

Relays can mainly be divided into three types: normal open, normal closed and mixed type relays.

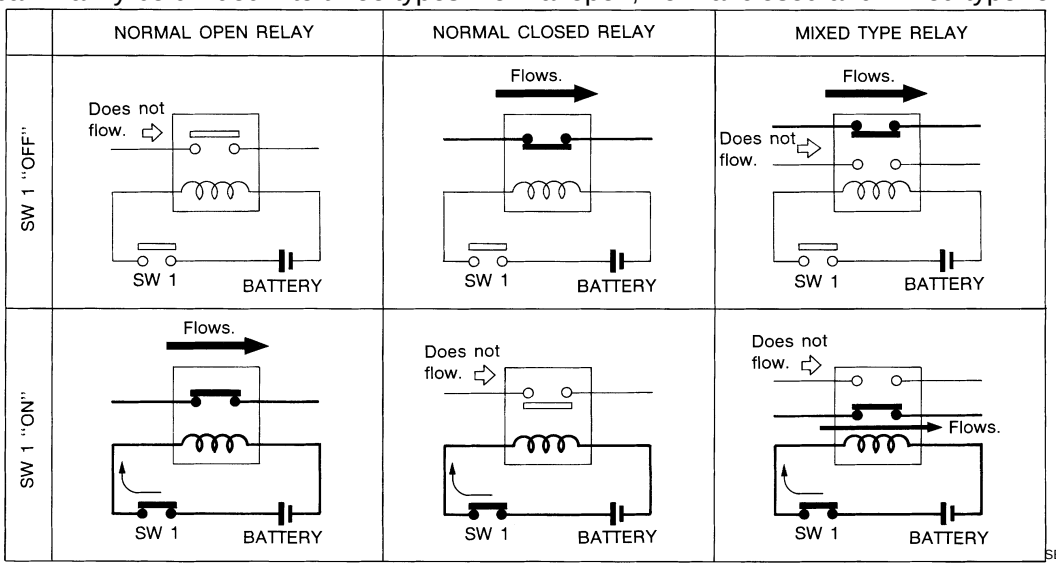

SEL881H

TYPE OF STANDARDIZED RELAYS

1M ..... 1 Make
2M ..... 2 Make
1T ..... 1 Transfer
1M·1B ..... 1 Make 1 Break

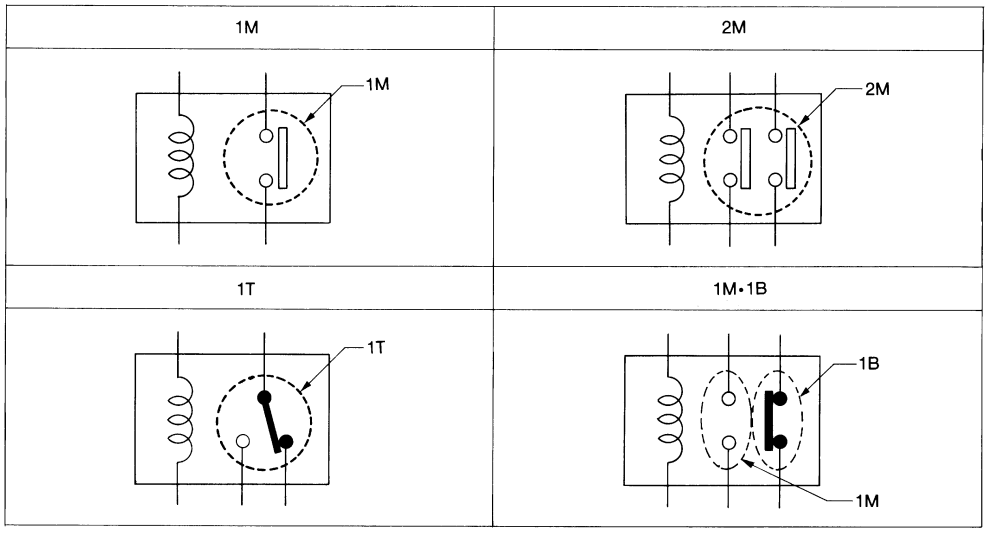

SEL882H

Type	Outer view	Circuit	Connector symbol and connection	Case color
1T	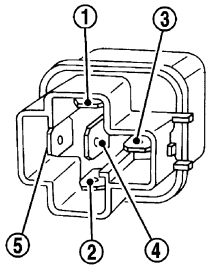	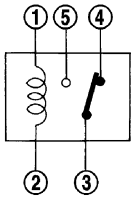	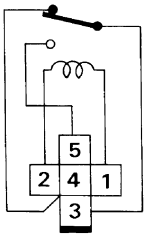	BLACK
2M	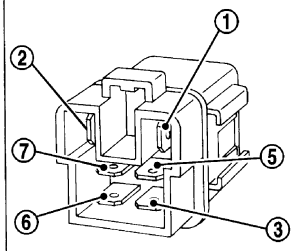	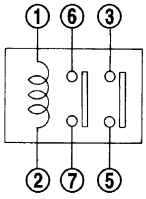	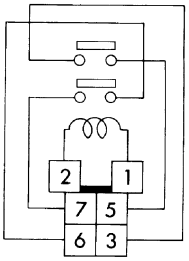	BROWN
1M•1B	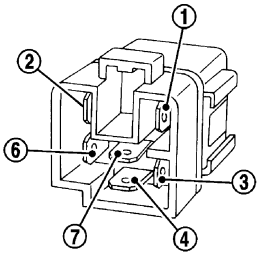	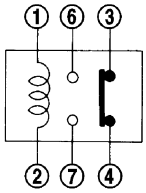	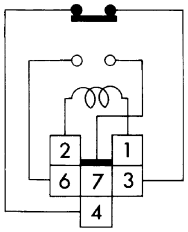	GRAY
1M	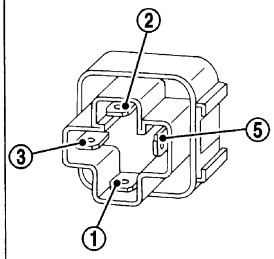 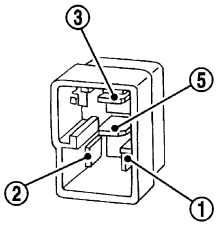	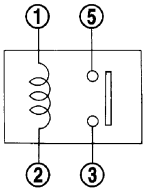	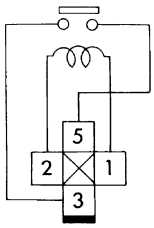 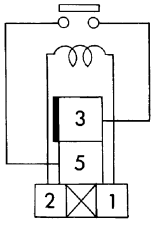	BLUE

The arrangement of terminal numbers on the actual relays may differ from those shown above.

SEL188W

FUSE BLOCK - JUNCTION BOX (J/B)

Fuse, Connector and Terminal Arrangement

INFOID:0000000009358109

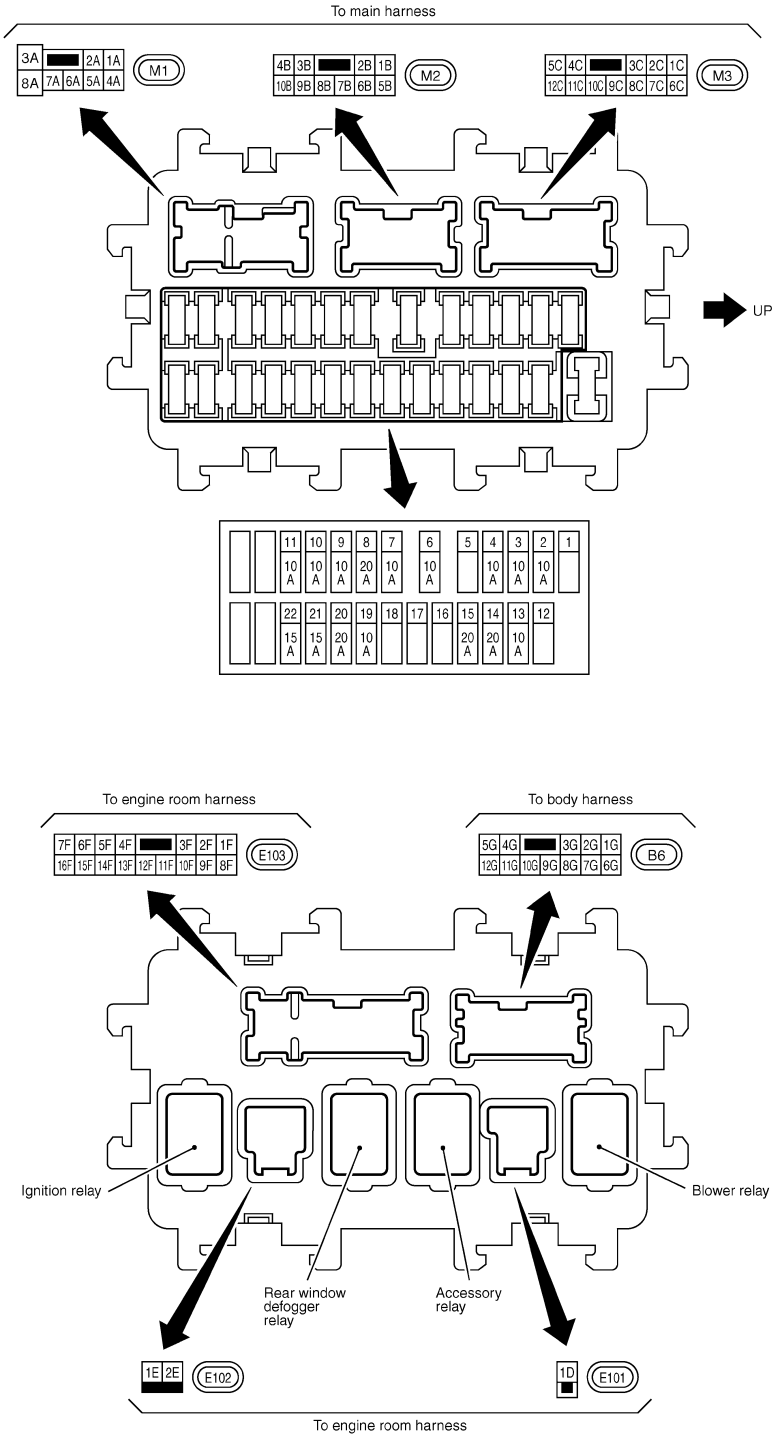

2011/07/19

JRMWC4677GB

FUSE, FUSIBLE LINK AND RELAY BOX

Fuse and Fusible Link Arrangement

INFOID:0000000009358110

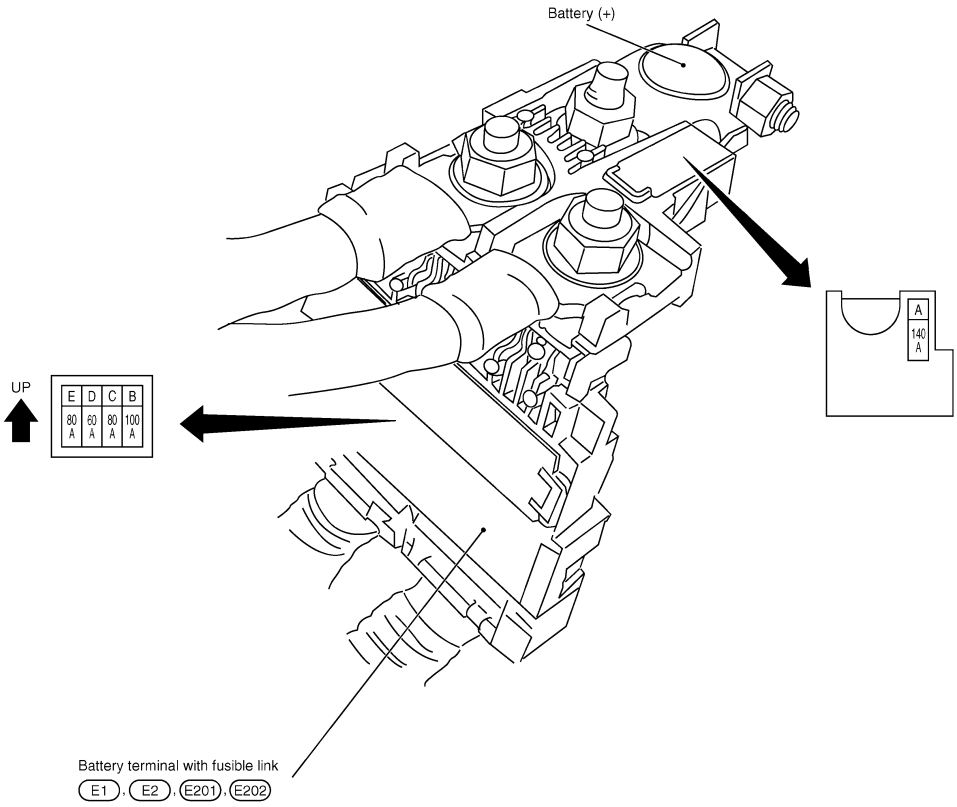

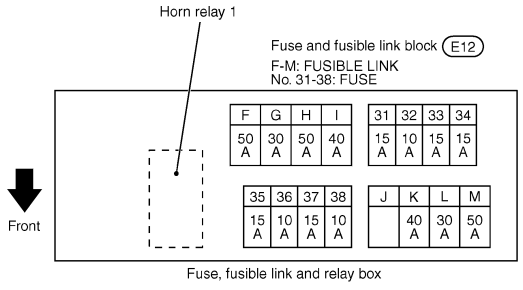

2011/07/19

JRMWC4678GB

IPDM E/R (INTELLIGENT POWER DISTRIBUTION MODULE ENGINE ROOM)

Fuse, Connector and Terminal Arrangement

INFOID:0000000009358111

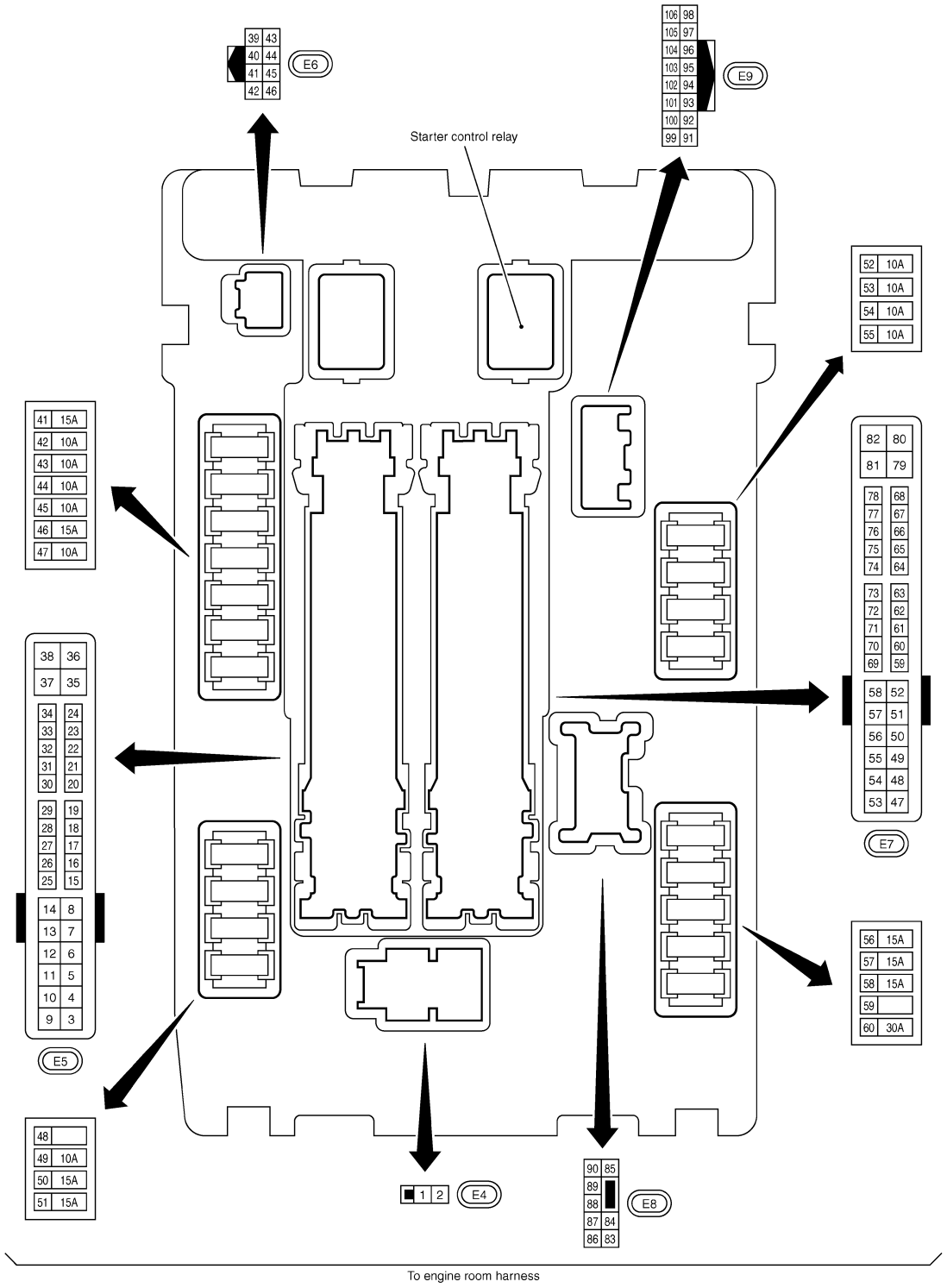

2012/04/18

JRMWD0800GB

PRECAUTION

PRECAUTIONS

EXCEPT FOR MEXICO

EXCEPT FOR MEXICO : Precaution for Supplemental Restraint System (SRS) "AIR BAG" and "SEAT BELT PRE-TENSIONER"

INFOID:0000000009358112

The Supplemental Restraint System such as “AIR BAG” and “SEAT BELT PRE-TENSIONER”, used along with a front seat belt, helps to reduce the risk or severity of injury to the driver and front passenger for certain types of collision. This system includes seat belt switch inputs and dual stage front air bag modules. The SRS system uses the seat belt switches to determine the front air bag deployment, and may only deploy one front air bag, depending on the severity of a collision and whether the front occupants are belted or unbelted. Information necessary to service the system safely is included in the “SRS AIR BAG” and “SEAT BELT” of this Service Manual.

WARNING:

Always observe the following items for preventing accidental activation.

- **To avoid rendering the SRS inoperative, which could increase the risk of personal injury or death in the event of a collision that would result in air bag inflation, all maintenance must be performed by an authorized NISSAN/INFINITI dealer.**
- **Improper maintenance, including incorrect removal and installation of the SRS, can lead to personal injury caused by unintentional activation of the system. For removal of Spiral Cable and Air Bag Module, see “SRS AIR BAG”.**
- **Never use electrical test equipment on any circuit related to the SRS unless instructed to in this Service Manual. SRS wiring harnesses can be identified by yellow and/or orange harnesses or harness connectors.**

PRECAUTIONS WHEN USING POWER TOOLS (AIR OR ELECTRIC) AND HAMMERS

WARNING:

Always observe the following items for preventing accidental activation.

- **When working near the Air Bag Diagnosis Sensor Unit or other Air Bag System sensors with the ignition ON or engine running, never use air or electric power tools or strike near the sensor(s) with a hammer. Heavy vibration could activate the sensor(s) and deploy the air bag(s), possibly causing serious injury.**
- **When using air or electric power tools or hammers, always switch the ignition OFF, disconnect the battery, and wait at least 3 minutes before performing any service.**

EXCEPT FOR MEXICO : Precaution for Battery Service

INFOID:0000000009358113

Before disconnecting the battery, lower both the driver and passenger windows. This will prevent any interference between the window edge and the vehicle when the door is opened/closed. During normal operation, the window slightly raises and lowers automatically to prevent any window to vehicle interference. The automatic window function will not work with the battery disconnected.

EXCEPT FOR MEXICO : Precaution for Procedure without Cowl Top Cover

INFOID:0000000009358114

When performing the procedure after removing cowl top cover, cover the lower end of windshield with urethane, etc to prevent damage to windshield.

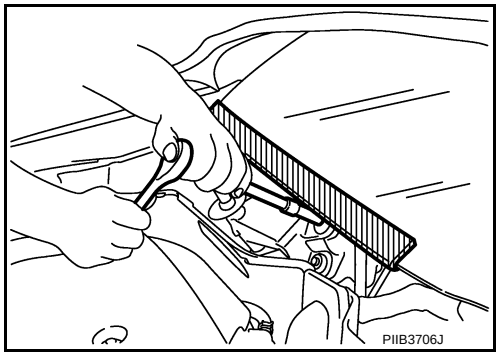

FOR MEXICO

FOR MEXICO : Precaution for Supplemental Restraint System (SRS) "AIR BAG" and "SEAT BELT PRE-TENSIONER"

INFOID:0000000009358115

The Supplemental Restraint System such as “AIR BAG” and “SEAT BELT PRE-TENSIONER”, used along with a front seat belt, helps to reduce the risk or severity of injury to the driver and front passenger for certain types of collision. Information necessary to service the system safely is included in the “SRS AIR BAG” and “SEAT BELT” of this Service Manual.

WARNING:

Always observe the following items for preventing accidental activation.

- **To avoid rendering the SRS inoperative, which could increase the risk of personal injury or death in the event of a collision that would result in air bag inflation, all maintenance must be performed by an authorized NISSAN/INFINITI dealer.**
- **Improper maintenance, including incorrect removal and installation of the SRS, can lead to personal injury caused by unintentional activation of the system. For removal of Spiral Cable and Air Bag Module, see “SRS AIR BAG”.**
- **Never use electrical test equipment on any circuit related to the SRS unless instructed to in this Service Manual. SRS wiring harnesses can be identified by yellow and/or orange harnesses or harness connectors.**

PRECAUTIONS WHEN USING POWER TOOLS (AIR OR ELECTRIC) AND HAMMERS

WARNING:

Always observe the following items for preventing accidental activation.

- **When working near the Air Bag Diagnosis Sensor Unit or other Air Bag System sensors with the ignition ON or engine running, never use air or electric power tools or strike near the sensor(s) with a hammer. Heavy vibration could activate the sensor(s) and deploy the air bag(s), possibly causing serious injury.**
- **When using air or electric power tools or hammers, always switch the ignition OFF, disconnect the battery, and wait at least 3 minutes before performing any service.**

FOR MEXICO : Precaution for Battery Service

INFOID:0000000009358116

Before disconnecting the battery, lower both the driver and passenger windows. This will prevent any interference between the window edge and the vehicle when the door is opened/closed. During normal operation, the window slightly raises and lowers automatically to prevent any window to vehicle interference. The automatic window function will not work with the battery disconnected.

FOR MEXICO : Precaution for Procedure without Cowl Top Cover

INFOID:0000000009358117

When performing the procedure after removing cowl top cover, cover the lower end of windshield with urethane, etc to prevent damage to windshield.

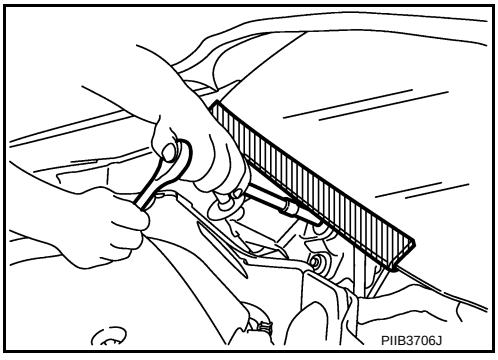

PREPARATION

PREPARATION

Special Service Tools

INFOID:0000000009358118

Tool number (Kent-Moore No.) Tool name		Description
— (—) Model GR8-1200 NI Multitasking battery and electrical diagnostic station	 AWIIA1239ZZ	Tests batteries, starting and charging systems and charges batteries. For operating instructions, refer to diagnostic station instruction manual.
— (—) Model EXP-800 NI Battery and electrical diagnostic analyzer	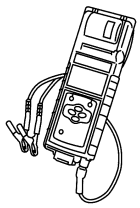 JSMIA0806ZZ	Tests batteries and charging systems. For operating instructions, refer to diagnostic analyzer instruction manual.

REMOVAL AND INSTALLATION

BATTERY

Exploded View

INFOID:0000000009358119

1 : Battery fix frame

Refer to GI-4, "Components" for symbols in the figure.

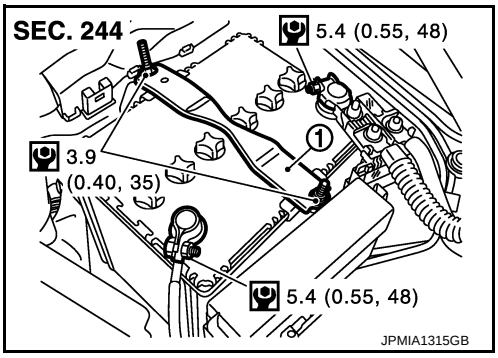

Removal and Installation

INFOID:0000000009358120

REMOVAL

1. Remove battery cover.
2. Remove cowl top cover RH. Refer to EXT-22, "Exploded View".
3. Remove cover of battery positive terminal.
4. Loosen battery terminal nuts (1), and disconnect both battery cables from battery terminals.
   CAUTION:
   When disconnecting, disconnect the battery cable from the negative terminal first.
5. Remove battery fix frame mounting nuts (2) and battery fix frame (3).
6. Remove battery.

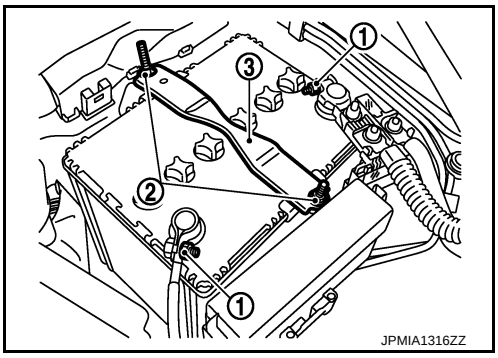

INSTALLATION

Install in the reverse order of removal.

CAUTION:

When connecting, connect the battery cable to the positive terminal first.

Reset electronic systems as necessary. Refer to GI-59, "ADDITIONAL SERVICE WHEN REMOVING BATTERY NEGATIVE TERMINAL : Required Procedure After Battery Disconnection".

BATTERY TERMINAL WITH FUSIBLE LINK

Exploded View

INFOID:0000000009358121

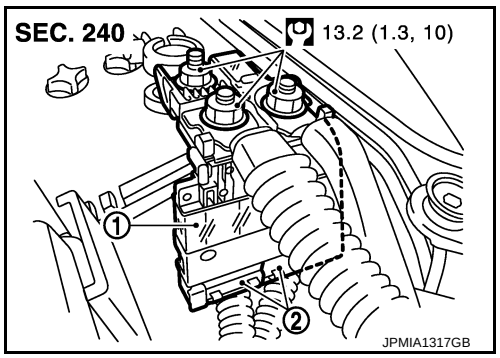

1 : Battery terminal with fusible link
2 : Harness connector
Refer to GI-4, "Components" for symbols in the figure.

Removal and Installation

INFOID:0000000009358122

REMOVAL

1. Remove battery cover.
2. Disconnect the battery cable from the negative terminal.
3. Remove cover of battery positive terminal.
4. Remove harness mounting nuts (1) and battery terminal with fusible link mounting nut (2).
5. Disconnect harness connector (3) and remove battery terminal with fusible link (4).

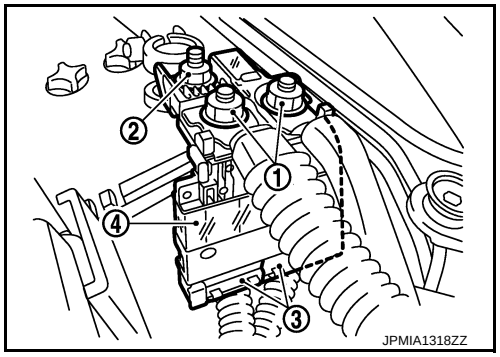

INSTALLATION

Install in the reverse order of removal.

SERVICE DATA AND SPECIFICATIONS (SDS)

SERVICE DATA AND SPECIFICATIONS (SDS)

Battery

INFOID:0000000009358123

Type		80D23L
20 hour rate capacity	[V – Ah]	12 – 62
Cold cranking current (For reference value)	[A]	582