SECTION EC
ENGINE CONTROL SYSTEM

CONTENTS

QR25DE

BASIC INSPECTION

DIAGNOSIS AND REPAIR WORKFLOW

Work Flow

INFOID:0000000003069075

EC

OVERALL SEQUENCE

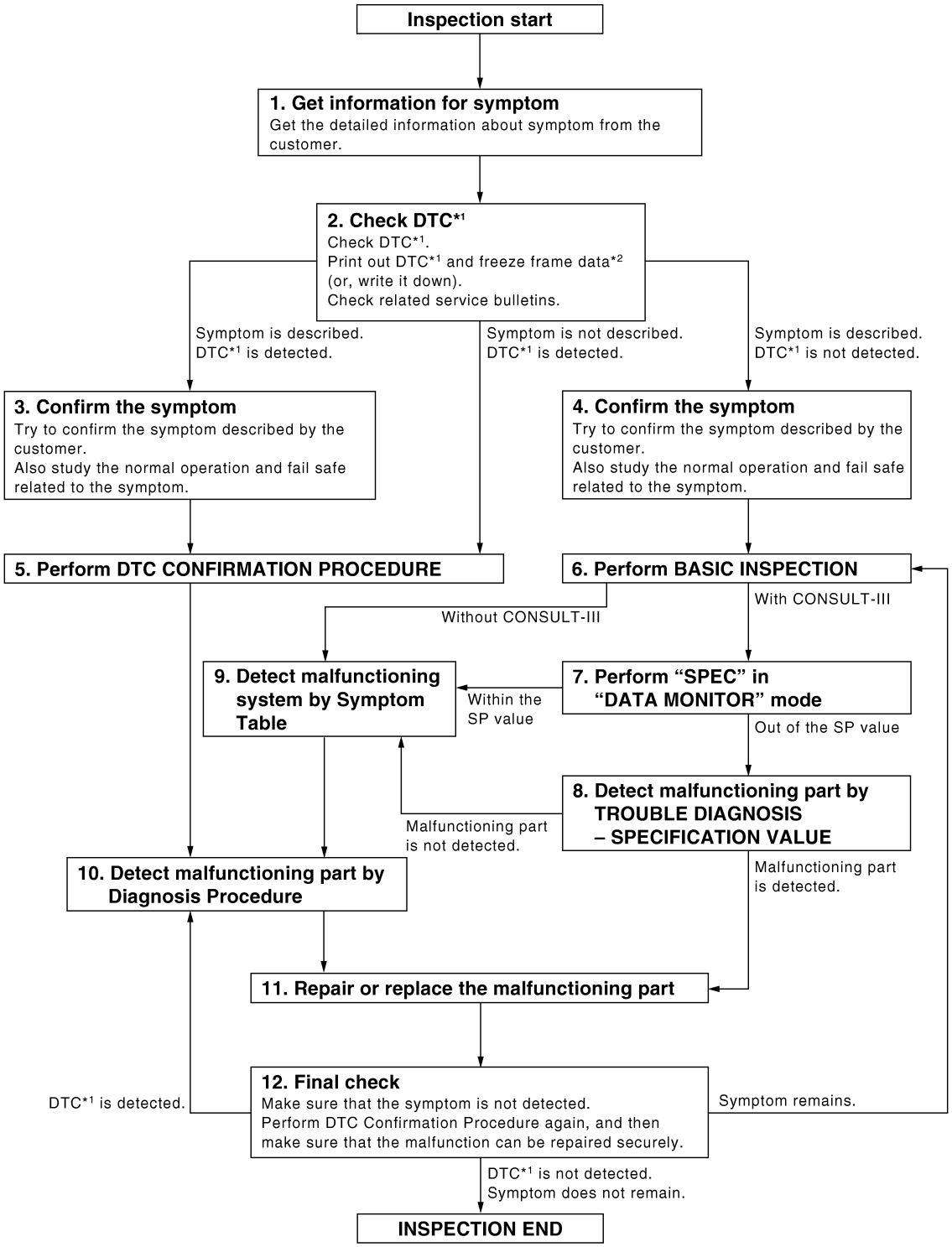

*1: Include 1st trip DTC.
*2: Include 1st trip freeze frame data.

JMBIA0078GB

DETAILED FLOW

1. GET INFORMATION FOR SYMPTOM

Get the detailed information from the customer about the symptom (the condition and the environment when the incident/malfunction occurred) using the “Diagnostic Work Sheet”. (Refer to EC-9, "Diagnostic Work Sheet".)

>> GO TO 2.

2. CHECK DTC

1. Check DTC.
2. Perform the following procedure if DTC is displayed.
- Record DTC and freeze frame data. (Print them out with CONSULT-III or GST.)
- Erase DTC. (Refer to EC-86, "Diagnosis Description".)
- Study the relationship between the cause detected by DTC and the symptom described by the customer. (Symptom Table is useful. Refer to EC-443, "Symptom Table".)
3. Check related service bulletins for information.

Is any symptom described and is any DTC detected?

Symptom is described, DTC is detected>>GO TO 3.
Symptom is described, DTC is not detected>>GO TO 4.
Symptom is not described, DTC is detected>>GO TO 5.

3. CONFIRM THE SYMPTOM

Try to confirm the symptom described by the customer (except MIL ON).
Also study the normal operation and fail safe related to the symptom. Refer to EC-447, "Description" and EC-432, "Fail Safe".
Diagnosis Work Sheet is useful to verify the incident.
Verify relation between the symptom and the condition when the symptom is detected.

>> GO TO 5.

4. CONFIRM THE SYMPTOM

Try to confirm the symptom described by the customer.
Also study the normal operation and fail safe related to the symptom. Refer to EC-447, "Description" and EC-432, "Fail Safe".
Diagnosis Work Sheet is useful to verify the incident.
Verify relation between the symptom and the condition when the symptom is detected.

>> GO TO 6.

5. PERFORM DTC CONFIRMATION PROCEDURE

Perform DTC CONFIRMATION PROCEDURE for the displayed DTC, and then make sure that DTC is detected again.
If two or more DTCs are detected, refer to EC-434, "DTC Inspection Priority Chart" and determine trouble diagnosis order.

NOTE:

- Freeze frame data is useful if the DTC is not detected.
- Perform Component Function Check if DTC CONFIRMATION PROCEDURE is not included on Service Manual. This simplified check procedure is an effective alternative though DTC cannot be detected during this check.
  If the result of Component Function Check is NG, it is the same as the detection of DTC by DTC CONFIRMATION PROCEDURE.

Is DTC detected?

YES >> GO TO 10.
NO >> Check according to EC-435, "DTC Index".

6. PERFORM BASIC INSPECTION

Perform EC-11, "BASIC INSPECTION : Special Repair Requirement".

Do you have CONSULT-III?

YES >> GO TO 7.
NO >> GO TO 9.

7. PERFORM SPEC IN DATA MONITOR MODE

With CONSULT-III

Make sure that “MAS A/F SE-B1”, “B/FUEL SCHDL” and “A/F ALPHA-B1” are within the SP value using CONSULT-III in “SPEC” of “DATA MONITOR” mode. Refer to EC-109, "Component Function Check".

Is the measurement value within the SP value?

YES >> GO TO 9.
NO >> GO TO 8.

8. DETECT MALFUNCTIONING PART BY TROUBLE DIAGNOSIS - SPECIFICATION VALUE

Detect malfunctioning part according to EC-110, "Diagnosis Procedure".

Is malfunctioning part detected?

YES >> GO TO 11.
NO >> GO TO 9.

9. DETECT MALFUNCTIONING SYSTEM BY SYMPTOM TABLE

Detect malfunctioning system according to EC-443, "Symptom Table" based on the confirmed symptom in step 4, and determine the trouble diagnosis order based on possible causes and symptom.

>> GO TO 10.

10. DETECT MALFUNCTIONING PART BY DIAGNOSIS PROCEDURE

Inspect according to Diagnosis Procedure of the system.

NOTE:

The Diagnosis Procedure in EC section described based on open circuit inspection. A short circuit inspection is also required for the circuit check in the Diagnosis Procedure. For details, refer to GI-45, "Circuit Inspection".

Is malfunctioning part detected?

YES >> GO TO 11.
NO >> Monitor input data from related sensors or check the voltage of related ECM terminals using CONSULT-III. Refer to EC-398, "Reference Value".

11. REPAIR OR REPLACE THE MALFUNCTIONING PART

1. Repair or replace the malfunctioning part.
2. Reconnect parts or connectors disconnected during Diagnosis Procedure again after repair and replacement.
3. Check DTC. If DTC is displayed, erase it. Refer to EC-86, "Diagnosis Description".

>> GO TO 12.

12. FINAL CHECK

When DTC was detected in step 2, perform DTC CONFIRMATION PROCEDURE or Component Function Check again, and then make sure that the malfunction have been repaired securely.
When symptom was described from the customer, refer to confirmed symptom in step 3 or 4, and make sure that the symptom is not detected.

Is DTC detected and does symptom remain?

YES-1 >> DTC is detected: GO TO 10.
YES-2 >> Symptom remains: GO TO 6.
NO >> Before returning the vehicle to the customer, make sure to erase unnecessary DTC in ECM. (Refer to EC-86, "Diagnosis Description".) If the completion of SRT is needed, drive vehicle under the specific DRIVING PATTERN in EC-438, "How to Set SRT Code".

Diagnostic Work Sheet

INFOID:0000000003069076

DESCRIPTION

There are many operating conditions that lead to the malfunction of engine components. A good grasp of such conditions can make troubleshooting faster and more accurate.
In general, each customer feels differently about a incident. It is important to fully understand the symptoms or conditions for a customer complaint.
Utilize a diagnostic worksheet like the one on the next page in order to organize all the information for troubleshooting.
Some conditions may cause the MIL to come on steady or blink and DTC to be detected. Examples:

- Vehicle ran out of fuel, which caused the engine to misfire.
- Fuel filler cap was left off or incorrectly screwed on, allowing fuel to evaporate into the atmosphere.

KEY POINTS

WHAT ..... Vehicle & engine model
WHEN ..... Date, Frequencies
WHERE..... Road conditions
HOW ..... Operating conditions, Weather conditions, Symptoms

SEF907L

WORKSHEET SAMPLE

Customer name MR/MS		Model & Year	VIN
Engine #		Trans.	Mileage
Incident Date		Manuf. Date	In Service Date
Fuel and fuel filler cap		☐ Vehicle ran out of fuel causing misfire ☐ Fuel filler cap was left off or incorrectly screwed on.	
Symptoms	☐ Startability	☐ Impossible to start ☐ No combustion ☐ Partial combustion ☐ Partial combustion affected by throttle position ☐ Partial combustion NOT affected by throttle position ☐ Possible but hard to start ☐ Others [ ]	
	☐ Idling	☐ No fast idle ☐ Unstable ☐ High idle ☐ Low idle ☐ Others [ ]	
	☐ Driveability	☐ Stumble ☐ Surge ☐ Knock ☐ Lack of power ☐ Intake backfire ☐ Exhaust backfire ☐ Others [ ]	
	☐ Engine stall	☐ At the time of start ☐ While idling ☐ While accelerating ☐ While decelerating ☐ Just after stopping ☐ While loading	
Incident occurrence		☐ Just after delivery ☐ Recently ☐ In the morning ☐ At night ☐ In the daytime	
Frequency		☐ All the time ☐ Under certain conditions ☐ Sometimes	
Weather conditions		☐ Not affected	
	Weather	☐ Fine ☐ Raining ☐ Snowing ☐ Others [ ]	
	Temperature	☐ Hot ☐ Warm ☐ Cool ☐ Cold ☐ Humid °F	
Engine conditions		☐ Cold ☐ During warm-up ☐ After warm-up Engine speed 0 2,000 4,000 6,000 8,000 rpm	
Road conditions		☐ In town ☐ In suburbs ☐ Highway ☐ Off road (up/down)	
Driving conditions		☐ Not affected ☐ At starting ☐ While idling ☐ At racing ☐ While accelerating ☐ While cruising ☐ While decelerating ☐ While turning (RH/LH) Vehicle speed 0 10 20 30 40 50 60 MPH	
Malfunction indicator lamp		☐ Turned on ☐ Not turned on	

MTBL0017

INSPECTION AND ADJUSTMENT
BASIC INSPECTION

BASIC INSPECTION : Special Repair Requirement

INFOID:0000000003069077

1. INSPECTION START

1. Check service records for any recent repairs that may indicate a related malfunction, or a current need for scheduled maintenance.
2. Open engine hood and check the following:
- Harness connectors for improper connections
- Wiring harness for improper connections, pinches and cut
- Vacuum hoses for splits, kinks and improper connections
- Hoses and ducts for leaks
- Air cleaner clogging
- Gasket
3. Lift up the vehicle.
4. Activate “INSPECTION MODE 1” (HBC-97) to start engine, and warm up engine until engine coolant temperature indicator points the middle of gauge.
   Ensure engine stays below 1,500 rpm.
5. Run engine at about 2,500 rpm for about 2 minutes under no load.
6. Make sure that no DTC is displayed with CONSULT-III or GST.

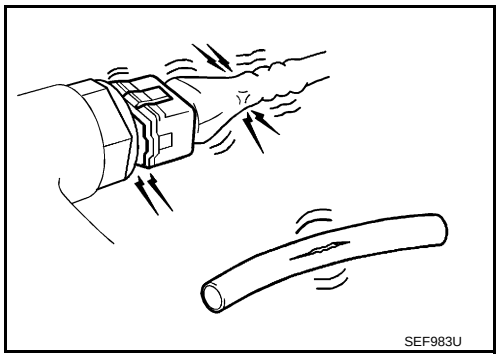

Is any DTC detected?

YES >> GO TO 2.
NO >> GO TO 3.

2. REPAIR OR REPLACE

Repair or replace components as necessary according to corresponding Diagnostic Procedure.

>> GO TO 3

3. CHECK TARGET IDLE SPEED

1. Run engine at about 2,500 rpm for about 2 minutes under no load.
2. Rev engine two or three times under no load, then run engine at idle speed for about 1 minute.
3. Shift the selector lever to N position with engine running.
4. Check idle speed.
   For procedure, refer to EC-14, "IDLE SPEED : Special Repair Requirement".
   For specification, refer to EC-459, "Idle Speed".
   CAUTION:
   Never leave the selector lever in the N position for a long period of time. In the N position, the engine operates but electricity cannot be generated.
5. Shift the selector lever to P position.

Is the inspection result normal?

YES >> GO TO 9.
NO >> GO TO 4.

4. PERFORM THROTTLE VALVE CLOSED POSITION LEARNING

1. Turn ignition switch OFF.
2. Perform EC-15, "THROTTLE VALVE CLOSED POSITION LEARNING : Special Repair Requirement".

>> GO TO 5.

5. PERFORM IDLE AIR VOLUME LEARNING

Perform EC-16, "IDLE AIR VOLUME LEARNING : Special Repair Requirement".

Is Idle Air Volume Learning carried out successfully?

YES >> GO TO 6.
NO >> Follow the instruction of Idle Air Volume Learning. Then GO TO 4.

6. CHECK TARGET IDLE SPEED AGAIN

1. Activate “INSPECTION MODE 1” (HBC-97) to start engine, and warm up engine until engine coolant temperature.
2. Shift the selector lever to N position with engine running.
3. Check idle speed.
   For procedure, refer to EC-14, "IDLE SPEED : Special Repair Requirement".
   For specification, refer to EC-459, "Idle Speed".
   CAUTION:
   Never leave the selector lever in the N position for a long period of time. In the N position, the engine operates but electricity cannot be generated.
4. Shift the selector lever to P position.

Is the inspection result normal?

YES >> GO TO 9.
NO >> GO TO 7.

7. DETECT MALFUNCTIONING PART

Check the Following.
- Check camshaft position sensor (PHASE) and circuit. Refer to EC-254, "DTC Logic".
- Check crankshaft position sensor (POS) and circuit. Refer to EC-250, "DTC Logic".

Is the inspection result normal?

YES >> GO TO 8.
NO >> Repair or replace. Then GO TO 4.

8. CHECK ECM FUNCTION

Substitute another known-good ECM to check ECM function. (ECM may be the cause of an incident, but this is a rare case.)

>> GO TO 4.

9. CHECK IGNITION TIMING

1. Run engine at idle.
2. Shift the selector lever to N position with engine running.
3. Check ignition timing with a timing light.
   For procedure, refer to EC-14, "IGNITION TIMING : Special Repair Requirement".
   For specification, refer to EC-459, "Ignition Timing".
   CAUTION:
   Never leave the selector lever in the N position for a long period of time. In the N position, the engine operates but electricity cannot be generated.
4. Shift the selector lever to P position.

Is the inspection result normal?

YES >> GO TO 17.
NO >> GO TO 10.

10. PERFORM THROTTLE VALVE CLOSED POSITION LEARNING

1. Turn ignition switch OFF.
2. Perform EC-15, "THROTTLE VALVE CLOSED POSITION LEARNING : Special Repair Requirement".

>> GO TO 11.

11. PERFORM IDLE AIR VOLUME LEARNING

Perform EC-16, "IDLE AIR VOLUME LEARNING : Special Repair Requirement".

Is Idle Air Volume Learning carried out successfully?

YES >> GO TO 12.
NO >> Follow the instruction of Idle Air Volume Learning. Then GO TO 4.

12. CHECK TARGET IDLE SPEED AGAIN

1. Activate “INSPECTION MODE 1” (HBC-97) to start engine, and warm up engine until engine coolant temperature.
2. Shift the selector lever to N position with engine running.
3. Check idle speed.
   For procedure, refer to EC-14, "IDLE SPEED : Special Repair Requirement".
   For specification, refer to EC-459, "Idle Speed".
   CAUTION:
   Never leave the selector lever in the N position for a long period of time. In the N position, the engine operates but electricity cannot be generated.
4. Shift the selector lever to P position.

Is the inspection result normal?

YES >> GO TO 13.
NO >> GO TO 15.

13. CHECK IGNITION TIMING AGAIN

1. Run engine at idle.
2. Shift the selector lever to N position with engine running.
3. Check ignition timing with a timing light.
   For procedure, refer to EC-14, "IGNITION TIMING : Special Repair Requirement".
   For specification, refer to EC-459, "Ignition Timing".
   CAUTION:
   Never leave the selector lever in the N position for a long period of time. In the N position, the engine operates but electricity cannot be generated.
4. Shift the selector lever to P position.

Is the inspection result normal?

YES >> GO TO 17.
NO >> GO TO 14.

14. CHECK TIMING CHAIN INSTALLATION

Check timing chain installation. Refer to EM-50, "Removal and Installation".

Is the inspection result normal?

YES >> GO TO 15.
NO >> Repair the timing chain installation. Then GO TO 4.

15. DETECT MALFUNCTIONING PART

Check the following.
- Check camshaft position sensor (PHASE) and circuit. Refer to EC-254, "DTC Logic".
- Check crankshaft position sensor (POS) and circuit. Refer to EC-250, "DTC Logic".

Is the inspection result normal?

YES >> GO TO 16.
NO >> Repair or replace. Then GO TO 4.

16. CHECK ECM FUNCTION

Substitute another known-good ECM to check ECM function. (ECM may be the cause of an incident, but this is a rare case.)

>> GO TO 4.

17. INSPECTION END

If ECM is replaced during this BASIC INSPECTION procedure, go to EC-14, "ADDITIONAL SERVICE WHEN REPLACING CONTROL UNIT : Special Repair Requirement".

>> INSPECTION END

ADDITIONAL SERVICE WHEN REPLACING CONTROL UNIT

ADDITIONAL SERVICE WHEN REPLACING CONTROL UNIT : Description

INFOID:0000000003069078

When replacing ECM, this procedure must be performed.

ADDITIONAL SERVICE WHEN REPLACING CONTROL UNIT : Special Repair Requirement

INFOID:0000000003069079

1. PERFORM VIN REGISTRATION

Refer to EC-14, "ADDITIONAL SERVICE WHEN REPLACING CONTROL UNIT : Special Repair Requirement".

>> GO TO 2.

2. PERFORM THROTTLE VALVE CLOSED POSITION LEARNING

Refer to EC-14, "ADDITIONAL SERVICE WHEN REPLACING CONTROL UNIT : Special Repair Requirement".

>> GO TO 3.

3. PERFORM IDLE AIR VOLUME LEARNING

Refer to EC-14, "ADDITIONAL SERVICE WHEN REPLACING CONTROL UNIT : Special Repair Requirement".

>> END

IDLE SPEED

IDLE SPEED : Description

INFOID:0000000003069080

This describes how to check the idle speed. For the actual procedure, follow the instructions in “BASIC INSPECTION”.

IDLE SPEED : Special Repair Requirement

INFOID:0000000003069081

1. CHECK IDLE SPEED

With CONSULT-III
Check idle speed in “DATA MONITOR” mode with CONSULT-III.
With GST
Check idle speed with Service $01 of GST.

>> INSPECTION END

IGNITION TIMING

IGNITION TIMING : Description

INFOID:0000000003069082

This describes how to check the ignition timing. For the actual procedure, follow the instructions in “BASIC INSPECTION”.

IGNITION TIMING : Special Repair Requirement

INFOID:0000000003069083

1. CHECK IGNITION TIMING

1. Attach timing light to No. 1 igniton coil (1) wire as shown.

A : Timing light
⇦ : Vehicle front

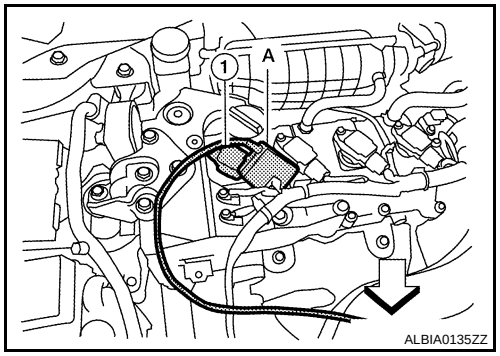

2. Check ignition timing.

1 : Timing indicator

>> INSPECTION END

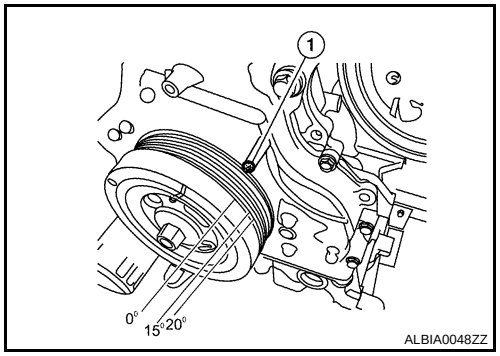

VIN REGISTRATION

VIN REGISTRATION : Description

INFOID:0000000003069084

VIN Registration is an operation to registering VIN in ECM. It must be performed each time ECM is replaced.
NOTE:
Accurate VIN which is registered in ECM may be required for Inspection & Maintenance (I/M).

VIN REGISTRATION : Special Repair Requirement

INFOID:0000000003069085

1. CHECK VIN

Check the VIN of the vehicle and note it. Refer to GI-21, "Identification Number".

>> GO TO 2.

2. PERFORM VIN REGISTRATION

With CONSULT-III
1. Turn ignition switch ON.
2. Select “VIN REGISTRATION” in “WORK SUPPORT” mode.
3. Follow the instruction of CONSULT-III display.

>> END

THROTTLE VALVE CLOSED POSITION LEARNING

THROTTLE VALVE CLOSED POSITION LEARNING : Description

INFOID:0000000003069086

Throttle Valve Closed Position Learning is a function of ECM to learn the fully closed position of the throttle valve by monitoring the throttle position sensor output signal. It must be performed each time harness connector of electric throttle control actuator or ECM is disconnected.

THROTTLE VALVE CLOSED POSITION LEARNING : Special Repair Requirement

INFOID:0000000003069087

1. START

1. Make sure that accelerator pedal is fully released.

2. Turn ignition switch ON.
3. Turn ignition switch OFF and wait at least 10 seconds.
   Make sure that throttle valve moves during above 10 seconds by confirming the operating sound.

>> END

IDLE AIR VOLUME LEARNING

IDLE AIR VOLUME LEARNING : Description

INFOID:0000000003069088

Idle Air Volume Learning is a function of ECM to learn the idle air volume that keeps each engine idle speed within the specific range. It must be performed under any of the following conditions:
- Each time electric throttle control actuator or ECM is replaced.
- Idle speed or ignition timing is out of specification.

IDLE AIR VOLUME LEARNING : Special Repair Requirement

INFOID:0000000003069089

1. PRECONDITIONING

Make sure that all of the following conditions are satisfied.
Learning will be cancelled if any of the following conditions are missed for even a moment.
- Battery voltage: More than 12.9V (At idle)
- Engine coolant temperature: 70 - 100°C (158 - 212°F)
- PNP switch: ON
- Vehicle speed: Stopped
- Transmission: Warmed-up (Drive vehicle for 10 minutes.)

Do you have CONSULT-III?

YES >> GO TO 2.
NO >> GO TO 4.

2. IDLE AIR VOLUME LEARNING

With CONSULT-III

1. Perform Throttle Valve Closed Position Learning. Refer to EC-15, "THROTTLE VALVE CLOSED POSITION LEARNING : Special Repair Requirement".
2. Turn ignition switch ON (READY).
3. Select “IDLE AIR VOL LEARN” in “WORK SUPPORT” mode.
4. Touch “START” and wait 20 seconds.

Is “CMPLT” displayed on CONSULT-III screen?

YES >> GO TO 3.
NO >> GO TO 6.

3. CHECK IDLE SPEED AND IGNITION TIMING

1. Rev up the engine two or three times.
2. Check idle speed and ignition timing are within the specifications. Refer to EC-459, "Idle Speed" and EC-459, "Ignition Timing".

Is the inspection result normal?

YES >> INSPECTION END
NO >> GO TO 6.

4. IDLE AIR VOLUME LEARNING

Without CONSULT-III

NOTE:
- **It is better to count the time accurately with a clock.**
- **It is impossible to switch the diagnostic mode when an accelerator pedal position sensor circuit has a malfunction.**

1. Lift up the vehicle.
2. Perform Throttle Valve Closed Position Learning. Refer to EC-15, "THROTTLE VALVE CLOSED POSITION LEARNING : Special Repair Requirement".
3. Turn ignition switch OFF and wait at least 10 seconds.
4. Confirm that accelerator pedal is fully released, turn ignition switch ON and wait 3 seconds.

5. Repeat the following procedure quickly five times within 5 seconds.
- Fully depress the accelerator pedal.
- Fully release the accelerator pedal.
6. Wait 7 seconds, fully depress the accelerator pedal and keep it for approx. 20 seconds until the MIL stops blinking and turned ON.
7. Fully release the accelerator pedal and turn ignition switch ON (READY).
8. Depress the accelerator pedal and keep it to start engine within 10 seconds after the MIL turned ON.
9. Shift the selector lever to N position with engine running.
10. Fully release the accelerator pedal.
11. Wait 1 minute.

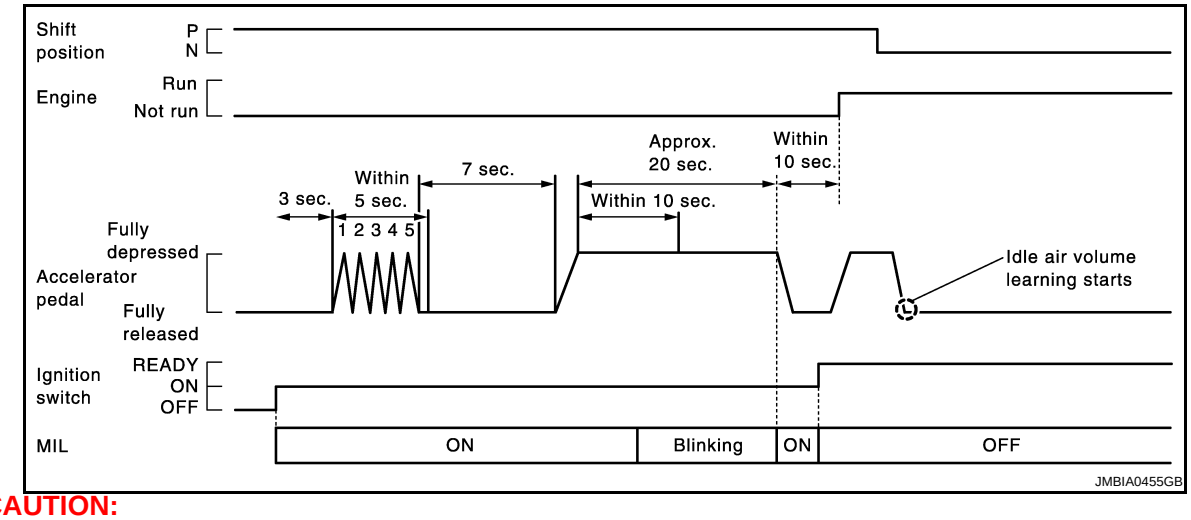

CAUTION:
Never leave the selector lever in the N position for a long period of time. In the N position, the engine operates but electricity cannot be generated.

12. Shift the selector lever to P position.
13. Depress the accelerator pedal and keep it.
14. Shift the selector lever to N position with engine running.
15. Check idle speed and ignition timing are within the specifications. Refer to EC-459, "Idle Speed" and EC-459, "Ignition Timing".

CAUTION:
Never leave the selector lever in the N position for a long period of time. In the N position, the engine operates but electricity cannot be generated.

16. Shift the selector lever to P position.

>> GO TO 5.

5. CHECK IDLE SPEED AND IGNITION TIMING

1. Depress the accelerator pedal and keep it.
2. Shift the selector lever to N position with engine running.
3. Check idle speed and ignition timing are within the specifications. Refer to EC-459, "Idle Speed" and EC-459, "Ignition Timing".

CAUTION:
Never leave the selector lever in the N position for a long period of time. In the N position, the engine operates but electricity cannot be generated.

4. Shift the selector lever to P position.

Is the inspection result normal?

YES >> INSPECTION END
NO >> GO TO 6.

6. DETECT MALFUNCTIONING PART-I

Check the following
- Check that throttle valve is fully closed.
- Check PCV valve operation.
- Check that downstream of throttle valve is free from air leakage.

Is the inspection result normal?

YES >> GO TO 7.
NO >> Repair or replace malfunctioning part.

7. DETECT MALFUNCTIONING PART-II

Engine component parts and their installation condition are questionable. Check and eliminate the cause of the incident.
It is useful to perform “TROUBLE DIAGNOSIS - SPECIFICATION VALUE”. Refer to EC-109, "Description".
If any of the following conditions occur after the engine has started, eliminate the cause of the incident and perform Idle Air Volume Learning all over again:
- Engine stalls.
- Erroneous idle.

>> INSPECTION END

MIXTURE RATIO SELF-LEARNING VALUE CLEAR

MIXTURE RATIO SELF-LEARNING VALUE CLEAR : Description

INFOID:0000000003069090

This describes how to erase the mixture ratio self-learning value. For the actual procedure, follow the instructions in “Diagnosis Procedure”.

MIXTURE RATIO SELF-LEARNING VALUE CLEAR : Special Repair Requirement

INFOID:0000000003069091

1. START

With CONSULT-III
1. Activate “INSPECTION MODE 1” (HBC-97) to start engine, and warm up engine to normal operating temperature.
2. Select “SELF-LEARNING CONT” in “WORK SUPPORT” mode with CONSULT-III.
3. Clear mixture ratio self-learning value by touching “CLEAR”.

With GST
1. Activate “INSPECTION MODE 1” (HBC-97) to start engine, and warm up engine to normal operating temperature.
2. Turn ignition switch OFF.
3. Disconnect mass air flow sensor harness connector.
4. Turn ignition switch ON (READY).
5. Depress the accelerator pedal to start engine, then keep engine running for at least 5 seconds.
6. Turn ignition switch OFF and reconnect mass air flow sensor harness connector.
7. Select Service $03 with GST. Make sure DTC P0102 is detected.
8. Select Service $04 with GST to erase the DTC P0102.

>> END

FUNCTION DIAGNOSIS

ENGINE CONTROL SYSTEM

System Diagram

INFOID:0000000003069092

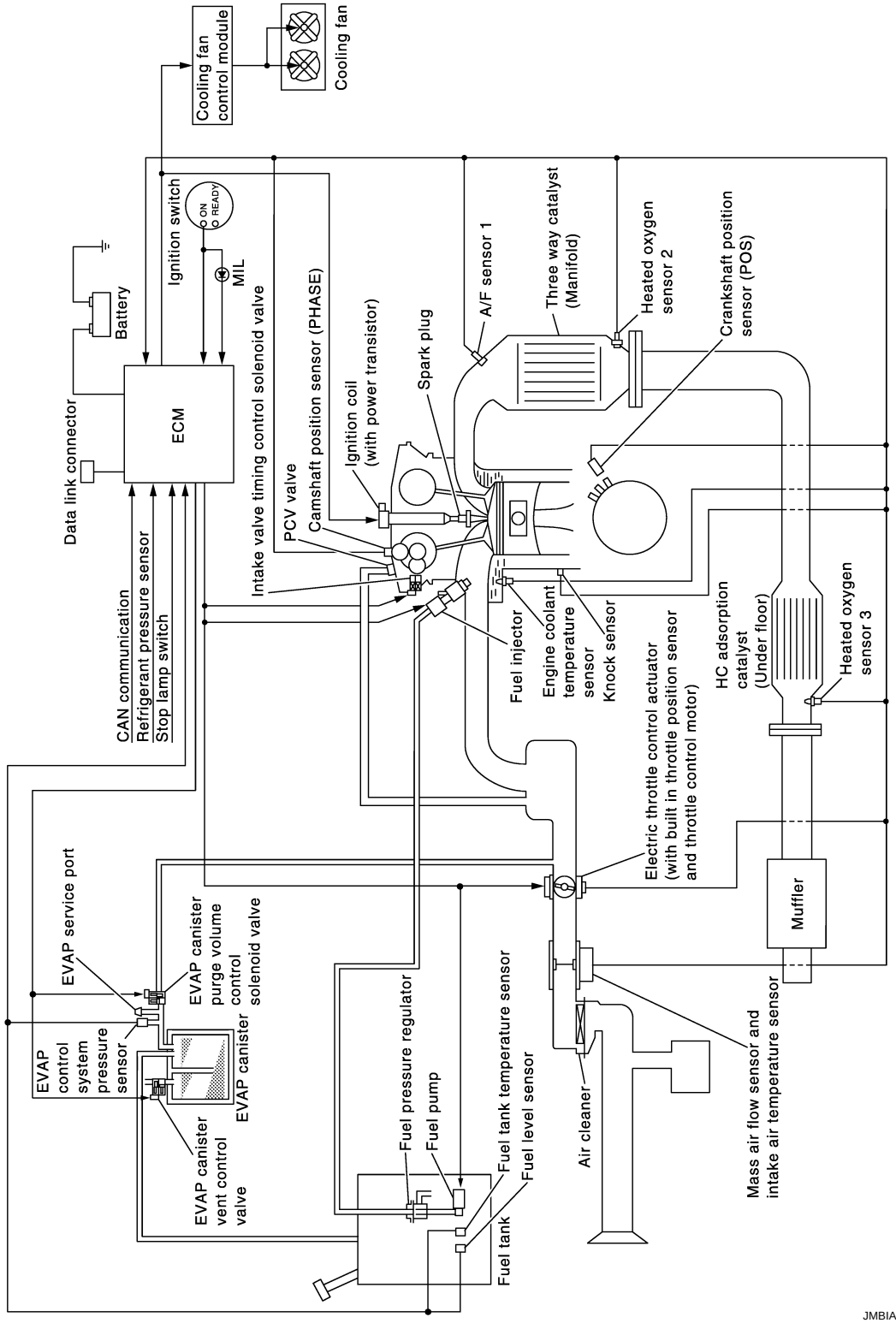

System Description

INFOID:0000000003069093

ECM performs various controls such as fuel injection control and ignition timing control.

Component Parts Location

INFOID:0000000003069094

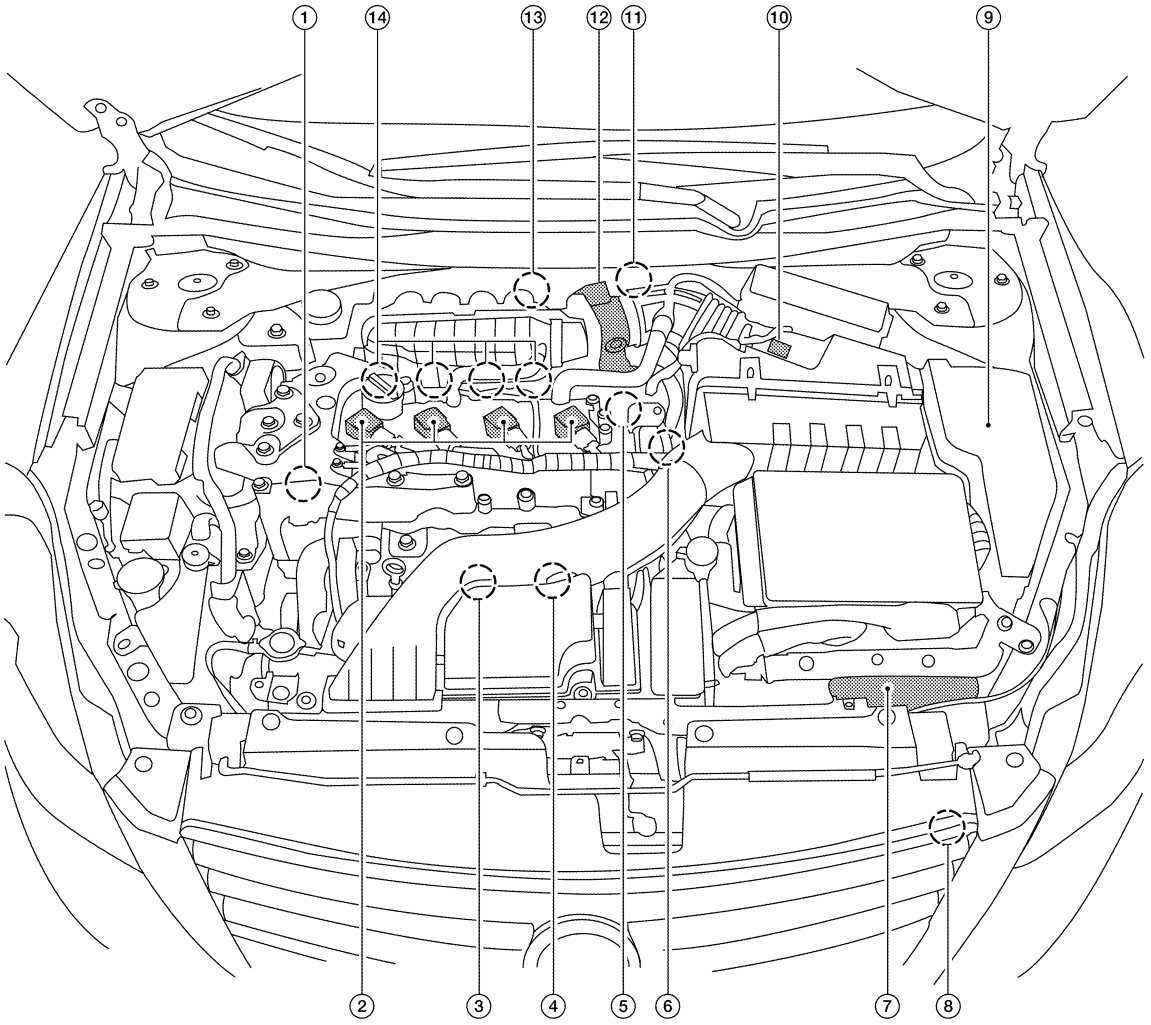

ALBIA0138ZZ

1. Intake valve timing control solenoid valve
2. Ignition coil (with power transistor) and spark plug
3. Knock sensor, Crankshaft position sensor (POS)
4. Air fuel ratio (A/F) sensor 1
5. Camshaft position sensor (PHASE)
6. Engine coolant temperature sensor
7. ECM
8. Refrigerant pressure sensor
9. IPDM E/R
10. Mass air flow sensor (with intake temperature sensor)
11. EVAP service port
12. Electric throttle control actuator (with built in throttle position sensor and throttle control motor)
13. EVAP canister purge volume control solenoid valve
14. Fuel injector

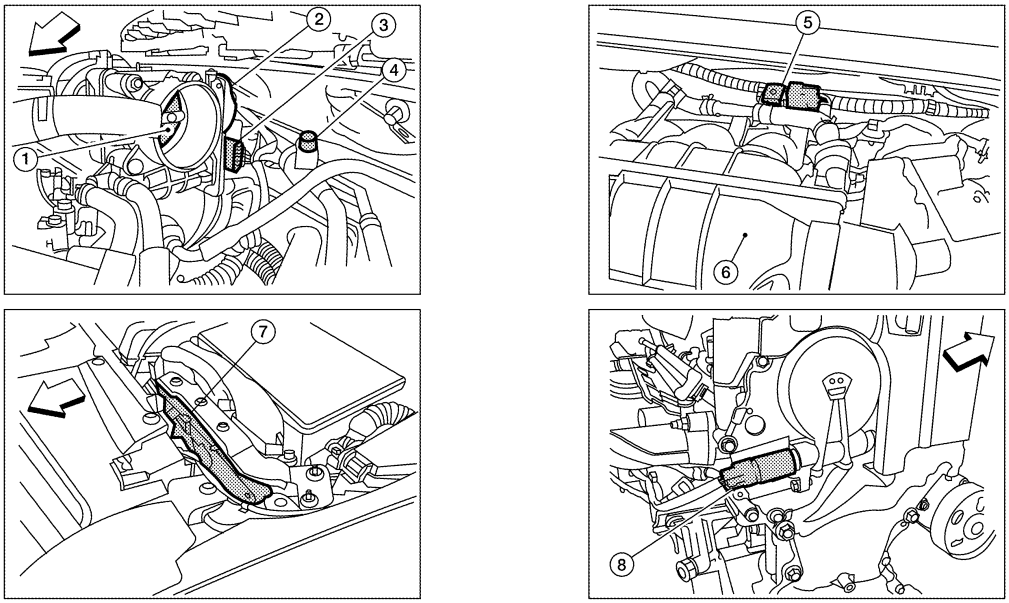

ALBIA0160ZZ

1. Throttle valve
2. Electric throttle control actuator
3. Electric throttle control actuator harness connector
4. EVAP service port
5. EVAP canister purge volume control solenoid valve
6. Intake manifold collector
7. ECM
8. Intake valve timing control solenoid valve

⇦: Vehicle front

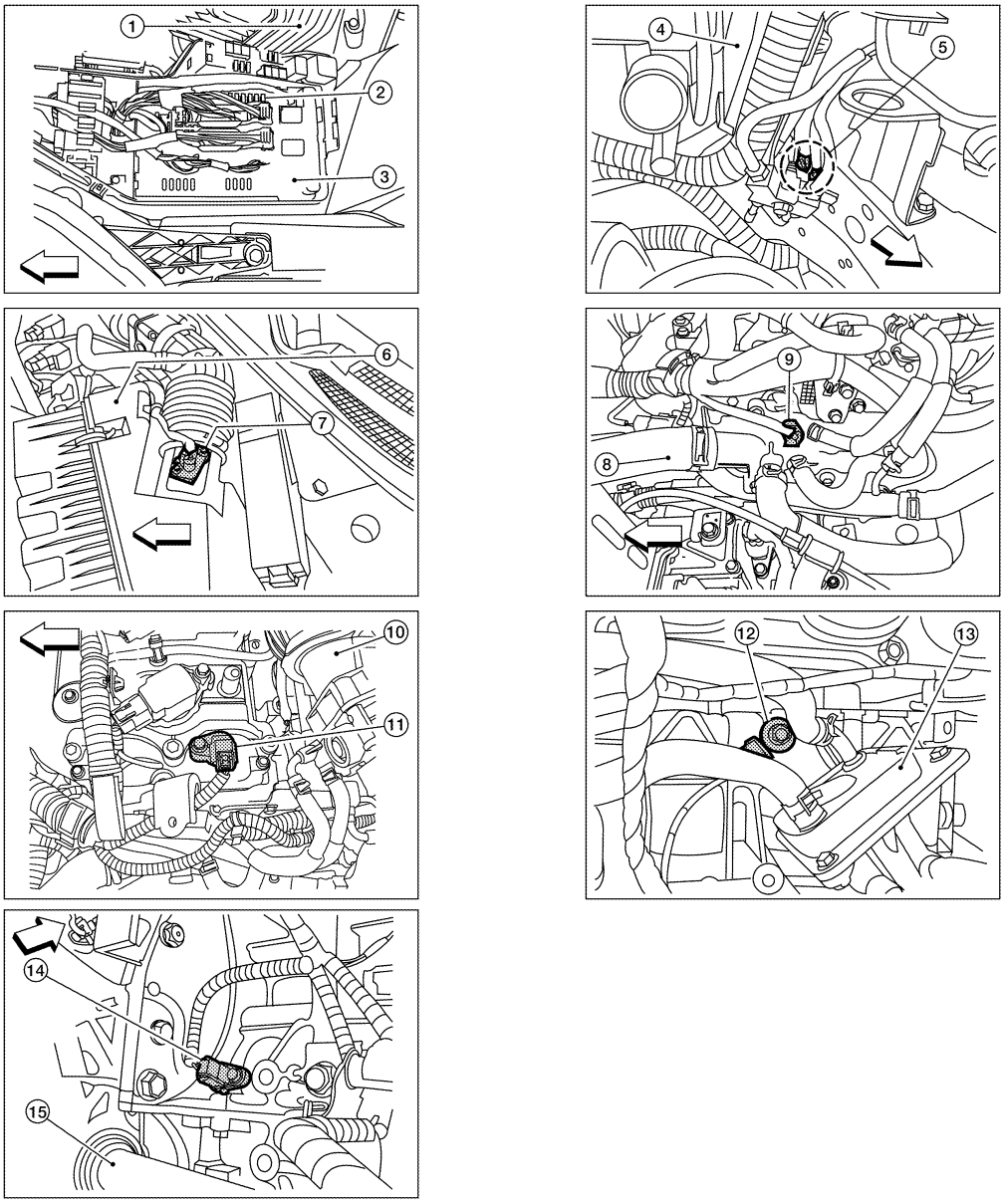

ALBIA0161ZZ

1.	Air cleaner assembly	2.	Fuel pump fuse	3.	IPDM E/R
4.	EPS control unit (view with air cleaner assembly removed)	5.	Engine grounds	6.	Air cleaner assembly
7.	Mass air flow sensor (with intake temperature sensor)	8.	Upper radiator hose	9.	Engine coolant temperature sensor
10.	Intake manifold collector	11.	Camshaft position sensor (PHASE)	12.	Knock sensor
13.	Engine oil cooler	14.	Crankshaft position sensor (POS)	15.	Drive shaft RH

⇦: Vehicle front

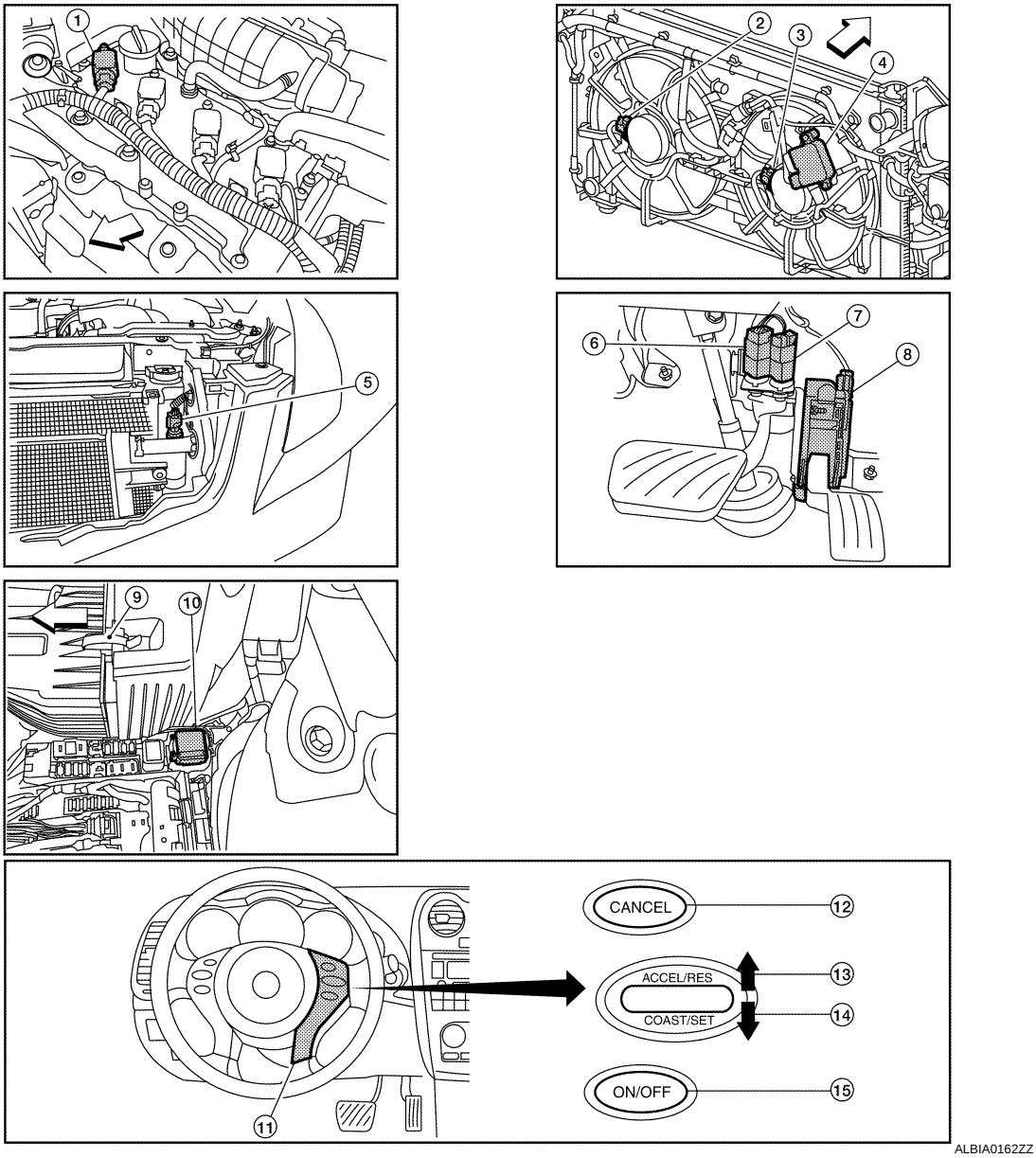

1. No.1 ignition coil
2. Cooling fan motor-1
3. Cooling fan motor-2
4. Cooling fan control module
5. Refrigerant pressure sensor
6. Stop lamp switch
7. ASCD brake switch
8. Accelerator pedal position sensor
9. Air cleaner assembly
10. Cooling fan relay-1
11. ASCD steering switch
12. CANSEC switch
13. RESUME/ACCELERATE switch
14. SET/COAST switch
15. MAIN switch

⇦: Vehicle front

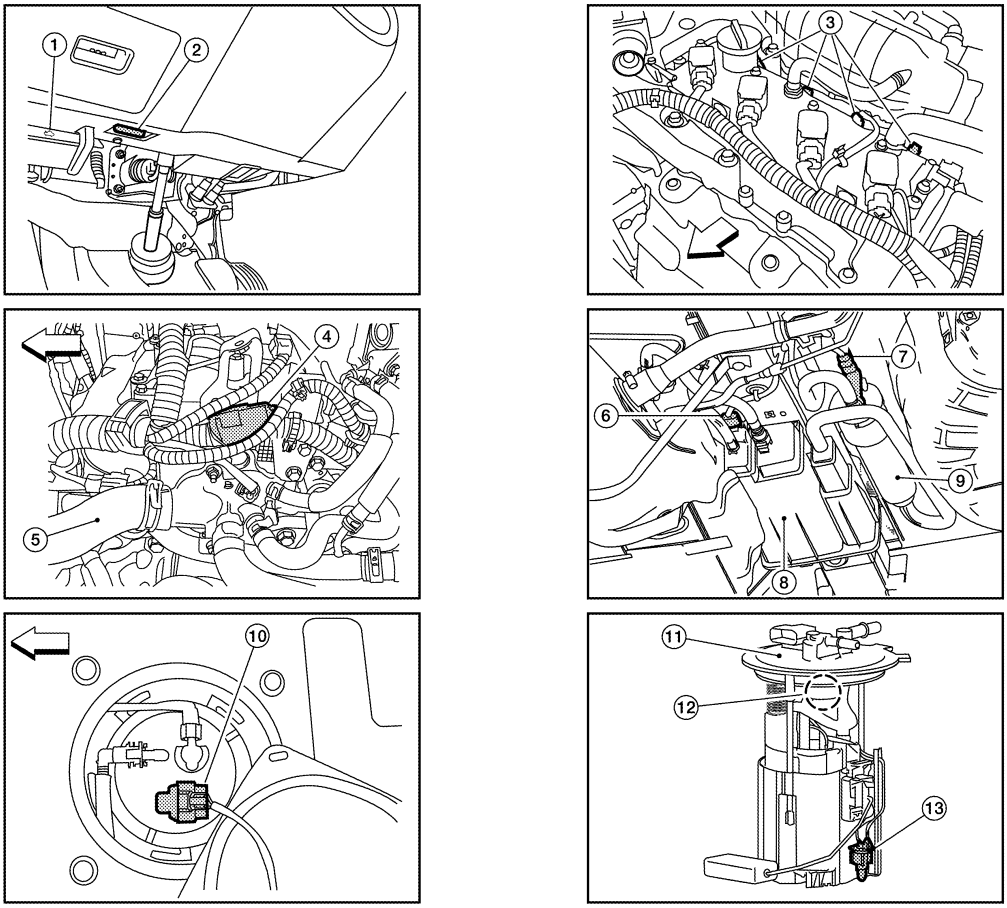

ALBIA0173ZZ

1. Hood opener handle
2. Data link connector
3. Fuel injector harness connector
4. Condenser-2
5. Upper radiator hose
6. EVAP control system pressure sensor
7. EVAP canister vent control valve
8. EVAP canister (MAIN)
9. EVAP canister (SUB)
10. Fuel level sensor unit and fuel pump harness connector (This illustration is view with rear seat cushion and inspection hole cover removed.)
11. Fuel pump assembly
12. Fuel pressure regulator
13. Fuel tank temperature sensor

⇦ : Vehicle front

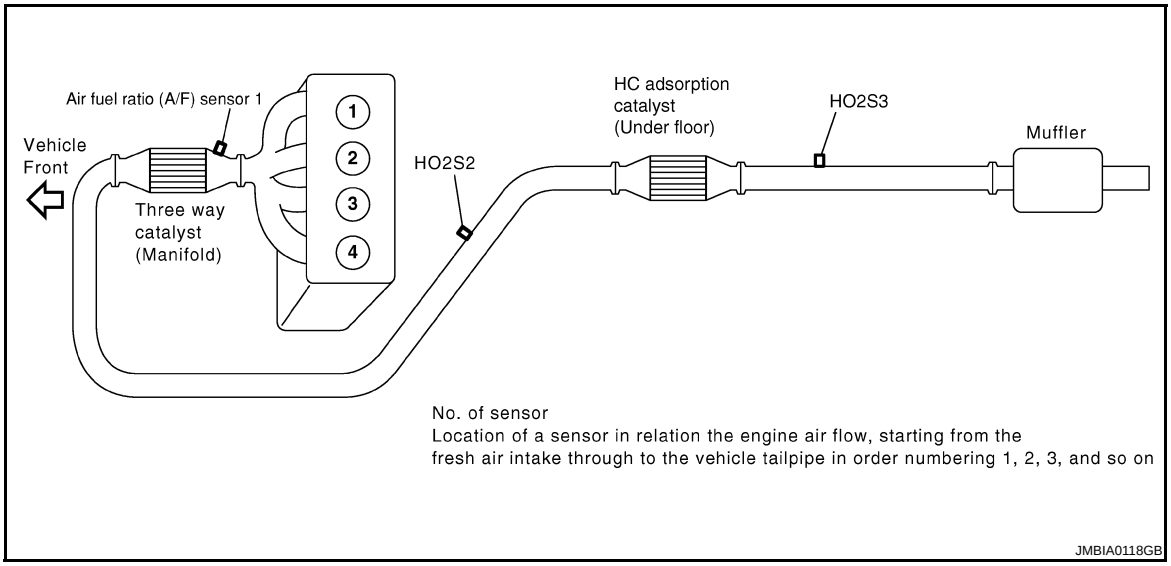

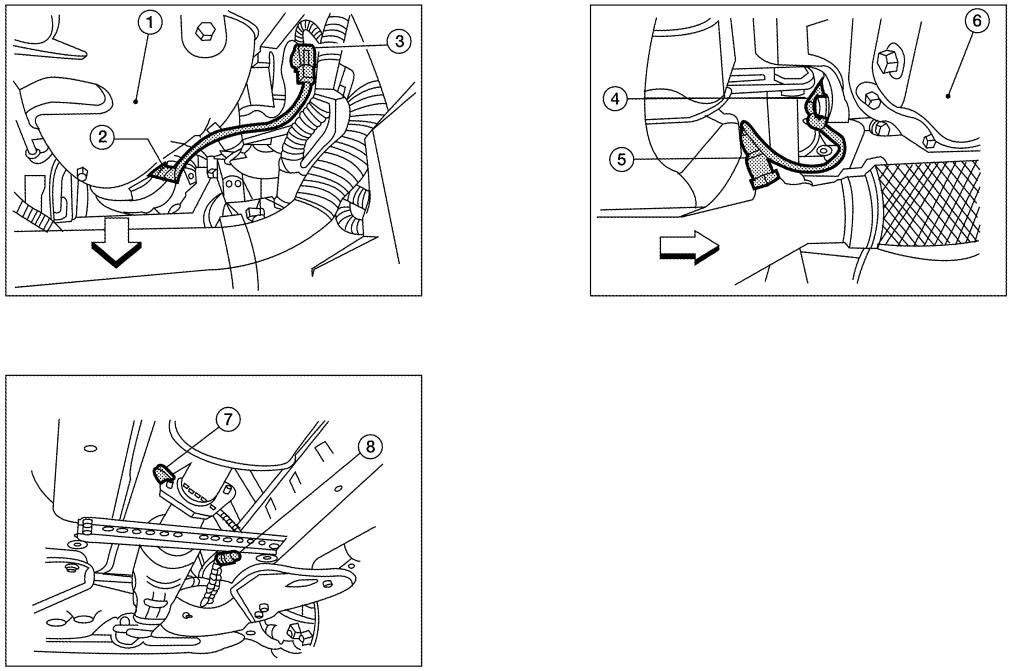

1. Exhaust manifold cover
2. Air fuel ratio (A/F) sensor 1
3. Air fuel ratio (A/F) sensor 1 harness connector
4. Heated oxygen sensor 2 harness connector
5. Heated oxygen sensor 2
6. Oil pan
7. Heated oxygen sensor 3
8. Heated oxygen sensor 3 harness connector

⇦: Vehicle front

Component Description

INFOID:0000000003069095

Component	Reference
A/F sensor 1	EC-179, "Description"
A/F sensor 1 heater	EC-133, "Description"

Component	Reference
ASCD brake switch	EC-340, "Description"
ASCD steering switch	EC-337, "Description"
ASCD vehicle speed sensor	EC-346, "Description"
Camshaft position sensor (PHASE)	EC-254, "Description"
Crankshaft position sensor (POS)	EC-250, "Description"
Cooling fan motor	EC-376, "Description"
Electric throttle control actuator	EC-360, "Description"
Engine coolant temperature sensor	EC-166, "Description"
EVAP canister purge volume control solenoid valve	EC-267, "Description"
EVAP canister vent control valve	EC-275, "Description"
EVAP control system pressure sensor	EC-283, "Description"
Fuel injector	EC-236, "Description"
Fuel level sensor	EC-301, "Description"
Fuel pump	EC-380, "Description"
Fuel tank temperature sensor	EC-230, "Description"
Heated oxygen sensor 2	EC-193, "Description"
Heated oxygen sensor 2 heater	EC-136, "Description"
Heated oxygen sensor 3	EC-210, "Description"
Heated oxygen sensor 3 heater	EC-139, "Description"
Ignition signal	EC-384, "Description"
Intake air temperature sensor	EC-160, "Description"
Intake valve timing control solenoid valve	EC-78, "System Description"
Knock sensor	EC-248, "Description"
Mass air flow sensor	EC-145, "Description"
PCV valve	EC-395, "Description"
Refrigerant pressure sensor	EC-396, "Description"
Stop lamp switch	EC-348, "Description"
Throttle control motor	EC-357, "Description"
Throttle control motor relay	EC-351, "Description"
Throttle position sensor	EC-169, "Description"
Vehicle speed sensor	EC-306, "Description"

MULTIPORT FUEL INJECTION SYSTEM

System Diagram

INFOID:0000000003069096

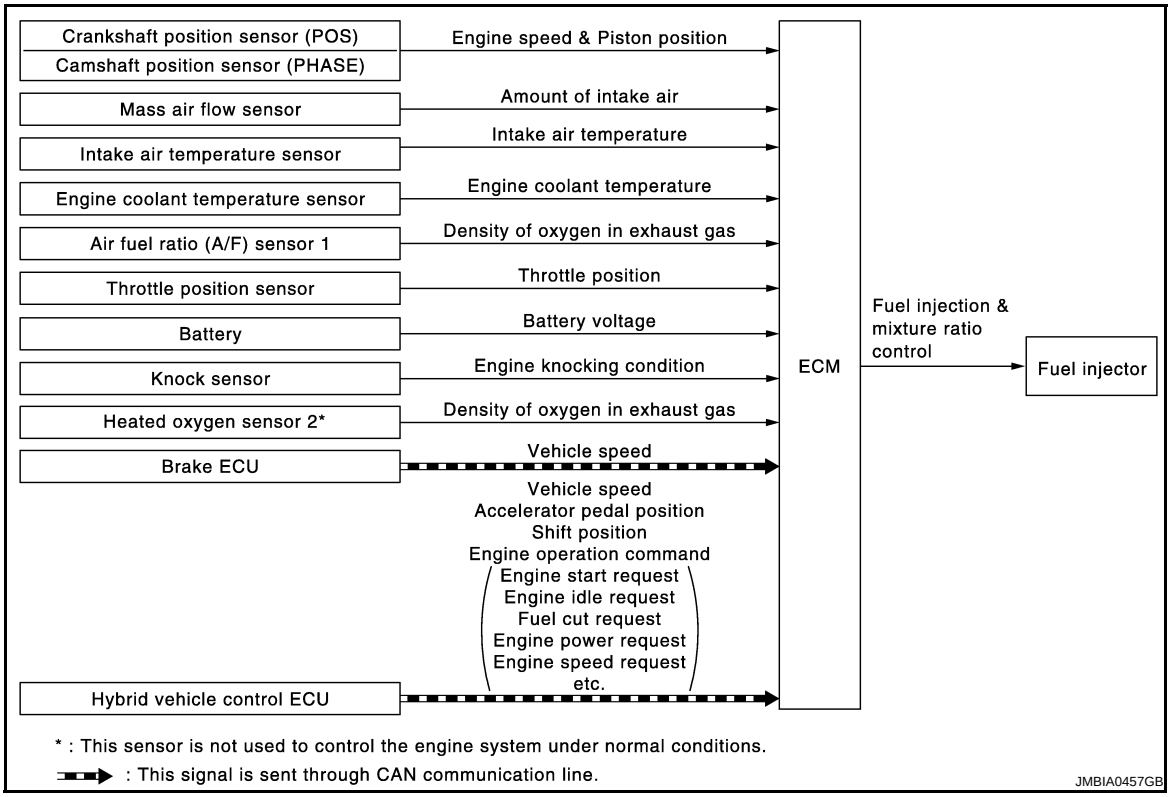

System Description

INFOID:0000000003069097

INPUT/OUTPUT SIGNAL CHART

Sensor	Input Signal to ECM	ECM function	Actuator
Crankshaft position sensor (POS)	Engine speed Piston position	Fuel injection & mixture ratio control	Fuel injector
Camshaft position sensor (PHASE)			
Mass air flow sensor	Amount of intake air		
Intake air temperature sensor	Intake air temperature		
Engine coolant temperature sensor	Engine coolant temperature		
Air fuel ratio (A/F) sensor 1	Density of oxygen in exhaust gas		
Throttle position sensor	Throttle position		
Battery	Battery voltage		
Knock sensor	Engine knocking condition		
Heated oxygen sensor 2*1	Density of oxygen in exhaust gas		
Brake ECU	Vehicle speed*2		
Hybrid vehicle control ECU	Vehicle speed*2		
	Accelerator pedal position*2		
	Shift position*2		
	Engine operation command*2 (Engine start request, Engine idle request, Fuel cut request, Engine power request, Engine speed request, etc.)		

*1: This sensor is not used to control the engine system under normal conditions.

*2: This signal is sent to the ECM through CAN communication line.

SYSTEM DESCRIPTION

The amount of fuel injected from the fuel injector is determined by the ECM. The ECM controls the length of time the valve remains open (injection pulse duration). The amount of fuel injected is a program value in the ECM memory. The program value is preset by engine operating conditions. These conditions are determined by input signals (for engine speed and intake air) from the crankshaft position sensor (POS), camshaft position sensor (PHASE) and the mass air flow sensor.

VARIOUS FUEL INJECTION INCREASE/DECREASE COMPENSATION

In addition, the amount of fuel injected is compensated to improve engine performance under various operating conditions as listed below.

<Fuel increase>
- During warm-up
- When starting the engine
- During acceleration
- Hot-engine operation
- When selector lever is changed from N to D
- High-load, high-speed operation

<Fuel decrease>
- During deceleration
- During high engine speed operation

MIXTURE RATIO FEEDBACK CONTROL (CLOSED LOOP CONTROL)

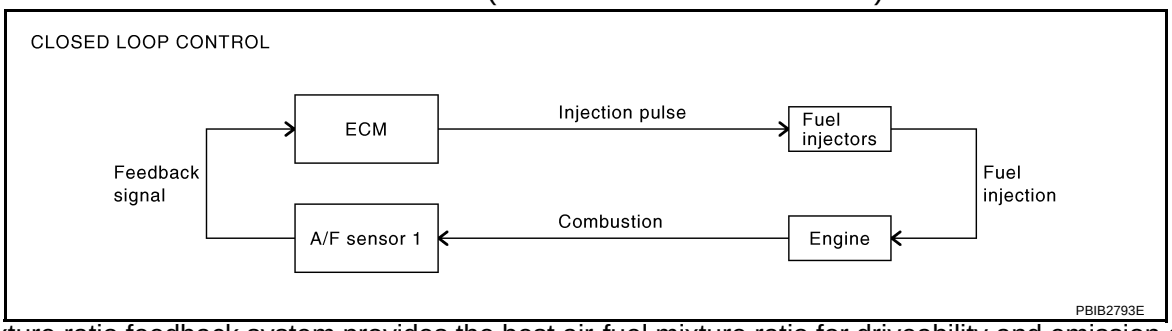

The mixture ratio feedback system provides the best air-fuel mixture ratio for driveability and emission control. The three way catalyst (manifold) can then better reduce CO, HC and NOx emissions. This system uses A/F sensor 1 in the exhaust manifold to monitor whether the engine operation is rich or lean. The ECM adjusts the injection pulse width according to the sensor voltage signal. For more information about A/F sensor 1, refer to EC-179, "DTC Logic". This maintains the mixture ratio within the range of stoichiometric (ideal air-fuel mixture).

This stage is referred to as the closed loop control condition.

Heated oxygen sensor 2 is located downstream of the three way catalyst (manifold). Even if the switching characteristics of A/F sensor 1 shift, the air-fuel ratio is controlled to stoichiometric by the signal from heated oxygen sensor 2.

- Open Loop Control
  The open loop system condition refers to when the ECM detects any of the following conditions. Feedback control stops in order to maintain stabilized fuel combustion.

- Deceleration and acceleration
- High-load, high-speed operation
- Malfunction of A/F sensor 1 or its circuit
- Insufficient activation of A/F sensor 1 at low engine coolant temperature
- High engine coolant temperature
- During warm-up
- After shifting from N to D
- When starting the engine

MIXTURE RATIO SELF-LEARNING CONTROL

The mixture ratio feedback control system monitors the mixture ratio signal transmitted from A/F sensor 1. This feedback signal is then sent to the ECM. The ECM controls the basic mixture ratio as close to the theoretical mixture ratio as possible. However, the basic mixture ratio is not necessarily controlled as originally

designed. Both manufacturing differences (i.e., mass air flow sensor hot wire) and characteristic changes during operation (i.e., fuel injector clogging) directly affect mixture ratio.
Accordingly, the difference between the basic and theoretical mixture ratios is monitored in this system. This is then computed in terms of “injection pulse duration” to automatically compensate for the difference between the two ratios.
“Fuel trim” refers to the feedback compensation value compared against the basic injection duration. Fuel trim includes short term fuel trim and long term fuel trim.
“Short term fuel trim” is the short-term fuel compensation used to maintain the mixture ratio at its theoretical value. The signal from A/F sensor 1 indicates whether the mixture ratio is RICH or LEAN compared to the theoretical value. The signal then triggers a reduction in fuel volume if the mixture ratio is rich, and an increase in fuel volume if it is lean.
“Long term fuel trim” is overall fuel compensation carried out long-term to compensate for continual deviation of the short term fuel trim from the central value. Such deviation will occur due to individual engine differences, wear over time and changes in the usage environment.

FUEL INJECTION TIMING

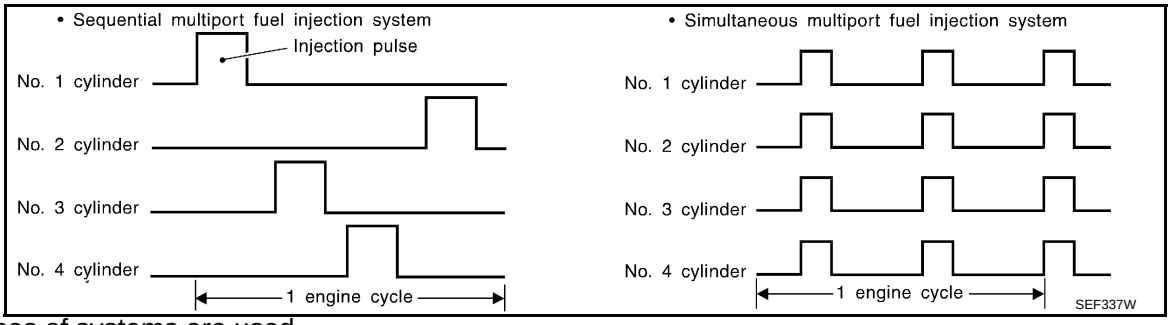

Two types of systems are used.

- Sequential Multiport Fuel Injection System
  Fuel is injected into each cylinder during each engine cycle according to the firing order. This system is used when the engine is running.
- Simultaneous Multiport Fuel Injection System
  Fuel is injected simultaneously into all four cylinders twice each engine cycle. In other words, pulse signals of the same width are simultaneously transmitted from the ECM.
  The four injectors will then receive the signals two times for each engine cycle.
  This system is used if the fail-safe system (CPU) is operating.

FUEL SHUT-OFF

Fuel to each cylinder is cut off during deceleration, operation of the engine at excessively high speeds or receiving the fuel cut request signal from hybrid vehicle control ECU.

Component Parts Location

INFOID:0000000003069098

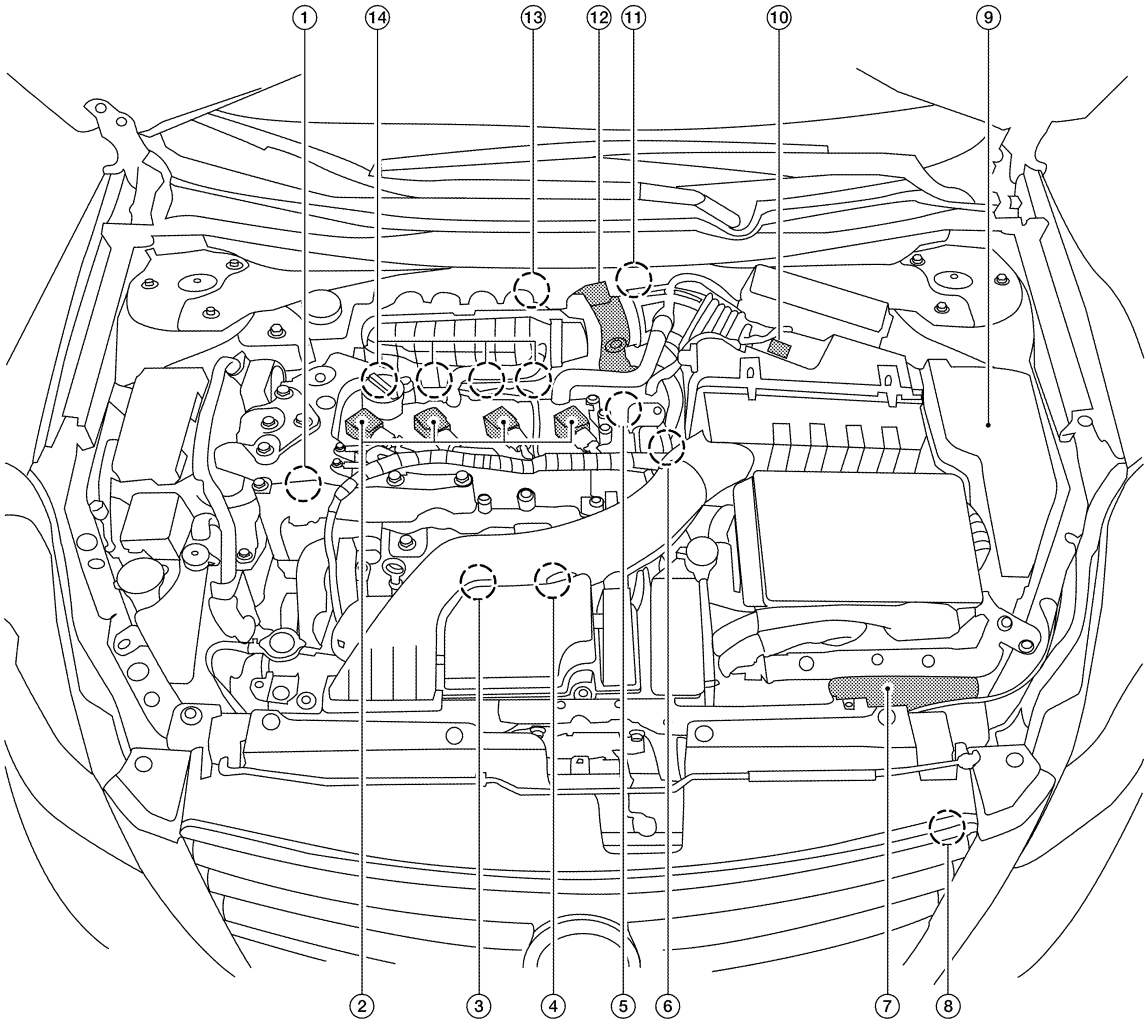

ALBIA0138ZZ

1. Intake valve timing control solenoid valve
2. Ignition coil (with power transistor) and spark plug
3. Knock sensor, Crankshaft position sensor (POS)
4. Air fuel ratio (A/F) sensor 1
5. Camshaft position sensor (PHASE)
6. Engine coolant temperature sensor
7. ECM
8. Refrigerant pressure sensor
9. IPDM E/R
10. Mass air flow sensor (with intake temperature sensor)
11. EVAP service port
12. Electric throttle control actuator (with built in throttle position sensor and throttle control motor)
13. EVAP canister purge volume control solenoid valve
14. Fuel injector

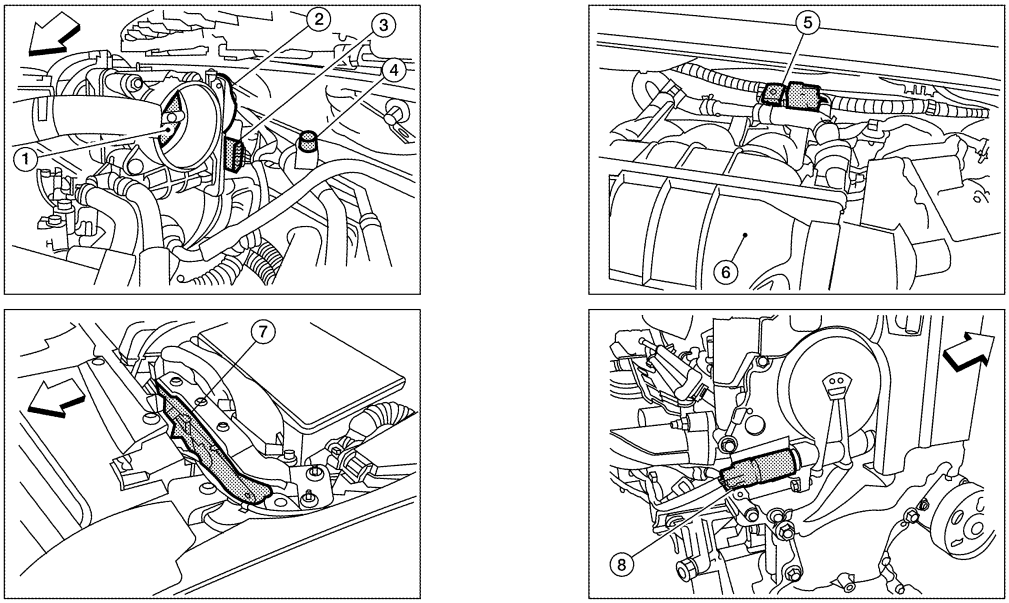

ALBIA0160ZZ

1. Throttle valve
2. Electric throttle control actuator
3. Electric throttle control actuator harness connector
4. EVAP service port
5. EVAP canister purge volume control solenoid valve
6. Intake manifold collector
7. ECM
8. Intake valve timing control solenoid valve

⇦: Vehicle front

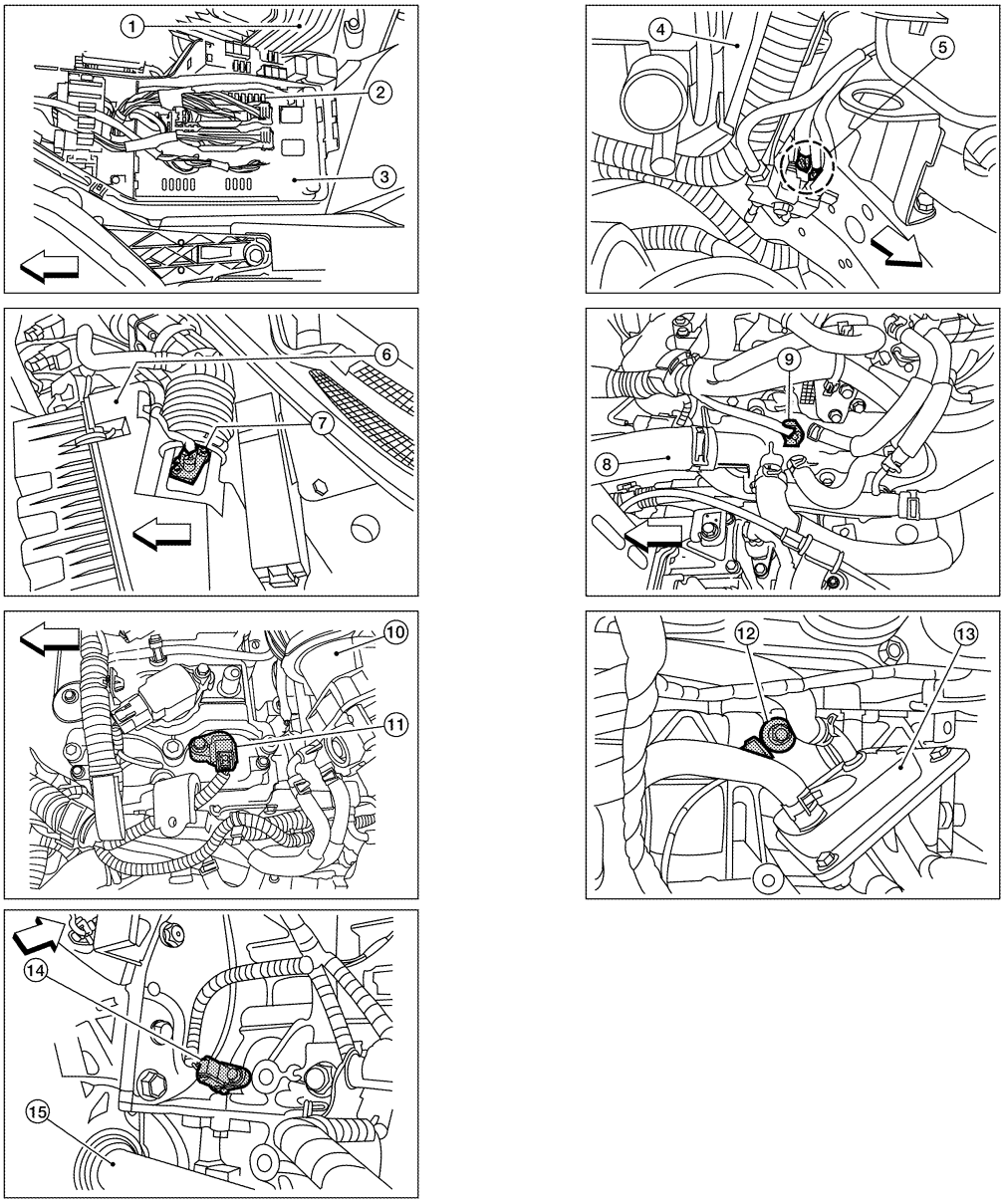

ALBIA0161ZZ

1.	Air cleaner assembly	2.	Fuel pump fuse	3.	IPDM E/R
4.	EPS control unit (view with air cleaner assembly removed)	5.	Engine grounds	6.	Air cleaner assembly
7.	Mass air flow sensor (with intake temperature sensor)	8.	Upper radiator hose	9.	Engine coolant temperature sensor
10.	Intake manifold collector	11.	Camshaft position sensor (PHASE)	12.	Knock sensor
13.	Engine oil cooler	14.	Crankshaft position sensor (POS)	15.	Drive shaft RH

⇦: Vehicle front

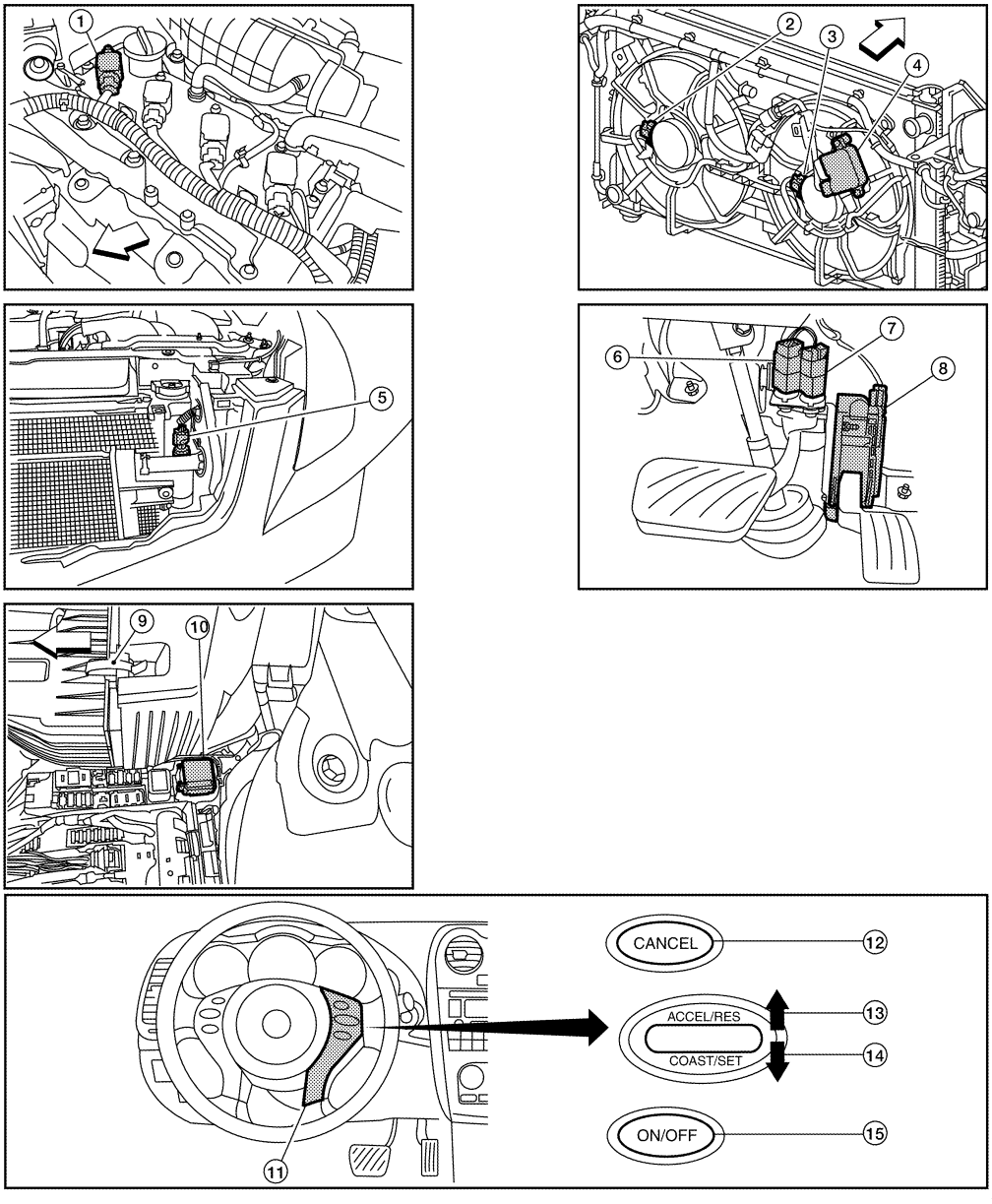

ALBIA0162ZZ

1. No.1 ignition coil
2. Cooling fan motor-1
3. Cooling fan motor-2
4. Cooling fan control module
5. Refrigerant pressure sensor
6. Stop lamp switch
7. ASCD brake switch
8. Accelerator pedal position sensor
9. Air cleaner assembly
10. Cooling fan relay-1
11. ASCD steering switch
12. CANSEC switch
13. RESUME/ACCELERATE switch
14. SET/COAST switch
15. MAIN switch

⇦: Vehicle front

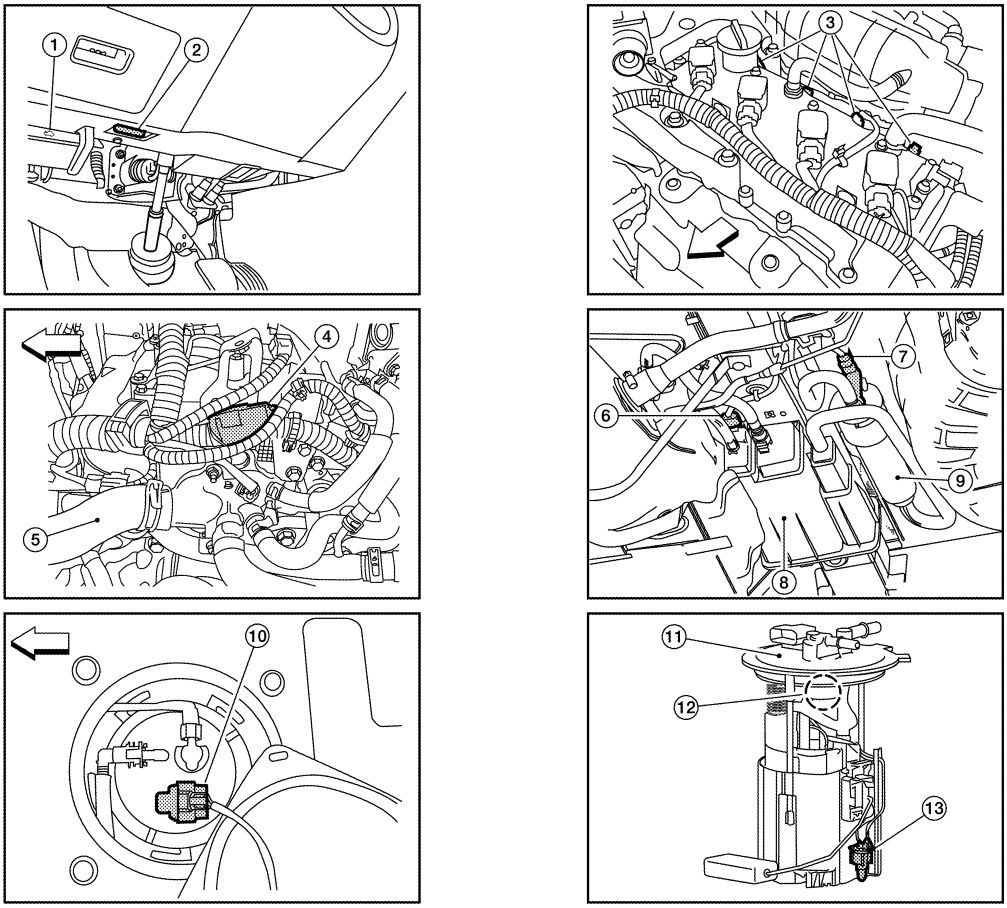

ALBIA0173ZZ

1. Hood opener handle
2. Data link connector
3. Fuel injector harness connector
4. Condenser-2
5. Upper radiator hose
6. EVAP control system pressure sensor
7. EVAP canister vent control valve
8. EVAP canister (MAIN)
9. EVAP canister (SUB)
10. Fuel level sensor unit and fuel pump harness connector (This illustration is view with rear seat cushion and inspection hole cover removed.)
11. Fuel pump assembly
12. Fuel pressure regulator
13. Fuel tank temperature sensor

⇦ : Vehicle front

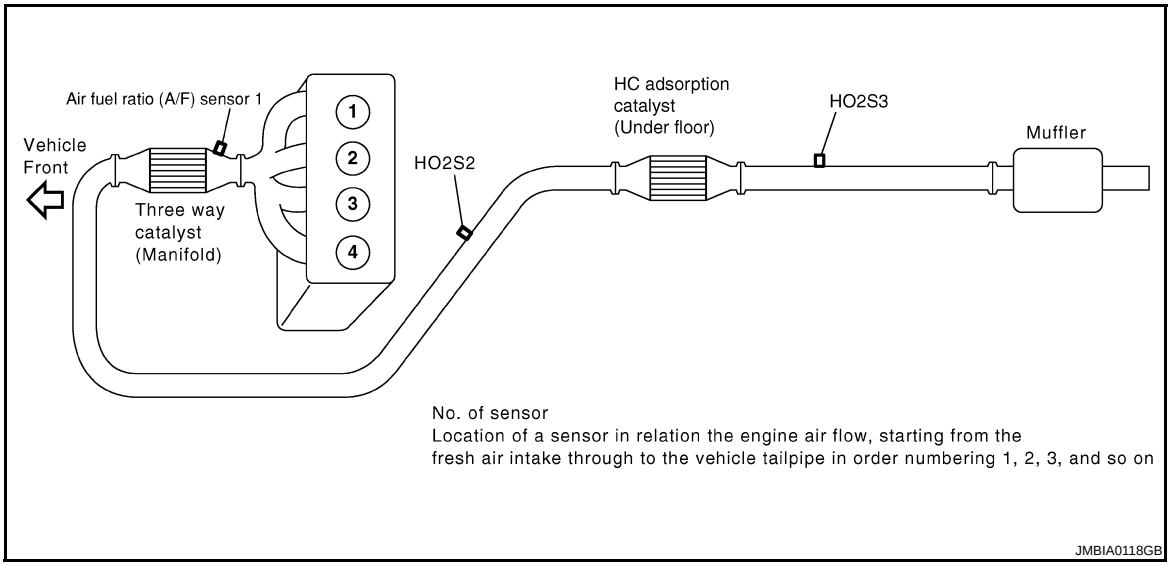

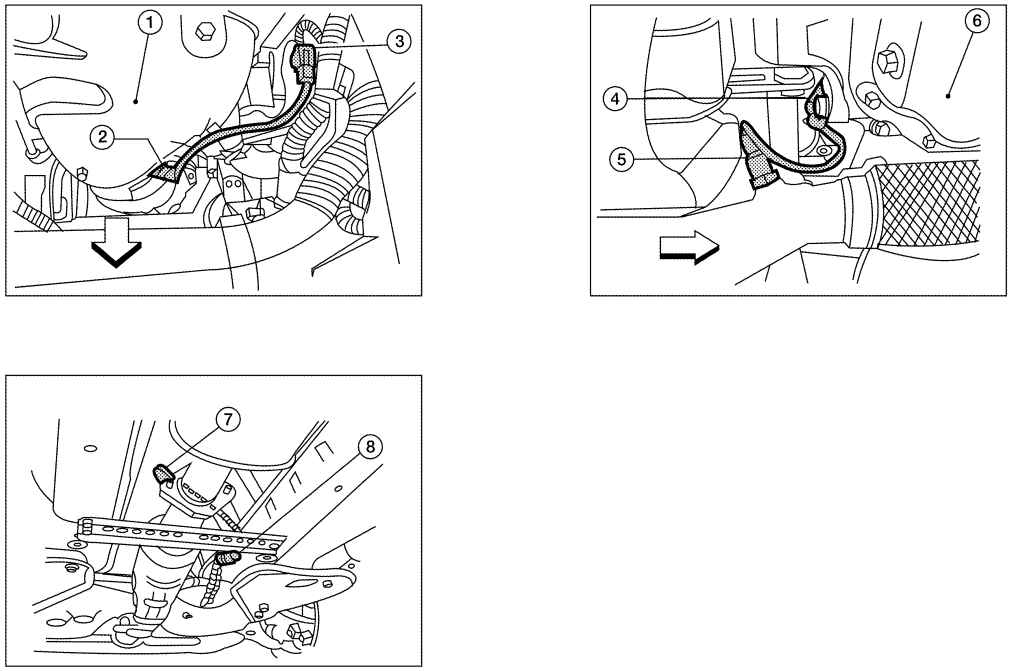

ALBIA0272ZZ

1. Exhaust manifold cover
2. Air fuel ratio (A/F) sensor 1
3. Air fuel ratio (A/F) sensor 1 harness connector
4. Heated oxygen sensor 2 harness connector
5. Heated oxygen sensor 2
6. Oil pan
7. Heated oxygen sensor 3
8. Heated oxygen sensor 3 harness connector

⇦: Vehicle front

Component Description

INFOID:0000000003069099

Component	Reference
A/F sensor 1	EC-179, "Description"
Camshaft position sensor (PHASE)	EC-254, "Description"

Component	Reference
Crankshaft position sensor (POS)	EC-250, "Description"
Engine coolant temperature sensor	EC-166, "Description"
Fuel injector	EC-236, "Description"
Heated oxygen sensor 2	EC-136, "Description"
Intake air temperature sensor	EC-160, "Description"
Knock sensor	EC-248, "Description"
Mass air flow sensor	EC-145, "Description"
Throttle position sensor	EC-169, "Description"
Vehicle speed sensor	EC-306, "Description"

ELECTRIC IGNITION SYSTEM

System Diagram

INFOID:0000000003069100

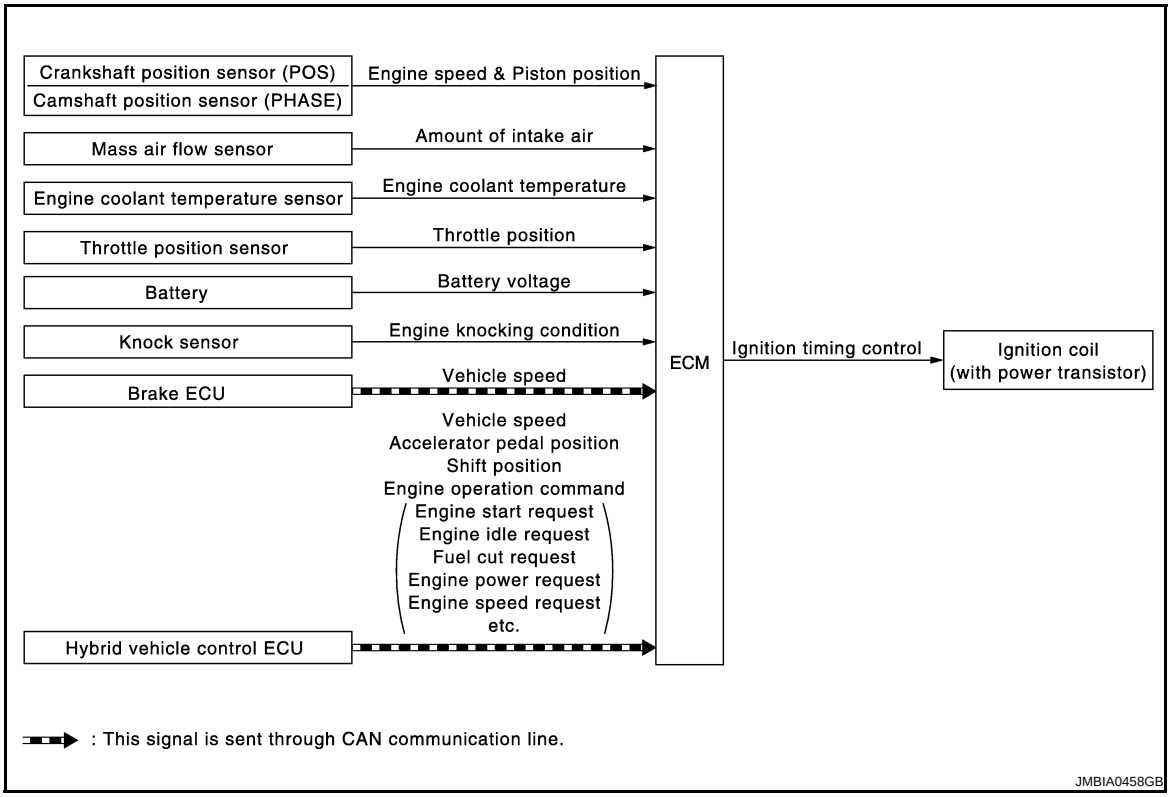

System Description

INFOID:0000000003069101

INPUT/OUTPUT SIGNAL CHART

Sensor	Input Signal to ECM	ECM function	Actuator
Crankshaft position sensor (POS)	Engine speed Piston position	Ignition timing control	Ignition coil (with power transistor)
Camshaft position sensor (PHASE)			
Mass air flow sensor	Amount of intake air		
Engine coolant temperature sensor	Engine coolant temperature		
Throttle position sensor	Throttle position		
Battery	Battery voltage		
Knock sensor	Engine knocking		
Brake ECU	Vehicle speed*		
Hybrid vehicle control ECU	Vehicle speed*		
	Accelerator pedal position*		
	Shift position*		
	Engine operation command* (Engine start request, Engine idle request, Fuel cut request, Engine power request, Engine speed request, etc.)		

*: This signal is sent to the ECM through CAN communication line.

SYSTEM DESCRIPTION

Firing order: 1 - 3 - 4 - 2

The ignition timing is controlled by the ECM to maintain the best air-fuel ratio for every running condition of the engine. The ignition timing data is stored in the ECM.
The ECM receives information such as the injection pulse width and camshaft position sensor (PHASE) signal. Computing this information, ignition signals are transmitted to the power transistor.
During the following conditions, the ignition timing is revised by the ECM according to the other data stored in the ECM.

- At starting
- During warm-up
- At idle
- At low battery voltage
- During acceleration

The knock sensor retard system is designed only for emergencies. The basic ignition timing is programmed within the anti-knocking zone, if recommended fuel is used under dry conditions. The retard system does not operate under normal driving conditions. If engine knocking occurs, the knock sensor monitors the condition. The signal is transmitted to the ECM. The ECM retards the ignition timing to eliminate the knocking condition.

Component Parts Location

INFOID:0000000003069102

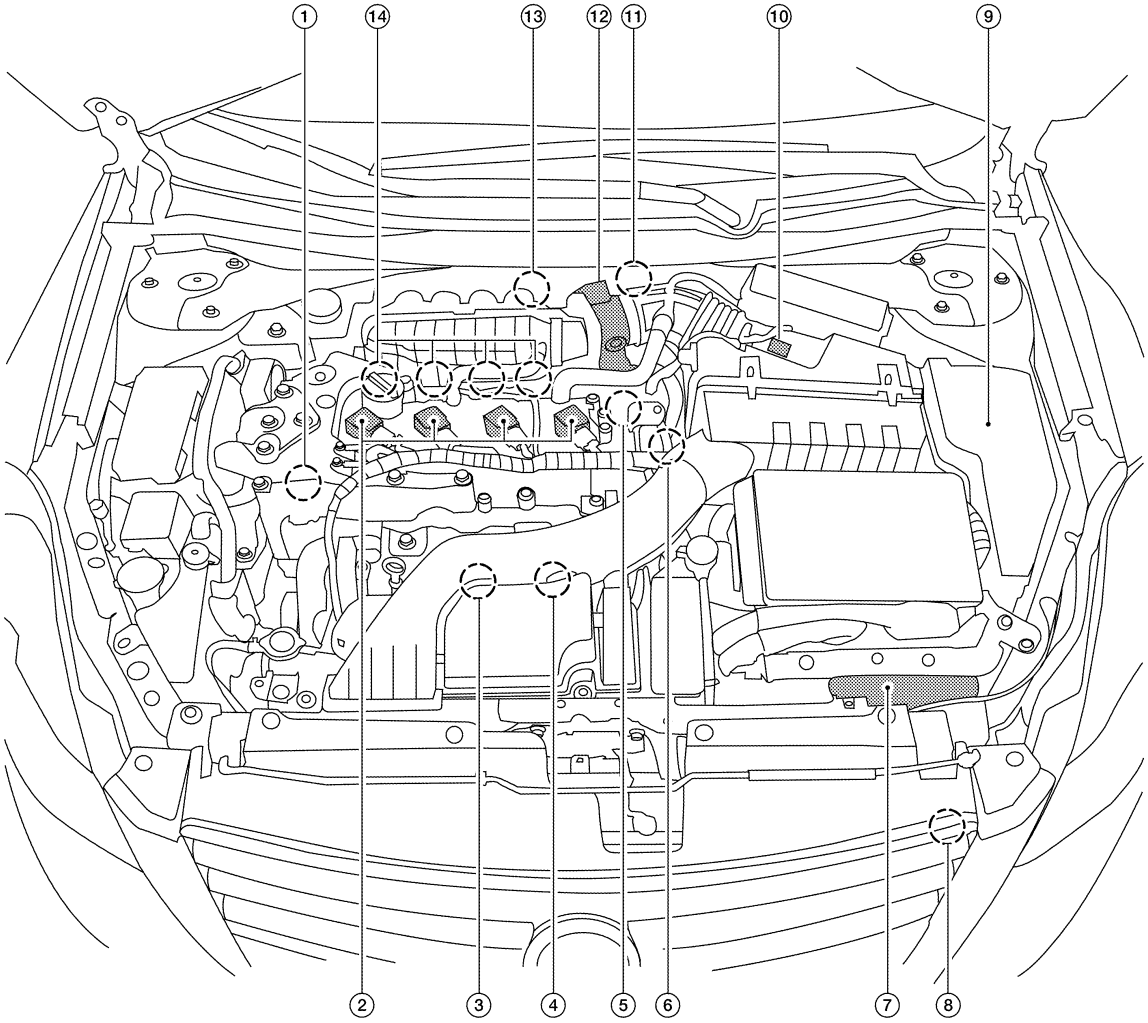

ALBIA0138ZZ

1. Intake valve timing control solenoid valve
2. Ignition coil (with power transistor) and spark plug
3. Knock sensor, Crankshaft position sensor (POS)
4. Air fuel ratio (A/F) sensor 1
5. Camshaft position sensor (PHASE)
6. Engine coolant temperature sensor
7. ECM
8. Refrigerant pressure sensor
9. IPDM E/R
10. Mass air flow sensor (with intake temperature sensor)
11. EVAP service port
12. Electric throttle control actuator (with built in throttle position sensor and throttle control motor)
13. EVAP canister purge volume control solenoid valve
14. Fuel injector

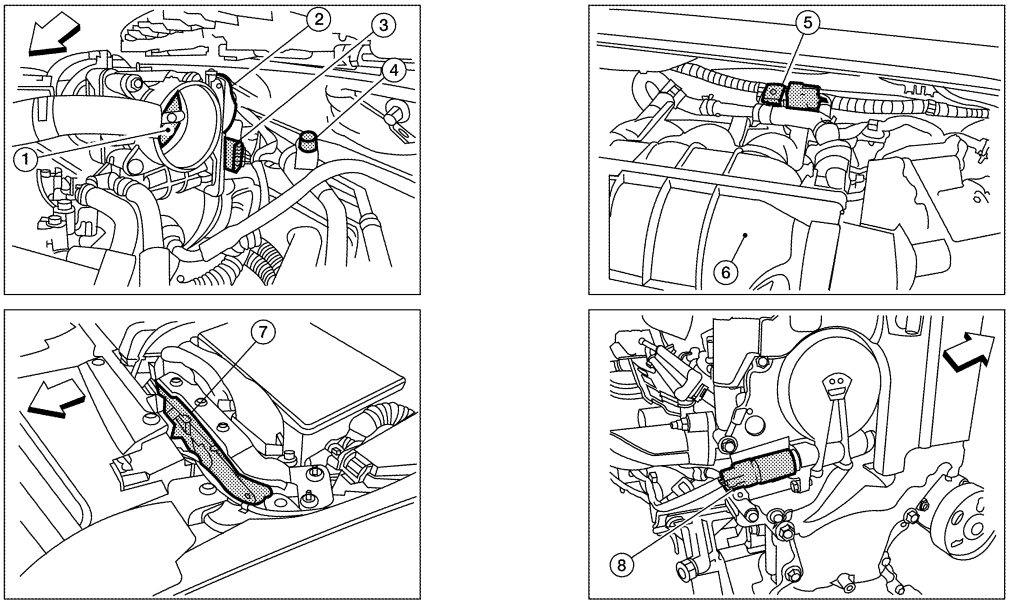

ALBIA0160ZZ

1. Throttle valve
2. Electric throttle control actuator
3. Electric throttle control actuator harness connector
4. EVAP service port
5. EVAP canister purge volume control solenoid valve
6. Intake manifold collector
7. ECM
8. Intake valve timing control solenoid valve

⇦: Vehicle front

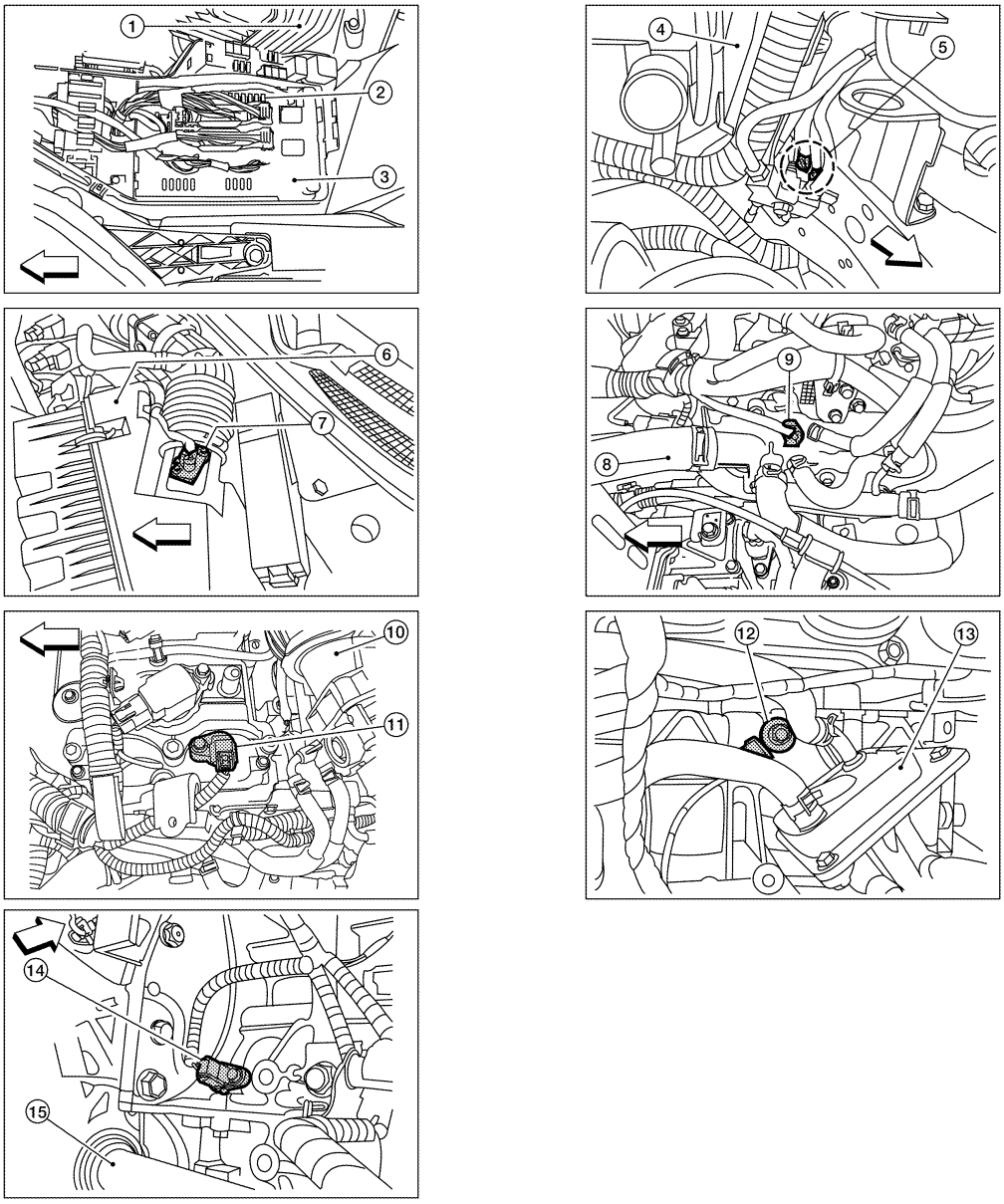

ALBIA0161ZZ

1. Air cleaner assembly	2. Fuel pump fuse	3. IPDM E/R
4. EPS control unit (view with air cleaner assembly removed)	5. Engine grounds	6. Air cleaner assembly
7. Mass air flow sensor (with intake temperature sensor)	8. Upper radiator hose	9. Engine coolant temperature sensor
10. Intake manifold collector	11. Camshaft position sensor (PHASE)	12. Knock sensor
13. Engine oil cooler	14. Crankshaft position sensor (POS)	15. Drive shaft RH

⇦: Vehicle front

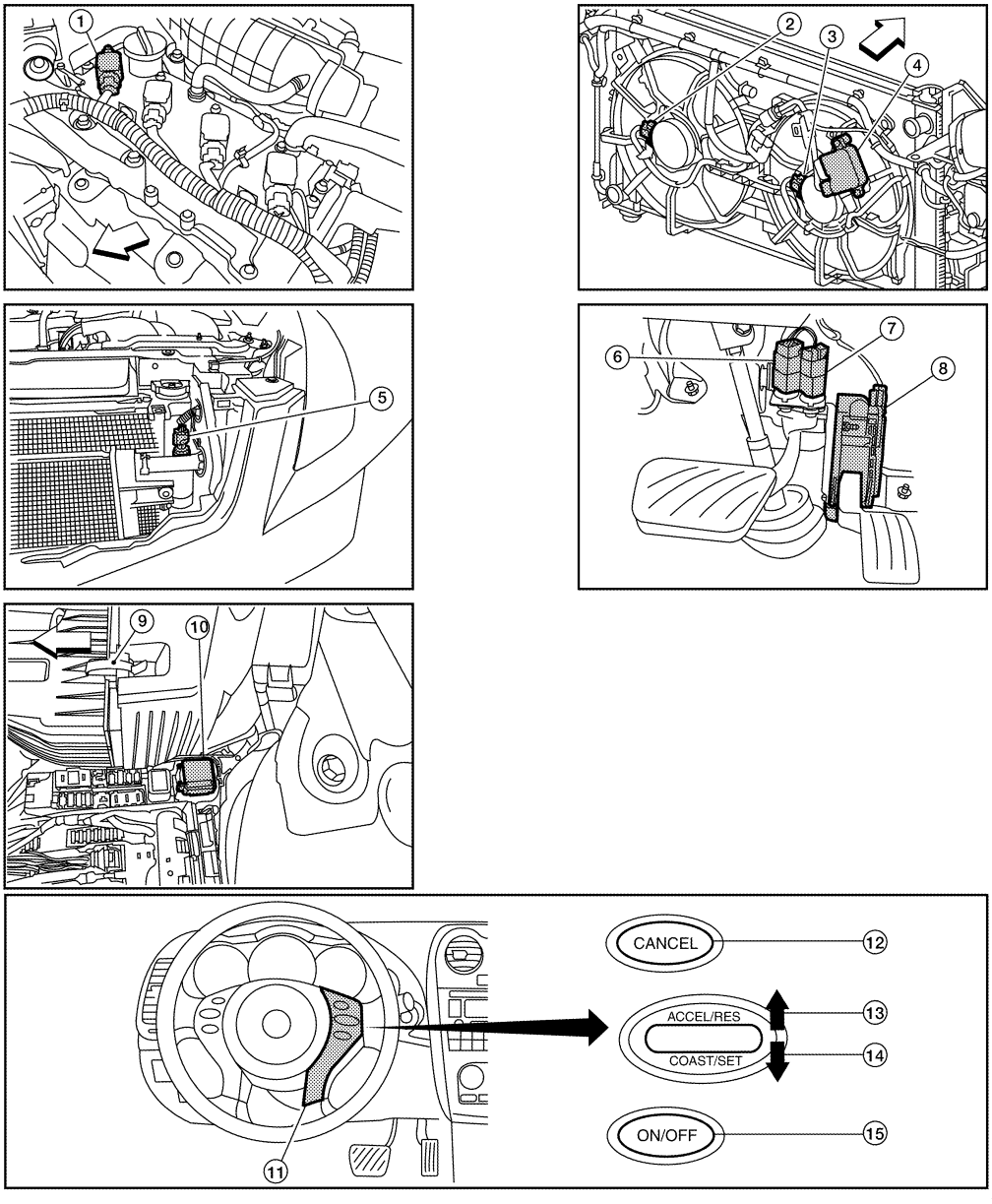

ALBIA0162ZZ

1. No.1 ignition coil
2. Cooling fan motor-1
3. Cooling fan motor-2
4. Cooling fan control module
5. Refrigerant pressure sensor
6. Stop lamp switch
7. ASCD brake switch
8. Accelerator pedal position sensor
9. Air cleaner assembly
10. Cooling fan relay-1
11. ASCD steering switch
12. CANSEC switch
13. RESUME/ACCELERATE switch
14. SET/COAST switch
15. MAIN switch

⇦: Vehicle front

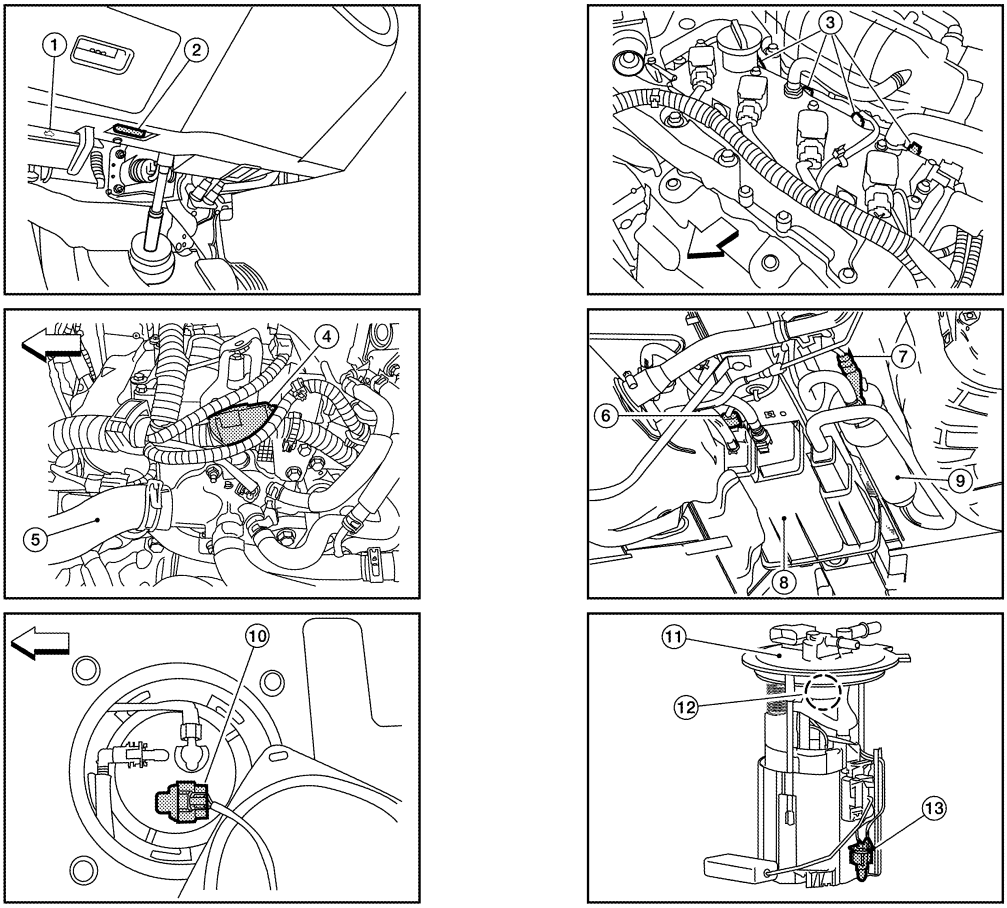

ALBIA0173ZZ

1. Hood opener handle
2. Data link connector
3. Fuel injector harness connector
4. Condenser-2
5. Upper radiator hose
6. EVAP control system pressure sensor
7. EVAP canister vent control valve
8. EVAP canister (MAIN)
9. EVAP canister (SUB)
10. Fuel level sensor unit and fuel pump harness connector (This illustration is view with rear seat cushion and inspection hole cover removed.)
11. Fuel pump assembly
12. Fuel pressure regulator
13. Fuel tank temperature sensor

⇦ : Vehicle front

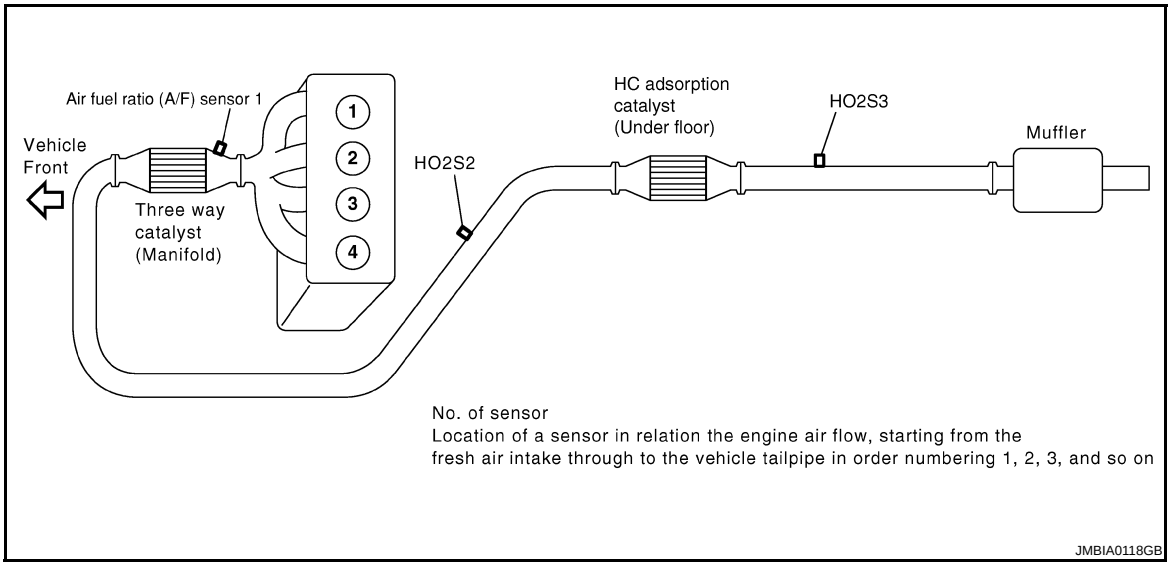

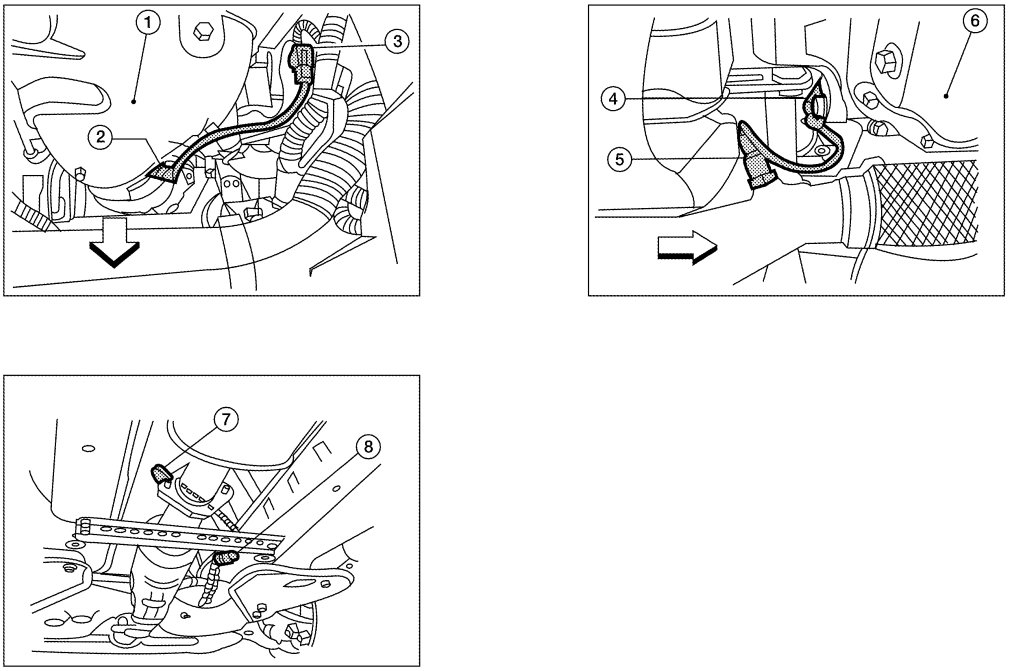

1. Exhaust manifold cover
2. Air fuel ratio (A/F) sensor 1
3. Air fuel ratio (A/F) sensor 1 harness connector
4. Heated oxygen sensor 2 harness connector
5. Heated oxygen sensor 2
6. Oil pan
7. Heated oxygen sensor 3
8. Heated oxygen sensor 3 harness connector

⇦: Vehicle front

Component Description

INFOID:0000000003069103

Component	Reference
Camshaft position sensor (PHASE)	EC-254, "Description"
Crankshaft position sensor (POS)	EC-250, "Description"

Component	Reference
Engine coolant temperature sensor	EC-166, "Description"
Ignition signal	EC-384, "Description"
Knock sensor	EC-248, "Description"
Mass air flow sensor	EC-145, "Description"
Throttle position sensor	EC-169, "Description"
Vehicle speed sensor	EC-306, "Description"

AUTOMATIC SPEED CONTROL DEVICE (ASCD)

System Diagram

INFOID:0000000003069104

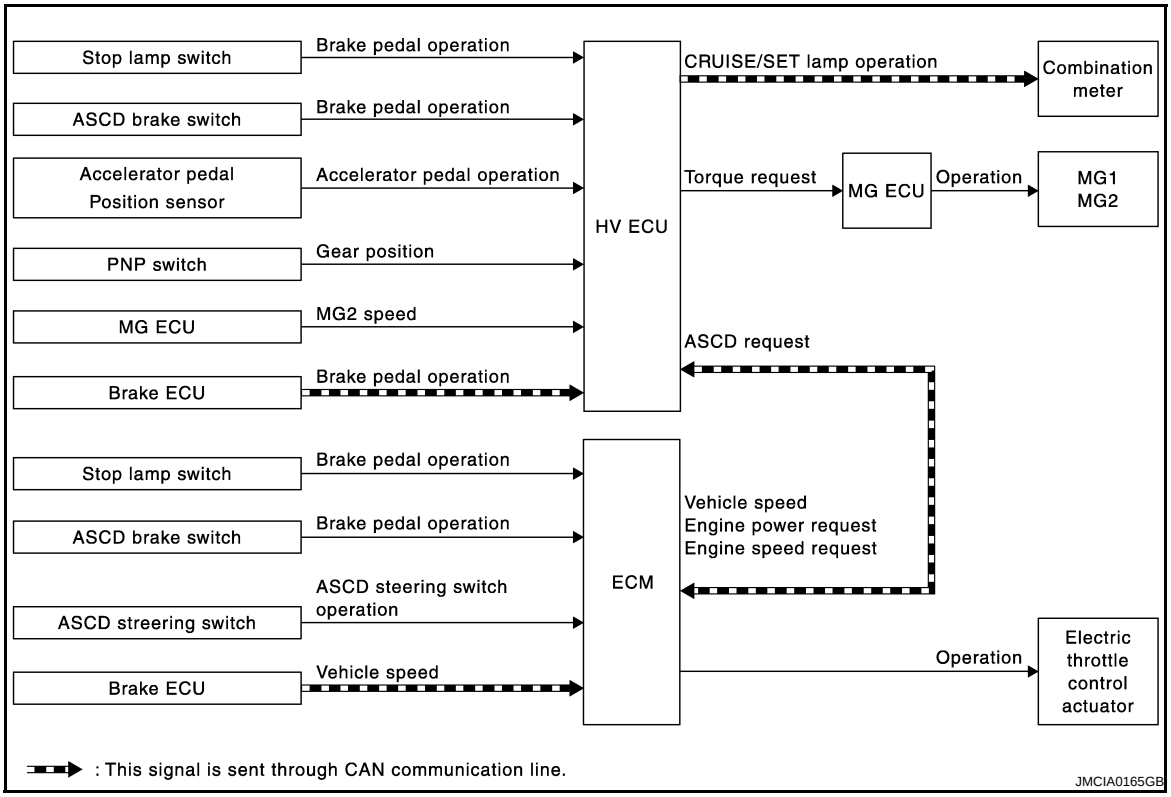

System Description

INFOID:0000000003069105

INPUT/OUTPUT SIGNAL CHART

Input				ECU	Output			
Sensor	Signal				Signal			Actuator
Stop lamp switch	Brake pedal operation			Hybrid vehicle control ECU	CRUISE lamp operation*			Combination meter
ASCD brake switch	Brake pedal operation				SET lamp operation*			
Accelerator pedal position sensor	Accelerator pedal operation				Torque request	MG ECU	Operation	MG1 MG2
PNP switch	Gear position							
MG ECU	MG2 speed							
Brake ECU	Brake pedal operation*							
Stop lamp switch	Brake pedal operation	ECM	ASCD request*		Vehicle speed* Engine power request* Engine speed request*	ECM	Operation	Electric throttle control actuator
ASCD brake switch	Brake pedal operation							
ASCD steering switch	ASCD steering switch operation							
Brake ECU	Vehicle speed*							

*: This signal is sent through CAN communication line.

BASIC ASCD SYSTEM

Refer to Owner's Manual for ASCD operating instructions.

Automatic Speed Control Device (ASCD) allows a driver to keep vehicle at predetermined constant speed without depressing accelerator pedal. Driver can set vehicle speed in advance between approximately 40 km/h (25 MPH) and 144 km/h (89 MPH).

The hybrid vehicle control ECU receives signals from each switch, sensor, control unit, and maintains constant vehicle speed by optimizing the use of the engine and motor driving force.
Operation status of ASCD is indicated by CRUISE lamp and SET lamp in combination meter. If any malfunction occurs in ASCD system, it automatically deactivates control.
NOTE:
Always drive vehicle in safe manner according to traffic conditions and obey all traffic laws.

SET OPERATION

Press MAIN switch. (The CRUISE lamp in combination meter illuminates.)
When vehicle speed reaches a desired speed between approximately 40 km/h (25 MPH) and 144 km/h (89 MPH), press SET/COAST switch. (Then SET lamp in combination meter illuminates.)

ACCELERATE OPERATION

If the RESUME/ACCELERATE switch is pressed during cruise control driving, increase the vehicle speed until the switch is released or vehicle speed reaches maximum speed controlled by the system.
And then ASCD will keep the new set speed.

CANCEL OPERATION

When any of following conditions exist, cruise operation will be canceled.
- CANCEL switch is pressed
- More than 2 switches at ASCD steering switch are pressed at the same time (Set speed will be cleared)
- Brake pedal is depressed
- Selector lever is changed to N, P, R position
- Vehicle speed decreased to 13 km/h (8 MPH) lower than the set speed
- TCS system is operated

When any of the following conditions is detected, the hybrid vehicle control ECU will cancel the cruise operation and inform the driver by blinking indicator lamp.
- Malfunction for some self-diagnoses regarding ASCD control: SET lamp will blink quickly.

If MAIN switch is turned to OFF during ASCD is activated, all of ASCD operations will be canceled and vehicle speed memory will be erased.

COAST OPERATION

When the SET/COAST switch is pressed during cruise control driving, decrease vehicle set speed until the switch is released. And then ASCD will keep the new set speed.

RESUME OPERATION

When the RESUME/ACCELERATE switch is pressed after cancel operation other than pressing MAIN switch is performed, vehicle speed will return to last set speed. To resume vehicle set speed, vehicle condition must meet following conditions.
- Brake pedal is released
- Selector lever is in other than P and N positions
- Vehicle speed is greater than 40 km/h (25 MPH) and less than 144 km/h (89 MPH)

Component Parts Location

INFOID:0000000003069106

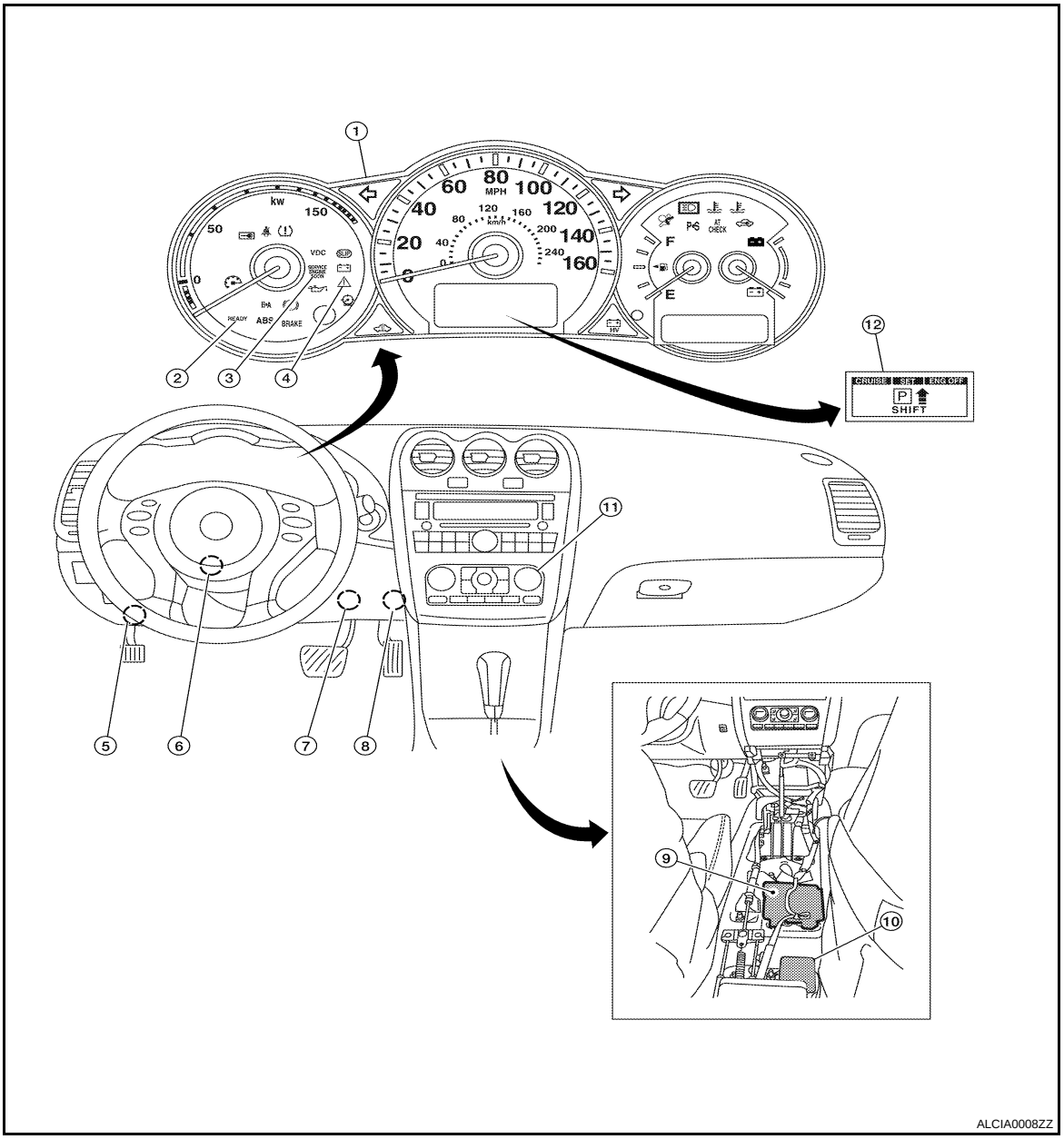

1. Combination meter	2. READY operation indicator light	3. Malfunction indicator light
4. Master warning light	5. Data link connector	6. Steering angle sensor
7. Stop lamp switch	8. Accelerator pedal position sensor	9. ACU (Air bag diagnosis sensor unit)
10. Yaw rate/side G sensor	11. Controller (A/C auto AMP.)	12. Vehicle information display indicator

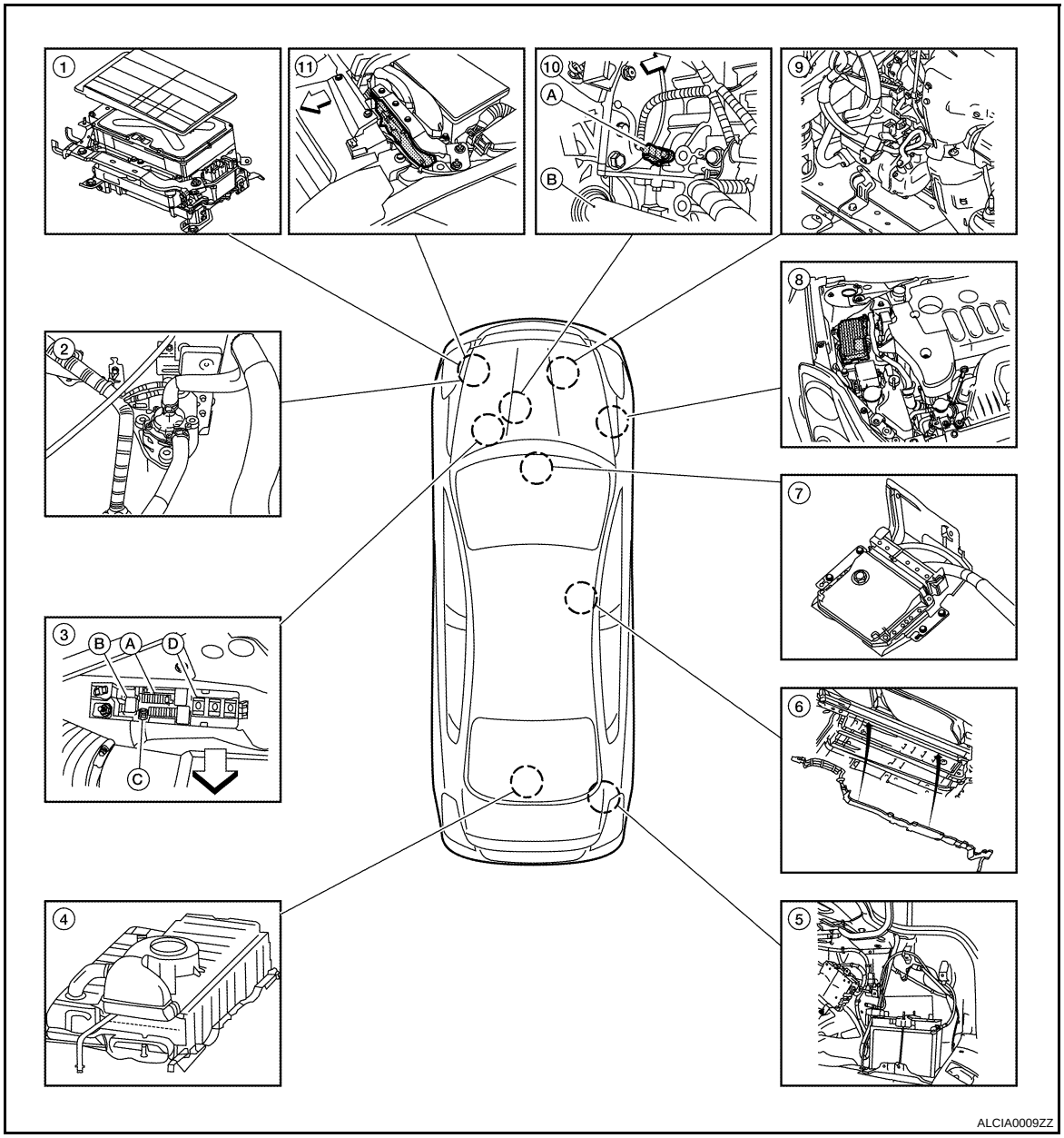

1. Inverter with converter assembly
2. Water pump with motor & bracket assembly
3. High voltage fuse and fusible link box
   A: HV CONT MAIN fuse 10A
   B: IGCT relay
   C: IGCT fusible link 50A
   D: DC/DC fusible link 120A
4. HV battery
5. Auxiliary battery
6. Frame wire
7. Hybrid vehicle control ECU (located under heater box assembly)
8. Brake ECU
9. Electric compressor (For A/C)
10. A: Crankshaft position sensor
    B: Axle
11. ECM

⇦ Vehicle front

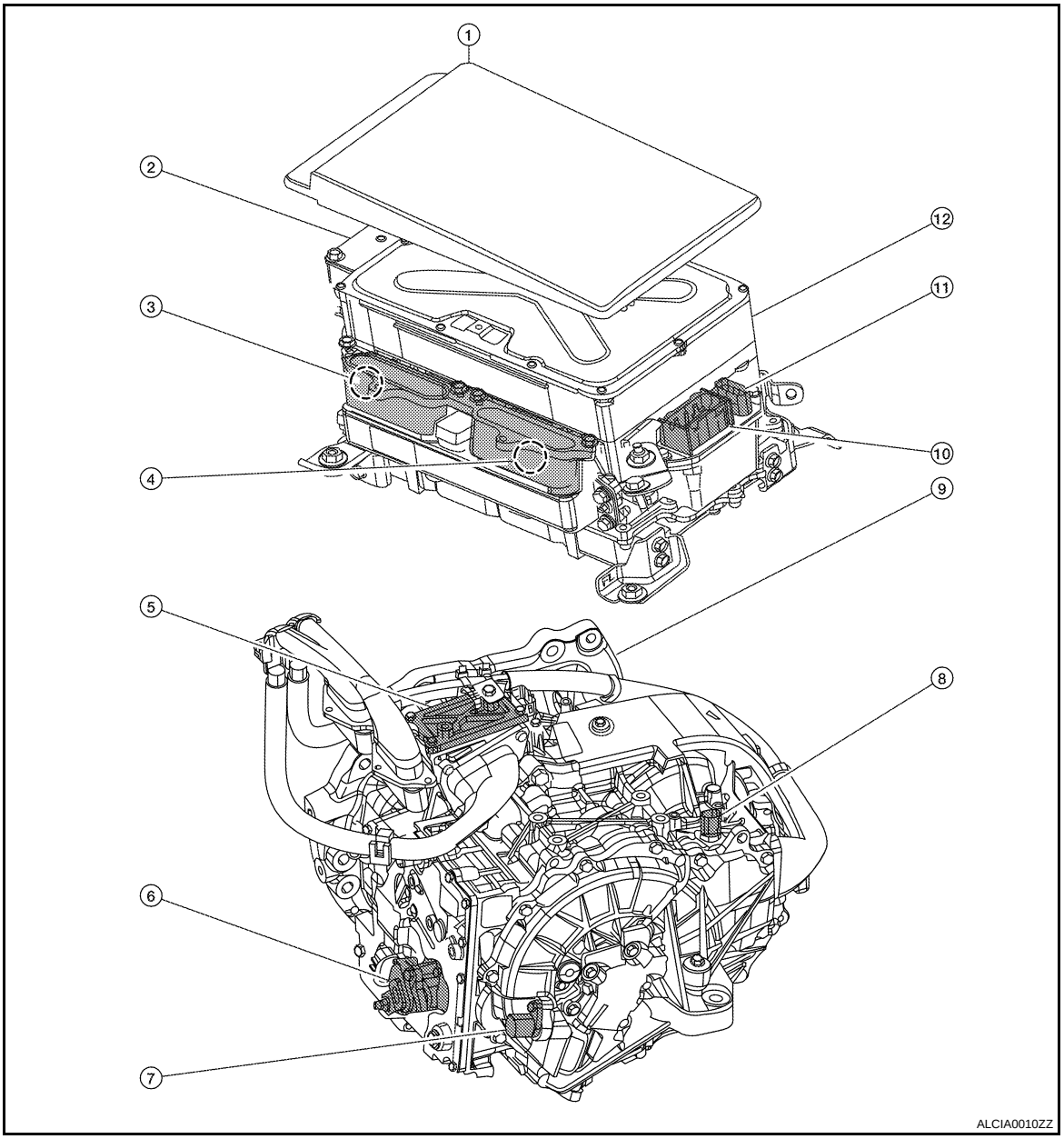

1.	Cover	2.	Compressor fuse cover	3.	MG1 connector
4.	MG2 connector	5.	Generator resolver and generator temperature sensor	6.	Park/Neutral position (PNP) switch
7.	Motor resolver	8.	Motor temperature sensor	9.	Hybrid transaxle (MG1, MG2, motor speed reduction planetary gear unit, power split planetary gear unit)
10.	Inverter with converter assembly connector (MG ECU)	11.	Inverter with converter assembly connector (Resolver)	12.	Inverter with converter assembly (Boost converter, inverter, MG ECU)

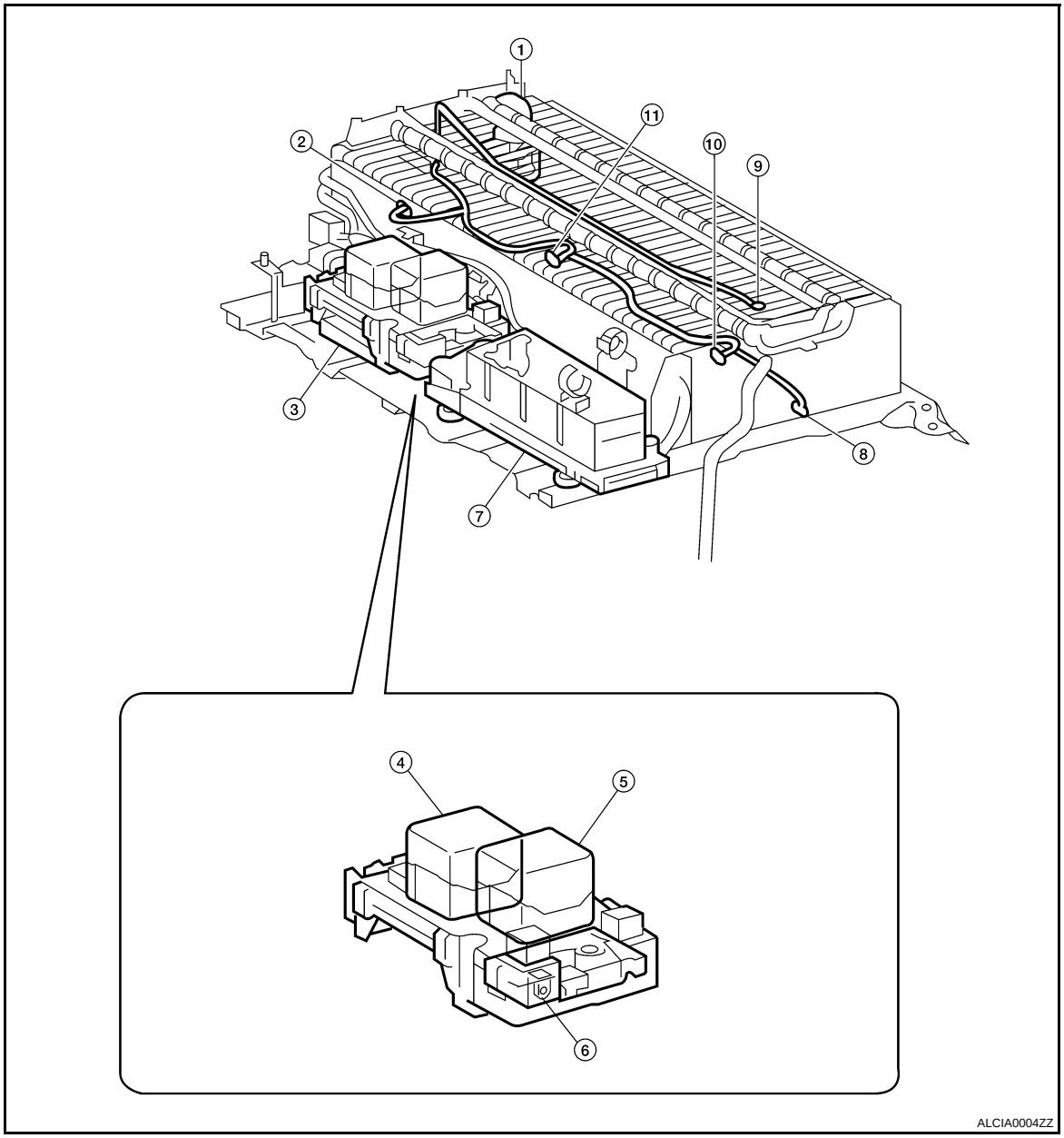

1. Service plug grip
2. Battery temperature sensor 0
3. Battery smart unit
4. SMRG
5. SMRB
6. Battery current sensor
7. Hybrid vehicle converter
8. Battery temperature sensor 3
9. Intake air temperature sensor
10. Battery temperature sensor 2
11. Battery temperature sensor 1

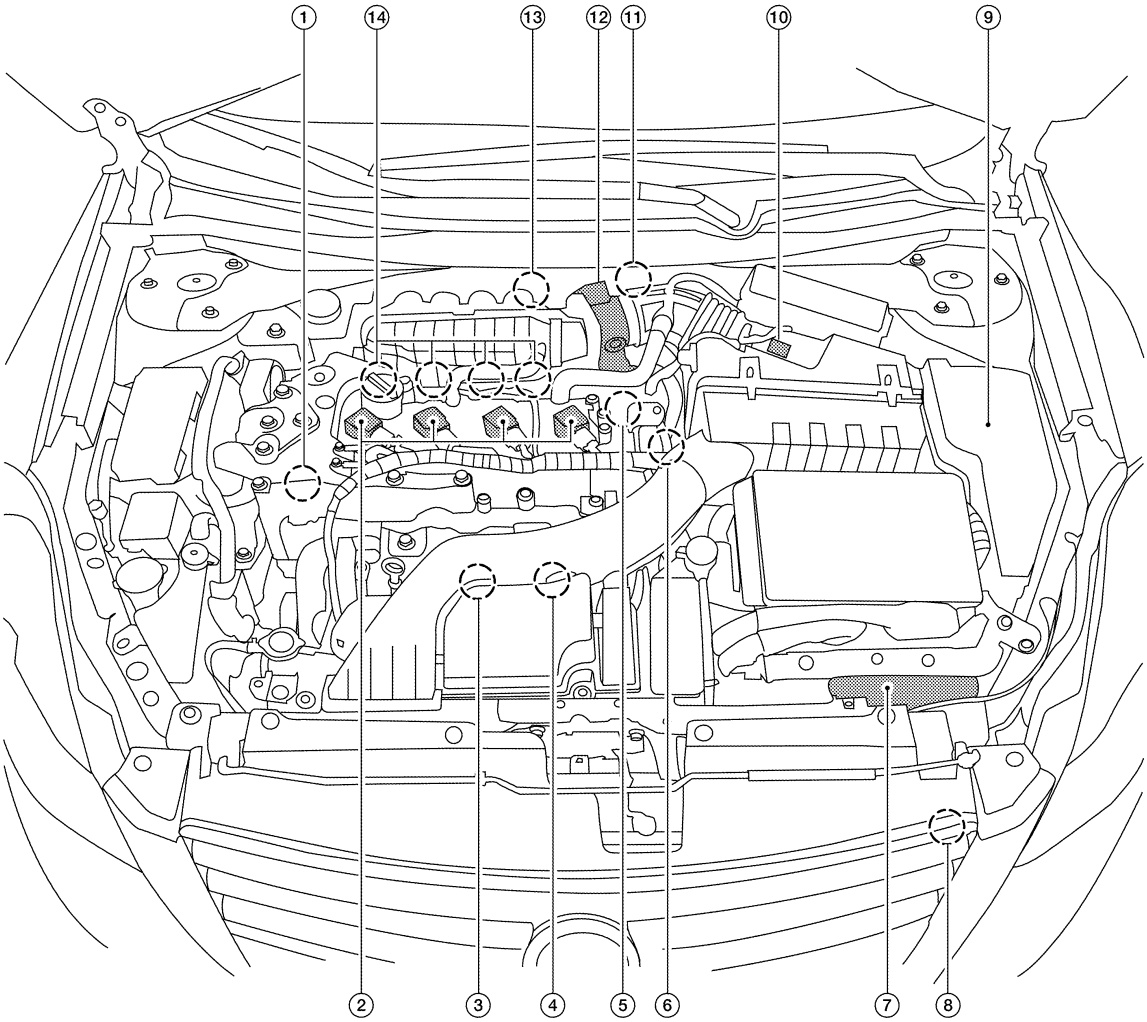

ALBIA0138ZZ

1. Intake valve timing control solenoid valve
2. Ignition coil (with power transistor) and spark plug
3. Knock sensor, Crankshaft position sensor (POS)
4. Air fuel ratio (A/F) sensor 1
5. Camshaft position sensor (PHASE)
6. Engine coolant temperature sensor
7. ECM
8. Refrigerant pressure sensor
9. IPDM E/R
10. Mass air flow sensor (with intake temperature sensor)
11. EVAP service port
12. Electric throttle control actuator (with built in throttle position sensor and throttle control motor)
13. EVAP canister purge volume control solenoid valve
14. Fuel injector

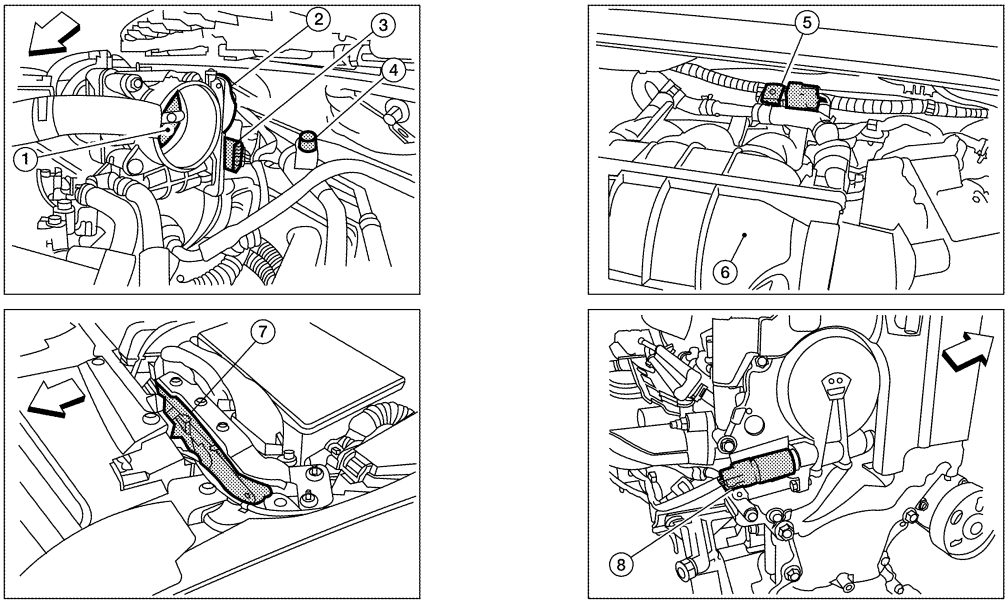

ALBIA0160ZZ

1. Throttle valve
2. Electric throttle control actuator
3. Electric throttle control actuator harness connector
4. EVAP service port
5. EVAP canister purge volume control solenoid valve
6. Intake manifold collector
7. ECM
8. Intake valve timing control solenoid valve

⇦: Vehicle front

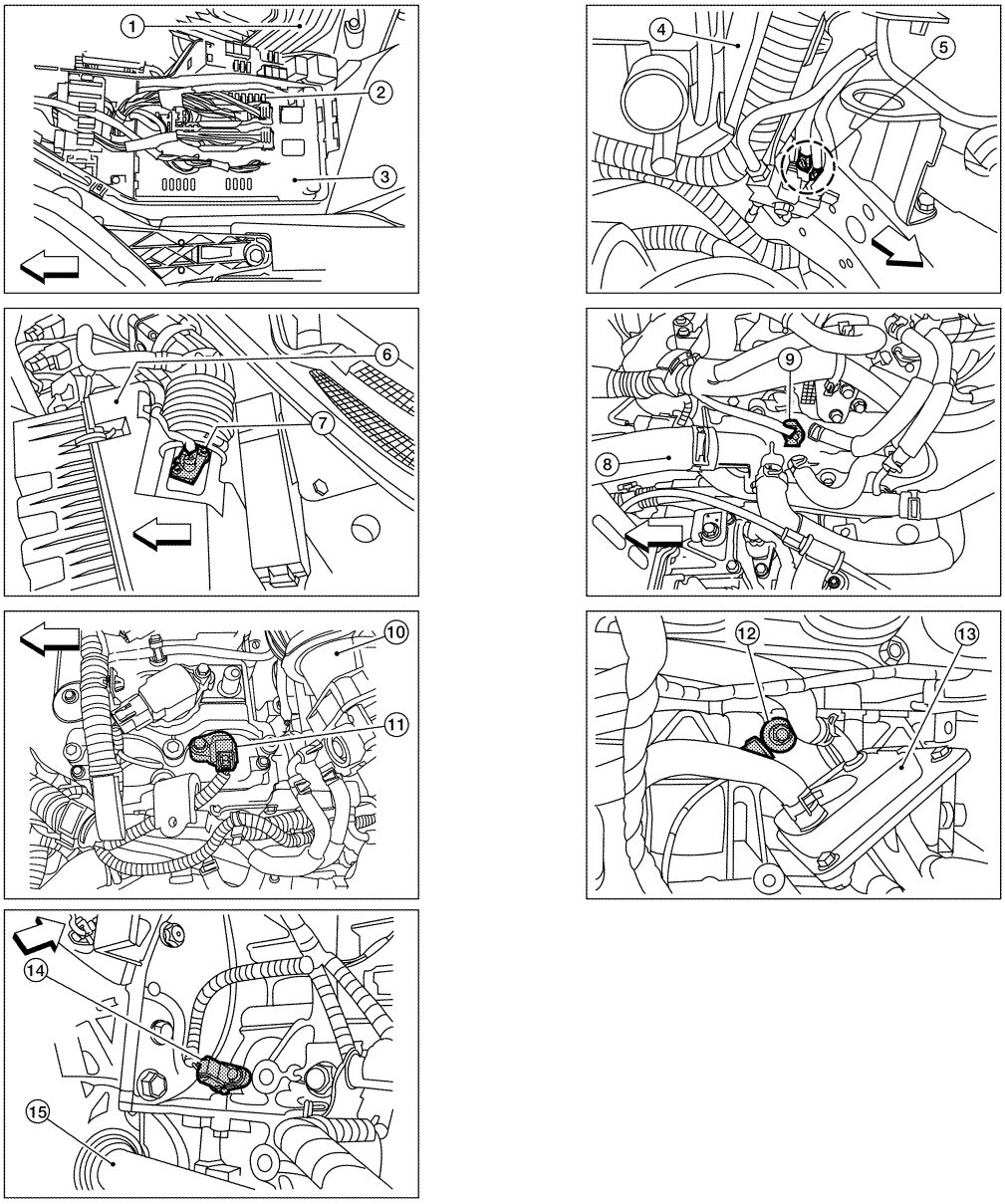

ALBIA0161ZZ

1.	Air cleaner assembly	2.	Fuel pump fuse	3.	IPDM E/R
4.	EPS control unit (view with air cleaner assembly removed)	5.	Engine grounds	6.	Air cleaner assembly
7.	Mass air flow sensor (with intake temperature sensor)	8.	Upper radiator hose	9.	Engine coolant temperature sensor
10.	Intake manifold collector	11.	Camshaft position sensor (PHASE)	12.	Knock sensor
13.	Engine oil cooler	14.	Crankshaft position sensor (POS)	15.	Drive shaft RH

⇦: Vehicle front

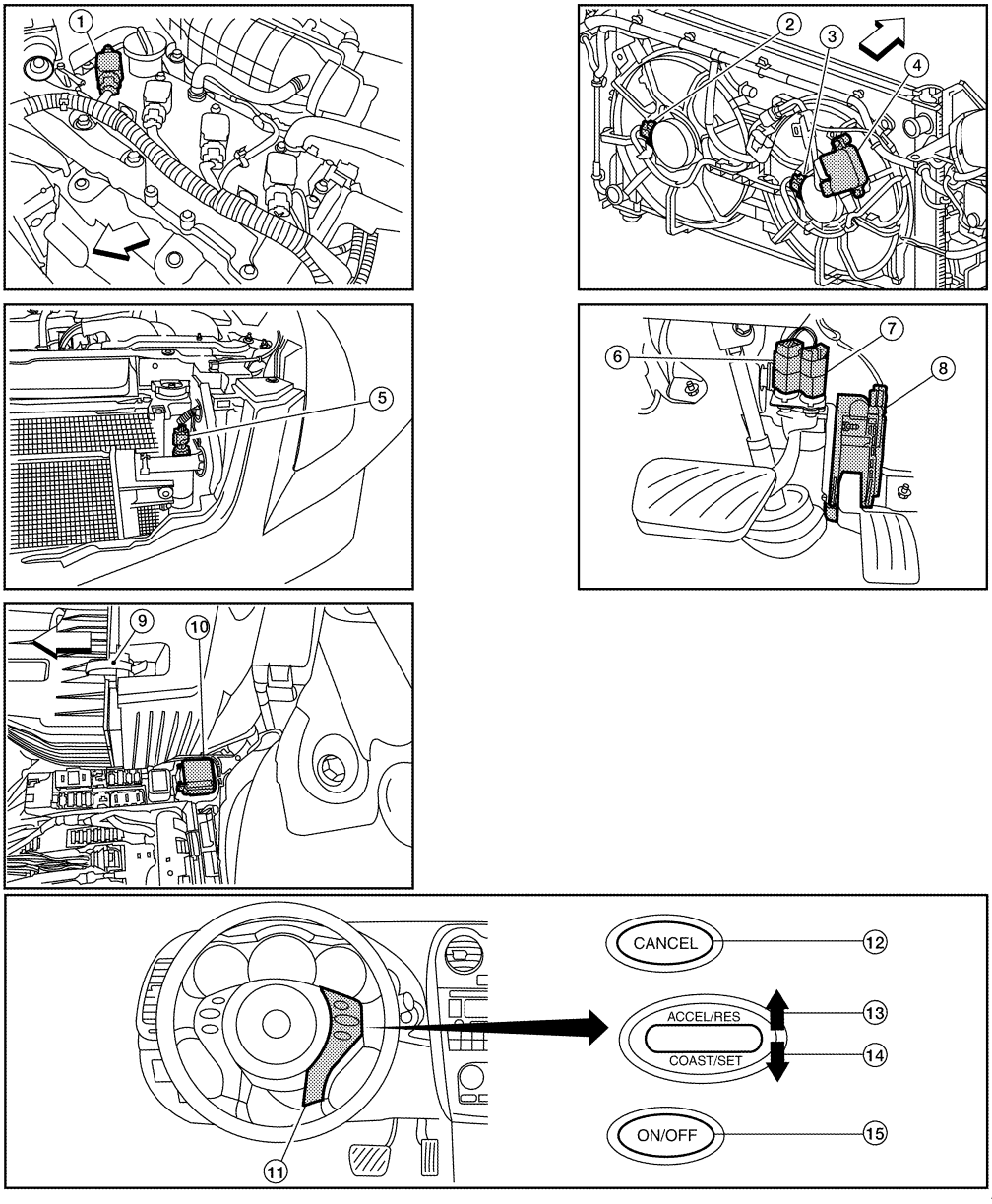

ALBIA0162ZZ

1. No.1 ignition coil
2. Cooling fan motor-1
3. Cooling fan motor-2
4. Cooling fan control module
5. Refrigerant pressure sensor
6. Stop lamp switch
7. ASCD brake switch
8. Accelerator pedal position sensor
9. Air cleaner assembly
10. Cooling fan relay
11. ASCD steering switch
12. CANSEC switch
13. RESUME/ACCELERATE switch
14. SET/COAST switch
15. MAIN switch

⇦: Vehicle front

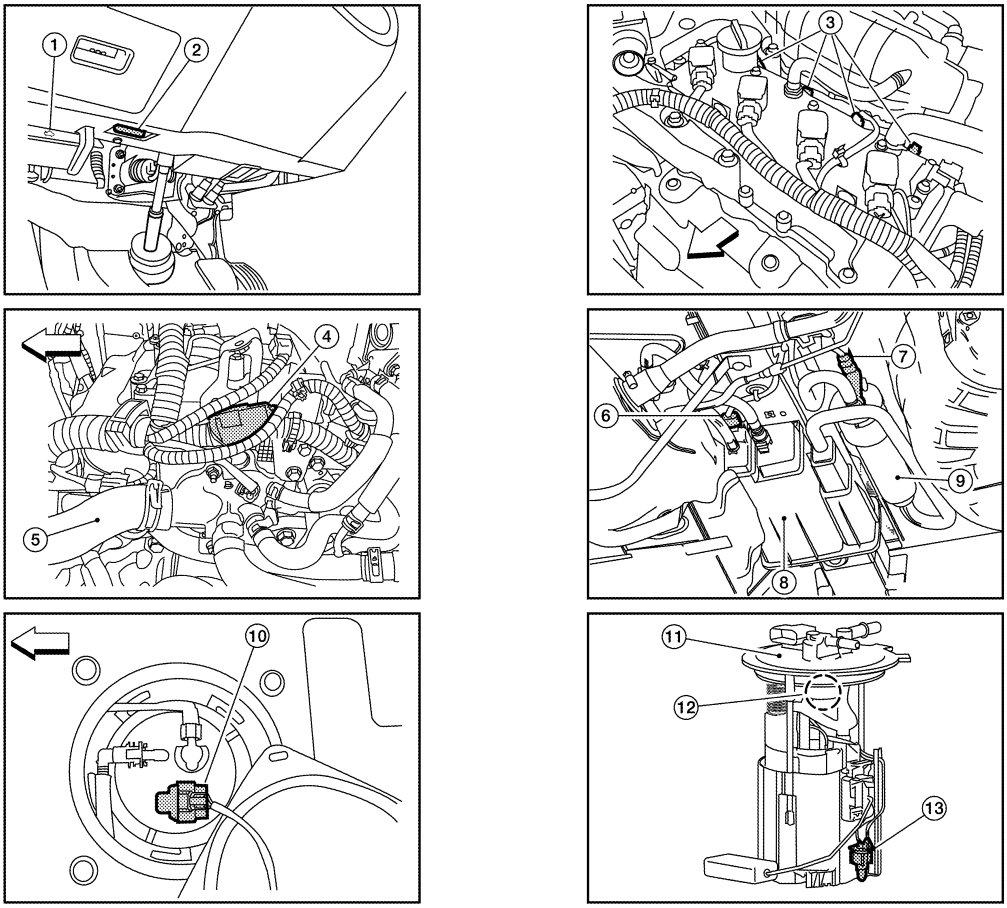

ALBIA0173ZZ

1. Hood opener handle
2. Data link connector
3. Fuel injector harness connector
4. Condenser-2
5. Upper radiator hose
6. EVAP control system pressure sensor
7. EVAP canister vent control valve
8. EVAP canister (MAIN)
9. EVAP canister (SUB)
10. Fuel level sensor unit and fuel pump harness connector (This illustration is view with rear seat cushion and inspection hole cover removed.)
11. Fuel pump assembly
12. Fuel pressure regulator
13. Fuel tank temperature sensor

⇦ : Vehicle front

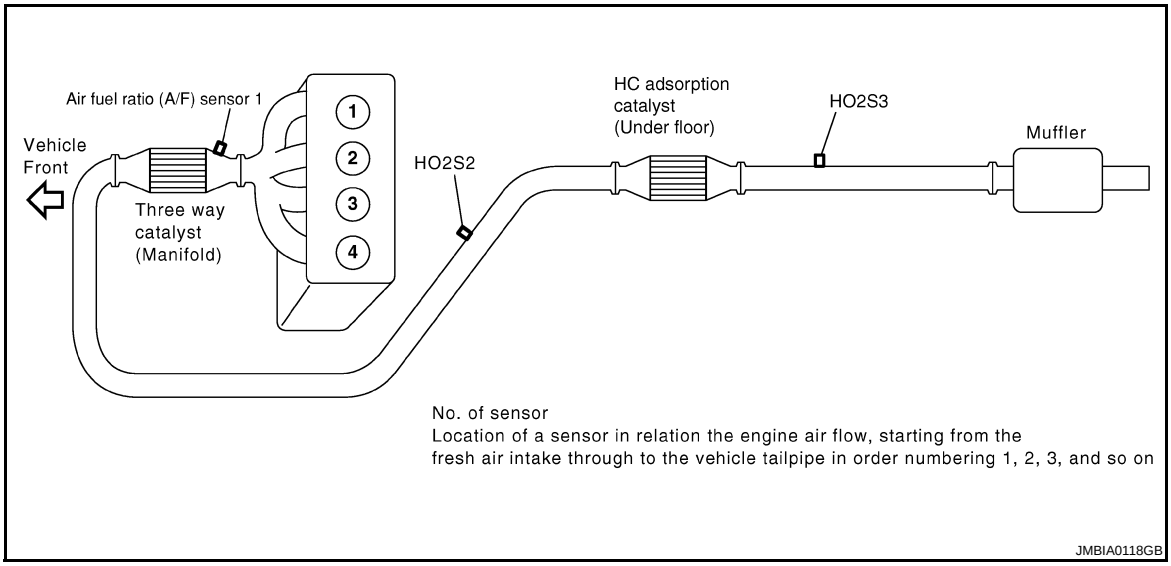

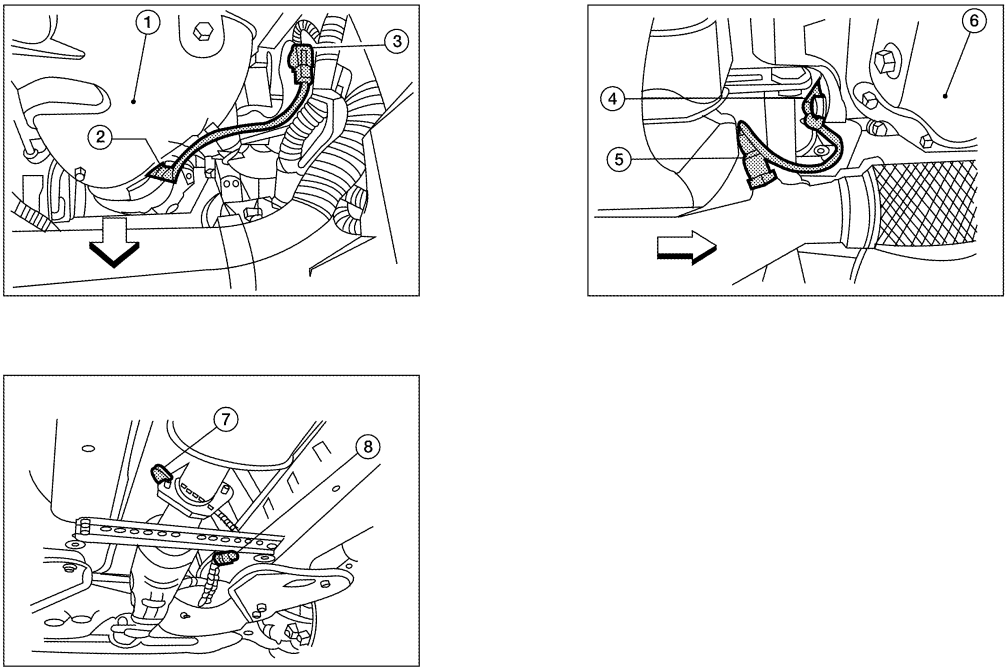

1. Exhaust manifold cover
2. Air fuel ratio (A/F) sensor 1
3. Air fuel ratio (A/F) sensor 1 harness connector
4. Heated oxygen sensor 2 harness connector
5. Heated oxygen sensor 2
6. Heated oxygen sensor 2 (This illustration is a view from under vehicle.)
7. Heated oxygen sensor 3
8. Heated oxygen sensor 3 harness connector

⇦: Vehicle front

Component Description

INFOID:0000000003069107

Component	Reference
ASCD steering switch	EC-337, "Description"
ASCD brake switch	HBC-475, "Description", EC-340, "Description"
Stop lamp switch	HBC-480, "Description", EC-348, "Description"
Electric throttle control actuator	EC-360, "Description"
MG1, MG2	HBC-39, "MG1 AND MG2 MAIN CONTROL : System Description"
ASCD indicator	HBC-581, "Description"

CAN COMMUNICATION

System Description

INFOID:0000000003069108

CAN (Controller Area Network) is a serial communication line for real time application. It is an on-vehicle multiplex communication line with high data communication speed and excellent error detection ability. Many electronic control units are equipped onto a vehicle, and each control unit shares information and links with other control units during operation (not independent). In CAN communication, control units are connected with 2 communication lines (CAN H line, CAN L line) allowing a high rate of information transmission with less wiring. Each control unit transmits/receives data but selectively reads required data only.
Refer to LAN-27, "CAN Communication Signal Chart", about CAN communication for detail..

COOLING FAN CONTROL

System Diagram

INFOID:0000000003069109

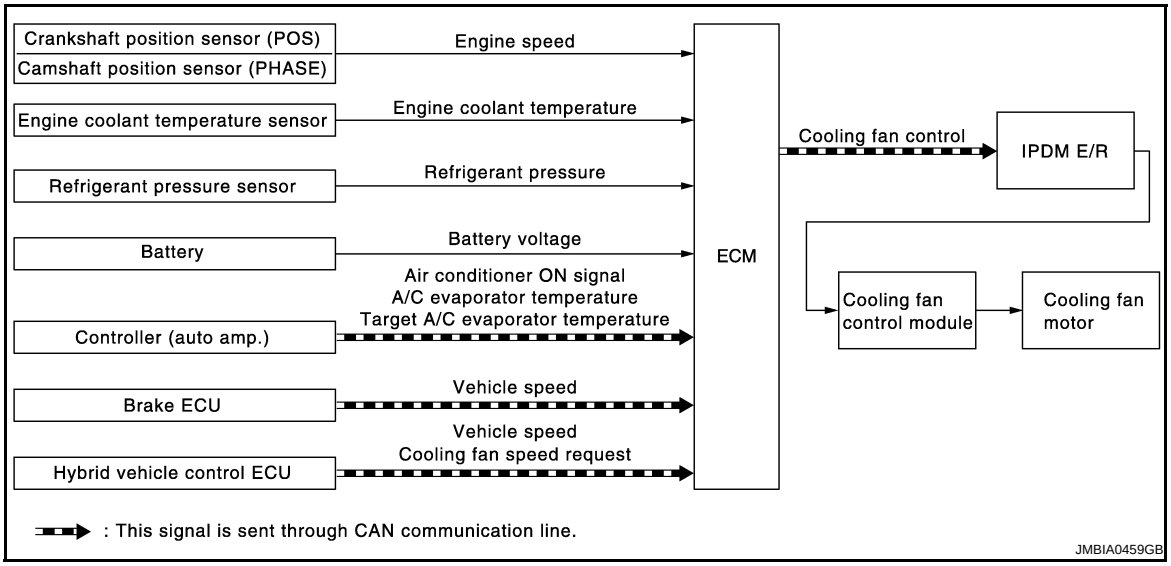

System Description

INFOID:0000000003069110

INPUT/OUTPUT SIGNAL CHART

Sensor	Input signal to ECM	ECM function	Actuator
Crankshaft position sensor (POS) Camshaft position sensor (PHASE)	Engine speed	Cooling fan control	IPDM E/R ↓ Cooling fan control module ↓ Cooling fan motor
Engine coolant temperature sensor	Engine coolant temperature		
Refrigerant pressure sensor	Refrigerant pressure		
Battery	Battery voltage		
Controller (auto amp.)	Air conditioner ON signal*		
	A/C evaporator temperature*		
	Target A/C evaporator temperature*		
Brake ECU	Vehicle speed*		
Hybrid vehicle control ECU	Vehicle speed*		
	Cooling fan speed request*		

*: This signal is sent to ECM through CAN communication line.

SYSTEM DESCRIPTION

ECM controls cooling fan speed corresponding to vehicle speed, engine coolant temperature, air conditioner ON signal, refrigerant pressure, target A/C evaporator temperature, A/C evaporator temperature and cooling fan speed request from hybrid vehicle control ECU.

Cooling fan control signal is sent to IPDM E/R from ECM by CAN communication line. Then, IPDM E/R sends ON/OFF pulse duty signal to cooling fan control module. Corresponding to this ON/OFF pulse duty signal, cooling fan control module gives cooling fan motor operating voltage to cooling fan motors. Cooling fan speed is controlled by duty cycle of cooling fan motor operating voltage sent from cooling fan control module.

Component Parts Location

INFOID:0000000003069111

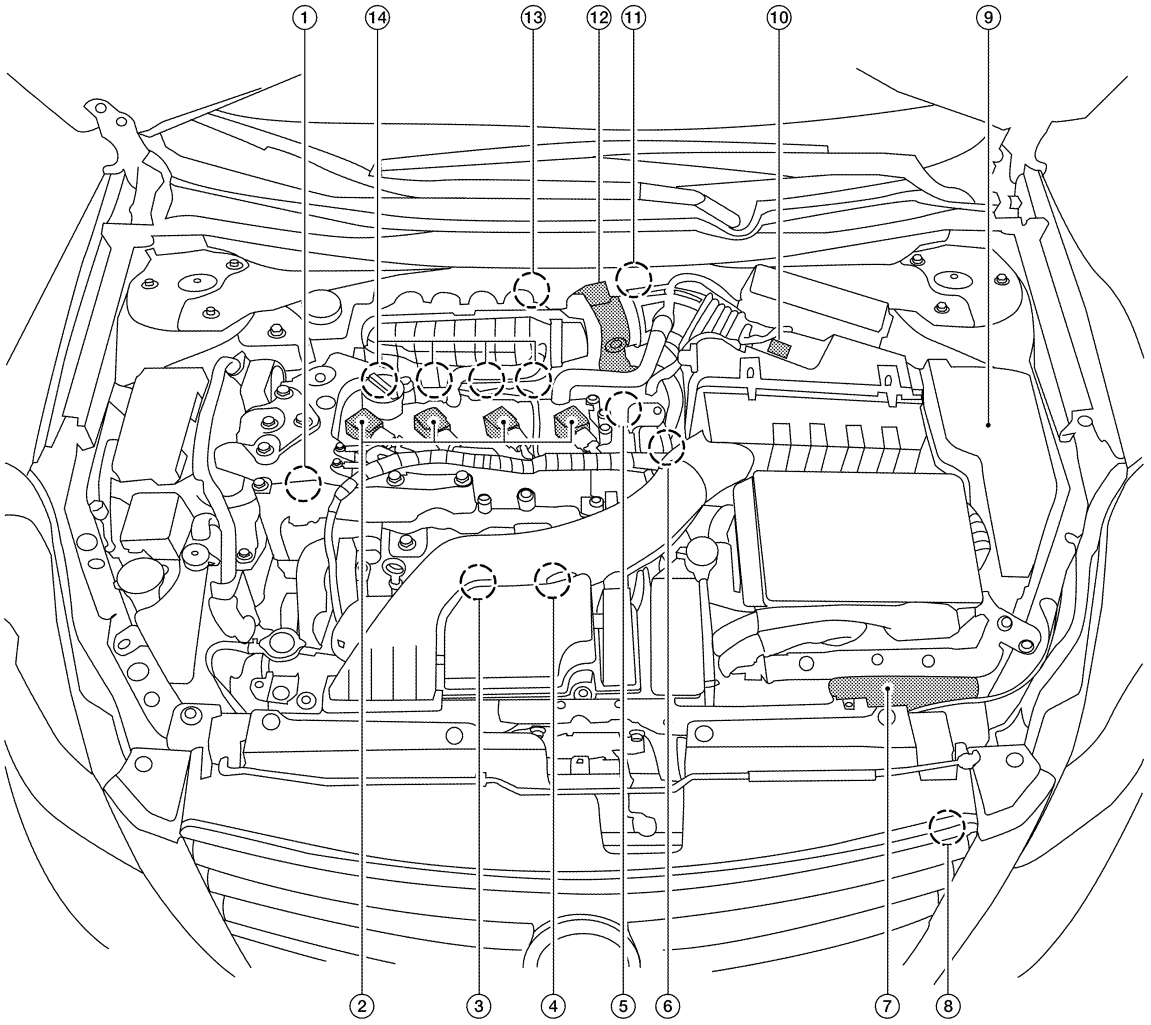

ALBIA0138ZZ

1. Intake valve timing control solenoid valve
2. Ignition coil (with power transistor) and spark plug
3. Knock sensor, Crankshaft position sensor (POS)
4. Air fuel ratio (A/F) sensor 1
5. Camshaft position sensor (PHASE)
6. Engine coolant temperature sensor
7. ECM
8. Refrigerant pressure sensor
9. IPDM E/R
10. Mass air flow sensor (with intake temperature sensor)
11. EVAP service port
12. Electric throttle control actuator (with built in throttle position sensor and throttle control motor)
13. EVAP canister purge volume control solenoid valve
14. Fuel injector

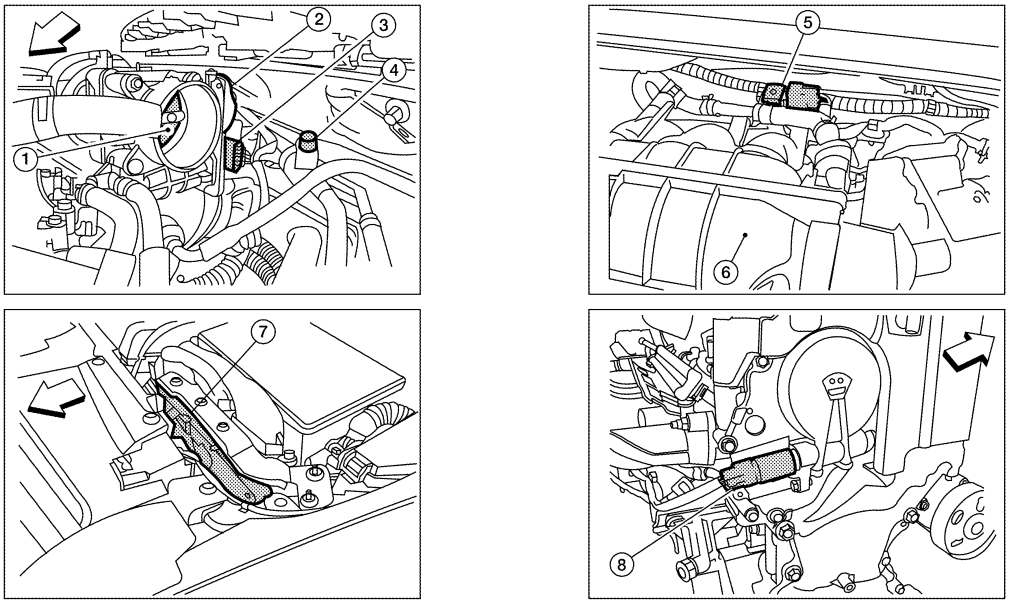

ALBIA0160ZZ

1. Throttle valve
2. Electric throttle control actuator
3. Electric throttle control actuator harness connector
4. EVAP service port
5. EVAP canister purge volume control solenoid valve
6. Intake manifold collector
7. ECM
8. Intake valve timing control solenoid valve

⇦: Vehicle front

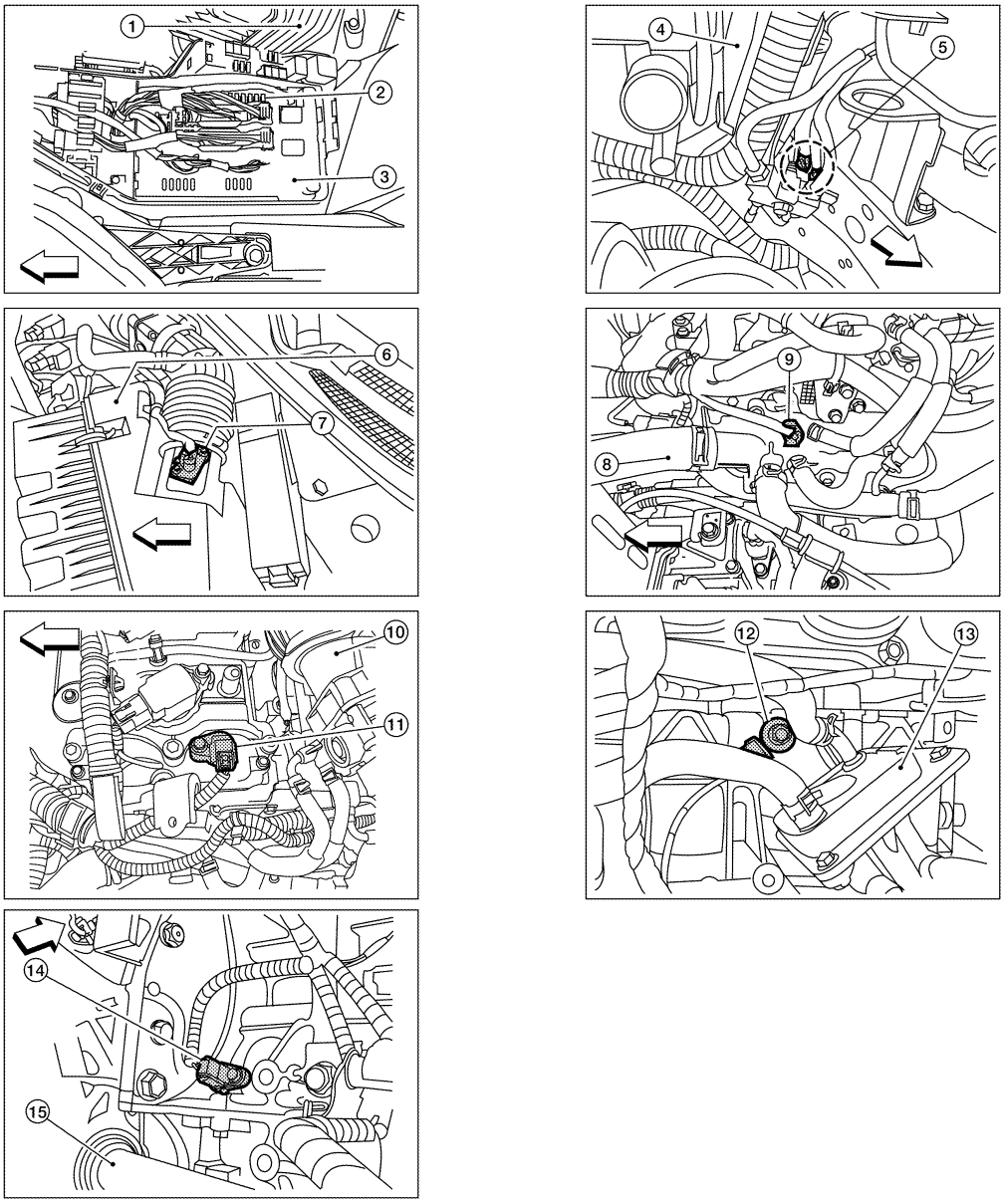

ALBIA0161ZZ

1.	Air cleaner assembly	2.	Fuel pump fuse	3.	IPDM E/R
4.	EPS control unit (view with air cleaner assembly removed)	5.	Engine grounds	6.	Air cleaner assembly
7.	Mass air flow sensor (with intake temperature sensor)	8.	Upper radiator hose	9.	Engine coolant temperature sensor
10.	Intake manifold collector	11.	Camshaft position sensor (PHASE)	12.	Knock sensor
13.	Engine oil cooler	14.	Crankshaft position sensor (POS)	15.	Drive shaft RH

⇦: Vehicle front

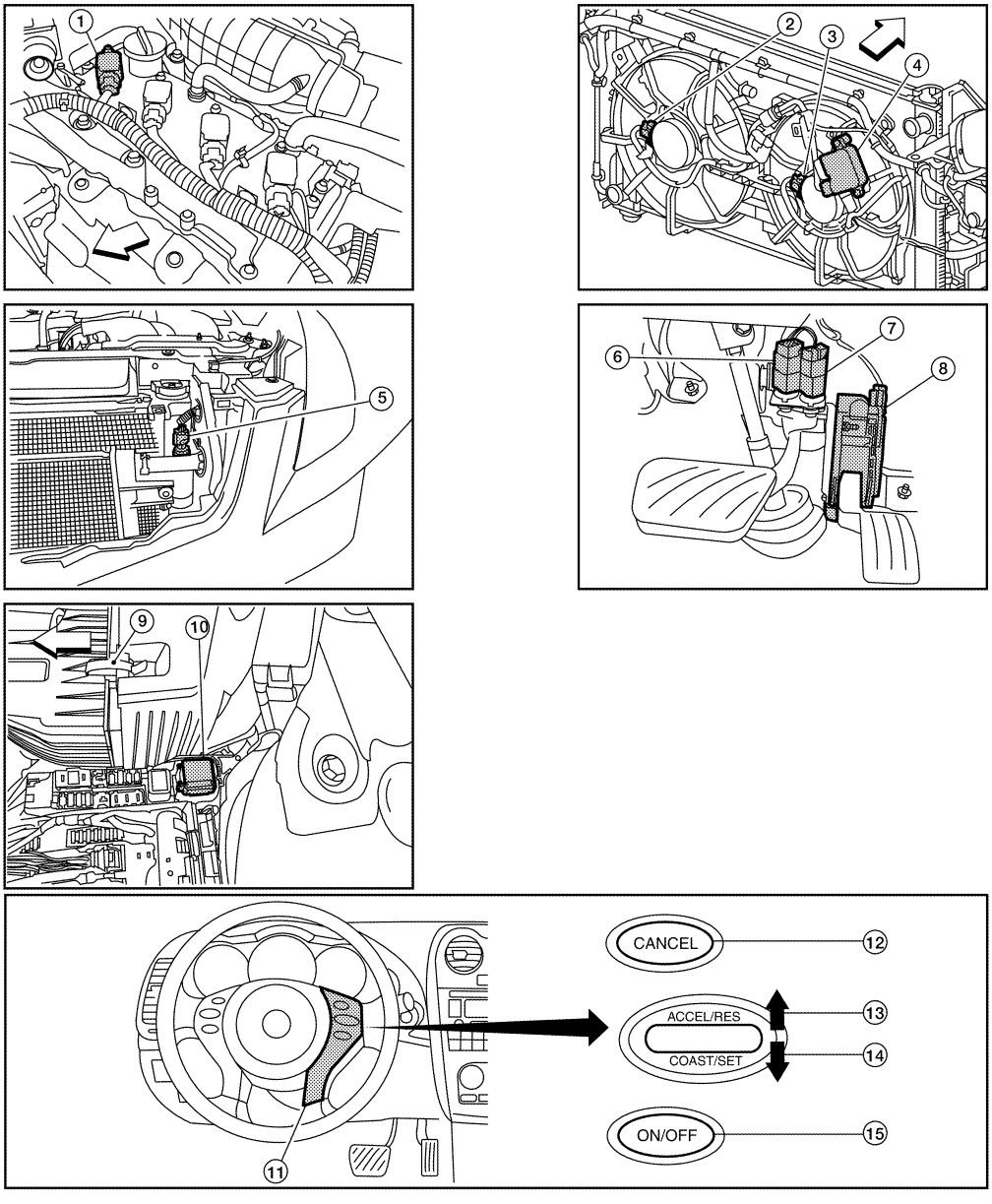

ALBIA0162ZZ

1. No.1 ignition coil
2. Cooling fan motor-1
3. Cooling fan motor-2
4. Cooling fan control module
5. Refrigerant pressure sensor
6. Stop lamp switch
7. ASCD brake switch
8. Accelerator pedal position sensor
9. Air cleaner assembly
10. Cooling fan relay-1
11. ASCD steering switch
12. CANSEC switch
13. RESUME/ACCELERATE switch
14. SET/COAST switch
15. MAIN switch

⇦: Vehicle front

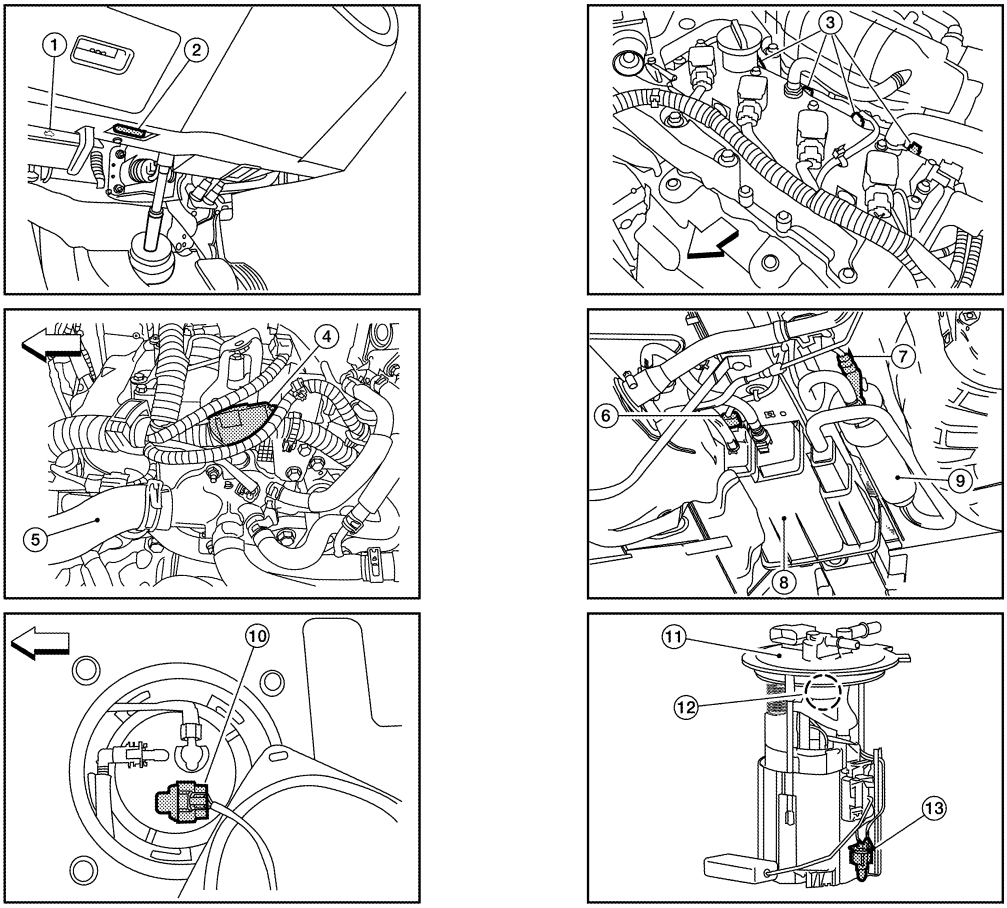

ALBIA0173ZZ

1. Hood opener handle
2. Data link connector
3. Fuel injector harness connector
4. Condenser-2
5. Upper radiator hose
6. EVAP control system pressure sensor
7. EVAP canister vent control valve
8. EVAP canister (MAIN)
9. EVAP canister (SUB)
10. Fuel level sensor unit and fuel pump harness connector (This illustration is view with rear seat cushion and inspection hole cover removed.)
11. Fuel pump assembly
12. Fuel pressure regulator
13. Fuel tank temperature sensor

⇦ : Vehicle front

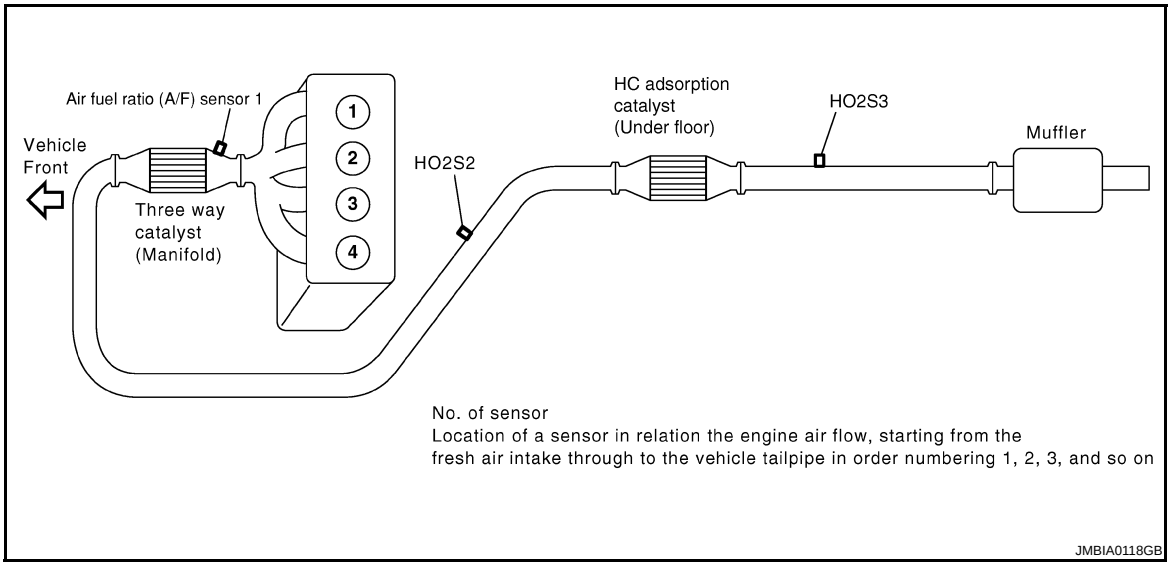

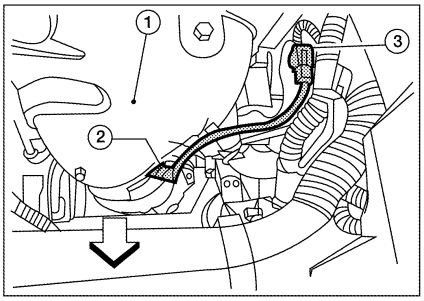

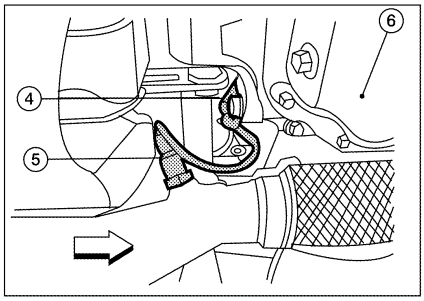

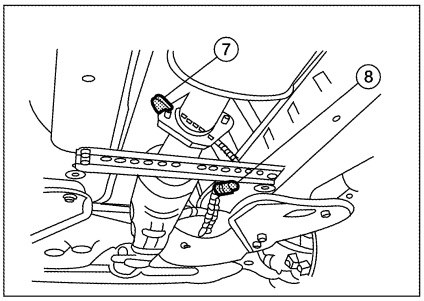

ALBIA0272ZZ

1. Exhaust manifold cover
2. Air fuel ratio (A/F) sensor 1
3. Air fuel ratio (A/F) sensor 1 harness connector
4. Heated oxygen sensor 2 harness connector
5. Heated oxygen sensor 2
6. Oil pan
7. Heated oxygen sensor 3
8. Heated oxygen sensor 3 harness connector

⇦: Vehicle front

Component Description

INFOID:0000000003069112

Component	Reference
Camshaft position sensor (PHASE)	EC-254, "Description"
Crankshaft position sensor (POS)	EC-250, "Description"

Component	Reference
Cooling fan control module	EC-376, "Description"
Cooling fan motor	EC-376, "Description"
Engine coolant temperature sensor	EC-166, "Description"
Refrigerant pressure sensor	EC-396, "Description"

EVAPORATIVE EMISSION SYSTEM

System Diagram

INFOID:0000000003069113

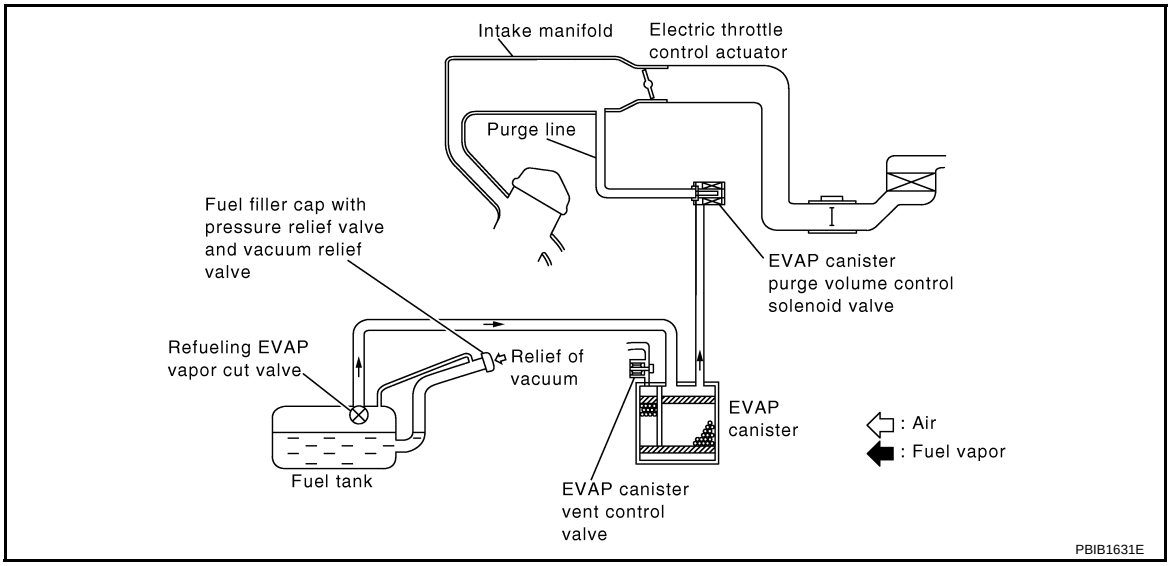

EVAPORATIVE EMISSION LINE DRAWING

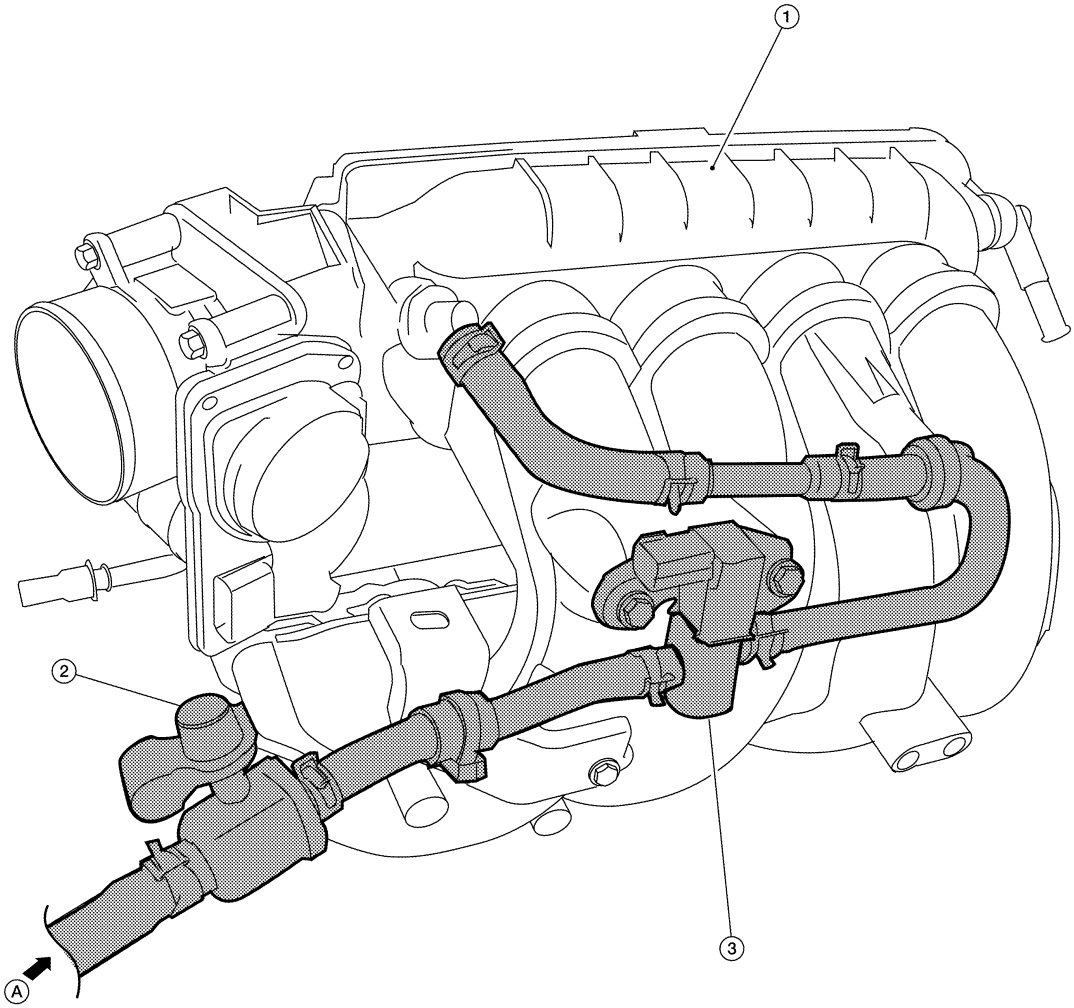

ALBIA0085ZZ

1. Intake manifold collector
2. EVAP service port
3. EVAP canister purge volume control solenoid valve

A. From next figure

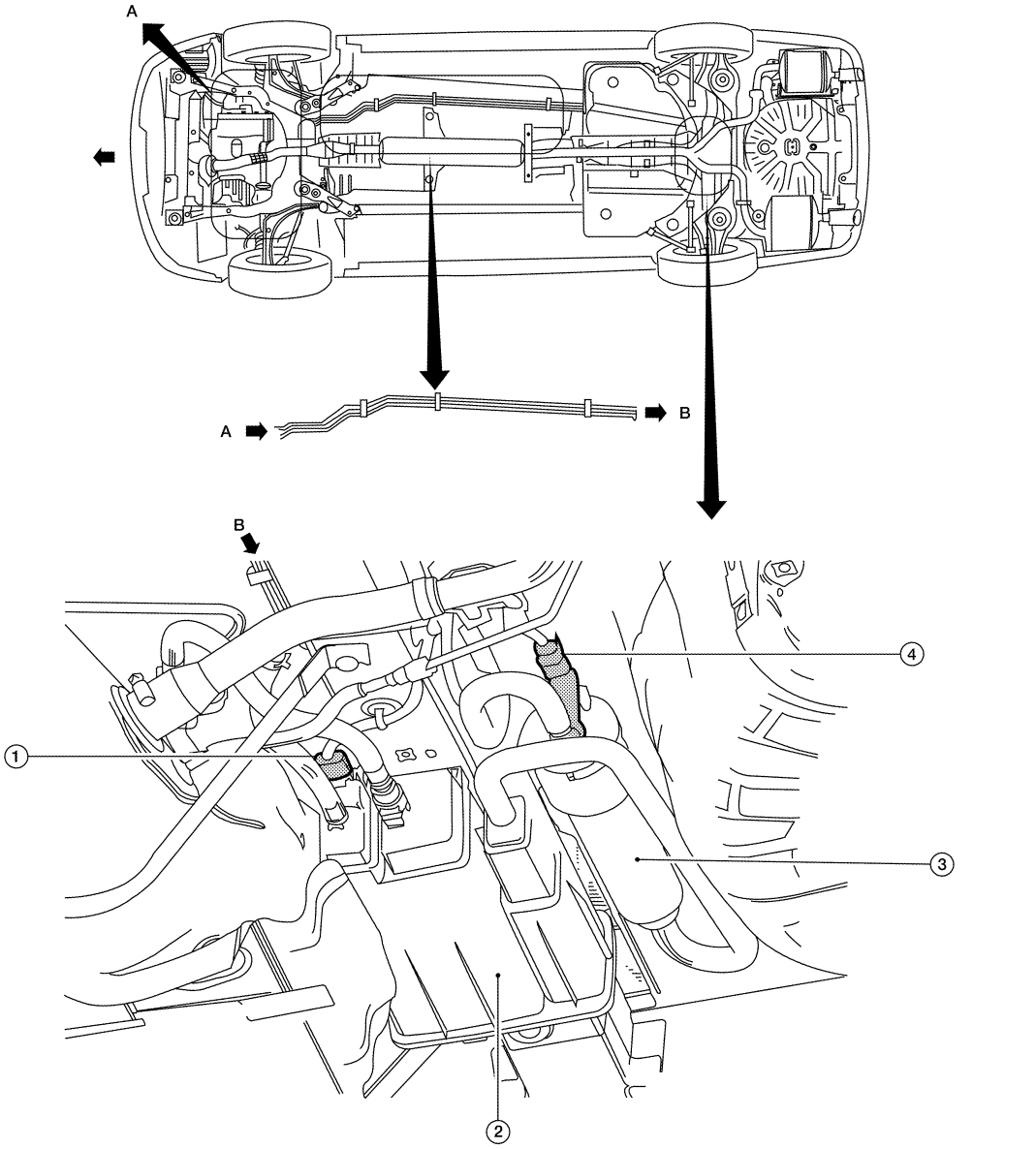

1. EVAP control system pressure sensor
2. EVAP canister (MAIN)
3. EVAP canister (SUB)
4. EVAP canister vent control valve

A. To previous figure

NOTE:
Do not use soapy water or any type of solvent while installing vacuum hose or purge hoses.

System Description

INFOID:0000000003069114

INPUT/OUTPUT SIGNAL CHART

Sensor	Input signal to ECM	ECM function	Actuator
Crankshaft position sensor (POS) Camshaft position sensor (PHASE)	Engine speed	EVAP canister purge flow control	EVAP canister purge volume control solenoid valve
Mass air flow sensor	Amount of intake air		
Engine coolant temperature sensor	Engine coolant temperature		
Battery	Battery voltage		
Throttle position sensor	Throttle position		
Air fuel ratio (A/F) sensor 1	Density of oxygen in exhaust gas (Mixture ratio feedback signal)		
Fuel tank temperature sensor	Fuel temperature in fuel tank		
EVAP control system pressure sensor	Pressure in purge line		
Brake ECU	Vehicle speed*		
Hybrid vehicle control ECU	Vehicle speed*		
	Accelerator pedal position*		

*: This signal is sent to the ECM through CAN communication line.

SYSTEM DESCRIPTION

The evaporative emission system is used to reduce hydrocarbons emitted into the atmosphere from the fuel system. This reduction of hydrocarbons is accomplished by activated charcoals in the EVAP canister.
The fuel vapor in the sealed fuel tank is led into the EVAP canister which contains activated carbon and the vapor is stored there when the engine is not operating or when refueling to the fuel tank.
The vapor in the EVAP canister is purged by the air through the purge line to the intake manifold when the engine is operating. EVAP canister purge volume control solenoid valve is controlled by ECM. When the engine operates, the flow rate of vapor controlled by EVAP canister purge volume control solenoid valve is proportionally regulated as the air flow increases.
EVAP canister purge volume control solenoid valve also shuts off the vapor purge line during decelerating and idling.

Component Parts Location

INFOID:0000000003069115

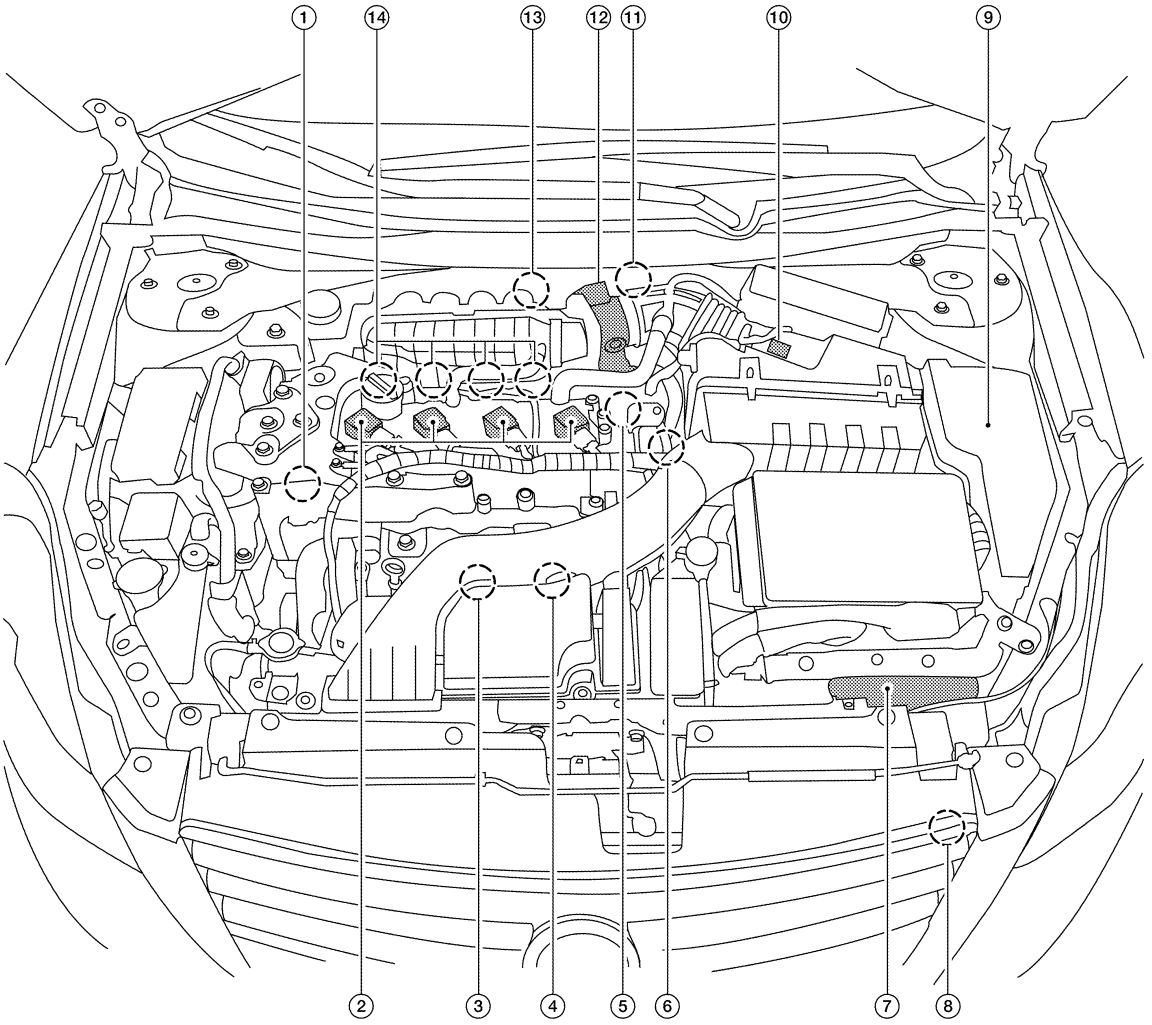

ALBIA0138ZZ

1. Intake valve timing control solenoid valve
2. Ignition coil (with power transistor) and spark plug
3. Knock sensor, Crankshaft position sensor (POS)
4. Air fuel ratio (A/F) sensor 1
5. Camshaft position sensor (PHASE)
6. Engine coolant temperature sensor
7. ECM
8. Refrigerant pressure sensor
9. IPDM E/R
10. Mass air flow sensor (with intake temperature sensor)
11. EVAP service port
12. Electric throttle control actuator (with built in throttle position sensor and throttle control motor)
13. EVAP canister purge volume control solenoid valve
14. Fuel injector

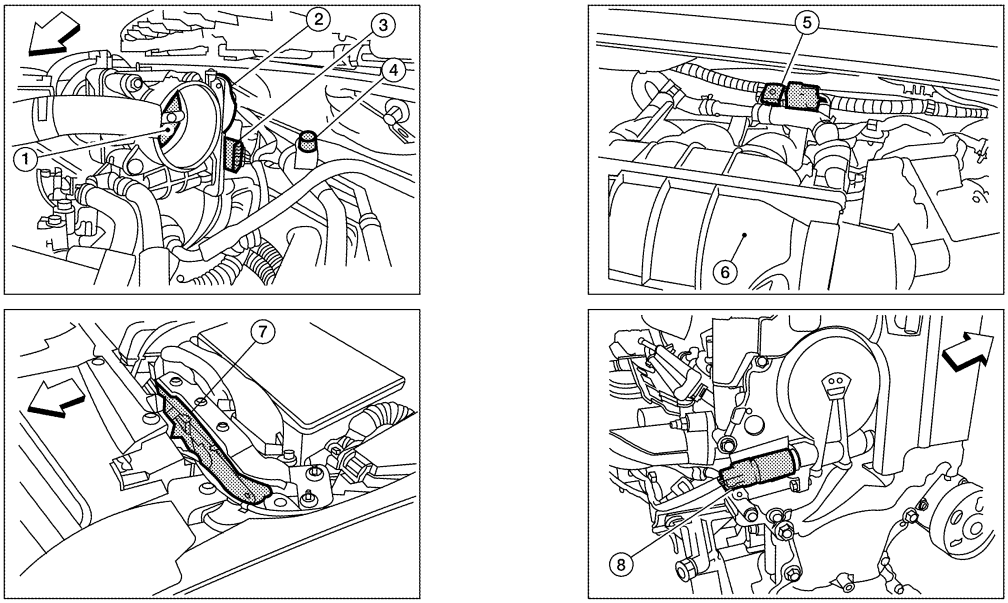

ALBIA0160ZZ

1. Throttle valve
2. Electric throttle control actuator
3. Electric throttle control actuator harness connector
4. EVAP service port
5. EVAP canister purge volume control solenoid valve
6. Intake manifold collector
7. ECM
8. Intake valve timing control solenoid valve

⇦: Vehicle front

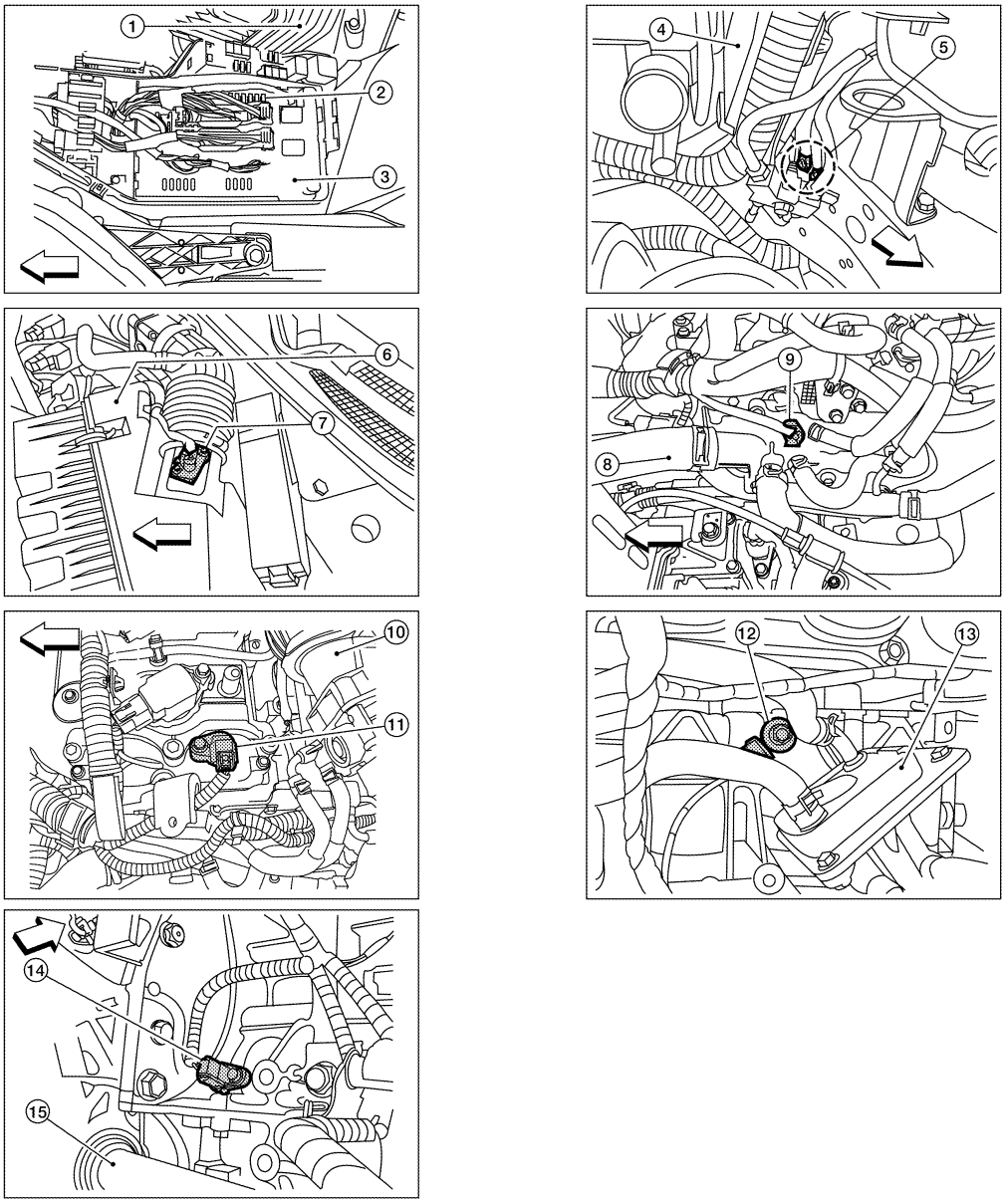

ALBIA0161ZZ

1.	Air cleaner assembly	2.	Fuel pump fuse	3.	IPDM E/R
4.	EPS control unit (view with air cleaner assembly removed)	5.	Engine grounds	6.	Air cleaner assembly
7.	Mass air flow sensor (with intake temperature sensor)	8.	Upper radiator hose	9.	Engine coolant temperature sensor
10.	Intake manifold collector	11.	Camshaft position sensor (PHASE)	12.	Knock sensor
13.	Engine oil cooler	14.	Crankshaft position sensor (POS)	15.	Drive shaft RH

⇦: Vehicle front

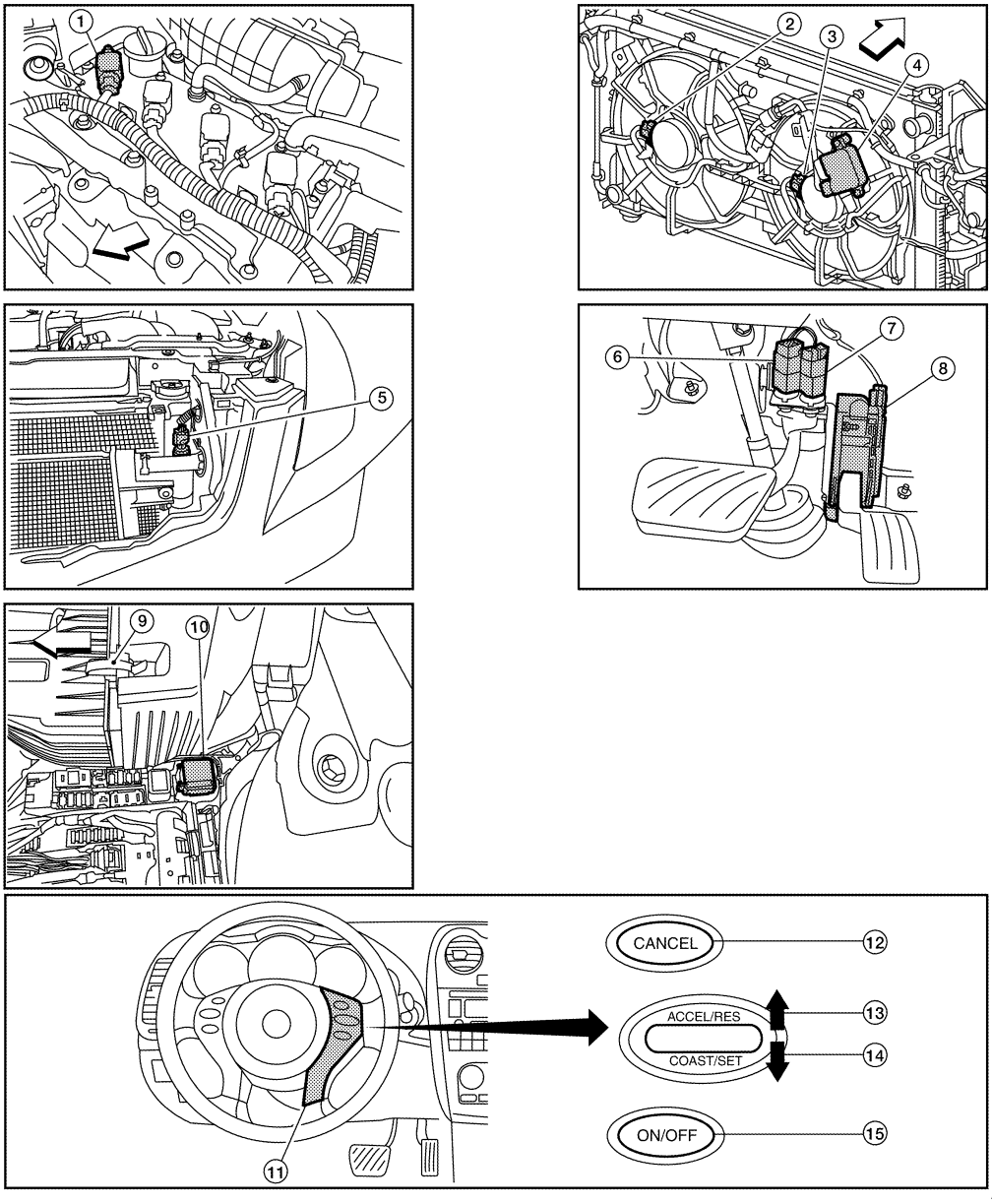

ALBIA0162ZZ

1. No.1 ignition coil
2. Cooling fan motor-1
3. Cooling fan motor-2
4. Cooling fan control module
5. Refrigerant pressure sensor
6. Stop lamp switch
7. ASCD brake switch
8. Accelerator pedal position sensor
9. Air cleaner assembly
10. Cooling fan relay-1
11. ASCD steering switch
12. CANSEC switch
13. RESUME/ACCELERATE switch
14. SET/COAST switch
15. MAIN switch

⇦: Vehicle front

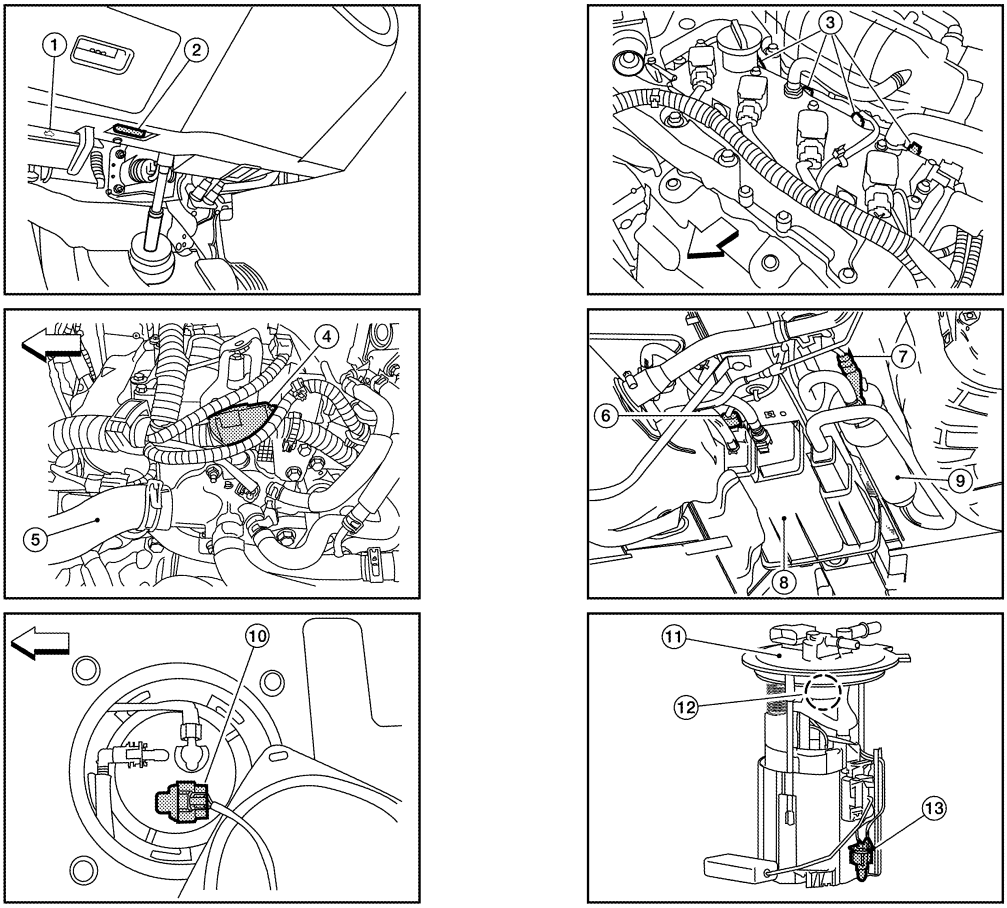

ALBIA0173ZZ

1. Hood opener handle
2. Data link connector
3. Fuel injector harness connector
4. Condenser-2
5. Upper radiator hose
6. EVAP control system pressure sensor
7. EVAP canister vent control valve
8. EVAP canister (MAIN)
9. EVAP canister (SUB)
10. Fuel level sensor unit and fuel pump harness connector (This illustration is view with rear seat cushion and inspection hole cover removed.)
11. Fuel pump assembly
12. Fuel pressure regulator
13. Fuel tank temperature sensor

⇦ : Vehicle front

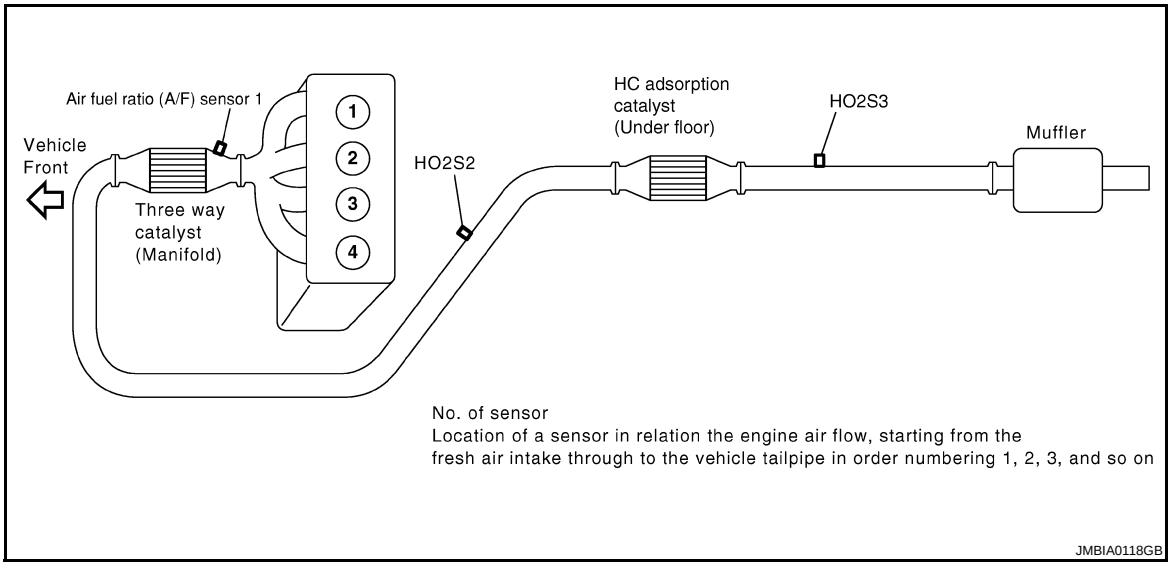

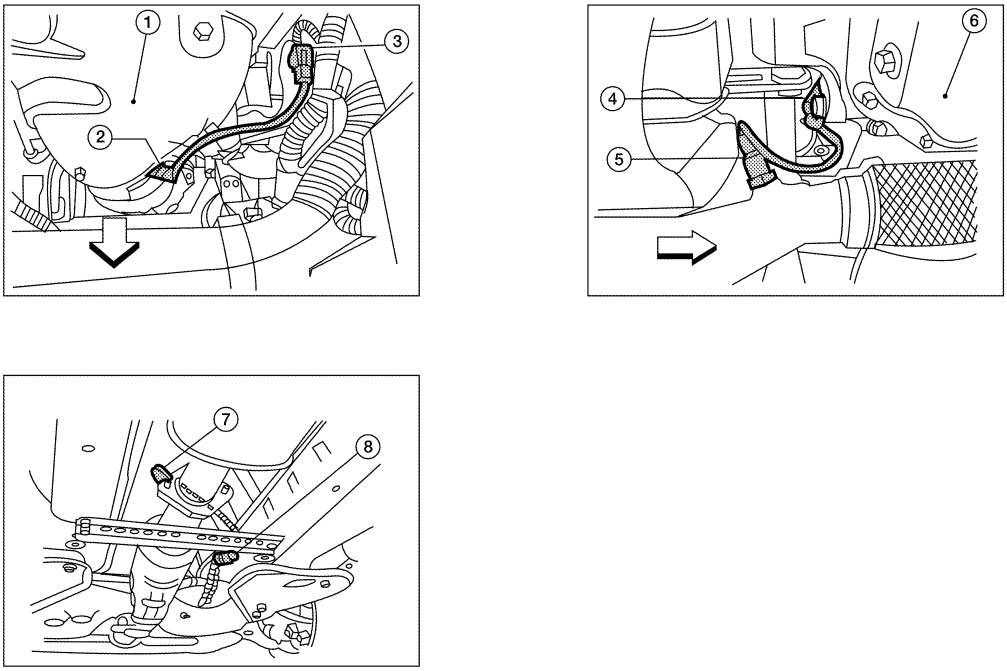

ALBIA0272ZZ

1. Exhaust manifold cover
2. Air fuel ratio (A/F) sensor 1
3. Air fuel ratio (A/F) sensor 1 harness connector
4. Heated oxygen sensor 2 harness connector
5. Heated oxygen sensor 2
6. Oil pan
7. Heated oxygen sensor 3
8. Heated oxygen sensor 3 harness connector

⇦: Vehicle front

Component Description

INFOID:0000000003069116

Component	Reference
A/F sensor 1	EC-179, "Description"
Camshaft position sensor (PHASE)	EC-254, "Description"

Component	Reference
Crankshaft position sensor (POS)	EC-250, "Description"
Engine coolant temperature sensor	EC-166, "Description"
EVAP canister purge volume control solenoid valve	EC-267, "Description"
EVAP control system pressure sensor	EC-283, "Description"
Fuel tank temperature sensor	EC-230, "Description"
Mass air flow sensor	EC-145, "Description"
Throttle position sensor	EC-169, "Description"
Vehicle speed sensor	EC-306, "Description"

INTAKE VALVE TIMING CONTROL

System Diagram

INFOID:0000000003069117

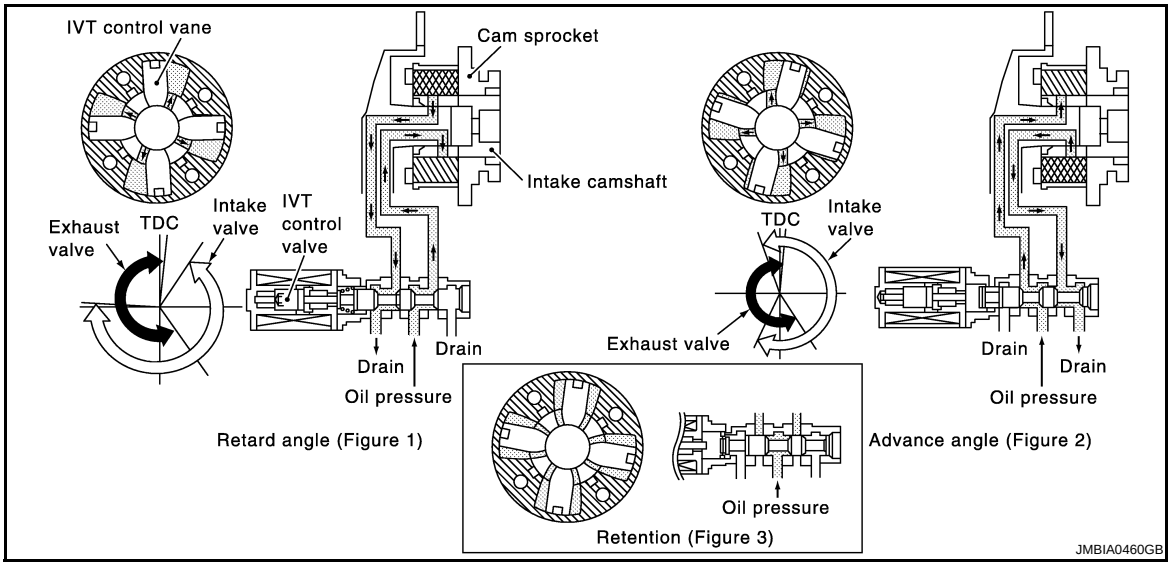

System Description

INFOID:0000000003069118

INPUT/OUTPUT SIGNAL CHART

Sensor	Input signal to ECM	ECM function	Actuator
Crankshaft position sensor (POS)	Engine speed and piston position	Intake valve timing control	Intake valve timing control solenoid valve
Camshaft position sensor (PHASE)			
Engine coolant temperature sensor	Engine coolant temperature		
Brake ECU	Vehicle speed*		
Hybrid vehicle control ECU	Vehicle speed*		

*: This signal is sent to the ECM through CAN communication line

SYSTEM DESCRIPTION

This mechanism hydraulically controls cam phases continuously with the fixed operating angle of the intake valve.

The ECM receives signals such as crankshaft position, camshaft position, engine speed, and engine coolant temperature. Then, the ECM sends ON/OFF pulse duty signals to the intake valve timing (IVT) control solenoid valve depending on driving status. This makes it possible to control the shut/open timing of the intake valve to increase engine torque in low/mid speed range and output in high-speed range.

Component Parts Location

INFOID:0000000003069119

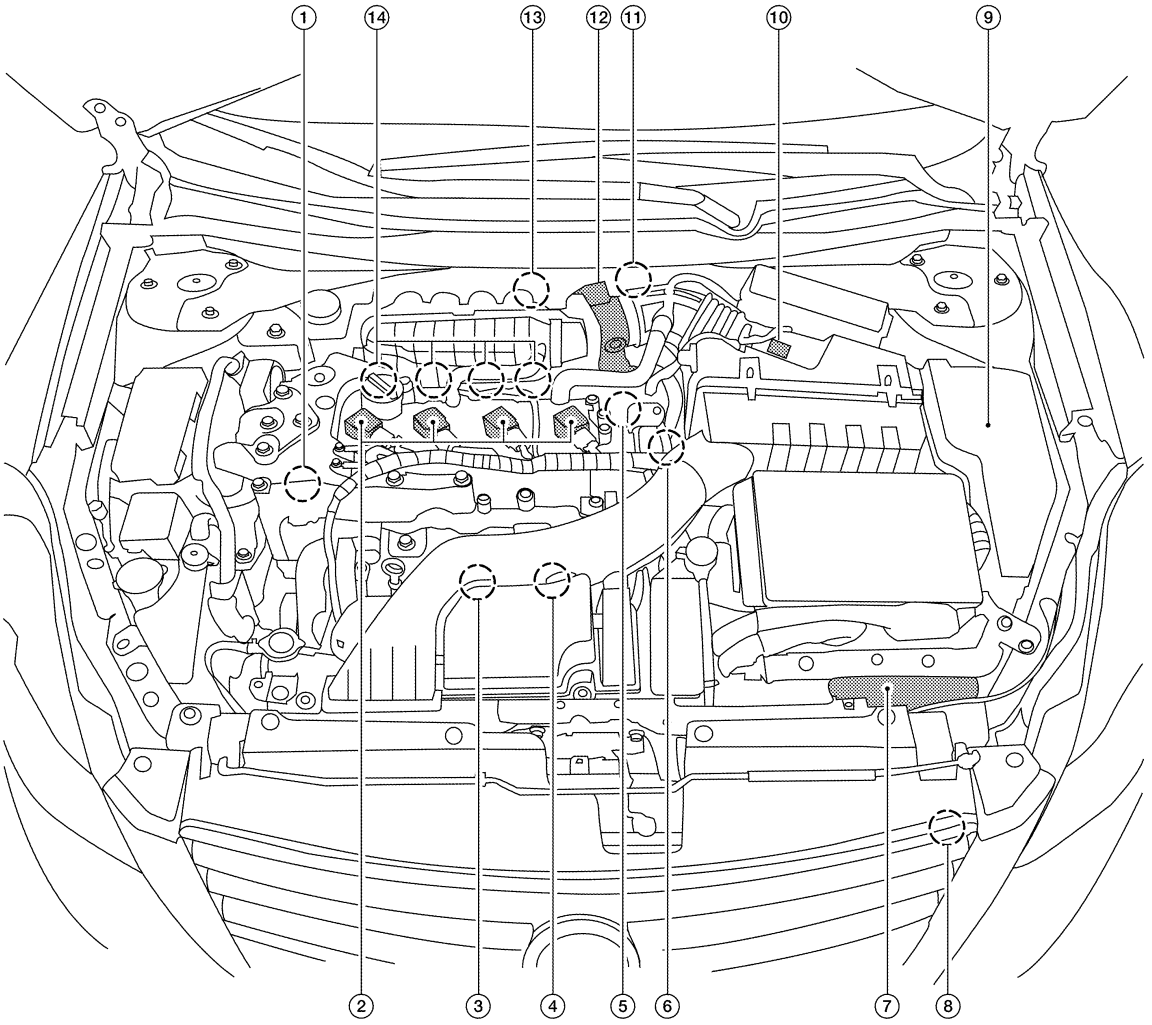

ALBIA0138ZZ

1. Intake valve timing control solenoid valve
2. Ignition coil (with power transistor) and spark plug
3. Knock sensor, Crankshaft position sensor (POS)
4. Air fuel ratio (A/F) sensor 1
5. Camshaft position sensor (PHASE)
6. Engine coolant temperature sensor
7. ECM
8. Refrigerant pressure sensor
9. IPDM E/R
10. Mass air flow sensor (with intake temperature sensor)
11. EVAP service port
12. Electric throttle control actuator (with built in throttle position sensor and throttle control motor)
13. EVAP canister purge volume control solenoid valve
14. Fuel injector

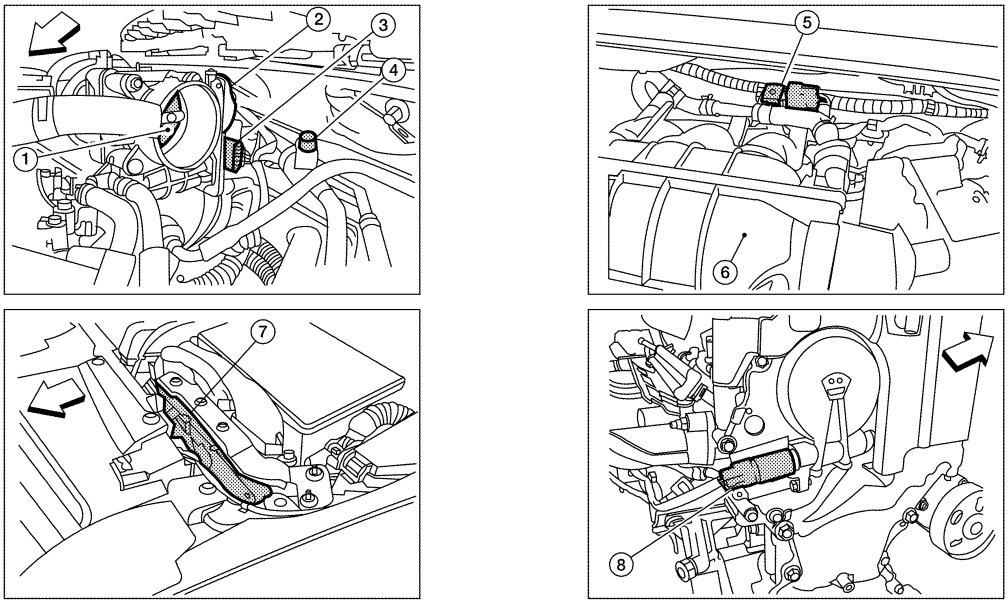

ALBIA0160ZZ

1. Throttle valve
2. Electric throttle control actuator
3. Electric throttle control actuator harness connector
4. EVAP service port
5. EVAP canister purge volume control solenoid valve
6. Intake manifold collector
7. ECM
8. Intake valve timing control solenoid valve

⇦: Vehicle front

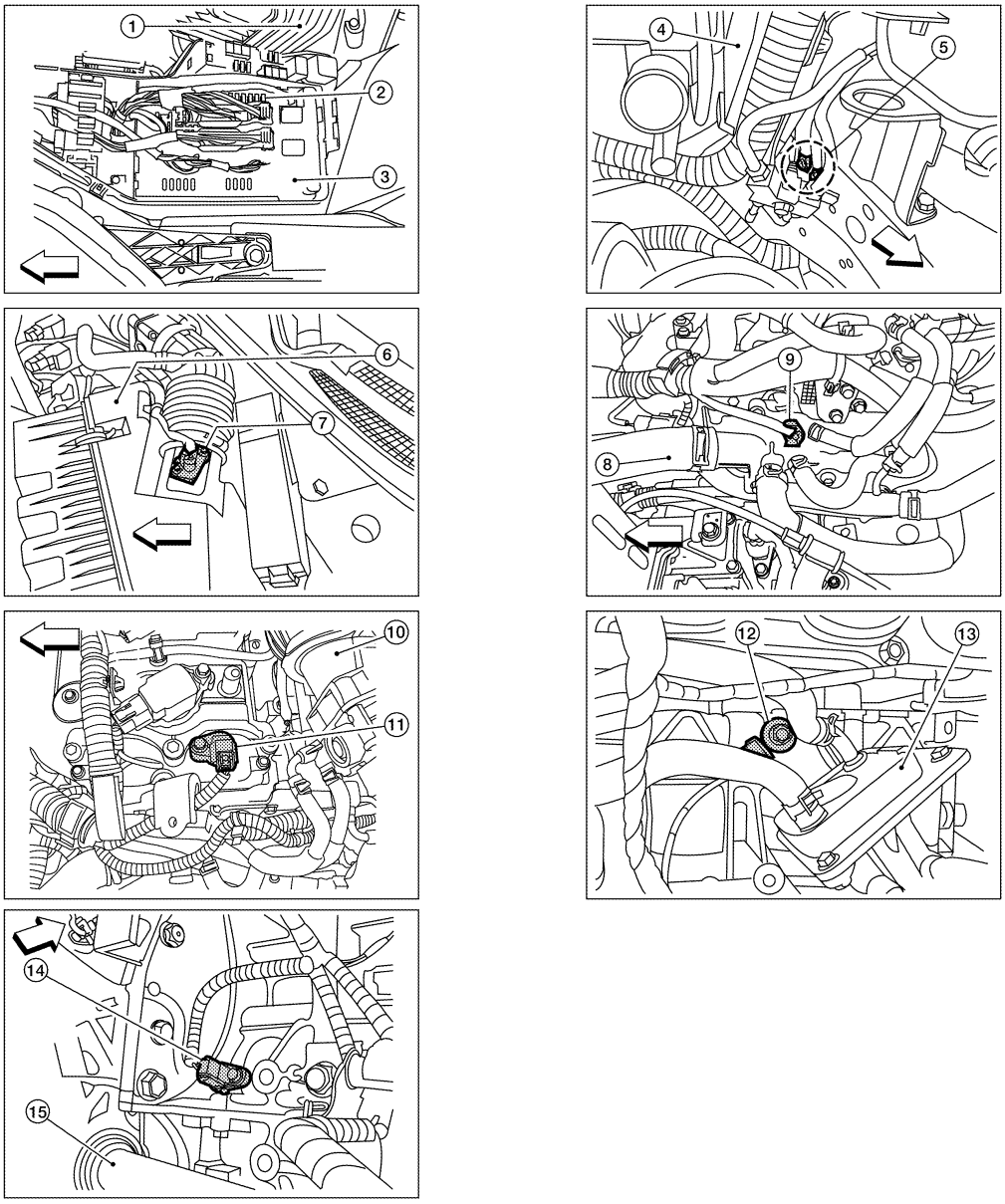

ALBIA0161ZZ

1.	Air cleaner assembly	2.	Fuel pump fuse	3.	IPDM E/R
4.	EPS control unit (view with air cleaner assembly removed)	5.	Engine grounds	6.	Air cleaner assembly
7.	Mass air flow sensor (with intake temperature sensor)	8.	Upper radiator hose	9.	Engine coolant temperature sensor
10.	Intake manifold collector	11.	Camshaft position sensor (PHASE)	12.	Knock sensor
13.	Engine oil cooler	14.	Crankshaft position sensor (POS)	15.	Drive shaft RH

⇦: Vehicle front

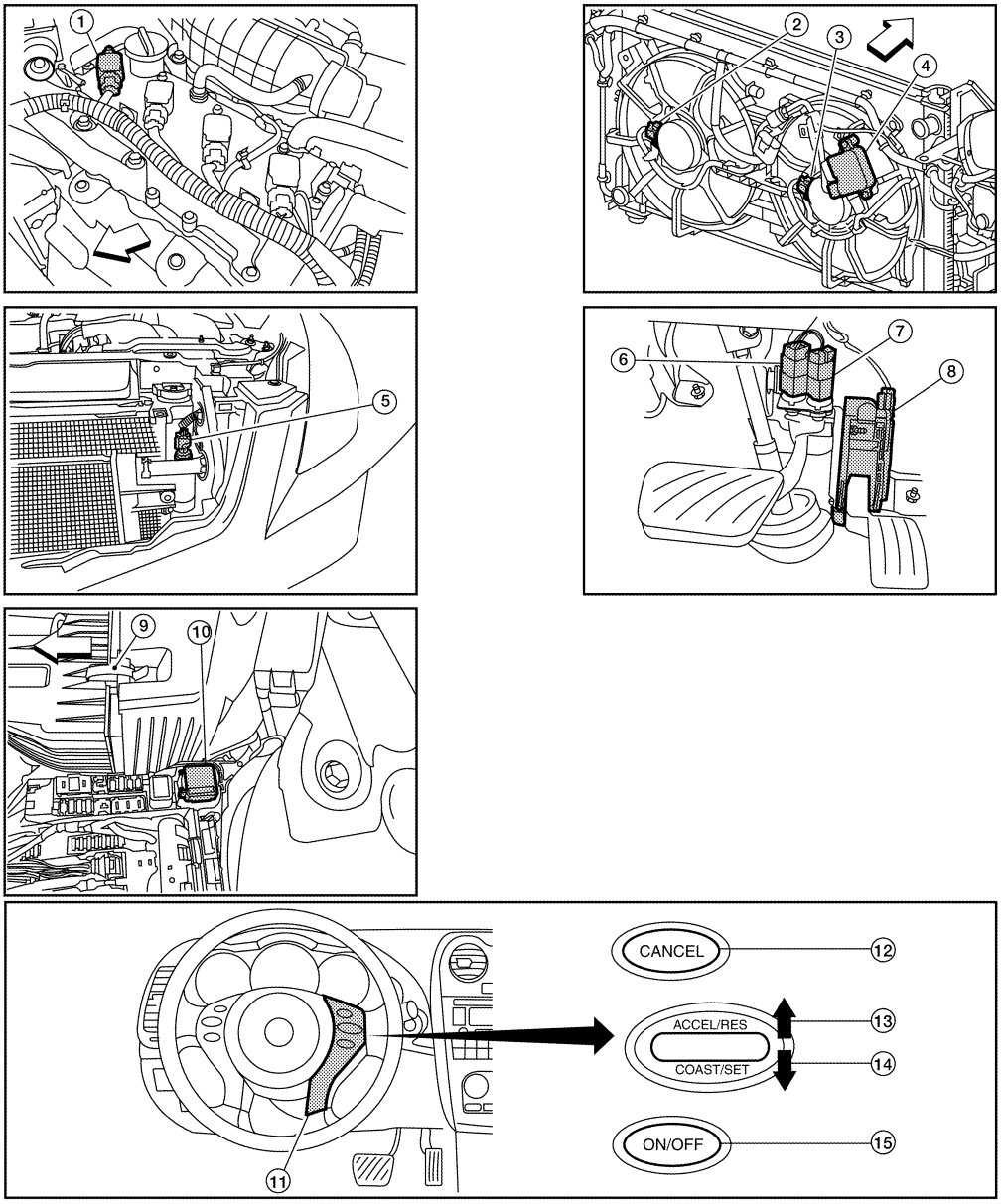

ALBIA0162ZZ

1. No.1 ignition coil
2. Cooling fan motor-1
3. Cooling fan motor-2
4. Cooling fan control module
5. Refrigerant pressure sensor
6. Stop lamp switch
7. ASCD brake switch
8. Accelerator pedal position sensor
9. Air cleaner assembly
10. Cooling fan relay-1
11. ASCD steering switch
12. CANSEC switch
13. RESUME/ACCELERATE switch
14. SET/COAST switch
15. MAIN switch

⇦: Vehicle front

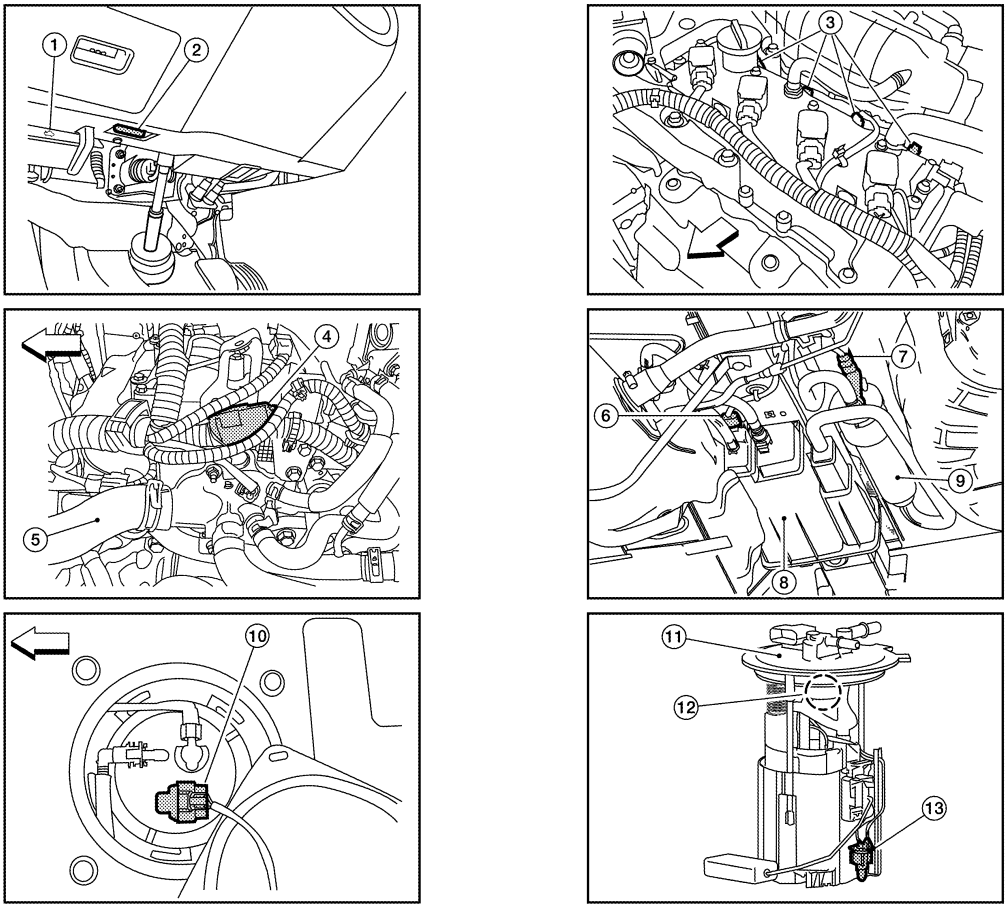

ALBIA0173ZZ

1. Hood opener handle
2. Data link connector
3. Fuel injector harness connector
4. Condenser-2
5. Upper radiator hose
6. EVAP control system pressure sensor
7. EVAP canister vent control valve
8. EVAP canister (MAIN)
9. EVAP canister (SUB)
10. Fuel level sensor unit and fuel pump harness connector (This illustration is view with rear seat cushion and inspection hole cover removed.)
11. Fuel pump assembly
12. Fuel pressure regulator
13. Fuel tank temperature sensor

⇦ : Vehicle front

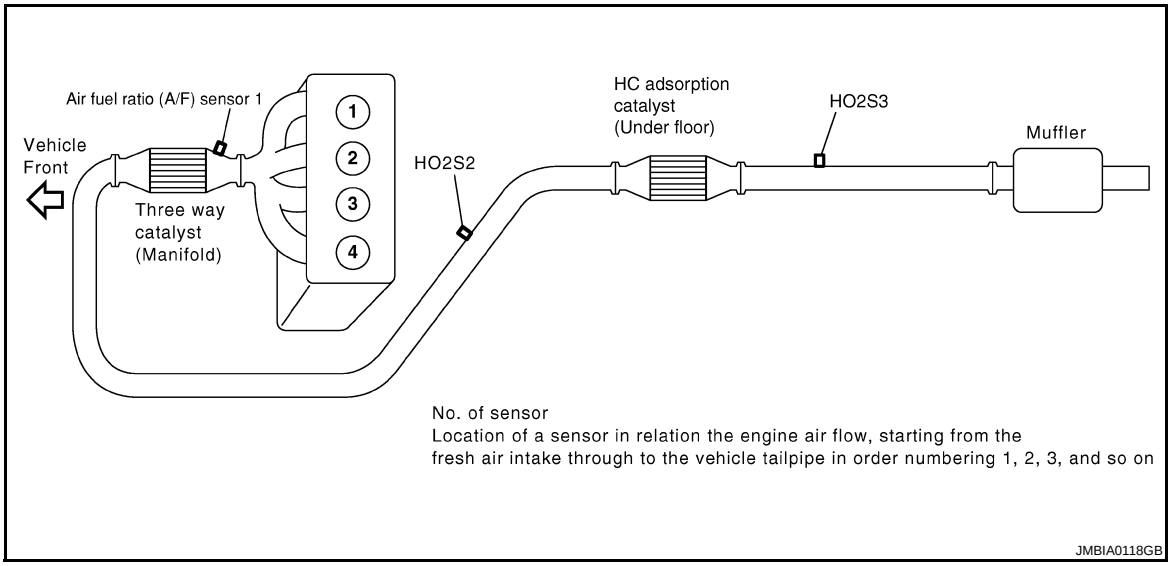

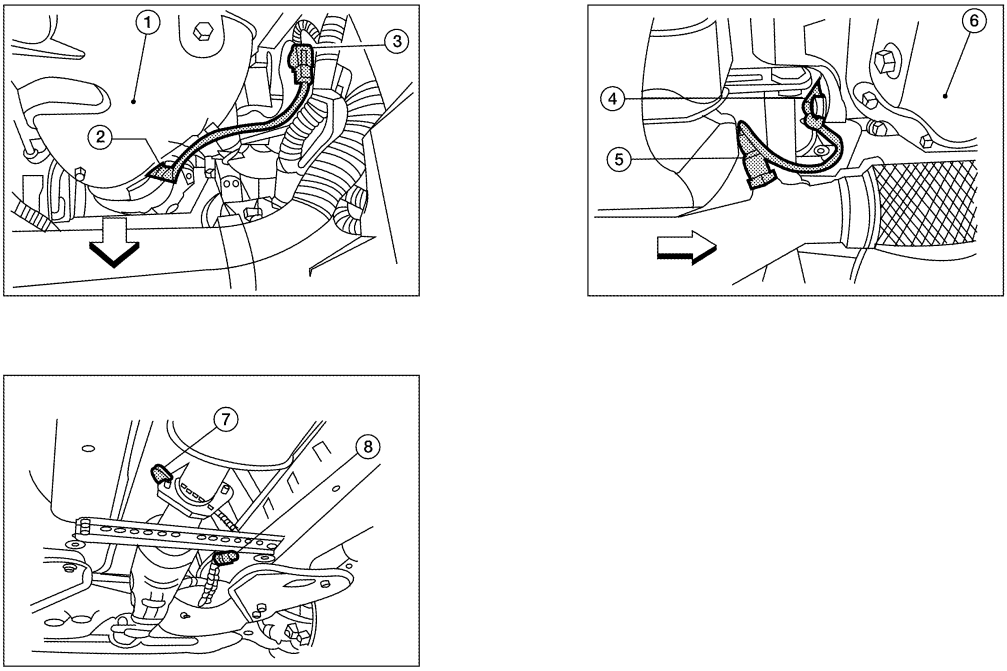

ALBIA0272ZZ

1. Exhaust manifold cover
2. Air fuel ratio (A/F) sensor 1
3. Air fuel ratio (A/F) sensor 1 harness connector
4. Heated oxygen sensor 2 harness connector
5. Heated oxygen sensor 2
6. Oil pan
7. Heated oxygen sensor 3
8. Heated oxygen sensor 3 harness connector

⇦: Vehicle front

Component Description

INFOID:0000000003069120

Component	Reference
Camshaft position sensor (PHASE)	EC-254, "Description"
Crankshaft position sensor (POS)	EC-250, "Description"

Component	Reference
Engine coolant temperature sensor	EC-166, "Description"
Intake valve timing control solenoid valve	EC-78, "System Description"
Vehicle speed sensor	EC-306, "Description"

ON BOARD DIAGNOSTIC (OBD) SYSTEM

Diagnosis Description

INFOID:0000000003069121

INTRODUCTION

The ECM has an on board diagnostic system, which detects malfunctions related to engine sensors or actuators. The ECM also records various emission-related diagnostic information including:

Emission-related diagnostic information	Diagnostic service
Diagnostic Trouble Code (DTC)	Service $03 of SAE J1979
Freeze Frame data	Service $02 of SAE J1979
System Readiness Test (SRT) code	Service $01 of SAE J1979
1st Trip Diagnostic Trouble Code (1st Trip DTC)	Service $07 of SAE J1979
1st Trip Freeze Frame data	
Test values and Test limits	Service $06 of SAE J1979
Calibration ID	Service $09 of SAE J1979

The above information can be checked using procedures listed in the table below.

×: Applicable —: Not applicable

	DTC	1st trip DTC	Freeze Frame data	1st trip Freeze Frame data	SRT code	SRT status	Test value
CONSULT-III	×	×	×	×	×	×	—
GST	×	×	×	—	×	×	×
ECM	×	×*	—	—	—	×	—

*: When DTC and 1st trip DTC simultaneously appear on the display, they cannot be clearly distinguished from each other.

The malfunction indicator lamp (MIL) on the instrument panel lights up when the same malfunction is detected in two consecutive trips (Two trip detection logic), or when the ECM enters fail-safe mode. (Refer to EC-432, "Fail Safe".)

TWO TRIP DETECTION LOGIC

When a malfunction is detected for the first time, 1st trip DTC and 1st trip Freeze Frame data are stored in the ECM memory. The MIL will not light up at this stage. <1st trip>

If the same malfunction is detected again during the next drive, the DTC and Freeze Frame data are stored in the ECM memory, and the MIL lights up. The MIL lights up at the same time when the DTC is stored. <2nd trip> The “trip” in the “Two Trip Detection Logic” means a driving mode in which self-diagnosis is performed during vehicle operation. Specific on board diagnostic items will cause the ECM to light up or blink the MIL, and store DTC and Freeze Frame data, even in the 1st trip, as shown below.

×: Applicable —: Not applicable

Items	MIL				DTC		1st trip DTC	
	1st trip		2nd trip		1st trip displaying	2nd trip displaying	1st trip displaying	2nd trip displaying
	Blinking	Lighting up	Blinking	Lighting up				
Misfire (Possible three way catalyst damage) — DTC: P0300 - P0304 is being detected	×	—	—	—	—	—	×	—
Misfire (Possible three way catalyst damage) — DTC: P0300 - P0304 is being detected	—	—	×	—	—	×	—	—
One trip detection diagnoses (Refer to EC-435, "DTC Index".)	—	×	—	—	×	—	—	—
Except above	—	—	—	×	—	×	×	—

DTC AND FREEZE FRAME DATA

DTC and 1st Trip DTC

The 1st trip DTC (whose number is the same as the DTC number) is displayed for the latest self-diagnostic result obtained. If the ECM memory was cleared previously, and the 1st trip DTC did not reoccur, the 1st trip DTC will not be displayed.
If a malfunction is detected during the 1st trip, the 1st trip DTC is stored in the ECM memory. The MIL will not light up (two trip detection logic). If the same malfunction is not detected in the 2nd trip (meeting the required driving pattern), the 1st trip DTC is cleared from the ECM memory. If the same malfunction is detected in the 2nd trip, both the 1st trip DTC and DTC are stored in the ECM memory and the MIL lights up. In other words, the DTC is stored in the ECM memory and the MIL lights up when the same malfunction occurs in two consecutive trips. If a 1st trip DTC is stored and a non-diagnostic operation is performed between the 1st and 2nd trips, only the 1st trip DTC will continue to be stored. For malfunctions that blink or light up the MIL during the 1st trip, the DTC and 1st trip DTC are stored in the ECM memory.
Procedures for clearing the DTC and the 1st trip DTC from the ECM memory are described in “HOW TO ERASE EMISSION-RELATED DIAGNOSTIC INFORMATION”.
For malfunctions in which 1st trip DTCs are displayed, refer to “EMISSION-RELATED DIAGNOSTIC INFORMATION ITEMS”. These items are required by legal regulations to continuously monitor the system/component. In addition, the items monitored non-continuously are also displayed on CONSULT-III.
1st trip DTC is specified in Service $07 of SAE J1979. 1st trip DTC detection occurs without lighting up the MIL and therefore does not warn the driver of a malfunction. However, 1st trip DTC detection will not prevent the vehicle from being tested, for example during Inspection/Maintenance (I/M) tests.
When a 1st trip DTC is detected, check, print out or write down and erase (1st trip) DTC and Freeze Frame data as specified in Work Flow procedure Step 2, refer to EC-7, "Work Flow". Then perform DTC CONFIRMATION PROCEDURE or Component Function Check to try to duplicate the malfunction. If the malfunction is duplicated, the item requires repair.

Freeze Frame Data and 1st Trip Freeze Frame Data

The ECM records the driving conditions such as fuel system status, calculated load value, engine coolant temperature, short term fuel trim, long term fuel trim, engine speed, vehicle speed, absolute throttle position, base fuel schedule and intake air temperature at the moment a malfunction is detected.
Data which are stored in the ECM memory, along with the 1st trip DTC, are called 1st trip freeze frame data. The data, stored together with the DTC data, are called freeze frame data and displayed on CONSULT-III or GST. The 1st trip freeze frame data can only be displayed on the CONSULT-III screen, not on the GST.
Only one set of freeze frame data (either 1st trip freeze frame data or freeze frame data) can be stored in the ECM. 1st trip freeze frame data is stored in the ECM memory along with the 1st trip DTC. There is no priority for 1st trip freeze frame data and it is updated each time a different 1st trip DTC is detected. However, once freeze frame data (2nd trip detection/MIL on) is stored in the ECM memory, 1st trip freeze frame data is no longer stored. Remember, only one set of freeze frame data can be stored in the ECM. The ECM has the following priorities to update the data.

Priority	Items	
1	Freeze frame data	Misfire — DTC: P0300 - P0304 Fuel Injection System Function — DTC: P0171, P0172
2		Except the above items
3	1st trip freeze frame data	

For example, the EGR malfunction (Priority: 2) was detected and the freeze frame data was stored in the 2nd trip. After that when the misfire (Priority: 1) is detected in another trip, the freeze frame data will be updated from the EGR malfunction to the misfire. The 1st trip freeze frame data is updated each time a different malfunction is detected. There is no priority for 1st trip freeze frame data. However, once freeze frame data is stored in the ECM memory, 1st trip freeze data is no longer stored (because only one freeze frame data or 1st trip freeze frame data can be stored in the ECM). If freeze frame data is stored in the ECM memory and freeze frame data with the same priority occurs later, the first (original) freeze frame data remains unchanged in the ECM memory.
Both 1st trip freeze frame data and freeze frame data (along with the DTCs) are cleared when the ECM memory is erased. Procedures for clearing the ECM memory are described in “HOW TO ERASE EMISSION-RELATED DIAGNOSTIC INFORMATION”.

How to Read DTC and 1st Trip DTC

With CONSULT-III

With GST

CONSULT-III or GST (Generic Scan Tool) Examples: P0340, P0850, P1148, etc.
These DTCs are prescribed by SAE J2012.

(CONSULT-III also displays the malfunctioning component or system.)

No Tools

The number of blinks of the MIL in the Diagnostic Test Mode II (Self-Diagnostic Results) indicates the DTC. Example: 0340, 0850, 1148, etc.

These DTCs are controlled by NISSAN.

- **1st trip DTC No. is the same as DTC No.**
- **Output of a DTC indicates a malfunction. However, GST or the Diagnostic Test Mode II do not indicate whether the malfunction is still occurring or has occurred in the past and has returned to normal. CONSULT-III can identify malfunction status as shown below. Therefore, using CONSULT-III (if available) is recommended.**

DTC or 1st trip DTC of a malfunction is displayed in “SELF-DIAGNOSTIC RESULTS” mode of CONSULT-III. Time data indicates how many times the vehicle was driven after the last detection of a DTC.

If the DTC is being detected currently, the time data will be [0].

If a 1st trip DTC is stored in the ECM, the time data will be [1t].

How to Erase DTC and 1st Trip DTC

With CONSULT-III

The emission related diagnostic information in the ECM can be erased by selecting “All Erase” in the “Description” of “FINAL CHECK” mode with CONSULT-III.

With GST

The emission related diagnostic information in the ECM can be erased by selecting Service $04 with GST.

1. If the ignition switch stays ON after repair work, be sure to turn ignition switch OFF once. Wait at least 10 seconds and then turn it ON (engine stopped) again.
2. Select Service $04 with GST (Generic Scan Tool).

No Tools

1. If the ignition switch stays ON after repair work, be sure to turn ignition switch OFF once.
   Wait at least 10 seconds and then turn it ON (engine stopped) again.
2. Change the diagnostic test mode from Mode II to Mode I by depressing the accelerator pedal.

- **If the battery is disconnected, the emission-related diagnostic information will be lost within 24 hours.**
- **The following data are cleared when the ECM memory is erased.**

- Diagnostic trouble codes
- 1st trip diagnostic trouble codes
- Freeze frame data
- 1st trip freeze frame data
- System readiness test (SRT) codes
- Test values

Actual work procedures are explained using a DTC as an example. Be careful so that not only the DTC, but all of the data listed above, are cleared from the ECM memory during work procedures.

SYSTEM READINESS TEST (SRT) CODE

System Readiness Test (SRT) code is specified in Service $01 of SAE J1979.

As part of an enhanced emissions test for Inspection & Maintenance (I/M), certain states require the status of SRT be used to indicate whether the ECM has completed self-diagnosis of major emission systems and components. Completion must be verified in order for the emissions inspection to proceed.

If a vehicle is rejected for a State emissions inspection due to one or more SRT items indicating “INCMP”, use the information in this Service Manual to set the SRT to “CMPLT”.

In most cases the ECM will automatically complete its self-diagnosis cycle during normal usage, and the SRT status will indicate “CMPLT” for each application system. Once set as “CMPLT”, the SRT status remains “CMPLT” until the self-diagnosis memory is erased.

Occasionally, certain portions of the self-diagnostic test may not be completed as a result of the customer's normal driving pattern; the SRT will indicate “INCMP” for these items.

NOTE:

The SRT will also indicate “INCMP” if the self-diagnosis memory is erased for any reason or if the ECM memory power supply is interrupted for several hours.

If, during the state emissions inspection, the SRT indicates “CMPLT” for all test items, the inspector will continue with the emissions test. However, if the SRT indicates “INCMP” for one or more of the SRT items the vehicle is returned to the customer untested.

NOTE:

If MIL is ON during the state emissions inspection, the vehicle is also returned to the customer untested even though the SRT indicates “CMPLT” for all test items. Therefore, it is important to check SRT (“CMPLT”) and DTC (No DTCs) before the inspection.

SRT Item

The table below shows required self-diagnostic items to set the SRT to “CMPLT”.

SRT item (CONSULT-III indication)	Required self-diagnostic items to set the SRT to “CMPLT”	Corresponding DTC No.
CATALYST	Three way catalyst function	P0420
	HC adsorption catalyst function	P2423
EVAP SYSTEM	EVAP control system purge flow monitoring	P0441
	EVAP control system	P0456
HO2S	Air fuel ratio sensor 1	P0133
	Heated oxygen sensor 2	P0137
	Heated oxygen sensor 2	P0138
	Heated oxygen sensor 2	P0139
	Heated oxygen sensor 3	P0143
	Heated oxygen sensor 3	P0144
	Heated oxygen sensor 3	P0145

SRT Set Timing

SRT is set as “CMPLT” after self-diagnosis has been performed one or more times. Completion of SRT is done regardless of whether the result is OK or NG. The set timing is different between OK and NG results and is shown in the table below.

Self-diagnosis result		Example				
		Diagnosis	Ignition cycle ← ON → OFF	← ON → OFF	← ON → OFF	← ON →
All OK	Case 1	P0400	OK (1)	— (1)	OK (2)	— (2)
		P0402	OK (1)	— (1)	— (1)	OK (2)
		P1402	OK (1)	OK (2)	— (2)	— (2)
		SRT of EGR	“CMPLT”	“CMPLT”	“CMPLT”	“CMPLT”
	Case 2	P0400	OK (1)	— (1)	— (1)	— (1)
		P0402	— (0)	— (0)	OK (1)	— (1)
		P1402	OK (1)	OK (2)	— (2)	— (2)
		SRT of EGR	“INCMP”	“INCMP”	“CMPLT”	“CMPLT”
NG exists	Case 3	P0400	OK	OK	—	—
		P0402	—	—	—	—
		P1402	NG	—	NG	NG (Consecutive NG)
		(1st trip) DTC	1st trip DTC	—	1st trip DTC	DTC (= MIL ON)
		SRT of EGR	“INCMP”	“INCMP”	“INCMP”	“CMPLT”

OK: Self-diagnosis is carried out and the result is OK.

NG: Self-diagnosis is carried out and the result is NG.

—: Self-diagnosis is not carried out.

When all SRT related self-diagnoses showed OK results in a single cycle (Ignition OFF-ON-OFF), the SRT will indicate “CMPLT”. → Case 1 above

When all SRT related self-diagnoses showed OK results through several different cycles, the SRT will indicate “CMPLT” at the time the respective self-diagnoses have at least one OK result. → Case 2 above

If one or more SRT related self-diagnoses showed NG results in 2 consecutive cycles, the SRT will also indicate “CMPLT”. → Case 3 above

The table above shows that the minimum number of cycles for setting SRT as “INCMP” is one (1) for each self-diagnosis (Case 1 & 2) or two (2) for one of self-diagnoses (Case 3). However, in preparation for the state emissions inspection, it is unnecessary for each self-diagnosis to be executed twice (Case 3) for the following reasons:

- The SRT will indicate “CMPLT” at the time the respective self-diagnoses have one (1) OK result.
- The emissions inspection requires “CMPLT” of the SRT only with OK self-diagnosis results.
- When, during SRT driving pattern, 1st trip DTC (NG) is detected prior to “CMPLT” of SRT, the self-diagnosis memory must be erased from ECM after repair.
- If the 1st trip DTC is erased, all the SRT will indicate “INCMP”.

  NOTE:
  SRT can be set as “CMPLT” together with the DTC(s). Therefore, DTC check must always be carried out prior to the state emission inspection even though the SRT indicates “CMPLT”.

SRT Service Procedure

If a vehicle has failed the state emissions inspection due to one or more SRT items indicating “INCMP”, review the flowchart diagnostic sequence on the next page.

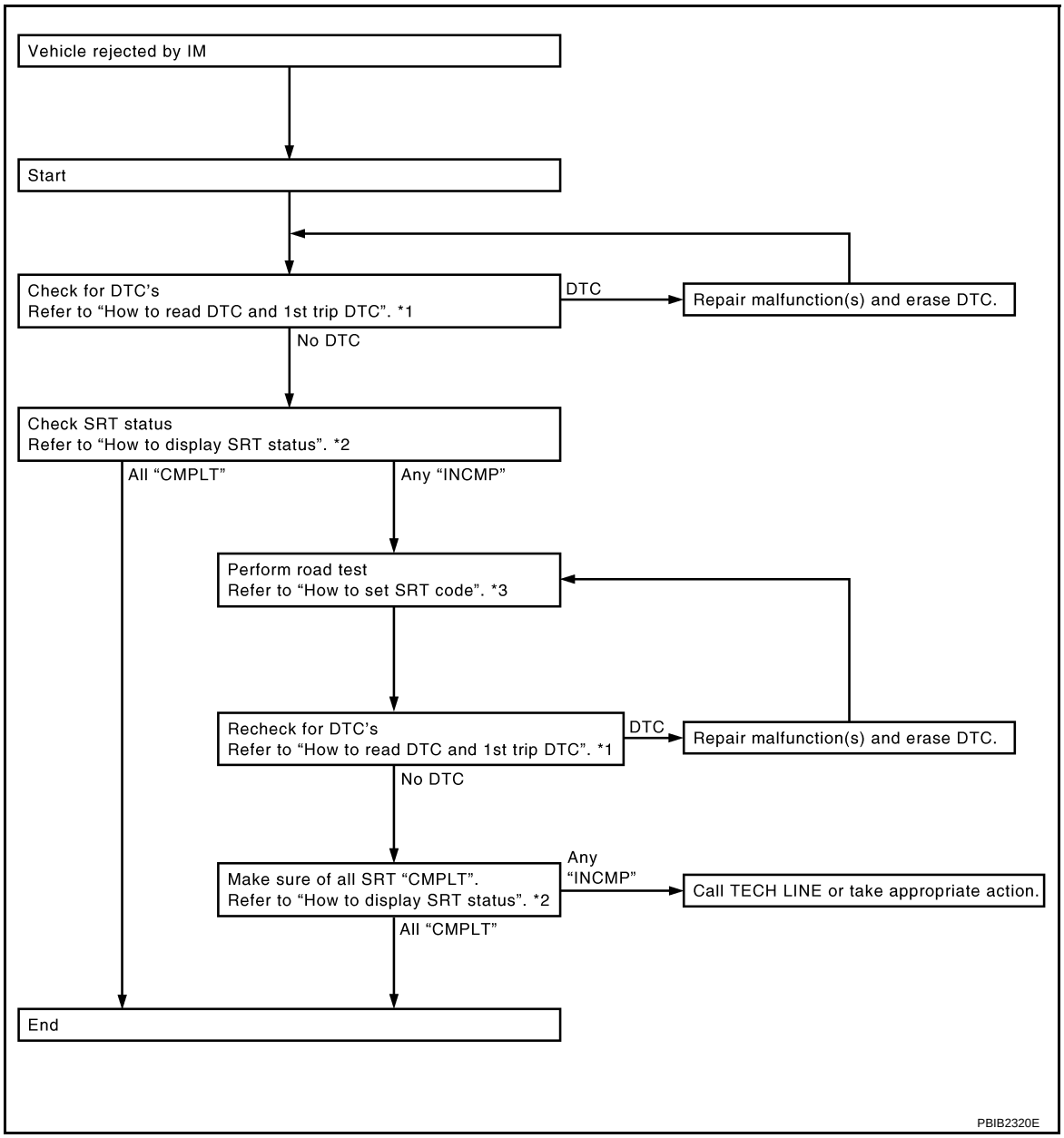

*1 “How to Read DTC and 1st Trip DTC” *2 “How to Display SRT Status” *3 “How to Set SRT Code”

How to Display SRT Status

WITH CONSULT-III

Selecting “SRT STATUS” in “DTC CONFIRMATION” mode with CONSULT-III.

For items whose SRT codes are set, a “CMPLT” is displayed on the CONSULT-III screen; for items whose SRT codes are not set, “INCMP” is displayed.

NOTE:

Though displayed on the CONSULT-III screen, “HO2S HTR” is not SRT item.

WITH GST

Selecting Service $01 with GST (Generic Scan Tool)

NO TOOLS

A SRT code itself can not be displayed while only SRT status can be.

1. Turn ignition switch ON and wait 20 seconds.
2. SRT status is indicated as shown below.
   - When all SRT codes are set, MIL lights up continuously.
   - When any SRT codes are not set, MIL will flash periodically for 10 seconds.

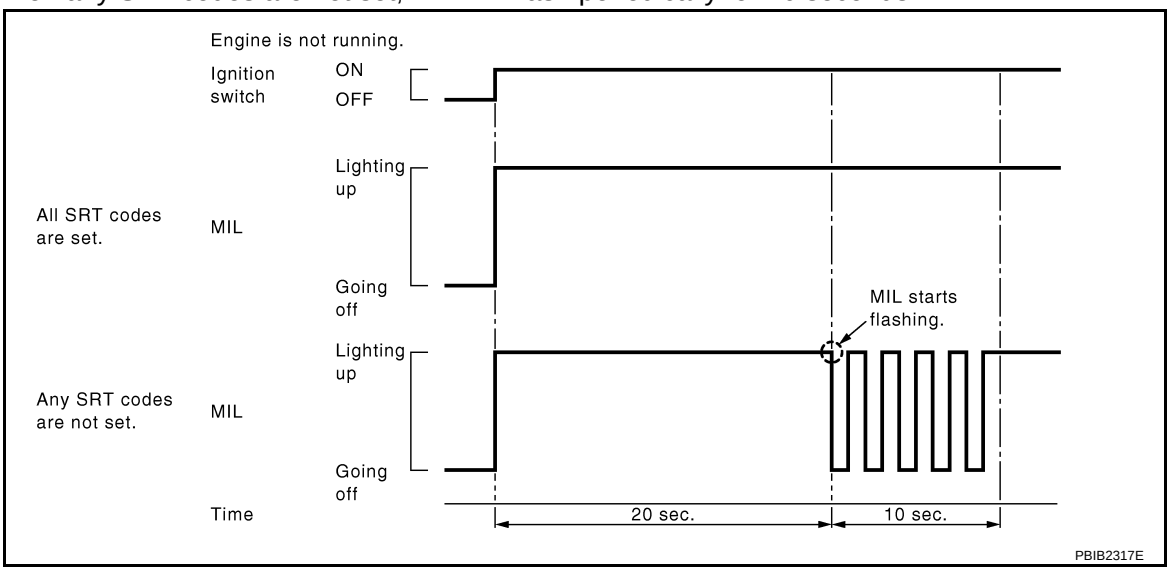

MALFUNCTION INDICATOR LAMP (MIL)

Description

The MIL is located on the instrument panel.

1. The MIL will light up when the ignition switch is turned ON. This is a bulb check.
   If the MIL does not light up, refer to EC-389, "Component Function Check".
2. When the ignition switch is turned ON (READY), the MIL should go off.
   If the MIL remains on, the on board diagnostic system has detected an engine system malfunction.

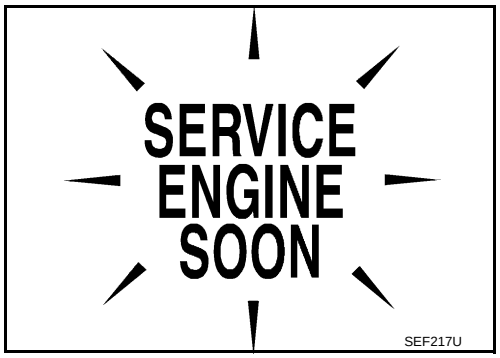

On Board Diagnostic System Function

The on board diagnostic system has the following three functions.

Diagnostic Test Mode	Ignition switch	Function	Explanation of Function
Mode I	ON	BULB CHECK	This function checks the MIL bulb for damage (blown, open circuit, etc.). If the MIL does not come on, check MIL circuit. When any SRT codes are not set, MIL may flash. For the details, refer to “How to Display SRT Status”.
	ON (READY)	MALFUNCTION WARNING	This is a usual driving condition. When a malfunction is detected twice in two consecutive driving cycles (two trip detection logic), the MIL will light up to inform the driver that a malfunction has been detected. The following malfunctions will light up or blink the MIL in the 1st trip. • Misfire (Possible three way catalyst damage) • One trip detection diagnoses
Mode II	ON	SELF-DIAGNOSTIC RESULTS	This function allows DTCs and 1st trip DTCs to be read.

Diagnostic Test Mode I — Bulb Check

In this mode, the MIL on the instrument panel should stay ON. If it remains OFF, check the bulb. Refer to EC-389, "Component Function Check".

Diagnostic Test Mode I — Malfunction Warning

MIL	Condition
ON	When the malfunction is detected.
OFF	No malfunction.

This DTC number is clarified in Diagnostic Test Mode II (SELF-DIAGNOSTIC RESULTS)

Diagnostic Test Mode II — Self-diagnostic Results

In this mode, the DTC and 1st trip DTC are indicated by the number of blinks of the MIL as shown below.

The DTC and 1st trip DTC are displayed at the same time. If the MIL does not illuminate in diagnostic test mode I (Malfunction warning), all displayed items are 1st trip DTCs. If only one code is displayed when the MIL illuminates in diagnostic test mode II (SELF-DIAGNOSTIC RESULTS), it is a DTC; if two or more codes are displayed, they may be either DTCs or 1st trip DTCs. DTC No. is same as that of 1st trip DTC. These uniden-

tified codes can be identified by using the CONSULT-III or GST. A DTC will be used as an example for how to read a code.

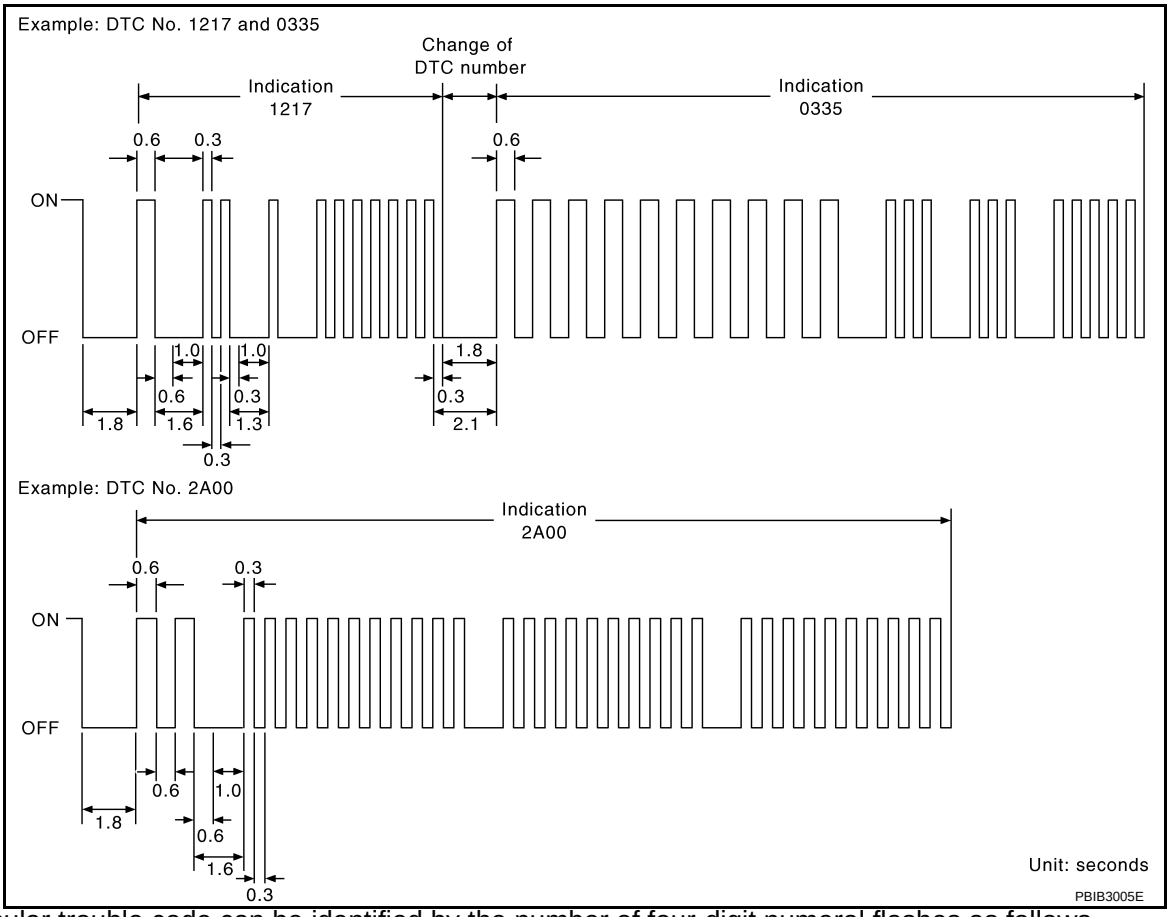

A particular trouble code can be identified by the number of four-digit numeral flashes as follows.

Number	0	1	2	3	4	5	6	7	8	9	A	B	C	D	E	F
Flashes	10	1	2	3	4	5	6	7	8	9	11	12	13	14	15	16

The length of time the 1,000th-digit numeral flashes on and off is 1.2 seconds consisting of an ON (0.6-second) - OFF (0.6-second) cycle.
The 100th-digit numeral and lower digit numerals consist of a 0.3-second ON and 0.3-second OFF cycle.
A change from one digit numeral to another occurs at an interval of 1.0-second OFF. In other words, the later numeral appears on the display 1.3 seconds after the former numeral has disappeared.
A change from one trouble code to another occurs at an interval of 1.8-second OFF.
In this way, all the detected malfunctions are classified by their DTC numbers. The DTC 0000 refers to no malfunction. (See EC-435, "DTC Index")

How to Switch Diagnostic Test Mode

NOTE:
- **It is better to count the time accurately with a clock.**
- **It is impossible to switch the diagnostic mode when an accelerator pedal position sensor circuit has a malfunction.**
- **Always ECM returns to Diagnostic Test Mode I after ignition switch is turned OFF.**

HOW TO SET DIAGNOSTIC TEST MODE II (SELF-DIAGNOSTIC RESULTS)

1. Confirm that accelerator pedal is fully released, turn ignition switch ON and wait 3 seconds.
2. Repeat the following procedure quickly five times within 5 seconds.
- Fully depress the accelerator pedal.
- Fully release the accelerator pedal.
3. Wait 7 seconds, fully depress the accelerator pedal and keep it for approx. 10 seconds until the MIL starts blinking.
   NOTE:
   Do not release the accelerator pedal for 10 seconds if MIL may start blinking on the halfway of this 10 seconds. This blinking is displaying SRT status and is continued for another 10 seconds.

4. Fully release the accelerator pedal.
   ECM has entered to Diagnostic Test Mode II (Self-diagnostic results).
   NOTE:
   Wait until the same DTC (or 1st trip DTC) appears to confirm all DTCs certainly.

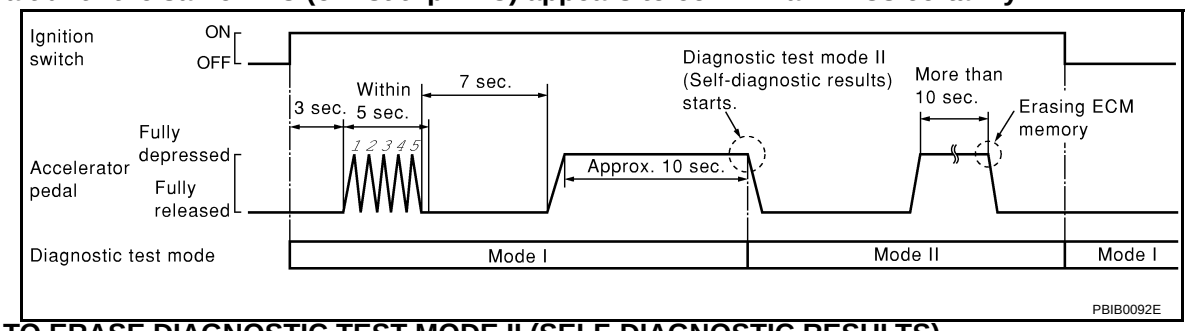

HOW TO ERASE DIAGNOSTIC TEST MODE II (SELF-DIAGNOSTIC RESULTS)

1. Set ECM in Diagnostic Test Mode II (Self-diagnostic results). Refer to “How to Set Diagnostic Test Mode II (Self-diagnostic Results)”.
2. Fully depress the accelerator pedal and keep it for more than 10 seconds.
   The emission-related diagnostic information has been erased from the backup memory in the ECM.
3. Fully release the accelerator pedal, and confirm the DTC 0000 is displayed.

How to Erase Diagnostic Test Mode II (Self-diagnostic Results)
The DTC can be erased from the back up memory in the ECM by depressing accelerator pedal. Refer to “How to Erase Diagnostic Test Mode II (Self-diagnostic Results)”.

- **If the battery is disconnected, the DTC will be lost from the backup memory within 24 hours.**
- **Be careful not to erase the stored memory before starting trouble diagnoses.**

OBD System Operation Chart

Relationship Between MIL, 1st Trip DTC, DTC and Detectable Items

- When a malfunction is detected for the first time, the 1st trip DTC and the 1st trip freeze frame data are stored in the ECM memory.
- When the same malfunction is detected in two consecutive trips, the DTC and the freeze frame data are stored in the ECM memory, and the MIL will come on.
- The MIL will go off after the vehicle is driven 3 times (driving pattern B) with no malfunction. The drive is counted only when the recorded driving pattern is met (as stored in the ECM). If another malfunction occurs while counting, the counter will reset.
- The DTC and the freeze frame data will be stored until the vehicle is driven 40 times (driving pattern A) without the same malfunction recurring (except for Misfire and Fuel Injection System). For Misfire and Fuel Injection System, the DTC and freeze frame data will be stored until the vehicle is driven 80 times (driving pattern C) without the same malfunction recurring. The “TIME” in “SELF-DIAGNOSTIC RESULTS” mode of CONSULT-III will count the number of times the vehicle is driven.
- The 1st trip DTC is not displayed when the self-diagnosis results in OK for the 2nd trip.

Summary Chart

Items	Fuel Injection System	Misfire	Other
MIL (goes off)	3 (pattern B)	3 (pattern B)	3 (pattern B)
DTC, Freeze Frame Data (no display)	80 (pattern C)	80 (pattern C)	40 (pattern A)
1st Trip DTC (clear)	1 (pattern C), *1	1 (pattern C), *1	1 (pattern B)
1st Trip Freeze Frame Data (clear)	*1, *2	*1, *2	1 (pattern B)

For details about patterns B and C under “Fuel Injection System” and “Misfire”, see “EXPLANATION FOR DRIVING PATTERNS FOR “MISFIRE <EXHAUST QUALITY DETERIORATION>”, “FUEL INJECTION SYSTEM”.

For details about patterns A and B under Other, see “EXPLANATION FOR DRIVING PATTERNS FOR “MISFIRE <EXHAUST QUALITY DETERIORATION>”, “FUEL INJECTION SYSTEM”.

*1: Clear timing is at the moment OK is detected.

*2: Clear timing is when the same malfunction is detected in the 2nd trip.

Relationship Between MIL, DTC, 1st Trip DTC and Driving Patterns for “Misfire <Exhaust Quality Deterioration>”,

"Fuel Injection System"

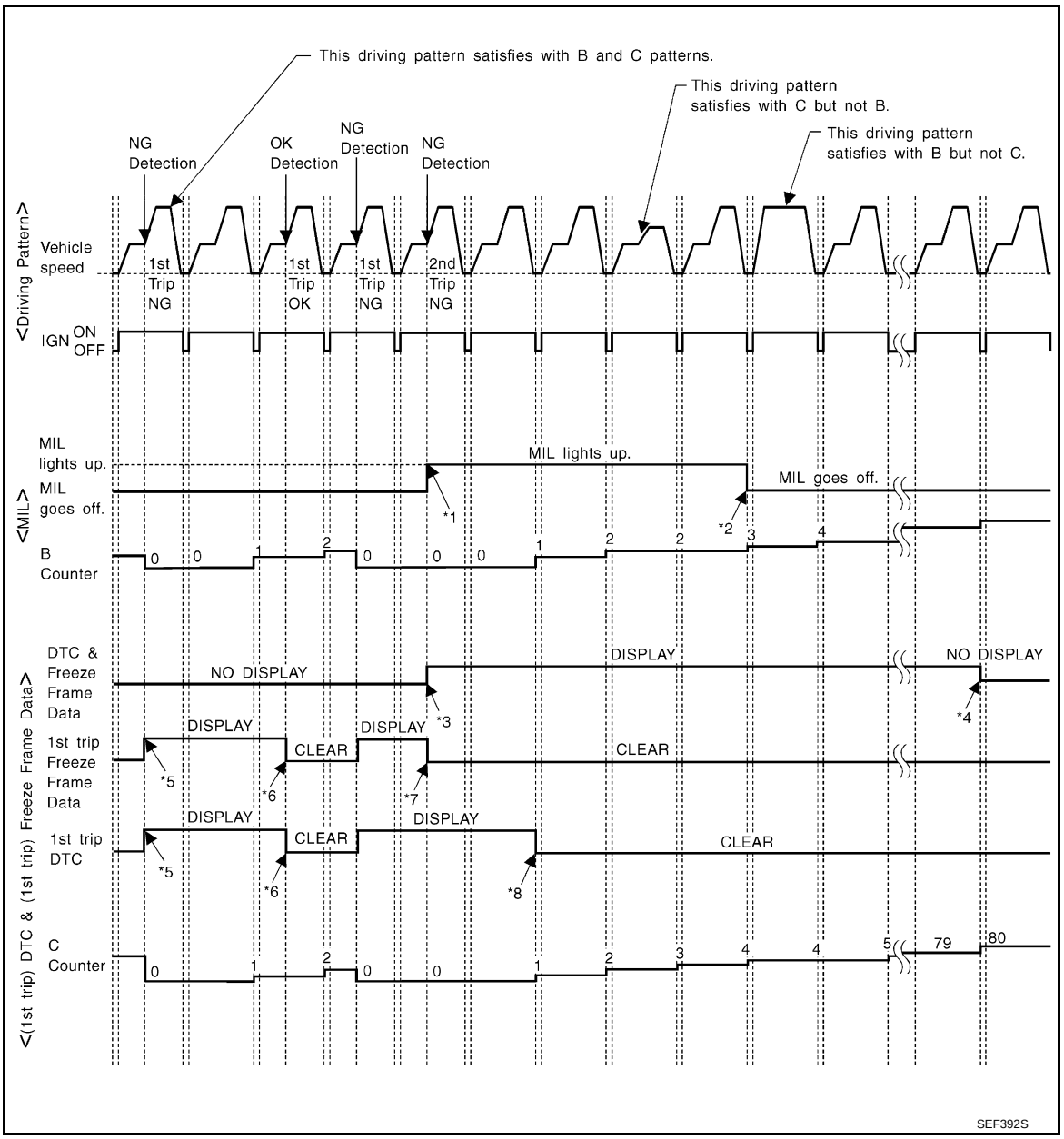

*1: When the same malfunction is detected in two consecutive trips, MIL will light up.

*2: MIL will go off after vehicle is driven 3 times (pattern B) without any malfunctions.

*3: When the same malfunction is detected in two consecutive trips, the DTC and the freeze frame data will be stored in ECM.

*4: The DTC and the freeze frame data will not be displayed any longer after vehicle is driven 80 times (pattern C) without the same malfunction. (The DTC and the freeze frame data still remain in ECM.)

*5: When a malfunction is detected for the first time, the 1st trip DTC and the 1st trip freeze frame data will be stored in ECM.

*6: The 1st trip DTC and the 1st trip freeze frame data will be cleared at the moment OK is detected.

*7: When the same malfunction is detected in the 2nd trip, the 1st trip freeze frame data will be cleared.

*8: 1st trip DTC will be cleared when vehicle is driven once (pattern C) without the same malfunction after DTC is stored in ECM.

Explanation for Driving Patterns for "Misfire <Exhaust Quality Deterioration>", "Fuel Injection System"

<Driving Pattern B>

Driving pattern B means the vehicle operation as follows:

All components and systems should be monitored at least once by the OBD system.
- The B counter will be cleared when the malfunction is detected once regardless of the driving pattern.
- The B counter will be counted up when driving pattern B is satisfied without any malfunction.
- The MIL will go off when the B counter reaches 3. (*2 in “OBD SYSTEM OPERATION CHART”)

<Driving Pattern C>
Driving pattern C means the vehicle operation as follows:
The following conditions should be satisfied at the same time:
Engine speed: (Engine speed in the freeze frame data) ±375 rpm
Calculated load value: (Calculated load value in the freeze frame data) x (1±0.1) [%]
Engine coolant temperature (T) condition:
- When the freeze frame data shows lower than 70°C (158°F), T should be lower than 70°C (158°F).
- When the freeze frame data shows higher than or equal to 70°C (158°F), T should be higher than or equal to 70°C (158°F).

Example:
If the stored freeze frame data is as follows:
Engine speed: 850 rpm, Calculated load value: 30%, Engine coolant temperature: 80°C (176°F)
To be satisfied with driving pattern C, the vehicle should run under the following conditions:
Engine speed: 475 - 1,225 rpm, Calculated load value: 27 - 33%, Engine coolant temperature: more than 70°C (158°F)
- The C counter will be cleared when the malfunction is detected regardless of vehicle conditions above.
- The C counter will be counted up when vehicle conditions above is satisfied without the same malfunction.
- The DTC will not be displayed after C counter reaches 80.
- The 1st trip DTC will be cleared when C counter is counted once without the same malfunction after DTC is stored in ECM.

Relationship Between MIL, DTC, 1st Trip DTC and Driving Patterns Except For “Misfire <Exhaust Quality Deterioration>”, “Fuel Injection System”

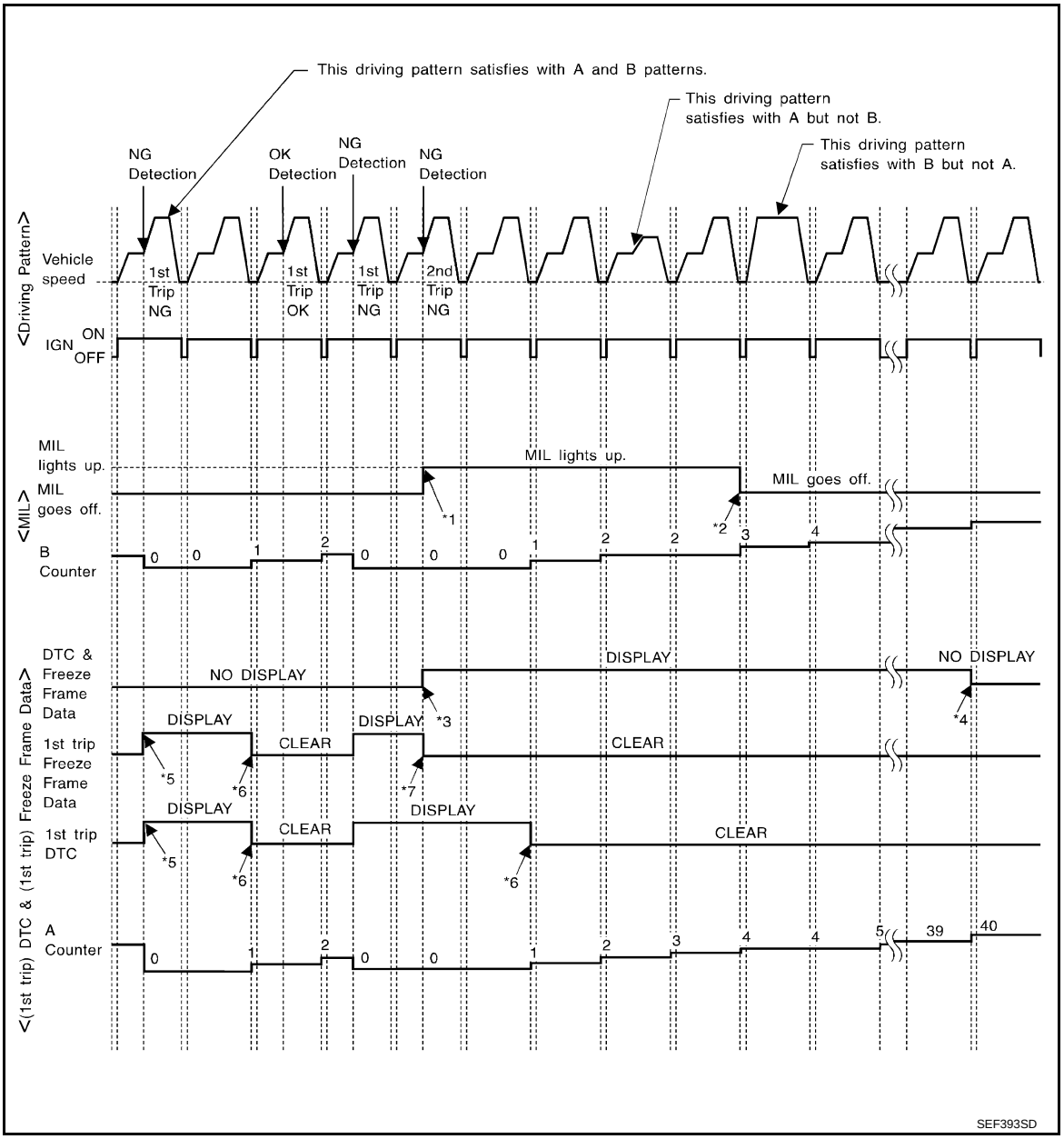

*1: When the same malfunction is detected in two consecutive trips, MIL will light up.

*2: MIL will go off after vehicle is driven 3 times (pattern B) without any malfunctions.

*3: When the same malfunction is detected in two consecutive trips, the DTC and the freeze frame data will be stored in ECM.

*4: The DTC and the freeze frame data will not be displayed any longer after vehicle is driven 40 times (pattern A) without the same malfunction. (The DTC and the freeze frame data still remain in ECM.)

*5: When a malfunction is detected for the first time, the 1st trip DTC and the 1st trip freeze frame data will be stored in ECM.

*6: 1st trip DTC will be cleared after vehicle is driven once (pattern B) without the same malfunction.

*7: When the same malfunction is detected in the 2nd trip, the 1st trip freeze frame data will be cleared.

Explanation for Driving Patterns Except for “Misfire <Exhaust Quality Deterioration>”, “Fuel Injection System”

<Driving Pattern A>

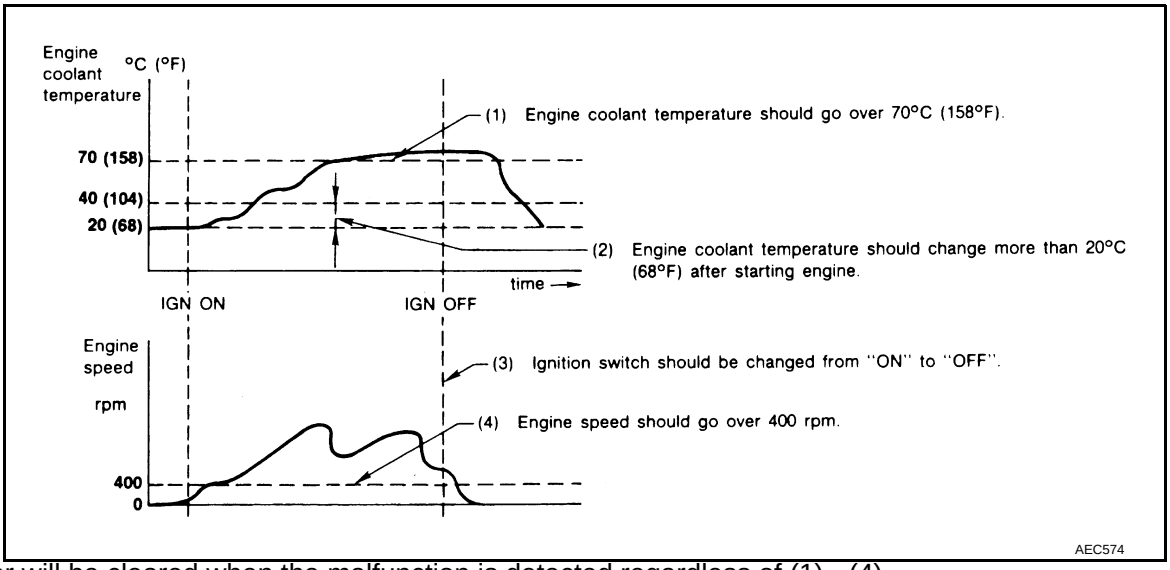

- The A counter will be cleared when the malfunction is detected regardless of (1) - (4).
- The A counter will be counted up when (1) - (4) are satisfied without the same malfunction.
- The DTC will not be displayed after the A counter reaches 40.

<Driving Pattern B>

Driving pattern B means the vehicle operation as follows:

All components and systems should be monitored at least once by the OBD system.

- The B counter will be cleared when the malfunction is detected once regardless of the driving pattern.
- The B counter will be counted up when driving pattern B is satisfied without any malfunctions.
- The MIL will go off when the B counter reaches 3 (*2 in OBD SYSTEM OPERATION CHART).

CONSULT-III Function

INFOID:0000000003069122

FUNCTION

Diagnostic test mode	Function
Work support	This mode enables a technician to adjust some devices faster and more accurately by following the indications on the CONSULT-III unit.
Self-diagnostic results	Self-diagnostic results such as 1st trip DTC, DTCs and 1st trip freeze frame data or freeze frame data can be read and erased quickly.*
Data monitor	Input/Output data in the ECM can be read.
Active test	Diagnostic Test Mode in which CONSULT-III drives some actuators apart from the ECMs and also shifts some parameters in a specified range.
DTC & SRT confirmation	The status of system monitoring tests and the self-diagnosis status/result can be confirmed.
Function test	This mode is used to inform customers when their vehicle condition requires periodic maintenance.
ECU part number	ECM part number can be read.

*: The following emission-related diagnostic information is cleared when the ECM memory is erased.

- Diagnostic trouble codes
- 1st trip diagnostic trouble codes
- Freeze frame data
- 1st trip freeze frame data
- System readiness test (SRT) codes
- Test values

ENGINE CONTROL COMPONENT PARTS/CONTROL SYSTEMS APPLICATION

Item			DIAGNOSTIC TEST MODE						
			WORK SUPPORT	SELF-DIAGNOSTIC RESULTS		DATA MONI-TOR	ACTIVE TEST	DTC & SRT CONFIRMATION	
				DTC*1	FREEZE FRAME DATA*2			SRT STA-TUS	DTC WORK SUP-PORT
ENGINE CONTROL COMPONENT PARTS	INPUT	Crankshaft position sensor (POS)		×	×	×			
		Camshaft position sensor (PHASE)		×	×	×			
		Mass air flow sensor		×		×			
		Engine coolant temperature sensor		×	×	×	×		
		A/F sensor 1		×		×		×	×
		Heated oxygen sensor 2		×		×		×	×
		Heated oxygen sensor 3		×		×		×	
		Vehicle speed sensor		×	×	×			
		Accelerator pedal position sensor				×			
		Throttle position sensor		×	×	×			
		Fuel tank temperature sensor		×		×	×		
		EVAP control system pressure sensor		×		×			
		Intake air temperature sensor		×	×	×			
		Knock sensor		×					
		Refrigerant pressure sensor				×			
		Air conditioner switch				×			
		PNP switch				×			
		Stop lamp switch		×		×			
		Battery voltage				×			
		Fuel level sensor		×		×			
		ASCD steering switch		×		×			
		ASCD brake switch		×		×			
ENGINE COTNROL COMPONENT PARTS	OUTPUT	Fuel injector		×		×	×		
		Power transistor (Ignition timing)				×	×		
		Throttle control motor relay		×		×			
		Throttle control motor		×					
		EVAP canister purge volume control solenoid valve		×		×	×		×
		Fuel pump relay	×			×	×		
		Cooling fan		×		×	×		
		A/F sensor 1 heater		×		×		×*3	
		Heated oxygen sensor 2 heater		×		×		×*3	
		Heated oxygen sensor 3 heater		×		×		×*3	
		EVAP canister vent control valve	×	×		×	×		
		Intake valve timing control solenoid valve		×		×	×		
		Calculated load value			×	×			

X: Applicable

*1: This item includes 1st trip DTCs.

*2: This mode includes 1st trip freeze frame data or freeze frame data. The items appear on CONSULT-III screen in freeze frame data mode only if a 1st trip DTC or DTC is detected. For details, refer to EC-86, "Diagnosis Description".

*3: Always “CMPLT” is displayed.

INSPECTION PROCEDURE

Refer to CONSULT-III Operators Manual.

WORK SUPPORT MODE

Work Item

WORK ITEM	CONDITION	USAGE
FUEL PRESSURE RELEASE*1	• SELECTOR LEVER IS N POSITION WITH ENGINE RUNNING. • FUEL PUMP WILL STOP BY TOUCHING “START”.	When releasing fuel pressure from fuel line
IDLE AIR VOL LEARN	• IGNITION SWITCH ON (READY) • THE IDLE AIR VOLUME THAT KEEPS THE ENGINE WITHIN THE SPECIFIED RANGE IS MEMORIZED IN ECM.	When learning the idle air volume
SELF-LEARNING CONT	• THE COEFFICIENT OF SELF-LEARNING CONTROL MIXTURE RATIO RETURNS TO THE ORIGINAL COEFFICIENT.	When clearing mixture ratio self-learning value
EVAP SYSTEM CLOSE	CLOSE THE EVAP CANISTER VENT CONTROL VALVE IN ORDER TO MAKE EVAP SYSTEM CLOSE UNDER THE FOLLOWING CONDITIONS. • IGN SW ON • ENGINE NOT RUNNING • AMBIENT TEMPERATURE IS ABOVE 0°C (32°F). • NO VACUUM AND NO HIGH PRESSURE IN EVAP SYSTEM • FUEL TANK TEMP. IS MORE THAN 0°C (32°F). • WITHIN 10 MINUTES AFTER STARTING “EVAP SYSTEM CLOSE” • WHEN TRYING TO EXECUTE “EVAP SYSTEM CLOSE” UNDER THE CONDITION EXCEPT ABOVE, CONSULT-III WILL DISCONTINUE IT AND DISPLAY APPROPRIATE INSTRUCTION. **NOTE:** **WHEN STARTING ENGINE, CONSULT-III MAY DISPLAY “BATTERY VOLTAGE IS LOW. CHARGE BATTERY”, EVEN IN USING CHARGED BATTERY.**	When detecting EVAP vapor leak point of EVAP system
VIN REGISTRATION	• IN THIS MODE, VIN IS REGISTERED IN ECM.	When registering VIN in ECM
TARGET IDLE RPM ADJ*2	• INSPECTION MODE • IDLE CONDITION	When setting target idle speed
TARGET IGN TIM ADJ*2	• INSPECTION MODE • IDLE CONDITION	When adjusting target ignition timing

*1: If this function is performed, a certain DTC may be detected.

*2: This function is not necessary in the usual service procedure.

SELF-DIAG RESULTS MODE

Self Diagnostic Item

Regarding items of DTC and 1st trip DTC, refer to EC-435, "DTC Index".)

Freeze Frame Data and 1st Trip Freeze Frame Data

Freeze frame data item*	Description
DIAG TROUBLE CODE [PXXXX]	• The engine control component part/control system has a trouble code, it is displayed as PXXXX. (Refer to EC-435, "DTC Index".)
FUEL SYS-B1	• “Fuel injection system status” at the moment a malfunction is detected is displayed. • One mode in the following is displayed. Mode2: Open loop due to detected system malfunction Mode3: Open loop due to driving conditions (power enrichment, deceleration enleanment) Mode4: Closed loop - using oxygen sensor(s) as feedback for fuel control Mode5: Open loop - has not yet satisfied condition to go to closed loop
CAL/LD VALUE [%]	• The calculated load value at the moment a malfunction is detected is displayed.
COOLANT TEMP [°C] or [°F]	• The engine coolant temperature at the moment a malfunction is detected is displayed.
L-FUEL TRM-B1 [%]	• “Long-term fuel trim” at the moment a malfunction is detected is displayed. • The long-term fuel trim indicates much more gradual feedback compensation to the base fuel schedule than short-term fuel trim.
S-FUEL TRM-B1 [%]	• “Short-term fuel trim” at the moment a malfunction is detected is displayed. • The short-term fuel trim indicates dynamic or instantaneous feedback compensation to the base fuel schedule.
ENGINE SPEED [rpm]	• The engine speed at the moment a malfunction is detected is displayed.
VEHICL SPEED [km/h] or [mph]	• The vehicle speed at the moment a malfunction is detected is displayed.
ABSOL TH·P/S [%]	• The throttle valve opening angle at the moment a malfunction is detected is displayed.
B/FUEL SCHDL [msec]	• The base fuel schedule at the moment a malfunction is detected is displayed.
INT/A TEMP SE [°C] or [°F]	• The intake air temperature at the moment a malfunction is detected is displayed.
FUEL SYS-B2	• Always a certain value is displayed. • These items are not efficient for L32 models.
L-FUEL TRM-B2 [%]	
S-FUEL TRM-B2 [%]	
INT MANI PRES [kPa]	
FTFMCH1	

*: The items are the same as those of 1st trip freeze frame data.

DATA MONITOR MODE

Monitored Item

×: Applicable

Monitored item	Unit	Description	Remarks
ENG SPEED	rpm	• Indicates the engine speed computed from the signal of the crankshaft position sensor (POS) and camshaft position sensor (PHASE).	• Accuracy becomes poor if engine speed drops below the idle rpm. • If the signal is interrupted while the engine is running, an abnormal value may be indicated.
MAS A/F SE-B1	V	• The signal voltage of the mass air flow sensor is displayed.	• When the engine is stopped, a certain value is indicated. • When engine is running specification range is indicated in “SPEC”.
B/FUEL SCHDL	msec	• “Base fuel schedule” indicates the fuel injection pulse width programmed into ECM, prior to any learned on board correction.	• When engine is running specification range is indicated in “SPEC”.

Monitored item	Unit	Description	Remarks
A/F ALPHA-B1	%	• The mean value of the air-fuel ratio feedback correction factor per cycle is indicated.	• When the engine is stopped, a certain value is indicated. • When engine is running specification range is indicated in “SPEC”. • This data also includes the data for the air-fuel ratio learning control.
COOLAN TEMP/S	°C or °F	• The engine coolant temperature (determined by the signal voltage of the engine coolant temperature sensor) is displayed.	• When the engine coolant temperature sensor is open or short-circuited, ECM enters fail-safe mode. The engine coolant temperature determined by the ECM is displayed.
A/F SEN1 (B1)	V	• The A/F signal computed from the input signal of the air fuel ratio (A/F) sensor 1 is displayed.	
HO2S2 (B1)	V	• The signal voltage of the heated oxygen sensor 2 is displayed.	
HO2S3 (B1)	V	• The signal voltage of the heated oxygen sensor 3 is displayed.	
HO2S2 MNTR(B1)	RICH/LEAN	• Display of heated oxygen sensor 2 signal: RICH: means the amount of oxygen after three way catalyst is relatively small. LEAN: means the amount of oxygen after three way catalyst is relatively large.	• When the engine is stopped, a certain value is indicated.
VHCL SPEED SE	km/h or mph	• The vehicle speed computed from the vehicle speed signal sent from brake ECU is displayed.	
BATTERY VOLT	V	• The power supply voltage of ECM is displayed.	
TP SEN 1-B1	V	• The throttle position sensor signal voltage is displayed.	• TP SEN 2-B1 signal is converted by ECM internally. Thus, it differs from ECM terminal voltage signal.
TP SEN 2-B1			
FUEL T/TMP SE	°C or °F	• The fuel temperature (determined by the signal voltage of the fuel tank temperature sensor) is displayed.	
INT/A TEMP SE	°C or °F	• The intake air temperature (determined by the signal voltage of the intake air temperature sensor) is indicated.	
EVAP SYS PRES	V	• The signal voltage of EVAP control system pressure sensor is displayed.	
FUEL LEVEL SE	V	• The signal voltage of the fuel level sensor is displayed.	
START SIGNAL	ON/OFF	• Indicates start signal status [ON/OFF] computed by the ECM according to the input signals.	• After starting the engine, [OFF] is displayed regardless of the starter signal.
CLSD THL POS	ON/OFF	• Indicates idle position [ON/OFF] computed by ECM according to the engine power request signal.	
AIR COND SIG	ON/OFF	• Indicates [ON/OFF] condition of the air conditioner switch as determined by the air conditioner signal.	
P/N POSI SW	ON/OFF	• Indicates [ON/OFF] condition from the park/neutral position (PNP) switch signal.	
PW/ST SIGNAL	ON/OFF	• Always OFF is displayed. • This item is not efficient for L32 models.	
LOAD SIGNAL	ON/OFF	• Indicates [ON/OFF] condition from the electrical load signal. ON: Rear window defogger switch is ON and/or lighting switch is in 2nd position. OFF: Both rear window defogger switch and lighting switch are OFF.	

Monitored item	Unit	Description	Remarks
IGNITION SW	ON/OFF	• Indicates [ON/OFF] condition from ignition switch signal.	
HEATER FAN SW	ON/OFF	• Indicates [ON/OFF] condition from the blower fan switch signal.	
BRAKE SW	ON/OFF	• Indicates [ON/OFF] condition from the stop lamp switch signal.	
INJ PULSE-B1	msec	• Indicates the actual fuel injection pulse width compensated by ECM according to the input signals.	• When the engine is stopped, a certain computed value is indicated.
IGN TIMING	BTDC	• Indicates the ignition timing computed by ECM according to the input signals.	• When the engine is stopped, a certain value is indicated.
CAL/LD VALUE	%	• “Calculated load value” indicates the value of the current air flow divided by peak air flow.	
MASS AIRFLOW	g·m/s	• Indicates the mass air flow computed by ECM according to the signal voltage of the mass air flow sensor.	
PURG VOL C/V	%	• Indicates the EVAP canister purge volume control solenoid valve control value computed by the ECM according to the input signals. • The opening becomes larger as the value increases.	
INT/V TIM (B1)	°CA	• Indicates [°CA] of intake camshaft advance angle.	
INT/V SOL-B1	%	• The control value of the intake valve timing control solenoid valve (determined by ECM according to the input signals) is indicated. • The advance angle becomes larger as the value increases.	
FUEL PUMP RLY	ON/OFF	• Indicates the fuel pump relay control condition determined by ECM according to the input signals.	
VENT CONT/V	ON/OFF	• The control condition of the EVAP canister vent control valve (determined by ECM according to the input signals) is indicated. ON: Closed OFF: Open	
THRTL RELAY	ON/OFF	• Indicates the throttle control motor relay control condition determined by the ECM according to the input signals.	
HO2S2 HTR (B1)	ON/OFF	• Indicates [ON/OFF] condition of heated oxygen sensor 2 heater determined by ECM according to the input signals.	
HO2S3 HTR(B1)	ON/OFF	• Indicates [ON/OFF] condition of heated oxygen sensor 3 heater determined by ECM according to the input signals.	
VEHICLE SPEED	km/h or mph	• The vehicle speed computed from the vehicle speed signal sent from HV ECU is displayed.	
IDL A/V LEARN	YET/CMPLT	• Display the condition of Idle Air Volume Learning YET: Idle air volume learning has not been performed yet. CMPLT: Idle air volume learning has already been performed successfully.	
TRVL AFTER MIL	km or mile	• Distance traveled while MIL is activated.	
A/F S1 HTR(B1)	%	• Air fuel ratio (A/F) sensor 1 heater control value computed by ECM according to the input signals. • The current flow to the heater becomes larger as the value increases.	

Monitored item	Unit	Description	Remarks
AC PRESS SEN	V	• The signal voltage from the refrigerant pressure sensor is displayed.	
VHCL SPEED SE	km/h or mph	• The vehicle speed computed from the vehicle speed signal sent from brake ECU is displayed.	
SET VHCL SPD	km/h or mph	• The preset vehicle speed is displayed.	
MAIN SW	ON/OFF	• Indicates [ON/OFF] condition from MAIN switch signal.	
CANCEL SW	ON/OFF	• Indicates [ON/OFF] condition from CANCEL switch signal.	
RESUME/ACC SW	ON/OFF	• Indicates [ON/OFF] condition from RESUME/ACCELERATE switch signal.	
SET SW	ON/OFF	• Indicates [ON/OFF] condition from SET/COAST switch signal.	
BRAKE SW1	ON/OFF	• Indicates [ON/OFF] condition from ASCD brake switch signal.	
BRAKE SW2	ON/OFF	• Indicates [ON/OFF] condition of stop lamp switch signal.	
VHCL SPD CUT	NON/CUT	• Indicates the vehicle cruise condition. NON: Vehicle speed is maintained at the ASCD set speed. CUT: Vehicle speed decreased to excessively low compared with the ASCD set speed, and ASCD operation is cut off.	
LO SPEED CUT	NON/CUT	• Indicates the vehicle cruise condition. NON: Vehicle speed is maintained at the ASCD set speed. CUT: Vehicle speed decreased to excessively low, and ASCD operation is cut off.	
AT OD MONITOR	ON/OFF	• Always OFF is displayed. • This item is not efficient for L32 models.	
AT OD CANCEL	ON/OFF	• Always OFF is displayed. • This item is not efficient for L32 models.	
CRUISE LAMP	ON/OFF	• Indicates request condition of CRUISE lamp determined by the ECM according to the input signals.	
SET LAMP	ON/OFF	• Always OFF is displayed. • This item is not efficient for L32 models.	
A/F ADJ-B1	—	• Indicates the correction of factor stored in ECM. The factor is calculated from the difference between the target air-fuel ratio stored in ECM and the air-fuel ratio calculated from A/F sensor 1 signal.	
FAN DUTY	%	• Indicates a command value for cooling fan. The value is calculated by ECM based on input signals.	
ACCEL PEDAL POSI	%	• Indicates the accelerator pedal opening value sent from HV ECU. • The opening becomes larger as the value increases	
ENG POWER RQST	kW	• Indicates engine power request value sent from HV ECU.	
ENG SPEED RQST	rpm	• Indicates engine speed request signal sent from HV ECU.	
CATALYST TEMP-B1	°C or °F	• Indicates the catalyst temperature computed by ECM according to the input signals.	

Monitored item	Unit	Description	Remarks
ENG START RQST	YES/NO	• Indicates [YES/NO] condition of engine start request signal sent from HV ECU.	
ENG IDLE RQST	YES/NO	• Indicates [YES/NO] condition of engine idle request signal sent from HV ECU.	
ENG F/C RQST	YES/NO	• Indicates [YES/NO] condition of fuel cut request signal sent from HV ECU.	
EVAP LEAK DIAG	YET/CMPLT	• Indicates the condition of EVAP leak diagnosis. YET: EVAP leak diagnosis has not been performed yet. CMPLT: EVAP leak diagnosis has been performed successfully.	
EVAP DIAG READY	ON/OFF	• Indicates the ready condition of EVAP leak diagnosis. ON: Diagnosis has been ready condition. OFF: Diagnosis has not been ready condition.	
ENG START DIAG	YET/CMPLT	• Indicates the condition of engine does not start diagnosis. YET: Diagnosis has not been performed yet. CMPLT: Diagnosis has been performed successfully.	
ENG ST DIAG RSLT	NOTNG/NG	• Indicates engine does not start diagnosis result.	

NOTE:

Any monitored item that does not match the vehicle being diagnosed is deleted from the display automatically.

ACTIVE TEST MODE

Test Item

TEST ITEM	CONDITION	JUDGEMENT	CHECK ITEM (REMEDY)
FUEL INJECTION	• Ignition switch: ON (READY) • Engine: Return to the original trouble condition • Change the amount of fuel injection using CONSULT-III.	If trouble symptom disappears, see CHECK ITEM.	• Harness and connectors • Fuel injector • Air fuel ratio (A/F) sensor 1
IGNITION TIMING	• Ignition switch: ON (READY) • Engine: Return to the original trouble condition • Timing light: Set • Retard the ignition timing using CONSULT-III.	If trouble symptom disappears, see CHECK ITEM.	• Perform Idle Air Volume Learning.
POWER BALANCE*1	• Ignition switch: ON (READY) • Engine: After warming up • Selector lever: P • Cut off each fuel injector signal one at a time using CONSULT-III.	Engine runs rough or dies.	• Harness and connectors • Compression • Fuel injector • Power transistor • Spark plug • Ignition coil
ENG COOLANT TEMP	• Ignition switch: ON (READY) • Engine: Return to the original trouble condition • Change the engine coolant temperature using CONSULT-III.	If trouble symptom disappears, see CHECK ITEM.	• Harness and connectors • Engine coolant temperature sensor • Fuel injector
FUEL PUMP RELAY*2	• Ignition switch: ON • Turn the fuel pump relay “ON” and “OFF” using CONSULT-III and listen to operating sound.	Fuel pump relay makes the operating sound.	• Harness and connectors • Fuel pump relay

TEST ITEM	CONDITION	JUDGEMENT	CHECK ITEM (REMEDY)
PURG VOL CONT/V	• Ignition switch: ON (READY) • Engine: After warming up, run engine at 1,500 rpm. • Change the EVAP canister purge volume control solenoid valve opening percent using CONSULT-III.	Engine speed changes according to the opening percent.	• Harness and connectors • Solenoid valve
FUEL/T TEMP SEN	• Change the fuel tank temperature using CONSULT-III.		
VENT CONTROL/V	• Ignition switch: ON (Engine stopped) • Turn solenoid valve “ON” and “OFF” with the CONSULT-III and listen to operating sound.	Solenoid valve makes an operating sound.	• Harness and connectors • Solenoid valve
V/T ASSIGN ANGLE	• Ignition switch: ON (READY) • Engine: Return to the original trouble condition • Change intake valve timing using CONSULT-III.	If trouble symptom disappears, see CHECK ITEM.	• Harness and connectors • Intake valve timing control solenoid valve
FAN DUTY CONTROL*3	• Ignition switch: ON • Change duty ratio using CONSULT-III.	Cooling fan speed changes.	• Harness and connectors • Cooling fan motor • Cooling fan relay • Cooling fan control module • IPDM E/R

*1: This item can be executed for 200 seconds after touch “Test Start”. If 200 seconds passed, touch “End”, and turn ignition switch OFF.

*2: Leaving fuel pump relay OFF with CONSULT-III while ignition switch is ON (READY) position, a certain DTC may be detected.

*3: Leaving cooling fan OFF with CONSULT-III while engine is running may cause the engine to overheat.

DTC & SRT CONFIRMATION MODE

SRT STATUS Mode

For details, refer to EC-86, "Diagnosis Description".

SRT WORK SUPPORT Mode

This mode enables a technician to drive a vehicle to set the SRT while monitoring the SRT status.

DTC WORK SUPPORT Mode

Test mode	Test item	Corresponding DTC No.	Reference page
EVAPORATIVE SYSTEM	PURG VOL CN/V P1444	P0443	EC-267
	PURG FLOW P0441	P0441	EC-262
A/F SEN1	A/F SEN1(B1) P0133	P0133	EC-189
	A/F SEN1(B1) P1276	P0130	EC-179
HO2S2	HO2S2(B1) P1146	P0138	EC-198
	HO2S2(B1) P1147	P0137	EC-193
	HO2S2(B1) P0139	P0139	EC-205
ENGINE PERFORMANCE	POOR ENG PWR P1196	P1196	EC-323

Diagnosis Tool Function

INFOID:0000000003069123

DESCRIPTION

Generic Scan Tool (OBDII scan tool) complying with SAE J1978 has 8 different functions explained below.
ISO15765-4 is used as the protocol.
The name “GST” or “Generic Scan Tool” is used in this service manual.

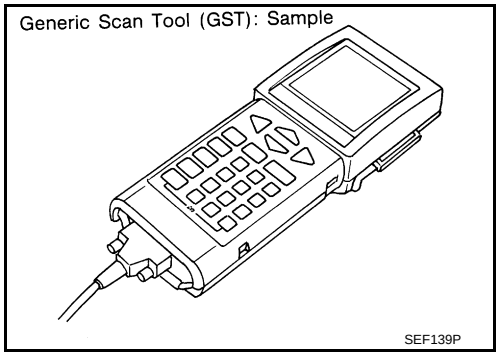

FUNCTION

Diagnostic Service		Function
Service $01	READINESS TESTS	This diagnostic service gains access to current emission-related data values, including analog inputs and outputs, digital inputs and outputs, and system status information.
Service $02	(FREEZE DATA)	This diagnostic service gains access to emission-related data value which were stored by ECM during the freeze frame. For details, refer to EC-435, "DTC Index".
Service $03	DTCs	This diagnostic service gains access to emission-related power train trouble codes which were stored by ECM.
Service $04	CLEAR DIAG INFO	This diagnostic service can clear all emission-related diagnostic information. This includes: • Clear number of diagnostic trouble codes (Service $01) • Clear diagnostic trouble codes (Service $03) • Clear trouble code for freeze frame data (Service $01) • Clear freeze frame data (Service $02) • Reset status of system monitoring test (Service $01) • Clear on board monitoring test results (Service $06 and $07)
Service $06	(ON BOARD TESTS)	This diagnostic service accesses the results of on board diagnostic monitoring tests of specific components/systems that are not continuously monitored.
Service $07	(ON BOARD TESTS)	This diagnostic service enables the off board test drive to obtain test results for emission-related powertrain components/systems that are continuously monitored during normal driving conditions.
Service $08	—	This diagnostic service can close EVAP system in ignition switch ON position (Engine stopped). When this diagnostic service is performed, EVAP canister vent control valve can be closed. In the following conditions, this diagnostic service cannot function. • Low ambient temperature • Low battery voltage • Engine running • Ignition switch OFF • Low fuel temperature • Too much pressure is applied to EVAP system
Service $09	(CALIBRATION ID)	This diagnostic service enables the off-board test device to request specific vehicle information such as Vehicle Identification Number (VIN) and Calibration IDs.

INSPECTION PROCEDURE

1. Turn ignition switch OFF.
2. Connect “GST” to data link connector (2), which is located under LH dash panel near the hood opener handle (1).

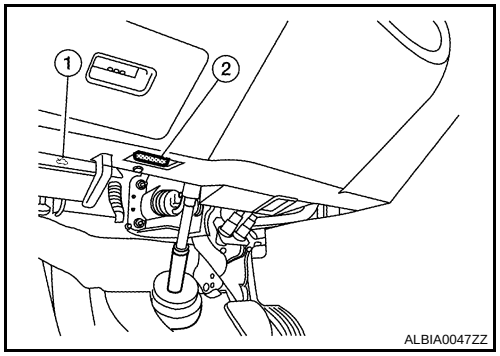

3. Turn ignition switch ON.
4. Enter the program according to instruction on the screen or in the operation manual.
   (*: Regarding GST screens in this section, sample screens are shown.)

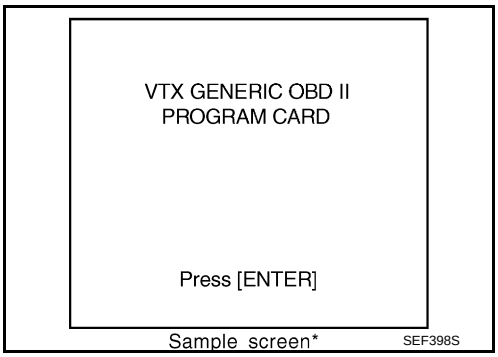

5. Perform each diagnostic mode according to each service procedure.
   For further information, see the GST Operation Manual of the tool maker.

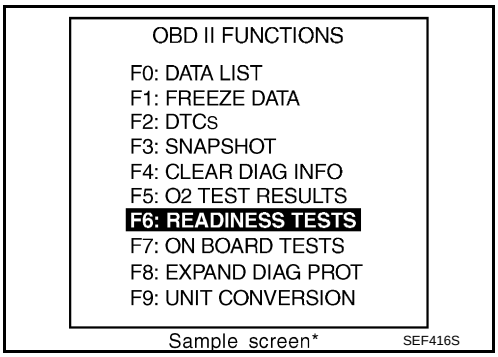

COMPONENT DIAGNOSIS

TROUBLE DIAGNOSIS - SPECIFICATION VALUE

Description

INFOID:0000000003069124

The specification (SP) value indicates the tolerance of the value that is displayed in “SPEC” of “DATA MONITOR” mode of CONSULT-III during normal operation of the Engine Control System. When the value in “SPEC” of “DATA MONITOR” mode is within the SP value, the Engine Control System is confirmed OK. When the value in “SPEC” of “DATA MONITOR” mode is NOT within the SP value, the Engine Control System may have one or more malfunctions.
The SP value is used to detect malfunctions that may affect the Engine Control System, but will not light the MIL.
The SP value will be displayed for the following three items:
- B/FUEL SCHDL (The fuel injection pulse width programmed into ECM prior to any learned on board correction)
- A/F ALPHA-B1 (The mean value of air-fuel ratio feedback correction factor per cycle)
- MAS A/F SE-B1 (The signal voltage of the mass air flow sensor)

Component Function Check

INFOID:0000000003069125

1. START

Make sure that all of the following conditions are satisfied.
- Vehicle driven distance: More than 5,000 km (3,107 miles)
- Barometric pressure: 98.3 - 104.3 kPa (1.003 - 1.064 kg/cm^2, 14.25 - 15.12 psi)
- Atmospheric temperature: 20 - 30°C (68 - 86°F)
- Engine coolant temperature: 75 - 95°C (167 - 203°F)
- Transmission: Warmed-up (After the engine is warmed up to normal operating temperature, drive vehicle for 5 minutes.)
- Engine speed: Idle

>> GO TO 2.

2. PERFORM “SPEC” OF “DATA MONITOR” MODE

With CONSULT-III
NOTE:
Perform “SPEC” in “DATA MONITOR” mode in maximum scale display.
1. Lift up the vehicle.
2. Perform EC-11, "BASIC INSPECTION : Special Repair Requirement".
3. Turn ignition switch ON (READY).
4. Depressed the accelerator pedal and keep it.
5. Shift the selector lever to N position with engine running.
   CAUTION:
   Never leave the selector lever in the N position for a long period of time. In the N position, the engine operates but electricity cannot be generated.
6. Select “B/FUEL SCHDL”, “A/F ALPHA-B1” and “MAS A/F SE-B1” in “SPEC” of “DATA MONITOR” mode with CONSULT-III.
7. Make sure that monitor items are within the SP value.
8. Shift the selector lever to P position.

Is the inspection result normal?

YES >> END
NO >> Go to EC-110, "Diagnosis Procedure".

Diagnosis Procedure

INFOID:0000000003069126

OVERALL SEQUENCE

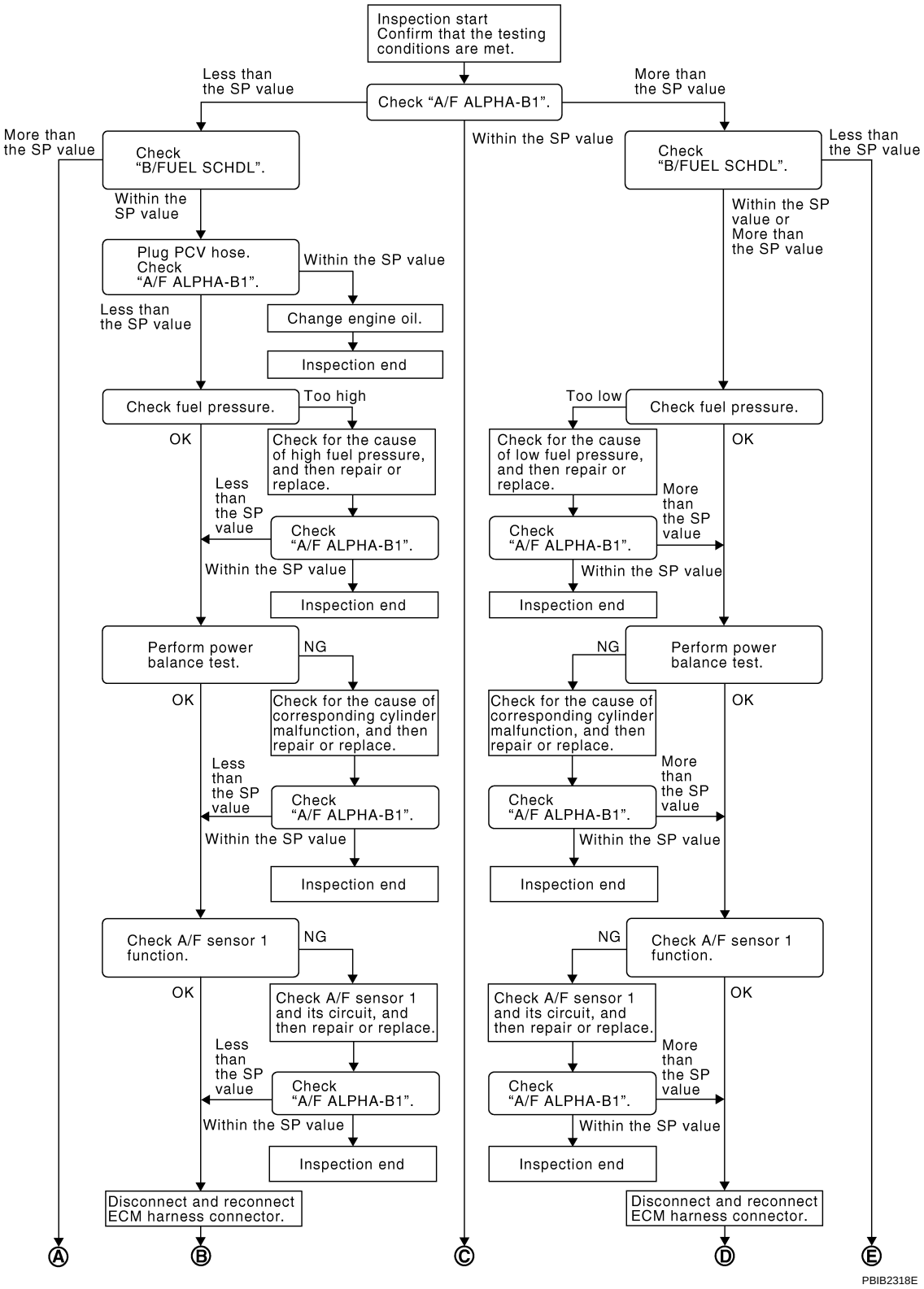

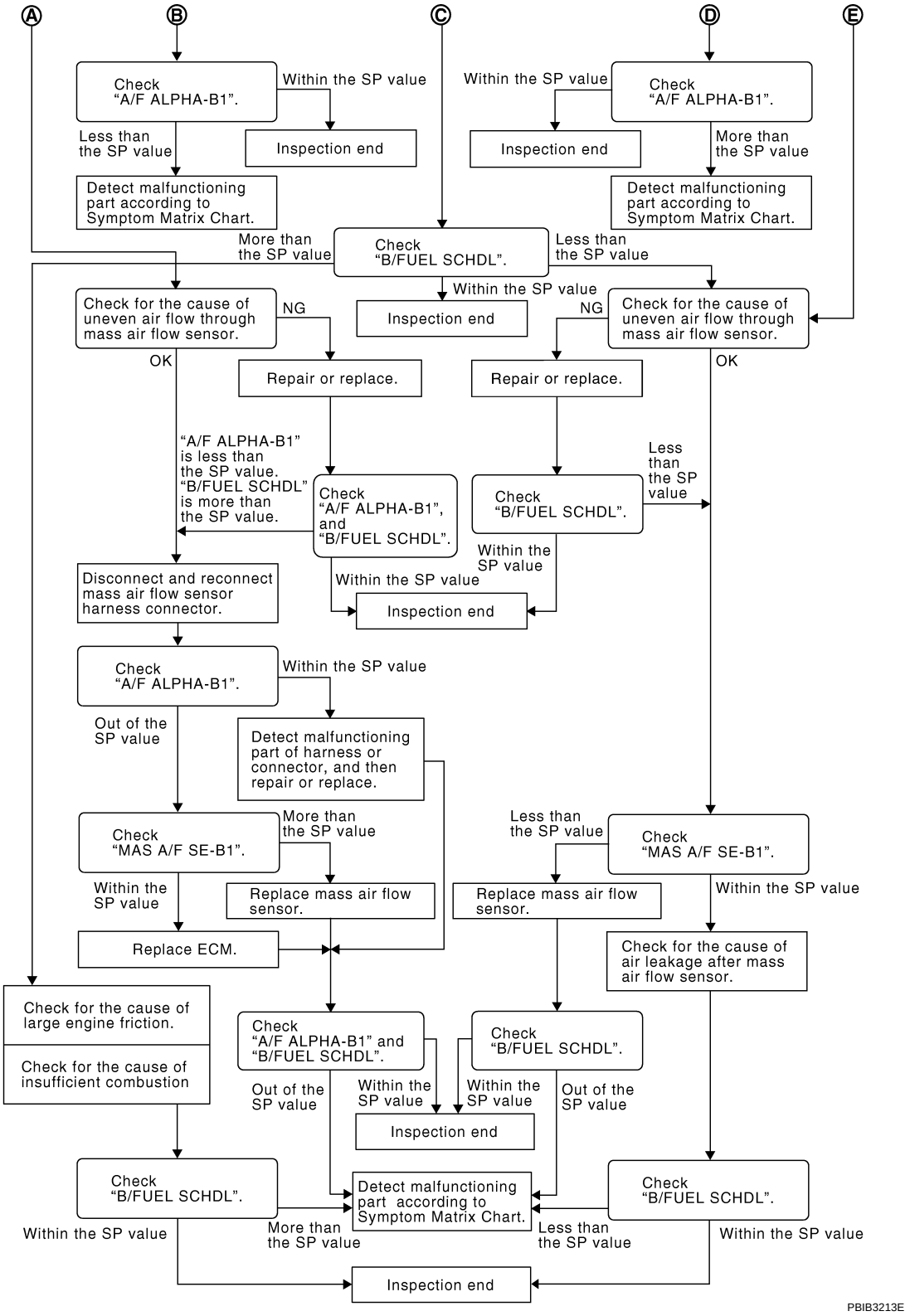

DETAILED PROCEDURE

1. CHECK "A/F ALPHA-B1"

With CONSULT-III

1. Confirm that the testing conditions are met. Refer to EC-109, "Component Function Check".
2. Lift up the vehicle.
3. Turn ignition switch ON (READY).
4. Depressed the accelerator pedal and keep it.

5. Shift the selector lever to N position with engine running.
   CAUTION:
   Never leave the selector lever in the N position for a long period of time. In the N position, the engine operates but electricity cannot be generated.
6. Select “A/F ALPHA-B1” in “SPEC” of “DATA MONITOR” mode, and make sure that the each indication is within the SP value.
   NOTE:
   Check “A/F ALPHA-B1” for approximately 1 minute because they may fluctuate. It is NG if the indication is out of the SP value even a little.

Is the measurement value within the SP value?

YES >> GO TO 17.
NO-1 >> Less than the SP value: GO TO 2.
NO-2 >> More than the SP value: GO TO 3.

2. CHECK “B/FUEL SCHDL”

1. Select “B/FUEL SCHDL” in “SPEC” of “DATA MONITOR” mode, and make sure that the indication is within the SP value.
2. Shift the selector lever to P position.

Is the measurement value within the SP value?

YES >> GO TO 4.
NO >> More than the SP value: GO TO 19.

3. CHECK “B/FUEL SCHDL”

1. Select “B/FUEL SCHDL” in “SPEC” of “DATA MONITOR” mode, and make sure that the indication is within the SP value.
2. Shift the selector lever to P position.

Is the measurement value within the SP value?

YES >> GO TO 6.
NO-1 >> More than the SP value: GO TO 6.
NO-2 >> Less than the SP value: GO TO 25.

4. CHECK “A/F ALPHA-B1”

1. Turn ignition switch OFF.
2. Disconnect PCV hose, and then plug it.
3. Turn ignition switch ON (READY).
4. Depressed the accelerator pedal and keep it.
5. Shift the selector lever to N position with engine running.
   CAUTION:
   Never leave the selector lever in the N position for a long period of time. In the N position, the engine operates but electricity cannot be generated.
6. Select “A/F ALPHA-B1” in “SPEC” of “DATA MONITOR” mode, and make sure that the indication is within the SP value.
7. Shift the selector lever to P position.

Is the measurement value within the SP value?

YES >> GO TO 5.
NO >> GO TO 6.

5. CHANGE ENGINE OIL

1. Turn ignition switch OFF.
2. Change engine oil.
   NOTE:
   This symptom may occur when a large amount of gasoline is mixed with engine oil because of driving conditions (such as when engine oil temperature does not rise enough since a journey distance is too short during winter). The symptom will not be detected after changing engine oil or changing driving condition.

>> **INSPECTION END**

6. CHECK FUEL PRESSURE

Check fuel pressure. (Refer to EC-454, "Inspection".)

Is the inspection result normal?

YES >> GO TO 9.
NO-1 >> Fuel pressure is too high: Replace “fuel filter and fuel pump assembly” and then GO TO 8.
NO-2 >> Fuel pressure is too low: GO TO 7.

7. DETECT MALFUNCTIONING PART

Check fuel hoses and fuel tubes for clogging

Is the inspection result normal?

YES >> Replace “fuel filter and fuel pump assembly” and then GO TO 8.
NO >> Repair or replace and then GO TO 8.

8. CHECK “A/F ALPHA-B1”

1. Turn ignition switch ON (READY).
2. Depressed the accelerator pedal and keep it.
3. Shift the selector lever to N position with engine running.
   CAUTION:
   Never leave the selector lever in the N position for a long period of time. In the N position, the engine operates but electricity cannot be generated.
4. Select “A/F ALPHA-B1” in “SPEC” of “DATA MONITOR” mode, and make sure that the indication is within the SP value.
5. Shift the selector lever to P position.

Is the measurement value within the SP value?

YES >> INSPECTION END
NO >> GO TO 9.

9. PERFORM POWER BALANCE TEST

1. Perform “POWER BALANCE” in “ACTIVE TEST” mode.
2. Make sure that the each cylinder produces a momentary engine speed drop.

Is the inspection result normal?

YES >> GO TO 12.
NO >> GO TO 10.

10. DETECT MALFUNCTIONING PART

Check the following.
1. Ignition coil and its circuit (Refer to EC-384, "Component Function Check".)
2. Fuel injector and its circuit (Refer to EC-236, "Diagnosis Procedure".)
3. Intake air leakage
4. Low compression pressure (Refer to EM-21, "Compression pressure".)

Is the inspection result normal?

YES >> Replace fuel injector and then GO TO 11.
NO >> Repair or replace malfunctioning part and then GO TO 11.

11. CHECK “A/F ALPHA-B1”

1. Turn ignition switch ON (READY).
2. Depressed the accelerator pedal and keep it.
3. Shift the selector lever to N position with engine running.
   CAUTION:
   Never leave the selector lever in the N position for a long period of time. In the N position, the engine operates but electricity cannot be generated.
4. Select “A/F ALPHA-B1” in “SPEC” of “DATA MONITOR” mode, and make sure that the indication is within the SP value.
5. Shift the selector lever to P position.

Is the measurement value within the SP value?

YES >> INSPECTION END
NO >> GO TO 12.

12. CHECK A/F SENSOR 1 FUNCTION

Perform all DTC CONFIRMATION PROCEDURE related with A/F sensor 1.
- For DTC P0130, refer to EC-179, "DTC Logic".
- For DTC P0131, refer to EC-183, "DTC Logic".
- For DTC P0132, refer to EC-186, "DTC Logic".
- For DTC P0133, refer to EC-189, "DTC Logic".
- For DTC P2A00, refer to EC-369, "DTC Logic".

Is any DTC detected?

YES >> GO TO 15.
NO >> GO TO 13.

13. CHECK A/F SENSOR 1 CIRCUIT

Perform DIAGNOSTIC PROCEDURE according to corresponding DTC.

>> GO TO 14.

14. CHECK “A/F ALPHA-B1”

1. Lift up the vehicle.
2. Turn ignition switch ON (READY).
3. Depressed the accelerator pedal and keep it.
4. Shift the selector lever to N position with engine running.
   CAUTION:
   Never leave the selector lever in the N position for a long period of time. In the N position, the engine operates but electricity cannot be generated.
5. Select “A/F ALPHA-B1” in “SPEC” of “DATA MONITOR” mode, and make sure that the each indication is within the SP value.
6. Shift the selector lever to P position.

Is the measurement value within the SP value?

YES >> INSPECTION END
NO >> GO TO 15.

15. DISCONNECT AND RECONNECT ECM HARNESS CONNECTOR

1. Turn ignition switch OFF.
2. Disconnect ECM harness connector. Check pin terminal and connector for damage, and then reconnect it.

>> GO TO 16.

16. CHECK “A/F ALPHA-B1”

1. Lift up the vehicle.
2. Turn ignition switch ON (READY).
3. Depressed the accelerator pedal and keep it.
4. Shift the selector lever to N position with engine running.
   CAUTION:
   Never leave the selector lever in the N position for a long period of time. In the N position, the engine operates but electricity cannot be generated.
5. Select “A/F ALPHA-B1” in “SPEC” of “DATA MONITOR” mode, and make sure that the indication is within the SP value.
6. Shift the selector lever to P position.

Is the measurement value within the SP value?

YES >> INSPECTION END
NO >> Detect malfunctioning part according to EC-443, "Symptom Table".

17. CHECK “B/FUEL SCHDL”

1. Select “B/FUEL SCHDL” in “SPEC” of “DATA MONITOR” mode, and make sure that the indication is within the SP value.
2. Shift the selector lever to P position.

Is the measurement value within the SP value?

YES >> INSPECTION END
NO-1 >> More than the SP value: GO TO 18.

NO-2 >> Less than the SP value: GO TO 25.

18. DETECT MALFUNCTIONING PART

1. Check for the cause of large engine friction. Refer to the following.
- Engine oil level is too high
- Engine oil viscosity
- Belt tension of power steering, alternator, A/C compressor, etc. is excessive
- Noise from engine
- Noise from transmission, etc.
2. Check for the cause of insufficient combustion. Refer to the following.
- Valve clearance malfunction
- Intake valve timing control function malfunction
- Camshaft sprocket installation malfunction, etc.

>> Repair or replace malfunctioning part, and then GO TO 30.

19. CHECK INTAKE SYSTEM

Check for the cause of uneven air flow through mass air flow sensor. Refer to the following.
- Crushed air ducts
- Malfunctioning seal of air cleaner element
- Uneven dirt of air cleaner element
- Improper specification of intake air system

Is the inspection result normal?

YES >> GO TO 21.
NO >> Repair or replace malfunctioning part, and then GO TO 20.

20. CHECK “A/F ALPHA-B1”, AND “B/FUEL SCHDL”

1. Lift up the vehicle.
2. Turn ignition switch ON (READY).
3. Depressed the accelerator pedal and keep it.
4. Shift the selector lever to N position with engine running.
   CAUTION:
   Never leave the selector lever in the N position for a long period of time. In the N position, the engine operates but electricity cannot be generated.
5. Select “A/F ALPHA-B1” and “B/FUEL SCHDL” in “SPEC” of “DATA MONITOR” mode, and make sure that the each indication is within the SP value.
6. Shift the selector lever to P position.

Is the measurement value within the SP value?

YES >> **INSPECTION END**
NO >> “B/FUEL SCHDL” is more, “A/F ALPHA-B1” is less than the SP value: GO TO 21.

21. DISCONNECT AND RECONNECT MASS AIR FLOW SENSOR HARNESS CONNECTOR

1. Turn ignition switch OFF.
2. Disconnect mass air flow sensor harness connector. Check pin terminal and connector for damage and then reconnect it again.

>> GO TO 22.

22. CHECK “A/F ALPHA-B1”

1. Lift up the vehicle.
2. Turn ignition switch ON (READY).
3. Depressed the accelerator pedal and keep it.
4. Shift the selector lever to N position with engine running.
   CAUTION:
   Never leave the selector lever in the N position for a long period of time. In the N position, the engine operates but electricity cannot be generated.
5. Select “A/F ALPHA-B1” in “SPEC” of “DATA MONITOR” mode, and make sure that the indication is within the SP value.
6. Shift the selector lever to P position.

Is the measurement value within the SP value?

YES >> Detect malfunctioning part of mass air flow sensor circuit and repair it. Refer to EC-145, "DTC Logic". Then GO TO 29.
NO >> GO TO 23.

23. CHECK "MAS A/F SE-B1"

1. Depressed the accelerator pedal and keep it.
2. Shift the selector lever to N position with engine running.
   CAUTION:
   Never leave the selector lever in the N position for a long period of time. In the N position, the engine operates but electricity cannot be generated.
3. Select "MAS A/F SE-B1" in "SPEC" of "DATA MONITOR" mode, and make sure that the indication is within the SP value.
4. Shift the selector lever to P position.

Is the measurement value within the SP value?

YES >> GO TO 24.
NO >> More than the SP value: Replace mass air flow sensor, and then GO TO 29.

24. REPLACE ECM

1. Replace ECM.
2. Go to EC-14, "ADDITIONAL SERVICE WHEN REPLACING CONTROL UNIT : Special Repair Requirement".

>> GO TO 29.

25. CHECK INTAKE SYSTEM

Check for the cause of uneven air flow through mass air flow sensor. Refer to the following.
- Crushed air ducts
- Malfunctioning seal of air cleaner element
- Uneven dirt of air cleaner element
- Improper specification of intake air system

Is the inspection result normal?

YES >> GO TO 27.
NO >> Repair or replace malfunctioning part, and then GO TO 26.

26. CHECK "B/FUEL SCHDL"

1. Lift up the vehicle.
2. Turn ignition switch ON (READY).
3. Depressed the accelerator pedal and keep it.
4. Shift the selector lever to N position with engine running.
   CAUTION:
   Never leave the selector lever in the N position for a long period of time. In the N position, the engine operates but electricity cannot be generated.
5. Select "B/FUEL SCHDL" in "SPEC" of "DATA MONITOR" mode, and make sure that the indication is within the SP value.
6. Shift the selector lever to P position.

Is the measurement value within the SP value?

YES >> INSPECTION END
NO >> Less than the SP value: GO TO 27.

27. CHECK "MAS A/F SE-B1"

1. Lift up the vehicle.
2. Turn ignition switch ON (READY).
3. Depressed the accelerator pedal and keep it.
4. Shift the selector lever to N position with engine running.
   CAUTION:
   Never leave the selector lever in the N position for a long period of time. In the N position, the engine operates but electricity cannot be generated.

5. Select “MAS A/F SE-B1” in “SPEC” of “DATA MONITOR” mode, and make sure that the indication is within the SP value.
6. Shift the selector lever to P position.

Is the measurement value within the SP value?

YES >> GO TO 28.
NO >> Less than the SP value: Replace mass air flow sensor, and then GO TO 30.

28. CHECK INTAKE SYSTEM

Check for the cause of air leak after the mass air flow sensor. Refer to the following.
- Disconnection, looseness, and cracks in air duct
- Looseness of oil filler cap
- Disconnection of oil level gauge
- Open stuck, breakage, hose disconnection, or cracks of PCV valve
- Disconnection or cracks of EVAP purge hose, open stuck of EVAP canister purge volume control solenoid valve
- Malfunctioning seal of rocker cover gasket
- Disconnection, looseness, or cracks of hoses, such as vacuum hose, connecting to intake air system parts
- Malfunctioning seal of intake air system, etc.

>> GO TO 30.

29. CHECK “A/F ALPHA-B1” AND “B/FUEL SCHDL”

1. Lift up the vehicle.
2. Turn ignition switch ON (READY).
3. Depressed the accelerator pedal and keep it.
4. Shift the selector lever to N position with engine running.
   CAUTION:
   Never leave the selector lever in the N position for a long period of time. In the N position, the engine operates but electricity cannot be generated.
5. Select “A/F ALPHA-B1” and “B/FUEL SCHDL” in “SPEC” of “DATA MONITOR” mode, and make sure that the indication is within the SP value.
6. Shift the selector lever to P position.

Is the measurement value within the SP value?

YES >> INSPECTION END
NO >> Detect malfunctioning part according to EC-443, "Symptom Table".

30. CHECK “B/FUEL SCHDL”

1. Lift up the vehicle.
2. Turn ignition switch ON (READY).
3. Depressed the accelerator pedal and keep it.
4. Shift the selector lever to N position with engine running.
   CAUTION:
   Never leave the selector lever in the N position for a long period of time. In the N position, the engine operates but electricity cannot be generated.
5. Select “B/FUEL SCHDL” in “SPEC” of “DATA MONITOR” mode, and then make sure that the indication is within the SP value.
6. Shift the selector lever to P position.

Is the measurement value within the SP value?

YES >> INSPECTION END
NO >> Detect malfunctioning part according to EC-443, "Symptom Table".

POWER SUPPLY AND GROUND CIRCUIT

Diagnosis Procedure

INFOID:0000000003069127

1. INSPECTION START

1. Turn ignition switch ON (READY).
2. Depress accelerator pedal.

Is engine running?

YES >> GO TO 8.
NO >> GO TO 2.

2. CHECK ECM POWER SUPPLY CIRCUIT-I

1. Turn ignition switch OFF and then ON.
2. Check the voltage between ECM harness connector and ground.

ECM		Ground	Voltage
Connector	Terminal		
E10	93	Ground	Battery voltage

Is the inspection result normal?

YES >> GO TO 4.
NO >> GO TO 3.

3. DETECT MALFUNCTIONING PART

Check the following.
- IPDM E/R harness connector E18
- 10A fuse (No. 35)
- Harness for open or short between ECM and fuse

>> Repair open circuit or short to ground or short to power in harness or connectors.

4. CHECK GROUND CONNECTION-I

1. Turn ignition switch OFF.
2. Check ground connection E9. Refer to Ground Inspection in GI-45, "Circuit Inspection".

Is the inspection result normal?

YES >> GO TO 5.
NO >> Repair or replace ground connection.

5. CHECK ECM GROUND CIRCUIT FOR OPEN AND SHORT-I

1. Disconnect ECM harness connectors.
2. Check the continuity between ECM harness connector and ground.

ECM		Ground	Continuity
Connector	Terminal		
F14	12	Ground	Existed
	16		
E10	107		
	108		
	111		
	112		

3. Also check harness for short to power.

Is the inspection result normal?

YES >> GO TO 7.
NO >> GO TO 6.

6. DETECT MALFUNCTIONING PART

Check the following.
- Harness connectors F80, E68
- Harness for open or short between ECM and ground

>> Repair open circuit or short to power in harness or connectors.

7. CHECK ECM POWER SUPPLY CIRCUIT-II

1. Reconnect ECM harness connectors.
2. Turn ignition switch ON.
3. Check the voltage between IPDM E/R harness connector and ground.

IPDM E/R		Ground	Voltage
Connector	Terminal		
F10	53	Ground	Battery voltage

Is the inspection result normal?

YES >> Go to EC-384, "Diagnosis Procedure".
NO >> GO TO 8.

8. CHECK ECM POWER SUPPLY CIRCUIT-III

1. Turn ignition switch OFF and wait at least 10 seconds.
2. Check the voltage between ECM harness connector and ground.

ECM		Ground	Voltage
Connector	Terminal		
E10	105	Ground	After turning ignition switch OFF, battery voltage will exist for a few seconds, then drop approximately 0V.

Is the inspection result normal?

YES >> GO TO 14.
NO-1 >> Battery voltage does not exist: GO TO 9.
NO-2 >> Battery voltage exists for more than a few seconds: GO TO 12.

9. CHECK ECM POWER SUPPLY CIRCUIT-IV

1. Turn ignition switch OFF and wait at least 10 seconds.
2. Check the voltage between ECM harness connector and ground.

ECM		Ground	Voltage
Connector	Terminal		
F14	24	Ground	Battery voltage

Is the inspection result normal?

YES >> GO TO 10.
NO >> GO TO 12.

10. CHECK ECM POWER SUPPLY CIRCUIT-V

1. Disconnect ECM harness connector.
2. Disconnect IPDM E/R harness connector E18.
3. Check the continuity between ECM harness connector and IPDM E/R harness connector.

ECM		IPDM E/R		Continuity
Connector	Terminal	Connector	Terminal	
E10	105	E18	10	Existed

4. Also check harness for short to ground and short to power.

Is the inspection result normal?

YES >> GO TO 17.
NO >> GO TO 11.

11. DETECT MALFUNCTIONING PART

Check the following.
- Junction block connectors E44, E45
- Harness for open or short between ECM and IPDM E/R

>> Repair open circuit or short to ground or short to power in harness or connectors.

12. CHECK ECM POWER SUPPLY CIRCUIT-VI

1. Disconnect ECM harness connector.
2. Disconnect IPDM E/R harness connector F10.
3. Check the continuity between ECM harness connector and IPDM E/R harness connector.

ECM		IPDM E/R		Continuity
Connector	Terminal	Connector	Terminal	
F14	24	F10	69	Existed

4. Also check harness for short to ground and short to power.

Is the inspection result normal?

YES >> GO TO 13.
NO >> Repair open circuit or short to ground or short power in harness or connectors.

13. CHECK 15A FUSE

1. Disconnect 15A fuse (No. 42) from IPDM E/R.
2. Check 15A fuse.

Is the inspection result normal?

YES >> GO TO 17.
NO >> Replace 15A fuse (No. 42).

14. CHECK GROUND CONNECTION-II

1. Turn ignition switch OFF.
2. Check ground connection E9. Refer to Ground Inspection in GI-45, "Circuit Inspection".

Is the inspection result normal?

YES >> GO TO 15.
NO >> Repair or replace ground connection.

15. CHECK ECM GROUND CIRCUIT FOR OPEN AND SHORT-II

1. Disconnect ECM harness connector.
2. Check the continuity between ECM harness connector and ground.

ECM		Ground	Continuity
Connector	Terminal		
F14	12	Ground	Existed
	16		
E10	107		
	108		
	111		
	112		

3. Also check harness for short to power.

Is the inspection result normal?

YES >> GO TO 17.

NO >> GO TO 16.

16. DETECT MALFUNCTIONING PART

Check the following.
- Harness or connectors F80, E68
- Harness for open or short between ECM and ground

>> Repair open circuit or short to power in harness or connectors.

17. CHECK INTERMITTENT INCIDENT

Refer to GI-42, "Intermittent Incident".

Is the inspection result normal?

YES >> Replace IPDM E/R.
NO >> Repair open circuit or short to power in harness or connectors.

U0129, U1022 CAN COMM CIRCUIT

DTC Logic

INFOID:0000000003069128

DTC DETECTION LOGIC

DTC No.	Trouble diagnosis name	DTC detecting condition	Possible cause
U0129	Lost communication with brake ECU	CAN communication signal of OBD (emission related diagnosis) is not received between brake ECU and ECM for 1 second or more.	• HEV SYSTEM CAN communication line between brake ECU and ECM • HEV SYSTEM CAN communication line short
U1022		CAN communication signal other than OBD (emission related diagnosis) is not received between brake ECU and ECM for 1 second or more.	

DTC CONFIRMATION PROCEDURE

1. PERFORM DTC CONFIRMATION PROCEDURE

1. Turn ignition switch ON and wait at least 3 seconds.
2. Check DTC.

Is DTC detected?

YES >> EC-122, "Diagnosis Procedure".
NO >> INSPECTION END

Diagnosis Procedure

INFOID:0000000003069129

Go to LAN-4, "Description".

U0293, U1020 CAN COMM CIRCUIT

DTC Logic

INFOID:0000000003069130

DTC DETECTION LOGIC

DTC No.	Trouble diagnosis name	DTC detecting condition	Possible cause
U0293	Lost communication with HV ECU	CAN communication signal of OBD (emission related diagnosis) is not received between HV ECU and ECM for 1 second or more.	• HEV SYSTEM CAN communication line between HV ECU and ECM • HEV SYSTEM CAN communication line short
U1020		CAN communication signal other than OBD (emission related diagnosis) is not received between HV ECU and ECM for 1 second or more.	

DTC CONFIRMATION PROCEDURE

1. PERFORM DTC CONFIRMATION PROCEDURE

1. Turn ignition switch ON and wait at least 3 seconds.
2. Check DTC.

Is DTC detected?

YES >> EC-123, "Diagnosis Procedure".
NO >> INSPECTION END

Diagnosis Procedure

INFOID:0000000003069131

Go to LAN-4, "Description".

U0400, U1021 CAN COMM DATA

DTC Logic

INFOID:0000000003069132

DTC DETECTION LOGIC

DTC No.	Trouble diagnosis name	DTC detecting condition	Possible cause
U0400	Invalid data received from hybrid vehicle control ECU	SUM data on CAN signal of OBD (emission related diagnosis) from HV ECU is different from SUM data calculated by ECM.	• Harness or connectors (HEV SYSTEM CAN communication line is open or shorted) • ECM • HV ECU
U1021		SUM data on CAN signal other than OBD (emission related diagnosis) from HV ECU is different from SUM data calculated by ECM.	

DTC CONFIRMATION PROCEDURE

1. PERFORM DTC CONFIRMATION PROCEDURE

1. Turn ignition switch ON and wait at least 3 seconds.
2. Check DTC.

Is DTC detected?

YES >> Go to EC-124, "Diagnosis Procedure".
NO >> INSPECTION END

Diagnosis Procedure

INFOID:0000000003069133

1. CHECK HEV SYSTEM CAN COMMUNICATION CIRCUIT

Refer to LAN-53, "Trouble Diagnosis Procedure".

Is the inspection result normal?

YES >> GO TO 2.
NO >> Repair or replace.

2. REPLACE ECM

1. Replace ECM.
2. Go to EC-14, "ADDITIONAL SERVICE WHEN REPLACING CONTROL UNIT : Special Repair Requirement".

>> GO TO 3.

3. PERFORM DTC CONFIRMATION PROCEDURE

With CONSULT-III

1. Turn ignition switch ON.
2. Select “SELF-DIAG RESULTS” mode with CONSULT-III.
3. Touch “ERASE”.
4. Perform DTC CONFIRMATION PROCEDURE.
   See EC-124, "DTC Logic".
5. Check DTC.

With GST

1. Turn ignition switch ON.
2. Select “Service $04” with GST.
3. Perform DTC CONFIRMATION PROCEDURE.
   See EC-124, "DTC Logic".
4. Check DTC.

Is the DTC U0400 or U1021 displayed again?

YES >> GO TO 4.
NO >> INSPECTION END

4. REPLACE HV ECU

1. Replace HV ECU.
2. Go to HBC-12, "ADDITIONAL SERVICE WHEN REPLACING CONTROL UNIT : Special Repair Requirement".

>> INSPECTION END

U0418, U1023 CAN COMM DATA

DTC Logic

INFOID:0000000003069134

DTC DETECTION LOGIC

DTC No.	Trouble diagnosis name	DTC detecting condition	Possible cause
U0418	Invalid data received from brake ECU	SUM data on CAN signal of OBD (emission related diagnosis) from brake ECU is different from SUM data calculated by ECM.	• Harness or connectors (HEV SYSTEM CAN communication line is open or shorted) • ECM • Brake ECU
U1023		SUM data on CAN signal other than OBD (emission related diagnosis) from brake ECU is different from SUM data calculated by ECM.	

DTC CONFIRMATION PROCEDURE

1. PERFORM DTC CONFIRMATION PROCEDURE

1. Turn ignition switch ON and wait at least 3 seconds.
2. Check DTC.

Is DTC detected?

YES >> Go to EC-126, "Diagnosis Procedure".
NO >> INSPECTION END

Diagnosis Procedure

INFOID:0000000003069135

1. CHECK HEV SYSTEM CAN COMMUNICATION CIRCUIT

Refer to LAN-53, "Trouble Diagnosis Procedure".

Is the inspection result normal?

YES >> GO TO 2.
NO >> Repair or replace.

2. REPLACE ECM

1. Replace ECM.
2. Go to EC-14, "ADDITIONAL SERVICE WHEN REPLACING CONTROL UNIT : Special Repair Requirement".

>> GO TO 3.

3. PERFORM DTC CONFIRMATION PROCEDURE

With CONSULT-III

1. Turn ignition switch ON.
2. Select “SELF-DIAG RESULTS” mode with CONSULT-III.
3. Touch “ERASE”.
4. Perform DTC CONFIRMATION PROCEDURE.
   See EC-126, "DTC Logic".
5. Check DTC.

With GST

1. Turn ignition switch ON.
2. Select “Service $04” with GST.
3. Perform DTC CONFIRMATION PROCEDURE.
   See EC-126, "DTC Logic".
4. Check DTC.

Is the DTC U0418 or U1023 displayed again?

YES >> GO TO 4.
NO >> INSPECTION END

4. REPLACE BRAKE ECU

1. Replace brake ECU.
2. Go to BRC-190, "Exploded View".

>> INSPECTION END

U1000, U1001 CAN COMM CIRCUIT

Description

INFOID:0000000003069136

CAN (Controller Area Network) is a serial communication line for real time application. It is an on-vehicle multiplex communication line with high data communication speed and excellent error detection ability. Many electronic control units are equipped onto a vehicle, and each control unit shares information and links with other control units during operation (not independent). In CAN communication, control units are connected with 2 communication lines (CAN H line, CAN L line) allowing a high rate of information transmission with less wiring. Each control unit transmits/receives data but selectively reads required data only.

DTC Logic

INFOID:0000000003069137

DTC DETECTION LOGIC

DTC No.	Trouble diagnosis name	DTC detecting condition	Possible cause
U1000	CAN communication line	When ECM is not transmitting or receiving CAN communication signal of OBD (emission related diagnosis) for 2 seconds or more.	• Harness or connectors (CAN communication line is open or shorted)
U1001		When ECM is not transmitting or receiving CAN communication signal other than OBD (emission related diagnosis) for 2 seconds or more.	

DTC CONFIRMATION PROCEDURE

1. PERFORM DTC CONFIRMATION PROCEDURE

1. Turn ignition switch ON and wait at least 3 seconds.
2. Check DTC.

Is DTC detected?

YES >> EC-128, "Diagnosis Procedure".
NO >> INSPECTION END

Diagnosis Procedure

INFOID:0000000003069138

Go to LAN-16, "Trouble Diagnosis Flow Chart".

P0011 IVT CONTROL

DTC Logic

INFOID:0000000003069144

DTC DETECTION LOGIC

NOTE:
- **If DTC P0011 is displayed with DTC P0075, first perform the trouble diagnosis for EC-142, "DTC Logic".**
- **If DTC P0011 is displayed with DTC P0340, first perform the trouble diagnosis for EC-254, "DTC Logic".**

DTC No.	Trouble diagnosis name	Detecting condition	Possible cause
P0011	Intake valve timing control performance	There is a gap between angle of target and phase-control angle degree.	• Crankshaft position sensor (POS) • Camshaft position sensor (PHASE) • Intake valve control solenoid valve • Accumulation of debris to the signal pick-up portion of the camshaft • Timing chain installation • Foreign matter caught in the oil groove for intake valve timing control

DTC CONFIRMATION PROCEDURE

1. PRECONDITIONING

If DTC Confirmation Procedure has been previously conducted, always perform the following before conducting the next test.
1. Turn ignition switch OFF and wait at least 10 seconds.
2. Turn ignition switch ON.
3. Turn ignition switch OFF and wait at least 10 seconds.

TESTING CONDITION:
Before performing the following procedure, confirm that battery voltage is between 10V and 16V at idle.

>> GO TO 2.

2. PERFORM DTC CONFIRMATION PROCEDURE-I

With CONSULT-III
1. Activate “INSPECTION MODE 1” (HBC-97) to start engine, and warm up engine to normal operating temperature.
2. Turn ignition switch OFF and wait at least 10 seconds.
3. Turn ignition switch ON (READY) and select “DATA MONITOR” mode with CONSULT-III.
4. Maintain the following conditions for at least 10 consecutive seconds. Hold the accelerator pedal as steady as possible.

VHCL SPEED SE	70 km/h (43 mph) or more
ENG SPEED	800 - 2,000 rpm
COOLAN TEMP/S	80°C (176°F) or more
Shift lever	D position

CAUTION:
Always drive at a safe speed.

5. Stop vehicle.
6. Check 1st trip DTC.

With GST
Follow the procedure “With CONSULT-III” above.

Is 1st trip DTC detected?

YES >> Go to EC-130, "Diagnosis Procedure"

NO >> GO TO 3.

3. PERFORM DTC CONFIRMATION PROCEDURE-II

With CONSULT-III

1. Maintain the following conditions for at least 10 consecutive seconds.

ENG SPEED	1,700 - 3,175 rpm (A constant rotation is maintained.)
COOLAN TEMP/S	More than 70°C (221°F)
Shift lever	D position
Driving location uphill	Driving vehicle uphill (Increased engine load will help maintain the driving conditions required for this test.)

CAUTION:
Always drive at a safe speed.

2. Check 1st trip DTC.

With GST

Follow the procedure “With CONSULT-III” above.

Is 1st trip DTC detected?

YES >> Go to EC-130, "Diagnosis Procedure"
NO >> INSPECTION END

Diagnosis Procedure

INFOID:0000000003069145

1. CHECK OIL PRESSURE WARNING LAMP

1. Activate “INSPECTION MODE 1” (HBC-97) to start engine.
2. Check oil pressure warning lamp and confirm it is not illuminated.

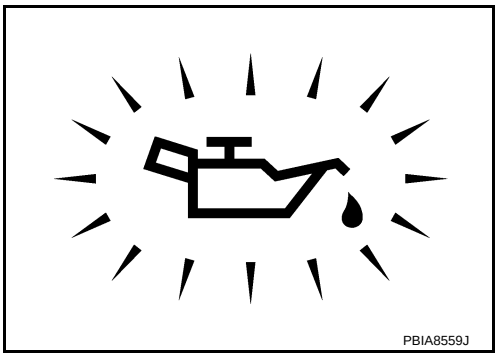

Is oil pressure warning lamp illuminated?

YES >> Go to LU-8, "Inspection".
NO >> GO TO 2.

2. CHECK INTAKE VALVE TIMING CONTROL SOLENOID VALVE

Refer to EC-131, "Component Inspection".

Is the inspection result normal?

YES >> GO TO 3.
NO >> Replace intake valve timing control solenoid valve.

3. CHECK CRANKSHAFT POSITION SENSOR (POS)

Refer to EC-252, "Component Inspection".

Is the inspection result normal?

YES >> GO TO 4.
NO >> Replace crankshaft position sensor (POS).

4. CHECK CAMSHAFT POSITION SENSOR (PHASE)

Refer to EC-256, "Component Inspection".

Is the inspection result normal?

YES >> GO TO 5.
NO >> Replace camshaft position sensor (PHASE).

5. CHECK CAMSHAFT (INTAKE)

Check the following.
- Accumulation of debris to the signal plate of camshaft (1) rear end
- Chipping signal plate of camshaft rear end

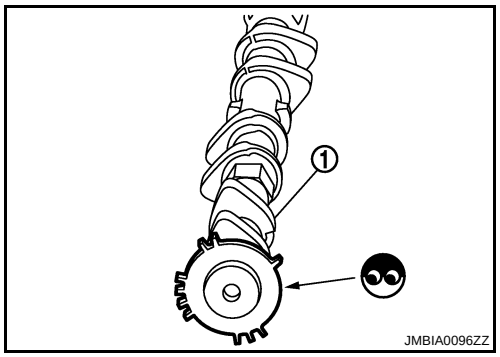

Is the inspection result normal?

YES >> GO TO 6.
NO >> Remove debris and clean the signal plate of camshaft rear end or replace camshaft.

6. CHECK TIMING CHAIN INSTALLATION

Check service records for any recent repairs that may cause timing chain misaligned.

Are there any service records that may cause timing chain misaligned?

YES >> Check timing chain installation. Refer to EM-50, "Removal and Installation".
NO >> GO TO 7.

7. CHECK LUBRICATION CIRCUIT

Refer to EM-46, "Inspection After Installation".

Is the inspection result normal?

YES >> GO TO 8.
NO >> Clean lubrication line.

8. CHECK INTERMITTENT INCIDENT

Refer to GI-42, "Intermittent Incident".

>> INSPECTION END

Component Inspection

INFOID:0000000003069146

1. CHECK INTAKE VALVE TIMING CONTROL SOLENOID VALVE-I

1. Turn ignition switch OFF.
2. Disconnect intake valve timing control solenoid valve harness connector.
3. Check resistance between intake valve timing control solenoid valve terminals as follows.

Terminals	Resistance
1 and 2	6.7 - 7.7Ω
1 or 2 and ground	∞Ω (Continuity should not exist)

Is the inspection result normal?

YES >> GO TO 2.
NO >> Replace intake valve timing control solenoid valve.

2. CHECK INTAKE VALVE TIMING CONTROL SOLENOID VALVE-II

1. Remove intake valve timing control solenoid valve.

2. Provide 12V DC between intake valve timing control solenoid valve terminals 1 and 2, and then interrupt it. Make sure that the plunger moves as shown in the figure.
   CAUTION:
   Do not apply 12V DC continuously for 5 seconds or more. Doing so may result in damage to the coil in intake valve timing control solenoid valve.
   NOTE:
   Always replace O-ring when intake valve timing control solenoid valve is removed.

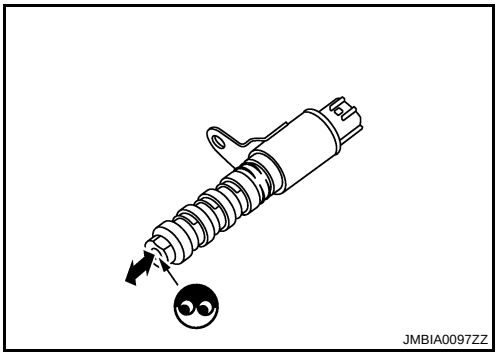

Is the inspection result normal?

YES >> INSPECTION END
NO >> Replace intake valve timing control solenoid valve.

P0031, P0032 A/F SENSOR 1 HEATER

Description

INFOID:0000000003069147

SYSTEM DESCRIPTION

Sensor	Input Signal to ECM	ECM function	Actuator
Camshaft position sensor (PHASE) Crankshaft position sensor (POS)	Engine speed	Air fuel ratio (A/F) sensor 1 heater control	Air fuel ratio (A/F) sensor 1 heater
Mass air flow sensor	Amount of intake air		

The ECM performs ON/OFF duty control of the A/F sensor 1 heater corresponding to the engine operating condition to keep the temperature of A/F sensor 1 element at the specified range.

DTC Logic

INFOID:0000000003069148

DTC DETECTION LOGIC

DTC No.	Trouble diagnosis name	DTC detecting condition	Possible cause
P0031	Air fuel ratio (A/F) sensor 1 heater control circuit low	The current amperage in the A/F sensor 1 heater circuit is out of the normal range. (An excessively low voltage signal is sent to ECM through the A/F sensor 1 heater.)	• Harness or connectors (The A/F sensor 1 heater circuit is open or shorted.) • A/F sensor 1 heater
P0032	Air fuel ratio (A/F) sensor 1 heater control circuit high	The current amperage in the A/F sensor 1 heater circuit is out of the normal range. (An excessively high voltage signal is sent to ECM through the A/F sensor 1 heater.)	• Harness or connectors (The A/F sensor 1 heater circuit is shorted.) • A/F sensor 1 heater

DTC CONFIRMATION PROCEDURE

1. PRECONDITIONING

If DTC Confirmation Procedure has been previously conducted, always perform the following before conducting the next test.

1. Turn ignition switch OFF and wait at least 10 seconds.
2. Turn ignition switch ON.
3. Turn ignition switch OFF and wait at least 10 seconds.

TESTING CONDITION:

Before performing the following procedure, confirm that battery voltage is more than between 11V at idle.

>> GO TO 2.

2. PERFORM DTC CONFIRMATION PROCEDURE

1. Activate “INSPECTION MODE 1” (HBC-97) to start engine, and let engine idle for at least 10 seconds.
2. Check 1st trip DTC.

Is 1st trip DTC detected?

YES >> Go to EC-133, "Diagnosis Procedure".
NO >> INSPECTION END

Diagnosis Procedure

INFOID:0000000003069149

1. CHECK GROUND CONNECTION

1. Turn ignition switch OFF.
2. Check ground connection E9. Refer to Ground Inspection in GI-45, "Circuit Inspection".

Is the inspection result normal?

YES >> GO TO 2.
NO >> Repair or replace ground connection.

2. CHECK AIR FUEL RATIO (A/F) SENSOR 1 POWER SUPPLY CIRCUIT

1. Disconnect air fuel ratio (A/F) sensor 1 harness connector.
2. Turn ignition switch ON.
3. Check the voltage between A/F sensor 1 harness connector and ground.

A/F sensor 1		Ground	Voltage
Connector	Terminal		
F44	4	Ground	Battery voltage

Is the inspection result normal?

YES >> GO TO 4.
NO >> GO TO 3.

3. DETECT MALFUNCTIONING PART

Check the following.
- IPDM E/R harness connector F10
- 15A fuse (No. 37)
- Harness for open or short between A/F sensor 1 and fuse

>> Repair or replace harness or connectors.

4. CHECK A/F SENSOR 1 HEATER OUTPUT SIGNAL CIRCUIT

1. Turn ignition switch OFF.
2. Disconnect ECM harness connector.
3. Check the continuity between A/F sensor 1 harness connector and ECM harness connector.

A/F sensor 1		ECM		Continuity
Connector	Terminal	Connector	Terminal	
F44	3	F14	4	Existed

4. Also check harness for short to ground and short to power.

Is the inspection result normal?

YES >> GO TO 5.
NO >> Repair open circuit or short to ground or short to power in harness or connectors.

5. CHECK A/F SENSOR 1 HEATER

Refer to EC-135, "Component Inspection".

Is the inspection result normal?

YES >> GO TO 7.
NO >> GO TO 6.

6. REPLACE AIR FUEL RATIO (A/F) SENSOR 1

Replace air fuel ratio (A/F) sensor 1.

CAUTION:
- **Discard any A/F sensor which has been dropped from a height of more than 0.5 m (19.7 in) onto a hard surface such as a concrete floor; use a new one.**
- **Before installing new A/F sensor, clean exhaust system threads using Oxygen Sensor Thread Cleaner tool J-43897-18 or J-43897-12 and approved anti-seize lubricant.**

>> INSPECTION END

7. CHECK INTERMITTENT INCIDENT

Perform GI-42, "Intermittent Incident".

>> Repair or replace.

Component Inspection

INFOID:0000000003069150

1. CHECK AIR FUEL RATIO (A/F) SENSOR 1

1. Turn ignition switch OFF.
2. Disconnect A/F sensor 1 harness connector.
3. Check resistance between A/F sensor 1 terminals as follows.

Terminals	Resistance
3 and 4	1.8 - 2.44 Ω [at 25°C (77°F)]
3 and 1, 2	∞Ω (Continuity should not exist)
4 and 1, 2	

Is the inspection result normal?

YES >> INSPECTION END
NO >> GO TO 2.

2. REPLACE AIR FUEL RATIO (A/F) SENSOR 1

Replace air fuel ratio (A/F) sensor 1.

CAUTION:

- **Discard any sensor which has been dropped from a height of more than 0.5 m (19.7 in) onto a hard surface such as a concrete floor; use a new one.**
- **Before installing new sensor, clean exhaust system threads using Heated Oxygen Sensor Thread Cleaner tool J-43897-18 or J-43897-12 and approved anti-seize lubricant.**

>> INSPECTION END

P0037, P0038 HO2S2 HEATER

Description

INFOID:0000000003069151

SYSTEM DESCRIPTION

Sensor	Input signal to ECM	ECM function	Actuator
Camshaft position sensor (PHASE) Crankshaft position sensor (POS)	Engine speed	Heated oxygen sensor 2 heater control	Heated oxygen sensor 2 heater
Engine coolant temperature sensor	Engine coolant temperature		
Mass air flow sensor	Amount of intake air		

The ECM performs ON/OFF control of the heated oxygen sensor 2 heater corresponding to the engine speed, amount of intake air and engine coolant temperature.

OPERATION

Engine speed	Heated oxygen sensor 2 heater
Above 3,600 rpm	OFF
More than 3 minutes after engine stopped.	
Below 3,600 rpm after the following conditions are met. • Engine: After warming up • Driving for 3 minutes at a speed of 80 km/h (50 MPH) or more (Keep the vehicle speed as steady as possible during the cruising.)	ON

DTC Logic

INFOID:0000000003069152

DTC DETECTION LOGIC

DTC No.	Trouble diagnosis name	DTC detecting condition	Possible cause
P0037	Heated oxygen sensor 2 heater control circuit low	The current amperage in the heated oxygen sensor 2 heater circuit is out of the normal range. (An excessively low voltage signal is sent to ECM through the heated oxygen sensor 2 heater.)	• Harness or connectors (The heated oxygen sensor 2 heater circuit is open or shorted.) • Heated oxygen sensor 2 heater
P0038	Heated oxygen sensor 2 heater control circuit high	The current amperage in the heated oxygen sensor 2 heater circuit is out of the normal range. (An excessively high voltage signal is sent to ECM through the heated oxygen sensor 2 heater.)	• Harness or connectors (The heated oxygen sensor 2 heater circuit is shorted.) • Heated oxygen sensor 2 heater

DTC CONFIRMATION PROCEDURE

1. PRECONDITIONING

If DTC Confirmation Procedure has been previously conducted, always perform the following before conducting the next test.

1. Turn ignition switch OFF and wait at least 10 seconds.
2. Turn ignition switch ON.
3. Turn ignition switch OFF and wait at least 10 seconds.

TESTING CONDITION:

Before performing the following procedure, confirm that battery voltage is more than 11V at idle.

>> GO TO 2.

2. PERFORM DTC CONFIRMATION PROCEDURE

1. Activate “INSPECTION MODE 1” (HBC-97) to start engine, and warm up engine to normal operating temperature.
2. Turn ignition switch OFF and wait at least 10 seconds.
3. Turn ignition switch ON.

4. Turn ignition switch OFF and wait at least 10 seconds.
5. Turn ignition switch ON (READY).
6. Drive vehicle at a speed of 80 km/h (50 MPH) or more for at least 3 consecutive minutes.
   CAUTION:
   Always drive vehicle in safe manner according to traffic conditions and obey all traffic laws.
   NOTE:
   Keep the vehicle speed as steady as possible during the cruising.
7. Check 1st trip DTC.

Is 1st trip DTC detected?

YES >> Go to EC-137, "Diagnosis Procedure".
NO >> INSPECTION END

Diagnosis Procedure

INFOID:0000000003069153

1. CHECK GROUND CONNECTION

1. Turn ignition switch OFF.
2. Check ground connection E9. Refer to Ground Inspection in GI-45, "Circuit Inspection".

Is the inspection result normal?

YES >> GO TO 2.
NO >> Repair or replace ground connection.

2. CHECK HO2S2 POWER SUPPLY CIRCUIT

1. Disconnect heated oxygen sensor 2 harness connector.
2. Turn ignition switch ON.
3. Check the voltage between HO2S2 harness connector and ground.

HO2S2		Ground	Voltage
Connector	Terminal		
F42	2	Ground	Battery voltage

Is the inspection result normal?

YES >> GO TO 4.
NO >> GO TO 3.

3. DETECT MALFUNCTIONING PART

Check the following.
- IPDM E/R connector F10
- 15A fuse (No. 37)
- Harness for open or short between heated oxygen sensor 2 and fuse

>> Repair open circuit or short to ground or short to power in harness or connectors.

4. CHECK HO2S2 OUTPUT SIGNAL CIRCUIT FOR OPEN AND SHORT

1. Turn ignition switch OFF.
2. Disconnect ECM harness connector.
3. Check the continuity between HO2S2 harness connector and ECM harness connector.

HO2S2		ECM		Continuity
Connector	Terminal	Connector	Terminal	
F42	3	F14	13	Existed

4. Also check harness for short to ground and short to power.

Is the inspection result normal?

YES >> GO TO 5.
NO >> Repair open circuit or short to ground or short to power in harness or connectors.

5. CHECK HEATED OXYGEN SENSOR 2 HEATER

Refer to EC-138, "Component Inspection".

Is the inspection result normal?

YES >> GO TO 7.
NO >> GO TO 6.

6. REPLACE HEATED OXYGEN SENSOR 2

Replace heated oxygen sensor 2.

CAUTION:

- **Discard any heated oxygen sensor which has been dropped from a height of more than 0.5 m (19.7 in) onto a hard surface such as a concrete floor; use a new one.**
- **Before installing new oxygen sensor, clean exhaust system threads using Oxygen Sensor Thread Cleaner tool J-43897-18 or J-43897-12 and approved anti-seize lubricant.**

>> INSPECTION END

7. CHECK INTERMITTENT INCIDENT

Refer to GI-42, "Intermittent Incident".

>> INSPECTION END

Component Inspection

INFOID:0000000003069154

1. CHECK HEATED OXYGEN SENSOR 2 HEATER

1. Turn ignition switch OFF.
2. Disconnect heated oxygen sensor 2 harness connector.
3. Check resistance between HO2S2 terminals as follows.

Terminals	Resistance
2 and 3	3.3 - 4.4 Ω [at 25°C (77°F)]
1 and 2, 3, 4	∞ Ω (Continuity should not exist)
4 and 1, 2, 3	

Is the inspection result normal?

YES >> INSPECTION END
NO >> GO TO 2.

2. REPLACE HEATED OXYGEN SENSOR 2

Replace heated oxygen sensor 2.

CAUTION:

- **Discard any heated oxygen sensor which has been dropped from a height of more than 0.5 m (19.7 in) onto a hard surface such as a concrete floor; use a new one.**
- **Before installing new oxygen sensor, clean exhaust system threads using Oxygen Sensor Thread Cleaner tool J-43897-18 or J-43897-12 and approved anti-seize lubricant.**

>> INSPECTION END

P0043, P0044 HO2S3 HEATER

Description

INFOID:0000000003069155

SYSTEM DESCRIPTION

Sensor	Input signal to ECM	ECM function	Actuator
Camshaft position sensor (PHASE)	Engine speed	Heated oxygen sensor 3 heater control	Heated oxygen sensor 3 heater
Crankshaft position sensor (POS)			
Engine coolant temperature sensor	Engine coolant temperature		
Mass air flow sensor	Amount of intake air		

The ECM performs ON/OFF control of the heated oxygen sensor 3 heater corresponding to the engine speed, amount of intake air and engine coolant temperature.

OPERATION

Engine speed	Heated oxygen sensor 3 heater
Above 3,600 rpm	OFF
More than 3 minutes after engine stopped.	
Below 3,600 rpm after the following conditions are met. • Engine: After warming up • Driving for 3 minutes at a speed of 80 km/h (50 MPH) or more (Keep the vehicle speed as steady as possible during the cruising.)	ON

DTC Logic

INFOID:0000000003069156

DTC DETECTION LOGIC

DTC No.	Trouble diagnosis name	DTC detecting condition	Possible cause
P0043	Heated oxygen sensor 3 heater control circuit low	The current amperage in the heated oxygen sensor 3 heater circuit is out of the normal range. (An excessively low voltage signal is sent to ECM through the heated oxygen sensor 3 heater.)	• Harness or connectors (The heated oxygen sensor 3 heater circuit is open or shorted.) • Heated oxygen sensor 3 heater
P0044	Heated oxygen sensor 3 heater control circuit high	The current amperage in the heated oxygen sensor 3 heater circuit is out of the normal range. (An excessively high voltage signal is sent to ECM through the heated oxygen sensor 3 heater.)	• Harness or connectors (The heated oxygen sensor 3 heater circuit is shorted.) • Heated oxygen sensor 3 heater

DTC CONFIRMATION PROCEDURE

1. PRECONDITIONING

If DTC Confirmation Procedure has been previously conducted, always perform the following before conducting the next test.

1. Turn ignition switch OFF and wait at least 10 seconds.
2. Turn ignition switch ON.
3. Turn ignition switch OFF and wait at least 10 seconds.

TESTING CONDITION:

Before performing the following procedure, confirm that battery voltage is between 10.5V and 16V at idle.

>> GO TO 2.

2. PERFORM DTC CONFIRMATION PROCEDURE

1. Activate “INSPECTION MODE 1” (HBC-97) to start engine, and warm up engine to normal operating temperature.

2. Turn ignition switch OFF and wait at least 10 seconds.
3. Turn ignition switch ON.
4. Turn ignition switch OFF and wait at least 10 seconds.
5. Turn ignition switch ON (READY).
6. Drive vehicle at a speed of 80 km/h (50 MPH) or more for at least 3 consecutive minutes.
   CAUTION:
   Always drive vehicle in safe manner according to traffic conditions and obey all traffic laws.
   NOTE:
   Keep the vehicle speed as steady as possible during the cruising.
7. Check 1st trip DTC.

Is 1st trip DTC detected?

YES >> Go to EC-140, "Diagnosis Procedure".
NO >> INSPECTION END

Diagnosis Procedure

INFOID:0000000003069157

1. CHECK GROUND CONNECTION

1. Turn ignition switch OFF.
2. Check ground connection E9. Refer to Ground Inspection in GI-45, "Circuit Inspection".

Is the inspection result normal?

YES >> GO TO 2.
NO >> Repair or replace ground connection.

2. CHECK HO2S3 POWER SUPPLY CIRCUIT

1. Disconnect heated oxygen sensor 3 harness connector.
2. Turn ignition switch ON.
3. Check the voltage between HO2S3 harness connector and ground.

HO2S3		Ground	Voltage
Connector	Terminal		
F102	2	Ground	Battery voltage

Is the inspection result normal?

YES >> GO TO 4.
NO >> GO TO 3.

3. DETECT MALFUNCTIONING PART

Check the following.
- Harness connectors F58, F101
- IPDM E/R harness connector F10
- 15A fuse (No. 37)
- Harness for open or short between heated oxygen sensor 3 and fuse

>> Repair open circuit or short to ground or short to power in harness or connectors.

4. CHECK HO2S3 OUTPUT SIGNAL CIRCUIT FOR OPEN AND SHORT

1. Turn ignition switch OFF.
2. Disconnect ECM harness connector.
3. Check harness continuity between HO2S3 harness connector and ECM harness connector.

HO2S3		ECM		Continuity
Connector	Terminal	Connector	Terminal	
F102	3	F14	17	Existed

4. Also check harness for short to ground and short to power.

Is the inspection result normal?

YES >> GO TO 6.

NO >> GO TO 5.

5. DETECT MALFUNCTIONING PART

Check the following.
- Harness connectors F58, F101
- Harness for open or short between heated oxygen sensor 3 and ECM

>> Repair open circuit or short to ground or short to power in harness or connectors.

6. CHECK HEATED OXYGEN SENSOR 3

Refer to EC-141, "Component Inspection".

Is the inspection result normal?

YES >> GO TO 8.
NO >> GO TO 7.

7. REPLACE HEATED OXYGEN SENSOR 3

Replace heated oxygen sensor 3.

CAUTION:
- **Discard any heated oxygen sensor which has been dropped from a height of more than 0.5 m (19.7 in) onto a hard surface such as a concrete floor; use a new one.**
- **Before installing new oxygen sensor, clean exhaust system threads using Oxygen Sensor Thread Cleaner tool J-43897-18 or J-43897-12 and approved anti-seize lubricant.**

>> INSPECTION END

8. CHECK INTERMITTENT INCIDENT

Refer to GI-42, "Intermittent Incident".

>> INSPECTION END

Component Inspection

INFOID:0000000003069158

1. CHECK HEATED OXYGEN SENSOR 3 HEATER

1. Turn ignition switch OFF.
2. Disconnect heated oxygen sensor 3 harness connector.
3. Check resistance between HO2S3 terminals as follows.

Terminals	Resistance
2 and 3	3.3 - 4.4 Ω [at 25°C (77°F)]
1 and 2, 3, 4	∞Ω (Continuity should not exist)
4 and 1, 2, 3	

Is the inspection result normal?

YES >> INSPECTION END
NO >> GO TO 2.

2. REPLACE HEATED OXYGEN SENSOR 3

Replace heated oxygen sensor 3.

CAUTION:
- **Discard any heated oxygen sensor which has been dropped from a height of more than 0.5 m (19.7 in) onto a hard surface such as a concrete floor; use a new one.**
- **Before installing new oxygen sensor, clean exhaust system threads using Oxygen Sensor Thread Cleaner tool J-43897-18 or J-43897-12 and approved anti-seize lubricant.**

>> INSPECTION END

P0075 IVT CONTROL SOLENOID VALVE

Description

INFOID:0000000003069159

Intake valve timing control solenoid valve is activated by ON/OFF pulse duty (ratio) signals from the ECM.
The intake valve timing control solenoid valve changes the oil amount and direction of flow through intake valve timing control unit or stops oil flow.
The longer pulse width advances valve angle.
The shorter pulse width retards valve angle.
When ON and OFF pulse widths become equal, the solenoid valve stops oil pressure flow to fix the intake valve angle at the control position.

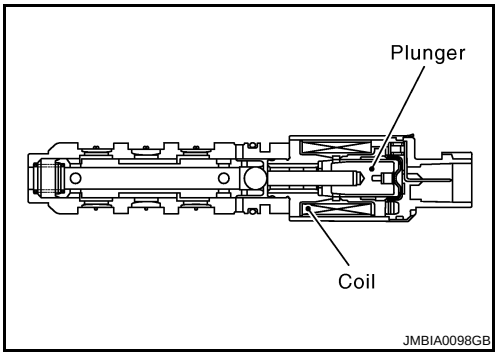

DTC Logic

INFOID:0000000003069160

DTC DETECTION LOGIC

DTC No.	Trouble diagnosis name	DTC detecting condition	Possible cause
P0075	Intake valve timing control solenoid valve circuit	An improper voltage is sent to the ECM through intake valve timing control solenoid valve.	• Harness or connectors (Intake valve timing control solenoid valve circuit is open or shorted.) • Intake valve timing control solenoid valve

DTC CONFIRMATION PROCEDURE

1. PRECONDITIONING

If DTC Confirmation Procedure has been previously conducted, always perform the following before conducting the next test.
1. Turn ignition switch OFF and wait at least 10 seconds.
2. Turn ignition switch ON.
3. Turn ignition switch OFF and wait at least 10 seconds.

>> GO TO2.

2. PERFORM DTC CONFIRMATION PROCEDURE

1. Activate “INSPECTION MODE 1” (HBC-97) to start engine, and let engine idle for 5 seconds.
2. Check 1st trip DTC.

Is 1st trip DTC detected?

YES >> Go to EC-142, "Diagnosis Procedure".
NO >> INSPECTION END

Diagnosis Procedure

INFOID:0000000003069161

1. CHECK INTAKE VALVE TIMING CONTROL SOLENOID VALVE POWER SUPPLY CIRCUIT

1. Turn ignition switch OFF.
2. Disconnect intake valve timing control solenoid valve harness connector.
3. Turn ignition switch ON.
4. Check the voltage between intake valve timing control solenoid valve harness connector and ground.

IVT control solenoid valve		Ground	Voltage
Connector	Terminal		
F59	1	Ground	Battery voltage

Is the inspection result normal?

YES >> GO TO 2.

NO >> Repair open circuit or short to ground or short to power in harness or connectors.

2. CHECK INTAKE VALVE TIMING CONTROL SOLENOID VALVE OUTPUT SIGNAL CIRCUIT FOR OPEN AND SHORT

1. Turn ignition switch OFF.
2. Disconnect ECM harness connector.
3. Check the continuity between intake valve timing control solenoid valve harness connector and ECM harness connector.

IVT control solenoid valve		ECM		Continuity
Connector	Terminal	Connector	Terminal	
F59	2	F13	78	Existed

4. Also check harness for short to ground and short to power.

Is the inspection result normal?

YES >> GO TO 3.
NO >> Repair open circuit or short to ground or short to power in harness or connectors.

3. CHECK INTAKE VALVE TIMING CONTROL SOLENOID VALVE

Refer to EC-143, "Component Inspection".

Is the inspection result normal?

YES >> GO TO 4.
NO >> Replace intake valve timing control solenoid valve.

4. CHECK INTERMITTENT INCIDENT

Refer to GI-42, "Intermittent Incident".

>> INSPECTION END

Component Inspection

INFOID:0000000003069162

1. CHECK INTAKE VALVE TIMING CONTROL SOLENOID VALVE-I

1. Turn ignition switch OFF.
2. Disconnect intake valve timing control solenoid valve harness connector.
3. Check resistance between intake valve timing control solenoid valve terminals as follows.

Terminals	Resistance
1 and 2	6.7 - 7.7Ω
1 or 2 and ground	∞Ω (Continuity should not exist)

Is the inspection result normal?

YES >> GO TO 2.
NO >> Replace intake valve timing control solenoid valve.

2. CHECK INTAKE VALVE TIMING CONTROL SOLENOID VALVE-II

1. Remove intake valve timing control solenoid valve.

2. Provide 12V DC between intake valve timing control solenoid valve terminals 1 and 2, and then interrupt it. Make sure that the plunger moves as shown in the figure.
   CAUTION:
   Do not apply 12V DC continuously for 5 seconds or more. Doing so may result in damage to the coil in intake valve timing control solenoid valve.
   NOTE:
   Always replace O-ring when intake valve timing control solenoid valve is removed.

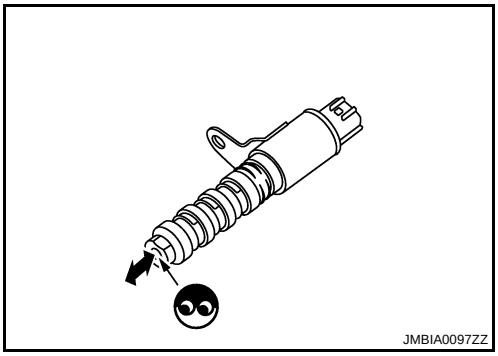

Is the inspection result normal?

YES >> INSPECTION END
NO >> Replace intake valve timing control solenoid valve.

P0101 MAF SENSOR

Description

INFOID:0000000003069163

The mass air flow sensor (1) is placed in the stream of intake air. It measures the intake flow rate by measuring a part of the entire intake flow. The mass air flow sensor controls the temperature of the hot wire to a certain amount. The heat generated by the hot wire is reduced as the intake air flows around it. The more air, the greater the heat loss.
Therefore, the electric current supplied to hot wire is changed to maintain the temperature of the hot wire as air flow increases. The ECM detects the air flow by means of this current change.

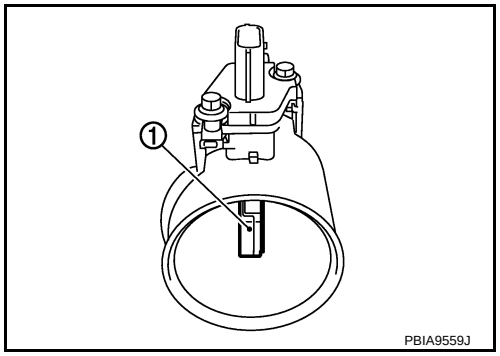

DTC Logic

INFOID:0000000003069164

DTC DETECTION LOGIC

DTC No.	Trouble diagnosis name	DTC detecting condition		Possible cause
P0101	Mass air flow sensor circuit range/performance	A)	A high voltage from the sensor is sent to ECM under light load driving condition.	• Harness or connectors (The sensor circuit is open or shorted.) • Mass air flow sensor • EVAP control system pressure sensor
		B)	A low voltage from the sensor is sent to ECM under heavy load driving condition.	• Harness or connectors (The sensor circuit is open or shorted.) • Intake air leaks • Mass air flow sensor • EVAP control system pressure sensor • Intake air temperature sensor

DTC CONFIRMATION PROCEDURE

1. PRECONDITIONING

If DTC Confirmation Procedure has been previously conducted, always perform the following before conducting the next test.
1. Turn ignition switch OFF and wait at least 10 seconds.
2. Turn ignition switch ON.
3. Turn ignition switch OFF and wait at least 10 seconds.

>> GO TO 2.

2. PERFORM DTC CONFIRMATION PROCEDURE FOR MALFUNCTION A

1. Activate “INSPECTION MODE 1” (HBC-97) to start engine, and warm up engine to normal operating temperature.
2. Wait at least 10 seconds at idle speed.
3. Check 1st trip DTC.

Is 1st trip DTC detected?

YES >> Go to EC-147, "Diagnosis Procedure".
NO-1 >> With CONSULT-III: GO TO 3.
NO-2 >> With GST: GO TO 5.

3. CHECK MASS AIR FLOW SENSOR FUNCTION

1. Activate “INSPECTION MODE 1” (HBC-97) to start engine, and warm up engine to normal operating temperature.

2. Select “DATA MONITOR” mode with CONSULT-III.
3. Check the voltage of “MAS A/F SE-B1” with “DATA MONITOR”.
4. Increases engine speed to about 2,500 rpm.
5. Monitor the linear voltage rise in response to engine speed increases.

Is the inspection result normal?

YES >> GO TO 4.
NO >> Go to EC-147, "Diagnosis Procedure".

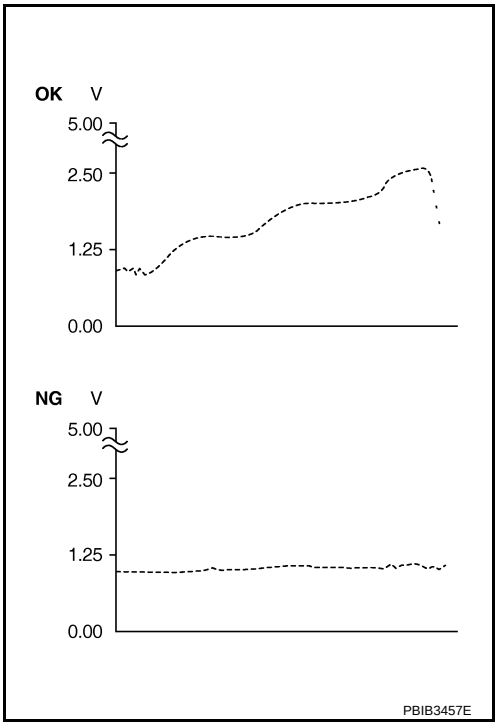

4. PERFORM DTC CONFIRMATION PROCEDURE FOR MALFUNCTION B

1. Turn ignition switch OFF.
2. Turn ignition switch ON (READY) and drive vehicle.
3. Maintain the following conditions for at least 10 consecutive seconds.

ENG SPEED	More than 2,000 rpm
THRTL SEN 1-B1	More than 3V
THRTL SEN 2-B1	More than 3V
Shift lever	Suitable position
Driving location	Driving vehicle uphill (Increased engine load) will help maintain the driving conditions required for this test.

CAUTION:
Always drive vehicle at a safe speed.

4. Check 1st trip DTC.

Is 1st trip DTC detected?

YES >> Go to EC-147, "Diagnosis Procedure".
NO >> INSPECTION END

5. PERFORM COMPONENT FUNCTION CHECK FOR MALFUNCTION B

Perform component function check. Refer to EC-146, "Component Function Check".

NOTE:
Use component function check to check the overall function of the mass air flow sensor circuit. During this check, a DTC might not be confirmed.

Is the inspection result normal?

YES >> INSPECTION END
NO >> Go to EC-147, "Diagnosis Procedure".

Component Function Check

INFOID:0000000003069165

1. PERFORM COMPONENT FUNCTION CHECK FOR MALFUNCTION B

With GST

1. Activate “INSPECTION MODE 1” (HBC-97) to start engine, and warm up engine to normal operating temperature.

2. Select Service $01 with GST.
3. Check the mass air flow sensor signal with Service $01.
4. Check for linear mass air flow sensor signal value rise in response to increases to about 2,500 rpm in engine speed.

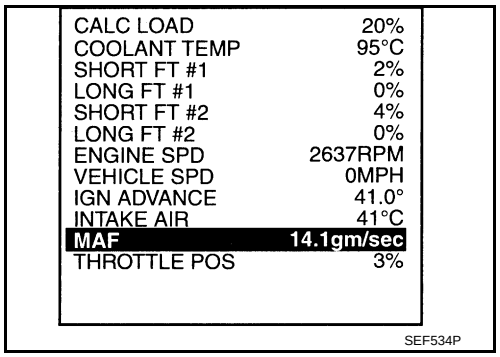

Is the inspection result normal?

YES >> INSPECTION END
NO >> Go to EC-147, "Diagnosis Procedure".

Diagnosis Procedure

INFOID:0000000003069166

1. INSPECTION START

Confirm the detected malfunction (A or B). Refer to EC-145, "DTC Logic".

Which malfunction is detected?

A >> GO TO 3.
B >> GO TO 2.

2. CHECK INTAKE SYSTEM

Check the following for connection.
- Air duct
- Vacuum hoses
- Intake air passage between air duct and intake manifold

Is the inspection result normal?

YES >> GO TO 3.
NO >> Reconnect the parts.

3. CHECK GROUND CONNECTION

1. Turn ignition switch OFF.
2. Check ground connection E9. Refer to Ground Inspection in GI-45, "Circuit Inspection".

Is the inspection result normal?

YES >> GO TO 4.
NO >> Repair or replace ground connection.

4. CHECK MAF SENSOR POWER SUPPLY CIRCUIT

1. Disconnect mass air flow (MAF) sensor harness connector.
2. Turn ignition switch ON.
3. Check the voltage between MAF sensor harness connector and ground.

MAF sensor		Ground	Voltage
Connector	Terminal		
F31	5	Ground	Battery voltage

Is the inspection result normal?

YES >> GO TO 6.
NO >> GO TO 5.

5. DETECT MALFUNCTIONING PART

Check the following.
- Junction block connector E44
- Harness for open or short between mass air flow sensor and ECM
- Harness for open or short between mass air flow sensor and IPDM E/R

>> Repair open circuit or short to ground or short to power in harness or connectors.

6. CHECK MAF SENSOR GROUND CIRCUIT FOR OPEN AND SHORT

1. Turn ignition switch OFF.
2. Disconnect ECM harness connector.
3. Check the continuity between MAF sensor harness connector and ECM harness connector.

MAF sensor		ECM		Continuity
Connector	Terminal	Connector	Terminal	
F31	4	F13	56	Existed

4. Also check harness for short to ground and short to power.

Is the inspection result normal?

YES >> GO TO 7.
NO >> Repair open circuit or short to ground or short to power in harness or connectors.

7. CHECK MAF SENSOR INPUT SIGNAL CIRCUIT FOR OPEN AND SHORT

1. Check the continuity between MAF sensor harness connector and ECM harness connector.

MAF sensor		ECM		Continuity
Connector	Terminal	Connector	Terminal	
F31	3	F13	58	Existed

2. Also check harness for short to ground and short to power.

Is the inspection result normal?

YES >> GO TO 8.
NO >> Repair open circuit or short to ground or short to power in harness or connectors.

8. CHECK INTAKE AIR TEMPERATURE SENSOR

Check intake air temperature sensor.
Refer to EC-161, "Component Inspection".

Is the inspection result normal?

YES >> GO TO 9.
NO >> Replace mass air flow sensor (with intake air temperature sensor).

9. CHECK EVAP CONTROL SYSTEM PRESSURE SENSOR

Refer to EC-285, "Component Inspection".

Is the inspection result normal?

YES >> GO TO 10.
NO >> Replace EVAP control system pressure sensor.

10. CHECK MASS AIR FLOW SENSOR

Refer to EC-148, "Component Inspection".

Is the inspection result normal?

YES >> GO TO 11.
NO >> Replace mass air flow sensor.

11. CHECK INTERMITTENT INCIDENT

Refer to GI-42, "Intermittent Incident".

>> INSPECTION END

Component Inspection

INFOID:0000000003069167

1. CHECK MASS AIR FLOW SENSOR-I

With CONSULT-III

1. Turn ignition switch OFF.

2. Reconnect all harness connectors disconnected.
3. Lift up the vehicle.
4. Turn ignition switch ON.
5. Connect CONSULT-III and select “DATA MONITOR” mode.
6. Select “MAS A/F SE-B1” and check indication.

Monitor item	Condition	MAS A/F SE-B1
MAS A/F SE-B1	Ignition switch ON	Approx. 0.4V

7. Activate “INSPECTION MODE 1” (HBC-97) to start engine, and warm up engine to normal operating temperature.
8. Depress the accelerator pedal and keep it.
9. Shift the selector lever to N position with engine running.
   CAUTION:
   Never leave the selector lever in the N position for a long period of time. In the N position, the engine operates but electricity cannot be generated.
10. Select “MAS A/F SE-B1” in “DATA MONITOR” and check indication.

Monitor item	Condition	MAS A/F SE-B1
MAS A/F SE-B1	Idle (Engine is warmed-up to normal operating temperature.)	0.9 - 1.2V

11. Shift the selector lever to P position.
12. Fully depress the accelerator pedal and keep it.
13. Check indication.

Monitor item	Condition	MAS A/F SE-B1
MAS A/F SE-B1	2,500 rpm (Engine is warmed-up to normal operating temperature.)	1.5 - 1.8V

14. Fully release accelerator pedal then fully depress it.
15. Check for linear voltage rise in response to engine being increased to about 2,500 rpm.

Without CONSULT-III

1. Turn ignition switch OFF.
2. Reconnect all harness connectors disconnected.
3. Lift up the vehicle.
4. Turn ignition switch ON.
5. Check the voltage between ECM harness connector and ground.

ECM		Ground	Condition	Voltage
Connector	Terminal			
F13	58 (MAF sensor signal)	Ground	Ignition switch ON	Approx. 0.4V

6. Activate “INSPECTION MODE 1” (HBC-97) to start engine, and warm up engine to normal operating temperature.
7. Depress the accelerator pedal and keep it.
8. Shift the selector lever to N position with engine running.
   CAUTION:
   Never leave the selector lever in the N position for a long period of time. In the N position, the engine operates but electricity cannot be generated.
9. Check the voltage between ECM harness connector and ground.

ECM		Ground	Condition	Voltage
Connector	Terminal			
F13	58 (MAF sensor signal)	Ground	Idle (Engine is warmed-up to normal operating temperature.)	0.9 - 1.2V

10. Shift the selector lever to P position.
11. Fully depress the accelerator pedal and keep it.
12. Check the voltage between ECM harness connector and ground.

ECM		Ground	Condition	Voltage
Connector	Terminal			
F13	58 (MAF sensor signal)	Ground	2,500 rpm (Engine is warmed-up to normal operating temperature.)	1.5 - 1.8V

13. Fully release accelerator pedal then fully depress it.
14. Check for linear voltage rise in response to engine being increased to about 2,500 rpm.

Is the inspection result normal?

YES >> GO TO 4.
NO >> GO TO 2.

2. CHECK FOR THE CAUSE OF UNEVEN AIR FLOW THROUGH MASS AIR FLOW SENSOR

1. Turn ignition switch OFF.
2. Check for the cause of uneven air flow through mass air flow sensor. Refer to following.

- Crushed air ducts
- Malfunctioning seal of air cleaner element
- Uneven dirt of air cleaner element
- Improper specification of intake air system parts

Is the inspection result normal?

YES >> GO TO 4.
NO >> GO TO 3.

3. CHECK MASS AIR FLOW SENSOR-II

With CONSULT-III

1. Repair or replace malfunctioning part.
2. Lift up the vehicle.
3. Turn ignition switch ON.
4. Connect CONSULT-III and select “DATA MONITOR” mode.
5. Select “MAS A/F SE-B1” and check indication.

Monitor item	Condition	MAS A/F SE-B1
MAS A/F SE-B1	Ignition switch ON	Approx. 0.4V

6. Activate “INSPECTION MODE 1” (HBC-97) to start engine, and warm up engine to normal operating temperature.
7. Depress the accelerator pedal and keep it.
8. Shift the selector lever to N position with engine running.
   CAUTION:
   Never leave the selector lever in the N position for a long period of time. In the N position, the engine operates but electricity cannot be generated.
9. Select “MAS A/F SE-B1” in “DATA MONITOR” and check indication.

Monitor item	Condition	MAS A/F SE-B1
MAS A/F SE-B1	Idle (Engine is warmed-up to normal operating temperature.)	0.9 - 1.2V

10. Shift the selector lever to P position.
11. Fully depress the accelerator pedal and keep it.
12. Check indication.

Monitor item	Condition	MAS A/F SE-B1
MAS A/F SE-B1	2,500 rpm (Engine is warmed-up to normal operating temperature.)	1.5 - 1.8V

13. Fully release accelerator pedal then fully depress it.
14. Check for linear voltage rise in response to engine being increased to about 2,500 rpm.

Without CONSULT-III

1. Repair or replace malfunctioning part.
2. Lift up the vehicle.
3. Turn ignition switch ON.

4. Check the voltage between ECM harness connector and ground.

ECM		Ground	Condition	Voltage
Connector	Terminal			
F13	58 (MAF sensor signal)	Ground	Ignition switch ON	Approx. 0.4V

5. Activate “INSPECTION MODE 1” (HBC-97) to start engine, and warm up engine to normal operating temperature.
6. Depress the accelerator pedal and keep it.
7. Shift the selector lever to N position with engine running.
   CAUTION:
   Never leave the selector lever in the N position for a long period of time. In the N position, the engine operates but electricity cannot be generated.
8. Check the voltage between ECM harness connector and ground.

ECM		Ground	Condition	Voltage
Connector	Terminal			
F13	58 (MAF sensor signal)	Ground	Idle (Engine is warmed-up to normal operating temperature.)	0.9 - 1.2V

9. Shift the selector lever to P position.
10. Fully depress the accelerator pedal and keep it.
11. Check the voltage between ECM harness connector and ground.

ECM		Ground	Condition	Voltage
Connector	Terminal			
F13	58 (MAF sensor signal)	Ground	2,500 rpm (Engine is warmed-up to normal operating temperature.)	1.5 - 1.8V

12. Fully release accelerator pedal then fully depress it.
13. Check for linear voltage rise in response to engine being increased to about 2,500 rpm.

Is the inspection result normal?

YES >> INSPECTION END
NO >> GO TO 4.

4. CHECK MASS AIR FLOW SENSOR-III

With CONSULT-III

1. Turn ignition switch OFF.
2. Disconnect mass air flow sensor harness connector and reconnect it again.
3. Lift up the vehicle.
4. Turn ignition switch ON.
5. Connect CONSULT-III and select “DATA MONITOR” mode.
6. Select “MAS A/F SE-B1” and check indication.

Monitor item	Condition	MAS A/F SE-B1
MAS A/F SE-B1	Ignition switch ON	Approx. 0.4V

7. Activate “INSPECTION MODE 1” (HBC-97) to start engine, and warm up engine to normal operating temperature.
8. Depress the accelerator pedal and keep it.
9. Shift the selector lever to N position with engine running.
   CAUTION:
   Never leave the selector lever in the N position for a long period of time. In the N position, the engine operates but electricity cannot be generated.
10. Select “MAS A/F SE-B1” in “DATA MONITOR” and check indication.

Monitor item	Condition	MAS A/F SE-B1
MAS A/F SE-B1	Idle (Engine is warmed-up to normal operating temperature.)	0.9 - 1.2V

11. Shift the selector lever to P position.
12. Fully depress the accelerator pedal and keep it.
13. Check indication.

Monitor item	Condition	MAS A/F SE-B1
MAS A/F SE-B1	2,500 rpm (Engine is warmed-up to normal operating temperature.)	1.5 - 1.8V

14. Fully release accelerator pedal then fully depress it.
15. Check for linear voltage rise in response to engine being increased to about 2,500 rpm.

Without CONSULT-III

1. Turn ignition switch OFF.
2. Disconnect mass air flow sensor harness connector and reconnect it again.
3. Lift up the vehicle.
4. Turn ignition switch ON.
5. Check the voltage between ECM harness connector and ground.

ECM		Ground	Condition	Voltage
Connector	Terminal			
F13	58 (MAF sensor signal)	Ground	Ignition switch ON	Approx. 0.4V

6. Activate “INSPECTION MODE 1” (HBC-97) to start engine, and warm up engine to normal operating temperature.
7. Depress the accelerator pedal and keep it.
8. Shift the selector lever to N position with engine running.
   CAUTION:
   Never leave the selector lever in the N position for a long period of time. In the N position, the engine operates but electricity cannot be generated.
9. Check the voltage between ECM harness connector and ground.

ECM		Ground	Condition	Voltage
Connector	Terminal			
F13	58 (MAF sensor signal)	Ground	Idle (Engine is warmed-up to normal operating temperature.)	0.9 - 1.2V

10. Shift the selector lever to P position.
11. Fully depress the accelerator pedal and keep it.
12. Check the voltage between ECM harness connector and ground.

ECM		Ground	Condition	Voltage
Connector	Terminal			
F13	58 (MAF sensor signal)	Ground	2,500 rpm (Engine is warmed-up to normal operating temperature.)	1.5 - 1.8V

13. Fully release accelerator pedal then fully depress it.
14. Check for linear voltage rise in response to engine being increased to about 2,500 rpm.

Is the inspection result normal?

YES >> INSPECTION END
NO >> Clean or replace mass air flow sensor.

P0102, P0103 MAF SENSOR

Description

INFOID:0000000003069168

The mass air flow sensor (1) is placed in the stream of intake air. It measures the intake flow rate by measuring a part of the entire intake flow. The mass air flow sensor controls the temperature of the hot wire to a certain amount. The heat generated by the hot wire is reduced as the intake air flows around it. The more air, the greater the heat loss.
Therefore, the electric current supplied to hot wire is changed to maintain the temperature of the hot wire as air flow increases. The ECM detects the air flow by means of this current change.

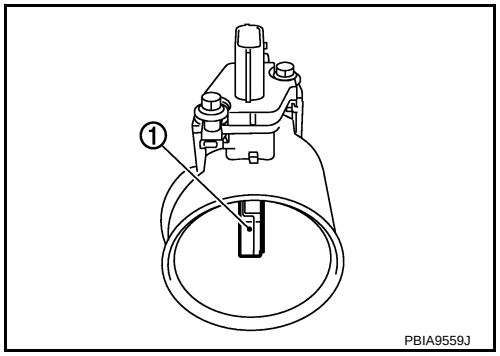

DTC Logic

INFOID:0000000003069169

DTC DETECTION LOGIC

DTC No.	Trouble diagnosis name	DTC detecting condition	Possible cause
P0102	Mass air flow sensor circuit low input	An excessively low voltage from the sensor is sent to ECM.	• Harness or connectors (The sensor circuit is open or shorted.) • Intake air leaks • Mass air flow sensor
P0103	Mass air flow sensor circuit high input	An excessively high voltage from the sensor is sent to ECM.	• Harness or connectors (The sensor circuit is open or shorted.) • Mass air flow sensor

DTC CONFIRMATION PROCEDURE

1. PRECONDITIONING

If DTC Confirmation Procedure has been previously conducted, always perform the following before conducting the next test.
1. Turn ignition switch OFF and wait at least 10 seconds.
2. Turn ignition switch ON.
3. Turn ignition switch OFF and wait at least 10 seconds.

Which DTC is detected?

P0102 >> GO TO 2.
P0103 >> GO TO 3.

2. PERFORM DTC CONFIRMATION PROCEDURE FOR DTC P0102

1. Activate “INSPECTION MODE 1” (HBC-97) to start engine, and wait at least 5 seconds.
2. Check DTC.

Is DTC detected?

YES >> Go to EC-154, "Diagnosis Procedure".
NO >> INSPECTION END

3. PERFORM DTC CONFIRMATION PROCEDURE FOR DTC P0103-I

1. Turn ignition switch ON and wait at least 5 seconds.
2. Check DTC.

Is DTC detected?

YES >> Go to EC-154, "Diagnosis Procedure".
NO >> GO TO 4.

4. PERFORM DTC CONFIRMATION PROCEDURE FOR DTC P0103-II

1. Activate “INSPECTION MODE 1” (HBC-97) to start engine, and wait at least 5 seconds.
2. Check DTC.

Is DTC detected?

YES >> Go to EC-154, "Diagnosis Procedure".
NO >> INSPECTION END

Diagnosis Procedure

INFOID:0000000003069170

1. INSPECTION START

Confirm the detected DTC.

Which DTC is detected?

P0102 >> GO TO 2.
P0103 >> GO TO 3.

2. CHECK INTAKE SYSTEM

Check the following for connection.
- Air duct
- Vacuum hoses
- Intake air passage between air duct to intake manifold

Is the inspection result normal?

YES >> GO TO 3.
NO >> Reconnect the parts.

3. CHECK GROUND CONNECTION

1. Turn ignition switch OFF.
2. Check ground connection E9. Refer to Ground Inspection in GI-45, "Circuit Inspection".

Is the inspection result normal?

YES >> GO TO 4.
NO >> Repair or replace ground connection.

4. CHECK MAF SENSOR POWER SUPPLY CIRCUIT

1. Disconnect mass air flow (MAF) sensor harness connector.
2. Turn ignition switch ON.
3. Check the voltage between MAF sensor harness connector and ground.

MAF sensor		Ground	Voltage
Connector	Terminal		
F31	5	Ground	Battery voltage

Is the inspection result normal?

YES >> GO TO 6.
NO >> GO TO 5.

5. DETECT MALFUNCTIONING PART

Check the following.
- Junction block connector E44
- Harness for open or short between mass air flow sensor and ECM
- Harness for open or short between mass air flow sensor and IPDM E/R

>> Repair open circuit or short to ground or short to power in harness or connectors.

6. CHECK MAF SENSOR GROUND CIRCUIT FOR OPEN AND SHORT

1. Turn ignition switch OFF.
2. Disconnect ECM harness connector.
3. Check the continuity between MAF sensor harness connector and ECM harness connector.

MAF sensor		ECM		Continuity
Connector	Terminal	Connector	Terminal	
F31	4	F13	56	Existed

4. Also check harness for short to ground and short to power.

Is the inspection result normal?

YES >> GO TO 7.
NO >> Repair open circuit or short to ground or short to power in harness or connectors.

7. CHECK MAF SENSOR INPUT SIGNAL CIRCUIT FOR OPEN AND SHORT

1. Check the continuity between MAF sensor harness connector and ECM harness connector.

MAF sensor		ECM		Continuity
Connector	Terminal	Connector	Terminal	
F31	3	F13	58	Existed

2. Also check harness for short to ground and short to power.

Is the inspection result normal?

YES >> GO TO 8.
NO >> Repair open circuit or short to ground or short to power in harness or connectors.

8. CHECK MASS AIR FLOW SENSOR

Refer to EC-155, "Component Inspection".

Is the inspection result normal?

YES >> GO TO 9.
NO >> Replace mass air flow sensor.

9. CHECK INTERMITTENT INCIDENT

Refer to GI-42, "Intermittent Incident".

>> INSPECTION END

Component Inspection

INFOID:0000000003069171

1. CHECK MASS AIR FLOW SENSOR-I

With CONSULT-III

1. Turn ignition switch OFF.
2. Reconnect all harness connectors disconnected.
3. Lift up the vehicle.
4. Turn ignition switch ON.
5. Connect CONSULT-III and select “DATA MONITOR” mode.
6. Select “MAS A/F SE-B1” and check indication.

Monitor item	Condition	MAS A/F SE-B1
MAS A/F SE-B1	Ignition switch ON	Approx. 0.4V

7. Activate “INSPECTION MODE 1” (HBC-97) to start engine, and warm up engine to normal operating temperature.
8. Depress the accelerator pedal and keep it.
9. Shift the selector lever to N position with engine running.
   CAUTION:
   Never leave the selector lever in the N position for a long period of time. In the N position, the engine operates but electricity cannot be generated.
10. Select “MAS A/F SE-B1” in “DATA MONITOR” and check indication.

Monitor item	Condition	MAS A/F SE-B1
MAS A/F SE-B1	Idle (Engine is warmed-up to normal operating temperature.)	0.9 - 1.2V

11. Shift the selector lever to P position.
12. Fully depress the accelerator pedal and keep it.
13. Check indication.

Monitor item	Condition	MAS A/F SE-B1
MAS A/F SE-B1	2,500 rpm (Engine is warmed-up to normal operating temperature.)	1.5 - 1.8V

14. Fully release accelerator pedal then fully depress it.
15. Check for linear voltage rise in response to engine being increased to about 2,500 rpm.

Without CONSULT-III

1. Turn ignition switch OFF.
2. Reconnect all harness connectors disconnected.
3. Lift up the vehicle.
4. Turn ignition switch ON.
5. Check the voltage between ECM harness connector and ground.

ECM		Ground	Condition	Voltage
Connector	Terminal			
F13	58 (MAF sensor signal)	Ground	Ignition switch ON	Approx. 0.4V

6. Activate “INSPECTION MODE 1” (HBC-97) to start engine, and warm up engine to normal operating temperature.
7. Depress the accelerator pedal and keep it.
8. Shift the selector lever to N position with engine running.
   CAUTION:
   Never leave the selector lever in the N position for a long period of time. In the N position, the engine operates but electricity cannot be generated.
9. Check the voltage between ECM harness connector and ground.

ECM		Ground	Condition	Voltage
Connector	Terminal			
F13	58 (MAF sensor signal)	Ground	Idle (Engine is warmed-up to normal operating temperature.)	0.9 - 1.2V

10. Shift the selector lever to P position.
11. Fully depress the accelerator pedal and keep it.
12. Check the voltage between ECM harness connector and ground.

ECM		Ground	Condition	Voltage
Connector	Terminal			
F13	58 (MAF sensor signal)	Ground	2,500 rpm (Engine is warmed-up to normal operating temperature.)	1.5 - 1.8V

13. Fully release accelerator pedal then fully depress it.
14. Check for linear voltage rise in response to engine being increased to about 2,500 rpm.

Is the inspection result normal?

YES >> GO TO 4.
NO >> GO TO 2.

2. CHECK FOR THE CAUSE OF UNEVEN AIR FLOW THROUGH MASS AIR FLOW SENSOR

1. Turn ignition switch OFF.
2. Check for the cause of uneven air flow through mass air flow sensor. Refer to following.

- Crushed air ducts
- Malfunctioning seal of air cleaner element

- Uneven dirt of air cleaner element
- Improper specification of intake air system parts

Is the inspection result normal?

YES >> GO TO 4.
NO >> GO TO 3.

3. CHECK MASS AIR FLOW SENSOR-II

With CONSULT-III

1. Repair or replace malfunctioning part.
2. Lift up the vehicle.
3. Turn ignition switch ON.
4. Connect CONSULT-III and select “DATA MONITOR” mode.
5. Select “MAS A/F SE-B1” and check indication.

Monitor item	Condition	MAS A/F SE-B1
MAS A/F SE-B1	Ignition switch ON	Approx. 0.4V

6. Activate “INSPECTION MODE 1” (HBC-97) to start engine, and warm up engine to normal operating temperature.
7. Depress the accelerator pedal and keep it.
8. Shift the selector lever to N position with engine running.
   CAUTION:
   Never leave the selector lever in the N position for a long period of time. In the N position, the engine operates but electricity cannot be generated.
9. Select “MAS A/F SE-B1” in “DATA MONITOR” and check indication.

Monitor item	Condition	MAS A/F SE-B1
MAS A/F SE-B1	Idle (Engine is warmed-up to normal operating temperature.)	0.9 - 1.2V

10. Shift the selector lever to P position.
11. Fully depress the accelerator pedal and keep it.
12. Check indication.

Monitor item	Condition	MAS A/F SE-B1
MAS A/F SE-B1	2,500 rpm (Engine is warmed-up to normal operating temperature.)	1.5 - 1.8V

13. Fully release accelerator pedal then fully depress it.
14. Check for linear voltage rise in response to engine being increased to about 2,500 rpm.

Without CONSULT-III

1. Repair or replace malfunctioning part.
2. Lift up the vehicle.
3. Turn ignition switch ON.
4. Check the voltage between ECM harness connector and ground.

ECM		Ground	Condition	Voltage
Connector	Terminal			
F13	58 (MAF sensor signal)	Ground	Ignition switch ON	Approx. 0.4V

5. Activate “INSPECTION MODE 1” (HBC-97) to start engine, and warm up engine to normal operating temperature.
6. Depress the accelerator pedal and keep it.
7. Shift the selector lever to N position with engine running.
   CAUTION:
   Never leave the selector lever in the N position for a long period of time. In the N position, the engine operates but electricity cannot be generated.
8. Check the voltage between ECM harness connector and ground.

ECM		Ground	Condition	Voltage
Connector	Terminal			
F13	58 (MAF sensor signal)	Ground	Idle (Engine is warmed-up to normal operating temperature.)	0.9 - 1.2V

9. Shift the selector lever to P position.
10. Fully depress the accelerator pedal and keep it.
11. Check the voltage between ECM harness connector and ground.

ECM		Ground	Condition	Voltage
Connector	Terminal			
F13	58 (MAF sensor signal)	Ground	2,500 rpm (Engine is warmed-up to normal operating temperature.)	1.5 - 1.8V

12. Fully release accelerator pedal then fully depress it.
13. Check for linear voltage rise in response to engine being increased to about 2,500 rpm.

Is the inspection result normal?

YES >> INSPECTION END
NO >> GO TO 4.

4. CHECK MASS AIR FLOW SENSOR-III

With CONSULT-III

1. Turn ignition switch OFF.
2. Disconnect mass air flow sensor harness connector and reconnect it again.
3. Lift up the vehicle.
4. Turn ignition switch ON.
5. Connect CONSULT-III and select “DATA MONITOR” mode.
6. Select “MAS A/F SE-B1” and check indication.

Monitor item	Condition	MAS A/F SE-B1
MAS A/F SE-B1	Ignition switch ON	Approx. 0.4V

7. Activate “INSPECTION MODE 1” (HBC-97) to start engine, and warm up engine to normal operating temperature.
8. Depress the accelerator pedal and keep it.
9. Shift the selector lever to N position with engine running.
   CAUTION:
   Never leave the selector lever in the N position for a long period of time. In the N position, the engine operates but electricity cannot be generated.
10. Select “MAS A/F SE-B1” in “DATA MONITOR” and check indication.

Monitor item	Condition	MAS A/F SE-B1
MAS A/F SE-B1	Idle (Engine is warmed-up to normal operating temperature.)	0.9 - 1.2V

11. Shift the selector lever to P position.
12. Fully depress the accelerator pedal and keep it.
13. Check indication.

Monitor item	Condition	MAS A/F SE-B1
MAS A/F SE-B1	2,500 rpm (Engine is warmed-up to normal operating temperature.)	1.5 - 1.8V

14. Fully release accelerator pedal then fully depress it.
15. Check for linear voltage rise in response to engine being increased to about 2,500 rpm.

Without CONSULT-III

1. Turn ignition switch OFF.
2. Disconnect mass air flow sensor harness connector and reconnect it again.
3. Lift up the vehicle.
4. Turn ignition switch ON.

5. Check the voltage between ECM harness connector and ground.

ECM		Ground	Condition	Voltage
Connector	Terminal			
F13	58 (MAF sensor signal)	Ground	Ignition switch ON	Approx. 0.4V

6. Activate “INSPECTION MODE 1” (HBC-97) to start engine, and warm up engine to normal operating temperature.
7. Depress the accelerator pedal and keep it.
8. Shift the selector lever to N position with engine running.
   CAUTION:
   Never leave the selector lever in the N position for a long period of time. In the N position, the engine operates but electricity cannot be generated.
9. Check the voltage between ECM harness connector and ground.

ECM		Ground	Condition	Voltage
Connector	Terminal			
F13	58 (MAF sensor signal)	Ground	Idle (Engine is warmed-up to normal operating temperature.)	0.9 - 1.2V

10. Shift the selector lever to P position.
11. Fully depress the accelerator pedal and keep it.
12. Check the voltage between ECM harness connector and ground.

ECM		Ground	Condition	Voltage
Connector	Terminal			
F13	58 (MAF sensor signal)	Ground	2,500 rpm (Engine is warmed-up to normal operating temperature.)	1.5 - 1.8V

13. Fully release accelerator pedal then fully depress it.
14. Check for linear voltage rise in response to engine being increased to about 2,500 rpm.

Is the inspection result normal?

YES >> INSPECTION END
NO >> Clean or replace mass air flow sensor.

P0112, P0113 IAT SENSOR

Description

INFOID:0000000003069172

The intake air temperature sensor is built-into mass air flow sensor (1). The sensor detects intake air temperature and transmits a signal to the ECM.
The temperature sensing unit uses a thermistor which is sensitive to the change in temperature. Electrical resistance of the thermistor decreases in response to the temperature rise.

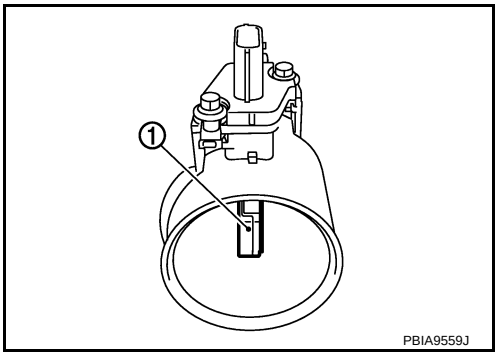

<Reference data>

Intake air temperature °C (°F)	Voltage* V	Resistance kΩ
25 (77)	3.3	1.800 - 2.200
80 (176)	1.2	0.283 - 0.359

*: These data are reference values and are measured between ECM terminal 50 (Intake air temperature sensor) and ground.

CAUTION:

Do not use ECM ground terminals when measuring input/output voltage. Doing so may result in damage to the ECM's transistor. Use a ground other than ECM terminals, such as the ground.

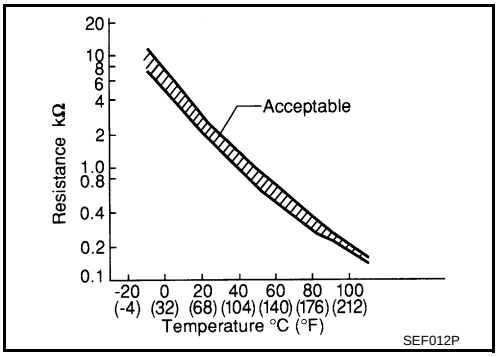

DTC Logic

INFOID:0000000003069173

DTC DETECTION LOGIC

DTC No.	Trouble diagnosis name	DTC detecting condition	Possible cause
P0112	Intake air temperature sensor circuit low input	An excessively low voltage from the sensor is sent to ECM.	• Harness or connectors (The sensor circuit is open or shorted.) • Intake air temperature sensor
P0113	Intake air temperature sensor circuit high input	An excessively high voltage from the sensor is sent to ECM.	

DTC CONFIRMATION PROCEDURE

1. PRECONDITIONING

If DTC Confirmation Procedure has been previously conducted, always perform the following before conducting the next test.
1. Turn ignition switch OFF and wait at least 10 seconds.
2. Turn ignition switch ON.
3. Turn ignition switch OFF and wait at least 10 seconds.

>> GO TO 2.

2. PERFORM DTC CONFIRMATION PROCEDURE

1. Turn ignition switch ON and wait at least 5 seconds.
2. Check 1st trip DTC.

Is 1st trip DTC detected?

YES >> Go to EC-161, "Diagnosis Procedure".
NO >> INSPECTION END

Diagnosis Procedure

INFOID:0000000003069174

1. CHECK GROUND CONNECTION

1. Turn ignition switch OFF.
2. Check ground connection E9. Refer to Ground Inspection in GI-45, "Circuit Inspection".

Is the inspection result normal?

YES >> GO TO 2.
NO >> Repair or replace ground connection.

2. CHECK INTAKE AIR TEMPERATURE SENSOR POWER SUPPLY CIRCUIT

1. Disconnect mass air flow sensor (with intake air temperature sensor) harness connector.
2. Turn ignition switch ON.
3. Check the voltage between mass air flow sensor harness connector and ground.

MAF sensor		Ground	Voltage
Connector	Terminal		
F31	2	Ground	Approx. 5V

Is the inspection result normal?

YES >> GO TO 3.
NO >> Repair open circuit or short to ground or short to power in harness or connectors.

3. CHECK INTAKE AIR TEMPERATURE SENSOR GROUND CIRCUIT FOR OPEN AND SHORT

1. Turn ignition switch OFF.
2. Disconnect ECM harness connector.
3. Check the continuity between mass air flow sensor harness connector and ECM harness connector.

MAF sensor		ECM		Continuity
Connector	Terminal	Connector	Terminal	
F31	1	F13	56	Existed

4. Also check harness for short to ground and short to power.

Is the inspection result normal?

YES >> GO TO 4.
NO >> Repair open circuit or short to ground or short to power in harness or connectors.

4. CHECK INTAKE AIR TEMPERATURE SENSOR

Refer to EC-161, "Component Inspection".

Is the inspection result normal?

YES >> GO TO 5.
NO >> Replace mass air flow sensor (with intake air temperature sensor).

5. CHECK INTERMITTENT INCIDENT

Refer to GI-42, "Intermittent Incident".

>> INSPECTION END

Component Inspection

INFOID:0000000003069175

1. CHECK INTAKE AIR TEMPERATURE SENSOR

1. Turn ignition switch OFF.
2. Disconnect mass air flow sensor harness connector.
3. Check resistance between mass air flow sensor terminals as follows.

Terminals	Condition		Resistance kΩ
1 and 2	Intake air temperature °C (°F)	25 (77)	1.800 - 2.200

Is the inspection result normal?

YES >> INSPECTION END
NO >> Replace mass air flow sensor (with intake air temperature sensor).

P0116 ECT SENSOR

Description

INFOID:0000000003103923

The engine coolant temperature sensor is used to detect the engine coolant temperature. The sensor modifies a voltage signal from the ECM. The modified signal returns to the ECM as the engine coolant temperature input. The sensor uses a thermistor which is sensitive to the change in temperature. The electrical resistance of the thermistor decreases as temperature increases.

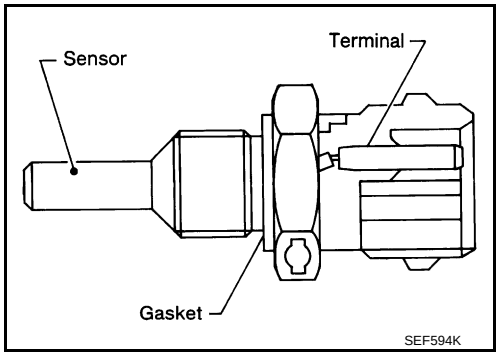

<Reference data>

Engine coolant temperature °C (°F)	Voltage* V	Resistance kΩ
–10 (14)	4.4	7.0 - 11.4
20 (68)	3.5	2.37 - 2.63
50 (122)	2.2	0.68 - 1.00
90 (194)	0.9	0.236 - 0.260

*: These data are reference values and are measured between ECM terminal 46 (Engine coolant temperature sensor) and ground.

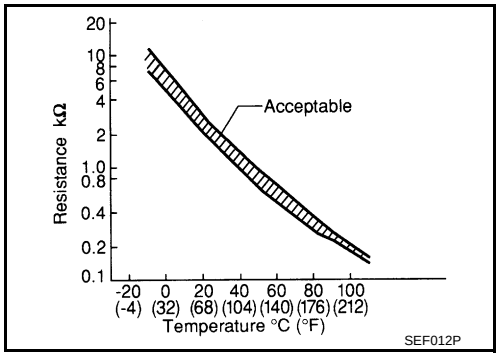

CAUTION:

Do not use ECM ground terminals when measuring input/output voltage. Doing so may result in damage to the ECM's transistor. Use a ground other than ECM terminals, such as the ground.

DTC Logic

INFOID:0000000003103924

DTC DETECTION LOGIC

NOTE:

If DTC P0116 is displayed with P0117 or P0118, first perform the trouble diagnosis for DTC P0117 or P0118. Refer to EC-166, "DTC Logic".

DTC No.	Trouble diagnosis name	DTC detecting condition	Possible cause
P0116	Engine coolant temperature sensor circuit range/performance	Engine coolant temperature signal from engine coolant temperature sensor does not fluctuate, even when some time has passed after starting the engine with pre-warming up condition.	• Harness or connectors (High or low resistance in the circuit) • Engine coolant temperature sensor

DTC CONFIRMATION PROCEDURE

1. PRECONDITIONING

If DTC Confirmation Procedure has been previously conducted, always perform the following before conducting the next test.

1. Turn ignition switch OFF and wait at least 10 seconds.
2. Turn ignition switch ON.
3. Turn ignition switch OFF and wait at least 10 seconds.

TEST CONDITON:

Before performing the following procedure, do not fill with the fuel.

>> GO TO 2.

2. PERFORM DTC CONFIRMATION PROCEDURE

1. Activate “INSPECTION MODE 1” (HBC-97) to start engine, and warm it up to normal operating temperature.
2. Rev engine up to 2,000 rpm for more than 10 minutes.
3. Move the vehicle to a cool place, then stop engine and turn ignition switch OFF.
4. Check resistance between “fuel level sensor unit and fuel pump” terminals 4 and 5.
5. Soak the vehicle.
   CAUTION:
   Never turn ignition switch ON during the soaking time.
   NOTE:
   Soak time changes depending on ambient air temperature. It may take several hours.
6. Repeat step 4.
7. Check that resistance value measured at step 6 is 0.5 kΩ higher than resistance value measured at step 4.
   If resistance value is more than 0.5 kΩ, go to the following steps.
   If resistance value is less than 0.5 kΩ, go to step 5.
8. Activate “INSPECTION MODE 1” (HBC-97) to start engine, and let it idle for 5 minutes.
9. Check 1st trip DTC.

Is 1st trip DTC detected?

YES >> EC-164, "Diagnosis Procedure"
NO >> INSPECTION END

Diagnosis Procedure

INFOID:0000000003103925

1. CHECK GROUND CONNECTION

1. Turn ignition switch OFF.
2. Check ground connection E9. Refer to Ground Inspection in GI-45, "Circuit Inspection".

Is the inspection result normal?

YES >> GO TO 2.
NO >> Repair or replace ground connection.

2. CHECK ENGINE COOLANT TEMPERATURE SENSOR

Refer to EC-164, "Component Inspection".

Is the inspection result normal?

YES >> GO TO 3.
NO >> Replace engine coolant temperature sensor.

3. CHECK INTERMITTENT INCIDENT

Refer to GI-42, "Intermittent Incident".

>> INSPECTION END

Component Inspection

INFOID:0000000003103926

1. CHECK ENGINE COOLANT TEMPERATURE SENSOR

1. Turn ignition switch OFF.
2. Disconnect engine coolant temperature sensor harness connector.
3. Remove engine coolant temperature sensor.
4. Check resistance between engine coolant temperature sensor terminals by heating with hot water as shown in the figure.

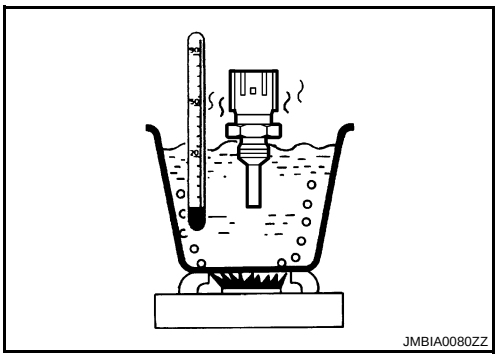

Terminals	Condition		Resistance
1 and 2	Temperature °C (°F)	20 (68)	2.37 - 2.63 kΩ
		50 (122)	0.68 - 1.00 kΩ
		90 (194)	0.236 - 0.260 kΩ

Is the inspection result normal?

YES >> INSPECTION END

NO >> Replace engine coolant temperature sensor.

P0117, P0118 ECT SENSOR

Description

INFOID:0000000003069176

The engine coolant temperature sensor is used to detect the engine coolant temperature. The sensor modifies a voltage signal from the ECM. The modified signal returns to the ECM as the engine coolant temperature input. The sensor uses a thermistor which is sensitive to the change in temperature. The electrical resistance of the thermistor decreases as temperature increases.

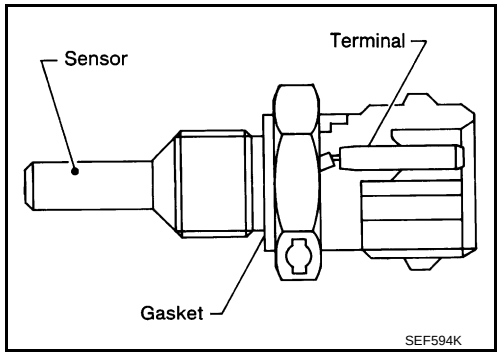

<Reference data>

Engine coolant temperature °C (°F)	Voltage* V	Resistance kΩ
–10 (14)	4.4	7.0 - 11.4
20 (68)	3.5	2.37 - 2.63
50 (122)	2.2	0.68 - 1.00
90 (194)	0.9	0.236 - 0.260

*: These data are reference values and are measured between ECM terminal 46 (Engine coolant temperature sensor) and ground.

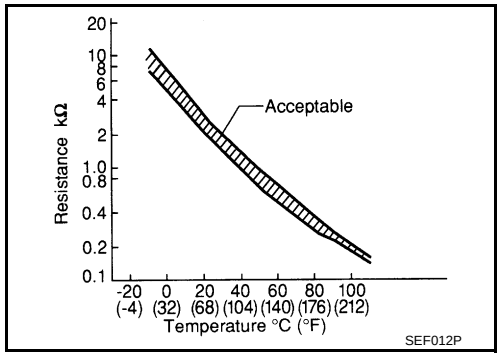

CAUTION:

Do not use ECM ground terminals when measuring input/output voltage. Doing so may result in damage to the ECM's transistor. Use a ground other than ECM terminals, such as the ground.

DTC Logic

INFOID:0000000003069177

DTC DETECTION LOGIC

DTC No.	Trouble Diagnosis Name	DTC Detecting Condition	Possible Cause
P0117	Engine coolant temperature sensor circuit low input	An excessively low voltage from the sensor is sent to ECM.	• Harness or connectors (The sensor circuit is open or shorted.) • Engine coolant temperature sensor
P0118	Engine coolant temperature sensor circuit high input	An excessively high voltage from the sensor is sent to ECM.	

DTC CONFIRMATION PROCEDURE

1. PRECONDITIONING

If DTC Confirmation Procedure has been previously conducted, always perform the following before conducting the next test.

1. Turn ignition switch OFF and wait at least 10 seconds.
2. Turn ignition switch ON.
3. Turn ignition switch OFF and wait at least 10 seconds.

>> GO TO 2.

2. PERFORM DTC CONFIRMATION PROCEDURE

1. Turn ignition switch ON and wait at least 5 seconds.
2. Check DTC.

Is DTC detected?

YES >> Go to EC-167, "Diagnosis Procedure".
NO >> INSPECTION END

Diagnosis Procedure

INFOID:0000000003069178

1. CHECK GROUND CONNECTION

1. Turn ignition switch OFF.
2. Check ground connection E9. Refer to Ground Inspection in GI-45, "Circuit Inspection".

Is the inspection result normal?

YES >> GO TO 2.
NO >> Repair or replace ground connection.

2. CHECK ECT SENSOR POWER SUPPLY CIRCUIT

1. Disconnect engine coolant temperature (ECT) sensor harness connector.
2. Turn ignition switch ON.
3. Check the voltage between ECT sensor harness connector and ground.

ECT sensor		Ground	Voltage
Connector	Terminal		
F11	1	Ground	Approx. 5V

Is the inspection result normal?

YES >> GO TO 3.
NO >> Repair open circuit or short to ground or short to power in harness or connectors.

3. CHECK ECT SENSOR GROUND CIRCUIT FOR OPEN AND SHORT

1. Turn ignition switch OFF.
2. Disconnect ECM harness connector.
3. Check the continuity between ECT sensor harness connector and ECM harness connector.

ECT sensor		ECM		Continuity
Connector	Terminal	Connector	Terminal	
F11	2	F13	52	Existed

4. Also check harness for short to ground and short to power.

Is the inspection result normal?

YES >> GO TO 4.
NO >> Repair open circuit or short to ground or short to power in harness or connectors.

4. CHECK ENGINE COOLANT TEMPERATURE SENSOR

Refer to EC-167, "Component Inspection".

Is the inspection result normal?

YES >> GO TO 5.
NO >> Replace engine coolant temperature sensor.

5. CHECK INTERMITTENT INCIDENT

Refer to GI-42, "Intermittent Incident".

>> INSPECTION END

Component Inspection

INFOID:0000000003069179

1. CHECK ENGINE COOLANT TEMPERATURE SENSOR

1. Turn ignition switch OFF.
2. Disconnect engine coolant temperature sensor harness connector.
3. Remove engine coolant temperature sensor.

4. Check resistance between engine coolant temperature sensor terminals by heating with hot water as shown in the figure.

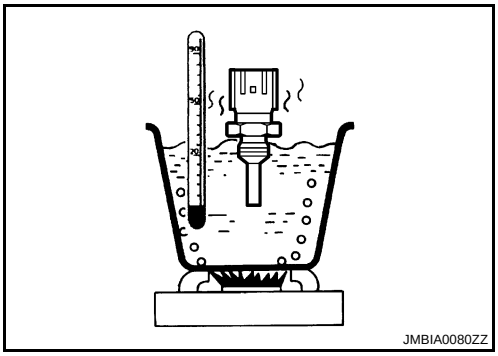

Terminals	Condition		Resistance
1 and 2	Temperature °C (°F)	20 (68)	2.37 - 2.63 kΩ
		50 (122)	0.68 - 1.00 kΩ
		90 (194)	0.236 - 0.260 kΩ

Is the inspection result normal?

YES >> INSPECTION END
NO >> Replace engine coolant temperature sensor.

P0122, P0123 TP SENSOR

Description

INFOID:0000000003069180

Electric throttle control actuator consists of throttle control motor, throttle position sensor, etc. The throttle position sensor responds to the throttle valve movement.
The throttle position sensor has two sensors. These sensors are a kind of potentiometers which transform the throttle valve position into output voltage, and emit the voltage signal to the ECM. In addition, these sensors detect the opening and closing speed of the throttle valve and feed the voltage signals to the ECM. The ECM judges the current opening angle of the throttle valve from these signals and the ECM controls the throttle control motor to make the throttle valve opening angle properly in response to driving condition.

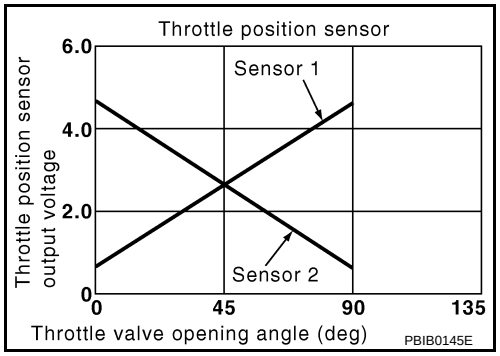

DTC Logic

INFOID:0000000003069181

DTC DETECTION LOGIC

NOTE:
If DTC P0122 or P0123 is displayed with DTC P0643, first perform the trouble diagnosis for DTC P0643. Refer to EC-316, "DTC Logic".

DTC No.	Trouble diagnosis name	DTC detecting condition	Possible cause
P0122	Throttle position sensor 2 circuit low input	An excessively low voltage from the TP sensor 2 is sent to ECM.	• Harness or connectors (TP sensor 2 circuit is open or shorted.) • Electric throttle control actuator (TP sensor 2)
P0123	Throttle position sensor 2 circuit high input	An excessively high voltage from the TP sensor 2 is sent to ECM.	

DTC CONFIRMATION PROCEDURE

1. PRECONDITIONING

If DTC Confirmation Procedure has been previously conducted, always perform the following before conducting the next test.
1. Turn ignition switch OFF and wait at least 10 seconds.
2. Turn ignition switch ON.
3. Turn ignition switch OFF and wait at least 10 seconds.

TESTING CONDITION:
Before performing the following procedure, confirm that battery voltage is more than 8V at idle.

>> GO TO 2.

2. PERFORM DTC CONFIRMATION PROCEDURE

1. Turn ignition switch ON (READY).
2. Depress the accelerator pedal to start engine, then keep engine running for at least 1 second.
3. Check DTC.

Is DTC detected?

YES >> Go to EC-169, "Diagnosis Procedure".
NO >> INSPECTION END

Diagnosis Procedure

INFOID:0000000003069182

1. CHECK GROUND CONNECTION

1. Turn ignition switch OFF.
2. Check ground connection E9. Refer to Ground Inspection in GI-45, "Circuit Inspection".

Is the inspection result normal?

YES >> GO TO 2.
NO >> Repair or replace ground connection.

2. CHECK THROTTLE POSITION SENSOR 2 POWER SUPPLY CIRCUIT

1. Disconnect electric throttle control actuator harness connector.
2. Turn ignition switch ON.
3. Check the voltage between electric throttle control actuator harness connector and ground.

Electric throttle control actuator		Ground	Voltage
Connector	Terminal		
F57	1	Ground	Approx. 5V

Is the inspection result normal?

YES >> GO TO 3.
NO >> Repair open circuit or short to ground or short to power in harness or connectors.

3. CHECK THROTTLE POSITION SENSOR 2 GROUND CIRCUIT FOR OPEN AND SHORT

1. Turn ignition switch OFF.
2. Disconnect ECM harness connector.
3. Check the continuity between electric throttle control actuator harness connector and ECM harness connector.

Electric throttle control actuator		ECM		Continuity
Connector	Terminal	Connector	Terminal	
F57	4	F13	36	Existed

4. Also check harness for short to ground and short to power.

Is the inspection result normal?

YES >> GO TO 4.
NO >> Repair open circuit or short to ground or short to power in harness or connectors.

4. CHECK THROTTLE POSITION SENSOR 2 INPUT SIGNAL CIRCUIT FOR OPEN AND SHORT

1. Check the continuity between electric throttle control actuator harness connector and ECM harness connector.

Electric throttle control actuator		ECM		Continuity
Connector	Terminal	Connector	Terminal	
F57	3	F13	38	Existed

2. Also check harness for short to ground and short to power.

Is the inspection result normal?

YES >> GO TO 5.
NO >> Repair open circuit or short to ground or short to power in harness or connectors.

5. CHECK THROTTLE POSITION SENSOR

Refer to EC-171, "Component Inspection".

Is the inspection result normal?

YES >> GO TO 7.
NO >> GO TO 6.

6. REPLACE ELECTRIC THROTTLE CONTROL ACTUATOR

1. Replace electric throttle control actuator.
2. Go to EC-171, "Special Repair Requirement".

>> INSPECTION END

7. CHECK INTERMITTENT INCIDENT

Refer to GI-42, "Intermittent Incident".

>> INSPECTION END

Component Inspection

INFOID:0000000003069183

1. CHECK THROTTLE POSITION SENSOR

1. Turn ignition switch OFF.
2. Reconnect all harness connectors disconnected.
3. Perform EC-15, "THROTTLE VALVE CLOSED POSITION LEARNING : Special Repair Requirement".
4. Turn ignition switch ON.
5. Set shift lever to D position.
6. Check the voltage between ECM harness connector and ground.

ECM		Ground	Condition		Voltage
Connector	Terminal				
F13	37 (TP sensor 1 signal)	Ground	Accelerator pedal	Fully released	More than 0.36V
				Fully depressed	Less than 4.75V
	38 (TP sensor 2 signal)			Fully released	Less than 4.75V
				Fully depressed	More than 0.36V

Is the inspection result normal?

YES >> INSPECTION END
NO >> GO TO 2.

2. REPLACE ELECTRIC THROTTLE CONTROL ACTUATOR

1. Replace electric throttle control actuator.
2. Go to EC-171, "Special Repair Requirement".

>> INSPECTION END

Special Repair Requirement

INFOID:0000000003069184

1. PERFORM THROTTLE VALVE CLOSED POSITION LEARNING

Refer to EC-15, "THROTTLE VALVE CLOSED POSITION LEARNING : Special Repair Requirement"

>> GO TO 2.

2. PERFORM IDLE AIR VOLUME LEARNING

Refer to EC-16, "IDLE AIR VOLUME LEARNING : Special Repair Requirement"

>> END

P0125 ECT SENSOR

Description

INFOID:0000000003069185

The engine coolant temperature sensor is used to detect the engine coolant temperature. The sensor modifies a voltage signal from the ECM. The modified signal returns to the ECM as the engine coolant temperature input. The sensor uses a thermistor which is sensitive to the change in temperature. The electrical resistance of the thermistor decreases as temperature increases.

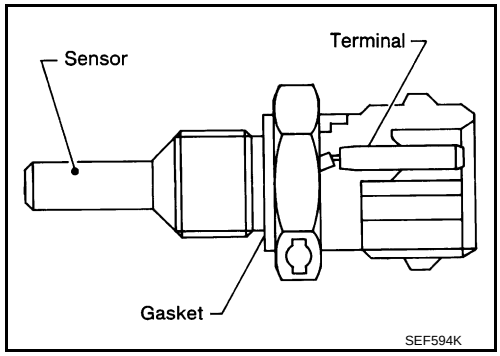

<Reference data>

Engine coolant temperature °C (°F)	Voltage* V	Resistance kΩ
–10 (14)	4.4	7.0 - 11.4
20 (68)	3.5	2.37 - 2.63
50 (122)	2.2	0.68 - 1.00
90 (194)	0.9	0.236 - 0.260

*: These data are reference values and are measured between ECM terminal 46 (Engine coolant temperature sensor) and ground.

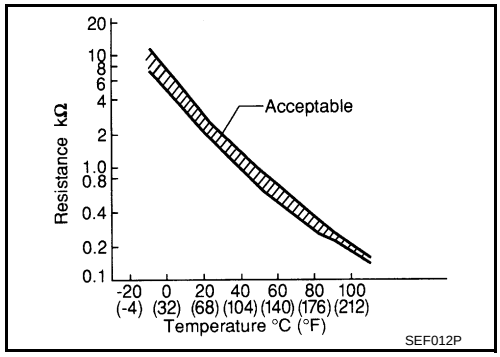

CAUTION:

Do not use ECM ground terminals when measuring input/output voltage. Doing so may result in damage to the ECM's transistor. Use a ground other than ECM terminals, such as the ground.

DTC Logic

INFOID:0000000003069186

DTC DETECTION LOGIC

NOTE:

- **If DTC P0125 is displayed with P0117 or P0118, first perform the trouble diagnosis for DTC P0117 or P0118. Refer to EC-166, "DTC Logic".**
- **If DTC P0125 is displayed with P0116, first perform the trouble diagnosis for DTC P0116. Refer to EC-163, "DTC Logic".**

DTC No.	Trouble diagnosis name	DTC detecting condition	Possible cause
P0125	Insufficient engine coolant temperature for closed loop fuel control	• Voltage sent to ECM from the sensor is not practical, even when some time has passed after starting the engine. • Engine coolant temperature is insufficient for closed loop fuel control.	• Harness or connectors (High resistance in the circuit) • Engine coolant temperature sensor • Thermostat

DTC CONFIRMATION PROCEDURE

1. PRECONDITIONING

If DTC Confirmation Procedure has been previously conducted, always perform the following before conducting the next test.

1. Turn ignition switch OFF and wait at least 10 seconds.
2. Turn ignition switch ON.
3. Turn ignition switch OFF and wait at least 10 seconds.

>> GO TO 2.

2. CHECK ENGINE COOLANT TEMPERATURE SENSOR FUNCTION

With CONSULT-III
1. Turn ignition switch ON.
2. Select “DATA MONITOR” mode with CONSULT-III.
3. Check that “COOLAN TEMP/S” is above 10°C (50°F).

With GST
Follow the procedure “With CONSULT-III” above.

Is it above 10°C (50°F)?

YES >> INSPECTION END
NO >> GO TO 3.

3. PERFORM DTC CONFIRMATION PROCEDURE

With CONSULT-III
1. Activate “INSPECTION MODE 1” (HBC-97) to start engine, and run engine for 65 minutes at idle speed.
2. Check 1st tip DTC.

If “COOLAN TEMP/S” increases to more than 10°C (50°F) within 65 minutes, turn ignition switch OFF because the test result will be OK.

CAUTION:
Be careful not to overheat engine.

With GST
Follow the procedure “With CONSULT-III” above.

Is 1st trip DTC detected?

YES >> EC-173, "Diagnosis Procedure"
NO >> INSPECTION END

Diagnosis Procedure

INFOID:0000000003069187

1. CHECK GROUND CONNECTION

1. Turn ignition switch OFF.
2. Check ground connection E9. Refer to Ground Inspection in GI-45, "Circuit Inspection".

Is the inspection result normal?

YES >> GO TO 2.
NO >> Repair or replace ground connection.

2. CHECK ENGINE COOLANT TEMPERATURE SENSOR

Refer to EC-173, "Component Inspection".

Is the inspection result normal?

YES >> GO TO 3.
NO >> Replace engine coolant temperature sensor.

3. CHECK THERMOSTAT OPERATION

When the engine is cold [lower than 70°C (158°F)] condition, grasp lower radiator hose and confirm the engine coolant does not flow.

Is the inspection result normal?

YES >> GO TO 4.
NO >> Repair or replace thermostat. Refer to CO-20, "Removal and Installation".

4. CHECK INTERMITTENT INCIDENT

Refer to GI-42, "Intermittent Incident".

>> INSPECTION END

Component Inspection

INFOID:0000000003069188

1. CHECK ENGINE COOLANT TEMPERATURE SENSOR

1. Turn ignition switch OFF.

2. Disconnect engine coolant temperature sensor harness connector.
3. Remove engine coolant temperature sensor.
4. Check resistance between engine coolant temperature sensor terminals by heating with hot water as shown in the figure.

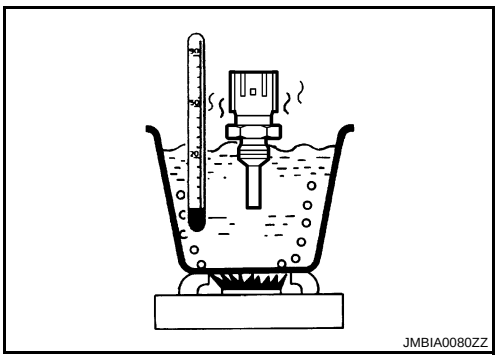

Terminals	Condition		Resistance
1 and 2	Temperature °C (°F)	20 (68)	2.37 - 2.63 kΩ
		50 (122)	0.68 - 1.00 kΩ
		90 (194)	0.236 - 0.260 kΩ

Is the inspection result normal?

YES >> INSPECTION END
NO >> Replace engine coolant temperature sensor.

P0127 IAT SENSOR

Description

INFOID:0000000003069189

The intake air temperature sensor is built-into mass air flow sensor (1). The sensor detects intake air temperature and transmits a signal to the ECM.
The temperature sensing unit uses a thermistor which is sensitive to the change in temperature. Electrical resistance of the thermistor decreases in response to the temperature rise.

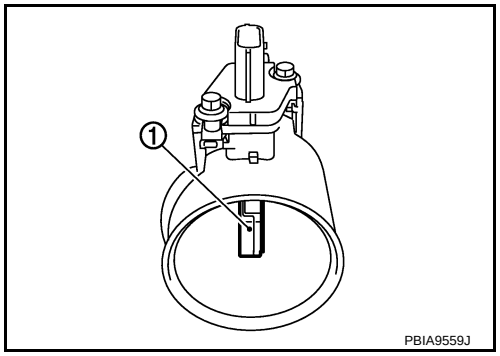

<Reference data>

Intake air temperature °C (°F)	Voltage* V	Resistance kΩ
25 (77)	3.3	1.800 - 2.200
80 (176)	1.2	0.283 - 0.359

*: These data are reference values and are measured between ECM terminal 50 (Intake air temperature sensor) and ground.

CAUTION:

Do not use ECM ground terminals when measuring input/output voltage. Doing so may result in damage to the ECM's transistor. Use a ground other than ECM terminals, such as the ground.

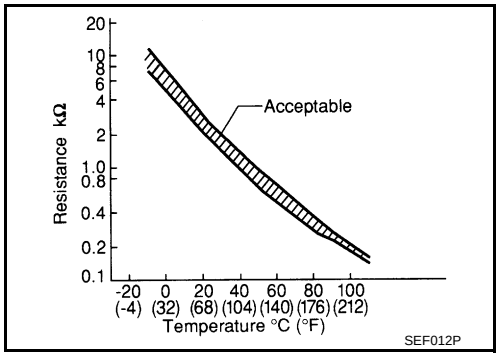

DTC Logic

INFOID:0000000003069190

DTC DETECTION LOGIC

DTC No.	Trouble diagnosis name	DTC detecting condition	Possible cause
P0127	Intake air temperature too high	Rationally incorrect voltage from the sensor is sent to ECM, compared with the voltage signal from engine coolant temperature sensor.	• Harness or connectors (The sensor circuit is open or shorted) • Intake air temperature sensor

DTC CONFIRMATION PROCEDURE

1. PRECONDITIONING

If DTC Confirmation Procedure has been previously conducted, always perform the following before conducting the next test.
1. Turn ignition switch OFF and wait at least 10 seconds.
2. Turn ignition switch ON.
3. Turn ignition switch OFF and wait at least 10 seconds.

TESTING CONDITION:
This test may be conducted with the drive wheels lifted in the shop or by driving the vehicle. If this test is conducted with the drive wheels lifted, activate “INPSECTION MODE 1” (HBC-97). If a road test is expected to be easier, it is unnecessary to lift up the vehicle.

>> GO TO 2.

2. PERFORM DTC CONFIRMATION PROCEDURE

With CONSULT-III
1. Wait until engine coolant temperature is less than 90°C (194°F)
- Turn ignition switch ON.

- Select “DATA MONITOR” mode with CONSULT-III.
- Check the engine coolant temperature.
- If the engine coolant temperature is not less than 90°C (194°F), turn ignition switch OFF and cool down engine.

NOTE:
Perform the following steps before engine coolant temperature is above 90°C (194°F).

2. Turn ignition switch ON.
3. Select “DATA MONITOR” mode with CONSULT-III.
4. Turn ignition switch ON (READY).
5. Hold vehicle speed at more than 70 km/h (43 MPH) for 100 consecutive seconds.
   CAUTION:
   Always drive vehicle at a safe speed.
   NOTE:
   Never fully release accelerator pedal during the cruising.
6. Check 1st trip DTC.

With GST
Follow the procedure “With CONSULT-III” above.

Is 1st trip DTC detected?

YES >> Go to EC-176, "Diagnosis Procedure".
NO >> INSPECTION END

Diagnosis Procedure

INFOID:0000000003069191

1. CHECK GROUND CONNECTION

1. Turn ignition switch OFF.
2. Check ground connection E9. Refer to Ground Inspection in GI-45, "Circuit Inspection".

Is the inspection result normal?

YES >> GO TO 2.
NO >> Repair or replace ground connection.

2. CHECK INTAKE AIR TEMPERATURE SENSOR

Refer to EC-176, "Component Inspection".

Is the inspection result normal?

YES >> GO TO 3.
NO >> Replace mass air flow sensor (with intake air temperature sensor).

3. CHECK INTERMITTENT INCIDENT

Refer to GI-42, "Intermittent Incident".

>> INSPECTION END

Component Inspection

INFOID:0000000003069192

1. CHECK INTAKE AIR TEMPERATURE SENSOR

1. Turn ignition switch OFF.
2. Disconnect mass air flow sensor harness connector.
3. Check resistance between mass air flow sensor terminals as follows.

Terminals	Condition		Resistance kΩ
1 and 2	Intake air temperature °C (°F)	25 (77)	1.800 - 2.200

Is the inspection result normal?

YES >> INSPECTION END
NO >> Replace mass air flow sensor (with intake air temperature sensor).

P0128 THERMOSTAT FUNCTION

DTC Logic

INFOID:0000000003069193

DTC DETECTION LOGIC

NOTE:
If DTC P0128 is displayed with DTC P0300, P0301, P0302, P0303 or P0304, first perform the trouble diagnosis for DTC P0300, P0301, P0302, P0303, P0304. Refer to EC-242, "DTC Logic".
Engine coolant temperature has not risen enough to open the thermostat even though the engine has run long enough.
This is due to a leak in the seal or the thermostat stuck open.

DTC No.	Trouble diagnosis name	DTC detecting condition	Possible cause
P0128	Thermostat function	The engine coolant temperature does not reach to specified temperature even though the engine has run long enough.	• Thermostat • Leakage from sealing portion of thermostat • Engine coolant temperature sensor

DTC CONFIRMATION PROCEDURE

1. PRECONDITIONING

If DTC Confirmation Procedure has been previously conducted, always perform the following before conducting the next test.
1. Turn ignition switch OFF and wait at least 10 seconds.
2. Turn ignition switch ON.
3. Turn ignition switch OFF and wait at least 10 seconds.

TESTING CONDITION:
- **For best results, perform at ambient temperature of –10°C (14°F) or higher.**
- **For best results, perform at engine coolant temperature of –10°C (14°F) to 52°C (126°F).**
- **Before performing the following procedure, do not fill with the fuel.**

>> GO TO 2.

2. PERFORM DTC CONFIRMATION PROCEDURE

With CONSULT-III
1. Turn A/C switch OFF.
2. Turn blower fan switch OFF.
3. Turn ignition switch ON.
4. Select “COOLAN TEMP/S” in “DATA MONITOR” mode with CONSULT-III.
5. Check the indication of “COOLAN TEMP/S”
   If it is below 52°C (126°F), go to following step.
   If it is above 52°C (126°F), cool down the engine to less than 52°C (126°F). Then go to next steps.
6. Activate “INSPECTION MODE 1” (HBC-97) to start engine.
7. Wait at idle for at least 30 minutes.
   If “COOLAN TEMP/S” increases to more than 71°C (160°F) within 30 minutes, turn ignition switch OFF because the test result will be OK.
8. Check 1st trip DTC.

With GST
Follow the procedure “With CONSULT-III” above.

Is 1st trip DTC detected?

YES >> Go to EC-177, "Diagnosis Procedure".
NO >> INSPECTION END

Diagnosis Procedure

INFOID:0000000003069194

1. CHECK ENGINE COOLANT TEMPERATURE SENSOR

Refer to EC-178, "Component Inspection".

Is the inspection result normal?

YES >> GO TO 2.
NO >> Replace engine coolant temperature sensor.

2. CHECK THERMOSTAT

Check thermostat. Refer to CO-20, "Removal and Installation".

Is the inspection result normal?

YES >> INSPECTION END
NO >> Replace thermostat.

Component Inspection

INFOID:0000000003069195

1. CHECK ENGINE COOLANT TEMPERATURE SENSOR

1. Turn ignition switch OFF.
2. Disconnect engine coolant temperature sensor harness connector.
3. Remove engine coolant temperature sensor.
4. Check resistance between engine coolant temperature sensor terminals by heating with hot water as shown in the figure.

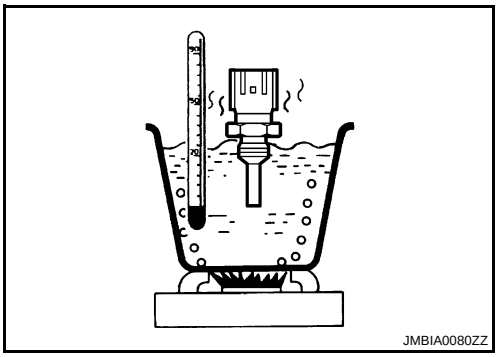

Terminals	Condition		Resistance
1 and 2	Temperature °C (°F)	20 (68)	2.37 - 2.63 kΩ
		50 (122)	0.68 - 1.00 kΩ
		90 (194)	0.236 - 0.260 kΩ

Is the inspection result normal?

YES >> INSPECTION END
NO >> Replace engine coolant temperature sensor.

P0130 A/F SENSOR 1

Description

INFOID:0000000003069196

The air fuel ratio (A/F) sensor 1 is a planar one-cell limit current sensor. The sensor element of the A/F sensor 1 is composed an electrode layer, which transports ions. It has a heater in the element.
The sensor is capable of precise measurement λ = 1, but also in the lean and rich range. Together with its control electronics, the sensor outputs a clear, continuous signal throughout a wide λ range.
The exhaust gas components diffuse through the diffusion layer at the sensor cell. An electrode layer is applied voltage, and this current relative oxygen density in lean. Also this current relative hydrocarbon density in rich.
Therefore, the A/F sensor 1 is able to indicate air fuel ratio by this electrode layer of current. In addition, a heater is integrated in the sensor to ensure the required operating temperature of about 800°C (1,472°F).

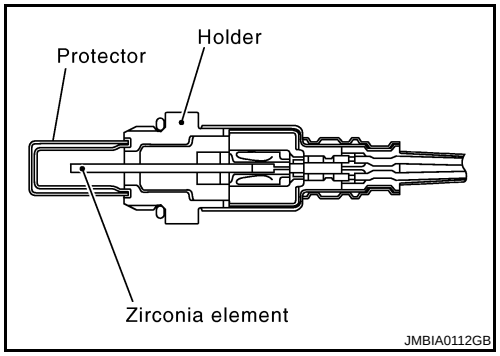

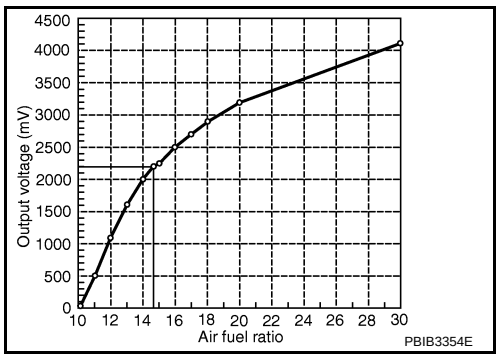

DTC Logic

INFOID:0000000003069197

DTC DETECTION LOGIC

To judge the malfunction, the diagnosis checks that the A/F signal computed by ECM from the A/F sensor 1 signal fluctuates according to fuel feedback control.

DTC No.	Trouble diagnosis name	DTC detecting condition		Possible Cause
P0130	Air fuel ratio (A/F) sensor 1 circuit	A)	The A/F signal computed by ECM from the A/F sensor 1 signal is constantly in the range other than approx. 2.2V.	• Harness or connectors (The A/F sensor 1 circuit is open or shorted.) • A/F sensor 1
		B)	The A/F signal computed by ECM from the A/F sensor 1 signal is constantly approx. 2.2V.	

DTC CONFIRMATION PROCEDURE

1. PRECONDITIONING

If DTC Confirmation Procedure has been previously conducted, always perform the following before conducting the next test.
1. Turn ignition switch OFF and wait at least 10 seconds.
2. Turn ignition switch ON.
3. Turn ignition switch OFF and wait at least 10 seconds.

TESTING CONDITION:
Before performing the following procedure, confirm that battery voltage is more than 11V at idle.

>> GO TO 2.

2. PERFORM DTC CONFIRMATION PROCEDURE FOR MALFUNCTION A

With CONSULT-III
1. Activate “INSPECTION MODE 1” (HBC-97) to start engine, and warm up engine to normal operating temperature.
2. Let it idle for 2 minutes.

3. Check 1st trip DTC.

Is 1st trip DTC detected?

YES >> Go to EC-181, "Diagnosis Procedure".
NO-1 >> With CONSULT-III: GO TO 3.
NO-2 >> Without CONSULT-III: GO TO 7.

3. CHECK AIR FUEL RATIO (A/F) SENSOR 1 FUNCTION

1. Select “A/F SEN1 (B1)” in “DATA MONITOR” mode with CONSULT-III.
2. Check “A/F SEN1 (B1)”indication.

Does the indication fluctuates around 2.2V?

YES >> GO TO 4.
NO >> Go to EC-181, "Diagnosis Procedure".

4. PERFORM DTC CONFIRMATION PROCEDURE FOR MALFUNCTION B-I

1. Turn ignition switch OFF and wait at least 10 seconds.
2. Turn ignition switch ON (READY).
3. Select “A/F SEN1 (B1) P1276” of “A/F SEN1” in “DTC WORK SUPPORT” mode with CONSULT-III.
4. Touch “START”.
5. When the following conditions are met, “TESTING” will be displayed on the CONSULT-III screen.

ENG SPEED	950 - 2,600 rpm
VHCL SPEED SE	More than 70 km/h (43 mph)
B/FUEL SCHDL	1.0 - 16.0 msec
Shift lever	D position

If “TESTING” is not displayed after 20 seconds, retry from step 2.
CAUTION:
Always drive vehicle in safe manner according to traffic conditions and obey all traffic laws.

Is “TESTING” displayed on CONSULT-III screen?

YES >> GO TO 5.
NO >> Check A/F sensor 1 function again. GO TO 3.

5. PERFORM DTC CONFIRMATION PROCEDURE FOR MALFUNCTION B-II

Release accelerator pedal fully.
NOTE:
Never apply brake during releasing the accelerator pedal.

Which does “TESTING” change to?

COMPLETED>>GO TO 6.
OUT OF CONDITION>>Retry DTC CONFIRMATION PROCEDURE. GO TO 4.

6. PERFORM DTC CONFIRMATION PROCEDURE FOR MALFUNCTION B-III

Touch “SELF-DIAG RESULT”

Which is displayed on CONSULT-III screen?

YES >> INSPECTION END
NO >> Go to EC-181, "Diagnosis Procedure".

7. PERFORM COMPONENT FUNCTION CHECK FOR MALFUNCTION B

Perform Component Function Check. Refer to EC-181, "Component Function Check".
NOTE:
Use component function check to check the overall function of the A/F sensor 1 circuit. During this check, a 1st trip DTC might not be confirmed.

Is the inspection result normal?

YES >> INSPECTION END
NO >> Go to EC-181, "Diagnosis Procedure".

Component Function Check

INFOID:0000000003069198

1. PERFORM COMPONENT FUNCTION CHECK

With GST

CAUTION:

Always drive vehicle in safe manner according to traffic conditions and obey all traffic laws.

1. Activate “INSPECTION MODE 1” (HBC-97) to start engine, and warm up engine to normal operating temperature.
2. Turn ignition switch OFF and wait at least 10 seconds.
3. Turn ignition switch ON (READY).
4. Drive the vehicle at a speed of 80 km/h (50 MPH) for a few minutes.
5. Set D position, then release the accelerator pedal fully until the vehicle speed decreases to 50 km/h (30 MPH).
   NOTE:
   Never apply brake during releasing the accelerator pedal.
6. Repeat steps 4 to 5 for five times.
7. Stop the vehicle and turn ignition switch OFF.
8. Turn ignition switch ON.
9. Turn ignition switch OFF and wait at least 10 seconds.
10. Turn ignition switch ON (READY).
11. Repeat steps 4 to 5 for five times.
12. Stop the vehicle and connect GST to the vehicle.
13. Check 1st trip DTC.

Is 1st trip DTC detected?

YES >> Go to EC-181, "Diagnosis Procedure".
NO >> INSPECTION END

Diagnosis Procedure

INFOID:0000000003069199

1. CHECK GROUND CONNECTION

1. Turn ignition switch OFF.
2. Check ground connection E9. Refer to Ground Inspection in GI-45, "Circuit Inspection".

Is the inspection result normal?

YES >> GO TO 2.
NO >> Repair or replace ground connection.

2. CHECK AIR FUEL RATIO (A/F) SENSOR 1 POWER SUPPLY CIRCUIT

1. Disconnect A/F sensor 1 harness connector.
2. Turn ignition switch ON.
3. Check the voltage between A/F sensor 1 harness connector and ground.

A/F sensor 1		Ground	Voltage
Connector	Terminal		
F44	4	Ground	Battery voltage

Is the inspection result normal?

YES >> GO TO 4.
NO >> GO TO 3.

3. DETECT MALFUNCTIONING PART

Check the following.
- IPDM E/R harness connector F10
- 15A fuse (No. 37)
- Harness for open or short between A/F sensor 1 and fuse

>> Repair or replace harness or connectors.

4. CHECK A/F SENSOR 1 INPUT SIGNAL CIRCUIT FOR OPEN AND SHORT

1. Turn ignition switch OFF.
2. Disconnect ECM harness connector.
3. Check the continuity between A/F sensor 1 harness connector and ECM harness connector.

A/F sensor 1		ECM		Continuity
Connector	Terminal	Connector	Terminal	
F44	1	F13	45	Existed
	2		49	

4. Check the continuity between A/F sensor 1 harness connector or ECM harness connector and ground.

A/F sensor 1		ECM		Ground	Continuity
Connector	Terminal	Connector	Terminal		
F44	1	F13	45	Ground	Not existed
	2		49		

5. Also check harness for short to power.

Is the inspection result normal?

YES >> GO TO 5.
NO >> Repair open circuit or short to ground or short to power in harness or connectors.

5. CHECK INTERMITTENT INCIDENT

Perform GI-42, "Intermittent Incident".

Is the inspection result normal?

YES >> GO TO 6.
NO >> Repair or replace.

6. REPLACE AIR FUEL RATIO (A/F) SENSOR 1

Replace air fuel ratio (A/F) sensor 1.

CAUTION:

- **Discard any A/F sensor which has been dropped from a height of more than 0.5 m (19.7 in) onto a hard surface such as a concrete floor; use a new one.**
- **Before installing new A/F sensor, clean exhaust system threads using Oxygen Sensor Thread Cleaner tool J-43897-18 or J-43897-12 and approved anti-seize lubricant.**

>> INSPECTION END

P0131 A/F SENSOR 1

Description

INFOID:0000000003069200

The air fuel ratio (A/F) sensor 1 is a planar one-cell limit current sensor. The sensor element of the A/F sensor 1 is composed an electrode layer, which transports ions. It has a heater in the element.
The sensor is capable of precise measurement λ = 1, but also in the lean and rich range. Together with its control electronics, the sensor outputs a clear, continuous signal throughout a wide λ range.
The exhaust gas components diffuse through the diffusion layer at the sensor cell. An electrode layer is applied voltage, and this current relative oxygen density in lean. Also this current relative hydrocarbon density in rich.
Therefore, the A/F sensor 1 is able to indicate air fuel ratio by this electrode layer of current. In addition, a heater is integrated in the sensor to ensure the required operating temperature of about 800°C (1,472°F).

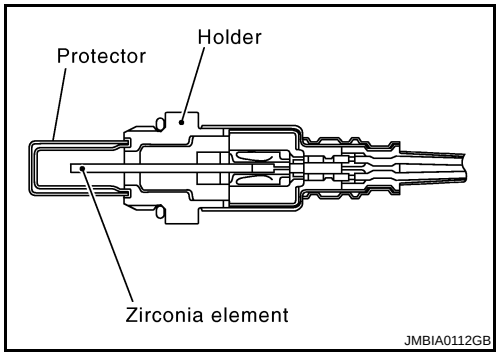

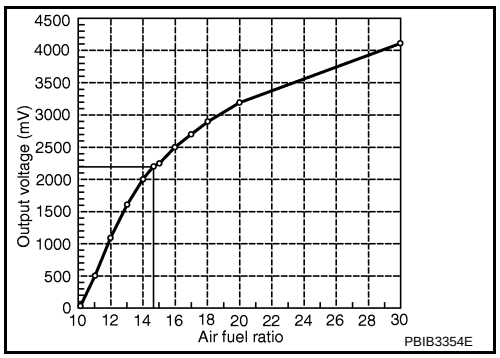

DTC Logic

INFOID:0000000003069201

DTC DETECTION LOGIC

To judge the malfunction, the diagnosis checks that the A/F signal computed by ECM from the A/F sensor 1 signal is not inordinately low.

DTC No.	Trouble diagnosis name	DTC detecting condition	Possible Cause
P0131	Air fuel ratio (A/F) sensor 1 circuit low voltage	• The A/F signal computed by ECM from the A/F sensor 1 signal is constantly approx. 0V.	• Harness or connectors (The A/F sensor 1 circuit is open or shorted.) • A/F sensor 1

DTC CONFIRMATION PROCEDURE

1. PRECONDITIONING

If DTC Confirmation Procedure has been previously conducted, always perform the following before conducting the next test.
1. Turn ignition switch OFF and wait at least 10 seconds.
2. Turn ignition switch ON.
3. Turn ignition switch OFF and wait at least 10 seconds.

TESTING CONDITION:
Before performing the following procedure, confirm that battery voltage is more than 10.5V at idle.

>> GO TO 2.

2. CHECK A/F SENSOR FUNCTION

With CONSULT-III
1. Activate “INSPECTION MODE 1” (HBC-97) to start engine, and warm up engine to normal operating temperature.
2. Select “A/F SEN1 (B1)” in “DATA MONITOR” mode with CONSULT-III.
3. Check “A/F SEN1 (B1)” indication.

With GST
Follow the procedure “With CONSULT-III” above.

Is the indication constantly approx. 0V?

YES >> Go to EC-184, "Diagnosis Procedure".
NO >> GO TO 3.

3. PERFORM DTC CONFIRMATION PROCEDURE

With CONSULT-III
1. Turn ignition switch OFF and wait at least 10 seconds.
2. Turn ignition switch ON.
3. Turn ignition switch OFF, wait at least 10 seconds and then turn ignition switch ON (READY).
4. Drive and accelerate vehicle to more than 70 km/h (43 MPH) within 1 minute after turning ignition switch ON (READY).
   CAUTION:
   Always drive vehicle at a safe speed.
5. Maintain the following conditions for about 20 consecutive seconds.

ENG SPEED	1,000 - 3,200 rpm
VHCL SPEED SE	More than 70 km/h (43 mph)
B/FUEL SCHDL	1.5 - 15.0 msec
COOLAN TEMP/S	More than 70°C (158°F)
Selector lever	Suitable position

NOTE:
- **Keep the accelerator pedal as steady as possible during the cruising.**
- **If this procedure is not completed within 150 seconds after turning ignition switch ON (READY) at step 3, return to step 1.**

6. Check 1st trip DTC.

With GST
Follow the procedure “With CONSULT-III” above.

Is 1st trip DTC detected?

YES >> Go to EC-184, "Diagnosis Procedure".
NO >> INSPECTION END

Diagnosis Procedure

INFOID:0000000003069202

1. CHECK GROUND CONNECTION

1. Turn ignition switch OFF.
2. Check ground connection E9. Refer to Ground Inspection in GI-45, "Circuit Inspection".

Is the inspection result normal?

YES >> GO TO 2.
NO >> Repair or replace ground connection.

2. CHECK AIR FUEL RATIO (A/F) SENSOR 1 POWER SUPPLY CIRCUIT

1. Disconnect A/F sensor 1 harness connector.
2. Turn ignition switch ON.
3. Check the voltage between A/F sensor 1 harness connector and ground.

A/F sensor 1		Ground	Voltage
Connector	Terminal		
F44	4	Ground	Battery voltage

Is the inspection result normal?

YES >> GO TO 4.
NO >> GO TO 3.

3. DETECT MALFUNCTIONING PART

Check the following.
- IPDM E/R harness connector F10
- 15A fuse (No. 37)
- Harness for open or short between A/F sensor 1 and fuse

>> Repair or replace harness or connectors.

4. CHECK A/F SENSOR 1 INPUT SIGNAL CIRCUIT FOR OPEN AND SHORT

1. Turn ignition switch OFF.
2. Disconnect ECM harness connector.
3. Check the continuity between A/F sensor 1 harness connector and ECM harness connector.

A/F sensor 1		ECM		Continuity
Connector	Terminal	Connector	Terminal	
F44	1	F13	45	Existed
	2		49	

4. Check the continuity between A/F sensor 1 harness connector or ECM harness connector and ground.

A/F sensor 1		ECM		Ground	Continuity
Connector	Terminal	Connector	Terminal		
F44	1	F13	45	Ground	Not existed
	2		49		

5. Also check harness for short to power.

Is the inspection result normal?

YES >> GO TO 5.
NO >> Repair open circuit or short to ground or short to power in harness or connectors.

5. CHECK INTERMITTENT INCIDENT

Perform GI-42, "Intermittent Incident".

Is the inspection result normal?

YES >> GO TO 6.
NO >> Repair or replace.

6. REPLACE AIR FUEL RATIO (A/F) SENSOR 1

Replace air fuel ratio (A/F) sensor 1.

CAUTION:
- **Discard any A/F sensor which has been dropped from a height of more than 0.5 m (19.7 in) onto a hard surface such as a concrete floor; use a new one.**
- **Before installing new A/F sensor, clean exhaust system threads using Oxygen Sensor Thread Cleaner tool J-43897-18 or J-43897-12 and approved anti-seize lubricant.**

>> INSPECTION END

P0132 A/F SENSOR 1

Description

INFOID:0000000003069203

The air fuel ratio (A/F) sensor 1 is a planar one-cell limit current sensor. The sensor element of the A/F sensor 1 is composed an electrode layer, which transports ions. It has a heater in the element.

The sensor is capable of precise measurement λ = 1, but also in the lean and rich range. Together with its control electronics, the sensor outputs a clear, continuous signal throughout a wide λ range.

The exhaust gas components diffuse through the diffusion layer at the sensor cell. An electrode layer is applied voltage, and this current relative oxygen density in lean. Also this current relative hydrocarbon density in rich.

Therefore, the A/F sensor 1 is able to indicate air fuel ratio by this electrode layer of current. In addition, a heater is integrated in the sensor to ensure the required operating temperature of about 800°C (1,472°F).

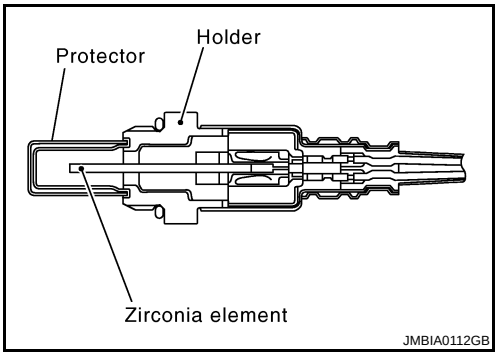

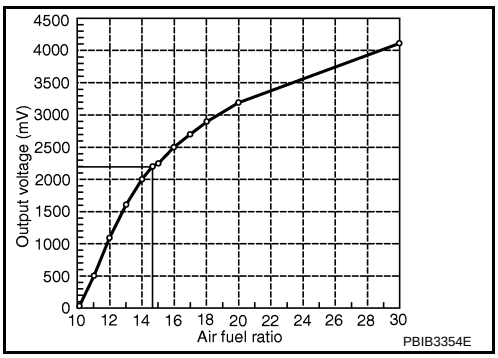

DTC Logic

INFOID:0000000003069204

DTC DETECTION LOGIC

To judge the malfunction, the diagnosis checks that the A/F signal computed by ECM from the A/F sensor 1 signal is not inordinately high.

DTC No.	Trouble diagnosis name	DTC detecting condition	Possible Cause
P0132	Air fuel ratio (A/F) sensor 1 circuit high voltage	• The A/F signal computed by ECM from the A/F sensor 1 signal is constantly approx. 5V.	• Harness or connectors (The A/F sensor 1 circuit is open or shorted.) • A/F sensor 1

DTC CONFIRMATION PROCEDURE

1. CHECK LOW FUEL WARNING LIGHT

1. Turn ignition switch ON.
2. Check the state of low fuel warning light.

Is low fuel warning light illuminated?

YES >> Refill the fuel until low fuel warning light turned OFF. Then GO TO 2.
NO >> GO TO 2.

2. PRECONDITIONING

If DTC Confirmation Procedure has been previously conducted, always perform the following before conducting the next test.

1. Turn ignition switch OFF and wait at least 10 seconds.
2. Turn ignition switch ON.
3. Turn ignition switch OFF and wait at least 10 seconds.

TESTING CONDITION:

Before performing the following procedure, confirm that battery voltage is more than 10.5V at idle.

>> GO TO 3.

3. CHECK A/F SENSOR FUNCTION

With CONSULT-III

1. Activate “INSPECTION MODE 1” (HBC-97) to start engine, and warm up engine to normal operating temperature.
2. Select “A/F SEN1 (B1)” in “DATA MONITOR” mode with CONSULT-III.
3. Check “A/F SEN1 (B1)” indication.

With GST

Follow the procedure “With CONSULT-III” above.

Is the indication constantly approx. 0V?

YES >> Go to EC-187, "Diagnosis Procedure".
NO >> GO TO 4.

4. PERFORM DTC CONFIRMATION PROCEDURE

With CONSULT-III

1. Turn ignition switch OFF and wait at least 10 seconds.
2. Turn ignition switch ON.
3. Turn ignition switch OFF, wait at least 10 seconds and then turn ignition switch ON (READY).
4. Drive and accelerate vehicle to more than 70 km/h (43 MPH) within 1 minute after turning ignition switch ON (READY).
   CAUTION:
   Always drive vehicle at a safe speed.
5. Maintain the following conditions for about 20 consecutive seconds.

ENG SPEED	1,000 - 3,200 rpm
VHCL SPEED SE	More than 70 km/h (43 mph)
B/FUEL SCHDL	1.5 - 15.0 msec
COOLAN TEMP/S	More than 70°C (158°F)
Selector lever	Suitable position

NOTE:
- **Keep the accelerator pedal as steady as possible during the cruising.**
- **If this procedure is not completed within 150 seconds after turning ignition switch ON (READY) at step 3, return to step 1.**

6. Check 1st trip DTC.

With GST

Follow the procedure “With CONSULT-III” above.

Is 1st trip DTC detected?

YES >> Go to EC-187, "Diagnosis Procedure".
NO >> INSPECTION END

Diagnosis Procedure

INFOID:0000000003069205

1. CHECK GROUND CONNECTION

1. Turn ignition switch OFF.
2. Check ground connection E9. Refer to Ground Inspection in GI-45, "Circuit Inspection".

Is the inspection result normal?

YES >> GO TO 2.
NO >> Repair or replace ground connection.

2. CHECK AIR FUEL RATIO (A/F) SENSOR 1 POWER SUPPLY CIRCUIT

1. Disconnect A/F sensor 1 harness connector.
2. Turn ignition switch ON.
3. Check the voltage between A/F sensor 1 harness connector and ground.

A/F sensor 1		Ground	Voltage
Connector	Terminal		
F44	4	Ground	Battery voltage

Is the inspection result normal?

YES >> GO TO 4.
NO >> GO TO 3.

3. DETECT MALFUNCTIONING PART

Check the following.
- IPDM E/R harness connector F10
- 15A fuse (No. 37)
- Harness for open or short between A/F sensor 1 and fuse

>> Repair or replace harness or connectors.

4. CHECK A/F SENSOR 1 INPUT SIGNAL CIRCUIT FOR OPEN AND SHORT

1. Turn ignition switch OFF.
2. Disconnect ECM harness connector.
3. Check the continuity between A/F sensor 1 harness connector and ECM harness connector.

A/F sensor 1		ECM		Continuity
Connector	Terminal	Connector	Terminal	
F44	1	F13	45	Existed
	2		49	

4. Check the continuity between A/F sensor 1 harness connector or ECM harness connector and ground.

A/F sensor 1		ECM		Ground	Continuity
Connector	Terminal	Connector	Terminal		
F44	1	F13	45	Ground	Not existed
	2		49		

5. Also check harness for short to power.

Is the inspection result normal?

YES >> GO TO 5.
NO >> Repair open circuit or short to ground or short to power in harness or connectors.

5. CHECK INTERMITTENT INCIDENT

Perform GI-42, "Intermittent Incident".

Is the inspection result normal?

YES >> GO TO 6.
NO >> Repair or replace.

6. REPLACE AIR FUEL RATIO (A/F) SENSOR 1

Replace air fuel ratio (A/F) sensor 1.

CAUTION:
- **Discard any A/F sensor which has been dropped from a height of more than 0.5 m (19.7 in) onto a hard surface such as a concrete floor; use a new one.**
- **Before installing new A/F sensor, clean exhaust system threads using Oxygen Sensor Thread Cleaner tool J-43897-18 or J-43897-12 and approved anti-seize lubricant.**

>> INSPECTION END

P0133 A/F SENSOR 1

Description

INFOID:0000000003069206

The air fuel ratio (A/F) sensor 1 is a planar one-cell limit current sensor. The sensor element of the A/F sensor 1 is composed an electrode layer, which transports ions. It has a heater in the element.

The sensor is capable of precise measurement λ = 1, but also in the lean and rich range. Together with its control electronics, the sensor outputs a clear, continuous signal throughout a wide λ range.

The exhaust gas components diffuse through the diffusion layer at the sensor cell. An electrode layer is applied voltage, and this current relative oxygen density in lean. Also this current relative hydrocarbon density in rich.

Therefore, the A/F sensor 1 is able to indicate air fuel ratio by this electrode layer of current. In addition, a heater is integrated in the sensor to ensure the required operating temperature of about 800°C (1,472°F).

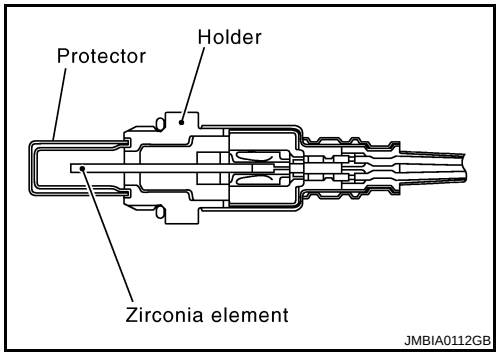

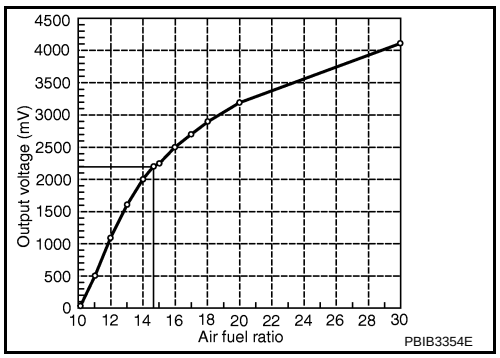

DTC Logic

INFOID:0000000003069207

DTC DETECTION LOGIC

To judge the malfunction of A/F sensor 1, this diagnosis measures response time of the A/F signal computed by ECM from the A/F sensor 1 signal. The time is compensated by engine operating (speed and load), fuel feedback control constant, and the A/F sensor 1 temperature index. Judgment is based on whether the compensated time (the A/F signal cycling time index) is inordinately long or not.

DTC No.	Trouble diagnosis name	DTC detecting condition	Possible Cause
P0133	Air fuel ratio (A/F) sensor 1 circuit slow response	• The response of the A/F signal computed by ECM from A/F sensor 1 signal takes more than the specified time.	• Harness or connectors (The A/F sensor 1 circuit is open or shorted.) • A/F sensor 1 • A/F sensor 1 heater • Fuel pressure • Fuel injector • Intake air leaks • Exhaust gas leaks • PCV • Mass air flow sensor

DTC CONFIRMATION PROCEDURE

1. PRECONDITIONING

If DTC Confirmation Procedure has been previously conducted, always perform the following before conducting the next test.

1. Turn ignition switch OFF and wait at least 10 seconds.
2. Turn ignition switch ON.
3. Turn ignition switch OFF and wait at least 10 seconds.

TESTING CONDITION:

Before performing the following procedure, confirm that battery voltage is more than 11V at idle.

Do you have CONSULT-III?

YES >> GO TO 2.
NO >> GO TO 3.

2. PERFORM DTC CONFIRMATION PROCEDURE

With CONSULT-III

1. Turn ignition switch ON (READY).
2. Depress accelerator pedal and wait at least 6 minutes.
   NOTE:
   If keeping depressing the accelerator pedal for more than 6 minutes, fuel will be cut off after some time.
3. Select “A/F SEN1(B1) P0133” of “A/F SEN1” in “DTC WORK SUPPORT” mode with CONSULT-III.
4. Touch “START”.
5. Drive vehicle at a speed of 90 km/h (56 MPH) or more until “TESTING” on CONSULT-III changes to “COMPLETED”. (It will take approximately 15 seconds.)
   CAUTION:
   Always drive vehicle in safe manner according to traffic conditions and obey all traffic laws.
6. Touch “SELF-DIAG RESULT”.

Which is displayed on CONSULT-III?

OK >> INSPECTION END
NG >> Go to EC-190, "Diagnosis Procedure".

3. PERFORM DTC CONFIRMATION PROCEDURE

With GST

1. Turn ignition switch ON (READY).
2. Depress accelerator pedal and wait at least 6 minutes.
   NOTE:
   If keeping depressing the accelerator pedal for more than 6 minutes, fuel will be cut off after some time.
3. Drive vehicle at a speed of 100 km/h (62 MPH) or more for at least 15 consecutive seconds.
   CAUTION:
   Always drive vehicle in safe manner according to traffic conditions and obey all traffic laws.
4. Check 1st trip DTC.

Is 1st trip DTC detected?

YES >> Go to EC-190, "Diagnosis Procedure".
NO >> INSPECTION END

Diagnosis Procedure

INFOID:0000000003069208

1. CHECK GROUND CONNECTION

1. Turn ignition switch OFF.
2. Check ground connection E9. Refer to Ground Inspection in GI-45, "Circuit Inspection".

Is the inspection result normal?

YES >> GO TO 2.
NO >> Repair or replace ground connection.

2. RETIGHTEN A/F SENSOR 1

Loosen and retighten the A/F sensor 1.

Tightening torque: 50 N-m (5.1 kg-m, 37 ft-lb)

>> GO TO 3.

3. CHECK EXHAUST GAS LEAK

1. Activate “INSPECTION MODE 1” (HBC-97) to start engine, and run engine at idle speed.

2. Listen for an exhaust gas leak before three way catalyst (manifold).

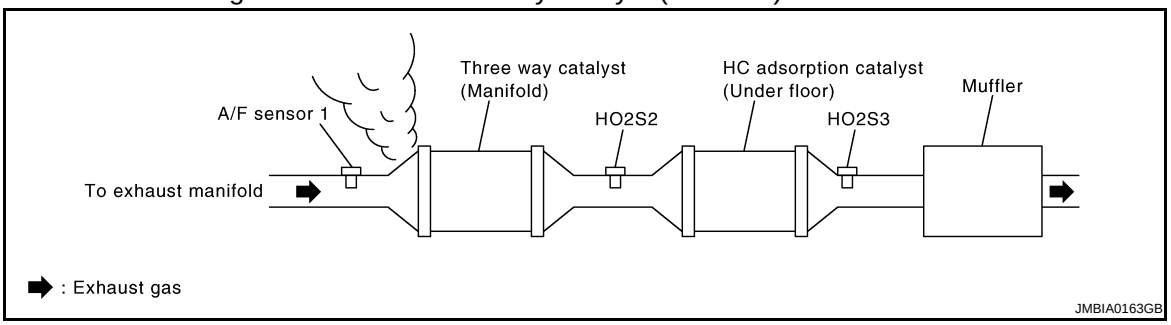

Is exhaust gas leak detected?

YES >> Repair or replace.
NO >> GO TO 4.

4. CHECK FOR INTAKE AIR LEAK

Listen for an intake air leak after the mass air flow sensor.

Is intake air leak detected?

YES >> Repair or replace.
NO >> GO TO 5.

5. CLEAR THE MIXTURE RATIO SELF-LEARNING VALUE

1. Clear the mixture ratio self-learning value. Refer to EC-18, "MIXTURE RATIO SELF-LEARNING VALUE CLEAR : Special Repair Requirement".
2. Activate “INSPECTION MODE 1” (HBC-97) to start engine.
3. Wait for at least 10 minutes at idle speed.

Is the 1st trip DTC P0171 or P172 detected? Is it difficult to start engine?

YES >> Perform trouble diagnosis for DTC P0171 or P0172. Refer to EC-222, "DTC Logic" or EC-226, "DTC Logic".
NO >> GO TO 6.

6. CHECK AIR FUEL RATIO (A/F) SENSOR 1 POWER SUPPLY CIRCUIT

1. Turn ignition switch OFF.
2. Disconnect A/F sensor 1 harness connector.
3. Turn ignition switch ON.
4. Check the voltage between A/F sensor 1 harness connector and ground.

A/F sensor 1		Ground	Voltage
Connector	Terminal		
F44	4	Ground	Battery voltage

Is the inspection result normal?

YES >> GO TO 8.
NO >> GO TO 7.

7. DETECT MALFUNCTIONING PART

Check the following.
- IPDM E/R harness connector F10
- 15A fuse (No. 37)
- Harness for open or short between A/F sensor 1 and fuse

>> Repair or replace harness or connectors.

8. CHECK A/F SENSOR 1 INPUT SIGNAL CIRCUIT FOR OPEN AND SHORT

1. Turn ignition switch OFF.
2. Disconnect ECM harness connector.
3. Check the continuity between A/F sensor 1 harness connector and ECM harness connector.

A/F sensor 1		ECM		Continuity
Connector	Terminal	Connector	Terminal	
F44	1	F13	45	Existed
	2		49	

4. Check the continuity between A/F sensor 1 harness connector or ECM harness connector and ground.

A/F sensor 1		ECM		Ground	Continuity
Connector	Terminal	Connector	Terminal		
F44	1	F13	45	Ground	Not existed
	2		49		

5. Also check harness for short to power.

Is the inspection result normal?

YES >> GO TO 9.
NO >> Repair open circuit or short to ground or short to power in harness or connectors.

9. CHECK AIR FUEL RATIO (A/F) SENSOR 1 HEATER

Refer to EC-135, "Component Inspection".

Is the inspection result normal?

YES >> GO TO 10.
NO >> GO TO 13.

10. CHECK MASS AIR FLOW SENSOR

Check mass air flow sensor.
Refer to EC-148, "Component Inspection".

Is the inspection result normal?

YES >> GO TO 11.
NO >> Replace mass air flow sensor.

11. CHECK PCV VALVE

Refer to EC-395, "Component Inspection".

Is the inspection result normal?

YES >> GO TO 12.
NO >> Repair or replace PCV valve.

12. CHECK INTERMITTENT INCIDENT

Perform GI-42, "Intermittent Incident".

Is the inspection result normal?

YES >> GO TO 13.
NO >> Repair or replace.

13. REPLACE AIR FUEL RATIO (A/F) SENSOR 1

Replace air fuel ratio (A/F) sensor 1.

CAUTION:

- **Discard any A/F sensor which has been dropped from a height of more than 0.5 m (19.7 in) onto a hard surface such as a concrete floor; use a new one.**
- **Before installing new A/F sensor, clean exhaust system threads using Oxygen Sensor Thread Cleaner tool J-43897-18 or J-43897-12 and approved anti-seize lubricant.**

>> INSPECTION END

P0137 HO2S2

Description

INFOID:0000000003069209

The heated oxygen sensor 2, after three way catalyst (manifold), monitors the oxygen level in the exhaust gas.
Even if switching characteristics of the air fuel ratio (A/F) sensor 1 are shifted, the air-fuel ratio is controlled to stoichiometric, by the signal from the heated oxygen sensor 2.
This sensor is made of ceramic zirconia. The zirconia generates voltage from approximately 1V in richer conditions to 0V in leaner conditions.
Under normal conditions the heated oxygen sensor 2 is not used for engine control operation.

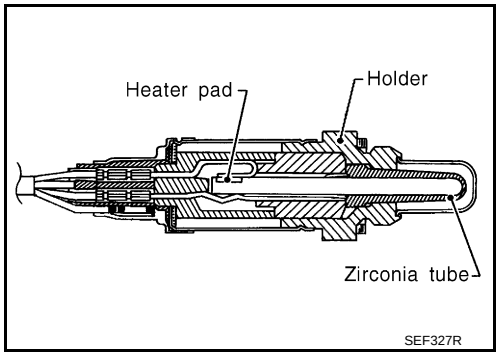

DTC Logic

INFOID:0000000003069210

DTC DETECTION LOGIC

The heated oxygen sensor 2 has a much longer switching time between rich and lean than the air fuel ratio (A/F) sensor 1. The oxygen storage capacity of the three way catalyst (manifold) causes the longer switching time. To judge the malfunctions of heated oxygen sensor 2, ECM monitors whether the maximum voltage of the sensor is sufficiently high during the various driving condition such as fuel-cut.

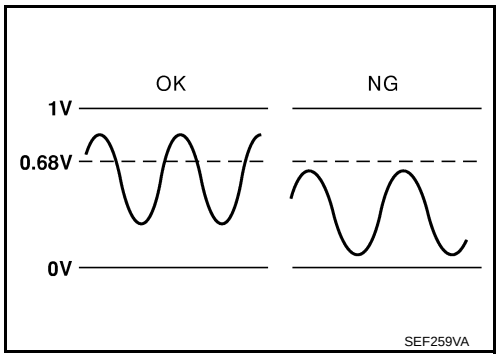

DTC No.	Trouble diagnosis name	DTC detecting condition	Possible cause
P0137	Heated oxygen sensor 2 circuit low voltage	The maximum voltage from the sensor is not reached to the specified voltage.	• Harness or connectors (The sensor circuit is open or shorted) • Heated oxygen sensor 2 • Fuel pressure • Fuel injector • Intake air leaks

DTC CONFIRMATION PROCEDURE

1. INSPECTION START

Do you have CONSULT-III?

Do you have CONSULT-III?

YES >> GO TO 2.
NO >> GO TO 5.

2. PRECONDITIONING

If DTC Confirmation Procedure has been previously conducted, always perform the following before conducting the next test.

1. Turn ignition switch OFF and wait at least 10 seconds.
2. Turn ignition switch ON.
3. Turn ignition switch OFF and wait at least 10 seconds.

TESTING CONDITION:
For better results, perform “DTC WORK SUPPORT” at a temperature of 0 to 30 °C (32 to 86 °F).

>> GO TO 3.

3. PERFORM DTC CONFIRMATION PROCEDURE

With CONSULT-III

1. Activate “INSPECTION MODE 1” (HBC-97) to start engine, and warm up engine to normal operating temperature.
2. Turn ignition switch OFF and wait at least 10 seconds.
3. Turn ignition switch ON.
4. Turn ignition switch OFF and wait at least 10 seconds.
5. Turn ignition switch ON (READY) and select “DATA MONITOR” mode with CONSULT-III.
6. Drive vehicle at a speed of 80 km/h (50 MPH) or more for at least 3 consecutive minutes.
   CAUTION:
   Always drive vehicle in safe manner according to traffic conditions and obey all traffic laws.
   NOTE:
   Keep the vehicle speed as steady as possible during the cruising.
7. Stop the vehicle and shift the selector lever to P position.
8. Fully depress the accelerator pedal and keep it until step 11.
9. Make sure that “COOLAN TEMP/S” indicates more than 70°C (158°F).
   If not, warm up engine and go to next step when “COOLAN TEMP/S” indication reaches to 70°C (158°F).
10. Select “HO2S2 (B1) P1147” of “HO2S2” in “DTC WORK SUPPORT” mode with CONSULT-III.
11. Touch “START”.
    NOTE:
    It will take at most 10 minutes until “COMPLETED” is displayed.
12. Touch “SELF-DIAG RESULT”.

Which is displayed on CONSULT-III screen?

OK >> INSPECTION END
NG >> Go to EC-195, "Diagnosis Procedure".
CAN NOT BE DIAGNOSED>>GO TO 4.

4. PERFORM DTC CONFIRMATION PROCEDURE AGAIN

1. Turn ignition switch OFF and leave the vehicle in a cool place (soak the vehicle).
2. Perform DTC CONFIRMATION PROCEDURE again.

>> GO TO 3.

5. PERFORM COMPONENT FUNCTION CHECK

Perform component function check. Refer to EC-194, "Component Function Check".

NOTE:

Use component function check to check the overall function of the heated oxygen sensor 2 circuit. During this check, a 1st trip DTC might not be confirmed.

Is the inspection result normal?

YES >> INSPECTION END
NO >> Go to EC-195, "Diagnosis Procedure".

Component Function Check

INFOID:0000000003069211

1. PERFORM COMPONENT FUNCTION CHECK

Without CONSULT-III

1. Activate “INSPECTION MODE 1” (HBC-97) to start engine, and warm up engine to the normal operating temperature.
2. Turn ignition switch OFF and wait at least 10 seconds.
3. Turn ignition switch ON.
4. Turn ignition switch OFF and wait at least 10 seconds.
5. Turn ignition ON (READY) and drive vehicle at a speed of 80 km/h (50 MPH) or more for at least 3 consecutive minutes.
   CAUTION:
   Always drive vehicle in safe manner according to traffic conditions and obey all traffic laws.
   NOTE:
   Keep the vehicle speed as steady as possible during the cruising.
6. Stop vehicle and shift the selector lever to P position.

7. Check the voltage between ECM harness connector and ground under the following condition.

ECM		Ground	Condition	Voltage
Connector	Terminal			
F13	33 (HO2S2 signal)	Ground	Fully depress the accelerator pedal and keep it, then fully release accelerator pedal.	The voltage should be above 0.68V at least once during this procedure.

Is the inspection result normal?

YES >> INSPECTION END
NO >> Go to EC-195, "Diagnosis Procedure".

Diagnosis Procedure

INFOID:0000000003069212

1. CHECK GROUND CONNECTION

1. Turn ignition switch OFF.
2. Check ground connection E9. Refer to Ground Inspection in GI-45, "Circuit Inspection".

Is the inspection result normal?

YES >> GO TO 2.
NO >> Repair or replace ground connection.

2. CLEAR THE MIXTURE RATIO SELF-LEARNING VALUE

1. Clear the mixture ratio self-learning value. Refer to EC-18, "MIXTURE RATIO SELF-LEARNING VALUE CLEAR : Special Repair Requirement".
2. Activate “INSPECTION MODE 1” (HBC-97) to start engine, and let engine idle for at least 10 minutes.

Is the 1st trip DTC P0171 detected? Is it difficult to start engine?

YES >> Perform trouble diagnosis for DTC P0171. Refer to EC-222, "DTC Logic".
NO >> GO TO 3.

3. CHECK HO2S2 GROUND CIRCUIT FOR OPEN AND SHORT

1. Turn ignition switch OFF.
2. Disconnect heated oxygen sensor 2 harness connector.
3. Disconnect ECM harness connector.
4. Check the continuity between HO2S2 harness connector and ECM harness connector.

HO2S2		ECM		Continuity
Connector	Terminal	Connector	Terminal	
F42	1	F13	35	Existed

5. Also check harness for short to ground and short to power.

Is the inspection result normal?

YES >> GO TO 4.
NO >> Repair open circuit or short to ground or short to power in harness or connectors.

4. CHECK HO2S2 INPUT SIGNAL CIRCUIT FOR OPEN AND SHORT

1. Check the continuity between HO2S2 harness connector and ECM harness connector.

HO2S2		ECM		Continuity
Connector	Terminal	Connector	Terminal	
F42	4	F13	33	Existed

2. Check the continuity between HO2S2 harness connector or ECM harness connector and ground.

HO2S2		ECM		Ground	Continuity
Connector	Terminal	Connector	Terminal		
F42	4	F13	33	Ground	Not existed

3. Also check harness for short to power.

Is the inspection result normal?

YES >> GO TO 5.
NO >> Repair open circuit or short to ground or short to power in harness or connectors.

5. CHECK HEATED OXYGEN SENSOR 2

Refer to EC-196, "Component Inspection".

Is the inspection result normal?

YES >> GO TO 7.
NO >> GO TO 6.

6. REPLACE HEATED OXYGEN SENSOR 2

Replace heated oxygen sensor 2.

CAUTION:

- **Discard any heated oxygen sensor which has been dropped from a height of more than 0.5 m (19.7 in) onto a hard surface such as a concrete floor; use a new one.**
- **Before installing new oxygen sensor, clean exhaust system threads using Oxygen Sensor Thread Cleaner tool J-43897-18 or J-43897-12 and approved anti-seize lubricant.**

>> INSPECTION END

7. CHECK INTERMITTENT INCIDENT

Refer to GI-42, "Intermittent Incident".

>> INSPECTION END

Component Inspection

INFOID:0000000003069213

1. INSPECTION START

Do you have CONSULT-III?

Do you have CONSULT-III?

YES >> GO TO 2.
NO >> GO TO 3.

2. CHECK HEATED OXYGEN SENSOR 2-I

With CONSULT-III

1. Activate “INSPECTION MODE 1” (HBC-97) to start engine, and warm up engine to the normal operating temperature.
2. Turn ignition switch OFF and wait at least 10 seconds.
3. Turn ignition switch ON.
4. Turn ignition switch OFF and wait at least 10 seconds.
5. Turn ignition ON (READY) and select “DATA MONITOR” mode with CONSULT-III.
6. Drive vehicle at a speed of 80 km/h (50 MPH) or more for at least 3 consecutive minutes.
   CAUTION:
   Always drive vehicle in safe manner according to traffic conditions and obey all traffic laws.
   NOTE:
   Keep the vehicle speed as steady as possible during the cruising.
7. Stop vehicle and shift the selector lever to P position.
8. Select “FUEL INJECTION” in “ACTIVE TEST” mode, and select “HO2S2 (B1)” as the monitor item with CONSULT-III.

9. Check “HO2S2 (B1)” at idle speed when adjusting “FUEL INJECTION” to ±25%.

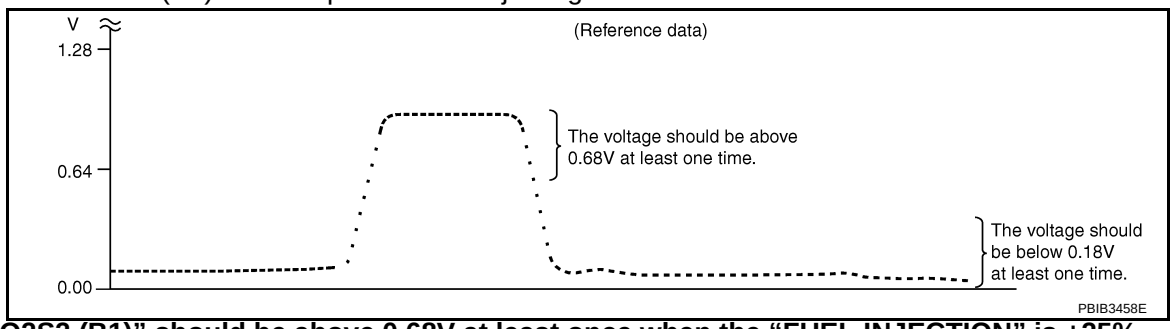

“HO2S2 (B1)” should be above 0.68V at least once when the “FUEL INJECTION” is +25%.
“HO2S2 (B1)” should be below 0.18V at least once when the “FUEL INJECTION” is –25%.

Is the inspection result normal?

YES >> INSPECTION END
NO >> GO TO 4.

3. CHECK HEATED OXYGEN SENSOR 2-II

Without CONSULT-III

1. Activate “INSPECTION MODE 1” (HBC-97) to start engine, and warm up engine to the normal operating temperature.
2. Turn ignition switch OFF and wait at least 10 seconds.
3. Turn ignition switch ON.
4. Turn ignition switch OFF and wait at least 10 seconds.
5. Turn ignition ON (READY) and drive vehicle at a speed of 80 km/h (50 MPH) or more for at least 3 consecutive minutes.
   CAUTION:
   Always drive vehicle in safe manner according to traffic conditions and obey all traffic laws.
   NOTE:
   Keep the vehicle speed as steady as possible during the cruising.
6. Stop vehicle and shift the selector lever to P position.
7. Check the voltage between ECM harness connector and ground under the following condition.

ECM		Ground	Condition	Voltage
Connector	Terminal			
F13	33 (HO2S2 signal)	Ground	Fully depress the accelerator pedal and keep it, then fully release accelerator pedal.	The voltage should be above 0.68V at least once during this procedure. The voltage should be below 0.18V at least once during this procedure.

Is the inspection result normal?

YES >> INSPECTION END
NO >> GO TO 4.

4. REPLACE HEATED OXYGEN SENSOR 2

Replace heated oxygen sensor 2.

CAUTION:

- **Discard any heated oxygen sensor which has been dropped from a height of more than 0.5 m (19.7 in) onto a hard surface such as a concrete floor; use a new one.**
- **Before installing new oxygen sensor, clean exhaust system threads using Oxygen Sensor Thread Cleaner tool J-43897-18 or J-43897-12 and approved anti-seize lubricant.**

>> INSPECTION END

P0138 HO2S2

Description

INFOID:0000000003069214

The heated oxygen sensor 2, after three way catalyst (manifold), monitors the oxygen level in the exhaust gas.
Even if switching characteristics of the air fuel ratio (A/F) sensor 1 are shifted, the air-fuel ratio is controlled to stoichiometric, by the signal from the heated oxygen sensor 2.
This sensor is made of ceramic zirconia. The zirconia generates voltage from approximately 1V in richer conditions to 0V in leaner conditions.
Under normal conditions the heated oxygen sensor 2 is not used for engine control operation.

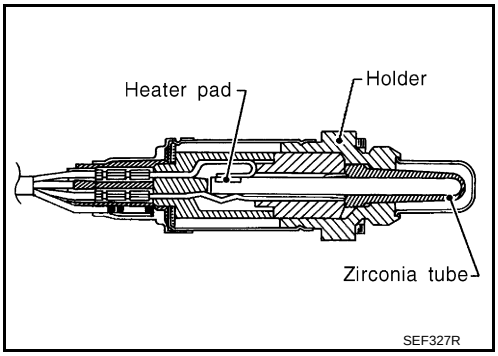

DTC Logic

INFOID:0000000003069215

DTC DETECTION LOGIC

The heated oxygen sensor 2 has a much longer switching time between rich and lean than the air fuel ratio (A/F) sensor 1. The oxygen storage capacity of the three way catalyst (manifold) causes the longer switching time.

MALFUNCTION A

To judge the malfunctions of heated oxygen sensor 2, ECM monitors whether the voltage is unusually high during the various driving condition such as fuel-cut.

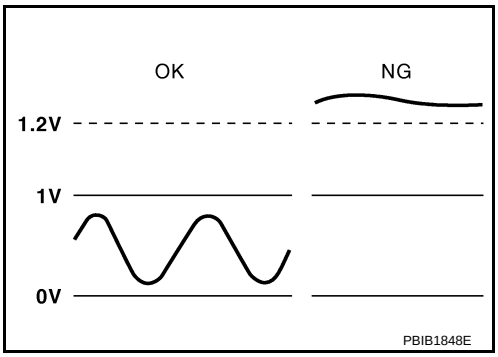

MALFUNCTION B

To judge the malfunctions of heated oxygen sensor 2, ECM monitors whether the minimum voltage of sensor is sufficiently low during the various driving condition such as fuel-cut.

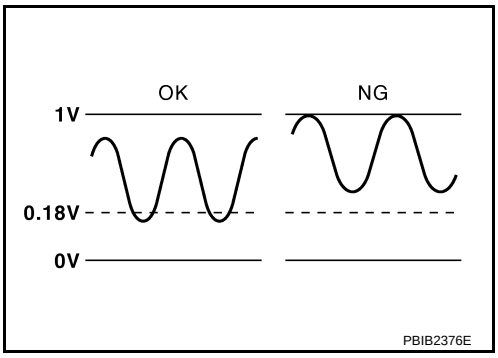

DTC No.	Trouble diagnosis name	DTC detecting condition		Possible cause
P0138	Heated oxygen sensor 2 circuit high voltage	A)	An excessively high voltage from the sensor is sent to ECM.	• Harness or connectors (The sensor circuit is open or shorted) • Heated oxygen sensor 2
		B)	The minimum voltage from the sensor is not reached to the specified voltage.	• Harness or connectors (The sensor circuit is open or shorted) • Heated oxygen sensor 2 • Fuel pressure • Fuel injector

DTC CONFIRMATION PROCEDURE

1. PRECONDITIONING

If DTC Confirmation Procedure has been previously conducted, always perform the following before conducting the next test.

1. Turn ignition switch OFF and wait at least 10 seconds.
2. Turn ignition switch ON.
3. Turn ignition switch OFF and wait at least 10 seconds.

>> GO TO 2.

2. PERFORM DTC CONFIRMATION PROCEDURE FOR MALFUNCTION A

1. Activate “INSPECTION MODE 1” (HBC-97) to start engine, and warm up engine to normal operating temperature.
2. Turn ignition switch OFF and wait at least 10 seconds.
3. Turn ignition switch ON.
4. Turn ignition switch OFF and wait at least 10 seconds.
5. Turn ignition switch ON (READY).
6. Drive vehicle at a speed of 80 km/h (50 MPH) or more for at least 3 consecutive minutes.
   CAUTION:
   Always drive vehicle in safe manner according to traffic conditions and obey all traffic laws.
   NOTE:
   Keep the vehicle speed as steady as possible during the cruising.
7. Check 1st trip DTC.

Is 1st trip DTC detected?

YES >> Go to EC-200, "Diagnosis Procedure".
NO-1 >> With CONSULT-III: GO TO 3.
NO-2 >> Without CONSULT-III: GO TO 5.

3. PERFORM DTC CONFIRMATION PROCEDURE FOR MALFUNCTION B

NOTE:
For better results, perform “DTC WORK SUPPORT” at a temperature of 0 to 30 °C (32 to 86 °F).

1. Activate “INSPECTION MODE 1” (HBC-97) to start engine, and warm up engine to normal operating temperature.
2. Turn ignition switch OFF and wait at least 10 seconds.
3. Turn ignition switch ON.
4. Turn ignition switch OFF and wait at least 10 seconds.
5. Turn ignition switch ON (READY) and select “DATA MONITOR” mode with CONSULT-III.
6. Drive vehicle at a speed of 80 km/h (50 MPH) or more for at least 3 consecutive minutes.
   CAUTION:
   Always drive vehicle in safe manner according to traffic conditions and obey all traffic laws.
   NOTE:
   Keep the vehicle speed as steady as possible during the cruising.
7. Stop the vehicle and shift the selector lever to P position.
8. Fully depress the accelerator pedal and keep it until step 11.
9. Make sure that “COOLAN TEMP/S” indicates more than 70°C (158°F).
   If not, warm up engine and go to next step when “COOLAN TEMP/S” indication reaches to 70°C (158°F).
10. Select “HO2S2 (B1) P1146” of “HO2S2” in “DTC WORK SUPPORT” mode with CONSULT-II.
11. Touch “START”.
    NOTE:
    It will take at most 10 minutes until “COMPLETED” is displayed.
12. Touch “SELF-DIAG RESULT”.

Which is displayed on CONSULT-III

OK >> INSPECTION END
NG >> Go to EC-200, "Diagnosis Procedure".
CAN NOT BE DIAGNOSED>>GO TO 4.

4. PERFORM DTC CONFIRMATION PROCEDURE FOR MALUNCTION B AGAIN

1. Turn ignition switch OFF and leave the vehicle in a cool place (soak the vehicle).
2. Perform DTC CONFIRMATION PROCEDURE again.

>> GO TO 3.

5. PERFORM COMPONENT FUNCTION CHECK FOR MALFUNCTION B

Perform component function check. Refer to EC-200, "Diagnosis Procedure".

NOTE:

Use component function check to check the overall function of the heated oxygen sensor 2 circuit. During this check, a 1st trip DTC might not be confirmed.

Is the inspection result normal?

YES >> INSPECTION END
NO >> Go to EC-200, "Diagnosis Procedure".

Component Function Check

INFOID:0000000003069216

1. PERFORM COMPONENT FUNCTION CHECK

Without CONSULT-III

1. Activate “INSPECTION MODE 1” (HBC-97) to start engine, and warm up engine to the normal operating temperature.
2. Turn ignition switch OFF and wait at least 10 seconds.
3. Turn ignition switch ON.
4. Turn ignition switch OFF and wait at least 10 seconds.
5. Turn ignition ON (READY) and drive vehicle at a speed of 80 km/h (50 MPH) or more for at least 3 consecutive minutes.

   CAUTION:

   Always drive vehicle in safe manner according to traffic conditions and obey all traffic laws.

   NOTE:

   Keep the vehicle speed as steady as possible during the cruising.
6. Stop vehicle and shift the selector lever to P position.
7. Check the voltage between ECM harness connector and ground under the following condition.

ECM		Ground	Condition	Voltage
Connector	Terminal			
F13	33 (HO2S2 signal)	Ground	Fully depress the accelerator pedal and keep it, then fully release accelerator pedal	The voltage should be below 0.18V at least once during this procedure.

Is the inspection result normal?

YES >> INSPECTION END
NO >> Go to EC-200, "Diagnosis Procedure".

Diagnosis Procedure

INFOID:0000000003069217

1. INSPECTION START

Confirm the detected malfunction (A or B). Refer to EC-198, "DTC Logic".

Which malfunction is detected?

A >> GO TO 2.
B >> GO TO 9.

2. CHECK GROUND CONNECTION

1. Turn ignition switch OFF.
2. Check ground connection E9. Refer to Ground Inspection in GI-45, "Circuit Inspection".

Is the inspection result normal?

YES >> GO TO 3.
NO >> Repair or replace ground connection.

3. CHECK HO2S2 GROUND CIRCUIT FOR OPEN AND SHORT

1. Disconnect heated oxygen sensor 2 harness connector.
2. Disconnect ECM harness connector.
3. Check the continuity between HO2S2 harness connector and ECM harness connector.

HO2S2		ECM		Continuity
Connector	Terminal	Connector	Terminal	
F42	1	F13	35	Existed

4. Also check harness for short to ground and short to power.

Is the inspection result normal?

YES >> GO TO 4.
NO >> Repair open circuit or short to ground or short to power in harness or connectors.

4. CHECK HO2S2 INPUT SIGNAL CIRCUIT FOR OPEN AND SHORT

1. Check the continuity between HO2S2 harness connector and ECM harness connector.

HO2S2		ECM		Continuity
Connector	Terminal	Connector	Terminal	
F42	4	F13	33	Existed

2. Check the continuity between HO2S2 harness connector or ECM harness connector and ground.

HO2S2		ECM		Ground	Continuity
Connector	Terminal	Connector	Terminal		
F42	4	F13	33	Ground	Not existed

3. Also check harness for short to power.

Is the inspection result normal?

YES >> GO TO 5.
NO >> Repair open circuit or short to ground or short to power in harness or connectors.

5. CHECK HO2S2 CONNECTOR FOR WATER

Check connectors for water.

Water should not exist.

Is the inspection result normal?

YES >> GO TO 6.
NO >> Repair or replace harness or connectors.

6. CHECK HEATED OXYGEN SENSOR 2

Refer to EC-203, "Component Inspection".

Is the inspection result normal?

YES >> GO TO 8.
NO >> GO TO 7.

7. REPLACE HEATED OXYGEN SENSOR 2

Replace heated oxygen sensor 2.

CAUTION:

- **Discard any heated oxygen sensor which has been dropped from a height of more than 0.5 m (19.7 in) onto a hard surface such as a concrete floor; use a new one.**
- **Before installing new oxygen sensor, clean exhaust system threads using Oxygen Sensor Thread Cleaner tool J-43897-18 or J-43897-12 and approved anti-seize lubricant.**

>> INSPECTION END

8. CHECK INTERMITTENT INCIDENT

Refer to GI-42, "Intermittent Incident".

>> INSPECTION END

9. CHECK GROUND CONNECTION

1. Turn ignition switch OFF.
2. Check ground connection E9. Refer to Ground Inspection in GI-45, "Circuit Inspection".

Is the inspection result normal?

YES >> GO TO 10.
NO >> Repair or replace ground connection.

10. CLEAR THE MIXTURE RATIO SELF-LEARNING VALUE

1. Clear the mixture ratio self-learning value. Refer to EC-18, "MIXTURE RATIO SELF-LEARNING VALUE CLEAR : Special Repair Requirement".
2. Activate “INSPECTION MODE 1” (HBC-97) to start for at least 10 minutes.

Is the 1st trip DTC P0172 detected? Is it difficult to start engine?

YES >> Perform trouble diagnosis for DTC P0172. Refer to EC-226, "DTC Logic".
NO >> GO TO 11.

11. CHECK HO2S2 GROUND CIRCUIT FOR OPEN AND SHORT

1. Turn ignition switch OFF.
2. Disconnect heated oxygen sensor 2 harness connector.
3. Disconnect ECM harness connector.
4. Check the continuity between HO2S2 harness connector and ECM harness connector.

HO2S2		ECM		Continuity
Connector	Terminal	Connector	Terminal	
F42	1	F13	35	Existed

5. Also check harness for short to ground and short to power.

Is the inspection result normal?

YES >> GO TO 12.
NO >> Repair open circuit or short to ground or short to power in harness or connectors.

12. CHECK HO2S2 INPUT SIGNAL CIRCUIT FOR OPEN AND SHORT

1. Check the continuity between HO2S2 harness connector and ECM harness connector.

HO2S2		ECM		Continuity
Connector	Terminal	Connector	Terminal	
F42	4	F13	33	Existed

2. Check the continuity between HO2S2 harness connector or ECM harness connector and ground.

HO2S2		ECM		Ground	Continuity
Connector	Terminal	Connector	Terminal		
F42	4	F13	33	Ground	Not existed

3. Also check harness for short to power.

Is the inspection result normal?

YES >> GO TO 13.
NO >> Repair open circuit or short to ground or short to power in harness or connectors.

13. CHECK HEATED OXYGEN SENSOR 2

Refer to EC-203, "Component Inspection".

Is the inspection result normal?

YES >> GO TO 15.
NO >> GO TO 14.

14. REPLACE HEATED OXYGEN SENSOR 2

Replace heated oxygen sensor 2.

CAUTION:
- **Discard any heated oxygen sensor which has been dropped from a height of more than 0.5 m (19.7 in) onto a hard surface such as a concrete floor; use a new one.**
- **Before installing new oxygen sensor, clean exhaust system threads using Oxygen Sensor Thread Cleaner tool J-43897-18 or J-43897-12 and approved anti-seize lubricant.**

>> INSPECTION END

15. CHECK INTERMITTENT INCIDENT

Refer to GI-42, "Intermittent Incident".

>> INSPECTION END

Component Inspection

INFOID:0000000003069218

1. INSPECTION START

Do you have CONSULT-III?

Do you have CONSULT-III?

YES >> GO TO 2.
NO >> GO TO 3.

2. CHECK HEATED OXYGEN SENSOR 2-I

With CONSULT-III

1. Activate “INSPECTION MODE 1” (HBC-97) to start engine, and warm up engine to the normal operating temperature.
2. Turn ignition switch OFF and wait at least 10 seconds.
3. Turn ignition switch ON.
4. Turn ignition switch OFF and wait at least 10 seconds.
5. Turn ignition ON (READY) and select “DATA MONITOR” mode with CONSULT-III.
6. Drive vehicle at a speed of 80 km/h (50 MPH) or more for at least 3 consecutive minutes.
   CAUTION:
   Always drive vehicle in safe manner according to traffic conditions and obey all traffic laws.
   NOTE:
   Keep the vehicle speed as steady as possible during the cruising.
7. Stop vehicle and shift the selector lever to P position.
8. Select “FUEL INJECTION” in “ACTIVE TEST” mode, and select “HO2S2 (B1)” as the monitor item with CONSULT-III.
9. Check “HO2S2 (B1)” at idle speed when adjusting “FUEL INJECTION” to ±25%.

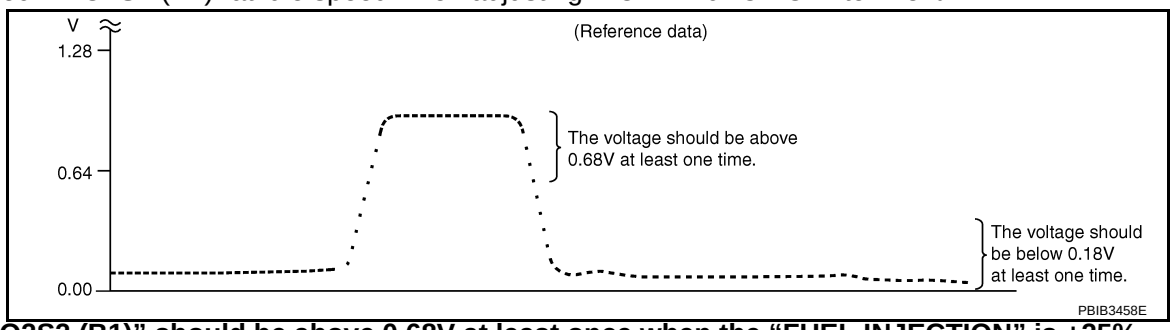

“HO2S2 (B1)” should be above 0.68V at least once when the “FUEL INJECTION” is +25%.
“HO2S2 (B1)” should be below 0.18V at least once when the “FUEL INJECTION” is –25%.

Is the inspection result normal?

YES >> INSPECTION END
NO >> GO TO 4.

3. CHECK HEATED OXYGEN SENSOR 2-II

Without CONSULT-III

1. Activate “INSPECTION MODE 1” (HBC-97) to start engine, and warm up engine to the normal operating temperature.

2. Turn ignition switch OFF and wait at least 10 seconds.
3. Turn ignition switch ON.
4. Turn ignition switch OFF and wait at least 10 seconds.
5. Turn ignition ON (READY) and drive vehicle at a speed of 80 km/h (50 MPH) or more for at least 3 consecutive minutes.
   CAUTION:
   Always drive vehicle in safe manner according to traffic conditions and obey all traffic laws.
   NOTE:
   Keep the vehicle speed as steady as possible during the cruising.
6. Stop vehicle and shift the selector lever to P position.
7. Check the voltage between ECM harness connector and ground under the following condition.

ECM		Ground	Condition	Voltage
Connector	Terminal			
F13	33 (HO2S2 signal)	Ground	Fully depress the accelerator pedal and keep it, then fully release accelerator pedal.	The voltage should be above 0.68V at least once during this procedure. The voltage should be below 0.18V at least once during this procedure.

Is the inspection result normal?

YES >> INSPECTION END
NO >> GO TO 4.

4. REPLACE HEATED OXYGEN SENSOR 2

Replace heated oxygen sensor 2.

CAUTION:

- **Discard any heated oxygen sensor which has been dropped from a height of more than 0.5 m (19.7 in) onto a hard surface such as a concrete floor; use a new one.**
- **Before installing new oxygen sensor, clean exhaust system threads using Oxygen Sensor Thread Cleaner tool J-43897-18 or J-43897-12 and approved anti-seize lubricant.**

>> INSPECTION END

P0139 HO2S2

Description

INFOID:0000000003069219

The heated oxygen sensor 2, after three way catalyst (manifold), monitors the oxygen level in the exhaust gas.
Even if switching characteristics of the air fuel ratio (A/F) sensor 1 are shifted, the air-fuel ratio is controlled to stoichiometric, by the signal from the heated oxygen sensor 2.
This sensor is made of ceramic zirconia. The zirconia generates voltage from approximately 1V in richer conditions to 0V in leaner conditions.
Under normal conditions the heated oxygen sensor 2 is not used for engine control operation.

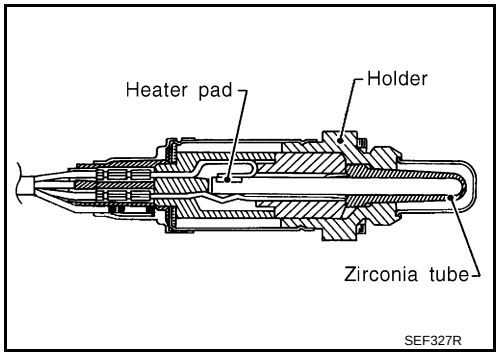

DTC Logic

INFOID:0000000003069220

DTC DETECTION LOGIC

The heated oxygen sensor 2 has a much longer switching time between rich and lean than the air fuel ratio (A/F) sensor 1. The oxygen storage capacity of the three way catalyst (manifold) causes the longer switching time. To judge the malfunctions of heated oxygen sensor 2, ECM monitors whether the switching response of the sensor's voltage is faster than specified during the various driving condition such as fuel-cut.

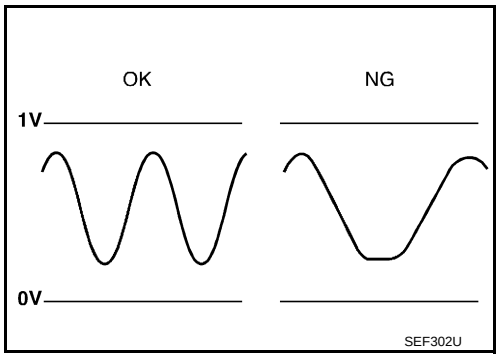

DTC No.	Trouble diagnosis name	DTC detecting condition	Possible cause
P0139	Heated oxygen sensor 2 circuit slow response	It takes more time for the sensor to respond between rich and lean than the specified time.	• Harness or connectors (The sensor circuit is open or shorted) • Heated oxygen sensor 2 • Fuel pressure • Fuel injector • Intake air leaks

DTC CONFIRMATION PROCEDURE

1. INSPECTION START

Do you have CONSULT-III?

Do you have CONSULT-III?

YES >> GO TO 2.
NO >> GO TO 5.

2. PRECONDITIONING

If DTC Confirmation Procedure has been previously conducted, always perform the following before conducting the next test.

1. Turn ignition switch OFF and wait at least 10 seconds.
2. Turn ignition switch ON.
3. Turn ignition switch OFF and wait at least 10 seconds.

TESTING CONDITION:
For better results, perform “DTC WORK SUPPORT” at a temperature of 0 to 30 °C (32 to 86 °F).

>> GO TO 3.

3. PERFORM DTC CONFIRMATION PROCEDURE

With CONSULT-III

1. Activate “INSPECTION MODE 1” (HBC-97) to start engine, and warm up engine to normal operating temperature.
2. Turn ignition switch OFF and wait at least 10 seconds.
3. Turn ignition switch ON.
4. Turn ignition switch OFF and wait at least 10 seconds.
5. Turn ignition switch ON (READY) and select “DATA MONITOR” mode with CONSULT-III.
6. Drive vehicle at a speed of 80 km/h (50 MPH) or more for at least 3 consecutive minutes.
   CAUTION:
   Always drive vehicle in safe manner according to traffic conditions and obey all traffic laws.
   NOTE:
   Keep the vehicle speed as steady as possible during the cruising.
7. Stop the vehicle and shift the selector lever to P position.
8. Fully depress the accelerator pedal and keep it until step 11.
9. Make sure that “COOLAN TEMP/S” indicates more than 70°C (158°F).
   If not, warm up engine and go to next step when “COOLAN TEMP/S” indication reaches to 70°C (158°F).
10. Select “HO2S2 (B1) P0139” of “HO2S2” in “DTC WORK SUPPORT” mode with CONSULT-III.
11. Touch “START”.
    NOTE:
    It will take at most 10 minutes until “COMPLETED” is displayed.
12. Touch “SELF-DIAG RESULT”.

Which is displayed on CONSULT-III?

OK >> INSPECTION END
NG >> GO TO 4.
CAN NOT BE DIAGNOSED>>GO TO 4.

4. PERFORM THE RESULT OF DTC CONFIRMATION PROCEDURE

1. Turn ignition switch OFF and leave the vehicle in a cool place (soak the vehicle).
2. Perform DTC CONFIRMATION PROCEDURE again.

>> GO TO 3.

5. PERFORM COMPONENT FUNCTION CHECK

Perform component function check. Refer to EC-206, "Component Function Check".

NOTE:
Use component function check to check the overall function of the heated oxygen sensor 2 circuit. During this check, a 1st trip DTC might not be confirmed.

Is the inspection result normal?

YES >> INSPECTION END
NO >> Go to EC-207, "Diagnosis Procedure".

Component Function Check

INFOID:0000000003069221

1. PERFORM COMPONENT FUNCTION CHECK

Without CONSULT-III

1. Activate “INSPECTION MODE 1” (HBC-97) to start engine, and warm up engine to the normal operating temperature.
2. Turn ignition switch OFF and wait at least 10 seconds.
3. Turn ignition switch ON.
4. Turn ignition switch OFF and wait at least 10 seconds.
5. Turn ignition ON (READY) and drive vehicle at a speed of 80 km/h (50 MPH) or more for at least 3 consecutive minutes.
   CAUTION:
   Always drive vehicle in safe manner according to traffic conditions and obey all traffic laws.
   NOTE:
   Keep the vehicle speed as steady as possible during the cruising.
6. Stop vehicle and shift the selector lever to P position.

7. Check the voltage between ECM harness connector and ground under the following condition.

ECM		Ground	Condition	Voltage
Connector	Terminal			
F13	33 (HO2S2 signal)	Ground	Fully depress the accelerator pedal and keep it, then fully release accelerator pedal	A change of voltage should be more than 0.30V for during this procedure.

Is the inspection result normal?

YES >> INSPECTION END
NO >> Go to EC-207, "Diagnosis Procedure".

Diagnosis Procedure

INFOID:0000000003069222

1. CHECK GROUND CONNECTION

1. Turn ignition switch OFF.
2. Check ground connection E9. Refer to Ground Inspection in GI-45, "Circuit Inspection".

Is the inspection result normal?

YES >> GO TO 2.
NO >> Repair or replace ground connection.

2. CLEAR THE MIXTURE RATIO SELF-LEARNING VALUE

1. Clear the mixture ratio self-learning value. Refer to EC-18, "MIXTURE RATIO SELF-LEARNING VALUE CLEAR : Special Repair Requirement".
2. Activate “INSPECTION MODE 1” (HBC-97) to start engine, and let engine idle for at least 10 minutes.

Is the 1st trip DTC P0171 or P0172 detected? Is it difficult to start engine?

YES >> Perform trouble diagnosis for DTC P0171 or P0172. Refer to EC-222, "DTC Logic" or EC-226, "DTC Logic".
NO >> GO TO 3.

3. CHECK HO2S2 GROUND CIRCUIT FOR OPEN AND SHORT

1. Turn ignition switch OFF.
2. Disconnect heated oxygen sensor 2 harness connector.
3. Disconnect ECM harness connector.
4. Check the continuity between HO2S2 harness connector and ECM harness connector.

HO2S2		ECM		Continuity
Connector	Terminal	Connector	Terminal	
F42	1	F13	35	Existed

5. Also check harness for short to ground and short to power.

Is the inspection result normal?

YES >> GO TO 4.
NO >> Repair open circuit or short to ground or short to power in harness or connectors.

4. CHECK HO2S2 INPUT SIGNAL CIRCUIT FOR OPEN AND SHORT

1. Check the continuity between HO2S2 harness connector and ECM harness connector.

HO2S2		ECM		Continuity
Connector	Terminal	Connector	Terminal	
F42	4	F13	33	Existed

2. Check the continuity between HO2S2 harness connector or ECM harness connector and ground.

HO2S2		ECM		Ground	Continuity
Connector	Terminal	Connector	Terminal		
F42	4	F13	33	Ground	Not existed

3. Also check harness for short to power.

Is the inspection result normal?

YES >> GO TO 5.
NO >> Repair open circuit or short to ground or short to power in harness or connectors.

5. CHECK HEATED OXYGEN SENSOR 2

Refer to EC-208, "Component Inspection".

Is the inspection result normal?

YES >> GO TO 7.
NO >> GO TO 6.

6. REPLACE HEATED OXYGEN SENSOR 2

Replace heated oxygen sensor 2.

CAUTION:

- **Discard any heated oxygen sensor which has been dropped from a height of more than 0.5 m (19.7 in) onto a hard surface such as a concrete floor; use a new one.**
- **Before installing new oxygen sensor, clean exhaust system threads using Oxygen Sensor Thread Cleaner tool J-43897-18 or J-43897-12 and approved anti-seize lubricant.**

>> INSPECTION END

7. CHECK INTERMITTENT INCIDENT

Refer to GI-42, "Intermittent Incident".

>> INSPECTION END

Component Inspection

INFOID:0000000003069223

1. INSPECTION START

Do you have CONSULT-III?

Do you have CONSULT-III?

YES >> GO TO 2.
NO >> GO TO 3.

2. CHECK HEATED OXYGEN SENSOR 2-I

With CONSULT-III

1. Activate “INSPECTION MODE 1” (HBC-97) to start engine, and warm up engine to the normal operating temperature.
2. Turn ignition switch OFF and wait at least 10 seconds.
3. Turn ignition switch ON.
4. Turn ignition switch OFF and wait at least 10 seconds.
5. Turn ignition ON (READY) and select “DATA MONITOR” mode with CONSULT-III.
6. Drive vehicle at a speed of 80 km/h (50 MPH) or more for at least 3 consecutive minutes.
   CAUTION:
   Always drive vehicle in safe manner according to traffic conditions and obey all traffic laws.
   NOTE:
   Keep the vehicle speed as steady as possible during the cruising.
7. Stop vehicle and shift the selector lever to P position.
8. Select “FUEL INJECTION” in “ACTIVE TEST” mode, and select “HO2S2 (B1)” as the monitor item with CONSULT-III.

9. Check “HO2S2 (B1)” at idle speed when adjusting “FUEL INJECTION” to ±25%.

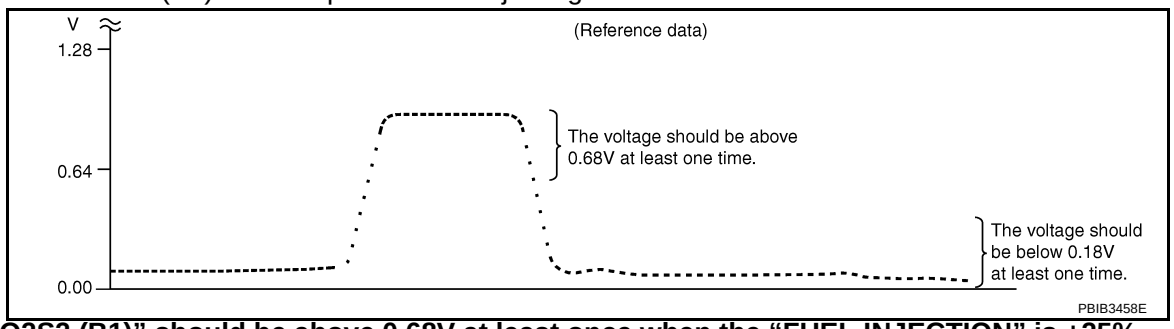

“HO2S2 (B1)” should be above 0.68V at least once when the “FUEL INJECTION” is +25%.
“HO2S2 (B1)” should be below 0.18V at least once when the “FUEL INJECTION” is –25%.

Is the inspection result normal?

YES >> INSPECTION END
NO >> GO TO 4.

3. CHECK HEATED OXYGEN SENSOR 2-II

Without CONSULT-III

1. Activate “INSPECTION MODE 1” (HBC-97) to start engine, and warm up engine to the normal operating temperature.
2. Turn ignition switch OFF and wait at least 10 seconds.
3. Turn ignition switch ON.
4. Turn ignition switch OFF and wait at least 10 seconds.
5. Turn ignition ON (READY) and drive vehicle at a speed of 80 km/h (50 MPH) or more for at least 3 consecutive minutes.
   CAUTION:
   Always drive vehicle in safe manner according to traffic conditions and obey all traffic laws.
   NOTE:
   Keep the vehicle speed as steady as possible during the cruising.
6. Stop vehicle and shift the selector lever to P position.
7. Check the voltage between ECM harness connector and ground under the following condition.

ECM		Ground	Condition	Voltage
Connector	Terminal			
F13	33 (HO2S2 signal)	Ground	Fully depress the accelerator pedal and keep it, then fully release accelerator pedal.	The voltage should be above 0.68V at least once during this procedure. The voltage should be below 0.18V at least once during this procedure.

Is the inspection result normal?

YES >> INSPECTION END
NO >> GO TO 4.

4. REPLACE HEATED OXYGEN SENSOR 2

Replace heated oxygen sensor 2.

CAUTION:

- **Discard any heated oxygen sensor which has been dropped from a height of more than 0.5 m (19.7 in) onto a hard surface such as a concrete floor; use a new one.**
- **Before installing new oxygen sensor, clean exhaust system threads using Oxygen Sensor Thread Cleaner tool J-43897-18 or J-43897-12 and approved anti-seize lubricant.**

>> INSPECTION END

P0143 HO2S3

Description

INFOID:0000000003069224

The heated oxygen sensor 3, after HC adsorption catalyst (Under floor), monitors the oxygen level in the exhaust gas.
This sensor is made of ceramic zirconia. The zirconia generates voltage from approximately 1V in richer conditions to 0V in leaner conditions.
Under normal conditions the heated oxygen sensor 3 is not used for engine control operation.

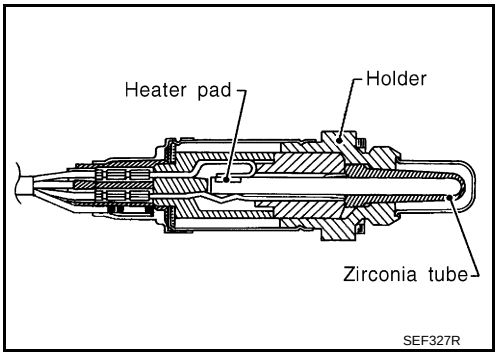

DTC Logic

INFOID:0000000003069225

DTC DETECTION LOGIC

The heated oxygen sensor 3 has a much longer switching time between rich and lean than the air fuel ratio (A/F) sensor 1. The oxygen storage capacity of the three way catalyst (manifold) causes the longer switching time. To judge the malfunctions of heated oxygen sensor 3, ECM monitors whether the minimum voltage of sensor is sufficiently low during the various driving condition such as fuel cut.

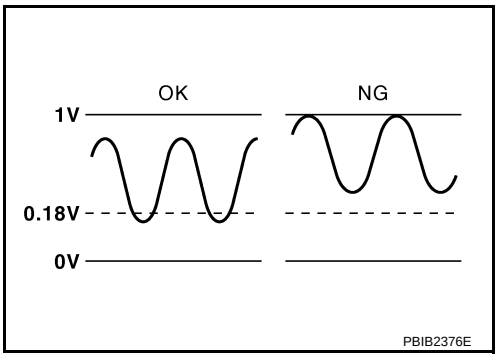

DTC No.	Trouble diagnosis name	DTC detecting condition	Possible cause
P0143	Heated oxygen sensor 3 circuit high voltage	The minimum voltage from the sensor is not reached to the specified voltage.	• Harness or connectors (The sensor circuit is open or shorted) • Heated oxygen sensor 3 • Fuel pressure • Fuel injector

DTC CONFIRMATION PROCEDURE

1. PRECONDITIONING

If DTC Confirmation Procedure has been previously conducted, always perform the following before conducting the next test.

1. Turn ignition switch OFF and wait at least 10 seconds.
2. Turn ignition switch ON.
3. Turn ignition switch OFF and wait at least 10 seconds.

>> GO TO 2.

2. PERFORM DTC CONFIRMATION PROCEDURE

1. Activate “INSPECTION MODE 1” (HBC-97) to start engine, and warm up engine to normal operating temperature.
2. Turn ignition switch OFF and wait at least 10 seconds.
3. Turn ignition switch ON.
4. Turn ignition switch OFF and wait at least 10 seconds.
5. Turn ignition switch ON (READY).
6. Repeat following procedure 3 times.

- Drive vehicle at a speed of 80 km/h (50 MPH) or more for at least 3 consecutive minutes.

CAUTION:
Always drive vehicle in safe manner according to traffic conditions and obey all traffic laws.

NOTE:
- **Keep the vehicle speed as steady as possible during the cruising.**
- **Never raise engine speed above 3,600 rpm in this step.**

- Release accelerator pedal fully and stop vehicle.

NOTE:
Never turn ignition switch OFF.

7. Check 1st trip DTC.

Is 1st tip DTC detected?

YES >> Go to EC-211, "Diagnosis Procedure".
NO >> INSPECTION END

Diagnosis Procedure

INFOID:0000000003069226

1. CHECK GROUND CONNECTION

1. Turn ignition switch OFF.
2. Check ground connection E9. Refer to Ground Inspection in GI-45, "Circuit Inspection".

Is the inspection result normal?

YES >> GO TO 2.
NO >> Repair or replace ground connection.

2. CLEAR THE MIXTURE RATIO SELF-LEARNING VALUE

1. Clear the mixture ratio self-learning value. Refer to EC-18, "MIXTURE RATIO SELF-LEARNING VALUE CLEAR : Special Repair Requirement".
2. Activate “INSPECTION MODE 1” (HBC-97) to start engine, and let engine idle for at least 10 minutes.

Is the 1st trip DTC P0172 detected? Is it difficult to start engine?

YES >> Perform trouble diagnosis for DTC P0172. Refer to EC-227, "Diagnosis Procedure".
NO >> GO TO 3.

3. CHECK HO2S3 GROUND CIRCUIT FOR OPEN AND SHORT

1. Turn ignition switch OFF.
2. Disconnect heated oxygen sensor 3 harness connector.
3. Disconnect ECM harness connector.
4. Check the continuity between HO2S3 harness connector and ECM harness connector.

HO2S3		ECM		Continuity
Connector	Terminal	Connector	Terminal	
F102	1	F13	35	Existed

5. Also check harness for short to ground and short to power.

Is the inspection result normal?

YES >> GO TO 5.
NO >> GO TO 4.

4. DETECT MALFUNCTIONING PART

Check the following.
- Harness connectors F58, F101
- Harness for open or short between heated oxygen sensor 3 and ECM

>> Repair open circuit or short to ground or short to power in harness or connectors.

5. CHECK HO2S3 INPUT SIGNAL CIRCUIT FOR OPEN AND SHORT

1. Check the continuity between HO2S3 harness connector and ECM harness connector.

HO2S3		ECM		Continuity
Connector	Terminal	Connector	Terminal	
F102	4	F13	34	Existed

2. Check the continuity between HO2S3 harness connector or ECM harness connector and ground.

HO2S3		ECM		Ground	Continuity
Connector	Terminal	Connector	Terminal		
F102	4	F13	34	Ground	Not existed

3. Also check harness for short to power.

Is the inspection result normal?

YES >> GO TO 7.
NO >> GO TO 6.

6. DETECT MALFUNCTIONING PART

Check the following.
- Harness connectors F58, F101
- Harness for open or short between heated oxygen sensor 3 and ECM

>> Repair open circuit or short to ground or short to power in harness or connectors.

7. CHECK INTERMITTENT INCIDENT

Refer to GI-42, "Intermittent Incident".

Is the inspection result normal?

YES >> GO TO 8.
NO >> Repir or replace.

8. REPLACE HEATED OXYGEN SENSOR 3

Replace heated oxygen sensor 3.

CAUTION:
- **Discard any heated oxygen sensor which has been dropped from a height of more than 0.5 m (19.7 in) onto a hard surface such as a concrete floor; use a new one.**
- **Before installing new oxygen sensor, clean exhaust system threads using Oxygen Sensor Thread Cleaner tool J-43897-18 or J-43897-12 and approved anti-seize lubricant.**

>> INSPECTION END

P0144 HO2S3

Description

INFOID:0000000003069227

The heated oxygen sensor 3, after HC adsorption catalyst (Under floor), monitors the oxygen level in the exhaust gas.
This sensor is made of ceramic zirconia. The zirconia generates voltage from approximately 1V in richer conditions to 0V in leaner conditions.
Under normal conditions the heated oxygen sensor 3 is not used for engine control operation.

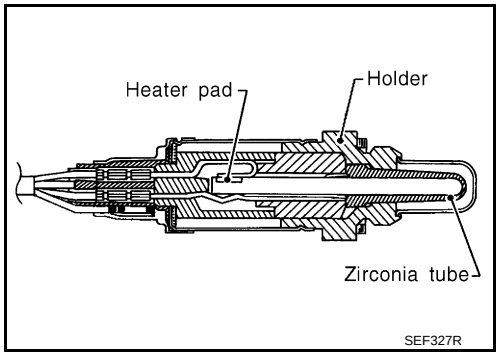

DTC Logic

INFOID:0000000003069228

DTC DETECTION LOGIC

The heated oxygen sensor 3 has a much longer switching time between rich and lean than the air fuel ratio (A/F) sensor 1. The oxygen storage capacity of the three way catalyst (manifold) causes the longer switching time. To judge the malfunctions of heated oxygen sensor 3, ECM monitors whether the maximum voltage of the sensor is sufficiently high during the various driving condition such as fuel-cut.

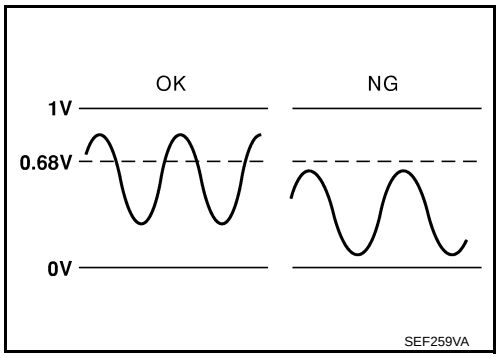

DTC No.	Trouble diagnosis name	DTC detecting condition	Possible cause
P0144	Heated oxygen sensor 3 circuit low voltage	The maximum voltage from the sensor is not reached to the specified voltage.	• Harness or connectors (The sensor circuit is open or shorted) • Heated oxygen sensor 3 • Fuel pressure • Fuel injector • Intake air leaks

DTC CONFIRMATION PROCEDURE

1. PRECONDITIONING

If DTC Confirmation Procedure has been previously conducted, always perform the following before conducting the next test.
1. Turn ignition switch OFF and wait at least 10 seconds.
2. Turn ignition switch ON.
3. Turn ignition switch OFF and wait at least 10 seconds.

>> GO TO 2.

2. PERFORM DTC CONFIRMATION PROCEDURE

1. Activate “INSPECTION MODE 1” (HBC-97) to start engine, and warm up engine to normal operating temperature.
2. Turn ignition switch OFF and wait at least 10 seconds.
3. Turn ignition switch ON.
4. Turn ignition switch OFF and wait at least 10 seconds.
5. Turn ignition switch ON (READY).
6. Repeat following procedure 3 times.

- Drive vehicle at a speed of 80 km/h (50 MPH) or more for at least 3 consecutive minutes.

CAUTION:
Always drive vehicle in safe manner according to traffic conditions and obey all traffic laws.
NOTE:
- **Keep the vehicle speed as steady as possible during the cruising.**
- **Never raise engine speed above 3,600 rpm in this step.**

- Release accelerator pedal fully and stop vehicle.

NOTE:
Never turn ignition switch OFF.

7. Check 1st trip DTC.

Is 1st tip DTC detected?

YES >> Go to EC-214, "Diagnosis Procedure".
NO >> INSPECTION END

Diagnosis Procedure

INFOID:0000000003069229

1. CHECK GROUND CONNECTION

1. Turn ignition switch OFF.
2. Check ground connection E9. Refer to Ground Inspection in GI-45, "Circuit Inspection".

Is the inspection result normal?

YES >> GO TO 2.
NO >> Repair or replace ground connection.

2. CLEAR THE MIXTURE RATIO SELF-LEARNING VALUE

1. Clear the mixture ratio self-learning value. Refer to EC-18, "MIXTURE RATIO SELF-LEARNING VALUE CLEAR : Special Repair Requirement".
2. Activate “INSPECTION MODE 1”(HBC-97) to start engine, and let engine idle for at least 10 minutes.

Is the 1st trip DTC P0171 or P0172 detected? Is it difficult to start engine?

YES >> Perform trouble diagnosis for DTC P0171 or P0172. Refer to EC-222, "DTC Logic" or EC-226, "DTC Logic".
NO >> GO TO 3.

3. CHECK HO2S3 GROUND CIRCUIT FOR OPEN AND SHORT

1. Turn ignition switch OFF.
2. Disconnect heated oxygen sensor 3 harness connector.
3. Disconnect ECM harness connector.
4. Check the continuity between HO2S3 harness connector and ECM harness connector.

HO2S3		ECM		Continuity
Connector	Terminal	Connector	Terminal	
F102	1	F13	35	Existed

5. Also check harness for short to ground and short to power.

Is the inspection result normal?

YES >> GO TO 5.
NO >> GO TO 4.

4. DETECT MALFUNCTIONING PART

Check the following.
- Harness connectors F58, F101
- Harness for open or short between heated oxygen sensor 3 and ECM

>> Repair open circuit or short to ground or short to power in harness or connectors.

5. CHECK HO2S3 INPUT SIGNAL CIRCUIT FOR OPEN AND SHORT

1. Check the continuity between HO2S3 harness connector and ECM harness connector.

HO2S3		ECM		Continuity
Connector	Terminal	Connector	Terminal	
F102	4	F13	34	Existed

2. Check the continuity between HO2S3 harness connector or ECM harness connector and ground.

HO2S3		ECM		Ground	Continuity
Connector	Terminal	Connector	Terminal		
F102	4	F13	34	Ground	Not existed

3. Also check harness for short to power.

Is the inspection result normal?

YES >> GO TO 7.
NO >> GO TO 6.

6. DETECT MALFUNCTIONING PART

Check the following.
- Harness connectors F58, F101
- Harness for open or short between heated oxygen sensor 3 and ECM

>> Repair open circuit or short to ground or short to power in harness or connectors.

7. CHECK INTERMITTENT INCIDENT

Refer to GI-42, "Intermittent Incident".

Is the inspection result normal?

YES >> GO TO 8.
NO >> Repir or replace.

8. REPLACE HEATED OXYGEN SENSOR 3

Replace heated oxygen sensor 3.

CAUTION:
- **Discard any heated oxygen sensor which has been dropped from a height of more than 0.5 m (19.7 in) onto a hard surface such as a concrete floor; use a new one.**
- **Before installing new oxygen sensor, clean exhaust system threads using Oxygen Sensor Thread Cleaner tool J-43897-18 or J-43897-12 and approved anti-seize lubricant.**

>> INSPECTION END

P0145 HO2S3

Description

INFOID:0000000003069230

The heated oxygen sensor 3, after HC adsorption catalyst (Under floor), monitors the oxygen level in the exhaust gas.
This sensor is made of ceramic zirconia. The zirconia generates voltage from approximately 1V in richer conditions to 0V in leaner conditions.
Under normal conditions the heated oxygen sensor 3 is not used for engine control operation.

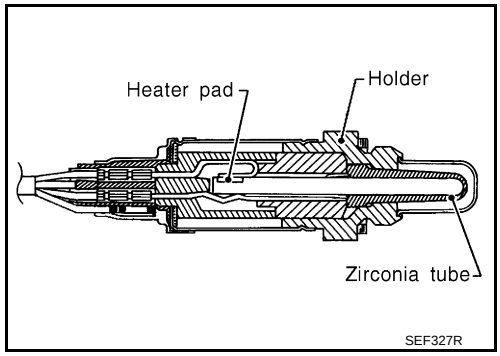

DTC Logic

INFOID:0000000003069231

DTC DETECTION LOGIC

The heated oxygen sensor 3 has a much longer switching time between rich and lean than the air fuel ratio (A/F) sensor 1. The oxygen storage capacity of the three way catalyst (manifold) causes the longer switching time. To judge the malfunctions of heated oxygen sensor 3, ECM monitors whether the switching response of the sensor's voltage is faster than specified during the various driving condition such as fuel-cut.

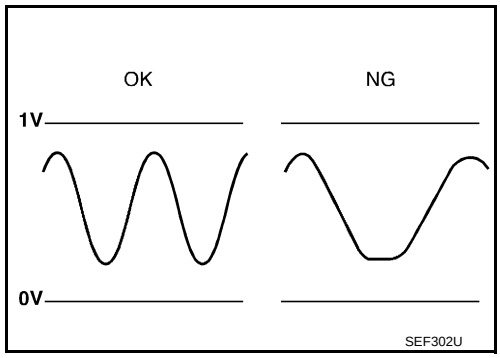

DTC No.	Trouble diagnosis name	DTC detecting condition	Possible cause
P0145	Heated oxygen sensor 3 circuit slow response	It takes more time for the sensor to respond between rich and lean than the specified time.	• Harness or connectors (The sensor circuit is open or shorted) • Heated oxygen sensor 3 • Fuel pressure • Fuel injector • Intake air leaks

DTC CONFIRMATION PROCEDURE

1. PRECONDITIONING

If DTC Confirmation Procedure has been previously conducted, always perform the following before conducting the next test.
1. Turn ignition switch OFF and wait at least 10 seconds.
2. Turn ignition switch ON.
3. Turn ignition switch OFF and wait at least 10 seconds.

>> GO TO 2.

2. PERFORM DTC CONFIRMATION PROCEDURE

1. Activate “INSPECTION MODE 1” (HBC-97) to start engine, and warm up engine to normal operating temperature.
2. Turn ignition switch OFF and wait at least 10 seconds.
3. Turn ignition switch ON.
4. Turn ignition switch OFF and wait at least 10 seconds.
5. Turn ignition switch ON (READY).
6. Repeat following procedure 3 times.

- Drive vehicle at a speed of 80 km/h (50 MPH) or more for at least 3 consecutive minutes.

CAUTION:
Always drive vehicle in safe manner according to traffic conditions and obey all traffic laws.
NOTE:
- **Keep the vehicle speed as steady as possible during the cruising.**
- **Never raise engine speed above 3,600 rpm in this step.**

- Release accelerator pedal fully and stop vehicle.

NOTE:
Never turn ignition switch OFF.

7. Check 1st trip DTC.

Is 1st tip DTC detected?

YES >> Go to EC-217, "Diagnosis Procedure".
NO >> INSPECTION END

Diagnosis Procedure

INFOID:0000000003069232

1. CHECK GROUND CONNECTION

1. Turn ignition switch OFF.
2. Check ground connection E9. Refer to Ground Inspection in GI-45, "Circuit Inspection".

Is the inspection result normal?

YES >> GO TO 2.
NO >> Repair or replace ground connection.

2. CLEAR THE MIXTURE RATIO SELF-LEARNING VALUE

1. Clear the mixture ratio self-learning value. Refer to EC-18, "MIXTURE RATIO SELF-LEARNING VALUE CLEAR : Special Repair Requirement".
2. Activate “INSPECTION MODE 1” (HBC-97) to start engine, and let idle for at least 10 minutes.

Is the 1st trip DTC P0171 or P0172 detected? Is it difficult to start engine?

YES >> Perform trouble diagnosis for DTC P0171 or P0172. Refer to EC-222, "DTC Logic" or EC-226, "DTC Logic".
NO >> GO TO 3.

3. CHECK HO2S3 GROUND CIRCUIT FOR OPEN AND SHORT

1. Turn ignition switch OFF.
2. Disconnect heated oxygen sensor 3 harness connector.
3. Disconnect ECM harness connector.
4. Check the continuity between HO2S3 harness connector and ECM harness connector.

HO2S3		ECM		Continuity
Connector	Terminal	Connector	Terminal	
F102	1	F13	35	Existed

5. Also check harness for short to ground and short to power.

Is the inspection result normal?

YES >> GO TO 5.
NO >> GO TO 4.

4. DETECT MALFUNCTIONING PART

Check the following.
- Harness connectors F58, F101
- Harness for open or short between heated oxygen sensor 3 and ECM

>> Repair open circuit or short to ground or short to power in harness or connectors.

5. CHECK HO2S3 INPUT SIGNAL CIRCUIT FOR OPEN AND SHORT

1. Check the continuity between HO2S3 harness connector and ECM harness connector.

HO2S3		ECM		Continuity
Connector	Terminal	Connector	Terminal	
F102	4	F13	34	Existed

2. Check the continuity between HO2S3 harness connector or ECM harness connector and ground.

HO2S3		ECM		Ground	Continuity
Connector	Terminal	Connector	Terminal		
F102	4	F13	34	Ground	Not existed

3. Also check harness for short to power.

Is the inspection result normal?

YES >> GO TO 7.
NO >> GO TO 6.

6. DETECT MALFUNCTIONING PART

Check the following.
- Harness connectors F58, F101
- Harness for open or short between heated oxygen sensor 3 and ECM

>> Repair open circuit or short to ground or short to power in harness or connectors.

7. CHECK INTERMITTENT INCIDENT

Refer to GI-42, "Intermittent Incident".

Is the inspection result normal?

YES >> GO TO 8.
NO >> Repair or replace.

8. REPLACE HEATED OXYGEN SENSOR

Replace heated oxygen sensor 3.

CAUTION:
- **Discard any heated oxygen sensor which has been dropped from a height of more than 0.5 m (19.7 in) onto a hard surface such as a concrete floor; use a new one.**
- **Before installing new oxygen sensor, clean exhaust system threads using Oxygen Sensor Thread Cleaner tool J-43897-18 or J-43897-12 and approved anti-seize lubricant.**

>> INSPECTION END

P0146 HO2S3

Description

INFOID:0000000003069233

The heated oxygen sensor 3, after HC adsorption catalyst (Under floor), monitors the oxygen level in the exhaust gas.
This sensor is made of ceramic zirconia. The zirconia generates voltage from approximately 1V in richer conditions to 0V in leaner conditions.
Under normal conditions the heated oxygen sensor 3 is not used for engine control operation.

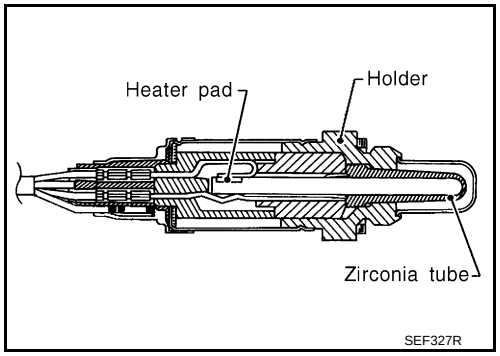

DTC Logic

INFOID:0000000003069234

DTC DETECTION LOGIC

The heated oxygen sensor 3 has a much longer switching time between rich and lean than the air fuel ratio (A/F) sensor 1. The oxygen storage capacity of the three way catalyst (manifold) causes the longer switching time. To judge the malfunctions of heated oxygen sensor 3, ECM monitors whether the voltage is unusually high during the various driving condition such as fuel-cut.

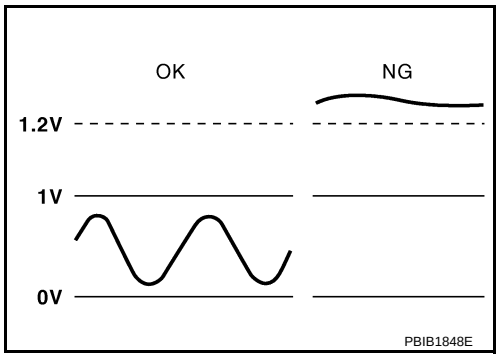

DTC No.	Trouble diagnosis name	DTC detecting condition	Possible cause
P0146	Heated oxygen sensor 3 circuit no activity detected	An excessively high voltage from the sensor is sent to ECM.	• Harness or connectors (The sensor circuit is open or shorted) • Heated oxygen sensor 3

DTC CONFIRMATION PROCEDURE

1. PRECONDITIONING

If DTC Confirmation Procedure has been previously conducted, always perform the following before conducting the next test.

1. Turn ignition switch OFF and wait at least 10 seconds.
2. Turn ignition switch ON.
3. Turn ignition switch OFF and wait at least 10 seconds.

>> GO TO 2.

2. PERFORM DTC CONFIRMATION PROCEDURE

1. Activate “INSPECTION MODE 1” (HBC-97) to start engine, and warm up engine to normal operating temperature.
2. Turn ignition switch OFF and wait at least 10 seconds.
3. Turn ignition switch ON.
4. Turn ignition switch OFF and wait at least 10 seconds.
5. Turn ignition switch ON (READY).
6. Drive vehicle at a speed of 80 km/h (50 MPH) or more for at least 3 consecutive minutes.
   CAUTION:
   Always drive vehicle in safe manner according to traffic conditions and obey all traffic laws.
   NOTE:
   Keep the vehicle speed as steady as possible during the cruising.
7. Check 1st trip DTC.

Is 1st trip DTC detected?

YES >> Go to EC-220, "Diagnosis Procedure".
NO >> INSPECTION END

Diagnosis Procedure

INFOID:0000000003069235

1. CHECK GROUND CONNECTION

1. Turn ignition switch OFF.
2. Check ground connection E9. Refer to Ground Inspection in GI-45, "Circuit Inspection".

Is the inspection result normal?

YES >> GO TO 2.
NO >> Repair or replace ground connection.

2. CHECK HO2S3 GROUND CIRCUIT FOR OPEN AND SHORT

1. Turn ignition switch OFF.
2. Disconnect heated oxygen sensor 3 harness connector.
3. Disconnect ECM harness connector.
4. Check the continuity between HO2S3 harness connector and ECM harness connector.

HO2S3		ECM		Continuity
Connector	Terminal	Connector	Terminal	
F102	1	F13	35	Existed

5. Also check harness for short to ground and short to power.

Is the inspection result normal?

YES >> GO TO 4.
NO >> GO TO 3.

3. DETECT MALFUNCTIONING PART

Check the following.
- Harness connectors F58, F101
- Harness for open or short between heated oxygen sensor 3 and ECM

>> Repair open circuit or short to ground or short to power in harness or connectors.

4. CHECK HO2S3 INPUT SIGNAL CIRCUIT FOR OPEN AND SHORT

1. Check the continuity between HO2S3 harness connector and ECM harness connector.

HO2S3		ECM		Continuity
Connector	Terminal	Connector	Terminal	
F102	4	F13	34	Existed

2. Check the continuity between HO2S3 harness connector or ECM harness connector and ground.

HO2S3		ECM		Ground	Continuity
Connector	Terminal	Connector	Terminal		
F102	4	F13	34	Ground	Not existed

3. Also check harness for short to power.

Is the inspection result normal?

YES >> GO TO 6.
NO >> GO TO 5.

5. DETECT MALFUNCTIONING PART

Check the following.
- Harness connectors F58, F101
- Harness for open or short between heated oxygen sensor 3 and ECM

>> Repair open circuit or short to ground or short to power in harness or connectors.

6. CHECK HO2S3 CONNECTOR FOR WATER

Check connectors for water.

Water should not exist.

Is the inspection result normal?

YES >> GO TO 7.
NO >> Repair or replace harness or connectors.

7. CHECK INTERMITTENT INCIDENT

Refer to GI-42, "Intermittent Incident".

Is the inspection result normal?

YES >> GO TO 8.
NO >> Repair or replace.

8. REPLACE HEATED OXYGEN SENSOR

Replace heated oxygen sensor 3.

CAUTION:

- **Discard any heated oxygen sensor which has been dropped from a height of more than 0.5 m (19.7 in) onto a hard surface such as a concrete floor; use a new one.**
- **Before installing new oxygen sensor, clean exhaust system threads using Oxygen Sensor Thread Cleaner tool J-43897-18 or J-43897-12 and approved anti-seize lubricant.**

>> INSPECTION END

P0171 FUEL INJECTION SYSTEM FUNCTION

DTC Logic

INFOID:0000000003069236

DTC DETECTION LOGIC

With the Air/Fuel Mixture Ratio Self-Learning Control, the actual mixture ratio can be brought closely to the theoretical mixture ratio based on the mixture ratio feedback signal from the A/F sensors 1. The ECM calculates the necessary compensation to correct the offset between the actual and the theoretical ratios.
In case the amount of the compensation value is extremely large (The actual mixture ratio is too lean.), the ECM judges the condition as the fuel injection system malfunction and lights up the MIL (2 trip detection logic).

Sensor	Input signal to ECM	ECM function	Actuator
A/F sensor 1	Density of oxygen in exhaust gas (Mixture ratio feedback signal)	Fuel injection control	Fuel injector

DTC No.	Trouble diagnosis name	DTC detecting condition	Possible cause
P0171	Fuel injection system too lean	• Fuel injection system does not operate properly. • The amount of mixture ratio compensation is too large. (The mixture ratio is too lean.)	• Intake air leaks • A/F sensor 1 • Fuel injector • Exhaust gas leaks • Incorrect fuel pressure • Lack of fuel • Mass air flow sensor • Incorrect PCV hose connection

DTC CONFIRMATION PROCEDURE

1. PRECONDITIONING

If DTC Confirmation Procedure has been previously conducted, always perform the following before conducting the next test.
1. Turn ignition switch OFF and wait at least 10 seconds.
2. Turn ignition switch ON.
3. Turn ignition switch OFF and wait at least 10 seconds.

>> GO TO 2.

2. PERFORM DTC CONFIRMATION PROCEDURE-II

1. Clear the mixture ratio self-learning value. Refer to EC-18, "MIXTURE RATIO SELF-LEARNING VALUE CLEAR : Special Repair Requirement".
2. Activate “INSPECTION MODE 1” (HBC-97) to start engine, and let engine idle for at least 10 minutes.
3. Check 1st trip DTC.

Is 1st trip DTC detected?

YES >> Go to EC-223, "Diagnosis Procedure".
NO >> GO TO 3.

3. PERFORM DTC CONFIRMATION PROCEDURE-III

1. Turn ignition switch OFF and wait at least 10 seconds.
2. Turn ignition switch ON (READY) and drive the vehicle under the similar conditions to (1st trip) Freeze Frame Data for 10 minutes. Refer to the table below.
   Hold the accelerator pedal as steady as possible.
   The similar conditions to (1st trip) Freeze Frame Data means the vehicle operation that the following conditions should be satisfied at the same time.

Engine speed	Engine speed in the freeze frame data ± 400 rpm
Vehicle speed	Vehicle speed in the freeze frame data ± 10 km/h (6 MPH)

Engine coolant temperature (T) condition	When the freeze frame data shows lower than 70 °C (158 °F), T should be lower than 70 °C (158 °F).
	When the freeze frame data shows higher than or equal to 70 °C (158 °F), T should be higher than or equal to 70 °C (158 °F).

3. Check 1st trip DTC.

Is 1st trip DTC detected?

YES >> Go to EC-223, "Diagnosis Procedure".
NO >> INSPECTION END

Diagnosis Procedure

INFOID:0000000003069237

1. CHECK EXHAUST GAS LEAK

1. Activate “INSPECTION MODE 1” (HBC-97) to start engine.
2. Listen for an exhaust gas leak before three way catalyst (manifold).

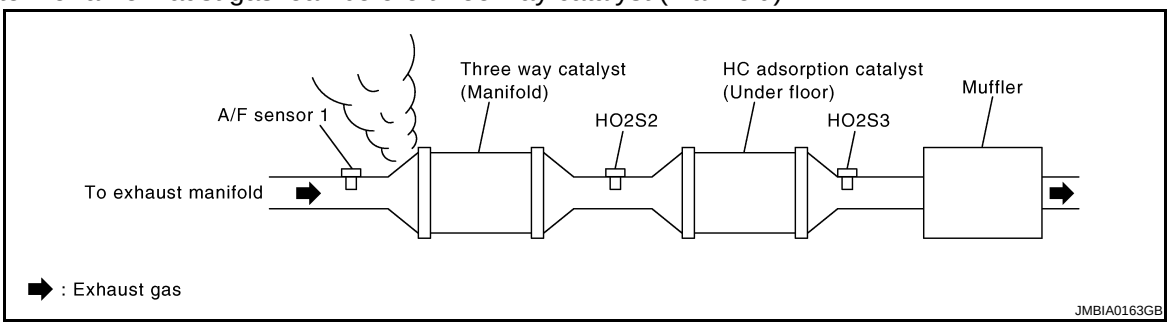

Is exhaust gas leak detected?

YES >> Repair or replace.
NO >> GO TO 2.

2. CHECK FOR INTAKE AIR LEAK

1. Listen for an intake air leak after the mass air flow sensor.
2. Check PCV hose connection.

Intake air leak detected?

YES >> Repair or replace.
NO >> GO TO 3.

3. CHECK A/F SENSOR 1 INPUT SIGNAL CIRCUIT

1. Turn ignition switch OFF.
2. Disconnect corresponding A/F sensor 1 harness connector.
3. Disconnect ECM harness connector.
4. Check the continuity between A/F sensor 1 harness connector and ECM harness connector.

A/F sensor 1		ECM		Continuity
Connector	Terminal	Connector	Terminal	
F44	1	F14	45	Existed
	2		49	

5. Check the continuity between A/F sensor 1 harness connector or ECM harness connector and ground.

A/F sensor 1		ECM		Ground	Continuity
Connector	Terminal	Connector	Terminal		
F44	1	F14	45	Ground	Not existed
	2		49		

6. Also check harness for short to power.

Is the inspection result normal?

YES >> GO TO 4.

NO >> Repair open circuit or short to ground or short to power in harness or connectors.

4. CHECK FUEL PRESSURE

1. Release fuel pressure to zero. Refer to EC-454, "Inspection".
2. Install fuel pressure gauge and check fuel pressure. Refer to EC-454, "Inspection".

At idling: Approximately 350 kPa (3.57 kg/cm^2, 51 psi)

Is the inspection result normal?

YES >> GO TO 6.
NO >> GO TO 5.

5. DETECT MALFUNCTIONING PART

Check fuel hoses and fuel tubes for clogging.

Is the inspection result normal?

YES >> Replace “fuel filter and fuel pump assembly”.
NO >> Repair or replace

6. CHECK MASS AIR FLOW SENSOR

With CONSULT-III

1. Install all removed parts.
2. Check “MASS AIR FLOW” in “DATA MONITOR” mode with CONSULT-III.
3. For specification, refer to EC-459, "Mass Air Flow Sensor".

With GST

1. Install all removed parts.
2. Check mass air flow sensor signal in Service $01 with GST.
3. For specification, refer to EC-459, "Mass Air Flow Sensor".

Is the measurement value within the specification?

YES >> GO TO 7.
NO >> Check connectors for rusted terminals or loose connections in the mass air flow sensor circuit or grounds. Refer to EC-145, "DTC Logic".

7. CHECK FUNCTION OF FUEL INJECTOR

With CONSULT-III

1. Turn ignition switch ON (READY).
2. Perform “POWER BALANCE” in “ACTIVE TEST” mode with CONSULT-III.
3. Make sure that each circuit produces a momentary engine speed drop.

Without CONSULT-III

1. Activate “INSPECTION MODE 1” (HBC-97) to start engine.
2. Listen to each fuel injector operating sound.

Clicking noise should be heard.

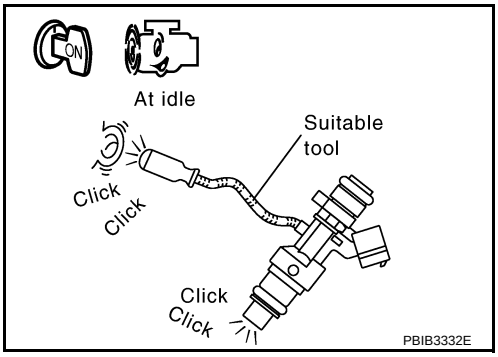

Is the inspection result normal?

YES >> GO TO 8.
NO >> Perform trouble diagnosis for FUEL INJECTOR, refer to EC-236, "Diagnosis Procedure".

8. CHECK FUEL INJECTOR

1. Turn ignition switch OFF.
2. Confirm that the engine is cooled down and there are no fire hazards near the vehicle.
3. Disconnect all fuel injector harness connectors.
4. Remove fuel tube assembly. Refer to EM-34, "Removal and Installation".
   Keep fuel hose and all fuel injectors connected to fuel tube.
5. Disconnect all ignition coil harness connectors.

6. Prepare pans or saucers under each fuel injector.
7. Turn ignition switch ON (READY).
8. Depress the accelerator pedal to crank engine.
   NOTE:
   If step 8 performed, a certain DTC may be detected.

Fuel should be sprayed evenly for each fuel injector.

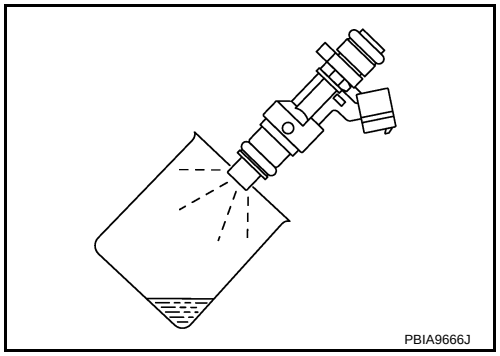

Is the inspection result normal?

YES >> GO TO 9.
NO >> Replace fuel injectors from which fuel does not spray out. Always replace O-ring with new ones.

9. CHECK INTERMITTENT INCIDENT

Refer to GI-42, "Intermittent Incident".

>> INSPECTION END

P0172 FUEL INJECTION SYSTEM FUNCTION

DTC Logic

INFOID:0000000003069238

DTC DETECTION LOGIC

With the Air/Fuel Mixture Ratio Self-Learning Control, the actual mixture ratio can be brought closely to the theoretical mixture ratio based on the mixture ratio feedback signal from the A/F sensors 1. The ECM calculates the necessary compensation to correct the offset between the actual and the theoretical ratios.
In case the amount of the compensation value is extremely large (The actual mixture ratio is too rich.), the ECM judges the condition as the fuel injection system malfunction and lights up the MIL (2 trip detection logic).

Sensor	Input signal to ECM	ECM function	Actuator
A/F sensor 1	Density of oxygen in exhaust gas (Mixture ratio feedback signal)	Fuel injection control	Fuel injector

DTC No.	Trouble diagnosis name	DTC detecting condition	Possible cause
P0172	Fuel injection system too rich	• Fuel injection system does not operate properly. • The amount of mixture ratio compensation is too large. (The mixture ratio is too rich.)	• A/F sensor 1 • Fuel injector • Exhaust gas leaks • Incorrect fuel pressure • Mass air flow sensor

DTC CONFIRMATION PROCEDURE

1. PRECONDITIONING

If DTC Confirmation Procedure has been previously conducted, always perform the following before conducting the next test.
1. Turn ignition switch OFF and wait at least 10 seconds.
2. Turn ignition switch ON.
3. Turn ignition switch OFF and wait at least 10 seconds.

>> GO TO 2.

2. PERFORM DTC CONFIRMATION PROCEDURE-II

1. Clear the mixture ratio self-learning value. Refer to EC-18, "MIXTURE RATIO SELF-LEARNING VALUE CLEAR : Special Repair Requirement".
2. Activate “INSPECTION MODE 1” (HBC-97) to start engine, and let engine idle for at least 10 minutes.
3. Check 1st trip DTC.

Is 1st trip DTC detected?

YES >> Go to EC-227, "Diagnosis Procedure".
NO >> GO TO 3.

3. PERFORM DTC CONFIRMATION PROCEDURE-III

1. Turn ignition switch OFF and wait at least 10 seconds.
2. Turn ignition switch ON (READY) and drive the vehicle under the similar conditions to (1st trip) Freeze Frame Data for 10 minutes. Refer to the table below.
   Hold the accelerator pedal as steady as possible.
   The similar conditions to (1st trip) Freeze Frame Data means the vehicle operation that the following conditions should be satisfied at the same time.

Engine speed	Engine speed in the freeze frame data ± 400 rpm
Vehicle speed	Vehicle speed in the freeze frame data ± 10 km/h (6 MPH)
Engine coolant temperature (T) condition	When the freeze frame data shows lower than 70 °C (158 °F), T should be lower than 70 °C (158 °F).
	When the freeze frame data shows higher than or equal to 70 °C (158 °F), T should be higher than or equal to 70 °C (158 °F).

3. Check 1st trip DTC.

Is 1st trip DTC detected?

YES >> Go to EC-227, "Diagnosis Procedure".
NO >> INSPECTION END

Diagnosis Procedure

INFOID:0000000003069239

1. CHECK EXHAUST GAS LEAK

1. Activate “INSPECTION MODE 1” (HBC-97) to start engine.
2. Listen for an exhaust gas leak before three way catalyst (manifold).

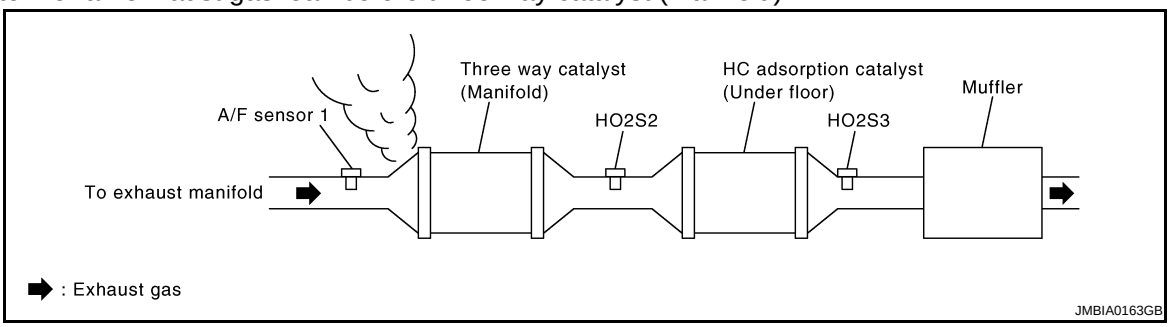

Is exhaust gas leak detected?

YES >> Repair or replace.
NO >> GO TO 2.

2. CHECK FOR INTAKE AIR LEAK

Listen for an intake air leak after the mass air flow sensor.

Is intake air leak detected?

YES >> Repair or replace.
NO >> GO TO 3.

3. CHECK A/F SENSOR 1 INPUT SIGNAL CIRCUIT

1. Turn ignition switch OFF.
2. Disconnect corresponding A/F sensor 1 harness connector.
3. Disconnect ECM harness connector.
4. Check the continuity between A/F sensor 1 harness connector and ECM harness connector.

A/F sensor 1		ECM		Continuity
Connector	Terminal	Connector	Terminal	
F44	1	F14	45	Existed
	2		49	

5. Check the continuity between A/F sensor 1 harness connector or ECM harness connector and ground.

A/F sensor 1		ECM		Ground	Continuity
Connector	Terminal	Connector	Terminal		
F44	1	F14	45	Ground	Not existed
	2		49		

6. Also check harness for short to power.

Is the inspection result normal?

YES >> GO TO 4.
NO >> Repair open circuit or short to ground or short to power in harness or connectors.

4. CHECK FUEL PRESSURE

1. Release fuel pressure to zero. Refer to EC-454, "Inspection".
2. Install fuel pressure gauge and check fuel pressure. Refer to EC-454, "Inspection".

At idling: Approximately 350 kPa (3.57 kg/cm^2, 51 psi)

Is the inspection result normal?

YES >> GO TO 6.
NO >> GO TO 5.

5. DETECT MALFUNCTIONING PART

Check fuel hoses and fuel tubes for clogging.

Is the inspection result normal?

YES >> Replace “fuel filter and fuel pump assembly”.
NO >> Repair or replace

6. CHECK MASS AIR FLOW SENSOR

With CONSULT-III

1. Install all removed parts.
2. Check “MASS AIR FLOW” in “DATA MONITOR” mode with CONSULT-III.
3. For specification, refer to EC-459, "Mass Air Flow Sensor".

With GST

1. Install all removed parts.
2. Check mass air flow sensor signal in “Service $01” with GST.
3. For specification, refer to EC-459, "Mass Air Flow Sensor".

Is the measurement value within the specification?

YES >> GO TO 7.
NO >> Check connectors for rusted terminals or loose connections in the mass air flow sensor circuit or grounds. Refer to EC-145, "DTC Logic".

7. CHECK FUNCTION OF FUEL INJECTOR

With CONSULT-III

1. Turn ignition ON (READY).
2. Perform “POWER BALANCE” in “ACTIVE TEST” mode with CONSULT-III.
3. Make sure that each circuit produces a momentary engine speed drop.

Without CONSULT-III

1. Activate “INSPECTION MODE 1” (HBC-97) to start engine.
2. Listen to each fuel injector operating sound.

Clicking noise should be heard.

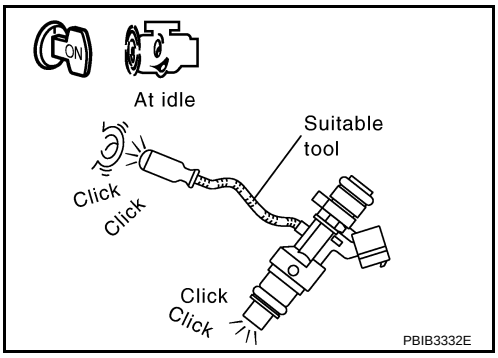

Is the inspection result normal?

YES >> GO TO 8.
NO >> Perform trouble diagnosis for FUEL INJECTOR, refer to EC-236, "Diagnosis Procedure".

8. CHECK FUELINJECTOR

1. Remove fuel injector assembly. Refer to EM-34, "Removal and Installation".
   Keep fuel hose and all fuel injectors connected to fuel tube.
2. Confirm that the engine is cooled down and there are no fire hazards near the vehicle.
3. Disconnect all fuel injector harness connectors.
4. Disconnect all ignition coil harness connectors.
5. Prepare pans or saucers under each fuel injectors.
6. Turn ignition switch ON (READY).
7. Depress the accelerator pedal to crank engine.
   Make sure fuel does not drip from fuel injector.
   NOTE:
   If step 7 performed, a certain DTC may be detected.

Is the inspection result normal?

YES >> GO TO 9.
NO >> Replace the fuel injectors from which fuel is dripping. Always replace O-ring with new one.

9. CHECK INTERMITTENT INCIDENT

Refer to GI-42, "Intermittent Incident".

>> INSPECTION END

P0181 FTT SENSOR

Description

INFOID:0000000003069240

The fuel tank temperature sensor is used to detect the fuel temperature inside the fuel tank. The sensor modifies a voltage signal from the ECM. The modified signal returns to the ECM as the fuel temperature input. The sensor uses a thermistor which is sensitive to the change in temperature. The electrical resistance of the thermistor decreases as temperature increases.

<Reference data>

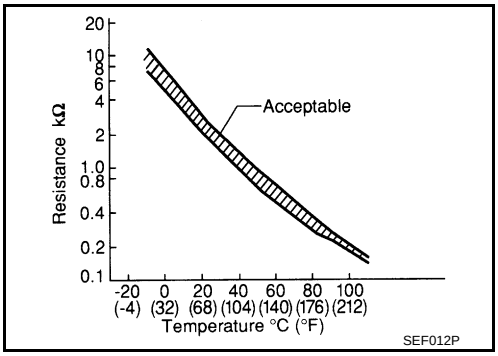

Fluid temperature °C (°F)	Voltage* V	Resistance kΩ
20 (68)	3.5	2.3 - 2.7
50 (122)	2.2	0.79 - 0.90

*: These data are reference values and are measured between ECM terminal 95 (Fuel tank temperature sensor) and ground.

CAUTION:

Do not use ECM ground terminals when measuring input/output voltage. Doing so may result in damage to the ECM's transistor. Use a ground other than ECM terminals, such as the ground.

DTC Logic

INFOID:0000000003069241

DTC DETECTION LOGIC

DTC No.	Trouble diagnosis name	DTC detecting condition	Possible cause
P0181	Fuel tank temperature sensor circuit range/performance	Rationally incorrect voltage from the sensor is sent to ECM, compared with the voltage signals from engine coolant temperature sensor and intake air temperature sensor.	• Harness or connectors (The sensor circuit is open or shorted) • Fuel tank temperature sensor

DTC CONFIRMATION PROCEDURE

1. PRECONDITIONING

If DTC Confirmation Procedure has been previously conducted, always perform the following before conducting the next test.

1. Turn ignition switch OFF and wait at least 10 seconds.
2. Turn ignition switch ON.
3. Turn ignition switch OFF and wait at least 10 seconds.

>> GO TO 2.

2. PERFORM DTC CONFIRMATION PROCEDURE-I

1. Turn ignition switch ON and wait at least 10 seconds.
2. Check 1st trip DTC.

Is 1st trip DTC detected?

YES >> Go to EC-231, "Diagnosis Procedure".
NO >> GO TO 3.

3. CHECK ENGINE COOLANT TEMPERATURE

With CONSULT-III

1. Select “COOLAN TEMP/S” in “DATA MONITOR” mode with CONSULT-III.
2. Check “COOLAN TEMP/S” value.

With GST

Follow the procedure “With CONSULT-III” above.

“COOLAN TEMP/S” less than 60°C (140°F)?

YES >> INSPECTION END

NO >> GO TO 4.

4. PERFORM DTC CONFIRMATION PROCEDURE-II

With CONSULT-III

1. Cool engine down until “COOLAN TEMP/S” is less than 60°C (140°F).
2. Wait at least 10 seconds.
3. Check 1st trip DTC.

With GST

Follow the procedure “With CONSULT-III” above.

Is 1st trip DTC detected?

YES >> Go to EC-231, "Diagnosis Procedure".
NO >> INSPECTION END

Diagnosis Procedure

INFOID:0000000003069242

1. CHECK GROUND CONNECTION

1. Turn ignition switch OFF.
2. Check ground connection E9. Refer to Ground Inspection in GI-45, "Circuit Inspection".

Is the inspection result normal?

YES >> GO TO 2.
NO >> Repair or replace ground connection.

2. CHECK FUEL TANK TEMPERATURE SENSOR POWER SUPPLY CIRCUIT

1. Disconnect “fuel level sensor unit and fuel pump” harness connector.
2. Turn ignition switch ON.
3. Check the voltage between “fuel level sensor unit and fuel pump” harness connector and ground.

Fuel level sensor unit and fuel pump		Ground	Voltage
Connector	Terminal		
B42	4	Ground	Approx. 5V

Is the inspection result normal?

YES >> GO TO 4.
NO >> GO TO 3.

3. DETECT MALFUNCTIONING PART

Check the following.

- Harness connectors E29, B10
- Harness for open or short between ECM and “fuel level sensor unit and fuel pump”

>> Repair open circuit or short to ground or short to power in harness or connector.

4. CHECK FUEL TANK TEMPERATURE SENSOR GROUND CIRCUIT FOR OPEN AND SHORT

1. Turn ignition switch OFF.
2. Check the continuity between “fuel level sensor unit and fuel pump” harness connector and ECM harness connector.

Fuel level sensor unit and fuel pump		ECM		Continuity
Connector	Terminal	Connector	Terminal	
B42	5	E10	104	Existed

3. Also check harness for short to ground and short to power.

Is the inspection result normal?

YES >> GO TO 6.
NO >> GO TO 5.

5. DETECT MALFUNCTIONING PART

Check the following.
- Harness connectors B1, M6
- Harness connectors E30, M1
- Harness for open or short between “fuel level sensor unit and fuel pump” and ECM

>> Repair open circuit or short to ground or short to power in harness or connector.

6. CHECK FUEL TANK TEMPERATURE SENSOR

Refer to EC-232, "Component Inspection".

Is the inspection result normal?

YES >> GO TO 7.
NO >> Replace “fuel level sensor unit and fuel pump”.

7. CHECK INTERMITTENT INCIDENT

Refer to GI-42, "Intermittent Incident".

>> INSPECTION END

Component Inspection

INFOID:0000000003069243

1. CHECK FUEL TANK TEMPERATURE SENSOR

1. Turn ignition switch OFF.
2. Disconnect “fuel level sensor unit and fuel pump” harness connector.
3. Remove fuel level sensor unit.
4. Check resistance between “fuel level sensor unit and fuel pump” terminals by heating with hot water as shown in the figure.

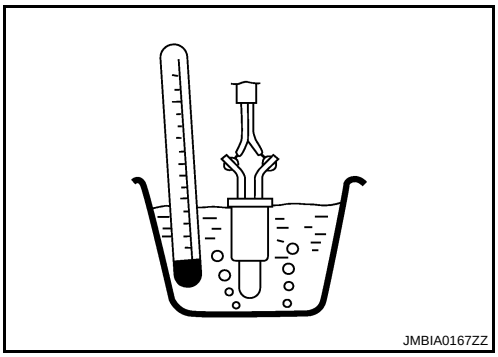

Terminals	Condition		Resistance
4 and 5	Temperature °C (°F)	20 (68)	2.3 - 2.7 kΩ
		50 (122)	0.79 - 0.90 kΩ

Is the inspection result normal?

YES >> INSPECTION END
NO >> Replace “fuel level sensor unit and fuel pump”.

P0182, P0183 FTT SENSOR

Description

INFOID:0000000003069244

The fuel tank temperature sensor is used to detect the fuel temperature inside the fuel tank. The sensor modifies a voltage signal from the ECM. The modified signal returns to the ECM as the fuel temperature input. The sensor uses a thermistor which is sensitive to the change in temperature. The electrical resistance of the thermistor decreases as temperature increases.

<Reference data>

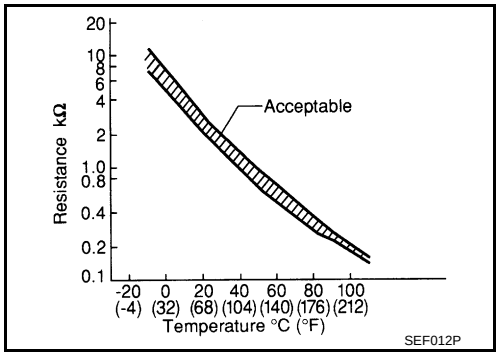

Fluid temperature °C (°F)	Voltage* V	Resistance kΩ
20 (68)	3.5	2.3 - 2.7
50 (122)	2.2	0.79 - 0.90

*: These data are reference values and are measured between ECM terminal 95 (Fuel tank temperature sensor) and ground.

CAUTION:

Do not use ECM ground terminals when measuring input/output voltage. Doing so may result in damage to the ECM's transistor. Use a ground other than ECM terminals, such as the ground.

DTC Logic

INFOID:0000000003069245

DTC DETECTION LOGIC

DTC No.	Trouble diagnosis name	DTC detecting condition	Possible cause
P0182	Fuel tank temperature sensor circuit low input	An excessively low voltage from the sensor is sent to ECM.	• Harness or connectors (The sensor circuit is open or shorted.) • Fuel tank temperature sensor
P0183	Fuel tank temperature sensor circuit high input	An excessively high voltage from the sensor is sent to ECM.	

DTC CONFIRMATION PROCEDURE

1. PRECONDITIONING

If DTC Confirmation Procedure has been previously conducted, always perform the following before conducting the next test.

1. Turn ignition switch OFF and wait at least 10 seconds.
2. Turn ignition switch ON.
3. Turn ignition switch OFF and wait at least 10 seconds.

>> GO TO 2.

2. PERFORM DTC CONFIRMATION PROCEDURE

1. Turn ignition switch ON and wait at least 5 seconds.
2. Check 1st trip DTC.

Is 1st trip DTC detected?

YES >> Go to EC-233, "Diagnosis Procedure".
NO >> INSPECTION END

Diagnosis Procedure

INFOID:0000000003069246

1. CHECK GROUND CONNECTION

1. Turn ignition switch OFF.
2. Check ground connection E9. Refer to Ground Inspection in GI-45, "Circuit Inspection".

Is the inspection result normal?

YES >> GO TO 2.

NO >> Repair or replace ground connection.

2. CHECK FUEL TANK TEMPERATURE SENSOR POWER SUPPLY CIRCUIT

1. Disconnect “fuel level sensor unit and fuel pump” harness connector.
2. Turn ignition switch ON.
3. Check the voltage between “fuel level sensor unit and fuel pump” harness connector and ground.

Fuel level sensor unit and fuel pump		Ground	Voltage
Connector	Terminal		
B42	4	Ground	Approx. 5V

Is the inspection result normal?

YES >> GO TO 4.
NO >> GO TO 3.

3. DETECT MALFUNCTIONING PART

Check the following.
- Harness connectors E29, B10
- Harness for open or short between ECM and “fuel level sensor unit and fuel pump”

>> Repair open circuit or short to ground or short to power in harness or connector.

4. CHECK FUEL TANK TEMPERATURE SENSOR GROUND CIRCUIT FOR OPEN AND SHORT

1. Turn ignition switch OFF.
2. Check the continuity between “fuel level sensor unit and fuel pump” harness connector and ECM harness connector.

Fuel level sensor unit and fuel pump		ECM		Continuity
Connector	Terminal	Connector	Terminal	
B42	5	E10	104	Existed

3. Also check harness for short to ground and short to power.

Is the inspection result normal?

YES >> GO TO 6.
NO >> GO TO 5.

5. DETECT MALFUNCTIONING PART

Check the following.
- Harness connectors B1, M6
- Harness connectors E30, M1
- Harness for open or short between “fuel level sensor unit and fuel pump” and ECM

>> Repair open circuit or short to ground or short to power in harness or connector.

6. CHECK FUEL TANK TEMPERATURE SENSOR

Refer to EC-235, "Component Inspection".

Is the inspection result normal?

YES >> GO TO 7.
NO >> Replace “fuel level sensor unit and fuel pump”.

7. CHECK INTERMITTENT INCIDENT

Refer to GI-42, "Intermittent Incident".

>> INSPECTION END

Component Inspection

INFOID:0000000003069247

1. CHECK FUEL TANK TEMPERATURE SENSOR

1. Turn ignition switch OFF.
2. Disconnect “fuel level sensor unit and fuel pump” harness connector.
3. Remove fuel level sensor unit.
4. Check resistance between “fuel level sensor unit and fuel pump” terminals by heating with hot water as shown in the figure.

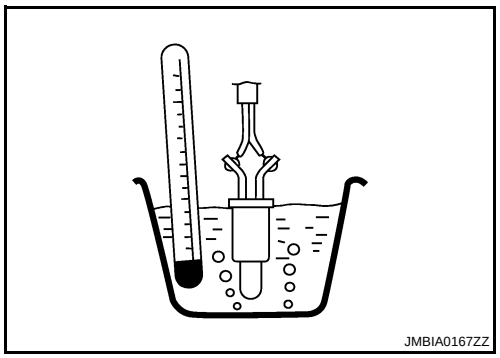

Terminals	Condition		Resistance
4 and 5	Temperature °C (°F)	20 (68)	2.3 - 2.7 kΩ
		50 (122)	0.79 - 0.90 kΩ

Is the inspection result normal?

YES >> INSPECTION END
NO >> Replace “fuel level sensor unit and fuel pump”.

P0201, P0202, P0203, P0204 FUEL INJECTOR

Description

INFOID:0000000003069248

The fuel injector is a small, precise solenoid valve. When the ECM supplies a ground to the fuel injector circuit, the coil in the fuel injector is energized. The energized coil pulls the ball valve back and allows fuel to flow through the fuel injector into the intake manifold. The amount of fuel injected depends upon the injection pulse duration. Pulse duration is the length of time the fuel injector remains open. The ECM controls the injection pulse duration based on engine fuel needs.

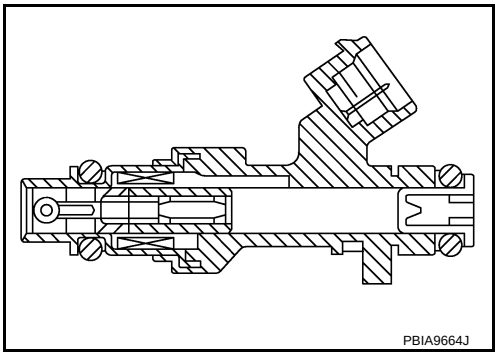

DTC Logic

INFOID:0000000003069249

DTC DETECTION LOGIC

DTC No.	Trouble diagnosis name	DTC detecting condition	Possible cause
P0201	No. 1 cylinder fuel injector circuit open	An excessively low voltage signal is sent to ECM through the No. 1 fuel injector	• Harness or connectors (No. 1 fuel injector circuit is open or shorted.) • No. 1 fuel injector
P0202	No. 2 cylinder fuel injector circuit open	An excessively low voltage signal is sent to ECM through the No. 2 fuel injector	• Harness or connectors (No. 2 fuel injector circuit is open or shorted.) • No. 2 fuel injector
P0203	No. 3 cylinder fuel injector circuit open	An excessively low voltage signal is sent to ECM through the No. 3 fuel injector	• Harness or connectors (No. 3 fuel injector circuit is open or shorted.) • No. 3 fuel injector
P0204	No. 4 cylinder fuel injector circuit open	An excessively low voltage signal is sent to ECM through the No. 4 fuel injector	• Harness or connectors (No. 4 fuel injector circuit is open or shorted.) • No. 4 fuel injector

DTC CONFIRMATION PROCEDURE

1. PRECONDITIONING

If DTC Confirmation Procedure has been previously conducted, always perform the following before conducting the next test.

1. Turn ignition switch OFF and wait at least 10 seconds.
2. Turn ignition switch ON.
3. Turn ignition switch OFF and wait at least 10 seconds.

>> GO TO 2.

2. PERFORM DTC CONFIRMATION PROCEDURE

1. Turn ignition switch ON (READY) and wait at least 1 second.
2. Check DTC.

Is DTC detected?

YES >> Go to EC-236, "Diagnosis Procedure".
NO >> INSPECTION END

Diagnosis Procedure

INFOID:0000000003069250

1. CHECK FUEL INJECTOR POWER SUPPLY CIRCUIT

1. Turn ignition switch OFF.
2. Disconnect fuel injector harness connector.
3. Turn ignition switch ON.

4. Check the voltage between fuel injector harness connector and ground.

DTC	Fuel injector			Ground	Voltage
	Cylinder	Connector	Terminal		
P0201	1	F17	1	Ground	Battery voltage
P0202	2	F18	1		
P0203	3	F19	1		
P0204	4	F20	1		

Is the inspection result normal?

YES >> GO TO 3.
NO >> GO TO 2.

2. DETECT MALFUNCTIONING PART

Check the following.
- IPDM E/R harness connector F10
- 10A fuse (No. 35)
- Harness for open or short between fuel injector and fuse

>> Repair open circuit or short to ground or short to power in harness or connectors.

3. CHECK FUEL INJECTOR OUTPUT SIGNAL CIRCUIT FOR OPEN AND SHORT

1. Turn ignition switch OFF.
2. Disconnect ECM harness connector.
3. Check the continuity between fuel injector harness connector and ECM harness connector.

DTC	Fuel injector			ECM		Continuity
	Cylinder	Connector	Terminal	Connector	Terminal	
P0201	1	F17	2	F14	32	Existed
P0202	2	F18	2		31	
P0203	3	F19	2		30	
P0204	4	F20	2		29	

4. Also check harness for short to ground and short to power.

Is the inspection result normal?

YES >> GO TO 4.
NO >> Repair open circuit or short to ground or short to power in harness or connectors.

4. CHECK FUEL INJECTOR

Refer to EC-237, "Component Inspection".

Is the inspection result normal?

YES >> GO TO 5.
NO >> Replace malfunctioning fuel injector.

5. CHECK INTERMITTENT INCIDENT

Refer to GI-42, "Intermittent Incident".

Is the inspection result normal?

YES >> Replace IPDM E/R.
NO >> Repair open circuit or short to ground or short to power in harness or connectors.

Component Inspection

INFOID:0000000003069251

1. CHECK FUEL INJECTOR

1. Turn ignition switch OFF.
2. Disconnect fuel injector harness connector.

3. Check resistance between fuel injector terminals as follows.

Terminals	Resistance
1 and 2	11.1 - 14.3Ω [at 10 -60°C (50 - 140°F)]

Is the inspection result normal?

YES >> INSPECTION END
NO >> Replace malfunctioning fuel injector.

P0222, P0223 TP SENSOR

Description

INFOID:0000000003069252

Electric throttle control actuator consists of throttle control motor, throttle position sensor, etc. The throttle position sensor responds to the throttle valve movement.
The throttle position sensor has two sensors. These sensors are a kind of potentiometers which transform the throttle valve position into output voltage, and emit the voltage signal to the ECM. In addition, these sensors detect the opening and closing speed of the throttle valve and feed the voltage signals to the ECM. The ECM judges the current opening angle of the throttle valve from these signals and the ECM controls the throttle control motor to make the throttle valve opening angle properly in response to driving condition.

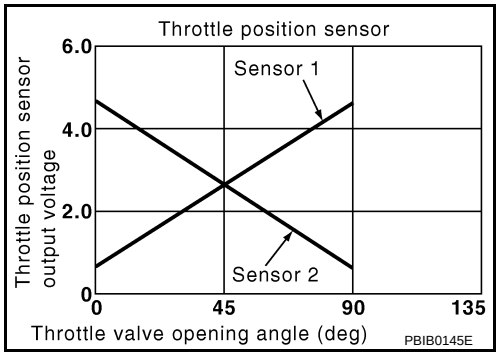

DTC Logic

INFOID:0000000003069253

DTC DETECTION LOGIC

DTC No.	Trouble diagnosis name	DTC detecting condition	Possible cause
P0222	Throttle position sensor 1 circuit low input	An excessively low voltage from the TP sensor 1 is sent to ECM.	• Harness or connectors (TP sensor 1 circuit is open or shorted.) • Electric throttle control actuator (TP sensor 1)
P0223	Throttle position sensor 1 circuit high input	An excessively high voltage from the TP sensor 1 is sent to ECM.	

DTC CONFIRMATION PROCEDURE

1. PRECONDITIONING

If DTC Confirmation Procedure has been previously conducted, always perform the following before conducting the next test.
1. Turn ignition switch OFF and wait at least 10 seconds.
2. Turn ignition switch ON.
3. Turn ignition switch OFF and wait at least 10 seconds.

TESTING CONDITION:
Before performing the following procedure, confirm that battery voltage is more than 8V at idle.

>> GO TO 2.

2. PERFORM DTC CONFIRMATION PROCEDURE

1. Turn ignition switch ON (READY).
2. Depress the accelerator pedal to start engine, then keep engine running for at least 1 second.
3. Check DTC.

Is DTC detected?

YES >> Go to EC-239, "Diagnosis Procedure".
NO >> INSPECTION END

Diagnosis Procedure

INFOID:0000000003069254

1. CHECK GROUND CONNECTION

1. Turn ignition switch OFF.
2. Check ground connection E9. Refer to Ground Inspection in GI-45, "Circuit Inspection".

Is the inspection result normal?

YES >> GO TO 2.
NO >> Repair or replace ground connection.

2. CHECK THROTTLE POSITION SENSOR 1 POWER SUPPLY CIRCUIT

1. Disconnect electric throttle control actuator harness connector.

2. Turn ignition switch ON.
3. Check the voltage between electric throttle control actuator harness connector and ground.

Electric throttle control actuator		Ground	Voltage
Connector	Terminal		
F57	1	Ground	Approx. 5V

Is the inspection result normal?

YES >> GO TO 3.
NO >> Repair open circuit or short to ground or short to power in harness or connectors.

3. CHECK THROTTLE POSITION SENSOR 1 GROUND CIRCUIT FOR OPEN AND SHORT

1. Turn ignition switch OFF.
2. Disconnect ECM harness connector.
3. Check the continuity between electric throttle control actuator harness connector and ECM harness connector.

Electric throttle control actuator		ECM		Continuity
Connector	Terminal	Connector	Terminal	
F57	4	F13	36	Existed

4. Also check harness for short to ground and short to power.

Is the inspection result normal?

YES >> GO TO 4.
NO >> Repair open circuit or short to ground or short to power in harness or connectors.

4. CHECK THROTTLE POSITION SENSOR 1 INPUT SIGNAL CIRCUIT FOR OPEN AND SHORT

1. Check the continuity between electric throttle control actuator harness connector and ECM harness connector.

Electric throttle control actuator		ECM		Continuity
Connector	Terminal	Connector	Terminal	
F57	2	F13	37	Existed

2. Also check harness for short to ground and short to power.

Is the inspection result normal?

YES >> GO TO 5.
NO >> Repair open circuit or short to ground or short to power in harness or connectors.

5. CHECK THROTTLE POSITION SENSOR

Refer to EC-241, "Component Inspection".

Is the inspection result normal?

YES >> GO TO 7.
NO >> GO TO 6.

6. REPLACE ELECTRIC THROTTLE CONTROL ACTUATOR

1. Replace electric throttle control actuator.
2. Go to EC-241, "Special Repair Requirement".

>> INSPECTION END

7. CHECK INTERMITTENT INCIDENT

Refer to GI-42, "Intermittent Incident".

>> INSPECTION END

Component Inspection

INFOID:0000000003069255

1. CHECK THROTTLE POSITION SENSOR

1. Turn ignition switch OFF.
2. Reconnect all harness connectors disconnected.
3. Perform EC-15, "THROTTLE VALVE CLOSED POSITION LEARNING : Special Repair Requirement".
4. Turn ignition switch ON.
5. Set shift lever to D position.
6. Check the voltage between ECM harness connector and ground.

ECM		Ground	Condition		Voltage
Connector	Terminal				
F13	37 (TP sensor 1 signal)	Ground	Accelerator pedal	Fully released	More than 0.36V
				Fully depressed	Less than 4.75V
	38 (TP sensor 2 signal)			Fully released	Less than 4.75V
				Fully depressed	More than 0.36V

Is the inspection result normal?

YES >> INSPECTION END
NO >> GO TO 2.

2. REPLACE ELECTRIC THROTTLE CONTROL ACTUATOR

1. Replace electric throttle control actuator.
2. Go to EC-364, "Special Repair Requirement".

>> INSPECTION END

Special Repair Requirement

INFOID:0000000003069256

1. PERFORM THROTTLE VALVE CLOSED POSITION LEARNING

Refer to EC-15, "THROTTLE VALVE CLOSED POSITION LEARNING : Special Repair Requirement"

>> GO TO 2.

2. PERFORM IDLE AIR VOLUME LEARNING

Refer to EC-16, "IDLE AIR VOLUME LEARNING : Special Repair Requirement"

>> END

P0300, P0301, P0302, P0303, P0304 MISFIRE

DTC Logic

INFOID:0000000003069257

DTC DETECTION LOGIC

When a misfire occurs, engine speed will fluctuate. If the engine speed fluctuates enough to cause the crankshaft position (CKP) sensor (POS) signal to vary, ECM can determine that a misfire is occurring.

Sensor	Input signal to ECM	ECM function
Crankshaft position sensor (POS)	Engine speed	On board diagnosis of misfire

The misfire detection logic consists of the following two conditions.

1. One Trip Detection Logic (Three Way Catalyst Damage)
   On the 1st trip that a misfire condition occurs that can damage the three way catalyst (TWC) due to overheating, the MIL will blink.
   When a misfire condition occurs, the ECM monitors the CKP sensor signal every 200 engine revolutions for a change.
   When the misfire condition decreases to a level that will not damage the TWC, the MIL will turn off.
   If another misfire condition occurs that can damage the TWC on a second trip, the MIL will blink.
   When the misfire condition decreases to a level that will not damage the TWC, the MIL will remain on.
   If another misfire condition occurs that can damage the TWC, the MIL will begin to blink again.
2. Two Trip Detection Logic (Exhaust quality deterioration)
   For misfire conditions that will not damage the TWC (but will affect vehicle emissions), the MIL will only light when the misfire is detected on a second trip. During this condition, the ECM monitors the CKP sensor signal every 1,000 engine revolutions.
   A misfire malfunction can be detected on any one cylinder or on multiple cylinders.

DTC No.	Trouble diagnosis name	DTC detecting condition	Possible cause
P0300	Multiple cylinder misfire detected	Multiple cylinder misfire.	• Improper spark plug • Insufficient compression • Incorrect fuel pressure • The fuel injector circuit is open or shorted • Fuel injector • Intake air leak • The ignition signal circuit is open or shorted • Lack of fuel • Signal plate • A/F sensor 1 • Incorrect PCV hose connection
P0301	No.1 cylinder misfire detected	No. 1 cylinder misfires.	
P0302	No. 2 cylinder misfire detected	No. 2 cylinder misfires.	
P0303	No. 3 cylinder misfire detected	No. 3 cylinder misfires.	
P0304	No. 4 cylinder misfire detected	No. 4 cylinder misfires.	

DTC CONFIRMATION PROCEDURE

1. PRECONDITIONING

If DTC Confirmation Procedure has been previously conducted, always perform the following before conducting the next test.

1. Turn ignition switch OFF and wait at least 10 seconds.
2. Turn ignition switch ON.
3. Turn ignition switch OFF and wait at least 10 seconds.

>> GO TO 2.

2. PERFORM DTC CONFIRMATION PROCEDURE-I

1. Activate “INSPECTION MODE 1” (HBC-97) to start engine, and warm up engine to normal operating temperature.
2. Turn ignition switch OFF and wait at least 10 seconds.
3. Turn ignition switch ON.
4. Turn ignition switch OFF and wait at least 10 seconds.
5. Activate “INSPECTION MODE 1” (HBC-97) to start engine, then keep engine running for at least 15 minutes.
6. Check 1st trip DTC.

Is 1st trip DTC detected?

YES >> Go to EC-243, "Diagnosis Procedure".
NO >> GO TO 3.

3. PERFORM DTC CONFIRMATION PROCEDURE-II

1. Turn ignition switch OFF and wait at least 10 seconds.
2. Turn ignition switch ON.
3. Turn ignition switch OFF and wait at least 10 seconds.
4. Turn ignition switch ON (READY) and drive the vehicle under the similar conditions to (1st trip) Freeze Frame Data for a certain time. Refer to the table below.
   Hold the accelerator pedal as steady as possible.
   The similar conditions to (1st trip) Freeze Frame Data means the vehicle operation that the following conditions should be satisfied at the same time.
   CAUTION:
   Always drive vehicle in safe manner according to traffic conditions and obey all traffic laws when driving.

Engine speed	Engine speed in the freeze frame data ± 400 rpm
Vehicle speed	Vehicle speed in the freeze frame data ± 10 km/h (6 MPH)
Engine coolant temperature (T) condition	When the freeze frame data shows lower than 70 °C (158 °F), T should be lower than 70 °C (158 °F).
	When the freeze frame data shows higher than or equal to 70 °C (158 °F), T should be higher than or equal to 70 °C (158 °F).

The time to driving varies according to the engine speed in the freeze frame data.

Engine speed	Time
Around 1,000 rpm	Approximately 10 minutes
Around 2,000 rpm	Approximately 5 minutes
More than 3,000 rpm	Approximately 3.5 minutes

5. Check 1st trip DTC.

Is 1st trip DTC detected?

YES >> Go to EC-243, "Diagnosis Procedure".
NO >> INSPECTION END

Diagnosis Procedure

INFOID:0000000003069258

1. CHECK FOR INTAKE AIR LEAK AND PCV HOSE

1. Activate “INSPECTION MODE 1” (HBC-97) to start engine, and run it at idle speed.
2. Listen for the sound of the intake air leak.
3. Check PCV hose connection.

Is intake air leak detected?

YES >> Discover air leak location and repair.
NO >> GO TO 2.

2. CHECK FOR EXHAUST SYSTEM CLOGGING

Turn ignition switch OFF and visually check exhaust tube, three way catalyst and muffler for dents.

Is the inspection result normal?

YES-1 >> With CONSULT-III: GO TO 3.
YES-2 >> Without CONSULT-III: GO TO 4.
NO >> Repair or replace it.

3. PERFORM POWER BALANCE TEST

With CONSULT-III

1. Turn ignition switch ON (READY).
2. Perform “POWER BALANCE” in “ACTIVE TEST” mode with CONSULT-III.

3. Make sure that each circuit produces a momentary engine speed drop.

Is the inspection result normal?

YES >> GO TO 9.
NO >> GO TO 4.

4. CHECK FUNCTION OF FUEL INJECTOR

1. Activate “INSPECTION MODE 1” (HBC-97) to start engine, and let engine idle.
2. Listen to each fuel injector operating sound.

Clicking noise should be heard.

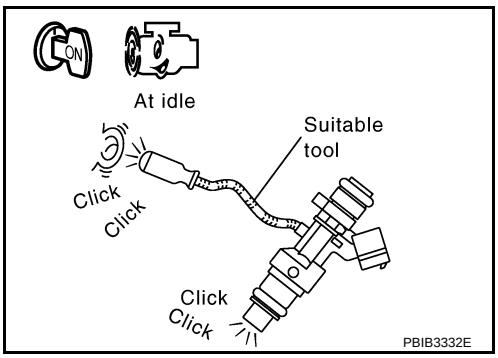

Is the inspection result normal?

YES >> GO TO 5.
NO >> Perform trouble diagnosis for FUEL INJECTOR, refer to EC-236, "Diagnosis Procedure".

5. CHECK FUNCTION OF IGNITION COIL-I

CAUTION:
Do the following procedure in the place where ventilation is good without the combustible.

1. Turn ignition switch OFF.
2. Remove fuel pump fuse in IPDM E/R to release fuel pressure.
   NOTE:
   Do not use CONSULT-III to release fuel pressure, or fuel pressure applies again during the following procedure.
3. Turn ignition switch ON (READY).
4. Depress accelerator pedal and keep it.
5. After engine stalls, check DTC.
   If DTC is detected, erase DTC and go to next steps.
   If DTC is not detected, go to next steps.
6. Turn ignition switch OFF.
7. Remove all ignition coil harness connectors to avoid the electrical discharge from the ignition coils.
8. Remove ignition coil and spark plug of the cylinder to be checked.
9. Repeat steps 3 to 5 for two or three times to remove combustion gas in the cylinder.
10. Connect spark plug and harness connector to ignition coil.
11. Fix ignition coil using a rope etc. with gap of 13 - 17 mm (0.52 - 0.66 in) between the edge of the spark plug and grounded metal portion as shown in the figure.
12. Turn ignition switch ON (READY).
13. Depress accelerator pedal for about 3 seconds, and check whether spark is generated between the spark plug and the grounded metal portion.

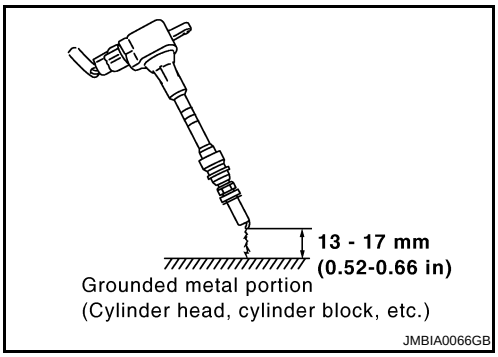

Spark should be generated.

CAUTION:
- **Do not approach to the spark plug and the ignition coil within 50 cm (19.7 in). Be careful not to get an electrical shock while checking, because the electrical discharge voltage becomes 20kV or more.**
- **It might cause to damage the ignition coil if the gap of more than 17 mm (0.66 in) is taken.**

NOTE:
When the gap is less than 13 mm (0.52 in), the spark might be generated even if the coil is malfunctioning.

Is the inspection result normal?

YES >> GO TO 9.
NO >> GO TO 6.

6. CHECK FUNCTION OF IGNITION COIL-II

1. Turn ignition switch OFF.
2. Disconnect spark plug and connect a known-good spark plug.
3. Turn ignition switch ON (READY).
4. Depress accelerator pedal for about 3 seconds, and recheck whether spark is generated between the spark plug and the grounded metal portion.

Spark should be generated.

Is the inspection result normal?

YES >> GO TO 7.
NO >> Check ignition coil, power transistor and their circuits. Refer to EC-384, "Component Function Check".

7. CHECK SPARK PLUG

Check the initial spark plug for fouling, etc.

Is the inspection result normal?

YES >> Replace spark plug(s) with standard type one(s). For spark plug type, refer to MA-19, "SPARK PLUG (PLATINUM-TIPPED TYPE) : Removal and Installation".
NO >> Repair or clean spark plug. Then GO TO 8.

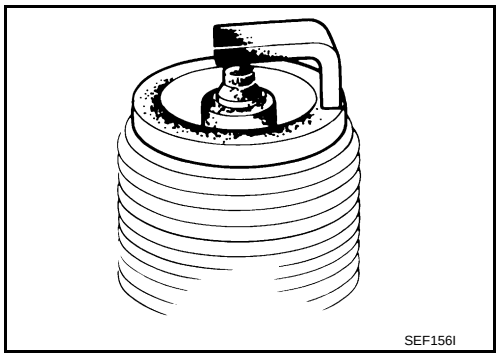

8. CHECK FUNCTION OF IGNITION COIL-III

1. Reconnect the initial spark plugs.
2. Turn ignition switch ON (READY).
3. Depress accelerator pedal for about 3 seconds, and recheck whether spark is generated between the spark plug and the grounded portion.

Spark should be generated.

Is the inspection result normal?

YES >> INSPECTION END
NO >> Replace spark plug(s) with standard type one(s). For spark plug type, refer to MA-19, "SPARK PLUG (PLATINUM-TIPPED TYPE) : Removal and Installation".

9. CHECK COMPRESSION PRESSURE

Check compression pressure. Refer to EM-21, "Compression pressure".

Is the inspection result normal?

YES >> GO TO 10.
NO >> Check pistons, piston rings, valves, valve seats and cylinder head gaskets.

10. CHECK FUEL PRESSURE

1. Install all removed parts.
2. Release fuel pressure to zero. Refer to EC-454, "Inspection".
3. Install fuel pressure gauge and check fuel pressure. Refer to EC-454, "Inspection".

At idling: Approximately 350 kPa (3.57 kg/cm^2, 51 psi)

Is the inspection result normal?

YES >> GO TO 12.
NO >> GO TO 11.

11. DETECT MALFUNCTIONING PART

Check fuel hoses and fuel tubes for clogging.

Is the inspection result normal?

YES >> Replace “fuel filter and fuel pump assembly”.

NO >> Repair or replace.

12. CHECK IDLE SPEED AND IGNITION TIMING

1. Check idle speed.
- For procedure, refer to EC-14, "IDLE SPEED : Special Repair Requirement".
- For specification, refer to EC-459, "Idle Speed".
2. Check ignition timing.
- For procedure, refer to EC-14, "IGNITION TIMING : Special Repair Requirement".
- For specification, refer to EC-459, "Ignition Timing".

Is the inspection result normal?

YES >> GO TO 13.
NO >> Follow the EC-11, "BASIC INSPECTION : Special Repair Requirement".

13. CHECK A/F SENSOR 1 INPUT SIGNAL CIRCUIT

1. Turn ignition switch OFF.
2. Disconnect corresponding A/F sensor 1 harness connector.
3. Disconnect ECM harness connector.
4. Check the continuity between A/F sensor 1 harness connector and ECM harness connector.

A/F sensor 1		ECM		Continuity
Connector	Terminal	Connector	Terminal	
F44	1	F13	45	Existed
	2		49	

5. Check the continuity between A/F sensor 1 harness connector or ECM harness connector and ground.

A/F sensor 1		ECM		Ground	Continuity
Connector	Terminal	Connector	Terminal		
F44	1	F13	45	Ground	Not existed
	2		49		

6. Also check harness for short to power.

Is the inspection result normal?

YES >> GO TO 14.
NO >> Repair open circuit or short to ground or short to power in harness or connectors.

14. CHECK A/F SENSOR 1 HEATER

Refer to EC-135, "Component Inspection".

Is the inspection result normal?

YES >> GO TO 15.
NO >> Replace A/F sensor 1.

15. CHECK MASS AIR FLOW SENSOR

With CONSULT-III
Check “MASS AIR FLOW” in “DATA MONITOR” mode with CONSULT-III.
For specification, refer to EC-459, "Mass Air Flow Sensor".

With GST
Check mass air flow sensor signal in Service $01 with GST.
For specification, refer to EC-459, "Mass Air Flow Sensor".

Is the measurement value within the specification?

YES >> GO TO 16.
NO >> Check connectors for rusted terminals or loose connections in the mass air flow sensor circuit or ground. Refer to EC-145, "DTC Logic".

16. CHECK SYMPTOM TABLE

Check items on the rough idle symptom in EC-443, "Symptom Table".

Is the inspection result normal?

YES >> GO TO 17.
NO >> Repair or replace.

17. ERASE THE 1ST TRIP DTC

Some tests may cause a 1st trip DTC to be set.
Erase the 1st trip DTC from the ECM memory after performing the tests. Refer to EC-86, "Diagnosis Description".

>> GO TO 18.

18. CHECK INTERMITTENT INCIDENT

Refer to GI-42, "Intermittent Incident".

>> INSPECTION END

P0327, P0328 KS

Description

INFOID:0000000003069259

The knock sensor is attached to the cylinder block. It senses engine knocking using a piezoelectric element. A knocking vibration from the cylinder block is sensed as vibrational pressure. This pressure is converted into a voltage signal and sent to the ECM.

DTC Logic

INFOID:0000000003069260

DTC DETECTION LOGIC

DTC No.	Trouble diagnosis name	DTC detected condition	Possible cause
P0327	Knock sensor circuit low input	An excessively low voltage from the sensor is sent to ECM.	• Harness or connectors (The sensor circuit is open or shorted.) • Knock sensor
P0328	Knock sensor circuit high input	An excessively high voltage from the sensor is sent to ECM.	

DTC CONFIRMATION PROCEDURE

1. PRECONDITIONING

If DTC Confirmation Procedure has been previously conducted, always perform the following before conducting the next test.
1. Turn ignition switch OFF and wait at least 10 seconds.
2. Turn ignition switch ON.
3. Turn ignition switch OFF and wait at least 10 seconds.

TESTING CONDITION:
Before performing the following procedure, confirm that battery voltage is more than 10V at idle.

>> GO TO 2.

2. PERFORM DTC CONFIRMATION PROCEDURE

1. Turn ignition switch ON (READY).
2. Depress the accelerator pedal to start engine, then keep engine running for at least 5 second.
3. Check 1st trip DTC.

Is 1st trip DTC detected?

YES >> Go to EC-248, "Diagnosis Procedure".
NO >> INSPECTION END

Diagnosis Procedure

INFOID:0000000003069261

1. CHECK GROUND CONNECTION

1. Turn ignition switch OFF.
2. Check ground connection E9. Refer to Ground Inspection in GI-45, "Circuit Inspection".

Is the inspection result normal?

YES >> GO TO 2.
NO >> Repair or replace ground connection.

2. CHECK KNOCK SENSOR GROUND CIRCUIT FOR OPEN AND SHORT

1. Disconnect knock sensor harness connector and disconnect ECM harness connector.
2. Check the continuity between knock sensor harness connector and ECM harness connector.

Knock sensor		ECM		Continuity
Connector	Terminal	Connector	Terminal	
F45	2	F13	67	Existed

3. Also check harness for short to ground and short to power.

Is the inspection result normal?

YES >> GO TO 3.
NO >> Repair open circuit or short to ground or short to power in harness or connectors.

3. CHECK KNOCK SENSOR INPUT SIGNAL CIRCUIT FOR OPEN AND SHORT

1. Check the continuity between knock sensor harness connector and ECM harness connector.

Knock sensor		ECM		Continuity
Connector	Terminal	Connector	Terminal	
F45	1	F13	61	Existed

2. Also check harness for short to ground and short to power.

Is the inspection result normal?

YES >> GO TO 4.
NO >> Repair open circuit or short to ground or short to power in harness or connectors.

4. CHECK KNOCK SENSOR

Refer to EC-249, "Component Inspection".

Is the inspection result normal?

YES >> GO TO 5.
NO >> Replace knock sensor.

5. CHECK INTERMITTENT INCIDENT

Refer to GI-42, "Intermittent Incident".

>> INSPECTION END

Component Inspection

INFOID:0000000003069262

1. CHECK KNOCK SENSOR

1. Turn ignition switch OFF.
2. Disconnect knock sensor harness connector.
3. Check resistance between knock sensor terminals as follows.
   NOTE:
   It is necessary to use an ohmmeter which can measure more than 10 MΩ.

Terminals	Resistance
1 and 2	Approx. 532 - 588 kΩ [at 20°C (68°F)]

CAUTION:
Do not use any knock sensors that have been dropped or physically damaged. Use only new ones.

Is the inspection result normal?

YES >> INSPECTION END
NO >> Replace knock sensor.

P0335 CKP SENSOR (POS)

Description

INFOID:0000000003069263

The crankshaft position sensor (POS) is located on the oil pan facing the gear teeth (cogs) of the signal plate. It detects the fluctuation of the engine revolution.
The sensor consists of a permanent magnet and Hall IC.
When the engine is running, the high and low parts of the teeth cause the gap with the sensor to change.
The changing gap causes the magnetic field near the sensor to change.
Due to the changing magnetic field, the voltage from the sensor changes.
The ECM receives the voltage signal and detects the fluctuation of the engine revolution.
ECM receives the signals as shown in the figure.

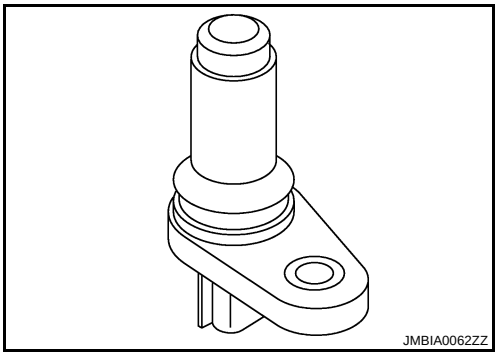

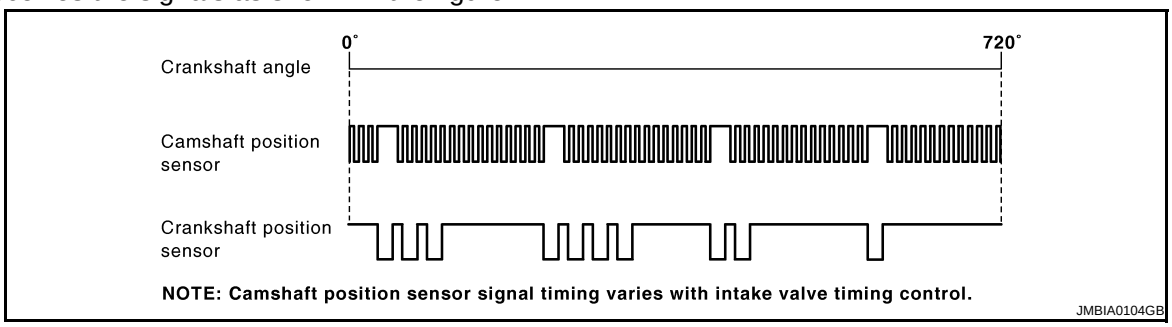

DTC Logic

INFOID:0000000003069264

DTC DETECTION LOGIC

DTC No.	Trouble diagnosis name	DTC detecting condition	Possible cause
P0335	Crankshaft position sensor (POS) circuit	• The crankshaft position sensor (POS) signal is not detected by the ECM during the first few seconds of engine cranking. • The proper pulse signal from the crankshaft position sensor (POS) is not sent to ECM while the engine is running. • The crankshaft position sensor (POS) signal is not in the normal pattern during engine running.	• Harness or connectors [Crankshaft position sensor (POS) circuit is open or shorted.] (Refrigerant pressure sensor circuit is shorted.) (EVAP control system pressure sensor circuit is shorted.) • Crankshaft position sensor (POS) • Refrigerant pressure sensor • EVAP control system pressure sensor • Signal plate

DTC CONFIRMATION PROCEDURE

1. PRECONDITIONING

If DTC Confirmation Procedure has been previously conducted, always perform the following before conducting the next test.
1. Turn ignition switch OFF and wait at least 10 seconds.
2. Turn ignition switch ON.
3. Turn ignition switch OFF and wait at least 10 seconds.

TESTING CONDITION:
Before performing the following procedure, confirm that battery voltage is more than 10.5V with ignition switch ON.

>> GO TO 2.

2. PERFORM DTC CONFIRMATION PROCEDURE

1. Turn ignition switch ON (READY).
2. Depress the accelerator pedal to start engine, then keep engine running for at least 5 seconds.
3. Check 1st trip DTC.

Is 1st trip DTC detected?

YES >> Go to EC-251, "Diagnosis Procedure".
NO >> INSPECTION END

Diagnosis Procedure

INFOID:0000000003069265

1. CHECK GROUND CONNECTION

1. Turn ignition switch OFF.
2. Check ground connection E9. Refer to Ground Inspection in GI-45, "Circuit Inspection".

Is the inspection result normal?

YES >> GO TO 2.
NO >> Repair or replace ground connection.

2. CHECK CRANKSHAFT POSITION (CKP) SENSOR (POS) POWER SUPPLY CIRCUIT-I

1. Disconnect crankshaft position (CKP) sensor (POS) harness connector.
2. Turn ignition switch ON.
3. Check the voltage between CKP sensor (POS) harness connector and ground.

CKP sensor (POS)		Ground	Voltage
Connector	Terminal		
F30	1	Ground	Approx. 5V

Is the inspection result normal?

YES >> GO TO 6.
NO >> GO TO 3.

3. CHECK CRANKSHAFT POSITION (CKP) SENSOR (POS) POWER SUPPLY CIRCUIT-II

1. Turn ignition switch ON.
2. Disconnect ECM harness connector.
3. Check the continuity between CKP sensor (POS) harness connector and ECM harness connector.

CKP sensor (POS)		ECM		Continuity
Connector	Terminal	Connector	Terminal	
F30	1	F13	76	Existed

Is the inspection result normal?

YES >> GO TO 4.
NO >> Repair open circuit.

4. CHECK CRANKSHAFT POSITION (CKP) SENSOR (POS) POWER SUPPLY CIRCUIT-III

Check harness for short to power and short to ground, between the following terminals.

ECM		Sensor		
Connector	Terminal	Name	Connector	Terminal
F13	72	Refrigerant pressure sensor	E219	1
	76	CKP sensor (POS)	F30	1
E10	91	EVAP control system pressure sensor	B41	3

Is the inspection result normal?

YES >> GO TO 5.
NO >> Repair short to ground or short to power in harness or connectors.

5. CHECK COMPONENTS

Check the following.

- Refrigerant pressure sensor
- EVAP control system pressure sensor (Refer to EC-285, "Component Inspection".)

Is the inspection result normal?

YES >> GO TO 10.
NO >> Replace malfunctioning components.

6. CHECK CKP SENSOR (POS) GROUND CIRCUIT FOR OPEN AND SHORT

1. Turn ignition switch OFF.
2. Check the continuity between CKP sensor (POS) harness connector and ECM harness connector.

CKP sensor (POS)		ECM		Continuity
Connector	Terminal	Connector	Terminal	
F30	2	F13	60	Existed

3. Also check harness for short to ground and short to power.

Is the inspection result normal?

YES >> GO TO 7.
NO >> Repair open circuit or short to ground or short to power in harness or connectors.

7. CHECK CKP SENSOR (POS) INPUT SIGNAL CIRCUIT FOR OPEN AND SHORT

1. Disconnect ECM harness connector.
2. Check the continuity between CKP sensor (POS) harness connector and ECM harness connector.

CKP sensor (POS)		ECM		Continuity
Connector	Terminal	Connector	Terminal	
F30	3	F13	65	Existed

3. Also check harness for short to ground and short to power.

Is the inspection result normal?

YES >> GO TO 8.
NO >> Repair open circuit or short to ground or short to power in harness or connectors.

8. CHECK CRANKSHAFT POSITION SENSOR (POS)

Refer to EC-252, "Component Inspection".

Is the inspection result normal?

YES >> GO TO 9.
NO >> Replace crankshaft position sensor (POS).

9. CHECK GEAR TOOTH

Visually check for chipping signal plate gear tooth.

Is the inspection result normal?

YES >> GO TO 10.
NO >> Replace the signal plate.

10. CHECK INTERMITTENT INCIDENT

Refer to GI-42, "Intermittent Incident".

>> INSPECTION END

Component Inspection

INFOID:0000000003069266

1. CHECK CRANKSHAFT POSITION SENSOR (POS)-I

1. Turn ignition switch OFF.
2. Loosen the fixing bolt of the sensor.
3. Disconnect crankshaft position sensor (POS) harness connector.
4. Remove the sensor.

5. Visually check the sensor for chipping.

Is the inspection result normal?

YES >> GO TO 2.
NO >> Replace crankshaft position sensor (POS).

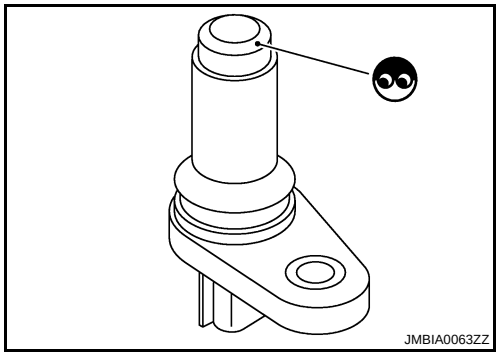

2. CHECK CRANKSHAFT POSITION SENSOR (POS)-II

Check resistance between crankshaft position sensor (POS) terminals as follows.

Terminals (Polarity)	Resistance Ω [at 25°C (77°F)]
1 (+) - 2 (-)	Except 0 or ∞
1 (+) - 3 (-)	
2 (+) - 3 (-)	

Is the inspection result normal?

YES >> INSPECTION END
NO >> Replace crankshaft position sensor (POS).

P0340 CMP SENSOR (PHASE)

Description

INFOID:0000000003069267

The camshaft position sensor (PHASE) senses the retraction of camshaft (INT) to identify a particular cylinder. The camshaft position sensor (PHASE) senses the piston position.
When the crankshaft position sensor (POS) system becomes inoperative, the camshaft position sensor (PHASE) provides various controls of engine parts instead, utilizing timing of cylinder identification signals.
The sensor consists of a permanent magnet and Hall IC.
When engine is running, the high and low parts of the teeth cause the gap with the sensor to change.
The changing gap causes the magnetic field near the sensor to change.

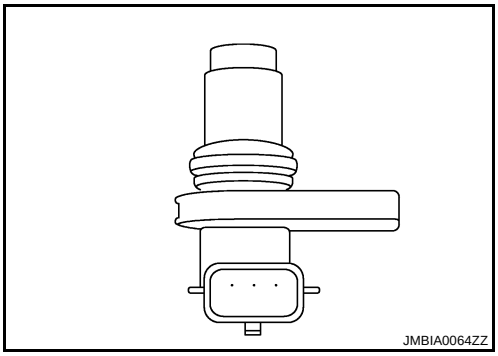

Due to the changing magnetic field, the voltage from the sensor changes.
ECM receives the signals as shown in the figure.

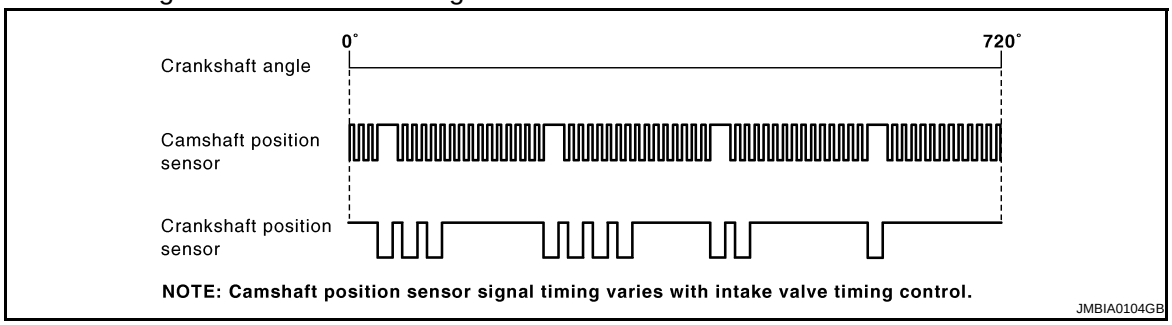

DTC Logic

INFOID:0000000003069268

DTC DETECTION LOGIC

NOTE:
If DTC P0340 is displayed with DTC P0643, first perform the trouble diagnosis for DTC P0643. Refer to EC-316, "DTC Logic".

DTC No.	Trouble diagnosis name	DTC detecting condition	Possible cause
P0340	Camshaft position sensor (PHASE) circuit	• The cylinder No. signal is not sent to ECM for the first few seconds during engine cranking. • The cylinder No. signal is not sent to ECM during engine running. • The cylinder No. signal is not in the normal pattern during engine running.	• Harness or connectors (The sensor circuit is open or shorted) • Camshaft position sensor (PHASE) • Camshaft (INT) • Dead (Weak) battery

DTC CONFIRMATION PROCEDURE

1. PRECONDITIONING

If DTC Confirmation Procedure has been previously conducted, always perform the following before conducting the next test.
1. Turn ignition switch OFF and wait at least 10 seconds.
2. Turn ignition switch ON.
3. Turn ignition switch OFF and wait at least 10 seconds.

TESTING CONDITION:
Before performing the following procedure, confirm that battery voltage is more than 10.5V with ignition switch ON.

>> GO TO 2.

2. PERFORM DTC CONFIRMATION PROCEDURE-I

1. Turn ignition switch ON (READY).

2. Depress the accelerator pedal to start engine, then keep engine running for at least 5 seconds.
3. Check 1st trip DTC.

Is 1st trip DTC detected?

YES >> Go to EC-255, "Diagnosis Procedure".
NO >> GO TO 3.

3. PERFORM DTC CONFIRMATION PROCEDURE-IL

1. Maintaining engine speed at more than 800 rpm for at least 5 seconds.
2. Check 1st trip DTC.

Is 1st trip DTC detected?

YES >> Go to EC-255, "Diagnosis Procedure".
NO >> INSPECTION END

Diagnosis Procedure

INFOID:0000000003069269

1. CHECK STARTING SYSTEM

1. Turn ignition switch ON (READY).
2. Depress accelerator pedal and keep it.

Does the engine turn over? Does the starter motor operate?

YES >> GO TO 2.
NO >> Check starting system.

2. CHECK GROUND CONNECTION

1. Turn ignition switch OFF.
2. Check ground connection E9. Refer to Ground Inspection in GI-45, "Circuit Inspection".

Is the inspection result normal?

YES >> GO TO 3.
NO >> Repair or replace ground connection.

3. CHECK CAMSHAFT POSITION (CMP) SENSOR (PHASE) POWER SUPPLY CIRCUIT

1. Disconnect camshaft position (CMP) sensor (PHASE) harness connector.
2. Turn ignition switch ON.
3. Check the voltage between CMP sensor (PHASE) harness connector and ground.

CMP sensor (PHASE)		Ground	Voltage
Connector	Terminal		
F55	1	Ground	Approx. 5V

Is the inspection result normal?

YES >> GO TO 4.
NO >> Repair open circuit or short to ground or short to power in harness or connectors.

4. CHECK CMP SENSOR (PHASE) GROUND CIRCUIT FOR OPEN AND SHORT

1. Turn ignition switch OFF.
2. Check the continuity between CMP sensor (PHASE) harness connector and ECM harness connector.

CMP sensor (PHASE)		ECM		Continuity
Connector	Terminal	Connector	Terminal	
F55	2	F13	64	Existed

3. Also check harness for short to power.

Is the inspection result normal?

YES >> GO TO 5.
NO >> Repair open circuit or short to ground or short to power in harness or connectors.

5. CHECK CMP SENSOR (PHASE) INPUT SIGNAL CIRCUIT FOR OPEN AND SHORT

1. Disconnect ECM harness connector.

2. Check the continuity between CMP sensor (PHASE) harness connector and ECM harness connector.

CMP sensor (PHASE)		ECM		Continuity
Connector	Terminal	Connector	Terminal	
F55	3	F13	69	Existed

3. Also check harness for short to ground and short to power.

Is the inspection result normal?

YES >> GO TO 6.
NO >> Repair open circuit or short to ground or short to power in harness or connectors.

6. CHECK CAMSHAFT POSITION SENSOR (PHASE)

Refer to EC-256, "Component Inspection".

Is the inspection result normal?

YES >> GO TO 7.
NO >> Replace camshaft position sensor (PHASE).

7. CHECK CAMSHAFT (INT)

Check the following.
- Accumulation of debris to the signal plate of camshaft (1) rear end
- Chipping signal plate of camshaft rear end

Is the inspection result normal?

YES >> GO TO 8.
NO >> Remove debris and clean the signal plate of camshaft rear end or replace camshaft.

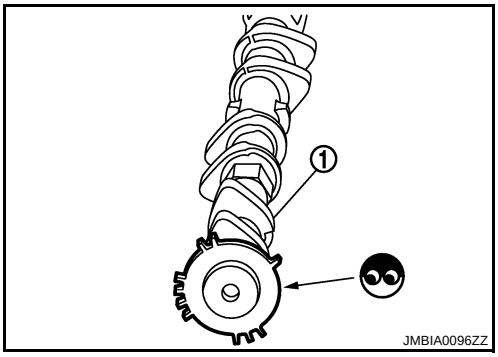

8. CHECK INTERMITTENT INCIDENT

Refer to GI-42, "Intermittent Incident".

>> INSPECTION END

Component Inspection

INFOID:0000000003069270

1. CHECK CAMSHAFT POSITION SENSOR (PHASE)-I

1. Turn ignition switch OFF.
2. Loosen the fixing bolt of the sensor.
3. Disconnect camshaft position sensor (PHASE) harness connector.
4. Remove the sensor.
5. Visually check the sensor for chipping.

Is the inspection result normal?

YES >> GO TO 2.
NO >> Replace camshaft position sensor (PHASE).

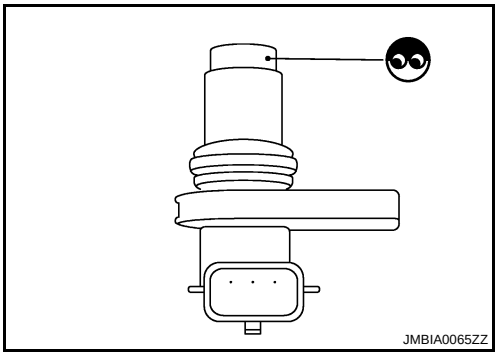

2. CHECK CAMSHAFT POSITION SENSOR (PHASE)-II

Check resistance camshaft position sensor (PHASE) terminals as follows.

Terminals (Polarity)	Resistance
1 (+) - 2 (-)	Except 0 or ∞ Ω [at 25°C (77°F)]
1 (+) - 3 (-)	
2 (+) - 3 (-)	

Is the inspection result normal?

YES >> INSPECTION END
NO >> Replace camshaft position sensor (PHASE).

P0420 THREE WAY CATALYST FUNCTION

DTC Logic

INFOID:0000000003069271

DTC DETECTION LOGIC

The ECM monitors the switching frequency ratio of air fuel ratio (A/F) sensor 1 and heated oxygen sensor 2.
A three way catalyst (manifold) with high oxygen storage capacity will indicate a low switching frequency of heated oxygen sensor 2. As oxygen storage capacity decreases, the heated oxygen sensor 2 switching frequency will increase.
When the frequency ratio of A/F sensor 1 and heated oxygen sensor 2 approaches a specified limit value, the three way catalyst (manifold) malfunction is diagnosed.

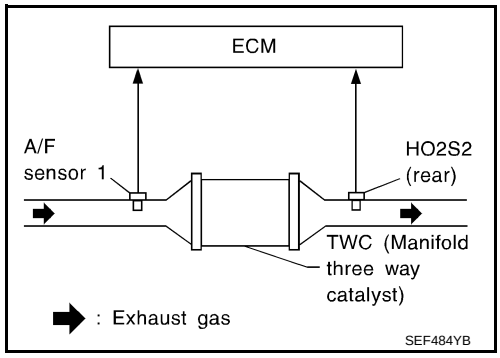

DTC No.	Trouble diagnosis name	DTC detecting condition	Possible cause
P0420	Catalyst system efficiency below threshold	• Three way catalyst (manifold) does not operate properly. • Three way catalyst (manifold) does not have enough oxygen storage capacity.	• Three way catalyst (manifold) • Exhaust tube • Intake air leaks • Fuel injector • Fuel injector leaks • Spark plug • Improper ignition timing

DTC CONFIRMATION PROCEDURE

1. PRECONDITIONING

If DTC Confirmation Procedure has been previously conducted, always perform the following before conducting the next test.
1. Turn ignition switch OFF and wait at least 10 seconds.
2. Turn ignition switch ON.
3. Turn ignition switch OFF and wait at least 10 seconds.

>> GO TO 2.

2. PERFORM DTC CONFIRMATION PROCEDURE

CAUTION:
Always drive vehicle in safe manner according to traffic conditions and obey all traffic laws.

With CONSULT-III
1. Activate “INSPECTION MODE 1” (HBC-97) to start engine, and warm up engine to normal operating temperature.
2. Turn ignition switch OFF and wait at least 10 seconds.
3. Turn ignition switch ON.
4. Turn ignition switch OFF and wait at least 10 seconds.
5. Turn ignition switch ON (READY).
6. Repeat following procedure 2 times.
- Drive vehicle at a speed of 80 km/h (50 MPH) or more for at least 3 consecutive minutes.
  NOTE:
  Keep the vehicle speed as steady as possible during the cruising.
- Stop vehicle.
  NOTE:
  Never turn ignition switch OFF.
7. Select “DTC & SRT CONFIRMATION” then “SRT WORK SUPPORT” mode with CONSULT-III.
8. Drive vehicle at a speed of 80 km/h (50 MPH) or more until “INCMP” of “CATALYST” changes to “CMPLT”.
   NOTE:
   - **Keep the vehicle speed as steady as possible during the cruising.**

- **It will take at most 3 minutes until “INCMP” of “CATALYST” changes to “CMPLT”.**

9. Check 1st trip DTC.

With GST

1. Activate “INSPECTION MODE 1” (HBC-97) to start engine, and warm up engine to normal operating temperature.
2. Turn ignition switch OFF and wait at least 10 seconds.
3. Turn ignition switch ON.
4. Turn ignition switch OFF and wait at least 10 seconds.
5. Turn ignition switch ON (READY).
6. Repeat following procedure 3 times.

- Drive vehicle at a speed of 80 km/h (50 MPH) or more for at least 3 consecutive minutes.

NOTE:
Keep the vehicle speed as steady as possible during the cruising.

- Stop vehicle.

NOTE:
Never turn ignition switch OFF.

7. Check 1st trip DTC.

Is 1st tip DTC detected?

YES >> Go to EC-259, "Diagnosis Procedure".
NO >> INSPECTION END

Diagnosis Procedure

INFOID:0000000003069272

1. CHECK EXHAUST SYSTEM

Visually check exhaust tubes and muffler for dent.

Is the inspection result normal?

YES >> GO TO 2.
NO >> Repair or replace.

2. CHECK EXHAUST GAS LEAK

1. Activate “INSPECTION MODE 1” (HBC-97) to start engine.
2. Listen for an exhaust gas leak before the three way catalyst (manifold).

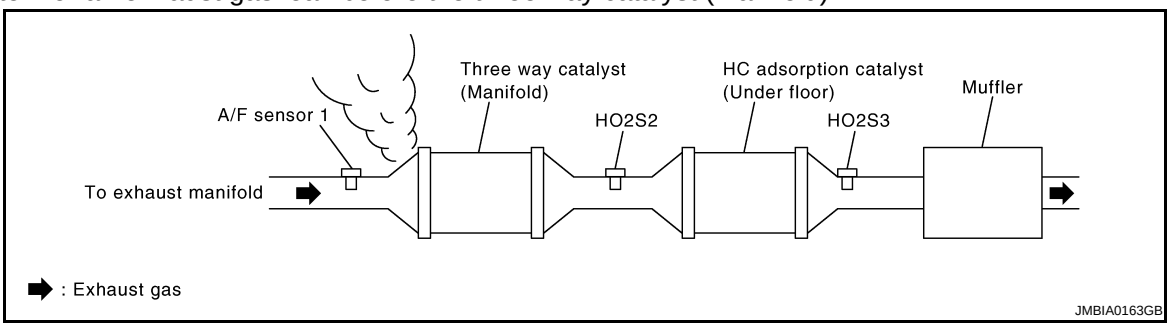

Is exhaust gas leak detected?

YES >> Repair or replace.
NO >> GO TO 3.

3. CHECK INTAKE AIR LEAK

Listen for an intake air leak after the mass air flow sensor.

Is intake air leak detected?

YES >> Repair or replace.
NO >> GO TO 4.

4. CHECK IDLE SPEED AND IGNITION TIMING

1. Check idle speed.

- For procedure, refer to EC-14, "IDLE SPEED : Special Repair Requirement".
- For specification, refer to EC-459, "Idle Speed".

2. Check ignition timing.

- For procedure, refer to EC-14, "IGNITION TIMING : Special Repair Requirement".

- For specification, refer to EC-459, "Ignition Timing".

Is the inspection result normal?

YES >> GO TO 5.
NO >> Follow the EC-11, "BASIC INSPECTION : Special Repair Requirement".

5. CHECK FUEL INJECTOR

1. Turn ignition switch OFF and then turn ON.
2. Check the voltage between ECM harness connector and ground.

ECM		Ground	Voltage
Connector	Terminal		
F14	29	Ground	Battery voltage
	30		
	31		
	32		

Is the inspection result normal?

YES >> GO TO 6.
NO >> Perform EC-236, "Diagnosis Procedure".

6. CHECK FUNCTION OF IGNITION COIL-I

CAUTION:
Do the following procedure in the place where ventilation is good without the combustible.

1. Turn ignition switch OFF.
2. Remove fuel pump fuse in IPDM E/R to release fuel pressure.
   NOTE:
   Do not use CONSULT-III to release fuel pressure, or fuel pressure applies again during the following procedure.
3. Turn ignition switch ON (READY).
4. Depress accelerator pedal and keep it.
5. After engine stalls, check DTC.
   If DTC is detected, erase DTC and go to next steps.
   If DTC is not detected, go to next steps.
6. Turn ignition switch OFF.
7. Remove all ignition coil harness connectors to avoid the electrical discharge from the ignition coils.
8. Remove ignition coil and spark plug of the cylinder to be checked.
9. Repeat steps 3 to 5 for two or three times to remove combustion gas in the cylinder.
10. Connect spark plug and harness connector to ignition coil.
11. Fix ignition coil using a rope etc. with gap of 13 - 17 mm (0.52 - 0.66 in) between the edge of the spark plug and grounded metal portion as shown in the figure.
12. Turn ignition switch ON (READY).
13. Depress accelerator pedal for about 3 seconds, and check whether spark is generated between the spark plug and the grounded metal portion.

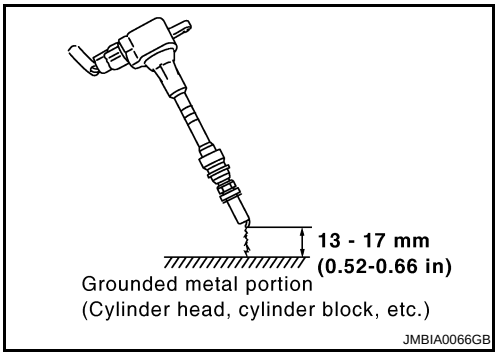

Spark should be generated.

CAUTION:
- **Do not approach to the spark plug and the ignition coil within 50 cm (19.7 in). Be careful not to get an electrical shock while checking, because the electrical discharge voltage becomes 20kV or more.**
- **It might cause to damage the ignition coil if the gap of more than 17 mm (0.66 in) is taken.**

NOTE:
When the gap is less than 13 mm (0.52 in), the spark might be generated even if the coil is malfunctioning.

Is the inspection result normal?

YES >> GO TO 10.
NO >> GO TO 7.

7. CHECK FUNCTION OF IGNITION COIL-II

1. Turn ignition switch OFF.
2. Disconnect spark plug and connect a known-good spark plug.
3. Turn ignition switch ON (READY).
4. Depress the accelerator pedal to crank engine for about 3 seconds, and recheck whether spark is generated between the spark plug and the grounded metal portion.

Spark should be generated.

Is the inspection result normal?

YES >> GO TO 8.
NO >> Check ignition coil, power transistor and their circuits. Refer to EC-384, "Diagnosis Procedure".

8. CHECK SPARK PLUG

Check the initial spark plug for fouling, etc.

Is the inspection result normal?

YES >> Replace spark plug(s) with standard type one(s). For spark plug type, refer to EM-13, "Removal and Installation".
NO >> Repair or clean spark plug. Then GO TO 9.

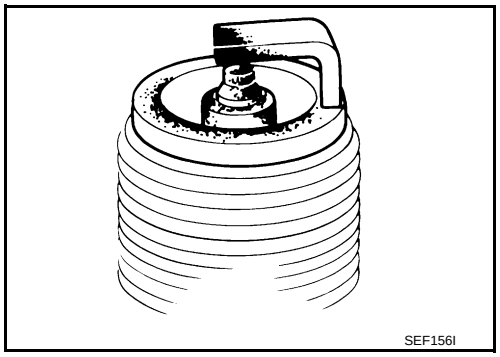

9. CHECK FUNCTION OF IGNITION COIL-III

1. Reconnect the initial spark plugs.
2. Turn ignition switch ON (READY).
3. Depress the accelerator pedal to crank engine for about three seconds, and recheck whether spark is generated between the spark plug and the grounded portion.

Spark should be generated.

Is the inspection result normal?

YES >> INSPECTION END
NO >> Replace spark plug(s) with standard type one(s). For spark plug type, refer to EM-13, "Removal and Installation".

10. CHECK FUEL INJECTOR

1. Turn ignition switch OFF.
2. Remove fuel injector assembly.
   Refer to EM-34, "Removal and Installation".
   Keep fuel hose and all fuel injectors connected to fuel tube.
3. Disconnect all ignition coil harness connectors.
4. Reconnect all fuel injector harness connectors disconnected.
5. Turn ignition switch ON.

Does fuel drip from fuel injector?

YES >> GO TO 11.
NO >> Replace the fuel injector(s) from which fuel is dripping.

11. CHECK INTERMITTENT INCIDENT

Refer to GI-42, "Intermittent Incident".

Is the trouble fixed?

YES >> INSPECTION END
NO >> Replace three way catalyst assembly.

P0441 EVAP CONTROL SYSTEM

DTC Logic

INFOID:0000000003069273

DTC DETECTION LOGIC

In this evaporative emission (EVAP) control system, purge flow occurs during non-closed throttle conditions. Purge volume is related to air intake volume. Under normal purge conditions (non-closed throttle), the EVAP canister purge volume control solenoid valve is open to admit purge flow. Purge flow exposes the EVAP control system pressure sensor to intake manifold vacuum.
Under normal conditions (non-closed throttle), sensor output voltage indicates if pressure drop and purge flow are adequate. If not, a malfunction is determined.

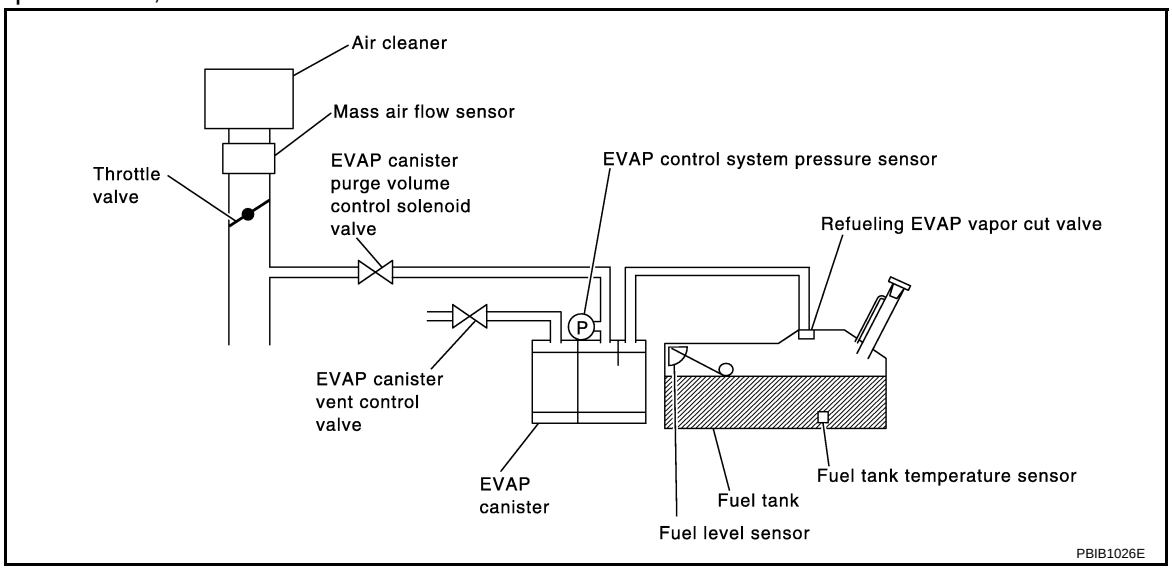

DTC No.	Trouble diagnosis name	DTC detecting condition	Possible cause
P0441	EVAP control system incorrect purge flow	EVAP control system does not operate properly, EVAP control system has a leak between intake manifold and EVAP control system pressure sensor.	• EVAP canister purge volume control solenoid valve stuck closed • EVAP control system pressure sensor and the circuit • Loose, disconnected or improper connection of rubber tube • Blocked rubber tube • Cracked EVAP canister • EVAP canister purge volume control solenoid valve circuit • Blocked purge port • EVAP canister vent control valve

DTC CONFIRMATION PROCEDURE

1. INSPECTION START

Do you have CONSULT-III?

Do you have CONSULT-III?

YES >> GO TO 2.
NO >> GO TO 4.

2. PRECONDITIONING

If DTC Confirmation Procedure has been previously conducted, always perform the following before conducting the next test.

1. Turn ignition switch OFF and wait at least 10 seconds.
2. Turn ignition switch ON.
3. Turn ignition switch OFF and wait at least 10 seconds.

TESTING CONDITION:
Always perform test at a temperature of 5°C (41°F) or more.

>> GO TO 3.

3. PERFORM DTC CONFIRMATION PROCEDURE-I

With CONSULT-III

1. Activate “INSPECTION MODE 1” (HBC-97) to start engine, and warm up engine to normal operating temperature.
2. Turn ignition switch OFF and wait at least 10 seconds.
3. Turn ignition switch ON.
4. Turn ignition switch OFF and wait at least 10 seconds.
5. Turn ignition switch ON (READY).
6. Select “PURG FLOW P0441” of “EVAPORATIVE SYSTEM” in “DTC WORK SUPPORT” mode with CONSULT-III.
7. Touch “START”.
8. Depress the accelerator pedal to start engine, then keep engine running until “TESTING” changes to “COMPLETED”. (It will take at most 10 seconds.)
9. Touch “SELF-DIAG RESULT”.

Which is displayed on CONSULT-III screen?

OK >> INSPECTION END
NG >> Go to EC-264, "Diagnosis Procedure".

4. PERFORM COMPONENT FUNCTION CHECK

Perform component function check. Refer to EC-263, "Component Function Check".

NOTE:
Use component function check to check the overall monitoring function of the EVAP control system purge flow monitoring. During this check, a 1st trip DTC might not be confirmed.

Is the inspection result normal?

YES >> INSPECTION END
NO >> Go to EC-264, "Diagnosis Procedure".

Component Function Check

INFOID:0000000003069274

1. PERFORM COMPONENT FUNCTION CHECK

Without CONSULT-III

1. Lift up the vehicle.
2. Activate “INSPECTION MODE 1” (HBC-97) to start engine, and warm up engine to normal operating temperature.
3. Turn ignition switch OFF and wait at least 10 seconds.
4. Turn ignition switch ON.
5. Turn ignition switch OFF and wait at least 10 seconds.
6. Activate “INSPECTION MODE 1” (HBC-97) to start engine, and wait at least 150 seconds.
7. Set voltmeter probes to ECM harness connector and ground.

ECM		Ground
Connector	Terminal	
E10	86 (EVAP control system pressure sensor signal)	Ground

8. Check EVAP control system pressure sensor value when vehicle is stopped and note it.
9. Establish and maintain the following conditions for at least 1 minute.

Vehicle speed	70 km/h (43 MPH) or more
Shift lever	D position

10. Verify that EVAP control system pressure sensor value stays 0.1V less than the value when vehicle is stopped (measured at step 8) for at least 1 second.

Is the inspection result normal?

YES >> INSPECTION END

NO >> Go to EC-264, "Diagnosis Procedure".

Diagnosis Procedure

INFOID:0000000003069275

1. CHECK EVAP CANISTER

1. Turn ignition switch OFF.
2. Check EVAP canister assembly for cracks.

Is the inspection result normal?

YES-1 >> With CONSULT-III: GO TO 2.
YES-2 >> Without CONSULT-III: GO TO 3.
NO >> Replace EVAP canister.

2. CHECK PURGE FLOW

With CONSULT-III

1. Disconnect vacuum hose connected to EVAP canister purge volume control solenoid valve at EVAP service port and install vacuum gauge. For the location of EVAP service port, refer to EC-67, "System Diagram".
2. Turn ignition switch ON (READY).
3. Perform “PURG VOL CONT/V” in “ACTIVE TEST” mode with CONSULT-III.
4. Rev engine up to 2,000 rpm.
5. Touch “Qd” and “Qu” on CONSULT-III screen to adjust “PURG VOL CONT/V” opening and check vacuum existence.

PURG VOL CONT/V	Vacuum
100%	Existed
0%	Not existed

Is the inspection result normal?

YES >> GO TO 7.
NO >> GO TO 4.

3. CHECK PURGE FLOW

Without CONSULT-III

1. Activate “INSPECTION MODE 1” (HBC-97) to start engine, and warm up engine to normal operating temperature.
2. Turn ignition switch OFF.
3. Disconnect vacuum hose connected to EVAP canister purge volume control solenoid valve at EVAP service port and install vacuum gauge. For the location of EVAP service port, refer to EC-67, "System Diagram".
4. Lift up the vehicle.
5. Activate “INSPECTION MODE 1” (HBC-97) to start engine, and let engine idle.
6. Wait at least 150 seconds.
7. Vehicle speed is 0 km/h (0 MPH).
8. Check vacuum hose for vacuum.

Vacuum should not exist.

9. Drive vehicle at a speed of 70 km/h (43 MPH) or more.
10. Check vacuum hose for vacuum.

Vacuum should exist.

Is the inspection result normal?

YES >> GO TO 7.
NO >> GO TO 4.

4. CHECK EVAP PURGE LINE

1. Turn ignition switch OFF.
2. Check EVAP purge line for improper connection or disconnection.
   Refer to EC-67, "System Diagram".

Is the inspection result normal?

YES >> GO TO 5.
NO >> Repair it.

5. CHECK EVAP PURGE HOSE AND PURGE PORT

1. Disconnect purge hoses connected to EVAP service port **A** and EVAP canister purge volume control solenoid valve **B**.
2. Blow air into each hose and EVAP purge port **C**.

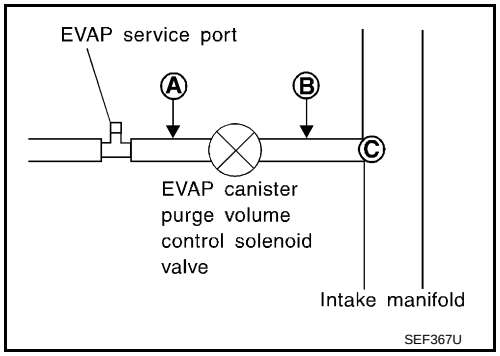

3. Check that air flows freely.

Is the inspection result normal?

YES-1 >> With CONSULT-III: GO TO 6.
YES-2 >> Without CONSULT-III: GO TO 7.
NO >> Repair or clean hoses and/or purge port.

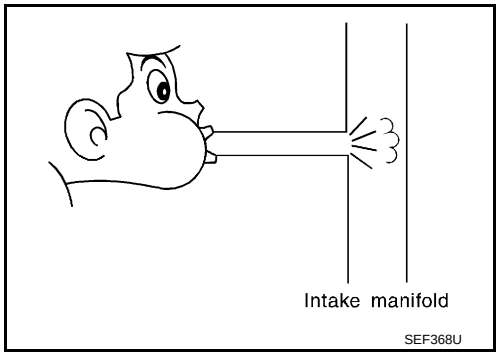

6. CHECK EVAP CANISTER PURGE VOLUME CONTROL SOLENOID VALVE

With CONSULT-III

1. Turn ignition switch ON (READY).
2. Perform “PURG VOL CONT/V” in “ACTIVE TEST” mode with CONSULT-III. Check that engine speed varies according to the valve opening.

Is the inspection result normal?

YES >> GO TO 8.
NO >> GO TO 7.

7. CHECK EVAP CANISTER PURGE VOLUME CONTROL SOLENOID VALVE

Refer to EC-270, "Component Inspection".

Is the inspection result normal?

YES >> GO TO 8.
NO >> Replace EVAP canister purge volume control solenoid valve.

8. CHECK EVAP CONTROL SYSTEM PRESSURE SENSOR CONNECTOR

1. Disconnect EVAP control system pressure sensor harness connector.
2. Check connectors for water.

Water should not exist.

Is the inspection result normal?

YES >> GO TO 9.
NO >> Replace EVAP control system pressure sensor.

9. CHECK EVAP CONTROL SYSTEM PRESSURE SENSOR FUNCTION

Refer to EC-286, "DTC Logic" for DTC P0452, EC-290, "DTC Logic" for DTC P0453.

Is the inspection result normal?

YES >> GO TO 10.

NO >> Replace EVAP control system pressure sensor.

10. CHECK RUBBER TUBE FOR CLOGGING

1. Disconnect rubber tube connected to EVAP canister vent control valve.
2. Check the rubber tube for clogging.

Is the inspection result normal?

YES >> GO TO 11.
NO >> Clean the rubber tube using an air blower.

11. CHECK EVAP CANISTER VENT CONTROL VALVE

Refer to EC-277, "Component Inspection".

Is the inspection result normal?

YES >> GO TO 12.
NO >> Replace EVAP canister vent control valve.

12. CHECK EVAP PURGE LINE

Inspect EVAP purge line (pipe and rubber tube). Check for evidence of leaks.
Refer to EC-67, "System Diagram".

Is the inspection result normal?

YES >> GO TO 13.
NO >> Replace it.

13. CLEAN EVAP PURGE LINE

Clean EVAP purge line (pipe and rubber tube) using air blower.

>> GO TO 14.

14. CHECK INTERMITTENT INCIDENT

Refer to GI-42, "Intermittent Incident".

>> INSPECTION END

P0443 EVAP CANISTER PURGE VOLUME CONTROL SOLENOID VALVE

Description

INFOID:0000000003069276

The EVAP canister purge volume control solenoid valve uses a ON/OFF duty to control the flow rate of fuel vapor from the EVAP canister. The EVAP canister purge volume control solenoid valve is moved by ON/OFF pulses from the ECM. The longer the ON pulse, the greater the amount of fuel vapor that will flow through the valve.

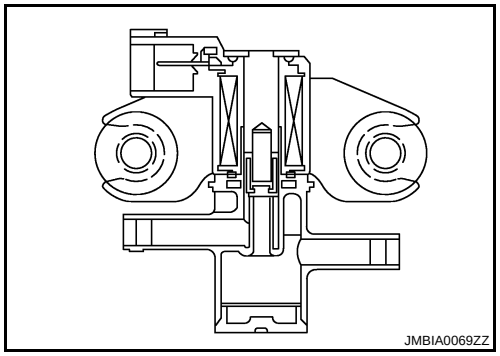

DTC Logic

INFOID:0000000003069277

DTC DETECTION LOGIC

DTC No.	Trouble diagnosis name	DTC detecting condition	Possible cause
P0443	EVAP canister purge volume control solenoid valve	The canister purge flow is detected during the specified driving conditions, even when EVAP canister purge volume control solenoid valve is completely closed.	• EVAP control system pressure sensor • EVAP canister purge volume control solenoid valve (The valve is stuck open.) • EVAP canister vent control valve • EVAP canister • Hoses (Hoses are connected incorrectly or clogged.)

DTC CONFIRMATION PROCEDURE

1. PRECONDITIONING

If DTC Confirmation Procedure has been previously conducted, always perform the following before conducting the next test.

1. Turn ignition switch OFF and wait at least 10 seconds.
2. Turn ignition switch ON.
3. Turn ignition switch OFF and wait at least 10 seconds.

TESTING CONDITION:
Always perform test at a temperature of 5°C (41°F) or more.

Do you have CONSULT-III

YES >> GO TO 2.
NO >> GO TO 3.

2. PERFORM DTC CONFIRMATION PROCEDURE

With CONSULT-III

1. Activate “INSPECTION MODE 1” (HBC-97) to start engine, and warm up engine to normal operating temperature.
2. Turn ignition switch OFF and wait at least 10 seconds.
3. Turn ignition switch ON.
4. Turn ignition switch OFF and wait at least 10 seconds.
5. Turn ignition switch ON (READY).
6. Depress the accelerator pedal to start engine, then keep engine running for at least 10 seconds.
7. Select “PURG VOL CN/V P1444” of “EVAPORATIVE SYSTEM” in “DTC WORK SUPPORT” mode with CONSULT-III.
8. Check that “COMPLETED” is displayed after touching “START”.
   If “COMPLETED” is not displayed, retry from step 1.
9. Touch “SELF-DIAG RESULT”.

Which is displayed on CONSULT-III?

OK >> INSPECTION END
NG >> Go to EC-268, "Diagnosis Procedure".

3. PERFORM DTC CONFIRMATION PROCEDURE

With GST

1. Activate “INSPECTION MODE 1” (HBC-97) to start engine, and warm up engine to normal operating temperature.
2. Turn ignition switch OFF and wait at least 10 seconds.
3. Turn ignition switch ON.
4. Turn ignition switch OFF and wait at least 10 seconds.
5. Activate “INSPECTION MODE 1” (HBC-97) to start engine, and let engine idle for at least 20 seconds.
6. Check 1st trip DTC.

Is 1st trip DTC displayed?

YES >> Go to EC-268, "Diagnosis Procedure".
NO >> INSPECTION END

Diagnosis Procedure

INFOID:0000000003069278

1. CHECK EVAP CANISTER PURGE VOLUME CONTROL SOLENOID VALVE POWER SUPPLY CIRCUIT

1. Turn ignition switch OFF.
2. Disconnect EVAP canister purge volume control solenoid valve harness connector.
3. Turn ignition switch ON.
4. Check the voltage between EVAP canister purge volume control solenoid valve harness connector and ground.

EVAP canister purge volume control solenoid valve		Ground	Voltage
Connector	Terminal		
F29	1	Ground	Battery voltage

Is the inspection result normal?

YES >> GO TO 3.
NO >> GO TO 2.

2. DETECT MALFUNCTIONING PART

Check the following.

- Junction block E44, E45
- Harness connectors E80, F84
- Harness for open or short between EVAP canister purge volume control solenoid valve and IPDM E/R
- Harness for open or short between EVAP canister purge volume control solenoid valve and ECM

>> Repair open circuit or short to ground or short to power in harness or connectors.

3. CHECK EVAP CANISTER PURGE VOLUME CONTROL SOLENOID VALVE OUTPUT SIGNAL CIRCUIT FOR OPEN AND SHORT

1. Turn ignition switch OFF.
2. Disconnect ECM harness connector.
3. Check the continuity between EVAP canister purge volume control solenoid valve harness connector and ECM harness connector.

EVAP canister purge volume control solenoid valve		ECM		Continuity
Connector	Terminal	Connector	Terminal	
F29	2	F14	25	Existed

4. Also check harness for short to ground and short to power.

Is the inspection result normal?

YES >> GO TO 4.

NO >> Repair open circuit or short to ground or short to power in harness or connectors.

4. CHECK EVAP CONTROL SYSTEM PRESSURE SENSOR CONNECTOR

1. Disconnect EVAP control system pressure sensor harness connector.
2. Check connectors for water.

Water should not exist.

Is the inspection result normal?

YES >> GO TO 5.
NO >> Replace EVAP control system pressure sensor.

5. CHECK EVAP CONTROL SYSTEM PRESSURE SENSOR

Refer to EC-285, "Component Inspection".

Is the inspection result normal?

YES-1 >> With CONSULT-III: GO TO 6.
YES-2 >> Without CONSULT-III: GO TO 7.
NO >> Replace EVAP control system pressure sensor.

6. CHECK EVAP CANISTER PURGE VOLUME CONTROL SOLENOID VALVE

With CONSULT-III

1. Turn ignition switch OFF.
2. Reconnect harness connectors disconnected.
3. Turn ignition switch ON (READY).
4. Perform “PURG VOL CONT/V” in “ACTIVE TEST” mode with CONSULT-III. Check that engine speed varies according to the valve opening.

Is the inspection result normal?

YES >> GO TO 8.
NO >> GO TO 7.

7. CHECK EVAP CANISTER PURGE VOLUME CONTROL SOLENOID VALVE

Refer to EC-270, "Component Inspection".

Is the inspection result normal?

YES >> GO TO 8.
NO >> Replace EVAP canister purge volume control solenoid valve.

8. CHECK RUBBER TUBE FOR CLOGGING

1. Disconnect rubber tube connected to EVAP canister vent control valve.
2. Check the rubber tube for clogging.

Is the inspection result normal?

YES >> GO TO 9.
NO >> Clean the rubber tube using an air blower.

9. CHECK EVAP CANISTER VENT CONTROL VALVE

Refer to EC-277, "Component Inspection".

Is the inspection result normal?

YES >> GO TO 10.
NO >> Replace EVAP canister vent control valve.

10. CHECK IF EVAP CANISTER SATURATED WITH WATER

1. Remove EVAP canister assembly with EVAP canister vent control valve and EVAP control system pressure sensor attached.

2. Check if water will drain from EVAP canister.

Does water drain from the EVAP canister?

YES >> GO TO 11.
NO >> GO TO 13.

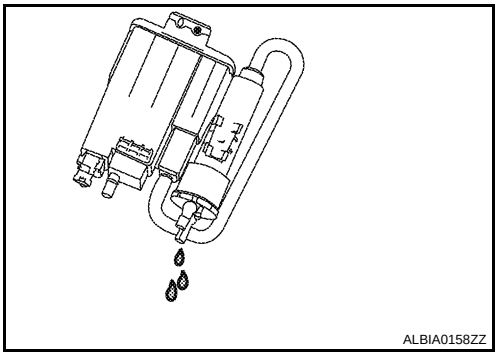

11. CHECK EVAP CANISTER

Weigh the EVAP canister assembly with the EVAP canister vent control valve and EVAP control system pressure sensor attached.

The weight should be less than 2.8 kg (6.2 lb).

Is the inspection result normal?

YES >> GO TO 13.
NO >> GO TO 12.

12. DETECT MALFUNCTIONING PART

Check the following.
- EVAP canister for damage
- EVAP hose between EVAP canister and vehicle frame for clogging or poor connection

>> Repair hose or replace EVAP canister.

13. CHECK INTERMITTENT INCIDENT

Refer to GI-42, "Intermittent Incident".

>> INSPECTION END

Component Inspection

INFOID:0000000003069279

1. CHECK EVAP CANISTER PURGE VOLUME CONTROL SOLENOID VALVE

With CONSULT-III

1. Turn ignition switch OFF.
2. Reconnect all harness connectors disconnected.
3. Disconnect EVAP purge hoses connected to EVAP canister purge volume control solenoid valve.
4. Turn ignition switch ON (READY).
5. Select “PURG VOL CONT/V” in “ACTIVE TEST” mode with CONSULT-III.
6. Touch “Qd” and “Qu” on CONSULT-III screen to adjust “PURG VOL CONT/V” opening and check air passage continuity of EVAP canister purge volume control solenoid valve under the following conditions.

Condition (PURG VOL CONT/V value)	Air passage continuity between (A) and (B)
100%	Existed
0%	Not existed

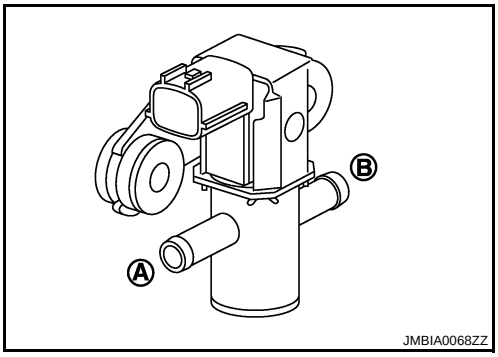

Without CONSULT-III

1. Turn ignition switch OFF.
2. Disconnect EVAP canister purge volume control solenoid valve harness connector.
3. Disconnect EVAP purge hoses connected to EVAP canister purge volume control solenoid valve.

4. Check air passage continuity of EVAP canister purge volume control solenoid valve under the following conditions.

Condition	Air passage continuity between (A) and (B)
12V direct current supply between terminals 1 and 2	Existed
No supply	Not existed

Is the inspection result normal?

YES >> INSPECTION END
NO >> Replace EVAP canister purge volume control solenoid valve

P0444, P0445 EVAP CANISTER PURGE VOLUME CONTROL SOLENOID VALVE

Description

INFOID:0000000003069280

The EVAP canister purge volume control solenoid valve uses a ON/OFF duty to control the flow rate of fuel vapor from the EVAP canister. The EVAP canister purge volume control solenoid valve is moved by ON/OFF pulses from the ECM. The longer the ON pulse, the greater the amount of fuel vapor that will flow through the valve.

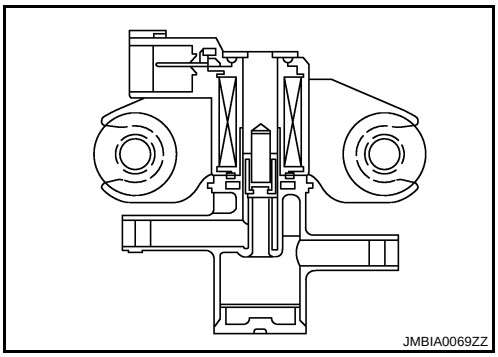

DTC Logic

INFOID:0000000003069281

DTC DETECTION LOGIC

DTC No.	Trouble diagnosis name	DTC detecting condition	Possible cause
P0444	EVAP canister purge volume control solenoid valve circuit open	An excessively low voltage signal is sent to ECM through the valve	• Harness or connectors (The solenoid valve circuit is open or shorted.) • EVAP canister purge volume control solenoid valve
P0445	EVAP canister purge volume control solenoid valve circuit shorted	An excessively high voltage signal is sent to ECM through the valve	• Harness or connectors (The solenoid valve circuit is shorted.) • EVAP canister purge volume control solenoid valve

DTC CONFIRMATION PROCEDURE

1. CONDITIONING

If DTC Confirmation Procedure has been previously conducted, always perform the following before conducting the next test.
1. Turn ignition switch OFF and wait at least 10 seconds.
2. Turn ignition switch ON.
3. Turn ignition switch OFF and wait at least 10 seconds.

TESTING CONDITION:
Before performing the following procedure, confirm battery voltage is more than 11V at idle.

>> GO TO 2.

2. PERFORM DTC CONFIRMATION PROCEDURE

1. Activate “INSPECTION MODE 1” (HBC-97) to start engine, and let engine idle for at least 13 seconds.
2. Check 1st trip DTC.

Is 1st trip DTC detected?

YES >> Go to EC-272, "Diagnosis Procedure".
NO >> INSPECTION END

Diagnosis Procedure

INFOID:0000000003069282

1. CHECK EVAP CANISTER PURGE VOLUME CONTROL SOLENOID VALVE POWER SUPPLY CIRCUIT

1. Turn ignition switch OFF.
2. Disconnect EVAP canister purge volume control solenoid valve harness connector.
3. Turn ignition switch ON.

4. Check the voltage between EVAP canister purge volume control solenoid valve harness connector and ground.

EVAP canister purge volume control solenoid valve		Ground	Voltage
Connector	Terminal		
F29	1	Ground	Battery voltage

Is the inspection result normal?

YES >> GO TO 3.
NO >> GO TO 2.

2. DETECT MALFUNCTIONING PART

Check the following.
- Junction block E44, E45
- Harness connectors E80, F84
- Harness for open or short between EVAP canister purge volume control solenoid valve and IPDM E/R
- Harness for open or short between EVAP canister purge volume control solenoid valve and ECM

>> Repair open circuit or short to ground or short to power in harness or connectors.

3. CHECK EVAP CANISTER PURGE VOLUME CONTROL SOLENOID VALVE OUTPUT SIGNAL CIRCUIT FOR OPEN AND SHORT

1. Turn ignition switch OFF.
2. Disconnect ECM harness connector.
3. Check the continuity between EVAP canister purge volume control solenoid valve harness connector and ECM harness connector.

EVAP canister purge volume control solenoid valve		ECM		Continuity
Connector	Terminal	Connector	Terminal	
F29	2	F14	25	Existed

4. Also check harness for short to ground and short to power.

Is the inspection result normal?

YES-1 >> With CONSULT-III: GO TO 4.
YES-2 >> Without CONSULT-III: GO TO 5.
NO >> Repair open circuit or short to ground or short to power in harness or connectors.

4. CHECK EVAP CANISTER PURGE VOLUME CONTROL SOLENOID VALVE OPERATION

With CONSULT-III

1. Reconnect all harness connectors disconnected.
2. Turn ignition switch ON (READY).
3. Perform “PURG VOL CONT/V” in “ACTIVE TEST” mode with CONSULT-III. Check that engine speed varies according to the valve opening.

Is the inspection result normal?

YES >> GO TO 6.
NO >> GO TO 5.

5. CHECK EVAP CANISTER PURGE VOLUME CONTROL SOLENOID VALVE

Refer to EC-274, "Component Inspection".

Is the inspection result normal?

YES >> GO TO 6.
NO >> Replace EVAP canister purge volume control solenoid valve.

6. CHECK INTERMITTENT INCIDENT

Refer to GI-42, "Intermittent Incident".

>> INSPECTION END

Component Inspection

INFOID:0000000003069283

1. CHECK EVAP CANISTER PURGE VOLUME CONTROL SOLENOID VALVE

With CONSULT-III

1. Turn ignition switch OFF.
2. Reconnect all harness connectors disconnected.
3. Disconnect EVAP purge hoses connected to EVAP canister purge volume control solenoid valve.
4. Turn ignition switch ON (READY).
5. Select “PURG VOL CONT/V” in “ACTIVE TEST” mode with CONSULT-III.
6. Touch “Qd” and “Qu” on CONSULT-III screen to adjust “PURG VOL CONT/V” opening and check air passage continuity of EVAP canister purge volume control solenoid valve under the following conditions.

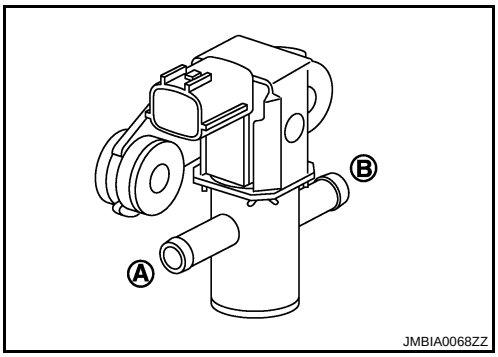

Condition (PURG VOL CONT/V value)	Air passage continuity between (A) and (B)
100%	Existed
0%	Not existed

Without CONSULT-III

1. Turn ignition switch OFF.
2. Disconnect EVAP canister purge volume control solenoid valve harness connector.
3. Disconnect EVAP purge hoses connected to EVAP canister purge volume control solenoid valve.
4. Check air passage continuity of EVAP canister purge volume control solenoid valve under the following conditions.

Condition	Air passage continuity between (A) and (B)
12V direct current supply between terminals 1 and 2	Existed
No supply	Not existed

Is the inspection result normal?

YES >> INSPECTION END
NO >> Replace EVAP canister purge volume control solenoid valve

P0447 EVAP CANISTER VENT CONTROL VALVE

Description

INFOID:0000000003069284

The EVAP canister vent control valve is located on the EVAP canister and is used to seal the canister vent.
This solenoid valve responds to signals from the ECM. When the ECM sends an ON signal, the coil in the solenoid valve is energized. A plunger will then move to seal the canister vent. The ability to seal the vent is necessary for the on board diagnosis of other evaporative emission control system components.
This solenoid valve is used only for diagnosis, and usually remains opened.
When the vent is closed, under normal purge conditions, the evaporative emission control system is depressurized and allows “EVAP Control System” diagnosis.

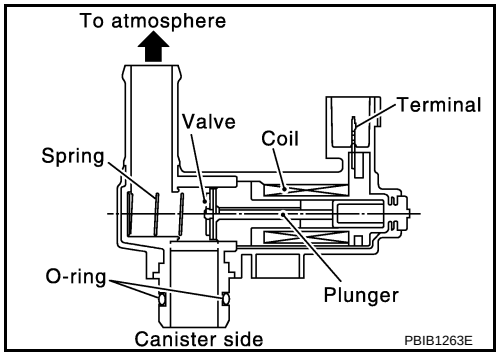

DTC Logic

INFOID:0000000003069285

DTC DETECTION LOGIC

DTC No.	Trouble diagnosis name	DTC detecting condition	Possible cause
P0447	EVAP canister vent control valve circuit open	An improper voltage signal is sent to ECM through EVAP canister vent control valve.	• Harness or connectors (The valve circuit is open or shorted.) • EVAP canister vent control valve

DTC CONFIRMATION PROCEDURE

1. PRECONDITIONING

If DTC Confirmation Procedure has been previously conducted, always perform the following before conducting the next test.
1. Turn ignition switch OFF and wait at least 10 seconds.
2. Turn ignition switch ON.
3. Turn ignition switch OFF and wait at least 10 seconds.

TESTING CONDITION:
Before performing the following procedure, confirm battery voltage is more than 11V at idle.

>> GO TO 2.

2. PERFORM DTC CONFIRMATION PROCEDURE

1. Turn ignition switch ON (READY).
2. Depress the accelerator pedal to start engine, then keep engine running for at least 8 seconds.
3. Check 1st trip DTC.

Is 1st trip DTC detected?

YES >> Go to EC-275, "Diagnosis Procedure".
NO >> INSPECTION END

Diagnosis Procedure

INFOID:0000000003069286

1. INSPECTION START

Do you have CONSULT-III?

Do you have CONSULT-III?

YES >> GO TO 2.
NO >> GO TO 3.

2. CHECK EVAP CANISTER VENT CONTROL VALVE CIRCUIT

With CONSULT-III
1. Turn ignition switch OFF and then turn ON.

2. Select “VENT CONTROL/V” in “ACTIVE TEST” mode with CONSULT-III.
3. Touch “ON/OFF” on CONSULT-III screen.
4. Check for operating sound of the valve.

Clicking sound should be heard.

Is the inspection result normal?

YES >> GO TO 7.
NO >> GO TO 3.

3. CHECK EVAP CANISTER VENT CONTROL VALVE POWER SUPPLY CIRCUIT

1. Turn ignition switch OFF.
2. Disconnect EVAP canister vent control valve harness connector.
3. Turn ignition switch ON.
4. Check the voltage between EVAP canister vent control valve harness connector and ground.

EVAP canister vent control valve		Ground	Voltage
Connector	Terminal		
B39	1	Ground	Battery voltage

Is the inspection result normal?

YES >> GO TO 5.
NO >> GO TO 4.

4. DETECT MALFUNCTIONING PART

Check the following.
- Harness connectors E80, F84
- Harness connectors E29, B10
- Harness for open or short between EVAP canister vent control valve and IPDM E/R

>> Repair open circuit or short to ground or short to power in harness or connectors.

5. CHECK EVAP CANISTER VENT CONTROL VALVE OUTPUT SIGNAL CIRCUIT FOR OPEN AND SHORT

1. Turn ignition switch OFF.
2. Disconnect ECM harness connector.
3. Check the continuity between EVAP canister vent control valve harness connector and ECM harness connector.

EVAP canister vent control valve		ECM		Continuity
Connector	Terminal	Connector	Terminal	
B39	2	E10	109	Existed

4. Also check harness for short to ground and short to power.

Is the inspection result normal?

YES >> GO TO 7.
NO >> GO TO 6.

6. DETECT MALFUNCTIONING PART

Check the following.
- Junction block connector E44, E45
- Harness connectors E29, B10
- Harness for open or short between EVAP canister vent control valve and ECM

>> Repair open circuit or short to ground or short to power in harness or connectors.

7. CHECK RUBBER TUBE FOR CLOGGING

1. Disconnect rubber tube connected to EVAP canister vent control valve.
2. Check the rubber tube for clogging.

Is the inspection result normal?

YES >> GO TO 8.
NO >> Clean the rubber tube using an air blower.

8. CHECK EVAP CANISTER VENT CONTROL VALVE

Refer to EC-277, "Component Inspection".

Is the inspection result normal?

YES >> GO TO 9.
NO >> Replace EVAP canister vent control valve.

9. CHECK INTERMITTENT INCIDENT

Refer to GI-42, "Intermittent Incident".

>> INSPECTION END

Component Inspection

INFOID:0000000003069287

1. CHECK EVAP CANISTER VENT CONTROL VALVE-I

1. Turn ignition switch OFF.
2. Remove EVAP canister vent control valve from EVAP canister.
3. Check portion (B) of EVAP canister vent control valve for being rusted.

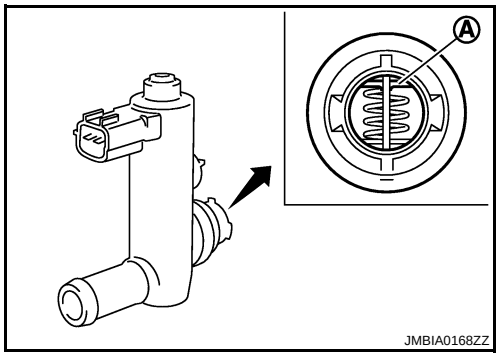

Is it rusted?

YES >> Replace EVAP canister vent control valve
NO >> GO TO 2.

2. CHECK EVAP CANISTER VENT CONTROL VALVE-II

With CONSULT-III

1. Reconnect harness connectors disconnected.
2. Turn ignition switch ON.
3. Perform “VENT CONTROL/V” in “ACTIVE TEST” mode.
4. Check air passage continuity and operation delay time.
   Make sure new O-ring is installed properly.

Condition VENT CONTROL/V	Air passage continuity between (A) and (B)
ON	Not existed
OFF	Existed

Operation takes less than 1 second.

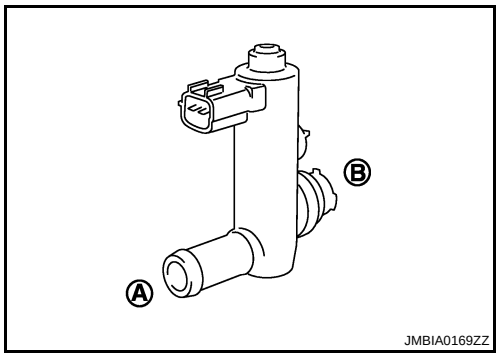

Without CONSULT-III

Check air passage continuity and operation delay time under the following conditions.
Make sure new O-ring is installed properly.

Condition	Air passage continuity between (A) and (B)
12V direct current supply between terminals (1) and (2)	Not existed
OFF	Existed

Operation takes less than 1 second.

Is the inspection result normal?

YES >> GO TO 3.
NO >> Replace EVAP canister vent control valve

3. CHECK EVAP CANISTER VENT CONTROL VALVE-III

With CONSULT-III

1. Clean the air passage [portion (A) to (B)] of EVAP canister vent control valve using an air blower.
2. Perform “VENT CONTROL/V” in “ACTIVE TEST” mode.
3. Check air passage continuity and operation delay time.
   Make sure new O-ring is installed properly.

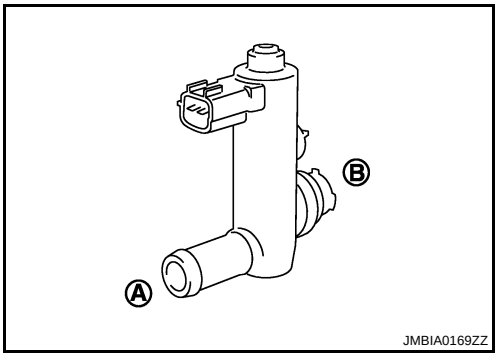

Condition VENT CONTROL/V	Air passage continuity between (A) and (B)
ON	Not existed
OFF	Existed

Operation takes less than 1 second.

Without CONSULT-III

1. Clean the air passage [portion (A) to (B)] of EVAP canister vent control valve using an air blower.
2. Check air passage continuity and operation delay time under the following conditions.
   Make sure new O-ring is installed properly.

Condition	Air passage continuity between (A) and (B)
12V direct current supply between terminals (1) and (2)	Not existed
OFF	Existed

Operation takes less than 1 second.

Is the inspection result normal?

YES >> INSPECTION END
NO >> Replace EVAP canister vent control valve

P0448 EVAP CANISTER VENT CONTROL VALVE

Description

INFOID:0000000003069288

The EVAP canister vent control valve is located on the EVAP canister and is used to seal the canister vent.
This solenoid valve responds to signals from the ECM. When the ECM sends an ON signal, the coil in the solenoid valve is energized. A plunger will then move to seal the canister vent. The ability to seal the vent is necessary for the on board diagnosis of other evaporative emission control system components.
This solenoid valve is used only for diagnosis, and usually remains opened.
When the vent is closed, under normal purge conditions, the evaporative emission control system is depressurized and allows “EVAP Control System” diagnosis.

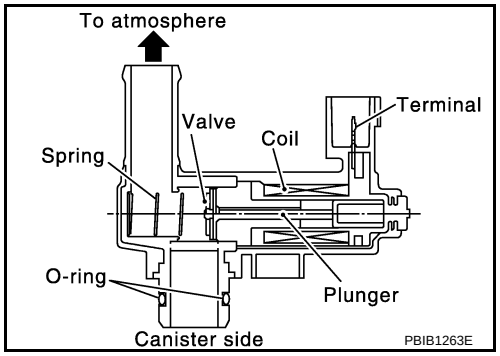

DTC Logic

INFOID:0000000003069289

DTC DETECTION LOGIC

DTC No.	Trouble diagnosis name	DTC detecting condition	Possible cause
P0448	EVAP canister vent control valve close	EVAP canister vent control valve remains closed under specified driving conditions.	• EVAP canister vent control valve • EVAP control system pressure sensor and the circuit • Blocked rubber tube to EVAP canister vent control valve • EVAP canister is saturated with water

DTC CONFIRMATION PROCEDURE

1. PRECONDITIONING

If DTC Confirmation Procedure has been previously conducted, always perform the following before conducting the next test.
1. Turn ignition switch OFF and wait at least 10 seconds.
2. Turn ignition switch ON.
3. Turn ignition switch OFF and wait at least 10 seconds.

TESTING CONDITION:
This test may be conducted with the drive wheels lifted in the shop or by driving the vehicle. If this test is conducted with the drive wheels lifted, activate “INPSECTION MODE 1” (HBC-97). If a road test is expected to be easier, it is unnecessary to lift up the vehicle.

>> GO TO 2.

2. PERFORM DTC CONFIRMATION PROCEDURE

1. Turn ignition switch ON (READY) and wait at least 150 seconds.
2. Drive vehicle at a speed of 80 km/h (50 MPH) or more for at least 3 consecutive minutes.
   CAUTION:
   Always drive vehicle at a safe speed.
   NOTE:
   Never fully release accelerator pedal during the cruising.
3. Check 1st trip DTC.

Is 1st trip DTC detected?

YES >> Go to EC-279, "Diagnosis Procedure".
NO >> INSPECTION END

Diagnosis Procedure

INFOID:0000000003069290

1. CHECK RUBBER TUBE

1. Turn ignition switch OFF.
2. Disconnect rubber tube connected to EVAP canister vent control valve.
3. Check the rubber tube for clogging.

Is the inspection result normal?

YES >> GO TO 2.
NO >> Clean rubber tube using an air blower.

2. CHECK EVAP CANISTER VENT CONTROL VALVE

Refer to EC-277, "Component Inspection".

Is the inspection result normal?

YES >> GO TO 3.
NO >> Replace EVAP canister vent control valve.

3. CHECK IF EVAP CANISTER SATURATED WITH WATER

1. Remove EVAP canister with EVAP canister vent control valve and EVAP control system pressure sensor attached.
2. Check if water will drain from the EVAP canister.

Does water drain from EVAP canister?

YES >> GO TO 4.
NO >> GO TO 6.

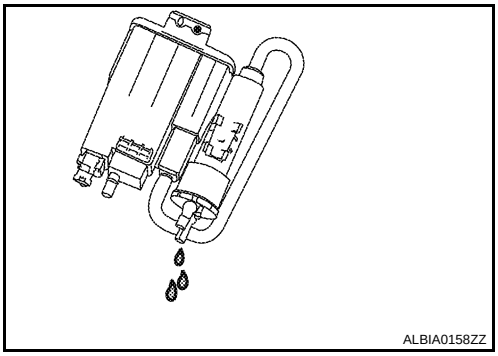

4. CHECK EVAP CANISTER

Weigh the EVAP canister with the EVAP canister vent control valve and EVAP control system pressure sensor attached.

The weight should be less than 2.8 kg (6.2 lb).

Is the inspection result normal?

YES >> GO TO 6.
NO >> GO TO 5.

5. DETECT MALFUNCTIONING PART

Check the following.
- EVAP canister for damage
- EVAP hose between EVAP canister and vehicle frame for clogging or poor connection

>> Repair hose or replace EVAP canister.

6. CHECK EVAP CONTROL SYSTEM PRESSURE SENSOR CONNECTOR

1. Disconnect EVAP control system pressure sensor harness connector.
2. Check connectors for water.

Water should not exist.

Is the inspection result normal?

YES >> GO TO 7.
NO >> Replace EVAP control system pressure sensor.

7. CHECK EVAP CONTROL SYSTEM PRESSURE SENSOR

Refer to EC-285, "Component Inspection".

Is the inspection result normal?

YES >> GO TO 8.
NO >> Replace EVAP control system pressure sensor.

8. CHECK INTERMITTENT INCIDENT

Refer to GI-42, "Intermittent Incident".

>> INSPECTION END

Component Inspection

INFOID:0000000003069291

1. CHECK EVAP CANISTER VENT CONTROL VALVE-I

1. Turn ignition switch OFF.
2. Remove EVAP canister vent control valve from EVAP canister.
3. Check portion (B) of EVAP canister vent control valve for being rusted.

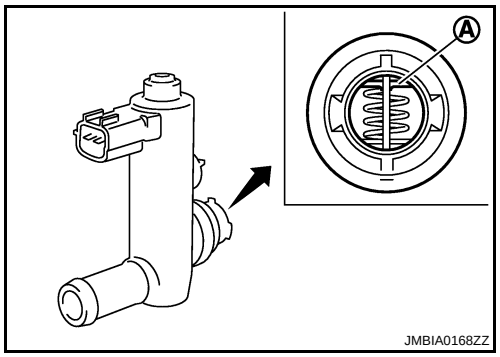

Is it rusted?

YES >> Replace EVAP canister vent control valve
NO >> GO TO 2.

2. CHECK EVAP CANISTER VENT CONTROL VALVE-II

With CONSULT-III

1. Reconnect harness connectors disconnected.
2. Turn ignition switch ON.
3. Perform “VENT CONTROL/V” in “ACTIVE TEST” mode.
4. Check air passage continuity and operation delay time.
   Make sure new O-ring is installed properly.

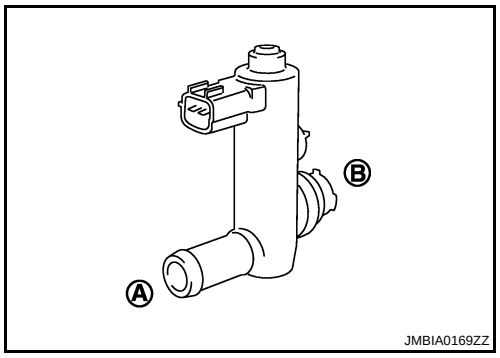

Condition VENT CONTROL/V	Air passage continuity between (A) and (B)
ON	Not existed
OFF	Existed

Operation takes less than 1 second.

Without CONSULT-III

Check air passage continuity and operation delay time under the following conditions.
Make sure new O-ring is installed properly.

Condition	Air passage continuity between (A) and (B)
12V direct current supply between terminals (1) and (2)	Not existed
OFF	Existed

Operation takes less than 1 second.

Is the inspection result normal?

YES >> GO TO 3.
NO >> Replace EVAP canister vent control valve

3. CHECK EVAP CANISTER VENT CONTROL VALVE-III

With CONSULT-III

1. Clean the air passage [portion (A) to (B)] of EVAP canister vent control valve using an air blower.
2. Perform “VENT CONTROL/V” in “ACTIVE TEST” mode.

3. Check air passage continuity and operation delay time.
   Make sure new O-ring is installed properly.

Condition VENT CONTROL/V	Air passage continuity between (A) and (B)
ON	Not existed
OFF	Existed

Operation takes less than 1 second.

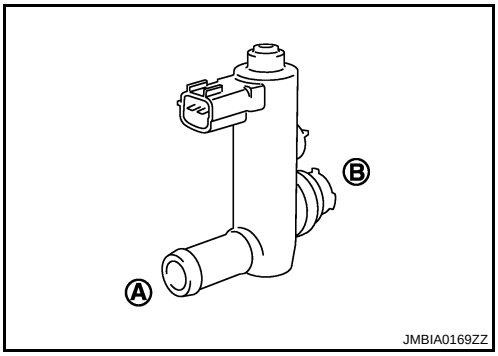

Without CONSULT-III

1. Clean the air passage [portion (A) to (B)] of EVAP canister vent control valve using an air blower.
2. Check air passage continuity and operation delay time under the following conditions.
   Make sure new O-ring is installed properly.

Condition	Air passage continuity between (A) and (B)
12V direct current supply between terminals (1) and (2)	Not existed
OFF	Existed

Operation takes less than 1 second.

Is the inspection result normal?

YES >> INSPECTION END
NO >> Replace EVAP canister vent control valve

P0451 EVAP CONTROL SYSTEM PRESSURE SENSOR

Description

INFOID:0000000003069292

The EVAP control system pressure sensor detects pressure in the purge line. The sensor output voltage to the ECM increases as pressure increases.

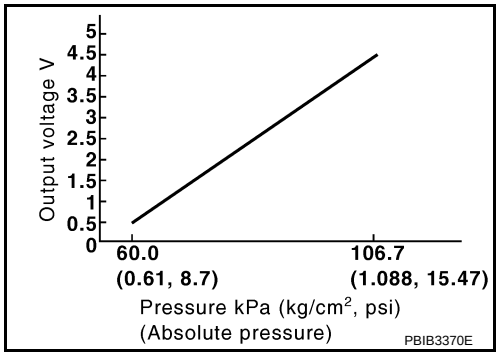

DTC Logic

INFOID:0000000003069293

DTC DETECTION LOGIC

DTC No.	Trouble diagnosis name	DTC detecting condition	Possible cause
P0451	EVAP control system pressure sensor performance	ECM detects a sloshing signal from the EVAP control system pressure sensor	• Harness or connectors (EVAP control system pressure sensor circuit is shorted.) [Crankshaft position sensor (POS) circuit is shorted.] (Refrigerant pressure sensor circuit is shorted.) • EVAP control system pressure sensor • Crankshaft position sensor (POS) • Refrigerant pressure sensor

DTC CONFIRMATION PROCEDURE

1. PRECONDITIONING

If DTC Confirmation Procedure has been previously conducted, always perform the following before conducting the next test.

1. Turn ignition switch OFF and wait at least 10 seconds.
2. Turn ignition switch ON.
3. Turn ignition switch OFF and wait at least 10 seconds.

>> GO TO 2.

2. PERFORM DTC CONFIRMATION PROCEDURE

1. Turn ignition switch OFF and wait at least 10 seconds.
2. Activate “INSPECTION MODE 1” (HBC-97) to start engine, and wait at least 40 seconds.
   NOTE:
   Do not depress accelerator pedal even slightly.
3. Check 1st trip DTC.

Is 1st trip DTC detected?

YES >> Go to EC-283, "Diagnosis Procedure".
NO >> INSPECTION END

Diagnosis Procedure

INFOID:0000000003069294

1. CHECK GROUND CONNECTION

1. Turn ignition switch OFF.
2. Check ground connection E9. Refer to Ground Inspection in GI-45, "Circuit Inspection".

Is the inspection result normal?

YES >> GO TO 2.
NO >> Repair or replace ground connection.

2. CHECK EVAP CONTROL SYSTEM PRESSURE SENSOR CONNECTOR FOR WATER

1. Disconnect EVAP control system pressure sensor harness connector.
2. Check sensor harness connector for water.

Water should not exist.

Is the inspection result normal?

YES >> GO TO 3.
NO >> Repair or replace harness connector.

3. CHECK EVAP CONTROL SYSTEM PRESSURE SENSOR POWER SUPPLY CIRCUIT

1. Turn ignition switch ON.
2. Check the voltage between EVAP control system pressure sensor harness connector and ground.

EVAP control system pressure sensor		Ground	Voltage
Connector	Terminal		
B41	3	Ground	Approx. 5V

Is the inspection result normal?

YES >> GO TO 6.
NO >> GO TO 4.

4. CHECK SENSOR POWER SUPPLY CIRCUITS

Check harness for short to power and short to ground, between the following terminals.

ECM		Sensor		
Connector	Terminal	Name	Connector	Terminal
F13	72	Refrigerant pressure sensor	E219	1
	76	CKP sensor (POS)	F30	1
E10	91	EVAP control system pressure sensor	B41	3

Is the inspection result normal?

YES >> GO TO 5.
NO >> Repair short to ground or short to power in harness or connectors.

5. CHECK COMPONENTS

Check the following.
- Crankshaft position sensor (POS) (Refer to EC-252, "Component Inspection".)
- Refrigerant pressure sensor

Is the inspection result normal?

YES >> GO TO 7.
NO >> Replace malfunctioning component.

6. CHECK EVAP CONTROL SYSTEM PRESSURE SENSOR

Refer to EC-285, "Component Inspection".

Is the inspection result normal?

YES >> GO TO 7.
NO >> Replace EVAP control system pressure sensor.

7. CHECK INTERMITTENT INCIDENT

Refer to GI-42, "Intermittent Incident".

>> INSPECTION END

Component Inspection

INFOID:0000000003069295

1. CHECK EVAP CONTROL SYSTEM PRESSURE SENSOR

1. Turn ignition switch OFF.
2. Remove EVAP control system pressure sensor with its harness connector connected from EVAP canister. **Always replace O-ring with a new one.**
3. Install a vacuum pump to EVAP control system pressure sensor.
4. Turn ignition switch ON and check output voltage between ECM harness connector and ground under the following conditions.

ECM		Condition [Applied vacuum kPa (kg/cm^2, psi)	Voltage
Connector	Terminal		
E10	86 (EVAP control system pressure sensor signal)	Not applied	1.8 - 4.8V
		-26.7 (-0.272, -3.87)	2.1 to 2.5V lower than above value

CAUTION:
- **Always calibrate the vacuum pump gauge when using it.**
- **Do not apply below -93.3 kPa (-0.952 kg/cm^2, -13.53 psi) or pressure over 101.3 kPa (1.033 kg/cm^2, 14.69 psi).**

Is the inspection result normal?

YES >> INSPECTION END
NO >> Replace EVAP control system pressure sensor

P0452 EVAP CONTROL SYSTEM PRESSURE SENSOR

Description

INFOID:0000000003069296

The EVAP control system pressure sensor detects pressure in the purge line. The sensor output voltage to the ECM increases as pressure increases.

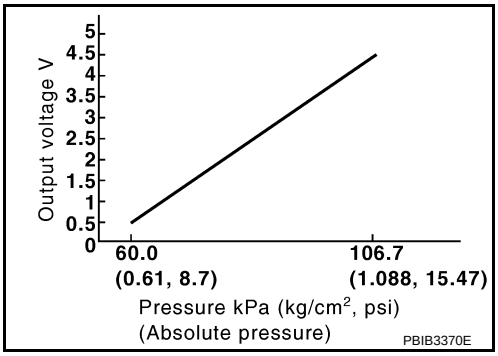

DTC Logic

INFOID:0000000003069297

DTC DETECTION LOGIC

DTC No.	Trouble diagnosis name	DTC detecting condition	Possible cause
P0452	EVAP control system pressure sensor low input	An excessively low voltage from the sensor is sent to ECM.	• Harness or connectors (EVAP control system pressure sensor circuit is open or shorted.) [Crankshaft position sensor (POS) circuit is shorted.) (Refrigerant pressure sensor circuit is shorted.) • EVAP control system pressure sensor • Crankshaft position sensor (POS) • Refrigerant pressure sensor

DTC CONFIRMATION PROCEDURE

1. PRECONDITIONING

If DTC Confirmation Procedure has been previously conducted, always perform the following before conducting the next test.

1. Turn ignition switch OFF and wait at least 10 seconds.
2. Turn ignition switch ON.
3. Turn ignition switch OFF and wait at least 10 seconds.

TESTING CONDITION:
Always perform test at a temperature of 5°C (41°F) or more.

>> GO TO 2.

2. PERFORM DTC CONFIRMATION PROCEDURE

With CONSULT-III

1. Activate “INSPECTION MODE 1” (HBC-97) to start engine, and warm up engine to normal operating temperature.
2. Turn ignition switch OFF and wait at least 10 seconds.
3. Turn ignition switch ON.
4. Select “DATA MONITOR” mode with CONSULT-III.
5. Make sure that “FUEL T/TMP SE” is more than 0°C (32°F).
6. Activate “INSPECTION MODE 1” (HBC-97) to start engine, and wait at least 20 seconds.
7. Check 1st trip DTC.

With GST

1. Activate “INSPECTION MODE 1” (HBC-97) to start engine, and warm up engine to normal operating temperature.
2. Set voltmeter probes to ECM harness connector and ground as follows.

ECM		Ground
Connector	Terminal	
E10	95 (Fuel tank temperature sensor signal)	Ground

3. Make sure that the voltage is less than 4.2V.
4. Turn ignition switch OFF and wait at least 10 seconds.
5. Activate “INSPECTION MODE 1” (HBC-97) to start engine and wait at least 20 seconds.
6. Check 1st trip DTC.

Is 1st trip DTC detected?

YES >> Go to EC-287, "Diagnosis Procedure".
NO >> INSPECTION END

Diagnosis Procedure

INFOID:0000000003069298

1. CHECK GROUND CONNECTION

1. Turn ignition switch OFF.
2. Check ground connection E9. Refer to Ground Inspection in GI-45, "Circuit Inspection".

Is the inspection result normal?

YES >> GO TO 2.
NO >> Repair or replace ground connection.

2. CHECK CONNECTOR

1. Disconnect EVAP control system pressure sensor harness connector.
2. Check sensor harness connector for water.

Water should not exist.

Is the inspection result normal?

YES >> GO TO 3.
NO >> Repair or replace harness connector.

3. CHECK EVAP CONTROL SYSTEM PRESSURE SENSOR POWER SUPPLY CIRCUIT-I

1. Turn ignition switch ON.
2. Check the voltage between EVAP control system pressure sensor harness connector and ground.

EVAP control system pressure sensor		Ground	Voltage
Connector	Terminal		
B41	3	Ground	Approx. 5V

Is the inspection result normal?

YES >> GO TO 8.
NO >> GO TO 4.

4. CHECK EVAP CONTROL SYSTEM PRESSURE SENSOR POWER SUPPLY CIRCUIT-II

1. Turn ignition switch OFF.
2. Disconnect ECM harness connector.
3. Check the continuity between EVAP control system pressure sensor harness connector and ECM harness connector.

EVAP control system pressure sensor		ECM		Continuity
Connector	Terminal	Connector	Terminal	
B41	3	E10	91	Existed

Is the inspection result normal?

YES >> GO TO 6.

NO >> GO TO 5.

5. DETECT MALFUNCTIONING PART

Check the following.
- Harness connectors B10, E29
- Harness for open or short between EVAP control system pressure sensor and ECM

>> Repair open circuit or short to ground or short to power in harness or connectors.

6. CHECK SENSOR POWER SUPPLY CIRCUITS

Check harness for short to power and short to ground, between the following terminals.

ECM		Sensor		
Connector	Terminal	Name	Connector	Terminal
F13	72	Refrigerant pressure sensor	E219	1
	76	CKP sensor (POS)	F30	1
E10	91	EVAP control system pressure sensor	B41	3

Is the inspection result normal?

YES >> GO TO 7.
NO >> Repair short to ground or short to power in harness or connectors.

7. CHECK COMPONENTS

Check the following.
- Crankshaft position sensor (POS) (Refer to EC-252, "Component Inspection".)
- Refrigerant pressure sensor

Is the inspection result normal?

YES >> GO TO 13.
NO >> Replace malfunctioning component.

8. CHECK EVAP CONTROL SYSTEM PRESSURE SENSOR GROUND CIRCUIT FOR OPEN AND SHORT

1. Turn ignition switch OFF.
2. Disconnect ECM harness connector.
3. Check the continuity between EVAP control system pressure sensor harness connector and ECM harness connector.

EVAP control system pressure sensor		ECM		Continuity
Connector	Terminal	Connector	Terminal	
B41	1	E10	96	Existed

4. Also check harness for short to ground and short to power.

Is the inspection result normal?

YES >> GO TO 10.
NO >> GO TO 9.

9. DETECT MALFUNCTIONING PART

Check the following.
- Harness connectors B10, E29
- Harness for open or short between EVAP control system pressure sensor and ECM

>> Repair open circuit or short to ground or short to power in harness or connectors.

10. CHECK EVAP CONTROL SYSTEM PRESSURE SENSOR INPUT SIGNAL CIRCUIT FOR OPEN AND SHORT

1. Check the continuity between EVAP control system pressure sensor harness connector and ECM harness connector.

EVAP control system pressure sensor		ECM		Continuity
Connector	Terminal	Connector	Terminal	
B41	2	E10	86	Existed

2. Also check harness for short to ground and short to power.

Is the inspection result normal?

YES >> GO TO 12.
NO >> GO TO 11.

11. DETECT MALFUNCTIONING PART

Check the following.
- Harness connectors B10, E29
- Harness for open or short between EVAP control system pressure sensor and ECM

>> Repair open circuit or short to ground or short to power in harness or connectors.

12. CHECK EVAP CONTROL SYSTEM PRESSURE SENSOR

Refer to EC-285, "Component Inspection".

Is the inspection result normal?

YES >> GO TO 13.
NO >> Replace EVAP control system pressure sensor.

13. CHECK INTERMITTENT INCIDENT

Refer to GI-42, "Intermittent Incident".

>> INSPECTION END

Component Inspection

INFOID:0000000003069299

1. CHECK EVAP CONTROL SYSTEM PRESSURE SENSOR

1. Turn ignition switch OFF.
2. Remove EVAP control system pressure sensor with its harness connector connected from EVAP canister. **Always replace O-ring with a new one.**
3. Install a vacuum pump to EVAP control system pressure sensor.
4. Turn ignition switch ON and check output voltage between ECM harness connector and ground under the following conditions.

ECM		Condition [Applied vacuum kPa (kg/cm^2, psi)	Voltage
Connector	Terminal		
E10	86 (EVAP control system pressure sensor signal)	Not applied	1.8 - 4.8V
		-26.7 (-0.272, -3.87)	2.1 to 2.5V lower than above value

CAUTION:
- **Always calibrate the vacuum pump gauge when using it.**
- **Do not apply below -93.3 kPa (-0.952 kg/cm^2, -13.53 psi) or pressure over 101.3 kPa (1.033 kg/cm^2, 14.69 psi).**

Is the inspection result normal?

YES >> INSPECTION END
NO >> Replace EVAP control system pressure sensor

P0453 EVAP CONTROL SYSTEM PRESSURE SENSOR

Description

INFOID:0000000003069300

The EVAP control system pressure sensor detects pressure in the purge line. The sensor output voltage to the ECM increases as pressure increases.

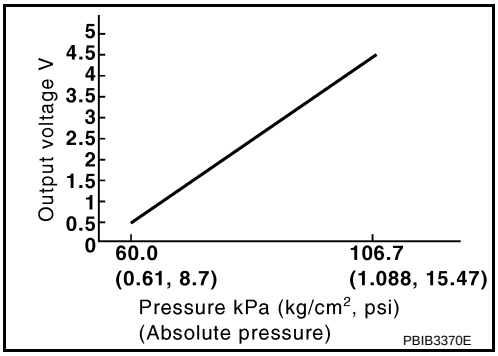

DTC Logic

INFOID:0000000003069301

DTC DETECTION LOGIC

DTC No.	Trouble diagnosis name	DTC detecting condition	Possible cause
P0453	EVAP control system pressure sensor high input	An excessively high voltage from the sensor is sent to ECM.	• Harness or connectors (EVAP control system pressure sensor circuit is open or shorted.) [Crankshaft position sensor (POS) circuit is shorted.] (Refrigerant pressure sensor circuit is shorted.) • EVAP control system pressure sensor • Crankshaft position sensor (POS) • Refrigerant pressure sensor • EVAP canister vent control valve • EVAP canister • Rubber hose from EVAP canister vent control valve to vehicle frame

DTC CONFIRMATION PROCEDURE

1. PRECONDITIONING

If DTC Confirmation Procedure has been previously conducted, always perform the following before conducting the next test.

1. Turn ignition switch OFF and wait at least 10 seconds.
2. Turn ignition switch ON.
3. Turn ignition switch OFF and wait at least 10 seconds.

TESTING CONDITION:
Always perform test at a temperature of 5°C (41°F) or more.

>> GO TO 2.

2. PERFORM DTC CONFIRMATION PROCEDURE

With CONSULT-III

1. Activate “INSPECTION MODE 1” (HBC-97) to start engine, and warm up engine to normal operating temperature.
2. Turn ignition switch OFF and wait at least 10 seconds.
3. Turn ignition switch ON.
4. Select “DATA MONITOR” mode with CONSULT-III.
5. Make sure that “FUEL T/TMP SE” is more than 0°C (32°F).
6. Activate “INSPECTION MODE 1” (HBC-97) to start engine, and wait at least 20 seconds.
7. Check 1st trip DTC.

With GST

1. Activate “INSPECTION MODE 1” (HBC-97) to start engine, and warm up engine to normal operating temperature.
2. Set voltmeter probes to ECM harness connector and ground as follows.

ECM		Ground
Connector	Terminal	
E10	95 (Fuel tank temperature sensor signal)	Ground

3. Make sure that the voltage is less than 4.2V.
4. Turn ignition switch OFF and wait at least 10 seconds.
5. Activate “INSPECTION MODE 1” (HBC-97) to start engine, and wait at least 20 seconds.
6. Check 1st trip DTC.

Is 1st trip DTC detected?

YES >> Go to EC-291, "Diagnosis Procedure".
NO >> INSPECTION END

Diagnosis Procedure

INFOID:0000000003069302

1. CHECK GROUND CONNECTION

1. Turn ignition switch OFF.
2. Check ground connection E9. Refer to Ground Inspection in GI-45, "Circuit Inspection".

Is the inspection result normal?

YES >> GO TO 2.
NO >> Repair or replace ground connection.

2. CHECK CONNECTOR

1. Disconnect EVAP control system pressure sensor harness connector.
2. Check sensor harness connector for water.

Water should not exist.

Is the inspection result normal?

YES >> GO TO 3.
NO >> Repair or replace harness connector.

3. CHECK EVAP CONTROL SYSTEM PRESSURE SENSOR POWER SUPPLY CIRCUIT

1. Turn ignition switch ON.
2. Check the voltage between EVAP control system pressure sensor harness connector and ground.

EVAP control system pressure sensor		Ground	Voltage
Connector	Terminal		
B41	3	Ground	Approx. 5V

Is the inspection result normal?

YES >> GO TO 8.
NO >> GO TO 4.

4. CHECK EVAP CONTROL SYSTEM PRESSURE SENSOR POWER SUPPLY CIRCUIT-II

1. Turn ignition switch OFF.
2. Disconnect ECM harness connector.
3. Check the continuity between EVAP control system pressure sensor harness connector and ECM harness connector.

EVAP control system pressure sensor		ECM		Continuity
Connector	Terminal	Connector	Terminal	
B41	3	E10	91	Existed

Is the inspection result normal?

YES >> GO TO 6.
NO >> GO TO 5.

5. DETECT MALFUNCTIONING PART

Check the following.
- Harness connectors B10, E29
- Harness for open or short between EVAP control system pressure sensor and ECM

>> Repair open circuit or short to ground or short to power in harness or connectors.

6. CHECK SENSOR POWER SUPPLY CIRCUITS

Check harness for short to power and short to ground, between the following terminals.

ECM		Sensor		
Connector	Terminal	Name	Connector	Terminal
F13	72	Refrigerant pressure sensor	E219	1
	76	CKP sensor (POS)	F30	1
E10	91	EVAP control system pressure sensor	B41	3

Is the inspection result normal?

YES >> GO TO 7.
NO >> Repair short to ground or short to power in harness or connectors.

7. CHECK COMPONENTS

Check the following.
- Crankshaft position sensor (POS) (Refer to EC-252, "Component Inspection".)
- Refrigerant pressure sensor

Is the inspection result normal?

YES >> GO TO 18.
NO >> Replace malfunctioning component.

8. CHECK EVAP CONTROL SYSTEM PRESSURE SENSOR GROUND CIRCUIT FOR OPEN AND SHORT

1. Turn ignition switch OFF.
2. Disconnect ECM harness connector.
3. Check the continuity between EVAP control system pressure sensor harness connector and ECM harness connector.

EVAP control system pressure sensor		ECM		Continuity
Connector	Terminal	Connector	Terminal	
B41	1	E10	96	Existed

4. Also check harness for short to ground and short to power.

Is the inspection result normal?

YES >> GO TO 10.
NO >> GO TO 9.

9. DETECT MALFUNCTIONING PART

Check the following.
- Harness connectors B10, E29
- Harness for open or short between EVAP control system pressure sensor and ECM

>> Repair open circuit or short to ground or short to power in harness or connectors.

10. CHECK EVAP CONTROL SYSTEM PRESSURE SENSOR INPUT SIGNAL CIRCUIT FOR OPEN AND SHORT

1. Check the continuity between EVAP control system pressure sensor harness connector and ECM harness connector.

EVAP control system pressure sensor		ECM		Continuity
Connector	Terminal	Connector	Terminal	
B41	2	E10	86	Existed

2. Also check harness for short to ground and short to power.

Is the inspection result normal?

YES >> GO TO 12.
NO >> GO TO 11.

11. DETECT MALFUNCTIONING PART

Check the following.
- Harness connectors B10, E29
- Harness for open or short between EVAP control system pressure sensor and ECM

>> Repair open circuit or short to ground or short to power in harness or connectors.

12. CHECK RUBBER TUBE

1. Disconnect rubber tube connected to EVAP canister vent control valve.
2. Check the rubber tube for clogging.

Is the inspection result normal?

YES >> GO TO 13.
NO >> Clean the rubber tube using an air blower, repair or replace rubber tube.

13. CHECK EVAP CANISTER VENT CONTROL VALVE

Refer to EC-277, "Component Inspection".

Is the inspection result normal?

YES >> GO TO 14.
NO >> Replace EVAP canister vent control valve.

14. CHECK EVAP CONTROL SYSTEM PRESSURE SENSOR

Refer to EC-294, "Component Inspection".

Is the inspection result normal?

YES >> GO TO 15.
NO >> Replace EVAP control system pressure sensor.

15. CHECK IF EVAP CANISTER SATURATED WITH WATER

1. Remove EVAP canister with EVAP canister vent control valve and EVAP control system pressure sensor attached.
2. Check if water will drain from the EVAP canister.

Does water drain from EVAP canister?

YES >> GO TO 16.
NO >> GO TO 18.

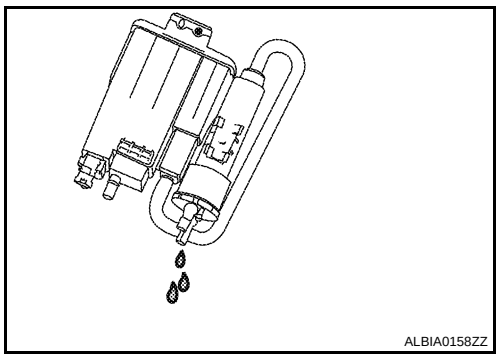

16. CHECK EVAP CANISTER

Weigh the EVAP canister with the EVAP canister vent control valve and EVAP control system pressure sensor attached.

The weight should be less than 2.8 kg (6.2 lb).

Is the inspection result normal?

YES >> GO TO 18.
NO >> GO TO 17.

17. DETECT MALFUNCTIONING PART

Check the following.
- EVAP canister for damage
- EVAP hose between EVAP canister and vehicle frame for clogging or poor connection

>> Repair hose or replace EVAP canister.

18. CHECK INTERMITTENT INCIDENT

Refer to GI-42, "Intermittent Incident".

>> INSPECTION END

Component Inspection

INFOID:0000000003069303

1. CHECK EVAP CONTROL SYSTEM PRESSURE SENSOR

1. Turn ignition switch OFF.
2. Remove EVAP control system pressure sensor with its harness connector connected from EVAP canister. **Always replace O-ring with a new one.**
3. Install a vacuum pump to EVAP control system pressure sensor.
4. Turn ignition switch ON and check output voltage between ECM harness connector and ground under the following conditions.

ECM		Condition [Applied vacuum kPa (kg/cm^2, psi)	Voltage
Connector	Terminal		
E10	86 (EVAP control system pressure sensor signal)	Not applied	1.8 - 4.8V
		-26.7 (-0.272, -3.87)	2.1 to 2.5V lower than above value

CAUTION:
- **Always calibrate the vacuum pump gauge when using it.**
- **Do not apply below -93.3 kPa (-0.952 kg/cm^2, -13.53 psi) or pressure over 101.3 kPa (1.033 kg/cm^2, 14.69 psi).**

Is the inspection result normal?

YES >> INSPECTION END
NO >> Replace EVAP control system pressure sensor

P0456 EVAP CONTROL SYSTEM

DTC Logic

INFOID:0000000003069304

DTC DETECTION LOGIC

This diagnosis detects leaks in the EVAP line between fuel tank and EVAP canister purge volume control solenoid valve, using the negative pressure caused by decrease of fuel temperature in the fuel tank after turning ignition switch OFF.
If ECM judges there are no leaks, the diagnosis will be OK.

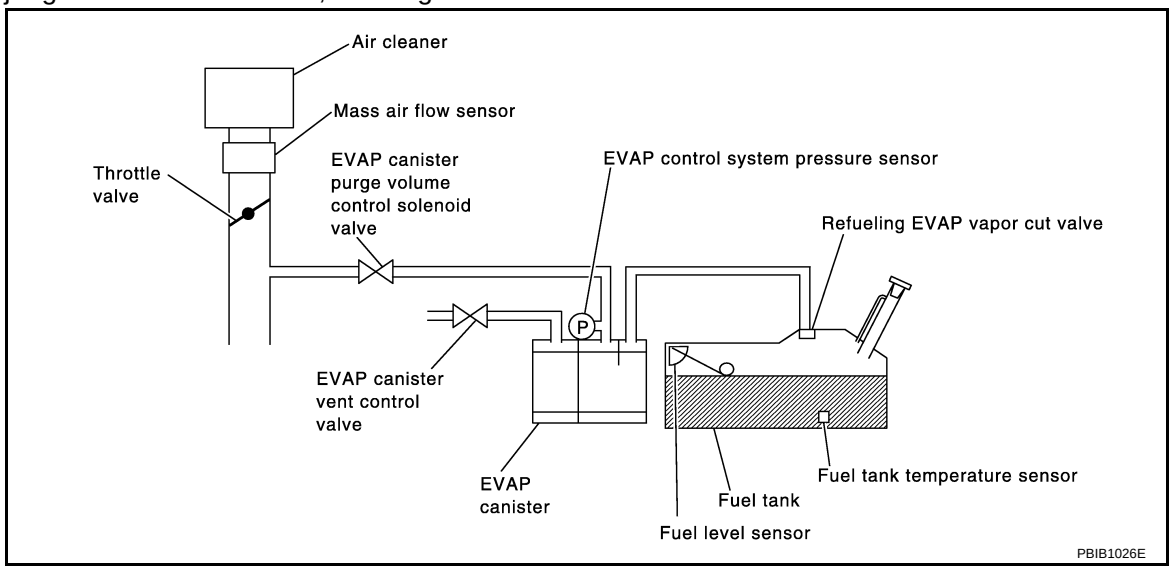

DTC No.	Trouble diagnosis name	DTC detecting condition	Possible cause
P0456	Evaporative emission control system leak	• EVAP system has a leak. • EVAP system does not operate properly.	• Incorrect fuel tank vacuum relief valve • Incorrect fuel filler cap used • Fuel filler cap remains open or fails to close. • Foreign matter caught in fuel filler cap. • Leak is in line between intake manifold and EVAP canister purge volume control solenoid valve. • Foreign matter caught in EVAP canister vent control valve. • EVAP canister or fuel tank leaks • EVAP purge line (pipe and rubber tube) leaks • EVAP purge line rubber tube bent • Loose or disconnected rubber tube • EVAP canister vent control valve and the circuit • EVAP canister purge volume control solenoid valve and the circuit • Fuel tank temperature sensor • O-ring of EVAP canister vent control valve is missing or damaged • EVAP canister is saturated with water • EVAP control system pressure sensor • Refueling EVAP vapor cut valve • ORVR system leaks • Fuel level sensor and the circuit • Foreign matter caught in EVAP canister purge volume control solenoid valve

CAUTION:
- **Use only a genuine NISSAN fuel filler cap as a replacement. If an incorrect fuel filler cap is used, the MIL may come on.**
- **If the fuel filler cap is not tightened properly, the MIL may come on.**
- **Use only a genuine NISSAN rubber tube as a replacement.**

DTC CONFIRMATION PROCEDURE

1. PRECONDITIONING

If DTC Confirmation Procedure has been previously conducted, always perform the following before conducting the next test.

1. Turn ignition switch OFF and wait at least 10 seconds.
2. Turn ignition switch ON.
3. Turn ignition switch OFF and wait at least 10 seconds.

Do you have CONSULT-III?

YES >> GO TO 2.
NO >> GO TO 4.

2. PERFORM DTC CONFIRMATION PROCEDURE-I

With CONSULT-III

1. Activate “INSPECTION MODE 1” (HBC-97) to start engine.
2. Select “EVAP DIAG READY” in “DATA MONITOR” mode with CONSULT-III.
3. Wait at idle until “OFF” of “EVAP DIAG READY” changes to “ON”.
   NOTE:
   It will take at most 2 hours until “OFF” of “EVAP DIAG READY” changes to “ON”.
4. Turn ignition switch OFF and wait at least 90 minutes.
   NOTE:
   Never turn ignition switch ON during 90 minutes.
5. Turn ignition switch ON and select “EVAP LEA DIAG” in “DATA MONITOR” mode with CONSULT-III.
6. Check that “EVAP LEA DIAG” indication.

Which is displayed on CONSULT-III?

CMPLT >> GO TO 3.
YET >> Perform DTC CONFIRMATION PROCEDURE again. GO TO 1.

3. PERFORM DTC CONFIRMATION PROCEDURE-II

Check 1st trip DTC.

Is 1st trip DTC detected?

YES >> Go to EC-296, "Diagnosis Procedure".
NO >> INSPECTION END.

4. PERFORM DTC CONFIRMATION PROCEDURE

With GST

1. Activate “INSPECTION MODE 1” (HBC-97) to start engine.
2. Wait engine idle for at least 2 hours.
3. Turn ignition switch OFF and wait at least 90 minutes.
   NOTE:
   Never turn ignition switch ON during 90 minutes.
4. Turn ignition switch ON.
5. Check 1st trip DTC.

Is 1st trip DTC detected?

YES >> Go to EC-296, "Diagnosis Procedure".
NO >> INSPECTION END.

Diagnosis Procedure

INFOID:0000000003069305

1. CHECK FUEL FILLER CAP DESIGN

1. Turn ignition switch OFF.

2. Check for genuine NISSAN fuel filler cap design.

Is the inspection result normal?

YES >> GO TO 2.
NO >> Replace with genuine NISSAN fuel filler cap.

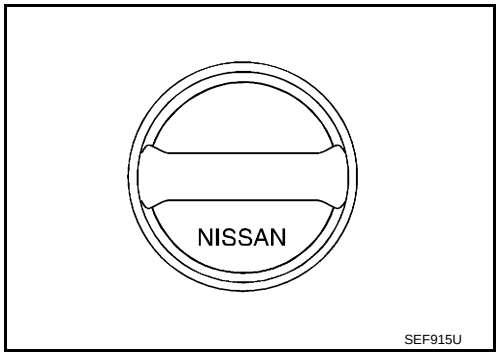

2. CHECK FUEL FILLER CAP INSTALLATION

Check that the cap is tightened properly by rotating the cap clockwise.

Is the inspection result normal?

YES >> GO TO 3.
NO >> Open fuel filler cap, then clean cap and fuel filler neck threads using air blower. Then retighten until ratcheting sound is heard.

3. CHECK FUEL FILLER CAP FUNCTION

Check for air releasing sound while opening the fuel filler cap.

Is the inspection result normal?

YES >> GO TO 5.
NO >> GO TO 4.

4. CHECK FUEL TANK VACUUM RELIEF VALVE

Refer to EC-300, "Component Inspection".

Is the inspection result normal?

YES >> GO TO 5.
NO >> Replace fuel filler cap with a genuine one.

5. CHECK FOR EVAP LEAK

Refer to EC-455, "Inspection".

Is there any leak in EVAP line?

YES >> Repair or replace.
NO >> GO TO 6.

6. CHECK EVAP CANISTER VENT CONTROL VALVE

Check the following.

- EVAP canister vent control valve is installed properly.
  Refer to EC-457, "Exploded View".
- EVAP canister vent control valve.
  Refer to EC-277, "Component Inspection".

Is the inspection result normal?

YES >> GO TO 7.
NO >> Repair or replace EVAP canister vent control valve and O-ring.

7. CHECK IF EVAP CANISTER SATURATED WITH WATER

1. Remove EVAP canister assembly with EVAP canister vent control valve and EVAP control system pressure sensor attached.

2. Check if water will drain from the EVAP canister.

Does water drain from EVAP canister?

YES >> GO TO 8.
NO-1 >> With CONSULT-III: GO TO 10.
NO-2 >> Without CONSULT-III: GO TO 11.

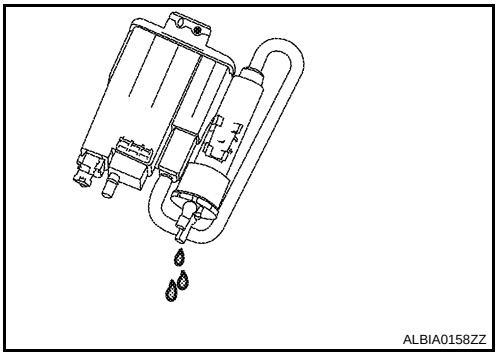

8. CHECK EVAP CANISTER

Weigh the EVAP canister assembly with the EVAP canister vent control valve and EVAP control system pressure sensor attached.

The weight should be less than 2.8 kg (6.2 lb).

Is the inspection result normal?

YES-1 >> With CONSULT-III: GO TO 10.
YES-2 >> Without CONSULT-III: GO TO 11.
NO >> GO TO 9.

9. DETECT MALFUNCTIONING PART

Check the following.
- EVAP canister for damage
- EVAP hose between EVAP canister and vehicle frame for clogging or poor connection

>> Repair hose or replace EVAP canister.

10. CHECK EVAP CANISTER PURGE VOLUME CONTROL SOLENOID VALVE OPERATION

With CONSULT-III

1. Disconnect vacuum hose to EVAP canister purge volume control solenoid valve at EVAP service port.
2. Turn ignition switch ON (READY).
3. Perform “PURG VOL CONT/V” in “ACTIVE TEST” mode.
4. Touch “Qu” on CONSULT-III screen to increase “PURG VOL CONT/V” opening to 100%.
5. Check vacuum hose for vacuum.

Vacuum should exist.

Is the inspection result normal?

YES >> GO TO 13.
NO >> GO TO 12.

11. CHECK EVAP CANISTER PURGE VOLUME CONTROL SOLENOID VALVE OPERATION

Without CONSULT-III

1. Disconnect vacuum hose to EVAP canister purge volume control solenoid valve at EVAP service port.
2. Lift up the vehicle.
3. Activate “INSPECTION MODE 1” (HBC-97).
4. Wait at least 150 seconds.
5. Drive vehicle at a speed of 70 km/h (43 MPH) or more.
6. Check vacuum hose for vacuum.

Vacuum should exist.

Is the inspection result normal?

YES >> GO TO 13.
NO >> GO TO 12.

12. CHECK VACUUM HOSE

Check vacuum hoses for clogging or disconnection. Refer to EC-67, "System Diagram".

Is the inspection result normal?

YES >> GO TO 13.
NO >> Repair or reconnect the hose.

13. CHECK EVAP CANISTER PURGE VOLUME CONTROL SOLENOID VALVE

Refer to EC-270, "Component Inspection".

Is the inspection result normal?

YES >> GO TO 14.
NO >> Replace EVAP canister purge volume control solenoid valve.

14. CHECK FUEL TANK TEMPERATURE SENSOR

Refer to EC-232, "Component Inspection".

Is the inspection result normal?

YES >> GO TO 15.
NO >> Replace fuel level sensor unit.

15. CHECK EVAP CONTROL SYSTEM PRESSURE SENSOR

Refer to EC-285, "Component Inspection".

Is the inspection result normal?

YES >> GO TO 16.
NO >> Replace EVAP control system pressure sensor.

16. CHECK EVAP PURGE LINE

Check EVAP purge line (pipe, rubber tube, fuel tank and EVAP canister) for cracks or improper connection. Refer to EC-69, "System Description".

Is the inspection result normal?

YES >> GO TO 17.
NO >> Repair or reconnect the hose.

17. CLEAN EVAP PURGE LINE

Clean EVAP purge line (pipe and rubber tube) using air blower.

>> GO TO 18.

18. CHECK EVAP/ORVR LINE

Check EVAP/ORVR line between EVAP canister and fuel tank for clogging, kink, looseness and improper connection. For location, refer to EC-390, "Description".

Is the inspection result normal?

YES >> GO TO 19.
NO >> Repair or replace hoses and tubes.

19. CHECK RECIRCULATION LINE

Check recirculation line between filler neck tube and fuel tank for clogging, kink, cracks, looseness and improper connection.

Is the inspection result normal?

YES >> GO TO 20.
NO >> Repair or replace hose, tube or filler neck tube.

20. CHECK REFUELING EVAP VAPOR CUT VALVE

Refer to EC-393, "Component Inspection".

Is the inspection result normal?

YES >> GO TO 21.
NO >> Replace refueling EVAP vapor cut valve with fuel tank.

21. CHECK FUEL LEVEL SENSOR

Refer to MWI-44, "Component Inspection".

Is the inspection result normal?

YES >> GO TO 22.
NO >> Replace fuel level sensor unit.

22. CHECK INTERMITTENT INCIDENT

Refer to GI-42, "Intermittent Incident".

>> INSPECTION END

Component Inspection

INFOID:0000000003069306

1. CHECK FUEL TANL VACUUM RELIEF VALVE

1. Turn ignition switch OFF.
2. Remove fuel filler cap.
3. Wipe clean valve housing.

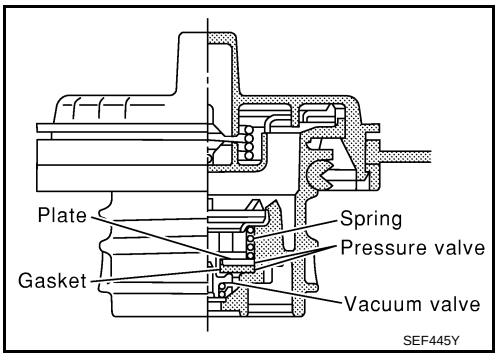

4. Check valve opening pressure and vacuum.

Pressure: **15.3 - 20.0 kPa (0.156 - 0.204 kg/cm^2, 2.22 - 2.90 psi)**

Vacuum: **–6.0 to –3.3 kPa (–0.061 to –0.034 kg/cm^2, –0.87 to –0.48 psi)**

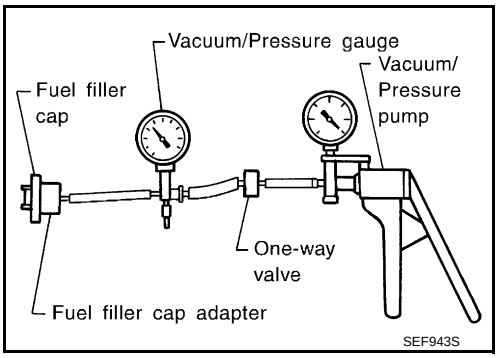

Is the inspection result normal?

YES >> INSPECTION END
NO >> GO TO 2.

2. REPLACE FUEL FILLER CAP

Replace fuel filler cap.

CAUTION:

Use only a genuine fuel filler cap as a replacement. If an incorrect fuel filler cap is used, the MIL may come on.

>> INSPECTION END

P0460 FUEL LEVEL SENSOR

Description

INFOID:0000000003069307

The fuel level sensor is mounted in the fuel level sensor unit.
The sensor detects a fuel level in the fuel tank and transmits a signal to the combination meter. The combination meter sends the fuel level sensor signal to the ECM through CAN communication line.
It consists of two parts, one is mechanical float and the other is variable resistor. Fuel level sensor output voltage changes depending on the movement of the fuel mechanical float.

DTC Logic

INFOID:0000000003069308

DTC DETECTION LOGIC

NOTE:
If DTC P0460 is displayed with DTC UXXXX, first perform the trouble diagnosis for DTC UXXXX.
When the vehicle is parked, naturally the fuel level in the fuel tank is stable. It means that output signal of the fuel level sensor does not change. If ECM senses sloshing signal from the sensor, fuel level sensor malfunction is detected.

DTC No.	Trouble diagnosis name	DTC detecting condition	Possible cause
P0460	Fuel level sensor circuit noise	Even though the vehicle is parked, a signal being varied is sent from the fuel level sensor to ECM.	• Harness or connectors (The CAN communication line is open or shorted) • Harness or connectors (The sensor circuit is open or shorted) • Combination meter • Fuel level sensor

DTC CONFIRMATION PROCEDURE

1. PRECONDITIONING

If DTC Confirmation Procedure has been previously conducted, always perform the following before conducting the next test.
1. Turn ignition switch OFF and wait at least 10 seconds.
2. Turn ignition switch ON.
3. Turn ignition switch OFF and wait at least 10 seconds.

>> GO TO 2.

2. PERFORM DTC CONFIRMATION PROCEDURE

1. Activate “INSPECTION MODE 1” (HBC-97) to start engine, and wait maximum of 2 consecutive minutes.
2. Check 1st trip DTC.

Is 1st trip DTC detected?

YES >> Go to EC-301, "Diagnosis Procedure".
NO >> INSPECTION END

Diagnosis Procedure

INFOID:0000000003069309

1. CHECK COMBINATION METER FUNCTION

Refer to MWI-43, "Component Function Check".

Is the inspection result normal?

YES >> GO TO 2.
NO >> Go to MWI-35, "Diagnosis Description"

2. CHECK INTERMITTENT INCIDENT

Refer to GI-42, "Intermittent Incident".

>> INSPECTION END

P0461 FUEL LEVEL SENSOR

Description

INFOID:0000000003069310

The fuel level sensor is mounted in the fuel level sensor unit.
The sensor detects a fuel level in the fuel tank and transmits a signal to the combination meter. The combination meter sends the fuel level sensor signal to the ECM through CAN communication line.
It consists of two parts, one is mechanical float and the other is variable resistor. Fuel level sensor output voltage changes depending on the movement of the fuel mechanical float.

DTC Logic

INFOID:0000000003069311

DTC DETECTION LOGIC

NOTE:
If DTC P0461 is displayed with DTC UXXXX, first perform the trouble diagnosis for DTC UXXXX.
Driving long distances naturally affect fuel gauge level.
This diagnosis detects the fuel gauge malfunction of the gauge not moving even after a long distance has been driven.

DTC No.	Trouble diagnosis name	DTC detecting condition	Possible cause
P0461	Fuel level sensor circuit range/performance	The output signal of the fuel level sensor does not change within the specified range even though the vehicle has been driven a long distance.	• Harness or connectors (The CAN communication line is open or shorted) • Harness or connectors (The sensor circuit is open or shorted) • Combination meter • Fuel level sensor

DTC CONFIRMATION PROCEDURE

1. PERFORM COMPONENT FUNCTION CHECK

Perform component function check. Refer to EC-302, "Component Function Check".
Use component function check to check the overall function of the fuel level sensor function. During this check, a 1st trip DTC might not be confirmed.

Is the inspection result normal?

YES >> INSPECTION END
NO >> Go to EC-303, "Diagnosis Procedure".

Component Function Check

INFOID:0000000003069312

1. PRECONDITIONING

WARNING:
When performing following procedure, be sure to observe the handling of the fuel. Refer to FL-11, "Removal and Installation".
TESTING CONDITION:
Before starting component function check, preparation of draining fuel and refilling fuel is required.

Do you have CONSULT-III?

YES >> GO TO 2.
NO >> GO TO 3.

2. PERFORM COMPONENT FUNCTION CHECK

With CONSULT-III
NOTE:
Start from step 10, if it is possible to confirm that the fuel cannot be drained by 30 ℓ (7-7/8 US gal, 6-5/8 Imp gal) in advance.

1. Prepare a fuel container and a spare hose.
2. Release fuel pressure from fuel line, refer to EC-454, "Inspection".
3. Remove the fuel feed hose on the fuel level sensor unit.

4. Connect a spare fuel hose where the fuel feed hose was removed.
5. Turn ignition switch OFF and wait at least 10 seconds then turn ON (engine stopped).
6. Select “FUEL LEVEL SE” in “DATA MONITOR” mode with CONSULT-III.
7. Check “FUEL LEVEL SE” output voltage and note it.
8. Select “FUEL PUMP RELAY” in “ACTIVE TEST” mode with CONSULT-III.
9. Touch “ON” and drain fuel approximately 30 ℓ (7-7/8 US gal, 6-5/8 Imp gal) and stop it.
10. Check “FUEL LEVEL SE” output voltage and note it.
11. Fill fuel into the fuel tank for 30 ℓ (7-7/8 US gal, 6-5/8 Imp gal).
12. Check “FUEL LEVEL SE” output voltage and note it.
13. Confirm whether the voltage changes more than 0.03V during step 7 to 10 and 10 to 12.

Is the inspection result normal?

YES >> INSPECTION END
NO >> Go to EC-303, "Diagnosis Procedure".

3. PERFORM COMPONENT FUNCTION CHECK

Without CONSULT-III

NOTE:

Start from step 8, if it is possible to confirm that the fuel cannot be drained by 30 ℓ (7-7/8 US gal, 6-5/8 Imp gal) in advance.

1. Prepare a fuel container and a spare hose.
2. Release fuel pressure from fuel line. Refer to EC-454, "Inspection".
3. Remove the fuel feed hose on the fuel level sensor unit.
4. Connect a spare fuel hose where the fuel feed hose was removed.
5. Turn ignition switch ON.
6. Drain fuel by 30 ℓ (7-7/8 US gal, 6-5/8 Imp gal) from the fuel tank using proper equipment.
7. Confirm that the fuel gauge indication varies.
8. Fill fuel into the fuel tank for 30 ℓ (7-7/8 US gal, 6-5/8 Imp gal).
9. Confirm that the fuel gauge indication varies.

Is the inspection result normal?

YES >> INSPECTION END
NO >> Go to EC-303, "Diagnosis Procedure".

Diagnosis Procedure

INFOID:0000000003069313

1. CHECK COMBINATION METER FUNCTION

Refer to MWI-43, "Component Function Check".

Is the inspection result normal?

YES >> GO TO 2.
NO >> Go to MWI-43, "Diagnosis Procedure"

2. CHECK INTERMITTENT INCIDENT

Refer to GI-42, "Intermittent Incident".

>> INSPECTION END

P0462, P0463 FUEL LEVEL SENSOR

Description

INFOID:0000000003069314

The fuel level sensor is mounted in the fuel level sensor unit.
The sensor detects a fuel level in the fuel tank and transmits a signal to the combination meter. The combination meter sends the fuel level sensor signal to the ECM through CAN communication line.
It consists of two parts, one is mechanical float and the other is variable resistor. Fuel level sensor output voltage changes depending on the movement of the fuel mechanical float.

DTC Logic

INFOID:0000000003069315

DTC DETECTION LOGIC

NOTE:

- **If DTC P0462 or P0463 is displayed with DTC UXXXX, first perform the trouble diagnosis for DTC UXXXX.**

This diagnosis indicates the former, to detect open or short circuit malfunction.

DTC No.	Trouble diagnosis name	DTC detecting condition	Possible cause
P0462	Fuel level sensor circuit low input	An excessively low voltage from the sensor is sent to ECM.	• Harness or connectors (The CAN communication line is open or shorted) • Harness or connectors (The sensor circuit is open or shorted) • Combination meter • Fuel level sensor
P0463	Fuel level sensor circuit high input	An excessively high voltage from the sensor is sent to ECM.	

DTC CONFIRMATION PROCEDURE

1. PRECONDITIONING

If DTC Confirmation Procedure has been previously conducted, always perform the following before conducting the next test.

1. Turn ignition switch OFF and wait at least 10 seconds.
2. Turn ignition switch ON.
3. Turn ignition switch OFF and wait at least 10 seconds.

TESTING CONDITION:

Before performing the following procedure, confirm that battery voltage is between 11V and 16V at ignition switch ON.

>> GO TO 2.

2. PERFORM DTC CONFIRMATION PROCEDURE

1. Turn ignition switch ON and wait at least 5 seconds.
2. Check 1st trip DTC.

Is 1st trip DTC detected?

YES >> Go to EC-304, "Diagnosis Procedure".
NO >> INSPECTION END

Diagnosis Procedure

INFOID:0000000003069316

1. CHECK COMBINATION METER FUNCTION

Refer to MWI-43, "Component Function Check".

Is the inspection result normal?

YES >> GO TO 2.
NO >> Go to MWI-43, "Diagnosis Procedure"

2. CHECK INTERMITTENT INCIDENT

Refer to GI-42, "Intermittent Incident".

>> INSPECTION END

P0500 VSS

Description

INFOID:0000000003069317

The ECM receives two vehicle speed sensor signals via CAN communication line. One is sent from hybrid vehicle control ECU, and the other is from brake ECU. The ECM uses these signals for engine control.

DTC Logic

INFOID:0000000003069318

DTC DETECTION LOGIC

NOTE:
If DTC P0500 is displayed with DTC UXXXX, first perform the trouble diagnosis for DTC UXXXX.

DTC No.	Trouble diagnosis name	DTC detecting condition	Possible cause
P0500	Vehicle speed sensor	ECM detects a difference between two vehicle speed signals is out of the specified range.	• Harness or connectors (The CAN communication line is open or shorted) • Hybrid vehicle control ECU • Brake ECU

DTC CONFIRMATION PROCEDURE

1. PRECONDITIONING

If DTC Confirmation Procedure has been previously conducted, always perform the following before conducting the next test.
1. Turn ignition switch OFF and wait at least 10 seconds.
2. Turn ignition switch ON.
3. Turn ignition switch OFF and wait at least 10 seconds.

TESTING CONDITION:
This test may be conducted with the drive wheels lifted in the shop or by driving the vehicle. If this test is conducted with the drive wheels lifted, activate “INPSECTION MODE 1” (HBC-97). If a road test is expected to be easier, it is unnecessary to lift up the vehicle.

>> GO TO 2.

2. PERFORM DTC CONFIRMATION PROCEDURE

1. Turn ignition switch ON (READY).
2. Drive the vehicle at more than 40 km/h (25 MPH) for at least 2 minutes.
   CAUTION:
   Always drive vehicle at a safe speed.
3. Check 1st trip DTC.

Is 1st trip DTC detected?

YES >> Go to EC-306, "Diagnosis Procedure".
NO >> INSPECTION END

Diagnosis Procedure

INFOID:0000000003069319

1. CHECK DTC WITH HYBRID VEHICLE CONTROL ECU

Refer to HBC-611, "DTC Index".

Is the inspection result normal?

YES >> GO TO 2.
NO >> Repair or replace.

2. CHECK BARAKE ECU

Refer to BRC-156, "DTC Index".

>> INSPECTION END

P0506 ISC SYSTEM

Description

INFOID:0000000003069320

The ECM controls the engine idle speed to a specified level through the fine adjustment of the air, which is let into the intake manifold, by operating the electric throttle control actuator. The operating of the throttle valve is varied to allow for optimum control of the engine idling speed. The crankshaft position sensor (POS) detects the actual engine speed and sends a signal to the ECM.
The ECM controls the electric throttle control actuator so that the engine speed coincides with the target value memorized in the ECM. The target engine speed is the lowest speed at which the engine can operate steadily. The optimum value stored in the ECM is determined by taking into consideration various engine conditions, such as during warming up and deceleration.

DTC Logic

INFOID:0000000003069321

DTC DETECTION LOGIC

NOTE:
If DTC P0506 is displayed with other DTC, first perform the trouble diagnosis for the other DTC.

DTC No.	Trouble diagnosis name	DTC detecting condition	Possible cause
P0506	Idle speed control system RPM lower than expected	The idle speed is less than the target idle speed by 100 rpm or more.	• Electric throttle control actuator • Intake air leak

DTC CONFIRMATION PROCEDURE

1. PRECONDITIONING

If DTC Confirmation Procedure has been previously conducted, always perform the following before conducting the next test.
1. Turn ignition switch OFF and wait at least 10 seconds.
2. Turn ignition switch ON.
3. Turn ignition switch OFF and wait at least 10 seconds.

If the target idle speed is out of the specified value, perform EC-16, "IDLE AIR VOLUME LEARNING : Special Repair Requirement", before conducting DTC Confirmation Procedure.
TESTING CONDITION:
- **Before performing the following procedure, confirm that battery voltage is more than 11V at idle.**
- **Always perform the test at a temperature above –10°C(14°F).**

>> GO TO 2.

2. PERFORM DTC CONFIRMATION PROCEDURE

1. Activate “INSPECTION MODE 1” (HBC-97.) to start engine, and warm up engine to normal operating temperature.
2. Turn ignition switch OFF and wait at least 10 seconds.
3. Turn ignition switch ON.
4. Turn ignition switch OFF and wait at least 10 seconds.
5. Activate “INSPECTION MODE 1” (HBC-97.) to start engine, and let engine idle for at least 1 minute.
6. Check 1st trip DTC.

Is 1st trip DTC detected?

YES >> Go to EC-307, "Diagnosis Procedure".
NO >> INSPECTION END

Diagnosis Procedure

INFOID:0000000003069322

1. CHECK INTAKE AIR LEAK

1. Activate “INSPECTION MODE 1” (HBC-97) to start.
2. Listen for an intake air leak after the mass air flow sensor.

Is intake air leak detected?

YES >> Discover air leak location and repair.
NO >> GO TO 2.

2. REPLACE ECM

1. Replace ECM.
2. Go to EC-14, "ADDITIONAL SERVICE WHEN REPLACING CONTROL UNIT : Special Repair Requirement".

>> INSPECTION END

P0507 ISC SYSTEM

Description

INFOID:0000000003069323

The ECM controls the engine idle speed to a specified level through the fine adjustment of the air, which is let into the intake manifold, by operating the electric throttle control actuator. The operating of the throttle valve is varied to allow for optimum control of the engine idling speed. The crankshaft position sensor (POS) detects the actual engine speed and sends a signal to the ECM.
The ECM controls the electric throttle control actuator so that the engine speed coincides with the target value memorized in the ECM. The target engine speed is the lowest speed at which the engine can operate steadily. The optimum value stored in the ECM is determined by taking into consideration various engine conditions, such as during warming up and deceleration.

DTC Logic

INFOID:0000000003069324

DTC DETECTION LOGIC

NOTE:
If DTC P0507 is displayed with other DTC, first perform the trouble diagnosis for the other DTC.

DTC No.	Trouble diagnosis name	DTC detecting condition	Possible cause
P0507	Idle speed control system RPM higher than expected	The idle speed is more than the target idle speed by 200 rpm or more.	• Electric throttle control actuator • Intake air leak • PCV system

DTC CONFIRMATION PROCEDURE

1. PRECONDITIONING

If DTC Confirmation Procedure has been previously conducted, always perform the following before conducting the next test.
1. Turn ignition switch OFF and wait at least 10 seconds.
2. Turn ignition switch ON.
3. Turn ignition switch OFF and wait at least 10 seconds.

If the target idle speed is out of the specified value, perform EC-16, "IDLE AIR VOLUME LEARNING : Special Repair Requirement", before conducting DTC Confirmation Procedure.
TESTING CONDITION:
- **Before performing the following procedure, confirm that battery voltage is more than 11V at idle.**
- **Always perform the test at a temperature above –10°C(14°F).**

>> GO TO 2.

2. PERFORM DTC CONFIRMATION PROCEDURE

1. Activate “INSPECTION MODE 1” (HBC-97.) to start engine, and warm up engine to normal operating temperature.
2. Turn ignition switch OFF and wait at least 10 seconds.
3. Turn ignition switch ON.
4. Turn ignition switch OFF and wait at least 10 seconds.
5. Activate “INSPECTION MODE 1” (HBC-97.) to start engine, and let engine idle for at least 1 minute.
6. Check 1st trip DTC.

Is 1st trip DTC detected?

YES >> Go to EC-309, "Diagnosis Procedure".
NO >> INSPECTION END

Diagnosis Procedure

INFOID:0000000003069325

1. CHECK PCV HOSE CONNECTION

Confirm that PCV hose is connected correctly.

Is the inspection result normal?

YES >> GO TO 2.

NO >> Repair or replace.

2. CHECK INTAKE AIR LEAK

1. Activate “INSPECTION MODE 1” (HBC-97) to start engine.
2. Listen for an intake air leak after the mass air flow sensor.

Is intake air leak detected?

YES >> Discover air leak location and repair.
NO >> GO TO 3.

3. REPLACE ECM

1. Replace ECM.
2. Go to EC-14, "ADDITIONAL SERVICE WHEN REPLACING CONTROL UNIT : Special Repair Requirement".

>> INSPECTION END

P0603 ECM POWER SUPPLY

Description

INFOID:0000000003069326

Battery voltage is supplied to the ECM even when the ignition switch is turned OFF for the ECM memory function of the DTC memory, the air-fuel ratio feedback compensation value memory, the idle air volume learning value memory, etc.

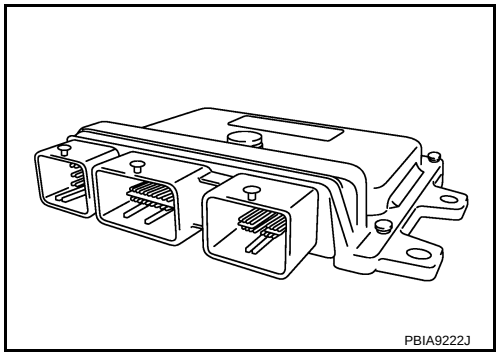

DTC Logic

INFOID:0000000003069327

DTC DETECTION LOGIC

DTC No.	Trouble diagnosis name	DTC detecting condition	Possible cause
P0603	ECM power supply circuit	ECM back-up RAM system does not function properly.	• Harness or connectors [ECM power supply (back-up) circuit is open or shorted.] • ECM

DTC CONFIRMATION PROCEDURE

1. PRECONDITIONING

If DTC Confirmation Procedure has been previously conducted, always perform the following before conducting the next test.

1. Turn ignition switch OFF and wait at least 10 seconds.
2. Turn ignition switch ON.
3. Turn ignition switch OFF and wait at least 10 seconds.

>> GO TO 2.

2. PERFORM DTC CONFIRMATION PROCEDURE

1. Turn ignition switch ON and wait at least 1 second.
2. Turn ignition switch ON (READY).
3. Depress the accelerator pedal to start engine, then keep engine running for at least 1 seconds.
4. Turn ignition switch OFF, wait at least 10 seconds, and then turn ON.
5. Repeat steps 2 and 4 for four times.
6. Check 1st trip DTC.

Is 1st trip DTC detected?

YES >> Go to EC-311, "Diagnosis Procedure".
NO >> INSPECTION END

Diagnosis Procedure

INFOID:0000000003069328

1. CHECK ECM POWER SUPPLY

1. Turn ignition switch OFF.
2. Disconnect ECM harness connector.
3. Check the voltage between ECM harness connector and ground.

ECM		Ground	Voltage
Connector	Terminal		
F13	77	Ground	Battery voltage

Is the inspection result normal?

YES >> GO TO 3.
NO >> GO TO 2.

2. DETECT MALFUNCTIONING PART

Check the following.
- 15A fuse (No. 42)
- IPDM E/R harness connector F10
- Harness for open or short between ECM and battery

>> Repair or replace harness or connectors.

3. CHECK INTERMITTENT INCIDENT

Refer to GI-42, "Intermittent Incident".

Is the inspection result normal?

YES >> GO TO 4.
NO >> Repair or replace harness or connectors.

4. PERFORM DTC CONFIRMATION PROCEDURE

With CONSULT-III
1. Turn ignition switch ON.
2. Select “SELF-DIAG RESULTS” mode with CONSULT-III.
3. Touch “ERASE”.
4. **Perform DTC CONFIRMATION PROCEDURE.**
   See EC-311, "DTC Logic".

With GST
1. Turn ignition switch ON.
2. Select Service $04 with GST.
3. **Perform DTC CONFIRMATION PROCEDURE.**
   See EC-311, "DTC Logic".

Is the 1st trip DTC P0603 displayed again?

YES >> GO TO 5.
NO >> INSPECTION END

5. REPLACE ECM

1. Replace ECM.
2. Go to EC-14, "ADDITIONAL SERVICE WHEN REPLACING CONTROL UNIT : Special Repair Requirement".

>> INSPECTION END

P0605 ECM

Description

INFOID:0000000003069329

The ECM consists of a microcomputer and connectors for signal input and output and for power supply. The ECM controls the engine.

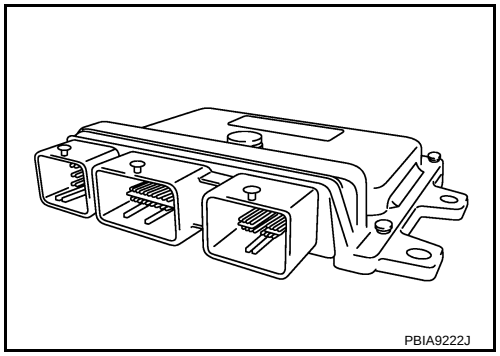

DTC Logic

INFOID:0000000003069330

DTC DETECTION LOGIC

DTC No.	Trouble diagnosis name	DTC detecting condition		Possible cause
P0605	Engine control module	A)	ECM calculation function is malfunctioning.	• ECM
		B)	ECM EEP-ROM system is malfunctioning.	
		C)	ECM self shut-off function is malfunctioning.	

DTC CONFIRMATION PROCEDURE

1. PRECONDITIONING

If DTC Confirmation Procedure has been previously conducted, always perform the following before conducting the next test.

1. Turn ignition switch OFF and wait at least 10 seconds.
2. Turn ignition switch ON.
3. Turn ignition switch OFF and wait at least 10 seconds.

>> GO TO 2.

2. PERFORM DTC CONFIRMATION PROCEDURE FOR MALFUNCTION A

1. Turn ignition switch ON.
2. Check 1st trip DTC.

Is 1st trip DTC detected?

YES >> Go to EC-314, "Diagnosis Procedure".
NO >> GO TO 3.

3. PERFORM DTC CONFIRMATION PROCEDURE FOR MALFUNCTION B

1. Turn ignition switch ON and wait at least 1 second.
2. Turn ignition switch OFF, wait at least 10 seconds, and then turn ON.
3. Check 1st trip DTC.

Is 1st trip DTC detected?

YES >> Go to EC-314, "Diagnosis Procedure".
NO >> GO TO 4.

4. PERFORM DTC CONFIRMATION PROCEDURE FOR MALFUNCTION C

1. Turn ignition switch ON and wait at least 1 second.
2. Turn ignition switch OFF, wait at least 10 seconds, and then turn ON.
3. Repeat step 2 for 32 times.
4. Check 1st trip DTC.

Is 1st trip DTC detected?

YES >> Go to EC-314, "Diagnosis Procedure".
NO >> INSPECTION END

Diagnosis Procedure

INFOID:0000000003069331

1. INSPECTION START

With CONSULT-III

1. Turn ignition switch ON.
2. Select “SELF-DIAG RESULTS” mode with CONSULT-III.
3. Touch “ERASE”.
4. **Perform DTC CONFIRMATION PROCEDURE.**
   See EC-313, "DTC Logic".

With GST

1. Turn ignition switch ON.
2. Select Service $04 with GST.
3. **Perform DTC CONFIRMATION PROCEDURE.**
   See EC-313, "DTC Logic".

Is the 1st trip DTC P0605 displayed again?

YES >> GO TO 2.
NO >> INSPECTION END

2. REPLACE ECM

1. Replace ECM.
2. Go to EC-14, "ADDITIONAL SERVICE WHEN REPLACING CONTROL UNIT : Special Repair Requirement".

>> INSPECTION END

P0607 ECM

Description

INFOID:0000000003069139

CAN (Controller Area Network) is a serial communication line for real time application. It is an on-vehicle multiplex communication line with high data communication speed and excellent error detection ability. Many electronic control units are equipped onto a vehicle, and each control unit shares information and links with other control units during operation (not independent). In CAN communication, control units are connected with 2 communication lines (CAN H line, CAN L line) allowing a high rate of information transmission with less wiring. Each control unit transmits/receives data but selectively reads required data only.

DTC Logic

INFOID:0000000003069140

DTC DETECTION LOGIC

DTC No.	Trouble diagnosis name	DTC detecting condition	Possible cause
P0607	CAN controller	When detecting error during the initial diagnosis of CAN controller of ECM.	• ECM
	HEV SYSTEM CAN controller	When detecting error during the initial diagnosis of HEV SYSTEM CAN controller of ECM.	

DTC CONFIRMATION PROCEDURE

1. PERFORM DTC CONFIRMATION PROCEDURE

1. Turn ignition switch ON and wait at least 3 seconds.
2. Check DTC.

Is DTC detected?

YES >> Go to EC-315, "Diagnosis Procedure".
NO >> INSPECTION END

Diagnosis Procedure

INFOID:0000000003069141

1. INSPECTION START

With CONSULT-III

1. Turn ignition switch ON.
2. Select “SELF-DIAG RESULTS” mode with CONSULT-III.
3. Touch “ERASE”.
4. Perform DTC CONFIRMATION PROCEDURE.
   See EC-315, "DTC Logic".
5. Check DTC.

With GST

1. Turn ignition switch ON.
2. Select “Service $04” with GST.
3. Perform DTC CONFIRMATION PROCEDURE.
   See EC-315, "DTC Logic".
4. Check DTC.

Is the DTC P0607 displayed again?

YES >> GO TO 2.
NO >> INSPECTION END

2. REPLACE ECM

1. Replace ECM.
2. Go to EC-14, "ADDITIONAL SERVICE WHEN REPLACING CONTROL UNIT : Special Repair Requirement".

>> INSPECTION END

P0643 SENSOR POWER SUPPLY

DTC Logic

INFOID:0000000003069332

DTC DETECTION LOGIC

DTC No.	Trouble diagnosis name	DTC detecting condition	Possible cause
P0643	Sensor power supply circuit short	ECM detects a voltage of power source for sensor is excessively low or high.	• Harness or connectors (TP sensor circuit is shorted.) [Camshaft position sensor (PHASE) circuit is shorted.] • Throttle position sensor • Camshaft position sensor (PHASE)

DTC CONFIRMATION PROCEDURE

1.PRECONDITIONING

If DTC Confirmation Procedure has been previously conducted, always perform the following before conducting the next test.
1. Turn ignition switch OFF and wait at least 10 seconds.
2. Turn ignition switch ON.
3. Turn ignition switch OFF and wait at least 10 seconds.

TESTING CONDITION:
Before performing the following procedure, confirm that battery voltage is more than 8V at idle.

>> GO TO 2.

2.PERFORM DTC CONFIRMATION PROCEDURE

1. Turn ignition switch ON (READY).
2. Depress the accelerator pedal to start engine, then keep engine running for at least 1 second.
3. Check DTC.

Is DTC detected?

YES >> Go to EC-316, "Diagnosis Procedure".
NO >> INSPECTION END

Diagnosis Procedure

INFOID:0000000003069333

1.CHECK GROUND CONNECTION

1. Turn ignition switch OFF.
2. Check ground connection E9. Refer to Ground Inspection in GI-45, "Circuit Inspection".

Is the inspection result normal?

YES >> GO TO 2.
NO >> Repair or replace ground connection.

2.CHECK SENSOR POWER SUPPLY CIRCUITS

Check harness for short to power and short to ground, between the following terminals.

ECM		Sensor		
Connector	Terminal	Name	Connector	Terminal
F13	47	Electric throttle control actuator	F57	1
	59	CMP sensor (PHASE)	F55	1

Is the inspection result normal?

YES >> GO TO 3.
NO >> Repair short to ground or short to power in harness or connectors.

3. CHECK CAMSHAFT POSITION SENSOR (PHASE)

Refer to EC-256, "Component Inspection".

Is the inspection result normal?

YES >> GO TO 4.
NO >> Replace malfunctioning component.

4. CHECK TP SENSOR

Refer to EC-171, "Component Inspection".

Is the inspection result normal?

YES >> GO TO 6.
NO >> GO TO 5.

5. REPLACE ELECTRIC THROTTLE CONTROL ACTUATOR

1. Replace electric throttle control actuator.
2. Go to EC-317, "Special Repair Requirement".

>> INSPECTION END

6. CHECK INTERMITTENT INCIDENT

Refer to GI-42, "Intermittent Incident".

>> INSPECTION END

Special Repair Requirement

INFOID:0000000003069334

1. PERFORM THROTTLE VALVE CLOSED POSITION LEARNING

Refer to EC-15, "THROTTLE VALVE CLOSED POSITION LEARNING : Special Repair Requirement"

>> GO TO 2.

2. PERFORM IDLE AIR VOLUME LEARNING

Refer to EC-16, "IDLE AIR VOLUME LEARNING : Special Repair Requirement"

>> END

P0AC4 HV MIL ON REQUEST

Description

INFOID:0000000003069335

This DTC is displayed when a malfunction is detected by HV ECU.
Check DTC for HV ECU and perform the trouble diagnosis. Refer to HBC-611, "DTC Index".
After repair work, erase DTC in ECM.

P1148 CLOSED LOOP CONTROL

DTC Logic

INFOID:0000000003069336

DTC DETECTION LOGIC

NOTE:
DTC P1148 is displayed with another DTC for A/F sensor 1.
Perform the trouble diagnosis for the corresponding DTC.

DTC No.	Trouble diagnosis name	DTC detecting condition	Possible cause
P1148	Closed loop control function	The closed loop control function for bank 1 does not operate even when vehicle is driving in the specified condition.	• Harness or connectors (The A/F sensor 1 circuit is open or shorted.) • A/F sensor 1 • A/F sensor 1 heater

P1195 ENGINE DOES NOT START

DTC Logic

INFOID:0000000003069337

DTC DETECTION LOGIC

NOTE:

- **If DTC P1195 is displayed with DTC P0201, P0202, P0203, P0204, first perform the trouble diagnosis for DTC P0201, P0202, P0203, P0204. Refer to EC-236, "DTC Logic".**
- **If DTC P1195 is displayed with DTC P0335, first perform the trouble diagnosis for DTC P0335. Refer to EC-250, "DTC Logic".**
- **If DTC P1195 is displayed with DTC P0340, first perform the trouble diagnosis for DTC P0340. Refer to EC-254, "DTC Logic".**
- **If DTC P1195 is displayed with DTC P0605, first perform the trouble diagnosis for DTC P0605. Refer to EC-313, "DTC Logic".**

DTC No.	Trouble diagnosis name	DTC detecting condition	Possible cause
P1195	Engine does not start	When the engine is abnormal, and the engine does not start.	• Intake air leaks • Incorrect PCV hose connection • Mass air flow sensor • Electric throttle control actuator • Fuel injector • Fuel run out • Incorrect fuel pressure • Spark plug • Ignition coil • Ignition signal circuit is open or shorted • Insufficient compression

DTC CONFIRMATION PROCEDURE

1. PRECONDITIONING

If DTC Confirmation Procedure has been previously conducted, always perform the following before conducting the next test.

1. Turn ignition switch OFF and wait at least 10 seconds.
2. Turn ignition switch ON.
3. Turn ignition switch OFF and wait at least 10 seconds.

>> GO TO 2.

2. PERFORM DTC CONFIRMATION PROCEDURE

1. Turn ignition switch ON (READY).
2. Depress accelerator pedal and wait at least 15 seconds.
3. Check DTC.

Is DTC detected?

YES >> Go to EC-320, "Diagnosis Procedure".
NO >> INSPECTION END

Diagnosis Procedure

INFOID:0000000003069338

1. CHECK FOR INTAKE AIR LEAK

1. Visually check for the cause of intake air leak after the mass air flow sensor.
2. Check PCV hose connection.

Intake air leak detected?

YES >> Repair or replace.
NO >> GO TO 2.

2. CHECK ELECTRIC THROTTLE CONTROL ACTUATOR VISUALLY

1. Remove the intake air duct.

2. Check if foreign matter is caught between the throttle valve (1) and the housing.

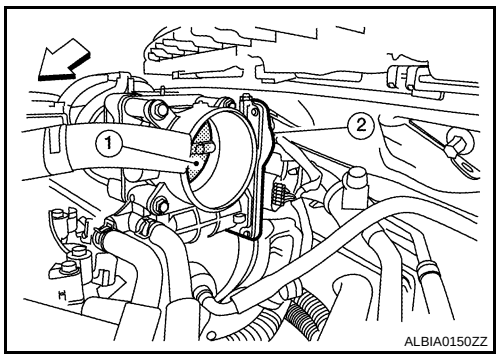

2. Electric throttle control actuator

⇦ : Vehicle front

Is the inspection result normal?

YES >> GO TO 3.
NO >> Remove the foreign matter and clean the electric throttle control actuator inside.

3. CHECK FUEL PUMP FUNCTION

Refer to EC-380, "Component Function Check".

Is the inspection result normal?

YES >> GO TO 4.
NO >> Go to EC-380, "Diagnosis Procedure".

4. CHECK MASS AIR FLOW SENSOR

Check mass air flow sensor. Refer to EC-148, "Component Inspection".

Is the inspection result normal?

YES >> GO TO 5.
NO >> Replace mass air flow sensor.

5. CHECK FUEL PRESSURE

1. Release fuel pressure to zero. Refer to EC-454, "Inspection".
2. Install fuel pressure gauge and check fuel pressure. Refer to EC-454, "Inspection".

Is the inspection result normal?

YES >> GO TO 7.
NO >> GO TO 6.

6. DETECT MALFUNCTIONING PART

Check fuel hoses and fuel tubes for clogging.

Is the inspection result normal?

YES >> Replace “fuel filter and fuel pump assembly”.
NO >> Repair or replace

7. CHECK FUEL INJECTOR

Check fuel injector. Refer to EC-237, "Component Inspection".

Is the inspection result normal?

YES >> GO TO 8.
NO >> Replace malfunctioning fuel injector.

8. CHECK SPARK PLUG

Check spark plug. Refer to EM-13, "Removal and Installation".

Is the inspection result normal?

YES >> GO TO 9.
NO >> Clean or replace spark plug.

9. CHECK IGNITION COIL AND CIRCUIT

Check ignition coil and circuit. Refer to EC-384, "Component Function Check".

Is the inspection result normal?

YES >> GO TO 10.
NO >> Go to EC-384, "Diagnosis Procedure".

10. CHECK COMPRESSION PRESSURE

Check compression pressure. Refer to EM-21, "Compression pressure".

Is the inspection result normal?

YES >> GO TO 11.
NO >> Check pistons, piston rings, valves, valve seats and cylinder head gaskets.

11. CHECK SYMPTOM TABLE

Check items on the no start symptom in EC-443, "Symptom Table".

Is the inspection result normal?

YES >> GO TO 12.
NO >> Repair or replace.

12. CHECK INTERMITTENT INCIDENT

Refer to GI-42, "Intermittent Incident".

>> INSPECTION END

P1196 POOR ENGINE POWER

DTC Logic

INFOID:0000000003069339

DTC DETECTION LOGIC

NOTE:

- **If DTC P1196 is displayed with DTC P0201, P0202, P0203, P0204, first perform the trouble diagnosis for DTC P0201, P0202, P0203, P0204. Refer to EC-236, "DTC Logic".**
- **If DTC P1196 is displayed with DTC P0335, first perform the trouble diagnosis for DTC P0335. Refer to EC-250, "DTC Logic".**
- **If DTC P1196 is displayed with DTC P0340, first perform the trouble diagnosis for DTC P0340. Refer to EC-254, "DTC Logic".**
- **If DTC P1196 is displayed with DTC P0605, first perform the trouble diagnosis for DTC P0605. Refer to EC-313, "DTC Logic".**

ECM calculates the target torque based on the engine power request signal and the engine speed request signal sent from HV ECU.
HV ECU calculates the estimated torque based on the generator torque.
ECM compares the calculated target torque with the estimated torque sent from HV ECU.

DTC No.	Trouble diagnosis name	DTC detecting condition	Possible cause
P1196	Poor engine power	The estimated torque is excessively low compared with the target torque	• Intake air leaks • Incorrect PCV hose connection • Mass air flow sensor • Electric throttle control actuator • Fuel injector • Fuel run out • Incorrect fuel pressure • Spark plug • Ignition coil • Ignition signal circuit is open or shorted • Insufficient compression

DTC CONFIRMATION PROCEDURE

1. PRECONDITIONING

If DTC Confirmation Procedure has been previously conducted, always perform the following before conducting the next test.

1. Turn ignition switch OFF and wait at least 10 seconds.
2. Turn ignition switch ON.
3. Turn ignition switch OFF and wait at least 10 seconds.

Do you have CONSULT-III?

YES >> GO TO 2.
NO >> GO TO 3.

2. PERFORM DTC CONFIRMATION PROCEDURE

With CONSULT-III

1. Activate “INSPECTION MODE 1” (HBC-97) to start engine, and warm up engine to normal operating temperature.
2. Turn ignition switch OFF and wait at least 10seconds.
3. Turn ignition switch ON.
4. Turn ignition switch OFF and wait at least 10seconds.
5. Turn ignition switch ON (READY).
6. Select “POOR ENG PWR P1196” of ”ENGINE PERFORMANCE” in “DTC WORK SUPPORT” mode with CONSULT-III.
7. Touch “START”.
8. Drive vehicle at a speed of 60 km/h (37 MPH) or more until “TESTING” on CONSULT-III changes to “COMPLETED”. (It will take approximately 10 seconds.)

   CAUTION:
   Always drive vehicle at a safe speed.
   NOTE:

Keep the vehicle speed as steady as possible during the cruising.

9. Touch “SELF-DIAG RESULT”.

Which is displayed on CONSULT-III?

OK >> INSPECTION END
NG >> Go to EC-324, "Diagnosis Procedure".

3. PERFORM DTC CONFIRMATION PROCEDURE

With GST

1. Activate “INSPECTION MODE 1” (HBC-97) to start engine, and warm up engine to normal operating temperature.
2. Turn ignition switch OFF and wait at least 10seconds.
3. Turn ignition switch ON.
4. Turn ignition switch OFF and wait at least 10seconds.
5. Turn ignition switch ON (READY).
6. Drive vehicle at a speed of 60 km/h (37 MPH) or more for at least 10 seconds.

   CAUTION:
   Always drive vehicle at a safe speed.
   NOTE:
   Keep the vehicle speed as steady as possible during the cruising.
7. Check DTC.

Is DTC detected?

YES >> Go to EC-324, "Diagnosis Procedure".
NO >> INSPECTION END

Diagnosis Procedure

INFOID:0000000003069340

1. CHECK FOR INTAKE AIR LEAK

1. Activate “INSPECTION MODE 1” (HBC-97) to start engine, and let engine idle.
2. Listen for an intake air leak after the mass air flow sensor.
3. Check PCV hose connection.

Intake air leak detected?

YES >> Repair or replace.
NO >> GO TO 2.

2. CHECK ELECTRIC THROTTLE CONTROL ACTUATOR VISUALLY

1. Turn ignition switch OFF.
2. Remove the intake air duct.
3. Check if foreign matter is caught between the throttle valve (1) and the housing.

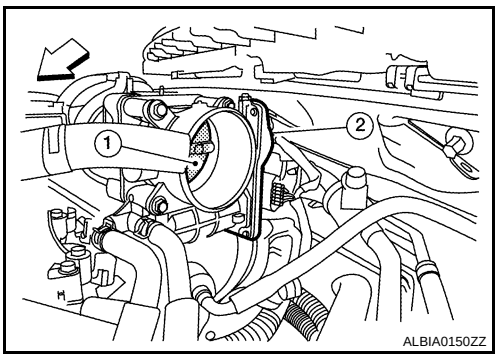

2. Electric throttle control actuator

⇦ : Vehicle front

Is the inspection result normal?

YES >> GO TO 3.
NO >> Remove the foreign matter and clean the electric throttle control actuator inside.

3. CHECK FUEL PUMP FUNCTION

Refer to EC-380, "Component Function Check".

Is the inspection result normal?

YES >> GO TO 4.
NO >> Go to EC-380, "Diagnosis Procedure".

4. CHECK MASS AIR FLOW SENSOR

Check mass air flow sensor. Refer to EC-148, "Component Inspection".

Is the inspection result normal?

YES >> GO TO 5.
NO >> Replace mass air flow sensor.

5. CHECK FUEL PRESSURE

1. Release fuel pressure to zero. Refer to EC-454, "Inspection".
2. Install fuel pressure gauge and check fuel pressure. Refer to EC-454, "Inspection".

Is the inspection result normal?

YES >> GO TO 7.
NO >> GO TO 6.

6. DETECT MALFUNCTIONING PART

Check fuel hoses and fuel tubes for clogging.

Is the inspection result normal?

YES >> Replace “fuel filter and fuel pump assembly”.
NO >> Repair or replace

7. CHECK FUEL INJECTOR

Check fuel injector. Refer to EC-237, "Component Inspection".

Is the inspection result normal?

YES >> GO TO 8.
NO >> Replace malfunctioning fuel injector.

8. CHECK SPARK PLUG

Check spark plug. Refer to EM-13, "Removal and Installation".

Is the inspection result normal?

YES >> GO TO 9.
NO >> Clean or replace spark plug.

9. CHECK IGNITION COIL AND CIRCUIT

Check ignition coil and circuit. Refer to EC-384, "Component Function Check".

Is the inspection result normal?

YES >> GO TO 10.
NO >> Go to EC-384, "Diagnosis Procedure".

10. CHECK COMPRESSION PRESSURE

Check compression pressure. Refer to EM-21, "Compression pressure".

Is the inspection result normal?

YES >> GO TO 11.
NO >> Check pistons, piston rings, valves, valve seats and cylinder head gaskets.

11. CHECK SYMPTOM TABLE

Check items on the lack of power symptom in EC-443, "Symptom Table".

Is the inspection result normal?

YES >> GO TO 12.
NO >> Repair or replace.

12. CHECK INTERMITTENT INCIDENT

Refer to GI-42, "Intermittent Incident".

>> INSPECTION END

P1197 FUEL RUN OUT

DTC Logic

INFOID:0000000003069341

DTC DETECTION LOGIC

NOTE:
This DTC may be detected if the vehicle continues turning counterclockwise over a certain speed for a length of time.

DTC No.	Trouble diagnosis name	DTC detecting condition	Possible cause
P1197	Fuel run out	Detecting condition for P1196 or P1197 is satisfied and low voltage from the fuel level sensor is sent to ECM	• Out of fuel

DTC CONFIRMATION PROCEDURE

1. REFILL FUEL

Refill the fuel until low fuel warning light turned OFF.

>> GO TO 2.

2. PERFORM DTC CONFIRMATION PROCEDURE FOR DTC P1195

Perform DTC CONFIRMATION PROCEDURE for DTC P1195. Refer to EC-320, "DTC Logic".

Is the inspection result normal?

YES >> GO TO 3.
NO >> Go to EC-320, "Diagnosis Procedure".

3. PERFORM DTC CONFIRMATION PROCEDURE FOR DTC P1196

Perform DTC CONFIRMATION PROCEDURE for DTC P1196. Refer to EC-323, "DTC Logic".

Is the inspection result normal?

YES >> INSPECTION END
NO >> Go to EC-324, "Diagnosis Procedure".

P1217 ENGINE OVER TEMPERATURE

DTC Logic

INFOID:0000000003069342

DTC DETECTION LOGIC

NOTE:

- **If DTC P1217 is displayed with DTC UXXXX, first perform the trouble diagnosis for DTC UXXXX.**

If the cooling fan or another component in the cooling system malfunctions, engine coolant temperature will rise.

When the engine coolant temperature reaches an abnormally high temperature condition, a malfunction is indicated.

DTC No.	Trouble diagnosis name	DTC detecting condition	Possible cause
P1217	Engine over temperature (Overheat)	• Cooling fan does not operate properly (Overheat). • Cooling fan system does not operate properly (Overheat). • Engine coolant was not added to the system using the proper filling method. • Engine coolant is not within the specified range.	• Harness or connectors (The cooling fan circuit is open or shorted.) • IPDM E/R • Cooling fan relays-1 • Cooling fan motors • Radiator hose • Radiator • Radiator cap • Reservoir tank • Water pump • Thermostat • Water control valve

CAUTION:

When a malfunction is indicated, be sure to replace the coolant. Refer to MA-12, "ENGINE COOLANT : Changing Engine Coolant". Also, replace the engine oil. Refer to MA-17, "ENGINE OIL : Changing Engine Oil".

1. **Fill radiator with coolant up to specified level with a filling speed of 2 liters per minute. Be sure to use coolant with the proper mixture ratio. Refer to MA-10, "Fluids and Lubricants".**
2. **After refilling coolant, run engine to ensure that no water-flow noise is emitted.**

DTC CONFIRMATION PROCEDURE

1. PERFORM COMPONENT FUNCTION CHECK

Perform component function check. Refer to EC-327, "Component Function Check".

NOTE:

Use component function check to check the overall function of the cooling fan. During this check, a DTC might not be confirmed.

Is the inspection result normal?

YES >> INSPECTION END

NO >> Go to EC-328, "Diagnosis Procedure".

Component Function Check

INFOID:0000000003069343

1. PERFORM COMPONENT FUNCTION CHECK-I

WARNING:

Never remove the radiator cap when the engine is hot. Serious burns could be caused by high pressure fluid escaping from the radiator.

Wrap a thick cloth around cap. Carefully remove the cap by turning it a quarter turn to allow built-up pressure to escape. Then turn the cap all the way off.

Check the coolant level in the reservoir tank and radiator.
Allow engine to cool before checking coolant level.

Is the coolant level in the reservoir tank and/or radiator below the proper range?

YES >> Go to EC-328, "Diagnosis Procedure".
NO >> GO TO 2.

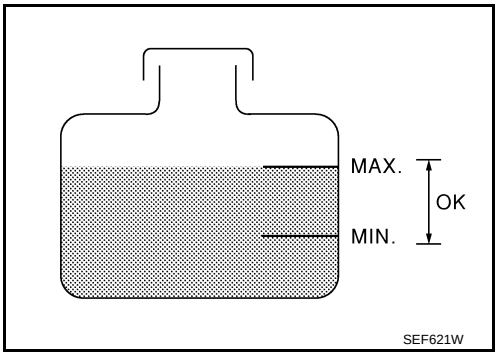

2. PERFORM COMPONENT FUNCTION CHECK-II

Confirm whether customer filled the coolant or not.

Did customer fill the coolant?

YES >> Go to EC-328, "Diagnosis Procedure".
NO >> GO TO 3.

3. PERFORM COMPONENT FUNCTION CHECK-III

With CONSULT-III
1. Turn ignition switch ON.
2. Perform “FAN DUTY CONTROL” in “ACTIVE TEST” mode with CONSULT-III.
3. Make sure that cooling fan speed varies according to the percent.

Without CONSULT-III
Perform IPDM E/R auto active test and check cooling fan motors operation, refer to PCS-10, "Diagnosis Description".

Is the inspection result normal?

YES >> INSPECTION END
NO >> Go to EC-328, "Diagnosis Procedure".

Diagnosis Procedure

INFOID:0000000003069344

1. CHECK COOLING FAN OPERATION

With CONSULT-III
1. Turn ignition switch ON.
2. Perform “FAN DUTY CONTROL” in “ACTIVE TEST” mode with CONSULT-III.
3. Make sure that cooling fan speed varies according to the percent.

Without CONSULT-III
1. Perform IPDM E/R auto active test and check cooling fan motors operation, refer to PCS-10, "Diagnosis Description".
2. Make sure that cooling fan operates.

Is the inspection result normal?

YES >> GO TO 2.
NO >> Go to EC-376, "Diagnosis Procedure".

2. CHECK COOLING SYSTEM FOR LEAK-I

Check cooling system for leak. Refer to CO-10, "System Inspection".

Is leakage detected?

YES >> GO TO 3.
NO >> GO TO 4.

3. CHECK COOLING SYSTEM FOR LEAK-II

Check the following for leak. Refer to CO-10, "System Inspection".
- Hose
- Radiator
- Water pump

>> Repair or replace malfunctioning part.

4. CHECK RADIATOR CAP

Check radiator cap. Refer to CO-14, "Removal and Installation".

Is the inspection result normal?

YES >> GO TO 5.
NO >> Replace radiator cap.

5. CHECK THERMOSTAT

Check thermostat. Refer to CO-20, "Removal and Installation".

Is the inspection result normal?

YES >> GO TO 6.
NO >> Replace thermostat.

6. CHECK WATER CONTROL VALVE

Check water control valve. Refer to CO-22, "Removal and Installation".

Is the inspection result normal?

YES >> GO TO 7.
NO >> Replace water control valve

7. CHECK ENGINE COOLANT TEMPERATURE SENSOR

Refer to EC-167, "Component Inspection".

Is the inspection result normal?

YES >> GO TO 8.
NO >> Replace engine coolant temperature sensor.

8. CHECK MAIN 13 CAUSES

If the cause cannot be isolated, check the following.

Engine	Step	Inspection item	Equipment	Standard	Reference page
OFF	1	• Blocked radiator • Blocked condenser • Blocked radiator grille • Blocked bumper	• Visual	No blocking	—
	2	• Coolant mixture	• Coolant tester	50 - 50% coolant mixture	MA-10, "Fluids and Lubricants"
	3	• Coolant level	• Visual	Coolant up to MAX level in reservoir tank and radiator filler neck	MA-12, "ENGINE COOLANT : Changing Engine Coolant"
	4	• Radiator cap	• Pressure tester	59 - 98 kPa (0.6 - 1.0 kg/cm^2, 9 - 14 psi) (Limit)	CO-14, "Removal and Installation"
ON*2	5	• Coolant leaks	• Visual	No leaks	CO-10, "System Inspection"
ON*2	6	• Thermostat	• Touch the upper and lower radiator hoses	Both hoses should be hot	CO-20, "Removal and Installation"
ON*1	7	• Cooling fan motor	• CONSULT-III	Operating	EC-376, "Component Function Check"
OFF	8	• Combustion gas leak	• Color checker chemical tester 4 Gas analyzer	Negative	—
ON*3	9	• Coolant temperature gauge	• Visual	Gauge less than 3/4 when driving	—
		• Coolant overflow to reservoir tank	• Visual	No overflow during driving and idling	CO-10, "System Inspection"
OFF*4	10	• Coolant return from reservoir tank to radiator	• Visual	Should be initial level in reservoir tank	CO-10, "System Inspection"

Engine	Step	Inspection item	Equipment	Standard	Reference page
OFF	11	• Water control valve	• Remove and inspect the valve	Within the specified value	CO-22, "Removal and Installation"
OFF	12	• Cylinder head	• Straight gauge feeler gauge	0.1 mm (0.004 in) Maximum distortion (warping)	EM-66, "Inspection After Disassembly"
	13	• Cylinder block and pistons	• Visual	No scuffing on cylinder walls or piston	EM-82, "Inspection After Disassembly"

*1: Turn the ignition switch ON.

*2: Engine running at 2,500 rpm for 10 minutes.

*3: Drive at 90 km/h (55 MPH) for 30 minutes and then let idle for 10 minutes.

*4: After 60 minutes of cool down time.

For more information, refer to CO-8, "Troubleshooting Chart".

>> INSPECTION END

P1225 TP SENSOR

Description

INFOID:0000000003069345

Electric throttle control actuator consists of throttle control motor, throttle position sensor, etc. The throttle position sensor responds to the throttle valve movement.
The throttle position sensor has two sensors. These sensors are a kind of potentiometers which transform the throttle valve position into output voltage, and emit the voltage signal to the ECM. In addition, these sensors detect the opening and closing speed of the throttle valve and feed the voltage signals to the ECM. The ECM judges the current opening angle of the throttle valve from these signals and the ECM controls the throttle control motor to make the throttle valve opening angle properly in response to driving condition.

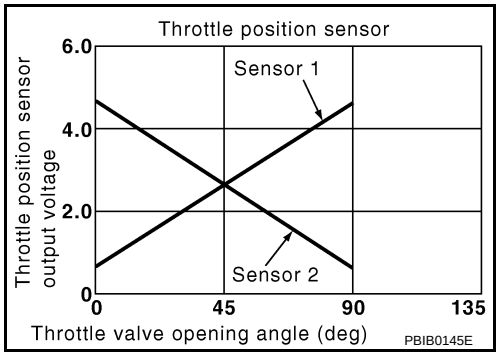

DTC Logic

INFOID:0000000003069346

DTC DETECTION LOGIC

DTC No.	Trouble diagnosis name	DTC detecting condition	Possible cause
P1225	Closed throttle position learning performance	Closed throttle position learning value is excessively low.	• Electric throttle control actuator (TP sensor 1 and 2)

DTC CONFIRMATION PROCEDURE

1. PRECONDITIONING

If DTC Confirmation Procedure has been previously conducted, always perform the following before conducting the next test.
1. Turn ignition switch OFF and wait at least 10 seconds.
2. Turn ignition switch ON.
3. Turn ignition switch OFF and wait at least 10 seconds.

TESTING CONDITION:
Before performing the following procedure, confirm that battery voltage is more than 10V at idle.

>> GO TO 2.

2. PERFORM DTC CONFIRMATION PROCEDURE

1. Turn ignition switch ON.
2. Turn ignition switch OFF and wait at least 10 seconds.
3. Turn ignition switch ON.
4. Check 1st trip DTC.

Is 1st trip DTC detected?

YES >> Go to EC-331, "Diagnosis Procedure".
NO >> INSPECTION END

Diagnosis Procedure

INFOID:0000000003069347

1. CHECK ELECTRIC THROTTLE CONTROL ACTUATOR VISUALLY

1. Turn ignition switch OFF.
2. Remove the intake air duct.

3. Check if foreign matter is caught between the throttle valve (1) and the housing.

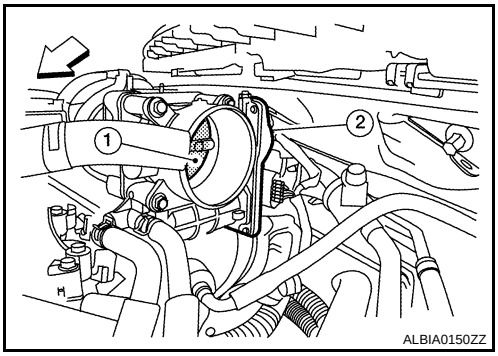

2. Electric throttle control actuator

⇦ : Vehicle front

Is the inspection result normal?

YES >> GO TO 2.
NO >> Remove the foreign matter and clean the electric throttle control actuator inside.

2. REPLACE ELECTRIC THROTTLE CONTROL ACTUATOR

1. Replace electric throttle control actuator.
2. Go to EC-332, "Special Repair Requirement".

>> INSPECTION END

Special Repair Requirement

INFOID:0000000003069348

1. PERFORM THROTTLE VALVE CLOSED POSITION LEARNING

Refer to EC-332, "Special Repair Requirement"

>> GO TO 2.

2. PERFORM IDLE AIR VOLUME LEARNING

Refer to EC-332, "Special Repair Requirement"

>> END

P1226 TP SENSOR

Description

INFOID:0000000003069349

Electric throttle control actuator consists of throttle control motor, throttle position sensor, etc. The throttle position sensor responds to the throttle valve movement.
The throttle position sensor has two sensors. These sensors are a kind of potentiometers which transform the throttle valve position into output voltage, and emit the voltage signal to the ECM. In addition, these sensors detect the opening and closing speed of the throttle valve and feed the voltage signals to the ECM. The ECM judges the current opening angle of the throttle valve from these signals and the ECM controls the throttle control motor to make the throttle valve opening angle properly in response to driving condition.

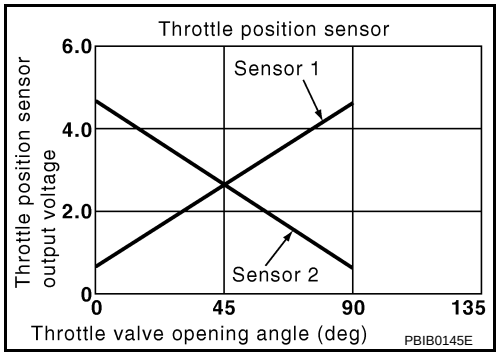

DTC Logic

INFOID:0000000003069350

DTC DETECTION LOGIC

DTC No.	Trouble diagnosis name	DTC detecting condition	Possible cause
P1226	Closed throttle position learning performance	Closed throttle position learning is not performed successfully, repeatedly.	• Electric throttle control actuator (TP sensor 1 and 2)

DTC CONFIRMATION PROCEDURE

1. PRECONDITIONING

If DTC Confirmation Procedure has been previously conducted, always perform the following before conducting the next test.
1. Turn ignition switch OFF and wait at least 10 seconds.
2. Turn ignition switch ON.
3. Turn ignition switch OFF and wait at least 10 seconds.

TESTING CONDITION:
Before performing the following procedure, confirm that battery voltage is more than 10V at idle.

>> GO TO 2.

2. PERFORM DTC CONFIRMATION PROCEDURE

1. Turn ignition switch ON.
2. Turn ignition switch OFF and wait at least 10 seconds.
3. Turn ignition switch ON.
4. Repeat steps 2 and 3 for 32 times.
5. Check 1st trip DTC.

Is 1st trip DTC detected?

YES >> Go to EC-333, "Diagnosis Procedure".
NO >> INSPECTION END

Diagnosis Procedure

INFOID:0000000003069351

1. CHECK ELECTRIC THROTTLE CONTROL ACTUATOR VISUALLY

1. Turn ignition switch OFF.
2. Remove the intake air duct.

3. Check if foreign matter is caught between the throttle valve (1) and the housing.

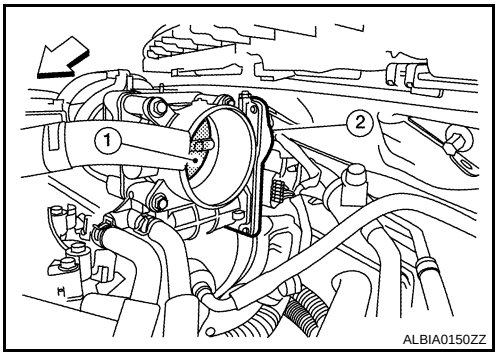

2. Electric throttle control actuator

⇦ : Vehicle front

Is the inspection result normal?

YES >> GO TO 2.
NO >> Remove the foreign matter and clean the electric throttle control actuator inside.

2. REPLACE ELECTRIC THROTTLE CONTROL ACTUATOR

1. Replace electric throttle control actuator.
2. Go to EC-332, "Special Repair Requirement".

>> INSPECTION END

Special Repair Requirement

INFOID:0000000003069352

1. PERFORM THROTTLE VALVE CLOSED POSITION LEARNING

Refer to EC-334, "Special Repair Requirement"

>> GO TO 2.

2. PERFORM IDLE AIR VOLUME LEARNING

Refer to EC-334, "Special Repair Requirement"

>> END

P1421 COLD START CONTROL

Description

INFOID:0000000003099468

ECM controls ignition timing and engine speed when engine is started with prewarming up condition.
This control promotes the activation of three way catalyst by heating the catalyst and reduces emissions.

DTC Logic

INFOID:0000000003099469

DTC DETECTION LOGIC

NOTE:
If DTC P1421 is displayed with other DTC, first perform the trouble diagnosis for other DTC.

DTC No.	Trouble diagnosis name	DTC detecting condition	Possible cause
P1421	Cold start emission reduction strategy monitoring	ECM does not control ignition timing and engine speed properly when engine is started with pre-warming up condition.	• Lack of intake air volume • Fuel injection system • ECM

DTC CONFIRMATION PROCEDURE

1. PRECONDITIONING

If DTC Confirmation Procedure has been previously conducted, always perform the following before conducting the next test.
1. Turn ignition switch OFF and wait at least 10 seconds.
2. Turn ignition switch ON.
3. Turn ignition switch OFF and wait at least 10 seconds.

TESTING CONDITION:
Before performing the following procedure, confirm that battery voltage is more than 11V at idle.

>> GO TO 2.

2. PERFORM DTC CONFIRMATION PROCEDURE

With CONSULT-III
1. Turn ignition switch OFF and wait at least 10 seconds.
2. Set selector lever to P position.
3. Turn ignition switch ON.
4. Make sure that air conditioner switch and electric load switches (lights, heater fan, rear window defogger) are OFF.
5. Select “DATA MONITOR” mode with CONSULT-III.
6. Check that the “COOLAN TEMP/S” indication is between 4°C (39°F) and 36°C (97°F).
   If “COOLAN TEMP/S” indication is within the specified value, go to the following step.
   If “COOLAN TEMP/S” indication is out of the specified value, cool engine down or warm engine up and go to step 1.
7. Confirm that the “SOC” indication in “DATA MONITOR” mode of “HYBRID SYSTEM” is between 40 and 70 %.
8. Turn ignition switch ON (READY) and wait for 70 seconds.
9. Check 1st trip DTC.

With GST
1. Turn ignition switch OFF and wait at least 10 seconds.
2. Set selector lever to P position.
3. Turn ignition switch ON.
4. Make sure that air conditioner switch and electric load switches (lights, heater fan, rear window defogger) are OFF.
5. Check engine coolant temperature with Service $01 of GST and confirm that the indication is between 4°C (39°F) and 36°C (97°F).
   If the indication is within the specified value, go to the following step.
   If the indication is out of the specified value, cool engine down or warm engine up and go to step 1.

6. Check high voltage battery status meter in combination meter and confirm that the indication is between 40 and 70 % as shown in the figure.
7. Turn ignition switch ON (READY) and wait for 70 seconds.
8. Check 1st trip DTC.

Is 1st trip DTC detected?

YES >> Go to EC-336, "Diagnosis Procedure".
NO >> INSPECTION END

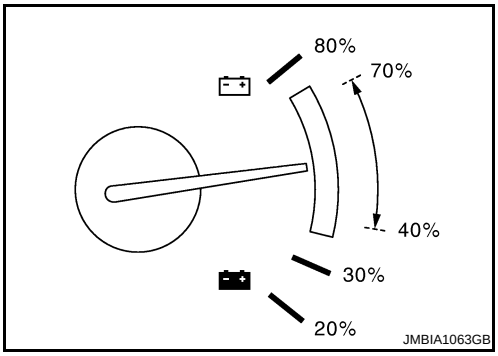

Diagnosis Procedure

INFOID:0000000003099470

1. PERFORM IDLE AIR VOLUME LEARNING

Perform EC-16, "IDLE AIR VOLUME LEARNING : Special Repair Requirement".

Is Idle Air Volume Learning carried out successfully?

YES >> GO TO 2.
NO >> Follow the instruction of Idle Air Volume Learning.

2. CHECK INTAKE SYSTEM

Check for the cause of intake air volume lacking. Refer to the following.
- Crushed intake air passage
- Intake air passage clogging

Is the inspection result normal?

YES >> GO TO 3.
NO >> Repair or replace malfunctioning part

3. CHECK FUEL INJECTION SYSTEM FUNCTION

Perform DTC CONFIRMATION PROCEDURE for DTC P0171. Refer to EC-222, "DTC Logic".

Is the inspection result normal?

YES >> GO TO 4.
NO >> Go to EC-223, "Diagnosis Procedure" for DTC P0171.

4. PERFORM DTC CONFIRMATION PROCEDURE

With CONSULT-III
1. Turn ignition switch ON.
2. Select “SELF DIAG RESULTS” mode with CONSULT-III.
3. Touch “ERASE”.
4. **Perform DTC CONFIRMATION PROCEDURE.**
   See EC-335, "DTC Logic".

With GST
1. Turn ignition switch ON.
2. Select Service $04 with GST.
3. **Perform DTC CONFIRMATION PROCEDURE.**
   See EC-335, "DTC Logic".

Is the 1st trip DTC P1421 displayed again?

YES >> GO TO 5.
NO >> INSPECTION END

5. REPLACE ECM

1. Replace ECM.
2. Go toEC-14, "ADDITIONAL SERVICE WHEN REPLACING CONTROL UNIT : Special Repair Requirement" .

>> INSPECTION END

P1564 ASCD STEERING SWITCH

Description

INFOID:0000000003069353

ASCD steering switch has variant values of electrical resistance for each button. ECM reads voltage variation of switch, and determines which button is operated.
Refer to EC-45, "System Description" for the ASCD function.

DTC Logic

INFOID:0000000003069354

DTC DETECTION LOGIC

NOTE:
If DTC P1564 is displayed with DTC P0605, first perform the trouble diagnosis for DTC P0605. Refer to EC-313, "DTC Logic".

DTC No.	Trouble diagnosis name	DTC detecting condition	Possible cause
P1564	ASCD steering switch	• An excessively high voltage signal from the ASCD steering switch is sent to ECM. • ECM detects that input signal from the ASCD steering switch is out of the specified range. • ECM detects that the ASCD steering switch is stuck ON.	• Harness or connectors (The switch circuit is open or shorted.) • ASCD steering switch • ECM

DTC CONFIRMATION PROCEDURE

1. PRECONDITIONING

If DTC Confirmation Procedure has been previously conducted, always perform the following before conducting the next test.
1. Turn ignition switch OFF and wait at least 10 seconds.
2. Turn ignition switch ON.
3. Turn ignition switch OFF and wait at least 10 seconds.

>> GO TO 2.

2. PERFORM DTC CONFIRMATION PROCEDURE

1. Turn ignition switch ON and wait at least 10 seconds.
2. Press MAIN switch for at least 10 seconds, then release it and wait at least 10 seconds.
3. Press CANCEL switch for at least 10 seconds, then release it and wait at least 10 seconds.
4. Press RESUME/ACCELERATE switch for at least 10 seconds, then release it and wait at least 10 seconds.
5. Press SET/COAST switch for at least 10 seconds, then release it and wait at least 10 seconds.
6. Check DTC.

Is DTC detected?

YES >> Go to EC-337, "Diagnosis Procedure".
NO >> INSPECTION END

Diagnosis Procedure

INFOID:0000000003069355

1. CHECK GROUND CONNECTION

1. Turn ignition switch OFF.
2. Check ground connection E9. Refer to Ground Inspection in GI-45, "Circuit Inspection".

Is the inspection result normal?

YS >> GO TO 2.
NO >> Repair or replace ground connection.

2. CHECK ASCD STEERING SWITCH CIRCUIT

With CONSULT-III

1. Turn ignition switch ON.
2. Select “MAIN SW”, “CANCEL SW”, “RESUME/ACC SW” and “SET SW” in “DATA MONITOR” mode with CONSULT-III.
3. Check each item indication under the following conditions.

Monitor item	Condition		Indication
MAIN SW	MAIN switch	Pressed	ON
		Released	OFF
CANCEL SW	CANCEL switch	Pressed	ON
		Released	OFF
RESUME/ACC SW	RESUME/ACCELERATE switch	Pressed	ON
		Released	OFF
SET SW	SET/COAST switch	Pressed	ON
		Released	OFF

Without CONSULT-III

1. Turn ignition switch ON.
2. Check the voltage between ECM harness connector and ground.

ECM		Ground	Condition	Voltage
Connector	Terminal			
E10	110 (ASCD steering switch signal)	Ground	MAIN switch: Pressed	Approx. 0V
			CANSEL switch: Pressed	Approx. 1V
			SET/COAST switch: Pressed	Approx. 2V
			RESUME/ACCELERATE switch: Pressed	Approx. 3V
			All ASCD steering switches: Released	Approx. 4V

Is the inspection result normal?

YES >> GO TO 8.
NO >> GO TO 3.

3. CHECK ASCD STEERING SWITCH GROUND CIRCUIT FOR OPEN AND SHORT

1. Turn ignition switch OFF.
2. Disconnect ECM harness connector.
3. Disconnect combination switch harness connector M88.
4. Check the continuity between combination switch and ECM harness connector.

Combination switch	ECM		Continuity
Terminal	Connector	Terminal	
16	E10	92	Existed

5. Also check harness for short to ground and short to power.

Is the inspection result normal?

YES >> GO TO 5.
NO >> GO TO 4.

4. DETECT MALFUNCTIONING PART

Check the following.
- Harness connectors M1, E30
- Combination switch (spiral cable)
- Harness for open and short between ECM and combination switch

>> Repair open circuit or short to ground or short to power in harness or connectors.

5. CHECK ASCD STEERING SWITCH INPUT SIGNAL CIRCUIT FOR OPEN AND SHORT

1. Check the continuity between ECM harness connector and combination switch.

Combination switch	ECM		Continuity
Terminal	Connector	Terminal	
13	E10	85	Existed

2. Also check harness for short to ground and short to power.

Is the inspection result normal?

YES >> GO TO 7.
NO >> GO TO 6.

6. DETECT MALFUNCTIONING PART

Check the following.
- Harness connectors M1, E30
- Combination switch (spiral cable)
- Harness for open and short between ECM and combination switch

>> Repair open circuit or short to ground or short to power in harness or connectors.

7. CHECK ASCD STEERING SWITCH

Refer to EC-339, "Component Inspection".

Is the inspection result normal?

YES >> GO TO 8.
NO >> Replace ASCD steering switch.

8. CHECK INTERMITTENT INCIDENT

Refer to GI-42, "Intermittent Incident".

>> INSPECTION END

Component Inspection

INFOID:0000000003069356

1. CHECK ASCD STEERING SWITCH

1. Disconnect combination switch (spiral cable) harness connector M88.
2. Check the continuity between combination switch harness connector terminals under following conditions.

Combination meter		Condition	Resistance
Connector	Terminals		
M88	13 and 16	MAIN switch: Pressed	Approx. 0 Ω
		CANCEL switch: Pressed	Approx. 250 Ω
		SET/COAST switch: Pressed	Approx. 660 Ω
		RESUME/ACCELERATE switch: Pressed	Approx. 1,480 Ω
		All ASCD steering switches: Released	Approx. 4,000 Ω

Is the inspection result normal?

YES >> INSPECTION END
NO >> Replace ASCD steering switch

P1572 ASCD BRAKE SWITCH

Description

INFOID:0000000003069357

When the brake pedal is depressed, ASCD brake switch is turned OFF and stop lamp switch is turned ON. ECM and hybrid vehicle control ECU detects the state of the brake pedal by this input of two kinds (ON/OFF signal). Refer to EC-45, "System Description" for the ASCD function.

DTC Logic

INFOID:0000000003069358

DTC DETECTION LOGIC

NOTE:

- **If DTC P1572 is displayed with DTC P0605, first perform the trouble diagnosis for DTC P0605. Refer to EC-313, "DTC Logic".**
- **This self-diagnosis has the one trip detection logic. When malfunction A is detected, DTC is not stored in ECM memory. And in that case, 1st trip DTC and 1st trip freeze frame data are displayed. 1st trip DTC is erased when ignition switch OFF. And even when malfunction A is detected in two consecutive trips, DTC is not stored in ECM memory.**

DTC No.	Trouble diagnosis name	DTC detecting condition		Possible cause
P1572	ASCD brake switch	A)	When the vehicle speed is above 30 km/h (19 MPH), ON signals from the stop lamp switch and the ASCD brake switch are sent to the ECM at the same time.	• Harness or connectors (The stop lamp switch circuit is shorted.) • Harness or connectors (The ASCD brake switch circuit is shorted.) • Harness or connectors • Stop lamp switch • ASCD brake switch • Incorrect stop lamp switch installation • Incorrect ASCD brake switch installation • ECM
		B)	ASCD brake switch signal is not sent to ECM for extremely long time while the vehicle is driving.	

DTC CONFIRMATION PROCEDURE

1. PRECONDITIONING

If DTC Confirmation Procedure has been previously conducted, always perform the following before conducting the next test.

1. Turn ignition switch OFF and wait at least 10 seconds.
2. Turn ignition switch ON.
3. Turn ignition switch OFF and wait at least 10 seconds.

TESTING CONDITION:

This test may be conducted with the drive wheels lifted in the shop or by driving the vehicle. If this test is conducted with the drive wheels lifted, activate “INPSECTION MODE 1” (HBC-97). If a road test is expected to be easier, it is unnecessary to lift up the vehicle.

NOTE:

Procedure for malfunction B is not described here. It takes extremely long time to complete procedure for malfunction B. By performing procedure for malfunction A, the incident that causes malfunction B can be detected.

>> GO TO 2.

2. PERFORM DTC CONFIRMATION PROCEDURE FOR MALFUNCTION A

1. Turn ignition switch ON (READY).
2. Press MAIN switch and make sure that CRUISE indicator is displayed in combination meter.
3. Drive the vehicle for at least 5 consecutive seconds under the following conditions.

   CAUTION:

   Always drive vehicle at a safe speed.

   NOTE:

   This procedure may be conducted with the drive wheels lifted in the shop or by driving the vehicle. If a road test is expected to be easier, it is unnecessary to lift the vehicle.

VHCL SPEED SE	More than 30 km/h (19 mph)
Shift lever	Suitable position

4. Check 1st trip DTC.

Is 1st trip DTC detected?

YES >> Go to EC-341, "Diagnosis Procedure".
NO >> GO TO 3.

3. PERFORM DTC CONFIRMATION PROCEDURE FOR MALFUNCTION B

1. Turn ignition ON (READY) and drive the vehicle for at least 5 consecutive seconds under the following conditions.
   CAUTION:
   Always drive vehicle at a safe speed.
   NOTE:
   This procedure may be conducted with the drive wheels lifted in the shop or by driving the vehicle. If a road test is expected to be easier, it is unnecessary to lift the vehicle.

VHCL SPEED SE	More than 30 km/h (19 mph)
Selector lever	Suitable position
Driving location	Depress the brake pedal for more than five seconds so as not to come off from the above-mentioned vehicle speed.

2. Check 1st trip DTC.

Is 1st trip DTC detected?

YES >> Go to EC-341, "Diagnosis Procedure".
NO >> INSPECTION END

Diagnosis Procedure

INFOID:0000000003069359

1. CHECK OVERALL FUNCTION-I

With CONSULT-III

1. Turn ignition switch ON.
2. Select “BRAKE SW1” in “DATA MONITOR” mode with CONSULT-III.
3. Check “BRAKE SW1” indication under the following conditions.

Monitor item	Condition		Indication
BRAKE SW1	Brake pedal	Slightly depressed	OFF
		Fully released	ON

Without CONSULT-III

1. Turn ignition switch ON.
2. Check the voltage between ECM harness connector and ground.

ECM		Ground	Condition		Voltage
Connector	Terminal				
E10	110 (ASCD brake switch signal)	Ground	Brake pedal	Slightly depressed	Approx. 0V
				Fully released	Battery voltage

Is the inspection result normal?

YES >> GO TO 2.
NO >> GO TO 3.

2. CHECK OVERALL FUNCTION-II

With CONSULT-III

Select “BRAKE SW2” and check indication in “DATA MONITOR” mode.

Monitor item	Condition		Indication
BRAKE SW2	Brake pedal	Slightly depressed	ON
		Fully released	OFF

Without CONSULT-III

Check the voltage between ECM harness connector and ground.

ECM		Ground	Condition		Voltage
Connector	Terminal				
E10	106 (Stop lamp switch signal)	Ground	Brake pedal	Slightly depressed	Battery voltage
				Fully released	Approx. 0V

Is the inspection result normal?

YES >> GO TO 13.
NO >> GO TO 8.

3. CHECK ASCD BRAKE SWITCH POWER SUPPLY CIRCUIT

1. Turn ignition switch OFF.
2. Disconnect ASCD brake switch harness connector.
3. Turn ignition switch ON.
4. Check the voltage between ASCD brake switch harness connector and ground.

ASCD brake switch		Ground	Voltage
Connector	Terminal		
E37	1	Ground	Battery voltage

Is the inspection result normal?

YES >> GO TO 5.
NO >> GO TO 4.

4. DETECT MALFUNCTIONING PART

Check the following.
- Fuse block (J/B) connector E6
- Junction block connector E46, E48
- 10A fuse (No.3)
- Harness for open or short between ASCD brake switch and fuse

>> Repair open circuit or short to ground or short to power in harness or connectors.

5. CHECK ASCD BRAKE SWITCH INPUT SIGNAL CIRCUIT FOR OPEN AND SHORT

1. Turn ignition switch OFF.
2. Disconnect ECM ASCD harness connector.
3. Check the continuity between ASCD brake switch harness connector and ECM harness connector.

ASCD brake switch		ECM		Continuity
Connector	Terminal	Connector	Terminal	
E37	2	E10	110	Existed

4. Also check harness for short to ground and short to power.

Is the inspection result normal?

YES >> GO TO 7.
NO >> GO TO 6.

6. DETECT MALFUNCTIONING PART

Check the following.
- Junction block connector E45, E46
- Harness for open or short between ASCD brake switch and ECM

>> Repair open circuit or short to ground or short to power in harness or connectors.

7. CHECK ASCD BRAKE SWITCH

Refer to EC-344, "Component Inspection (ASCD Brake Switch)".

Is the inspection result normal?

YES >> GO TO 13.
NO >> Replace ASCD brake switch.

8. CHECK STOP LAMP SWITCH POWER SUPPLY CIRCUIT

1. Turn ignition switch OFF.
2. Disconnect stop lamp switch harness connector.
3. Check the voltage between stop lamp switch harness connector and ground.

Stop lamp switch		Ground	Voltage
Connector	Terminal		
E38	1	Ground	Battery voltage

Is the inspection result normal?

YES >> GO TO 10.
NO >> GO TO 9.

9. DETECT MALFUNCTIONING PART

Check the following.
- Fuse block (J/B) connector E6
- 10A fuse (No.7)
- Harness for open or short between stop lamp switch and battery

>> Repair open circuit or short to ground or short to power in harness or connectors.

10. CHECK STOP LAMP SWITCH INPUT SIGNAL CIRCUIT FOR OPEN AND SHORT

1. Disconnect ECM harness connector.
2. Check the continuity between ECM harness connector and stop lamp switch harness connector.

ECM		ASCD clutch switch		Continuity
Connector	Terminal	Connector	Terminal	
E10	106	E38	2	Existed

3. Also check harness for short to ground and short to power.

Is the inspection result normal?

YES >> GO TO 12.
NO >> GO TO 11.

11. DETECT MALFUNCTIONING PART

Check the following.
- Fuse block (J/B) connector E6
- Harness for open or short between ECM and stop lamp switch

>> Repair open circuit or short to ground or short to power in harness or connectors.

12. CHECK STOP LAMP SWITCH

Refer to EC-344, "Component Inspection (Stop Lamp Switch)".

Is the inspection result normal?

YES >> GO TO 13.

NO >> Replace stop lamp switch.

13. CHECK INTERMITTENT INCIDENT

Refer to GI-42, "Intermittent Incident".

>> INSPECTION END

Component Inspection (ASCD Brake Switch)

INFOID:0000000003069360

1. CHECK ASCD BRAKE SWITCH-I

1. Turn ignition switch OFF.
2. Disconnect ASCD brake switch harness connector.
3. Check the continuity between ASCD brake switch terminals under the following conditions.

Terminals	Condition		Continuity
1 and 2	Brake pedal	Fully released	Existed
		Slightly depressed	Not existed

Is the inspection result normal?

YES >> INSPECTION END
NO >> GO TO 2.

2. CHECK ASCD BRAKE SWITCH-II

1. Adjust ASCD brake switch installation. Refer to BR-11, "Inspection and Adjustment".
2. Check the continuity between ASCD brake switch terminals under the following conditions.

Terminals	Condition		Continuity
1 and 2	Brake pedal	Fully released	Existed
		Slightly depressed	Not existed

Is the inspection result normal?

YES >> INSPECTION END
NO >> Replace ASCD brake switch.

Component Inspection (Stop Lamp Switch)

INFOID:0000000003069361

1. CHECK STOP LAMP SWITCH-I

1. Turn ignition switch OFF.
2. Disconnect stop lamp switch harness connector.
3. Check the continuity between stop lamp switch terminals under the following conditions.

Terminals	Condition		Continuity
1 and 2	Brake pedal	Fully released	Not existed
		Slightly depressed	Existed

Is the inspection result normal?

YES >> INSPECTION END
NO >> GO TO 2.

2. CHECK STOP LAMP SWITCH-II

1. Adjust stop lamp switch installation. Refer to BR-11, "Inspection and Adjustment".
2. Check the continuity between stop lamp switch terminals under the following conditions.

Terminals	Condition		Continuity
1 and 2	Brake pedal	Fully released	Not existed
		Slightly depressed	Existed

Is the inspection result normal?

YES >> INSPECTION END
NO >> Replace stop lamp switch.

P1574 ASCD VEHICLE SPEED SENSOR

Description

INFOID:0000000003069362

The ECM receives two vehicle speed sensor signals via CAN communication line. One is sent from hybrid vehicle ECU, and the other is from brake ECU. The ECM uses these signals for ASCD control. Refer to EC-45, "System Description" for ASCD functions.

DTC Logic

INFOID:0000000003069363

DTC DETECTION LOGIC

NOTE:
- **If DTC P1574 is displayed with DTC UXXXX, first perform the trouble diagnosis for DTC UXXXX.**
- **If DTC P1574 is displayed with DTC P0500, first perform the trouble diagnosis for DTC P0500. Refer to EC-306, "DTC Logic"**
- **If DTC P1574 is displayed with DTC P0605, first perform the trouble diagnosis for DTC P0605. Refer to EC-313, "DTC Logic"**

DTC No.	Trouble diagnosis name	DTC detecting condition	Possible cause
P1574	ASCD vehicle speed sensor	ECM detects a difference between two vehicle speed signals is out of the specified range.	• Harness or connectors (The CAN communication line is open or shorted.) • Hybrid vehicle control ECU • Brake ECU

DTC CONFIRMATION PROCEDURE

1. PRECONDITIONING

If DTC Confirmation Procedure has been previously conducted, always perform the following before conducting the next test.
1. Turn ignition switch OFF and wait at least 10 seconds.
2. Turn ignition switch ON.
3. Turn ignition switch OFF and wait at least 10 seconds.

TESTING CONDITION:
This test may be conducted with the drive wheels lifted in the shop or by driving the vehicle. If this test is conducted with the drive wheels lifted, activate “INPSECTION MODE 1” (HBC-97). If a road test is expected to be easier, it is unnecessary to lift up the vehicle.

>> GO TO 2.

2. PERFORM DTC CONFIRMATION PROCEDURE

1. Turn ignition switch ON (READY).
2. Drive the vehicle at more than 40 km/h (25 MPH).
   CAUTION:
   Always drive vehicle at a safe speed.
3. Check DTC.

Is DTC detected?

YES >> Go to EC-346, "Diagnosis Procedure".
NO >> INSPECTION END

Diagnosis Procedure

INFOID:0000000003069364

1. CHECK DTC WITH HYBRID VEHICLE CONTROL ECU

Refer to HBC-611, "DTC Index".

Is the inspection result normal?

YES >> GO TO 2.
NO >> Repair or replace.

2. CHECK BARAKE ECU

Refer to BRC-156, "DTC Index".

>> INSPECTION END

P1805 BRAKE SWITCH

Description

INFOID:0000000003069365

Brake switch signal is applied to the ECM and hybrid vehicle control ECU through the stop lamp switch when the brake pedal is depressed. This signal is used mainly to decrease the engine speed when the vehicle is driving.

DTC Logic

INFOID:0000000003069366

DTC DETECTION LOGIC

DTC No.	Trouble diagnosis name	DTC detecting condition	Possible cause
P1805	Brake switch	A brake switch signal is not sent to ECM for extremely long time while the vehicle is driving.	• Harness or connectors (Stop lamp switch circuit is open or shorted.) • Stop lamp switch

DTC CONFIRMATION PROCEDURE

1. PERFORM DTC CONFIRMATION PROCEDURE

1. Turn ignition switch ON.
2. Fully depress the brake pedal for at least 5 seconds.
3. Erase the DTC with CONSULT-III.
4. Check 1st trip DTC.

Is 1st trip DTC detected?

YES >> Go to EC-348, "Diagnosis Procedure".
NO >> INSPECTION END

Diagnosis Procedure

INFOID:0000000003069367

1. CHECK STOP LAMP SWITCH CIRCUIT

1. Turn ignition switch OFF.
2. Check the stop lamp when depressing and releasing the brake pedal.

Brake pedal	Stop lamp
Fully released	Not illuminated
Slightly depressed	Illuminated

Is 1st trip DTC detected?

YES >> GO TO 4.
NO >> GO TO 2.

2. CHECK STOP LAMP SWITCH POWER SUPPLY CIRCUIT

1. Turn ignition switch OFF.
2. Disconnect stop lamp switch harness connector.
3. Check the voltage between stop lamp switch harness connector and ground.

Stop lamp switch		Ground	Voltage
Connector	Terminal		
E38	1	Ground	Battery voltage

Is the inspection result normal?

YES >> GO TO 4.
NO >> GO TO 3.

3. DETECT MALFUNCTIONING PART

Check the following.

- Fuse block (J/B) connector E6
- 10A fuse (No. 7)
- Harness for open or short between stop lamp switch and battery

>> Repair open circuit or short to ground or short to power in harness or connectors.

4. CHECK STOP LAMP SWITCH INPUT SIGNAL CIRCUIT FOR OPEN AND SHORT

1. Disconnect ECM harness connector.
2. Check the continuity between ECM harness connector and stop lamp switch harness connector.

ECM		Stop lamp switch		Continuity
Connector	Terminal	Connector	Terminal	
E10	106	E38	2	Existed

3. Also check harness for short to ground and short to power.

Is the inspection result normal?

YES >> GO TO 6.
NG >> GO TO 5.

5. DETECT MALFUNCTIONING PART

Check the following.
- Fuse block (J/B) connector E6
- Harness for open or short between ECM and stop lamp switch

>> Repair open circuit or short to ground or short to power in harness or connectors.

6. CHECK STOP LAMP SWITCH

Refer to EC-349, "Component Inspection (Stop Lamp Switch)".

Is the inspection result normal?

YES >> GO TO 7.
NO >> Replace stop lamp switch.

7. CHECK INTERMITTENT INCIDENT

Refer to GI-42, "Intermittent Incident".

>> INSPECTION END

Component Inspection (Stop Lamp Switch)

INFOID:0000000003069368

1. CHECK STOP LAMP SWITCH-I

1. Turn ignition switch OFF.
2. Disconnect stop lamp switch harness connector.
3. Check the continuity between stop lamp switch terminals under the following conditions.

Terminals	Condition		Continuity
1 and 2	Brake pedal	Fully released	Not existed
		Slightly depressed	Existed

Is the inspection result normal?

YES >> INSPECTION END
NO >> GO TO 2.

2. CHECK STOP LAMP SWITCH-II

1. Adjust stop lamp switch installation. Refer to BR-11, "Inspection and Adjustment".
2. Check the continuity between stop lamp switch terminals under the following conditions.

Terminals	Condition		Continuity
1 and 2	Brake pedal	Fully released	Not existed
		Slightly depressed	Existed

Is the inspection result normal?

YES >> INSPECTION END
NO >> Replace stop lamp switch.

P2100, P2103 THROTTLE CONTROL MOTOR RELAY

Description

INFOID:0000000003069369

Power supply for the throttle control motor is provided to the ECM via throttle control motor relay. The throttle control motor relay is ON/OFF controlled by the ECM. When the ignition switch is turned ON, the ECM sends an ON signal to throttle control motor relay and battery voltage is provided to the ECM. When the ignition switch is turned OFF, the ECM sends an OFF signal to throttle control motor relay and battery voltage is not provided to the ECM.

DTC Logic

INFOID:0000000003069370

DTC DETECTION LOGIC

DTC No.	Trouble diagnosis name	DTC detecting condition	Possible cause
P2100	Throttle control motor relay circuit open	ECM detects a voltage of power source for throttle control motor is excessively low.	• Harness or connectors (Throttle control motor relay circuit is open) • Throttle control motor relay
P2103	Throttle control motor relay circuit short	ECM detect the throttle control motor relay is stuck ON.	• Harness or connectors (Throttle control motor relay circuit is shorted) • Throttle control motor relay

DTC CONFIRMATION PROCEDURE

1. PRECONDITIONING

If DTC Confirmation Procedure has been previously conducted, always perform the following before conducting the next test.

1. Turn ignition switch OFF and wait at least 10 seconds.
2. Turn ignition switch ON.
3. Turn ignition switch OFF and wait at least 10 seconds.

TESTING CONDITION:

Before performing the following procedure, confirm that battery voltage is more than 8V.

Witch DTC is detected?

P2100 >> GO TO 2.
P2103 >> GO TO 3.

2. PERFORM DTC CONFIRMATION PROCEDURE FOR DTC P2100

1. Turn ignition switch ON and wait at least 2 seconds.
2. Turn ignition switch ON (READY).
3. Depress the accelerator pedal to start engine, then keep engine running for at least 5 seconds.
4. Check DTC.

Is DTC detected?

YES >> Go to EC-351, "Diagnosis Procedure".
NO >> INSPECTION END

3. PERFORM DTC CONFIRMATION PROCEDURE FOR DTC P2103

1. Turn ignition switch ON and wait at least 1 second.
2. Check DTC.

Is DTC detected?

YES >> Go to EC-351, "Diagnosis Procedure".
NO >> INSPECTION END

Diagnosis Procedure

INFOID:0000000003069371

1. CHECK THROTTLE CONTROL MOTOR RELAY POWER SUPPLY CIRCUIT

1. Turn ignition switch OFF.

2. Disconnect ECM harness connector.
3. Disconnect IPDM E/R harness connector F10.
4. Check the continuity between ECM harness connector and IPDM E/R harness connector.

ECM		IPDM E/R		Continuity
Connector	Terminal	Connector	Terminal	
F14	15	F10	70	Existed

5. Also check harness for short to ground and short to power.

Is the inspection result normal?

YES >> GO TO 2.
NO >> Repair open circuit or short to ground or short to power in harness or connectors.

2. CHECK THROTTLE CONTROL MOTOR RELAY INPUT SIGNAL CIRCUIT

1. Check the continuity between ECM harness connector and IPDM E/R harness connector.

ECM		IPDM E/R		Continuity
Connector	Terminal	Connector	Terminal	
F14	2	F10	54	Existed

2. Also check harness for short to ground and short to power.

Is the inspection result normal?

YES >> GO TO 3.
NG >> Repair open circuit or short to ground or short to power in harness or connectors.

3. CHECK FUSE

1. Disconnect 15A fuse (No. 43) from IPDM E/R.
2. Check 15A fuse for blown.

Is the inspection result normal?

YES >> GO TO 4.
NO >> Replace 15A fuse.

4. CHECK INTERMITTENT INCIDENT

Refer to GI-42, "Intermittent Incident".

Is the inspection result normal?

YES >> Replace IPDM E/R.
NO >> Repair or replace harness or connectors.

P2101 ELECTRIC THROTTLE CONTROL FUNCTION

Description

INFOID:0000000003069372

Electric throttle control actuator consists of throttle control motor, throttle position sensor, etc.
The throttle control motor is operated by the ECM and it opens and closes the throttle valve.
The current opening angle of the throttle valve is detected by the throttle position sensor and it provides feedback to the ECM to control the throttle control motor to make the throttle valve opening angle properly in response to driving condition.

DTC Logic

INFOID:0000000003069373

DTC DETECTION LOGIC

NOTE:
If DTC P2101 is displayed with DTC P2100 or P2119, first perform the trouble diagnosis for DTC P2100 or P2119. Refer to EC-351, "DTC Logic" or EC-360, "DTC Logic".

DTC No.	Trouble diagnosis name	DTC detecting condition	Possible cause
P2101	Electric throttle control performance	Electric throttle control function does not operate properly.	• Harness or connectors (Throttle control motor circuit is open or shorted) • Electric throttle control actuator

DTC CONFIRMATION PROCEDURE

1. PRECONDITIONING

If DTC Confirmation Procedure has been previously conducted, always perform the following before conducting the next test.
1. Turn ignition switch OFF and wait at least 10 seconds.
2. Turn ignition switch ON.
3. Turn ignition switch OFF and wait at least 10 seconds.

TESTING CONDITION:
Before performing the following procedure, confirm that battery voltage is more than 11V when engine is running.

>> GO TO 2.

2. PERFORM DTC CONFIRMATION PROCEDURE

1. Turn ignition switch ON and wait at least 2 seconds.
2. Turn ignition switch ON (READY).
3. Depress the accelerator pedal to start engine, then keep engine running for at least 5 seconds.
4. Check DTC.

Is DTC detected?

YES >> Go to EC-353, "Diagnosis Procedure".
NO >> INSPECTION END

Diagnosis Procedure

INFOID:0000000003069374

1. CHECK GROUND CONNECTION

1. Turn ignition switch OFF.
2. Check ground connection E9. Refer to Ground Inspection in GI-45, "Circuit Inspection".

Is the inspection result normal?

YES >> GO TO 2.
NO >> Repair or replace ground connection.

2. CHECK THROTTLE CONTROL MOTOR RELAY INPUT SIGNAL CIRCUIT-I

1. Check the voltage between ECM harness connector and ground.

ECM		Ground	Condition	Voltage
Connector	Terminal			
F14	2	Ground	Ignition switch OFF	Approx. 0V
			Ignition switch ON	Battery voltage

Is the inspection result normal?

YES >> GO TO 7.
NO >> GO TO 3.

3. CHECK THROTTLE CONTROL MOTOR RELAY POWER SUPPLY CIRCUIT

1. Disconnect ECM harness connector.
2. Disconnect IPDM E/R harness connector F10.
3. Check the continuity between ECM harness connector and IPDM E/R harness connector.

IPDM E/R		ECM		Continuity
Connector	Terminal	Connector	Terminal	
F10	70	F14	15	Existed

4. Also check harness for short to ground and short to power.

Is the inspection result normal?

YES >> GO TO 4.
NO >> Repair open circuit or short to ground or short to power in harness or connectors.

4. CHECK THROTTLE CONTROL MOTOR RELAY INPUT SIGNAL CIRCUIT-II

1. Check the continuity between ECM harness connector and IPDM E/R harness connector.

IPDM E/R		ECM		Continuity
Connector	Terminal	Connector	Terminal	
F10	54	F14	2	Existed

2. Also check harness for short to ground and short to power.

Is the inspection result normal?

YES >> GO TO 5.
NO >> Repair open circuit or short to ground or short to power in harness or connectors.

5. CHECK FUSE

1. Disconnect 15A fuse (No. 43) from IPDM E/R.
2. Check 15A fuse for blown.

Is the inspection result normal?

YES >> GO TO 6.
NO >> Replace 15A fuse.

6. CHECK INTERMITTENT INCIDENT

Refer to GI-42, "Intermittent Incident".

Is the inspection result normal?

YES >> Replace IPDM E/R.
NO >> Repair or replace harness or connectors.

7. CHECK THROTTLE CONTROL MOTOR OUTPUT SIGNAL CIRCUIT FOR OPEN OR SHORT

1. Turn ignition switch OFF.
2. Disconnect electric throttle control actuator harness connector.
3. Disconnect ECM harness connector.
4. Check the continuity between electric throttle control actuator harness connector and ECM harness connector.

Electric throttle control actuator		ECM		Continuity
Connector	Terminal	Connector	Terminal	
F57	5	F14	5	Not existed
			6	Existed
	6		5	Existed
			6	Not existed

5. Also check harness for short to ground and short to power.

Is the inspection result normal?

YES >> GO TO 8.
NO >> Repair or replace.

8. CHECK ELECTRIC THROTTLE CONTROL ACTUATOR VISUALLY

1. Remove the intake air duct.
2. Check if foreign matter is caught between the throttle valve (1) and the housing.

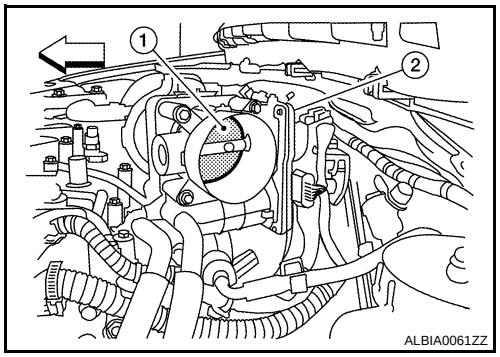

2. Electric throttle control actuator

⇦ : Vehicle front

Is the inspection result normal?

YES >> GO TO 9.
NO >> Remove the foreign matter and clean the electric throttle control actuator inside.

9. CHECK THROTTLE CONTROL MOTOR

Refer to EC-355, "Component Inspection".

Is the inspection result normal?

YES >> GO TO 10.
NO >> GO TO 11.

10. CHECK INTERMITTENT INCIDENT

Refer to GI-42, "Intermittent Incident".

Is the inspection result normal?

YES >> GO TO 11.
NO >> Repair or replace harness or connectors.

11. REPLACE ELECTRIC THROTTLE CONTROL ACTUATOR

1. Replace electric throttle control actuator.
2. Go to EC-356, "Special Repair Requirement".

>> INSPECTION END

Component Inspection

INFOID:0000000003069375

1. CHECK THROTTLE CONTROL MOTOR

1. Disconnect electric throttle control actuator harness connector.
2. Check resistance between electric throttle control actuator terminals as follows.

Terminals	Resistance
5 and 6	Approx. 1 - 15 Ω [at 25 °C (77°F)]

Is the inspection result normal?

YES >> INSPECTION END

NO >> GO TO 2.

2. REPLACE ELECTRIC THROTTLE CONTROL ACTUATOR

1. Replace electric throttle control actuator.
2. Go to EC-356, "Special Repair Requirement".

>> INSPECTION END

Special Repair Requirement

INFOID:0000000003069376

1. PERFORM THROTTLE VALVE CLOSED POSITION LEARNING

Refer to EC-15, "THROTTLE VALVE CLOSED POSITION LEARNING : Special Repair Requirement"

>> GO TO 2.

2. PERFORM IDLE AIR VOLUME LEARNING

Refer to EC-16, "IDLE AIR VOLUME LEARNING : Special Repair Requirement"

>> END

P2118 THROTTLE CONTROL MOTOR

Description

INFOID:0000000003069377

The throttle control motor is operated by the ECM and it opens and closes the throttle valve.
The current opening angle of the throttle valve is detected by the throttle position sensor and it provides feedback to the ECM to control the throttle control motor to make the throttle valve opening angle properly in response to driving condition.

DTC Logic

INFOID:0000000003069378

DTC DETECTION LOGIC

DTC No.	Trouble diagnosis name	DTC detecting condition	Possible cause
P2118	Throttle control motor circuit short	ECM detects short in both circuits between ECM and throttle control motor.	• Harness or connectors (Throttle control motor circuit is shorted.) • Electric throttle control actuator (Throttle control motor)

DTC CONFIRMATION PROCEDURE

1. PRECONDITIONING

If DTC Confirmation Procedure has been previously conducted, always perform the following before conducting the next test.
1. Turn ignition switch OFF and wait at least 10 seconds.
2. Turn ignition switch ON.
3. Turn ignition switch OFF and wait at least 10 seconds.

>> GO TO 2.

2. PERFORM DTC CONFIRMATION PROCEDURE

1. Turn ignition switch ON and wait at least 2 seconds.
2. Turn ignition switch ON (READY).
3. Depress the accelerator pedal to start engine, then keep engine running for at least 5 seconds.
4. Check DTC.

Is DTC detected?

YES >> Go to EC-357, "Diagnosis Procedure".
NO >> INSPECTION END

Diagnosis Procedure

INFOID:0000000003069379

1. CHECK GROUND CONNECTION

1. Turn ignition switch OFF.
2. Check ground connection E9. Refer to Ground Inspection in GI-42, "Intermittent Incident".

Is the inspection result normal?

YES >> GO TO 2.
NO >> Repair or replace ground connection.

2. CHECK THROTTLE CONTROL MOTOR OUTPUT SIGNAL CIRCUIT FOR OPEN AND SHORT

1. Disconnect electric throttle control actuator harness connector.
2. Disconnect ECM harness connector.
3. Check the continuity between electric throttle control actuator harness connector and ECM harness connector.

Electric throttle control actuator		ECM		Continuity
Connector	Terminal	Connector	Terminal	
F57	5	F14	5	Not existed
			6	Existed
	6		5	Existed
			6	Not existed

4. Also check harness for short to ground and short to power.

Is the inspection result normal?

YES >> GO TO 3.
NO >> Repair or replace.

3. CHECK THROTTLE CONTROL MOTOR

Refer to EC-358, "Component Inspection".

Is the inspection result normal?

YES >> GO TO 4.
NO >> GO TO 5.

4. CHECK INTERMITTENT INCIDENT

Refer to GI-42, "Intermittent Incident".

Is the inspection result normal?

YES >> GO TO 5.
NO >> Repair or replace harness or connectors.

5. REPLACE ELECTRIC THROTTLE CONTROL ACTUATOR

1. Replace electric throttle control actuator.
2. Go to EC-358, "Special Repair Requirement".

>> INSPECTION END

Component Inspection

INFOID:0000000003069380

1. CHECK THROTTLE CONTROL MOTOR

1. Disconnect electric throttle control actuator harness connector.
2. Check resistance between electric throttle control actuator terminals as follows.

Terminals	Resistance
5 and 6	Approx. 1 - 15 Ω [at 25 °C (77°F)]

Is the inspection result normal?

YES >> INSPECTION END
NO >> GO TO 2.

2. REPLACE ELECTRIC THROTTLE CONTROL ACTUATOR

1. Replace electric throttle control actuator.
2. Go to EC-356, "Special Repair Requirement".

>> INSPECTION END

Special Repair Requirement

INFOID:0000000003069381

1. PERFORM THROTTLE VALVE CLOSED POSITION LEARNING

Refer to EC-15, "THROTTLE VALVE CLOSED POSITION LEARNING : Special Repair Requirement"

>> GO TO 2.

2. PERFORM IDLE AIR VOLUME LEARNING

Refer to EC-16, "IDLE AIR VOLUME LEARNING : Special Repair Requirement"

>> END

P2119 ELECTRIC THROTTLE CONTROL ACTUATOR

Description

INFOID:0000000003069382

Electric throttle control actuator consists of throttle control motor, throttle position sensor, etc.
The throttle control motor is operated by the ECM and it opens and closes the throttle valve.
The throttle position sensor detects the throttle valve position, and the opening and closing speed of the throttle valve and feeds the voltage signals to the ECM. The ECM judges the current opening angle of the throttle valve from these signals and the ECM controls the throttle control motor to make the throttle valve opening angle properly in response to driving condition.

DTC Logic

INFOID:0000000003069383

DTC DETECTION LOGIC

DTC No.	Trouble diagnosis name	DTC detecting condition		Possible cause
P2119	Electric throttle control actuator	A)	Electric throttle control actuator does not function properly due to the return spring malfunction.	• Electric throttle control actuator
		B)	Throttle valve opening angle in fail-safe mode is not in specified range.	
		C)	ECM detect the throttle valve is stuck open.	

DTC CONFIRMATION PROCEDURE

1. PRECONDITIONING

If DTC Confirmation Procedure has been previously conducted, always perform the following before conducting the next test.
1. Turn ignition switch OFF and wait at least 10 seconds.
2. Turn ignition switch ON.
3. Turn ignition switch OFF and wait at least 10 seconds.

>> GO TO 2.

2. PERFORM DTC CONFIRMATION PROCEDURE FOR MALFUNCTION A AND B

1. Turn ignition switch ON and wait at least 1 second.
2. Set shift lever to D position and wait at least 3 seconds.
3. Set shift lever to P or N position.
4. Turn ignition switch OFF and wait at least 10 seconds.
5. Turn ignition switch ON and wait at least 1 second.
6. Set shift lever to D position and wait at least 3 seconds.
7. Set shift lever to P or N position.
8. Turn ignition switch OFF, wait at least 10 seconds, and then turn ON.
9. Check DTC.

Is DTC detected?

YES >> Go to EC-361, "Diagnosis Procedure".
NO >> GO TO 3.

3. PERFORM DTC CONFIRMATION PROCEDURE FOR MALFUNCTION C

1. Turn ignition switch ON and wait at least 1 second.
2. Set shift lever to D position and wait at least 3 seconds.
3. Set shift lever to P position.
4. Turn ignition switch ON (READY).
5. Depress the accelerator pedal to start engine, then keep engine running for at least 3 seconds.
6. Check DTC.

Is DTC detected?

YES >> Go to EC-361, "Diagnosis Procedure".
NO >> INSPECTION END

Diagnosis Procedure

INFOID:0000000003069384

1. CHECK ELECTRIC THROTTLE CONTROL ACTUATOR VISUALLY

1. Turn ignition switch OFF.
2. Remove the intake air duct.
3. Check if foreign matter is caught between the throttle valve (1) and the housing.

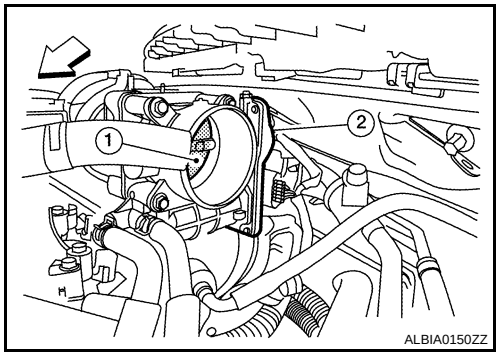

2. Electric throttle control actuator

⇦ : Vehicle front

Is the inspection result normal?

YES >> GO TO 2.
NO >> Remove the foreign matter and clean the electric throttle control actuator inside.

2. REPLACE ELECTRIC THROTTLE CONTROL ACTUATOR

1. Replace electric throttle control actuator.
2. Go to EC-332, "Special Repair Requirement".

>> INSPECTION END

Special Repair Requirement

INFOID:0000000003069385

1. PERFORM THROTTLE VALVE CLOSED POSITION LEARNING

Refer to EC-15, "THROTTLE VALVE CLOSED POSITION LEARNING : Special Repair Requirement"

>> GO TO 2.

2. PERFORM IDLE AIR VOLUME LEARNING

Refer to EC-16, "IDLE AIR VOLUME LEARNING : Special Repair Requirement"

>> END

P2135 TP SENSOR

Description

INFOID:0000000003069386

Electric throttle control actuator consists of throttle control motor, throttle position sensor, etc. The throttle position sensor responds to the throttle valve movement.
The throttle position sensor has two sensors. These sensors are a kind of potentiometers which transform the throttle valve position into output voltage, and emit the voltage signal to the ECM. In addition, these sensors detect the opening and closing speed of the throttle valve and feed the voltage signals to the ECM. The ECM judges the current opening angle of the throttle valve from these signals and the ECM controls the throttle control motor to make the throttle valve opening angle properly in response to driving condition.

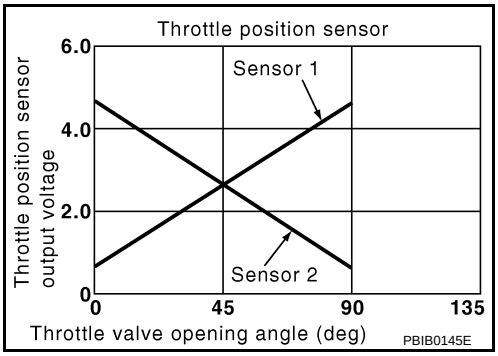

DTC Logic

INFOID:0000000003069387

DTC DETECTION LOGIC

NOTE:
If DTC P2135 is displayed with DTC P0643, first perform the trouble diagnosis for DTC P0643. Refer to EC-316, "DTC Logic".

DTC No.	Trouble diagnosis name	DTC detecting condition	Possible cause
P2135	Throttle position sensor circuit range/performance	Rationally incorrect voltage is sent to ECM compared with the signals from TP sensor 1 and TP sensor 2.	• Harness or connector (TP sensor 1 and 2 circuit is open or shorted.) • Electric throttle control actuator (TP sensor 1 and 2)

DTC CONFIRMATION PROCEDURE

1. PRECONDITIONING

If DTC Confirmation Procedure has been previously conducted, always perform the following before conducting the next test.
1. Turn ignition switch OFF and wait at least 10 seconds.
2. Turn ignition switch ON.
3. Turn ignition switch OFF and wait at least 10 seconds.

TESTING CONDITION:
Before performing the following procedure, confirm that battery voltage is more than 8V at idle.

>> GO TO 2.

2. PERFORM DTC CONFIRMATION PROCEDURE

1. Turn ignition switch ON (READY).
2. Depress the accelerator pedal to start engine, then keep engine running for at least 1 second.
3. Check DTC.

Is DTC detected?

YES >> Go to EC-362, "Diagnosis Procedure".
NO >> INSPECTION END

Diagnosis Procedure

INFOID:0000000003069388

1. CHECK GROUND CONNECTION

1. Turn ignition switch OFF.
2. Check ground connection E9. Refer to Ground Inspection in GI-45, "Circuit Inspection".

Is the inspection result normal?

YES >> GO TO 2.

NO >> Repair or replace ground connection.

2. CHECK THROTTLE POSITION SENSOR POWER SUPPLY CIRCUIT-I

1. Disconnect electric throttle control actuator harness connector.
2. Turn ignition switch ON.
3. Check the voltage between electric throttle control actuator harness connector and ground.

Electric throttle control actuator		Ground	Voltage
Connector	Terminal		
F57	1	Ground	Approx. 5V

Is the inspection result normal?

YES >> GO TO 4.
NO >> GO TO 3.

3. CHECK THROTTLE POSITION SENSOR POWER SUPPLY CIRCUIT-II

1. Turn ignition switch OFF.
2. Disconnect ECM harness connector.
3. Check the continuity between electric throttle control actuator harness connector and ground.

Electric throttle control actuator		ECM		Continuity
Connector	Terminal	Connector	Terminal	
F57	1	F13	47	Existed

Is the inspection result normal?

YES >> GO TO 4.
NO >> Repair open circuit.

4. CHECK THROTTLE POSITION SENSOR GROUND CIRCUIT FOR OPEN AND SHORT

1. Turn ignition switch OFF.
2. Disconnect ECM harness connector.
3. Check the continuity between electric throttle control actuator harness connector and ground.

Electric throttle control actuator		ECM		Continuity
Connector	Terminal	Connector	Terminal	
F57	4	F13	36	Existed

4. Also check harness for short to ground and short to power.

Is the inspection result normal?

YES >> GO TO 5.
NO >> Repair open circuit or short to ground or short to power in harness or connectors.

5. CHECK THROTTLE POSITION SENSOR INPUT SIGNAL CIRCUIT FOR OPEN AND SHORT

1. Check the continuity between electric throttle control actuator harness connector and ground.

Electric throttle control actuator		ECM		Continuity
Connector	Terminal	Connector	Terminal	
F57	2	F13	37	Existed
	3		38	

2. Also check harness for short to ground and short to power.

Is the inspection result normal?

YES >> GO TO 6.
NO >> Repair open circuit or short to ground or short to power in harness or connectors.

6. CHECK THROTTLE POSITION SENSOR

Refer to EC-364, "Component Inspection".

Is the inspection result normal?

YES >> GO TO 8.
NO >> GO TO 7.

7. REPLACE ELECTRIC THROTTLE CONTROL ACTUATOR

1. Replace electric throttle control actuator.
2. Go to EC-364, "Special Repair Requirement".

>> INSPECTION END

8. CHECK INTERMITTENT INCIDENT

Refer to GI-42, "Intermittent Incident".

>> INSPECTION END

Component Inspection

INFOID:0000000003069389

1. CHECK THROTTLE POSITION SENSOR

1. Turn ignition switch OFF.
2. Reconnect all harness connectors disconnected.
3. Perform EC-15, "THROTTLE VALVE CLOSED POSITION LEARNING : Special Repair Requirement".
4. Turn ignition switch ON.
5. Set shift lever to D position.
6. Check the voltage between ECM harness connector and ground.

ECM		Ground	Condition		Voltage
Connector	Terminal				
F13	37 (TP sensor 1 signal)	Ground	Accelerator pedal	Fully released	More than 0.36V
				Fully depressed	Less than 4.75V
	38 (TP sensor 2 signal)			Fully released	Less than 4.75V
				Fully depressed	More than 0.36V

Is the inspection result normal?

YES >> INSPECTION END
NO >> GO TO 2.

2. REPLACE ELECTRIC THROTTLE CONTROL ACTUATOR

1. Replace electric throttle control actuator.
2. Go to EC-364, "Special Repair Requirement".

>> INSPECTION END

Special Repair Requirement

INFOID:0000000003069390

1. PERFORM THROTTLE VALVE CLOSED POSITION LEARNING

Refer to EC-15, "THROTTLE VALVE CLOSED POSITION LEARNING : Special Repair Requirement"

>> GO TO 2.

2. PERFORM IDLE AIR VOLUME LEARNING

Refer to EC-16, "IDLE AIR VOLUME LEARNING : Special Repair Requirement"

>> END

P2423 HC ADSORPTION CATALYST FUNCTION

DTC Logic

INFOID:0000000003069391

DTC DETECTION LOGIC

The ECM monitors the phase gap between heated oxygen sensor 2 signal and heated oxygen sensor 3 signal.
The phase gap between heated oxygen sensor 2 signal and heated oxygen sensor 3 signal becomes small as the HC adsorption catalyst (under floor) is deteriorated.
When the phase gap between heated oxygen sensor 2 signal and heated oxygen sensor 3 signal approaches a specified limit value, the HC adsorption catalyst (under floor) malfunction is diagnosed.

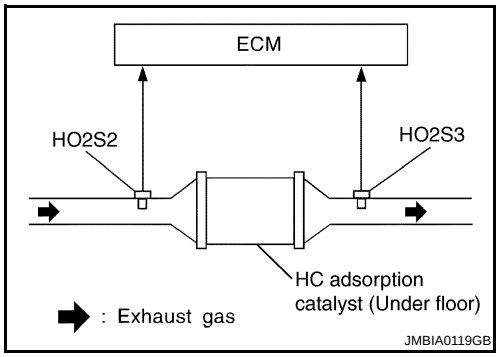

DTC No.	Trouble diagnosis name	DTC detecting condition	Possible cause
P2423	HC adsorption catalyst efficiency below threshold	• HC adsorption catalyst (under floor) does not operate properly. • HC adsorption catalyst (under floor) does not have enough oxygen storage capacity.	• HC adsorption catalyst (under floor) • Exhaust tube • Intake air leaks • Fuel injector • Fuel injector leaks • Spark plug • Improper ignition timing

DTC CONFIRMATION PROCEDURE

1. PRECONDITIONING

If DTC Confirmation Procedure has been previously conducted, always perform the following before conducting the next test.
1. Turn ignition switch OFF and wait at least 10 seconds.
2. Turn ignition switch ON.
3. Turn ignition switch OFF and wait at least 10 seconds.

>> GO TO 2.

2. PERFORM DTC CONFIRMATION PROCEDURE

CAUTION:
Always drive vehicle in safe manner according to traffic conditions and obey all traffic laws.

With CONSULT-III
1. Activate “INSPECTION MODE 1” (HBC-97) to start engine, and warm up engine to normal operating temperature.
2. Turn ignition switch OFF and wait at least 10 seconds.
3. Turn ignition switch ON.
4. Turn ignition switch OFF and wait at least 10 seconds.
5. Turn ignition switch ON (READY).
6. Repeat following procedure 2 times.
- Drive vehicle at a speed of 80 km/h (50 MPH) or more for at least 3 consecutive minutes.

  NOTE:
  Keep the vehicle speed as steady as possible during the cruising.
- Stop vehicle.

  NOTE:
  Never turn ignition switch OFF.
7. Select “DTC & SRT CONFIRMATION” then “SRT WORK SUPPORT” mode with CONSULT-III.
8. Drive vehicle at a speed of 80 km/h (50 MPH) or more until “INCMP” of “CATALYST” changes to “CMPLT”.
   NOTE:
   - **Keep the vehicle speed as steady as possible during the cruising.**
   - **It will take at most 3 minutes until “INCMP” of “CATALYST” changes to “CMPLT”.**
9. Check 1st trip DTC.

With GST

1. Activate “INSPECTION MODE 1” (HBC-97) to start engine, and warm up engine to normal operating temperature.
2. Turn ignition switch OFF and wait at least 10 seconds.
3. Turn ignition switch ON.
4. Turn ignition switch OFF and wait at least 10 seconds.
5. Turn ignition switch ON (READY).
6. Repeat following procedure 3 times.

- Drive vehicle at a speed of 80 km/h (50 MPH) or more for at least 3 consecutive minutes.

NOTE:
Keep the vehicle speed as steady as possible during the cruising.

- Stop vehicle.

NOTE:
Never turn ignition switch OFF.

7. Check 1st trip DTC.

Is 1st tip DTC detected?

YES >> Go to EC-366, "Diagnosis Procedure".
NO >> INSPECTION END

Diagnosis Procedure

INFOID:0000000003069392

1. CHECK EXHAUST SYSTEM

Visually check exhaust tubes and muffler for dent.

Is the inspection result normal?

YES >> GO TO 2.
NO >> Repair or replace.

2. CHECK EXHAUST GAS LEAK

1. Activate “INSPECTION MODE 1” (HBC-97) to start engine.
2. Listen for an exhaust gas leak before the HC adsorption catalyst (under floor).

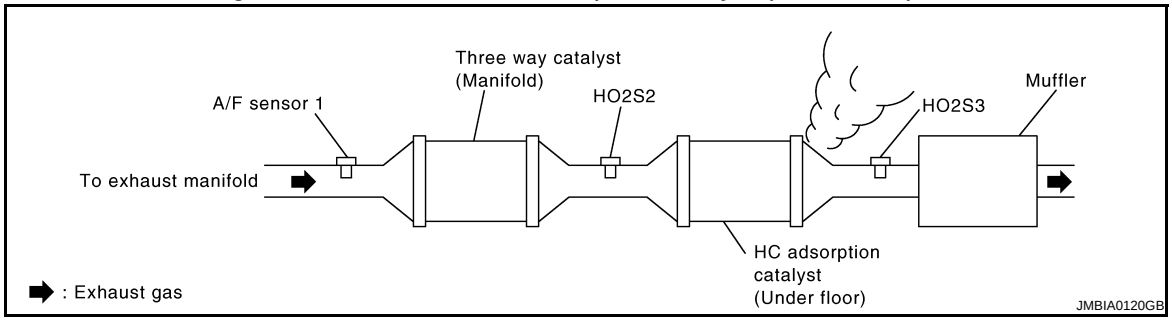

Is exhaust gas leak detected?

OK >> Repair or replace.
NG >> GO TO 3.

3. CHECK INTAKE AIR LEAK

Listen for an intake air leak after the mass air flow sensor.

Is intake air leak detected?

YES >> Repair or replace.
NO >> GO TO 4.

4. CHECK IDLE SPEED AND IGNITION TIMING

For procedure, refer to EC-11, "BASIC INSPECTION : Special Repair Requirement".
For specification, refer to EC-459, "Idle Speed" and EC-459, "Ignition Timing".

Is the inspection result normal?

YES >> GO TO 5.
NO >> Follow the EC-11, "BASIC INSPECTION : Special Repair Requirement".

5. CHECK FUEL INJECTOR

1. Turn ignition switch OFF and then turn ON.
2. Check the voltage between ECM harness connector and ground.

ECM		Ground	Voltage
Connector	Terminal		
F14	29	Ground	Battery voltage
	30		
	31		
	32		

Is the inspection result normal?

YES >> GO TO 6.
NO >> Perform EC-236, "Diagnosis Procedure".

6. CHECK FUNCTION OF IGNITION COIL-I

CAUTION:
Do the following procedure in the place where ventilation is good without the combustible.

1. Turn ignition switch OFF.
2. Remove fuel pump fuse in IPDM E/R to release fuel pressure.
   NOTE:
   Do not use CONSULT-III to release fuel pressure, or fuel pressure applies again during the following procedure.
3. Turn ignition switch ON (READY).
4. Depress accelerator pedal and keep it.
5. After engine stalls, check DTC.
   If DTC is detected, erase DTC and go to next steps.
   If DTC is not detected, go to next steps.
6. Turn ignition switch OFF.
7. Remove all ignition coil harness connectors to avoid the electrical discharge from the ignition coils.
8. Remove ignition coil and spark plug of the cylinder to be checked.
9. Repeat steps 3 to 5 for two or three times to remove combustion gas in the cylinder.
10. Connect spark plug and harness connector to ignition coil.
11. Fix ignition coil using a rope etc. with gap of 13 - 17 mm (0.52 - 0.66 in) between the edge of the spark plug and grounded metal portion as shown in the figure.
12. Turn ignition switch ON (READY).
13. Depress accelerator pedal for about 3 seconds, and check whether spark is generated between the spark plug and the grounded metal portion.

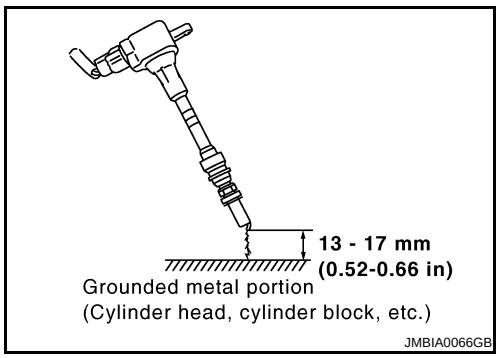

Spark should be generated.

CAUTION:
- **Do not approach to the spark plug and the ignition coil within 50 cm (19.7 in). Be careful not to get an electrical shock while checking, because the electrical discharge voltage becomes 20kV or more.**
- **It might cause to damage the ignition coil if the gap of more than 17 mm (0.66 in) is taken.**

NOTE:
When the gap is less than 13 mm (0.52 in), the spark might be generated even if the coil is malfunctioning.

Is the inspection result normal?

YES >> GO TO 10.
NO >> GO TO 7.

7. CHECK FUNCTION OF IGNITION COIL-II

1. Turn ignition switch OFF.
2. Disconnect spark plug and connect a known-good spark plug.
3. Turn ignition switch ON (READY).

4. Depress the accelerator pedal to crank engine for about 3 seconds, and recheck whether spark is generated between the spark plug and the grounded metal portion.

Spark should be generated.

Is the inspection result normal?

YES >> GO TO 8.
NO >> Check ignition coil, power transistor and their circuits. Refer to EC-384, "Diagnosis Procedure".

8. CHECK SPARK PLUG

Check the initial spark plug for fouling, etc.

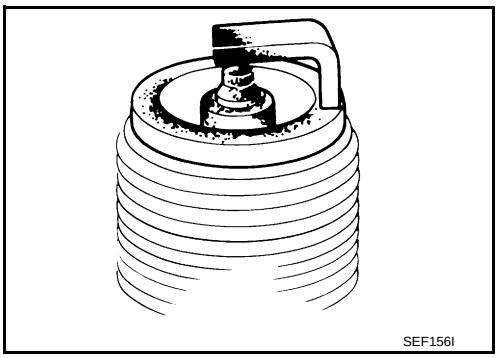

Is the inspection result normal?

YES >> Replace spark plug(s) with standard type one(s). For spark plug type, refer to MA-19, "SPARK PLUG (PLATINUM-TIPPED TYPE) : Removal and Installation".
NO >> Repair or clean spark plug. Then GO TO 9.

9. CHECK FUNCTION OF IGNITION COIL-III

1. Reconnect the initial spark plugs.
2. Turn ignition switch ON (READY).
3. Depress the accelerator pedal to crank engine for about 3 seconds, and recheck whether spark is generated between the spark plug and the grounded metal portion.

Spark should be generated.

Is the inspection result normal?

YES >> INSPECTION END
NO >> Replace spark plug(s) with standard type one(s). For spark plug type, refer to MA-19, "SPARK PLUG (PLATINUM-TIPPED TYPE) : Removal and Installation".

10. CHECK FUEL INJECTOR

1. Turn ignition switch OFF.
2. Remove fuel injector assembly.
   Refer to EM-34, "Removal and Installation".
   Keep fuel hose and all fuel injectors connected to fuel tube.
3. Disconnect all ignition coil harness connectors.
4. Reconnect all fuel injector harness connectors disconnected.
5. Turn ignition switch ON.
   Make sure fuel does not drip from fuel injector.

Is the inspection result normal?

YES >> GO TO 11.
NO >> Replace the fuel injector(s) from which fuel is dripping.

11. CHECK INTERMITTENT INCIDENT

Refer to GI-42, "Intermittent Incident".

Is the trouble fixed?

YES >> INSPECTION END
NO >> Replace HC adsorption catalyst (under floor).

P2A00 A/F SENSOR 1

Description

INFOID:0000000003069393

The air fuel ratio (A/F) sensor 1 is a planar one-cell limit current sensor. The sensor element of the A/F sensor 1 is composed an electrode layer, which transports ions. It has a heater in the element.

The sensor is capable of precise measurement λ = 1, but also in the lean and rich range. Together with its control electronics, the sensor outputs a clear, continuous signal throughout a wide λ range.

The exhaust gas components diffuse through the diffusion layer at the sensor cell. An electrode layer is applied voltage, and this current relative oxygen density in lean. Also this current relative hydrocarbon density in rich.

Therefore, the A/F sensor 1 is able to indicate air fuel ratio by this electrode layer of current. In addition, a heater is integrated in the sensor to ensure the required operating temperature of about 800°C (1,472°F).

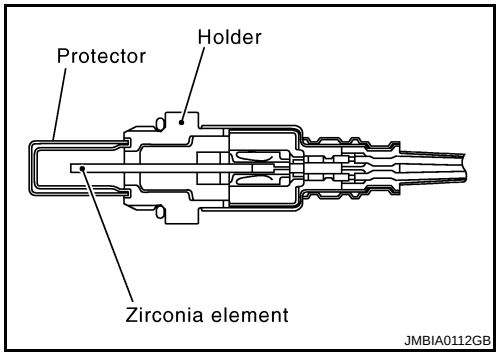

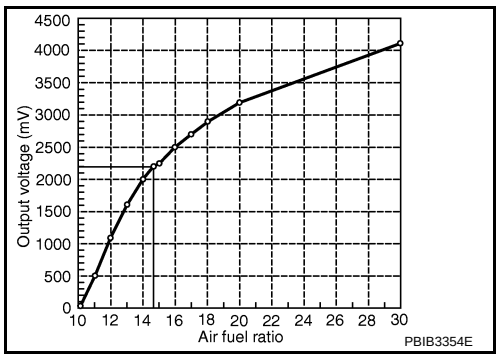

DTC Logic

INFOID:0000000003069394

DTC DETECTION LOGIC

To judge the malfunction, the A/F signal computed by ECM from the A/F sensor 1 signal is monitored not to be shifted to LEAN side or RICH side.

DTC No.	Trouble diagnosis name	DTC detecting condition	Possible Cause
P2A00	Air fuel ratio (A/F) sensor 1 circuit range/performance	• The output voltage computed by ECM from the A/F sensor 1 signal is shifted to the lean side for a specified period. • The A/F signal computed by ECM from the A/F sensor 1 signal is shifted to the rich side for a specified period.	• A/F sensor 1 • A/F sensor 1 heater • Fuel pressure • Fuel injector • Intake air leaks

DTC CONFIRMATION PROCEDURE

1. PRECONDITIONING

If DTC Confirmation Procedure has been previously conducted, always perform the following before conducting the next test.

1. Turn ignition switch OFF and wait at least 10 seconds.
2. Turn ignition switch ON.
3. Turn ignition switch OFF and wait at least 10 seconds.

TESTING CONDITION:

Before performing the following procedure, confirm that battery voltage is more than 11V at idle.

>> GO TO 2.

2. PERFORM DTC CONFIRMATION PROCEDURE

1. Clear the mixture ratio self-learning value. Refer to EC-18, "MIXTURE RATIO SELF-LEARNING VALUE CLEAR : Special Repair Requirement".
2. Turn ignition switch OFF and wait at least 10 seconds.

3. Activate “INSPECTION MODE 1” (HBC-97) to start engine, and warm up engine to normal operating temperature.
4. Turn ignition switch OFF and wait at least 10 seconds.
5. Turn ignition switch ON.
6. Turn ignition switch OFF and wait at least 10 seconds.
7. Turn ignition switch ON (READY).
8. Drive vehicle at a speed of 80 km/h (50 MPH) or more for at least 3 consecutive minutes.
   CAUTION:
   Always drive vehicle in safe manner according to traffic conditions and obey all traffic laws.
   NOTE:
   Keep the vehicle speed as steady as possible during the cruising.
9. Stop the vehicle and shift the selector lever to P position.
10. Repeat following procedure 4 times.
- Fully depress the accelerator pedal and keep the engine speed 2,500 rpm for 5 minutes.
- Fully release the accelerator pedal.
11. Check 1st trip DTC.

Is 1st trip DTC detected?

YES >> Go to EC-370, "Diagnosis Procedure".
NO >> INSPECTION END

Diagnosis Procedure

INFOID:0000000003069395

1. CHECK GROUND CONNECTION

1. Turn ignition switch OFF.
2. Check ground connection E9. Refer to Ground Inspection in GI-45, "Circuit Inspection".

Is the inspection result normal?

YES >> GO TO 2.
NO >> Repair or replace ground connection.

2. RETIGHTEN A/F SENSOR 1

1. Loosen and retighten the A/F sensor 1.

Tightening torque: 50 N-m (5.1 kg-m, 37 ft-lb)

>> GO TO 3.

3. CHECK FOR INTAKE AIR LEAK

1. Activate “INSPECTION MODE 1” (HBC-97) to start engine.
2. Listen for an intake air leak after the mass air flow sensor.

Is intake air leak detected?

YES >> GO TO 4.
NO >> Repair or replace.

4. CLEAR THE MIXTURE RATIO SELF-LEARNING VALUE

1. Clear the mixture ratio self-learning value. Refer to EC-18, "MIXTURE RATIO SELF-LEARNING VALUE CLEAR : Special Repair Requirement".
2. Activate “INSPECTION MODE 1” (HBC-97) to start engine, and let engine idle for at least 10 minutes.

Is the 1st trip DTC P0171 or P0172 detected? Is it difficult to start engine?

YES >> Perform trouble diagnosis for DTC P0171or P0172. Refer to EC-222, "DTC Logic" or EC-226, "DTC Logic".
NO >> GO TO 5.

5. CHECK HARNESS CONNECTOR

1. Turn ignition switch OFF.
2. Disconnect A/F sensor 1 harness connector.
3. Check harness connector for water.

Water should not exit.

Is the inspection result normal?

YES >> GO TO 6.
NO >> Repair or replace harness connector.

6. CHECK A/F SENSOR 1 POWER SUPPLY CIRCUIT

1. Turn ignition switch ON.
2. Check the voltage between A/F sensor 1 harness connector and ground.

A/F sensor 1		Ground	Voltage
Connector	Terminal		
F44	4	Ground	Battery voltage

Is the inspection result normal?

YES >> GO TO 8.
NO >> GO TO 7.

7. DETECT MALFUNCTIONING PART

Check the following.
- IPDM E/R harness connector F10
- 15A fuse (No. 37)
- Harness for open or short between A/F sensor 1 and fuse

>> Repair or replace harness or connectors.

8. CHECK A/F SENSOR 1 INPUT SIGNAL CIRCUIT FOR OPEN AND SHORT

1. Turn ignition switch OFF.
2. Disconnect ECM harness connector.
3. Check the continuity between A/F sensor 1 harness connector and ECM harness connector.

A/F sensor 1		ECM		Continuity
Connector	Terminal	Connector	Terminal	
F44	1	F13	45	Existed
	2		49	

4. Check the continuity between ECM harness connector or A/F sensor 1 harness connector and ground.

A/F sensor 1		ECM		Ground	Continuity
Connector	Terminal	Connector	Terminal		
F44	1	F13	45	Ground	Not existed
	2		49		

5. Also check harness for short to power.

Is the inspection result normal?

YES >> GO TO 9.
NO >> Repair open circuit or short to ground or short to power in harness or connectors.

9. CHECK A/F SENSOR 1 HEATER

Refer to EC-135, "Component Inspection".

Is the inspection result normal?

YES >> GO TO 10.
NO >> GO TO 11.

10. CHECK INTERMITTENT INCIDENT

Perform GI-42, "Intermittent Incident".

Is the inspection result normal?

YES >> GO TO 11.

NO >> Repair or replace.

11. REPLACE AIR FUEL RATIO (A/F) SENSOR 1

Replace air fuel ratio (A/F) sensor 1.

CAUTION:

- **Discard any A/F sensor which has been dropped from a height of more than 0.5 m (19.7 in) onto a hard surface such as a concrete floor; use a new one.**
- **Before installing new A/F sensor, clean exhaust system threads using Oxygen Sensor Thread Cleaner tool J-43897-18 or J-43897-12 and approved anti-seize lubricant.**

Do you have CONSULT-III?

YES >> GO TO 12.
NO >> GO TO 13.

12. CONFIRM A/F ADJUSTMENT DATA

With CONSULT-III

1. Turn ignition switch ON.
2. Select “A/F ADJ-B1” in “DATA MONITOR” mode with CONSULT-III.
3. Make sure that “0.000” is displayed on CONSULT-III screen.

Is “0.000” displayed?

YES >> INSPECTION END
NO >> GO TO 13.

13. CLEAR THE MIXTURE RATIO SELF-LEARNING VALUE

Clear the mixture ratio self-learning value. Refer to EC-18, "MIXTURE RATIO SELF-LEARNING VALUE CLEAR : Special Repair Requirement".

Do you have CONSULT-III?

YES >> GO TO 14.
NO >> INSPECTION END

14. CONFIRM A/F ADJUSTMENT DATA

With CONSULT-III

1. Turn ignition switch ON.
2. Select “A/F ADJ-B1” in “DATA MONITOR” mode with CONSULT-III.
3. Make sure that “0.000” is displayed on CONSULT-III screen.

>> INSPECTION END

ASCD BRAKE SWITCH

Description

INFOID:0000000003069396

When the brake pedal is depressed, ASCD brake switch is turned OFF and stop lamp switch is turned ON. ECM and hybrid vehicle control ECU detects the state of the brake pedal by this input of two kinds (ON/OFF signal). Refer to EC-45, "System Description" for the ASCD function.

Component Function Check

INFOID:0000000003069397

1. CHECK FOR ASCD BRAKE SWITCH FUNCTION

With CONSULT-III

1. Turn ignition switch ON.
2. Select “BRAKE SW1” in “DATA MONITOR” mode with CONSULT-III.
3. Check “BRAKE SW1” indication under the following conditions.

Monitor item	Condition		Indication
BRAKE SW1	Brake pedal	Slightly depressed	OFF
		Fully released	ON

Without CONSULT-III

1. Turn ignition switch ON.
2. Check the voltage between ECM harness connector and ground.

ECM		Ground	Condition		Voltage
Connector	Terminal				
E10	110 (ASCD brake switch signal)	Ground	Brake pedal	Slightly depressed	Approx. 0V
				Fully released	Battery voltage

Is the inspection result normal?

YES >> INSPECTION END.
NO >> Refer to EC-373, "Diagnosis Procedure".

Diagnosis Procedure

INFOID:0000000003069398

1. CHECK ASCD BRAKE SWITCH POWER SUPPLY CIRCUIT

1. Turn ignition switch OFF.
2. Disconnect ASCD brake switch harness connector.
3. Turn ignition switch ON.
4. Check the voltage between ASCD brake switch harness connector and ground.

ASCD brake switch		Ground	Voltage
Connector	Terminal		
E37	1	Ground	Battery voltage

Is the inspection result normal?

YES >> GO TO 3.
NO >> GO TO 2.

2. DETECT MALFUNCTIONING PART

Check the following.

- Fuse block (J/B) connector E6
- Junction block connector E46, E48
- 10A fuse (No. 3)
- Harness for open or short between ASCD brake switch and fuse

>> Repair open circuit or short to ground or short to power in harness or connectors.

3. CHECK ASCD BRAKE SWITCH INPUT SIGNAL CIRCUIT FOR OPEN AND SHORT

1. Turn ignition switch OFF.
2. Disconnect ECM harness connector.
3. Check the continuity between ASCD brake switch harness connector and ECM harness connector.

ASCD brake switch		ECM		Continuity
Connector	Terminal	Connector	Terminal	
E37	2	E10	110	Existed

4. Also check harness for short to ground and short to power.

Is the inspection result normal?

YES >> GO TO 5.
NO >> GO TO 4.

4. DETECT MALFUNCTIONING PART

Check the following.
- Junction block connector E45, E46
- Harness for open or short between ASCD brake switch and fuse

>> Repair open circuit or short to ground or short to power in harness or connectors.

5. CHECK ASCD BRAKE SWITCH

Refer to EC-374, "Component Inspection (ASCD Brake Switch)".

Is the inspection result normal?

YES >> GO TO 6.
NO >> Replace ASCD brake switch.

6. CHECK INTERMITTENT INCIDENT

Refer to GI-42, "Intermittent Incident".

>> INSPECTION END

Component Inspection (ASCD Brake Switch)

INFOID:0000000003069399

1. CHECK ASCD BRAKE SWITCH-I

1. Turn ignition switch OFF.
2. Disconnect ASCD brake switch harness connector.
3. Check the continuity between ASCD brake switch terminals under the following conditions.

Terminals	Condition		Continuity
1 and 2	Brake pedal	Fully released	Existed
		Slightly depressed	Not existed

Is the inspection result normal?

YES >> INSPECTION END
NO >> GO TO 2.

2. CHECK ASCD BRAKE SWITCH-II

1. Adjust ASCD brake switch installation. Refer to BR-11, "Inspection and Adjustment".
2. Check the continuity between ASCD brake switch terminals under the following conditions.

Terminals	Condition		Continuity
1 and 2	Brake pedal	Fully released	Existed
		Slightly depressed	Not existed

Is the inspection result normal?

YES >> INSPECTION END
NO >> Replace ASCD brake switch.

COOLING FAN

Description

INFOID:0000000003069400

COOLING FAN CONTROL MODULE

Cooling fan control module receives ON/OFF pulse duty signal from IPDM E/R. Corresponding to this ON/OFF pulse duty signal, cooling fan control module sends cooling fan motor operating voltage to cooling fan motor. The revolution speed of cooling fan motor is controlled by duty cycle of the voltage.

COOLING FAN MOTOR

Cooling fan motor receives cooling fan motor operating voltage from cooling fan control module. The revolution speed of cooling fan motor is controlled by duty cycle of the voltage.

Component Function Check

INFOID:0000000003069401

1. CHECK COOLING FAN FUNCTION

With CONSULT-III

1. Turn ignition switch ON.
2. Perform “FAN DUTY CONTROL” in “ACTIVE TEST” mode with CONSULT-III.
3. Make sure that cooling fan speed varies according to the percent.

Without CONSULT-III

1. Perform IPDM E/R auto active test and check cooling fan motors operation, refer to PCS-10, "Diagnosis Description".
2. Make sure that cooling fan operates.

Is the inspection result normal?

YES >> INSPECTION END
NO >> Go to EC-376, "Diagnosis Procedure".

Diagnosis Procedure

INFOID:0000000003069402

1. CHECK COOLING FAN CONTROL MODULE POWER SUPPLY CIRCUIT-I

1. Turn ignition switch OFF.
2. Disconnect cooling fan control module harness connector E231.
3. Turn ignition switch ON.
4. Check the voltage between cooling fan control module harness connector and ground.

Cooling fan control module		Ground	Voltage
Connector	Terminal		
E231	3	Ground	Battery voltage

Is the inspection result normal?

YES >> GO TO 2.
NO >> GO TO 7.

2. CHECK COOLING FAN CONTROL MODULE GROUND CIRCUIT

1. Turn ignition switch OFF.
2. Check the continuity between cooling fan control module harness connector and ground.

Cooling fan control module		Ground	Continuity
Connector	Terminal		
E231	1	Ground	Existed

3. Also check harness for short to power.

Is the inspection result normal?

YES >> GO TO 3.
NO >> Repair open circuit or short to power in harness or connectors.

3. CHECK IPDM E/R GROUND CIRCUIT

1. Disconnect IPDM E/R harness connectors E17, E18.
2. Check the continuity between IPDM E/R harness connector and ground.

IPDM E/R		Ground	Continuity
Connector	Terminal		
E18	12	Ground	Existed
E17	41		

3. Also check harness for short to power.

Is the inspection result normal?

YES >> GO TO 4.
NO >> Repair open circuit or short to power in harness or connectors.

4. CHECK COOLING FAN CONTROL SIGNAL CIRCUIT

1. Disconnect IPDM E/R harness connector E201.
2. Check the continuity between IPDM E/R harness connector and cooling fan control module harness connector.

IPDM E/R		Cooling fan control module		Continuity
Connector	Terminal	Connector	Terminal	
E201	97	E231	2	Existed

3. Also check harness for short to ground and short to power.

Is the inspection result normal?

YES >> GO TO 5.
NO >> Repair open circuit or short to ground or short to power in harness or connectors.

5. CHECK COOLING FAN CONTROL MODULE OUTPUT SIGNAL CIRCUIT

1. Reconnect all harness connectors disconnected.
2. Disconnect cooling fan control module harness connectors E232, E233.
3. Turn ignition switch ON.
4. Check the voltage between cooling fan control module harness connector and ground.

Cooling fan control module		Ground	Voltage
Connector	Terminal		
E232	4	Ground	Battery voltage
E233	6		

Is the inspection result normal?

YES >> GO TO 6.
NO >> Replace cooling fan control module.

6. CHECK COOLING FAN MOTORS -1 AND -2

Refer to EC-379, "Component Inspection (Cooling Fan Motor)".

Is the inspection result normal?

YES >> GO TO 11.
NO >> Replace cooling fan motor.

7. CHECK COOLING FAN CONTROL MODULE POWER SUPPLY CIRCUIT-II

1. Turn ignition switch OFF.
2. Disconnect cooling fan relay harness connector E82.
3. Turn ignition switch ON.
4. Check the voltage between cooling fan relay harness connector and ground.

Cooling fan relay-1		Ground	Voltage
Connector	Terminal		
E82	1	Ground	Battery voltage
	3		

Is the inspection result normal?

YES >> GO TO 9.
NO >> GO TO 8.

8. DETECT MALFUNCTIONING PART

Check the following.
- IPDM E/R harness connector E18
- 50A fusible link (letter O)
- Harness for open or short between cooling fan relay-1 and fuse
- Harness for open or short between cooling fan relay-1 and IPDM E/R

>> Repair open circuit or short to ground or short to power in harness or connectors.

9. CHECK COOLING FAN CONTROL MODULE POWER SUPPLY CIRCUIT-III

1. Turn ignition switch OFF.
2. Disconnect IPDM E/R harness connector E17.
3. Check the continuity between cooling fan relay-1 harness connector and IPDM E/R harness connector.

Cooling fan relay-1		IPDM E/R		Continuity
Connector	Terminal	Connector	Terminal	
E82	2	E17	42	Existed

4. Check the continuity between cooling fan relay harness connector and cooling fan control module harness connector.

Cooling fan relay-1		Cooling fan control module		Continuity
Connector	Terminal	Connector	Terminal	
E82	5	E231	3	Existed

5. Also check harness for short to ground and short to power.

Is the inspection result normal?

YES >> GO TO 11.
NO >> GO TO 10.

10. DETECT MALFUNCTIONING PART

Check the following.
- Harness connector E81, E207
- Harness for open or short between cooling fan relay-1 and cooling fan control module

>> Repair open circuit or short to ground or short to power in harness or connectors.

11. CHECK COOLING FAN RELAY-1

Refer to EC-379, "Component Inspection (Cooling Fan Relay)".

Is the inspection result normal?

YES >> GO TO 12.
NO >> Replace cooling fan relay-1.

12. CHECK INTERMITTENT INCIDENT

Perform GI-42, "Intermittent Incident".

Is the inspection result normal?

YES >> Replace IPDM E/R.
NO >> Repair or replace harness connectors.

Component Inspection (Cooling Fan Motor)

INFOID:0000000003069403

1. CHECK COOLING FAN MOTOR

1. Turn ignition switch OFF.
2. Disconnect cooling fan control module harness connectors E232, E233.
3. Supply cooling fan control module terminals with battery voltage and check operation.

Cooling fan control module				Operation
Motor	Connector	Terminal		
		(+)	(–)	
1	E232	4	5	Cooling fan operates.
2	E233	6	7	

Is the inspection result normal?

YES >> INSPECTION END
NO >> Replace cooling fan motor.

Component Inspection (Cooling Fan Relay)

INFOID:0000000003069404

1. CHECK COOLING FAN RELAY-1

1. Turn ignition switch OFF.
2. Remove cooling fan relay-1.
3. Check the continuity between cooling fan relay-1 terminals under the following conditions.

Terminals	Conditions	Continuity
3 and 5	12V direct current supply between terminals 1 and 2	Existed
	No current supply	Not existed

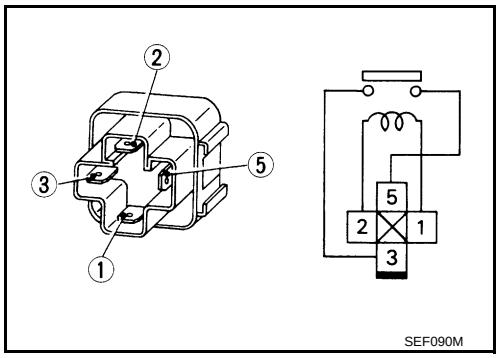

Is the inspection result normal?

YES >> INSPECTION END
NO >> Replace cooling fan relay.

FUEL PUMP

Description

INFOID:0000000003069405

Sensor	Input signal to ECM	ECM Function	Actuator
Crankshaft position sensor (POS) Camshaft position sensor (PHASE)	Engine speed*	Fuel pump control	Fuel pump relay ↓ Fuel pump
Battery	Battery voltage*		

*: ECM determines the start signal status by the signals of engine speed and battery voltage.

The ECM activates the fuel pump for several seconds after the ignition switch is turned ON to improve engine startability. If the ECM receives a engine speed signal from the camshaft position sensor (PHASE), it knows that the engine is rotating, and causes the pump to operate. If the engine speed signal is not received when the ignition switch is ON, the engine stalls. The ECM stops pump operation and prevents battery discharging, thereby improving safety. The ECM does not directly drive the fuel pump. It controls the ON/OFF fuel pump relay, which in turn controls the fuel pump.

Condition	Fuel pump operation
Ignition switch is turned to ON.	Operates for 1 second.
Engine running and cranking	Operates.
When engine is stopped	Stops in 1.5 seconds.
Except as shown above	Stops.

Component Function Check

INFOID:0000000003069406

1. CHECK FUEL PUMP FUNCTION

1. Turn ignition switch ON.
2. Pinch fuel feed hose (1) with two fingers.

⇦ : Vehicle front

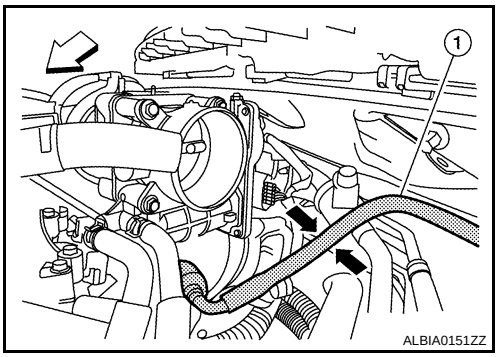

Fuel pressure pulsation should be felt on the fuel feed hose for 1 second after ignition switch is turned ON.

Is the inspection result normal?

YES >> INSPECTION END
NO >> EC-380, "Diagnosis Procedure".

Diagnosis Procedure

INFOID:0000000003069407

1. CHECK FUEL PUMP POWER SUPPLY CIRCUIT-I

1. Turn ignition switch OFF.
2. Disconnect ECM harness connector.
3. Turn ignition switch ON.
4. Check the voltage between ECM harness connector and ground.

ECM		Ground	Voltage
Connector	Terminal		
F14	14	Ground	Battery voltage

Is the inspection result normal?

YES >> GO TO 4.
NO >> GO TO 2.

2. CHECK FUEL PUMP POWER SUPPLY CIRCUIT-II

1. Turn ignition switch OFF.
2. Disconnect IDPDM E/R harness connector F10.
3. Check the continuity between IPDM E/R harness connector and ECM harness connector.

ECM		IPDM E/R		Continuity
Connector	Terminal	Connector	Terminal	
F14	14	F10	77	Existed

Is the inspection result normal?

YES >> GO TO 3.
NO >> Repair open circuit or short to ground or short to power in harness or connectors.

3. CHECK CONDENSER-1 POWER SUPPLY CIRCUIT-I

1. Reconnect all harness connectors disconnected.
2. Disconnect condenser-1 harness connector.
3. Turn ignition switch ON.
4. Check the voltage between condenser-1 harness connector and ground.

Condenser-1		Ground	Voltage
Connector	Terminal		
B17	1	Ground	Battery voltage should exist for 1 second after ignition switch is turned ON.

Is the inspection result normal?

YES >> GO TO 5.
NO >> GO TO 4.

4. CHECK 15A FUSE

1. Turn ignition switch OFF.
2. Disconnect 15A fuse (No. 32) from IPDM E/R.
3. Check 15A fuse.

Is the inspection result normal?

YES >> GO TO 6.
NO >> Replace fuse.

5. CHECK CONDENSER-1 POWER SUPPLY CIRCUIT-II

1. Disconnect IPDM E/R harness connector E18.
2. Check the continuity between IPDM E/R harness connector and condenser-1 harness connector.

IPDM E/R		Condenser-1		Continuity
Connector	Terminal	Connector	Terminal	
F18	13	B17	1	Existed

3. Also check harness for short to ground and short to power.

Is the inspection result normal?

YES >> GO TO 13.
NO >> GO TO 7.

6. DETECT MALFUNCTIONING PART

Check the following.
- Harness connectors E29, B10
- IPDM E/R connector E18
- Harness for open or short between IPDM E/R and condenser-1

>> Repair open circuit or short to power in harness or connectors.

7. CHECK CONDENSER GROUND CIRCUIT

1. Turn ignition switch OFF.
2. Disconnect dropping resistor harness connector.
3. Check the continuity between condenser-1 harness connector and ground.

Condenser-1		Ground	Continuity
Connector	Terminal		
B17	2	Ground	Existed

4. Also check harness for short to ground and short to power.

Is the inspection result normal?

YES >> GO TO 8.
NO >> Repair open circuit or short to power in harness or connectors.

8. CHECK CONDENSER-1

Refer to EC-383, "Component Inspection (Condenser-1)".

Is the inspection result normal?

YES >> GO TO 9.
NO >> Replace condenser-1.

9. CHECK FUEL PUMP POWER SUPPLY CIRCUIT-III

1. Disconnect “fuel level sensor unit and fuel pump” harness connector.
2. Check the continuity between IPDM E/R harness connector and “fuel level sensor unit and fuel pump” and ground.

IPDM E/R		Fuel level sensor unit and fuel pump		Continuity
Connector	Terminal	Connector	Terminal	
E18	13	B42	1	Existed

Is the inspection result normal?

YES >> GO TO 11.
NO >> GO TO 10.

10. DETECT MALFUNCTIONING PART

Check the following.
- Harness connector E29, B10
- Harness for open or short between “fuel level sensor unit and fuel pump” and IPDM E/R
- Harness for open or short between “fuel level sensor unit and fuel pump” and ground

>> Repair open circuit or short to power in harness or connectors.

11. CHECK FUEL PUMP GROUND CIRCUIT

1. Check the continuity between “fuel level sensor unit and fuel pump” and ground.

Fuel level sensor unit and fuel pump		Ground	Continuity
Connector	Terminal		
B42	3	Ground	Existed

2. Also heck harness for short to power.

Is the inspection result normal?

YES >> GO TO 12.
NO >> Repair open circuit or short to power in harness or connectors.

12. CHECK FUEL PUMP

Refer to EC-383, "Component Inspection (Fuel Pump)".

Is the inspection result normal?

YES >> GO TO 13.
NO >> Replace fuel pump.

13. CHECK INTERMITTENT INCIDENT

Refer to GI-42, "Intermittent Incident".

Is the inspection result normal?

YES >> Replace IPDM E/R.
NO >> Repair or replace harness or connectors.

Component Inspection (Fuel Pump)

INFOID:0000000003069408

1. CHECK FUEL PUMP

1. Turn ignition switch OFF.
2. Disconnect “fuel level sensor unit and fuel pump” harness connector.
3. Check resistance between “fuel level sensor unit and fuel pump” terminals as follows.

Terminals	Resistance
1 and 3	0.2 - 5.0Ω [at 25°C (77°F)]

Is the inspection result normal?

YES >> INSPECTION END
NO >> Replace “fuel level sensor unit and fuel pump”.

Component Inspection (Condenser-1)

INFOID:0000000003069409

1. CHECK CONDENSER

1. Turn ignition switch OFF.
2. Disconnect condenser-1 harness connector.
3. Check resistance between condenser-1 terminals as follows.

Terminal	Resistance
1 and 2	Above 1MΩ [at 25°C (77°F)]

Is the inspection result normal?

YES >> INSPECTION END
NO >> Replace condenser-1.

IGNITION SIGNAL

Description

INFOID:0000000003069410

The ignition signal from the ECM is sent to and amplified by the power transistor. The power transistor turns ON and OFF the ignition coil primary circuit. This ON/OFF operation induces the proper high voltage in the coil secondary circuit.

Component Function Check

INFOID:0000000003069411

1. INSPECTION START

1. Turn ignition switch OFF and wait at least 10 seconds.
2. Turn ignition switch ON (READY).
3. Depress the accelerator pedal to start engine.

Does the engine start?

YES-1 >> With CONSULT-III: GO TO 2.
YES-2 >> Without CONSULT-III: GO TO 3.
NO >> Go to EC-384, "Diagnosis Procedure".

2. IGNITION SIGNAL FUNCTION

With CONSULT-III

1. Turn ignition switch OFF and wait at least 10 seconds.
2. Turn ignition switch ON (READY).
3. Perform “POWER BALANCE” in “ACTIVE TEST” mode with CONSULT-III.
4. Make sure that each circuit produces a momentary engine speed drop.

Is the inspection result normal?

YES >> INSPECTION END
NO >> Go to EC-384, "Diagnosis Procedure".

3. IGNITION SIGNAL FUNCTION

Without CONSULT-III

1. Activate “INSPECTION MODE 1” (HBC-97) to start engine, then let engine idle.
2. Read the voltage signal between ECM harness connector and ground.

ECM		Ground	Voltage signal
Connector	Terminal		
F14	9	Ground	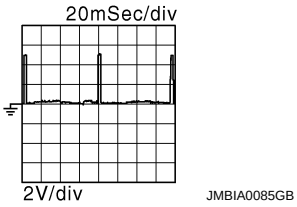
	10		
	11		
	21		

NOTE:
The pulse cycle changes depending on rpm at idle.

Is the inspection result normal?

YES >> INSPECTION END
NO >> Go to EC-384, "Diagnosis Procedure".

Diagnosis Procedure

INFOID:0000000003069412

1. CHECK IGNITION COIL POWER SUPPLY CIRCUIT-I

1. Turn ignition switch OFF, wait at least 10 seconds and then turn ON.
2. Check the voltage between ECM harness connector and ground.

ECM		Ground	Voltage
Connector	Terminal		
E10	105	Ground	Battery voltage

Is the inspection result normal?

YES >> GO TO 2.
NO >> Go to EC-118, "Diagnosis Procedure".

2. CHECK IGNITION COIL POWER SUPPLY CIRCUIT-II

1. Turn ignition switch OFF.
2. Disconnect condenser-2 harness connector.
3. Turn ignition switch ON.
4. Check the voltage between condenser-2 harness connector and ground.

Condenser		Ground	Voltage
Connector	Terminal		
F26	1	Ground	Battery voltage

Is the inspection result normal?

YES >> GO TO 4.
NO >> GO TO 3.

3. CHECK IGNITION COIL POWER SUPPLY CIRCUIT-III

1. Turn ignition switch OFF.
2. Disconnect IPDM E/R harness connector F10.
3. Check the continuity between IPDM E/R harness connector and condenser-2 harness connector.

IPDM E/R		Condenser-2		Continuity
Connector	Terminal	Connector	Terminal	
F10	53	F26	1	Existed

4. Also check harness for short to ground and short to power.

Is the inspection result normal?

YES >> Go to EC-118, "Diagnosis Procedure".
NO >> Repair open circuit or short to ground or short to power in harness or connectors.

4. CHECK CONDENSER-2 GROUND CIRCUIT FOR OPEN AND SHORT

1. Turn ignition switch OFF.
2. Check the continuity between condenser-2 harness connector and ground.

Condenser-2		Ground	Continuity
Connector	Terminal		
F26	2	Ground	Existed

3. Also check harness for short to power.

Is the inspection result normal?

YES >> GO TO 5.
NO >> Repair open circuit or short to ground or short to power in harness or connectors.

5. CHECK CONDENSER

Refer to EC-388, "Component Inspection (Condenser-2)"

Is the inspection result normal?

YES >> GO TO 6.
NG >> Replace condenser.

6. CHECK IGNITION COIL POWER SUPPLY CIRCUIT-V

1. Reconnect all harness connectors disconnected.
2. Disconnect ignition coil harness connector.
3. Turn ignition switch ON.
4. Check the voltage between ignition coil harness connector and ground.

Ignition coil			Ground	Voltage
Cylinder	Connector	Terminal		
1	F34	3	Ground	Battery voltage
2	F35	3		
3	F36	3		
4	F37	3		

Is the inspection result normal?

YES >> GO TO 7.
NO >> Repair open circuit or short to ground or short to power in harness or connectors.

7. CHECK IGNITION COIL GROUND CIRCUIT FOR OPEN AND SHORT

1. Turn ignition switch OFF.
2. Check the continuity between ignition coil harness connector and ground.

Ignition coil			Ground	Continuity
Cylinder	Connector	Terminal		
1	F34	2	Ground	Existed
2	F35	2		
3	F36	2		
4	F37	2		

3. Also check harness for short to power.

Is the inspection result normal?

YES >> GO TO 8.
NO >> Repair open circuit or short to ground or short to power in harness or connectors.

8. CHECK IGNITION COIL OUTPUT SIGNAL CIRCUIT FOR OPEN AND SHORT

1. Disconnect ECM harness connector.
2. Check the continuity between ECM harness connector and ignition coil harness connector.

Ignition coil			ECM		Continuity
Cylinder	Connector	Terminal	Connector	Terminal	
1	F34	1	F14	11	Existed
2	F35	1		10	
3	F36	1		9	
4	F37	1		21	

3. Also check harness for short to ground and short to power.

Is the inspection result normal?

YES >> GO TO 9.
NO >> Repair open circuit or short to ground or short to power in harness or connectors.

9. CHECK IGNITION COIL WITH POWER TRANSISTOR

Refer to EC-387, "Component Inspection (Ignition Coil with Power Transistor)".

Is the inspection result normal?

YES >> GO TO 10.
NO >> Replace malfunctioning ignition coil with power transistor.

10. CHECK INTERMITTENT INCIDENT

Refer to GI-42, "Intermittent Incident".

>> INSPECTION END

Component Inspection (Ignition Coil with Power Transistor)

INFOID:0000000003069413

1. CHECK IGNITION COIL WITH POWER TRANSISTOR-I

1. Turn ignition switch OFF.
2. Disconnect ignition coil harness connector.
3. Check resistance between ignition coil terminals as follows.

Terminals	Resistance Ω [at 25°C (77°F)]
1 and 2	Except 0 or ∞
1 and 3	Except 0
2 and 3	

Is the inspection result normal?

YES >> GO TO 2.
NO >> Replace malfunctioning ignition coil with power transistor.

2. CHECK IGNITION COIL WITH POWER TRANSISTOR-II

CAUTION:
Do the following procedure in the place where ventilation is good without the combustible.

1. Turn ignition switch OFF.
2. Remove fuel pump fuse in IPDM E/R to release fuel pressure.
   NOTE:
   Do not use CONSULT-III to release fuel pressure, or fuel pressure applies again during the following procedure.
3. Turn ignition switch ON (READY).
4. Depress accelerator pedal and keep it.
5. After engine stalls, check DTC.
   If DTC is detected, erase DTC and go to next steps.
   If DTC is not detected, go to next steps.
6. Turn ignition switch OFF.
7. Remove all ignition coil harness connectors to avoid the electrical discharge from the ignition coils.
8. Remove ignition coil and spark plug of the cylinder to be checked.
9. Repeat steps 3 to 5 for two or three times to remove combustion gas in the cylinder.
10. Connect spark plug and harness connector to ignition coil.
11. Fix ignition coil using a rope etc. with gap of 13 - 17 mm (0.52 - 0.66 in) between the edge of the spark plug and grounded metal portion as shown in the figure.
12. Turn ignition switch ON (READY).
13. Depress accelerator pedal for about 3 seconds, and check whether spark is generated between the spark plug and the grounded metal portion.

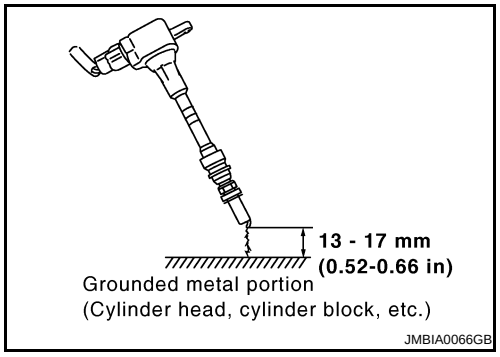

Spark should be generated.

CAUTION:
- **Do not approach to the spark plug and the ignition coil within 50 cm (19.7 in). Be careful not to get an electrical shock while checking, because the electrical discharge voltage becomes 20kV or more.**
- **It might cause to damage the ignition coil if the gap of more than 17 mm (0.66 in) is taken.**

NOTE:
When the gap is less than 13 mm (0.52 in), the spark might be generated even if the coil is malfunctioning.

Is the inspection result normal?

YES >> INSPECTION END
NO >> Replace malfunctioning ignition coil with power transistor.

Component Inspection (Condenser-2)

INFOID:0000000003069414

1. CHECK CONDENSER-2

1. Turn ignition switch OFF.
2. Disconnect condenser-2 harness connector.
3. Check resistance between condenser-2 terminals as follows.

Terminals	Resistance
1 and 2	Above 1 MΩ [at 25°C (77°F)]

Is the inspection result normal?

YES >> INSPECTION END
NO >> Replace condenser-2.

MALFUNCTION INDICATOR LAMP

Description

INFOID:0000000003069415

The Malfunction Indicator Lamp (MIL) is located on the combination meter.
The MIL will light up when the ignition switch is turned ON without the engine running. This is a bulb check.
When the engine is started, the MIL should go off. If the MIL remains on, the on board diagnostic system has detected an engine system malfunction.
For details, refer to EC-389, "Diagnosis Procedure".

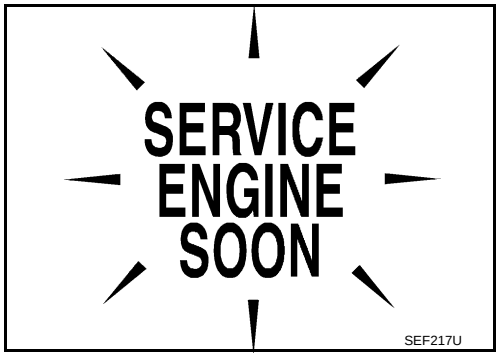

Component Function Check

INFOID:0000000003069416

1. CHECK MIL FUNCTION

1. Turn ignition switch ON.
2. Make sure that MIL lights up.

Is the inspection result normal?

YES >> INSPECTION END
NO >> Go to EC-389, "Diagnosis Procedure".

Diagnosis Procedure

INFOID:0000000003069417

1. CHECK DTC

Check that DTC U1000 or U1001 is not displayed.

Is the inspection result normal?

YES >> GO TO 2.
NO >> Perform trouble diagnosis for DTC U1000, U1001. Refer to EC-128, "Diagnosis Procedure".

2. CHECK DTC WITH COMBINATION METER

Refer to MWI-71, "DTC Index".

Is the inspection result normal?

YES >> GO TO 3.
NO >> Repair or replace.

3. CHECK INTERMITTENT INCIDENT

Refer to GI-42, "Intermittent Incident".

Is the inspection result normal?

YES >> Replace combination meter.
NO >> Repair or replace.

ON BOARD REFUELING VAPOR RECOVERY (ORVR)

Description

INFOID:0000000003069418

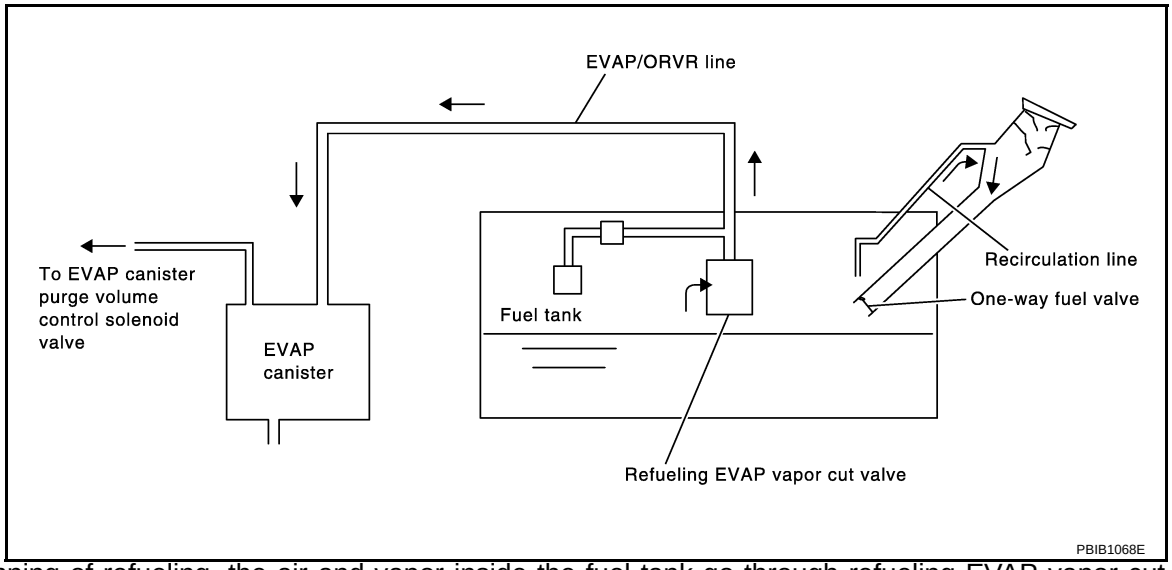

From the beginning of refueling, the air and vapor inside the fuel tank go through refueling EVAP vapor cut valve and EVAP/ORVR line to the EVAP canister. The vapor is absorbed by the EVAP canister and the air is released to the atmosphere.
When the refueling has reached the full level of the fuel tank, the refueling EVAP vapor cut valve is closed and refueling is stopped because of auto shut-off. The vapor which was absorbed by the EVAP canister is purged during driving.

WARNING:
When conducting inspections below, be sure to observe the following:
- **Put a “CAUTION: FLAMMABLE” sign in workshop.**
- **Do not smoke while servicing fuel system. Keep open flames and sparks away from work area.**
- **Be sure to furnish the workshop with a CO_2 fire extinguisher.**

CAUTION:
- **Before removing fuel line parts, carry out the following procedures:**
- **Put drained fuel in an explosion-proof container and put lid on securely.**
- **Release fuel pressure from fuel line. Refer to EC-454, "Inspection".**
- **Disconnect battery ground cable.**
- **Always replace O-ring when the fuel gauge retainer is removed.**
- **Do not kink or twist hose and tube when they are installed.**
- **Do not tighten hose and clamps excessively to avoid damaging hoses.**
- **After installation, run engine and check for fuel leaks at connection.**
- **Do not attempt to top off the fuel tank after the fuel pump nozzle shuts off automatically. Continued refueling may cause fuel overflow, resulting in fuel spray and possibly a fire.**

Component Function Check

INFOID:0000000003069419

1. CHECK ORVR FUNCTION

Check whether the following symptoms are present.
- Fuel odor from EVAP canister is strong.
- Cannot refuel/Fuel odor from the fuel filler opening is strong while refueling.

Is any symptom present?

YES >> Go to EC-390, "Diagnosis Procedure".
NO >> INSPECTION END

Diagnosis Procedure

INFOID:0000000003069420

1. INSPECTION START

Check whether the following symptoms are present.
A: Fuel odor from EVAP canister is strong.

B: Cannot refuel/Fuel odor from the fuel filler opening is strong while refueling.

Which symptom is present?

A >> GO TO 2.
B >> GO TO 7.

2. CHECK EVAP CANISTER

1. Remove EVAP canister with EVAP canister vent control valve and EVAP control system pressure sensor attached.
2. Weigh the EVAP canister with EVAP canister vent control valve and EVAP control system pressure sensor attached.
   The weight should be less than 2.8 kg (6.2 lb).

Is the inspection result normal?

YES >> GO TO 3.
NO >> GO TO 4.

3. CHECK IF EVAP CANISTER SATURATED WITH WATER

Check if water will drain from EVAP canister.

Does water drain from the EVAP canister?

YES >> GO TO 4.
NO >> GO TO 6.

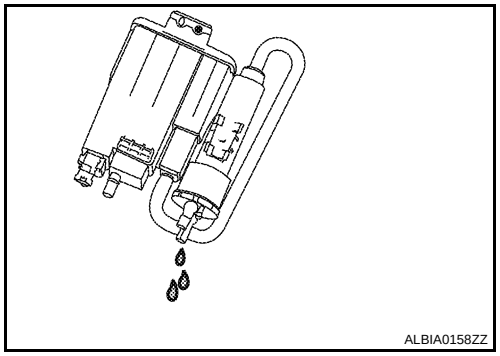

4. REPLACE EVAP CANISTER

Replace EVAP canister with a new one.

>> GO TO 5.

5. DETECT MALFUNCTIONING PART

Check the EVAP hose between EVAP canister and vehicle frame for clogging or poor connection.

>> Repair or replace EVAP hose.

6. CHECK REFUELING EVAP VAPOR CUT VALVE

Refer to EC-393, "Component Inspection".

Is the inspection result normal?

YES >> INSPECTION END
NO >> Replace refueling EVAP vapor cut valve with fuel tank.

7. CHECK EVAP CANISTER

1. Remove EVAP canister with EVAP canister vent control valve and EVAP control system pressure sensor attached.
2. Weigh the EVAP canister with EVAP canister vent control valve and EVAP control system pressure sensor attached.
   The weight should be less than 2.8 kg (6.2 lb).

Is the inspection result normal?

YES >> GO TO 8.
NO >> GO TO 9.

8. CHECK IF EVAP CANISTER SATURATED WITH WATER

Check if water will drain from EVAP canister.

Does water drain from the EVAP canister?

YES >> GO TO 9.
NO >> GO TO 11.

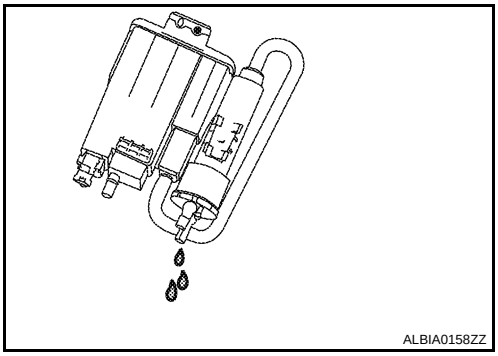

9. REPLACE EVAP CANISTER

Replace EVAP canister with a new one.

>> GO TO 10.

10. DETECT MALFUNCTIONING PART

Check the EVAP hose between EVAP canister and vehicle frame for clogging or poor connection.

>> Repair or replace EVAP hose.

11. CHECK VENT HOSES AND VENT TUBES

Check hoses and tubes between EVAP canister and refueling control valve for clogging, kink, looseness and improper connection.

Is the inspection result normal?

YES >> GO TO 12.
NO >> Repair or replace hoses and tubes.

12. CHECK FILLER NECK TUBE

Check recirculation line for clogging, dents and cracks.

Is the inspection result normal?

YES >> GO TO 13.
NO >> Replace filler neck tube.

13. CHECK REFUELING EVAP VAPOR CUT VALVE

Refer to EC-393, "Component Inspection".

Is the inspection result normal?

YES >> GO TO 14.
NO >> Replace refueling EVAP vapor cut valve with fuel tank.

14. CHECK FUEL FILLER TUBE

Check filler neck tube and hose connected to the fuel tank for clogging, dents and cracks.

Is the inspection result normal?

YES >> GO TO 15.
NO >> Replace fuel filler tube.

15. CHECK ONE-WAY FUEL VALVE-I

Check one-way valve for clogging.

Is the inspection result normal?

YES >> GO TO 16.
NO >> Repair or replace one-way fuel valve with fuel tank.

16. CHECK ONE-WAY FUEL VALVE-II

1. Make sure that fuel is drained from the tank.
2. Remove fuel filler tube and hose.

3. Check one-way fuel valve for operation as follows.
   When a stick is inserted, the valve should open, when removing stick it should close.
   Do not drop any material into the tank.

Is the inspection result normal?

YES >> INSPECTION END
NO >> Replace fuel filler tube or replace one-way fuel valve with fuel tank.

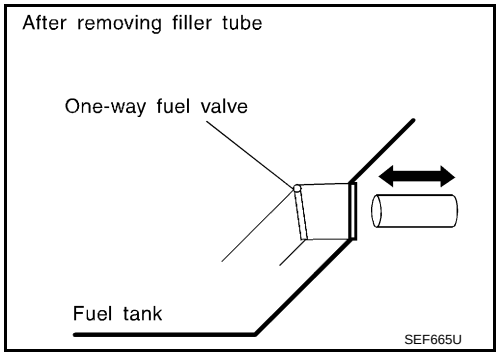

Component Inspection

INFOID:0000000003069421

1. INSPECTION START

Do you have CONSULT-III?

Do you have CONSULT-III?

YES >> GO TO 2.
NO >> GO TO 3.

2. CHECK REFUELING EVAP VAPOR CUT VALVE

With CONSULT-III

1. Remove fuel tank. Refer to FL-11, "Removal and Installation".
2. Drain fuel from the tank as follows:
- Remove fuel feed hose located on the fuel gauge retainer.
- Connect a spare fuel hose, one side to fuel gauge retainer where the hose was removed and the other side to a fuel container.
- Drain fuel using “FUEL PUMP RELAY” in “ACTIVE TEST” mode with CONSULT-III.
3. Check refueling EVAP vapor cut valve for being stuck to close as follows.
   Blow air into the refueling EVAP vapor cut valve (from the end of EVAP/ORVR line hose), and check that the air flows freely into the tank.
4. Check refueling EVAP vapor cut valve for being stuck to open as follows.
- Connect vacuum pump to hose end.
- Remove fuel gauge retainer with fuel gauge unit.

Always replace O-ring with new one.

- Put fuel tank upside down.
- Apply vacuum pressure to hose end [–13.3 kPa (–0.136 kg/cm^3, –1.93 psi)] with fuel gauge retainer remaining open and check that the pressure is applicable.

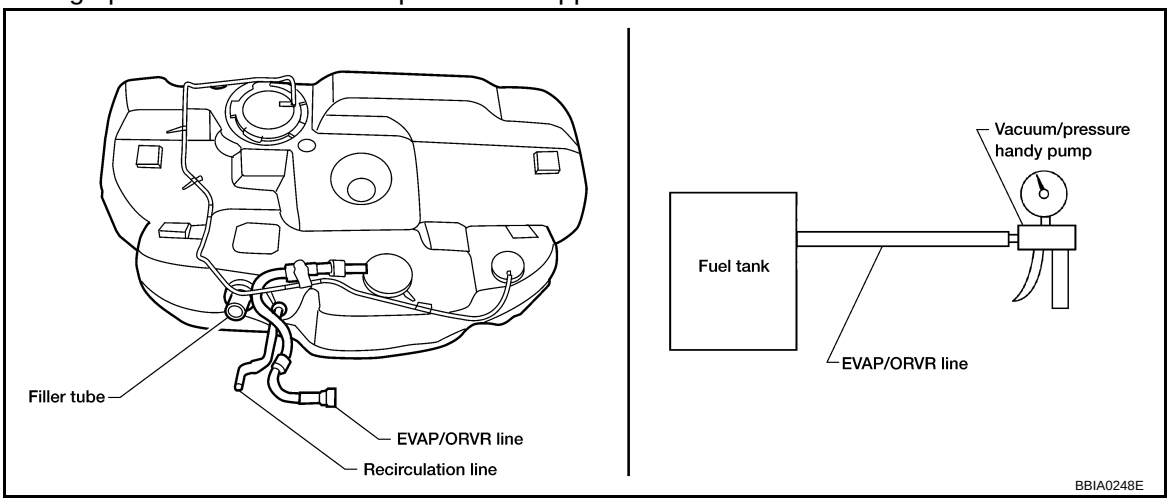

Is the inspection result normal?

YES >> INSPECTION END
NO >> Replace refueling EVAP vapor cut valve with fuel tank.

3. CHECK REFUELING EVAP VAPOR CUT VALVE

Without CONSULT-III

1. Remove fuel tank. Refer to FL-11, "Removal and Installation".
2. Drain fuel from the tank as follows:
- Remove fuel gauge retainer.
- Drain fuel from the tank using a handy pump into a fuel container.
3. Check refueling EVAP vapor cut valve for being stuck to close as follows.
   Blow air into the refueling EVAP vapor cut valve (from the end of EVAP/ORVR line hose), and check that the air flows freely into the tank.
4. Check refueling EVAP vapor cut valve for being stuck to open as follows.
- Connect vacuum pump to hose end.
- Remove fuel gauge retainer with fuel gauge unit.

Always replace O-ring with new one.

- Put fuel tank upside down.
- Apply vacuum pressure to hose end [–13.3 kPa (–0.136 kg/cm^3, –1.93 psi)] with fuel gauge retainer remaining open and check that the pressure is applicable.

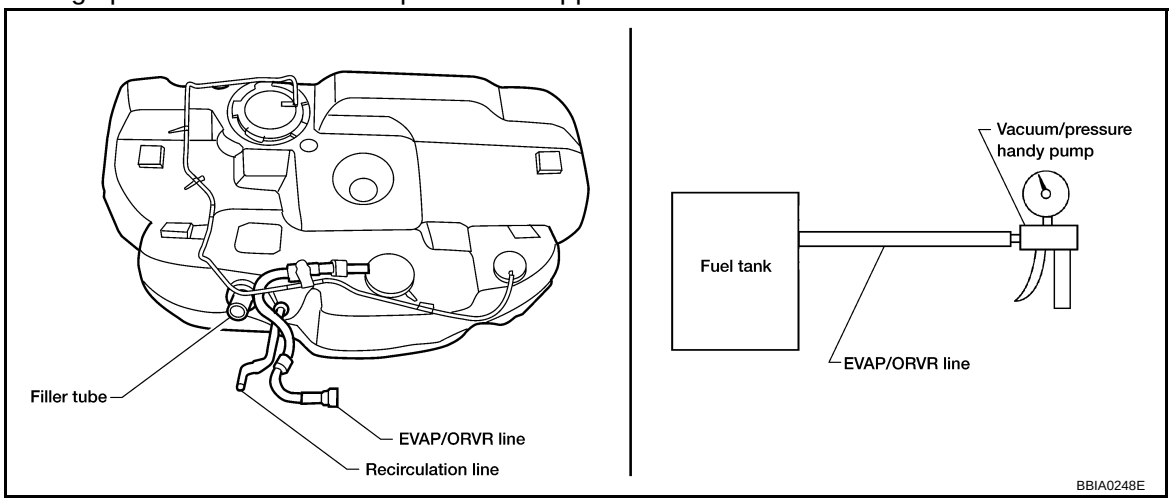

Is the inspection result normal?

YES >> INSPECTION END
NO >> Replace refueling EVAP vapor cut valve with fuel tank.

POSITIVE CRANKCASE VENTILATION

Description

INFOID:0000000003069422

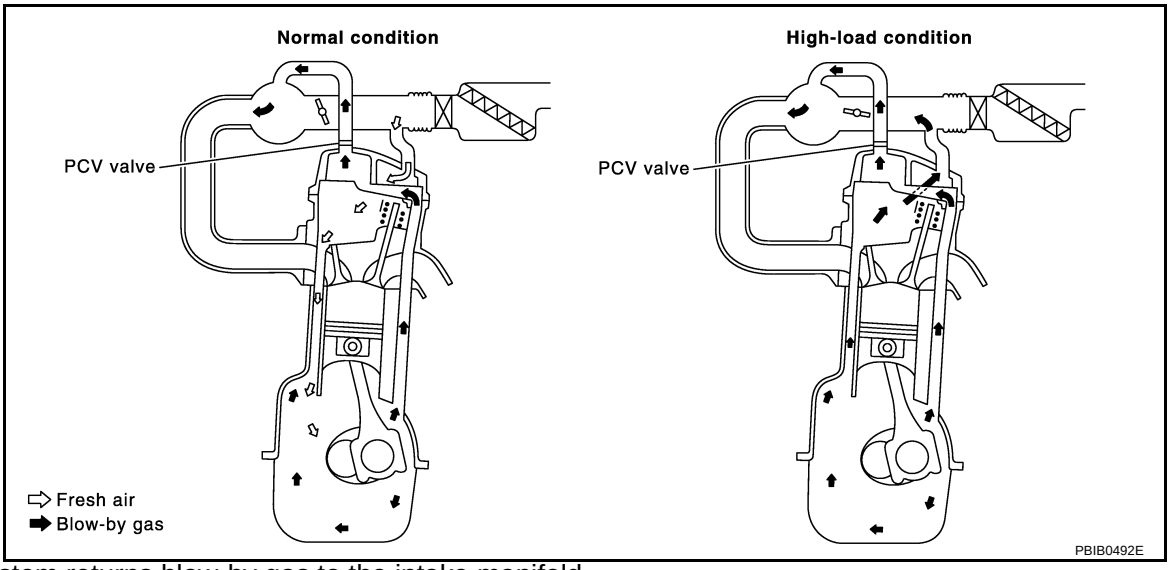

This system returns blow-by gas to the intake manifold.
The positive crankcase ventilation (PCV) valve is provided to conduct crankcase blow-by gas to the intake manifold.
During partial throttle operation of the engine, the intake manifold sucks the blow-by gas through the PCV valve.
Normally, the capacity of the valve is sufficient to handle any blow-by and a small amount of ventilating air.
The ventilating air is then drawn from the air inlet tubes into the crankcase. In this process the air passes through the hose connecting air inlet tubes to rocker cover.
Under full-throttle condition, the manifold vacuum is insufficient to draw the blow-by flow through the valve. The flow goes through the hose connection in the reverse direction.
On vehicles with an excessively high blow-by, the valve does not meet the requirement. This is because some of the flow will go through the hose connection to the air inlet tubes under all conditions.

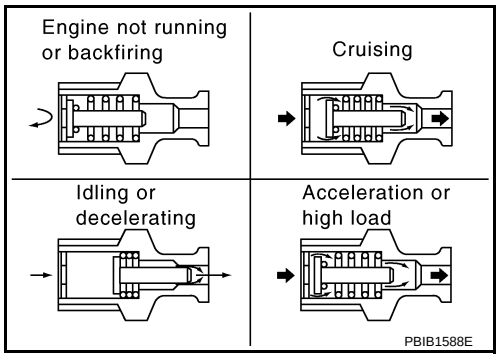

Component Inspection

INFOID:0000000003069423

1. CHECK PCV VALVE

With engine running at idle, remove PCV valve from rocker cover. A properly working valve makes a hissing noise as air passes through it. A strong vacuum should be felt immediately when a finger is placed over valve inlet.

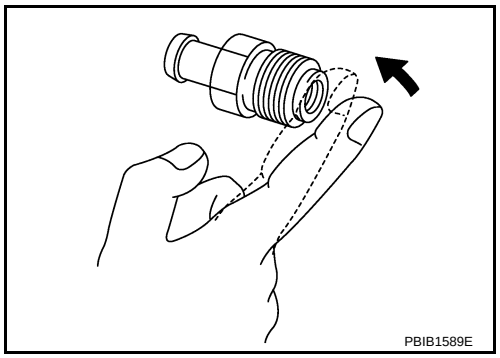

Is the inspection result normal?

YES >> INSPECTION END
NO >> Replace PCV valve.

REFRIGERANT PRESSURE SENSOR

Description

INFOID:0000000003069424

The refrigerant pressure sensor is installed at the condenser of the air conditioner system. The sensor uses an electrostatic volume pressure transducer to convert refrigerant pressure to voltage. The voltage signal is sent to ECM, and ECM controls cooling fan system.

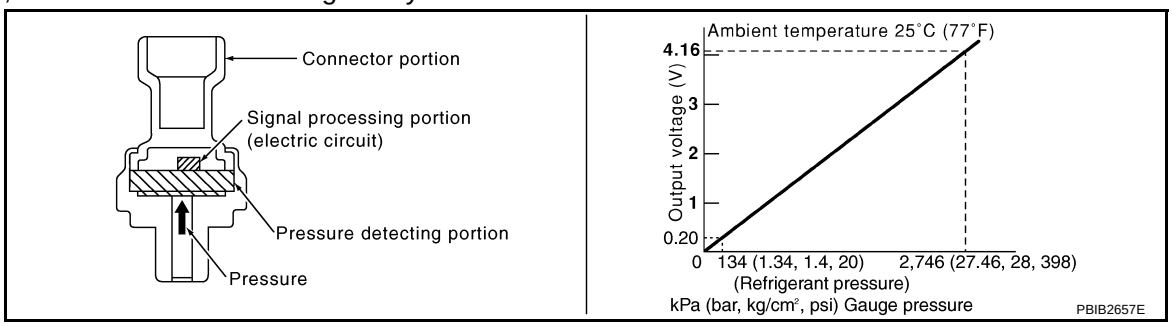

Component Function Check

INFOID:0000000003069425

1. CHECK REFRIGERANT PRESSURE SENSOR OVERALL FUNCTION

1. Activate “INSPECTION MODE 1” (HBC-97) to start engine, and warm up engine to normal operating temperature.
2. Turn A/C switch and blower fan switch ON.
3. Check the voltage between ECM harness connector and ground.

ECM		Ground	Voltage
Connector	Terminal		
E219	39 (Refrigerant pressure sensor signal)	Ground	1.0 - 4.0V

Is the inspection result normal?

YES >> INSPECTION END
NO >> Go to EC-396, "Diagnosis Procedure".

Diagnosis Procedure

INFOID:0000000003069426

1. CHECK GROUND CONNECTION

1. Turn A/C switch and blower fan switch OFF.
2. Turn ignition switch OFF.
3. Check ground connection E9. Refer to Ground Inspection in GI-45, "Circuit Inspection".

Is the inspection result normal?

YES >> GO TO 2.
NO >> Repair or replace ground connection.

2. CHECK REFRIGERANT PRESSURE SENSOR POWER SUPPLY CIRCUIT

1. Disconnect refrigerant pressure sensor harness connector.
2. Turn ignition switch ON.
3. Check the voltage between refrigerant pressure sensor harness connector and ground.

Refrigerant pressure sensor		Ground	Voltage
Connector	Terminal		
E219	1	Ground	Approx. 5V

Is the inspection result normal?

YES >> GO TO 4.
NO >> GO TO 3.

3. DETECT MALFUNCTIONING PART

Check the following.
- Harness connectors F82, E78
- Harness for open or short between ECM and refrigerant pressure sensor

>> Repair open circuit or short to ground or short to power in harness or connectors.

4. CHECK REFRIGERANT PRESSURE SENSOR GROUND CIRCUIT FOR OPEN AND SHORT

1. Turn ignition switch OFF.
2. Disconnect ECM harness connector.
3. Check the continuity between refrigerant pressure sensor harness connector and ECM harness connector.

Refrigerant pressure sensor		ECM		Continuity
Connector	Terminal	Connector	Terminal	
E219	3	F13	40	Existed

4. Also check harness for short to ground and short to power.

Is the inspection result normal?

YES >> GO TO 6.
NO >> GO TO 5.

5. DETECT MALFUNCTIONING PART

Check the following.
- Harness connectors F82, E78
- Harness for open or short between ECM and refrigerant pressure sensor

>> Repair open circuit or short to ground or short to power in harness or connectors.

6. CHECK REFRIGERANT PRESSURE SENSOR INPUT SIGNAL CIRCUIT FOR OPEN AND SHORT

1. Check the continuity between ECM harness connector and refrigerant pressure sensor harness connector.

Refrigerant pressure sensor		ECM		Continuity
Connector	Terminal	Connector	Terminal	
E219	2	F13	39	Existed

2. Also check harness for short to ground and short to power.

Is the inspection result normal?

YES >> GO TO 8.
NO >> GO TO 7.

7. DETECT MALFUNCTIONING PART

Check the following.
- Harness connectors F82, E78
- Harness for open or short between ECM and refrigerant pressure sensor

>> Repair open circuit or short to ground or short to power in harness or connectors.

8. CHECK INTERMITTENT INCIDENT

Refer to GI-42, "Intermittent Incident".

Is the inspection result normal?

YES >> Replace refrigerant pressure sensor.
NO >> Repair or replace.

ECU DIAGNOSIS

ECM

Reference Value

INFOID:0000000003069427

VALUES ON THE DIAGNOSIS TOOL

NOTE:

- Specification data are reference values.
- Specification data are output/input values which are detected or supplied by the ECM at the connector.
  * Specification data may not be directly related to their components signals/values/operations.
  i.e. Adjust ignition timing with a timing light before monitoring IGN TIMING, because the monitor may show the specification data in spite of the ignition timing not being adjusted to the specification data. this IGN TIMING monitors the data calculated by the ECM according to the signals input from the camshaft position sensor and other ignition timing related sensors.
- If necessary, activate “INSPECTION MODE 1” (HBC-97).

Monitor Item	Condition		Values/Status
ENG SPEED	See EC-11, "BASIC INSPECTION : Special Repair Requirement".		
MAS A/F SE-B1	See EC-110, "Diagnosis Procedure".		
B/FUEL SCHDL	See EC-110, "Diagnosis Procedure".		
A/F ALPHA-B1	See EC-110, "Diagnosis Procedure".		
COOLAN TEMP/S	• Engine: After warming up		More than 70°C (158°F)
A/F SEN1 (B1)	• Engine: After warming up	Maintaining engine speed at 2,500 rpm	Fluctuates around 2.2 V
HO2S2 (B1)	• Revving engine from idle up to 2,500 rpm quickly after the following conditions are met. - Engine: After warming up - Driving for 3 minutes at a speed of 80 km/h (50 MPH) or more (Keep the vehicle speed as steady as possible during the cruising.)		0 - 0.3V ←→ Approx. 0.6 - 1.0V
HO2S3 (B1)	• Engine running after the following conditions are met. - Engine: After warming up - Driving for 3 minutes at a speed of 80 km/h (50 MPH) or more (Keep the vehicle speed as steady as possible during the cruising.)		0 - 1.0V
HO2S2 MNTR (B1)	• Revving engine from idle up to 2,500 rpm quickly after the following conditions are met. - Engine: After warming up - Driving for 3 minutes at a speed of 80 km/h (50 MPH) or more (Keep the vehicle speed as steady as possible during the cruising.)		LEAN ←→ RICH
VHCL SPEED SE	• Turn drive wheels and compare CONSULT-III value with the speedometer indication.		Almost the same speed as speedometer indication
BATTERY VOLT	• Ignition switch: ON (Engine stopped)		11 – 14V
TP SEN 1-B1	• Ignition switch: ON • Selector lever: D	Accelerator pedal: Fully released	More than 0.36V
		Accelerator pedal: Fully depressed	Less than 4.75V
TP SEN 2-B1*	• Ignition switch: ON • Selector lever: D	Accelerator pedal: Fully released	More than 0.36V
		Accelerator pedal: Fully depressed	Less than 4.75V
FUEL T/TMP SE	• Ignition switch: ON		Indicates fuel tank temperature
INT/A TEMP SE	• Ignition switch: ON		Indicates intake air temperature
EVAP SYS PRES	• Ignition switch: ON		Approx. 1.8 – 4.8V
FUEL LEVEL SE	• Ignition switch: ON		Depending on fuel level of fuel tank
START SIGNAL	• INSPECTION MODE • Ignition switch: ON → ON (READY)		OFF → ON → OFF

Monitor Item	Condition		Values/Status
CLSD THL POS	• Ignition switch: ON (READY)	ENG POWER RQST: 0 kW	ON
		ENG POWER RQST: Except 0 kW	OFF
AIR COND SIG	• Ignition switch: ON (READY)	Air conditioner switch: OFF	OFF
		Air conditioner switch: ON (Compressor operates.)	ON
P/N POSI SW	• Ignition switch: ON	Selector lever: P or N	ON
		Selector lever: Except above	OFF
PW/ST SIGNAL	• Ignition switch: ON		OFF
LOAD SIGNAL	• Ignition switch: ON	Rear window defogger switch: ON and/or Lighting switch: 2nd position	ON
		Rear window defogger switch and lighting switch: OFF	OFF
IGNITION SW	• Ignition switch: ON → OFF → ON		ON → OFF → ON
HEATER FAN SW	• Ignition switch: ON (READY)	Heater fan switch: ON	ON
		Heater fan switch: OFF	OFF
BRAKE SW	• Ignition switch: ON	Brake pedal: Fully released	OFF
		Brake pedal: Slightly depressed	ON
INJ PULSE-B1	• Engine: After warming up • Selector lever: P • No load	Idle	2.0 – 3.0 msec
		2,500 rpm	1.9 – 2.9 msec
IGN TIMING	• Engine: After warming up • Selector lever: N	Idle	11° – 21° BTDC
CAL/LD VALUE	• Engine: After warming up • Selector lever: P • No load	Idle	10% – 35%
		2,500 rpm	10% – 35%
MASS AIRFLOW	• Engine: After warming up • Selector lever: P • No load	Idle	1.0 – 5.0 g·m/s
		2,500 rpm	4.0 – 12.0 g·m/s
PURG VOL C/V	• Engine: After warming up • 150 seconds or more after turning ignition switch ON (READY)	Vehicle speed: 0 km/h (0 MPH)	0%
		Vehicle speed: 70 km/h (43 MPH) or more (Accelerator pedal: Depressed)	20% – 90%
INT/V TIM (B1)	• Engine: After warming up • Selector lever: P • No load	Idle	Approx. 20° – 30°CA
INT/V SOL (B1)	• Engine: After warming up • Selector lever: P • No load	Idle	Approx. 50% – 60%
FUEL PUMP RLY	• For 1 seconds after turning ignition switch: ON • Engine running or cranking		ON
	• Except above		OFF
VENT CONT/V	• Ignition switch: ON		OFF
THRTL RELAY	• Ignition switch: ON		ON
HO2S2 HTR (B1)	• Engine speed: Below 3,600 rpm after the following conditions are met. - Engine: Running after warming up - Driving for 3 minutes at a speed of 80 km/h (50 MPH) or more (Keep the vehicle speed as steady as possible during the cruising.)		ON
	• Engine speed: Above 3,600 rpm		OFF

Monitor Item	Condition		Values/Status
HO2S3 HTR (B1)	• Engine speed: Below 3,600 rpm after the following conditions are met. - Engine: Running after warming up - Driving for 3 minutes at a speed of 80 km/h (50 MPH) or more (Keep the vehicle speed as steady as possible during the cruising.)		ON
	• Engine speed: Above 3,600 rpm		OFF
VEHICLE SPEED	• Turn drive wheels and compare CONSULT-III value with the speedometer indication.		Almost the same speed as the speedometer indication
IDL A/V LEARN	• Engine: running	Idle air volume learning has not been performed yet.	YET
		Idle air volume learning has already been performed successfully.	CMPLT
TRVL AFTER MIL	• Ignition switch: ON	Vehicle has traveled after MIL has turned ON.	0 – 65,535 km (0 – 40,723 miles)
A/F S1 HTR (B1)	• Engine: After warming up, idle the engine (More than 140 seconds after starting engine.)		4 – 100%
AC PRESS SEN	• Engine: Idle • Both A/C switch and blower fan switch: ON (Compressor operates)		1.0 – 4.0V
VHCL SPEED SE	• Turn drive wheels and compare CONSULT-III value with the speedometer indication.		Almost the same speed as the speedometer indication
SET VHCL SPD	• Engine: Running	ASCD: Operating	The preset vehicle speed is displayed
MAIN SW	• Ignition switch: ON	MAIN switch: Pressed	ON
		MAIN switch: Released	OFF
CANCEL SW	• Ignition switch: ON	CANCEL switch: Pressed	ON
		CANCEL switch: Released	OFF
RESUME/ACC SW	• Ignition switch: ON	RESUME/ACCELERATE switch: Pressed	ON
		RESUME/ACCELERATE switch: Released	OFF
SET SW	• Ignition switch: ON	SET/COAST switch: Pressed	ON
		SET/COAST switch: Released	OFF
BRAKE SW1 (ASCD brake switch)	• Ignition switch: ON	Brake pedal: Fully released	ON
		Brake pedal: Slightly depressed	OFF
BRAKE SW2 (Stop lamp switch)	• Ignition switch: ON	Brake pedal: Fully released	OFF
		Brake pedal: Slightly depressed	ON
VHCL SPD CUT	• Ignition switch: ON		NON
LO SPEED CUT	• Ignition switch: ON		NON
AT OD MONITOR	• Ignition switch: ON		OFF
AT OD CANCEL	• Ignition switch: ON		OFF
CRUISE LAMP	• Ignition switch: ON	MAIN switch: Pressed at the 1st time → at the 2nd time	ON → OFF
SET LAMP	• Ignition switch: ON		OFF
A/F ADJ B1	• Engine: running		-0.330 – 0.330
FAN DUTY	• Engine: Running		0 – 100%
ACCEL PEDAL POSI	• Ignition switch: ON		Depending on accelerator pedal position
ENG POWER RQST	• Ignition switch: ON (READY)		Depending on signals from Hybrid vehicle control ECU
ENG SPEED RQST	• Ignition switch: ON (READY)		Depending on signals from Hybrid vehicle control ECU

Monitor Item	Condition	Values/Status
CATALYST TEMP-B1	• Engine: Running after warming up	More than 360°C (680°F)
ENG START RQST	• Ignition switch: ON (READY)	Depending on signals from Hybrid vehicle control ECU
ENG IDLE RQST	• Ignition switch: ON (READY)	Depending on signals from Hybrid vehicle control ECU
ENG F/C RQST	• Ignition switch: ON (READY)	Depending on signals from Hybrid vehicle control ECU
EVAP LEAK DIAG	• Ignition switch: ON	Depending on condition of EVAP leak diagnosis
EVAP DIAG READY	• Ignition switch: ON (READY)	Depending on ready condition of EVAP leak diagnosis
ENG START DIAG	• Ignition switch: ON (READY)	Depending on condition of engine does not start diagnosis
ENG ST DIAG RSLT	• Ignition switch: ON (READY)	Depending on result of engine does not start diagnosis

*: Throttle position sensor 2 signal is converted by ECM internally. Thus, it differs from ECM terminal voltage signal.

TERMINAL LAYOUT

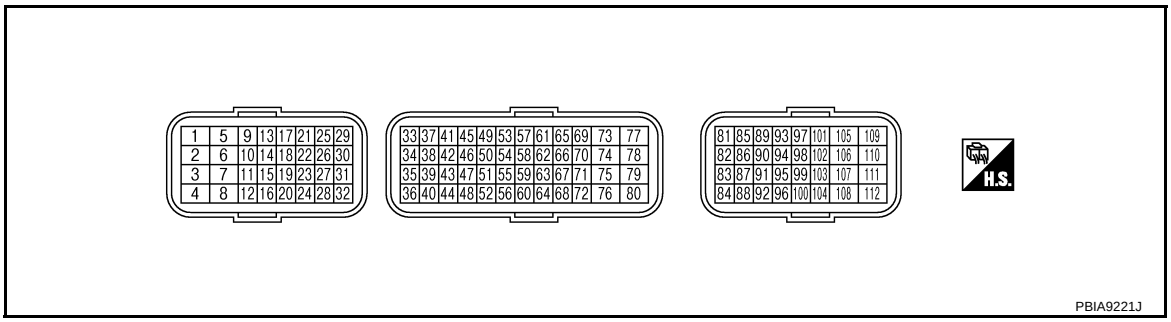

PHYSICAL VALUES

NOTE:
- ECM is located in the engine room left side near inverter with converter assembly.
- Specification data are reference values and are measured between each terminal and ground.
- Pulse signal is measured by CONSULT-III.
- If necessary, activate “INSPECTION MODE 1” (HBC-97).

CAUTION:
Do not use ECM ground terminals when measuring input/output voltage. Doing so may result in damage to the ECMs transistor. Use a ground other than ECM terminals, such as the ground.

Terminal No.		Wire color	Description		Condition	Value (Approx.)
+	–		Signal name	Input/ Output		
2	Ground	G/W	Throttle control motor relay power supply	Input	[Ignition switch: ON]	BATTERY VOLTAGE (11 - 14V)
4	Ground	BR/Y	A/F sensor 1 heater	Output	[Engine is running] • Warm-up condition • Idle speed (More than 140 seconds after starting engine)	2.9 - 8.8V★ 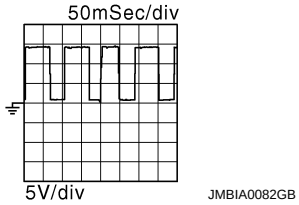

Terminal No. +	Terminal No. -–	Wire color	Description: Signal name	Description: Input/ Output	Condition	Value (Approx.)
5	Ground	L	Throttle control motor (Open)	Output	[Ignition switch: ON] • Selector lever: D • Accelerator pedal: Fully depressed	0 - 14V★ 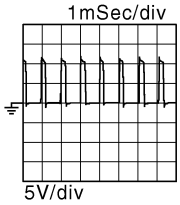 JMBIA0083GB
6	Ground	P	Throttle control motor (Close)	Output	[Ignition switch: ON] • Selector lever: D • Accelerator pedal: Fully released	0 - 14V★ 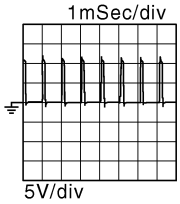 JMBIA0084GB
9 10 11 21	Ground	L/B G/R Y/R G/Y	Ignition signal No. 3 Ignition signal No. 2 Ignition signal No. 1 Ignition signal No. 4	Output	[Engine is running] • Warm-up condition • Idle speed **NOTE:** The pulse cycle changes depending on rpm at idle	0 - 0.2V★ 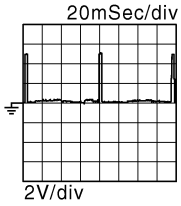 JMBIA0085GB
					[Engine is running] • Warm-up condition • Engine speed: 2,500 rpm	0 - 0.3V★ 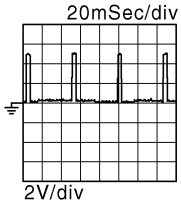 JMBIA0086GB
12 16	Ground	B	ECM ground	—	[Engine is running] • Idle speed	Body ground
13	Ground	R	Heated oxygen sensor 2 heater	Output	[Engine is running] • Engine speed: Below 3,600 rpm after the following conditions are met - Engine: after warming up - Driving for 3 minutes at a speed of 80 km/h (50 MPH) or more (Keep the vehicle speed as steady as possible during the cruising.)	10V★ 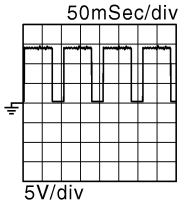 JMBIA0037GB
					[Ignition switch: ON] • Engine stopped [Engine is running] • Engine speed: Above 3,600 rpm	BATTERY VOLTAGE (11 - 14V)

Terminal No. +	Terminal No. -–	Wire color	Description: Signal name	Description: Input/ Output	Condition	Value (Approx.)
14	Ground	B/R	Fuel pump relay	Output	[Ignition switch: ON] • For 1 second after turning ignition switch ON [Engine is running]	0 - 1.0V
					[Ignition switch: ON] • More than 1 second after turning ignition switch ON	BATTERY VOLTAGE (11 - 14V)
15	Ground	O	Throttle control motor relay	Output	[Ignition switch: ON → OFF]	0 - 1.0V ↓ BATTERY VOLTAGE (11 - 14V) ↓ 0V
					[Ignition switch: ON]	0 - 1.0V
17	Ground	L	Heated oxygen sensor 3 heater	Output	[Engine is running] • Engine speed: Below 3,600 rpm after the following conditions are met - Engine: after warming up - Driving for 3 minutes at a speed of 80 km/h (50 MPH) or more (Keep the vehicle speed as steady as possible during the cruising.)	10V★ 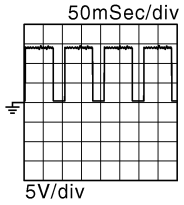 JMBIA0037GB
					[Engine is running] • Engine speed: Above 3,600 rpm [Ignition switch: ON]	BATTERY VOLTAGE (11 - 14V)
24	Ground	W/B	ECM relay (Self shut-off)	Output	[Engine is running] [Ignition switch: OFF] • A few seconds after turning ignition switch OFF	0 - 1.0V
					[Ignition switch: OFF] • More than a few seconds after turning ignition switch OFF	BATTERY VOLTAGE (11 - 14V)
25	Ground	P/L	EVAP canister purge volume control solenoid valve	Output	[Engine is running] • Idle speed	BATTERY VOLTAGE (11 - 14V)★ 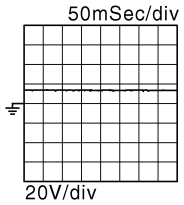 JMBIA0087GB
					[Engine is running] • 150 seconds or more after turning ignition switch ON (READY) • Vehicle speed: 70 km/h (43MPH) or more • Accelerator pedal: Depressed	BATTERY VOLTAGE (11 - 14V)★ 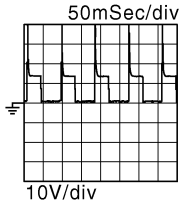 JMBIA0088GB

Terminal No.		Wire color	Description		Condition	Value (Approx.)
+	-–		Signal name	Input/ Output		
29 30 31 32	Ground	LG/R R/Y R/W R/B	Fuel injector No. 4 Fuel injector No. 3 Fuel injector No. 2 Fuel injector No. 1	Output	[Engine is running] • Warm-up condition • Idle speed **NOTE:** The pulse cycle changes depending on rpm at idle	BATTERY VOLTAGE (11 - 14V)★ 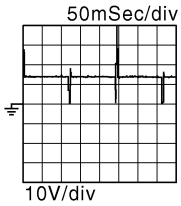 JMBIA0089GB
					[Engine is running] • Warm-up condition • Engine speed: 2,500 rpm	BATTERY VOLTAGE (11 - 14V)★ 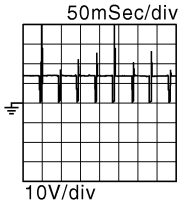 JMBIA0090GB
33	Ground	LG	Heated oxygen sensor 2	Input	[Engine is running] • Revving engine from idle to 2,500 rpm quickly after the following conditions are met - Engine: after warming up - Driving for 3 minutes at a speed of 80 km/h (50 MPH) or more (Keep the vehicle speed as steady as possible during the cruising.)	0 - 1.0V
34	Ground	W/L	Heated oxygen sensor 3	Input	[Engine is running] • Engine running after the following conditions are met - Engine: after warming up - Driving for 3 minutes at a speed of 80 km/h (50 MPH) or more (Keep the vehicle speed as steady as possible during the cruising.)	0 - 1.0V
35	Ground	B/Y	Sensor ground (Heated oxygen sensor 2, Heated oxygen sensor 3)	—	[Engine is running] • Warm-up condition • Idle speed	0V
36	Ground	B	Sensor ground (Throttle position sensor)	—	[Engine is running] • Warm-up condition • Idle speed	0V
37	Ground	W	Throttle position sensor 1	Input	[Ignition switch: ON] • Selector lever: D • Accelerator pedal: Fully released	More than 0.36V
					[Ignition switch: ON] • Selector lever: D • Accelerator pedal: Fully depressed	Less than 4.75V

Terminal No. +	Terminal No. –	Wire color	Description: Signal name	Description: Input/Output	Condition	Value (Approx.)
38	Ground	R	Throttle position sensor 2	Input	[Ignition switch: ON] • Selector lever: D • Accelerator pedal: Fully released	Less than 4.75V
					[Ignition switch: ON] • Selector lever: D • Accelerator pedal: Fully depressed	More than 0.36V
39	Ground	R	Refrigerant pressure sensor	Input	[Engine is running] • Warm-up condition • Both A/C switch and blower fan motor switch: ON (Compressor operates)	1.0 - 4.0V
40	Ground	G	Sensor ground (Refrigerant pressure sensor)	—	[Engine is running] • Warm-up condition • Idle speed	0V
45	Ground	B/W	A/F sensor 1 (bank 1)	Input	[Ignition switch: ON]	2.2V
46	Ground	Y	Engine coolant temperature sensor	Input	[Engine is running]	0 - 4.8V Output voltage varies with engine coolant temperature.
47	Ground	B	Sensor power supply (Throttle position sensor)	—	[Ignition switch: ON]	5V
49	Ground	L	A/F sensor 1	Input	[Engine is running] • Warm-up condition • Engine speed: 2,500 rpm	1.8V Output voltage varies with air fuel ratio.
50	Ground	L/Y	Intake air temperature sensor	Input	[Engine is running]	0 - 4.8V Output voltage varies with intake air temperature.
52	Ground	LG	Sensor ground (Engine coolant temperature sensor)	—	[Engine is running] • Warm-up condition • Idle speed	0V
56	Ground	G/B	Sensor ground (Mass air flow sensor, Intake air temperature sensor)	—	[Engine is running] • Warm-up condition • Idle speed	0V
58	Ground	O	Mass air flow sensor	Input	[Engine is running] • Warm-up condition • Selector lever: N • Idle speed	0.9 - 1.2V
					[Engine is running] • Warm-up condition • Selector lever: P • Engine speed: 2,500 rpm	1.5 - 1.8V
59	Ground	G/W	Sensor power supply [Camshaft position sensor (PHASE)]	—	[Ignition switch: ON]	5V
60	Ground	Y/B	Sensor ground [Crankshaft position sensor (POS)]	—	[Engine is running] • Warm-up condition • Idle speed	0V
61	Ground	W	Knock sensor	Input	[Engine is running] • Idle speed	2.5V
64	Ground	B/R	Sensor ground [Camshaft position sensor (PHASE)]	—	[Engine is running] • Warm-up condition • Idle speed	0V

Terminal No.		Wire color	Description		Condition	Value (Approx.)
+	-–		Signal name	Input/ Output		
65	Ground	W	Crankshaft position sensor (POS)	Input	[Engine is running] • Warm-up condition • Idle speed **NOTE:** The pulse cycle changes depending on rpm at idle	1.0 - 6.0★ 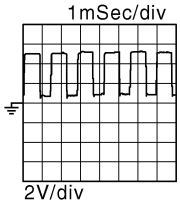 JMBIA0091GB
					[Engine is running] • Engine speed: 2,500 rpm	1.0 - 6.0★ 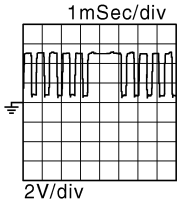 JMBIA0092GB
67	Ground	—	Sensor ground (Knock sensor)	—	[Engine is running] • Warm-up condition • Idle speed	0V
69	Ground	W/R	Camshaft position sensor (PHASE)	Input	[Engine is running] • Warm-up condition • Idle speed **NOTE:** The pulse cycle changes depending on rpm at idle	1.0 - 6.0★ 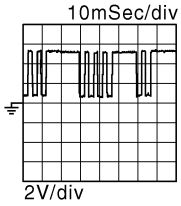 JMBIA0093GB
					[Engine is running] • Engine speed is 2,500 rpm	1.0 - 6.0★ 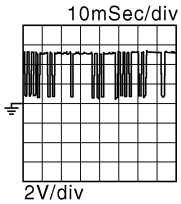 JMBIA0094GB
72	Ground	LG/B	Sensor power supply (Refrigerant pressure sensor)	—	[Ignition switch: ON]	5V
73	Ground	BR	CAN communication line	Input/ Output	—	—
74	Ground	Y	CAN communication line	Input/ Output	—	—
76	Ground	R/G	Sensor power supply [Crankshaft position sensor (POS)]	—	[Ignition switch: ON]	5V
77	Ground	W/L	Power supply for ECM (Back-up)	Input	[Ignition switch: OFF]	BATTERY VOLTAGE (11 - 14V)

Terminal No. +	Terminal No. -–	Wire color	Description: Signal name	Description: Input/ Output	Condition	Value (Approx.)
78	Ground	R/L	Intake valve timing control solenoid valve	Output	[Engine is running] • Warm-up condition • Idle speed	7 - 10V★ 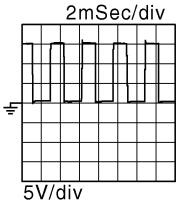
85	Ground	G/Y	ASCD steering switch	Input	[Ignition switch: ON] • ASCD steering switch: OFF	4V
					[Ignition switch: ON] • MAIN switch: Pressed	0V
					[Ignition switch: ON] • CANCEL switch: Pressed	1V
					[Ignition switch: ON] • RESUME/ACCELERATE switch: Pressed	3V
					[Ignition switch: ON] • SET/COAST switch: Pressed	2V
86	Ground	LG	EVAP control system pressure sensor	Input	[Ignition switch: ON]	1.8 - 4.8V
88	Ground	W	Data link connector	Input/ Output	—	—
91	Ground	BR/L	Sensor power supply (EVAP control system pressure sensor)	—	[Ignition switch: ON]	5V
92	Ground	R	Sensor ground (ASCD steering switch)	—	[Engine is running] • Warm-up condition • Idle speed	0V
93	Ground	L/Y	Ignition switch	Input	[Ignition switch: OFF]	0V
					[Ignition switch: ON]	BATTERY VOLTAGE (11 - 14V)
95	Ground	R/Y	Fuel tank temperature sensor	Input	[Engine is running]	0 - 4.8V Output voltage varies with fuel tank temperature.
96	Ground	V	Sensor ground (EVAP control system pressure sensor)	—	[Engine is running] • Warm-up condition • Idle speed	0V
97	Ground	P	CAN communication line	Input/ Output	—	—
98	Ground	L	CAN communication line	Input/ Output	—	—
99	Ground	P	Engine speed signal output	Output	[Engine is running] • Warm-up condition • Idle speed **NOTE:** The pulse cycle changes depending on rpm at idle	0 - 14V★ 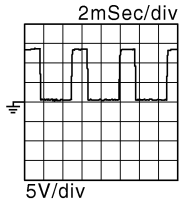

Terminal No.		Wire color	Description		Condition	Value (Approx.)
+	-–		Signal name	Input/ Output		
103	Ground	L	Engine TDC signal output	Output	[Engine is running] • Warm-up condition • Idle speed **NOTE:** The pulse cycle changes depending on rpm at idle	0 - 14V★ 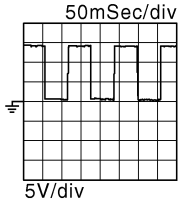
104	Ground	B/W	Sensor ground (Fuel tank temperature sensor)	—	[Engine is running] • Warm-up condition • Idle speed	0V
105	Ground	R/G	Power supply for ECM	Input	[Ignition switch: ON]	BATTERY VOLTAGE (11 - 14V)
106	Ground	SB	Stop lamp switch	Input	[Ignition switch: OFF] • Brake pedal: Fully released	0V
					[Ignition switch: OFF] • Brake pedal: Slightly depressed	BATTERY VOLTAGE (11 - 14V)
107 108	Ground	B B	ECM ground	—	[Engine is running] • Idle speed	Body ground
109	Ground	LG	EVAP canister vent control valve	Output	[Ignition switch: ON]	BATTERY VOLTAGE (11 - 14V)
110	Ground	G/B	ASCD brake switch	Input	[Ignition switch: ON] • Brake pedal: Slightly depressed	0V
					[Ignition switch: ON] • Brake pedal: Fully released	BATTERY VOLTAGE (11 - 14V)
111 112	Ground	B B	ECM ground	—	[Engine is running] • Idle speed	Body ground

★: Average voltage for pulse signal (Actual pulse signal can be confirmed by oscilloscope.)

Wiring Diagram — ENGINE CONTROL SYSTEM —

INFOID:0000000003069428

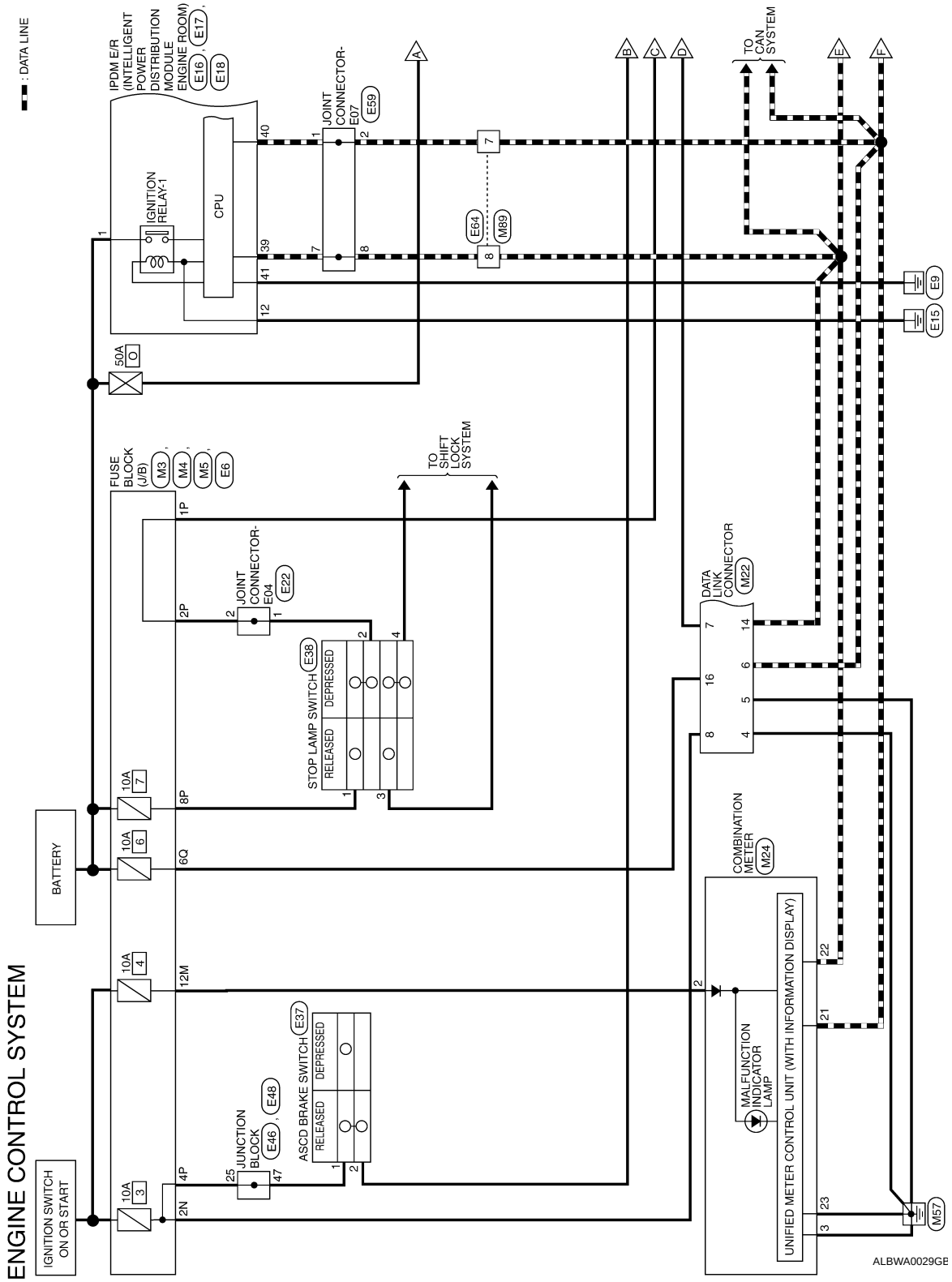

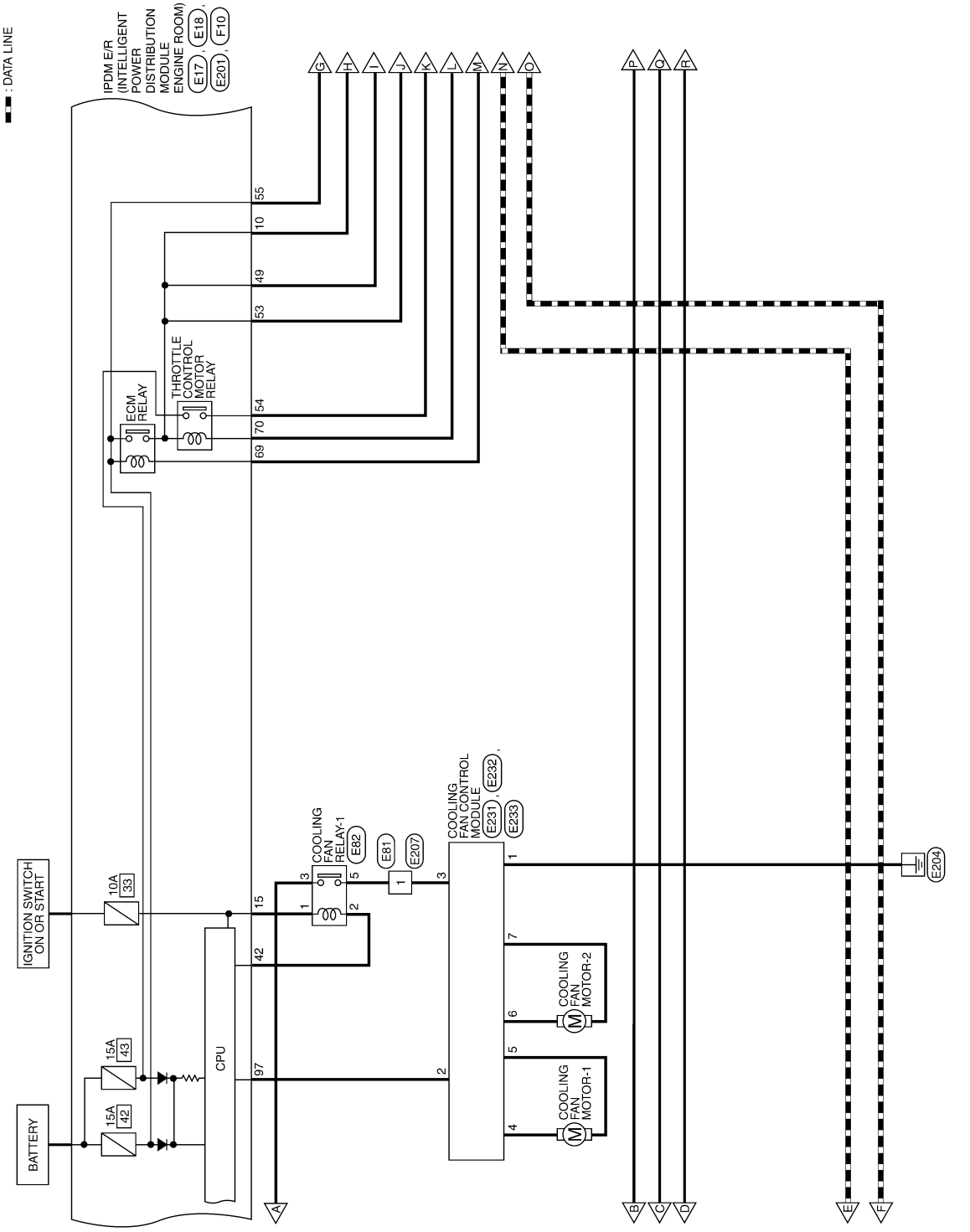
: DATA LINE
IPDM E/R (INTELLIGENT POWER DISTRIBUTION MODULE ENGINE ROOM)
E17, E18, E201, F10
ECM RELAY
THROTTLE CONTROL MOTOR RELAY
55
10
49
53
54
70
69
IGNITION SWITCH ON OR START
BATTERY
10A 33
15A 43
15A 42
CPU
15
42
97
COOLING FAN RELAY-1
E82
E81
E207
COOLING FAN CONTROL MODULE
E231, E232, E233
COOLING FAN MOTOR-2
COOLING FAN MOTOR-1
E204
ALBWA0030GE

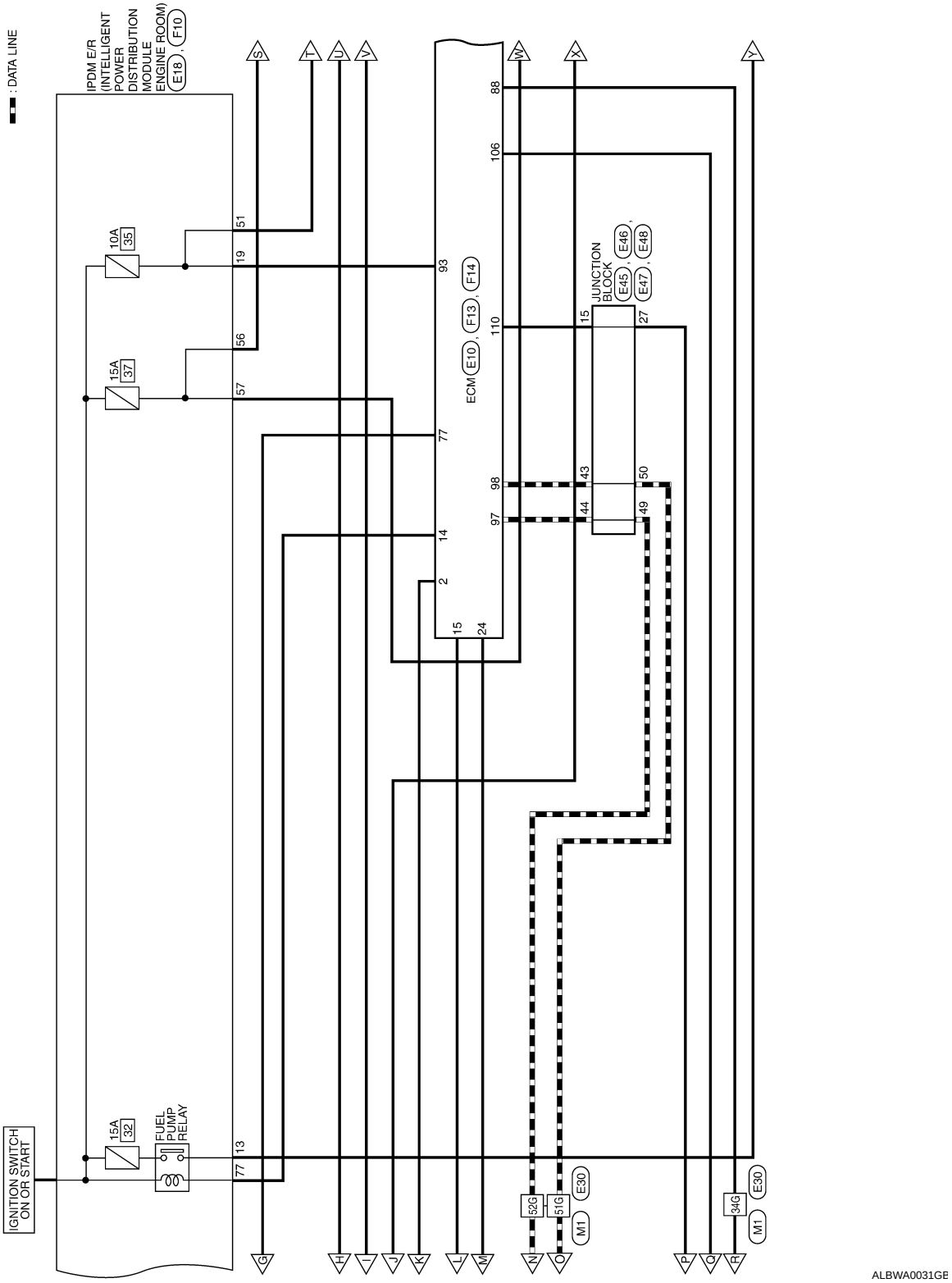
: DATA LINE
IPDM E/R (INTELLIGENT POWER DISTRIBUTION MODULE ENGINE ROOM) E18, F10
10A 35
15A 37
15A 32
FUEL PUMP RELAY
IGNITION SWITCH ON OR START
ECM E10, F13, F14
JUNCTION BLOCK E45, E46, E47, E48
52G
51G
34G
M1
E30
ALBWA0031GB

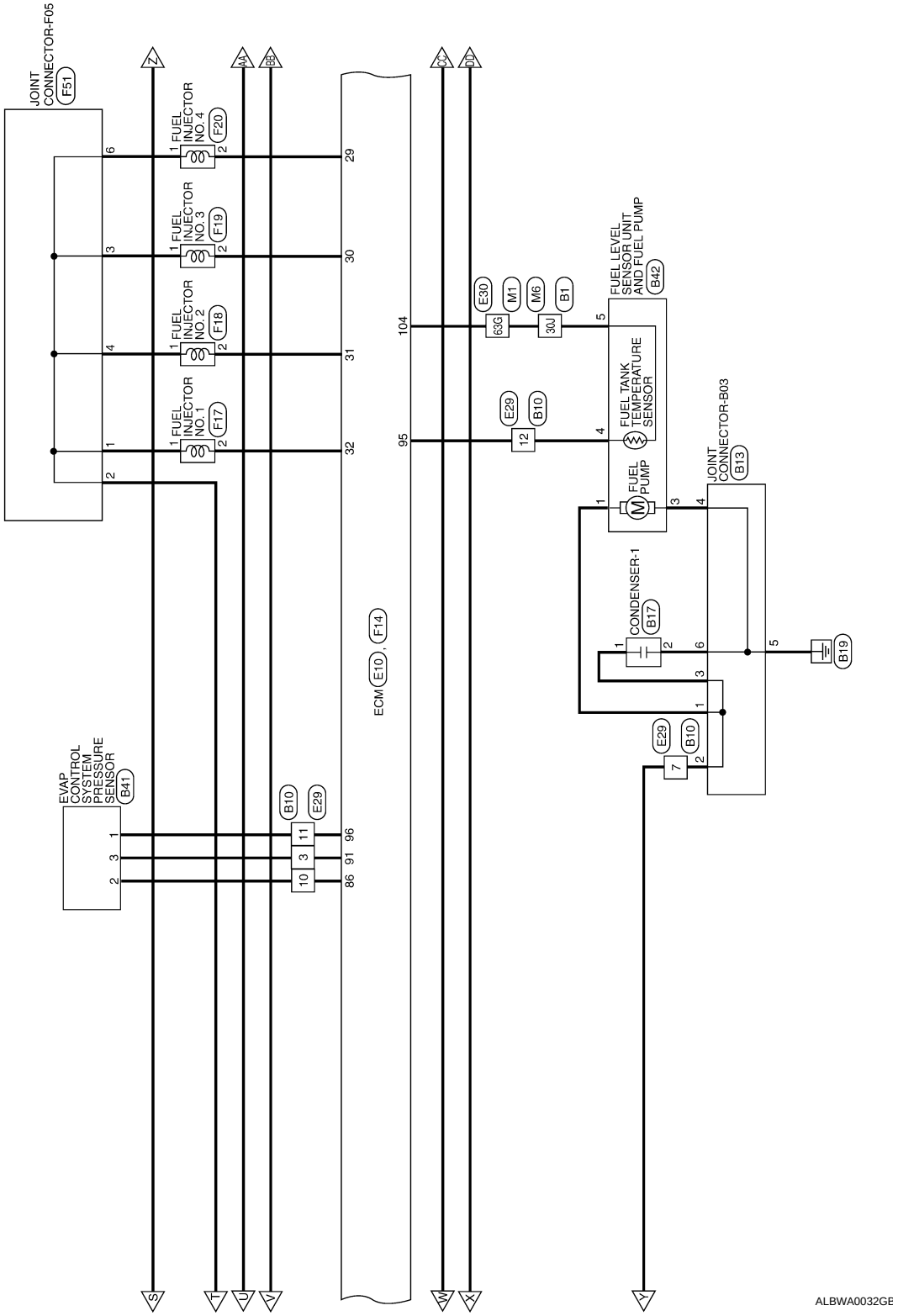
JOINT CONNECTOR-F05
F51
FUEL INJECTOR NO.4
F20
FUEL INJECTOR NO.3
F19
FUEL INJECTOR NO.2
F18
FUEL INJECTOR NO.1
F17
EVAP CONTROL SYSTEM PRESSURE SENSOR
B41
ECM
E10
F14
FUEL LEVEL SENSOR UNIT AND FUEL PUMP
B42
FUEL TANK TEMPERATURE SENSOR
FUEL PUMP
CONDENSER-1
B17
JOINT CONNECTOR-B03
B13
B19
E29
B10
E30
M1
M6
B1
63G
30J
12
7
11
3
10
29
30
31
32
104
95
96
91
86
Z
AA
BB
CC
DD
S
T
U
V
W
X
Y
ALBWA0032GE

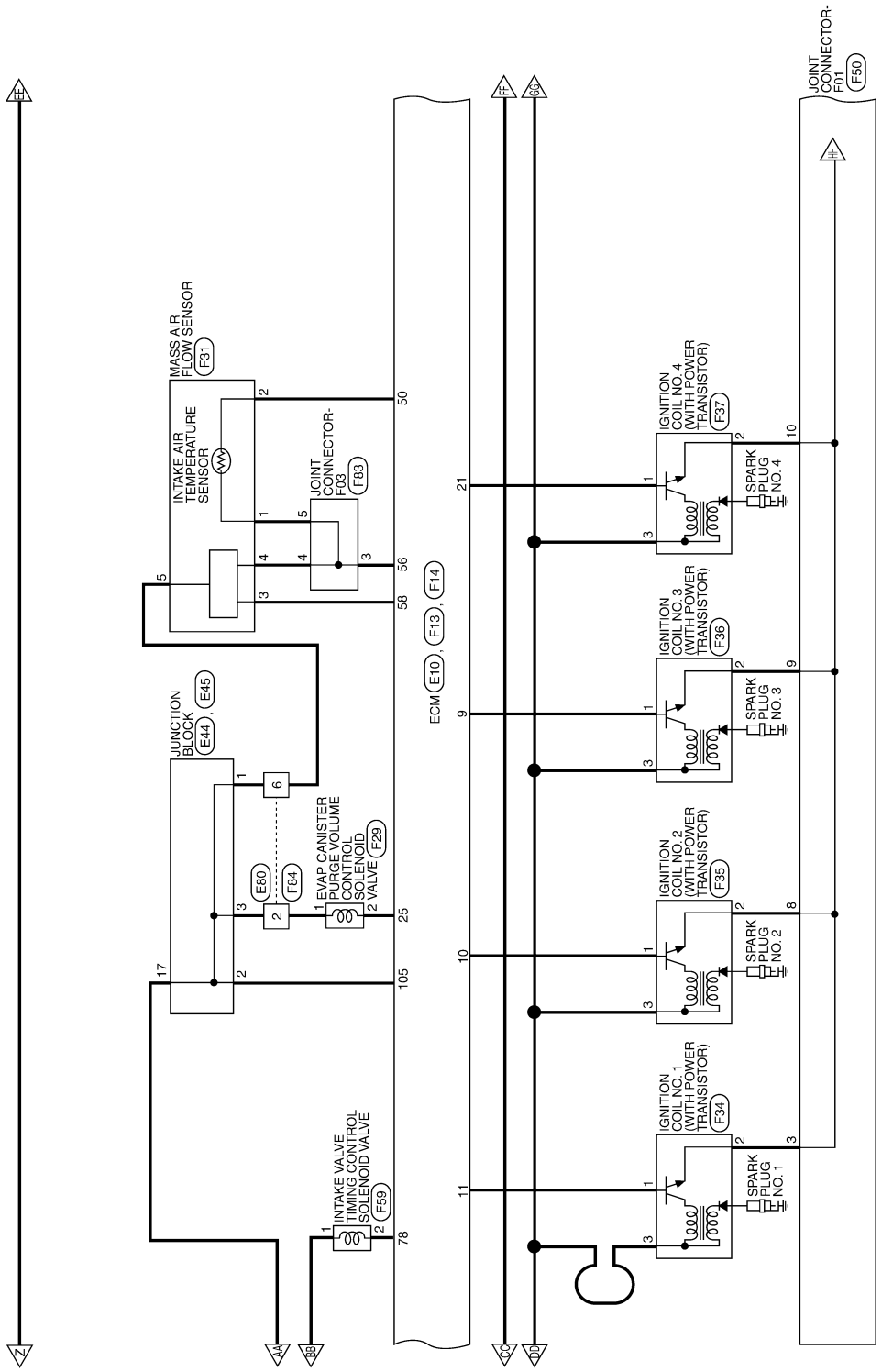

ALBWA0033GB

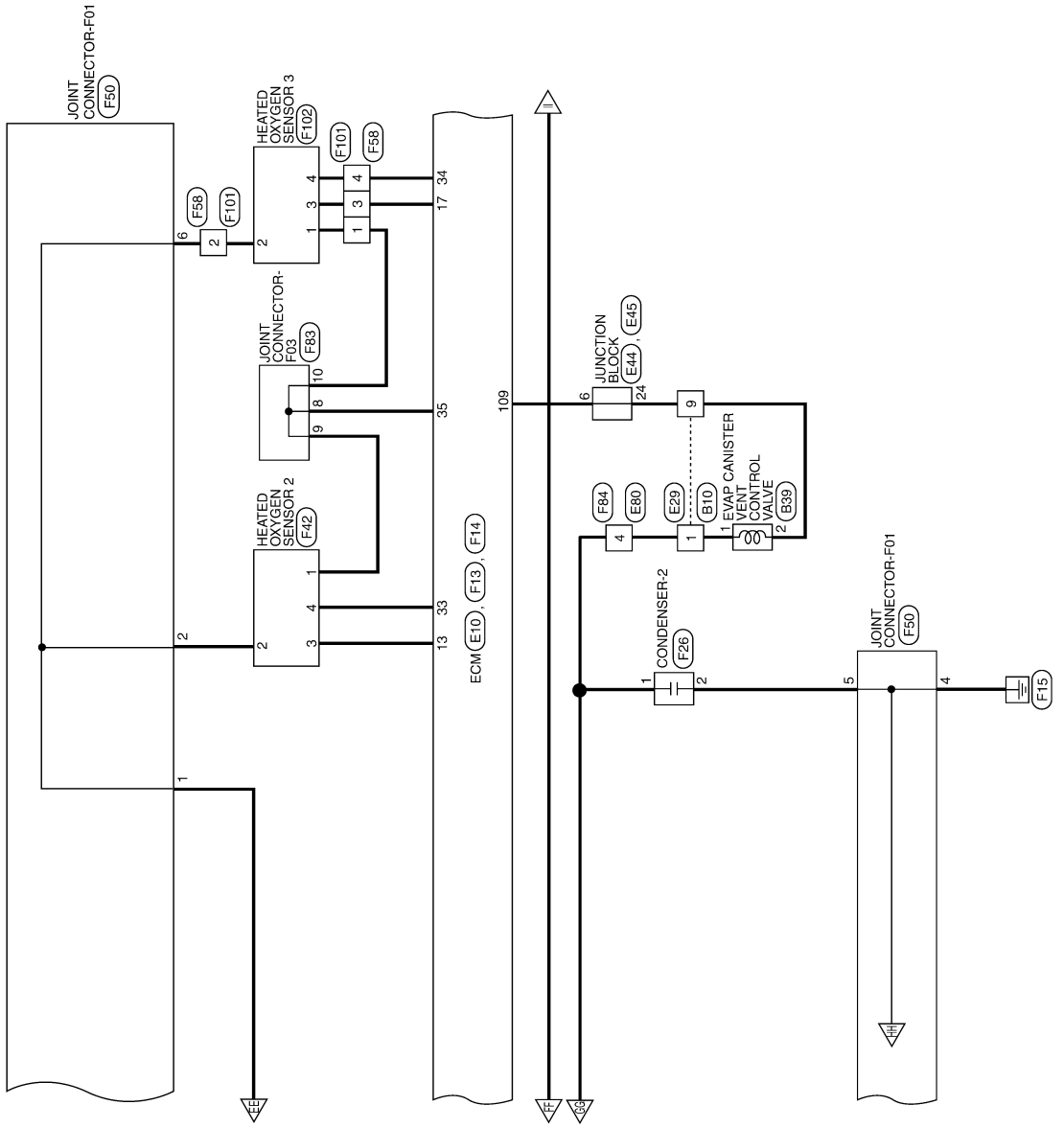

ALBWA0034GE

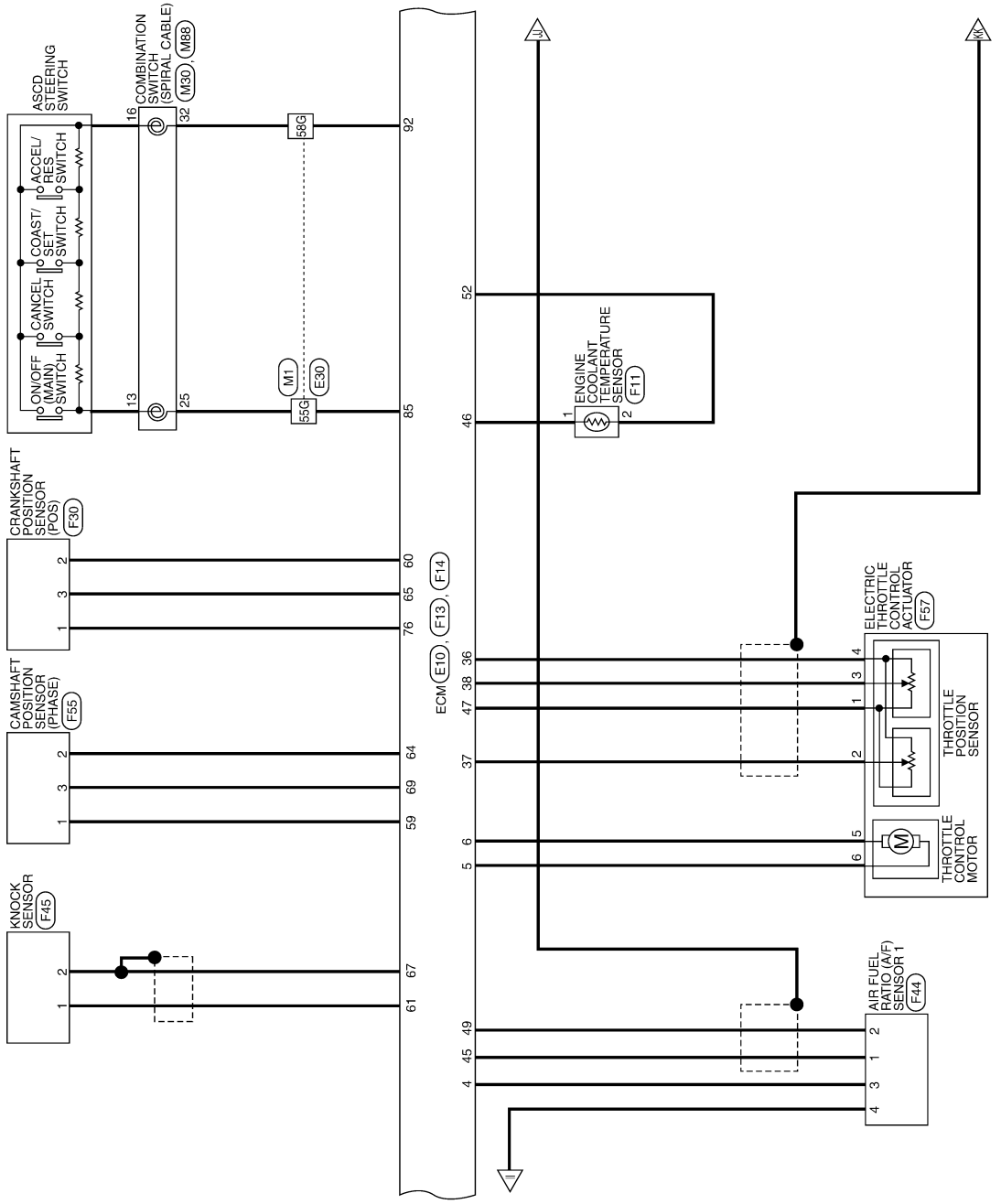
ASCD STEERING SWITCH
ON/OFF (MAIN) SWITCH
CANCEL SWITCH
COAST/ SET SWITCH
ACCEL/ RES SWITCH
COMBINATION SWITCH (SPIRAL CABLE) (M30), (M88)
16
13
32
25
58G
55G
M1
E30
92
85
52
46
ENGINE COOLANT TEMPERATURE SENSOR (F11)
CRANKSHAFT POSITION SENSOR (POS) (F30)
CAMSHAFT POSITION SENSOR (PHASE) (F55)
KNOCK SENSOR (F45)
60
65
76
64
69
59
67
61
ECM (E10), (F13), (F14)
36
38
47
37
6
5
49
45
4
ELECTRIC THROTTLE CONTROL ACTUATOR (F57)
THROTTLE POSITION SENSOR
THROTTLE CONTROL MOTOR
AIR FUEL RATIO (A/F) SENSOR 1 (F44)
ALBWA0035GB

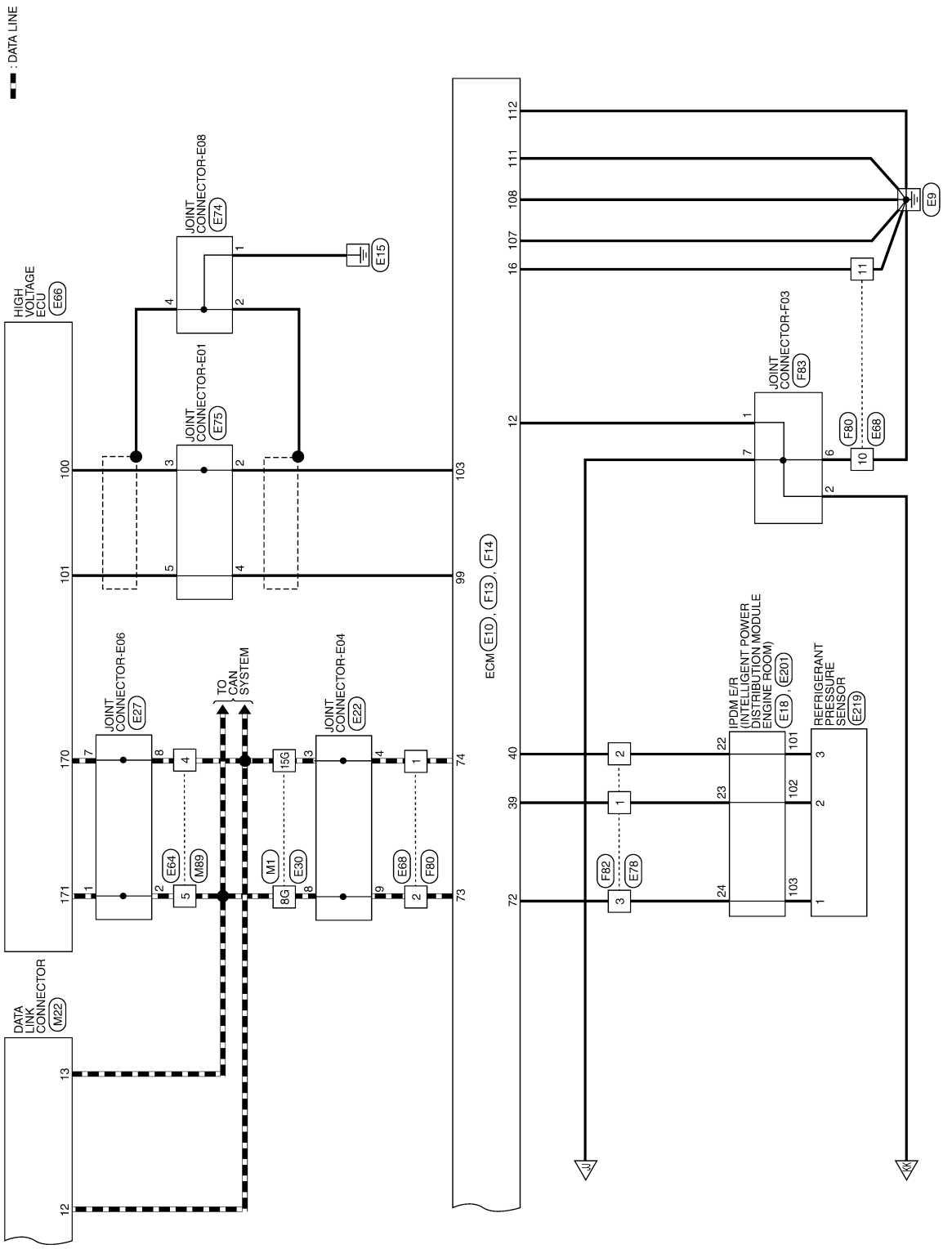
: DATA LINE
HIGH VOLTAGE ECU
E66
DATA LINK CONNECTOR
M22
JOINT CONNECTOR-E08
E74
JOINT CONNECTOR-E01
E75
JOINT CONNECTOR-E06
E27
JOINT CONNECTOR-E04
E22
TO CAN SYSTEM
E15
E64
M89
M1
E30
E68
F80
15G
8G
ECM
E10
F13
F14
JOINT CONNECTOR-F03
F83
E9
E78
F82
IPDM E/R (INTELLIGENT POWER DISTRIBUTION MODULE ENGINE ROOM)
E18
E201
REFRIGERANT PRESSURE SENSOR
E219
ALBWA0036GE

ENGINE CONTROL SYSTEM CONNECTORS

Connector No.	M1
Connector Name	WIRE TO WIRE
Connector Color	WHITE

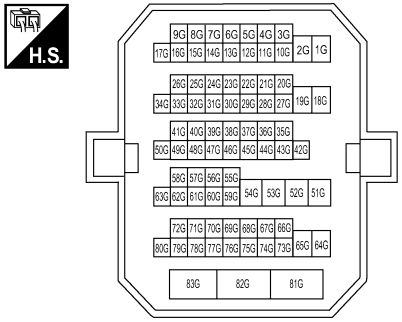

Terminal No.	Color of wire	Signal Name
8G	BR	–
15G	Y	–
34G	O	–
51G	L	–
52G	P	–
55G	G/Y	–
58G	R	–
63G	B/W	–

Connector No.	M3
Connector Name	FUSE BLOCK (J/B)
Connector Color	WHITE

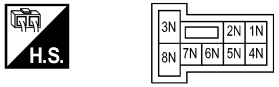

Terminal No.	Color of wire	Signal Name
2N	G	–

Connector No.	M4
Connector Name	FUSE BLOCK (J/B)
Connector Color	WHITE

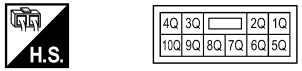

Terminal No.	Color of wire	Signal Name
6Q	Y/R	–

Connector No.	M5
Connector Name	FUSE BLOCK (J/B)
Connector Color	WHITE

Terminal No.	Color of wire	Signal Name
12M	P	–

Connector No.	M6
Connector Name	WIRE TO WIRE
Connector Color	WHITE

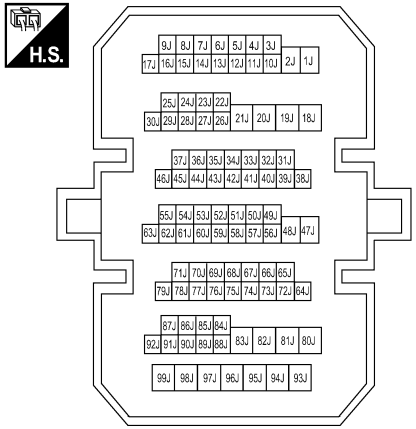

Terminal No.	Color of wire	Signal Name
30J	B/W	–

ALBIA0277GB

Connector No.	M22
Connector Name	DATA LINK CONNECTOR
Connector Color	WHITE

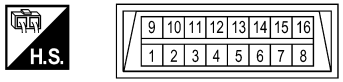

Terminal No.	Color of wire	Signal Name
4	B	GND
5	B	GND
6	L	CAN-H
7	O	KLINE
8	G	IGN_SW
12	BR	CAN-L
13	Y	CAN-H
14	P	CAN-L
16	Y/R	BATT

Connector No.	M24
Connector Name	COMBINATION METER
Connector Color	WHITE

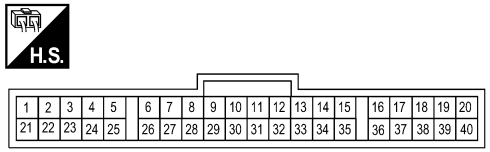

Terminal No.	Color of wire	Signal Name
2	O	IGN
3	B	GND
21	L	CAN-H
22	P	CAN-L
23	B	GND

Connector No.	M30
Connector Name	COMBINATION SWITCH (SPIRAL CABLE)
Connector Color	GRAY

Terminal No.	Color of wire	Signal Name
25	G/Y	ASCD_SW
32	R	ASCD_GND

Connector No.	M88
Connector Name	COMBINATION SWITCH (SPIRAL CABLE)
Connector Color	GRAY

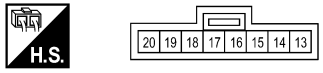

Terminal No.	Color of wire	Signal Name
13	Y	ASCD_SW
16	B	ASCD_GND

Connector No.	M89
Connector Name	WIRE TO WIRE
Connector Color	WHITE

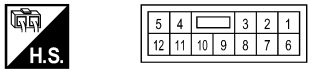

Terminal No.	Color of wire	Signal Name
4	BR	–
5	Y	–
7	L	–
8	P	–

Connector No.	E6
Connector Name	FUSE BLOCK (J/B)
Connector Color	WHITE

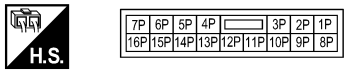

Terminal No.	Color of wire	Signal Name
1P	SB	–
2P	R/G	–
4P	LG	–
8P	Y/R	–

ALBIA0278GB

Connector No.	E10
Connector Name	ECM
Connector Color	BLACK

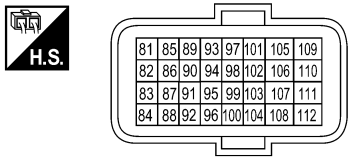

Terminal No.	Color of wire	Signal Name
85	G/Y	ASCDSW
86	LG	FTPRES
88	W	KLINE
91	BR/L	AVCC2-FTPRES

Terminal No.	Color of wire	Signal Name
92	R	GNDA-ASCDSW
93	L/Y	IGNSW
95	R/Y	TF
96	V	GNDA-FTPRES
97	P	CAN-L
98	L	CAN-H
99	P	NEO
103	L	GO
104	B/W	GNDA-TF
105	R/G	VBR
106	SB	BRAKE
107	B	GND
108	B	GND
109	LG	CDCV
110	G/B	BNCSW
111	B	GND
112	B	GND

Connector No.	E16
Connector Name	IPDM E/R (INTELLIGENT POWER DISTRIBUTION MODULE ENGINE ROOM)
Connector Color	BLACK

Terminal No.	Color of wire	Signal Name
1	R	F/L_MAIN

Connector No.	E17
Connector Name	IPDM E/R (INTELLIGENT POWER DISTRIBUTION MODULE ENGINE ROOM)
Connector Color	WHITE

Terminal No.	Color of wire	Signal Name
39	P	CAN-L
40	L	CAN-H
41	B	S-GND
42	SB	MOTOR_FAN_RLY_MID

Connector No.	E18
Connector Name	IPDM E/R (INTELLIGENT POWER DISTRIBUTION MODULE ENGINE ROOM)
Connector Color	WHITE

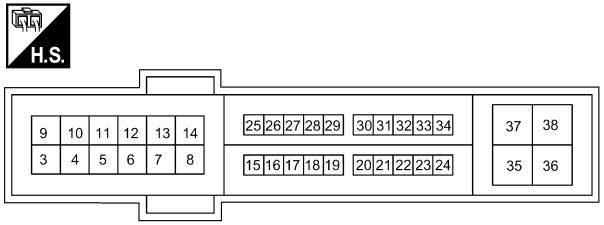

Terminal No.	Color of wire	Signal Name
10	R/B	ECM_VB
12	B	P-GND
13	W	FUEL_PUMP
15	BR	START_IG_E/R
19	L/Y	BCM_IGNSW
22	W/R	PD_SENS_GND-E/R
23	B/R	PD_SENS_SIG-E/R
24	BR/W	PD_SENSPWRE/R

ALBIA0279GB

Connector No.	E22
Connector Name	JOINT CONNECTOR-E04
Connector Color	BLACK

Terminal No.	Color of wire	Signal Name
1	R/G	–
2	R/G	–
3	Y	–
4	Y	–
8	BR	–
9	BR	–

Connector No.	E27
Connector Name	JOINT CONNECTOR-E06
Connector Color	BLUE

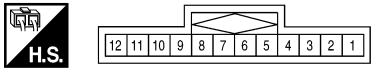

Terminal No.	Color of wire	Signal Name
1	Y	–
2	Y	–
7	BR	–
8	BR	–

Connector No.	E29
Connector Name	WIRE TO WIRE
Connector Color	WHITE

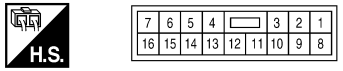

Terminal No.	Color of wire	Signal Name
1	R/Y	–
3	BR/L	–
7	W	–
9	Y	–
10	LG	–
11	V	–
12	R/Y	–

Connector No.	E30
Connector Name	WIRE TO WIRE
Connector Color	WHITE

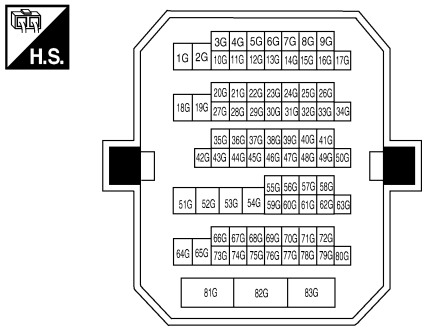

ALBIA0280GB

Terminal No.	Color of wire	Signal Name
8G	BR	–
15G	Y	–
34G	W	–
51G	L	–
52G	P	–
55G	G/Y	–
58G	R	–
63G	B/W	–

Connector No.	E37
Connector Name	ASCD BRAKE SWITCH
Connector Color	BROWN

Terminal No.	Color of wire	Signal Name
1	G/R	–
2	G/B	–

Connector No.	E38
Connector Name	STOP LAMP SWITCH
Connector Color	WHITE

Terminal No.	Color of wire	Signal Name
1	Y/R	–
2	R/G	–
3	G/R	–
4	R/W	–

Connector No.	E44
Connector Name	JUNCTION BLOCK
Connector Color	BROWN

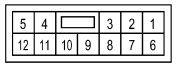

Terminal No.	Color of wire	Signal Name
1	R/G	–
2	R/G	–
3	R/W	–
6	LG	–

Connector No.	E45
Connector Name	JUNCTION BLOCK
Connector Color	WHITE

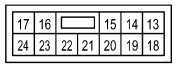

Terminal No.	Color of wire	Signal Name
15	G/B	–
17	R/B	–
24	Y	–

Connector No.	E46
Connector Name	JUNCTION BLOCK
Connector Color	WHITE

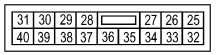

Terminal No.	Color of wire	Signal Name
25	LG	–
27	G/B	–

Connector No.	E47
Connector Name	JUNCTION BLOCK
Connector Color	WHITE

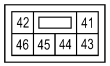

Terminal No.	Color of wire	Signal Name
43	L	–
44	P	–

Connector No.	E48
Connector Name	JUNCTION BLOCK
Connector Color	WHITE

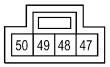

Terminal No.	Color of wire	Signal Name
47	G/R	–
49	P	–
50	L	–

ALBIA0281GB

Connector No.	E59
Connector Name	JOINT CONNECTOR-E07
Connector Color	BLUE

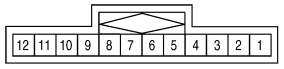

Terminal No.	Color of Wire	Signal Name
1	L	–
2	L	–
7	P	–
8	P	–

Connector No.	E64
Connector Name	WIRE TO WIRE
Connector Color	WHITE

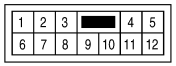

Terminal No.	Color of Wire	Signal Name
4	BR	–
5	Y	–
7	L	–
8	P	–

Connector No.	E66
Connector Name	HIGH VOLTAGE ECU
Connector Color	BLACK

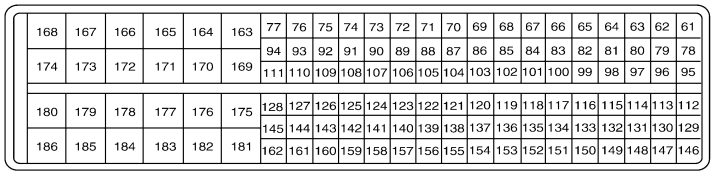

Terminal No.	Color of Wire	Signal Name
100	L	GI (PHASE)
101	P	NEI (POS)
170	BR	CAN-L
171	Y	CAN-H

Connector No.	E68
Connector Name	WIRE TO WIRE
Connector Color	WHITE

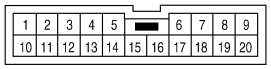

Terminal No.	Color of Wire	Signal Name
1	Y	–
2	BR	–
10	B	–
11	B	–

Connector No.	E74
Connector Name	JOINT CONNECTOR-E08
Connector Color	WHITE

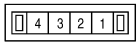

Terminal No.	Color of Wire	Signal Name
1	B	–
2	–	–
4	–	–

Connector No.	E75
Connector Name	JOINT CONNECTOR-E01
Connector Color	WHITE

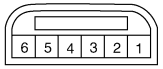

Terminal No.	Color of Wire	Signal Name
2	L	–
3	L	–
4	P	–
5	P	–

ALBIA0282GB

Connector No.	E78
Connector Name	WIRE TO WIRE
Connector Color	WHITE

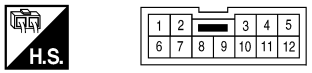

Terminal No.	Color of Wire	Signal Name
1	B/R	–
2	W/R	–
3	BR/W	–

Connector No.	E80
Connector Name	WIRE TO WIRE
Connector Color	BROWN

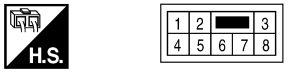

Terminal No.	Color of Wire	Signal Name
2	R/W	–
4	R/Y	–
6	R/L	–

Connector No.	E81
Connector Name	WIRE TO WIRE
Connector Color	BLACK

Terminal No.	Color of Wire	Signal Name
1	R	–

Connector No.	E82
Connector Name	COOLING FAN RELAY-1
Connector Color	–

Terminal No.	Color of Wire	Signal Name
1	BR	–
2	SB	–
3	W/L	–
5	R	–

Connector No.	E201
Connector Name	IPDM E/R (INTELLIGENT POWER DISTRIBUTION MODULE ENGINE ROOM)
Connector Color	WHITE

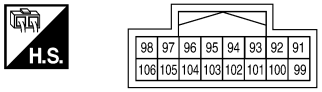

Terminal No.	Color of Wire	Signal Name
97	V	MOTOR_FAN_PWM
101	O/L	PD_SENS_GND
102	R/B	PD_SENS_SIG
103	P	PD_SEND_PWR

ALBIA0283GB

Connector No.	E207
Connector Name	WIRE TO WIRE
Connector Color	BLACK

Terminal No.	Color of Wire	Signal Name
1	R	–

Connector No.	E219
Connector Name	REFRIGERANT PRESSURE SENSOR
Connector Color	BLACK

Terminal No.	Color of wire	Signal Name
1	P	AVCC2
2	R	SIGNAL
3	W	GND

Connector No.	E231
Connector Name	COOLING FAN CONTROL MODULE
Connector Color	GRAY

Terminal No.	Color of wire	Signal Name
1	B	GND
2	V	PWM_SIG
3	R	PWM_POWER

Connector No.	E232
Connector Name	COOLING FAN MOTOR-1
Connector Color	BLACK

Terminal No.	Color of wire	Signal Name
4	B	–
5	SB	–

Connector No.	E233
Connector Name	COOLING FAN MOTOR-2
Connector Color	BLACK

Terminal No.	Color of wire	Signal Name
6	B	–
7	SB	–

ALBIA0284GB

Connector No.	F10
Connector Name	IPDM E/R (INTELLIGENT POWER DISTRIBUTION MODULE ENGINE ROOM)
Connector Color	WHITE

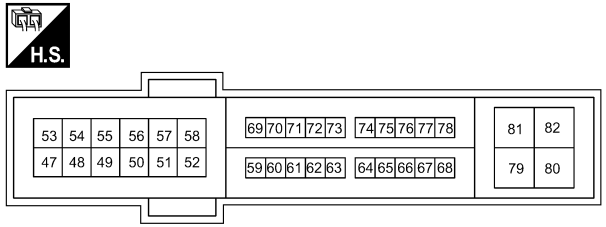

Terminal No.	Color of wire	Signal Name
49	B/R	ENG_SOL
51	LG	INJECTOR_#1
53	R/B	IGN_COIL
54	G/W	ETC
55	W/L	ECM_BAT
56	R/Y	O2_SENS_#1
57	O	O2_SENS_#2
69	W/B	SSOFF
70	O	MOTRLY
77	B/R	FPR

Connector No.	F11
Connector Name	ENGINE COOLANT TEMPERATURE SENSOR
Connector Color	GRAY

Terminal No.	Color of wire	Signal Name
1	Y	TW
2	LG	GND

Connector No.	F13
Connector Name	ECM
Connector Color	BROWN

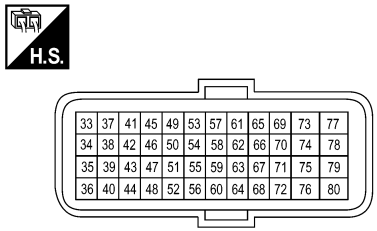

Terminal No.	Color of wire	Signal Name
33	LG	OSR1
34	W/L	3RDO2S
35	B/Y	GNDA-02SR2
36	B	GNDA-TPS-B1
37	W	TPS1-B1
38	R	TPS2-B1
39	R	PDPRES
40	G	GNDA-PDPRES
45	B/W	AF+1
46	Y	TW
47	G	AVCC1-TPS-B1
49	L	AF-1
50	L/Y	TA1
52	LG	GNDA-TW
56	G/B	GNDA-TA1

Terminal No.	Color of wire	Signal Name
58	O	QA1+
59	G/W	AVCC1-PHASE#1
60	Y/B	GND-POS
61	W	KNK1
64	B/R	GND-PHASE#1
65	W	POS
67	–	GNDA-KNK 1
69	W/R	PHASE#1
72	LG/B	AVCC2-PDPRES
73	BR	ENGCAN-H
74	Y	ENGCAN-L
76	R/G	AVCC2-POS
77	W/L	BATT
78	R/L	CVTC#1

ALBIA0285GB

Connector No.	F14
Connector Name	ECM
Connector Color	GRAY

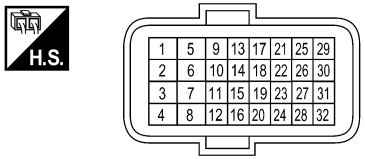

Terminal No.	Color of wire	Signal Name
2	G/W	VMOT-B1
4	BR/Y	AFH1
5	L	MOTOR1-B1
6	P	MOTOR2-B1
9	L/B	IGN #3
10	G/R	IGN #2
11	Y/R	IGN #1
12	B	GND
13	R	02HR1
14	B/R	FPR

Terminal No.	Color of wire	Signal Name
15	O	MOTRLY-B1
16	B	GND
17	L	3RD02H
21	G/Y	IGN #4
24	W/B	SSOF
25	P/L	EVAP
29	LG/R	INJ #4
30	R/Y	INJ #3
31	R/W	INJ #2
32	R/B	INJ #1

Connector No.	F17
Connector Name	FUEL INJECTOR NO. 1
Connector Color	GRAY

Terminal No.	Color of wire	Signal Name
1	LG	IGN
2	R/B	C/U

Connector No.	F18
Connector Name	FUEL INJECTOR NO. 2
Connector Color	GRAY

Terminal No.	Color of wire	Signal Name
1	Y/G	IGN
2	R/W	C/U

Connector No.	F19
Connector Name	FUEL INJECTOR NO. 3
Connector Color	GRAY

Terminal No.	Color of wire	Signal Name
1	LG	IGN
2	R/Y	C/U

ALBIA0286GB

Connector No.	F20
Connector Name	FUEL INJECTOR NO. 4
Connector Color	GRAY

Terminal No.	Color of wire	Signal Name
1	Y/G	IGN
2	LG/R	C/U

Connector No.	F26
Connector Name	CONDENSER-2
Connector Color	GRAY

Terminal No.	Color of wire	Signal Name
1	R/G	VBR
2	B	GND

Connector No.	F29
Connector Name	EVAP CANISTER PURGE VOLUME CONTROL SOLENOID VALVE
Connector Color	GRAY

Terminal No.	Color of wire	Signal Name
1	R/W	VBR
2	P/L	C/U

Connector No.	F30
Connector Name	CRANKSHAFT POSITION SENSOR (POS)
Connector Color	BLACK

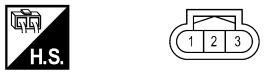

Terminal No.	Color of wire	Signal Name
1	R/G	AVCC2
2	Y/B	GND
3	W	POS

Connector No.	F31
Connector Name	MASS AIR FLOW SENSOR
Connector Color	BLACK

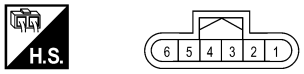

Terminal No.	Color of wire	Signal Name
1	G/B	TA-
2	L/Y	TA+
3	O	QA+
4	G/B	GND
5	R/G	VB

Connector No.	F34
Connector Name	IGNITION COIL NO. 1 (WITH POWER TRANSISTOR)
Connector Color	GRAY

Terminal No.	Color of wire	Signal Name
1	Y/R	SIGNAL
2	B	GND
3	R/W	VBR

ALBIA0287GB

Connector No.	F35
Connector Name	IGNITION COIL NO. 2 (WITH POWER TRANSISTOR)
Connector Color	GRAY

Terminal No.	Color of wire	Signal Name
1	G/R	SIGNAL
2	B	GND
3	R/W	VBR

Connector No.	F36
Connector Name	IGNITION COIL NO. 3 (WITH POWER TRANSISTOR)
Connector Color	GRAY

Terminal No.	Color of wire	Signal Name
1	L/B	SIGNAL
2	B	GND
3	R/W	VBR

Connector No.	F37
Connector Name	IGNITION COIL NO. 4 (WITH POWER TRANSISTOR)
Connector Color	GRAY

Terminal No.	Color of wire	Signal Name
1	G/Y	SIGNAL
2	B	GND
3	R/W	VBR

Connector No.	F42
Connector Name	HEATED OXYGEN SENSOR 2
Connector Color	BLACK

Terminal No.	Color of wire	Signal Name
1	B/Y	SENSOR(-)
2	R/Y	HEATER(+)
3	R	HEATER(-)
4	LG	SENSOR(+)

Connector No.	F44
Connector Name	AIR FUEL RATIO (A/F) SENSOR 1
Connector Color	DARK GRAY

Terminal No.	Color of wire	Signal Name
1	B/W	AF(+)
2	L	AF(-)
3	BR/Y	HEATER(-)
4	O	HEATER(+)

Connector No.	F45
Connector Name	KNOCK SENSOR
Connector Color	GRAY

Terminal No.	Color of wire	Signal Name
1	W	KNK
2	–	GND

ALBIA0288GB

Connector No.	F50
Connector Name	JOINT CONNECTOR-F01
Connector Color	BLACK

Terminal No.	Color of wire	Signal Name
1	R/Y	–
2	R/Y	–
3	B	–
4	B	–
5	B	–
6	R/Y	–
8	B	–
9	B	–
10	B	–

Connector No.	F51
Connector Name	JOINT CONNECTOR-F05
Connector Color	BLACK

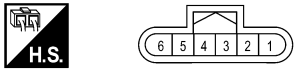

Terminal No.	Color of wire	Signal Name
1	LG	–
2	LG	–
3	LG	–
4	LG	–
6	LG	–

Connector No.	F55
Connector Name	CAMSHAFT POSITION SENSOR (PHASE)
Connector Color	BLACK

Terminal No.	Color of wire	Signal Name
1	G/W	AVCC1
2	B/R	GND
3	W/R	PHASE

Connector No.	F57
Connector Name	ELECTRIC THROTTLE CONTROL ACTUATOR
Connector Color	BLACK

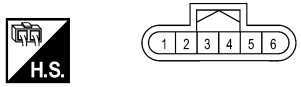

Terminal No.	Color of wire	Signal Name
1	G	INPUT
2	W	OUTPUT1
3	R	OUTPUT2
4	B	GND
5	P	MOTOR2
6	L	MOTOR1

ALBIA0289GB

Connector No.	F58
Connector Name	WIRE TO WIRE
Connector Color	BLACK

Terminal No.	Color of wire	Signal Name
1	B	–
2	R/Y	–
3	L	–
4	W	–

Connector No.	F59
Connector Name	INTAKE VALVE TIMING CONTROL SOLENOID VALVE
Connector Color	GRAY

Terminal No.	Color of wire	Signal Name
1	B/R	VB
2	R/L	C/U

Connector No.	F80
Connector Name	WIRE TO WIRE
Connector Color	WHITE

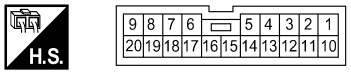

Terminal No.	Color of wire	Signal Name
1	Y	–
2	BR	–
10	B	–
11	B	–

Connector No.	F82
Connector Name	WIRE TO WIRE
Connector Color	WHITE

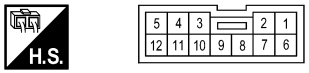

Terminal No.	Color of wire	Signal Name
1	R	–
2	G	–
3	LG/B	–

Connector No.	F83
Connector Name	JOINT CONNECTOR-F03
Connector Color	BLACK

Terminal No.	Color of wire	Signal Name
1	B	–
2	GR	–
3	G/B	–
4	G/B	–
5	G/B	–
6	B	–
7	–	SHIELD
8	B/Y	–
9	B/Y	–
10	B/L	–

Connector No.	F84
Connector Name	WIRE TO WIRE
Connector Color	BROWN

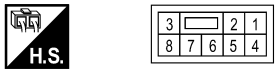

Terminal No.	Color of wire	Signal Name
2	R/W	–
4	R/W	–
6	R/G	–

Connector No.	F101
Connector Name	WIRE TO WIRE
Connector Color	BLACK

Terminal No.	Color of wire	Signal Name
1	B	–
2	R/Y	–
3	L	–
4	W	–

Connector No.	F102
Connector Name	HEATED OXYGEN SENSOR 3
Connector Color	GRAY

Terminal No.	Color of wire	Signal Name
1	B	SENSOR(-)
2	R/Y	HEATER(+)
3	L	HEATER(-)
4	W	SENSOR(+)

ALBIA0290GB

Connector No.	B1
Connector Name	WIRE TO WIRE
Connector Color	WHITE

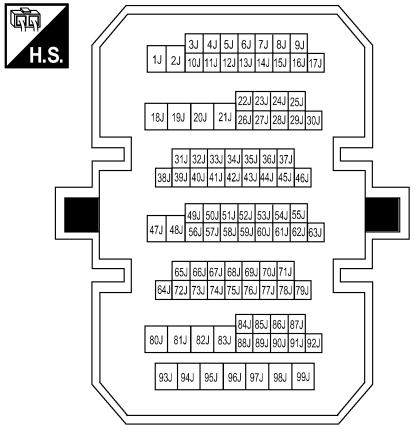

Terminal No.	Color of wire	Signal Name
30J	B/W	–

Connector No.	B10
Connector Name	WIRE TO WIRE
Connector Color	WHITE

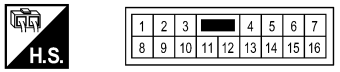

Terminal No.	Color of wire	Signal Name
1	R	–
3	BR/L	–
7	W	–
9	LG	–
10	LG	–
11	V	–
12	R/Y	–

Connector No.	B13
Connector Name	JOINT CONNECTOR-B03
Connector Color	WHITE

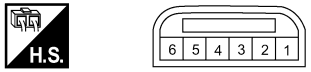

Terminal No.	Color of wire	Signal Name
1	SB	–
2	SB	–
3	W	–
4	B/Y	–
5	B/Y	–
6	B/Y	–

Connector No.	B17
Connector Name	CONDENSER-1
Connector Color	WHITE

Terminal No.	Color of wire	Signal Name
1	W	(+)
2	B/Y	(-)

Connector No.	B39
Connector Name	EVAP CANISTER VENT CONTROL VALVE
Connector Color	BLACK

Terminal No.	Color of wire	Signal Name
1	R	BATT
2	LG	C/U

Connector No.	B41
Connector Name	EVAP CONTROL SYSTEM PRESSURE SENSOR
Connector Color	GRAY

Terminal No.	Color of wire	Signal Name
1	V	GND
2	LG	SIGNAL
3	BR/L	AVCC2

ALBIA0291GB

Connector No.	B42
Connector Name	FUEL LEVEL SENSOR UNIT AND FUEL PUMP
Connector Color	GRAY

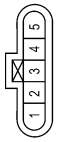

Terminal No.	Color of wire	Signal Name
1	S/B	IGN
3	B/Y	GND
4	R/Y	TEMP_SENS
5	B/W	SENSOR -

ALBIA0292GB

Fail Safe

INFOID:0000000003069429

DTC RELATED ITEM

DTC No.	Detected items	Engine operating condition in fail-safe mode
U0293 U0400 U1020 U1021	CAN communication	• ECM stops the engine. • The vehicle drives using the motor.
P0011	Intake valve timing control	• Engine idling stop is inhibited. • The signal is not energized to the intake valve timing control solenoid valve and the valve control does not function.
P0075	Intake valve timing control solenoid valve	Engine idling stop is inhibited.
P0101 P0102 P0103	Mass air flow sensor	• Engine idling stop is inhibited. • Fuel is cut off when engine speed is more than 2,400 rpm.
P0117 P0118	Engine coolant temperature sensor circuit	• Engine idling stop is inhibited. • Cooling fan operates while engine is running. • Engine coolant temperature will be determined by ECM based on the following condition. CONSULT-III displays the engine coolant temperature decided by ECM.

Condition	Engine coolant temperature decided (CONSULT-III display)
Just as ignition switch is turned ON or START	40°C (104°F)
Approx 4 minutes or more after engine starting	80°C (176°F)
Except as shown above	40 - 80°C (104 - 176°F) (Depends on the time)

P0122 P0123 P0222 P0223 P2135	Throttle position sensor	• Engine idling stop is inhibited. • The ECM controls the electric throttle control actuator in regulating the throttle opening in order for the idle position to be within +10 degrees. The ECM regulates the opening speed of the throttle valve to be slower than the normal condition. So, the acceleration will be poor.
P0125	Engine coolant temperature sensor	Engine idling stop is inhibited.
P0171 P0172	Fuel injection system	Engine idling stop is inhibited.
P0300 P0301 P0302 P0303 P0304	Misfire	Engine idling stop is inhibited.
P0335	Crankshaft position sensor (POS)	Engine idling stop is inhibited.
P0340	Camshaft position sensor (PHASE)	Engine idling stop is inhibited.
P0500	Vehicle speed sensor	When the fail-safe system for vehicle speed sensor is activated, the cooling fan operates (Highest) while engine is running.
P0605	ECM	ECM enters various fail-safe mode according to the detected malfunction. • Engine idling stop is inhibited. • The engine speed will not rise 2,500 rpm or more. • ECM stops the electric throttle control actuator control, throttle valve is maintained at a fixed opening (approx. 5 degrees) by the return spring. • ECM deactivates ASCD operation.
P0643	Sensor power supply	• Engine idling stop is inhibited. • ECM stops the electric throttle control actuator control, throttle valve is maintained at a fixed opening (approx. 5 degrees) by the return spring.
P1195	Engine does not start	• ECM stops the engine according to the fuel cut request signal sent from HV ECU. • The vehicle drives using the motor.

DTC No.	Detected items	Engine operating condition in fail-safe mode
P1196	Poor engine power	• ECM stops the engine according to the fuel cut request signal sent from HV ECU. • The vehicle drives using the motor.
P1197	Fuel run out	• ECM stops the engine according to the fuel cut request signal sent from HV ECU. • The vehicle drives using the motor.
P1805	Brake switch	ECM controls the electric throttle control actuator by regulating the throttle opening to a small range. Therefore, acceleration will be poor. Vehicle condition: Driving condition When engine is idling: Normal When accelerating: Poor acceleration
P2100 P2103	Throttle control motor relay	• Engine idling stop is inhibited. • ECM stops the electric throttle control actuator control, throttle valve is maintained at a fixed opening (approx. 5 degrees) by the return spring.
P2101	Electric throttle control function	• Engine idling stop is inhibited. • ECM stops the electric throttle control actuator control, throttle valve is maintained at a fixed opening (approx. 5 degrees) by the return spring.
P2118	Throttle control motor	• Engine idling stop is inhibited. • ECM stops the electric throttle control actuator control, throttle valve is maintained at a fixed opening (approx. 5 degrees) by the return spring.
P2119	Electric throttle control actuator	(When electric throttle control actuator does not function properly due to the return spring malfunction:) ECM controls the electric throttle actuator by regulating the throttle opening around the idle position. The engine speed will not rise more than 2,000 rpm.
		(When throttle valve opening angle in fail-safe mode is not in specified range:) ECM controls the electric throttle control actuator by regulating the throttle opening to 20 degrees or less.
		(When ECM detects the throttle valve is stuck open:) • Engine idling stop is inhibited. • The engine speed will not rise 1,150 rpm or more.

DTC Inspection Priority Chart

INFOID:0000000003069430

If some DTCs are displayed at the same time, perform inspections one by one based on the following priority chart.

Priority	Detected items (DTC)
1	• U0129 U0293 U1020 1022 CAN communication line • U0400 U0418 U1021 U1023 CAN communication • U1000 U1001 CAN communication line • P0101 P0102 P0103 Mass air flow sensor • P0112 P0113 P0127 Intake air temperature sensor • P0116 P0117 P0118 P0125 Engine coolant temperature sensor • P0122 P0123 P0222 P0223 P1225 P1226 P2135 Throttle position sensor • P0128 Thermostat function • P0181 P0182 P0183 Fuel tank temperature sensor • P0201 - P0204 Fuel injector • P0327 P0328 Knock sensor • P0335 Crankshaft position sensor (POS) • P0340 Camshaft position sensor (PHASE) • P0460 P0461 P0462 P0463 Fuel level sensor • P0500 Vehicle speed sensor • P0605 P0607 ECM • P0643 Sensor power supply
2	• P0031 P0032 Air fuel ratio (A/F) sensor 1 heater • P0037 P0038 Heated oxygen sensor 2 heater • P0043 P0044 Heated oxygen sensor 3 heater • P0075 Intake valve timing control solenoid valve • P0130 P0131 P0132 P0133 P2A00 Air fuel ratio (A/F) sensor 1 • P0137 P0138 P0139 Heated oxygen sensor 2 • P0143 P0144 P0145 P0146 Heated oxygen sensor 3 • P0441 EVAP control system purge flow monitoring • P0443 P0444 P0445 EVAP canister purge volume control solenoid valve • P0447 P0448 EVAP canister vent control valve • P0451 P0452 P0453 EVAP control system pressure sensor • P0603 ECM power supply • P1195 Engine does not start • P1196 Poor engine power • P1197 Fuel run out • P1217 Engine over temperature (OVERHEAT) • P1805 Brake switch • P2100 P2103 Throttle control motor relay • P2101 Electric throttle control function • P2118 Throttle control motor
3	• P0011 Intake valve timing control • P0171 P0172 Fuel injection system function • P0300 - P0304 Misfire • P0420 Three way catalyst function • P0456 EVAP control system • P0506 P0507 Idle speed control system • P0AC4 HV ECU MIL ON request • P1148 Closed loop control • P1421 Cold start control • P1564 ASCD steering switch • P1572 ASCD brake switch • P1574 ASCD vehicle speed sensor • P2119 Electric throttle control actuator • P2423 HC adsorption catalyst

DTC Index

INFOID:0000000003069431

×:Applicable —: Not applicable

DTC*1		Items (CONSULT-III screen terms)	SRT code	Trip	MIL	Reference page
CONSULT-III GST*2	ECM*3					
U0129	0129	LOST COMM (BRAKE)	—	1	×	EC-122
U0293	0293	LOST COMM (HV ECU)	—	1	×	EC-123

DTC*1		Items (CONSULT-III screen terms)	SRT code	Trip	MIL	Reference page
CONSULT-III GST*2	ECM*3					
U0400	0400	INVALID (HV ECU)	—	1	×	EC-124
U0418	0418	INVALID (BRAKE)	—	1	×	EC-126
U1000	1000*4	CAN COMM CIRCUIT	—	1	×	EC-128
U1001	1001*4	CAN COMM CIRCUIT	—	2	—	EC-128
U1020	1020	LOST COMM (HV ECU)	—	2	—	EC-123
U1021	1021	INVALID (HV ECU)	—	2	—	EC-124
U1022	1022	LOST COMM (BRAKE)	—	2	—	EC-122
U1023	1023	INVALID (BRAKE)	—	2	—	EC-126
P0000	**0000**	**NO DTC IS DETECTED. FURTHER TESTING MAY BE REQUIRED.**	—	—	**Flashing*5**	**—**
P0011	0011	INT/V TIM CONT-B1	—	2	×	EC-129
P0031	0031	A/F SEN1 HTR (B1)	—	2	×	EC-133
P0032	0032	A/F SEN1 HTR (B1)	—	2	×	EC-133
P0037	0037	HO2S2 HTR (B1)	—	2	×	EC-136
P0038	0038	HO2S2 HTR (B1)	—	2	×	EC-136
P0043	0043	HO2S3 HTR (B1)	—	2	×	EC-139
P0044	0044	HO2S3 HTR (B1)	—	2	×	EC-139
P0075	0075	INT/V TIM V/CIR-B1	—	2	×	EC-142
P0101	0101	MAF SEN/CIRCUIT-B1	—	2	×	EC-145
P0102	0102	MAF SEN/CIRCUIT-B1	—	1	×	EC-153
P0103	0103	MAF SEN/CIRCUIT-B1	—	1	×	EC-153
P0112	0112	IAT SEN/CIRCUIT-B1	—	2	×	EC-160
P0113	0113	IAT SEN/CIRCUIT-B1	—	2	×	EC-160
P0116	0116	ECT SEN/CIRC	—	2	×	EC-163
P0117	0117	ECT SEN/CIRC	—	1	×	EC-166
P0118	0118	ECT SEN/CIRC	—	1	×	EC-166
P0122	0122	TP SEN 2/CIRC-B1	—	1	×	EC-169
P0123	0123	TP SEN 2/CIRC-B1	—	1	×	EC-169
P0125	0125	ECT SENSOR	—	2	×	EC-172
P0127	0127	IAT SENSOR-B1	—	2	×	EC-175
P0128	0128	THERMSTAT FNCTN	—	2	×	EC-177
P0130	0130	A/F SENSOR1 (B1)	—	2	×	EC-179
P0131	0131	A/F SENSOR1 (B1)	—	2	×	EC-183
P0132	0132	A/F SENSOR1 (B1)	—	2	×	EC-186
P0133	0133	A/F SENSOR1 (B1)	×	2	×	EC-189
P0137	0137	HO2S2 (B1)	×	2	×	EC-193
P0138	0138	HO2S2 (B1)	×	2	×	EC-198
P0139	0139	HO2S2 (B1)	×	2	×	EC-205
P0143	0143	HO2S3 (B1)	×	2	×	EC-210
P0144	0144	HO2S3 (B1)	×	2	×	EC-213
P0145	0145	HO2S3 (B1)	×	2	×	EC-216
P0146	0146	HO2S3 (B1)	—	2	×	EC-219

DTC*1		Items (CONSULT-III screen terms)	SRT code	Trip	MIL	Reference page
CONSULT-III GST*2	ECM*3					
P0171	0171	FUEL SYS-LEAN-B1	—	2	×	EC-222
P0172	0172	FUEL SYS-RICH-B1	—	2	×	EC-226
P0181	0181	FTT SENSOR	—	2	×	EC-230
P0182	0182	FTT SEN/CIRCUIT	—	2	×	EC-233
P0183	0183	FTT SEN/CIRCUIT	—	2	×	EC-233
P0201	0201	INJECTOR CIRC-CYL1	—	1	—	EC-236
P0202	0202	INJECTOR CIRC-CYL2	—	1	—	EC-236
P0203	0203	INJECTOR CIRC-CYL3	—	1	—	EC-236
P0204	0204	INJECTOR CIRC-CYL4	—	1	—	EC-236
P0222	0222	TP SEN 1/CIRC-B1	—	1	×	EC-239
P0223	0223	TP SEN 1/CIRC-B1	—	1	×	EC-239
P0300	0300	MULTI CYL MISFIRE	—	2	×	EC-242
P0301	0301	CYL 1 MISFIRE	—	2	×	EC-242
P0302	0302	CYL 2 MISFIRE	—	2	×	EC-242
P0303	0303	CYL 3 MISFIRE	—	2	×	EC-242
P0304	0304	CYL 4 MISFIRE	—	2	×	EC-242
P0327	0327	KNOCK SEN/CIRC-B1	—	2	—	EC-248
P0328	0328	KNOCK SEN/CIRC-B1	—	2	—	EC-248
P0335	0335	CKP SEN/CIRCUIT	—	2	×	EC-250
P0340	0340	CMP SEN/CIRC-B1	—	2	×	EC-254
P0420	0420	TW CATALYST SYS-B1	×	2	×	EC-258
P0441	0441	EVAP PURG FLOW/MON	×	2	×	EC-262
P0443	0443	PURG VOLUME CONT/V	—	2	×	EC-267
P0444	0444	PURG VOLUME CONT/V	—	2	×	EC-272
P0445	0445	PURG VOLUME CONT/V	—	2	×	EC-272
P0447	0447	VENT CONTROL VALVE	—	2	×	EC-275
P0448	0448	VENT CONTROL VALVE	—	2	×	EC-279
P0451	0451	EVAP SYS PRES SEN	—	2	×	EC-283
P0452	0452	EVAP SYS PRES SEN	—	2	×	EC-286
P0453	0453	EVAP SYS PRES SEN	—	2	×	EC-290
P0456	0456	EVAP VERY SML LEAK	×	2	×	EC-295
P0460	0460	FUEL LEV SEN SLOSH	—	2	×	EC-301
P0461	0461	FUEL LEVEL SENSOR	—	2	×	EC-302
P0462	0462	FUEL LEVL SEN/CIRC	—	2	×	EC-304
P0463	0463	FUEL LEVL SEN/CIRC	—	2	×	EC-304
P0500	0500	VEH SPEED SEN/CIRC	—	2	×	EC-306
P0506	0506	ISC SYSTEM	—	2	×	EC-307
P0507	0507	ISC SYSTEM	—	2	×	EC-309
P0603	0603	ECM BACK UP/CIRCUIT	—	2	×	EC-311
P0605	0605	ECM	—	1 or 2	× or —	EC-313
P0607	0607	ECM	—	1	×	EC-315
P0643	0643	SENSOR POWER/CIRC	—	1	×	EC-316

DTC*1		Items (CONSULT-III screen terms)	SRT code	Trip	MIL	Reference page
CONSULT-III GST*2	ECM*3					
P0AC4	0AC4	HV ECU MIL REQUEST	—	1	×	EC-318
P1148	1148	CLOSED LOOP-B1	—	1	×	EC-319
P1195	1195	ENGINE NOT START	—	1	×	EC-320
P1196	1196	POOR ENGINE POWER	—	1	×	EC-323
P1197	1197	FUEL RUN OUT	—	1	—	EC-326
P1217	1217	ENG OVER TEMP	—	1	×	EC-327
P1225	1225	CTP LEARNING-B1	—	2	—	EC-331
P1226	1226	CTP LEARNING-B1	—	2	—	EC-333
P1421	1421	COLD START CONTROL	—	2	×	EC-335
P1564	1564	ASCD SW	—	1	—	EC-337
P1572	1572	ASCD BRAKE SW	—	1	—	EC-340
P1574	1574	ASCD VHL SPD SEN	—	1	—	EC-346
P1805	1805	BRAKE SW/CIRCUIT	—	2	—	EC-348
P2100	2100	ETC MOT PWR-B1	—	1	×	EC-351
P2101	2101	ETC FNCTN/CIRC-B1	—	1	×	EC-353
P2103	2103	ETC MOT PWR	—	1	×	EC-351
P2118	2118	ETC MOT-B1	—	1	×	EC-357
P2119	2119	ETC ACTR-B1	—	1	×	EC-360
P2135	2135	TP SENSOR-B1	—	1	×	EC-362
P2423	2423	HC ADS CATALYST-B1	×	2	×	EC-365
P2A00	2A00	A/F SENSOR1 (B1)	—	2	×	EC-369

*1: 1st trip DTC No. is the same as DTC No.

*2: This number is prescribed by SAE J2012.

*3: In Diagnostic Test Mode II (Self-diagnostic results), this number is controlled by NISSAN.

*4: The troubleshooting for this DTC needs CONSULT-III.

*5: When the ECM is in the mode of displaying SRT status, MIL may flash. For the details, refer to “How to Display SRT Status”.

How to Set SRT Code

INFOID:0000000003069432

To set all SRT codes, self-diagnosis for the items indicated above must be performed one or more times. Each diagnosis may require a long period of actual driving under various conditions.

WITH CONSULT-III

Perform corresponding DTC CONFIRMATION PROCEDURE one by one.

WITHOUT CONSULT-III

The most efficient driving pattern in which SRT codes can be properly set is explained on the next page. The driving pattern should be performed one or more times to set all SRT codes.

DRIVING PATTERN

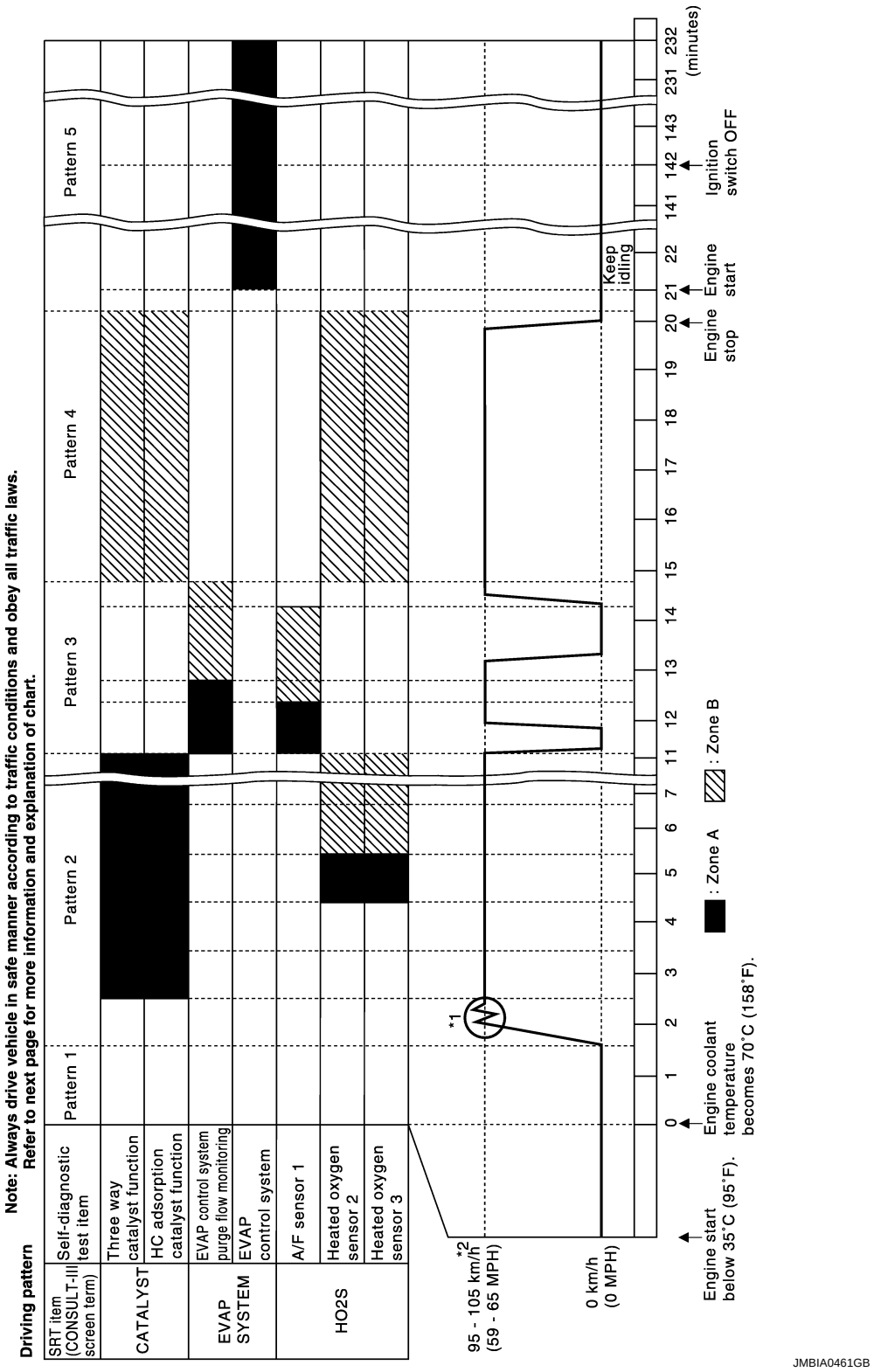

- The time required for each diagnosis varies with road surface conditions, weather, altitude, individual driving habits, etc.
  Zone A refers to the range where the time, required for the diagnosis under normal conditions*, is the shortest.
  Zone B refers to the range where the diagnosis can still be performed if the diagnosis is not completed within zone A.

*: Normal conditions refer to the following:

- Sea level
- Flat road
- Ambient air temperature: 20 - 30°C (68 - 86°F)
- Diagnosis is performed as quickly as possible under normal conditions.
  Under different conditions [For example: ambient air temperature other than 20 - 30°C (68 - 86°F)], diagnosis may also be performed.

Pattern 1:

- **The engine is started at the engine coolant temperature of –10 to 35°C (14 to 95°F) (where the voltage between the ECM terminal 46 and ground is 3.0 - 4.3V).**
- **The engine must be operated until the engine coolant temperature is greater than 70°C (158°F) (where the voltage between the ECM terminal 46 and ground is lower than 1.4V).**
- **The engine is started at the fuel tank temperature of warmer than 0°C (32°F) (where the voltage between the ECM terminal 95 and ground is less than 4.1V).**

Pattern 2:

- When steady-state driving is performed again even after it is interrupted, each diagnosis can be conducted. In this case, the time required for diagnosis may be extended.

Pattern 3:

- Operate vehicle following the driving pattern shown in the figure.
- Release the accelerator pedal during decelerating vehicle speed from 100 km/h (62 MPH) to 0 km/h (0 MPH).

Pattern 4:

- The accelerator pedal must be held very steady during steady-state driving.
- If the accelerator pedal is moved, the test must be conducted all over again.

Pattern 5:

- Activate “INSPECTION MODE 1” (HBC-97) to start engine, and wait at least 2 hours. Then turn ignition switch OFF and wait at least 90 minutes.

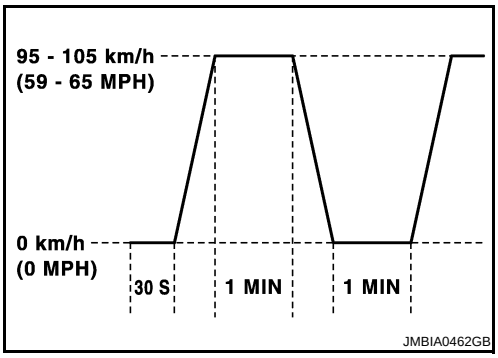

*1: Depress the accelerator pedal until vehicle speed is 100 km/h (62 MPH), then release the accelerator pedal and keep it released for more than 10 seconds. Depress the accelerator pedal until vehicle speed is 100 km/h (62 MPH) again.
*2: Checking the vehicle speed with GST is advised.

Suggested Transmission Gear Position
Set the selector lever in the D position.

Test Value and Test Limit

INFOID:0000000003069433

The following is the information specified in Service $06 of SAE J1979.
The test value is a parameter used to determine whether a system/circuit diagnostic test is OK or NG while being monitored by the ECM during self-diagnosis. The test limit is a reference value which is specified as the maximum or minimum value and is compared with the test value being monitored.
These data (test value and test limit) are specified by On Board Monitor ID (OBDMID), Test ID (TID), Unit and Scaling ID to be displayed on the GST screen.

Item	OBD-MID	Self-diagnostic test item	DTC	Test value and Test limit (GST display)		Description
				TID	Unit and Scaling ID	
HO2S	01H	Air fuel ratio (A/F) sensor 1 (Bank 1)	P0130	85H	0BH	Minimum sensor output voltage for test cycle
			P0130	86H	0BH	Maximum sensor output voltage for test cycle
			P0130	8BH	0BH	Difference in sensor output voltage
			P2A00	89H	84H	The amount of shift in air fuel ratio
			P2A00	8AH	84H	The amount of shift in air fuel ratio
	02H	Heated oxygen sensor 2 (Bank 1)	P0137	08H	0CH	Maximum sensor output voltage for test cycle
			P0138	07H	0CH	Minimum sensor output voltage for test cycle
			P0138	80H	0CH	Sensor output voltage
			P0139	81H	0CH	Difference in sensor output voltage
	03H	Heated oxygen sensor 3 (Bank 1)	P0143	07H	0CH	Minimum sensor output voltage for test cycle
			P0144	08H	0CH	Maximum sensor output voltage for test cycle
			P0145	81H	0CH	Difference in sensor output voltage
			P0146	80H	0CH	Sensor output voltage
CATALYST	21H	Three way catalyst function (Bank1)	P0420	80H	01H	O2 storage index
			P0420	82H	01H	Switching time lag engine exhaust index value
			P2423	83H	0CH	Difference in 3rd O2 sensor output voltage
			P2423	84H	84H	O2 storage index in HC trap catalyst
EVAP SYSTEM	3CH	EVAP control system (Very small leak)	P0456	80H	05H	Leak area index (for more than 0.02inch)
			P0456	81H	FDH	Maximum internal pressure of EVAP system during monitoring
			P0456	82H	FDH	Internal pressure of EVAP system at the end of monitoring
HO2S HEATER	41H	A/F sensor 1 heater (Bank 1)	Low Input:P0031 High Input:P0032	81H	0BH	Converted value of Heater electric current to voltage
	42H	Heated oxygen sensor 2 (Bank 1)	Low Input:P0037 High Input:P0038	80H	0CH	Converted value of Heater electric current to voltage
	43H	Heated oxygen sensor 3 (Bank 1)	P0043	80H	0CH	Converted value of Heater electric current to voltage

Item	OBD-MID	Self-diagnostic test item	DTC	Test value and Test limit (GST display)		Description
				TID	Unit and Scaling ID	
FUEL SYSTEM	81H	Fuel injection system function (Bank 1)	Enleanment: P0171 Enrichment: P0172	80H	2FH	Long term fuel trim
			Enleanment: P0171 Enrichment: P0172	81H	24H	The number of lambda control clamped
MISFIRE	A1H	Multiple Cylinder Misfire	P0301	80H	24H	Misfiring counter at 1000rev of the first cylinder
			P0302	81H	24H	Misfiring counter at 1000rev of the second cylinder
			P0303	82H	24H	Misfiring counter at 1000rev of the third cylinder
			P0304	83H	24H	Misfiring counter at 1000rev of the fourth cylinder
			P0300	88H	24H	Misfiring counter at 1000rev of the multiple cylinders
			P0301	89H	24H	Misfiring counter at 200rev of the first cylinder
			P0302	8AH	24H	Misfiring counter at 200rev of the second cylinder
			P0303	8BH	24H	Misfiring counter at 200rev of the third cylinder
			P0304	8CH	24H	Misfiring counter at 200rev of the fourth cylinder
	A2H	No.1 Cylinder Misfire	P0301	0BH	24H	EWMA (Exponential Weighted Moving Average) misfire counts for last 10 driving cycles
			P0301	0CH	24H	Misfire counts for last/current driving cycles
	A3H	No.2 Cylinder Misfire	P0302	0BH	24H	EWMA (Exponential Weighted Moving Average) misfire counts for last 10 driving cycles
			P0302	0CH	24H	Misfire counts for last/current driving cycles
	A4H	No.3 Cylinder Misfire	P0303	0BH	24H	EWMA (Exponential Weighted Moving Average) misfire counts for last 10 driving cycles
			P0303	0CH	24H	Misfire counts for last/current driving cycles
	A5H	No.4 Cylinder Misfire	P0304	0BH	24H	EWMA (Exponential Weighted Moving Average) misfire counts for last 10 driving cycles
			P0304	0CH	24H	Misfire counts for last/current driving cycles

SYMPTOM DIAGNOSIS

ENGINE CONTROL SYSTEM SYMPTOMS

Symptom Table

INFOID:0000000003069434

SYSTEM — BASIC ENGINE CONTROL SYSTEM

		SYMPTOM												Reference page
		HARD/NO START/RESTART (EXCP. HA)	ENGINE STALL	HESITATION/SURGING/FLAT SPOT	SPARK KNOCK/DETONATION	LACK OF POWER/POOR ACCELERATION	HIGH IDLE/LOW IDLE	ROUGH IDLE/HUNTING	IDLING VIBRATION	SLOW/NO RETURN TO IDLE	OVERHEATS/WATER TEMPERATURE HIGH	EXCESSIVE FUEL CONSUMPTION	EXCESSIVE OIL CONSUMPTION	
Warranty symptom code		AA	AB	AC	AD	AE	AF	AG	AH	AJ	AK	AL	AM	
Fuel	Fuel pump circuit	1	1	2	3	2		2	2			3		EC-380
	Fuel pressure regulator system	3	3	4	4	4	4	4	4	4		4		EC-454
	Fuel injector circuit	1	1	2	3	2		2	2			2		EC-236
	Evaporative emission system	3	3	4	4	4	4	4	4	4		4		EC-67
Air	Positive crankcase ventilation system	3	3	4	4	4	4	4	4	4		4	1	EC-395
	Incorrect idle speed adjustment						1	1	1	1		1		EC-14
	Electric throttle control actuator	1	1	2	3	3	2	2	2	2		2		EC-353, EC-360
Ignition	Incorrect ignition timing adjustment	3	3	1	1	1		1	1			1		EC-14
	Ignition circuit	1	1	2	2	2		2	2			2		EC-384
Main power supply and ground circuit		2	2	3	3	3		3	3		2	3		EC-118
Mass air flow sensor circuit		1	1	2	2	2		2	2			2		EC-145, EC-153
Engine coolant temperature sensor circuit					3		3			3				EC-166, EC-172
Air fuel ratio (A/F) sensor 1 circuit														EC-179, EC-183, EC-186, EC-189, EC-369
Throttle position sensor circuit							2			2				EC-169, EC-239, EC-331, EC-333, EC-362
Knock sensor circuit				2								3		EC-248
Crankshaft position sensor (POS) circuit		2	2											EC-250
Camshaft position sensor (PHASE) circuit		3	2											EC-254

	SYMPTOM												Reference page
	HARD/NO START/RESTART (EXCP. HA)	ENGINE STALL	HESITATION/SURGING/FLAT SPOT	SPARK KNOCK/DETONATION	LACK OF POWER/POOR ACCELERATION	HIGH IDLE/LOW IDLE	ROUGH IDLE/HUNTING	IDLING VIBRATION	SLOW/NO RETURN TO IDLE	OVERHEATS/WATER TEMPERATURE HIGH	EXCESSIVE FUEL CONSUMPTION	EXCESSIVE OIL CONSUMPTION	
Warranty symptom code	AA	AB	AC	AD	AE	AF	AG	AH	AJ	AK	AL	AM	
ECM	2	2	3	3	3	3	3	3	3	3	3		EC-311, EC-313
Intake valve timing control solenoid valve circuit		3	2		1	3	2	2	3		3		EC-142
Refrigerant pressure sensor circuit		2				3			3		4		EC-396
Hybrid vehicle control ECU	1	1	2		1	1	3	3	1	3			HBC-9

1 - 6: The numbers refer to the order of inspection.

(continued on next page)

SYSTEM — ENGINE MECHANICAL & OTHER

		SYMPTOM												Reference page
		HARD/NO START/RESTART (EXCP. HA)	ENGINE STALL	HESITATION/SURGING/FLAT SPOT	SPARK KNOCK/DETONATION	LACK OF POWER/POOR ACCELERATION	HIGH IDLE/LOW IDLE	ROUGH IDLE/HUNTING	IDLING VIBRATION	SLOW/NO RETURN TO IDLE	OVERHEATS/WATER TEMPERATURE HIGH	EXCESSIVE FUEL CONSUMPTION	EXCESSIVE OIL CONSUMPTION	
Warranty symptom code		AA	AB	AC	AD	AE	AF	AG	AH	AJ	AK	AL	AM	
Fuel	Fuel tank	5	5											FL-11
	Fuel piping			5	5	5		5	5			5		EM-34
	Vapor lock													—
	Valve deposit	5		5	5	5		5	5			5		—
	Poor fuel (Heavy weight gasoline, Low octane)													—

		SYMPTOM												
		HARD/NO START/RESTART (EXCP. HA)	ENGINE STALL	HESITATION/SURGING/FLAT SPOT	SPARK KNOCK/DETONATION	LACK OF POWER/POOR ACCELERATION	HIGH IDLE/LOW IDLE	ROUGH IDLE/HUNTING	IDLING VIBRATION	SLOW/NO RETURN TO IDLE	OVERHEATS/WATER TEMPERATURE HIGH	EXCESSIVE FUEL CONSUMPTION	EXCESSIVE OIL CONSUMPTION	Reference page
Warranty symptom code		AA	AB	AC	AD	AE	AF	AG	AH	AJ	AK	AL	AM	
Air	Air duct		5	5		5		5	5			5		EM-23
	Air cleaner													EM-23
	Air leakage from air duct (Mass air flow sensor — electric throttle control actuator)	5			5		5			5				EM-23
	Electric throttle control actuator													EM-24
	Air leakage from intake manifold/Collector/Gasket													EM-24
Cranking	Signal plate	6										1		EM-70
Engine	Cylinder head	5	5	5	5	5		5	5			5		EM-62
	Cylinder head gasket										4		3	
	Cylinder block	6	6	6	6	6		6	6			6	4	EM-74
	Piston													
	Piston ring													
	Connecting rod													
	Bearing													
	Crankshaft													
Valve mechanism	Timing chain	5	5	5	5	5		5	5			5		EM-50
	Camshaft													EM-39
	Intake valve timing control													EM-50
	Intake valve												3	EM-62
	Exhaust valve													
Exhaust	Exhaust manifold/Tube/Muffler/Gasket	5	5	5	5	5		5	5			5		EM-28, EX-5
	Three way catalyst													
	HC adsorption catalyst													EX-5
Lubrication	Oil pan/Oil strainer/Oil pump/Oil filter/Oil gallery/Oil cooler	5	5	5	5	5		5	5			5		EM-30, LU-11, LU-10, LU-14
	Oil level (Low)/Filthy oil													LU-8

		SYMPTOM												Reference page
		HARD/NO START/RESTART (EXCP. HA)	ENGINE STALL	HESITATION/SURGING/FLAT SPOT	SPARK KNOCK/DETONATION	LACK OF POWER/POOR ACCELERATION	HIGH IDLE/LOW IDLE	ROUGH IDLE/HUNTING	IDLING VIBRATION	SLOW/NO RETURN TO IDLE	OVERHEATS/WATER TEMPERATURE HIGH	EXCESSIVE FUEL CONSUMPTION	EXCESSIVE OIL CONSUMPTION	
Warranty symptom code		AA	AB	AC	AD	AE	AF	AG	AH	AJ	AK	AL	AM	
Cooling	Radiator/Hose/Radiator filler cap	5	5	5	5	5		5	5		4	5		CO-14
	Thermostat									5				CO-20
	Water pump													CO-18
	Water gallery													CO-22
	Cooling fan									5				CO-16
	Coolant level (Low)/Contaminated coolant													CO-10

1 - 6: The numbers refer to the order of inspection.

NORMAL OPERATING CONDITION

Description

INFOID:0000000003069435

FUEL CUT CONTROL (AT NO LOAD AND HIGH ENGINE SPEED)

If the engine speed is above 1,800 rpm under no load (for example, the selector lever position is P and engine speed is over 1,800 rpm) fuel will be cut off after some time. The exact time when the fuel is cut off varies based on engine speed.

Fuel cut will be operated until the engine speed reaches 1,500 rpm, then fuel cut will be cancelled.

NOTE:

This function is different from deceleration control listed under Multiport Fuel Injection (MFI) System, EC-27, "System Description".

PRECAUTION

PRECAUTIONS

Precaution for Supplemental Restraint System (SRS) "AIR BAG" and "SEAT BELT PRE-TENSIONER"

INFOID:0000000003069436

The Supplemental Restraint System such as “AIR BAG” and “SEAT BELT PRE-TENSIONER”, used along with a front seat belt, helps to reduce the risk or severity of injury to the driver and front passenger for certain types of collision. This system includes seat belt switch inputs and dual stage front air bag modules. The SRS system uses the seat belt switches to determine the front air bag deployment, and may only deploy one front air bag, depending on the severity of a collision and whether the front occupants are belted or unbelted.
Information necessary to service the system safely is included in the “SRS AIRBAG” and “SEAT BELT” of this Service Manual.

WARNING:

- **To avoid rendering the SRS inoperative, which could increase the risk of personal injury or death in the event of a collision which would result in air bag inflation, all maintenance must be performed by an authorized NISSAN/INFINITI dealer.**
- **Improper maintenance, including incorrect removal and installation of the SRS, can lead to personal injury caused by unintentional activation of the system. For removal of Spiral Cable and Air Bag Module, see the “SRS AIRBAG”.**
- **Do not use electrical test equipment on any circuit related to the SRS unless instructed to in this Service Manual. SRS wiring harnesses can be identified by yellow and/or orange harnesses or harness connectors.**

Precaution for Procedure without Cowl Top Cover

INFOID:0000000003069437

When performing the procedure after removing cowl top cover, cover the lower end of windshield with urethane, etc.

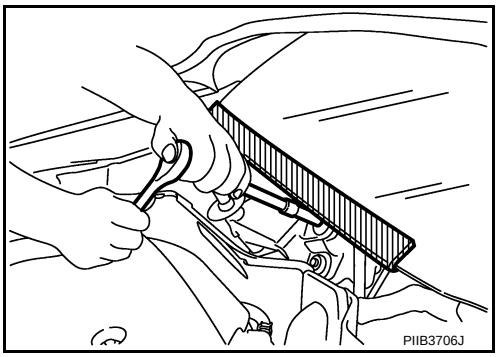

Precautions For Xenon Headlamp Service

INFOID:0000000003069438

WARNING:

Comply with the following warnings to prevent any serious accident.

- **Disconnect the battery cable (negative terminal) or the power supply fuse before installing, removing, or touching the xenon headlamp (bulb included). The xenon headlamp contains high-voltage generated parts.**
- **Never work with wet hands.**
- **Check the xenon headlamp ON-OFF status after assembling it to the vehicle. Never turn the xenon headlamp ON in other conditions. Connect the power supply to the vehicle-side connector. (Turning it ON outside the lamp case may cause fire or visual impairments.)**
- **Never touch the bulb glass immediately after turning it OFF. It is extremely hot.**

CAUTION:

Comply with the following cautions to prevent any error and malfunction.

- **Install the xenon bulb securely. (Insufficient bulb socket installation may melt the bulb, the connector, the housing, etc. by high-voltage leakage or corona discharge.)**
- **Never perform HID circuit inspection with a tester.**
- **Never touch the xenon bulb glass with hands. Never put oil and grease on it.**
- **Dispose of the used xenon bulb after packing it in thick vinyl without breaking it.**
- **Never wipe out dirt and contamination with organic solvent (thinner, gasoline, etc.).**

On Board Diagnostic (OBD) System of Engine

INFOID:0000000003069439

The ECM has an on board diagnostic system. It will light up the malfunction indicator lamp (MIL) to warn the driver of a malfunction causing emission deterioration.

CAUTION:

- **Be sure to turn the ignition switch OFF and disconnect the negative battery cable before any repair or inspection work. The open/short circuit of related switches, sensors, solenoid valves, etc. will cause the MIL to light up.**
- **Be sure to connect and lock the connectors securely after work. A loose (unlocked) connector will cause the MIL to light up due to the open circuit. (Be sure the connector is free from water, grease, dirt, bent terminals, etc.)**
- **Certain systems and components, especially those related to OBD, may use a new style slide-locking type harness connector. For description and how to disconnect, refer to PG-58, "Description".**
- **Be sure to route and secure the harnesses properly after work. The interference of the harness with a bracket, etc. may cause the MIL to light up due to the short circuit.**
- **Be sure to connect rubber tubes properly after work. A misconnected or disconnected rubber tube may cause the MIL to light up due to the malfunction of the EVAP system or fuel injection system, etc.**
- **Be sure to erase the unnecessary malfunction information (repairs completed) from the ECM before returning the vehicle to the customer.**

General Precautions

INFOID:0000000003069440

- **Always use a 12 volt battery as power source.**
- **Do not attempt to disconnect battery cables while engine is running.**
- **Before connecting or disconnecting the ECM harness connector, turn ignition switch OFF and disconnect negative battery cable. Failure to do so may damage the ECM because battery voltage is applied to ECM even if ignition switch is turned OFF.**
- **Before removing parts, turn ignition switch OFF and then disconnect battery ground cable.**

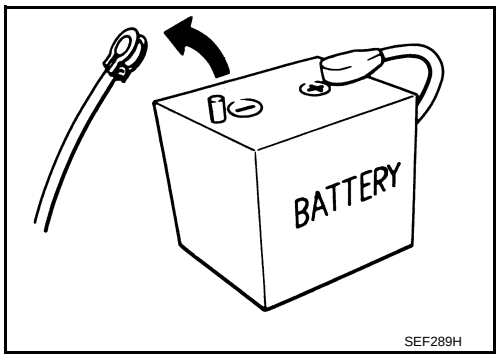

SEF289H

- **Do not disassemble ECM.**
- **If a battery cable is disconnected, the memory will return to the ECM value.**
  The ECM will now start to self-control at its initial value. Engine operation can vary slightly when the terminal is disconnected. However, this is not an indication of a malfunction. Do not replace parts because of a slight variation.
- **If the battery is disconnected, the following emission-related diagnostic information will be lost within 24 hours.**
- **Diagnostic trouble codes**
- **1st trip diagnostic trouble codes**
- **Freeze frame data**
- **1st trip freeze frame data**
- **System readiness test (SRT) codes**
- **Test values**

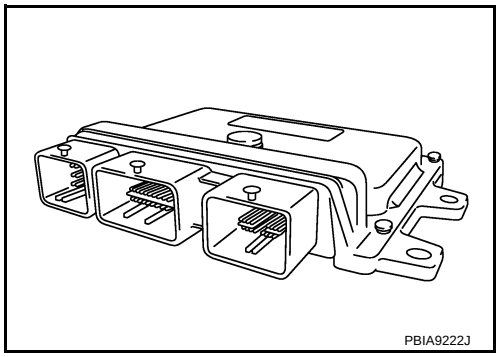
PBIA9222J

- **When connecting ECM harness connector (1), fasten (B) it securely with a lever as far as it will go as shown in the figure.**

  2. ECM
  A. Loosen

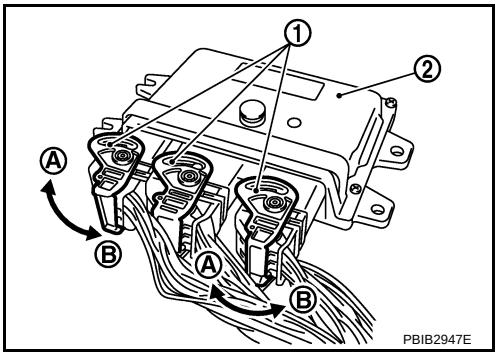

- **When connecting or disconnecting pin connectors into or from ECM, take care not to damage pin terminals (bend or break).**
  Make sure that there are not any bends or breaks on ECM pin terminal, when connecting pin connectors.
- **Securely connect ECM harness connectors.**
  A poor connection can cause an extremely high (surge) voltage to develop in coil and condenser, thus resulting in damage to ICs.
- **Keep engine control system harness at least 10 cm (4 in) away from adjacent harness, to prevent engine control system malfunctions due to receiving external noise, degraded operation of ICs, etc.**
- **Keep engine control system parts and harness dry.**
- **Before replacing ECM, perform ECM Terminals and Reference Value inspection and make sure ECM functions properly. Refer to EC-398, "Reference Value".**
- **Handle mass air flow sensor carefully to avoid damage.**
- **Do not clean mass air flow sensor with any type of detergent.**
- **Do not disassemble electric throttle control actuator.**
- **Even a slight leak in the air intake system can cause serious incidents.**
- **Do not shock or jar the camshaft position sensor (PHASE), crankshaft position sensor (POS).**

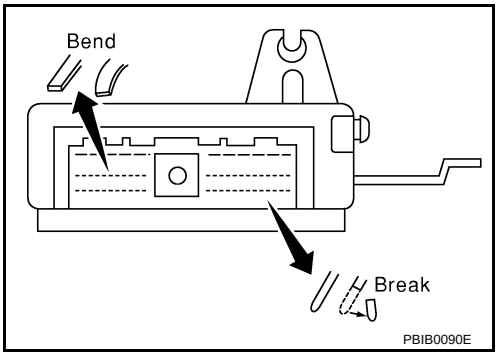

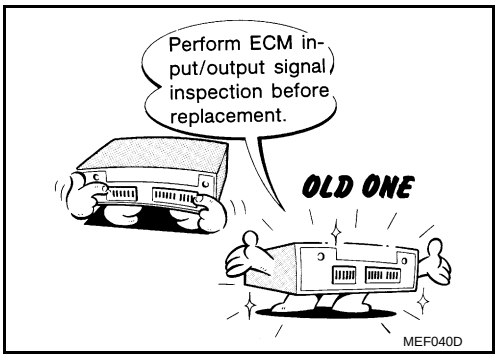

- **After performing each TROUBLE DIAGNOSIS, perform DTC CONFIRMATION PROCEDURE or Component Function Check. The DTC should not be displayed in the DTC Confirmation Procedure if the repair is completed. The Component Function Check should be a good result if the repair is completed.**

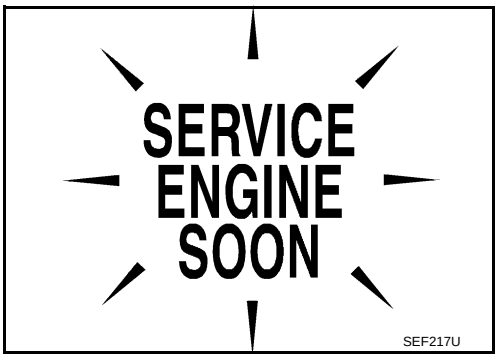

- **When measuring ECM signals with a circuit tester, never allow the two tester probes to contact.**
  Accidental contact of probes will cause a short circuit and damage the ECM power transistor.
- **Do not use ECM ground terminals when measuring input/output voltage. Doing so may result in damage to the ECM's transistor. Use a ground other than ECM terminals, such as the ground.**

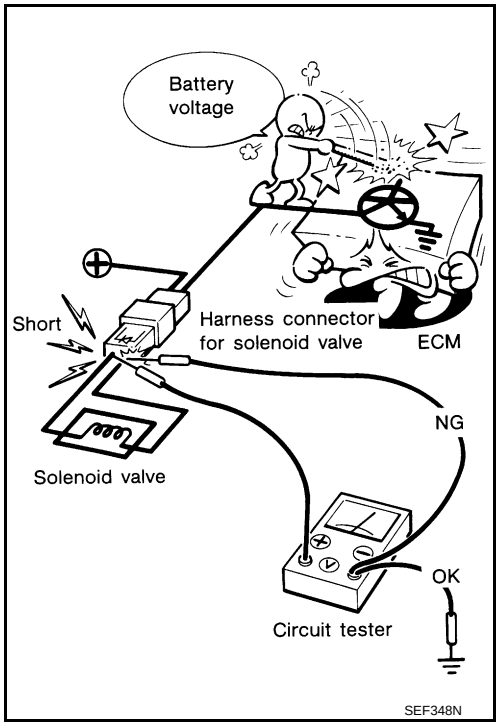

- **Do not operate fuel pump when there is no fuel in lines.**
- **Tighten fuel hose clamps to the specified torque.**

- **Do not depress accelerator pedal when starting.**
- **Immediately after starting, do not rev up engine unnecessarily.**
- **Do not rev up engine just prior to shutdown.**

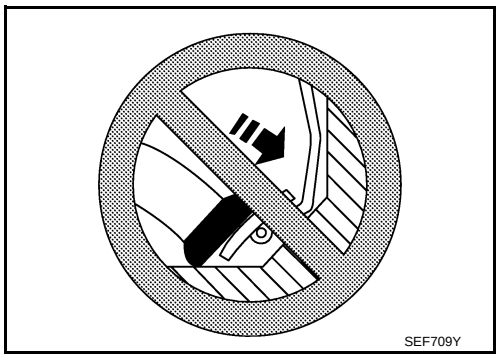

- **When installing C.B. ham radio or a mobile phone, be sure to observe the following as it may adversely affect electronic control systems depending on installation location.**
  - **Keep the antenna as far as possible from the electronic control units.**
  - **Keep the antenna feeder line more than 20 cm (8 in) away from the harness of electronic controls.**
    Do not let them run parallel for a long distance.
  - **Adjust the antenna and feeder line so that the standing-wave ratio can be kept smaller.**
  - **Be sure to ground the radio to vehicle body.**

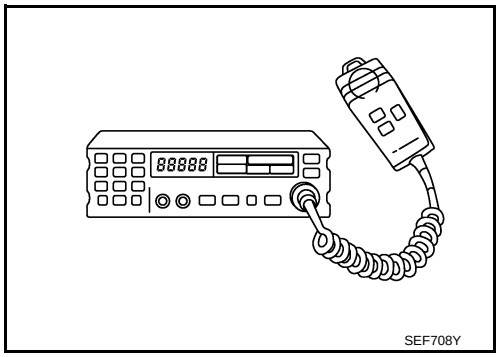

PREPARATION

PREPARATION

Special Service Tools

INFOID:0000000003069441

NOTE:
The actual shapes of Kent-Moore tools may differ from those of special service tools illustrated here.

Tool number (Kent-Moore No.) Tool name	Description
(J-44626) Air fuel ratio (A/F) sensor wrench 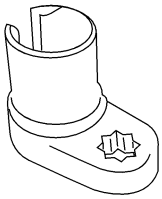 LEM054	Loosening tightening air fuel ratio (A/F) sensor 1
KV10114400 (J-38365) Heated oxygen sensor wrench 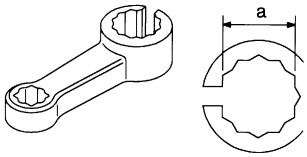 S-NT636	Loosening or tightening heated oxygen sensor **a: 22 mm (0.87 in)**
(J-44321) Fuel pressure gauge kit 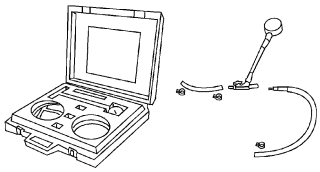 LEC642	Checking fuel pressure

Commercial Service Tools

INFOID:0000000003069442

Tool name (Kent-Moore No.)	Description
Leak detector i.e.: (J-41416) 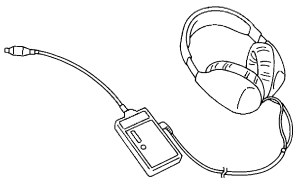 S-NT703	Locating the EVAP leak
EVAP service port adapter i.e.: (J-41413-OBD) 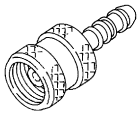 S-NT704	Applying positive pressure through EVAP service port

Tool name (Kent-Moore No.)		Description
Fuel filler cap adapter i.e.: (MLR-8382)	 S-NT815	Checking fuel tank vacuum relief valve opening pressure
Socket wrench	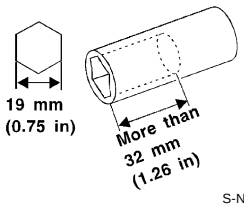 S-NT705	Removing and installing engine coolant temperature sensor
Oxygen sensor thread cleaner i.e.: (J-43897-18) (J-43897-12)	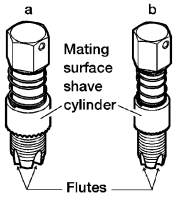 AEM488	Reconditioning the exhaust system threads before installing a new oxygen sensor. Use with anti-seize lubricant shown below. **a: 18 mm diameter with pitch 1.5 mm for Zirconia Oxygen Sensor** **b: 12 mm diameter with pitch 1.25 mm for Titania Oxygen Sensor**
Anti-seize lubricant i.e.: (Permatex™ 133AR or equivalent meeting MIL specification MIL-A-907)	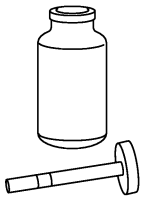 S-NT779	Lubricating oxygen sensor thread cleaning tool when reconditioning exhaust system threads.

ON-VEHICLE MAINTENANCE

FUEL PRESSURE

Inspection

INFOID:0000000003069443

FUEL PRESSURE RELEASE

NOTE:
If following procedure performed, a certain DTC may be detected.

With CONSULT-III

1. Lift up the vehicle.
2. Turn ignition switch ON (READY).
3. Depress the accelerator pedal and keep it.
4. Shift the selector lever to N position with engine running.
   CAUTION:
   Never leave the selector lever in the N position for a long period of time. In the N position, the engine operates but electricity cannot be generated.
5. Perform “FUEL PRESSURE RELEASE” in “WORK SUPPORT” mode with CONSULT-III.
6. After engine stalls, turn ignition switch OFF.

Without CONSULT-III

1. Turn ignition switch OFF.
2. Remove fuel pump fuse located in IPDM E/R.
3. Turn ignition switch ON (READY).
4. Depress the accelerator pedal and keep it.
5. After engine stalls, turn ignition switch OFF.
6. Reinstall fuel pump fuse after servicing fuel system.

FUEL PRESSURE CHECK

CAUTION:
Before disconnecting fuel line, release fuel pressure from fuel line to eliminate danger.
NOTE:
- **Prepare pans or saucers under the disconnected fuel line because the fuel may spill out. The fuel pressure cannot be completely released because L32 models do not have fuel return system.**
- **Use Fuel Pressure Gauge Kit (J-44321) to check fuel pressure.**

1. Release fuel pressure to zero.
2. Disconnect the fuel quick connector on the engine side.
3. Install fuel pressure gauge adapter J-44321-6 (B) with fuel pressure gauge (A).

   1 : Fuel feed hose

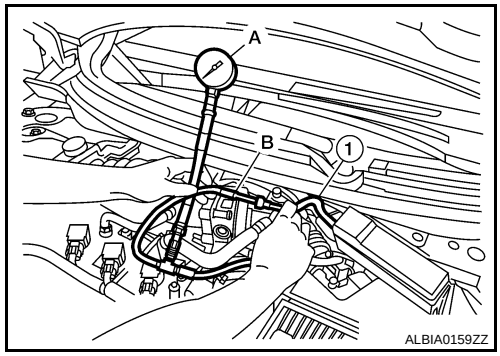

4. Turn ignition switch ON and check for fuel leakage.
5. Check DTC.
   If DTC is detected, erase DTC and go to next steps.
   If DTC is not detected, go to next steps.
6. Activate “INSPECTION MODE 1” (HBC-97) to start engine, and check for fuel leakage.
7. Read the indication of fuel pressure gauge.

   At idling : Approximately 350 kPa (3.57 kg/cm^2, 51 psi)

8. If result is unsatisfactory, check fuel hoses and fuel tubes for clogging.
   If OK, Replace “fuel filter and fuel pump assembly”.
   If NG, Repair or replace.

EVAP LEAK CHECK

Inspection

INFOID:0000000003069444

CAUTION:
- **Do not use compressed air or a high pressure pump.**
- **Do not exceed 4.12 kPa (0.042 kg/cm^2, 0.6 psi) of pressure in EVAP system.**

NOTE:
- Do not start engine.
- Improper installation of EVAP service port adapter to the EVAP service port may cause a leak.

WITH CONSULT-III

1. To locate the EVAP leak, install EVAP service port adapter and pressure pump to EVAP service port.
2. Turn ignition switch ON.
3. Select the “EVAP SYSTEM CLOSE” of “WORK SUPPORT” mode with CONSULT-III.
4. Touch “START”. A bar graph (Pressure indicating display) will appear on the screen.
5. Apply positive pressure to the EVAP system until the pressure indicator reaches the middle of the bar graph.
6. Remove EVAP service port adapter and hose with pressure pump.
7. Locate the leak using a leak detector. Refer to EC-67, "System Diagram".

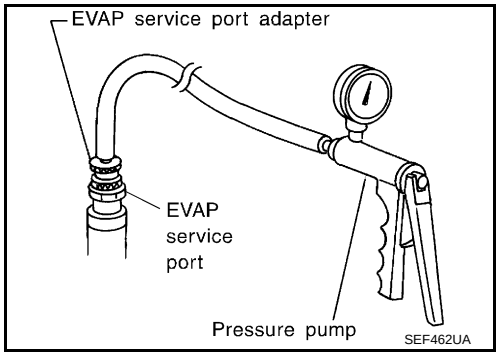

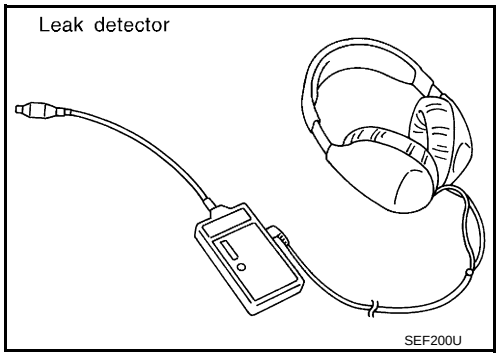

WITHOUT CONSULT-III

1. To locate the EVAP leak, install EVAP service port adapter and pressure pump to EVAP service port.
2. Apply battery voltage between the terminals of EVAP canister vent control valve to make a closed EVAP system.
3. To locate the leak, deliver positive pressure to the EVAP system until pressure gauge points reach 1.38 to 2.76 kPa (0.014 to 0.028 kg/cm^2, 0.2 to 0.4 psi).
4. Remove EVAP service port adapter and hose with pressure pump.

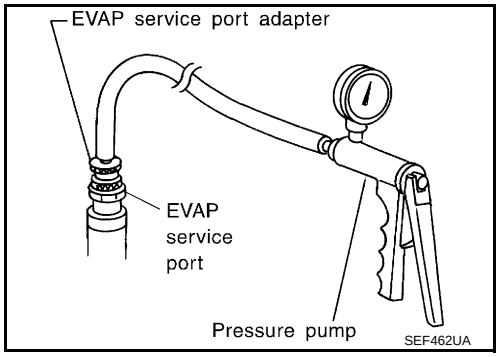

5. Locate the leak using a leak detector. Refer to EC-67, "System Diagram".

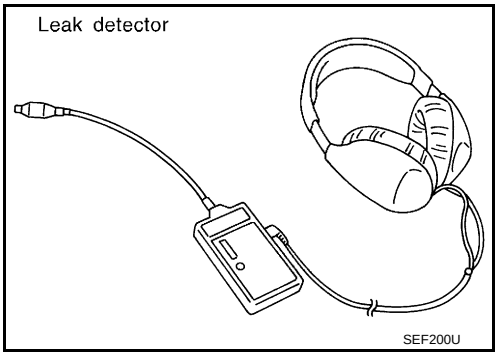

ON-VEHICLE REPAIR

EVAP CANISTER

Exploded View

INFOID:0000000003069445

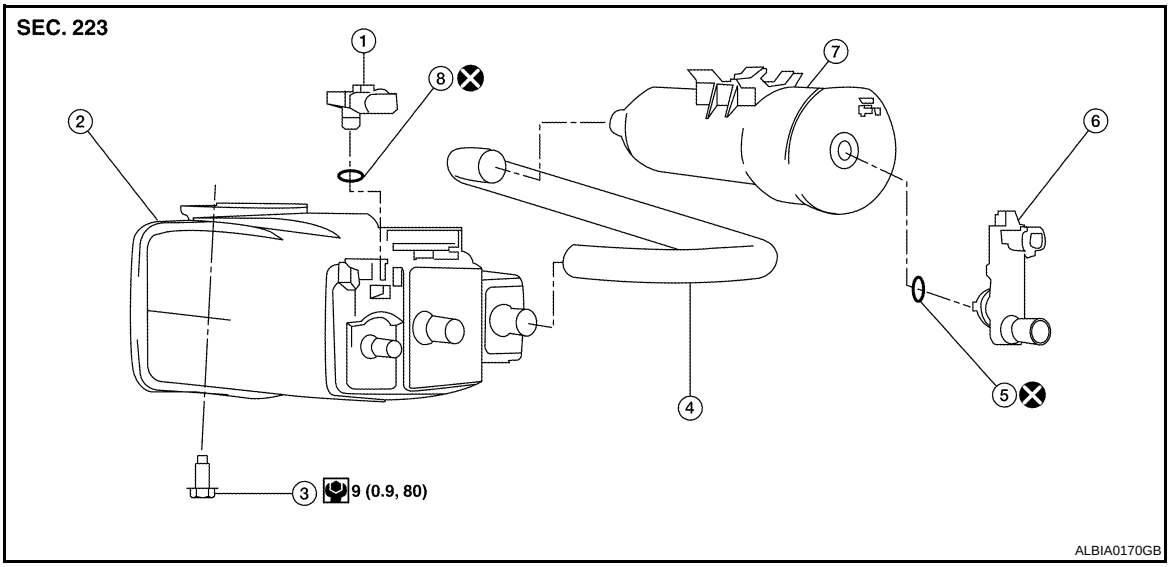

1. EVAP control system pressure sensor	2. EVAP canister (MAIN)	3. Bolt
4. Hose	5. O-ring	6. EVAP canister vent control valve
7. EVAP canister (SUB)		

Removal and Installation

INFOID:0000000003069446

REMOVAL

1. Lift up the vehicle.
2. Remove EVAP canister fixing bolt.
3. Remove EVAP canister.

NOTE:
The EVAP canister vent control valve and EVAP canister system pressure sensor can be removed without removing the EVAP canister.

INSTALLATION

Install in the reverse order of removal.

NOTE:
Tighten EVAP canister fixing bolt to the specified torque.

DISASSEMBLY

1. Turn EVAP canister vent control valve counterclockwise.

   A : Lock
   B : Unlock

2. Remove the EVAP canister vent control valve.

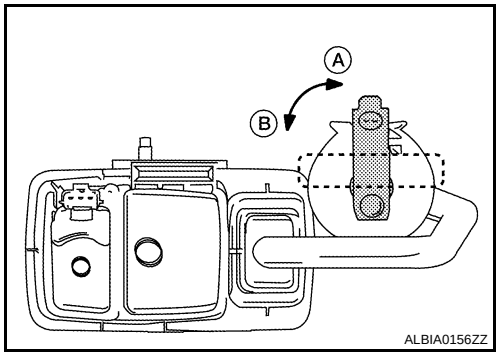

ASSEMBLY

Assemble in the reverse order of disassembly.

CAUTION:

Always replace O-ring with a new one.

Inspection

INFOID:0000000003069447

Check EVAP canister as follows:

1. Block port (B).
2. Blow air into port (A) and check that it flows freely out of port (C).
3. Release blocked port (B).
4. Apply vacuum pressure to port (B) and check that vacuum pressure exists at the ports (A) and (C).
5. Block port (A) and (B).
6. Apply pressure to port (C) and check that there is no leakage.

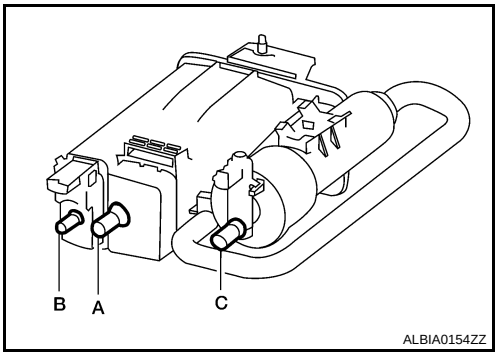

SERVICE DATA AND SPECIFICATIONS (SDS)

SERVICE DATA AND SPECIFICATIONS (SDS)

Idle Speed

INFOID:0000000003069448

Condition	Specification
No load (in N position)	1,000 ± 50 rpm

Ignition Timing

INFOID:0000000003069449

Condition	Specification
No load (in N position)	21 ± 5° BTDC

Calculated Load Value

INFOID:0000000003069450

Condition	Specification (Using CONSULT-III or GST)
At idle	10 – 35 %
At 2,500 rpm	10 – 35 %

Mass Air Flow Sensor

INFOID:0000000003069451

Supply voltage	Battery voltage (11 – 14 V)
Output voltage at idle (in N position)	0.9 – 1.2 V*
Mass air flow (Using CONSULT-III or GST)	1.0 – 5.0 g·m/sec at idle* 4.0 – 12.0 g·m/sec at 2,500 rpm*

*: Engine is warmed up to normal operating temperature and running under no load.