SECTION BF

CONTENTS

CONTENTS (Cont'd.)

When you read wiring diagrams:
- **Read GI section, "HOW TO READ WIRING DIAGRAMS".**
- **See EL section, "POWER SUPPLY ROUTING" for power distribution circuit.**

When you perform trouble diagnoses, read GI section, "HOW TO FOLLOW FLOW CHART IN TROUBLE DIAGNOSES".

Precautions

- When removing or installing various parts, place a cloth or padding on the vehicle body to prevent scratches.
- Handle trim, molding, instruments, grille, etc. carefully during removing or installation. Be careful not to soil or damage them.
- Apply sealing compound where necessary when installing parts.
- When applying sealing compound, be careful that the sealing compound does not protrude from parts.
- When replacing any metal parts (for example body outer panel, members, etc.), be sure to take rust prevention measures.

Supplemental Restraint System "AIR BAG"

The Supplemental Restraint System "Air Bag" helps to reduce the risk or severity of injury to the driver and front passenger in a frontal collision. The Supplemental Restraint System consists of air bags (located in the center of the steering wheel and on the instrument panel on the passenger side), sensors, a control module, warning lamp, wiring harness and spiral cable. Information necessary to service the system safely is included in the **BF** section of this Service Manual.

WARNING:

- **To avoid rendering the SRS inoperative, which could lead to personal injury or death in the event of a severe frontal collision, all maintenance must be performed by an authorized NISSAN dealer.**
- **Improper maintenance, including incorrect removal and installation of the SRS, can lead to personal injury caused by unintentional activation of the system.**
- **All SRS electrical wiring harnesses and connectors are covered with yellow outer insulation. Do not use electrical test equipment on any circuit related to the SRS "Air Bag".**

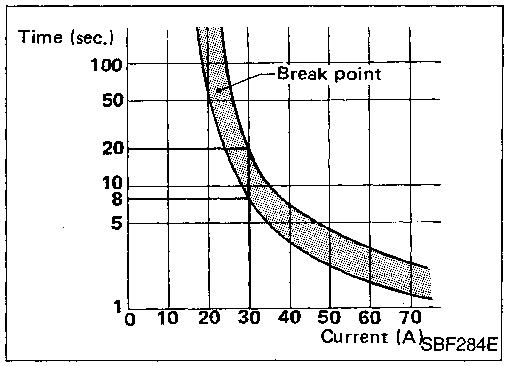

Circuit Breaker Inspection

For example, when current is 30A, the circuit is broken within 8 to 20 seconds.

Circuit breakers are used in the following systems.

- Power door lock
- Power window
- Power sun roof

Clip and Fastener

- Clips and fasteners in BF section correspond to the following numbers and symbols.
- Replace any clips and/or fasteners which are damaged during removal or installation.

Symbol No.	Shapes	Removal & Installation
C101	SBF256G	**Removal:** **Remove by bending up with flat-bladed screwdrivers.** SBF367B
C102	SBF114B SBF137B SBF137B	**Removal:** Pull up by rotating. SBF115B
C103	SBF257G	**Removal:** Remove with a flat-bladed screwdriver or pliers. SBF292C
C203	SBF258G	Push Push center pin to catching position. (Do not remove center pin by hitting it.) Push **Installation:** SBF708E

Clip and Fastener (Cont'd)

Symbol No.	Shapes	Removal & Installation
CE103	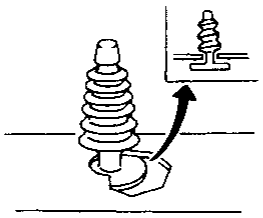 SBF104B	**Removal:** 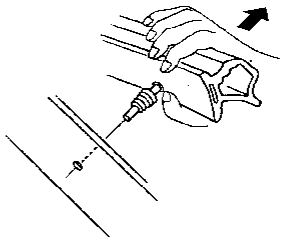 SBF147B
CF118	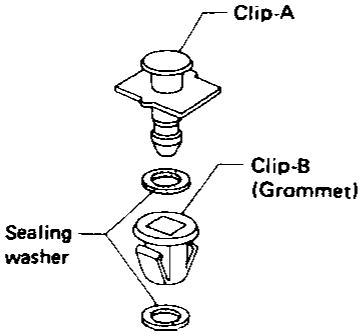 SBF151D	**Removal:** 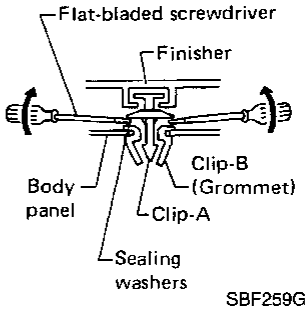 SBF259G
CG101	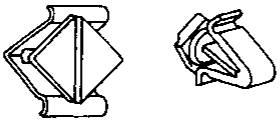 SBF145B	**Removal**  **Rotate 45° to remove.**  **Removal** **Installation** 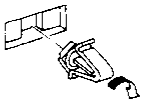 SBF085B
CR103	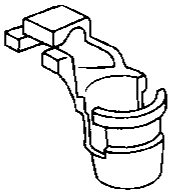 SBF768B	**Removal:** **Holder portion of clip must be spread out to remove rod.** 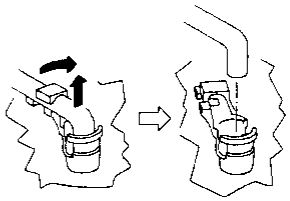 SBF770B
CS101	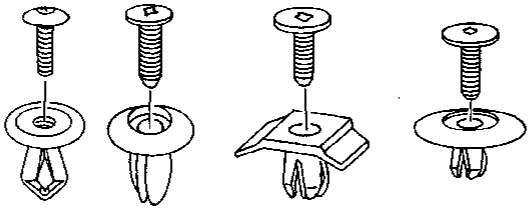 SBF260G	**Removal:** **Screw out with a Phillips screwdriver.** Remove female portion with flat-bladed screwdriver. 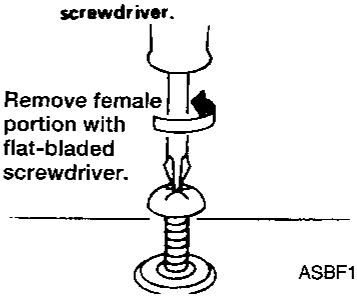 ASBF140B

Body Front End

- Bumper fascia: It is made of plastic, so do not use excessive force and take care to keep oil away from it.
- Hood adjustment: Adjust at hinge portion.
- Hood lock adjustment: After adjusting, check hood lock operation. Apply a coat of grease to engaging mechanism.
- Hood opener: Do not attempt to bend cable forcibly. This will increase the effort required to unlock hood.

REMOVAL — Front bumper assembly

① Remove screws and clips (C203) securing left and right fender protectors to bumper fascia.
② Remove screws securing left and right engine undercovers to bumper fascia.
③ Remove nuts securing left and right front fenders to bumper fascia.
④ Remove screws and clips (C203) securing bumper fascia to bumper reinforcement.
⑤ Extract bumper fascia.
⑥ Remove two bolts securing bumper reinforcement.

Body Front End (Cont'd)

Hood lock adjustment

- Adjust hood so that hood primary lock meshes at a position 1 to 1.5 mm (0.039 to 0.059 in) lower than fender.
- After hood lock adjustment, adjust bumper rubber.
- When securing hood lock, ensure it does not tilt. Striker must be positioned at the center of hood primary lock.
- After adjustment, ensure that hood primary and secondary lock operate properly.

Hood lock secondary latch hooking length

More than 5.0 mm (0.197 in)

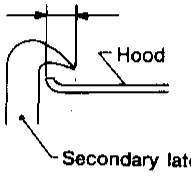

Bumper rubber adjustment

- Adjust so that hood is aligned with fender. At that time deflection is approx. 2 mm (0.08 in).
  [Bumper rubber free height is approx. 13 mm (0.51 in)]

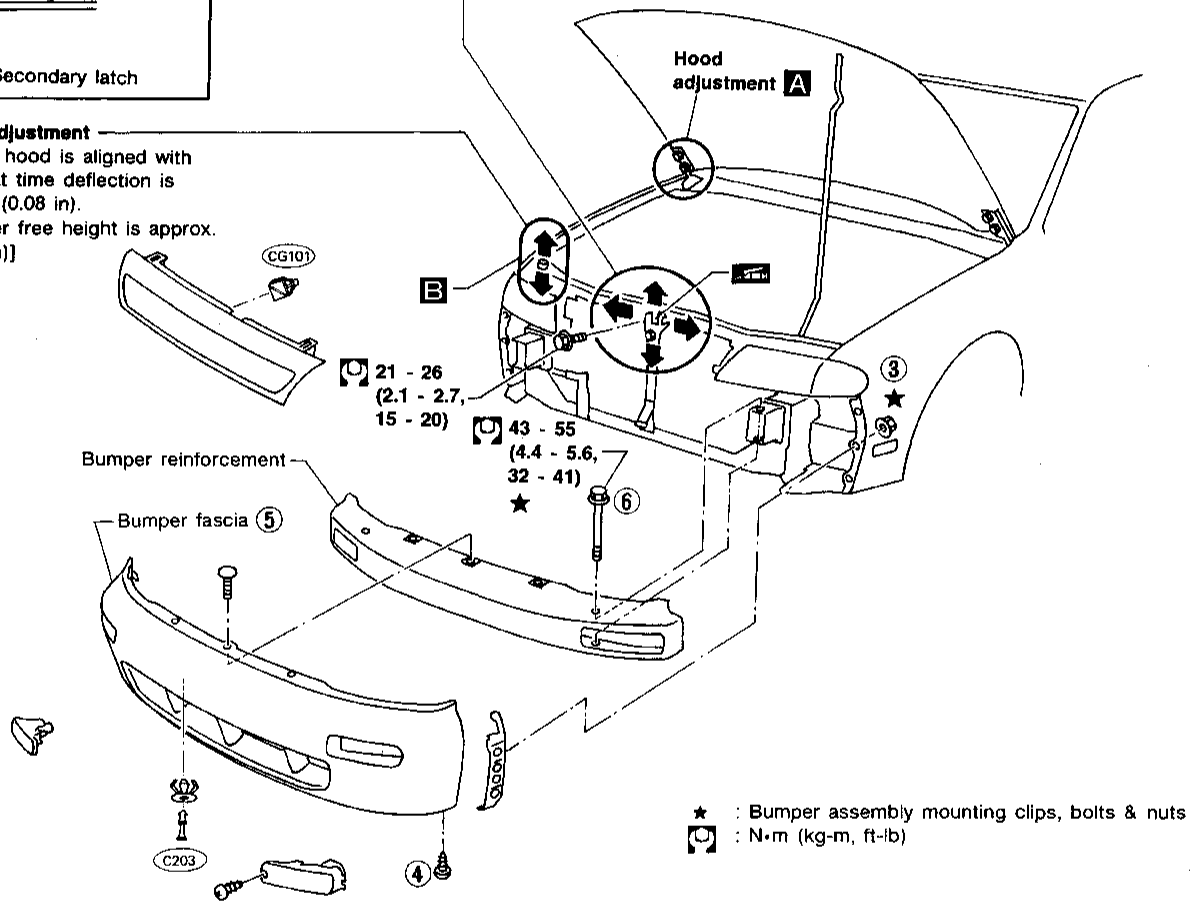

★ : Bumper assembly mounting clips, bolts & nuts
: N•m (kg-m, ft-lb)

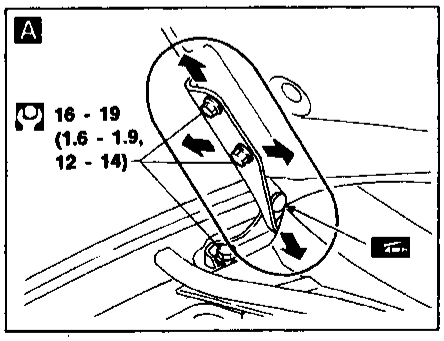

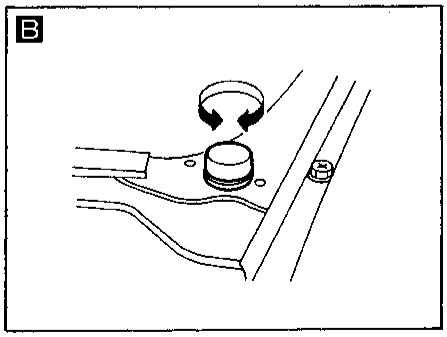

MBF615A

Body Rear End and Opener

- Trunk lid adjustment: Adjust at hinge-trunk lid portion for proper trunk lid fit.
- Trunk lid lock system adjustment: Adjust striker so that it is in the center of the lock. After adjustment, check trunk lid lock operation.
- Opener cable: Do not attempt to bend cable forcibly.
- After installing/adjusting opener, make sure that trunk lid and fuel filler lid open.

REMOVAL — Rear bumper assembly

① Remove luggage room trim. Refer to BF-34.
② Remove the two bolts from inside of trunk room.
③ Working inside trunk, remove nuts securing left and right rear fenders to bumper fascia.
④ Working inside trunk, remove left and right plugs from floor, then remove the four bolts.
⑤ Extract bumper assembly.

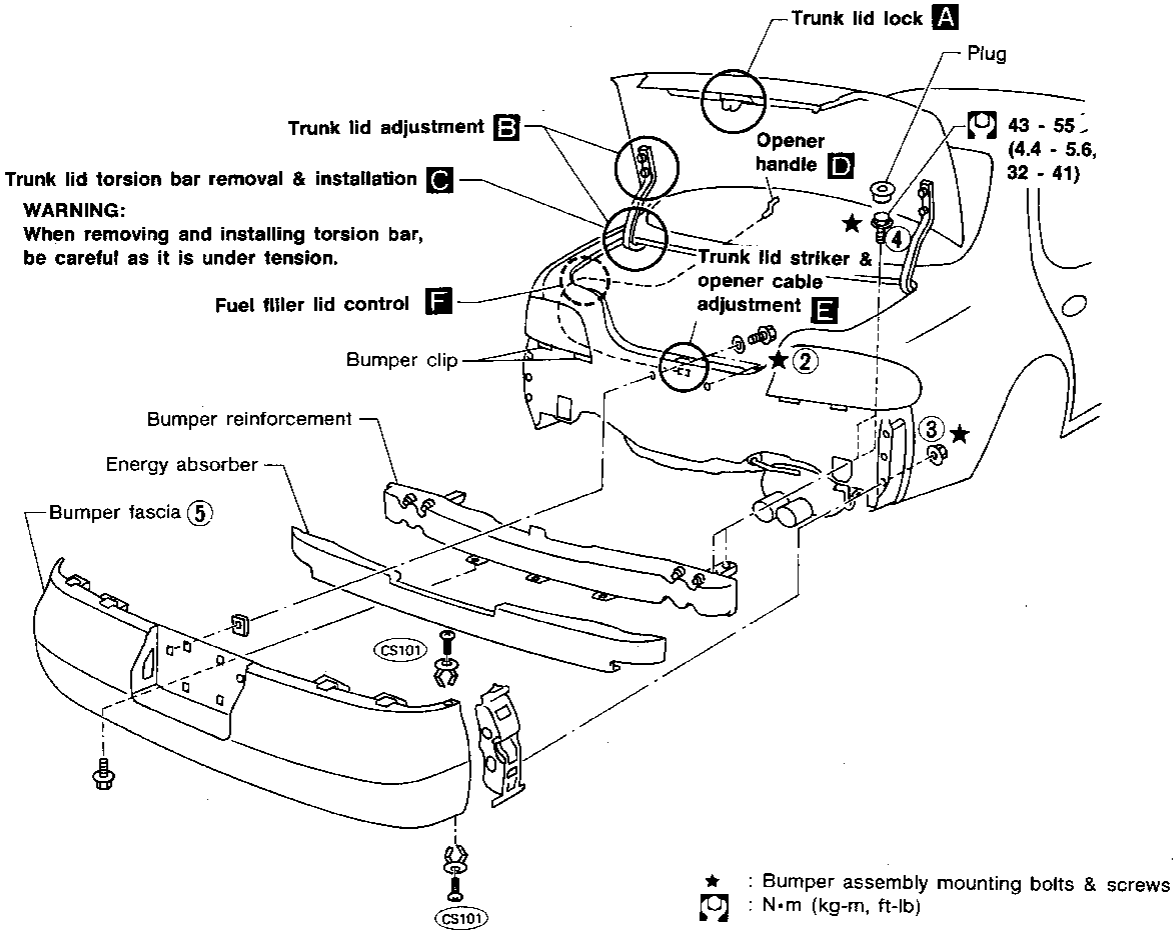

Body Rear End and Opener (Cont'd)

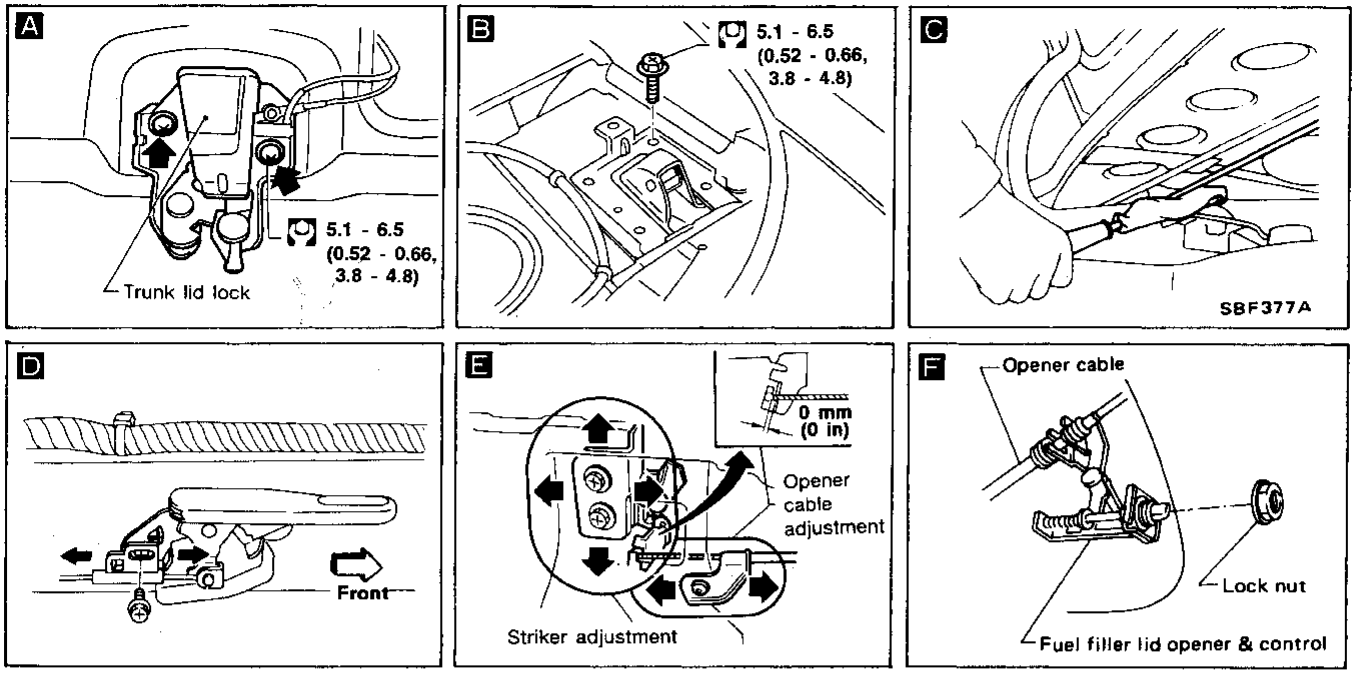

Trunk lid and fuel filler lid opener installation

Installation (Refer to figure below)

① Temporarily route cable and secure fuel lock to vehicle body.

② Lightly pull stopper A (at cable end) in direction Ⓐ to eliminate clearance **b** between stopper B and casing end.

③ Secure bracket A to vehicle body so that clearance **a** between stopper A and trunk striker is 0 mm (0 in). (At this point, do not pull striker lever.)

④ Attach stopper C to handle. While lightly pushing cable in direction Ⓑ shown by arrow (do not allow any clearance **c** at fuel lock casing end to occur), secure handle to vehicle body.

Ensure that clearances a and b are eliminated after installation.

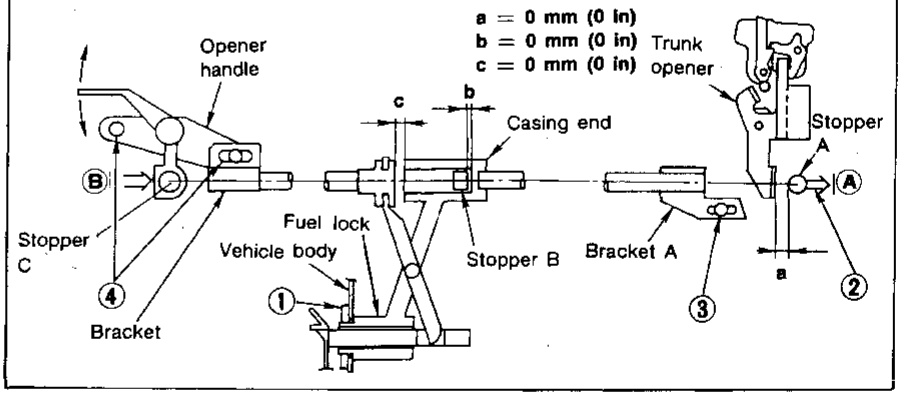

MBF597A

- For removal of door trim, refer to "INTERIOR AND EXTERIOR" (BF-32).
- When removing door, be sure not to scratch vehicle body.
- After adjusting door or door lock, check door lock operation.
- When disassembling rear door window, it is better to remove upper and waist roller mounting first.

Front Door

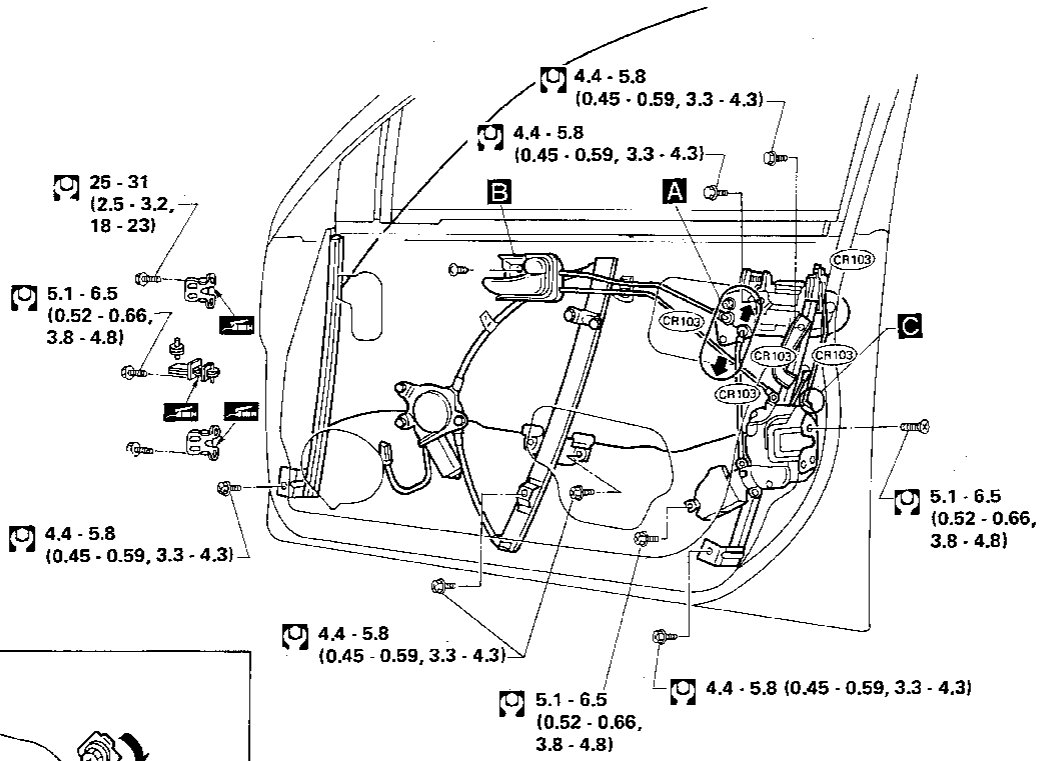

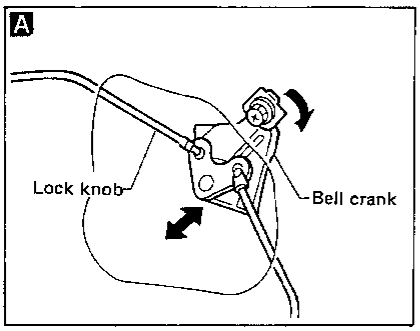

Bell crank adjustment

Lock door after setting door lock assembly and inside handle in position.

Move bell crank in direction of arrow (shown in figure at left) to take up knob free play, and secure with bolts.

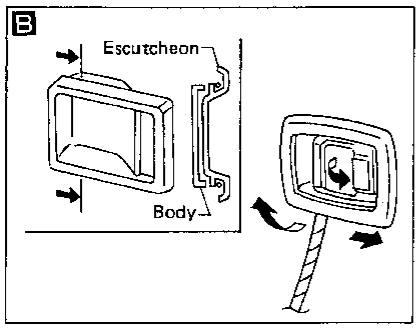

Hinge-body adjustment

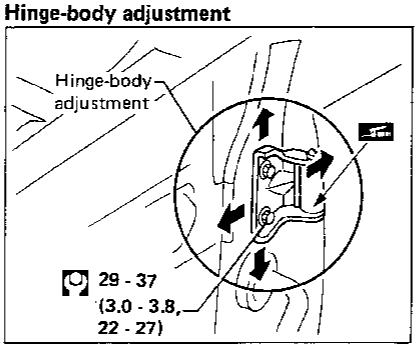

Striker adjustment

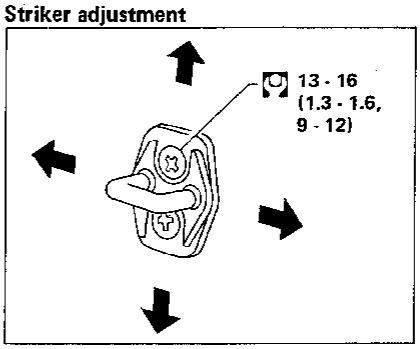

Door adjustment

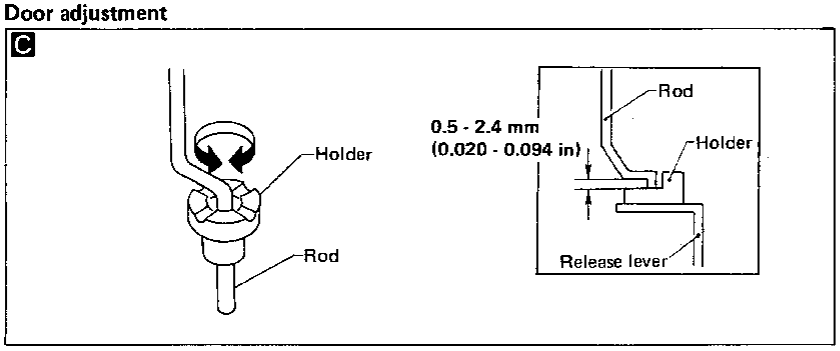

: N·m (kg·m, ft·lb)

MBF553A

Rear Door

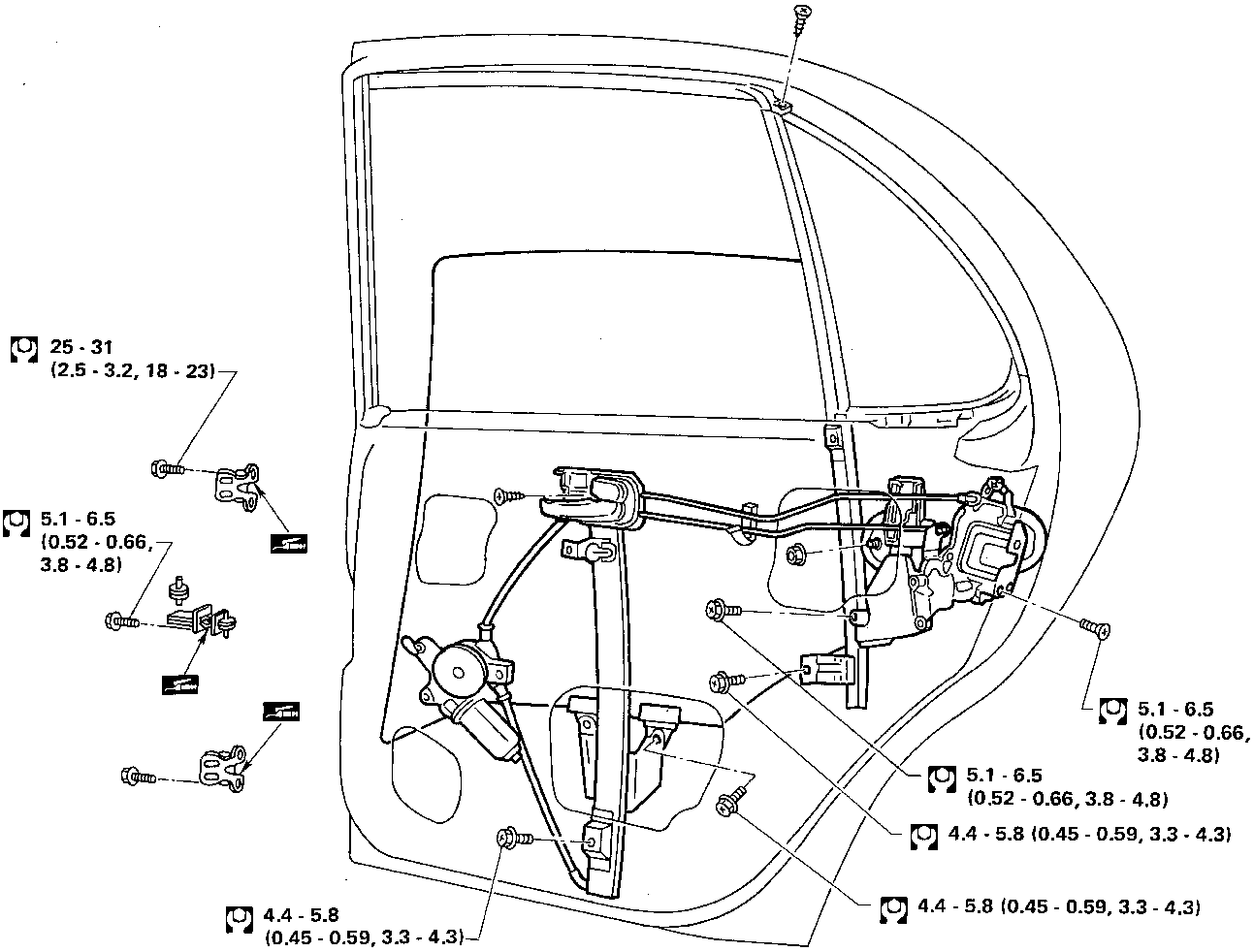

Hinge-body adjustment

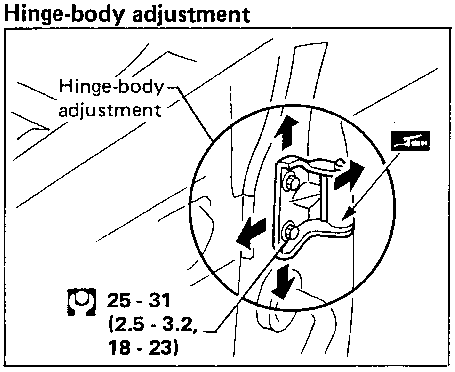

Striker adjustment

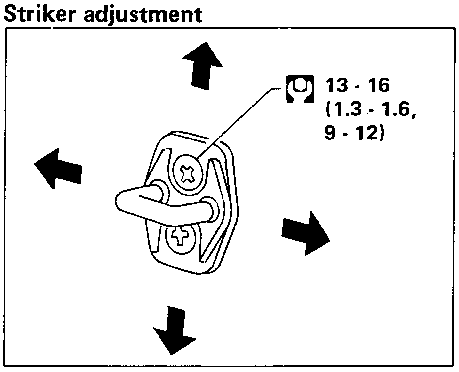

: N·m (kg-m, ft-lb)

MBF555A

System Description

POWER DOOR LOCK

The door key will not activate the power door lock system. The main switch or door lock switch RH triggers the power door lock actuators.

Power is supplied at all times to door lock terminal ① through:
- 75A fusible link to
- 25A fusible link to
- circuit breaker

The door lock timer is grounded through body grounds (M51), (M76) and (M77).

UNLOCK

When either the main switch or door lock switch RH is pressed to the unlock position:
- Door lock timer terminal ② supplies voltage and
- Door lock timer terminal ③ supplies ground

All door lock actuators move to the unlock position.

LOCK

When either the main switch or door lock switch RH is pressed to the lock position:
- Door lock timer terminal ③ supplies voltage and
- Door lock timer terminal ② supplies ground

All door lock actuators move to the lock position.

Circuit Diagram for Quick Pinpoint Check

- **Refer to BF-18.**

Wiring Diagram

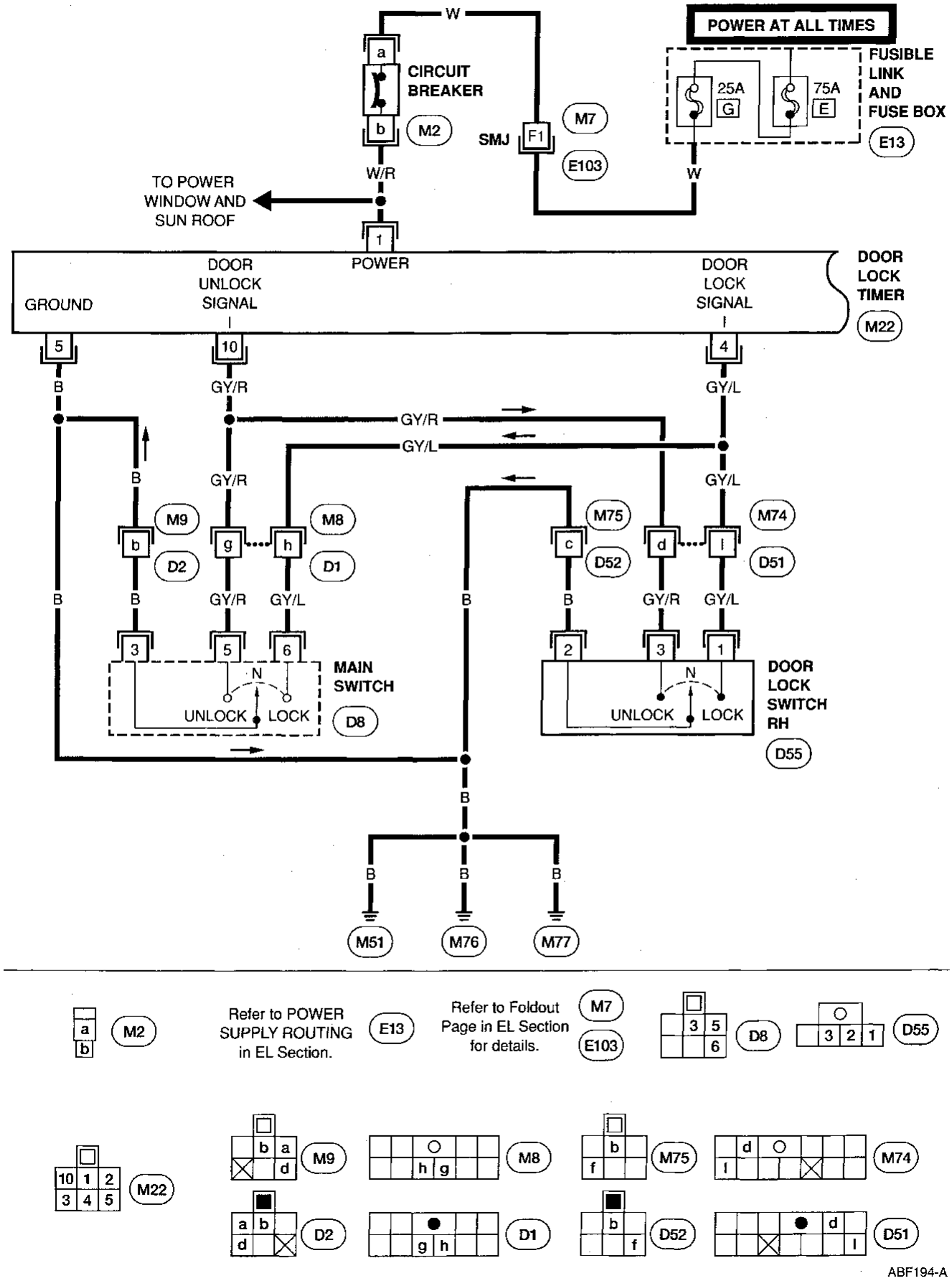

ABF194-A

Wiring Diagram (Cont'd)

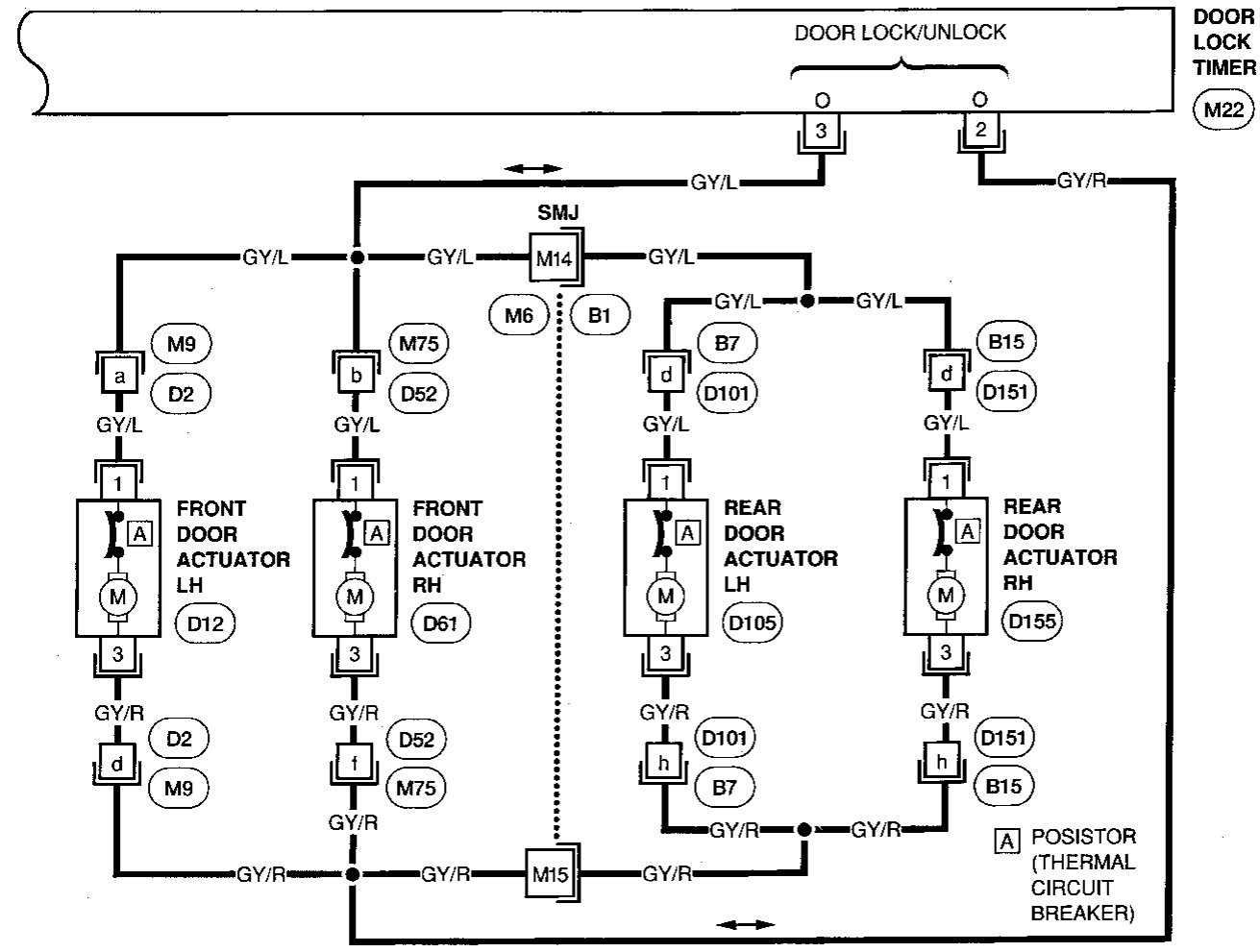

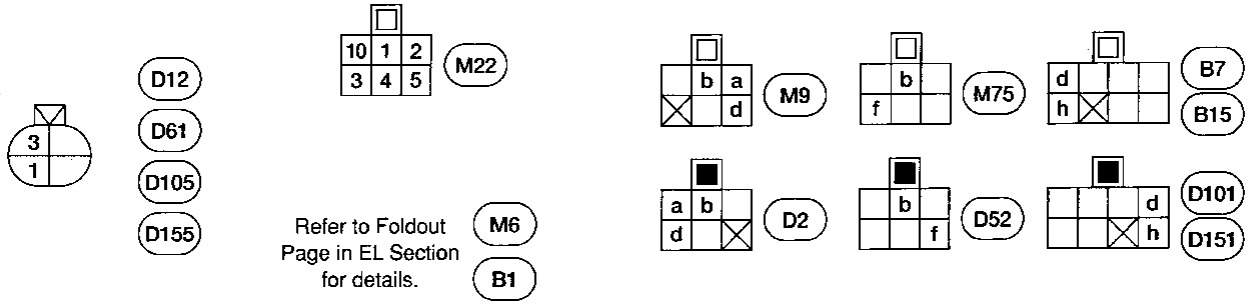

ABF194-B

Door Lock Timer

- Carry out the inspections below.

(1) Power source and ground: Battery voltage should exist between terminals ① and ⑤.
(2) Input signals: Continuity should exist between terminals ④, ⑩, and ground in "ON" condition, and should not exist in "OFF" condition.
(3) Output signals: Voltage shown in the chart should exist.

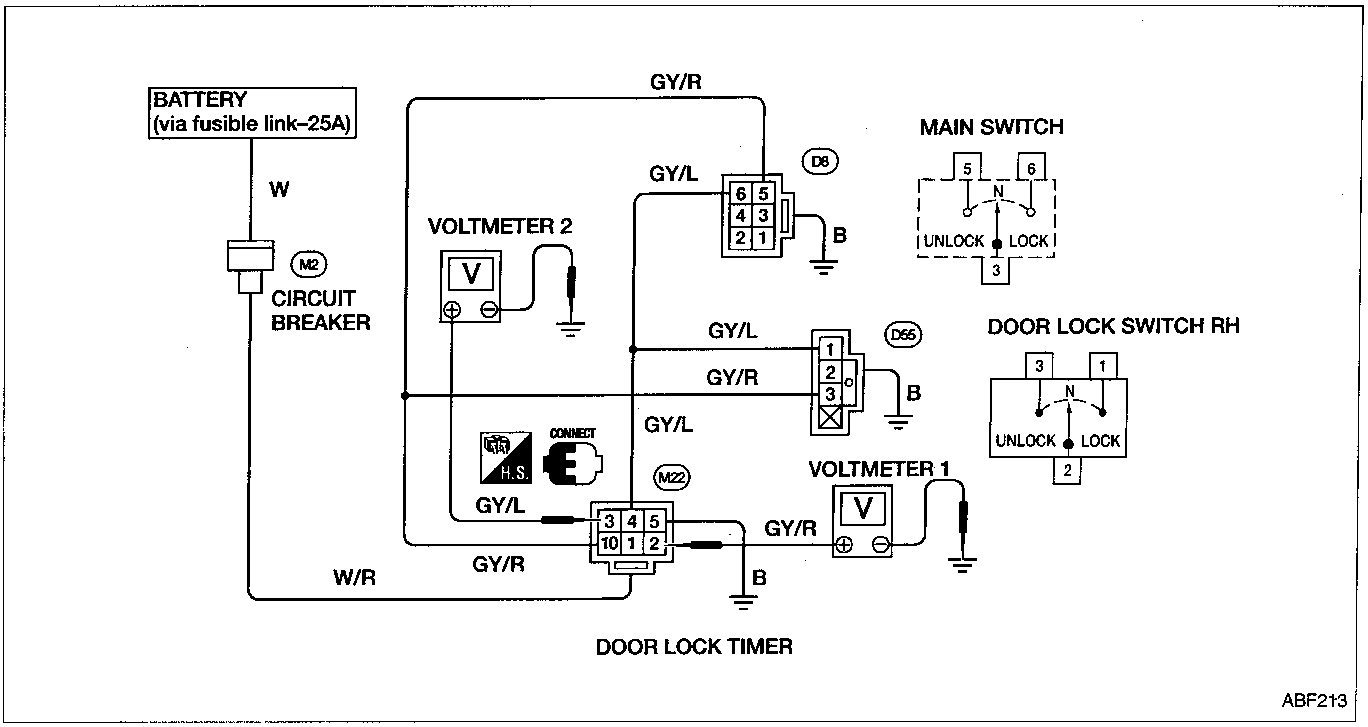

- Carry out the complete inspection in the chart from left to right.

Door lock timer (M22) terminal	Connections		Operations		
			Main switch/door lock switch RH		
			N	Unlock	Lock
1	Power source		12V	12V	12V
5	Ground		Ground	Ground	Ground
4	Input signal	Main switch/door lock switch RH (Input signal for lock)	OFF	OFF	ON
10		Main switch/door lock switch RH (Input signal for unlock)	OFF	ON	OFF
2	Output signal	Door lock actuator (Lock power source) VOLTMETER 1	0V	0V	12V (Approx. 1.0 sec.) → 0V
3		Door lock actuator (Unlock power source) VOLTMETER 2	0V	12V (Approx. 1.0 sec.) → 0V	0V

System Description

The power window motors are supplied power through:
- 75A fusible link to
- 25A fusible link to
- circuit breaker to
  - terminal ④ of the main switch and
  - terminal ㊶ of the power window amplifiers in the front passenger door and both the rear doors.

The driver's door power window amplifier is built into the main switch. Ignition power is supplied:
- to terminal ⑱ of the main switch and
- from terminal ⑦ of the main switch to terminal ㊹ of the other three power window amplifiers.

The main switch and front RH power window amplifier are grounded at body grounds (M51), (M76) and (M77).

The rear LH and RH power window amplifiers are grounded through body grounds (B6) and (B14).

WINDOW DOWN

The main switch located in the driver's door contains individual window switches for each door. The driver can control window operation for all four doors.

When a window switch in the main switch is pressed in the down position:
- a ground data signal is supplied to terminal ㊿ of the corresponding power window amplifier (except the driver's door amplifier which receives the signal internally) and
- the amplifier applies voltage through terminal ㊻ and supplies ground through terminal ㊺ to the power window motor.

Then, the motor lowers the window until the switch is released.

When an individual window switch on each door is pressed in the down position, the amplifier receives a ground data signal on terminal ㊾, then the motor lowers the window as described above.

WINDOW UP

The main switch located in the driver's door contains individual window switches for each door. The driver can control window operation for all four doors.

When a window switch in the main switch is pressed in the up position:
- a power data signal is supplied to terminal ㊿ of the corresponding power window amplifier (except the driver's door amplifier which receives the signal internally) and
- the amplifier applies voltage through terminal ㊺ and supplies ground through terminal ㊻ to the power window motor.

Then, the motor raises the window until the switch is released.

When an individual window switch on each door is pressed in the up position, the amplifier receives a power data signal on terminal ㊾, then the motor raises the window as described above.

AUTO FEATURE

The power window AUTO feature enables the driver to lower the driver's window without holding the window switch in the down position.
When the AUTO switch in the main switch is pressed and released, the driver's window will travel to the fully open position.
The AUTO feature only operates on the driver's window downward movement.

LOCK FEATURE

The lock feature is designed to lock-out window operation to all windows except the driver's window.
When the lock switch in the main switch is pressed to lock position, ignition power to terminal ㊹ of the remaining three power window amplifiers is disconnected. This prevents the power window motors from operating.

Component Layout

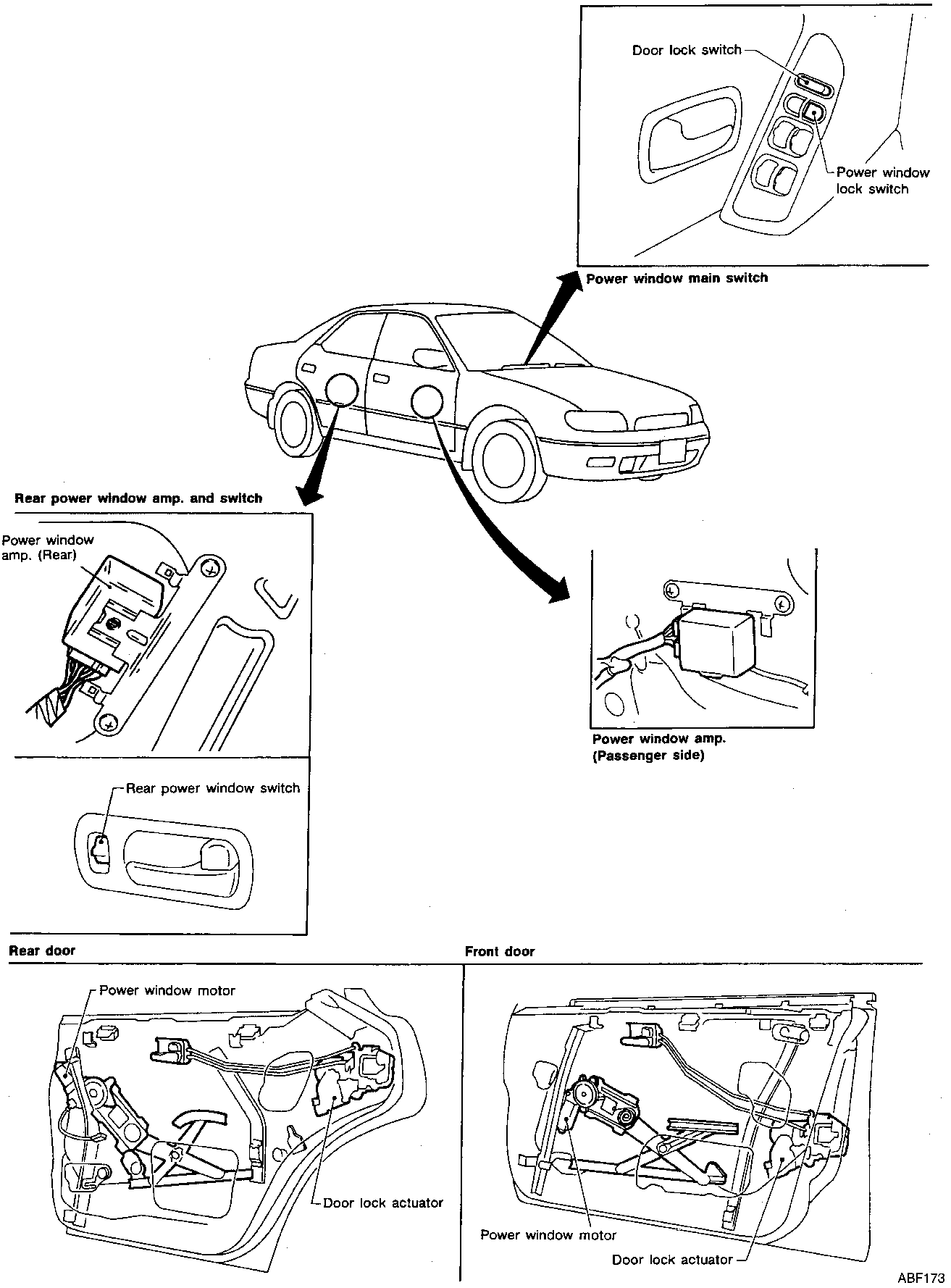

Since left and right component parts are basically the same, harness layout and methods for electrical components inspection are shown for one side only.
Although methods for checking component parts on both sides are described in the flow chart, making it easier to troubleshoot, apply checking procedures to either side that have malfunction during trouble diagnoses.

Symptom Chart

Procedure	Main Power Supply and Ground Circuit Check			Diagnostic Procedure				Electrical Components Inspection		Remarks
Reference Page	BF-22	BF-22	BF-22	BF-23	BF-24	BF-25	BF-26	BF-27	BF-27	—
SYMPTOM	Procedure 1	Procedure 2	Procedure 3	Procedure 1	Procedure 2	Procedure 3	Procedure 4	Power window motor(s)	Power window switch(es)	—
None of the power windows can be operated.	○		○	○	○	○	○	○	○	—
Driver side power window cannot be operated but other windows can be operated.				○				○		—
Passenger power windows cannot be operated.		○			○	○		○	○	—
Passenger power windows cannot be operated by main switch but can be operated by passenger's switches.	○						○			—

Circuit Diagram for Quick Pinpoint Check

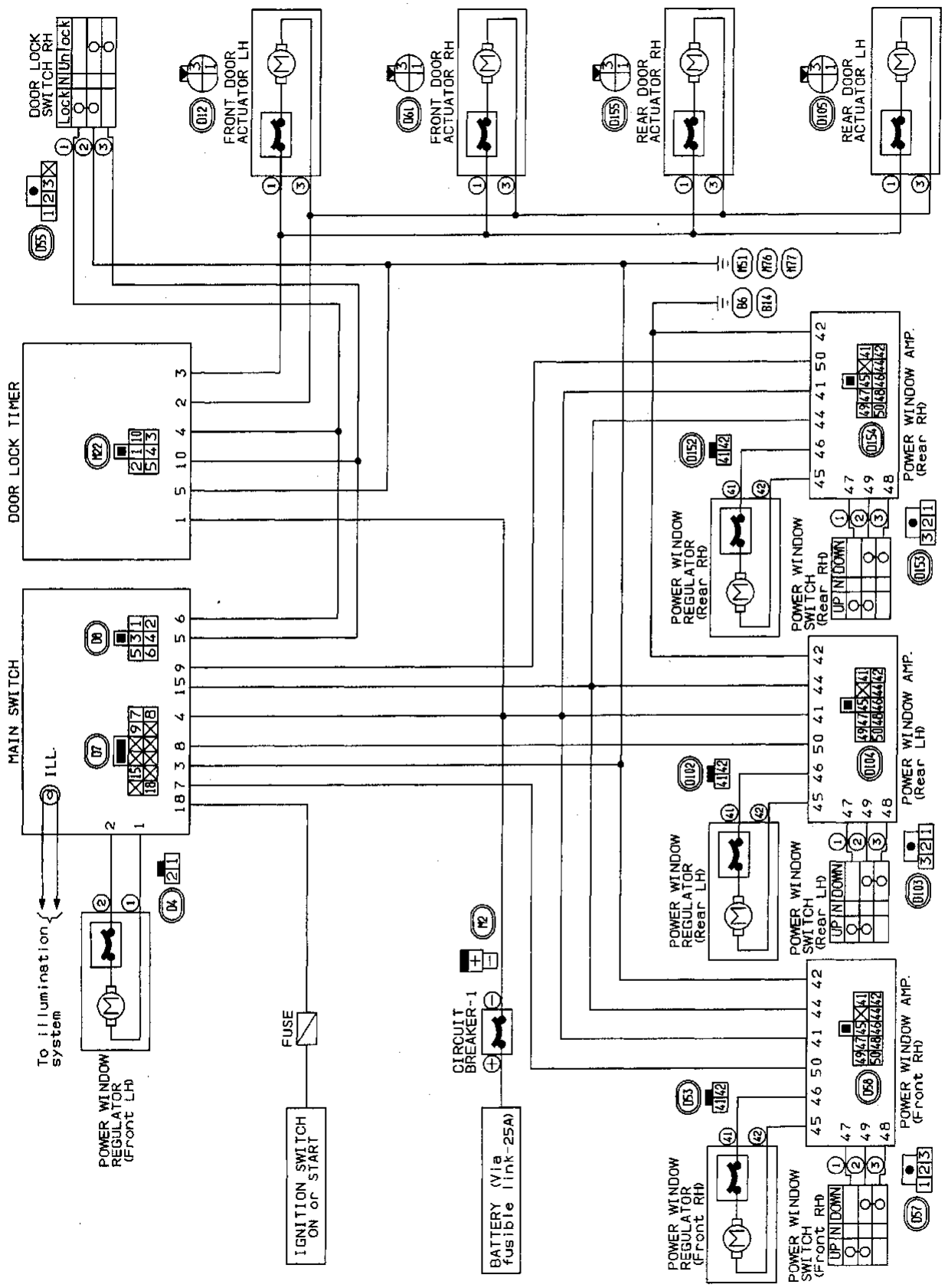

MBF628A

Wiring Diagram

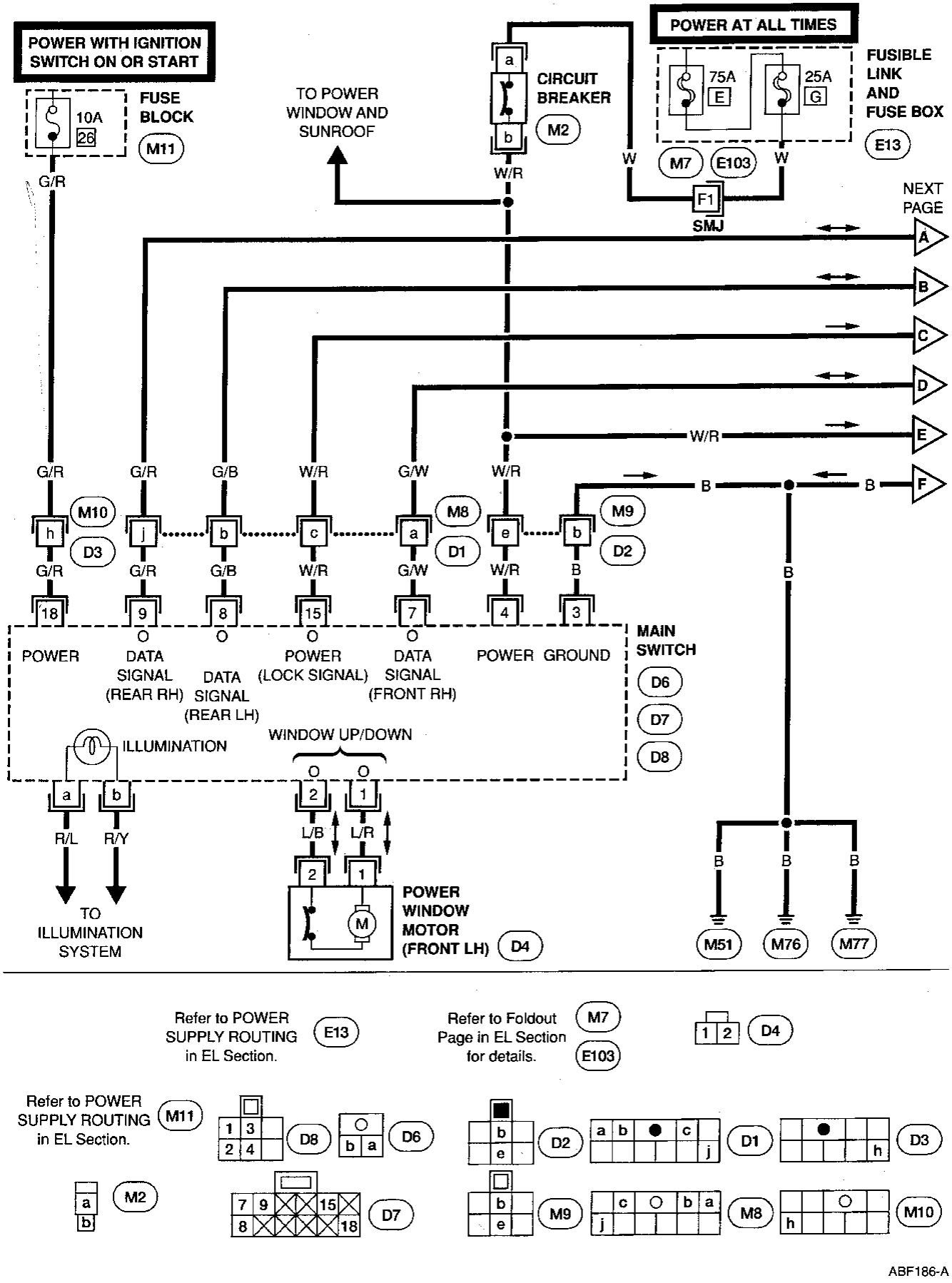

ABF186-A

Wiring Diagram (Cont'd)

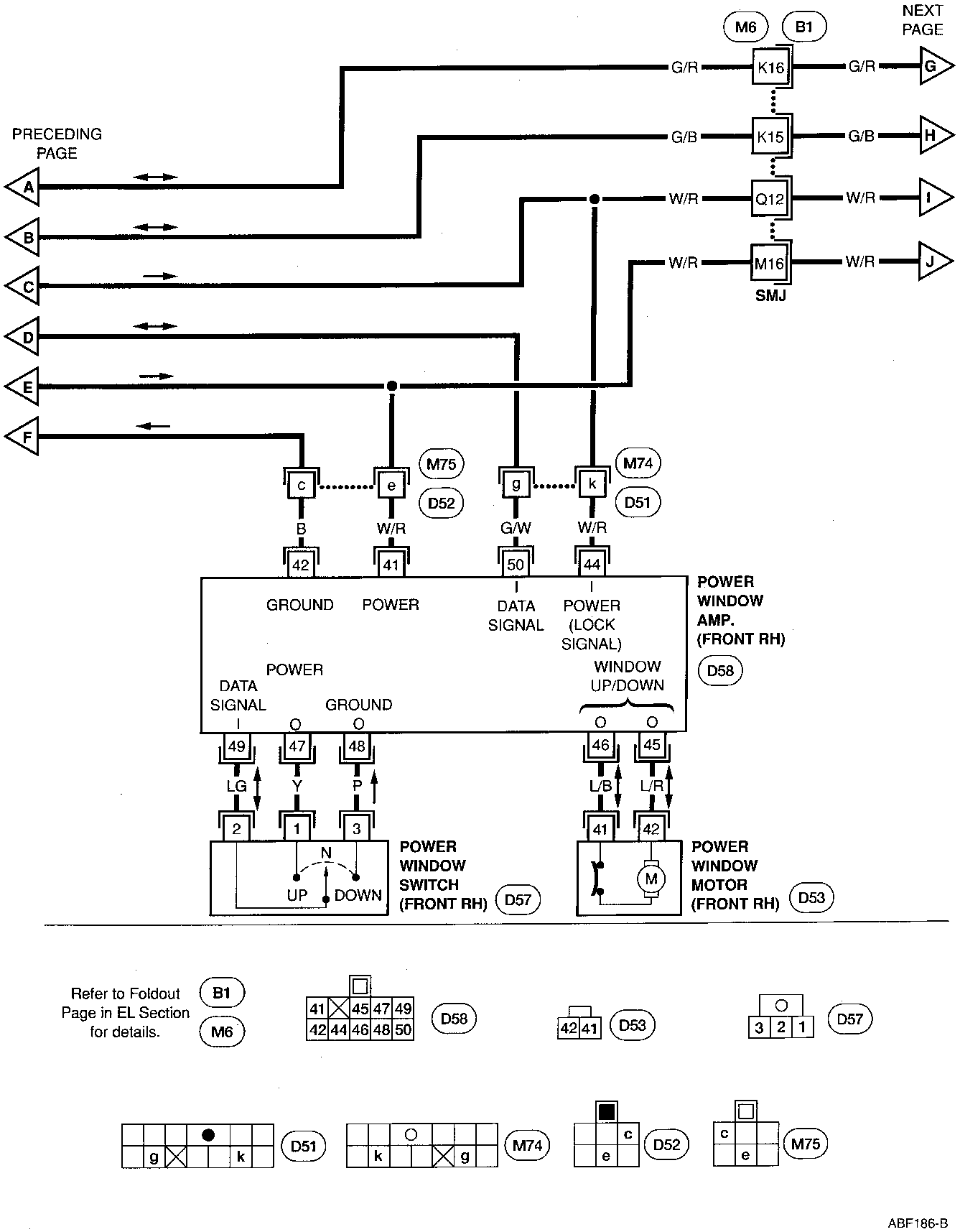

Refer to Foldout Page in EL Section for details.

ABF186-B

Wiring Diagram (Cont'd)

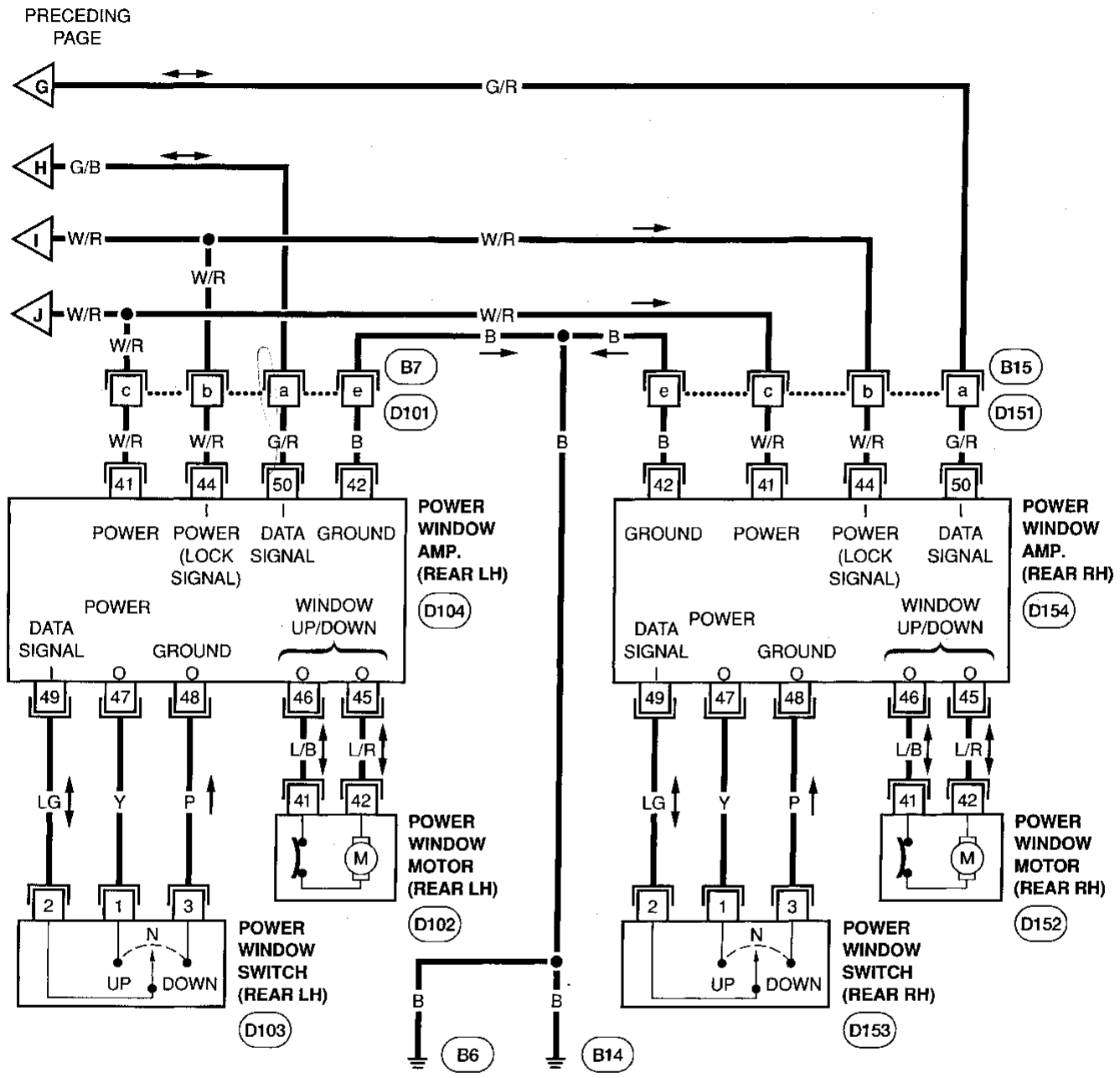

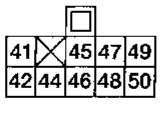

D104
D154

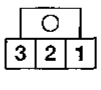

D103
D153

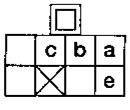

B7
B15

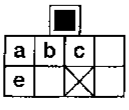

D101
D151

D102
D152

ABF186-C

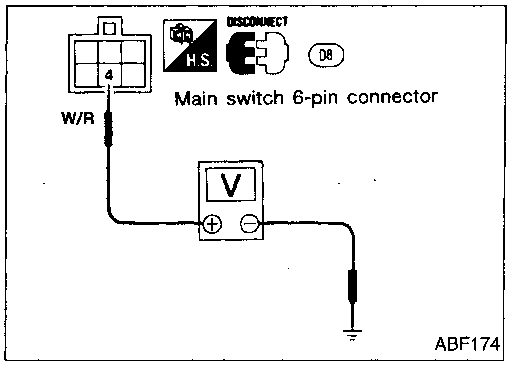

Main Power Supply and Ground Circuit Check

PROCEDURE 1

Main power supply

Terminals	Battery positive voltage existence
④ - Ground	Yes

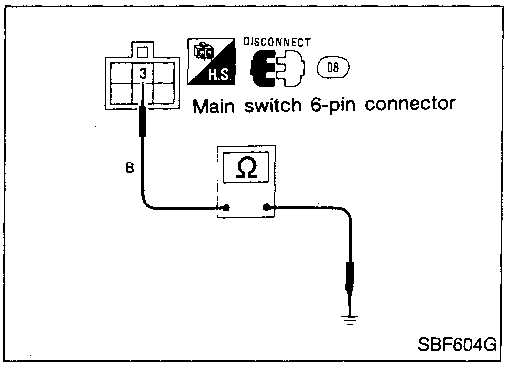

Ground circuit

Terminals	Continuity
③ - Ground	Yes

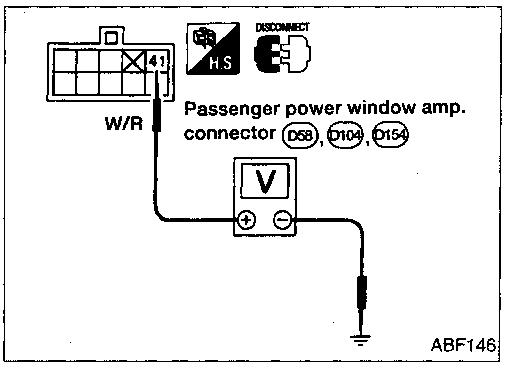

PROCEDURE 2

Power supply for power window amp. (front and rear passengers)

Terminals	Battery positive voltage existence
㊶ - Ground	Yes

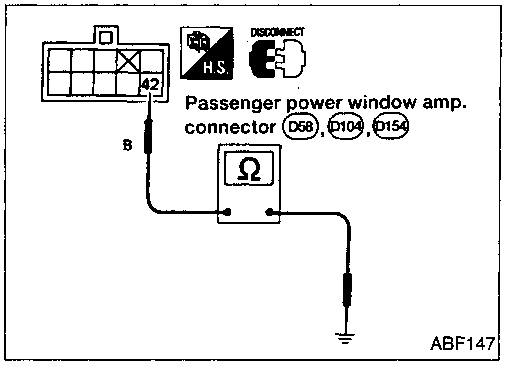

Ground circuit for power window amp. (front and rear passengers)

Terminals	Continuity
㊷ - Ground	Yes

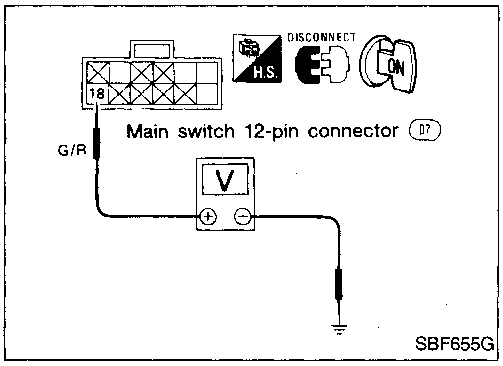

PROCEDURE 3

Power supply for ignition signal

Terminals	Ignition switch	Battery positive voltage existence
⑱ - Ground	ON	Yes

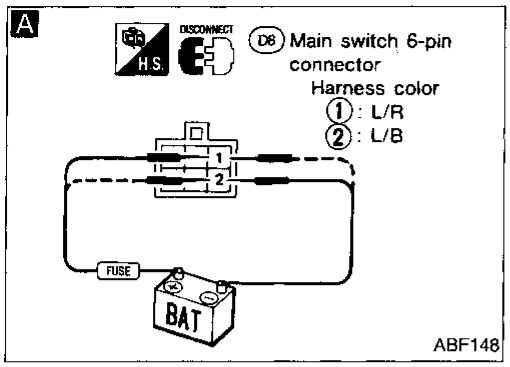

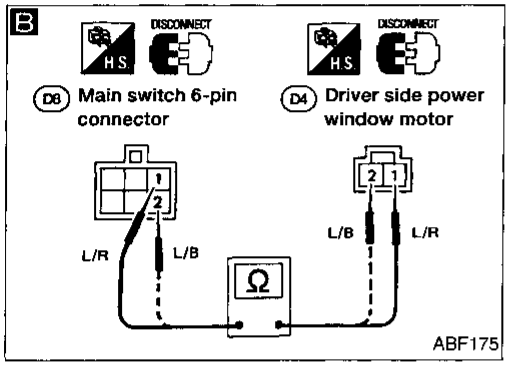

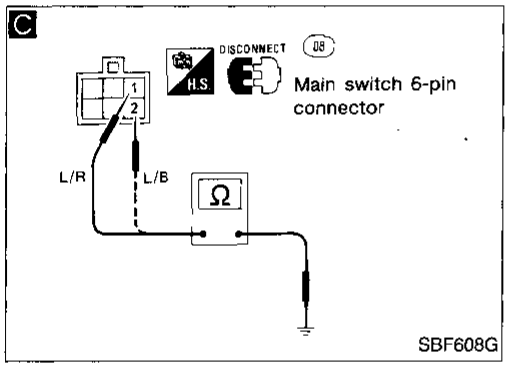

Diagnostic Procedure 1

SYMPTOM:

Driver side power window cannot be operated but other power windows can be operated.

START

A

CHECK DRIVER SIDE WINDOW MOTOR CIRCUIT.
1) Disconnect 6-pin connector from main switch.
2) Check power window operation.

Terminals		Window
⊕	⊖	
1	2	Up
2	1	Down

O.K. → Replace main switch.

N.G.

B

1) Disconnect connector from driver side power window motor.
2) Check continuity.

Terminals
1 - 1
2 - 2

Continuity should exist.

N.G. → Repair harness.

O.K.

C

Does continuity exist?

Terminals
1 - Ground
2 - Ground

Yes → Repair harness. There will be incorrect grounding.

No

Go to POWER WINDOW MOTOR in Electrical Components Inspection. (Refer to BF-27.)

O.K. → Check system again.

N.G.

Check power window motor harness for open or short circuit.

N.G. → Repair harness.

O.K.

Replace power window motor.

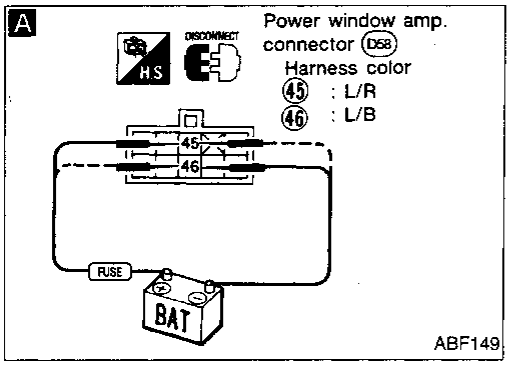

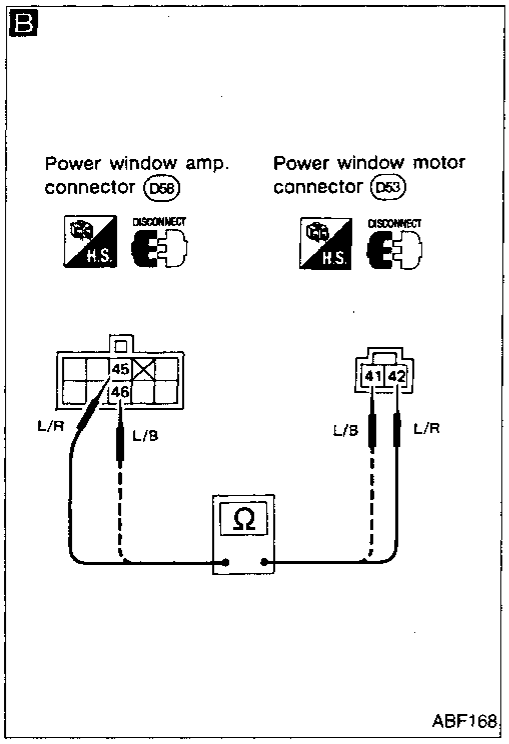

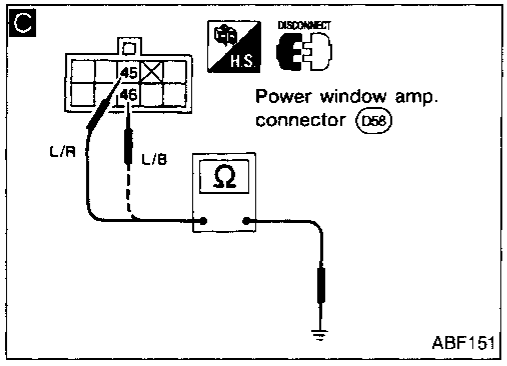

Diagnostic Procedure 2

SYMPTOM:

Passenger power windows cannot be operated by main switch and passenger switch.

START

A

CHECK PASSENGER POWER WINDOW CIRCUIT.
1) Disconnect connector from power window amp.
2) Check power window.

Terminals ⊕	Terminals ⊖	Window operation
(45)	(46)	Up
(46)	(45)	Down

O.K. → Perform Diagnostic Procedure 3. (Refer to BF-25.)

N.G. ↓

B

1) Disconnect connector from power window motor.
2) Check continuity.

Terminals
(45) - (42)
(46) - (41)

Continuity should exist.

N.G. → Repair harness.

O.K. ↓

C

Does continuity exist?

Terminals
(45) - Ground
(46) - Ground

Yes → Repair harness. There will be incorrect grounding.

No ↓

Go to POWER WINDOW MOTOR in Electrical Components Inspection. (Refer to BF-27.)

O.K. → Check system again.

N.G. ↓

Check power window motor harness for open or short circuit.

N.G. → Repair harness.

O.K. ↓

Replace power window motor.

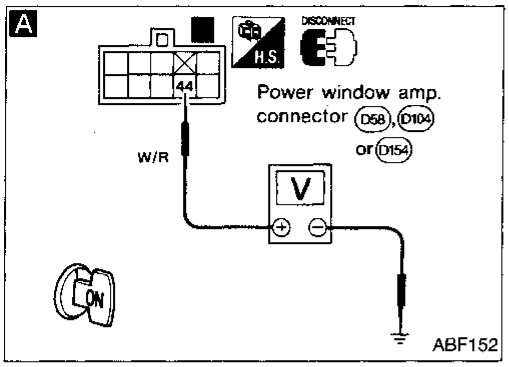

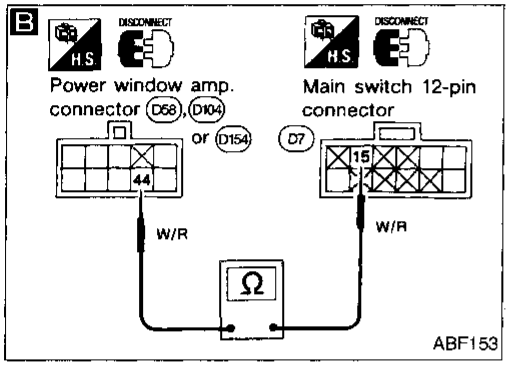

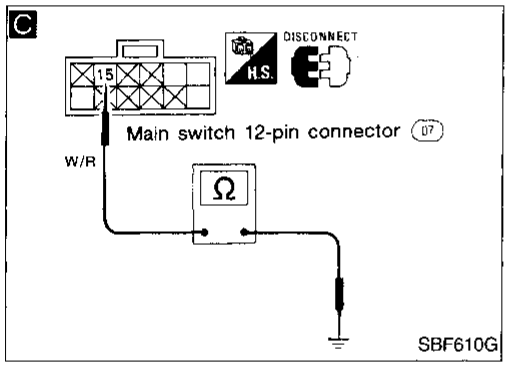

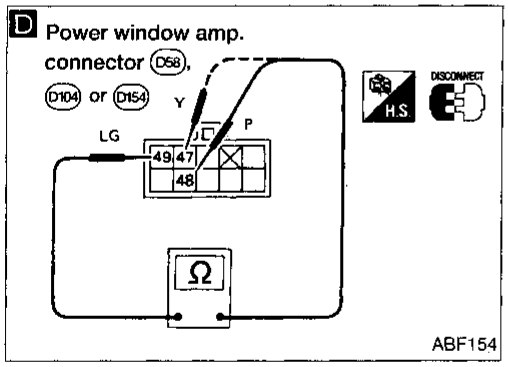

Diagnostic Procedure 3

SYMPTOM:

Passenger power windows cannot be operated but driver side power window can be operated.

START

A

CHECK POWER WINDOW LOCK SIGNAL CIRCUIT.
1) Disconnect connector from power window amp.
2) Check battery positive voltage between terminal 44 for each connector and ground while ignition switch is "ON".

Terminals	Power window lock switch	Battery positive voltage exists
44 - Ground	ON	No
	OFF	Yes

O.K. → **D**

Check continuity.

Terminals	Passenger switches	Continuity
47 - 49	Up	Yes
	Down	No
48 - 49	Up	No
	Down	Yes

O.K. → Replace power window amp.

N.G. → Go to POWER WINDOW SWITCH in Electrical Components Inspection. (Refer to BF-27.)

O.K. → Repair harness between power window amp. and power window switch.

N.G. → Replace power window switch.

N.G. → **B**

1) Disconnect 12-pin connector from main switch.
2) Check continuity between terminal 44 for each connector and 15 for main switch connector.

Terminals
44 - 15

Continuity should exist.

N.G. → Repair harness.

O.K. → **C**

Does continuity exist?

Terminals
15 - Ground

Yes → Repair harness. There will be incorrect grounding.

No → Replace main switch.

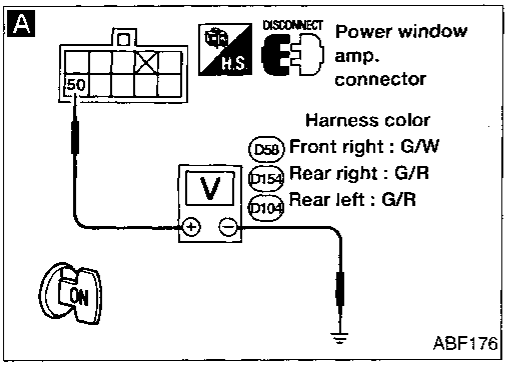

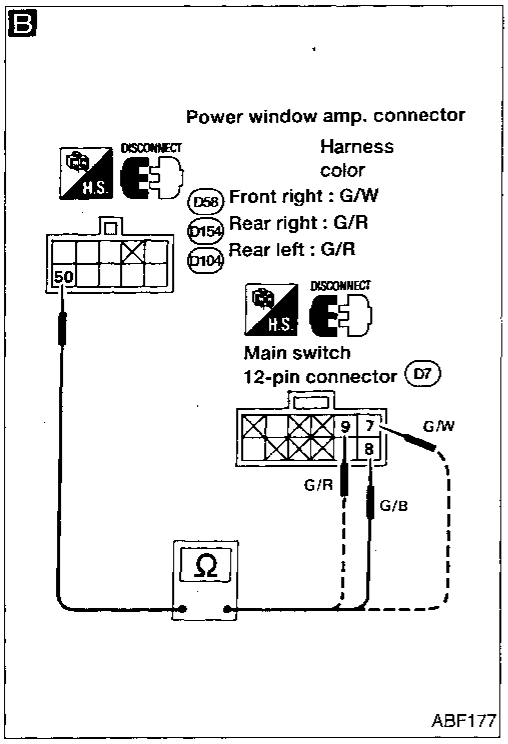

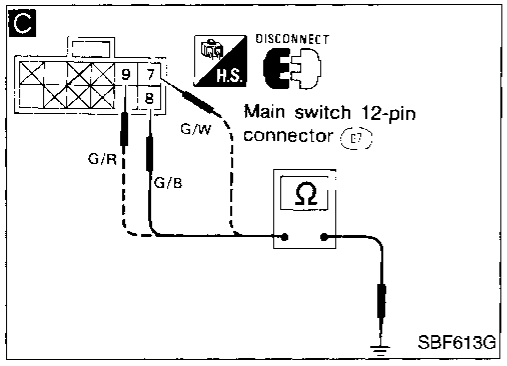

Diagnostic Procedure 4

SYMPTOM:

Passenger power windows cannot be operated by main switch but can be operated by passenger's switches.

START

A

CHECK DATA LINE SIGNAL CIRCUIT.
1) Disconnect connectors from power window amp.
2) Check voltage while power window lock switch is "OFF".

Terminals	Main switch operation	Voltage
50 - Ground	Up	Above 12V
	Down	Approx. 4V
	No operation	Approx. 0V

O.K. → Replace switch.

N.G.

B

1) Disconnect 12-pin connector from main switch.
2) Check continuity.

	Terminals
Front right	7 - 50
Rear left	8 - 50
Rear right	9 - 50

Continuity should exist.

N.G. → Repair harness.

O.K.

C

Does continuity exist?

	Terminals
Front right	7 - Ground
Rear left	8 - Ground
Rear right	9 - Ground

Yes → Repair harness. There will be incorrect grounding.

No

Replace main switch.

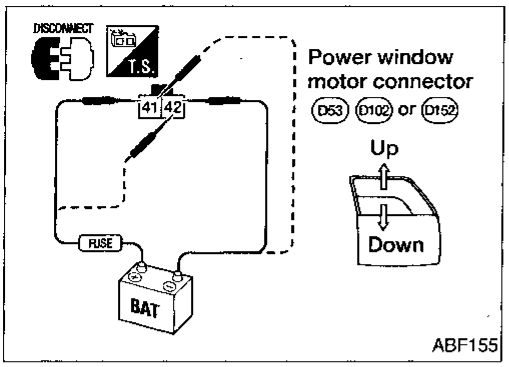

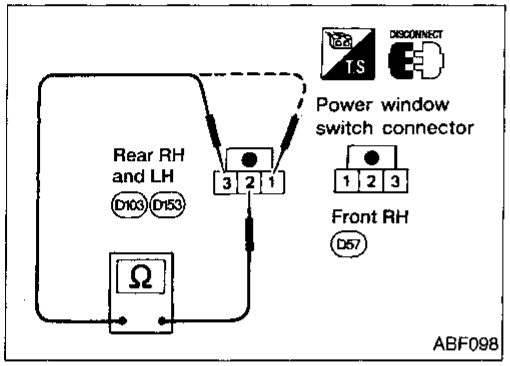

Electrical Components Inspection

POWER WINDOW MOTOR

Terminals		Operation
⊕	⊖	
41	42	Downward
42	41	Upward

POWER WINDOW SWITCH

Terminals	Condition	Continuity
1 - 2	UP	Yes
	Down	No
2 - 3	UP	No
	Down	Yes

CAUTION:
a. Disconnect ground terminal from battery in advance.
b. Disconnect air bag system line in advance.
c Be careful not to scratch finishers and other parts.

REMOVAL — Instrument panel assembly

① Remove steering wheel. Disengage air bag system in advance.
② Remove glove box lid and glove box.
③ Remove front passenger air bag module.
④ Remove steering column cover.
⑤ Remove lower instrument cover on driver's side.
⑥ Remove A/T finisher or shift lever boot.
⑦ Remove cluster lid C.
⑧ Remove radio and deck pocket.
⑨ Remove cluster lid A.
⑩ Remove instrument finisher A.
⑪ Remove combination meter assembly.
⑫ Remove instrument finisher B.
⑬ Remove console box.
⑭ Remove instrument panel center.
⑮ Remove defroster grille.
⑯ Remove instrument panel assembly.

HEAD-UP DISPLAY (HUD)

- When removing HUD finisher, be extremely careful not to scratch HUD's reflective surface. To avoid scratching, cover HUD's reflective surface or finisher with a cloth or vinyl sheet.

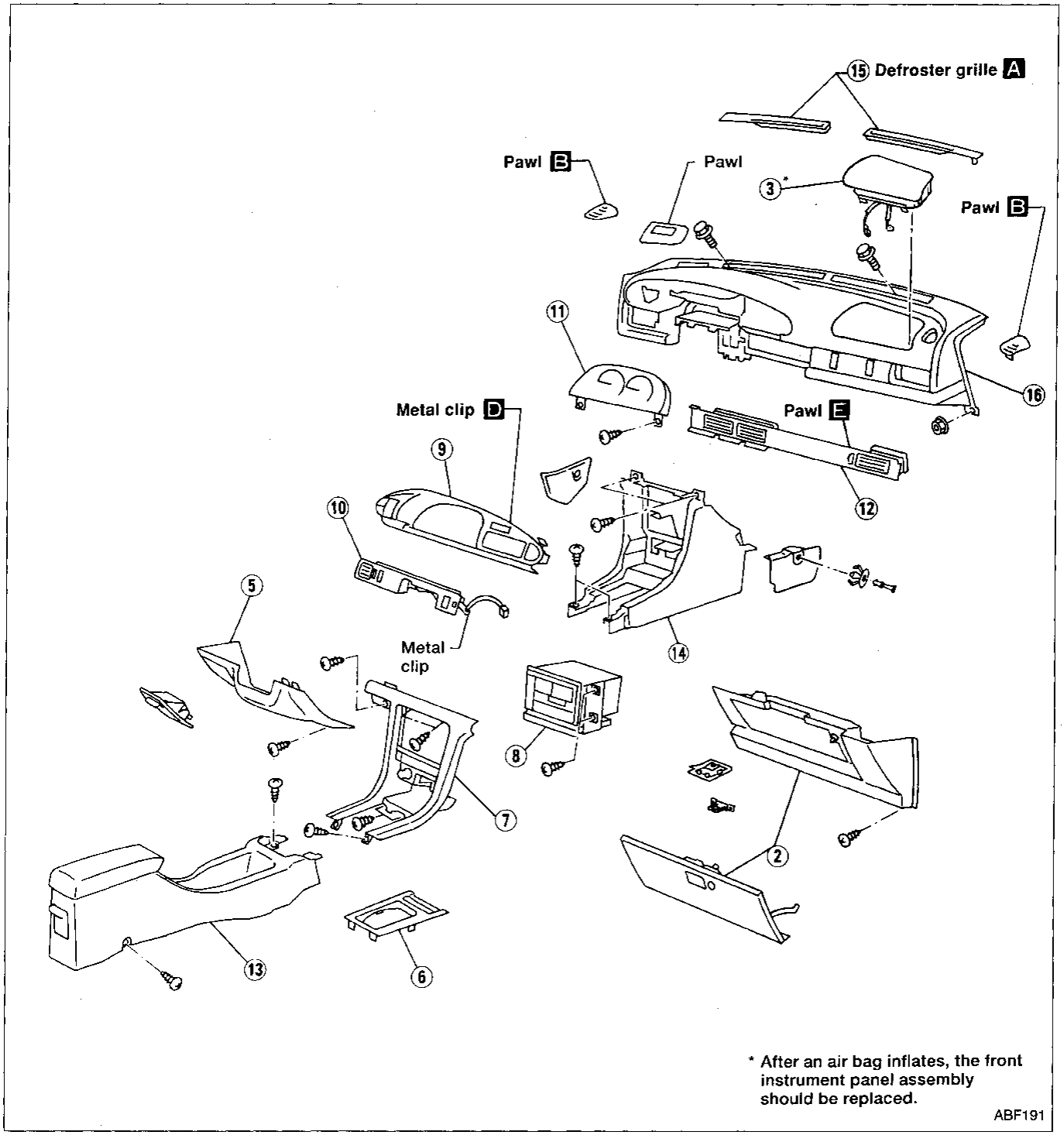

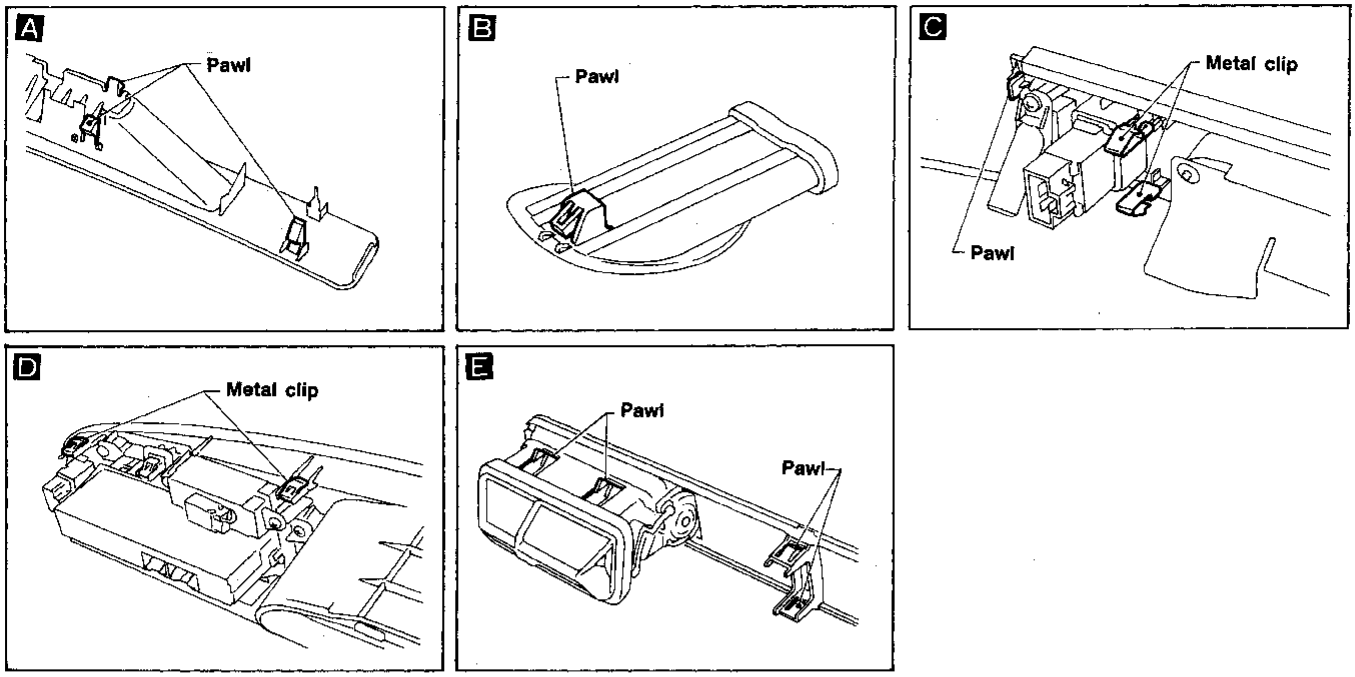

MBF598A-1

Interior

SIDE AND FLOOR TRIM

CAUTION:
Wrap the tip of flat-bladed screwdriver with a cloth when removing metal clips from garnishes.

REMOVAL — Body side trim

① Remove front and rear kick plates.
② Remove dash side finisher.
③ Remove center pillar lower garnish.
④ Remove front and rear body side welts.
⑤ Remove center pillar upper garnish.
⑥ Remove front pillar garnish.
⑦ Remove rear pillar garnish.
⑧ Remove rear parcel shelf.

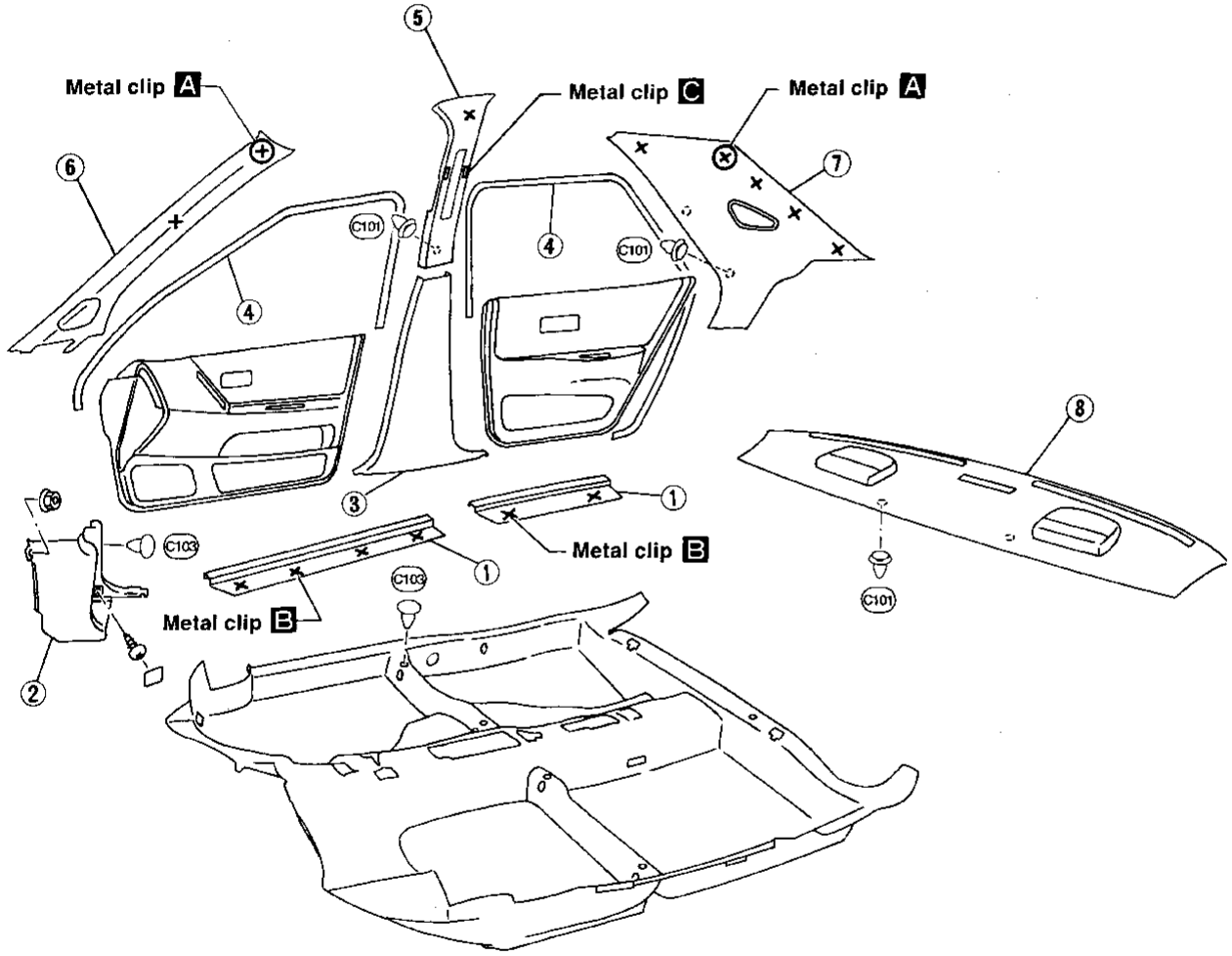

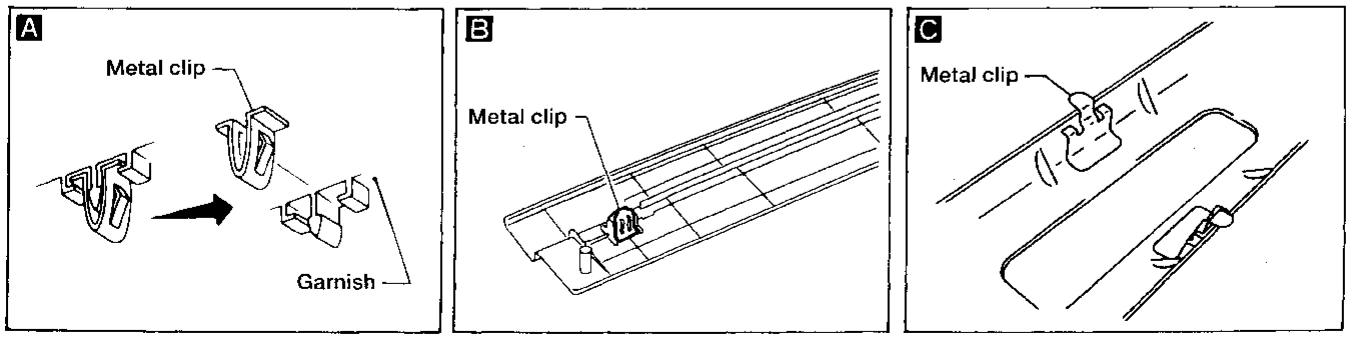

ABF192

DOOR TRIM REMOVAL — Door trim

① Remove inside handle escutcheon.
(Refer to BF-9.)
② Remove pull handle (rear door and driver door only).
③ Remove power window switch finisher (driver door only).
④ Remove screws.
⑤ Remove clips securing door finisher.
⑥ Lift out door finisher. Disconnect main and door harnesses.

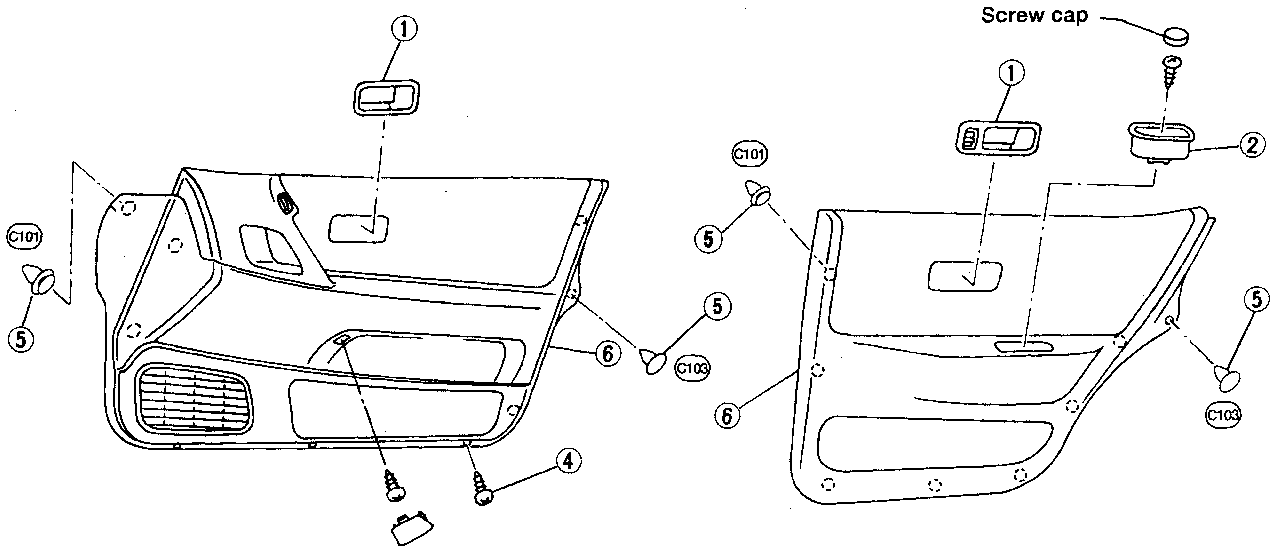

ABF195

ROOM TRIM

REMOVAL — Headlining

① Remove rear seat.
② Remove front seat belts.
③ Remove body side trim. Refer to BF-31.
④ Remove assist grips.
⑤ Remove interior lamp.
⑥ Remove sunroof switch. (Models equipped with sunroof)
⑦ Remove sunvisors.
⑧ Remove rearview mirror.
⑨ Remove front, center upper and rear pillar garnishes.
⑩ Remove headlining.

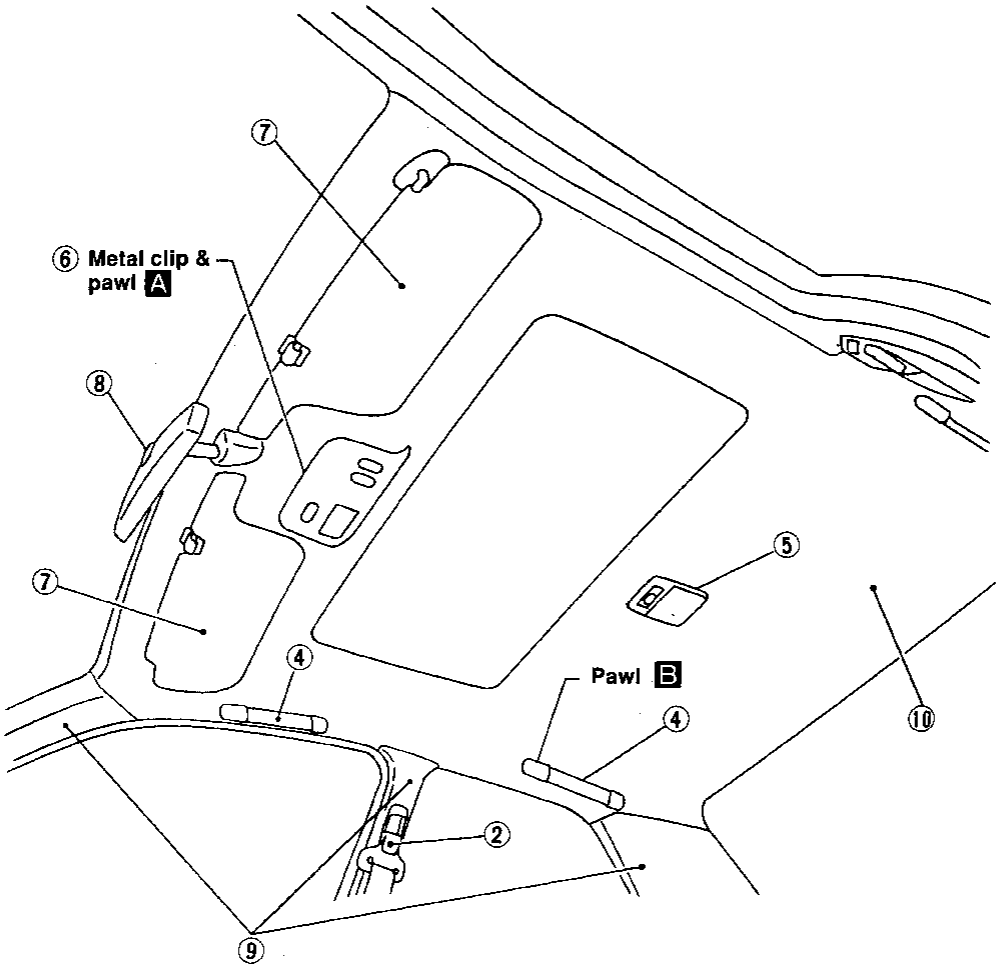

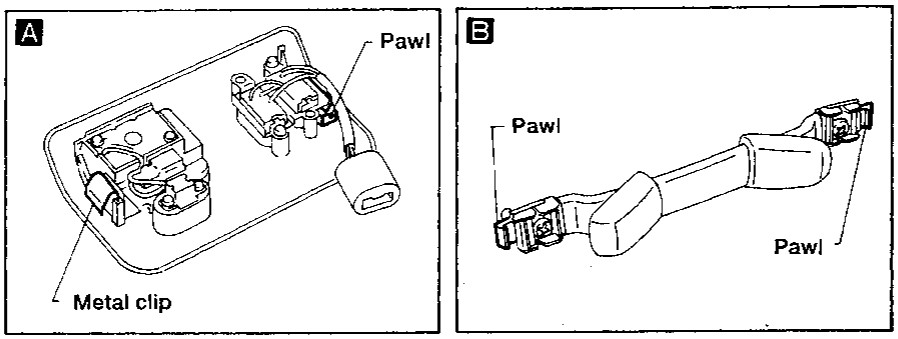

ABF193

LUGGAGE ROOM TRIM

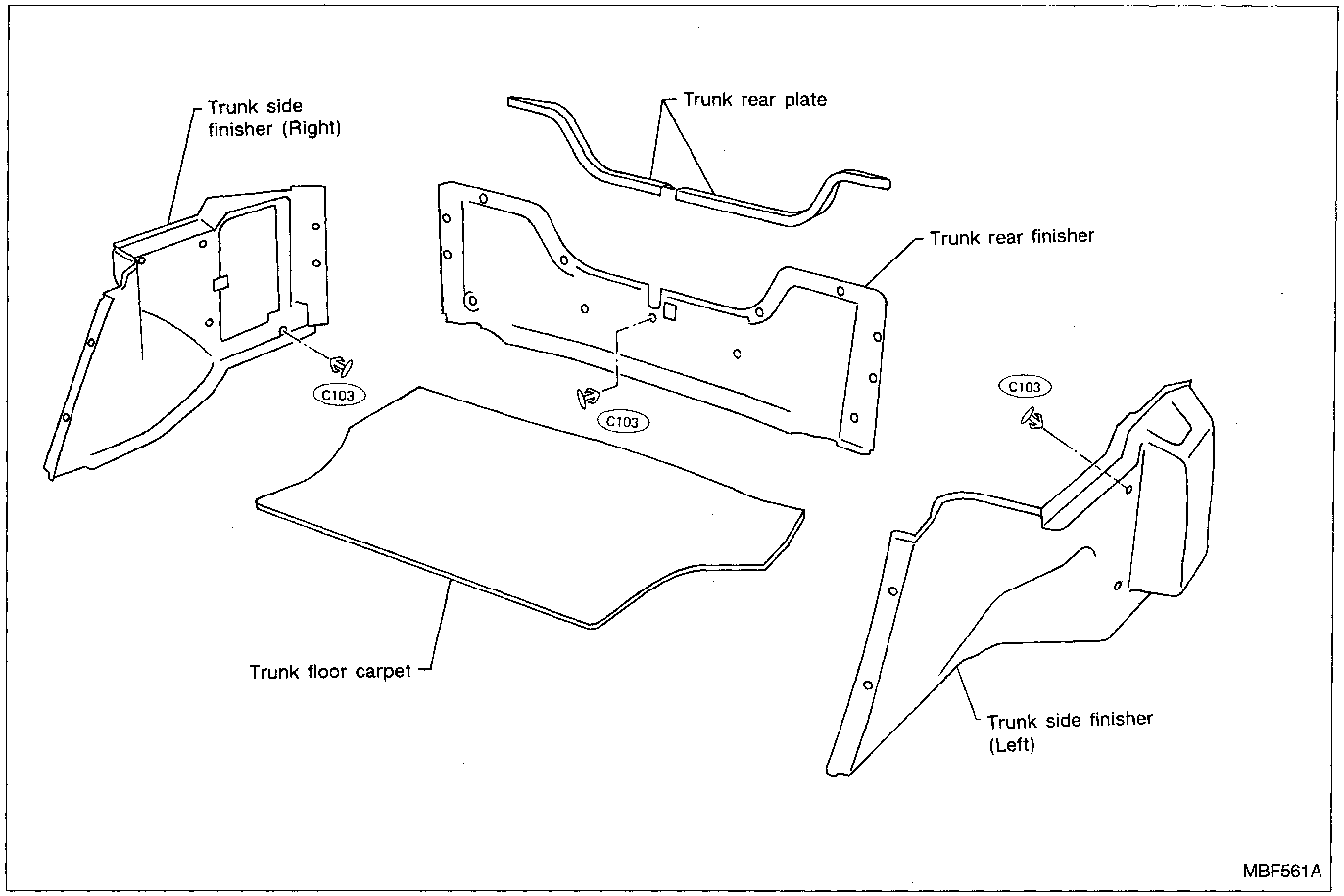

Exterior

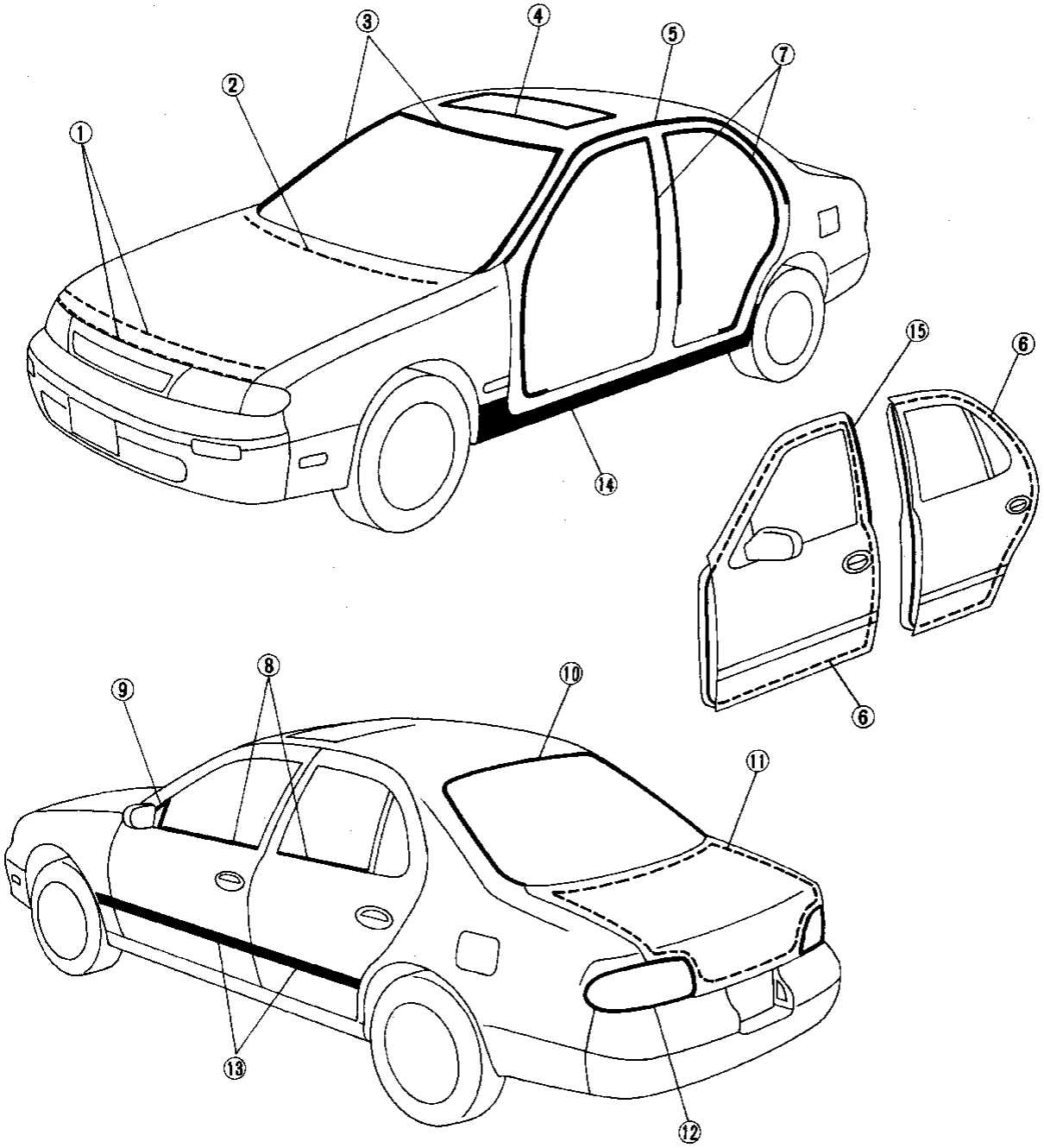

MBF602A

Exterior (Cont'd)

① Front hood insulator

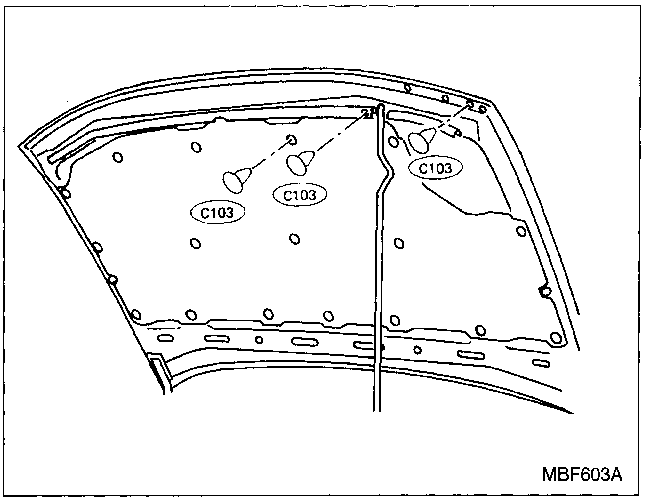

② Cowl top grille and cowl top front sealing rubber

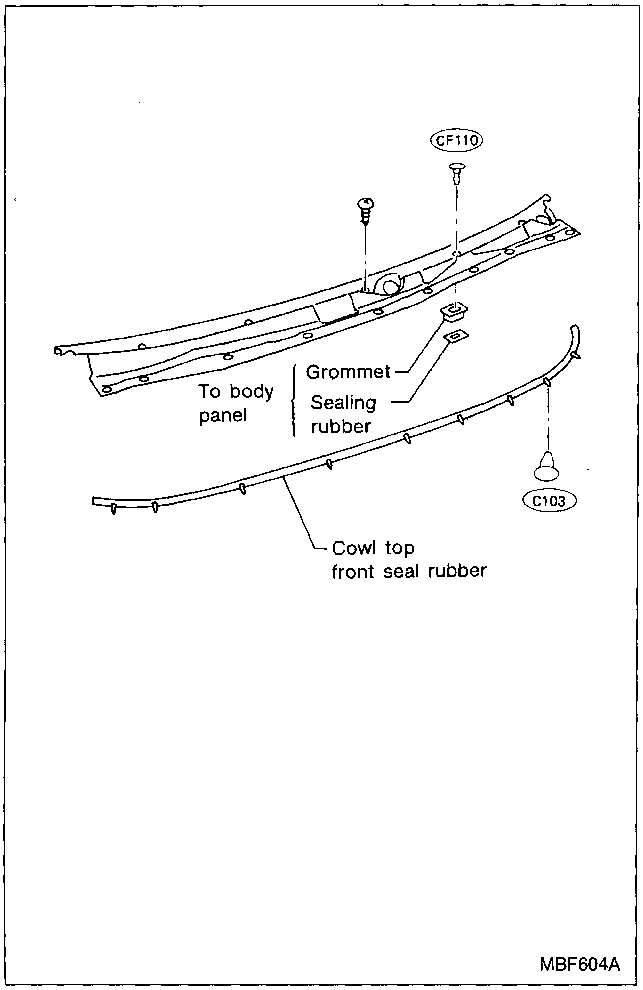

③ Front windshield molding

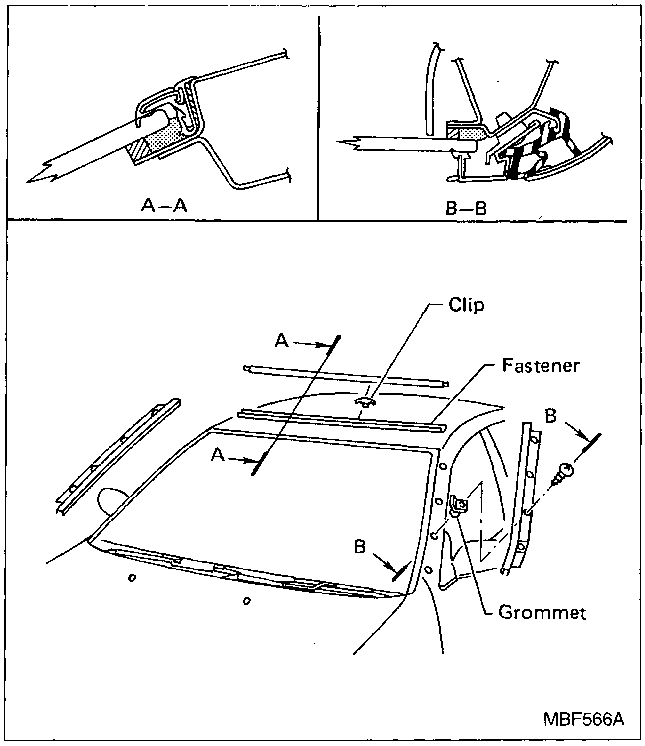

Windshield upper and side molding

Method 1

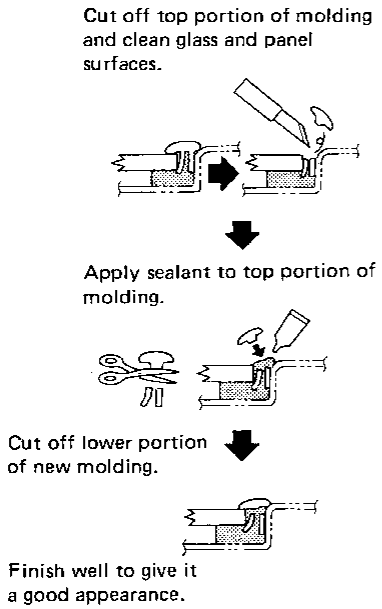

SBF266G

Method 2

1. Cut off sealant at glass end.
2. Clean the side on which panel was mounted.
3. Set molding fastener and apply sealant to body panel, and apply primer to molding and body.

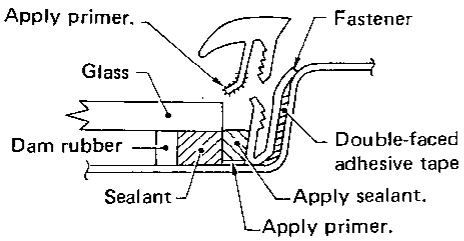

4. Install molding by aligning the molding mark located on center with vehicle center.
   Be sure to install tightly so that there is no gap around the corner.

SBF267G

④ Sunroof lid weatherstrip

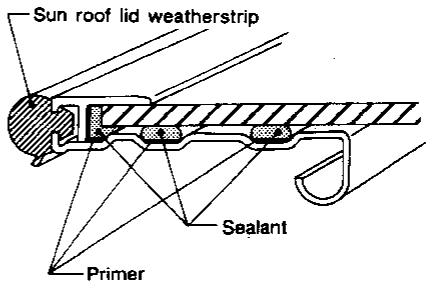

MBF109A

⑤ Body side drip weatherstrip

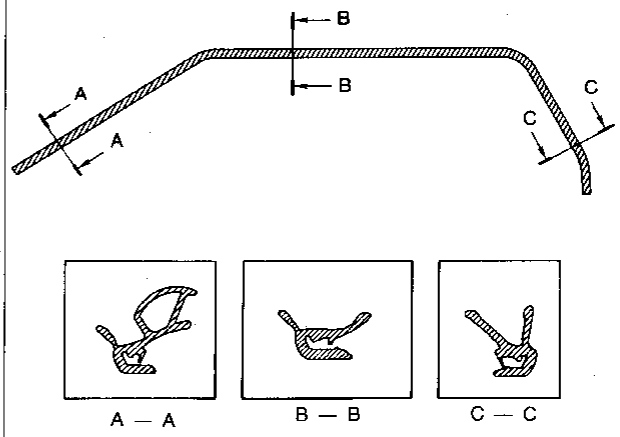

MBF568A

Exterior (Cont'd)

⑥ Door weatherstrip

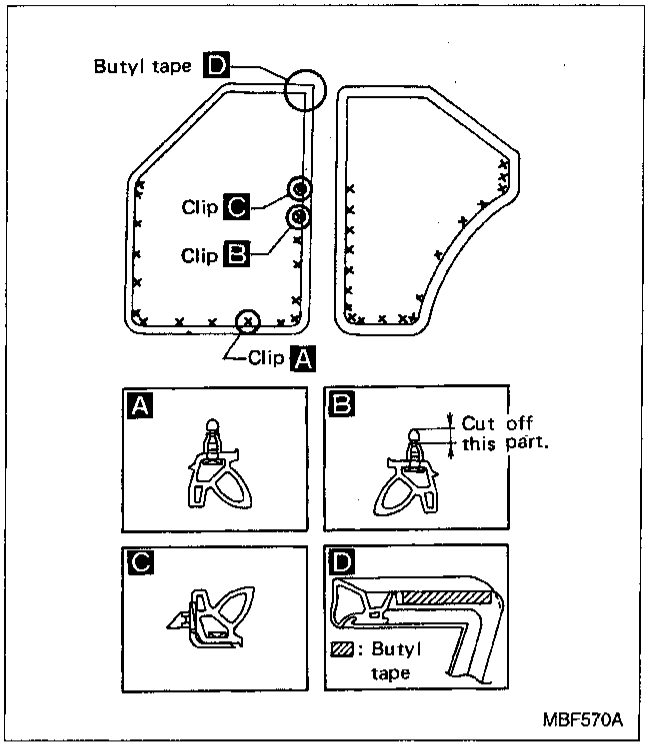

⑦ Body side welt

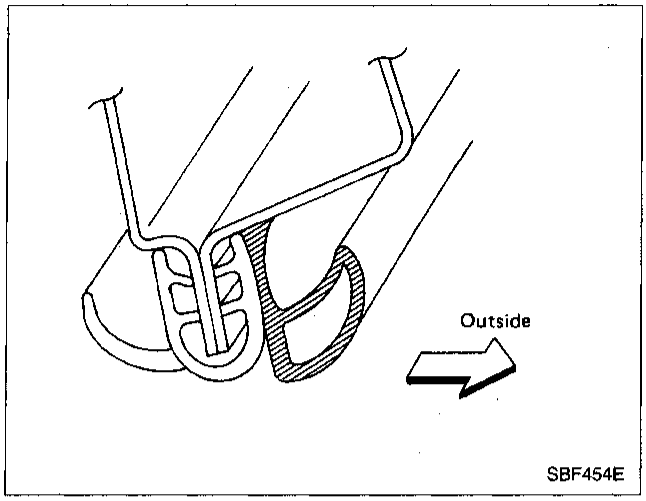

⑧ Door waist outside molding

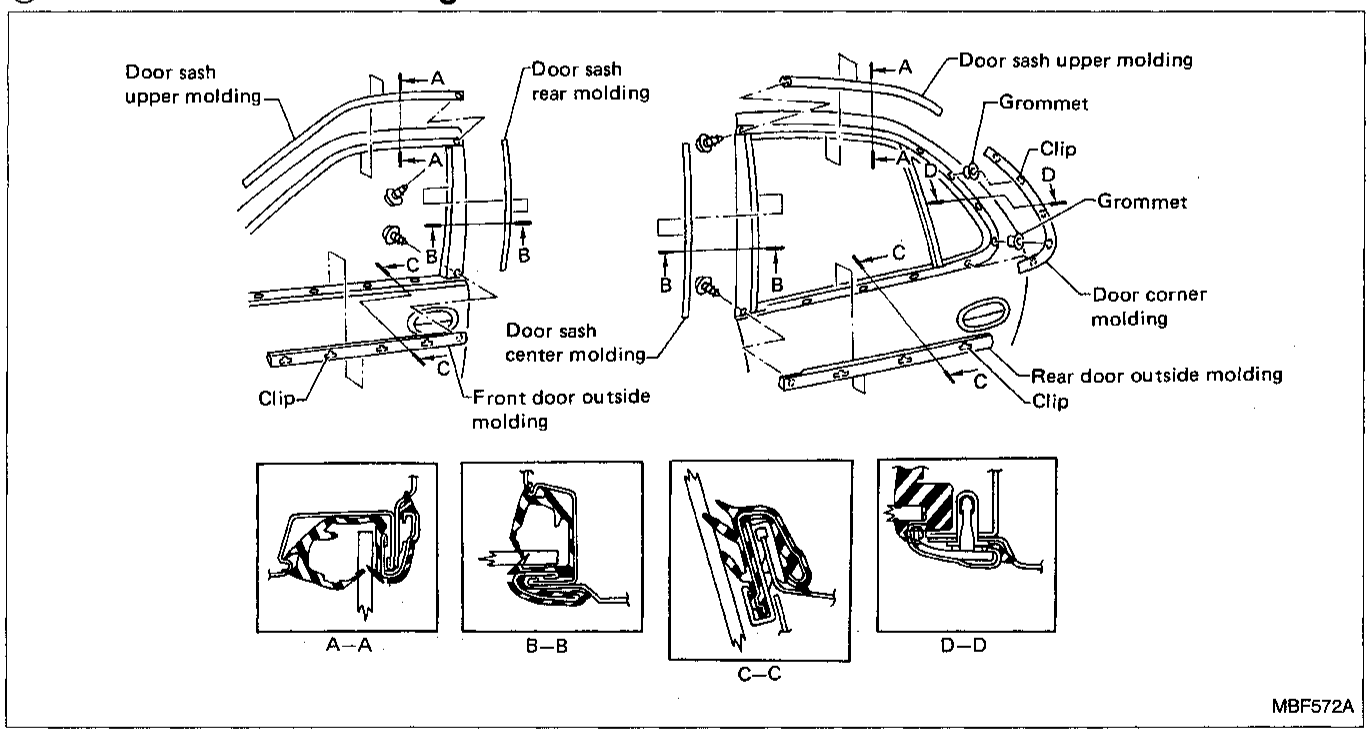

Exterior (Cont'd)

⑨ Front door corner cover

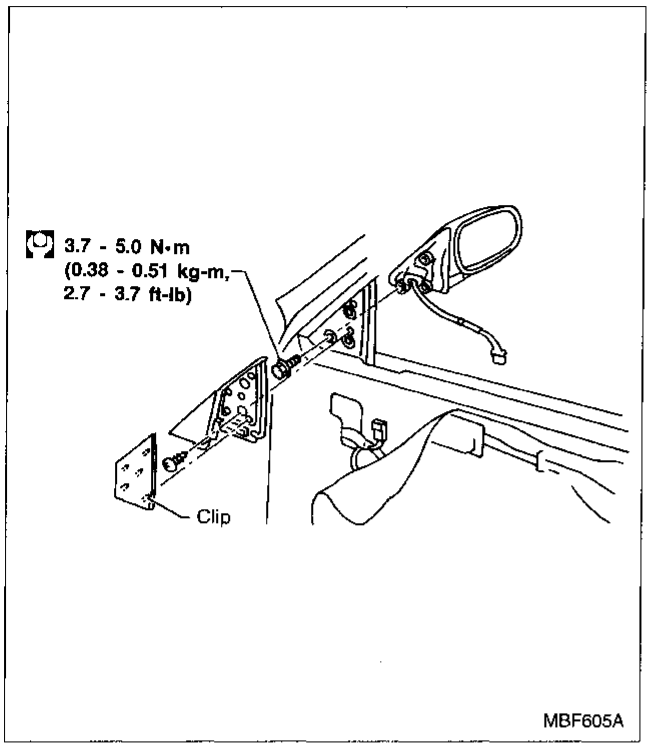

⑪ Trunk lid weatherstrip

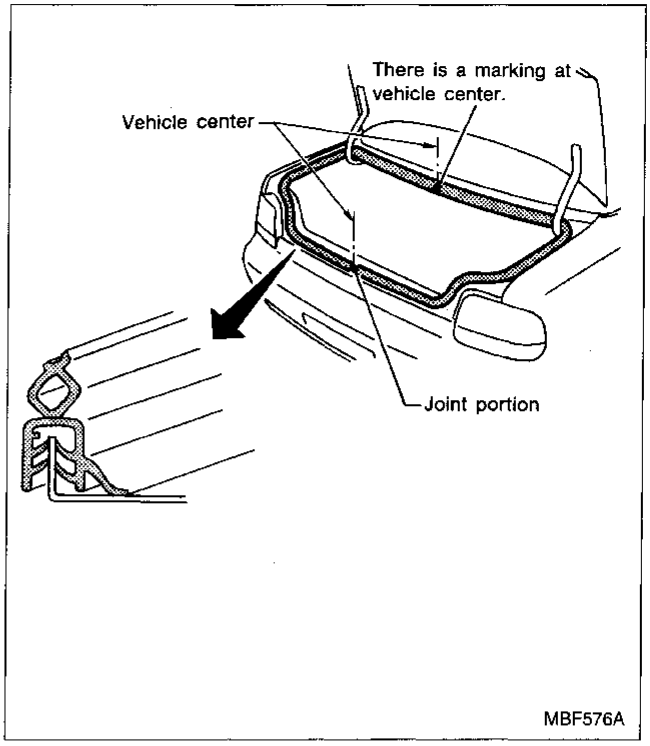

⑩ Rear windshield molding

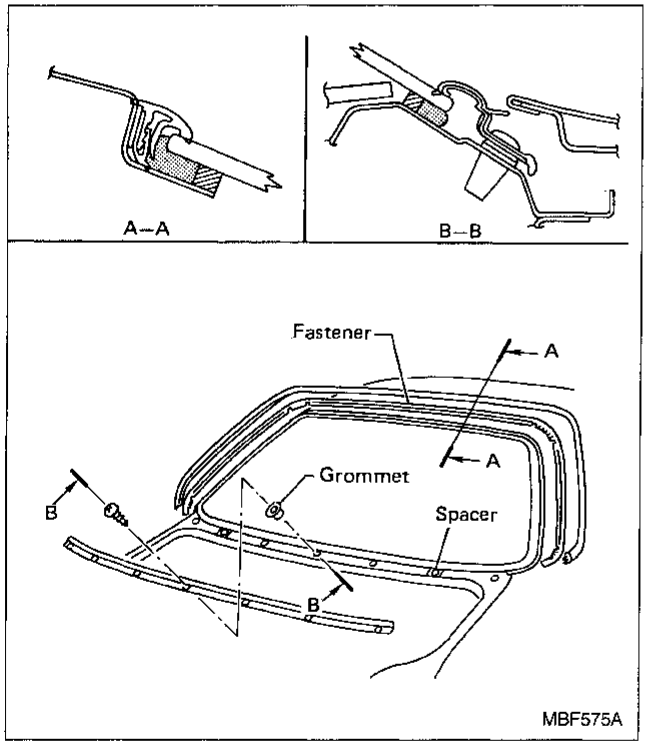

⑫ Rear combination lamp

- Rear combination lamps are installed with nuts and butyl seal.

Removal

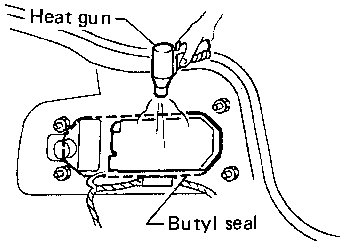

- Warm up lamp assembly area to a temperature slightly below 60°C (140°F)

Installation

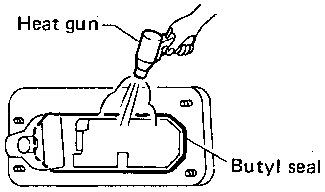

- Apply butyl seal evenly as it tends to become thin at the corners.
- Warm up lamp assembly area to a temperature slightly below 60°C (140°F).

MBF120A

⑬ Side guard molding

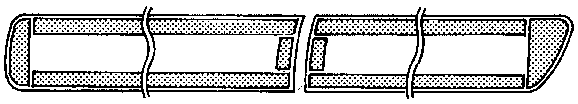

: Double-faced adhesive tape

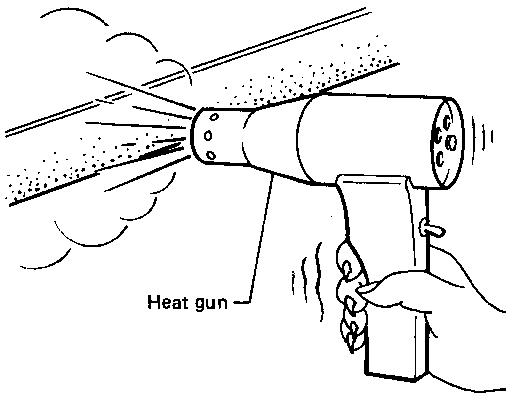

SBF460E

- Original side guard molding is affixed to body panel with double-faced adhesive tape.
- The repair parts are also affixed with double-faced adhesive tape.
- **Removal:**

1. Heat molding portion to 30 to 40°C (86 to 104°F) with a heat gun.
2 Raise end of molding and, while cutting off bonding agent, detach molding.

- **Installation:**

1. Remove all traces of bonding agent from body panel. Then clean contact face of body.

CAUTION:
Never apply tack-paper adhesive remover to body panel surface finished with lacquer-based paint.

2. Heat body panel and molding to 30 to 40°C (86 to 104°F) with a heat gun. Then install molding.

⑭ Center mudguard

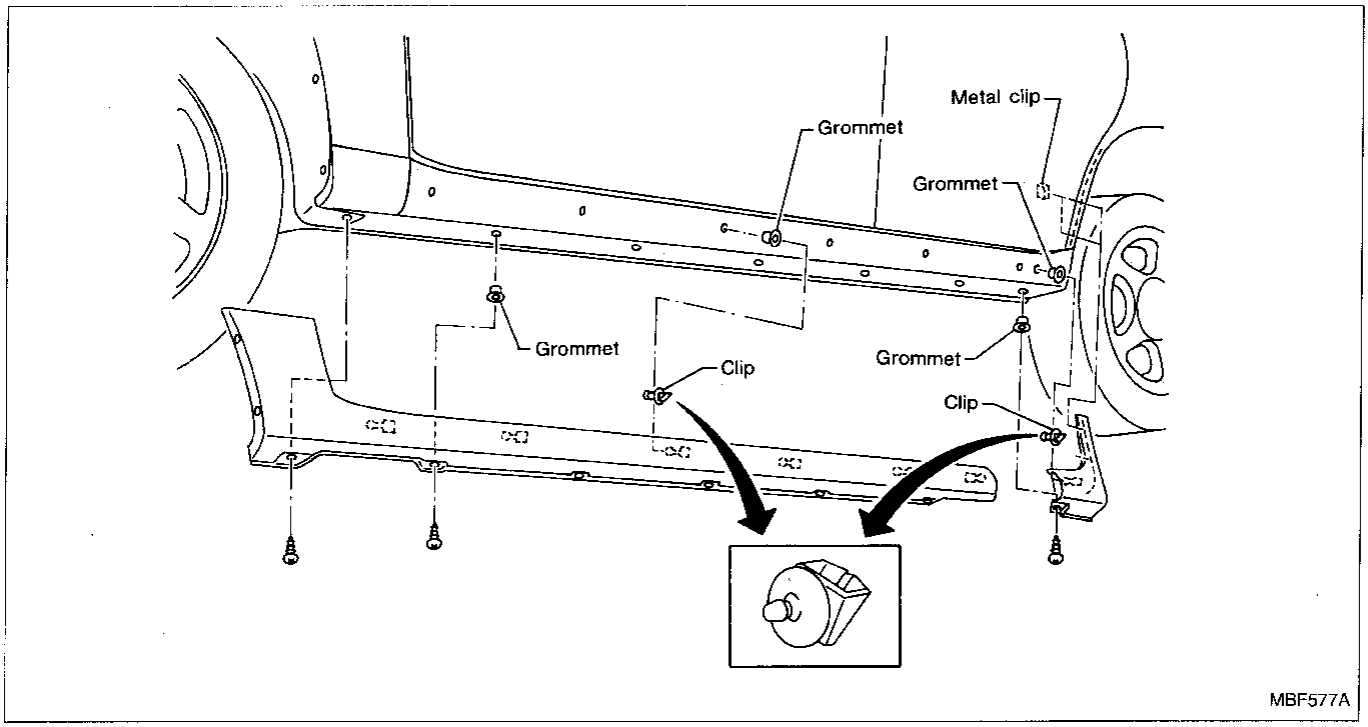

⑮ Front door parting seal

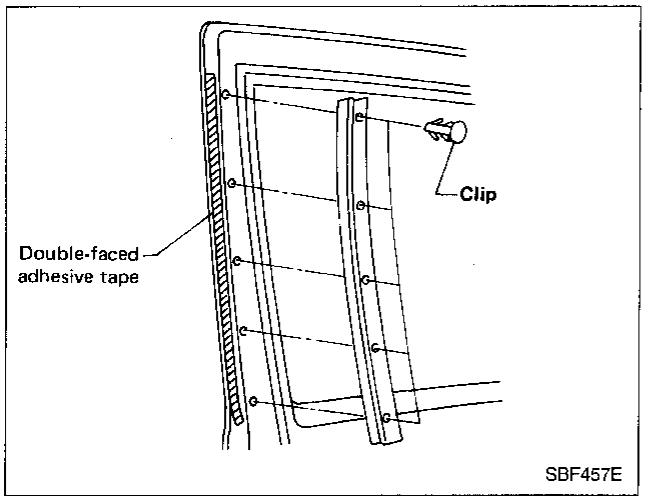

- When removing or installing the seat trim, handle carefully to keep dirt out and avoid damage.

Front Seat

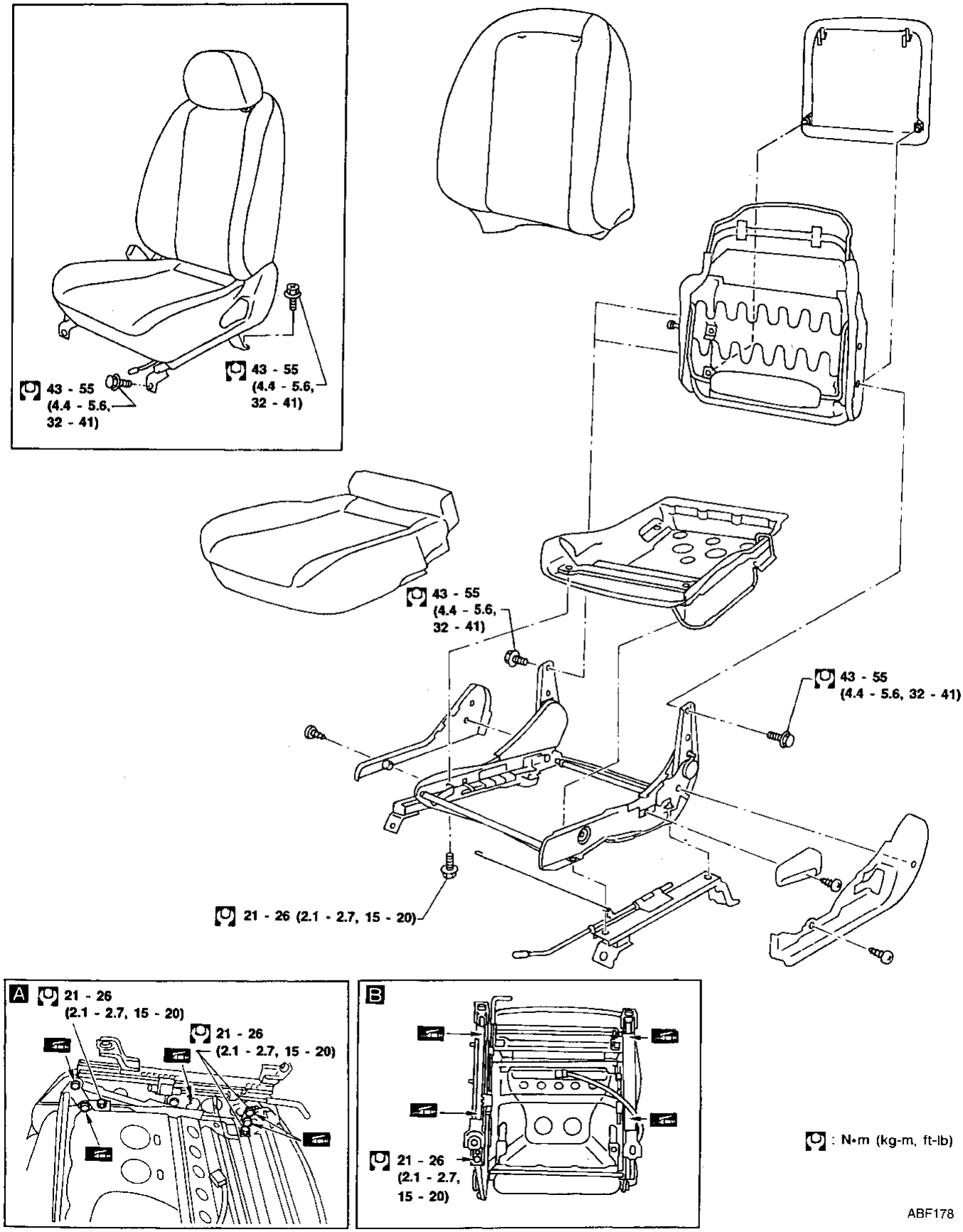

Rear Seat

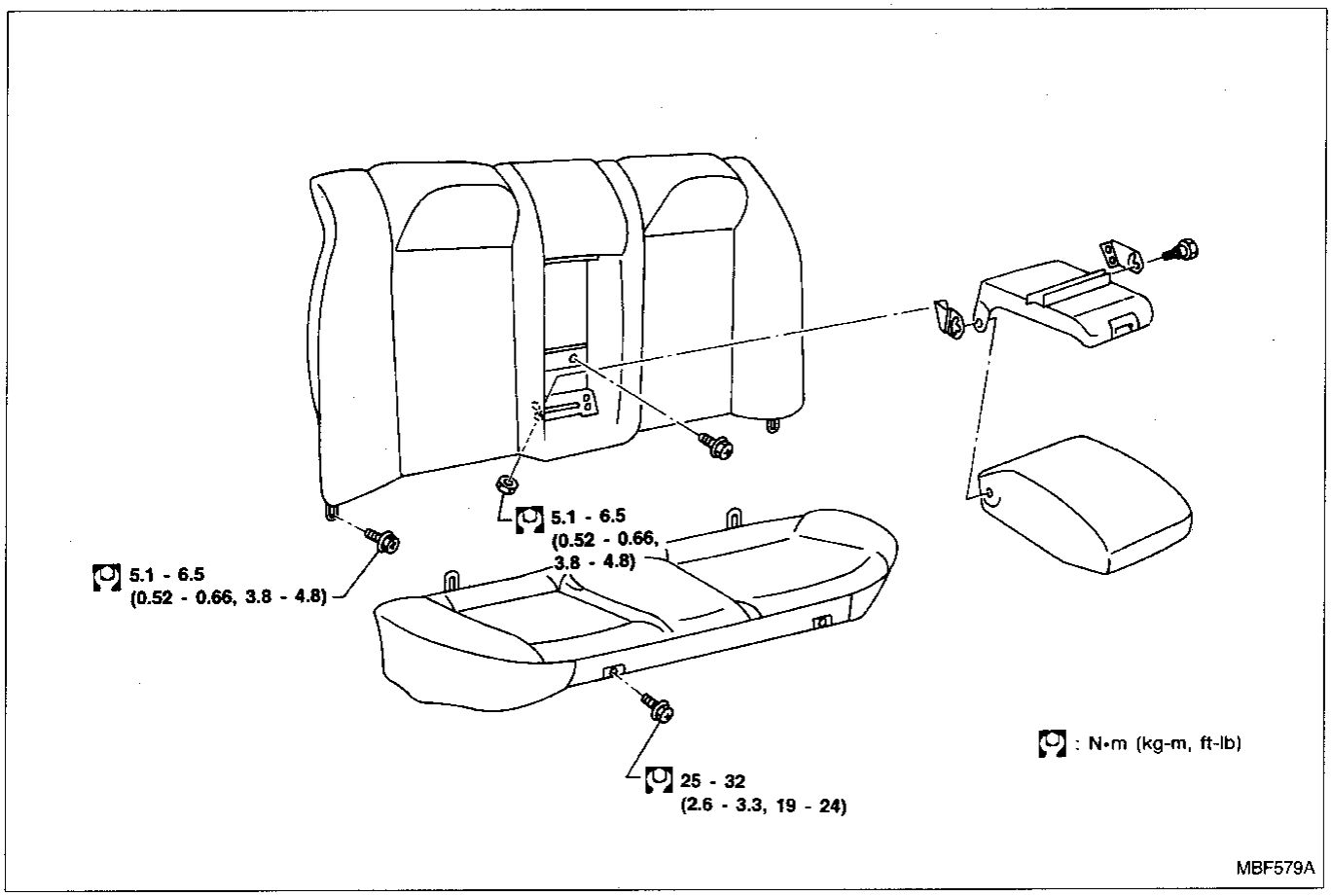
5.1 - 6.5
(0.52 - 0.66, 3.8 - 4.8)
5.1 - 6.5
(0.52 - 0.66,
3.8 - 4.8)
25 - 32
(2.6 - 3.3, 19 - 24)
: N•m (kg-m, ft-lb)
MBF579A

Unit Location

FRONT SEAT

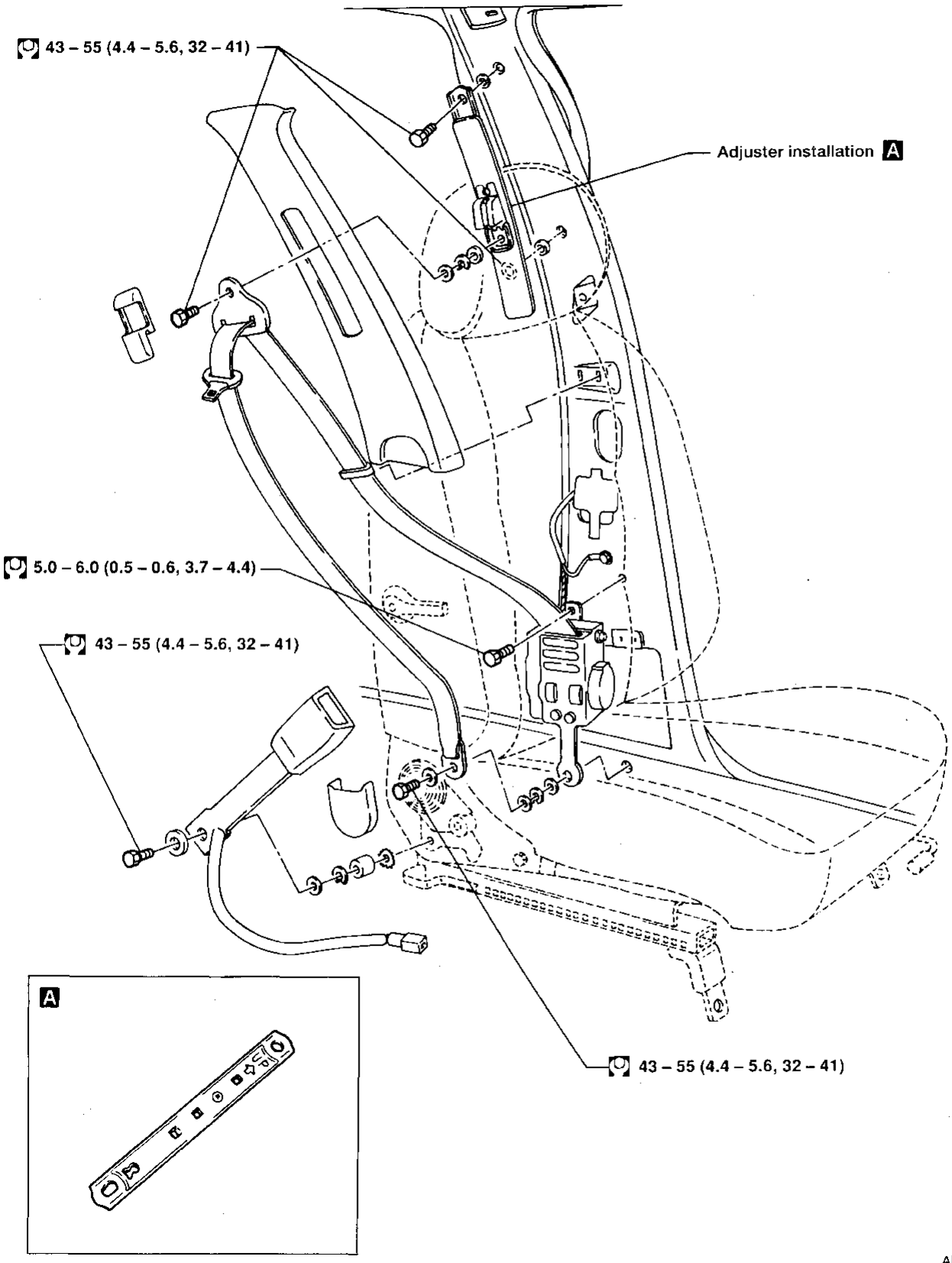

ABF190

: N·m (kg-m, ft-lb)

Unit Location (Cont'd)

REAR SEAT

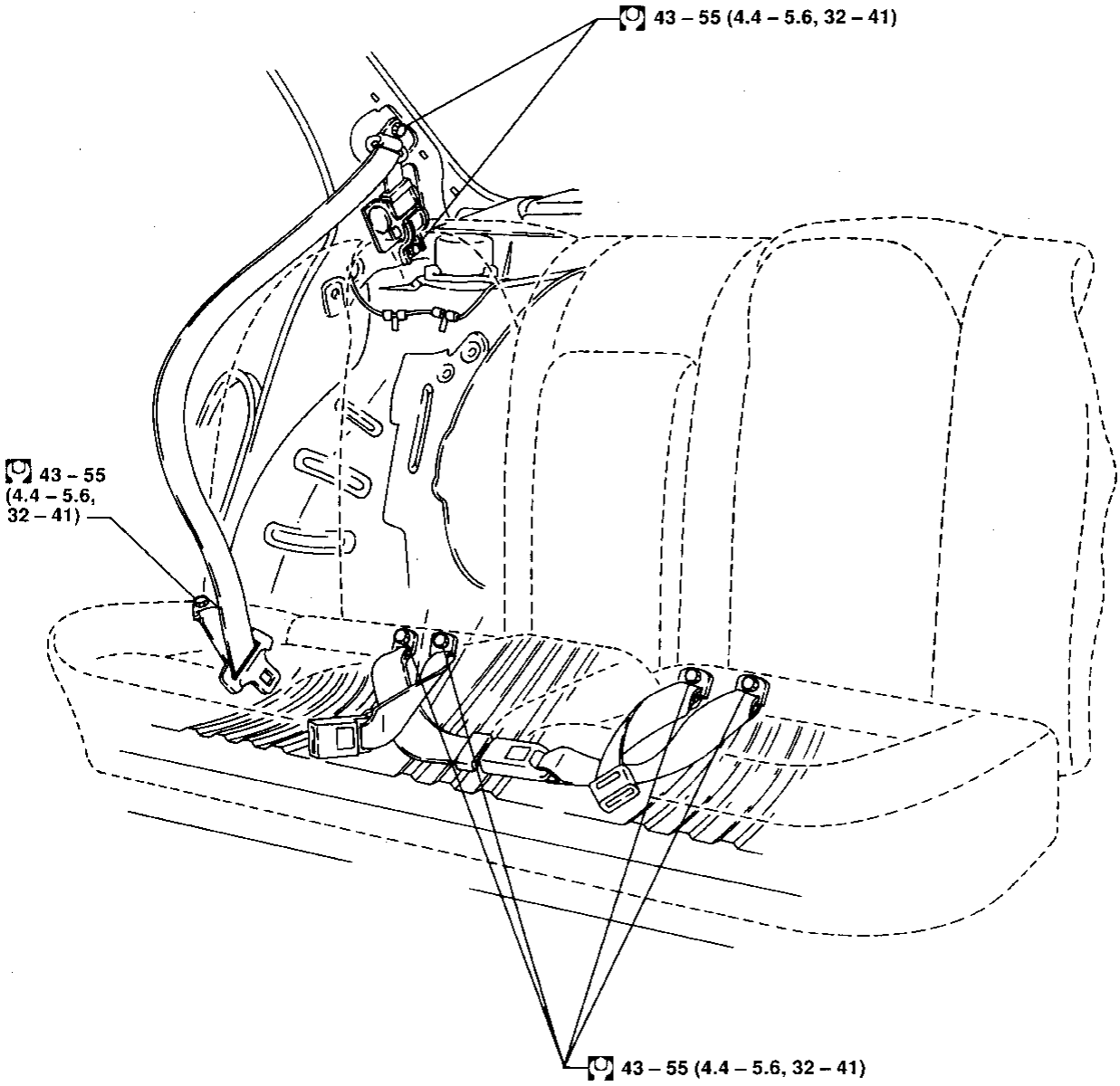

: N·m (kg-m, ft-lb)

ABF196

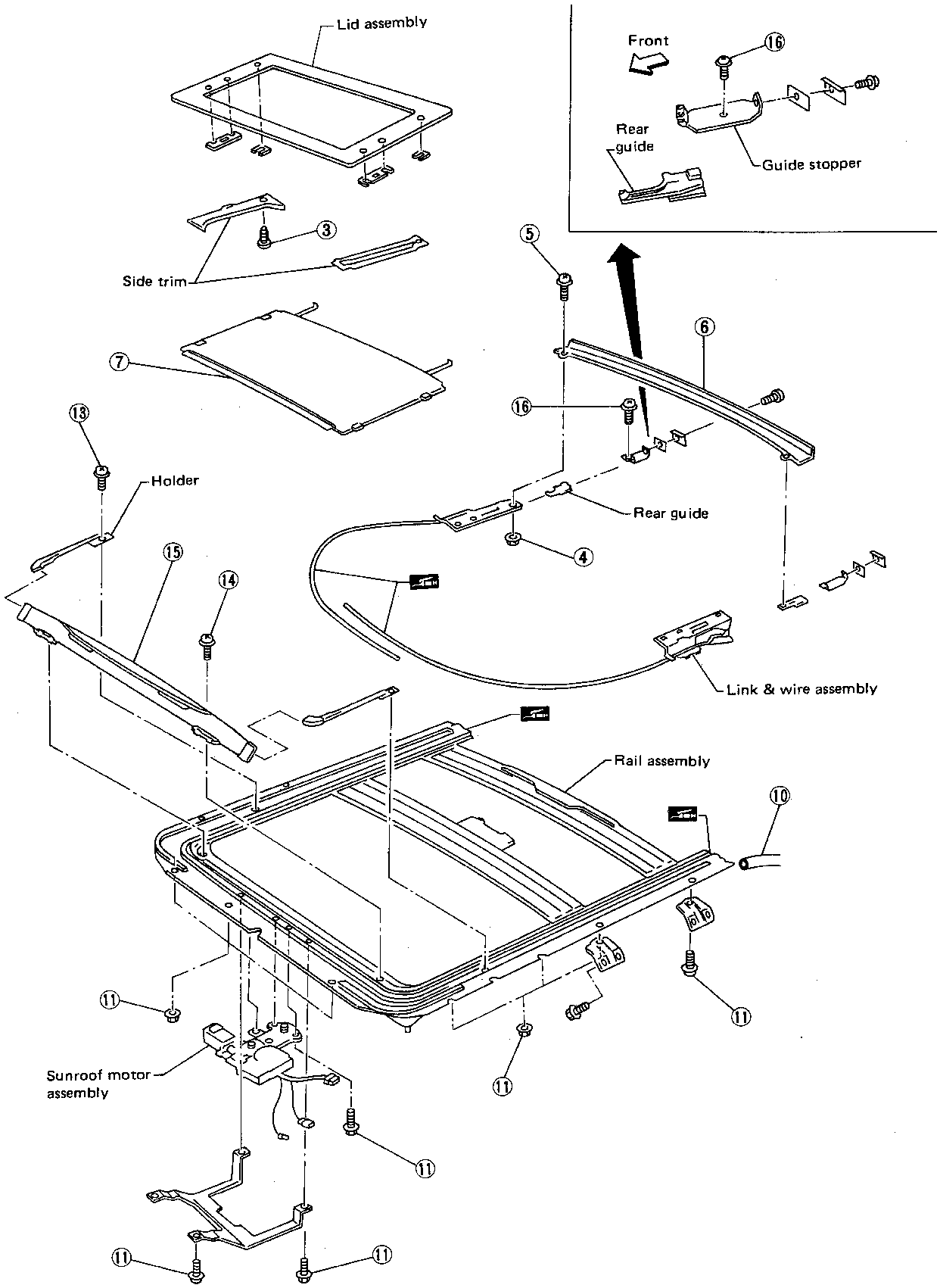
Lid assembly
Front
⑯
Rear guide
Guide stopper
③
Side trim
⑤
⑥
⑦
⑯
⑬
Holder
Rear guide
④
⑮
⑭
Link & wire assembly
Rail assembly
⑩
⑪
⑪
Sunroof motor assembly
⑪
⑪
⑪

MBF580A

System Description

POWER

Power is supplied to the sunroof motor assembly by the sunroof relay when the ignition switch is turned ON. The power circuit is protected by the circuit breaker. The sunroof motor assembly has an independent ground circuit.

TILT AND SLIDE OPERATION

A ground signal is sent to the internal control circuitry of the sunroof motor assembly when the sunroof switches are pressed. The motor is activated by the control circuitry. The motor turns off when the switches are released.
The sunroof will slide open when the OPEN side of the sunroof switch is pressed. It will slide closed when the CLOSE side of the switch is pressed.
The sunroof must be in the closed position for the tilt feature to operate. The rear of the sunroof will tilt up when the UP side of the tilt switch is pressed. The sunroof will return from the up position to the closed position when the DOWN side of the tilt switch is pressed.
The sun shade opens automatically when the sunroof is opened. It must be closed manually.

IF THE SUNROOF DOES NOT CLOSE

The sunroof motor may be manually operated using the wrench supplied in the tool bag (located in the trunk next to the spare tire).
1. Turn the ignition switch OFF.
2. Remove the sunroof switch assembly.
3. Insert the wrench into the sunroof motor shaft and rotate the shaft clockwise to close the sunroof.

Removal

- After any repair, check sunroof operation and lid alignment.
- Handle finisher plate and glass lid with care so not to cause damage.
- It is desirable for easy installation to mark each point before removal.

CAUTION:
a. Always work with a helper.
b. Remove sunroof frame from rear door opening.

SUNROOF LID ASSEMBLY

① Open sunroof shade.
② Close sunroof lid.
③ Remove side trim clips.
④ Remove the six nuts securing sunroof lid assembly to link assembly.

SHADE ASSEMBLY

⑤ After removing sunroof lid assembly, remove screws securing rear drains to roof.
⑥ Remove rear drain.
⑦ Remove shade assembly.

SUNROOF ASSEMBLY

⑧ Remove headlining. Refer to BF-33.
⑨ Disconnect interior lamp harness.
⑩ Disconnect front and rear drain hoses.
⑪ Remove nuts and bolts securing sunroof rail and motor to roof.
⑫ Remove sunroof assembly.

Removal (Cont'd)

LINK & WIRE ASSEMBLY

⑬ After removing shade assembly and sunroof assembly, remove the two screws securing holders to sunroof rail.
⑭ Remove the two screws securing window deflector to sunroof rail.
⑮ Remove window deflector.
⑯ Remove the two screws securing guide stoppers to sunroof rail.

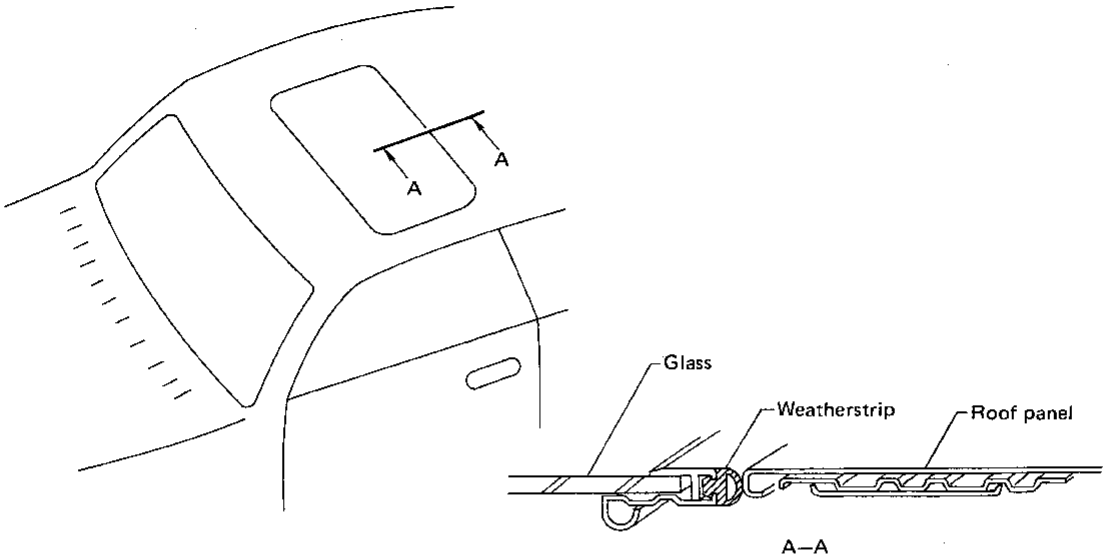

Adjustment

Install motor & limit SW assembly and sunroof rail assembly in the following sequence:

1. Arrange equal lengths of link and wire assemblies on both sides of sunroof opening.
2. Connect sunroof connector to sunroof switch and positive (+) power supply.
3. Set lid assembly to fully closed position **A** by operating CLOSE switch and TILT switch.
4. Fit outer side of lid assembly to the surface of roof on body outer panel.
5. Remove motor, and keep CLOSE switch pressed until motor pinion gear reaches the end of its rotating range.
6. Install motor.
7. Check that motor drive gear fits properly in wires.
8. Press TILT-UP switch to check lid assembly for normal tilting.
9. Check sunroof lid assembly for normal operations (tilt-up, tilt-down, open, and close).

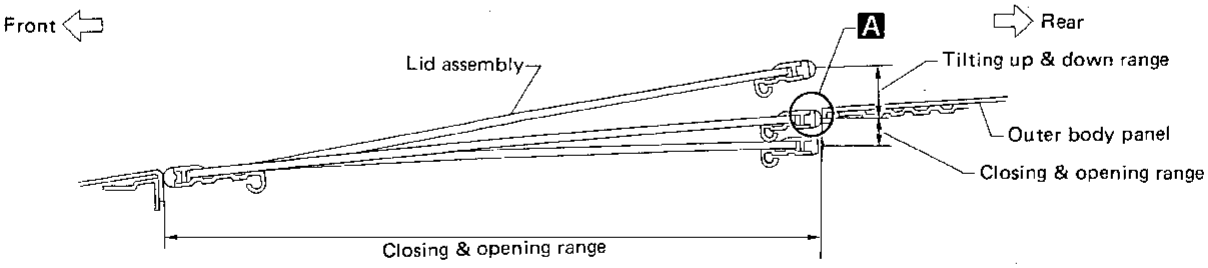

Wiring Diagram

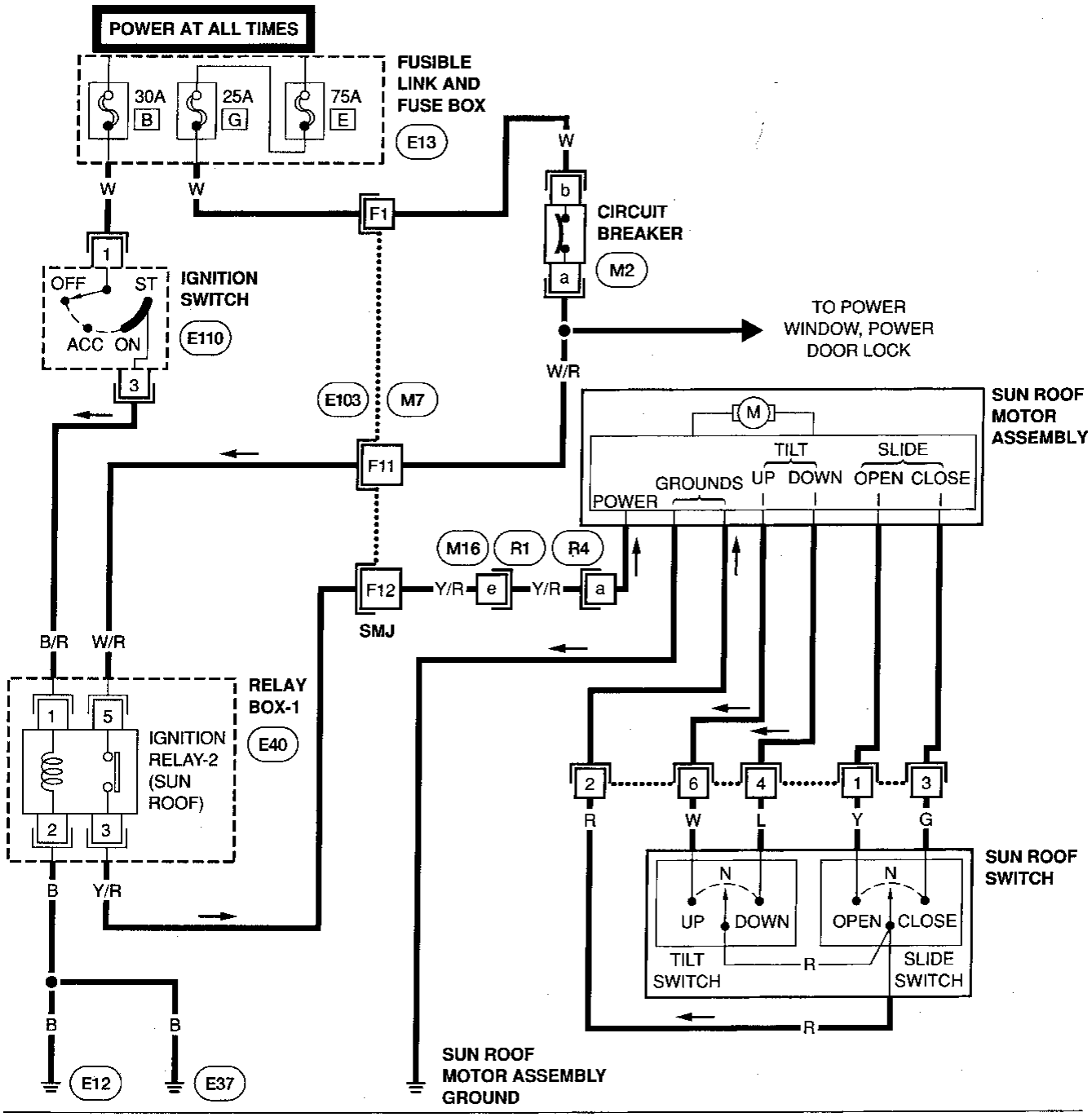

Refer to POWER SUPPLY ROUTING in EL Section. E13

Refer to Foldout Page in EL Section for details. M7 E103

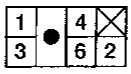

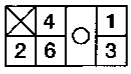

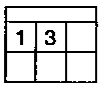

E110

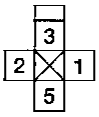

E40

M2

R4

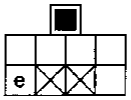

M16

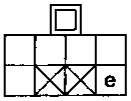

R1

ABF187

Windshield

REMOVAL

After removing moldings, remove glass.

CAUTION:
Be careful not to scratch glass when removing.

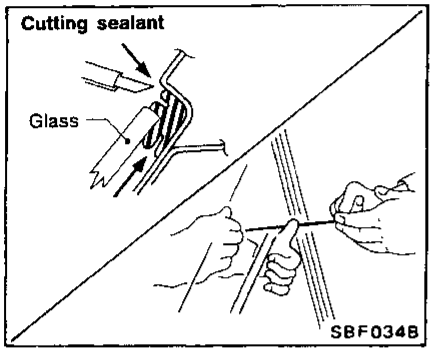

INSTALLATION

- **Use genuine Nissan Sealant kit or equivalent. Follow instructions furnished with it.**
- **After installation, the vehicle should remain stationary for about 24 hours.**

WARNING:
Keep heat and open flames away as primers are flammable.
CAUTION:
Advise the user of the fact that vehicle should not be driven on rough roads or surfaces until sealant has properly vulcanized.

- **Do not use sealant which is past its usable term.**
- **Do not leave cartridge unattended with its cap open.**
- **Keep primers and sealant in a cool, dry place. Ideally, they should be stored in a refrigerator.**
- **Windshield glass should be installed within 15 minutes of applying sealant:**
  sealant starts to harden 15 minutes after it is applied.
- **Molding must be installed securely so that it is in position and leaves no gap.**

Body side

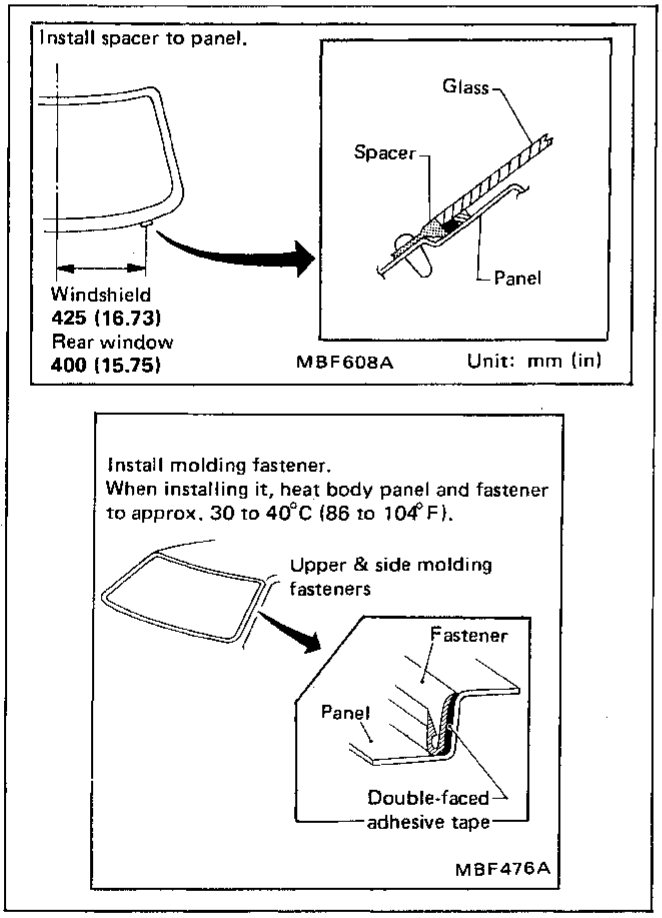

Glass side

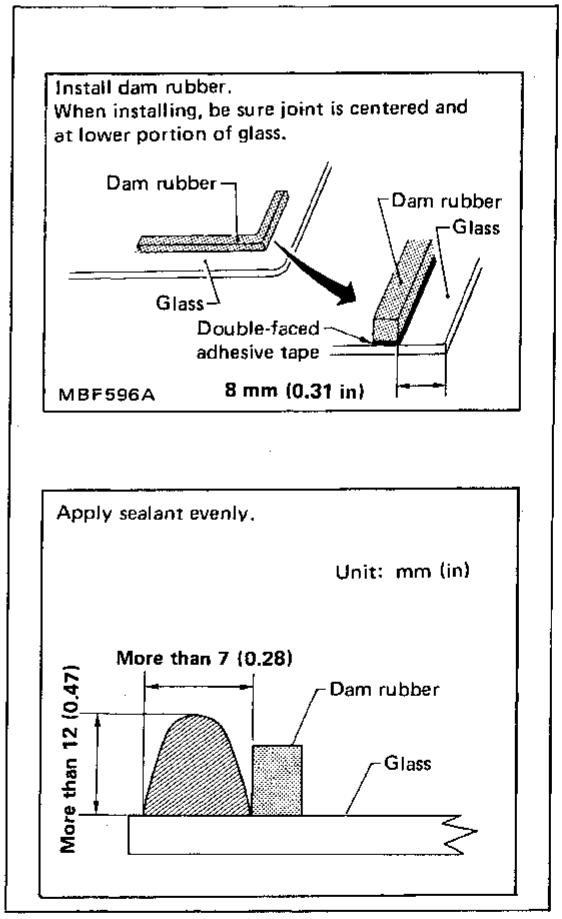

REPAIRING WATER LEAKS FOR WINDSHIELD

Leaks can be repaired without removing and reinstalling glass.

If water is leaking between caulking material and body or between glass and caulking material, determine the extent of the leak by applying water while pushing glass outward.

To stop the leak, apply primer (if necessary) and then sealant to the leak point.

Door Mirror

REMOVAL

- Wrap flat-bladed screwdriver with a cloth to prevent scratching rear of door mirror. Do not insert screwdriver too far.

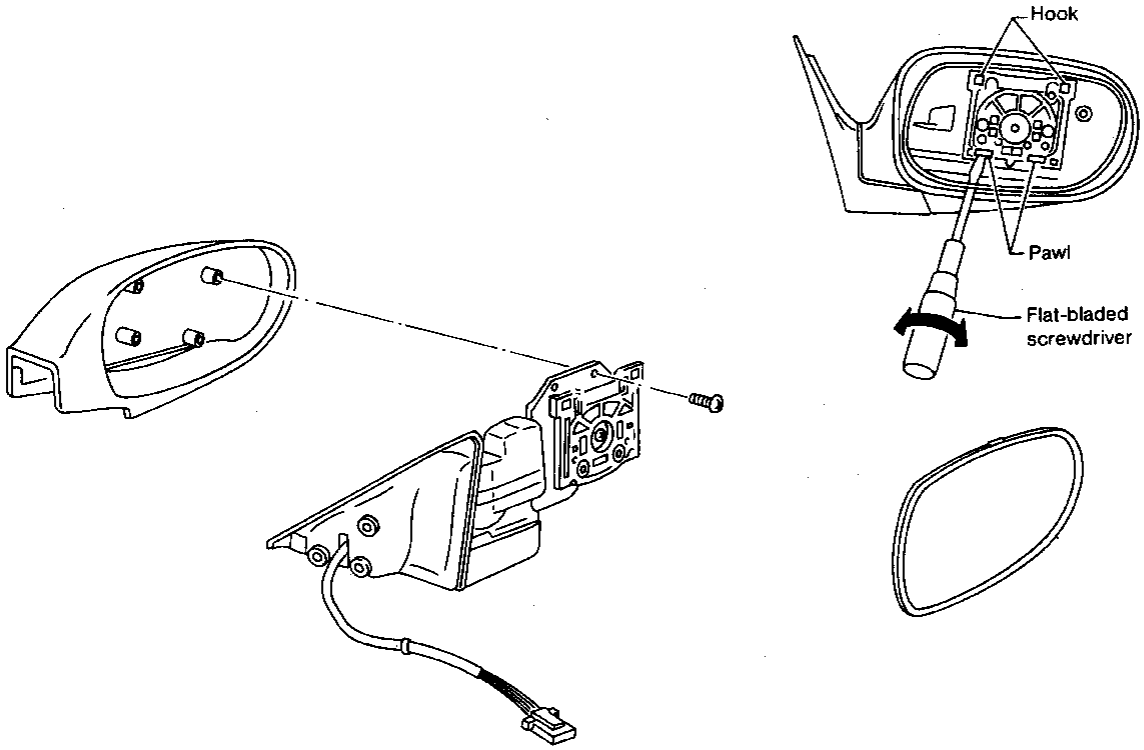

MBF581A

Wiring Diagram

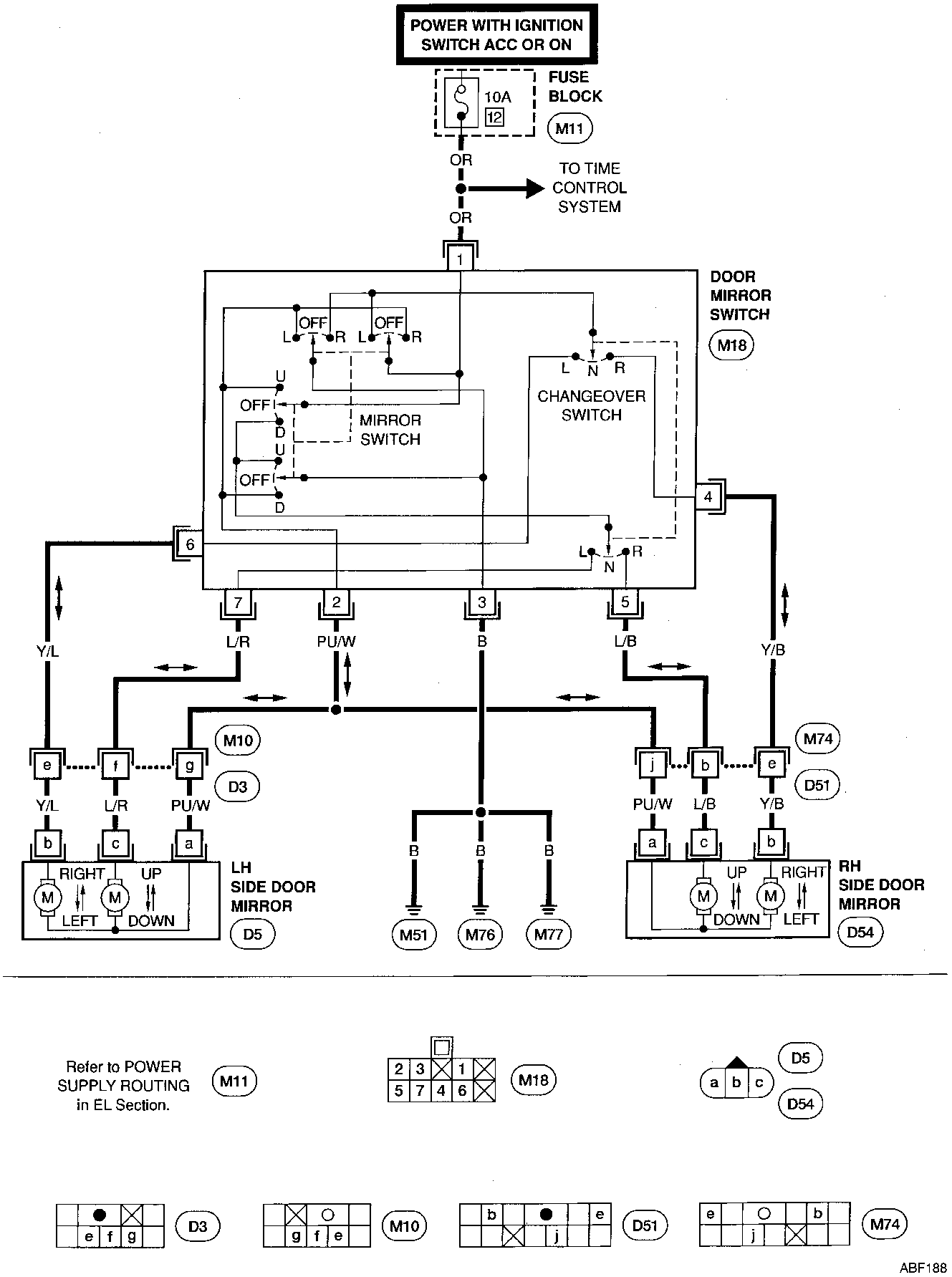

Refer to POWER SUPPLY ROUTING in EL Section. M11

M18

D5 D54

D3

M10

D51

M74

ABF188

- When installing, make sure that there are no gaps or waves at ends of air spoiler.
- Before installing spoiler, clean and remove oil from surface where spoiler will be mounted.

REAR AIR SPOILER

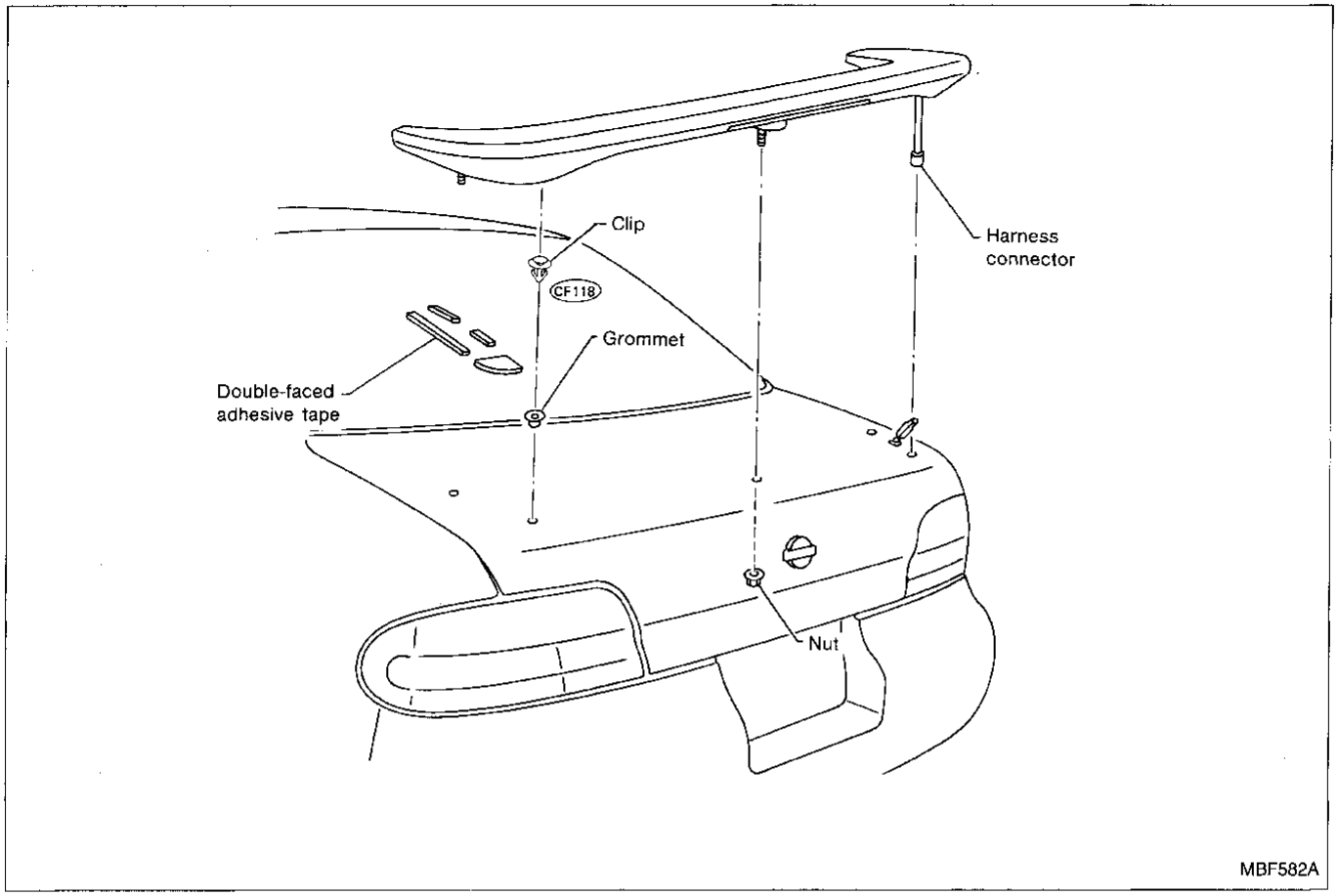

- All dimensions indicated in figures are actual ones.
- When a tram tracking gauge is used, adjust both pointers to equal length and check the pointers and gauge itself to make sure there is no free play.
- When a measuring tape is used, check to be sure there is no elongation, twisting or bending.
- Measurements should be taken at the center of the mounting holes.
- All measurements and mounting hole diameters are expressed in millimeters (mm).
- An asterisk (*) following the value at the measuring point indicates that the measuring point on the other side is symmetrically the same value.
- The coordinates of the measurement points are the distances measured from the standard line of "X", "Y" and "Z".

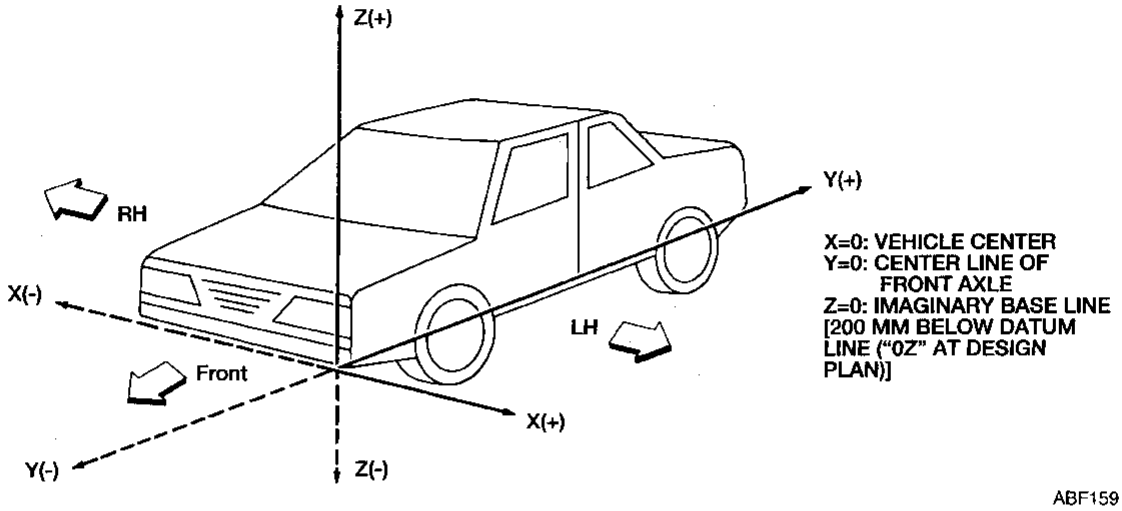

Engine Compartment

MEASUREMENT

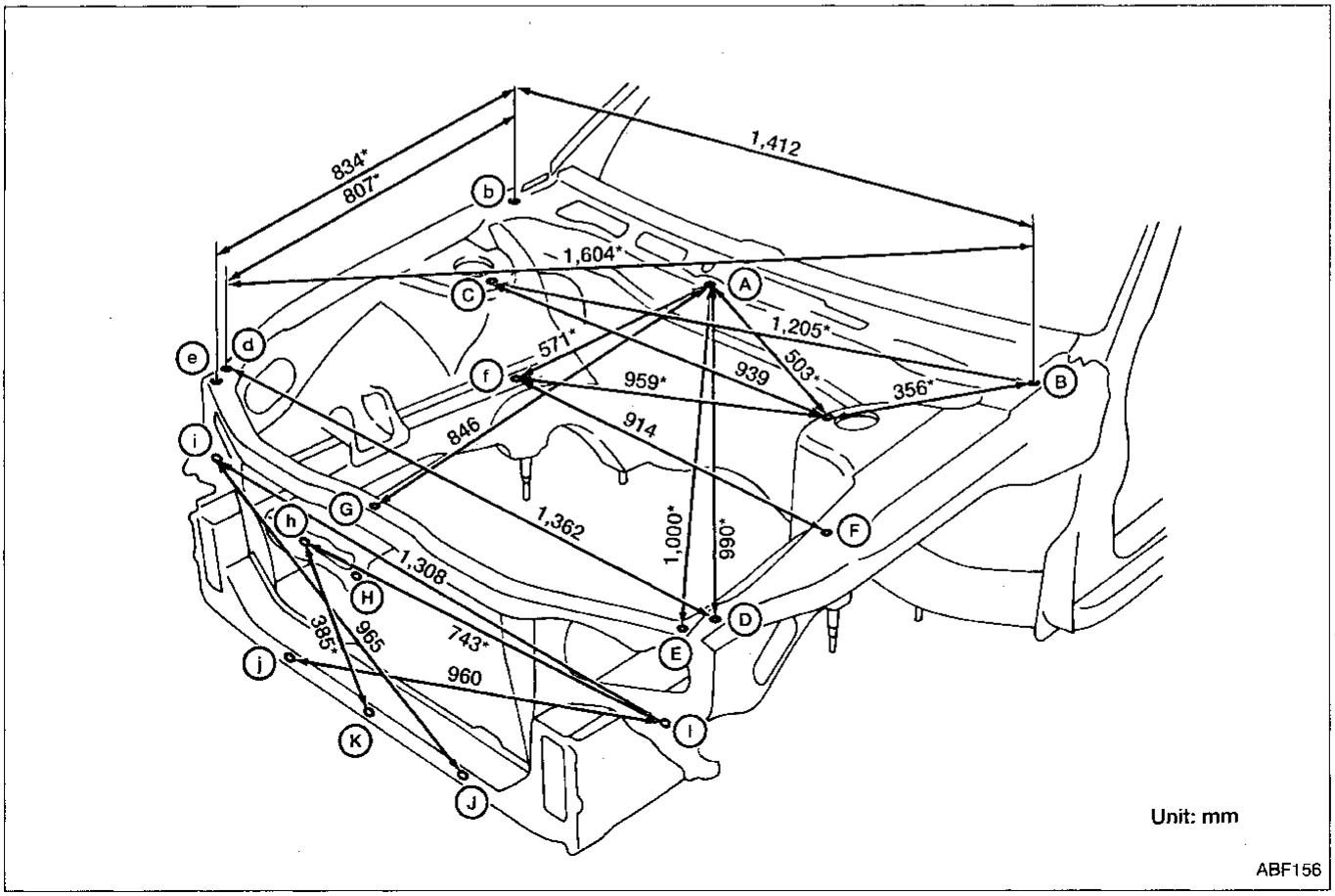

MEASUREMENT POINTS

Unit: mm

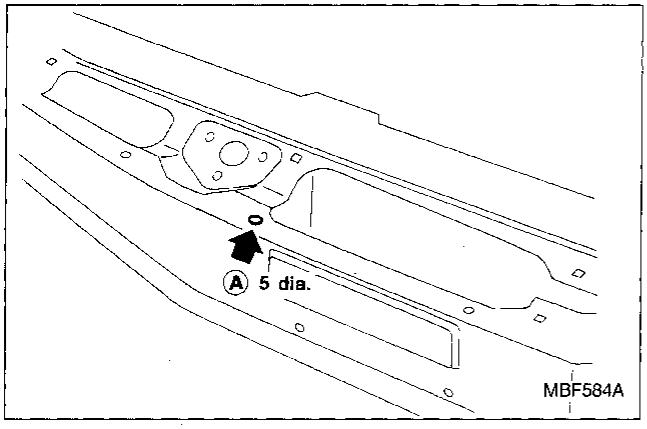

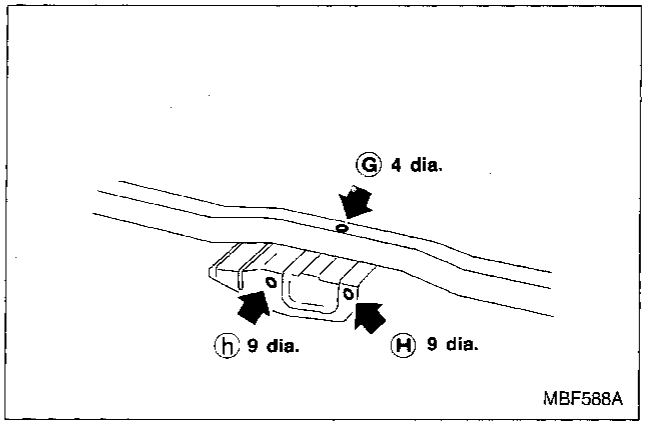

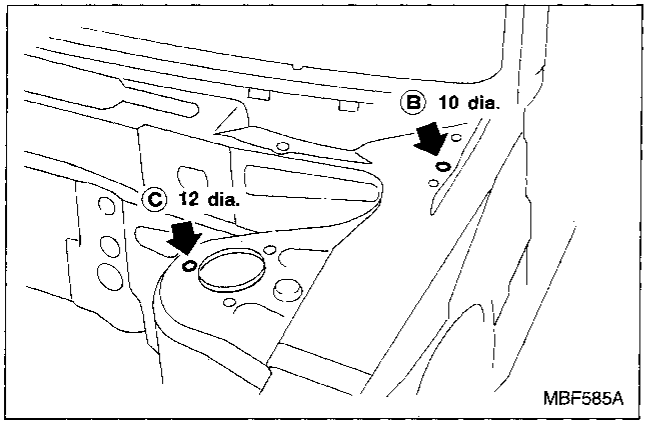

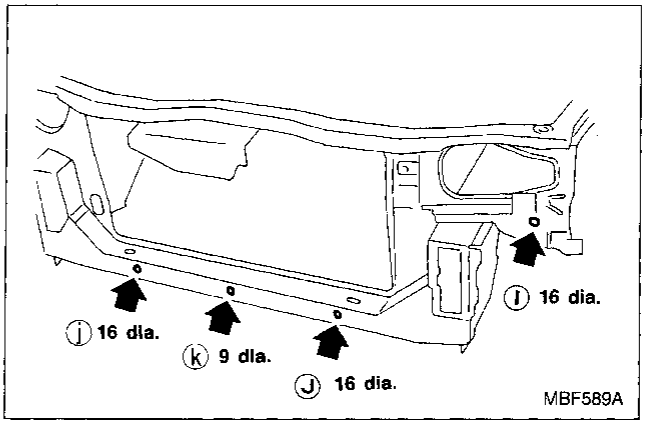

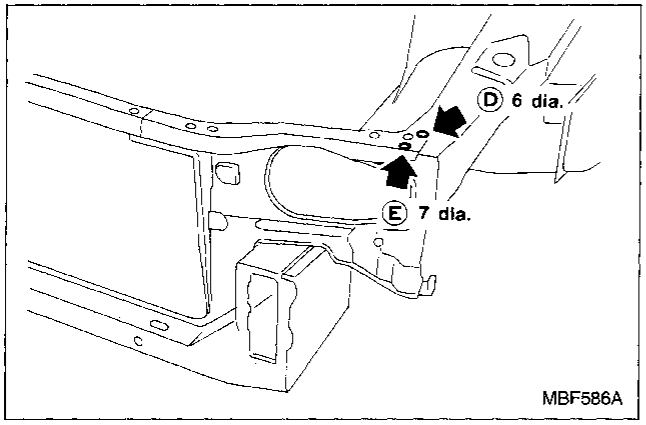

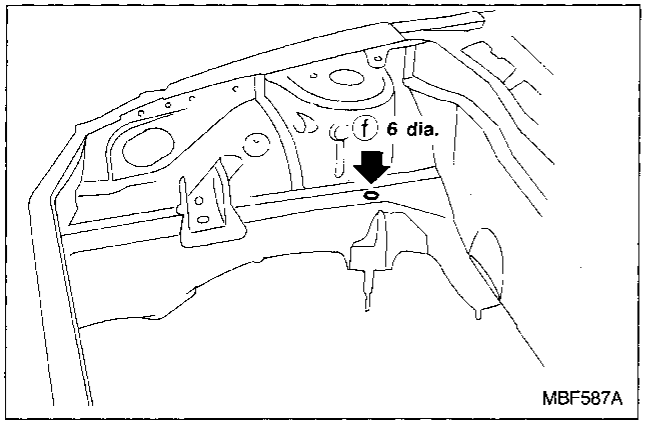

Underbody

MEASUREMENT

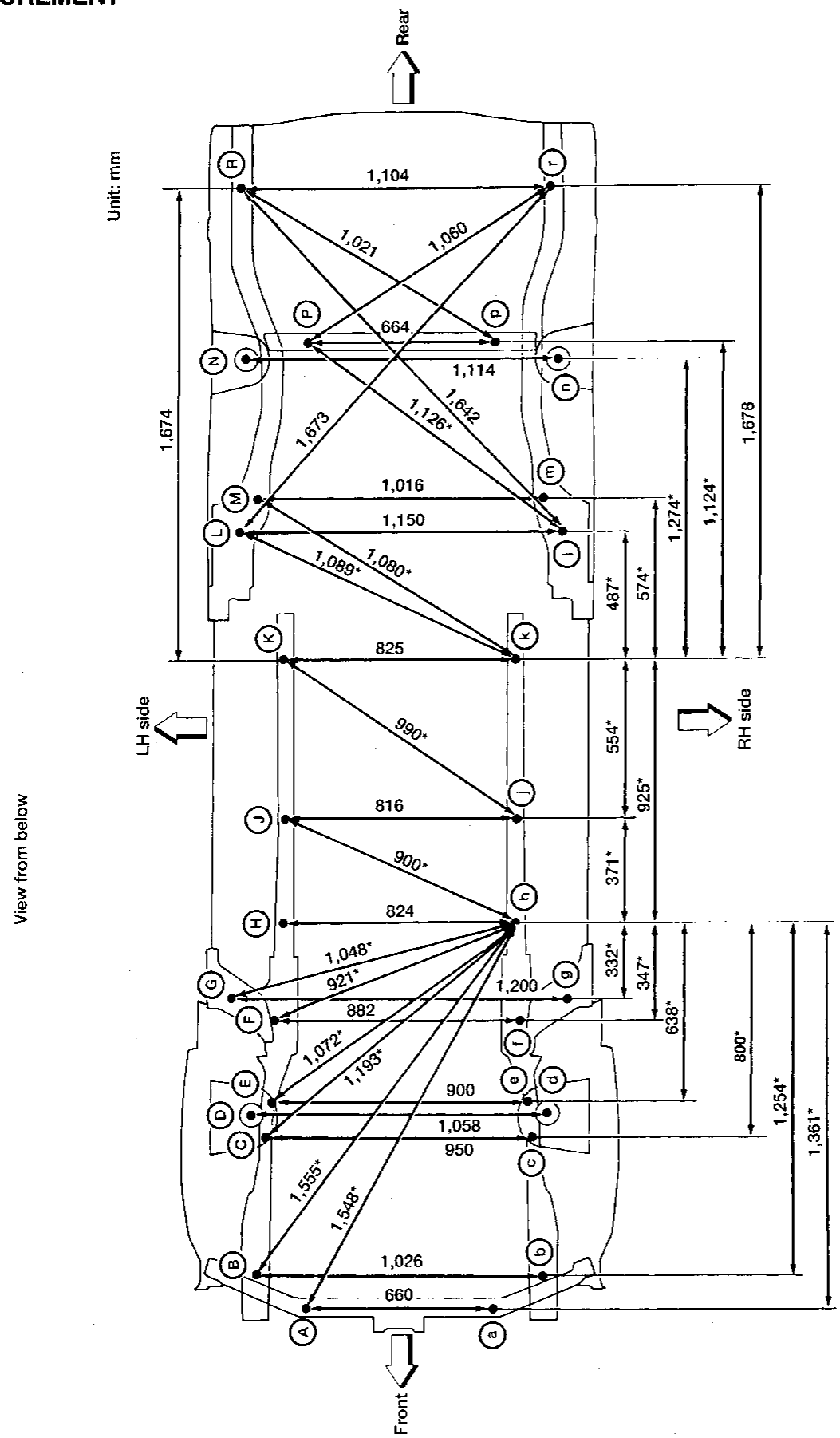

MEASUREMENT POINTS

Unit: mm

Coordinates:

A, a	X: 330	Y: -655	Z: 208	C, c	X: 475	Y: -52	Z: 376	F, f	X: 441	Y: 354	Z: 111.5	H, h	X: 412	Y: 700	Z: 109	K, k	X: 412.5	Y: 1,625	Z: 105.4	M, m	X: 508	Y: 2,190	Z: 133	R	X: 529	Y: 3,280	Z: 326.5
B, b	X: 513	Y: -540	Z: 265	E, e	X: 450	Y: 68	Z: 188.5	G, g	X: 600	Y: 430	Z: 154.9	J, j	X: 408	Y: 1,071	Z: 109	L, l	X: 575	Y: 2,070	Z: 216.1	P, p	X: 332	Y: 2,735	Z: 266	r	X: 575	Y: 3,280	Z: 326.5

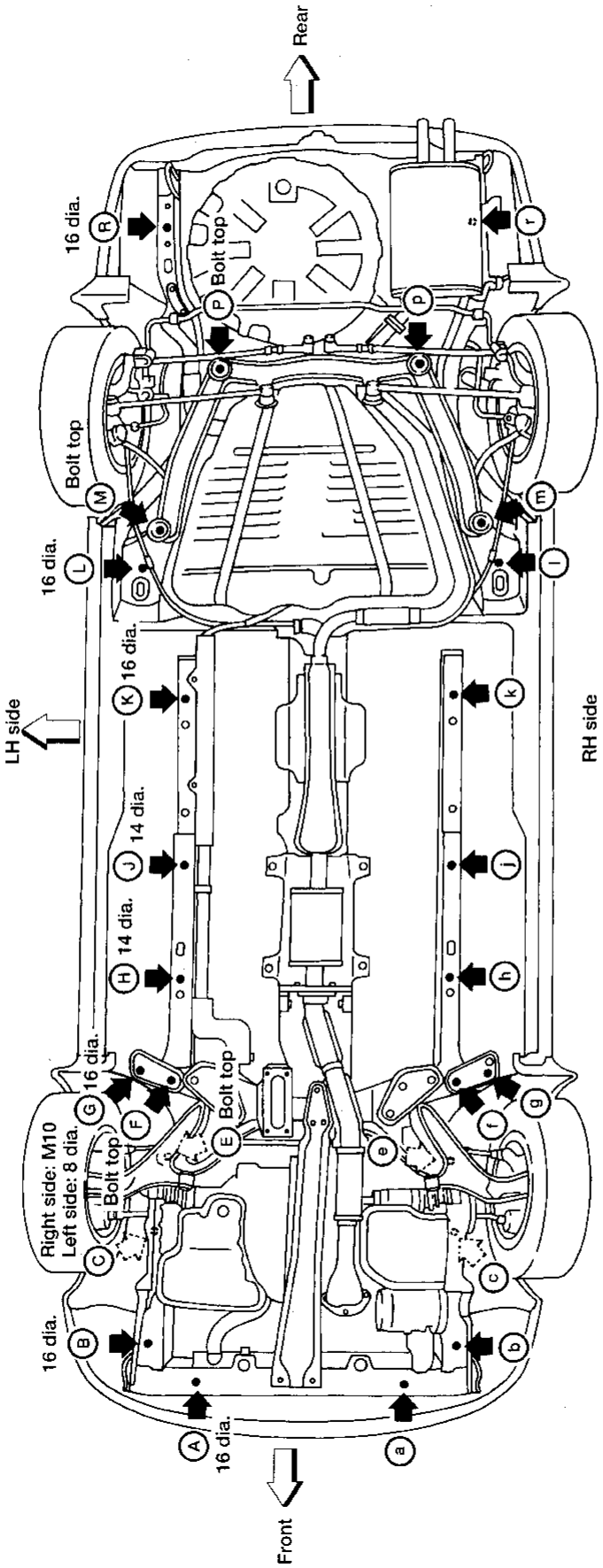

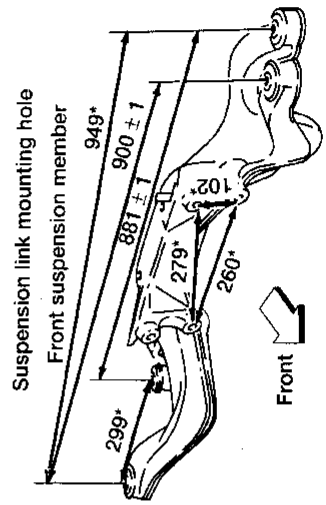

Coordinates:

D, d	X: 529	Y: 27	Z: 756	N, n	X: 557.2	Y: 2,623.9	Z: 813.1				

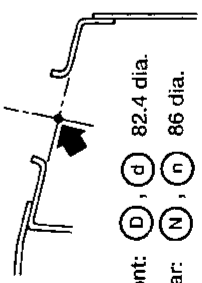

Front and rear strut lower centers

Front: D, d 82.4 dia.
Rear: N, n 86 dia.

ABF158

Precautions for SRS "Air Bag" Service

- Do not use a circuit tester to check SRS circuits.
- Before servicing the SRS, turn ignition switch "OFF", disconnect battery ground cable and wait for at least 10 minutes.
  For approximately ten minutes after the cables are removed, it is still possible for the air bag to inflate. Therefore, do not work on any air bag system connectors or wires until at least ten minutes have passed.
- SRS sensors must always be installed with their arrow marks "⇧" facing the front of the vehicle for proper operation. Also check sensors for cracks, deformities or rust before installation and replace as required.
- The spiral cable must be aligned with the neutral position since its rotations are limited. Do not attempt to turn steering wheel or column after removal of steering gear.
- Handle air bag modules carefully. Always place them with the pad side facing upward.
- After removing any SRS parts, discard old bolts and replace with new ones. Conduct self-diagnosis to check entire SRS for proper function.
- If front of vehicle is damaged in a collision, always check the crash zone sensor and the wiring harness.
- After air bag inflates, the front instrument panel assembly should be replaced.

Special Service Tools

Tool number (Kent-Moore No.) Tool name	Description	
(J38381) Deployment tool	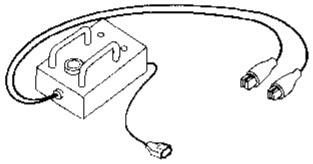	Disposing of air bag module
(J38381-30) Deployment tool adapters	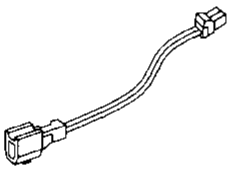	

Commercial Service Tools

Tool name	Description	
Special torx bit	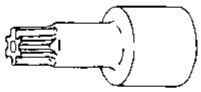	Use for special bolts (tamper resistant screw)
Spiral cable stopper		Avoiding unexpected spiral cable rotation

Description

The air bags deploy when any of the two sensors (front crash zone sensor or tunnel sensor) and the safing sensor simultaneously activate while the ignition switch is "ON".

Ignition	Crash zone sensor	Tunnel sensor	Safing sensor	Air bag signal
	Front			
ON	ON		ON	ON
ON		ON	ON	ON

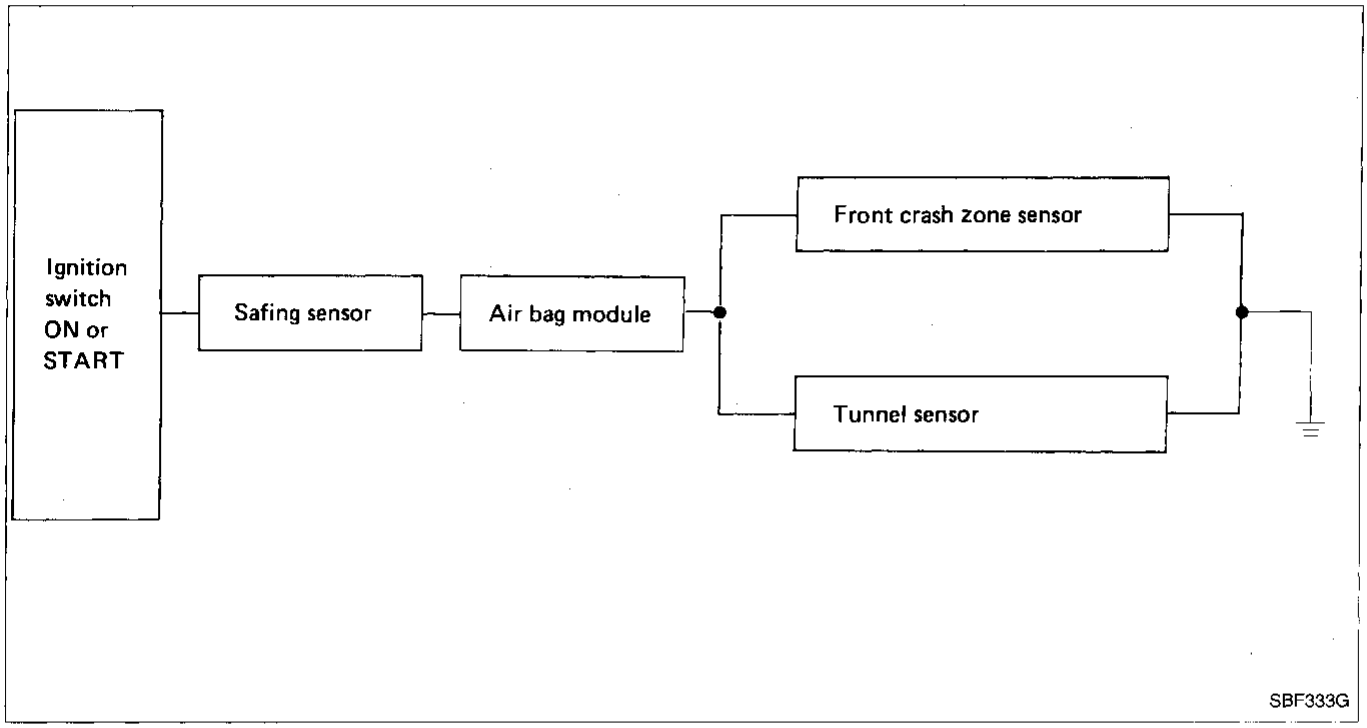

Self-diagnosis

The control module (diagnostic module) diagnoses the SRS circuit. When the ignition key is in the "ON" or "START" position, the "AIR BAG" warning lamp will illuminate for about 7 seconds and then turn off. This means that the system is operational.

SRS Component Parts Location

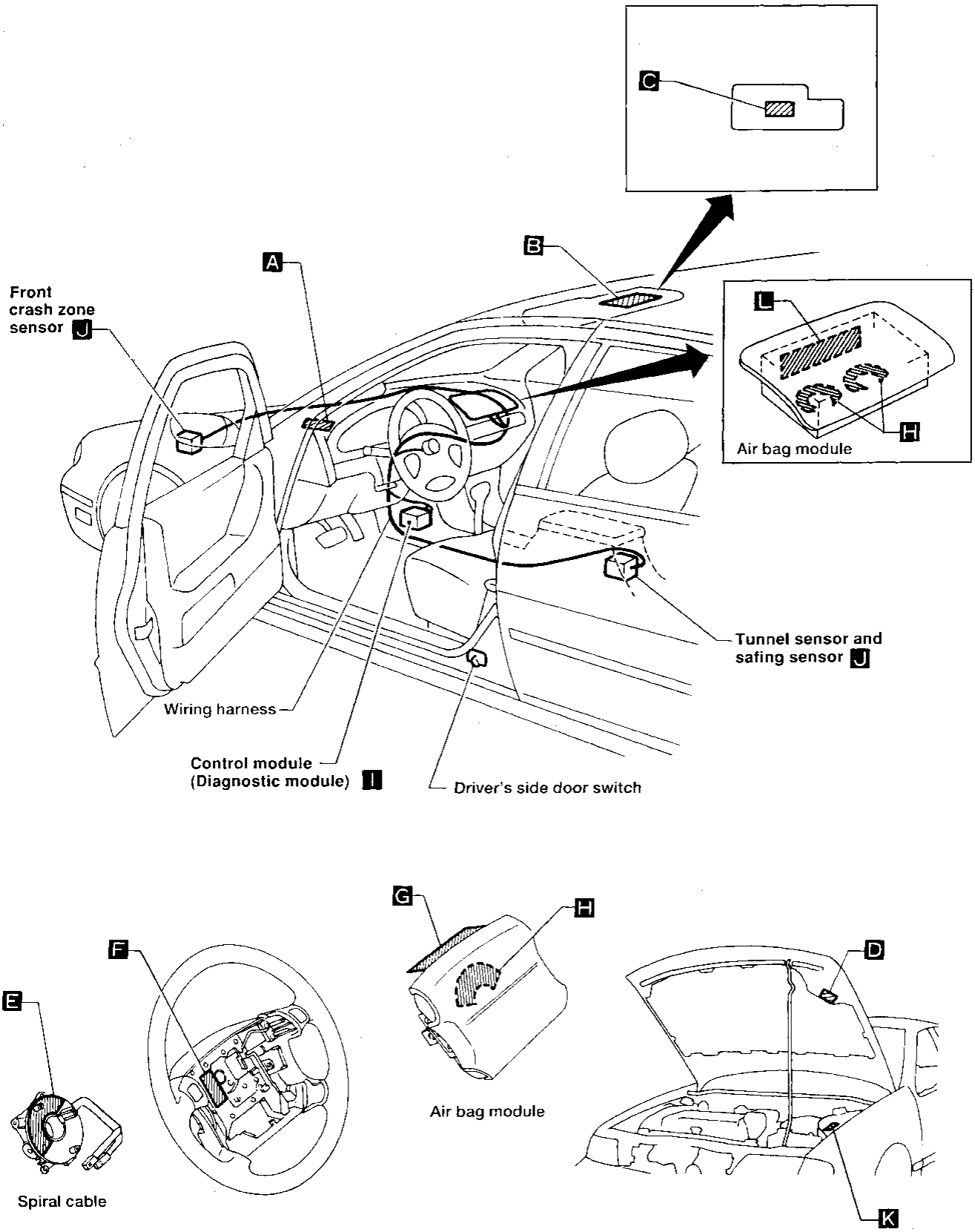

ABF197

Caution Labels

The CAUTION LABELS are important when servicing air bags in the field. If they are dirty or damaged, replace them with new ones.

A

SRS-AIRBAG

B

INFORMATION SRS AIRBAG

- THIS CAR IS EQUIPPED WITH AIR BAGS AS A SUPPLEMENTAL RESTRAINT SYSTEM (S.R.S.) TO HELP PROTECT FRONT OCCUPANTS IN A FRONTAL COLLISION.
- ALWAYS USE SEAT BELTS & CHILD SEAT.
- THE SYSTEM MUST BE INSPECTED 10 YEARS AFTER DATE OF MANUFACTURE, AS NOTED ON THE CERTIFICATION LABEL LOCATED ON THE LEFT FRONT DOOR.
- IF ANY OF THE FOLLOWING CONDITIONS OCCUR, THE SYSTEM MUST BE SERVICED: THE "AIR BAG" LAMP DOES NOT GO ON, FLASHES INTERMITTENTLY OR REMAINS ON.
- SEE YOUR OWNER'S MANUAL FOR DETAILS ABOUT THE FUNCTIONING, SERVICE, AND DISPOSAL PROCEDURES FOR THE SYSTEM.

C

NOTICE SRS AIRBAG

- THIS CAR IS EQUIPPED WITH AIR BAGS TO SUPPLEMENT THE SEAT BELTS.
- ALWAYS USE SEAT BELTS OR CHILD SEAT.
- CHILD SEATS: USE IN REAR SEAT.
  IF USED IN PASSENGER SEAT SET CHILD SEATS FORWARD FACING AND MOVE AS FAR FROM DASH AS POSSIBLE.
- READ THE INFORMATION ON THE REVERSE SIDE.

D

WARNING SRS AIRBAG

- THIS CAR IS EQUIPPED WITH A DRIVER AIR BAG AS A SUPPLEMENTAL RESTRAINT SYSTEM (S.R.S.).
- ALL SRS ELECTRICAL WIRING AND CONNECTORS ARE COLORED YELLOW.
- DO NOT USE ELECTRICAL TEST EQUIPMENT ON THESE CIRCUITS.
- TAMPERING WITH OR DISCONNECTING THE S.R.S. WIRING AND CONNECTORS COULD RESULT IN ACCIDENTAL DEPLOYMENT OF THE AIR BAG OR MAKE THE SYSTEM INOPERATIVE, WHICH MAY RESULT IN SERIOUS INJURY.

E

CAUTION SRS AIRBAG

- BEFORE ASSEMBLY;
  - LINE UP THE FRONT WHEELS STRAIGHT AHEAD.
  - ALIGN THE ARROW WITH THE YELLOW MARK ON THE SIDE GEAR.
  - READ SERVICE MANUAL.
- NO SERVICEABLE PARTS INSIDE.
- DO NOT DISASSEMBLE OR TAMPER.

F

WARNING SRS AIRBAG

BEFORE MOUNTING STEERING WHEEL;

- MAKE SURE THAT THE FRONT WHEELS ARE IN STRAIGHT-AHEAD POSITION.
- ALIGN THE ARROW WITH THE YELLOW MARK ON THE SIDE GEAR. (SPIRAL CABLE)
- READ SERVICE MANUAL.

Caution Labels (Cont'd)

G

WARNING SRS AIRBAG

- THIS AIR BAG MODULE CANNOT BE REPAIRED.
- USE DIAGNOSTIC INSTRUCTIONS TO DETERMINE IF THE UNIT IS OPERATIONAL.
- IF NOT OPERATIONAL, REPLACE AND DISPOSE OF THE ENTIRE UNIT AS DIRECTED IN THE INSTRUCTIONS.
- UNDER NO CIRCUMSTANCES SHOULD A DIAGNOSIS BE PERFORMED USING ELECTRICALLY POWERED TEST EQUIPMENT OR PROBING DEVICES.
- TAMPERING OR MISHANDLING CAN RESULT IN PERSONAL INJURY.
- STORE THE REMOVED AIR BAG MODULE WITH THE PAD SURFACE UP.
- FOR SPECIAL HANDLING OR STORAGE REFER TO SERVICE MANUAL.

H

DANGER POISON

- KEEP OUT OF THE REACH OF CHILDREN.
- CONTAINS SODIUM AZIDE AND POTASSIUM NITRATE.
- CONTENTS ARE POISONOUS AND EXTREMELY FLAMMABLE.
- CONTACT WITH ACID, WATER OR HEAVY METALS MAY PRODUCE HARMFUL AND IRRITATING GASES OR EXPLOSIVE COMPOUNDS.
- DO NOT DISMANTLE, INCINERATE, OR BRING INTO CONTACT WITH ELECTRICITY OR STORE AT TEMPERATURES EXCEEDING 200°F.
- FIRST AID: IF CONTENTS ARE SWALLOWED, INDUCE VOMITING;
  - FOR EYE CONTACT, FLUSH EYES WITH WATER FOR 15 MINUTES
  - IF GASES FROM ACID OR WATER CONTACT ARE INHALED, SEEK FRESH AIR
  - IN EVERY CASE, GET PROMPT MEDICAL ATTENTION
- FOR ADDITIONAL INFORMATION, SEE MATERIAL SAFETY DATA SHEET (MSDS) FOR THIS PRODUCT.

I

CAUTION SRS AIRBAG

- NO SERVICEABLE PARTS INSIDE.
- DO NOT DISASSEMBLE OR TAMPER.
- DO NOT DROP; KEEP DRY.
- WHILE REMOVED, STORE IN A CLEAN AND DRY AREA.
- IF WET CONDITION OCCURS, THIS UNIT MUST BE SERVICED.

J

WARNING SRS AIRBAG

- DO NOT DISASSEMBLE OR TAMPER.
- DISMANTLING AND INSTALLATION SHOULD ONLY BE PERFORMED BY TRAINED PERSONNEL.

K

CAUTION SRS AIRBAG

TO AVOID DAMAGING THE SRS SPIRAL CABLE, REMOVE THE STEERING WHEEL BEFORE REMOVING THE STEERING JOINT.

L

WARNING SRS AIRBAG

- THIS AIR BAG MODULE CAN NOT BE REPAIRED. SEE SERVICE MANUAL FOR INSTRUCTIONS (ON DIAGNOSIS AND REPLACEMENT).
- DO NOT DIAGNOSE USING ELECTRICALLY POWERED TEST EQUIPMENT OR PROBING DEVICES.
- TAMPERING OR MISHANDLING CAN RESULT IN PERSONAL INJURY.
- STORE THE REMOVED AIRBAG MODULE WITH THE PAD OR COVER SURFACE UP. (REFER TO THE SERVICE MANUAL FOR SPECIAL HANDLING OR STORAGE.)

Maintenance Items

1. Check "AIR BAG" warning lamp
When the ignition key is in the "ON" or "START" position, the "AIR BAG" warning lamp will illuminate for about 7 seconds and then turn off. This means that the system is operational.

2. Visually check SRS components

(1) Sensors
- Check sensors to ensure the arrow marks face the front of the vehicle.
- Check body and sensor brackets for deformities or rust.
- Check sensor case for dents, cracks, deformities or rust.
- Check sensor harness for binds, connector for damage, and terminals for deformities.

(2) Control module — Airbag
- Check case and bracket for dents, cracks or deformities.
- Check connectors for damage, and terminals for deformities.

(3) Main harness and instrument harness
- Check connectors for poor connections.
- Check harnesses for binds, connectors for damage, and terminals deformities.

(4) Spiral cable
- Visually check lock (engagement) pins and combination switch for damage.
- Check connectors, flat cable and protective tape for damage.
- Check steering wheel for noise, binds or difficult operation.

(5) Steering wheel
- Check harness (built into steering wheel) and connectors for damage, and terminals for deformities.
- Install air bag module to check fit or alignment with steering wheel.
- Check steering wheel for excessive free play.

(6) Air bag module
- Remove air bag module from steering wheel.
Check harness cover and connectors for damage, terminals for deformities, and harness for binds.
- Install air bag module to steering wheel to check fit or alignment with the wheel.

CAUTION:
Replace previously used screws with new ones.

Removal and Installation — Control Module and Sensors

CAUTION:

- **Before servicing SRS, turn the ignition switch off, disconnect battery ground cable and wait for at least 10 minutes.**
- **The special bolts are coated with bonding agent. Discard old ones after removal; replace with new ones.**
- Check all sensors for proper installation.
- Check all sensors to ensure they are free of deformities, dents, cracks or rust. If they show any visible signs of damage, replace them with new ones.
- Check sensor brackets to ensure they are free of deformities or rust.

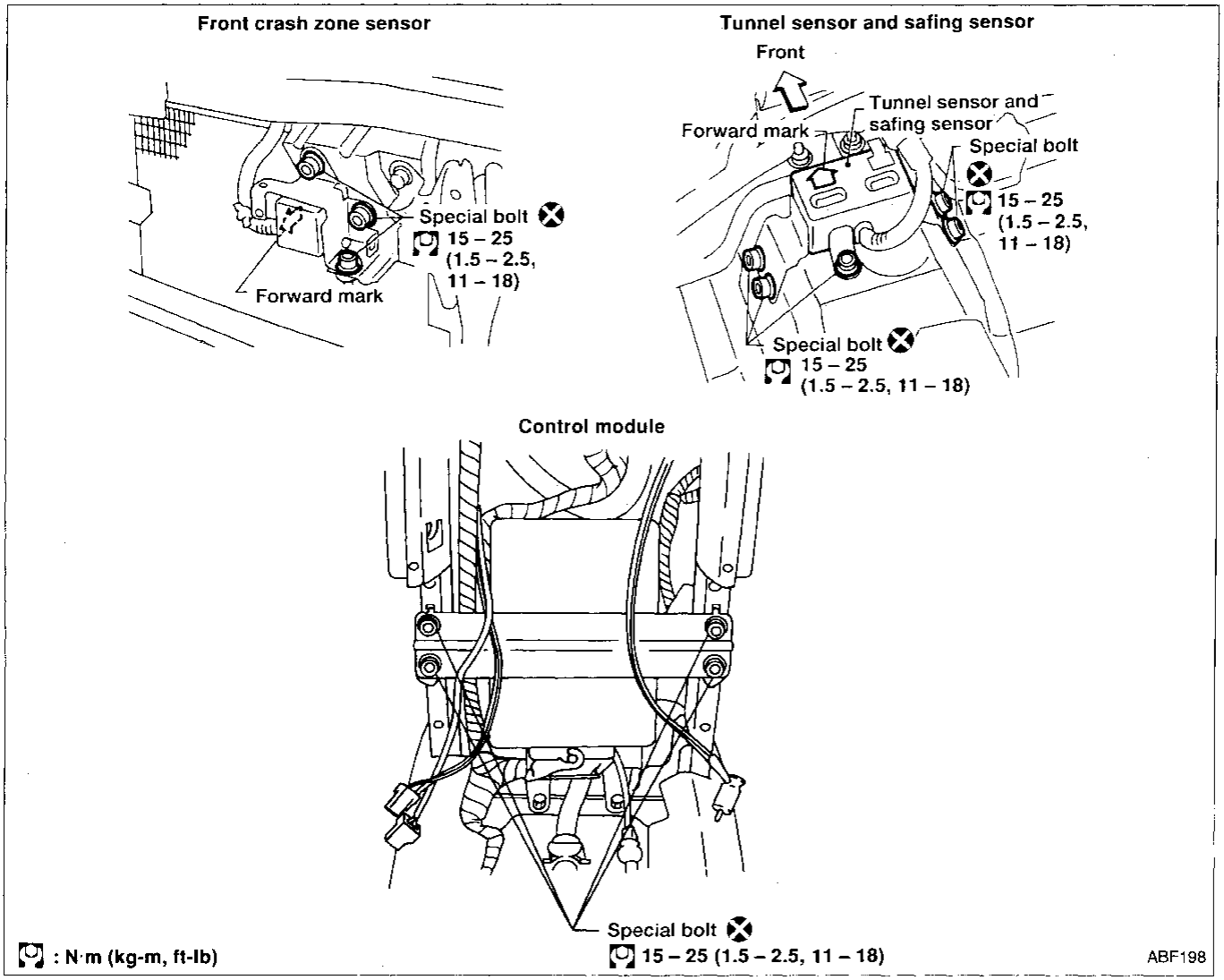

Removal — Driver Air Bag Module and Spiral Cable

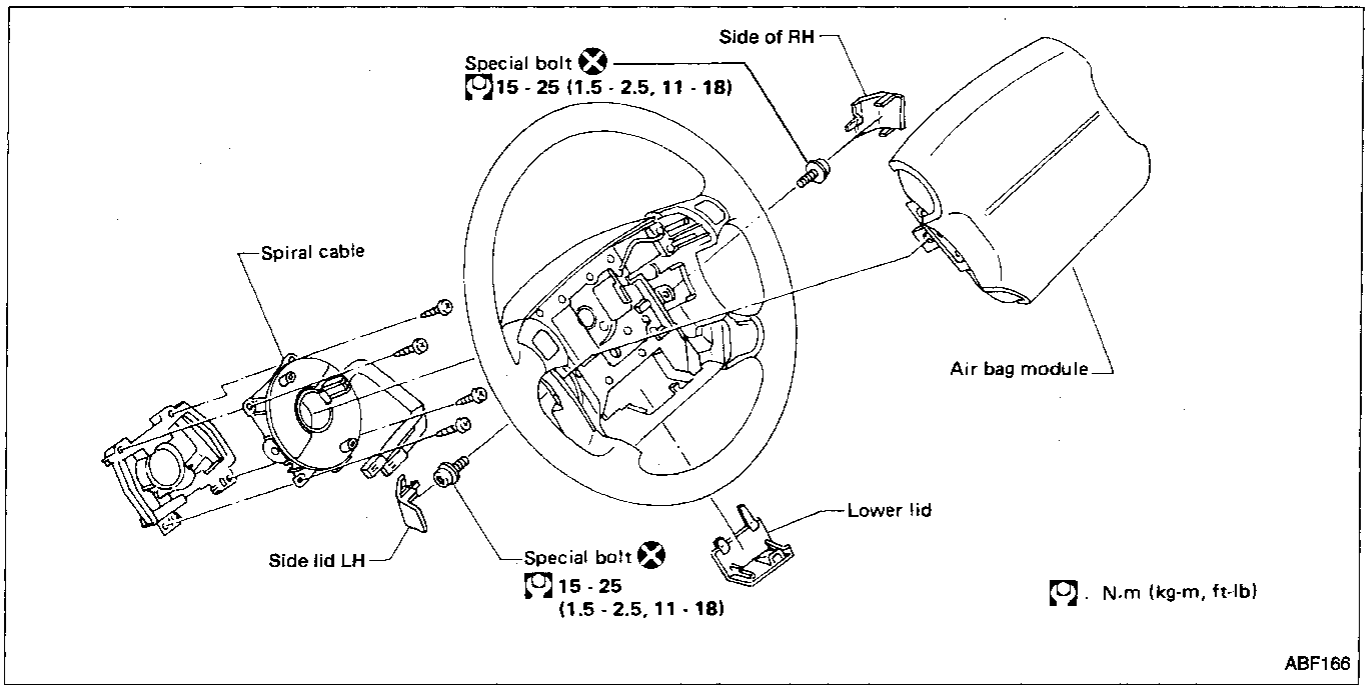

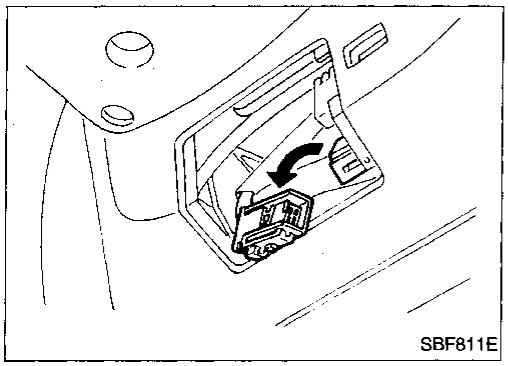

CAUTION:
Before servicing SRS, turn the ignition switch off, disconnect battery ground cable and wait for at least 10 minutes.

1. Remove lower lid from steering wheel, and disconnect air bag module connector.

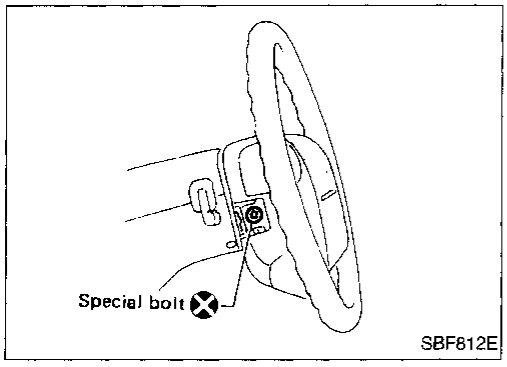

2. Remove side lid. Using the T50H torx bit, remove left and right special bolts. Air bag module can then be removed.

Removal — Driver Air Bag Module and Spiral Cable (Cont'd)

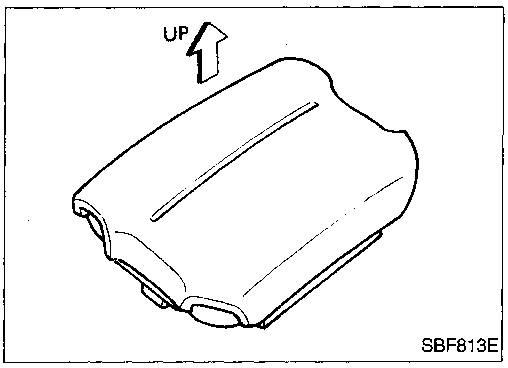

CAUTION:

- **Always place air bag module with pad side facing upward.**
- **Do not attempt to disassemble air bag module.**
- **The special bolts are coated with bonding agent. Discard old ones after removal; replace with new ones.**

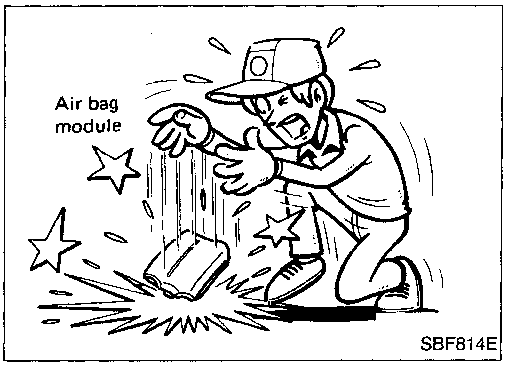

- **Do not drop or impact air bag module. If any portion is deformed or cracked, replace the module.**
- **Do not expose the air bag module to temperatures exceeding 100°C (212°F).**
- **Do not allow oil, grease or water to come in contact with the air bag module.**

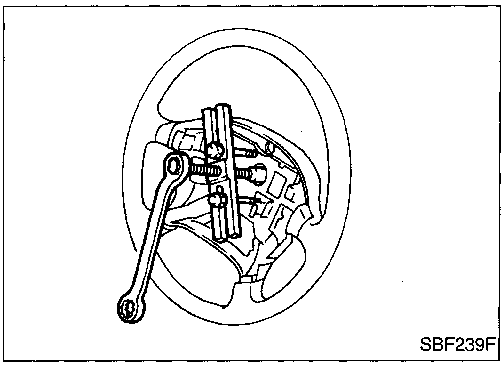

3. Set steering wheel in the neutral position.
4. Disconnect horn connector and remove nuts.
5. Using steering wheel puller, remove steering wheel. Be careful not to over-tighten puller bolt on steering wheel.

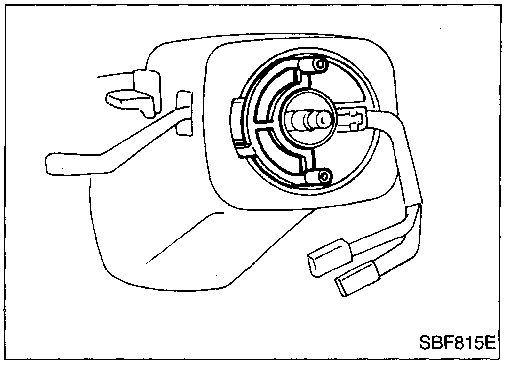

6. Attach spiral cable to stopper.
7. Remove steering column cover.
8. Disconnect connector and remove the four screws. The spiral cable can then be removed.

Removal — Front Passenger Air Bag Module

CAUTION:
Before servicing SRS, turn the ignition switch off, disconnect battery ground cable and wait for at least 10 minutes.

1. Remove glove box lid and glove box.
2. Disconnect inflator connectors from air bag harness connectors.

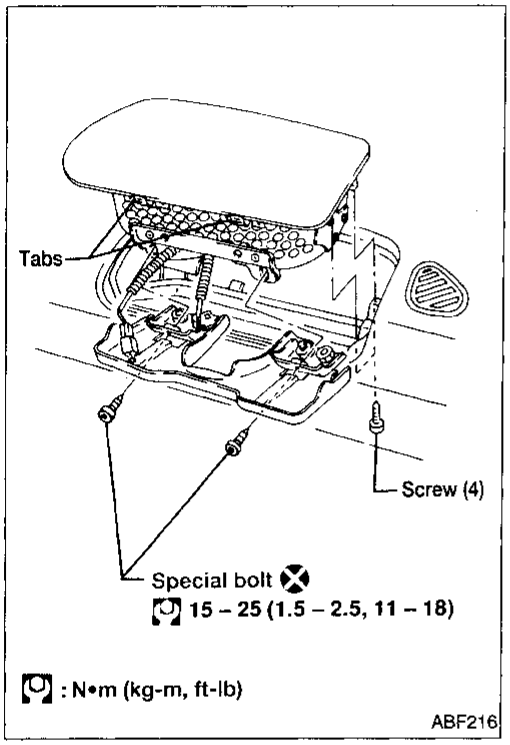

3. Remove the special bolt from left and right sides of front passenger air bag module.
4. Remove the screws from left and right sides of front passenger air bag module.
5. Remove air bag module by releasing the tabs from the top of the instrument panel.

- Air bag module is heavy and should be supported using both hands during removal.

CAUTION:

- **Always place air bag module with pad side facing upward.**
- **Do not attempt to disassemble air bag module.**
- **The special bolts are coated with bonding agent. Discard old ones after removal; replace with new ones.**

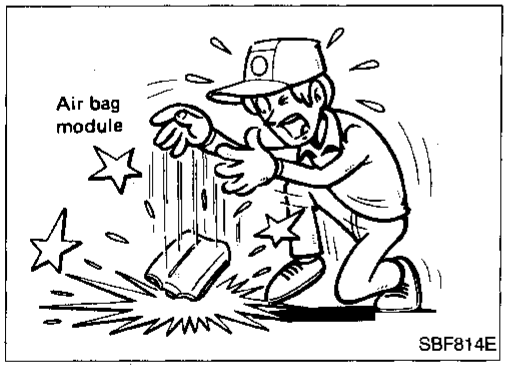

- **Do not drop or impact air bag module. If any portion is deformed or cracked, replace the module.**
- **Do not expose the air bag module to temperatures exceeding 100°C (212°F).**
- **Do not allow oil, grease or water to come in contact with the air bag module.**

Installation — Driver Air Bag Module and Spiral Cable

1. Connect spiral cable connector and tighten with screws. Install steering column cover.

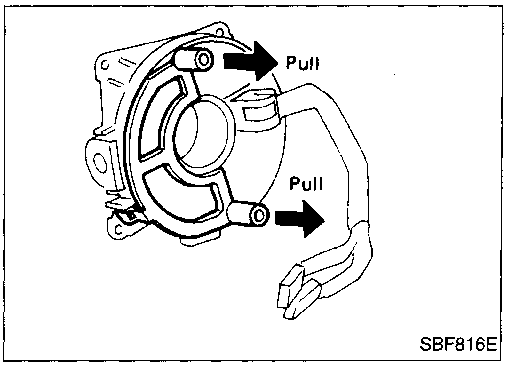

SBF816E

2. Remove stopper by pulling two pin guides.

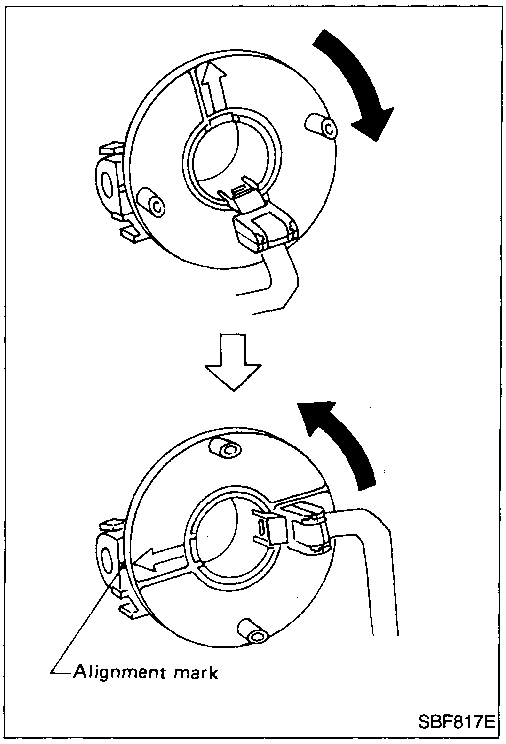

SBF817E

- Alignment of spiral cable with neutral position
  If stopper is not used, align spiral cable with neutral position as follows:
  Turn spiral cable clockwise until it catches stopper. Then, back spiral cable off approximately two turns until yellow alignment mark appears on left gear. Align arrow mark "ϕ" of spiral cable with this yellow mark.

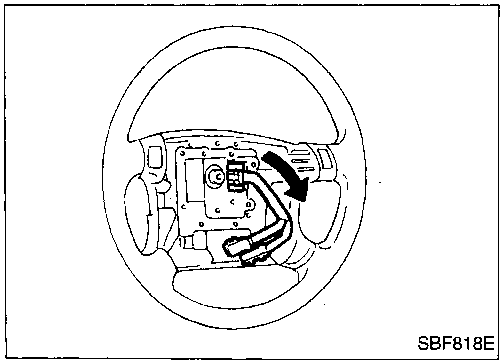
SBF818E

3. Install steering wheel setting spiral cable pin guides, and pull spiral cable through.
4. Connect horn connector and engage spiral cable with pawls in steering wheel.
5. Tighten nuts.

Installation — Driver Air Bag Module and Spiral Cable (Cont'd)

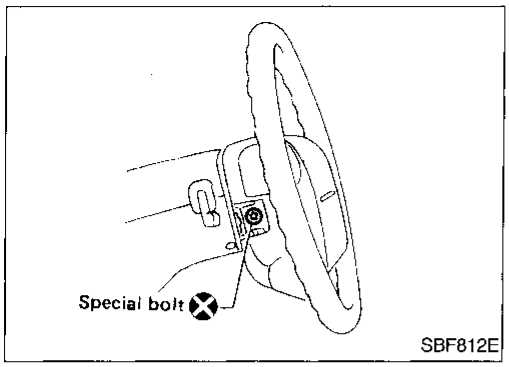

6. Position air bag module and tighten with new special bolts.
7. Connect air bag module connector.
8. Install all lids.
9. Conduct self-diagnosis to ensure entire SRS operates properly. (Use CONSULT or warning lamp check.)

Installation — Front Passenger Air Bag Module

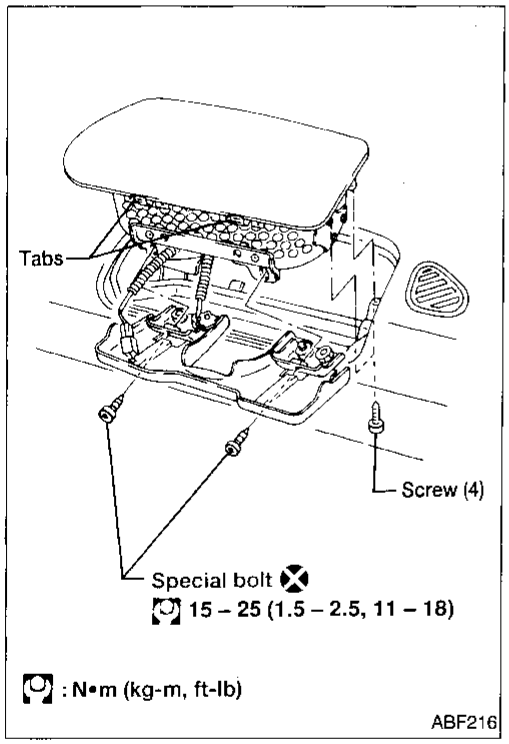

1. Install front passenger air bag module in instrument panel.
   - Ensure harness is not caught between air bag module and support bracket.
2. Connect inflator connectors to air bag harness connectors.
3. Install glove box and glove box lid.

Scrapping the Air Bag

Before scrapping an air bag module or a vehicle equipped with an SRS air bag, be sure to deploy air bag.

CONNECTING TO BATTERY

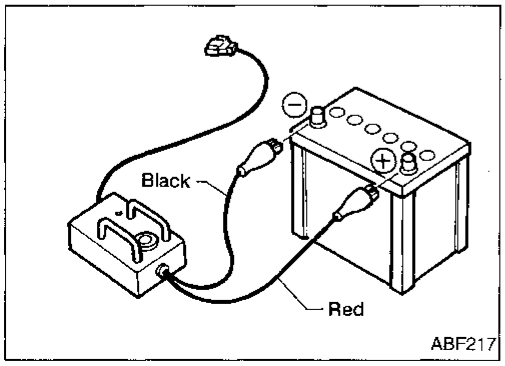

- Place the vehicle outdoors in such a way that it is surrounded on all sides by at least 6 m (20 ft) of open space.
- Use a voltmeter to make sure the vehicle battery is fully charged.

CAUTION:
The battery must show voltage of 9.6V or more.

Scrapping the Air Bag (Cont'd)

Remove the battery from the vehicle and place it on dry wood blocks approximately 5 m (16 ft) away from the vehicle.

- Wait 10 to 12 minutes after the vehicle battery is disconnected before proceeding.
- Connect deployment tool to the battery.

CAUTION:

Make sure the polarity is correct. The right side lamp in the tool, marked "deployment tool power", should glow with a green light. If the right side lamp glows red, reverse the connections to the battery.

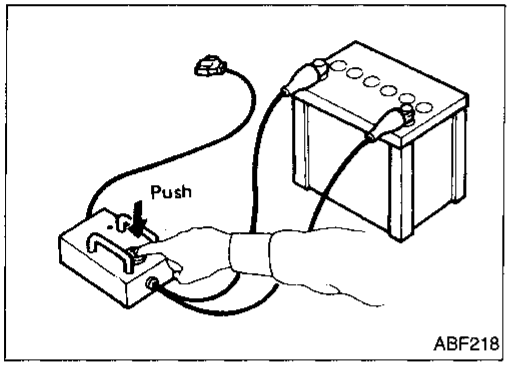

DEPLOYMENT TOOL CHECK

Press the deployment tool switch to the "ON" position. The left side lamp in the tool, marked "air bag connector voltage" should illuminate. If it does not illuminate, replace the tool.

AIR BAG DEPLOYMENT TOOL LAMP ILLUMINATION CHART (Battery connected)

Switch operation	Left side lamp, green* "AIR BAG CONNECTOR VOLTAGE"	Right side lamp, green* "DEPLOYMENT TOOL POWER"
OFF	OFF	ON
ON	ON	ON

*: If this lamp glows red, the tool is connected to the battery incorrectly. Reverse the connections and make sure the lamp glows green.

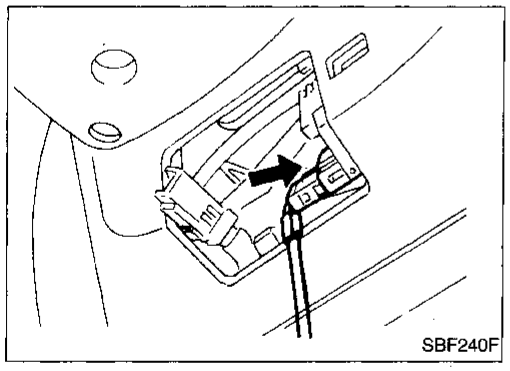

CONNECTING TO AIR BAG

1. Disconnect the prepared battery cable.
2. Also disconnect the vehicle battery ground cable and wait 10 minutes.
3. Disconnect air bag module connectors.
4. Connect deployment tool connector. For front passenger air bag, attach the adapters to the tool connector.

CAUTION:

Make sure the deployment tool is disconnected from the battery before you make this connection.

5. Reconnect the battery cable to the prepared battery.

- The lamp on the right side of the tool, marked "deployment tool power", should glow green, not red.

Scrapping the Air Bag (Cont'd)

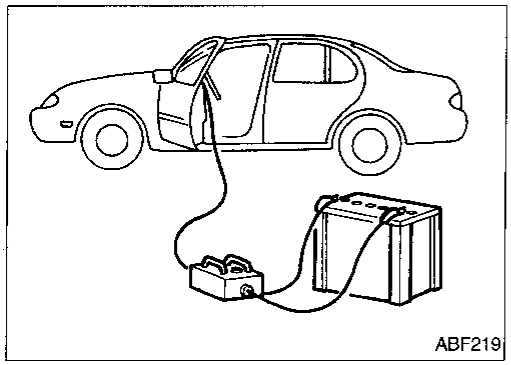

DEPLOYMENT

Press the button on the deployment tool. The left side lamp on the tool, marked "air connector voltage", will illuminate and the air bag will deploy.

DISPOSAL

- Remove steering wheel side lids. Use the special "torx" bit to remove the air bag module from the steering wheel. Place it into a sealed vinyl bag for disposal.

CAUTION:

- **When deploying air bag, ensure vehicle is empty.**
- **No poisonous gas is produced upon air bag deployment. However, be careful not to inhale gas since it irritates throat and can cause choking.**
- **Due to heat, leave air bag module unattended for more than 30 minutes after air bag deployment.**
- **Do not attempt to disassemble air bag module.**
- **Air bag module can not be re-used.**
- **Never apply water to a deployed air bag module.**
- **Be sure to wear gloves when handling a deployed air bag module.**

NOTE

Schematic

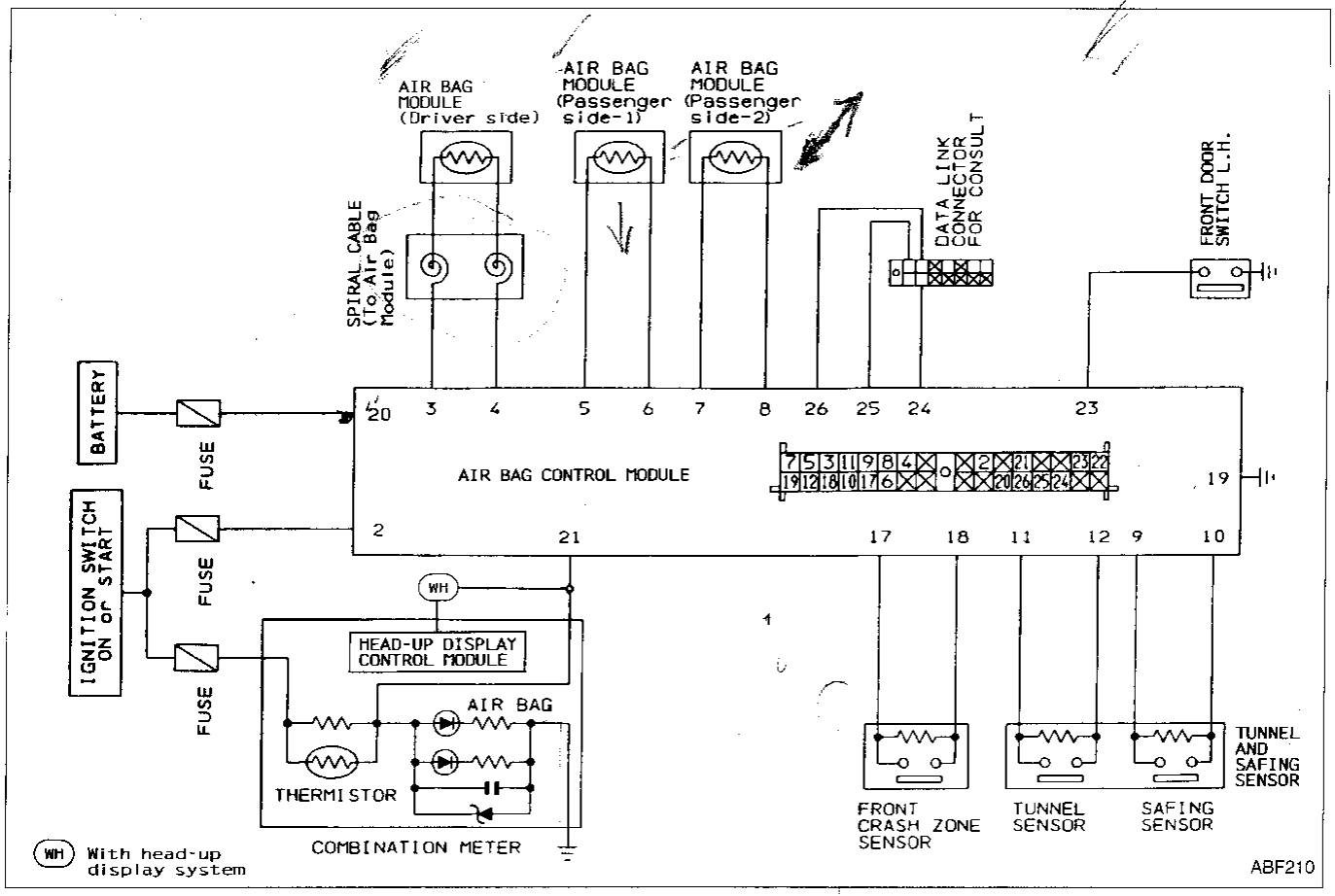

Wiring Diagram

CAUTION:

- **Do not use a circuit tester to check SRS "Air Bag" harness connectors. The wiring harness and connectors have yellow outer insulation for easy identification.**
- **Do not attempt to repair, splice or modify the SRS "Air Bag" wiring harness. If the harness is damaged, replace it with a new one.**
- **Keep ground portion clean.**

Wiring Diagram (Cont'd)

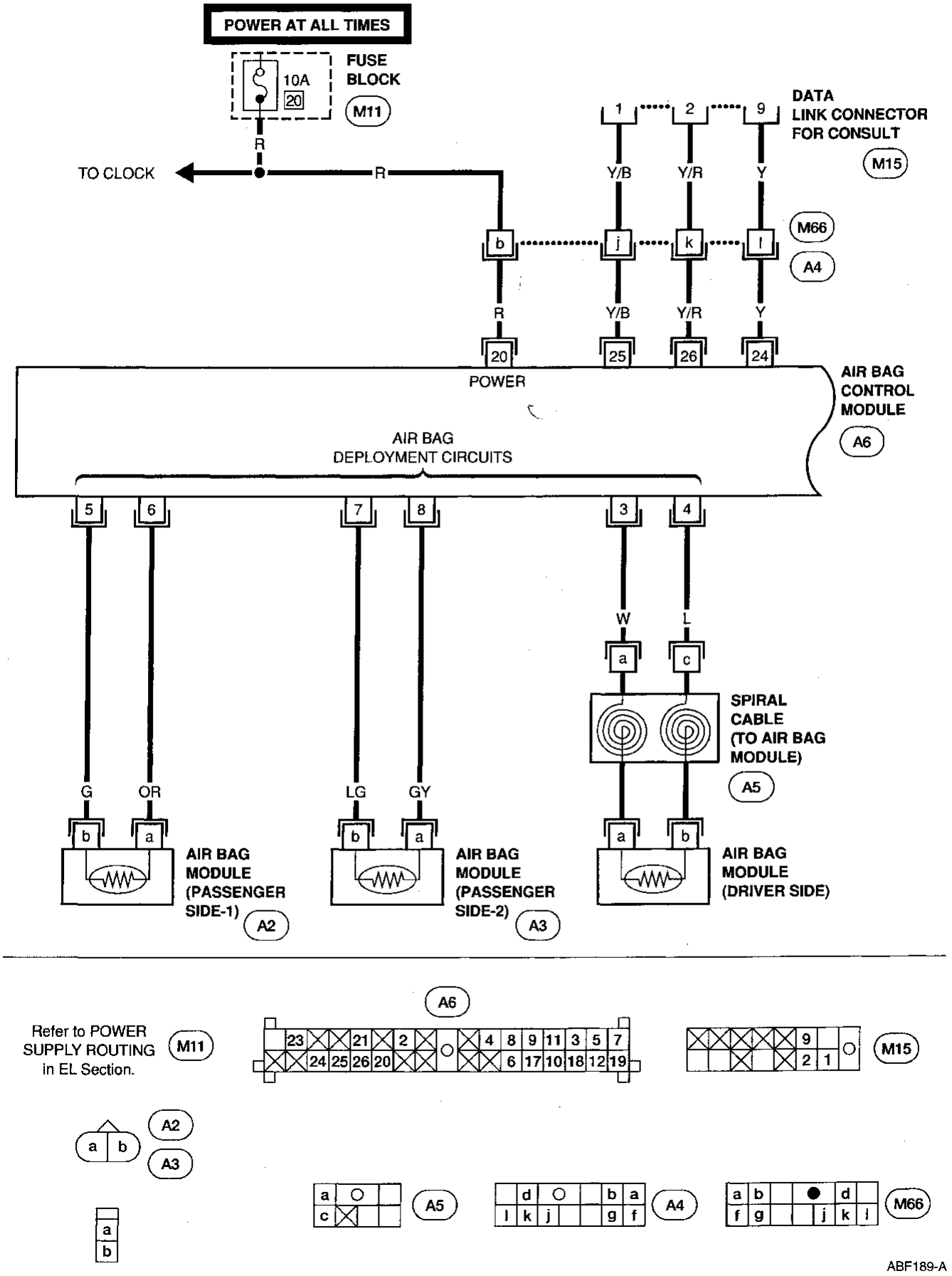

Wiring Diagram (Cont'd)

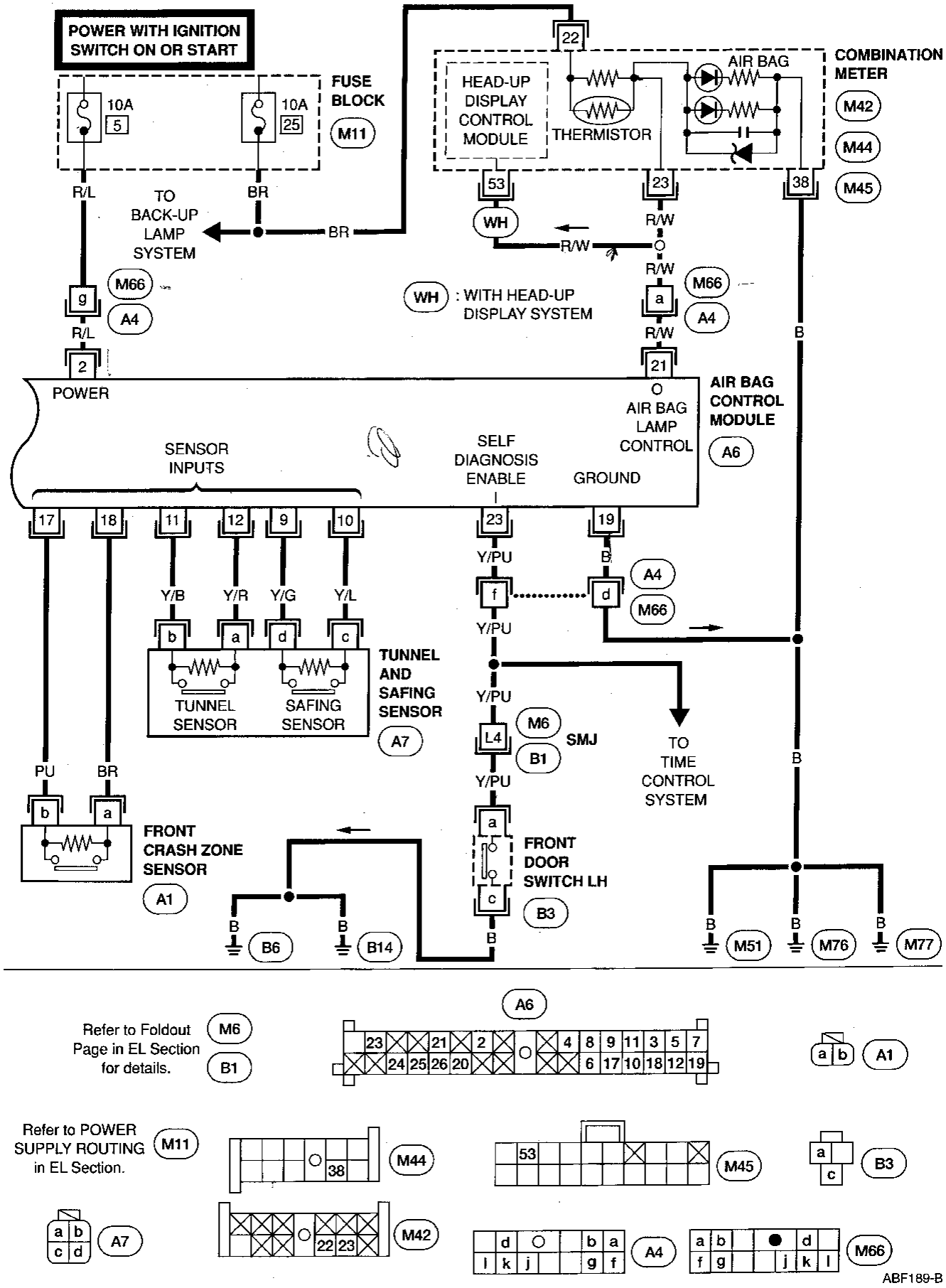

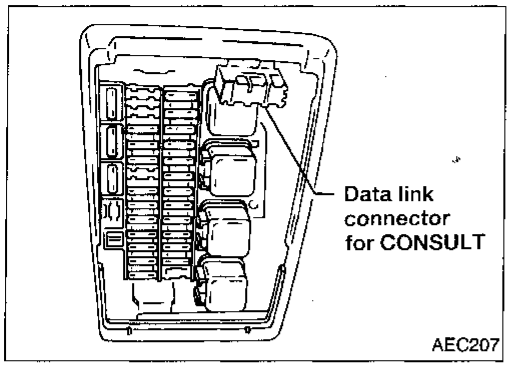

Self-diagnosis

USING CONSULT

The self-diagnosis results can be read by CONSULT, as follows:

1. Connect "CONSULT" to vehicle harness connector.
   ↓
2. Turn ignition switch to "ON". (When CONSULT is connected, the "AIR BAG" warning lamp will be turned to present diagnosis mode.)
   ↓
3. Touch "START" to operate "CONSULT".
   ↓
4. Touch "AIR BAG" to choose air bag system.
   ↓
5. Touch "SELF DIAG RESULTS" to read self-diagnosis results.
   ↓
6. Problem codes are displayed on "SELF DIAG RESULT 1" (first page — present mode). The problem code last indicated is displayed on "SELF DIAG RESULT 2" (second page — initial mode).
   ↓
7. When "PRINT" is pressed, information displayed on "SELF DIAG RESULTS 1 and 2" is printed out.
   ↓
8. After repairing malfunctioning parts, press "ERASE" to clear self-diagnosis results.

- **After repairing malfunctioning parts, attempt to clear self-diagnosis results from memory.**
- **If malfunctioning parts are not completely repaired, self-diagnosis results remain stored in memory.**

   ↓
9. Push Back Key of CONSULT until SELECT SYSTEM mode appears to make "SELF-DIAGNOSIS" user mode.
   ↓
10. Push the power off switch.
   ↓
11. Turn off ignition switch.

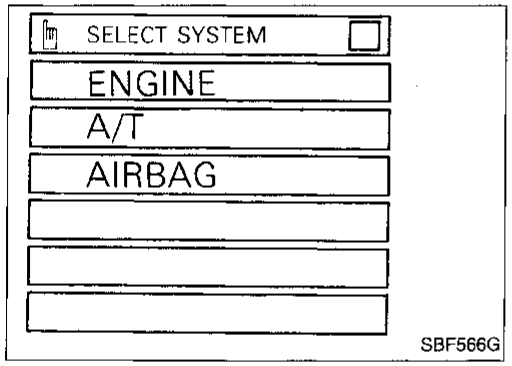

Self-diagnosis (Cont'd)

Self-diagnosis results

Failure parts group [Present] and [Initial]	Explanation	Repair order * Recheck SRS at each replacement.
NO SELF DIAGNOSTIC FAILURE INDICATED.	Normal. The SRS system is in good order.	—
SAFING SENSOR [OPEN/UPR-VB-SHORT]	The circuit for the safing sensor is open or the wire from the control module (terminal No. 9) to the safing sensor is shorted to some power supply circuit.	1. Visually check the wiring harness connections. 2. Replace the safing sensor. (safing sensor and tunnel sensor) 3. Replace the control module. 4. Replace the main harness.
SAFING SENSOR [SHORT/UPR-GND-SHORT]	Both the wires for the safing sensor are shorted or the wire from the control module (terminal No. 9) to the safing sensor is shorted to ground.	
AIRBAG MODULE [OPEN]	The circuit for the air bag module is open. (including the spiral cable)	1. Visually check the wiring harness connections. 2. Replace the spiral cable. 3. Replace the driver's air bag module. (Before disposing of it, it must be deployed.) 4. Replace the control module. 5. Replace the main harness.
AIRBAG MODULE [VB-SHORT]	The circuit for driver's air bag module is shorted to some power supply circuit. (including the spiral cable)	
AIRBAG MODULE [GND-SHORT]	The circuit for the air bag module is shorted to ground. (including the spiral cable)	
AIRBAG MODULE [SHORT]	The circuit for driver's air bag module are shorted to each other.	
AIRBAG MODULE [OPEN]	The circuit for driver's air bag module is open. (including the spiral cable)	1. Visually check the wiring harness connections. 2. Replace the spiral cable. 3. Replace driver's air bag module. (Before disposing of it, it must be deployed.) 4. Replace the control module. 5. Replace the main harness.
AIRBAG MODULE [VB-SHORT]	The circuit for driver's air bag module is shorted to some power supply circuit. (including the spiral cable)	
AIRBAG MODULE [GND-SHORT]	The circuit for driver's air bag module is shorted to ground. (including the spiral cable)	
AIRBAG MODULE [SHORT]	The circuits for driver's air bag module are shorted to each other.	
ASSIST A/B MODULE 1 [OPEN]	The circuit for front passenger air bag module 1 is open.	1. Visually check the wiring harness connections. 2. Replace front passenger air bag module. (Before disposing of it, it must be deployed.) 3. Replace the control module. 4. Replace the main harness.
ASSIST A/B MODULE 1 [VB-SHORT]	The circuit for front passenger air bag module 1 is shorted to some power supply circuit.	
ASSIST A/B MODULE 1 [GND-SHORT]	The circuit for front passenger air bag module 1 is shorted to ground.	
ASSIST A/B MODULE 1 [SHORT]	The circuits for front passenger air bag module 1 are shorted to each other.	
ASSIST A/B MODULE 2 [OPEN]	The circuit for front passenger air bag module 2 is open.	1. Visually check the wiring harness connections. 2. Replace front passenger air bag module. (Before disposing of it, it must be deployed.) 3. Replace the control module. 4. Replace the main harness.
ASSIST A/B MODULE 2 [VB-SHORT]	The circuit for front passenger air bag module 2 is shorted to some power supply circuit.	
ASSIST A/B MODULE 2 [GND-SHORT]	The circuit for front passenger air bag module 2 is shorted to ground.	
ASSIST A/B MODULE 2 [SHORT]	The circuits for front passenger air bag module 2 are shorted to each other.	

Self-diagnosis (Cont'd)

Failure parts group [Present] and [Initial]	Explanation	Repair order * Recheck SRS at each replacement.
TUNNEL SENSOR [OPEN/UPR-VB-SHORT]	The circuit for the tunnel sensor is open or the wire from the control module (terminal No. 11) to the tunnel sensor is shorted to some power supply circuit.	1. Visually check the wiring harness connections. 2. Replace the tunnel sensor. (safing sensor and tunnel sensor) 3. Replace the control module. 4. Replace the main harness.
TUNNEL SENSOR [SHORT/UPR-GND-SHORT]	Both the wires for the tunnel sensor are shorted or the wire from the control module (terminal No. 11) to the tunnel sensor is shorted to ground.	
CRASH ZONE SEN-CTR [OPEN/UPR-VB-SHORT]	The circuit for the center crash zone sensor is open or the wire from the control module (terminal No. 17) to the center crash zone sensor is shorted to some power supply circuit.	1. Visually check the wiring harness connections. 2. Replace the center crash zone sensor. 3. Replace the control module. 4. Replace the main harness.
CRASH ZONE SEN-CTR [SHORT/UPR-GND-SHORT]	Both the wires for the crash zone sensor are shorted or the wire from the control module (terminal No. 17) to the crash zone sensor is shorted to ground.	
CONTROL MODULE	The control module (diagnostic module) is out of order.	1. Visually check the wiring harness connections. 2. Replace the control module. 3. Replace the main harness.
INDEFINITE FAILURES	A problem which cannot be specified occurs because more than two parts are out of order.	1. See the SELF-DIAGNOSIS RESULT 2 failure parts group [initial], then repair as necessary. 2. Visually check the wiring harness connections. 3. Replace the control module. 4. Replace all sensors, the spiral cable and air bag modules. 5. Replace the main harness.

Self-diagnosis (Cont'd)

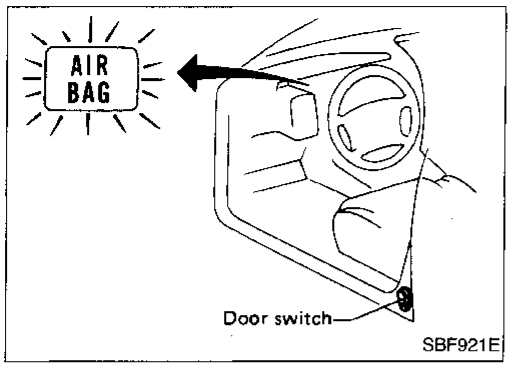

USING THE WARNING LAMP

Self-diagnosis results can be also read by using the "AIR BAG" warning lamp.
The "AIR BAG" warning lamp operates as shown below:

How to alternate self-diagnosis

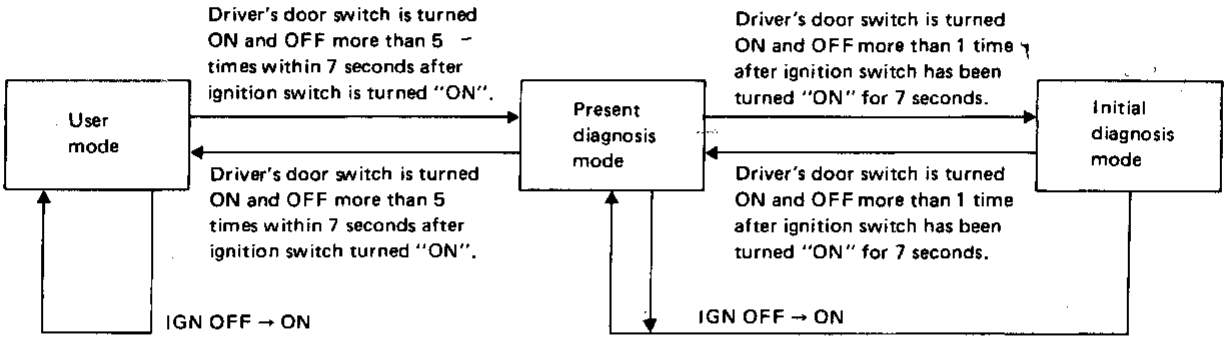

Problem codes are displayed in present diagnosis mode (self-diagnosis result 1). The problem code last indicated is displayed in initial diagnosis mode (self-diagnosis result 2).

After the malfunctioning parts have been repaired and the system is returned to the user mode, the present diagnosis mode information, displayed as self-diagnosis results, is automatically cleared from memory.

- **After repairing malfunctioning part, attempt to clear self-diagnosis results from memory.**
- **If a malfunctioning part is not completely repaired, information stored in memory will not be cleared.**

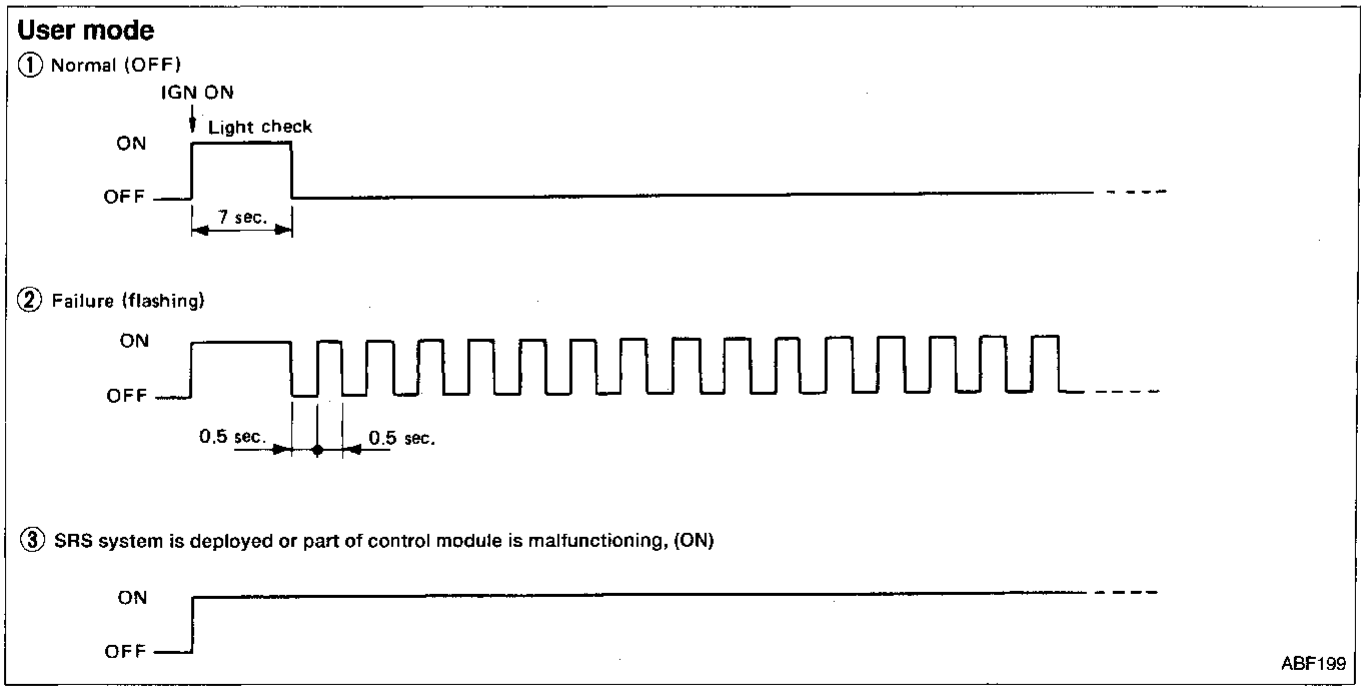

Self-diagnosis (Cont'd)

Present diagnosis mode (self-diagnosis result 1)

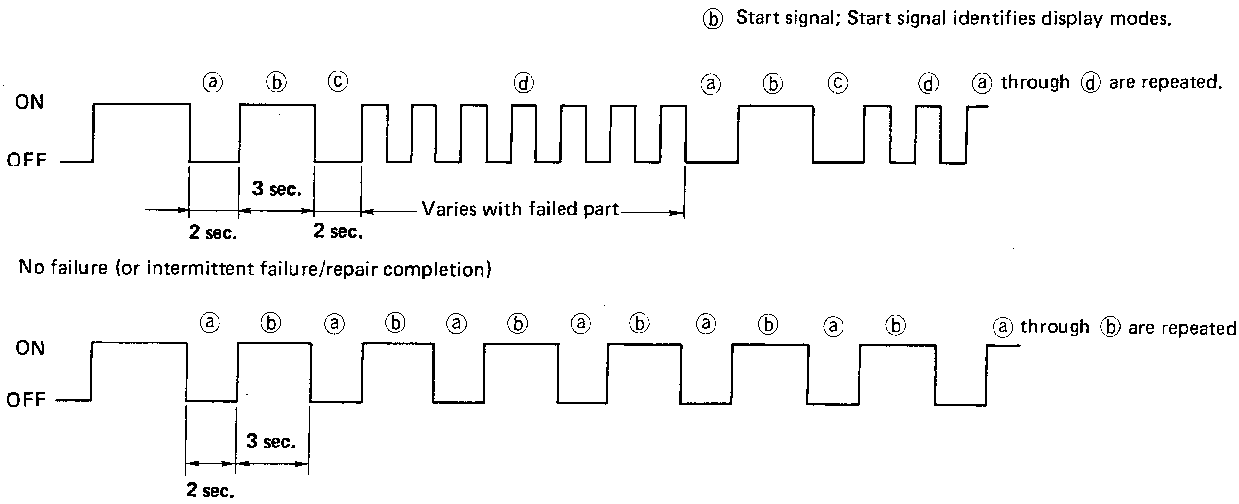

ABF182

Initial diagnosis mode (self-diagnosis result 2)

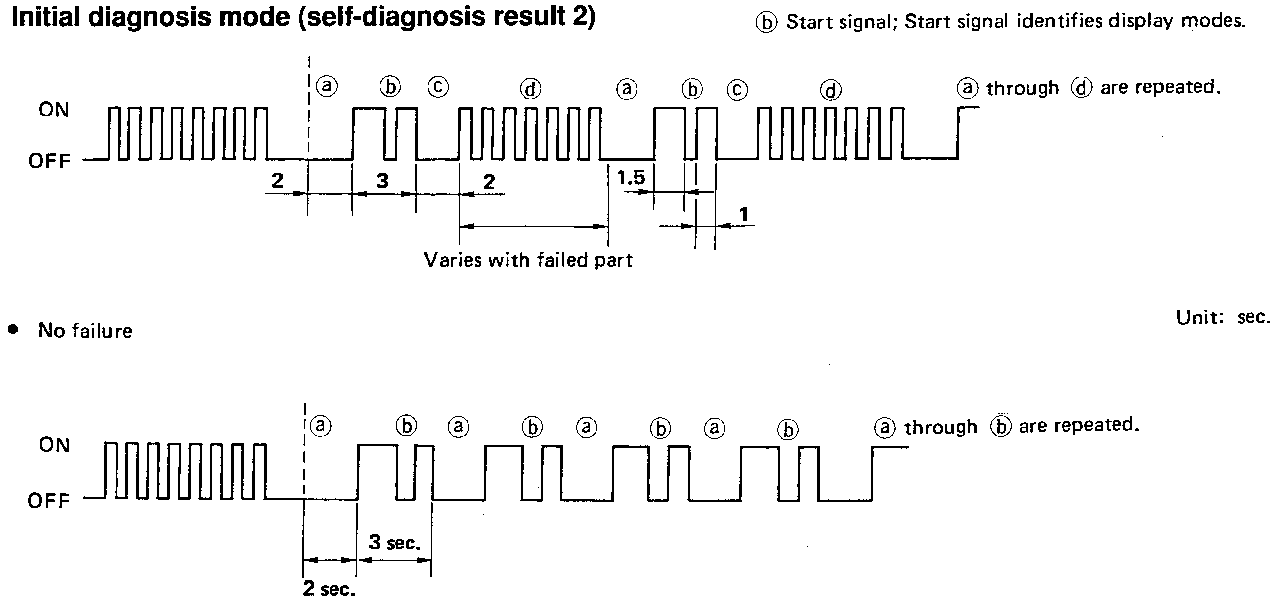

ABF183

Self-diagnosis results in present- and initial-diagnosis modes can be identified by number of flashes ⓓ. Refer to Table on next page for failed parts.

Self-diagnosis (Cont'd)

Warning lamp flashing times and repair

Flash code ⓓ (# of flashes)	Explanation	Repair order * Recheck SRS at each replacement.
0	Normal. The SRS "Air Bag" is in good order.	—
1	The circuit for the safing sensor is out of order.	1. Visually check the wiring harness connections. 2. Replace the safing sensor. (safing sensor and tunnel sensor) 3. Replace the control module. 4. Replace the main harness.
2	The circuit for the driver's air bag module is out of order.	1. Visually check the wiring harness connections. 2. Replace the spiral cable. 3. Replace the driver's air bag module. (Before disposing of it, it must be deployed.) 4. Replace the control module. 5. Replace the main harness.
3	The circuit for the tunnel sensor is out of order.	1. Visually check the wiring harness connections. 2. Replace the tunnel sensor. (safing sensor and tunnel sensor) 3. Replace the control module. 4. Replace the main harness.
6	The circuit for the center crash zone sensor is out of order.	1. Visually check the wiring harness connections. 2. Replace the center crash zone sensor. 3. Replace the control module. 4. Replace the main harness.
7	The control module (diagnostic module) is out of order.	1. Visually check the wiring harness connections. 2. Replace the control module. 3. Replace the main harness.
8	The circuit for the front passenger air bag module is out of order.	1. Visually check the wiring harness connections. 2. Replace the front passenger air bag module. (Before disposing of it, it must be deployed.) 3. Replace the control module. 4. Replace the main harness.
9	More than two parts groups are out of order.	1. See the SELF-DIAGNOSIS RESULT 2 failure parts group [Initial], then repair it. 2. Visually check the wiring harness connections. 3. Replace the control module. 4. Replace all sensors, spiral cable and air bag module. 5. Replace the main harness.

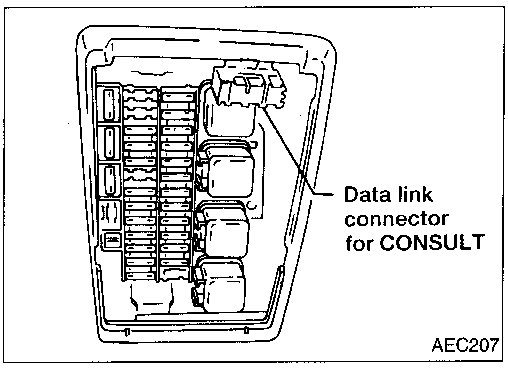

Diagnostic Procedure 1

SYMPTOM: Warning lamp flashes.

Connect CONSULT and operate it. Read the SELF-DIAGNOSIS RESULTS 1 and 2.	→ Refer to SELF-DIAGNOSIS RESULTS and repair.
OR	
Refer to warning lamp self-diagnosis.	→ Refer to the number of warning lamp flashes. Repair as necessary.

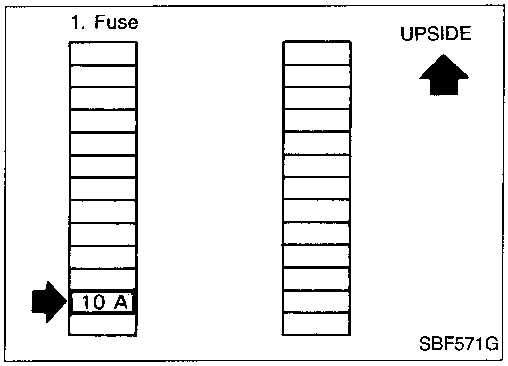

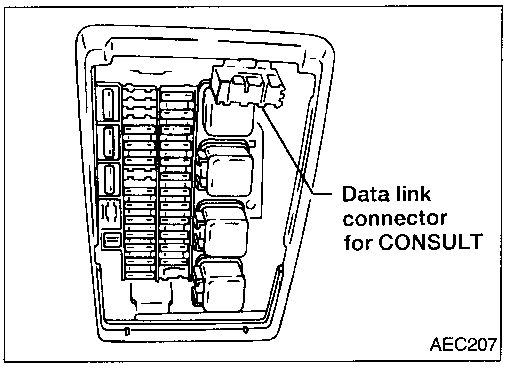

Diagnostic Procedure 2

SYMPTOM: Warning lamp does not come on.

1. Check the warning lamp fuse. — N.G. → Replace the fuse.
   O.K. ↓
2. Connect CONSULT and begin diagnosis.
   - Is "AIR BAG" displayed on the CONSULT screen? — N.G. → Replace the control module.
   O.K. ↓
3. Read the SELF-DIAGNOSIS RESULTS 1 and 2. — N.G. → Refer to SELF-DIAGNOSIS RESULTS and repair.
   O.K. ↓
4. Check the warning lamp bulb. — N.G. → Replace the warning lamp bulb.
   O.K. ↓
5. Check the warning lamp harness connection. — N.G. → Replace the harness.
   O.K. ↓
6. Replace the control module.

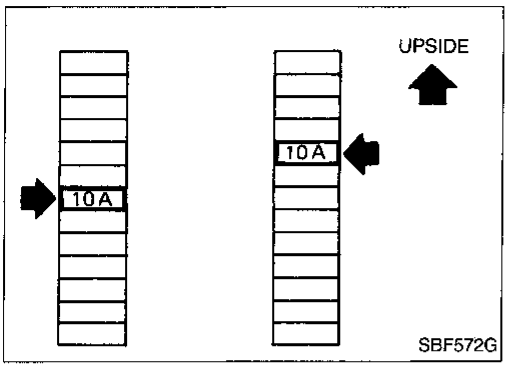

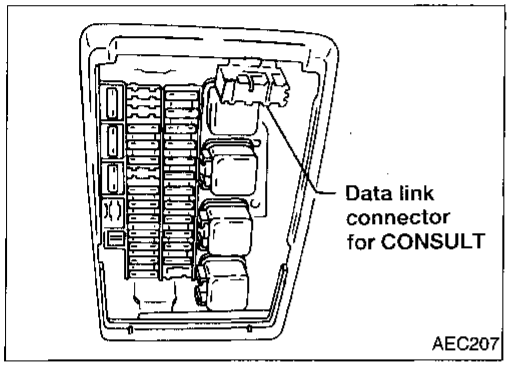

Diagnostic Procedure 3

SYMPTOM: Warning lamp does not go off.

1. Have the air bag modules been deployed?
   - Yes → Replace the air bag modules.
   - No ↓
2. Check the fuses used for the SRS "Air Bag" and "Elec Device".
   - N.G. → Replace the fuse.
   - O.K. ↓
3. Connect CONSULT and operate it.
   - Is "AIR BAG" displayed on the CONSULT?
   - N.G. → Replace the control module.
   - O.K. ↓
4. Read the SELF-DIAGNOSIS RESULTS 1 and 2.*
   - N.G. → Refer to SELF-DIAGNOSIS RESULTS and repair.

   OR

   Refer to the warning lamp self-diagnosis.*
   - N.G. → Refer to the warning lamp flashing times and repair as necessary.
   - O.K. ↓
5. Check the harness connection between the warning lamp and the control module.
   - N.G. → Replace the harness.
   - O.K. ↓
6. Replace the control module.

* Recheck SRS after each replacement.

Collision Diagnosis

To repair the SRS "AIR BAG", perform the following steps.

① Check the control module (diagnostic module).
- Connect CONSULT and then erase the memory. (However, the memory may not be cleared.)

OR

- Check "AIR BAG" warning lamp and perform the following twice: turn driver's door switch ON and OFF 5 times within 7 seconds after ignition switch turned "ON".

↓ If "AIR BAG" warning lamp comes on continuously.

Replace the control module.

② Remove the deployed air bag modules.

③ Check the SRS components using the table shown below:
- If the SRS components are showing any visible damage such as dents, cracks, or deformation, replace them with new ones.

④ Conduct self-diagnosis using CONSULT or "AIR BAG" warning lamp to ensure entire SRS operates properly except open circuits of air bag modules.

⑤ Install new air bag modules.

	Inspection (when air bag deploys in collision)	Inspection (when air bag does not deploy in low-speed collision)
Steering wheel	(1) Check harness (built into steering wheel) and connectors for damage, and terminals for deformities. (2) Install air bag module to check fit or alignment with steering wheel. (3) Check steering wheel for excessive free play.	
In-compartment sensor All sensors (except those affected by collision)	(1) Check body and sensor brackets for deformities or rust. (2) Check sensor case for dents, cracks, deformities or rust. (3) Check sensor harness for binding, connector for damage, and terminals for deformities.	
Air bag modules	Replace air bag modules.	(1) Remove air bag modules. Check harness cover and connectors for damage, terminals for deformities, and harness for binding. (2) Install driver's air bag module to steering wheel to check fit or alignment with the wheel. (3) Replace air bag module screws with new ones.
Harness connector (Main and Instrument harness)	(1) Check connectors for poor connections. (2) Check harness for binding, connectors for damage, and terminals for deformities.	
Spiral cable	(1) Visually check lock (engagement) pins and combination switch for damage. (2) Check connectors, flat cable and protective tape for damage. (3) Check steering wheel for noise, binding or heavy operation.	
Control module	Replace control module (diagnostic module).	(1) Check case and bracket for dents, cracks or deformities. (2) Check connectors for damage, and terminals for deformities.