SECTION MA

CONTENTS

Precautions for Supplemental Restraint System (SRS) "AIR BAG"

The Supplemental Restraint System "Air Bag", used along with a seat belt, helps to reduce the risk or severity of injury to the driver and front passenger in a frontal collision. The Supplemental Restraint System consists of air bag modules (located in the center of the steering wheel and on the instrument panel on the passenger side), a diagnosis sensor unit, warning lamp, wiring harness and spiral cable. Information necessary to service the system safely is included in the **RS section** of this Service Manual.

WARNING:

- **To avoid rendering the SRS inoperative, which could increase the risk of personal injury or death in the event of a collision which would result in air bag inflation, all maintenance must be performed by an authorized NISSAN dealer.**
- **Improper maintenance, including incorrect removal and installation of the SRS, can lead to personal injury caused by unintentional activation of the system.**
- **Do not use electrical test equipment on any circuit related to the SRS unless instructed to in this Service Manual. SRS wiring harnesses are covered with yellow insulation either just before the harness connectors or for the complete harness, for easy identification.**

General maintenance includes those items which should be checked during normal day-to-day operation of the vehicle. They are essential if the vehicle is to continue operating properly. The owners can perform checks and inspections themselves or have their NISSAN dealers do them.

Item	Reference page
OUTSIDE THE VEHICLE The maintenance items listed here should be performed from time to time, unless otherwise specified.	
Tires Check the pressure with a gauge periodically when at a service station, including the spare, and adjust to the specified pressure if necessary. Check carefully for damage, cuts or excessive wear.	—
Wheel nuts When checking the tires, make sure no nuts are missing, and check for any loose nuts. Tighten if necessary.	—
Tire rotation Tires should be rotated every 12,000 km (7,500 miles.)	MA-19
Wheel alignment and balance If the vehicle pulls to either side while driving on a straight and level road, or if you detect uneven or abnormal tire wear, there may be a need for wheel alignment. If the steering wheel or seat vibrates at normal highway speeds, wheel balancing may be needed.	MA-19, FA-5
Windshield wiper blades Check for cracks or wear if they do not wipe properly.	—
Doors and engine hood Check that all doors and the engine hood as well as the trunk lid or back hatch operate smoothly. Also, make sure that all latches lock securely. Lubricate if necessary. Make sure that the secondary latch keeps the hood from opening when the primary latch is released. When driving in areas using road salt or other corrosive materials, check lubrication frequently.	MA-21
INSIDE THE VEHICLE The maintenance items listed here should be checked on a regular basis, such as when performing periodic maintenance-cleaning the vehicle, etc.	
Lamps Make sure that the headlamps, stop lamps, tail lamps, turn signal lamps, and other lamps are all operating properly and installed securely. Also, check headlamp aim.	—
Warning lamps and buzzers/chimes Make sure that all warning lamps and buzzers/chimes are operating properly.	—
Windshield wiper and washer Check that the wipers and washer operate properly and that the wipers do not streak.	—
Windshield defroster Check that air comes out of the defroster outlets properly and in good quantity when operating the heater or air conditioning.	—
Steering wheel Check that it has the specified play. Be sure to check for changes in the steering condition, such as excessive play, hard steering or strange noises. **Free play: Less than 35 mm (1.38 in)**	ST-7
Seats Check seat position controls such as seat adjusters, seatback recliner, etc. to make sure they operate smoothly and that all latches lock securely in every position. Check that the head restraints move up and down smoothly and that the locks (if equipped) hold securely in all latched positions. Check that the latches lock securely for folding-down rear seatbacks.	—
Seat belts Check that all parts of the seat belt system (e.g., buckles, anchors, adjusters and retractors) operate properly and smoothly and are installed securely. Check the belt webbing for cuts, fraying, wear or damage.	MA-21
Clutch pedal Make sure the pedal operates smoothly and check that it has the proper free play.	CL-4
Brakes Check that the brake does not pull the vehicle to one side when applied.	—
Brake pedal and booster Check the pedal for smooth operation and make sure it has the proper distance under it when depressed fully. Check the brake booster function. Be sure to keep the floor mats away from the pedal.	BR-9, 14
Parking brake Check that the lever has the proper travel and make sure that the vehicle is held securely on a fairly steep hill when only the parking brake is applied.	BR-33

Item	Reference page
Automatic transaxle "Park" mechanism Check that the lock release button on the selector lever operates properly and smoothly. On a fairly steep hill check that the vehicle is held securely with the selector lever in the "P" position without applying brakes.	—
UNDER THE HOOD AND VEHICLE The maintenance items listed here should be checked periodically (e.g., each time you check the engine oil or refuel).	
Windshield washer fluid Check that there is adequate fluid in the tank.	—
Engine coolant level Check the coolant level when the engine is cold.	MA-12
Radiator and hoses Check the front of the radiator and clean off any dirt, insects, leaves, etc., that may have accumulated. Make sure the hoses have no cracks, deformation, deterioration or loose connections.	LC-8
Brake and clutch fluid levels Make sure that the brake and clutch fluid levels are between the "MAX" and "MIN" lines on the reservoir.	MA-16, 18
Battery Check the fluid level in each cell. It should be between the "MAX" and "MIN" lines.	EL-18
Engine drive belts Make sure that no belt is frayed, worn, cracked or oily.	MA-10
Engine oil level Check the level on the dipstick after parking the vehicle on a level spot and turning off the engine.	MA-14
Power steering fluid level and lines Check the level on the dipstick with the engine off. Check the lines for proper attachment, leaks, cracks, etc.	MA-20
Automatic transaxle fluid level Check the level on the dipstick after putting the selector lever in "P" with the engine idling.	MA-17
Exhaust system Make sure there are no loose supports, cracks or holes. If the sound of the exhaust seems unusual or there is a smell of exhaust fumes, immediately locate the trouble and correct it.	MA-16
Underbody The underbody is frequently exposed to corrosive substances such as those used on icy roads or to control dust. It is very important to remove these substances, otherwise rust will form on the floor pan, frame, fuel lines and around the exhaust system. At the end of winter, the underbody should be thoroughly flushed with plain water, and carefully cleaned in those areas where mud and dirt can easily accumulate.	—
Fluid leaks Check under the vehicle for fuel, oil, water or other fluid leaks after the vehicle has been parked for awhile. Water dripping from the air conditioning after use is normal. If you should notice any leaks or if gasoline fumes are evident, check for the cause and correct it immediately.	—

Two different maintenance schedules are provided, and should be used, depending upon the conditions in which the vehicle is mainly operated. **After 60,000 miles (96,000 km) or 48 months, continue the periodic maintenance at the same mileage/time intervals.**

SCHEDULE 1

Follow Periodic Maintenance Schedule 1 if the driving habits frequently include one or more of the following driving conditions:

- Repeated short trips of less than 5 miles (8 km).
- Repeated short trips of less than 10 miles (16 km) with outside temperatures remaining below freezing.
- Operating in hot weather in stop-and-go "rush hour" traffic.
- Extensive idling and/or low speed driving for long distances, such as police, taxi or door-to-door delivery use.
- Driving in dusty conditions.
- Driving on rough, muddy, or salt spread roads.
- Towing a trailer, using a camper or a car-top carrier.

SCHEDULE 2

Follow Periodic Maintenance Schedule 2 if none of the driving conditions shown in Schedule 1 apply to the driving habits.

Schedule 1

Abbreviations: R = Replace. I = Inspect. Correct or replace if necessary. [ ]: At the mileage intervals only

MAINTENANCE OPERATION Perform at number of miles, kilometers or months, whichever comes first.	Miles x 1,000 (km x 1,000) Months	MAINTENANCE INTERVAL 3.75 (6) 3	7.5 (12) 6	11.25 (18) 9	15 (24) 12	18.75 (30) 15	22.5 (36) 18	26.25 (42) 21	30 (48) 24	33.75 (54) 27	37.5 (60) 30	41.25 (66) 33	45 (72) 36	48.75 (78) 39	52.5 (84) 42	56.25 (90) 45	60 (96) 48	Reference page
Emission control system maintenance																		
Drive belts	See NOTE (1)																I*	MA-10
Air cleaner filter	See NOTE (2)								[R]								[R]	MA-13
Vapor lines									I*								I*	MA-15
Fuel lines									I*								I*	MA-12
Fuel filter	See NOTE (3)*																	MA-13
Engine coolant	See NOTE (4)																R*	MA-11
Engine oil		R	R	R	R	R	R	R	R	R	R	R	R	R	R	R	R	MA-14
Engine oil filter (Use Nissan PREMIUM type or equivalent)		R	R	R	R	R	R	R	R	R	R	R	R	R	R	R	R	MA-14
Spark plugs									[R]								[R]	MA-15
Intake & exhaust valve clearance	See NOTE (5)*																	EM-37
Chassis and body maintenance																		
Brake lines & cables					I				I				I				I	MA-18
Brake pads, discs, drums & linings			I		I		I		I		I		I		I		I	MA-18
Manual & automatic transaxle oil	See NOTE (6)				I				I				I				I	MA-16, 17
Steering gear & linkage, axle & suspension parts			I		I		I		I		I		I		I		I	MA-19, FA-4, RA-4
Steering linkage ball joints & front suspension ball joints			I		I		I		I		I		I		I		I	MA-19, FA-5
Exhaust system			I		I		I		I		I		I		I		I	MA-16
Drive shaft boots			I		I		I		I		I		I		I		I	FA-18
Air bag system	See NOTE (7)																	RS-7

NOTE:
(1) After 60,000 miles (96,000 km) or 48 months, inspect every 15,000 miles (24,000 km) or 12 months.
(2) If operating mainly in dusty conditions, more frequent maintenance may be required.
(3) If vehicle is operated under extremely adverse weather conditions or in areas where ambient temperatures are either extremely low or extremely high, the filters might become clogged. In such an event, replace them immediately.
(4) After 60,000 miles (96,000 km) or 48 months, replace every 30,000 miles (48,000 km) or 24 months.
(5) If valve noise increases, inspect valve clearance.
(6) If towing a trailer, using a camper or a car-top carrier, or driving on rough or muddy roads, change (not just inspect) oil at every 30,000 miles (48,000 km) or 24 months.
(7) Inspect the air bag system 10 years after the date of manufacture noted on the FMVSS certification label.
*** Maintenance items and intervals with "*" are recommended by NISSAN for reliable vehicle operation. The owner need not perform such maintenance in order to maintain the emission warranty or manufacturer recall liability. Other maintenance items and intervals are required.**

Schedule 2

Abbreviations: R = Replace. I = Inspect. Correct or replace if necessary.

[ ]: At the mileage intervals only

MAINTENANCE OPERATION Perform at number of miles, kilometers or months, whichever comes first.	Miles x 1,000 (km x 1,000) Months	MAINTENANCE INTERVAL 7.5 (12) 6	15 (24) 12	22.5 (36) 18	30 (48) 24	37.5 (60) 30	45 (72) 36	52.5 (84) 42	60 (96) 48	Reference page
Emission control system maintenance										
Drive belts	See NOTE (1)								I*	MA-10
Air cleaner filter					[R]				[R]	MA-13
Vapor lines					I*				I*	MA-15
Fuel lines					I*				I*	MA-12
Fuel filter	See NOTE (2)*									MA-13
Engine coolant	See NOTE (3)								R*	MA-11
Engine oil		R	R	R	R	R	R	R	R	MA-14
Engine oil filter (Use Nissan PREMIUM type or equivalent)		R	R	R	R	R	R	R	R	MA-14
Spark plugs					[R]				[R]	MA-15
Intake & exhaust valve clearance	See NOTE (4)*									EM-37
Chassis and body maintenance										
Brake lines & cables			I		I		I		I	MA-18
Brake pads, discs, drums & linings			I		I		I		I	MA-18
Manual & automatic transaxle oil			I		I		I		I	MA-16, 17
Steering gear linkage, axle & suspension parts					I				I	MA-19, FA-5, RA-4
Exhaust system					I				I	MA-16
Drive shaft boots			I		I		I		I	FA-18
Air bag system	See NOTE (5)									RS-7

NOTE: (1) After 60,000 miles (96,000 km) or 48 months, inspect every 15,000 miles (24,000 km) or 12 months.
(2) If vehicle is operated under extremely adverse weather conditions or in areas where ambient temperatures are either extremely low or extremely high, the filters might become clogged. In such an event, replace them immediately.
(3) After 60,000 miles (96,000 km) or 48 months, replace every 30,000 miles (48,000 km) or 24 months.
(4) If valve noise increases, inspect valve clearance.
(5) Inspect the air bag system 10 years after the date of manufacture noted on the FMVSS certification label.
*** Maintenance items and intervals with "*" are recommended by NISSAN for reliable vehicle operation. The owner need not perform such maintenance in order to maintain the emission warranty or manufacturer recall liability. Other maintenance items and intervals are required.**

Fluids and Lubricants

	Capacity (Approximate)			Recommended fluids and lubricants
	US measure	Imp measure	Liter	
Engine oil (Refill)				
With oil filter	4-1/8 qt	3-3/8 qt	3.9	● API SG or SH and Energy Conserving II*2 ● API Certification Mark*2
Without oil filter	3-3/4 qt	3-1/8 qt	3.5	
Cooling system (Reservoir tank included)	8-1/4 qt	6-7/8 qt	7.8	Anti-freeze coolant (Ethylene glycol base)
Manual transaxle gear oil				
RS5F50A	9-1/2 - 10-1/8 pt	7-7/8 - 8-1/2 pt	4.5 - 4.8	API GL-4*2
RS5F50V	9-1/8 - 9-1/2 pt	7-5/8 - 7-7/8 pt	4.3 - 4.5	
Automatic transaxle fluid				
RE4F04A RE4F04V	10 qt	8-1/4 qt	9.4	Nissan Matic 'D' (Continental U.S. and Alaska) or Genuine Nissan Automatic Transmission Fluid (Canada).*1
Power steering fluid	1 qt	3/4 qt	0.9	Type DEXRON™ II or equivalent
Brake & Clutch fluid	—	—	—	Genuine Nissan Brake Fluid*3 or equivalent DOT 3 (US FMVSS No. 116)
Multi-purpose grease	—	—	—	NLGI No. 2 (Lithium soap base)

*1: Dexron® III/Mercon® or equivalent may also be used. Outside the continental United States and Alaska contact a NISSAN dealership for more information regarding suitable fluids, including recommended brand(s) of Dexron® III/Mercon® or Dexron® IIE/Mercon® Automatic Transmission Fluid.
*2: For further details, see "SAE Viscosity Number".
*3: Available in mainland U.S.A. through your NISSAN dealer.

SAE Viscosity Number

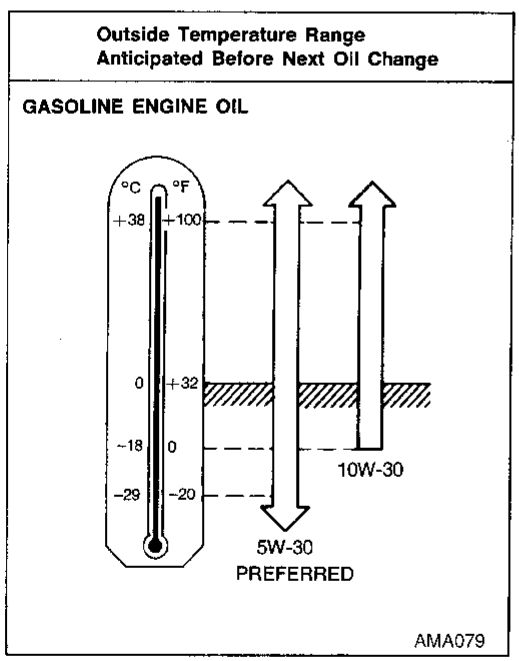

SAE 5W-30 viscosity oil is preferred for all temperatures. SAE 10W-30 viscosity oil may be used if the ambient temperature is above –18°C (0°F).

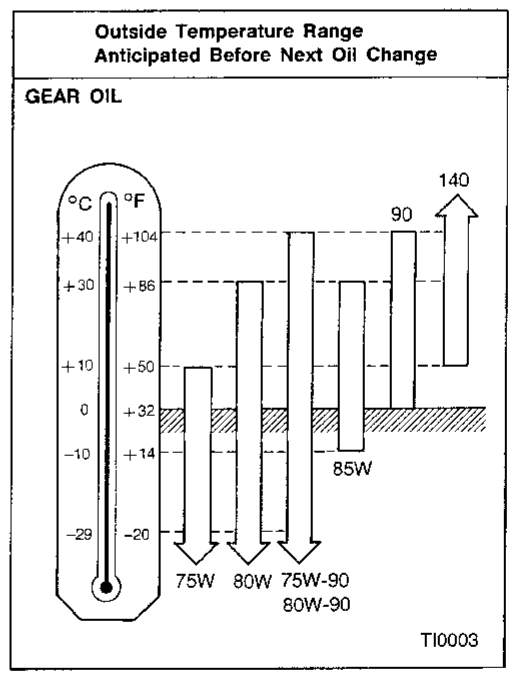

80W-90 is preferable for ambient temperatures below 40°C (104°F).

Anti-freeze Coolant Mixture Ratio

The engine cooling system is filled at the factory with a high-quality, year-round, anti-freeze coolant solution. The anti-freeze solution contains rust and corrosion inhibitors, therefore additional cooling system additives are not necessary.

CAUTION:

When adding or replacing coolant, be sure to use only an ethylene glycol anti-freeze with the proper mixture ratio. See the following examples:

Outside temperature down to		Anti-freeze	Soft water
°C	°F		
–15	5	30%	70%
–35	–30	50%	50%

The use of other types of coolant solutions may damage the cooling system.

Checking Drive Belts

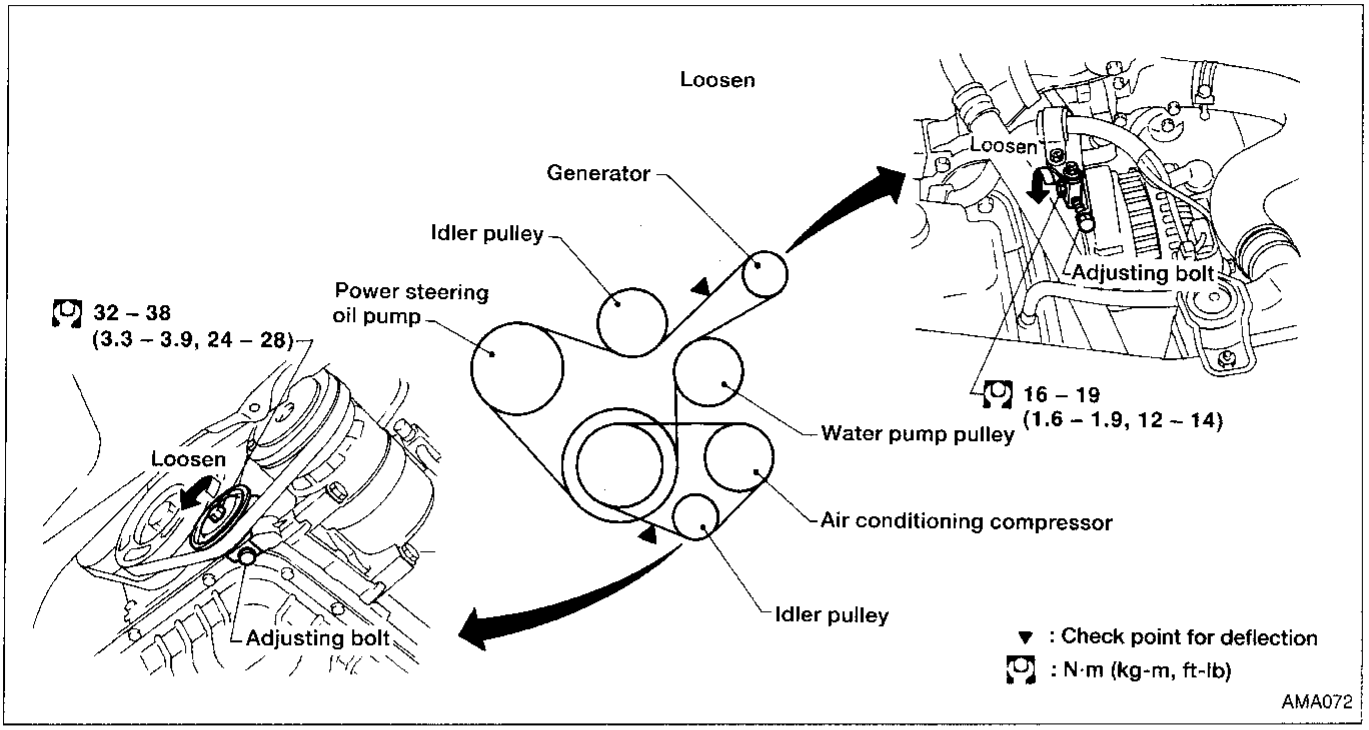

1. Inspect belts for cracks, fraying, wear or oil. If necessary, replace.
2. Inspect drive belt deflections by pushing midway between pulleys.

Inspect drive belt deflections when engine is cold.
Adjust if belt deflections exceed the limit.

Belt deflection:

Unit: mm (in)

	Used belt deflection		Deflection of new belt
	Limit	Deflection after adjustment	
Generator & Power steering oil pump	8 (0.31)	6 - 7 (0.24 - 0.28)	5 - 6 (0.20 - 0.24)
Air conditioning compressor	10 (0.39)	7 - 8 (0.28 - 0.31)	6 - 7 (0.24 - 0.28)
Applied pushing force	98 N (10 kg, 22 lb)		

Changing Engine Coolant

WARNING:
To avoid being scalded, never change the coolant when the engine is hot.

—DRAINING ENGINE COOLANT—

1. Set air conditioning system as follows to prevent coolant from remaining in the system.

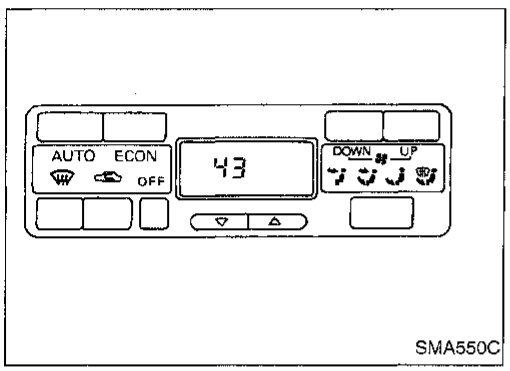

SMA550C

Automatic air conditioning

Perform self-diagnosis step 4 of Automatic Air Conditioning system, referring to the following notes. Refer to HA section ("Self-diagnosis", "TROUBLE DIAGNOSES — Auto Air Conditioning").

a. Turn ignition switch from "OFF" to "ON".
b. Within 5 seconds after ignition switch is turned "ON", press OFF switch and hold in for at least 5 seconds.
c. Press ▲ (HOT) switch 3 times.
d. Press (DEF) switch 2 times.
e. Confirm indication of the A/C display shown at left.
f. Wait 10 seconds before turning ignition switch "OFF".

This step is necessary to allow heater water cock to open wide.

Manual air conditioning

a. Turn ignition switch "ON" and set temperature controller to maximum hot position.
b. Wait 10 seconds before turning ignition switch "OFF".

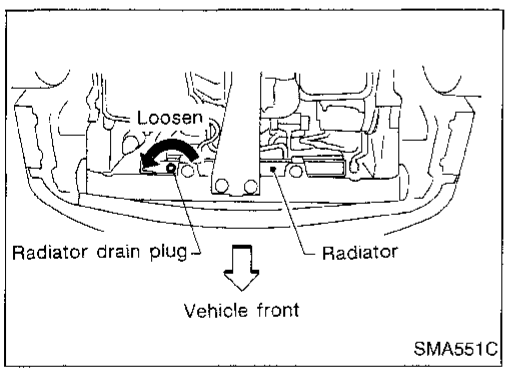

SMA551C

2. Open drain plug at the bottom of radiator, and remove radiator cap.

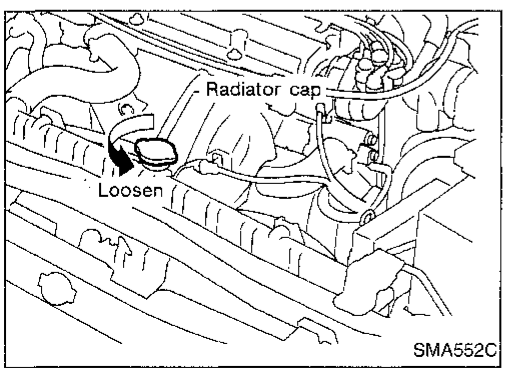

SMA552C

Changing Engine Coolant (Cont'd)

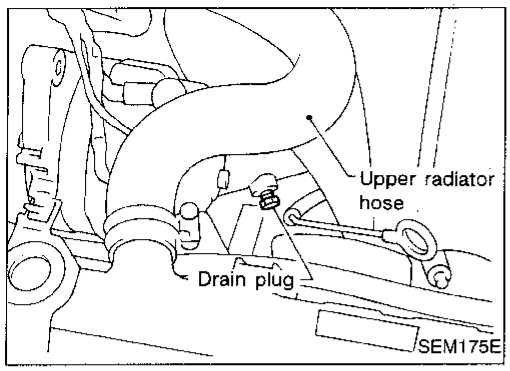

3. Remove drain plug on water pipe.
4. Close radiator drain plug and tighten drain plug on water pipe securely.

- **Apply sealant to the thread of drain plug on water pipe.**
  : 34 - 44 N·m
  (3.5 - 4.5 kg-m, 25 - 33 ft-lb)

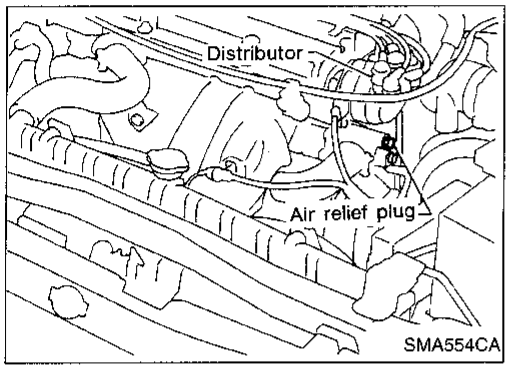

—FLUSHING COOLING SYSTEM—

5. Open air relief plug.
6. Fill radiator with water until water spills from the air relief hole, then reinstall air relief plug. Fill radiator and reservoir tank with water and reinstall radiator cap.
7. Run engine and warm it up sufficiently.
8. Race engine 2 or 3 times under no-load.
9. Stop engine and wait until it cools down.
10. Drain water.
11. Repeat steps 1 through 10 until clear water begins to drain from radiator.

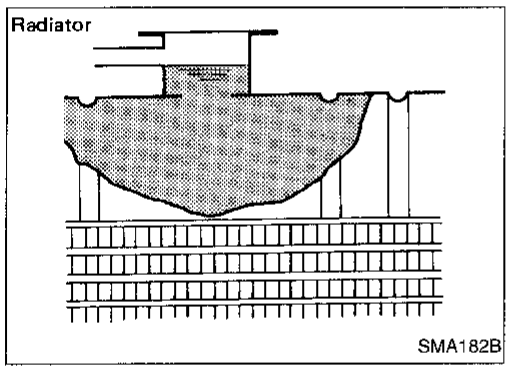

—REFILLING ENGINE COOLANT—

12. Open radiator cap and air relief plug.
13. Fill radiator with coolant up to specified level following steps 1 through 9.
    Follow instructions attached to anti-freeze container for mixing ratio of anti-freeze to water.
    Engine coolant capacity (With reservoir tank):
    7.8 ℓ (8-1/4 US qt, 6-7/8 Imp qt)
    Reservoir tank capacity:
    0.7 ℓ (3/4 US qt, 5/8 Imp qt)

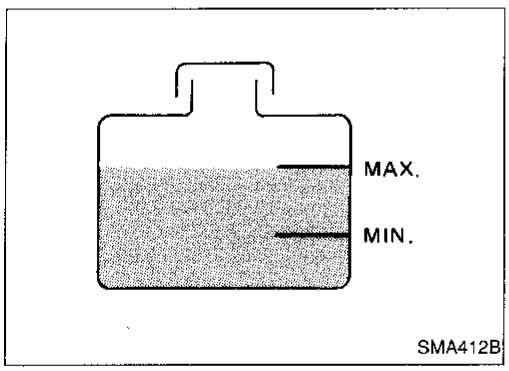

For coolant mixture ratio, refer to "RECOMMENDED FLUIDS AND LUBRICANTS", MA-8.

Pour coolant through coolant filler neck slowly to allow air in system to escape.

14. If necessary, add coolant.
15. Start and warm up engine, then increase engine speed to 4,000 rpm. Check that radiator coolant level does not lower, and no water noise is heard in heater core.

- **Clean excess coolant from engine block.**

Checking Fuel Lines

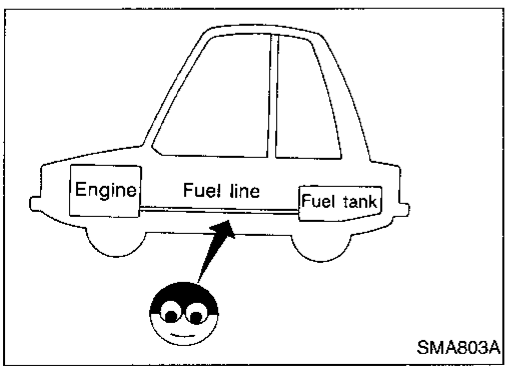

Inspect fuel lines and tank for improper attachment, leaks, cracks, damage, chafing, or deterioration.
If necessary, repair or replace.

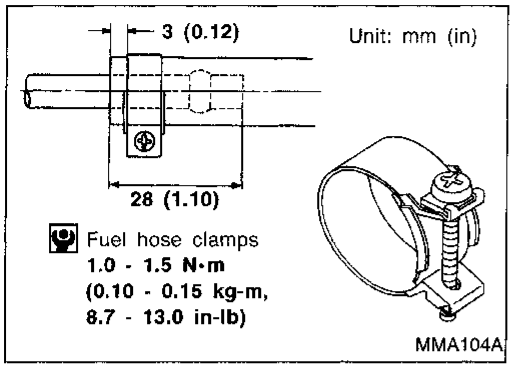

Changing Fuel Filter

CAUTION:
Tighten high-pressure rubber hose clamp so that clamp end is 3 mm (0.12 in) from hose end.
Tightening torque specifications are the same for all rubber hose clamps.
Ensure that screw does not contact adjacent parts.

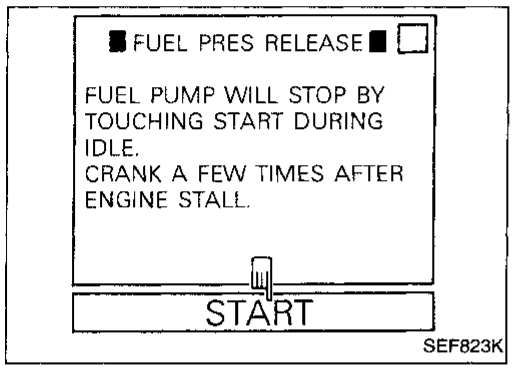

WARNING:
Before removing fuel filter, release fuel pressure from fuel line.

1. Release fuel pressure using the following procedure.
   a. Start engine.
   b. Perform "FUEL PRESSURE RELEASE" in "WORK SUPPORT" mode to release fuel pressure to zero.
   c. After engine stalls, crank engine two or three times to make sure that fuel pressure is released.
   d. Turn ignition switch "OFF".

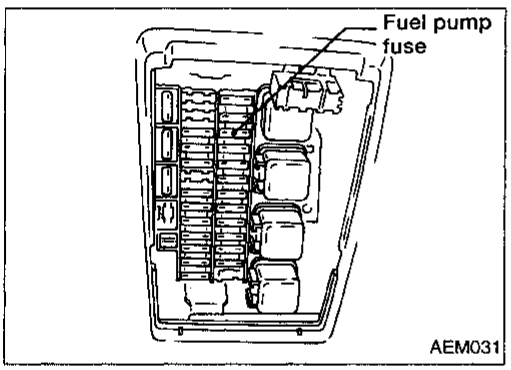

   a. Remove fuse for fuel pump.
   b. Start engine.
   c. After engine stalls, crank engine two or three times to make sure that fuel pressure is released.
   d. Turn ignition switch "OFF", and install fuse for fuel pump.

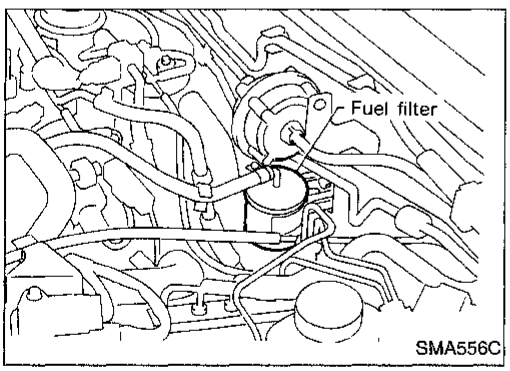

WARNING:
Use rubber gloves to prevent fuel from contacting the skin when removing fuel hoses and filter.

2. Loosen fuel hose clamps.
3. Replace fuel filter.

- **Be careful not to spill fuel over engine compartment. Place a shop towel to absorb fuel.**
- **Use a high-pressure type fuel filter. Do not use a synthetic resinous fuel filter.**

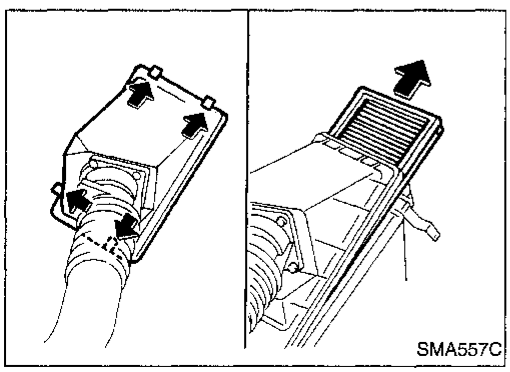

Changing Air Cleaner Filter

Unfasten clamps to change air cleaner filter.

The viscous paper type filter does not need cleaning between renewals.

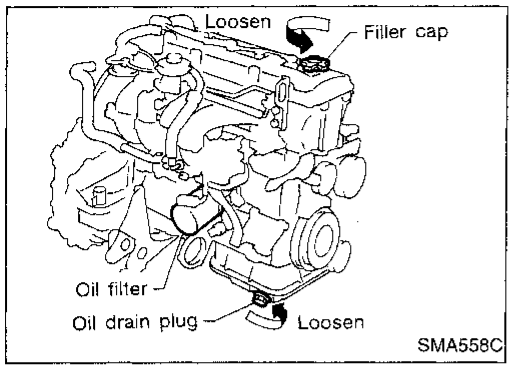

Changing Engine Oil

WARNING:

- **Be careful not to burn yourself, as the engine oil is hot.**
- **Prolonged and repeated contact with used engine oil may cause skin cancer; try to avoid direct skin contact with used oil. If skin contact is made, wash thoroughly with soap or hand cleaner as soon as possible.**

1. Warm up engine, and check for oil leakage from engine components.
2. Remove drain plug and oil filler cap.
3. Drain oil and refill with new engine oil.

Oil grade: API SG or SH
Viscosity: Refer to MA-8.

Refill oil capacity (Approximately):

With oil filter change	3.9 ℓ (4-1/8 US qt, 3-3/8 Imp qt)
Without oil filter change	3.5 ℓ (3-3/4 US qt, 3-1/8 Imp qt)

CAUTION:

- **Be sure to clean drain plug and install with new washer.**
  Drain plug:
  [O]: 29 - 39 N·m (3.0 - 4.0 kg-m, 22 - 29 ft-lb)
- **The refill capacity depends on the oil temperature and drain time; use "Refill oil capacity" values as a reference and be certain to check with the dipstick when changing the oil.**

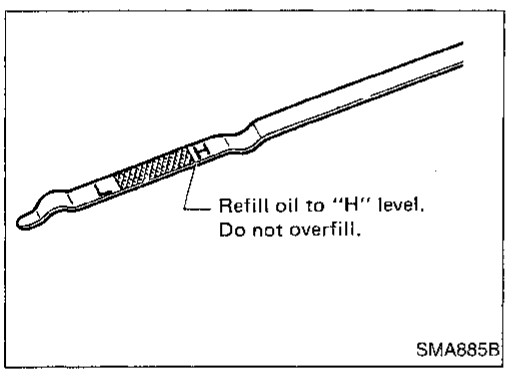

4. Check oil level.
5. Start engine and check area around drain plug and oil filter for oil leakage.
6. Run engine for a few minutes, then turn it off. After several minutes, check oil level.

Changing Oil Filter

1. Remove oil filter with a suitable tool.

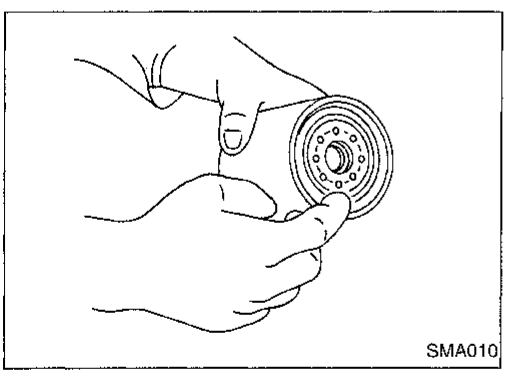

WARNING:
Be careful not to burn yourself, as the engine and the engine oil are hot.

2. Clean oil filter mounting surface on cylinder block. Coat rubber seal of new oil filter with engine oil.

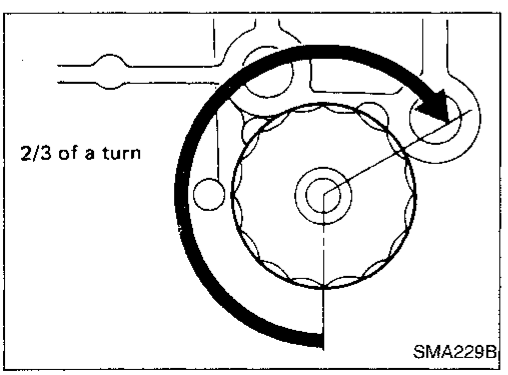

3. Screw in the oil filter until a slight resistance is felt, then tighten additionally more than 2/3 turn.
4. Add engine oil.

Refer to "Changing Engine Oil", MA-14.

- **Clean excess oil from engine block.**

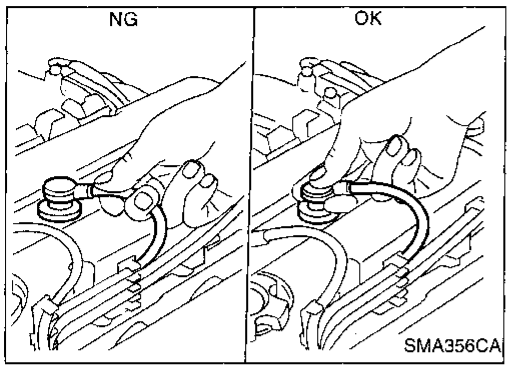

Changing Spark Plugs

1. Disconnect ignition wires from spark plugs at boot. Do not pull on the wire.

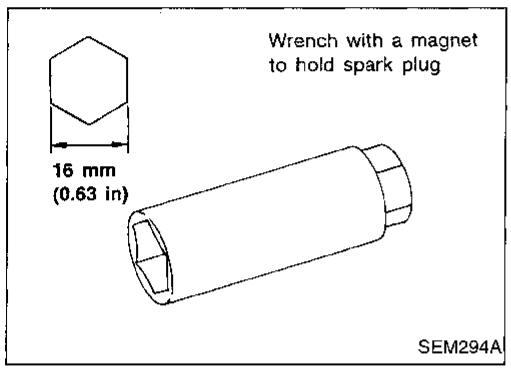

2. Remove spark plugs with spark plug socket.

Spark plug:

Make	NGK
Standard type	BKR5E-11
Cold type	BKR6E-11 BKR7E-11

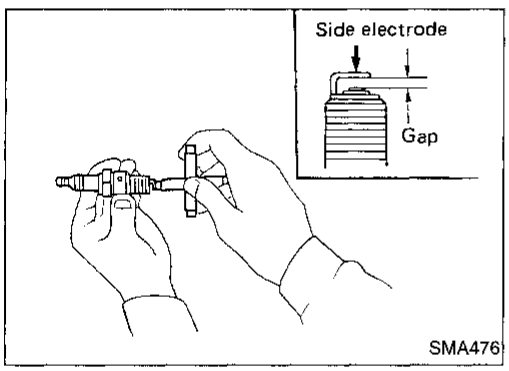

3. Check plug gap of each new spark plug.
   Gap: 1.0 - 1.1 mm (0.039 - 0.043 in)
- **Use a wire brush for cleaning, if necessary.**
4. Install spark plugs. Reconnect ignition wires according to numbers indicated on them.
   Spark plug:
   [O]: 20 - 29 N·m
   (2.0 - 3.0 kg-m, 14 - 22 ft-lb)

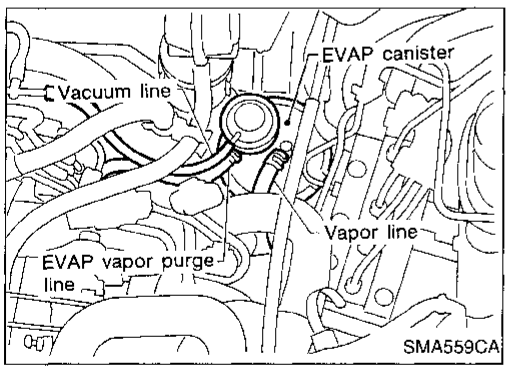

Checking Vapor Lines

1. Visually inspect vapor lines for improper attachment, cracks, damage, chafing, or deterioration.
2. Inspect vacuum relief valve of fuel tank filler cap for clogging, sticking, etc.
   Refer to EC section ("Inspection", "EVAPORATIVE EMISSION SYSTEM").

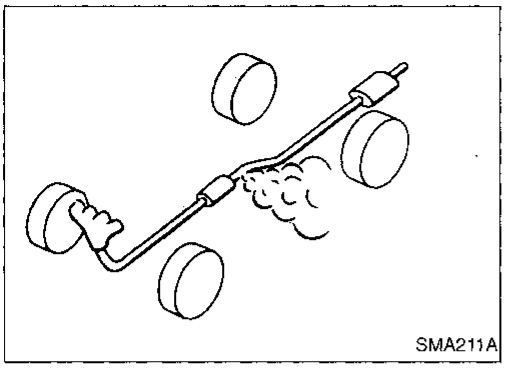

Checking Exhaust System

Check exhaust pipes, muffler and mounting for improper attachment, leaks, cracks, damage, chafing or deterioration.

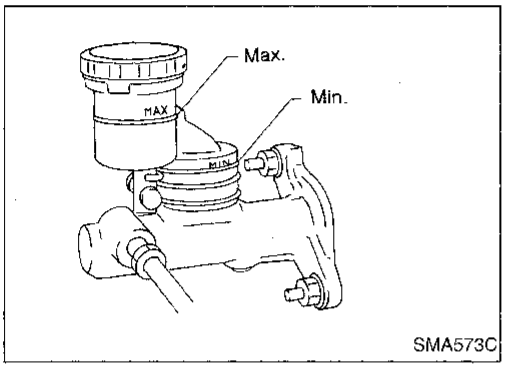

Checking Clutch Fluid Level and Leaks

If fluid level is extremely low, check clutch system for leaks.

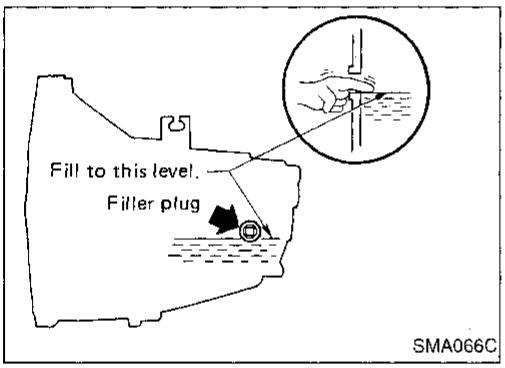

Checking M/T Oil

Check for oil leaks and oil level.

Never start engine while checking oil level.

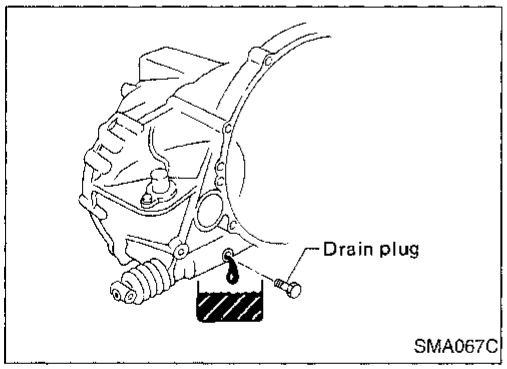

Changing M/T Oil

1. Drain oil from drain plug and refill with new gear oil.
2. Check oil level.

Oil grade: API GL-4
Oil viscosity:
Refer to MA-8.
Oil capacity:
RS5F50A
4.5 - 4.8 liters (9-1/2 - 10-1/8 US pt, 7-7/8 - 8-1/2 Imp pt)
RS5F50V
4.3 - 4.5 liters (9-1/8 - 9-1/2 US pt, 7-5/8 - 7-7/8 Imp pt)
Drain plug:
: 15 - 20 N·m (1.5 - 2.0 kg-m, 11 - 14 ft-lb)

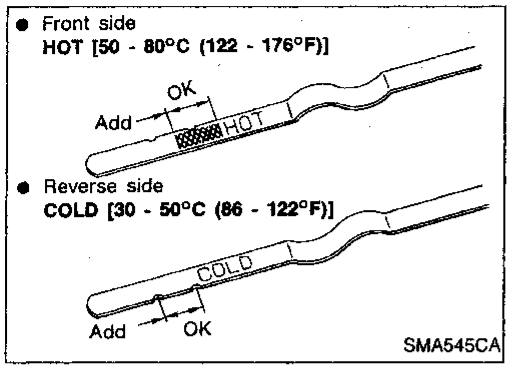

Checking A/T Fluid

1. Warm up engine.
2. Check for fluid leakage.
3. Before driving, fluid level can be checked at fluid temperatures of 30 to 50°C (86 to 122°F) using "COLD" range on dipstick.

a. Park vehicle on level surface and set parking brake.
b. Start engine and move selector lever through each gear position. Leave selector lever in "P" position.
c. Check fluid level with engine idling.
d. Remove dipstick and wipe clean with lint-free paper.
e. Re-insert dipstick as far as it will go into charging pipe.
f. Remove dipstick and note reading. If reading is at low side of range, add fluid to the charging pipe.

Do not overfill.

4. Drive vehicle for approximately 5 minutes in urban area.
5. Re-check fluid level at fluid temperatures of 50 to 80°C (122 to 176°F) using "HOT" range on dipstick.

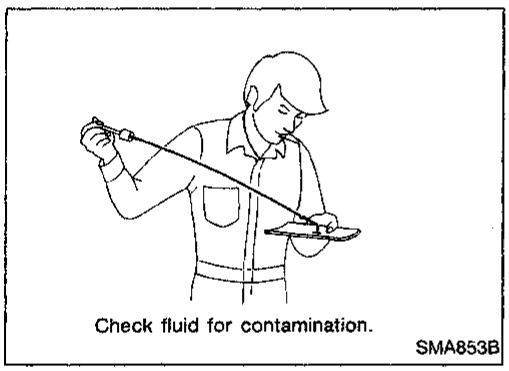

6. Check fluid condition.

a. If fluid is very dark or smells burned, refer to A/T section for checking operation of A/T. Flush cooling system after repair of A/T.
b. If A/T fluid contains frictional material (clutches, bands, etc.), replace radiator and flush cooler line using cleaning solvent and compressed air after repair of A/T. Refer to LC section ("Radiator", "ENGINE COOLING SYSTEM").

Changing A/T Fluid

1. Warm up A/T fluid.
2. Stop engine.
3. Drain A/T fluid from drain plug and refill with new A/T fluid. Always refill same volume with drained fluid.

   Fluid grade:
   Nissan Matic 'D' (Continental U.S. and Alaska) or Genuine Nissan Automatic Transmission Fluid (Canada). Refer MA-8.
   Fluid capacity (With torque converter):
   9.4 ℓ(10 US qt, 8-1/4 Imp qt)
   Drain plug:
   : 29 - 39 N·m (3.0 - 4.0 kg-m, 22 - 29 ft-lb)

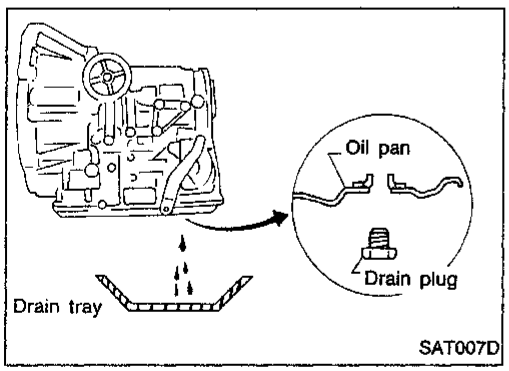

4. Run engine at idle speed for five minutes.
5. Check fluid level and condition. Refer to "Checking A/T Fluid", MA-17. If fluid is still dirty, repeat step 2. through 5.

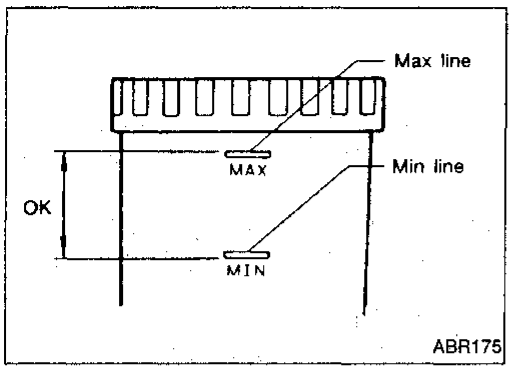

Checking Brake Fluid Level and Leaks

If fluid level is extremely low, check brake system for leaks

Checking Brake Lines and Cables

Check brake fluid lines and parking brake cables for improper attachment, leaks, chafing, abrasions, or deterioration.

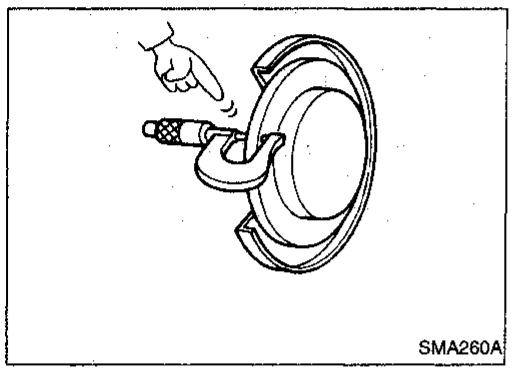

Checking Disc Brake

ROTOR

Check condition and thickness.

Unit: mm (in)

	CL25VB	CL9HA
Standard	22.0 (0.866)	9.0 (0.354)
Minimum	20.0 (0.787)	8.0 (0.315)

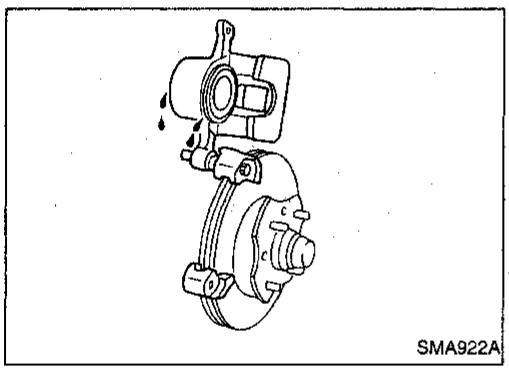

CALIPER

Check operation and for leakage.

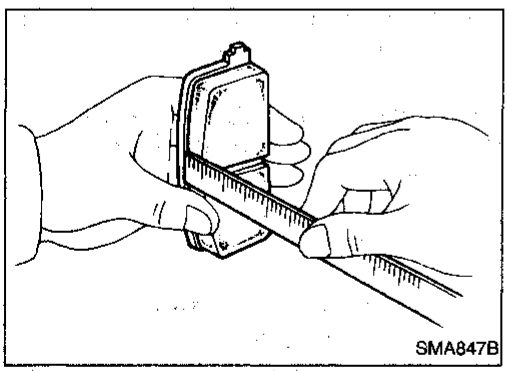

PAD

Check for wear or damage.

Unit: mm (in)

	CL25VB	CL9HA
Standard		
MT model	10.0 (0.394)	10.0 (0.394)
A/T model	11.0 (0.433)	
Minimum	2.0 (0.079)	1.5 (0.059)

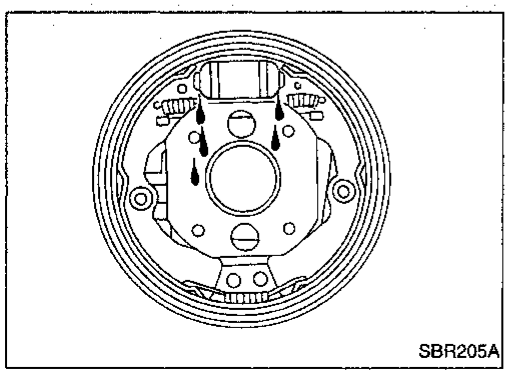

Checking Drum Brake

WHEEL CYLINDER

Check operation and for leakage.

Checking Drum Brake (Cont'd)

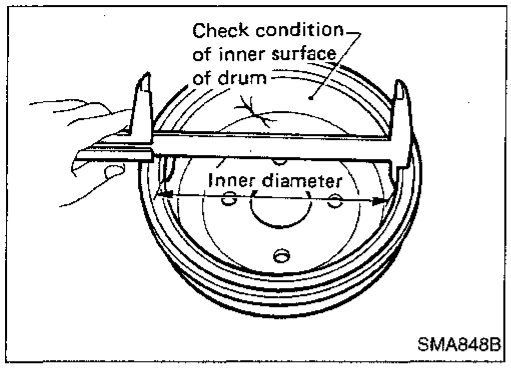

DRUM

Check condition of inner surface.

Standard inner diameter:
228.6 mm (9 in)
Maximum diameter:
230.0 mm (9.06 in)

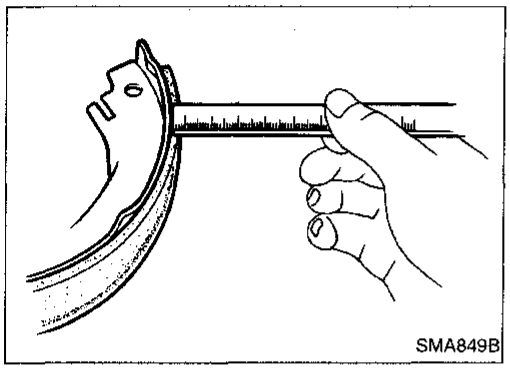

LINING

Check for wear or damage.

Standard thickness:
4.1 mm (0.161 in)
Minimum thickness:
1.5 mm (0.059 in)

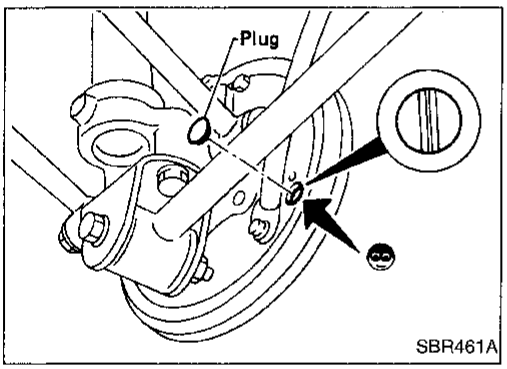

TEMPORARY METHOD FOR CHECKING LINING WEAR

Remove inspection hole plug and check for lining wear.

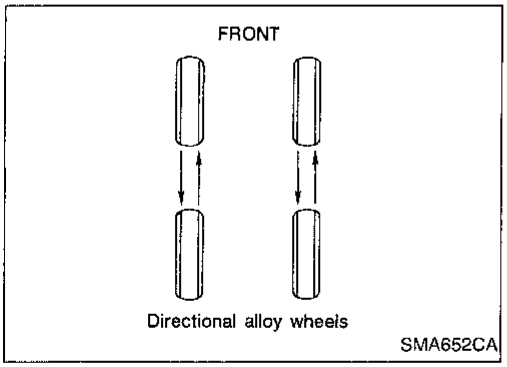

Balancing Wheels

- Adjust wheel balance using road wheel center.
  Wheel balance (Maximum allowable unbalance):
  Refer to MA-22.

Tire Rotation

- **Do not include the T-type spare tire when rotating the tires.**
  Wheel nuts:
  [O]: 98 - 118 N·m
  (10 - 12 kg-m, 72 - 87 ft-lb)

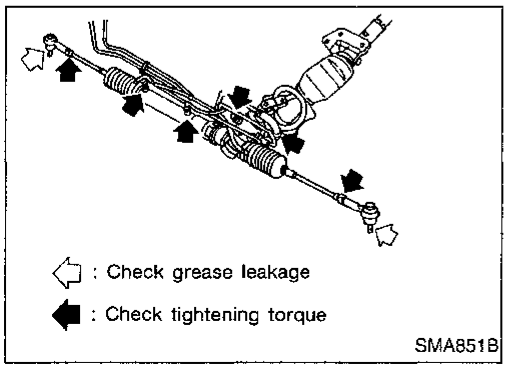

Checking Steering Gear and Linkage

STEERING GEAR

- Check gear housing and boots for looseness, damage or grease leakage.
- Check connection with steering column for looseness.

STEERING LINKAGE

- Check ball joint, dust cover and other component parts for looseness, wear, damage or grease leakage.

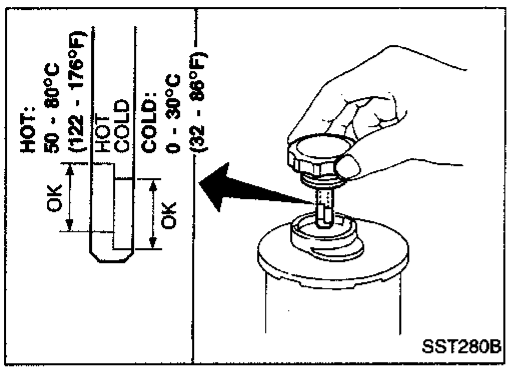

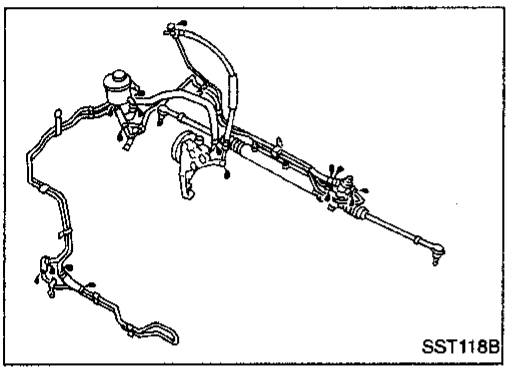

Checking Power Steering Fluid and Lines

Check fluid level with engine off.
Check fluid level with dipstick on reservoir cap. Use "HOT" range at fluid temperatures of 50 to 80°C (122 to 176°F). Use "COLD" range at fluid temperatures of 0 to 30°C (32 to 86°F).

CAUTION:

- **Do not overfill.**
- **Recommended fluid is type DEXRON™ II or equivalent.**

- Check lines for improper attachment, leaks, cracks, damage, loose connections, chafing or deterioration.
- Check rack boots for accumulation of power steering fluid.

Lubricating Locks, Hinges and Hood Latches

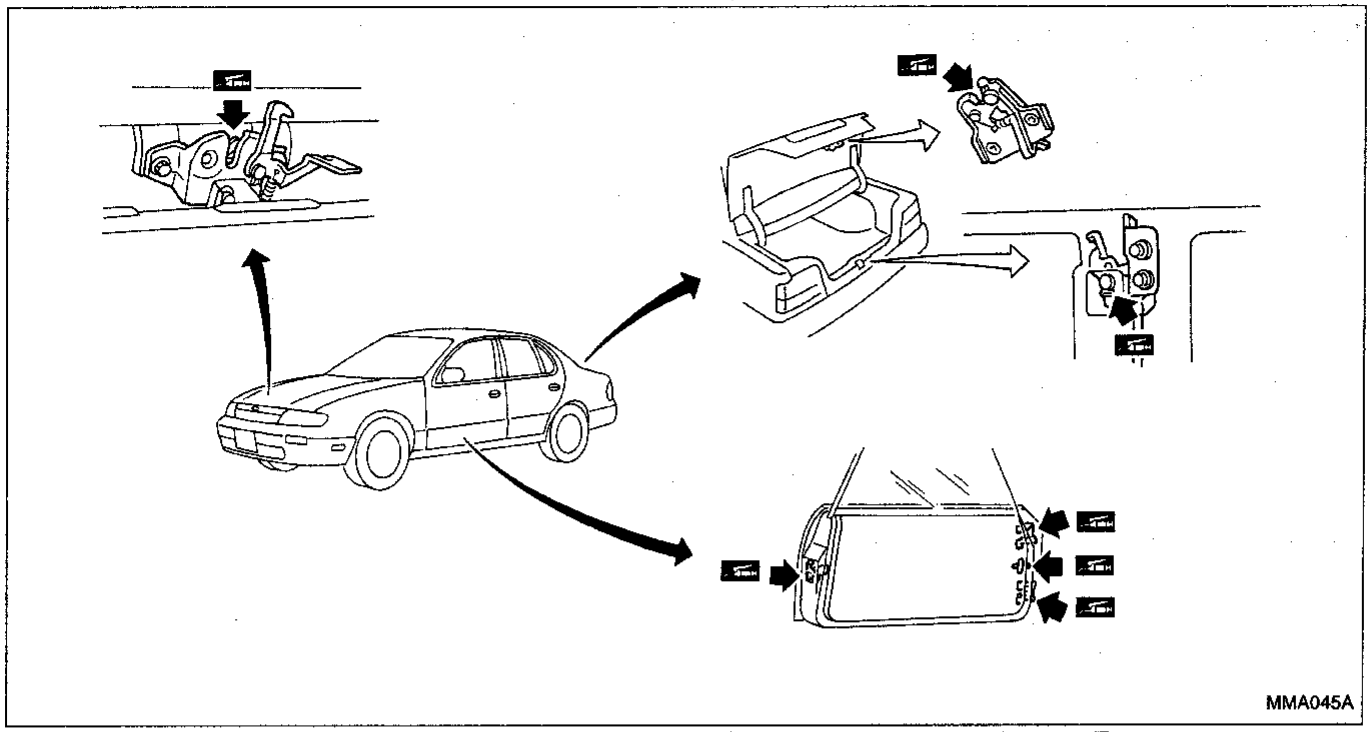

Checking Seat Belts, Buckles, Retractors, Anchors and Adjusters

CAUTION:

- **All seat belt assemblies, including retractors and attaching hardwares such as anchors, etc., should be inspected after any collision. Nissan recommends that all seat belt assemblies in use during a collision be replaced unless the collision was minor and the belts show no damage and continue to operate properly. Seat belt assemblies not in use during a collision should also be inspected and replaced if either damage or improper operation is noted.**
- **If the condition of any component of seat belt assembly is questionable, do not have it repaired, but replaced as seat belt assembly.**
- **If webbing is cut, frayed, or damaged, replace belt assembly.**
- **Do not spill drinks, oil, etc. on inner lap belt buckle. Never oil tongue and buckle.**
- **Use a NISSAN genuine seat belt assembly.**

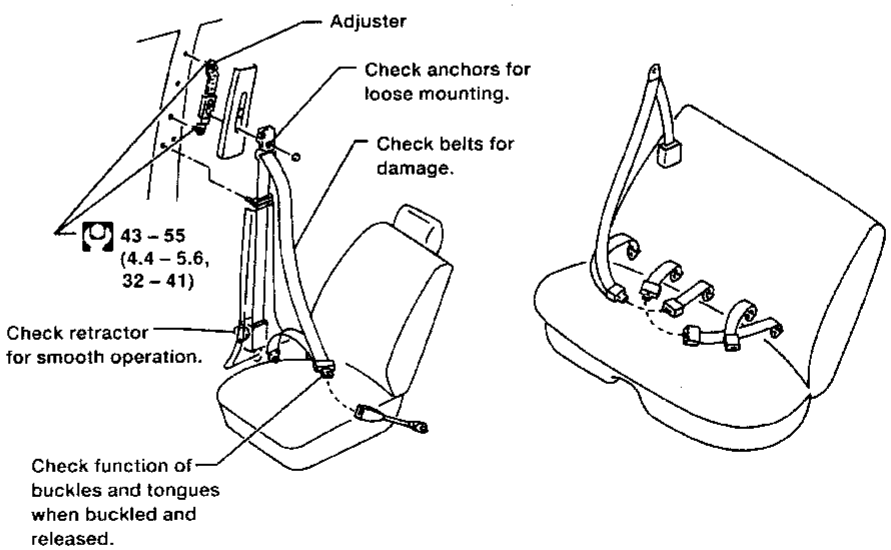

Anchor bolt
43 – 55 (4.4 – 5.6, 32 – 41)

: N•m (kg-m, ft-lb)

AMA071

Engine Maintenance

INSPECTION AND ADJUSTMENT

Drive belt deflection

Unit: mm (in)

	Used belt deflection		Deflection of new belt
	Limit	Deflection after adjustment	
Generator & Power steering oil pump	8 (0.31)	6 - 7 (0.24 - 0.28)	5 - 6 (0.20 - 0.24)
Air conditioning compressor	10 (0.39)	7 - 8 (0.28 - 0.31)	6 - 7 (0.24 - 0.28)
Applied pushing force	98 N (10 kg, 22 lb)		

Spark plug

Standard type	BKR5E-11
Cold type	BKR6E-11
	BKR7E-11
Plug gap	1.0 - 1.1 mm (0.039 - 0.043 in)

Chassis and Body Maintenance

INSPECTION AND ADJUSTMENT

Wheel balance

Maximum allowable unbalance	Dynamic (at rim flange) g (oz)	10 (0.35) (One side)
	Static g (oz)	20 (0.71)