SECTION EM

CONTENTS

Parts Requiring Angular Tightening

- Use an angle wrench for the final tightening of the following engine parts:
  (1) Cylinder head bolts
  (2) Main bearing cap bolts
  (3) Connecting rod cap nuts
- Do not use a torque value for final tightening.
- The torque value for these parts is for a preliminary step.
- Ensure thread and seat surfaces are clean and coated with engine oil.

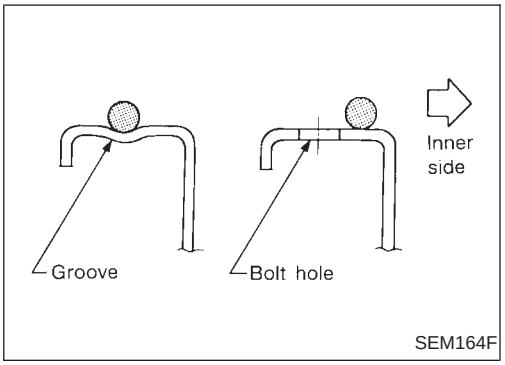

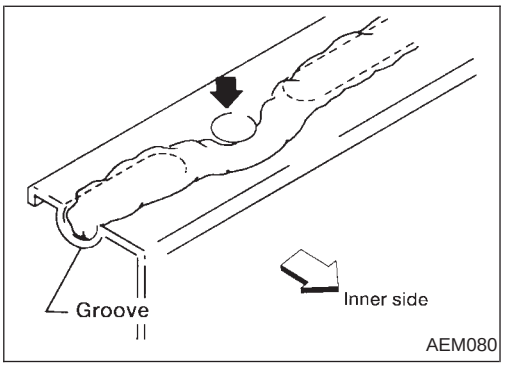

Liquid Gasket Application Procedure

a. Use a scraper to remove all traces of old liquid gasket from mating surfaces and grooves. Also, completely clean any oil from these areas.

b. Apply a continuous bead of liquid gasket to mating surfaces. (Use Genuine RTV silicone sealant Part No. 999MP-A7007 or equivalent.)
- **For oil pan, be sure liquid gasket diameter is 3.5 to 4.5 mm (0.138 to 0.177 in).**
- **For areas except oil pan, be sure liquid gasket diameter is 2.0 to 3.0 mm (0.079 to 0.118 in).**

c. Apply liquid gasket around the inner side of bolt holes (unless otherwise specified).

d. Assembly should be done within 5 minutes after coating.

e. Wait at least 30 minutes before refilling engine oil and engine coolant.

Special Service Tools

The actual shapes of Kent-Moore tools may differ from those of special service tools illustrated here.

Tool number (Kent-Moore No.) Tool name	Description
ST0501S000 (—) Engine stand assembly ① ST05011000 (—) Engine stand ② ST05012000 (—) Base	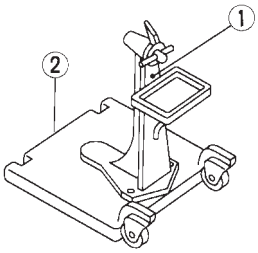 NT042 Disassembling and assembling
KV10114300 (—) Engine sub-attachment	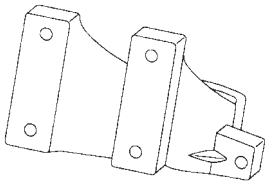 NT239
KV10106500 (—) Engine stand shaft	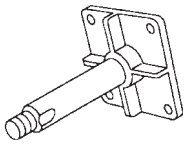 NT028
KV10109250 (J-26336-B) Valve spring compressor ① KV10109210 (—) Compressor ② KV10109220 (—) Adapter or (J-39773) Valve spring compressor kit	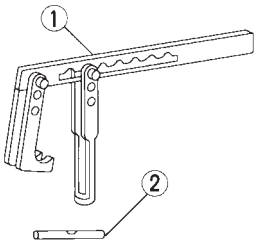 NT021 Disassembling and assembling valve components
KV10116300 (J-38955) Valve oil seal drift	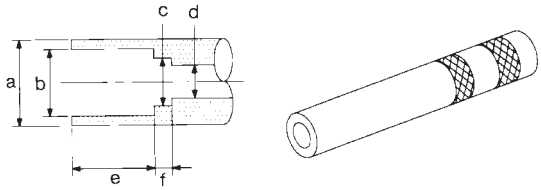 NT602 Installing valve oil seal **a: 25 (0.98) dia.** **b: 14.4 (0.567) dia.** **c: 11.8 (0.465) dia.** **d: 10 (0.39) dia.** **e: 11 (0.43)** **f: 9 (0.35)** Unit: mm (in)

Special Service Tools (Cont'd)

Tool number (Kent-Moore No.) Tool name	Description
KV10110300 (—) Piston pin press stand assembly ① KV10110310 (—) Cap ② KV10110330 (—) Spacer ③ ST13030020 (—) Press stand ④ ST13030030 (—) Spring ⑤ KV10110340 (—) Drift ⑥ KV10110320 (—) Center shaft	Disassembling and assembling piston with connecting rod 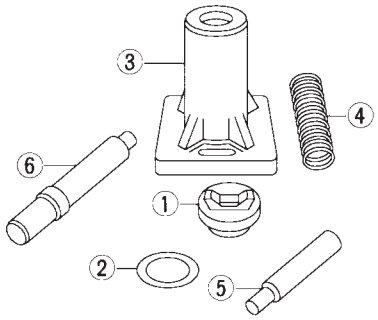 NT036
EM03470000 (J8037) Piston ring compressor	Installing piston assembly into cylinder bore 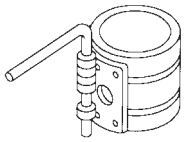 NT044
(J36467) Valve oil seal remover	Displacement valve oil seal 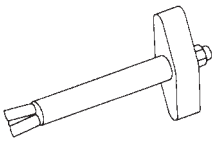 NT034
KV10111100 (J37228) Seal cutter	Removing oil pan 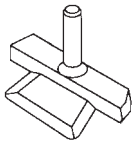 NT046
WS39930000 (—) Tube presser	Pressing the tube of liquid gasket 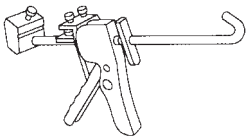 NT052
ST16610001 (J23907) Pilot bushing puller	Removing crankshaft pilot bushing 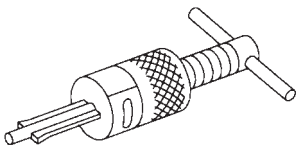 NT045

Special Service Tools (Cont'd)

Tool number (Kent-Moore No.) Tool name	Description	
ST10120000 (J-24239-01) Cylinder head bolt wrench	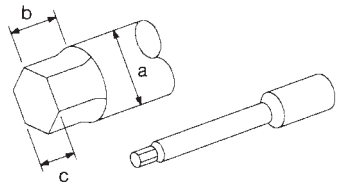 NT583	Loosening and tightening cylinder head bolt **a: 13 (0.51) dia.** **b. 12 (0.47)** **c: 10 (0.39)** Unit: mm (in)
KV10115150 (J-38972) Lifter stopper set ① KV10115110 (J-38972-1) Camshaft pliers ② KV10115120 (J-38972-2) Lifter stopper	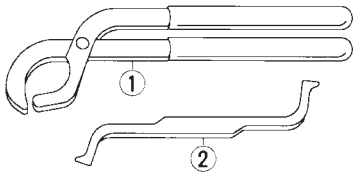 NT041	Changing shims
KV10112100 (BT8653-A) Angle wrench	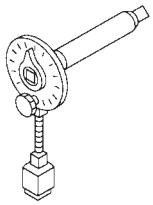 NT014	Tightening bolts for bearing cap, cylinder head, etc.
KV10117100 (J36471-A) Front heated oxygen sensor wrench	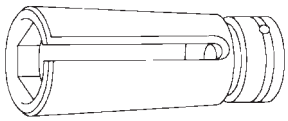 NT630	Loosening or tightening front heated oxygen sensor [22 mm (0.87 in) type]

Commercial Service Tools

Tool name	Description	
Spark plug wrench	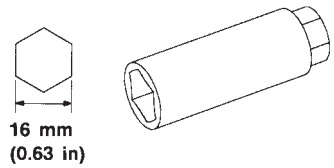 NT047	Removing and installing spark plug
Pulley holder	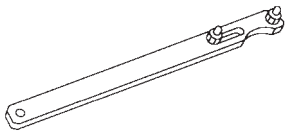 NT035	Holding camshaft pulley while tightening or loosening camshaft bolt
Valve seat cutter set	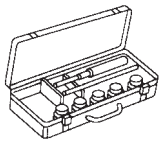 NT048	Finishing valve seat dimensions
Piston ring expander	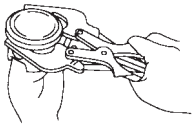 NT030	Removing and installing piston ring
Valve guide drift	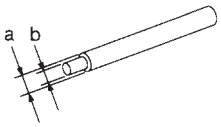 NT015	Removing and installing valve guide **Intake & Exhaust:** **a: 10.5 mm (0.413 in) dia.** **b: 6.6 mm (0.260 in) dia.**
Valve guide reamer	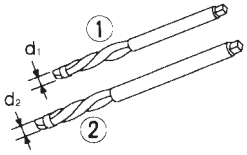 NT016	Reaming valve guide 1 or hole for oversize valve guide 2 **Intake & Exhaust:** **d_1: 7.0 mm (0.28 in) dia.** **d_2: 11.175 mm (0.4400 in) dia.**
Oxygen Sensor thread cleaner (J-43897-18) (J-43897-12)	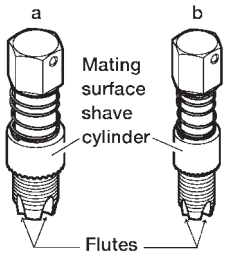 AEM488	Reconditioning the exhaust system threads before installing a new oxygen sensor. Use with anti-seize lubricant shown below. **a: J-43897-18 — 18 mm diameter, for Zirconia oxygen sensor.** **b: J-43897-12 — 12 mm diameter, for Titania oxygen sensor.**

Commercial Service Tools (Cont'd)

Anti-seize lubricant (Permatex™ 133 AR or equivalent meeting MIL specification MIL-A-907)	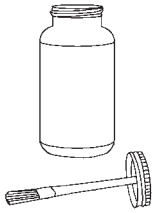 AEM489	Lubricating oxygen sensor thread cleaning tool when reconditioning exhaust system threads.

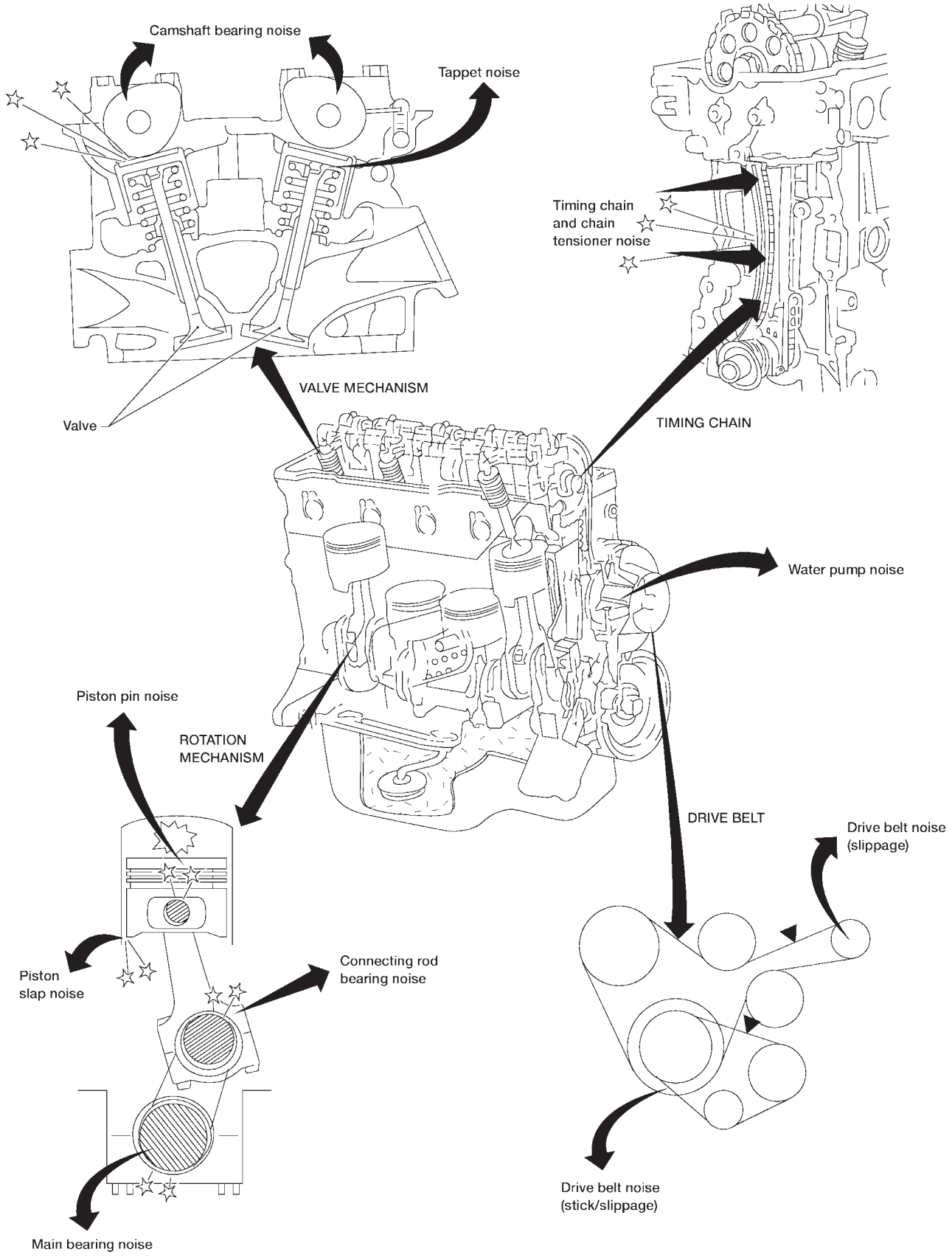
Camshaft bearing noise
Tappet noise
Valve
VALVE MECHANISM
Timing chain
and chain
tensioner noise
TIMING CHAIN
Water pump noise
Piston pin noise
ROTATION
MECHANISM
DRIVE BELT
Drive belt noise
(slippage)
Piston
slap noise
Connecting rod
bearing noise
Drive belt noise
(stick/slippage)
Main bearing noise

WEM003

NVH Troubleshooting Chart — Engine Noise

Use the chart below to help you find the cause of the symptom.
1. Locate the area where noise occurs.
2. Confirm the type of noise.
3. Specify the operating condition of engine.
4. Check specified noise source.

If necessary, repair or replace these parts.

Location of Noise	Type of Noise	Operating Condition of Engine.						Source of Noise	Check Item	Reference page
		Before warm-up	After warm-up	When starting	When idling	When revving	While driving			
Top of Engine Rocket Cover Cylinder Head	Ticking or click	C	A	—	A	B	—	Tappet noise	Valve clearance	EM-38
	Rattle	C	A	—	A	B	C	Camshaft bearing noise	Camshaft journal clearance Camshaft runout	EM-33
Crankshaft Pulley Cylinder block (Side of Engine) Oil pan	Slap or knock	—	A	—	B	B	—	Piston pin noise	Pistion and piston pin clearance Connecting rod bushing clearance	EM-46, 51
	Slap or rap	A	—	—	B	B	A	Piston slap noise	Piston-to-bore clearance Piston ring side clearance Piston ring end gap Connecting rod bend and torsion	EM-46, 47
	Knock	A	B	C	B	B	B	Connecting rod-bearing noise	Connecting rod bearing clearance (Big end) Connecting rod bushing clearance (Small end)	EM-50, 51
	Knock	A	B	—	A	B	C	Main bearing noise	Main bearing oil clearance Crankshaft runout	EM-48, 49
Front of Engine Timing Chain Cover	Tapping or ticking	A	A	—	B	B	B	Timing chain and chain tensioner noise	Timing chain cracks and wear Timing chain tensioner operation	EM-23
Front of Engine	Squeak or fizzing	A	B	—	B	—	C	Other drive belts (sticking or slipping)	Drive belts deflection	MA-10 Section (“Checking Drive Belts”, “Engine Maintenance”)
	Creaking	A	B	A	B	A	B	Other drive belts (slipping)	Idler pulley bearing operation	
	Squall or creak	A	B	—	B	A	B	Water pump noise	Water pump operation	LC-12 Section (“Water Pump Inspection”, “Engine Cooling System”)

A: Closely related B: Related C: Sometimes related —: Not related

SEC. 118 • 140 • 147 • 148 • 163 • 164 • 493

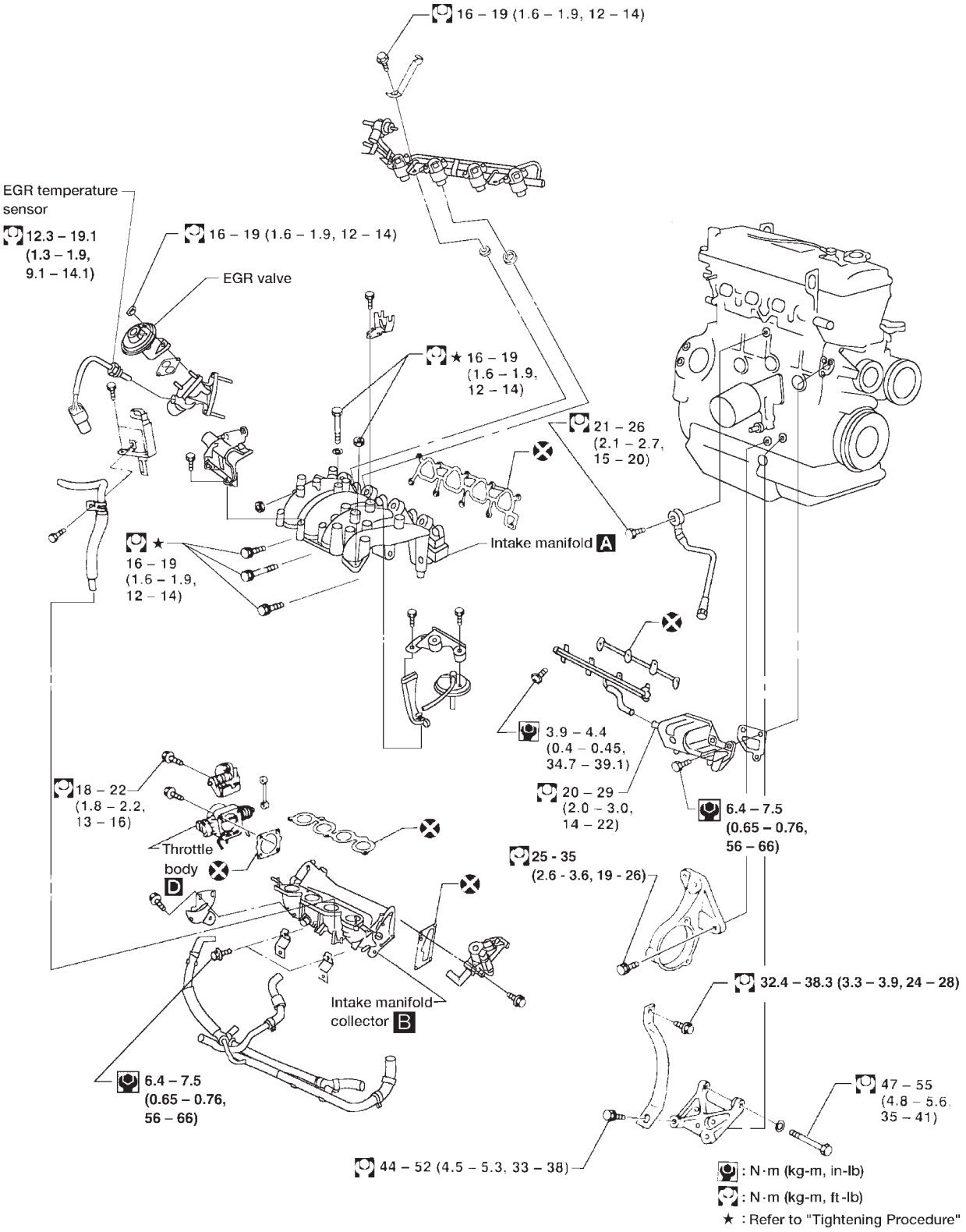

WEM011

SEC. 140•208•210•275

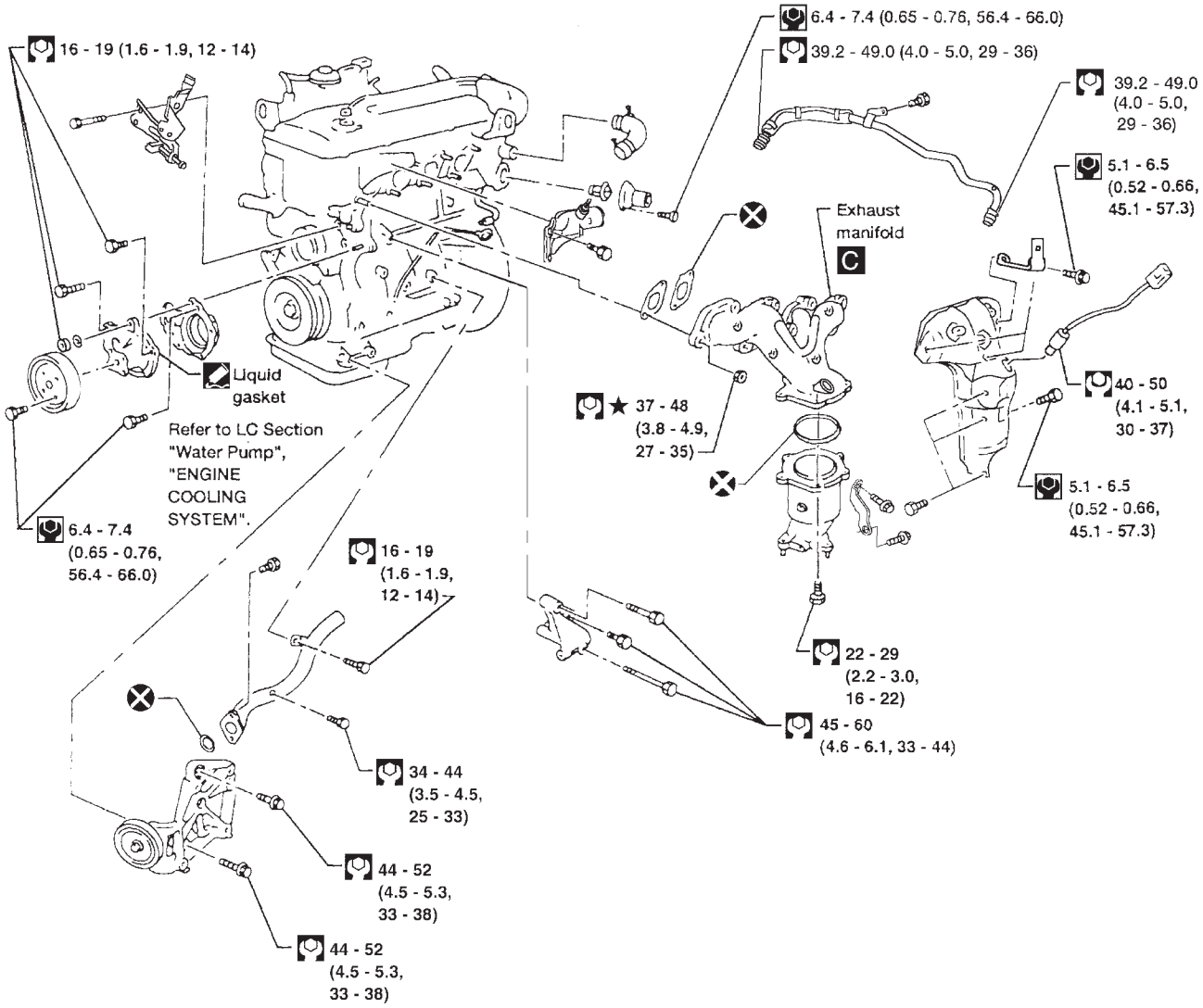

: N·m (kg-m, in-lb)

: N·m (kg-m, ft-lb)

★ : Refer to "Tightening Procedure"

WEM004

Tightening procedure

A Intake manifold

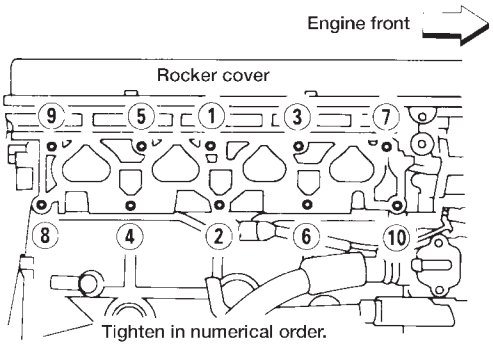

Tighten in numerical order.
Loosen in reverse order.

B Intake manifold collector

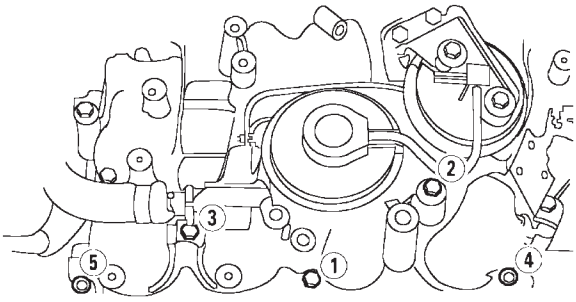

Tighten in numerical order.
Loosen in reverse order.

C Exhaust manifold

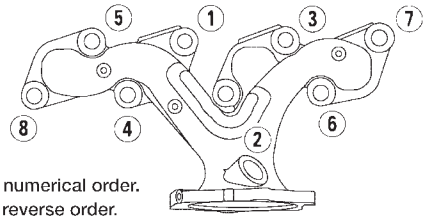

Tighten in numerical order.
Loosen in reverse order.

D Throttle body

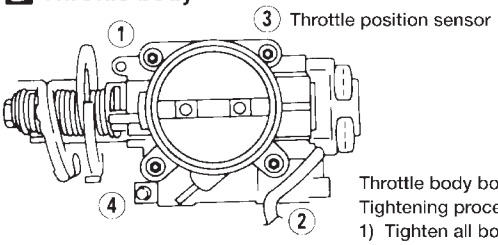

Tighten in numerical order.
Loosen in reverse order.

Throttle body bolts
Tightening procedure
1) Tighten all bolts to 9 to 11 N·m (0.9 to 1.1 kg-m, 6.5 to 8.0 ft-lb).
2) Tighten all bolts to 18 to 22 N·m (1.8 - 2.2 kg-m, 13 to 16 ft-lb).

WEM005

Measurement of Compression Pressure

1. Warm up engine.
2. Turn ignition switch OFF.
3. Release fuel pressure.
   Refer to EC-34, ‘‘Fuel Pressure Release’’.
4. Remove all spark plugs.

- **Clean area around plug with compressed air before removing the spark plug.**

5. Disconnect camshaft position sensor harness connector at the distributor.
6. Disconnect all fuel injector harness connectors.

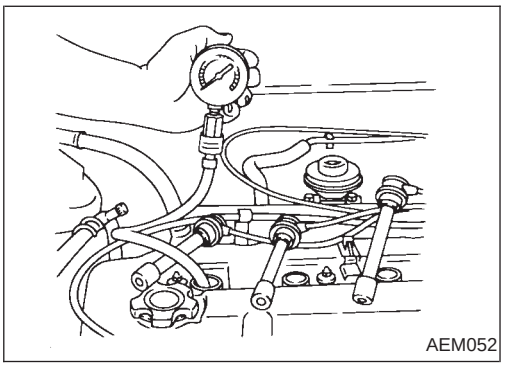

7. Attach a compression tester to No. 1 cylinder.
8. Depress accelerator pedal fully to keep throttle valve wide open.
9. Crank engine and record highest gauge indication.
10. Repeat the measurement on each cylinder.

- **Always use a fully-charged battery to obtain specified engine speed.**

Compression pressure: kPa (kg/cm^2, psi)/300 rpm
Standard
1,226 (12.5, 178)/300
Minimum
1,030 (10.5, 149)/300
Difference limit between cylinders
98 (1.0, 14)/300

11. If compression in one or more cylinders is low:

a. Pour a small amount of engine oil into cylinders through spark plug holes.
b. Retest compression.

- **If adding oil helps compression, piston rings may be worn or damaged. If so, replace piston rings after checking piston.**
- **If pressure stays low, a valve may be sticking or seating improperly. Inspect and repair valve and valve seat. (Refer to SDS.) If valve or valve seat is damaged excessively, replace.**
- **If compression stays low in two cylinders that are next to each other:**

a. The cylinder head gasket may be leaking, or
b. Both cylinders may have valve component damage. Inspect and repair as necessary.

12. Reconnect fuel pump fuse, all fuel injector harness connectors, and camshaft position sensor harness connector at the distributor and reinstall spark plugs.
13. Erase the DTC stored in the ECM.

Measurement of Compression Pressure (Cont'd)

CAUTION:

- **Always erase the DTC after checking compression. Refer to EC-44, "Emission-related Diagnostic Information".**

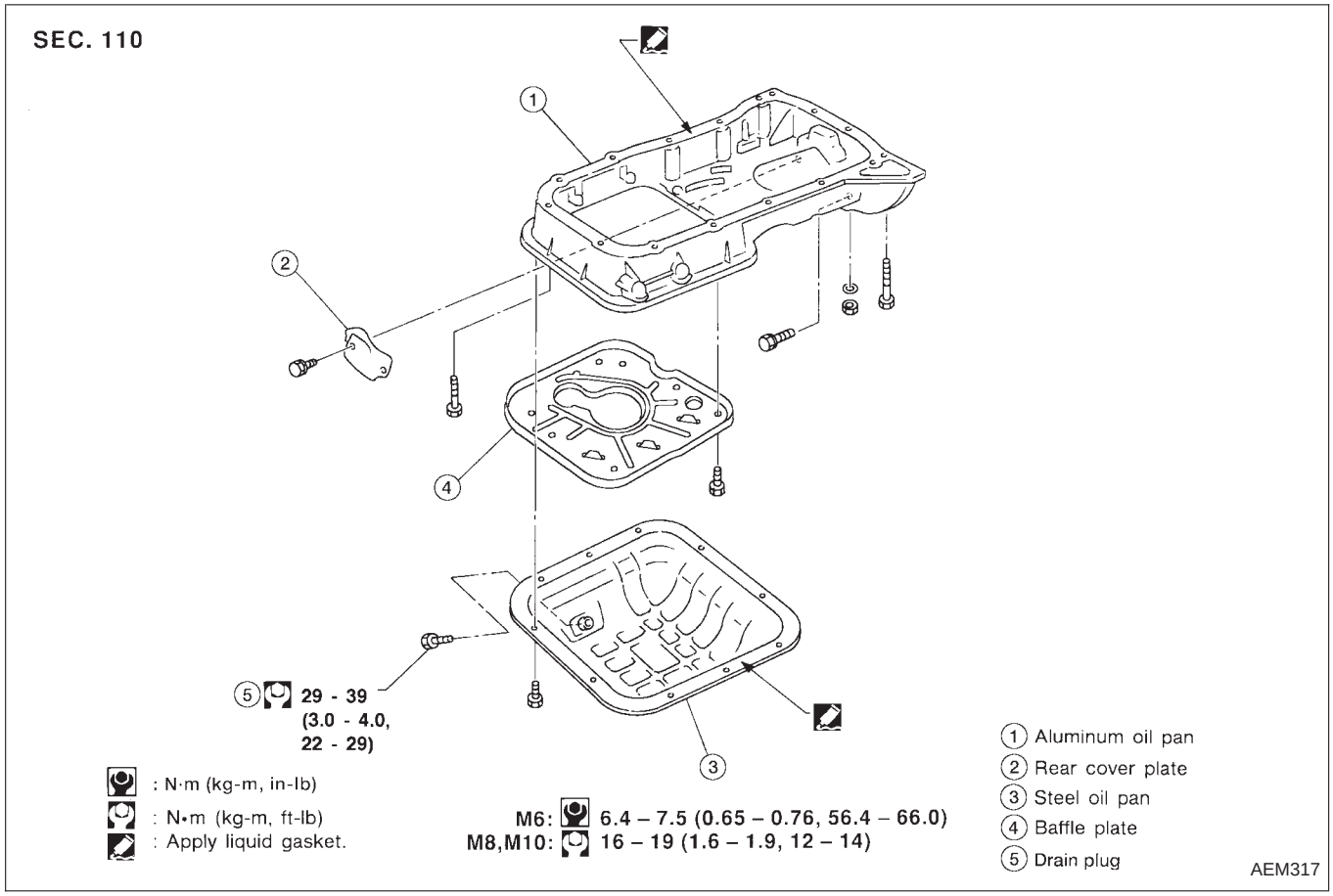

Removal

1. Remove engine undercover.
2. Drain engine oil.

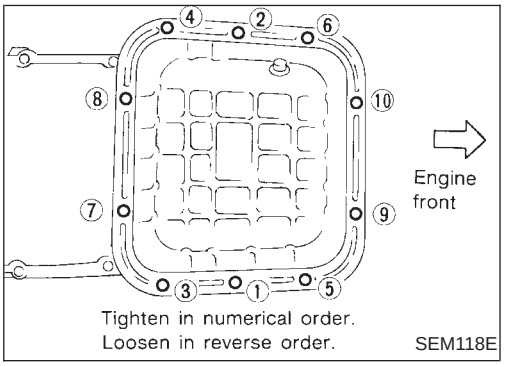

3. Remove steel oil pan bolts.
- **Remove in reverse order as shown.**

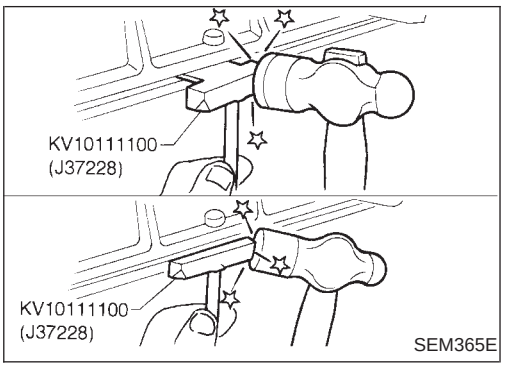

4. Remove steel oil pan.

a. Insert Tool between aluminum oil pan and steel oil pan.
- **Be careful not to damage aluminum mating surface.**
- **Do not insert screwdriver or oil pan flange will be damaged.**

b. Slide Tool by tapping on the side of Tool with hammer.

Removal (Cont'd)

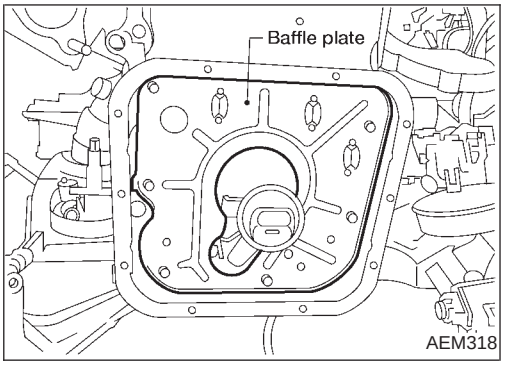

5. Remove baffle plate.
6. Remove oil strainer.

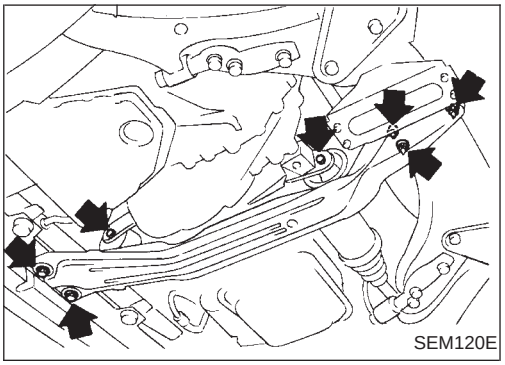

7. Remove exhaust front tube.
8. Set a suitable transmission jack under transaxle and lift engine with engine slinger.
9. Remove center member.

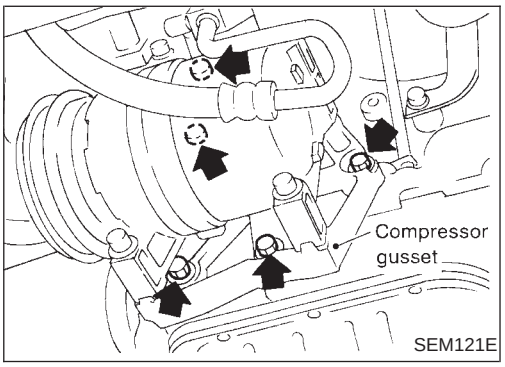

10. Remove compressor gusset.

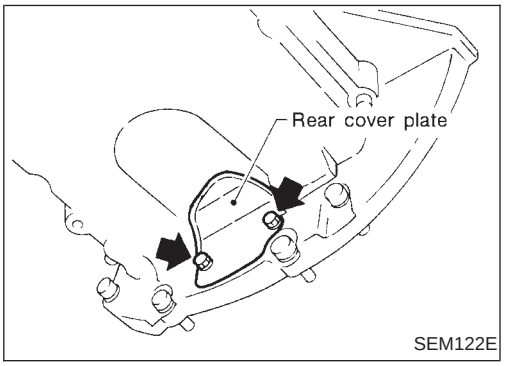

11. Remove rear cover plate.

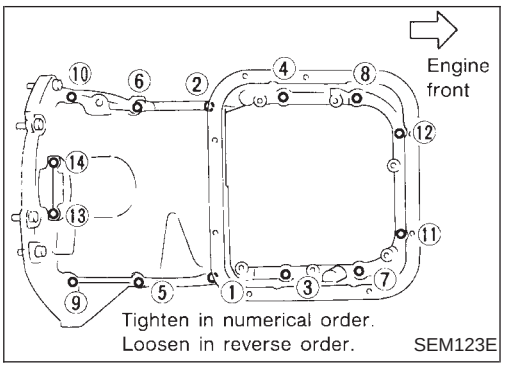

12. Remove aluminum oil pan nuts and bolts.

- **Remove in reverse order as shown.**

Removal (Cont'd)

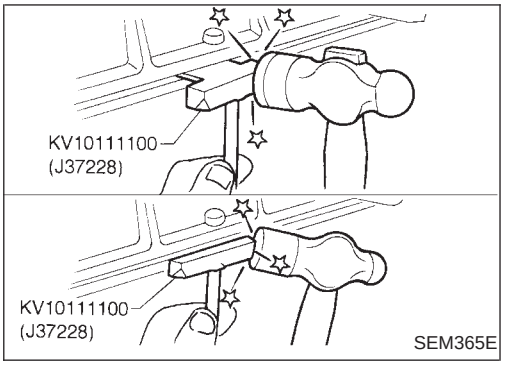

13. Remove aluminum oil pan.
a. Insert Tool between cylinder block and aluminum oil pan.
- **Be careful not to damage aluminum mating surface.**
- **Do not insert screwdriver or oil pan flange will be damaged.**

b. Slide Tool by tapping on the side of Tool with a hammer.

Installation

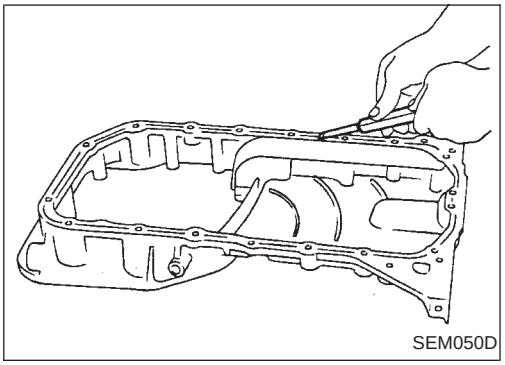

1. Use a scraper to remove old liquid gasket from mating surface of aluminum oil pan.
- **Also remove old liquid gasket from mating surface of cylinder block.**

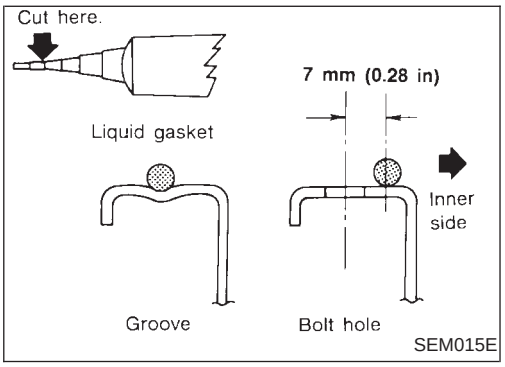

2. Apply a continuous bead of liquid gasket to mating surface of aluminum oil pan.
- **Use Genuine RTV silicone sealant Part No. 999MP-A7007 or equivalent.**
- **Apply to groove on mating surface.**
- **Allow 7 mm (0.28 in) clearance around bolt holes.**

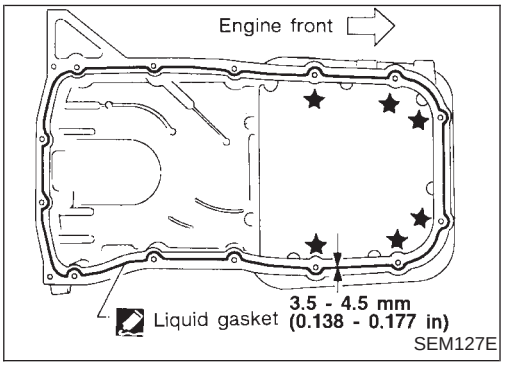

- **For areas marked with "★", apply liquid gasket around the outer side of the bolt hole.**
- **Be sure liquid gasket diameter is 3.5 to 4.5 mm (0.138 to 0.177 in).**
- **Attaching should be done within 5 minutes after coating.**

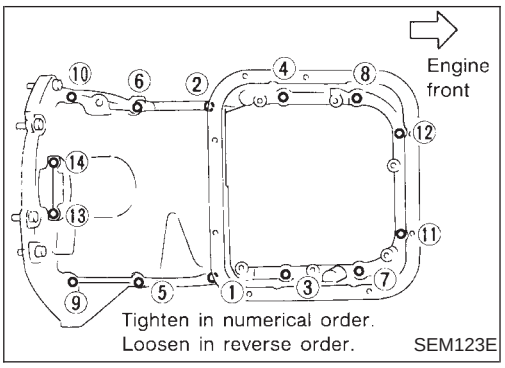

3. Install aluminum oil pan.
- **Tighten nuts and bolts in numerical order shown.**

4. Install rear cover plate.

Installation (Cont'd)

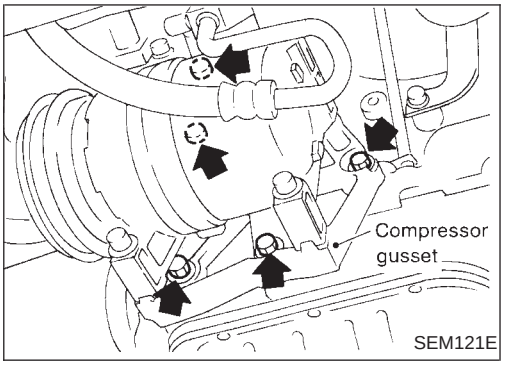

5. Install compressor gusset.
6. Install center member.
7. Install front tube.
8. Install oil strainer.
9. Install baffle plate.

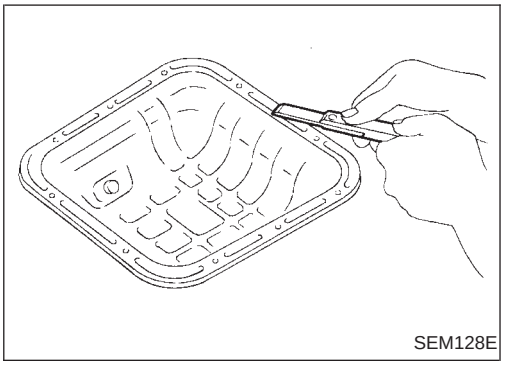

10. Use a scraper to remove old liquid gasket from mating surface of steel oil pan.
- **Also remove old liquid gasket from mating surface of aluminum oil pan.**

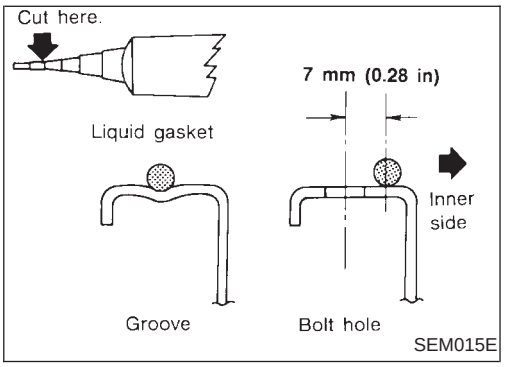

11. Apply a continuous bead of liquid gasket to mating surface of steel oil pan.
- **Use Genuine RTV silicone sealant Part No. 999-A7007 or equivalent.**
- **Apply to groove on mating surface.**
- **Allow 7 mm (0.28 in) clearance around bolt holes.**

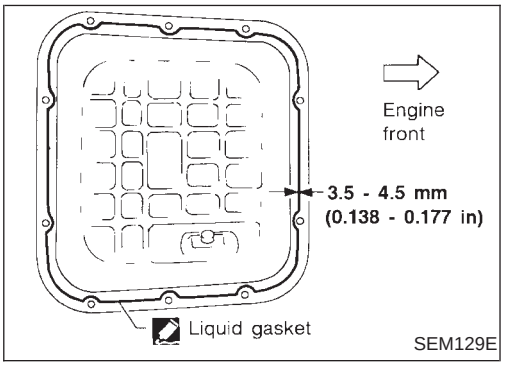

- **Be sure liquid gasket diameter is 3.5 to 4.5 mm (0.138 to 0.177 in).**
- **Attaching should be done within 5 minutes after coating.**

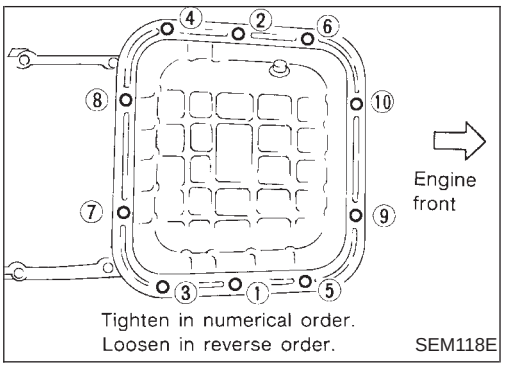

12. Install steel oil pan.
- **Tighten bolts in numerical order shown.**
- **Wait at least 30 minutes before refilling engine oil.**

SEC. 111•120•130•135

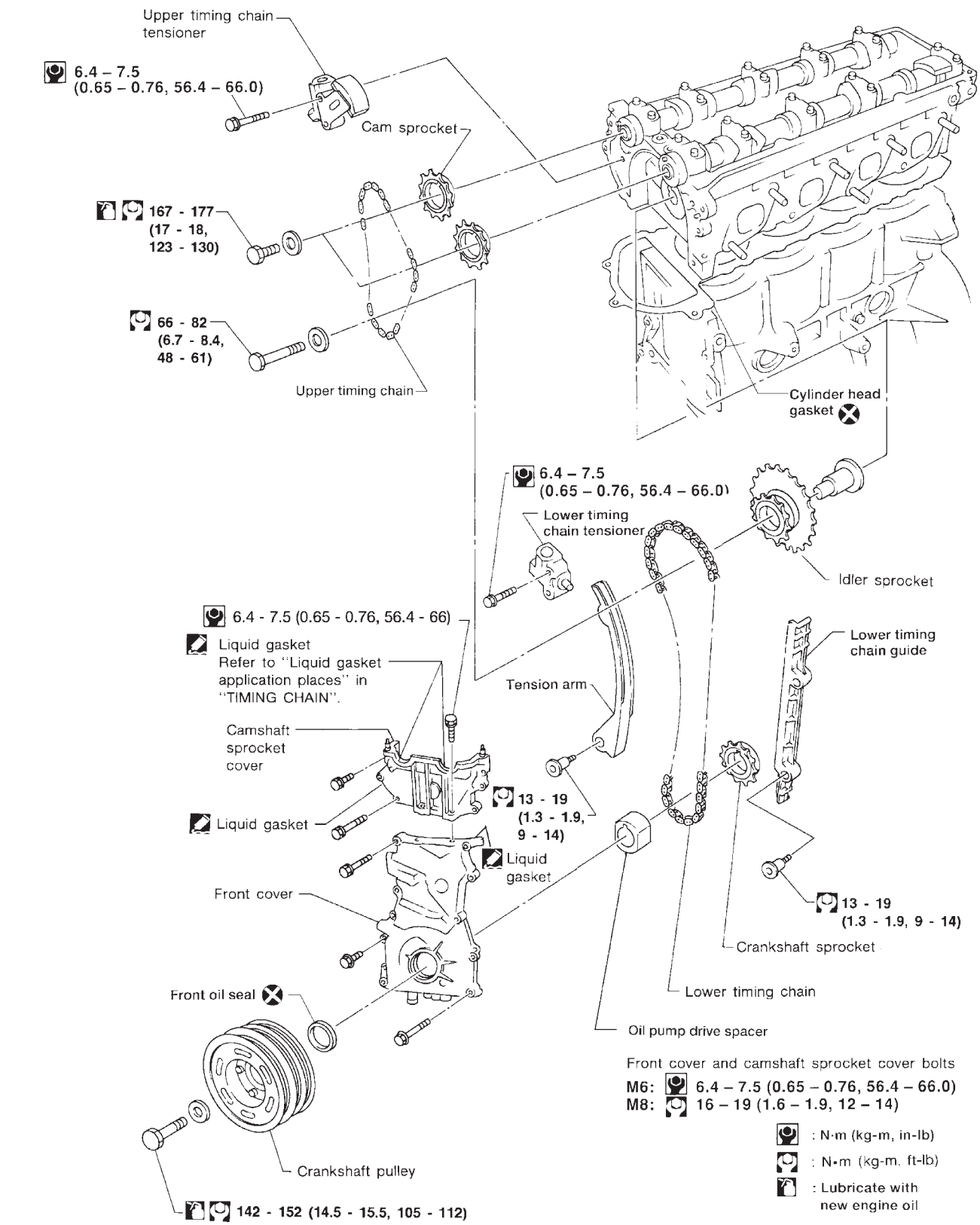

WEM006

Liquid gasket application places

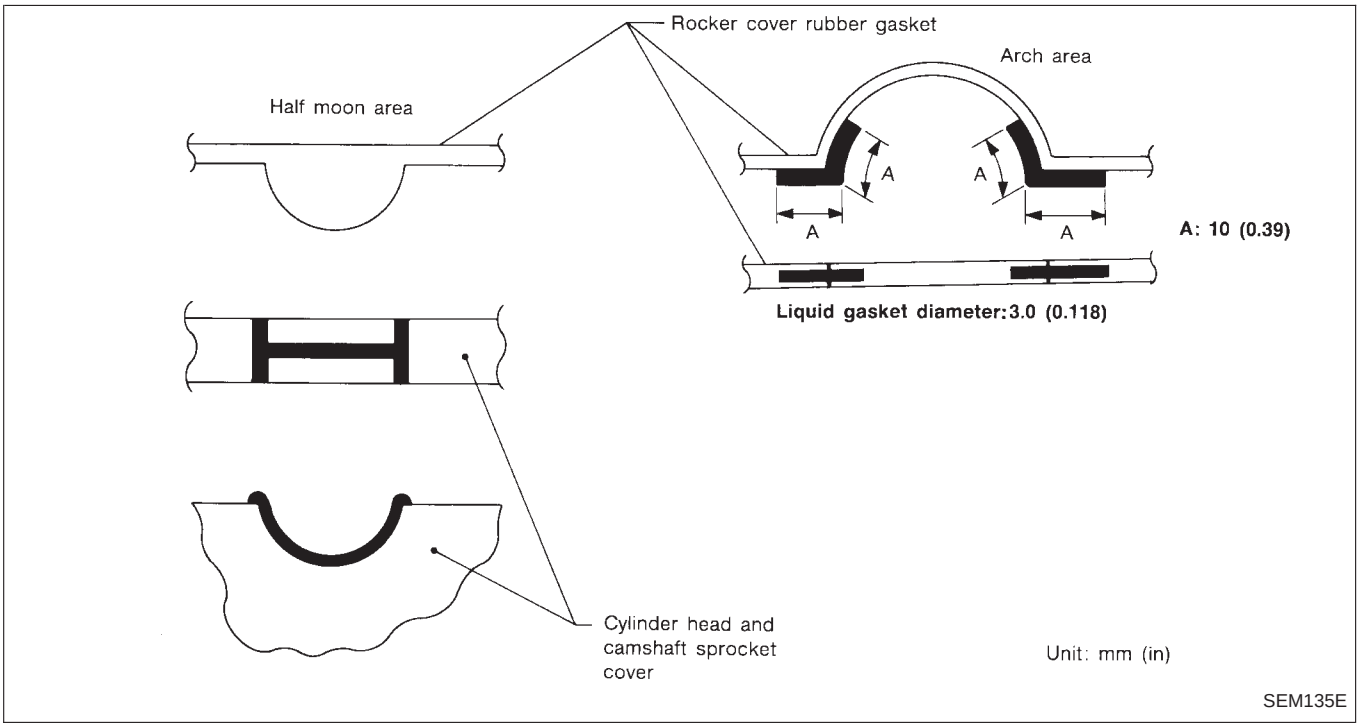

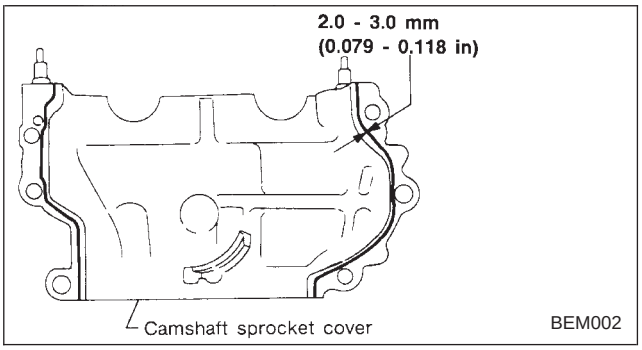

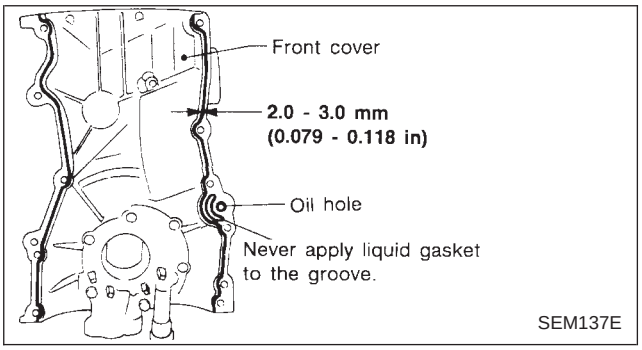

Removal

CAUTION:

- **After removing timing chain, do not turn crankshaft and camshaft separately, or valves will strike piston heads.**
- **When installing chain tensioners or other sliding parts, lubricate contacting surfaces with new engine oil.**
- **Apply new engine oil to bolt threads and seat surfaces when installing camshaft sprockets and crankshaft pulley.**
- **Do not spill engine coolant on drive belts.**

UPPER TIMING CHAIN

1. Remove the spark plug wires.

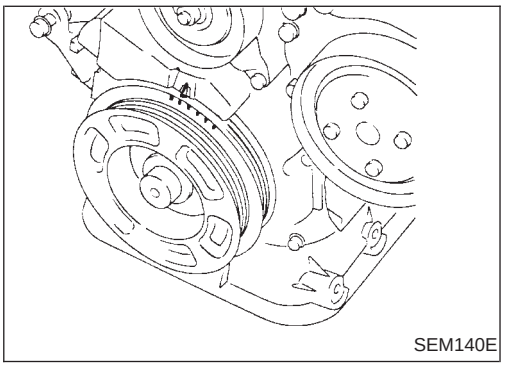
SEM140E

2. Set No.1 piston at TDC on its compression stroke.
3. Remove vacuum hoses, electrical harness connectors, and harness clamps.
4. Remove the power steering belt, A/C compressor belt and generator belt.
5. Remove the generator support bracket and generator, position aside.
6. Remove the power steering reservoir tank and reposition it for clearance.

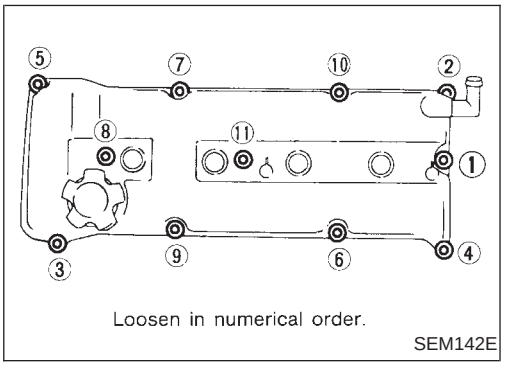

SEM142E

7. Install the engine support eye bracket at the right rear of the cylinder head and support engine.
8. Remove the upper right engine mount and bracket.
9. Remove the rocker cover.

- **Remove in numerical order as shown.**

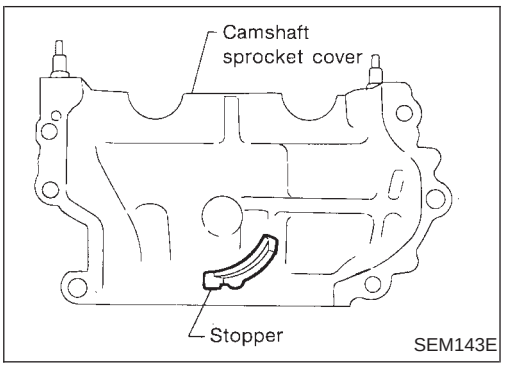

SEM143E

10. Remove the camshaft sprocket cover.

- **The stoppers on camshaft sprocket cover prevent upper timing chain from disengaging idler sprocket.**

Removal (Cont'd)

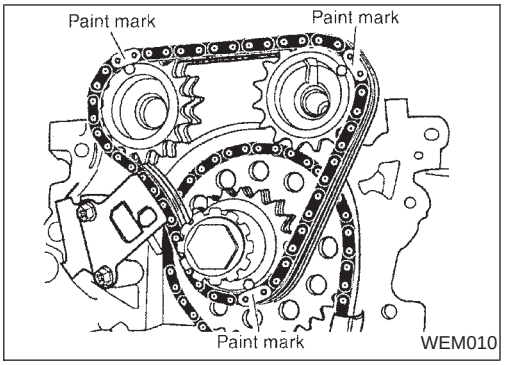

11. Wipe off the links of timing chain next to the timing marks on the sprockets. Put paint marks on the timing chain, matching them with the timing marks on the cam sprockets and idler sprocket.
12. Remove cam sprocket bolts, cam sprockets, upper timing chain tensioner, and upper timing chain.

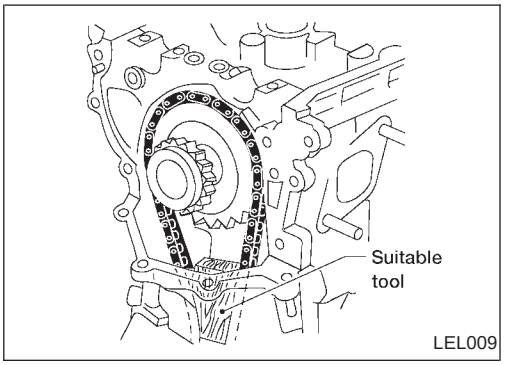

IDLER SPROCKET

1. Remove upper timing chain.
   Refer to "UPPER TIMING CHAIN", "Removal", EM-21.
2. Support lower timing chain by using a suitable tool to avoid chain tensioner spring from coming out.

NOTE:
This step is only to be applied when the lower cover is not being removed.

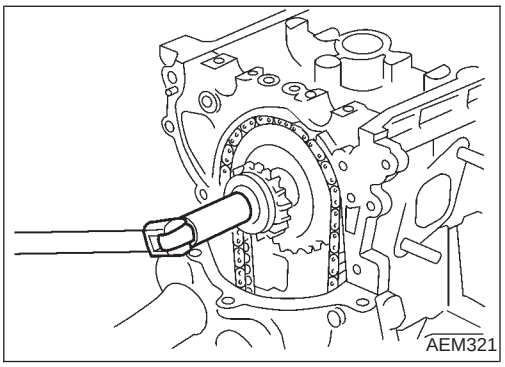

3. Remove the idler sprocket bolt.
4. Remove the idler sprocket.

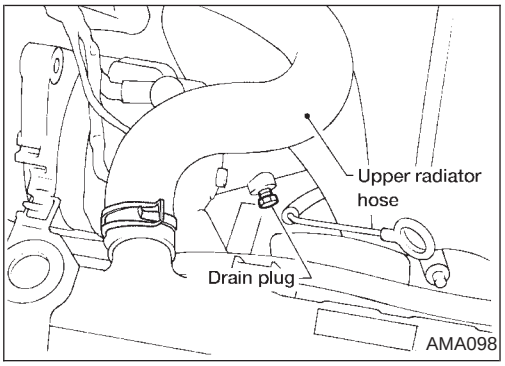

LOWER TIMING CHAIN

1. Drain coolant by removing the cylinder block drain plug and opening the radiator drain cock. Refer to MA-11, "Changing Engine Coolant".
2. Remove oil pan.
   Refer to "Removal", "OIL PAN", EM-15.
3. Remove the power steering pump and position it to the side. Remove the idler pulley and bracket.
4. Set No. 1 piston at TDC on its compression stroke.

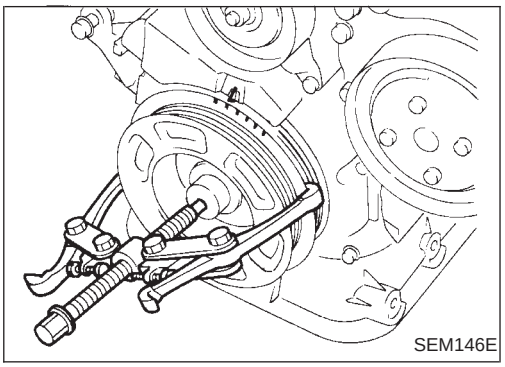

5. Remove the crankshaft pulley.
6. Remove the oil separator.
7. Remove the front cover.

CAUTION:
Be careful not to tear or damage the cylinder head gasket.

NOTE:
Engine may need to be lowered to provide clearance for the timing cover to clear the frame. Engine height may need to be adjusted when removing the cover.

Removal (Cont'd)

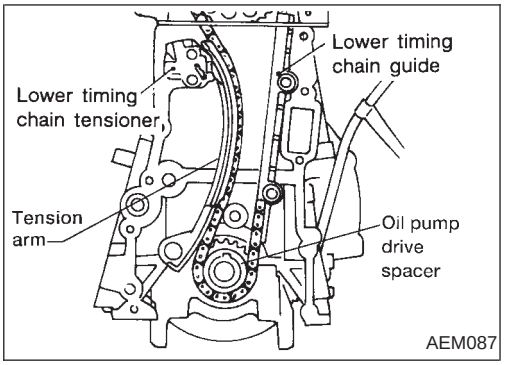

8. Remove the following parts:
- Lower timing chain tensioner (Push piston and insert a suitable pin into pin hole.)
- Chain tension arm
- Lower timing chain guide
- Oil pump drive spacer
9. Remove the idler sprocket. Refer to "IDLER SPROCKET", "Removal", EM-22.

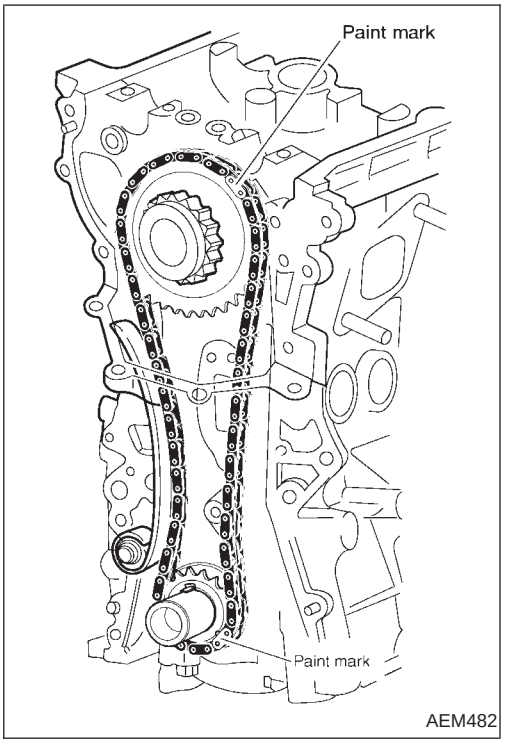

10. Wipe off the links of the timing chain next to the timing marks on the sprockets. Put paint marks on the timing chain, matching them with the timing marks on the crankshaft sprocket and idler sprocket.
11. Remove the lower timing chain and sprocket.

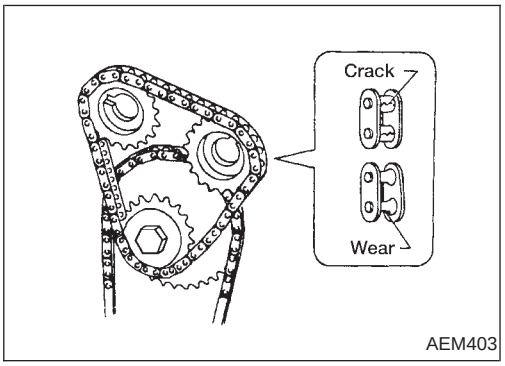

Inspection

Check for cracks and excessive wear at roller links. Replace chain if necessary.

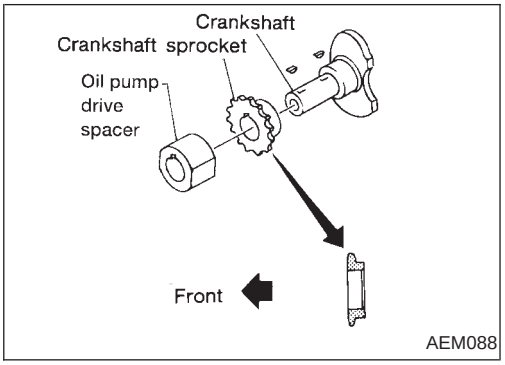

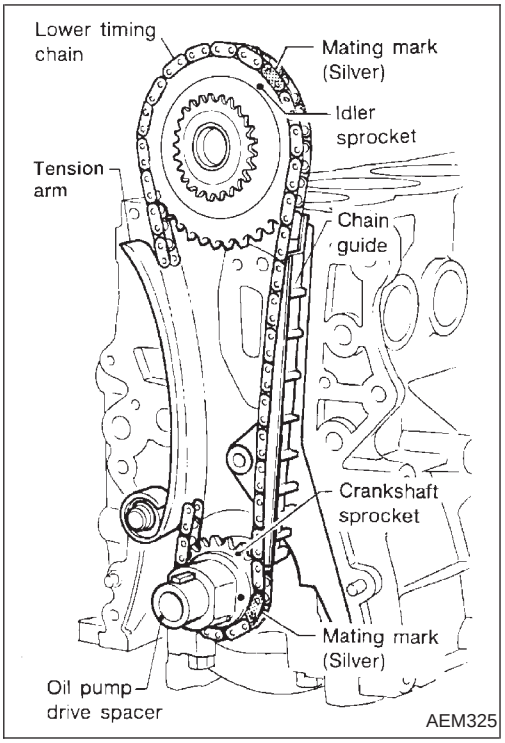

Installation

LOWER TIMING CHAIN

1. Install crankshaft sprocket and oil pump drive spacer.

- **Make sure that mating marks of crankshaft sprocket face front of engine.**

2. Position crankshaft so that No. 1 piston is set at TDC on compression stroke.
3. Install the idler sprocket and lower timing chain using the mating marks and the paint marks made during the removal process.

CAUTION:

Be careful not to tear or damage the cylinder head gasket.

4. Install chain guide and chain tension arm.
5. Install lower chain tensioner and remove the pin securing the piston into the tensioner body.
6. Install oil pump drive spacer.

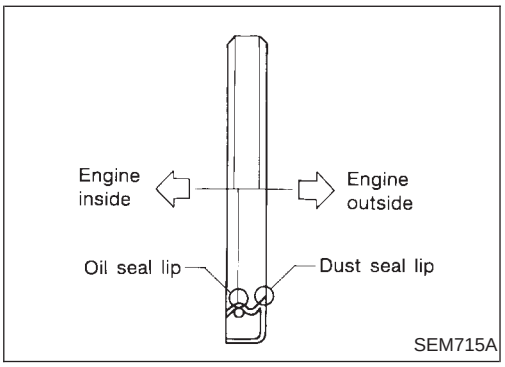

7. Front cover installation:

- Using a scraper or other suitable tool remove all traces of liquid gasket from the cylinder block and front cover mating surfaces.
- Install a new crankshaft seal in front of cover.
- Apply a continuous bead of liquid gasket to front cover. Refer to EM-20.

NOTE:

USE Genuine Nissan RTV Silicone Sealant P/N 999MP-A7007 or equivalent.

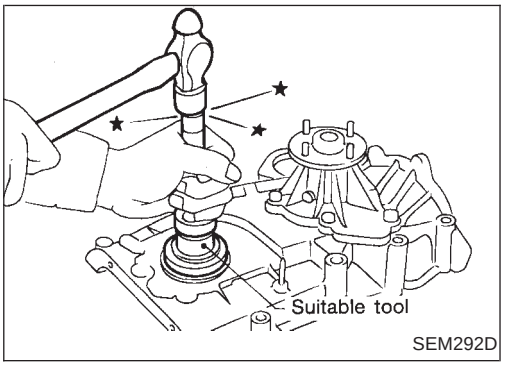

- **Be sure to install new front oil seal. Refer to EM-26.**
- Also place RTV sealant on the head gasket surface.
- Install front cover to the engine.

CAUTION:

Be careful not to tear or damage the cylinder head gasket.

8. Install oil pan. Refer to “Installation”, “OIL PAN”, EM-17.
9. Install the following parts:

- Crankshaft pulley.
- A/C compressor and idler pulley bracket.
- Power steering pump.

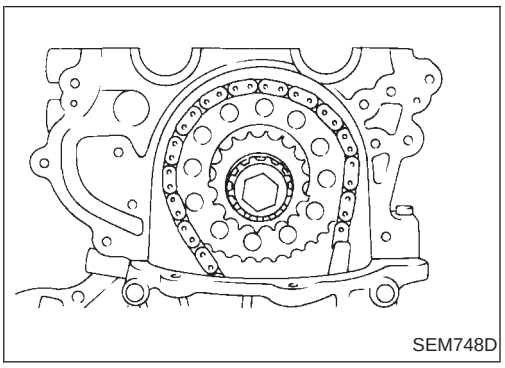

UPPER TIMING CHAIN

1. Install lower timing chain (if removed). Refer to “LOWER TIMING CHAIN”, “Installation”, EM-24.

Installation (Cont'd)

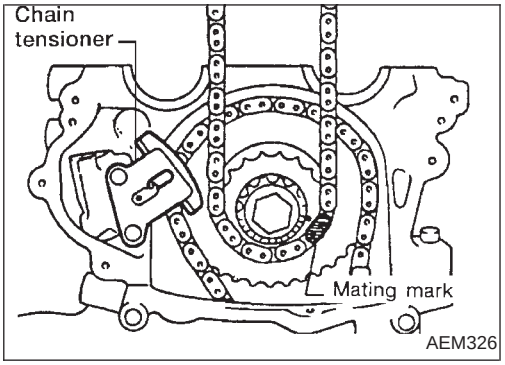

2. Install upper timing chain and sprockets, to the painted reference marks made during removal.
3. Install chain tensioner. Remove the pin holding the tensioner piston in the bore of the tensioner.
4. Install camshaft sprocket cover.

- Use a scraper to remove all traces of liquid gasket from mating surfaces of the engine block and camshaft sprocket cover.
- Apply a continuous bead of RTV sealant to the cover. Refer to EM-20.
- Also place RTV sealant on the head gasket surface.

NOTE:
Use Nissan Genuine RTV Silicone Sealant, Part No. 999 MP-A7007 or equivalent.

CAUTION:
Be careful not to tear or damage the cylinder head gasket.

CAUTION:
Be careful upper timing chain does not slip or jump when installing camshaft sprocket cover.

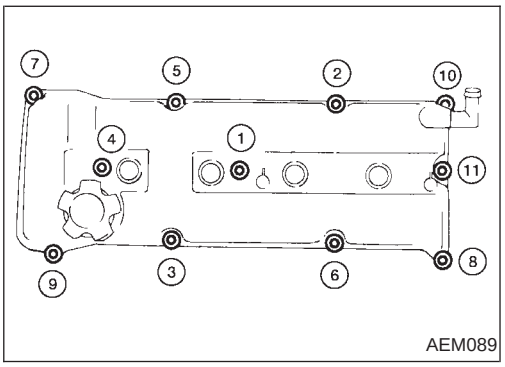

5. Install rocker cover using the following procedure:

a. Tighten nuts and bolts ① - ⑤ - ⑥ - ④ in that order to 4 Nm (0.4 kg-m, 35 in-lb).

b. Tighten nuts and bolts to ① to ⑪ in numerical order to 8 to 11 Nm (0.8 to 1.1 kg-m, 69 to 95 in-lb).

Install all spark plugs with high-tension cords.

6. Install upper right engine mount and bracket.
7. Install power steering fluid reservoir tank.
8. Install generator support bracket and generator.
9. Install power steering, generator and A/C compressor drive belts.
10. Install vacuum hoses, electrical harnesses and connectors.
11. Install the spark plug wires.

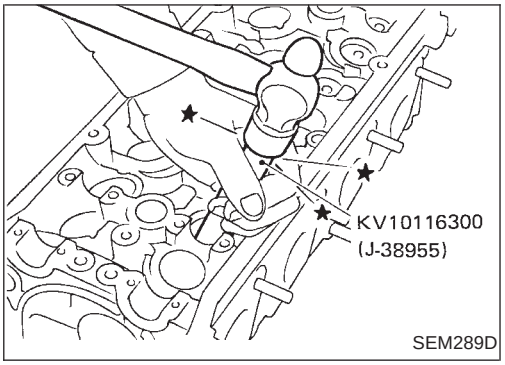

SEM289D

Valve Oil Seal

1. Remove rocker cover.
2. Remove camshaft. Refer to EM-21.
3. Remove valve spring and valve oil seal with Tool or suitable tool.

- **Piston must be set at TDC to prevent valve from falling.**

4. Apply engine oil to new valve oil seal and install it with Tool.

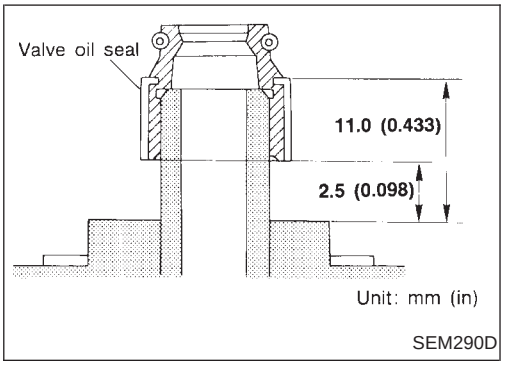

SEM290D

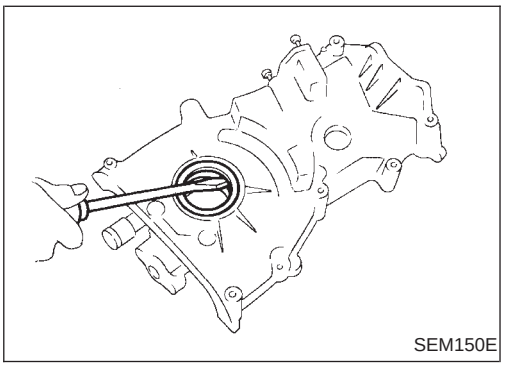
SEM150E

Front Oil Seal

1. Remove radiator shroud and crankshaft pulley.
2. Remove front oil seal.

- **Be careful not to scratch front cover.**

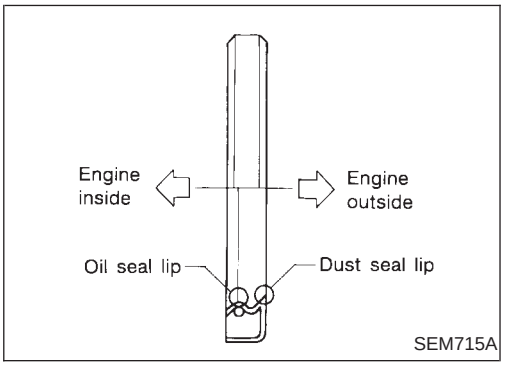

SEM715A

3. Apply engine oil to new oil seal and install it using a suitable tool.

- **Install new oil seal in the direction shown.**

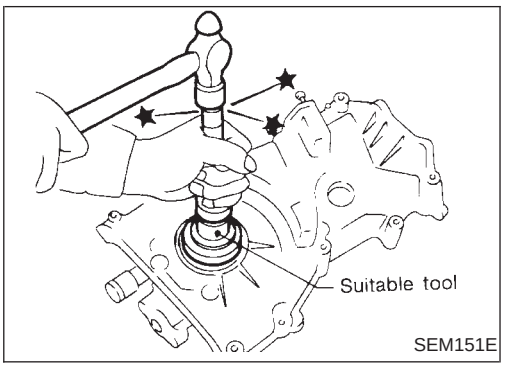

SEM151E

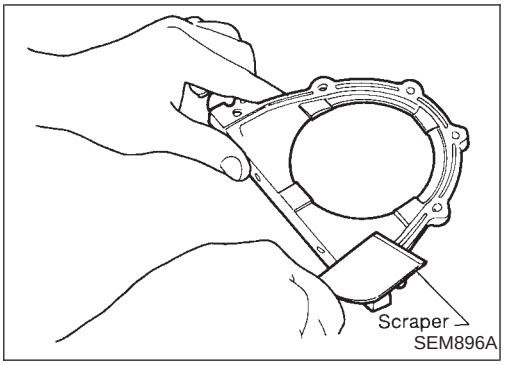

Rear Oil Seal

1. Remove drive plate or flywheel.
2. Remove rear oil seal retainer.
3. Remove traces of liquid gasket using scraper.

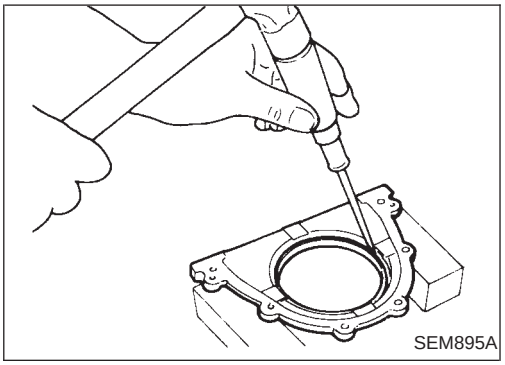

4. Remove rear oil seal from rear oil seal retainer.
- **Be careful not to scratch rear oil seal retainer.**

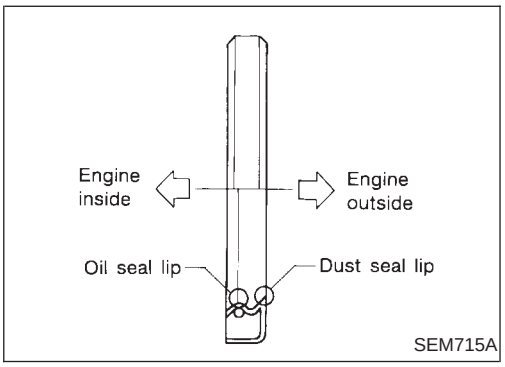

5. Apply engine oil to new oil seal and install it using a suitable tool.
- **Install new oil seal in the direction shown.**

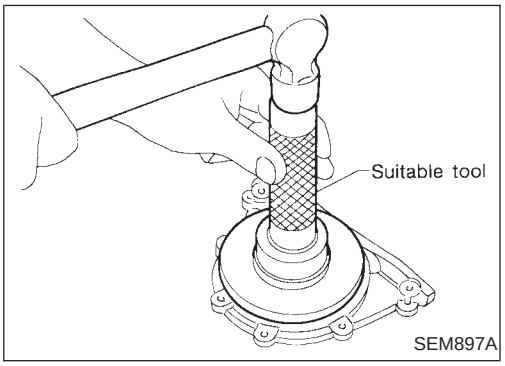

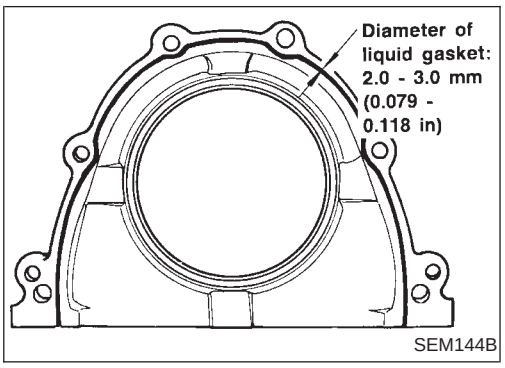

6. Apply a continuous bead of liquid gasket to mating surface of rear oil seal retainer.
- **Use Genuine RTV silicone sealant Part No. 999MP-A7007 or equilavant.**
- **Apply around inner side of bolt holes.**

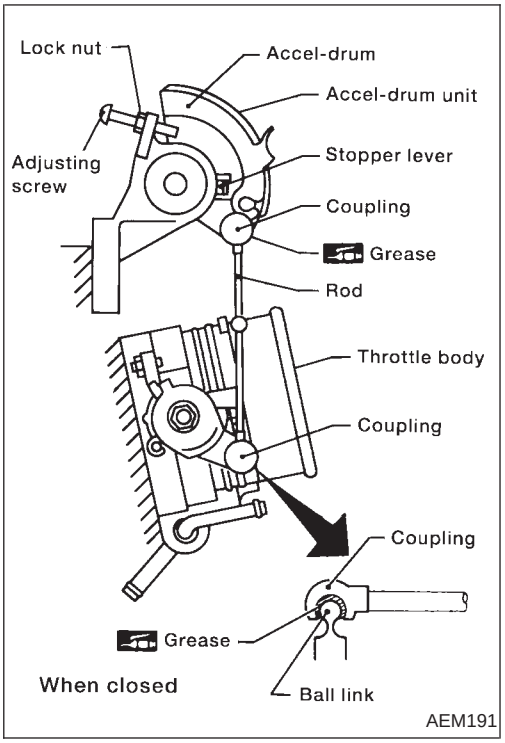

Adjustment

Adjust accel-drum unit after any of the following parts are installed:

- **Accel-drum unit**
- **Throttle body**
- **Rod (Always replace with a new one after removal.)**

1. Install accel-drum unit and throttle body.
2. Apply grease all over the inside of the rod couplings.

Use genuine Nissan grease or equivalent.

3. Attach each coupling to ball links on throttle body and accel-drum unit.

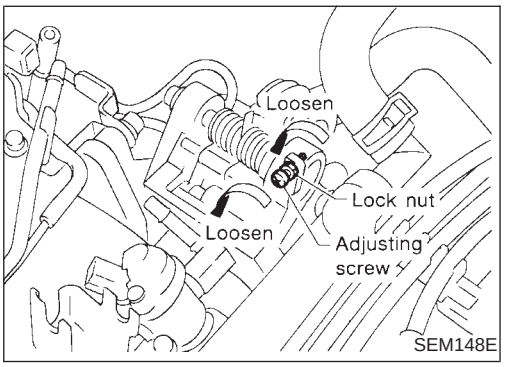

4. Loosen lock nut.
5. Loosen adjusting screw.

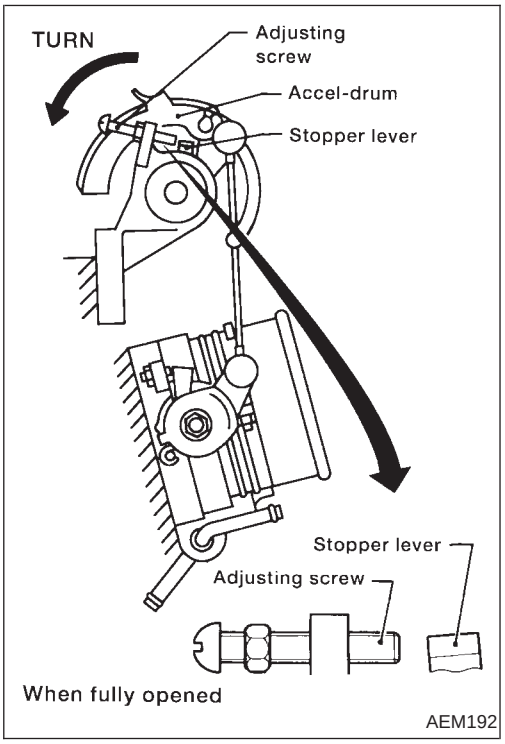

6. Manually turn accel-drum until throttle valve is fully open.

- **Check that stopper lever is not touching adjusting screw.**

  If it is, loosen adjusting screw to maintain clearance between the two.

Adjustment (Cont'd)

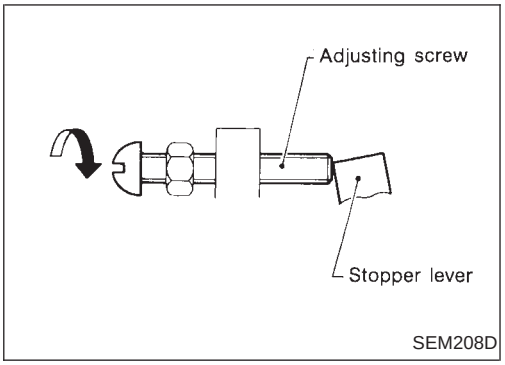

7. Turn adjusting screw until it touches stopper lever.
8. Release accel-drum.

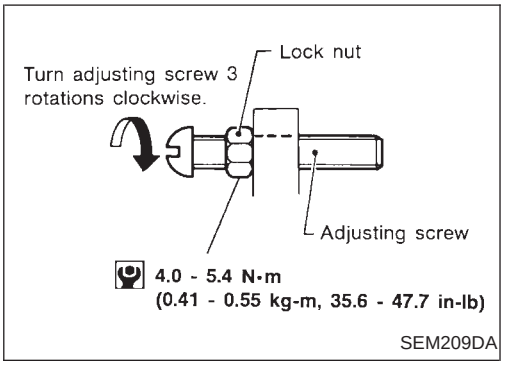

9. Turn adjusting screw 3 rotations clockwise.
10. Tighten lock nut to specification.

SEC. 111•130

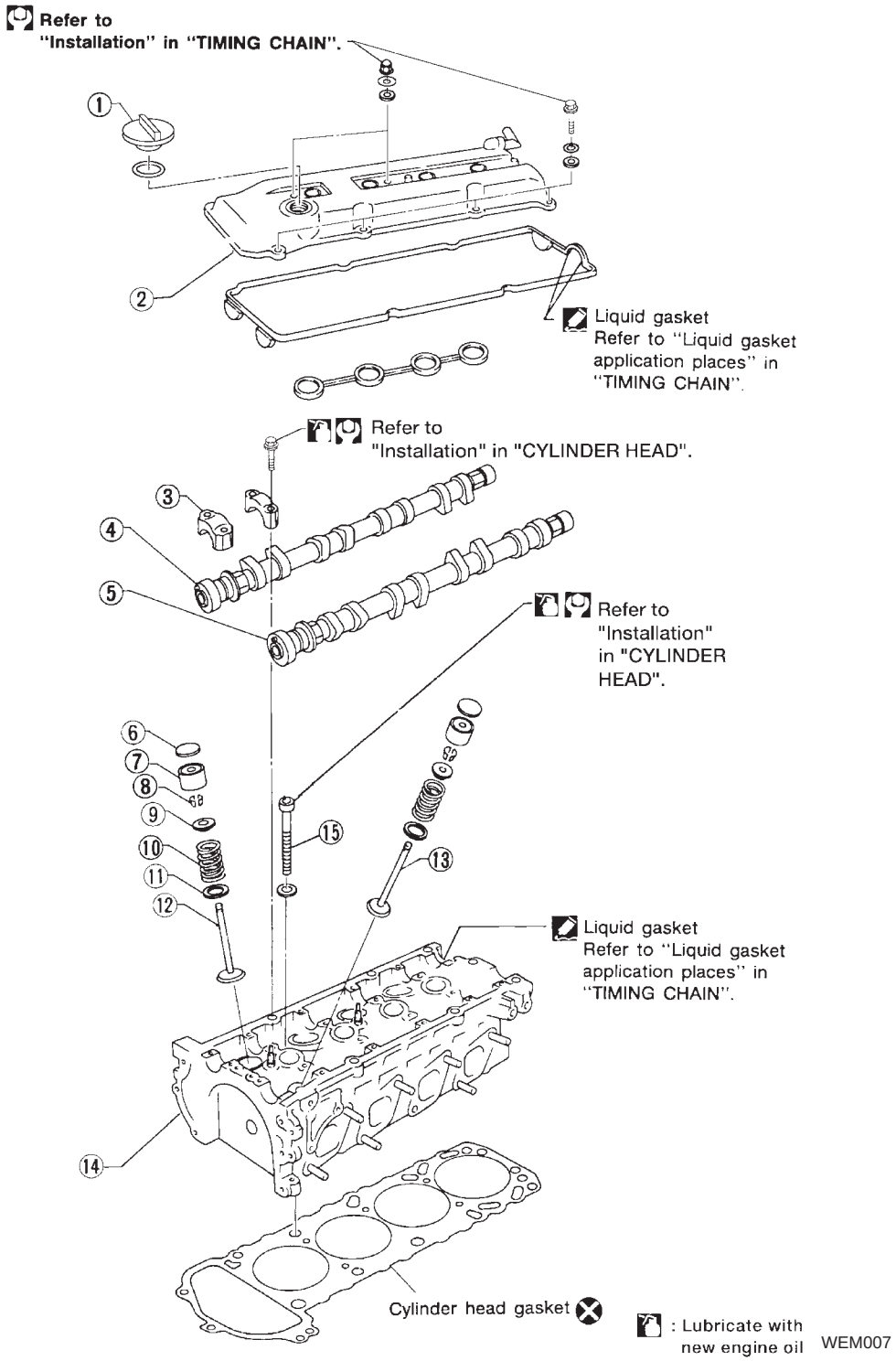

① Oil filler cap
② Rocker cover
③ Camshaft bracket
④ Intake camshaft
⑤ Exhaust camshaft
⑥ Shim
⑦ Valve lifter
⑧ Valve cotter
⑨ Spring retainer
⑩ Valve spring
⑪ Spring seat
⑫ Intake valve
⑬ Exhaust valve
⑭ Cylinder head
⑮ Cylinder head bolt

CAUTION:

- **When installing camshafts, chain tensioners, oil seals, or other sliding parts, lubricate contacting surfaces with new engine oil.**
- **Apply new engine oil to threads and seat surfaces when installing cylinder head, camshaft sprocket, crankshaft pulley, and camshaft bracket.**
- **Attach tags to valve lifters so as not to mix them up.**
- **Before removing camshaft and idler sprockets, apply paint marks to them for retiming.**

Removal

1. Remove upper timing chain and idler sprocket.

Refer to "TIMING CHAIN", "Removal", "UPPER TIMING CHAIN" (EM-21).

- **For retiming during cylinder head removal/installation, apply paint marks to camshaft sprockets, upper timing chain, lower timing chain and idler sprocket.**

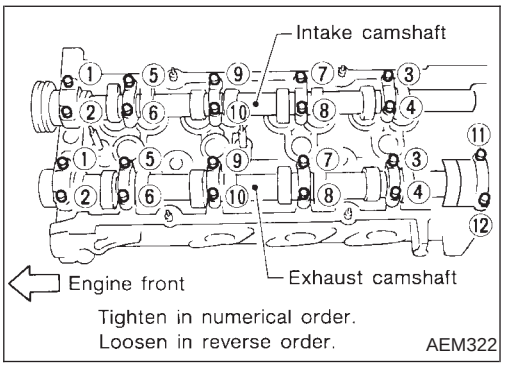

2. Remove camshaft brackets and camshafts.
- **Mark these parts original positions for reassembly.**
3. Remove cylinder head bolts in numerical order.
- **Removing bolts in incorrect order could result in a warped or cracked cylinder head.**

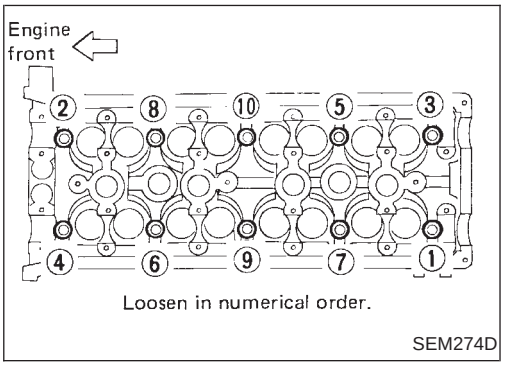

- **Loosen cylinder head bolts in two or three steps.**
4. Remove cylinder head and cylinder head gasket.

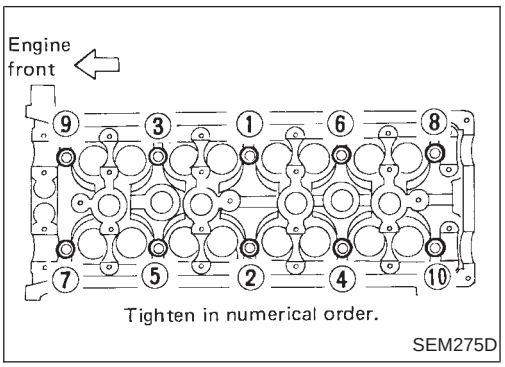

Installation

1. Tighten cylinder head bolts in numerical order using the following procedure:

a. Tighten all bolts to 29 N·m (3.0 kg-m, 22 ft-lb).
b. Tighten all bolts to 79 N·m (8.1 kg-m, 59 ft-lb).

Installation (Cont'd)

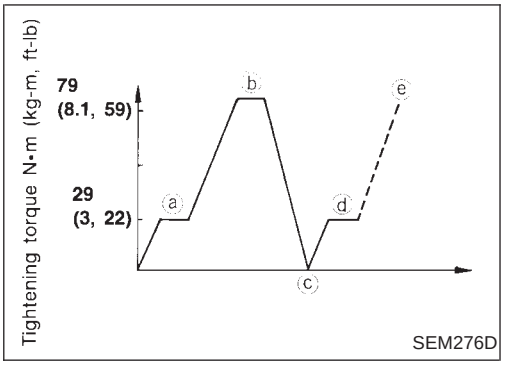

c. Loosen all bolts completely.
d. Tighten all bolts to 25 to 34 N·m (2.5 to 3.5 kg-m, 18 to 25 ft-lb).
e. Turn all bolts 86 to 91 degrees clockwise. If angle wrench is not available, mark all cylinder head bolts on the side facing engine front. Then, turn each cylinder head bolt 86 to 91 degrees clockwise.

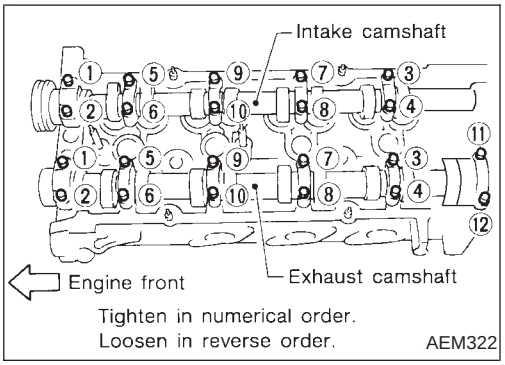

2. Install camshafts and camshaft brackets in the order shown using the following procedure.
a. Set camshafts and camshaft brackets.
b. Tighten all bolts to 2 N·m (0.2 kg-m, 17 in-lb).
c. Tighten all bolts to 9.0 to 11.8 N·m (0.92 to 1.2 kg-m, 79.9 to 104.2 in-lb).
- **Apply new engine oil to bolt threads and seat surfaces.**

3. Install upper timing chain and idler sprocket.
Refer to "TIMING CHAIN", "Installation", "UPPER TIMING CHAIN" (EM-24).

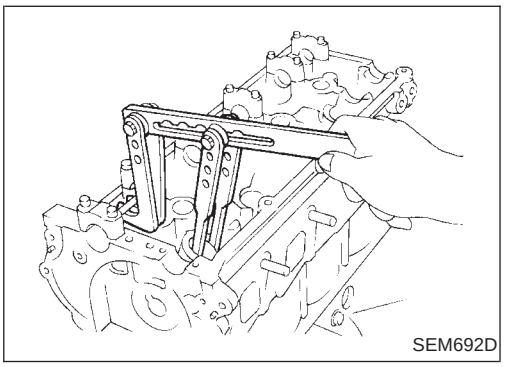

Disassembly

1. Remove intake manifold and exhaust manifold. Refer to "Outer Components Parts" (EM-10).
2. Remove valve components with Tool.
3. Remove valve oil seal with a suitable tool. (Refer to OIL SEAL REPLACEMENT, EM-26.)

CAUTION:
Keep parts in order so that they can be installed in their original positions during assembly.

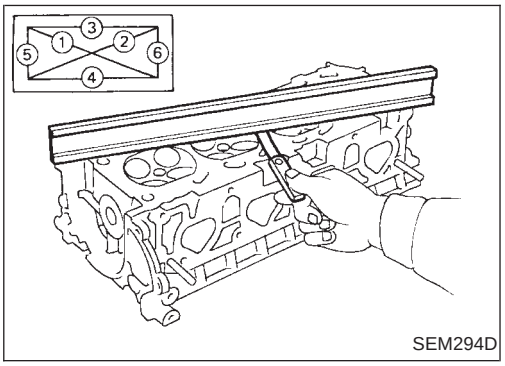

Inspection

CYLINDER HEAD DISTORTION

- Clean surface of cylinder head.
- Use a reliable straightedge and feeler gauge to check the flatness of cylinder head surface.
- Check along six positions shown in figure.

Head surface flatness:
Standard: Less than 0.03 mm (0.0012 in)
Limit: 0.1 mm (0.004 in)

If beyond the specified limit, replace or resurface.

Resurfacing limit:
The limit for cylinder head resurfacing is determined by the cylinder block resurfacing.
Amount of cylinder head resurfacing is "A".
Amount of cylinder block resurfacing is "B".
The maximum limit is as follows:
A + B = 0.2 mm (0.008 in)

After resurfacing cylinder head, check that camshaft rotates freely by hand. If resistance is felt, cylinder head must be replaced.

Nominal cylinder head height:
126.3 - 126.5 mm (4.972 - 4.980 in)

Inspection (Cont'd)

CAMSHAFT VISUAL CHECK

Check camshaft for scratches, seizure and wear.

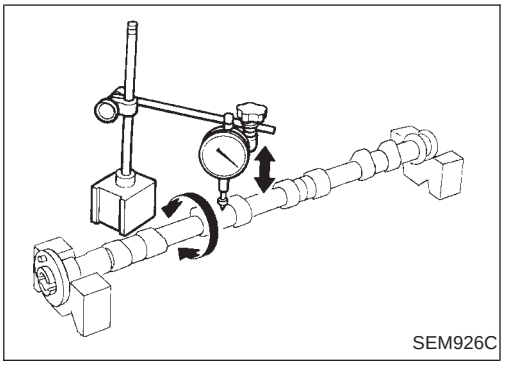
SEM926C

CAMSHAFT RUNOUT

1. Measure camshaft runout at the center journal.
   Runout (Total indicator reading):
   Standard
   Less than 0.02 mm (0.0008 in)
   Limit
   0.04 mm (0.0016 in)
2. If it exceeds the limit, replace camshaft.

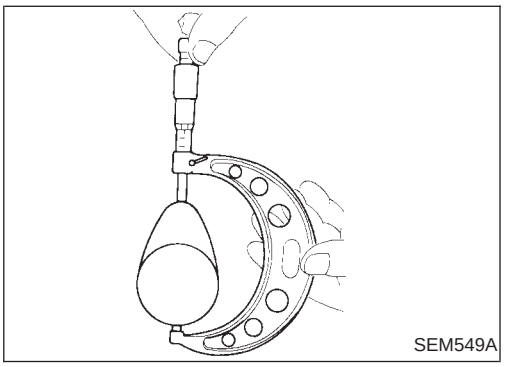
SEM549A

CAMSHAFT CAM HEIGHT

1. Measure camshaft cam height.
   Standard cam height:
   Intake
   42.040 - 42.230 mm (1.6551 - 1.6626 in)
   Exhaust
   42.040 - 42.230 mm (1.6551 - 1.6626 in)
   Cam wear limit:
   Intake & Exhaust
   0.2 mm (0.008 in)
2. If wear is beyond the limit, replace camshaft.

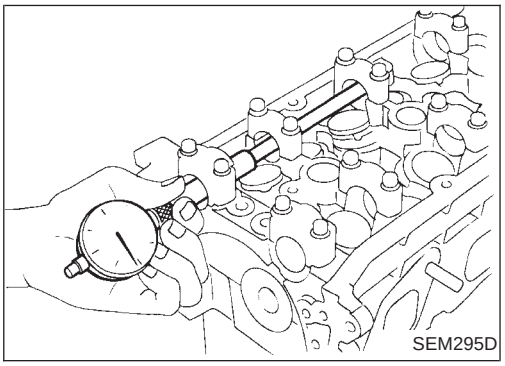
SEM295D

CAMSHAFT JOURNAL CLEARANCE

1. Install camshaft brackets and tighten bolts to the specified torque. Refer to EM-30.
2. Measure inner diameter of camshaft bearing.
   Standard inner diameter:
   #1 to #5 journals
   28.000 - 28.025 mm (1.1024 - 1.1033 in)

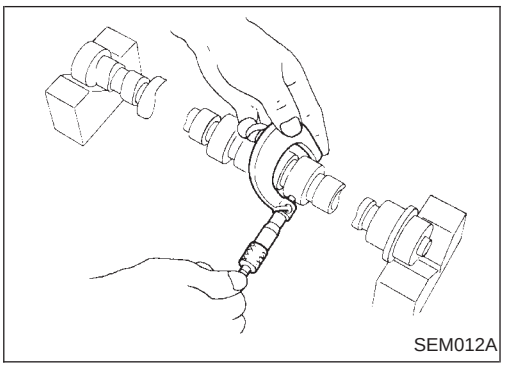
SEM012A

3. Measure outer diameter of camshaft journal.
   Standard outer diameter:
   #1 to #5 journals
   27.935 - 27.955 mm (1.0998 - 1.1006 in)
4. If clearance exceeds the limit, replace camshaft and/or cylinder head.
   Camshaft journal clearance:
   Standard 0.045 - 0.090 mm (0.0018 - 0.0035 in)
   Limit 0.12 mm (0.0047 in)

Inspection (Cont'd)

CAMSHAFT END PLAY

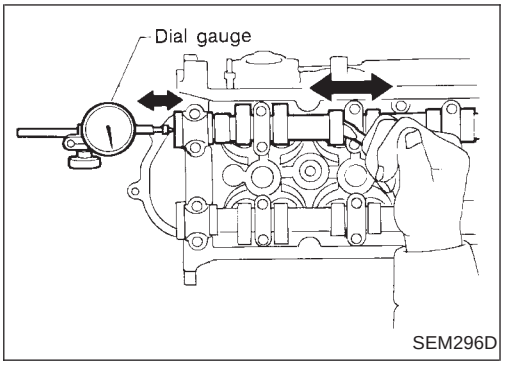

SEM296D

1. Install camshaft in cylinder head. Refer to EM-30.
2. Measure camshaft end play.
   Camshaft end play:
   Standard
   0.070 - 0.148 mm (0.0028 - 0.0058 in)
   Limit
   0.20 mm (0.0079 in)
3. If end play exceeds the limit, replace camshaft and remeasure camshaft end play.
4. If end play still exceeds the limit after replacing camshaft, replace cylinder head.

CAMSHAFT SPROCKET RUNOUT

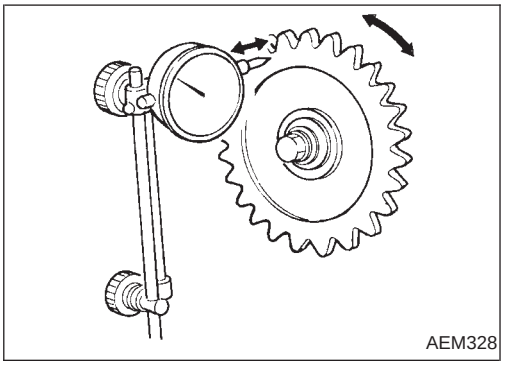
AEM328

1. Install sprocket on camshaft.
2. Measure camshaft sprocket runout.
   Runout (Total indicator reading):
   Limit 0.12 mm (0.0047 in)
3. If it exceeds the limit, replace camshaft sprocket.

VALVE GUIDE CLEARANCE

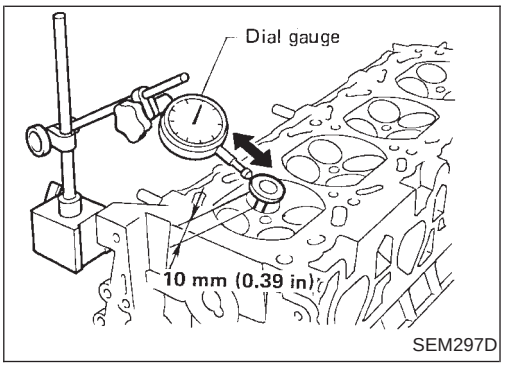

SEM297D

1. Measure valve deflection as shown in figure. (Valve and valve guide mostly wear in this direction.)
   Valve intake and exhaust deflection limit (Dial gauge reading):
   0.2 mm (0.008 in)

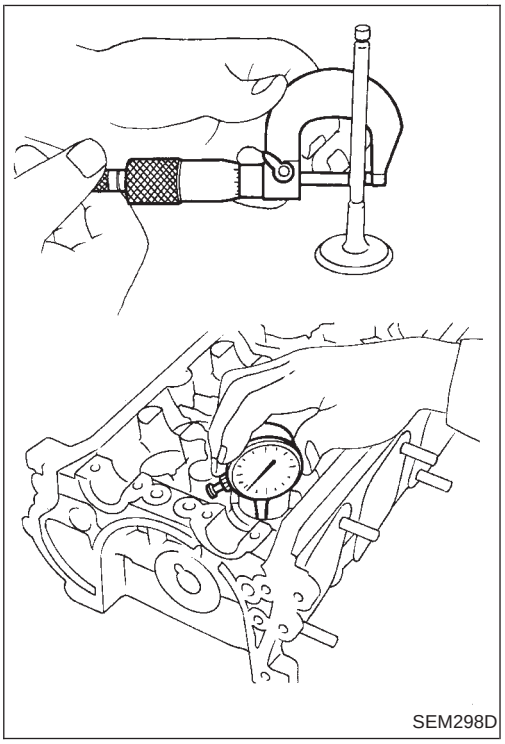
SEM298D

2. If it exceeds the limit, check valve to valve guide clearance.
a. Measure valve stem diameter and valve guide inner diameter.
b. Check that clearance is within specification.

Valve to valve guide clearance = Valve guide inner diameter – Valve stem diameter:

Unit: mm (in)

	Standard	Limit
Intake	0.020 - 0.053 (0.0008 - 0.0021)	0.08 (0.0031)
Exhaust	0.040 - 0.073 (0.0016 - 0.0029)	0.1 (0.004)

c. If it exceeds the limit, replace valve and remeasure clearance.
- If clearance still exceeds the limit after replacing valve, replace the valve guide.

Inspection (Cont'd)

VALVE GUIDE REPLACEMENT

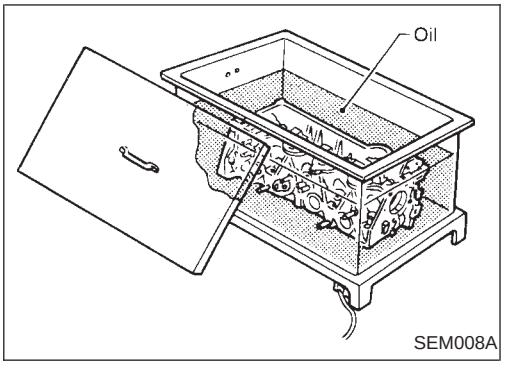

SEM008A

1. To remove valve guide, heat cylinder head to 120 to 140°C (248 to 284°F).

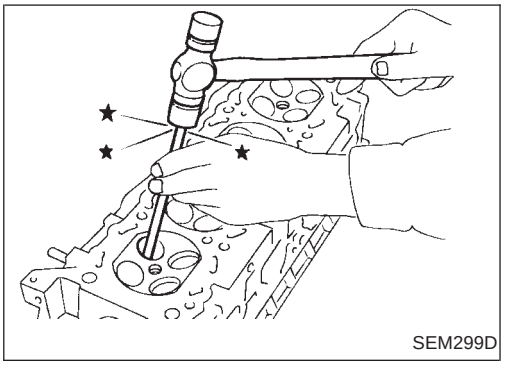
SEM299D

2. Drive out valve guide using a hammer and suitable tool or a press [under a 20 kN (2 ton, 2.2 US ton, 2.0 Imp ton) pressure].

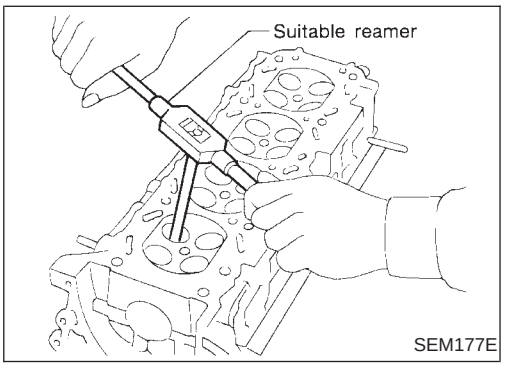

SEM177E

3. Ream cylinder head valve guide hole.
   Valve guide hole diameter
   (for service parts):
   Intake & Exhaust
   11.175 - 11.196 mm (0.4400 - 0.4408 in)

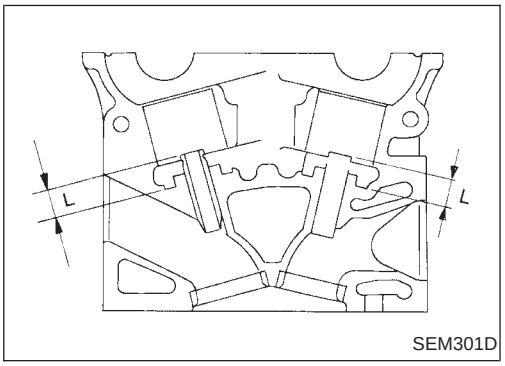

SEM301D

4. Heat cylinder head to 120 to 140°C (248 to 284°F) and press service valve guide onto cylinder head.
   Projection "L":
   13.3 - 13.9 mm (0.524 - 0.547 in)

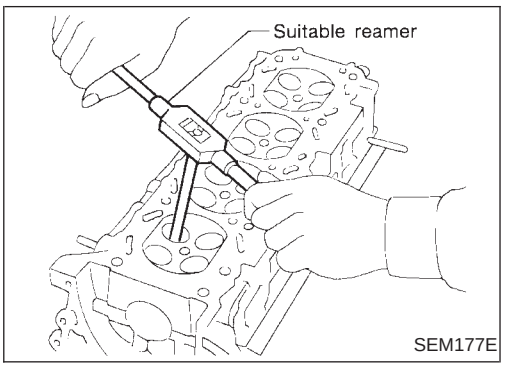

SEM177E

5. Ream valve guide.
   Finished size:
   Intake & Exhaust
   7.000 - 7.018 mm (0.2756 - 0.2763 in)

Inspection (Cont'd)

VALVE SEATS

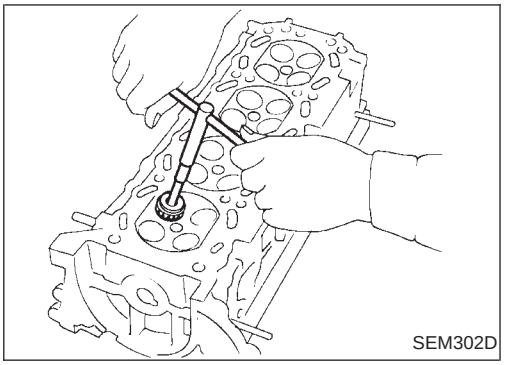
SEM302D

Check valve seats for pitting at contact surface. Resurface or replace if excessively worn.

- **Before repairing valve seats, check valve and valve guide for wear. If they are worn, replace them. Then correct valve seat.**
- **Use both hands to cut uniformly.**

REPLACING VALVE SEAT FOR SERVICE PARTS

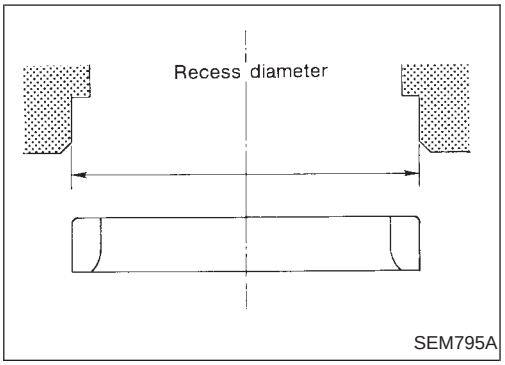

SEM795A

1. Bore out old seat until it collapses. Set machine depth stop so that boring cannot contact bottom face of seat recess in cylinder head.
2. Ream cylinder head recess.
   Reaming bore for service valve seat
   Oversize [0.5 mm (0.020 in)]:
   Intake 38.000 - 38.016 mm (1.4961 - 1.4967 in)
   Exhaust 32.700 - 32.716 mm (1.2874 - 1.2880 in)

Use the valve guide center for reaming to ensure valve seat will have the correct fit.

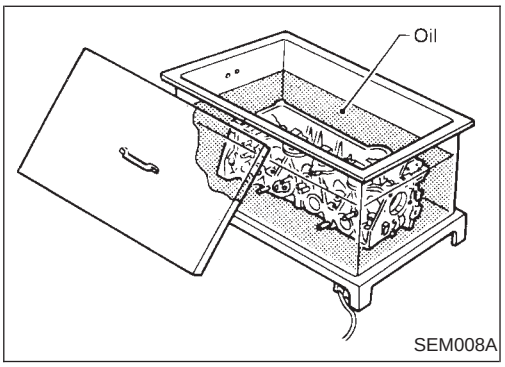

SEM008A

3. Heat cylinder head to 120 to 140°C (248 to 284°F).
4. Press fit valve seat until it seats on the bottom.

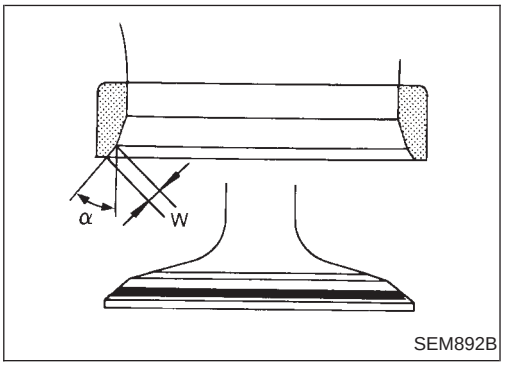

SEM892B

5. Cut or grind valve seat using suitable tool to the specified dimensions. Refer to SDS, EM-58.
6. After cutting, lap valve seat with abrasive compound.
7. Check valve seating condition.
   Seat face angle "α":
   44°53′ - 45°07′
   Contacting width "W":
   Intake
   1.48 - 1.63 mm (0.0583 - 0.0642 in)
   Exhaust
   1.8 - 2.0 mm (0.071 - 0.079 in)

VALVE DIMENSIONS

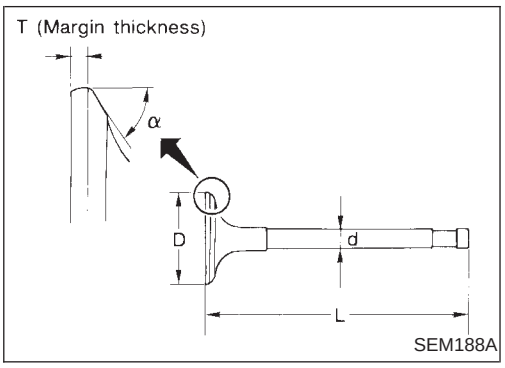

SEM188A

Check dimensions of each valve. Refer to SDS, EM-55.
When valve head has been worn down to 0.5 mm (0.020 in) in margin thickness, replace valve.

Grinding allowance for valve stem tip is 0.2 mm (0.008 in) or less.

Inspection (Cont'd)

VALVE SPRING

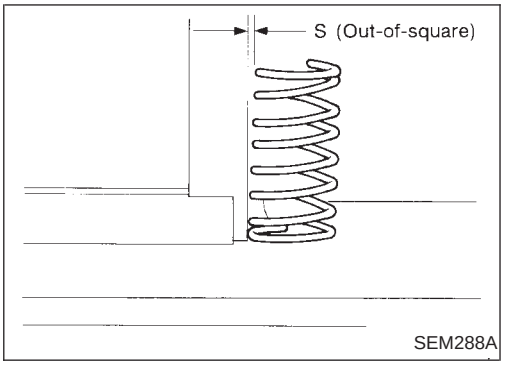

Squareness

1. Measure dimension "S".
   Out-of-square "S":
   Less than 2.3 mm (0.091 in)
2. If it exceeds the limit, replace spring.

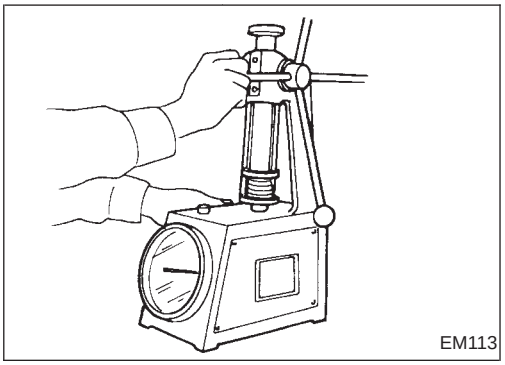

Pressure

Check valve spring pressure at specified spring height.

Pressure:
Standard
369.0 N (37.64 kg, 82.95 lb) at 27.25 mm (1.0728 in)
Limit
More than 347.0 N (35.38 kg, 78.01 lb) at 27.25 mm (1.0728 in)

If it exceeds the limit, replace spring.

VALVE LIFTER AND VALVE SHIM

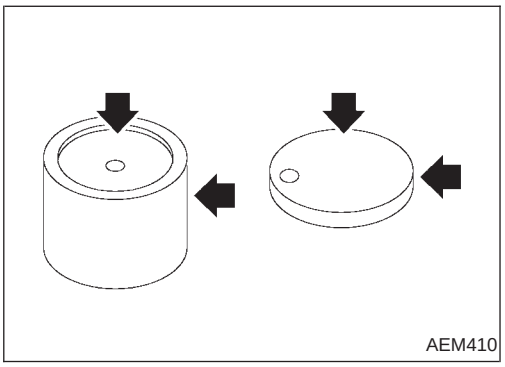

1. Check contact and sliding surfaces for wear or scratches.

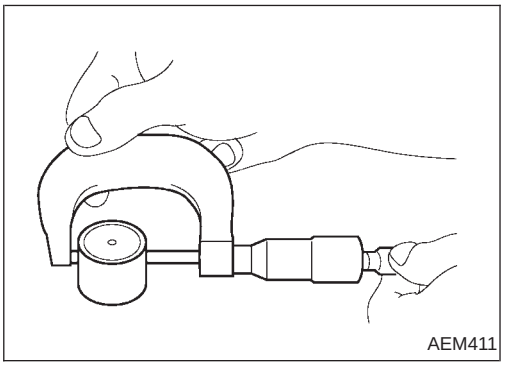

2. Check diameter of valve lifter and valve lifter guide bore.
   Valve lifter diameter:
   33.965 - 33.975 mm (1.3372 - 1.3376 in)

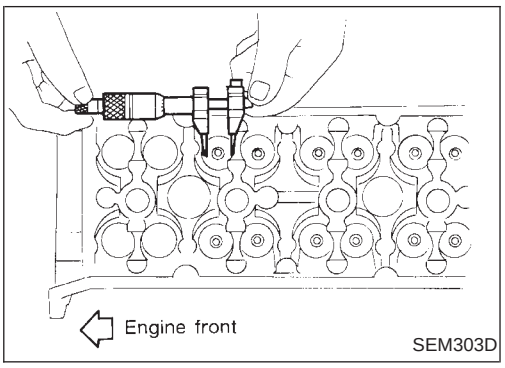

Lifter guide bore diameter:
34.000 - 34.021 mm (1.3386 - 1.3394 in)
Valve lifter to valve lifter guide clearance:
0.025 - 0.056 mm (0.0010 - 0.0022 in)

If it exceeds the standard diameter or clearance, replace valve lifter or cylinder head.

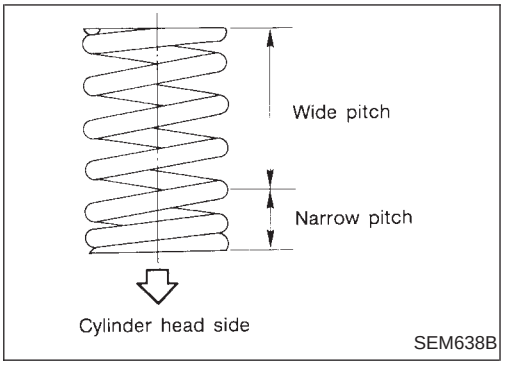

Assembly

Install valve component parts.

- **Always use new valve oil seal. Refer to EM-26.**
- **Before installing valve oil seal, install valve spring seat.**
- **Install outer valve spring (uneven pitch type) with its narrow pitch side toward cylinder head side.**
- **After installing valve components, use plastic hammer to lightly tap valve stem tip to assure a proper fit.**

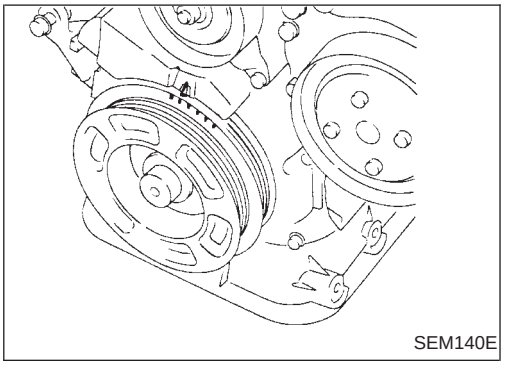

Valve Clearance

CHECKING

Check valve clearance while engine is warm but not running.

1. Remove rocker cover and all spark plugs.
2. Set No. 1 cylinder at TDC on its compression stroke.
- Align pointer with TDC mark on crankshaft pulley.
- Check that valve lifters on No. 1 cylinder are loose and valve lifters on No. 4 are tight.
  If not, turn crankshaft one revolution (360°) and align as above.

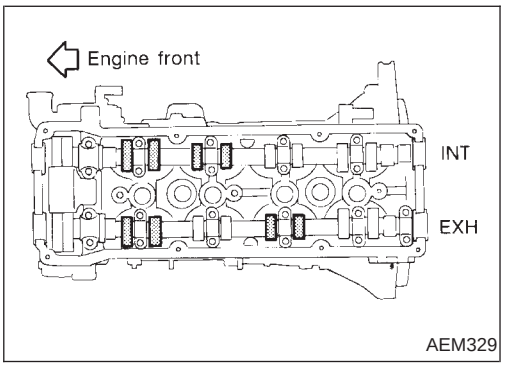

3. Check only those valves shown in the figure.

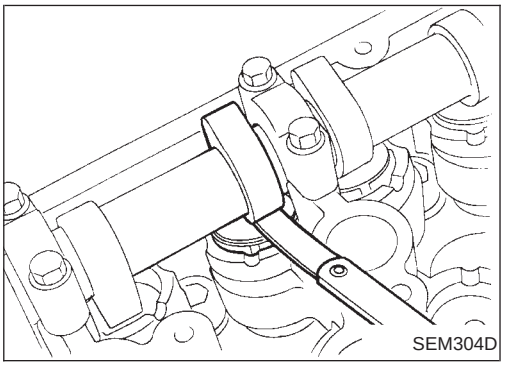

- Using a feeler gauge, measure clearance between valve lifter and camshaft.
- Record any valve clearance measurements which are out of specification. They will be used later to determine the required replacement adjusting shim.

  Valve clearance (Hot):

  Intake

  0.31 - 0.39 mm (0.012 - 0.015 in)

  Exhaust

  0.39 - 0.47 mm (0.015 - 0.018 in)

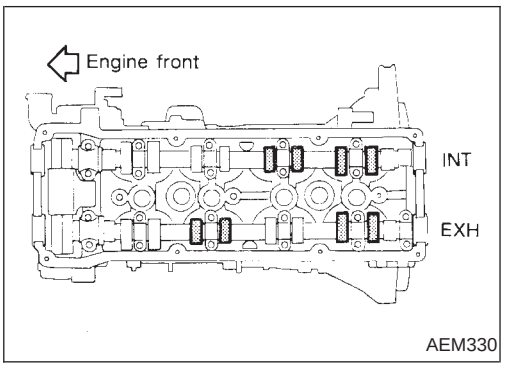

4. Turn crankshaft one revolution (360°) and align mark on crankshaft pulley with pointer.
5. Check valves shown in the figure.
- Use the same procedure mentioned in step 4.
6. If all valve clearances are within specification, install the following parts:
- Rocker cover
- All spark plugs

Valve Clearance (Cont'd)

ADJUSTING

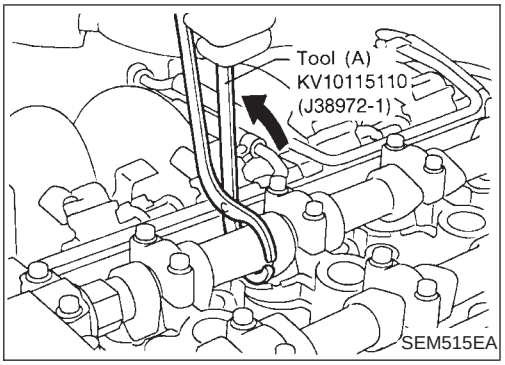

Adjust valve clearance while engine is cold.

1. Turn crankshaft to position cam lobe upward on camshaft of valve being adjusted.
2. Place Tool (A) around camshaft as shown in figure.
3. Rotate Tool (A) so that lifter is pushed down.

Before placing Tool (A), rotate notch toward center of cylinder head (see figure). This will simplify shim removal later.

CAUTION:

Be careful not to damage cam surface with Tool (A).

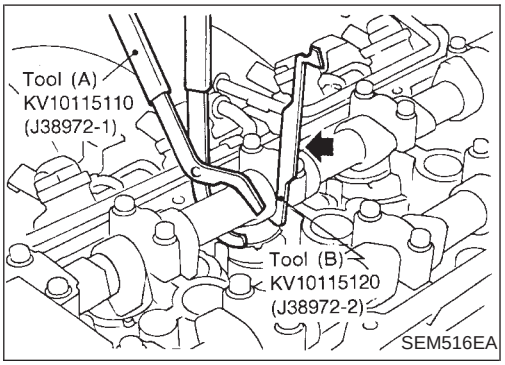

4. Place Tool (B) between camshaft and valve lifter to retain valve lifter.

CAUTION:

- **Place Tool (B) as close to camshaft bracket as possible.**
- **Be careful not to damage cam surface with Tool (B).**

5. Remove Tool (A).

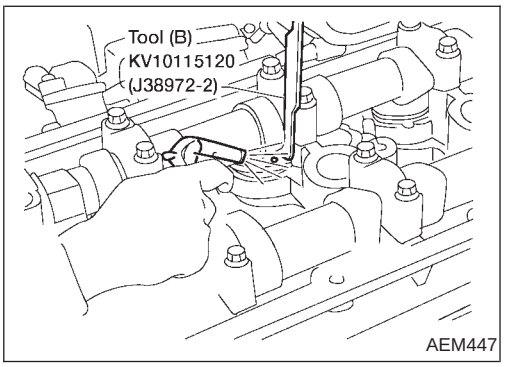

6. Rotate adjusting shim until hole is visible. Blow air into the hole to separate adjusting shim from valve lifter.

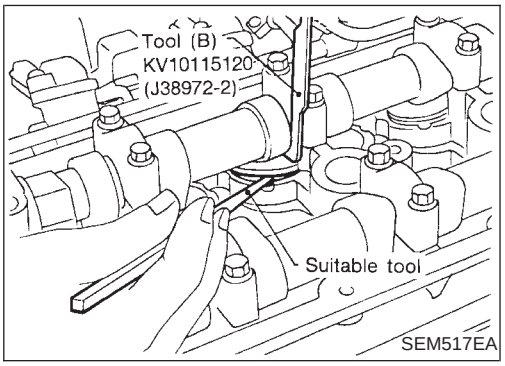

7. Remove adjusting shim using a small screwdriver and a magnetic finger.

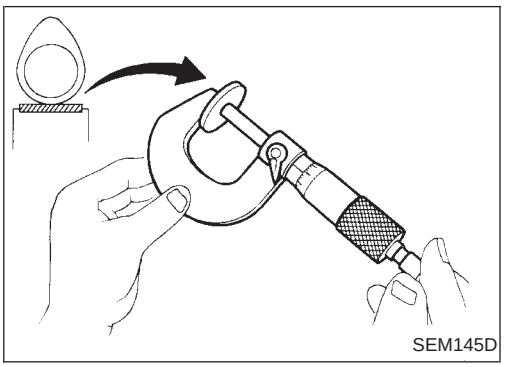

8. Determine replacement adjusting shim size as follows:

a. Using a micrometer, determine thickness of removed shim.

b. Calculate thickness of new adjusting shim so valve clearance comes within specified values.

R = Thickness of removed shim

N = Thickness of new shim

M = Measured valve clearance

Intake: N = R + [M − 0.35 mm (0.0138 in)]

Exhaust: N = R + [M − 0.37 mm (0.0146 in)]

Valve Clearance (Cont'd)

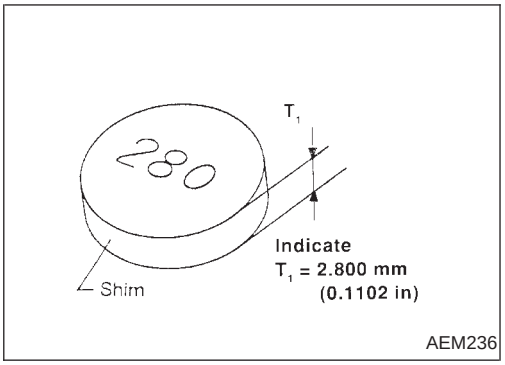

Shims are available in thicknesses from 1.96 mm (0.0772 in) to 2.68 mm (0.1055 in), in steps of 0.02 mm (0.0008 in).

c. Select new shim with thickness as close as possible to calculated value.
   Refer to SDS, EM-57.

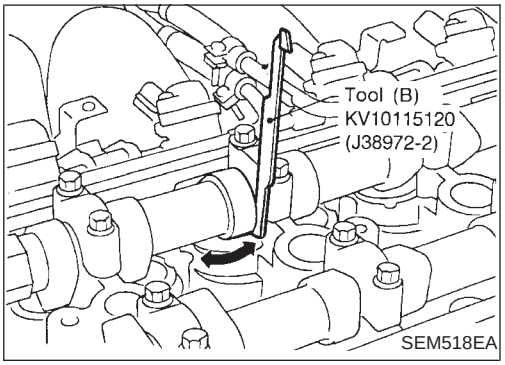

9. Install new shim using a suitable tool.

Install with the surface on which the thickness is stamped facing down.

10. Place Tool (A) as mentioned in steps 2 and 3.
11. Remove Tool (B).
12. Remove Tool (A).
13. Recheck valve clearance.
    Refer to EM-38.

SEC. 112

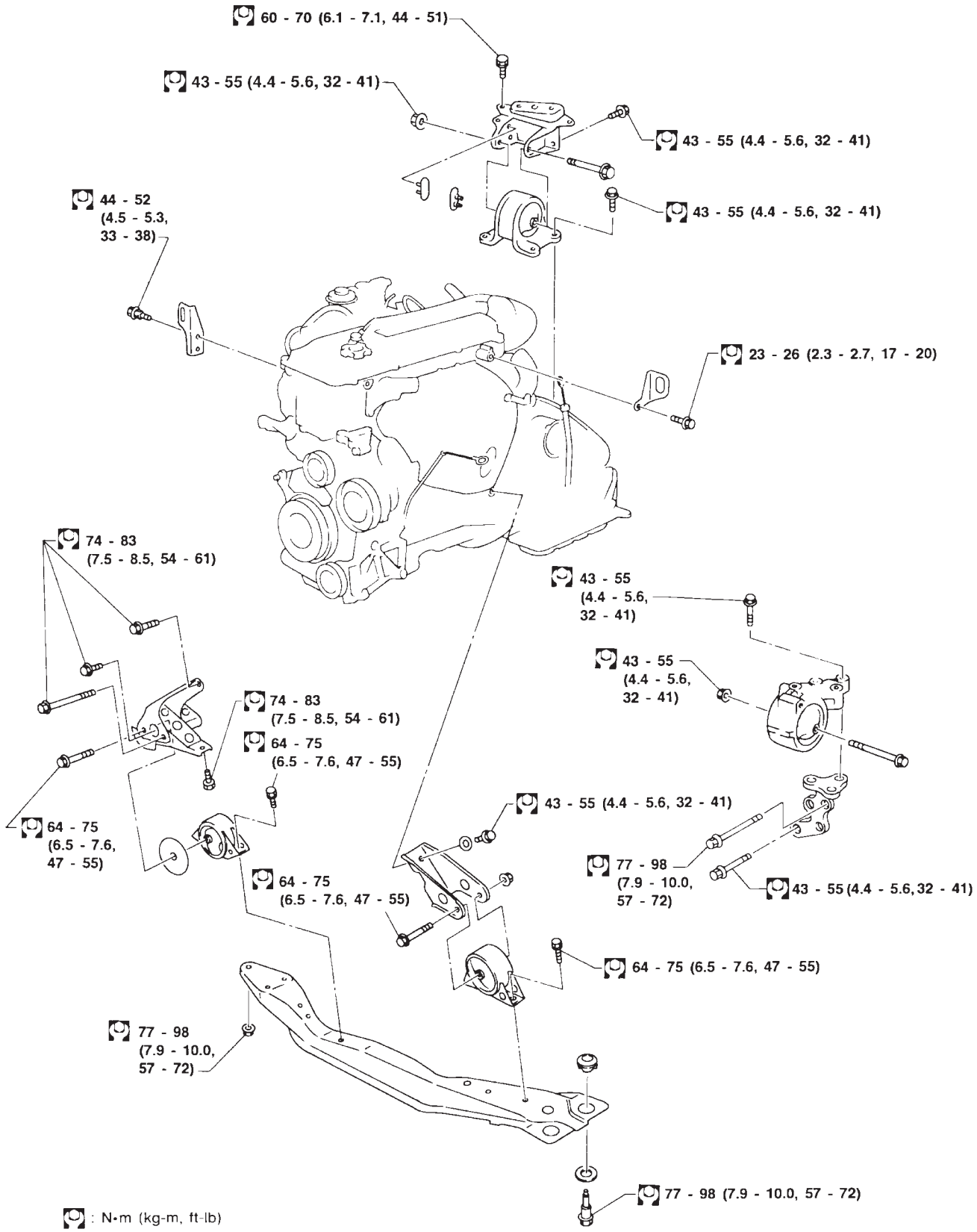

AEM331

WARNING:

- **Position vehicle on a flat and solid surface.**
- **Do not remove engine until exhaust system has completely cooled; otherwise, you may burn yourself and/or fire may break out in fuel line.**
- **Before disconnecting fuel hose, release fuel pressure. Refer to EC-34 section (“Fuel Pressure Release”, “BASIC SERVICE PROCEDURE”).**
- **Before removing front axle from transaxle, place safety stands under designated front supporting points. Refer to GI section for lifting points and towing.**
- **Be sure to hoist engine and transaxle in a safe manner.**
- **For engines not equipped with engine slingers, attach proper slingers and bolts described in PARTS CATALOG.**

CAUTION:

- **When lifting engine, be sure to clear surrounding parts. Use special care near accelerator wire casing, brake lines and brake master cylinder.**
- **In hoisting the engine, always use engine slingers in a safe manner.**
- **When removing drive shaft, be careful not to damage grease seal of transaxle.**
- **Before separating engine and transaxle, remove crankshaft position sensor (OBD) from the assembly.**
- **Always be extra careful not to damage edge of crankshaft position sensor (OBD), or ring gear teeth.**

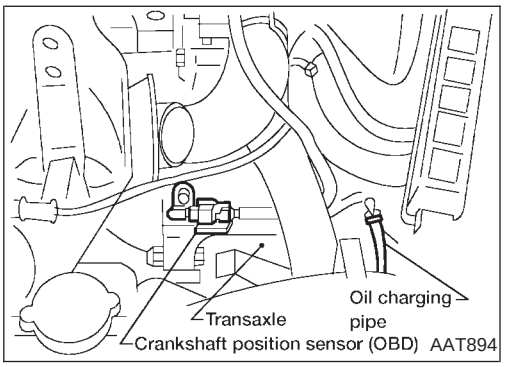

Removal

1. Remove engine undercover and hood.
2. Drain coolant from drain plug on water pipe, and radiator. Refer to MA-11 section (“Changing Engine Coolant”, “ENGINE MAINTENANCE”).
3. Release fuel pressure. Refer to EC-34 section (“Fuel Pressure Release”, “BASIC SERVICE PROCEDURE”).

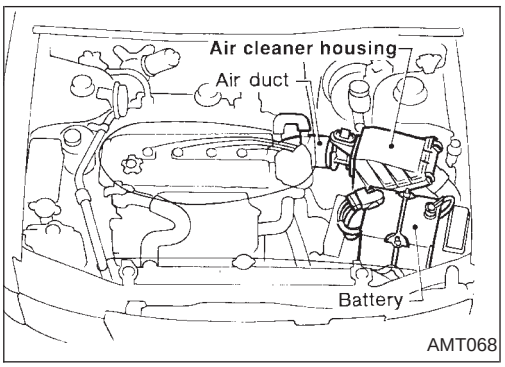

4. Remove battery and its bracket, air cleaner and air duct.
5. Remove vacuum hoses, fuel hoses, wires, harnesses and connectors and so on.
6. Remove front exhaust tube and drive shafts.
7. Remove radiator and fans. Refer to LC-14 section (“Radiator”, “ENGINE COOLING SYSTEM”).
8. Remove drive belts.
9. Remove generator and A/C compressor from engine.
10. Set a suitable transmission jack under transaxle. Hoist engine with engine slinger.

Removal (Cont'd)

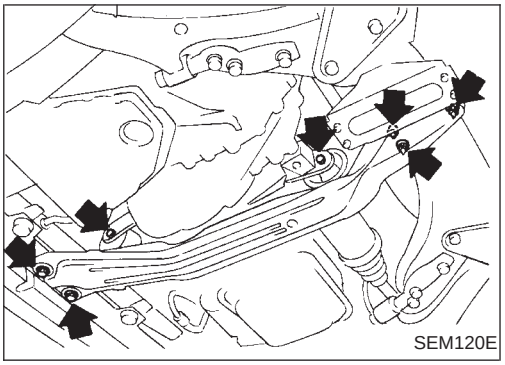
SEM120E

11. Remove RH and LH engine mountings and center member.
- Make sure engine is hoisted level to allow easy removal of mounting thru bolts.

12. Remove front and rear engine mountings.

13. Remove engine with transaxle as shown.

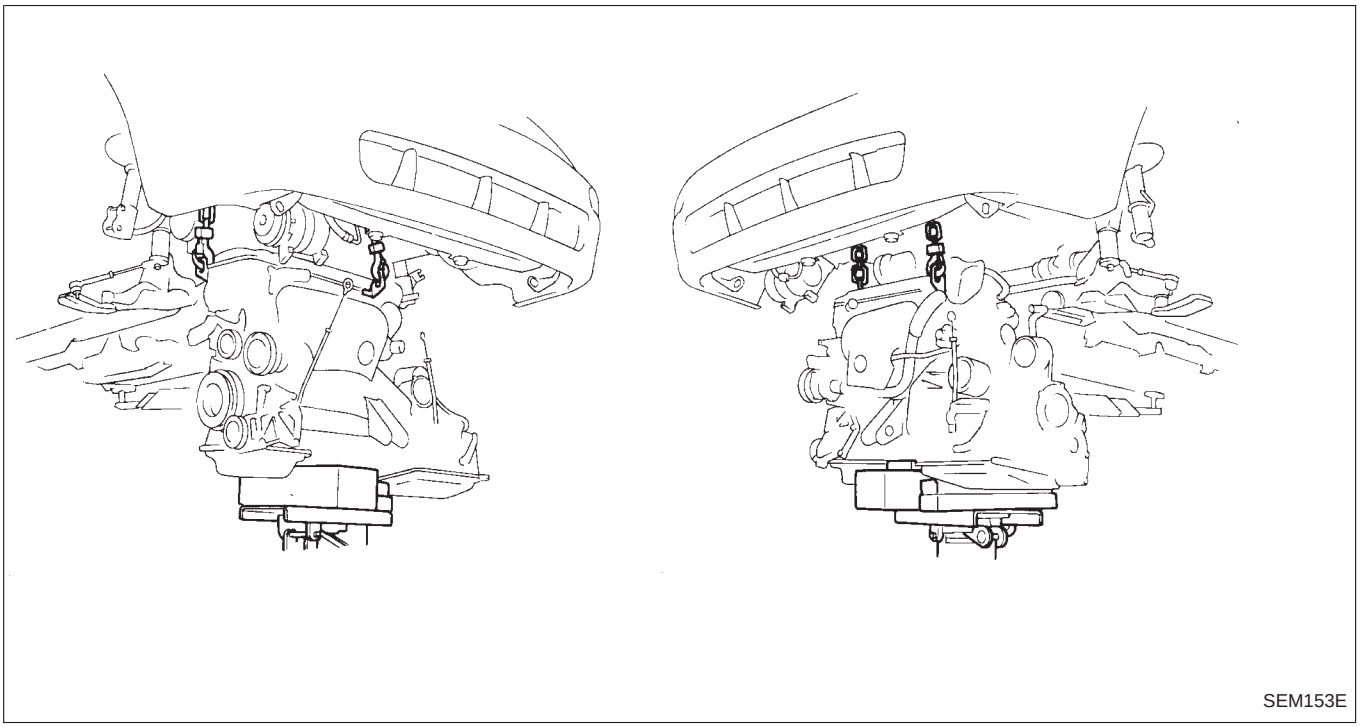
SEM153E

Installation

Installation is in the reverse order of removal.

SEC. 110 • 120

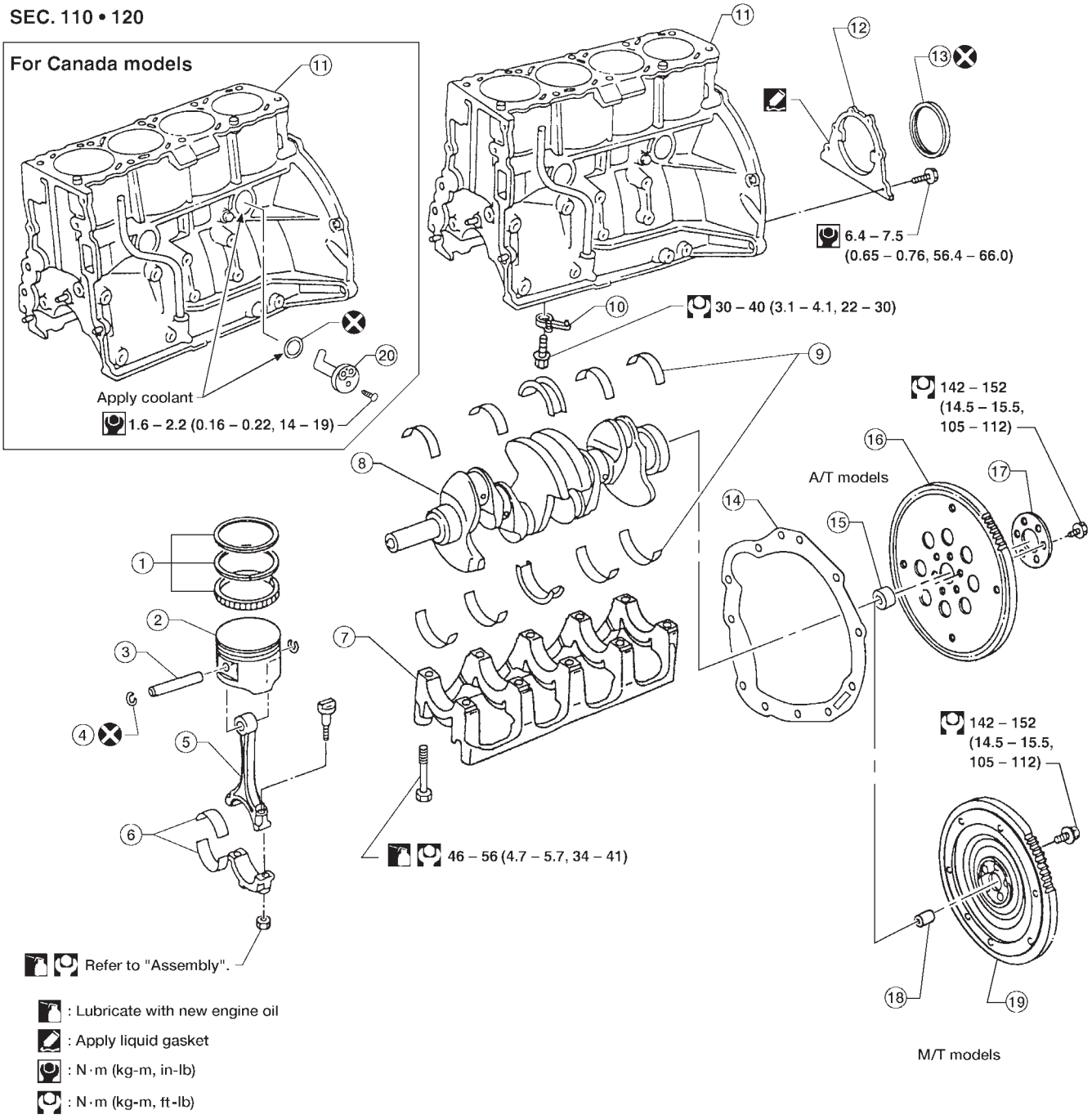

WEM008

1. Piston rings
2. Piston
3. Piston pin
4. Snap ring
5. Connecting rod
6. Connecting rod bearing
7. Main bearing cap
8. Crankshaft
9. Main bearing
10. Oil jet
11. Cylinder block
12. Rear oil seal retainer
13. Rear oil seal
14. Rear plate
15. Pilot converter (A/T)
16. Drive plate (A/T)
17. Drive plate reinforcement
18. Pilot bushing (M/T)
19. Flywheel (M/T)
20. Cylinder block heater

CAUTION:

- **When installing sliding parts such as bearings and pistons, apply new engine oil on the sliding surfaces.**
- **Place removed parts such as bearings and bearing caps in their proper order and direction.**
- **When installing connecting rod nuts and main bearing cap bolts, apply new engine oil to threads and seating surfaces.**
- **Do not allow any magnetic materials to contact the ring gear teeth of flywheel or drive plate.**

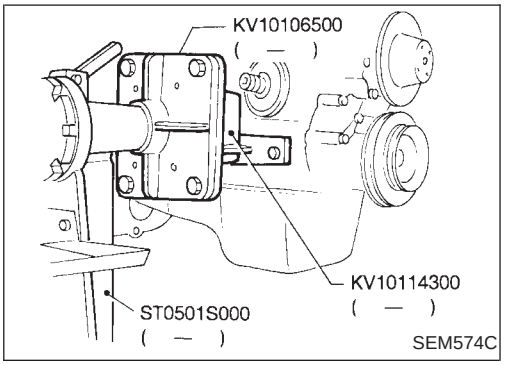

Disassembly

PISTON AND CRANKSHAFT

1. Place engine on a work stand.
2. Remove timing chains.
   Refer to EM-21.

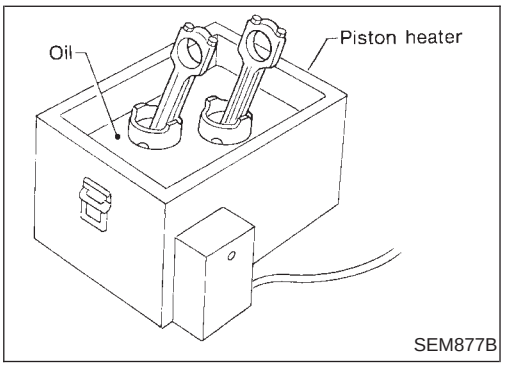

3. Remove pistons with connecting rods.
- To disassemble piston and connecting rod, first remove snap rings. Heat piston to 60 to 70°C (140 to 158°F) then use piston pin press to remove pin.

CAUTION:

- **When piston rings are not replaced, make sure that piston rings are mounted in their original positions.**
- **When piston rings are being replaced and no punch-mark is present, piston rings can be mounted with either side up.**

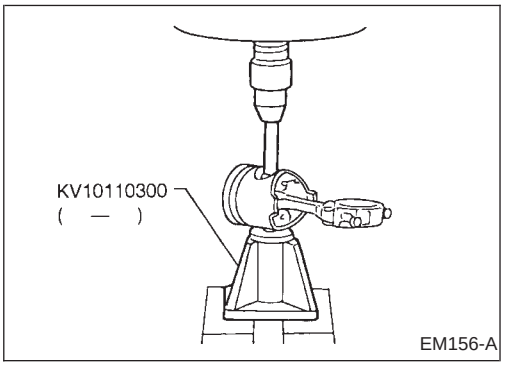

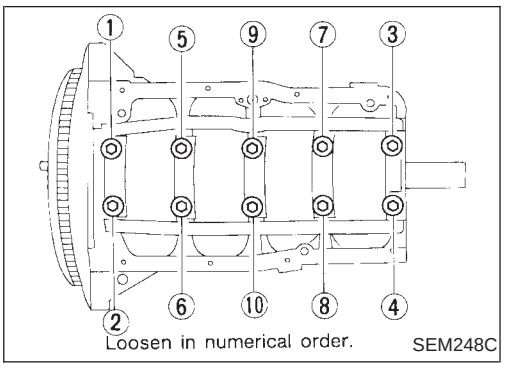

4. Remove main bearing cap and crankshaft.
- **Before removing main bearing cap, measure crankshaft end play. Refer to EM-53.**
- **Bolts should be loosened in two or three steps in numerical order as shown.**

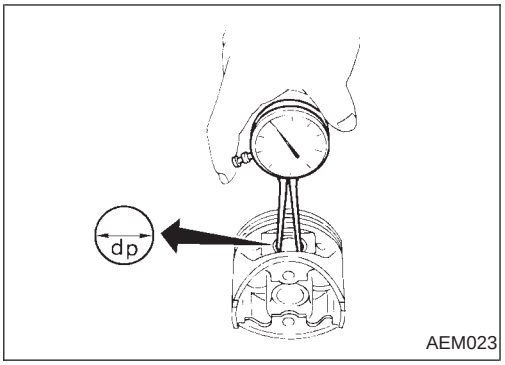

Inspection

PISTON AND PISTON PIN CLEARANCE

1. Measure inner diameter of piston pin hole ‘‘dp’’.
   Standard diameter ‘‘dp’’:
   20.993 - 20.999 mm (0.8265 - 0.8267 in)

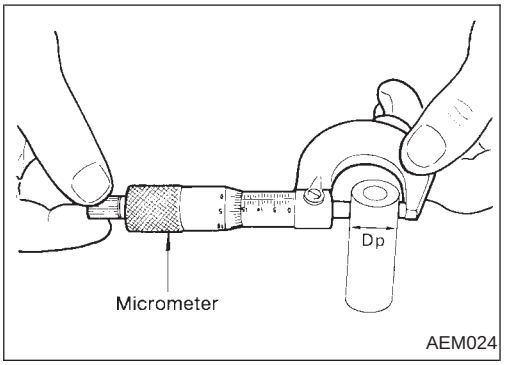

2. Measure outer diameter of piston pin ‘‘Dp’’.
   Standard diameter ‘‘Dp’’:
   20.989 - 21.001 mm (0.8263 - 0.8268 in)
3. Calculate interference fit of piston pin to piston.
   Dp − dp: −0.002 to 0.01 mm (−0.0001 to 0 in)
   If it exceeds the above value, replace piston assembly with pin.

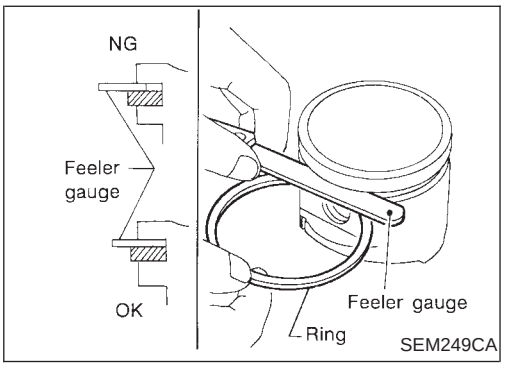

PISTON RING SIDE CLEARANCE

Side clearance:
Top ring
0.040 - 0.080 mm (0.0016 - 0.0031 in)
2nd ring
0.030 - 0.070 mm (0.0012 - 0.0028 in)
Max. limit of side clearance:
0.1 mm (0.004 in)

If out of specification, replace piston ring. If clearance exceeds maximum limit with new ring, replace piston.

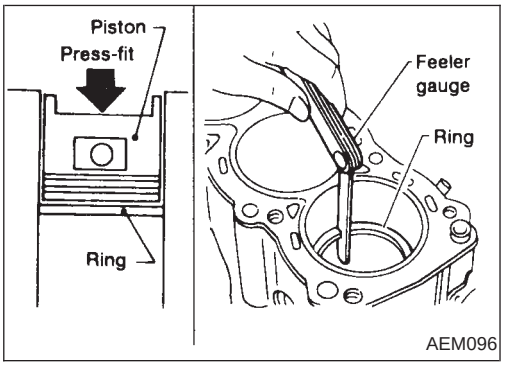

PISTON RING END GAP

End gap:
Top ring
0.28 - 0.52 mm (0.0110 - 0.0205 in)
2nd ring
0.45 - 0.69 mm (0.0177 - 0.0272 in)
Oil ring
0.20 - 0.69 mm (0.0079 - 0.0272 in)
Max. limit of end gap:
1.0 mm (0.039 in)

If out of specification, replace piston ring. If gap exceeds maximum limit with new ring, rebore cylinder and use oversized piston and piston rings.

Refer to SDS, EM-61.

When replacing the piston, check the cylinder block surface for scratches or seizure.
If scratches or seizure are found, hone or replace the cylinder block.

Inspection (Cont'd)

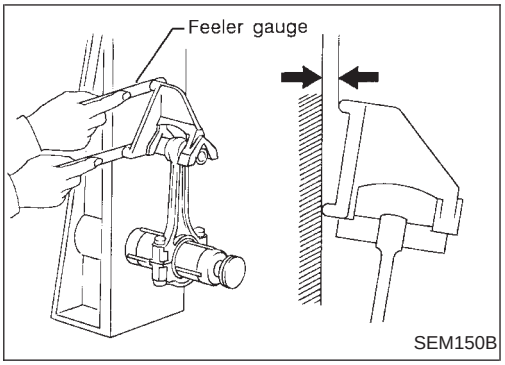

CONNECTING ROD BEND AND TORSION

Bend:
Limit 0.15 mm (0.0059 in)
per 100 mm (3.94 in) length
Torsion:
Limit 0.30 mm (0.0118 in)
per 100 mm (3.94 in) length

If it exceeds the limit, replace connecting rod assembly.

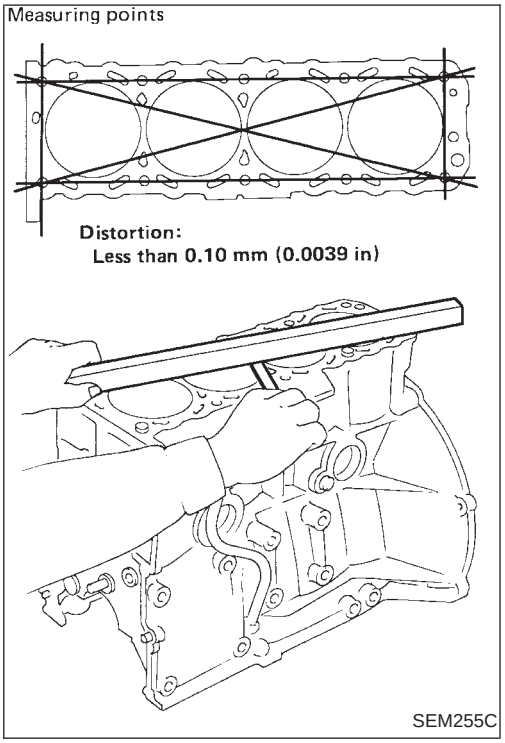

CYLINDER BLOCK DISTORTION

1. Clean upper surface of cylinder block.
   Use a reliable straightedge and feeler gauge to check the flatness of cylinder block surface.
   Check along six positions shown in figure.
   Block surface flatness:
   Standard: Less than 0.03 mm (0.0012 in)
   Limit: 0.10 mm (0.0039 in)
2. If out of specification, resurface it.
   Resurfacing limit:
   The limit for cylinder block resurfacing is determined by the cylinder head resurfacing.
   Amount of cylinder head resurfacing is "A".
   Amount of cylinder block resurfacing is "B".
   The maximum limit is as follows:
   A + B = 0.2 mm (0.008 in)
   Nominal cylinder block height from crankshaft center:
   246.95 - 247.05 mm (9.7224 - 9.7264 in)
3. If necessary, replace cylinder block.

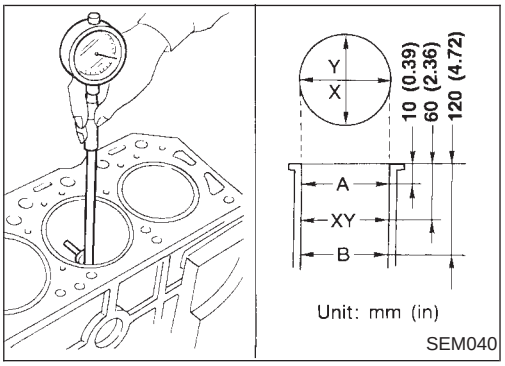

PISTON-TO-BORE CLEARANCE

1. Using a bore gauge, measure cylinder bore for wear, out-of-round and taper.
   Standard inner diameter:
   89.000 - 89.030 mm (3.5039 - 3.5051 in)
   Wear limit:
   0.2 mm (0.008 in)
   If it exceeds the limit, rebore all cylinders. Replace cylinder block if necessary.
   Out-of-round (X − Y) standard:
   Less than 0.015 mm (0.0006 in)
   Taper (A − B) standard:
   Less than 0.01 mm (0.0004 in)
2. Check for scratches and seizure. If seizure is found, hone it.

- **If cylinder block and piston are replaced, match piston grade with grade number on cylinder block surface.**

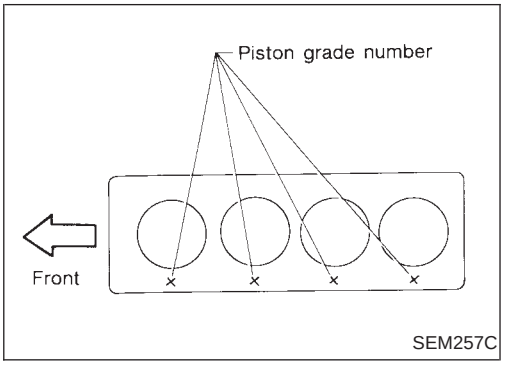

Inspection (Cont'd)

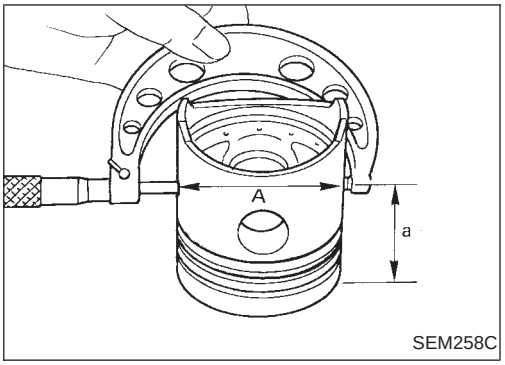

3. Measure piston skirt diameter.
   Piston diameter "A":
   Refer to SDS, EM-61.
   Measuring point "a" (Distance from the top):
   Approximately 48 mm (1.89 in)
4. Check that piston-to-bore clearance is within specification.
   Piston-to-bore clearance "B":
   0.020 - 0.040 mm (0.0008 - 0.0016 in)
5. Determine piston oversize according to amount of cylinder wear.

Oversize pistons are available for service. Refer to SDS, EM-61.

6. Cylinder bore size is determined by adding piston-to-bore clearance "B" to piston diameter "A".
   Rebored size calculation: D = A + B − C where,
   D: Bored diameter
   A: Piston diameter as measured
   B: Piston-to-bore clearance
   C: Honing allowance 0.02 mm (0.0008 in)
7. Install main bearing caps and tighten to the specified torque. This will prevent distortion of cylinder bores.
8. Cut cylinder bores.

- **When any cylinder needs boring, all other cylinders must also be bored.**
- **Do not cut too much out of cylinder bore at a time. Cut only 0.05 mm (0.0020 in) or so at a time.**

9. Hone cylinders to obtain specified piston-to-bore clearance.
10. Measure finished cylinder bore for out-of-round and taper.

- **Measurement should be done after cylinder bore cools down.**

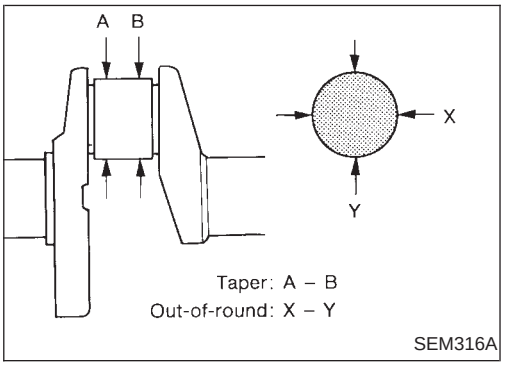

CRANKSHAFT

- Check crankshaft main and pin journals for score, wear or cracks.
- With a micrometer, measure journals for taper and out-of-round.
  Out-of-round (X − Y):
  Main
  0.01 mm (0.0004 in)
  Pin
  0.005mm (0.0002 in)
  Taper (A − B):
  Main
  0.01 mm (0.0004 in)
  Pin
  0.005 mm (0.0002 in)

Inspection (Cont'd)

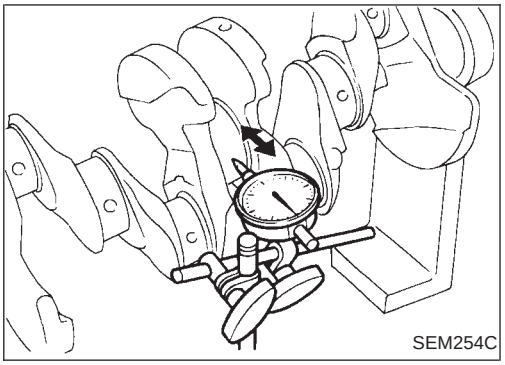
SEM254C

- Measure crankshaft runout.
  Runout (Total indicator reading):
  0.10 mm (0.0039 in)

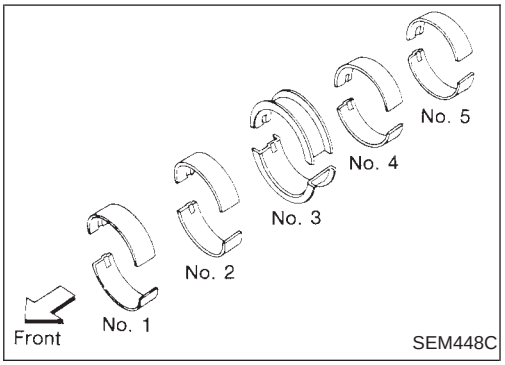

SEM448C

BEARING CLEARANCE

- Use Method A or Method B. Method A is preferred because it is more accurate.

Method A (Using bore gauge & micrometer)

Main bearing

1. Set main bearings in their proper positions on cylinder block and main bearing cap.

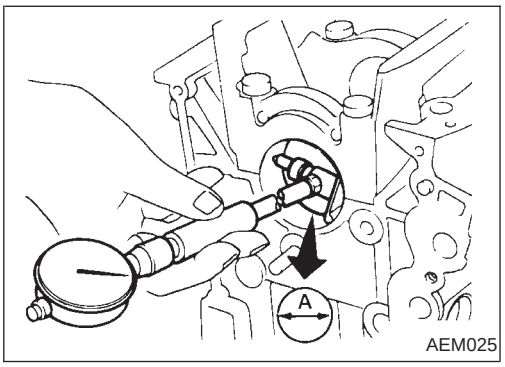

AEM025

2. Install main bearing cap to cylinder block.
   - **Tighten all bolts in correct order in two or three stages. Refer to EM-53.**
3. Measure inner diameter "A" of each main bearing.

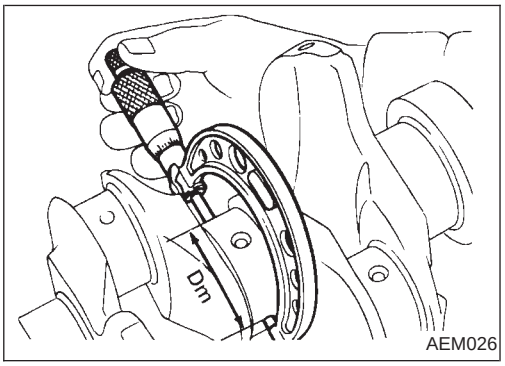

AEM026

4. Measure outer diameter "Dm" of each crankshaft main journal.
5. Calculate main bearing clearance.
   Main bearing clearance = A − Dm
   Standard:
   0.020 - 0.047 mm (0.0008 - 0.0019 in)
   Limit: 0.1 mm (0.004 in)
   If it exceeds the limit, replace bearing.
   If clearance cannot be adjusted using any standard bearing grade, grind crankshaft main journal and use undersized bearing.

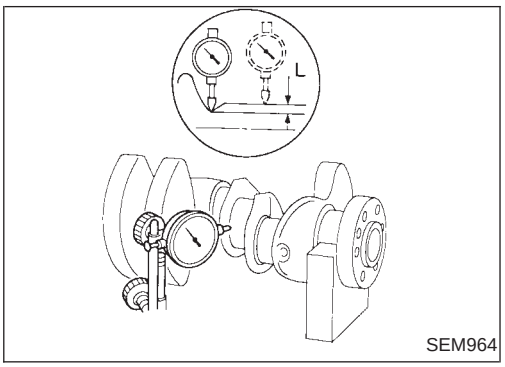

SEM964

When grinding crankshaft journal, confirm that "L" dimension in fillet roll is more than the specified limit.
"L": 0.1 mm (0.004 in)
Refer to EM-62 for grinding crankshaft and available service parts.

Inspection (Cont'd)

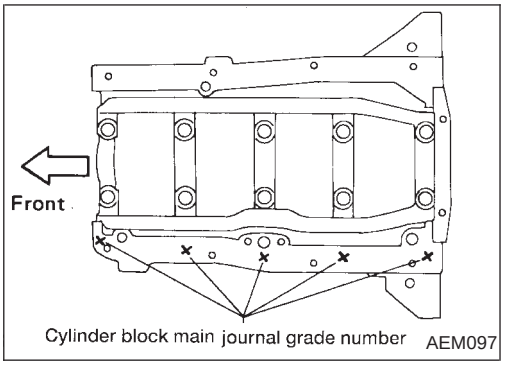

- If crankshaft is replaced, select thickness of main bearings as follows:

a. Grade number of each cylinder block main journal is punched on the respective cylinder block. These numbers are punched in either Arabic or Roman numerals.

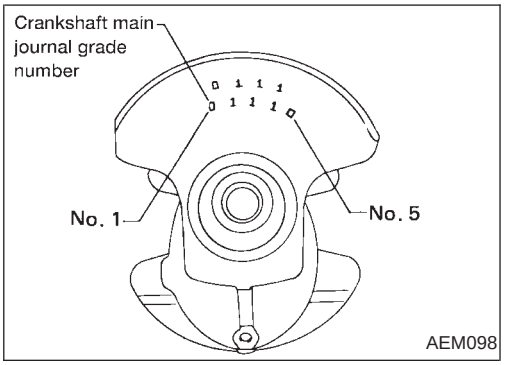

b. Grade number of each crankshaft main journal is punched on crankshaft. These numbers are punched in either Arabic or Roman numerals.

c. Select main bearing with suitable thickness according to the following table.

Main bearing grade number:

Crankshaft main journal grade number	Cylinder block main journal grade number		
	0	1 or I	2 or II
0	0 (Black)	1 (Brown)	2 (Green)
1 or I	1 (Brown)	2 (Green)	3 (Yellow)
2 or II	2 (Green)	3 (Yellow)	4 (Blue)

For example:

Cylinder block main journal grade number: 1
Crankshaft main journal grade number: 2
Main bearing grade number = 1 + 2 = 3 (Yellow)

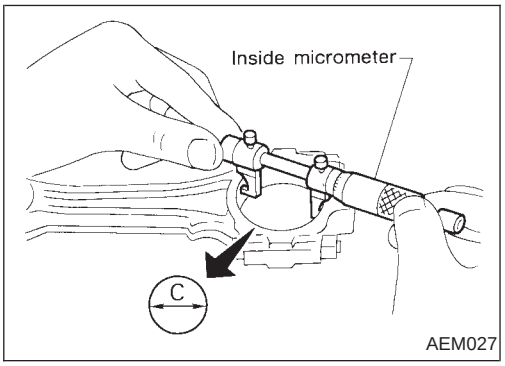

Connecting rod bearing (Big end)

1. Install connecting rod bearing to connecting rod and connecting rod cap.
2. Install connecting rod cap to connecting rod.

- **Tighten bolts to the specified torque. Refer to EM-53.**

3. Measure inner diameter "C" of each bearing.

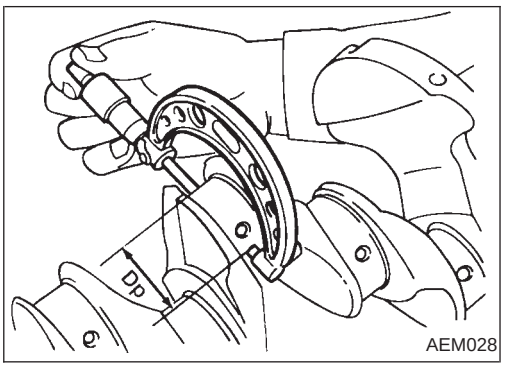

4. Measure outer diameter "Dp" of each crankshaft pin journal.
5. Calculate connecting rod bearing clearance.

Connecting rod bearing clearance = C − Dp
Standard: 0.010 - 0.035 mm (0.0004 - 0.0014 in)
Limit: 0.09 mm (0.0035 in)

If it exceeds the limit, replace bearing.
If clearance cannot be adjusted using any standard bearing grade, grind crankshaft pin journal and use undersized bearing. Refer to step 5 on EM-49 for fillet roll remarks and EM-62 for grinding crankshaft and available service parts.

Inspection (Cont'd)

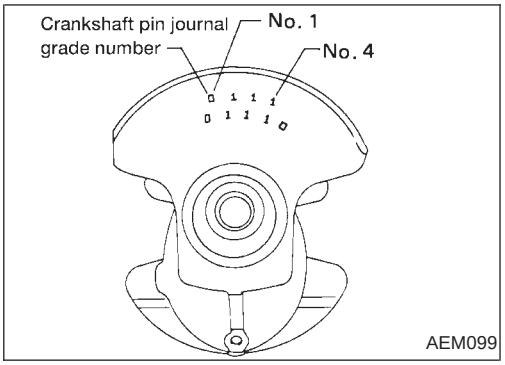

- If crankshaft is replaced with a new one, select connecting rod bearings according to the following table.

Connecting rod bearing grade number:

These numbers are punched in either Arabic or Roman numerals.

Crankshaft pin journal grade number	Connecting rod bearing grade number
0	0 (Black)
1 or I	1 (Brown)
2 or II	2 (Green)

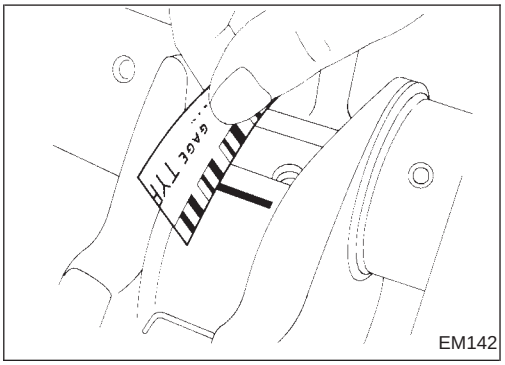

Method B (Using plastigage)

CAUTION:

- **Do not turn crankshaft or connecting rod while plastigage is being inserted.**
- **When bearing clearance exceeds the specified limit, ensure that the proper bearing has been installed. Then if excessive bearing clearance exists, use a thicker main bearing or undersized bearing so that the specified bearing clearance is obtained.**

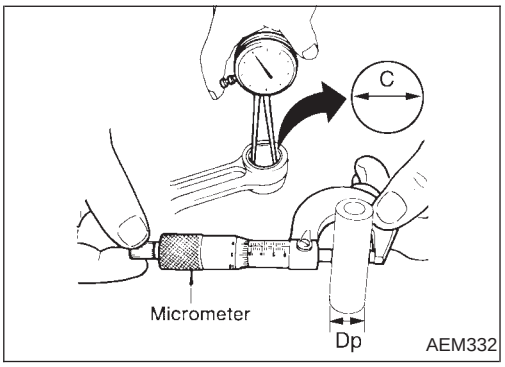

CONNECTING ROD BUSHING CLEARANCE (Small end)

1. Measure inner diameter "C" of bushing.
2. Measure outer diameter "Dp" of piston pin.
3. Calculate connecting rod bushing clearance.

   C − Dp =

   0.005 - 0.017 mm (0.0002 - 0.0007 in) (Standard)

   0.023 mm (0.0009 in) (Limit)

   If it exceeds the limit, replace connecting rod assembly and/or piston set with pin.

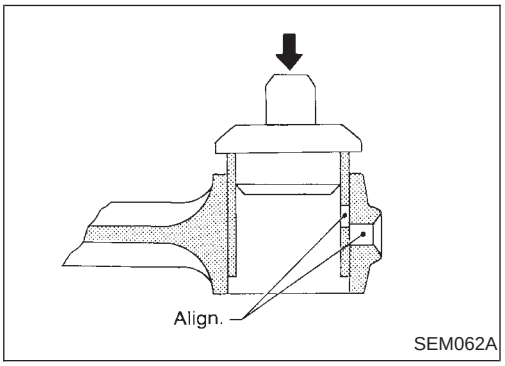

REPLACEMENT OF CONNECTING ROD BUSHING (Small end)

1. Drive in small end bushing until it is flush with end surface of rod.

Be sure to align the oil holes.

2. Ream the bushing so that clearance with piston pin is within specification.

   Clearance between small end bushing and piston pin:

   0.005 - 0.017 mm (0.0002 - 0.0007 in)

Inspection (Cont'd)

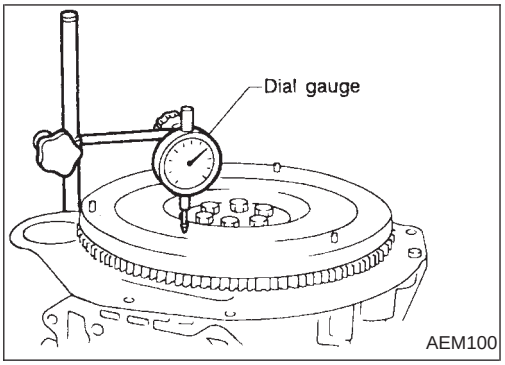

FLYWHEEL/DRIVE PLATE RUNOUT

Runout (Total indicator reading):
Flywheel (M/T model)
Less than 0.15 mm (0.0059 in)
Drive plate (A/T model)
Less than 0.15 mm (0.0059 in)

CAUTION:

- **Be careful not to damage the ring gear teeth.**
- **Check drive plate for deformation and cracks.**
- **Do not allow any magnetic materials to contact the ring gear teeth.**
- **Do not resurface the flywheel. Replace as necessary.**

Assembly

PISTON

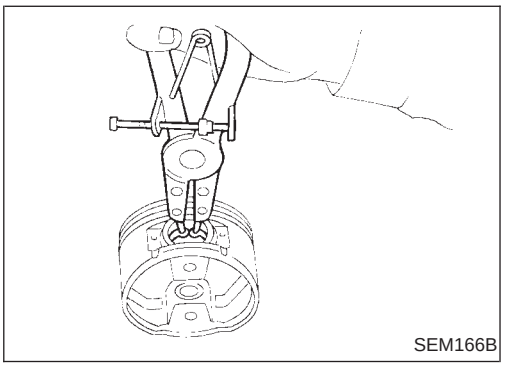

1. Install new snap ring on one side of piston pin hole.

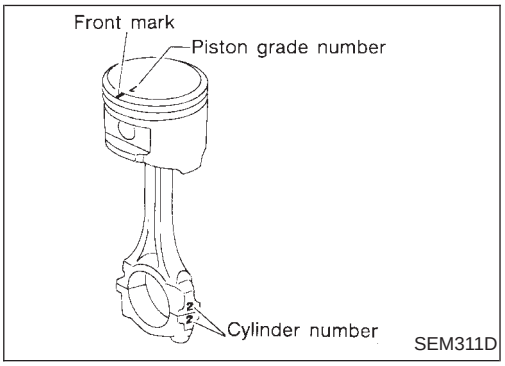

2. Heat piston to 60 to 70°C (140 to 158°F) and assemble piston, piston pin, connecting rod and new snap ring.

- **Align the direction of piston and connecting rod.**
- **Numbers stamped on connecting rod and cap correspond to each cylinder.**
- **After assembly, make sure connecting rod swings smoothly.**

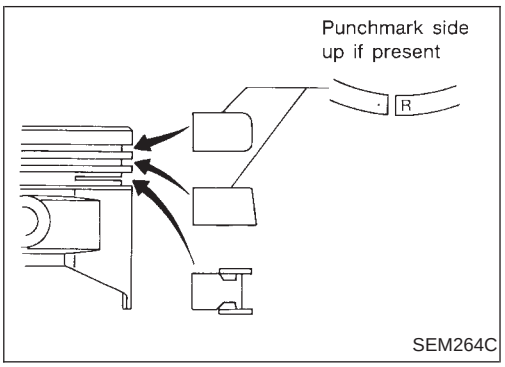

3. Set piston rings as shown.

CAUTION:

- **When piston rings are not being replaced, make sure that piston rings are mounted in their original positions.**
- **When piston rings are being replaced and no punchmark is present, piston rings can be mounted with either side up.**

Assembly (Cont'd)

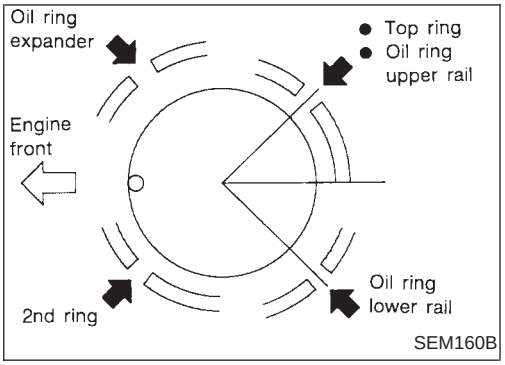

- Align piston rings so that end gaps are positioned as shown.

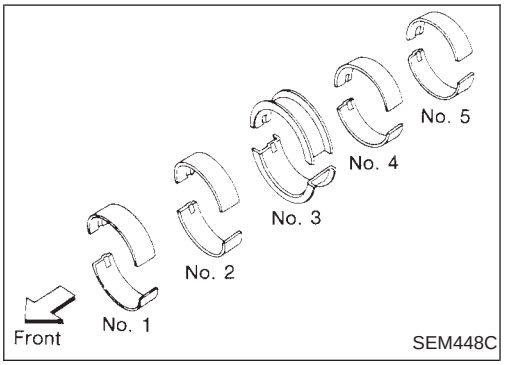

CRANKSHAFT

1. Set main bearings in their proper positions on cylinder block and main bearing cap.

- **Confirm that correct main bearings are used. Refer to EM-49.**
- **Apply new engine oil to bearing surfaces.**

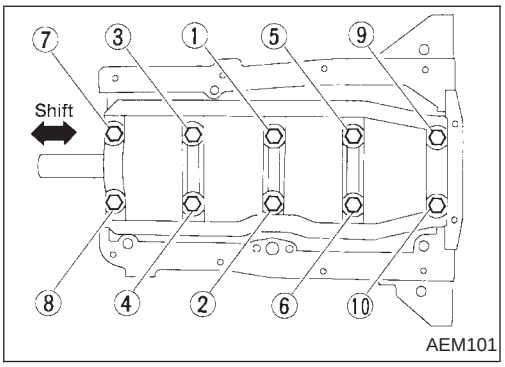

2. Install crankshaft and main bearing cap and tighten bolts to the specified torque.

- **Apply new engine oil to bolt threads and seat surfaces.**
- **Prior to tightening bearing cap bolts, shift crankshaft back and forth to properly seat the bearing cap.**
- **Tighten bearing cap bolts gradually in two or three stages. Start with center bearing and move outward as shown in figure.**
- **After securing bearing cap bolts, make sure crankshaft turns smoothly by hand.**

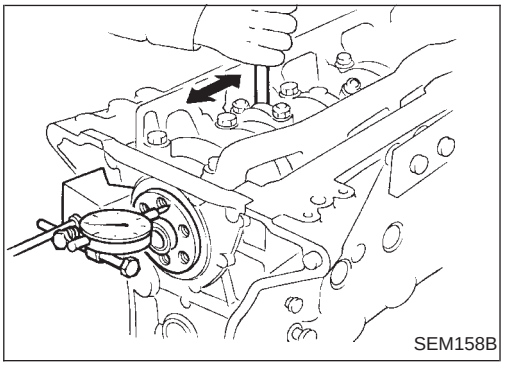

3. Measure crankshaft end play.

Crankshaft end play:
Standard
0.05 - 0.18 mm (0.0020 - 0.0071 in)
Limit
0.3 mm (0.012 in)

If beyond the limit, replace bearing with a new one.

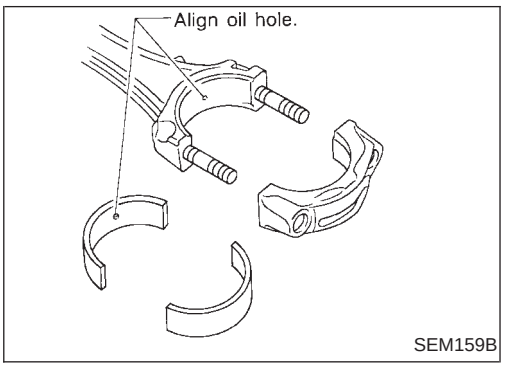

4. Install connecting rod bearings in connecting rods and connecting rod caps.

- **Confirm that correct bearings are used. Refer to EM-50.**
- **Install bearings so that oil hole in connecting rod aligns with oil hole of bearing.**
- **Apply new engine oil to bearing surfaces, bolt threads and seating surfaces.**

Assembly (Cont'd)

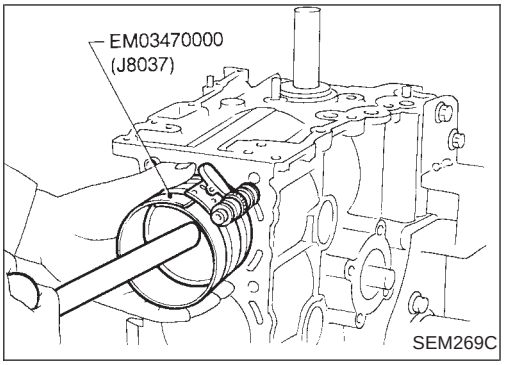

5. Install pistons with connecting rods.
a. Install them into corresponding cylinders with Tool.

- **Be careful not to scratch cylinder wall with connecting rod.**
- **Arrange so that front mark on piston head faces toward engine front.**
- **Be careful not to scratch crankshaft journals with connecting rod bolts.**
- **Apply new engine oil to piston rings and sliding surface of piston.**

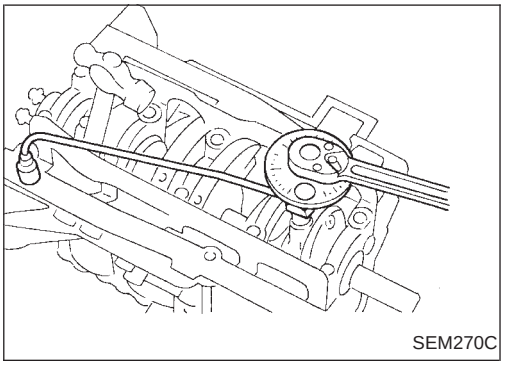

b. Install connecting rod bearing caps.
Apply new engine oil to threads and seat surfaces.
Tighten connecting rod bearing cap nuts in the following procedure:

(1) Tighten to 14 to 16 N·m (1.4 to 1.6 kg-m, 10 to 12 ft-lb).
(2) Turn all nuts 60 to 65 degrees clockwise. If an angle wrench is not available, mark all connecting rod bearing cap nuts on the side facing engine front. Then, turn each nut 60 to 65 degrees clockwise.

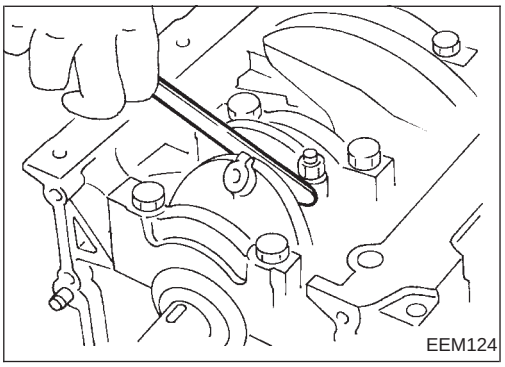

6. Measure connecting rod side clearance.
Connecting rod side clearance:
Standard
0.2 - 0.4 mm (0.008 - 0.016 in)
Limit
0.6 mm (0.024 in)
If beyond the limit, replace connecting rod and/or crankshaft.

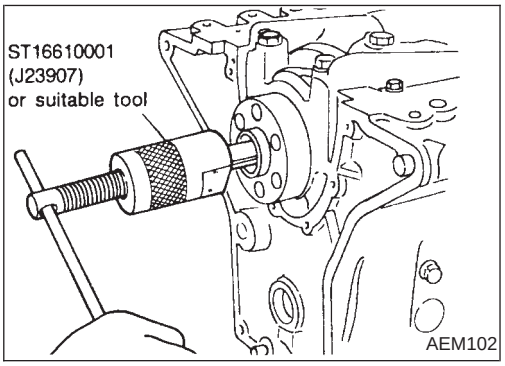

REPLACING PILOT BUSHING

1. Remove pilot bushing (M/T) or pilot converter (A/T).

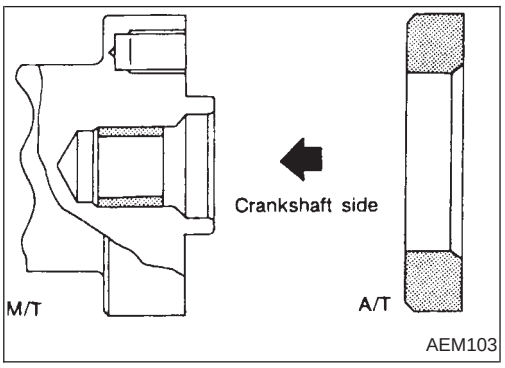

2. Install pilot bushing (M/T) or pilot converter (A/T).

General Specifications

Cylinder arrangement		In-line 4
Displacement	cm^3 (cu in)	2,389 (145.78)
Bore and stroke	mm (in)	89 x 96 (3.50 x 3.78)
Valve arrangement		DOHC
Firing order		1-3-4-2
Number of piston rings		
Compression		2
Oil		1
Number of main bearings		5
Compression ratio		9.2

Unit: kPa (kg/cm^2, psi)/300 rpm

Compression pressure	
Standard	1,226 (12.5, 178)
Minimum	1,030 (10.5, 149)
Difference limit between cylinders	98 (1.0, 14)

Inspection and Adjustment

CYLINDER HEAD

Unit: mm (in)

	Standard	Limit
Head surface distortion	Less than 0.03 (0.0012)	0.1 (0.004)

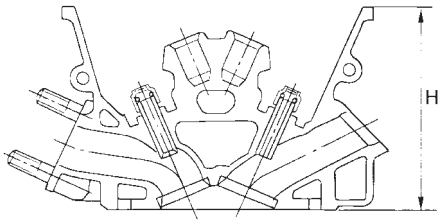

Nominal cylinder head height:
H = 126.3 - 126.5 (4.972 - 4.980)
Limit:
0.2 (0.008)*

SEM956C

* Total amount of cylinder head resurfacing plus cylinder block resurfacing

VALVE

Unit: mm (in)

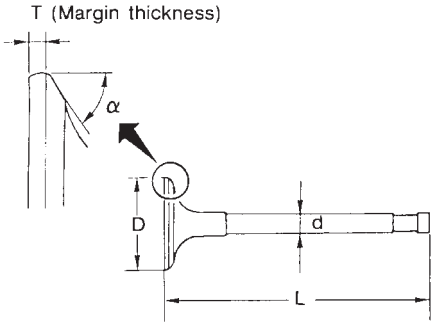

SEM188

Valve head diameter "D"	
Intake	36.5 - 36.8 (1.437 - 1.449)
Exhaust	31.2 - 31.5 (1.228 - 1.240)
Valve length "L"	
Intake	99.17 - 99.47 (3.9043 - 3.9161)
Exhaust	96.67 - 96.97 (3.8059 - 3.8177)
Valve stem diameter "d"	
Intake	6.965 - 6.980 (0.2742 - 0.2748)
Exhaust	6.945 - 6.960 (0.2734 - 0.2740)
Valve face angle "α"	
Intake	45°25' - 45°75'
Exhaust	
Valve margin "T"	
Intake	0.95 - 1.25 (0.0374 - 0.0492)
Exhaust	1.15 - 1.45 (0.0453 - 0.0571)
Valve margin "T" limit	More than 0.5 (0.020)
Valve stem end surface grinding limit	Less than 0.2 (0.008)

VALVE SPRING

Free height mm (in)	50.15 (1.9744)
Pressure N (kg, lb) at height mm (in)	
Standard	369.0 (37.63, 82.97) at 27.25 (1.0728)
Limit	347.0 (35.38, 78.02) at 27.25 (1.0728)
Out-of-square mm (in)	Less than 2.3 (0.091)

VALVE LIFTER

Unit: mm (in)

Valve lifter diameter	33.965 - 33.975 (1.3372 - 1.3376)
Lifter guide bore diameter	34.000 - 34.021 (1.3386 - 1.3394)
Clearance between lifter and lifter guide	0.025 - 0.056 (0.0010 - 0.0022)

VALVE GUIDE

Unit: mm (in)

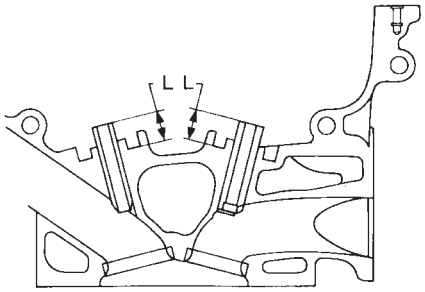

SEM301D

		Standard	Service
Valve guide Outer diameter	Intake & Exhaust	11.023 - 11.034 (0.4340 - 0.4344)	11.223 - 11.234 (0.4418 - 0.4423)
Valve guide Inner diameter (Finished size)	Intake	7.000 - 7.018 (0.2756 - 0.2763)	
	Exhaust	7.000 - 7.018 (0.2756 - 0.2763)	
Cylinder head valve guide hole diameter	Intake & Exhaust	10.975 - 10.996 (0.4321 - 0.4329)	11.175 - 11.196 (0.4400 - 0.4408)
Interference fit of valve guide		0.027 - 0.059 (0.0011 - 0.0023)	
		Standard	Limit
Stem to guide clearance	Intake	0.020 - 0.053 (0.0008 - 0.0021)	0.08 (0.0031)
	Exhaust	0.040 - 0.073 (0.0016 - 0.0029)	0.1 (0.004)
Valve deflection limit		0.2 (0.008)	
Projection length "L"		13.3 - 13.9 (0.524 - 0.547)	

VALVE CLEARANCE ADJUSTMENT

Unit: mm (in)

Valve clearance (Hot)	
Intake	0.31 - 0.39 (0.012 - 0.015)
Exhaust	0.39 - 0.47 (0.015 - 0.019)

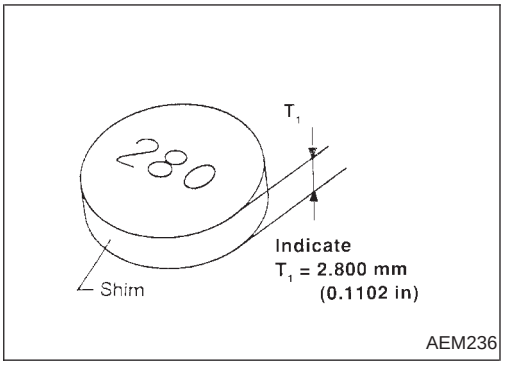

Available shims

Thickness mm (in)	Identification mark
2.40 (0.0945)	240
2.42 (0.0953)	242
2.44 (0.0961)	244
2.46 (0.0969)	246
2.48 (0.0976)	248
2.50 (0.0984)	250
2.52 (0.0992)	252
2.54 (0.1000)	254
2.56 (0.1008)	256
2.58 (0.1016)	258
2.60 (0.1024)	260
2.62 (0.1031)	262
2.64 (0.1039)	264
2.66 (0.1047)	266
2.68 (0.1055)	268
2.70 (0.1063)	270
2.72 (0.1071)	272
2.74 (0.1079)	274
2.76 (0.1087)	276
2.78 (0.1094)	278
2.80 (0.1102)	280
2.82 (0.1110)	282
2.84 (0.1118)	284
2.86 (0.1126)	286
2.88 (0.1134)	288
2.90 (0.1142)	290
2.92 (0.1150)	292
2.94 (0.1157)	294
2.96 (0.1165)	296
2.98 (0.1173)	298
3.00 (0.1181)	300
3.02 (0.1189)	302
3.04 (0.1197)	304
3.06 (0.1205)	306
3.08 (0.1213)	308
3.10 (0.1220)	310

VALVE SEAT

Unit: mm (in)

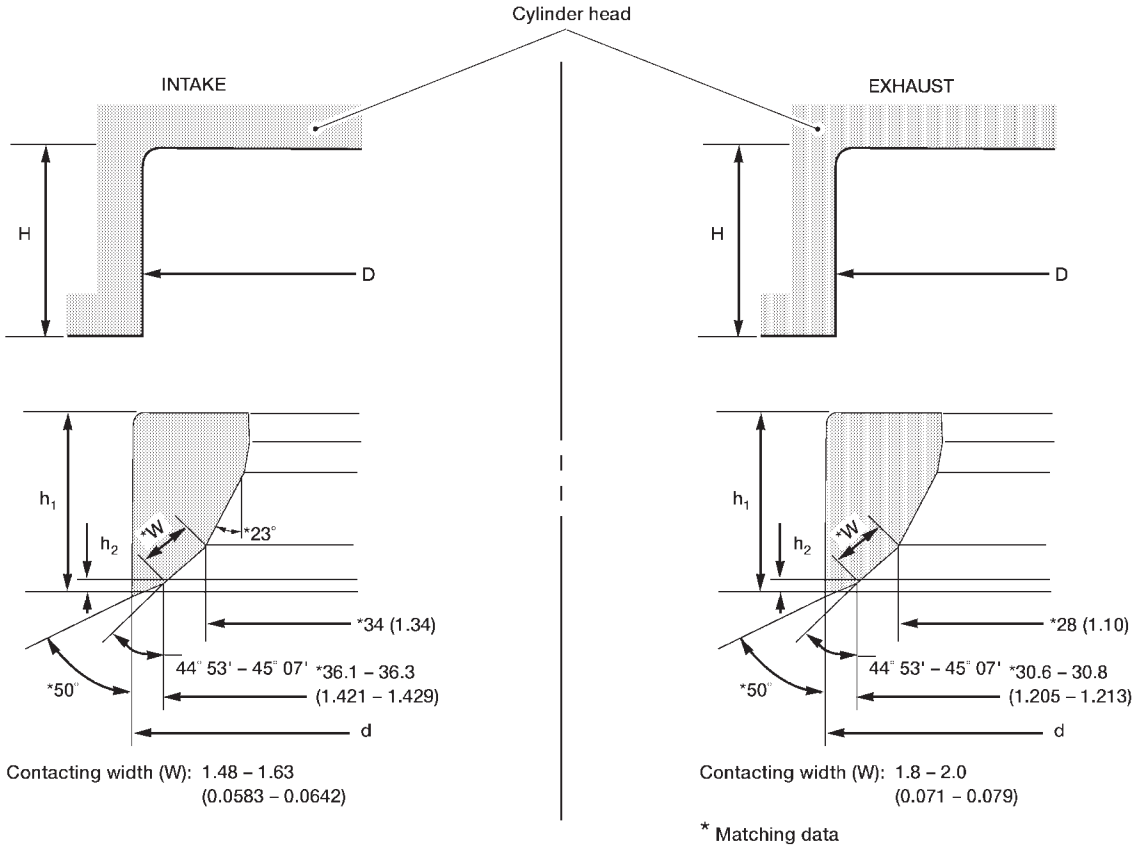

WEM012

		Standard	Service
Cylinder head seat recess diameter (D)	In.	37.500 - 37.516 (1.4764 - 1.4770)	38.000 - 38.016 (1.4961 - 1.4967)
	Ex.	32.200 - 32.216 (1.2677 - 1.2683)	32.700 - 32.716 (1.2874 - 1.2880)
Valve seat interference fit	In.	0.064 - 0.096 (0.0025 - 0.0038)	
	Ex.	0.064 - 0.096 (0.0025 - 0.0038)	
Valve seat outer diameter (d)	In.	37.580 - 37.596 (1.4795 - 1.4802)	38.080 - 38.096 (1.4992 - 1.4998)
	Ex.	32.280 - 32.296 (1.2709 - 1.2715)	32.780 - 32.796 (1.2905 - 1.2912)
Depth (H)	In.	6.1 - 6.3 (0.240 - 0.248)	
	Ex.	6.1 - 6.3 (0.240 - 0.248)	
Height (h_1)	In.	5.8 - 6.0 (0.228 - 0.236)	5.3 - 5.5 (0.209 - 0.217)
	Ex.	5.9 - 6.0 (0.232 - 0.236)	5.32 - 5.42 (0.2094 - 0.2134)
Height (h_2)	In.	0.24 - 0.64 (0.0094 - 0.0252)	
	Ex.	0.43 - 0.73 (0.0169 - 0.0287)	

CYLINDER BLOCK

Unit: mm (in)

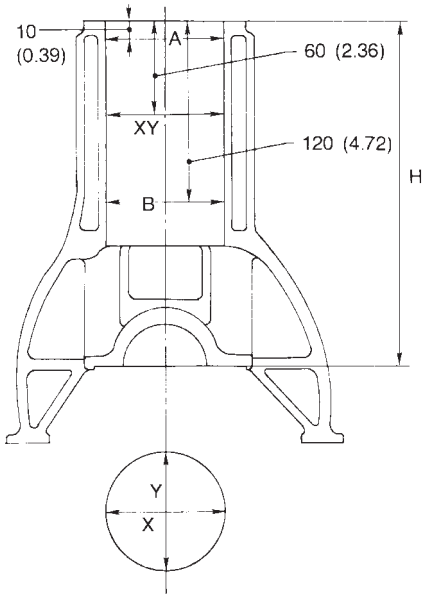

SEM447C

			Standard	Limit
Distortion			Less than 0.03 (0.0012)	0.10 (0.0039)
Cylinder bore	Inner diameter	Grade 1	89.000 - 89.010 (3.5039 - 3.5043)	0.2 (0.008)
		Grade 2	89.010 - 89.020 (3.5043 - 3.5047)	
		Grade 3	89.020 - 89.030 (3.5047 - 3.5051)	
	Out-of-round (X −Y)		Less than 0.015 (0.0006)	—
	Taper (A −B)		Less than 0.010 (0.0004)	—
Difference in inner diameter between cylinders			Less than 0.03 (0.0012)	0.2 (0.008)
Nominal cylinder block height : H (From crankshaft center)			246.95 - 247.05 (9.7224 - 9.7264)	0.2 (0.008)*

* Total amount of cylinder head resurfacing plus cylinder block resurfacing

CAMSHAFT AND CAMSHAFT BEARING

Unit: mm (in)

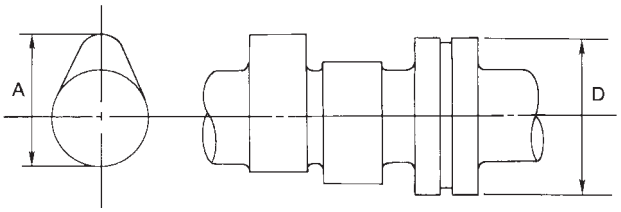

SEM568A

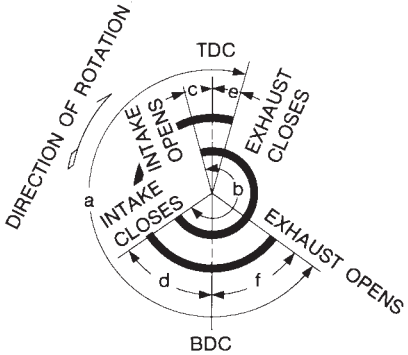

EM120

		Standard	Limit
Cam height (A)	Intake	42.040 - 42.230 (1.6551 - 1.6626)	—
	Exhaust	42.040 - 42.230 (1.6551 - 1.6626)	—
Wear limit of cam height		—	0.2 (0.008)
Camshaft journal to bearing clearance		0.045 - 0.090 (0.0018 - 0.0035)	0.12 (0.0047)
Inner diameter of camshaft bearing	#1 to #5 journals	28.000 - 28.025 (1.1024 - 1.1033)	—
Outer diameter of camshaft journal (D)	#1 to #5 journals	27.935 - 27.955 (1.0998 - 1.1006)	—
Camshaft runout*		Less than 0.02 (0.0008)	0.04 (0.0016)
Camshaft end play		0.070 - 0.148 (0.0028 - 0.0058)	0.20 (0.0079)
Valve timing (Degree on crankshaft)	a	240	—
	b	224	—
	c	−1	—
	d	45	—
	e	7	—
	f	53	—

*: Total indicator reading

PISTON, PISTON RING AND PISTON PIN

Piston

Unit: mm (in)

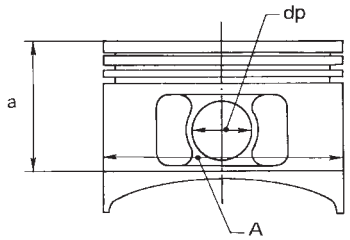

BEM003

Piston skirt diameter (A)	Standard	Grade No. 1	88.970 - 88.980 (3.5027 - 3.5031)
		Grade No. 2	88.980 - 88.990 (3.5031 - 3.5035)
		Grade No. 3	88.990 - 89.000 (3.5035 - 3.5039)
	Service (Oversize)	0.5 (0.020)	89.470 - 89.500 (3.5224 - 3.5236)
		1.0 (0.039)	89.970 - 90.000 (3.5421 - 3.5433)
Measuring point - Distance from top (a)		Approximately 48 (1.89)	
Piston pin hole diameter (dp)		20.993 - 20.999 (0.8265 - 0.8267)	
Piston-to-bore clearance		0.020 - 0.040 (0.0008 - 0.0016)	

Piston pin

Unit: mm (in)

	Standard	Limit
Piston pin outer diameter	20.989 - 21.001 (0.8263 - 0.8268)	—
Interference fit of piston pin to piston pin hole	−0.002 to 0.01 (−0.0001 to 0)	—
Piston pin to connecting rod bushing clearance	0.005 - 0.017 (0.0002 - 0.0007)	0.023 (0.0009)

Piston ring

Unit: mm (in)

		Standard	Limit
Side clearance	Top	0.040 - 0.080 (0.0016 - 0.0031)	0.1 (0.004)
	2nd	0.030 - 0.070 (0.0012 - 0.0028)	0.1 (0.004)
End gap	Top	0.28 - 0.52 (0.0110 - 0.0205)	1.0 (0.039)
	2nd	0.45 - 0.69 (0.0177 - 0.0272)	1.0 (0.039)
	Oil (rail ring)	0.20 - 0.69 (0.0079 - 0.0272)	1.0 (0.039)

CONNECTING ROD

Unit: mm (in)

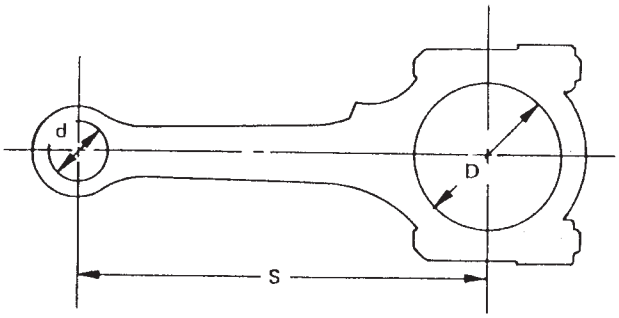

SEM180E

	Standard	Limit
Center distance (S)	164.95 - 165.05 (6.4941 - 6.4980)	—
Bend [per 100 mm (3.94 in)]	—	0.15 (0.0059)
Torsion [per 100 mm (3.94 in)]	—	0.30 (0.0118)
Piston pin bushing inner diameter (d)	23.987 - 24.000 (0.9444 - 0.9449)	—
Connecting rod big end inner diameter (D)*	53.000 - 53.013 (2.0866 - 2.0871)	—
Side clearance	0.2 - 0.4 (0.008 - 0.016)	0.6 (0.024)

* Without bearing

CRANKSHAFT

Unit: mm (in)

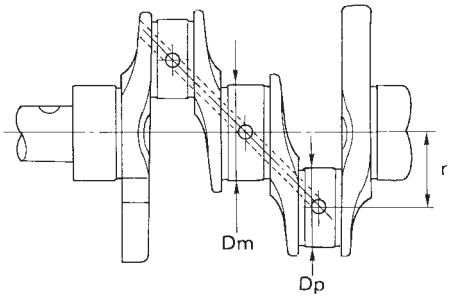

SEM394

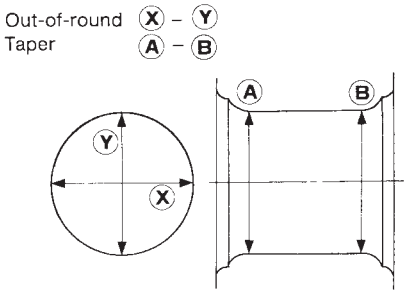

EM715

Main journal diameter (Dm)	Grade	No. 0	59.967 - 59.975 (2.3609 - 2.3612)	
		No. 1	59.959 - 59.967 (2.3606 - 2.3609)	
		No. 2	59.951 - 59.959 (2.3603 - 2.3606)	
Pin journal diameter (Dp)	Grade	No. 0	49.968 - 49.974 (1.9672 - 1.9675)	
		No. 1	49.962 - 49.968 (1.9670 - 1.9672)	
		No. 2	49.956 - 49.962 (1.9668 - 1.9670)	
Center distance (r)			47.95 - 48.05 (1.8878 - 1.8917)	
			Standard	Limit
Taper of main or pin journal (Ⓐ – Ⓑ)		Main	0.01 (0.0004)	—
		Pin	0.005 (0.0002)	—
Out-of-round of main or pin journal (Ⓧ – Ⓨ)		Main	0.01 (0.0004)	—
		Pin	0.005 (0.0002)	—
Runout [TIR]*			0.10 (0.0039)	—
Free end play			0.05 - 0.18 (0.0020 - 0.0071)	0.3 (0.012)
Fillet roll			More than 0.1 (0.004)	

* Total indicator reading

BEARING CLEARANCE

Unit: mm (in)

	Standard	Limit
Main bearing clearance	0.020 - 0.047 (0.0008 - 0.0019)	0.1 (0.004)
Connecting rod bearing clearance	0.010 - 0.035 (0.0004 - 0.0014)	0.09 (0.0035)

AVAILABLE MAIN BEARING

Standard

Unit: mm (in)

Grade number	Thickness	Identification color
0	1.821 - 1.825 (0.0717 - 0.0719)	Black
1	1.825 - 1.829 (0.0719 - 0.0720)	Brown
2	1.829 - 1.833 (0.0720 - 0.0722)	Green
3	1.833 - 1.837 (0.0722 - 0.0723)	Yellow
4	1.837 - 1.841 (0.0723 - 0.0725)	Blue

Undersize (service)

Unit: mm (in)

	Thickness	Main journal diameter "Dm"
0.25 (0.0098)	1.952 - 1.960 (0.0769 - 0.0772)	Grind so that bearing clearance is the specified value.

AVAILABLE CONNECTING ROD BEARING

Standard

Unit: mm (in)

Grade number	Thickness	Identification color
0	1.505 - 1.508 (0.0593 - 0.0594)	Black
1	1.508 - 1.511 (0.0594 - 0.0595)	Brown
2	1.511 - 1.514 (0.0595 - 0.0596)	Green

Undersize (service)

Unit: mm (in)

	Thickness	Crank pin journal diameter "Dp"
0.08 (0.0031)	1.540 - 1.548 (0.0606 - 0.0609)	Grind so that bearing clearance is the specified value.
0.12 (0.0047)	1.560 - 1.568 (0.0614 - 0.0617)	
0.25 (0.0098)	1.625 - 1.633 (0.0640 - 0.0643)	

MISCELLANEOUS COMPONENTS

Unit: mm (in)

Camshaft sprocket runout	[TIR]*	Less than 0.12 (0.0047)
Flywheel runout	[TIR]*	Less than 0.15 (0.0059)
Drive plate runout	[TIR]*	Less than 0.15 (0.0059)

* Total indicator reading

NOTES