SECTION EC
ENGINE CONTROL SYSTEM

CONTENTS

QR25DE FOR CALIFORNIA

BASIC INSPECTION 20

DIAGNOSIS AND REPAIR WORK FLOW 20
Work Flow 20
Diagnostic Work Sheet 22

INSPECTION AND ADJUSTMENT 24

BASIC INSPECTION 24
BASIC INSPECTION : Special Repair Requirement 24

ADDITIONAL SERVICE WHEN REPLACING CONTROL UNIT 27
ADDITIONAL SERVICE WHEN REPLACING CONTROL UNIT : Description 27
ADDITIONAL SERVICE WHEN REPLACING CONTROL UNIT : Special Repair Requirement 27

IDLE SPEED 28
IDLE SPEED : Description 28
IDLE SPEED : Special Repair Requirement 28

IGNITION TIMING 28
IGNITION TIMING : Description 28
IGNITION TIMING : Special Repair Requirement...28

VIN REGISTRATION 28
VIN REGISTRATION : Description 28
VIN REGISTRATION : Special Repair Requirement 29

ACCELERATOR PEDAL RELEASED POSITION LEARNING 29
ACCELERATOR PEDAL RELEASED POSITION LEARNING : Description 29
ACCELERATOR PEDAL RELEASED POSITION LEARNING : Special Repair Requirement 29

THROTTLE VALVE CLOSED POSITION LEARNING 29
THROTTLE VALVE CLOSED POSITION LEARNING : Description 29
THROTTLE VALVE CLOSED POSITION LEARNING : Special Repair Requirement 29

IDLE AIR VOLUME LEARNING 29
IDLE AIR VOLUME LEARNING : Description 30
IDLE AIR VOLUME LEARNING : Special Repair Requirement 30

MIXTURE RATIO SELF-LEARNING VALUE CLEAR 31
MIXTURE RATIO SELF-LEARNING VALUE CLEAR : Description 31
MIXTURE RATIO SELF-LEARNING VALUE CLEAR : Special Repair Requirement 32

FUNCTION DIAGNOSIS 33

ENGINE CONTROL SYSTEM 33
System Diagram 33
System Description 34
Component Parts Location 34
Component Description 39

MULTIPORT FUEL INJECTION SYSTEM 41
System Diagram 41
System Description 41
Component Parts Location 44
Component Description 49

ELECTRIC IGNITION SYSTEM 51
System Diagram 51
System Description 51
Component Parts Location 52
Component Description 57

AIR CONDITIONING CUT CONTROL 59
System Diagram 59
System Description 59
Component Parts Location 60
Component Description 65

AUTOMATIC SPEED CONTROL DEVICE (ASCD) 67
System Diagram 67
System Description 67
Component Parts Location 69
Component Description 74

CAN COMMUNICATION 76
System Description 76

COOLING FAN CONTROL 77
System Diagram 77
System Description 77
Component Parts Location 79
Component Description 84

EVAPORATIVE EMISSION SYSTEM 86
System Diagram 86
System Description 88
Component Parts Location 90
Component Description 95

INTAKE VALVE TIMING CONTROL 97
System Diagram 97
System Description 97
Component Parts Location 98
Component Description 103

TUMBLE CONTROL VALVE CONTROL 105
System Diagram 105
System Description 105
Component Parts Location 106
Component Description 111

ON BOARD DIAGNOSTIC (OBD) SYSTEM .. 112
Diagnosis Description 112
CONSULT-III Function 125
Diagnosis Tool Function 134

COMPONENT DIAGNOSIS 136

TROUBLE DIAGNOSIS - SPECIFICATION VALUE 136
Description 136
Component Function Check 136
Diagnosis Procedure 137

POWER SUPPLY AND GROUND CIRCUIT .. 144
Diagnosis Procedure 144

U0101 CAN COMM CIRCUIT 148
Description 148
DTC Logic 148
Diagnosis Procedure 148

U0140 CAN COMM CIRCUIT 149
Description 149
DTC Logic 149
Diagnosis Procedure 149

U1001 CAN COMM CIRCUIT 150
Description 150
DTC Logic 150
Diagnosis Procedure 150

P0011 IVT CONTROL 151
DTC Logic 151
Diagnosis Procedure 152
Component Inspection 153

P0031, P0032 A/F SENSOR 1 HEATER 155
Description 155
DTC Logic 155
Diagnosis Procedure 155
Component Inspection 157

P0037, P0038 HO2S2 HEATER 158
Description 158
DTC Logic 158
Diagnosis Procedure 159
Component Inspection 160

P0043, P0044 HO2S3 HEATER 161
Description 161
DTC Logic 161
Diagnosis Procedure 162
Component Inspection 163

P0075 IVT CONTROL SOLENOID VALVE 165
Description 165
DTC Logic 165
Diagnosis Procedure 165
Component Inspection 166

P0101 MAF SENSOR 168
Description 168
DTC Logic 168
Component Function Check 169
Diagnosis Procedure 170
Component Inspection 171

P0102, P0103 MAF SENSOR 175
Description 175
DTC Logic 175
Diagnosis Procedure 176
Component Inspection 177

P0112, P0113 IAT SENSOR 181
Description 181
DTC Logic 181
Diagnosis Procedure 182
Component Inspection 182

P0116 ECT SENSOR 184
Description 184
DTC Logic 184
Diagnosis Procedure 185
Component Inspection 185

P0117, P0118 ECT SENSOR 186
Description 186
DTC Logic 186

Diagnosis Procedure 187
Component Inspection 187

P0122, P0123 TP SENSOR 189
Description 189
DTC Logic 189
Diagnosis Procedure 189
Component Inspection 191
Special Repair Requirement 191

P0125 ECT SENSOR 192
Description 192
DTC Logic 192
Diagnosis Procedure 193
Component Inspection 193

P0127 IAT SENSOR 195
Description 195
DTC Logic 195
Diagnosis Procedure 196
Component Inspection 196

P0128 THERMOSTAT FUNCTION 197
DTC Logic 197
Diagnosis Procedure 197
Component Inspection 198

P0130 A/F SENSOR 1 199
Description 199
DTC Logic 199
Component Function Check 200
Diagnosis Procedure 201

P0131 A/F SENSOR 1 203
Description 203
DTC Logic 203
Diagnosis Procedure 204

P0132 A/F SENSOR 1 206
Description 206
DTC Logic 206
Diagnosis Procedure 207

P0133 A/F SENSOR 1 209
Description 209
DTC Logic 209
Diagnosis Procedure 211

P0137 HO2S2 214
Description 214
DTC Logic 214
Component Function Check 215
Diagnosis Procedure 216
Component Inspection 217

P0138 HO2S2 220
Description 220
DTC Logic 220
Component Function Check 221
Diagnosis Procedure 222
Component Inspection 225

P0139 HO2S2 228
Description 228
DTC Logic 228
Component Function Check 229
Diagnosis Procedure 230
Component Inspection 231

P0143 HO2S3 234
Description 234
DTC Logic 234
Diagnosis Procedure 235
Component Inspection 236

P0144 HO2S3 239
Description 239
DTC Logic 239
Diagnosis Procedure 240
Component Inspection 241

P0145 HO2S3 244
Description 244
DTC Logic 244
Diagnosis Procedure 245
Component Inspection 246

P0146 HO2S3 249
Description 249
DTC Logic 249
Diagnosis Procedure 250
Component Inspection 251

P0171 FUEL INJECTION SYSTEM FUNCTION 254
DTC Logic 254
Diagnosis Procedure 255

P0172 FUEL INJECTION SYSTEM FUNCTION 258
DTC Logic 258
Diagnosis Procedure 259

P0181 FTT SENSOR 262
Description 262
DTC Logic 262
Diagnosis Procedure 263
Component Inspection 264

P0182, P0183 FTT SENSOR 265
Description 265
DTC Logic 265
Diagnosis Procedure 265
Component Inspection 267

P0222, P0223 TP SENSOR 268
Description 268
DTC Logic 268
Diagnosis Procedure 268
Component Inspection 270
Special Repair Requirement 270

P0300, P0301, P0302, P0303, P0304 MISFIRE 271
DTC Logic 271
Diagnosis Procedure 272

P0327, P0328 KS 276
Description 276
DTC Logic 276
Diagnosis Procedure 276
Component Inspection 277

P0335 CKP SENSOR (POS) 278
Description 278
DTC Logic 278
Diagnosis Procedure 279
Component Inspection 281

P0340 CMP SENSOR (PHASE) 282
Description 282
DTC Logic 282
Diagnosis Procedure 283
Component Inspection 284

P0420 THREE WAY CATALYST FUNCTION. 286
DTC Logic 286
Diagnosis Procedure 287

P0441 EVAP CONTROL SYSTEM 290
DTC Logic 290
Component Function Check 291
Diagnosis Procedure 292

P0442 EVAP CONTROL SYSTEM 295
DTC Logic 295
Diagnosis Procedure 296
Component Inspection 300

P0443 EVAP CANISTER PURGE VOLUME CONTROL SOLENOID VALVE 301
Description 301
DTC Logic 301
Diagnosis Procedure 302
Component Inspection 304

P0444, P0445 EVAP CANISTER PURGE VOLUME CONTROL SOLENOID VALVE 305
Description 305
DTC Logic 305
Diagnosis Procedure 305
Component Inspection 307

P0447 EVAP CANISTER VENT CONTROL VALVE 308
Description 308
DTC Logic 308
Diagnosis Procedure 308
Component Inspection 310

P0448 EVAP CANISTER VENT CONTROL VALVE 312
Description 312
DTC Logic 312
Diagnosis Procedure 313
Component Inspection 314

P0451 EVAP CONTROL SYSTEM PRESSURE SENSOR 316
Description 316
DTC Logic 316
Diagnosis Procedure 316
Component Inspection 318

P0452 EVAP CONTROL SYSTEM PRESSURE SENSOR 319
Description 319
DTC Logic 319
Diagnosis Procedure 320
Component Inspection 323

P0453 EVAP CONTROL SYSTEM PRESSURE SENSOR 324
Description 324
DTC Logic 324
Diagnosis Procedure 325
Component Inspection 328

P0455 EVAP CONTROL SYSTEM 330
DTC Logic 330
Diagnosis Procedure 331
Component Inspection 334

P0456 EVAP CONTROL SYSTEM 336
DTC Logic 336
Component Function Check 338
Diagnosis Procedure 338
Component Inspection 341

P0460 FUEL LEVEL SENSOR 343
Description 343
DTC Logic 343
Diagnosis Procedure 343

P0461 FUEL LEVEL SENSOR 344
Description 344
DTC Logic 344
Component Function Check 344
Diagnosis Procedure 345

P0462, P0463 FUEL LEVEL SENSOR 346
Description 346
DTC Logic 346
Diagnosis Procedure 346

P0500 VSS 348
Description 348
DTC Logic 348
Component Function Check 349
Diagnosis Procedure 349

P0506 ISC SYSTEM 350
Description 350
DTC Logic 350

Diagnosis Procedure 350

P0507 ISC SYSTEM 352
Description 352
DTC Logic 352
Diagnosis Procedure 352

P0550 PSP SENSOR 354
Description 354
DTC Logic 354
Diagnosis Procedure 354
Component Inspection 355

P0603 ECM POWER SUPPLY 357
Description 357
DTC Logic 357
Diagnosis Procedure 357

P0605 ECM 359
Description 359
DTC Logic 359
Diagnosis Procedure 360

P0607 ECM 361
Description 361
DTC Logic 361
Diagnosis Procedure 361

P0643 SENSOR POWER SUPPLY 362
DTC Logic 362
Diagnosis Procedure 362

P0850 PNP SWITCH 365
Description 365
DTC Logic 365
Component Function Check 366
Diagnosis Procedure 366

P1148 CLOSED LOOP CONTROL 368
DTC Logic 368

P1217 ENGINE OVER TEMPERATURE 369
DTC Logic 369
Component Function Check 369
Diagnosis Procedure 370

P1225 TP SENSOR 373
Description 373
DTC Logic 373
Diagnosis Procedure 373
Special Repair Requirement 374

P1226 TP SENSOR 375
Description 375
DTC Logic 375
Diagnosis Procedure 375
Special Repair Requirement 376

P1421 COLD START CONTROL 377
Description 377
DTC Logic 377
Diagnosis Procedure 377

P1550 BATTERY CURRENT SENSOR 379
Description 379
DTC Logic 379
Diagnosis Procedure 379
Component Inspection 380

P1551, P1552 BATTERY CURRENT SENSOR 382
Description 382
DTC Logic 382
Diagnosis Procedure 382
Component Inspection 383

P1553 BATTERY CURRENT SENSOR 385
Description 385
DTC Logic 385
Diagnosis Procedure 385
Component Inspection 386

P1554 BATTERY CURRENT SENSOR 388
Description 388
DTC Logic 388
Component Function Check 388
Diagnosis Procedure 389
Component Inspection 390

P1564 ASCD STEERING SWITCH 391
Description 391
DTC Logic 391
Diagnosis Procedure 391
Component Inspection 393

P1572 ASCD BRAKE SWITCH 394
Description 394
DTC Logic 394
Diagnosis Procedure 395
Component Inspection (ASCD Brake Switch) 399
Component Inspection (ASCD Clutch Switch) 400
Component Inspection (Stop Lamp Switch) 401

P1574 ASCD VEHICLE SPEED SENSOR 402
Description 402
DTC Logic 402
Diagnosis Procedure 402

P1715 INPUT SPEED SENSOR (PRIMARY SPEED SENSOR) 404
Description 404
DTC Logic 404
Diagnosis Procedure 404

P1805 BRAKE SWITCH 406
Description 406
DTC Logic 406
Diagnosis Procedure 406
Component Inspection (Stop Lamp Switch) 407

P2004 TUMBLE CONTROL VALVE 409
Description 409
DTC Logic 409
Diagnosis Procedure 410

Component Inspection 413

P2014 TUMBLE CONTROL VALVE POSITION SENSOR 414
Description 414
DTC Logic 414
Diagnosis Procedure 414

P2100, P2103 THROTTLE CONTROL MOTOR RELAY 417
Description 417
DTC Logic 417
Diagnosis Procedure 417

P2101 ELECTRIC THROTTLE CONTROL FUNCTION 419
Description 419
DTC Logic 419
Diagnosis Procedure 419
Component Inspection 421
Special Repair Requirement 422

P2118 THROTTLE CONTROL MOTOR 423
Description 423
DTC Logic 423
Diagnosis Procedure 423
Component Inspection 424
Special Repair Requirement 424

P2119 ELECTRIC THROTTLE CONTROL ACTUATOR 425
Description 425
DTC Logic 425
Diagnosis Procedure 425
Special Repair Requirement 426

P2122, P2123 APP SENSOR 427
Description 427
DTC Logic 427
Diagnosis Procedure 427
Component Inspection 429
Special Repair Requirement 429

P2127, P2128 APP SENSOR 430
Description 430
DTC Logic 430
Diagnosis Procedure 431
Component Inspection 432
Special Repair Requirement 433

P2135 TP SENSOR 434
Description 434
DTC Logic 434
Diagnosis Procedure 434
Component Inspection 436
Special Repair Requirement 436

P2138 APP SENSOR 438
Description 438
DTC Logic 438
Diagnosis Procedure 439
Component Inspection 441
Special Repair Requirement 441

P2423 HC ADSORPTION CATALYST FUNCTION 442
DTC Logic 442
Diagnosis Procedure 443

P2A00 A/F SENSOR 1 446
Description 446
DTC Logic 446
Diagnosis Procedure 447

ASCD BRAKE SWITCH 450
Description 450
Component Function Check 450
Diagnosis Procedure 450
Component Inspection (ASCD Brake Switch) 453
Component Inspection (ASCD Clutch Switch) 453

ASCD INDICATOR 455
Description 455
Component Function Check 455
Diagnosis Procedure 455

COOLING FAN 456
Description 456
Component Function Check 456
Diagnosis Procedure 456
Component Inspection (Cooling Fan Motor) 459
Component Inspection (Cooling Fan Relay) 460

ELECTRICAL LOAD SIGNAL 461
Description 461
Component Function Check 461
Diagnosis Procedure 461

FUEL INJECTOR 463
Description 463
Component Function Check 463
Diagnosis Procedure 463
Component Inspection 464

FUEL PUMP 466
Description 466
Component Function Check 466
Diagnosis Procedure 466
Component Inspection (Fuel Pump) 469
Component Inspection (Condenser-1) 469

IGNITION SIGNAL 470
Description 470
Component Function Check 470
Diagnosis Procedure 470
Component Inspection (Ignition Coil with Power Transistor) 473
Component Inspection (Condenser-2) 474

MALFUNCTION INDICATOR LAMP 475
Description 475
Component Function Check 475

Diagnosis Procedure 475

ON BOARD REFUELING VAPOR RECOVERY (ORVR) 476
Description 476
Component Function Check 476
Diagnosis Procedure 476
Component Inspection 479

POSITIVE CRANKCASE VENTILATION 481
Description 481
Component Inspection 481

REFRIGERANT PRESSURE SENSOR 482
Description 482
Component Function Check 482
Diagnosis Procedure 482

ECU DIAGNOSIS 485

ECM 485
Reference Value 485
Wiring Diagram — ENGINE CONTROL SYSTEM — 498
Fail Safe 523
DTC Inspection Priority Chart 525
DTC Index 527
How to Set SRT Code 530
Test Value and Test Limit 532

SYMPTOM DIAGNOSIS 539

ENGINE CONTROL SYSTEM SYMPTOMS ... 539
Symptom Table 539

NORMAL OPERATING CONDITION 543
Description 543

PRECAUTION 544

PRECAUTIONS 544
Precaution for Supplemental Restraint System (SRS) "AIR BAG" and "SEAT BELT PRE-TENSIONER" 544
Precaution for Procedure without Cowl Top Cover. 544
On Board Diagnostic (OBD) System of Engine and CVT 544
General Precautions 545

PREPARATION 548

PREPARATION 548
Special Service Tools 548
Commercial Service Tools 548

ON-VEHICLE MAINTENANCE 550

FUEL PRESSURE 550
Inspection 550

EVAP LEAK CHECK 551
Inspection 551

ON-VEHICLE REPAIR 553

EVAP CANISTER 553
Exploded View 553
Removal and Installation 553
Inspection 554

SERVICE DATA AND SPECIFICATIONS (SDS) 555

SERVICE DATA AND SPECIFICATIONS (SDS) 555
Idle Speed 555
Ignition Timing 555
Calculated Load Value 555
Mass Air Flow Sensor 555

QR25DE EXCEPT FOR CALIFORNIA

BASIC INSPECTION 556

DIAGNOSIS AND REPAIR WORK FLOW 556
Work Flow 556
Diagnostic Work Sheet 558

INSPECTION AND ADJUSTMENT 560

BASIC INSPECTION 560
BASIC INSPECTION : Special Repair Requirement 560

ADDITIONAL SERVICE WHEN REPLACING CONTROL UNIT 563
ADDITIONAL SERVICE WHEN REPLACING CONTROL UNIT : Description 563
ADDITIONAL SERVICE WHEN REPLACING CONTROL UNIT : Special Repair Requirement ... 563

IDLE SPEED 564
IDLE SPEED : Description 564
IDLE SPEED : Special Repair Requirement 564

IGNITION TIMING 564
IGNITION TIMING : Description 564
IGNITION TIMING : Special Repair Requirement. 564

VIN REGISTRATION 564
VIN REGISTRATION : Description 564
VIN REGISTRATION : Special Repair Requirement 565

ACCELERATOR PEDAL RELEASED POSITION LEARNING 565
ACCELERATOR PEDAL RELEASED POSITION LEARNING : Description 565
ACCELERATOR PEDAL RELEASED POSITION LEARNING : Special Repair Requirement 565

THROTTLE VALVE CLOSED POSITION LEARNING 565
THROTTLE VALVE CLOSED POSITION LEARNING : Description 565

THROTTLE VALVE CLOSED POSITION LEARNING : Special Repair Requirement 565

IDLE AIR VOLUME LEARNING 565
IDLE AIR VOLUME LEARNING : Description 566
IDLE AIR VOLUME LEARNING : Special Repair Requirement 566

MIXTURE RATIO SELF-LEARNING VALUE CLEAR 567
MIXTURE RATIO SELF-LEARNING VALUE CLEAR : Description 567
MIXTURE RATIO SELF-LEARNING VALUE CLEAR : Special Repair Requirement 568

FUNCTION DIAGNOSIS 569

ENGINE CONTROL SYSTEM 569
System Diagram 569
System Description 570
Component Parts Location 570
Component Description 575

MULTIPORT FUEL INJECTION SYSTEM 577
System Diagram 577
System Description 577
Component Parts Location 580
Component Description 585

ELECTRIC IGNITION SYSTEM 587
System Diagram 587
System Description 587
Component Parts Location 588
Component Description 593

AIR CONDITIONING CUT CONTROL 595
System Diagram 595
System Description 595
Component Parts Location 596
Component Description 601

AUTOMATIC SPEED CONTROL DEVICE (ASCD) 603
System Diagram 603
System Description 603
Component Parts Location 605
Component Description 610

CAN COMMUNICATION 612
System Description 612

COOLING FAN CONTROL 613
System Diagram 613
System Description 613
Component Parts Location 615
Component Description 620

EVAPORATIVE EMISSION SYSTEM 622
System Diagram 622
System Description 624
Component Parts Location 626
Component Description 631

INTAKE VALVE TIMING CONTROL 633
System Diagram 633
System Description 633
Component Parts Location 634
Component Description 639

ON BOARD DIAGNOSTIC (OBD) SYSTEM ...641
Diagnosis Description 641
CONSULT-III Function 654
Diagnosis Tool Function 663

COMPONENT DIAGNOSIS 665

TROUBLE DIAGNOSIS - SPECIFICATION VALUE 665
Description 665
Component Function Check 665
Diagnosis Procedure 666

POWER SUPPLY AND GROUND CIRCUIT ...673
Diagnosis Procedure 673

U0101 CAN COMM CIRCUIT 677
Description 677
DTC Logic 677
Diagnosis Procedure 677

U0140 CAN COMM CIRCUIT 678
Description 678
DTC Logic 678
Diagnosis Procedure 678

U1001 CAN COMM CIRCUIT 679
Description 679
DTC Logic 679
Diagnosis Procedure 679

P0011 IVT CONTROL 680
DTC Logic 680
Diagnosis Procedure 681
Component Inspection 682

P0031, P0032 A/F SENSOR 1 HEATER 684
Description 684
DTC Logic 684
Diagnosis Procedure 684
Component Inspection 686

P0037, P0038 HO2S2 HEATER 687
Description 687
DTC Logic 687
Diagnosis Procedure 688
Component Inspection 689

P0075 IVT CONTROL SOLENOID VALVE 690
Description 690
DTC Logic 690
Diagnosis Procedure 690
Component Inspection 691

P0101 MAF SENSOR **693**
Description 693
DTC Logic 693
Component Function Check 694
Diagnosis Procedure 695
Component Inspection 696

P0102, P0103 MAF SENSOR **700**
Description 700
DTC Logic 700
Diagnosis Procedure 701
Component Inspection 702

P0112, P0113 IAT SENSOR **706**
Description 706
DTC Logic 706
Diagnosis Procedure 707
Component Inspection 707

P0116 ECT SENSOR **709**
Description 709
DTC Logic 709
Diagnosis Procedure 710
Component Inspection 710

P0117, P0118 ECT SENSOR **711**
Description 711
DTC Logic 711
Diagnosis Procedure 712
Component Inspection 712

P0122, P0123 TP SENSOR **714**
Description 714
DTC Logic 714
Diagnosis Procedure 714
Component Inspection 716
Special Repair Requirement 716

P0125 ECT SENSOR **717**
Description 717
DTC Logic 717
Diagnosis Procedure 718
Component Inspection 718

P0127 IAT SENSOR **720**
Description 720
DTC Logic 720
Diagnosis Procedure 721
Component Inspection 721

P0128 THERMOSTAT FUNCTION **722**
DTC Logic 722
Diagnosis Procedure 722
Component Inspection 723

P0130 A/F SENSOR 1 ..... **724**
Description 724
DTC Logic 724
Component Function Check 725
Diagnosis Procedure 726

P0131 A/F SENSOR 1 ..... **728**
Description 728
DTC Logic 728
Diagnosis Procedure 729

P0132 A/F SENSOR 1 ..... **731**
Description 731
DTC Logic 731
Diagnosis Procedure 732

P0133 A/F SENSOR 1 ..... **734**
Description 734
DTC Logic 734
Diagnosis Procedure 736

P0137 HO2S2 ..... **739**
Description 739
DTC Logic 739
Component Function Check 740
Diagnosis Procedure 741
Component Inspection 742

P0138 HO2S2 ..... **745**
Description 745
DTC Logic 745
Component Function Check 746
Diagnosis Procedure 747
Component Inspection 750

P0139 HO2S2 ..... **753**
Description 753
DTC Logic 753
Component Function Check 754
Diagnosis Procedure 755
Component Inspection 756

P0171 FUEL INJECTION SYSTEM FUNCTION **759**
DTC Logic 759
Diagnosis Procedure 760

P0172 FUEL INJECTION SYSTEM FUNCTION **763**
DTC Logic 763
Diagnosis Procedure 764

P0181 FTT SENSOR **767**
Description 767
DTC Logic 767
Diagnosis Procedure 768
Component Inspection 769

P0182, P0183 FTT SENSOR **770**
Description 770
DTC Logic 770
Diagnosis Procedure 770
Component Inspection 772

P0222, P0223 TP SENSOR **773**
Description 773
DTC Logic 773

Diagnosis Procedure 773
Component Inspection 775
Special Repair Requirement 775

P0300, P0301, P0302, P0303, P0304 MISFIRE 776
DTC Logic 776
Diagnosis Procedure 777

P0327, P0328 KS 781
Description 781
DTC Logic 781
Diagnosis Procedure 781
Component Inspection 782

P0335 CKP SENSOR (POS) 783
Description 783
DTC Logic 783
Diagnosis Procedure 784
Component Inspection 786

P0340 CMP SENSOR (PHASE) 787
Description 787
DTC Logic 787
Diagnosis Procedure 788
Component Inspection 789

P0420 THREE WAY CATALYST FUNCTION. 791
DTC Logic 791
Component Function Check 792
Diagnosis Procedure 793

P0441 EVAP CONTROL SYSTEM 796
DTC Logic 796
Component Function Check 797
Diagnosis Procedure 798

P0442 EVAP CONTROL SYSTEM 801
DTC Logic 801
Diagnosis Procedure 802
Component Inspection 806

P0443 EVAP CANISTER PURGE VOLUME CONTROL SOLENOID VALVE 807
Description 807
DTC Logic 807
Diagnosis Procedure 808
Component Inspection 810

P0444, P0445 EVAP CANISTER PURGE VOLUME CONTROL SOLENOID VALVE 811
Description 811
DTC Logic 811
Diagnosis Procedure 811
Component Inspection 813

P0447 EVAP CANISTER VENT CONTROL VALVE 814
Description 814
DTC Logic 814
Diagnosis Procedure 814
Component Inspection 816

P0448 EVAP CANISTER VENT CONTROL VALVE 818
Description 818
DTC Logic 818
Diagnosis Procedure 819
Component Inspection 820

P0451 EVAP CONTROL SYSTEM PRESSURE SENSOR 822
Description 822
DTC Logic 822
Diagnosis Procedure 822
Component Inspection 824

P0452 EVAP CONTROL SYSTEM PRESSURE SENSOR 825
Description 825
DTC Logic 825
Diagnosis Procedure 826
Component Inspection 828

P0453 EVAP CONTROL SYSTEM PRESSURE SENSOR 830
Description 830
DTC Logic 830
Diagnosis Procedure 831
Component Inspection 834

P0455 EVAP CONTROL SYSTEM 835
DTC Logic 835
Diagnosis Procedure 836
Component Inspection 839

P0456 EVAP CONTROL SYSTEM 841
DTC Logic 841
Component Function Check 843
Diagnosis Procedure 843
Component Inspection 846

P0460 FUEL LEVEL SENSOR 848
Description 848
DTC Logic 848
Diagnosis Procedure 848

P0461 FUEL LEVEL SENSOR 849
Description 849
DTC Logic 849
Component Function Check 849
Diagnosis Procedure 850

P0462, P0463 FUEL LEVEL SENSOR 851
Description 851
DTC Logic 851
Diagnosis Procedure 851

P0500 VSS 853
Description 853
DTC Logic 853
Component Function Check 854

Diagnosis Procedure 854

P0506 ISC SYSTEM 855
Description 855
DTC Logic 855
Diagnosis Procedure 855

P0507 ISC SYSTEM 857
Description 857
DTC Logic 857
Diagnosis Procedure 857

P0550 PSP SENSOR 859
Description 859
DTC Logic 859
Diagnosis Procedure 859
Component Inspection 860

P0603 ECM POWER SUPPLY 862
Description 862
DTC Logic 862
Diagnosis Procedure 862

P0605 ECM 864
Description 864
DTC Logic 864
Diagnosis Procedure 865

P0607 ECM 866
Description 866
DTC Logic 866
Diagnosis Procedure 866

P0643 SENSOR POWER SUPPLY 867
DTC Logic 867
Diagnosis Procedure 867

P0850 PNP SWITCH 870
Description 870
DTC Logic 870
Component Function Check 871
Diagnosis Procedure 871

P1148 CLOSED LOOP CONTROL 873
DTC Logic 873

P1217 ENGINE OVER TEMPERATURE 874
DTC Logic 874
Component Function Check 874
Diagnosis Procedure 875

P1225 TP SENSOR 878
Description 878
DTC Logic 878
Diagnosis Procedure 878
Special Repair Requirement 879

P1226 TP SENSOR 880
Description 880
DTC Logic 880
Diagnosis Procedure 880
Special Repair Requirement 881

P1421 COLD START CONTROL 882
Description 882
DTC Logic 882
Diagnosis Procedure 882

P1550 BATTERY CURRENT SENSOR 884
Description 884
DTC Logic 884
Diagnosis Procedure 884
Component Inspection 885

P1551, P1552 BATTERY CURRENT SENSOR 887
Description 887
DTC Logic 887
Diagnosis Procedure 887
Component Inspection 888

P1553 BATTERY CURRENT SENSOR 890
Description 890
DTC Logic 890
Diagnosis Procedure 890
Component Inspection 891

P1554 BATTERY CURRENT SENSOR 893
Description 893
DTC Logic 893
Component Function Check 893
Diagnosis Procedure 894
Component Inspection 895

P1564 ASCD STEERING SWITCH 896
Description 896
DTC Logic 896
Diagnosis Procedure 896
Component Inspection 898

P1572 ASCD BRAKE SWITCH 899
Description 899
DTC Logic 899
Diagnosis Procedure 900
Component Inspection (ASCD Brake Switch) 904
Component Inspection (ASCD Clutch Switch) 905
Component Inspection (Stop Lamp Switch) 906

P1574 ASCD VEHICLE SPEED SENSOR 907
Description 907
DTC Logic 907
Diagnosis Procedure 907

P1715 INPUT SPEED SENSOR (PRIMARY SPEED SENSOR) 909
Description 909
DTC Logic 909
Diagnosis Procedure 909

P1805 BRAKE SWITCH 911
Description 911
DTC Logic 911
Diagnosis Procedure 911
Component Inspection (Stop Lamp Switch) 912

P2100, P2103 THROTTLE CONTROL MOTOR RELAY 914
Description 914
DTC Logic 914
Diagnosis Procedure 914

P2101 ELECTRIC THROTTLE CONTROL FUNCTION 916
Description 916
DTC Logic 916
Diagnosis Procedure 916
Component Inspection 918
Special Repair Requirement 919

P2118 THROTTLE CONTROL MOTOR 920
Description 920
DTC Logic 920
Diagnosis Procedure 920
Component Inspection 921
Special Repair Requirement 921

P2119 ELECTRIC THROTTLE CONTROL ACTUATOR 922
Description 922
DTC Logic 922
Diagnosis Procedure 922
Special Repair Requirement 923

P2122, P2123 APP SENSOR 924
Description 924
DTC Logic 924
Diagnosis Procedure 924
Component Inspection 926
Special Repair Requirement 926

P2127, P2128 APP SENSOR 927
Description 927
DTC Logic 927
Diagnosis Procedure 927
Component Inspection 929
Special Repair Requirement 930

P2135 TP SENSOR 931
Description 931
DTC Logic 931
Diagnosis Procedure 931
Component Inspection 933
Special Repair Requirement 933

P2138 APP SENSOR 935
Description 935
DTC Logic 935
Diagnosis Procedure 936
Component Inspection 938
Special Repair Requirement 938

P2A00 A/F SENSOR 1 939
Description 939
DTC Logic 939
Diagnosis Procedure 940

ASCD BRAKE SWITCH 943
Description 943
Component Function Check 943
Diagnosis Procedure 943
Component Inspection (ASCD Brake Switch) 946
Component Inspection (ASCD Clutch Switch) 946

ASCD INDICATOR 948
Description 948
Component Function Check 948
Diagnosis Procedure 948

COOLING FAN 949
Description 949
Component Function Check 949
Diagnosis Procedure 949
Component Inspection (Cooling Fan Motor) 952
Component Inspection (Cooling Fan Relay) 953

ELECTRICAL LOAD SIGNAL 954
Description 954
Component Function Check 954
Diagnosis Procedure 954

FUEL INJECTOR 956
Description 956
Component Function Check 956
Diagnosis Procedure 956
Component Inspection 957

FUEL PUMP 959
Description 959
Component Function Check 959
Diagnosis Procedure 959
Component Inspection (Fuel Pump) 962
Component Inspection (Condenser-1) 962

IGNITION SIGNAL 963
Description 963
Component Function Check 963
Diagnosis Procedure 963
Component Inspection (Ignition Coil with Power Transistor) 966
Component Inspection (Condenser-2) 967

MALFUNCTION INDICATOR LAMP 968
Description 968
Component Function Check 968
Diagnosis Procedure 968

ON BOARD REFUELING VAPOR RECOVERY (ORVR) 969
Description 969
Component Function Check 969
Diagnosis Procedure 969
Component Inspection 972

POSITIVE CRANKCASE VENTILATION 974
Description 974
Component Inspection 974

REFRIGERANT PRESSURE SENSOR 975
Description 975
Component Function Check 975
Diagnosis Procedure 975

ECU DIAGNOSIS 978

ECM 978
Reference Value 978
Wiring Diagram — ENGINE CONTROL SYSTEM — 990
Fail Safe 1012
DTC Inspection Priority Chart 1014
DTC Index 1015
How to Set SRT Code 1018
Test Value and Test Limit 1020

SYMPTOM DIAGNOSIS 1027

ENGINE CONTROL SYSTEM SYMPTOMS .. 1027
Symptom Table 1027

NORMAL OPERATING CONDITION 1031
Description 1031

PRECAUTION 1032

PRECAUTIONS 1032
Precaution for Supplemental Restraint System (SRS) "AIR BAG" and "SEAT BELT PRE-TENSIONER" 1032
Precaution for Procedure without Cowl Top Cover 1032
On Board Diagnostic (OBD) System of Engine and CVT 1032
General Precautions 1033

PREPARATION 1036

PREPARATION 1036
Special Service Tools 1036
Commercial Service Tools 1036

ON-VEHICLE MAINTENANCE 1038

FUEL PRESSURE 1038
Inspection 1038

EVAP LEAK CHECK 1039
Inspection 1039

ON-VEHICLE REPAIR 1041

EVAP CANISTER 1041
Exploded View 1041
Removal and Installation 1041
Inspection 1042

SERVICE DATA AND SPECIFICATIONS (SDS) 1043

SERVICE DATA AND SPECIFICATIONS (SDS) 1043
Idle Speed 1043
Ignition Timing 1043
Calculated Load Value 1043
Mass Air Flow Sensor 1043

VQ35DE

BASIC INSPECTION 1044

DIAGNOSIS AND REPAIR WORK FLOW 1044
Work Flow 1044
Diagnostic Work Sheet 1047

INSPECTION AND ADJUSTMENT 1048

BASIC INSPECTION 1048
BASIC INSPECTION : Special Repair Requirement 1048

ADDITIONAL SERVICE WHEN REPLACING CONTROL UNIT 1051
ADDITIONAL SERVICE WHEN REPLACING CONTROL UNIT : Description 1051
ADDITIONAL SERVICE WHEN REPLACING CONTROL UNIT : Special Repair Requirement .. 1051

IDLE SPEED 1051
IDLE SPEED : Description 1051
IDLE SPEED : Special Repair Requirement 1052

IGNITION TIMING 1052
IGNITION TIMING : Description 1052
IGNITION TIMING : Special Repair Requirement 1052

VIN REGISTRATION 1052
VIN REGISTRATION : Description 1052
VIN REGISTRATION : Special Repair Requirement 1052

ACCELERATOR PEDAL RELEASED POSITION LEARNING 1053
ACCELERATOR PEDAL RELEASED POSITION LEARNING : Description 1053
ACCELERATOR PEDAL RELEASED POSITION LEARNING : Special Repair Requirement 1053

THROTTLE VALVE CLOSED POSITION LEARNING 1053
THROTTLE VALVE CLOSED POSITION LEARNING : Description 1053
THROTTLE VALVE CLOSED POSITION LEARNING : Special Repair Requirement 1053

IDLE AIR VOLUME LEARNING 1053
IDLE AIR VOLUME LEARNING : Description 1053
IDLE AIR VOLUME LEARNING : Special Repair Requirement 1053

MIXTURE RATIO SELF-LEARNING VALUE CLEAR 1055
MIXTURE RATIO SELF-LEARNING VALUE CLEAR : Description 1055

MIXTURE RATIO SELF-LEARNING VALUE CLEAR : Special Repair Requirement 1055

FUNCTION DIAGNOSIS 1057

ENGINE CONTROL SYSTEM 1057
System Diagram 1057
System Description 1058
Component Parts Location 1058
Component Description 1063

MULTIPORT FUEL INJECTION SYSTEM 1065
System Diagram 1065
System Description 1065
Component Parts Location 1068
Component Description 1073

ELECTRIC IGNITION SYSTEM 1075
System Diagram 1075
System Description 1075
Component Parts Location 1076
Component Description 1081

AIR CONDITIONING CUT CONTROL 1083
System Diagram 1083
System Description 1083
Component Parts Location 1084
Component Description 1089

AUTOMATIC SPEED CONTROL DEVICE (ASCD) 1090
System Diagram 1090
System Description 1090
Component Parts Location 1092
Component Description 1097

CAN COMMUNICATION 1098
System Description 1098

COOLING FAN CONTROL 1099
System Diagram 1099
System Description 1099
Component Parts Location 1101
Component Description 1106

ELECTRONIC CONTROLLED ENGINE MOUNT 1107
System Diagram 1107
System Description 1107
Component Parts Location 1110
Component Description 1115

EVAPORATIVE EMISSION SYSTEM 1116
System Diagram 1116
System Description 1116
Component Parts Location 1119
Component Description 1124

INTAKE VALVE TIMING CONTROL 1126
System Diagram 1126
System Description 1126
Component Parts Location 1127
Component Description 1132

VARIABLE INDUCTION AIR SYSTEM 1133
System Diagram 1133
System Description 1133
Component Parts Location 1135
Component Description 1140

ON BOARD DIAGNOSTIC (OBD) SYSTEM ..1142
Diagnosis Description 1142
CONSULT-III Function 1155
Diagnosis Tool Function 1164

COMPONENT DIAGNOSIS 1167

TROUBLE DIAGNOSIS - SPECIFICATION VALUE 1167
Description 1167
Component Function Check 1167
Diagnosis Procedure 1168

POWER SUPPLY AND GROUND CIRCUIT ..1175
Diagnosis Procedure 1175

U0101 CAN COMM CIRCUIT 1178
Description 1178
DTC Logic 1178
Diagnosis Procedure 1178

U1001 CAN COMM CIRCUIT 1179
Description 1179
DTC Logic 1179
Diagnosis Procedure 1179

P0011, P0021 IVT CONTROL 1180
DTC Logic 1180
Diagnosis Procedure 1181
Component Inspection 1182

P0031, P0032, P0051, P0052 A/F SENSOR 1 HEATER 1184
Description 1184
DTC Logic 1184
Diagnosis Procedure 1184
Component Inspection 1186

P0037, P0038, P0057, P0058 HO2S2 HEATER 1187
Description 1187
DTC Logic 1187
Diagnosis Procedure 1188
Component Inspection 1189

P0075, P0081 IVT CONTROL SOLENOID VALVE 1191
Description 1191
DTC Logic 1191
Diagnosis Procedure 1191
Component Inspection 1192

P0101 MAF SENSOR 1194
Description 1194
DTC Logic 1194
Component Function Check 1195
Diagnosis Procedure 1196
Component Inspection 1197

P0102, P0103 MAF SENSOR 1201
Description 1201
DTC Logic 1201
Diagnosis Procedure 1202
Component Inspection 1203

P0112, P0113 IAT SENSOR 1207
Description 1207
DTC Logic 1207
Diagnosis Procedure 1208
Component Inspection 1208

P0116 ECT SENSOR 1210
Description 1210
DTC Logic 1210
Diagnosis Procedure 1211
Component Inspection 1211

P0117, P0118 ECT SENSOR 1212
Description 1212
DTC Logic 1212
Diagnosis Procedure 1213
Component Inspection 1213

P0122, P0123 TP SENSOR 1215
Description 1215
DTC Logic 1215
Diagnosis Procedure 1215
Component Inspection 1217
Special Repair Requirement 1217

P0125 ECT SENSOR 1218
Description 1218
DTC Logic 1218
Diagnosis Procedure 1219
Component Inspection 1219

P0127 IAT SENSOR 1221
Description 1221
DTC Logic 1221
Diagnosis Procedure 1222
Component Inspection 1222

P0128 THERMOSTAT FUNCTION 1223
DTC Logic 1223
Diagnosis Procedure 1224
Component Inspection 1224

P0130, P0150 A/F SENSOR 1 1225
Description 1225
DTC Logic 1225
Component Function Check 1227
Diagnosis Procedure 1227

P0131, P0151 A/F SENSOR 1 1229
Description 1229
DTC Logic 1229
Diagnosis Procedure 1230

P0132, P0152 A/F SENSOR 1 1233
Description 1233
DTC Logic 1233
Diagnosis Procedure 1234

P0133, P0153 A/F SENSOR 1 1237
Description 1237
DTC Logic 1237
Diagnosis Procedure 1239

P0137, P0157 HO2S2 1242
Description 1242
DTC Logic 1242
Component Function Check 1243
Diagnosis Procedure 1245
Component Inspection 1246

P0138, P0158 HO2S2 1249
Description 1249
DTC Logic 1249
Component Function Check 1251
Diagnosis Procedure 1253
Component Inspection 1256

P0139, P0159 HO2S2 1259
Description 1259
DTC Logic 1259
Component Function Check 1260
Diagnosis Procedure 1262
Component Inspection 1263

P0171, P0174 FUEL INJECTION SYSTEM FUNCTION 1266
DTC Logic 1266
Diagnosis Procedure 1267

P0172, P0175 FUEL INJECTION SYSTEM FUNCTION 1270
DTC Logic 1270
Diagnosis Procedure 1271

P0181 FTT SENSOR 1274
Description 1274
DTC Logic 1274
Diagnosis Procedure 1275
Component Inspection 1276

P0182, P0183 FTT SENSOR 1277
Description 1277
DTC Logic 1277
Diagnosis Procedure 1277
Component Inspection 1279

P0222, P0223 TP SENSOR 1280
Description 1280
DTC Logic 1280

Diagnosis Procedure 1280
Component Inspection 1282
Special Repair Requirement 1282

P0300, P0301, P0302, P0303, P0304, P0305, P0306 MISFIRE 1283
DTC Logic 1283
Diagnosis Procedure 1284

P0327, P0328, P0332, P0333 KS 1289
Description 1289
DTC Logic 1289
Diagnosis Procedure 1289
Component Inspection 1290

P0335 CKP SENSOR (POS) 1292
Description 1292
DTC Logic 1292
Diagnosis Procedure 1293
Component Inspection 1295

P0340, P0345 CMP SENSOR (PHASE) 1296
Description 1296
DTC Logic 1296
Diagnosis Procedure 1297
Component Inspection 1298

P0420, P0430 THREE WAY CATALYST FUNCTION 1300
DTC Logic 1300
Component Function Check 1301
Diagnosis Procedure 1302

P0441 EVAP CONTROL SYSTEM 1305
DTC Logic 1305
Component Function Check 1306
Diagnosis Procedure 1307

P0442 EVAP CONTROL SYSTEM 1310
DTC Logic 1310
Diagnosis Procedure 1311
Component Inspection 1315

P0443 EVAP CANISTER PURGE VOLUME CONTROL SOLENOID VALVE 1316
Description 1316
DTC Logic 1316
Diagnosis Procedure 1317
Component Inspection 1319

P0444, P0445 EVAP CANISTER PURGE VOLUME CONTROL SOLENOID VALVE 1321
Description 1321
DTC Logic 1321
Diagnosis Procedure 1321
Component Inspection 1323

P0447 EVAP CANISTER VENT CONTROL VALVE 1324
Description 1324
DTC Logic 1324
Diagnosis Procedure 1324
Component Inspection 1326

P0448 EVAP CANISTER VENT CONTROL VALVE 1328
Description 1328
DTC Logic 1328
Diagnosis Procedure 1329
Component Inspection 1330

P0451 EVAP CONTROL SYSTEM PRESSURE SENSOR 1332
Description 1332
DTC Logic 1332
Diagnosis Procedure 1332
Component Inspection 1334

P0452 EVAP CONTROL SYSTEM PRESSURE SENSOR 1335
Description 1335
DTC Logic 1335
Diagnosis Procedure 1336
Component Inspection 1338

P0453 EVAP CONTROL SYSTEM PRESSURE SENSOR 1340
Description 1340
DTC Logic 1340
Diagnosis Procedure 1341
Component Inspection 1344

P0455 EVAP CONTROL SYSTEM 1346
DTC Logic 1346
Diagnosis Procedure 1348
Component Inspection 1350

P0456 EVAP CONTROL SYSTEM 1352
DTC Logic 1352
Component Function Check 1354
Diagnosis Procedure 1354
Component Inspection 1358

P0460 FUEL LEVEL SENSOR 1359
Description 1359
DTC Logic 1359
Diagnosis Procedure 1359

P0461 FUEL LEVEL SENSOR 1361
Description 1361
DTC Logic 1361
Component Function Check 1361
Diagnosis Procedure 1362

P0462, P0463 FUEL LEVEL SENSOR 1363
Description 1363
DTC Logic 1363
Diagnosis Procedure 1363

P0500 VSS 1365
Description 1365
DTC Logic 1365

Component Function Check 1366
Diagnosis Procedure 1366

P0506 ISC SYSTEM 1367
Description 1367
DTC Logic 1367
Diagnosis Procedure 1367

P0507 ISC SYSTEM 1369
Description 1369
DTC Logic 1369
Diagnosis Procedure 1369

P0550 PSP SENSOR 1371
Description 1371
DTC Logic 1371
Diagnosis Procedure 1371
Component Inspection 1372

P0603 ECM POWER SUPPLY 1374
Description 1374
DTC Logic 1374
Diagnosis Procedure 1374

P0605 ECM 1376
Description 1376
DTC Logic 1376
Diagnosis Procedure 1377

P0607 ECM 1378
Description 1378
DTC Logic 1378
Diagnosis Procedure 1378

P0643 SENSOR POWER SUPPLY 1379
DTC Logic 1379
Diagnosis Procedure 1379

P0850 PNP SWITCH 1382
Description 1382
DTC Logic 1382
Component Function Check 1383
Diagnosis Procedure 1383

P1148, P1168 CLOSED LOOP CONTROL ...1386
DTC Logic 1386

P1212 TCS COMMUNICATION LINE 1387
Description 1387
DTC Logic 1387
Diagnosis Procedure 1387

P1217 ENGINE OVER TEMPERATURE 1388
DTC Logic 1388
Component Function Check 1388
Diagnosis Procedure 1389

P1225 TP SENSOR 1392
Description 1392
DTC Logic 1392
Diagnosis Procedure 1392
Special Repair Requirement 1393

P1226 TP SENSOR 1394
Description 1394
DTC Logic 1394
Diagnosis Procedure 1394
Special Repair Requirement 1395

P1421 COLD START CONTROL 1396
Description 1396
DTC Logic 1396
Diagnosis Procedure 1396

P1550 BATTERY CURRENT SENSOR 1398
Description 1398
DTC Logic 1398
Diagnosis Procedure 1398
Component Inspection 1399

P1551, P1552 BATTERY CURRENT SENSOR 1401
Description 1401
DTC Logic 1401
Diagnosis Procedure 1401
Component Inspection 1402

P1553 BATTERY CURRENT SENSOR 1404
Description 1404
DTC Logic 1404
Diagnosis Procedure 1404
Component Inspection 1405

P1554 BATTERY CURRENT SENSOR 1407
Description 1407
DTC Logic 1407
Component Function Check 1407
Diagnosis Procedure 1408
Component Inspection 1409

P1564 ASCD STEERING SWITCH 1410
Description 1410
DTC Logic 1410
Diagnosis Procedure 1410
Component Inspection 1412

P1572 ASCD BRAKE SWITCH 1413
Description 1413
DTC Logic 1413
Diagnosis Procedure 1414
Component Inspection (ASCD Brake Switch) 1418
Component Inspection (ASCD Clutch Switch) 1419
Component Inspection (Stop Lamp Switch) 1420

P1574 ASCD VEHICLE SPEED SENSOR 1421
Description 1421
DTC Logic 1421
Diagnosis Procedure 1421

P1700 CVT CONTROL SYSTEM 1423
Description 1423

P1715 INPUT SPEED SENSOR (PRIMARY SPEED SENSOR) 1424

Description 1424
DTC Logic 1424
Diagnosis Procedure 1424

P1720 VSS 1426
Description 1426
DTC Logic 1426
Diagnosis Procedure 1426

P1800 VIAS CONTROL SOLENOID VALVE 1 1428
Description 1428
DTC Logic 1428
Diagnosis Procedure 1428
Component Inspection 1429

P1801 VIAS CONTROL SOLENOID VALVE 2 1431
Description 1431
DTC Logic 1431
Diagnosis Procedure 1431
Component Inspection 1432

P1805 BRAKE SWITCH 1434
Description 1434
DTC Logic 1434
Diagnosis Procedure 1434
Component Inspection (Stop Lamp Switch) 1435

P2100, P2103 THROTTLE CONTROL MOTOR RELAY 1437
Description 1437
DTC Logic 1437
Diagnosis Procedure 1437

P2101 ELECTRIC THROTTLE CONTROL FUNCTION 1439
Description 1439
DTC Logic 1439
Diagnosis Procedure 1439
Component Inspection 1441
Special Repair Requirement 1442

P2118 THROTTLE CONTROL MOTOR 1443
Description 1443
DTC Logic 1443
Diagnosis Procedure 1443
Component Inspection 1444
Special Repair Requirement 1445

P2119 ELECTRIC THROTTLE CONTROL ACTUATOR 1446
Description 1446
DTC Logic 1446
Diagnosis Procedure 1447
Special Repair Requirement 1447

P2122, P2123 APP SENSOR 1448
Description 1448
DTC Logic 1448
Diagnosis Procedure 1448
Component Inspection 1450
Special Repair Requirement 1450

P2127, P2128 APP SENSOR 1451
Description 1451
DTC Logic 1451
Diagnosis Procedure 1451
Component Inspection 1453
Special Repair Requirement 1454

P2135 TP SENSOR 1455
Description 1455
DTC Logic 1455
Diagnosis Procedure 1455
Component Inspection 1457
Special Repair Requirement 1457

P2138 APP SENSOR 1458
Description 1458
DTC Logic 1458
Diagnosis Procedure 1459
Component Inspection 1461
Special Repair Requirement 1461

P2A00, P2A03 A/F SENSOR 1 1463
Description 1463
DTC Logic 1463
Diagnosis Procedure 1464

ASCD BRAKE SWITCH 1467
Description 1467
Component Function Check 1467
Diagnosis Procedure 1467
Component Inspection (ASCD Brake Switch) 1470
Component Inspection (ASCD Clutch Switch) 1470

ASCD INDICATOR 1472
Description 1472
Component Function Check 1472
Diagnosis Procedure 1472

COOLING FAN 1473
Description 1473
Component Function Check 1473
Diagnosis Procedure 1473
Component Inspection (Cooling Fan Motor) 1476
Component Inspection (Cooling Fan Relay) 1477

ELECTRICAL LOAD SIGNAL 1478
Description 1478
Component Function Check 1478
Diagnosis Procedure 1478

ELECTRONIC CONTROLLED ENGINE MOUNT 1480
Description 1480
Component Function Check 1480
Diagnosis Procedure 1480
Component Inspection 1481

FUEL INJECTOR 1483
Description 1483
Component Function Check 1483
Diagnosis Procedure 1483

Component Inspection 1485

FUEL PUMP 1486
Description 1486
Component Function Check 1486
Diagnosis Procedure 1486
Component Inspection (Fuel Pump) 1489
Component Inspection (Condenser-1) 1489

IGNITION SIGNAL 1491
Description 1491
Component Function Check 1491
Diagnosis Procedure 1491
Component Inspection (Ignition Coil with Power Transistor) 1494
Component Inspection (Condenser) 1495

MALFUNCTION INDICATOR LAMP 1496
Description 1496
Component Function Check 1496
Diagnosis Procedure 1496

ON BOARD REFUELING VAPOR RECOVERY (ORVR) 1497
Description 1497
Component Function Check 1497
Diagnosis Procedure 1497
Component Inspection 1500

POSITIVE CRANKCASE VENTILATION 1502
Description 1502
Component Inspection 1502

REFRIGERANT PRESSURE SENSOR 1503
Description 1503
Component Function Check 1503
Diagnosis Procedure 1503

VARIABLE INDUCTION AIR SYSTEM 1506
Description 1506
Component Function Check 1506
Diagnosis Procedure 1507

ECU DIAGNOSIS 1510

ECM 1510
Reference Value 1510
Wiring Diagram—ENGINE CONTROL SYSTEM— 1525
Fail-safe 1551
DTC Inspection Priority Chart 1553
DTC Index 1555
How to Set SRT Code 1558
Test Value and Test Limit 1560

SYMPTOM DIAGNOSIS 1567

ENGINE CONTROL SYSTEM SYMPTOMS ..1567
Symptom Table 1567

NORMAL OPERATING CONDITION 1571
Description 1571

PRECAUTION 1572

PRECAUTIONS 1572
Precaution for Supplemental Restraint System (SRS) "AIR BAG" and "SEAT BELT PRE-TENSIONER" 1572
Precautions For Xenon Headlamp Service 1572
Precaution for Procedure without Cowl Top Cover1572
On Board Diagnostic (OBD) System of Engine and CVT 1573
General Precautions 1573

PREPARATION 1577

PREPARATION 1577
Special Service Tools 1577
Commercial Service Tools 1577

ON-VEHICLE MAINTENANCE 1579

FUEL PRESSURE 1579
Inspection 1579

EVAP LEAK CHECK 1581
Inspection 1581

ON-VEHICLE REPAIR 1583

EVAP CANISTER 1583
Exploded View 1583
Removal and Installation 1583
Inspection 1584

SERVICE DATA AND SPECIFICATIONS (SDS) 1585

SERVICE DATA AND SPECIFICATIONS (SDS) 1585
Idle Speed 1585
Ignition Timing 1585
Calculated Load Value 1585
Mass Air Flow Sensor 1585

BASIC INSPECTION

DIAGNOSIS AND REPAIR WORK FLOW

Work Flow

INFOID:0000000004349124

OVERALL SEQUENCE

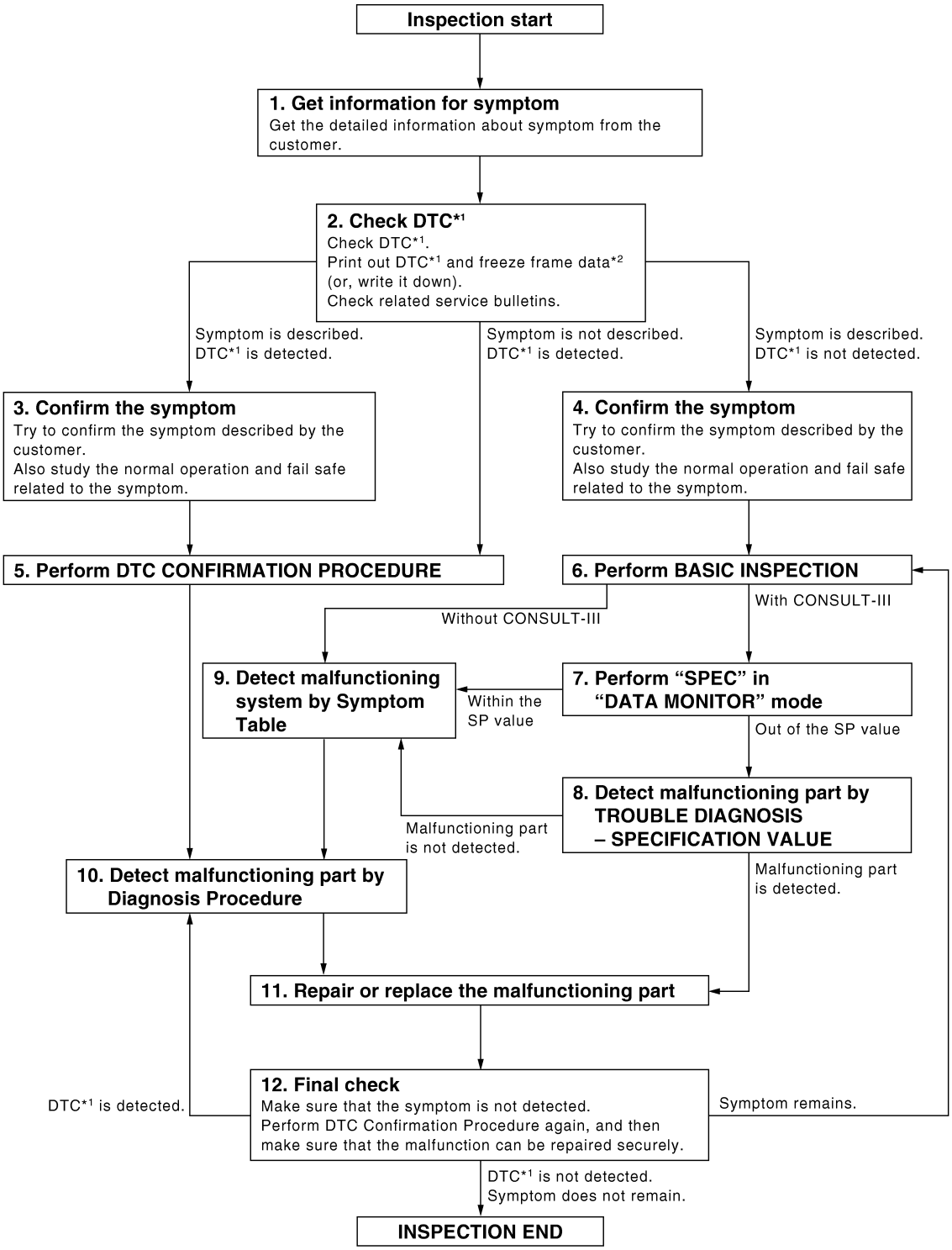

*1: Include 1st trip DTC.
*2: Include 1st trip freeze frame data.

JMBIA0078GB

DETAILED FLOW

1. GET INFORMATION FOR SYMPTOM

Get the detailed information from the customer about the symptom (the condition and the environment when the incident/malfunction occurred) using the “Diagnostic Work Sheet”. (Refer to EC-22, "Diagnostic Work Sheet".)

>> GO TO 2.

2. CHECK DTC

1. Check DTC.
2. Perform the following procedure if DTC is displayed.
- Record DTC and freeze frame data. (Print them out with CONSULT-III or GST.)
- Erase DTC. (Refer to EC-112, "Diagnosis Description".)
- Study the relationship between the cause detected by DTC and the symptom described by the customer. (Symptom Table is useful. Refer to EC-539, "Symptom Table".)
3. Check related service bulletins for information.

Is any symptom described and is any DTC detected?

Symptom is described, DTC is detected>>GO TO 3.
Symptom is described, DTC is not detected>>GO TO 4.
Symptom is not described, DTC is detected>>GO TO 5.

3. CONFIRM THE SYMPTOM

Try to confirm the symptom described by the customer (except MIL ON).
Also study the normal operation and fail safe related to the symptom. Refer to EC-543, "Description" and EC-523, "Fail Safe".
Diagnosis Work Sheet is useful to verify the incident.
Verify relation between the symptom and the condition when the symptom is detected.

>> GO TO 5.

4. CONFIRM THE SYMPTOM

Try to confirm the symptom described by the customer.
Also study the normal operation and fail safe related to the symptom. Refer to EC-543, "Description" and EC-523, "Fail Safe".
Diagnosis Work Sheet is useful to verify the incident.
Verify relation between the symptom and the condition when the symptom is detected.

>> GO TO 6.

5. PERFORM DTC CONFIRMATION PROCEDURE

Perform DTC CONFIRMATION PROCEDURE for the displayed DTC, and then make sure that DTC is detected again.
If two or more DTCs are detected, refer to EC-525, "DTC Inspection Priority Chart" and determine trouble diagnosis order.

NOTE:
- Freeze frame data is useful if the DTC is not detected.
- Perform Component Function Check if DTC CONFIRMATION PROCEDURE is not included on Service Manual. This simplified check procedure is an effective alternative though DTC cannot be detected during this check.
  If the result of Component Function Check is NG, it is the same as the detection of DTC by DTC CONFIRMATION PROCEDURE.

Is DTC detected?

YES >> GO TO 10.
NO >> Check according to EC-527, "DTC Index".

6. PERFORM BASIC INSPECTION

Perform EC-24, "BASIC INSPECTION : Special Repair Requirement".

Do you have CONSULT-III?

YES >> GO TO 7.
NO >> GO TO 9.

7. PERFORM SPEC IN DATA MONITOR MODE

With CONSULT-III

Make sure that “MAS A/F SE-B1”, “B/FUEL SCHDL” and “A/F ALPHA-B1” are within the SP value using CONSULT-III in “SPEC” of “DATA MONITOR” mode. Refer to EC-136, "Component Function Check".

Is the measurement value within the SP value?

YES >> GO TO 9.
NO >> GO TO 8.

8. DETECT MALFUNCTIONING PART BY TROUBLE DIAGNOSIS - SPECIFICATION VALUE

Detect malfunctioning part according to EC-137, "Diagnosis Procedure".

Is malfunctioning part detected?

YES >> GO TO 11.
NO >> GO TO 9.

9. DETECT MALFUNCTIONING SYSTEM BY SYMPTOM TABLE

Detect malfunctioning system according to EC-539, "Symptom Table" based on the confirmed symptom in step 4, and determine the trouble diagnosis order based on possible causes and symptom.

>> GO TO 10.

10. DETECT MALFUNCTIONING PART BY DIAGNOSIS PROCEDURE

Inspect according to Diagnosis Procedure of the system.

NOTE:

The Diagnosis Procedure in EC section described based on open circuit inspection. A short circuit inspection is also required for the circuit check in the Diagnosis Procedure. For details, refer to Circuit Inspection in GI-45, "Circuit Inspection".

Is malfunctioning part detected?

YES >> GO TO 11.
NO >> Monitor input data from related sensors or check the voltage of related ECM terminals using CONSULT-III. Refer to EC-485, "Reference Value".

11. REPAIR OR REPLACE THE MALFUNCTIONING PART

1. Repair or replace the malfunctioning part.
2. Reconnect parts or connectors disconnected during Diagnosis Procedure again after repair and replacement.
3. Check DTC. If DTC is displayed, erase it. Refer to EC-112, "Diagnosis Description".

>> GO TO 12.

12. FINAL CHECK

When DTC was detected in step 2, perform DTC CONFIRMATION PROCEDURE or Component Function Check again, and then make sure that the malfunction have been repaired securely.
When symptom was described from the customer, refer to confirmed symptom in step 3 or 4, and make sure that the symptom is not detected.

Is DTC detected and does symptom remain?

YES-1 >> DTC is detected: GO TO 10.
YES-2 >> Symptom remains: GO TO 6.
NO >> Before returning the vehicle to the customer, make sure to erase unnecessary DTC in ECM and TCM (Transmission Control Module). (Refer to EC-112, "Diagnosis Description".) If the completion of SRT is needed, drive vehicle under the specific DRIVING PATTERN in EC-530, "How to Set SRT Code".

Diagnostic Work Sheet

INFOID:0000000004349125

DESCRIPTION

There are many operating conditions that lead to the malfunction of engine components. A good grasp of such conditions can make troubleshooting faster and more accurate.
In general, each customer feels differently about an incident. It is important to fully understand the symptoms or conditions for a customer complaint.
Utilize a diagnostic worksheet like the one on the WORKSHEET SAMPLE in order to organize all the information for troubleshooting.
Some conditions may cause the MIL to come on steady or blink and DTC to be detected. Examples:
- Vehicle ran out of fuel, which caused the engine to misfire.
- Fuel filler cap was left off or incorrectly screwed on, allowing fuel to evaporate into the atmosphere.

KEY POINTS

WHAT ..... Vehicle & engine model
WHEN ..... Date, Frequencies
WHERE..... Road conditions
HOW ..... Operating conditions, Weather conditions, Symptoms

SEF907L

WORKSHEET SAMPLE

Customer name MR/MS		Model & Year	VIN
Engine #		Trans.	Mileage
Incident Date		Manuf. Date	In Service Date
Fuel and fuel filler cap		☐ Vehicle ran out of fuel causing misfire ☐ Fuel filler cap was left off or incorrectly screwed on.	
Symptoms	☐ Startability	☐ Impossible to start ☐ No combustion ☐ Partial combustion ☐ Partial combustion affected by throttle position ☐ Partial combustion NOT affected by throttle position ☐ Possible but hard to start ☐ Others [ ]	
	☐ Idling	☐ No fast idle ☐ Unstable ☐ High idle ☐ Low idle ☐ Others [ ]	
	☐ Driveability	☐ Stumble ☐ Surge ☐ Knock ☐ Lack of power ☐ Intake backfire ☐ Exhaust backfire ☐ Others [ ]	
	☐ Engine stall	☐ At the time of start ☐ While idling ☐ While accelerating ☐ While decelerating ☐ Just after stopping ☐ While loading	
Incident occurrence		☐ Just after delivery ☐ Recently ☐ In the morning ☐ At night ☐ In the daytime	
Frequency		☐ All the time ☐ Under certain conditions ☐ Sometimes	
Weather conditions		☐ Not affected	
	Weather	☐ Fine ☐ Raining ☐ Snowing ☐ Others [ ]	
	Temperature	☐ Hot ☐ Warm ☐ Cool ☐ Cold ☐ Humid ˚F	
Engine conditions		☐ Cold ☐ During warm-up ☐ After warm-up Engine speed 0 2,000 4,000 6,000 8,000 rpm	
Road conditions		☐ In town ☐ In suburbs ☐ Highway ☐ Off road (up/down)	
Driving conditions		☐ Not affected ☐ At starting ☐ While idling ☐ At racing ☐ While accelerating ☐ While cruising ☐ While decelerating ☐ While turning (RH/LH) Vehicle speed 0 10 20 30 40 50 60 MPH	
Malfunction indicator lamp		☐ Turned on ☐ Not turned on	

MTBL0017

INSPECTION AND ADJUSTMENT
BASIC INSPECTION

BASIC INSPECTION : Special Repair Requirement

INFOID:0000000004349126

1. INSPECTION START

1. Check service records for any recent repairs that may indicate a related malfunction, or a current need for scheduled maintenance.
2. Open engine hood and check the following:
- Harness connectors for improper connections
- Wiring harness for improper connections, pinches and cut
- Vacuum hoses for splits, kinks and improper connections
- Hoses and ducts for leaks
- Air cleaner clogging
- Gasket
3. Confirm that electrical or mechanical loads are not applied.
- Headlamp switch is OFF.
- Air conditioner switch is OFF.
- Rear window defogger switch is OFF.
- Steering wheel is in the straight-ahead position, etc.
4. Start engine and warm it up until engine coolant temperature indicator points the middle of gauge.
   Ensure engine stays below 1,000 rpm.

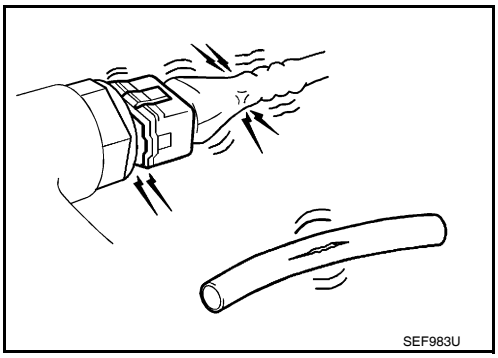
SEF983U

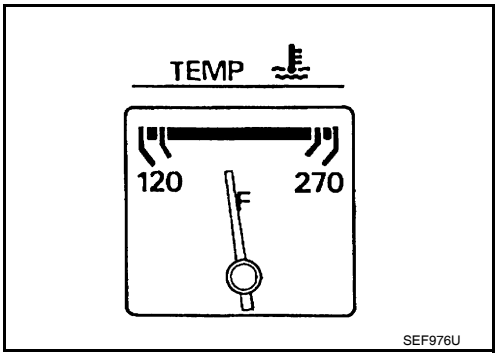

SEF976U

5. Run engine at about 2,000 rpm for about 2 minutes under no load.
6. Make sure that no DTC is displayed with CONSULT-III or GST.

Is any DTC detected?

YES >> GO TO 2.
NO >> GO TO 3.

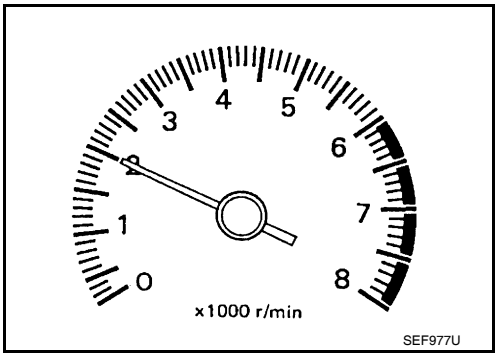

SEF977U

2. REPAIR OR REPLACE

Repair or replace components as necessary according to corresponding Diagnostic Procedure.

>> GO TO 3

3. CHECK TARGET IDLE SPEED

1. Run engine at about 2,000 rpm for about 2 minutes under no load.

2. Rev engine (2,000 to 3,000 rpm) two or three times under no load, then run engine at idle speed for about 1 minute.
3. Check idle speed.
   For procedure, refer to EC-28, "IDLE SPEED : Special Repair Requirement".
   For specification, refer to EC-555, "Idle Speed".

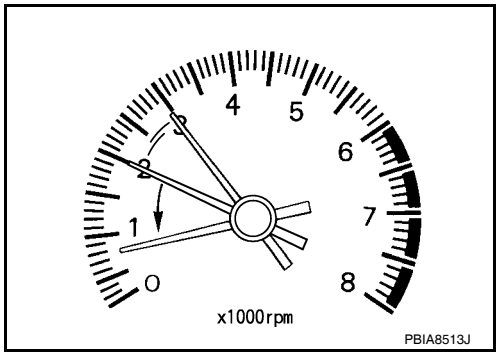

Is the inspection result normal?

YES >> GO TO 10.
NO >> GO TO 4.

4. PERFORM ACCELERATOR PEDAL RELEASED POSITION LEARNING

1. Stop engine.
2. Perform EC-29, "ACCELERATOR PEDAL RELEASED POSITION LEARNING : Special Repair Requirement".

>> GO TO 5.

5. PERFORM THROTTLE VALVE CLOSED POSITION LEARNING

Perform EC-29, "THROTTLE VALVE CLOSED POSITION LEARNING : Special Repair Requirement".

>> GO TO 6.

6. PERFORM IDLE AIR VOLUME LEARNING

Perform EC-30, "IDLE AIR VOLUME LEARNING : Special Repair Requirement".

Is Idle Air Volume Learning carried out successfully?

YES >> GO TO 7.
NO >> Follow the instruction of Idle Air Volume Learning. Then GO TO 4.

7. CHECK TARGET IDLE SPEED AGAIN

1. Start engine and warm it up to normal operating temperature.
2. Check idle speed.
   For procedure, refer to EC-28, "IDLE SPEED : Special Repair Requirement".
   For specification, refer to EC-555, "Idle Speed".

Is the inspection result normal?

YES >> GO TO 10.
NO >> GO TO 8.

8. DETECT MALFUNCTIONING PART

Check the Following.
- Check camshaft position sensor (PHASE) and circuit. Refer to EC-282, "DTC Logic".
- Check crankshaft position sensor (POS) and circuit. Refer to EC-278, "DTC Logic".

Is the inspection result normal?

YES >> GO TO 9.
NO >> Repair or replace. Then GO TO 4.

9. CHECK ECM FUNCTION

1. Substitute another known-good ECM to check ECM function. (ECM may be the cause of an incident, but this is a rare case.)
2. Perform initialization of NVIS (NATS) system and registration of all NVIS (NATS) ignition key IDs. Refer to EC-27, "ADDITIONAL SERVICE WHEN REPLACING CONTROL UNIT : Special Repair Requirement".

>> GO TO 4.

10. CHECK IGNITION TIMING

1. Run engine at idle.

2. Check ignition timing with a timing light.
   For procedure, refer to EC-28, "IGNITION TIMING : Special Repair Requirement".
   For specification, refer to EC-555, "Ignition Timing".

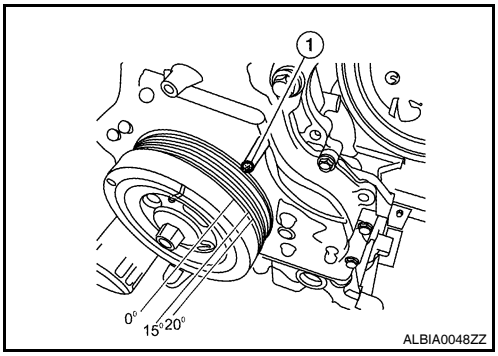

1 : Timing indicator

Is the inspection result normal?

YES >> GO TO 19.
NO >> GO TO 11.

11. PERFORM ACCELERATOR PEDAL RELEASED POSITION LEARNING

1. Stop engine.
2. Perform EC-29, "ACCELERATOR PEDAL RELEASED POSITION LEARNING : Special Repair Requirement".

>> GO TO 12.

12. PERFORM THROTTLE VALVE CLOSED POSITION LEARNING

Perform EC-29, "THROTTLE VALVE CLOSED POSITION LEARNING : Special Repair Requirement".

>> GO TO 13.

13. PERFORM IDLE AIR VOLUME LEARNING

Perform EC-30, "IDLE AIR VOLUME LEARNING : Special Repair Requirement".

Is Idle Air Volume Learning carried out successfully?

YES >> GO TO 14.
NO >> Follow the instruction of Idle Air Volume Learning. Then GO TO 4.

14. CHECK TARGET IDLE SPEED AGAIN

1. Start engine and warm it up to normal operating temperature.
2. Check idle speed.
   For procedure, refer to EC-28, "IDLE SPEED : Special Repair Requirement".
   For specification, refer to EC-555, "Idle Speed".

Is the inspection result normal?

YES >> GO TO 15.
NO >> GO TO 17.

15. CHECK IGNITION TIMING AGAIN

1. Run engine at idle.
2. Check ignition timing with a timing light.
   For procedure, refer to EC-28, "IGNITION TIMING : Special Repair Requirement".
   For specification, refer to EC-555, "Ignition Timing".

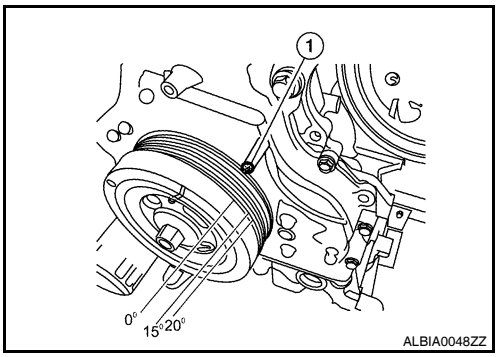

1 : Timing indicator

Is the inspection result normal?

YES >> GO TO 19.
NO >> GO TO 16.

16. CHECK TIMING CHAIN INSTALLATION

Check timing chain installation. Refer to EM-52, "Removal and Installation".

Is the inspection result normal?

YES >> GO TO 17.
NO >> Repair the timing chain installation. Then GO TO 4.

17. DETECT MALFUNCTIONING PART

Check the following.
- Check camshaft position sensor (PHASE) and circuit. Refer to EC-282, "DTC Logic".
- Check crankshaft position sensor (POS) and circuit. Refer to EC-278, "DTC Logic".

Is the inspection result normal?

YES >> GO TO 18.
NO >> Repair or replace. Then GO TO 4.

18. CHECK ECM FUNCTION

1. Substitute another known-good ECM to check ECM function. (ECM may be the cause of an incident, but this is a rare case.)
2. Perform initialization of NVIS (NATS) system and registration of all NVIS (NATS) ignition key IDs. Refer to EC-27, "ADDITIONAL SERVICE WHEN REPLACING CONTROL UNIT : Special Repair Requirement".

>> GO TO 4.

19. INSPECTION END

If ECM is replaced during this BASIC INSPECTION procedure, go to EC-27, "ADDITIONAL SERVICE WHEN REPLACING CONTROL UNIT : Special Repair Requirement".

>> INSPECTION END

ADDITIONAL SERVICE WHEN REPLACING CONTROL UNIT

ADDITIONAL SERVICE WHEN REPLACING CONTROL UNIT : Description

INFOID:0000000004349127

When replacing ECM, this procedure must be performed.

ADDITIONAL SERVICE WHEN REPLACING CONTROL UNIT : Special Repair Requirement

INFOID:0000000004349128

1. PERFORM INITIALIZATION OF NATS SYSTEM AND REGISTRATION OF ALL NATS IGNITION KEY IDS

Refer to SEC-15, "ECM RE-COMMUNICATING FUNCTION : Special Repair Requirement" (Coupe) or SEC-214, "ECM RE-COMMUNICATING FUNCTION : Special Repair Requirement" (Sedan).

>> GO TO 2.

2. PERFORM VIN REGISTRATION

Refer to EC-29, "VIN REGISTRATION : Special Repair Requirement".

>> GO TO 3.

3. PERFORM ACCELERATOR PEDAL RELEASED POSITION LEARNING

Refer to EC-29, "ACCELERATOR PEDAL RELEASED POSITION LEARNING : Special Repair Requirement".

>> GO TO 4.

4. PERFORM THROTTLE VALVE CLOSED POSITION LEARNING

Refer to EC-29, "THROTTLE VALVE CLOSED POSITION LEARNING : Special Repair Requirement".

>> GO TO 5.

5. PERFORM IDLE AIR VOLUME LEARNING

Refer to EC-30, "IDLE AIR VOLUME LEARNING : Special Repair Requirement".

>> END

IDLE SPEED

IDLE SPEED : Description

INFOID:0000000004349129

This describes how to check the idle speed. For the actual procedure, follow the instructions in “BASIC INSPECTION”.

IDLE SPEED : Special Repair Requirement

INFOID:0000000004349130

1.CHECK IDLE SPEED

With CONSULT-III
Check idle speed in “DATA MONITOR” mode with CONSULT-III.
With GST
Check idle speed with Service $01 of GST.

>> INSPECTION END

IGNITION TIMING

IGNITION TIMING : Description

INFOID:0000000004349131

This describes how to check the ignition timing. For the actual procedure, follow the instructions in “BASIC INSPECTION”.

IGNITION TIMING : Special Repair Requirement

INFOID:0000000004349132

1.CHECK IGNITION TIMING

1. Attach timing light to No. 1 igniton coil (1) wire as shown.

2 : Timing light
⇦ : Vehicle front

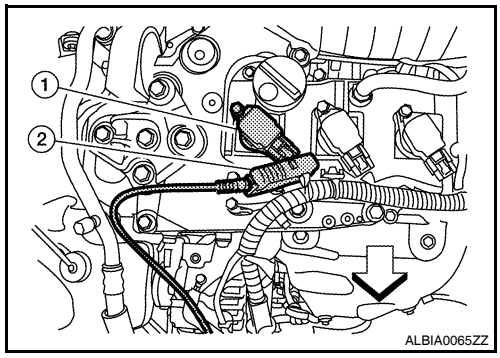

2. Check ignition timing.

1 : Timing indicator

>> INSPECTION END

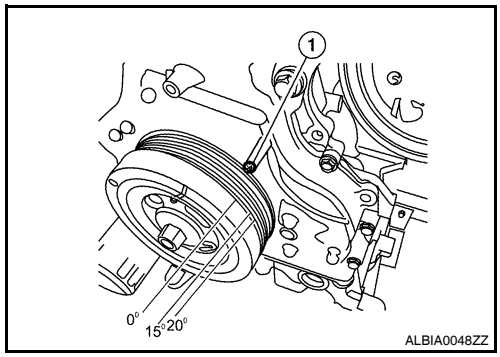

VIN REGISTRATION

VIN REGISTRATION : Description

INFOID:0000000004349133

VIN Registration is an operation to registering VIN in ECM. It must be performed each time ECM is replaced.
NOTE:
Accurate VIN which is registered in ECM may be required for Inspection & Maintenance (I/M).

VIN REGISTRATION : Special Repair Requirement

INFOID:0000000004349134

1. CHECK VIN

Check the VIN of the vehicle and note it. Refer toGI-23, "Identification Number - Coupe" or GI-22, "Identification Number - Sedan".

>> GO TO 2.

2. PERFORM VIN REGISTRATION

With CONSULT-III

1. Turn ignition switch ON and engine stopped.
2. Select “VIN REGISTRATION” in “WORK SUPPORT” mode.
3. Follow the instruction of CONSULT-III display.

>> END

ACCELERATOR PEDAL RELEASED POSITION LEARNING

ACCELERATOR PEDAL RELEASED POSITION LEARNING : Description

INFOID:0000000004349135

Accelerator Pedal Released Position Learning is a function of ECM to learn the fully released position of the accelerator pedal by monitoring the accelerator pedal position sensor output signal. It must be performed each time harness connector of accelerator pedal position sensor or ECM is disconnected.

ACCELERATOR PEDAL RELEASED POSITION LEARNING : Special Repair Requirement

INFOID:0000000004349136

1. START

1. Make sure that accelerator pedal is fully released.
2. Turn ignition switch ON and wait at least 2 seconds.
3. Turn ignition switch OFF and wait at least 10 seconds.
4. Turn ignition switch ON and wait at least 2 seconds.
5. Turn ignition switch OFF and wait at least 10 seconds.

>> END

THROTTLE VALVE CLOSED POSITION LEARNING

THROTTLE VALVE CLOSED POSITION LEARNING : Description

INFOID:0000000004349137

Throttle Valve Closed Position Learning is a function of ECM to learn the fully closed position of the throttle valve by monitoring the throttle position sensor output signal. It must be performed each time harness connector of electric throttle control actuator or ECM is disconnected.

THROTTLE VALVE CLOSED POSITION LEARNING : Special Repair Requirement

INFOID:0000000004349138

1. START

1. Make sure that accelerator pedal is fully released.
2. Turn ignition switch ON.
3. Turn ignition switch OFF and wait at least 10 seconds.
   Make sure that throttle valve moves during above 10 seconds by confirming the operating sound.

>> END

IDLE AIR VOLUME LEARNING

IDLE AIR VOLUME LEARNING : Description

INFOID:0000000004349139

Idle Air Volume Learning is a function of ECM to learn the idle air volume that keeps each engine idle speed within the specific range. It must be performed under any of the following conditions:
- Each time electric throttle control actuator or ECM is replaced.
- Idle speed or ignition timing is out of specification.

IDLE AIR VOLUME LEARNING : Special Repair Requirement

INFOID:0000000004349140

1.PRECONDITIONING

Make sure that all of the following conditions are satisfied.
Learning will be cancelled if any of the following conditions are missed for even a moment.
- Battery voltage: More than 12.9V (At idle)
- Engine coolant temperature: 70 - 100°C (158 - 212°F)
- Selector lever: P or N (CVT), Neutral (M/T)
- Electric load switch: OFF
  (Air conditioner, headlamp, rear window defogger)
  On vehicles equipped with daytime light systems, if the parking brake is applied before the engine is started the headlamp will not be illuminated.
- Steering wheel: Neutral (Straight-ahead position)
- Vehicle speed: Stopped
- Transmission: Warmed-up
- CVT models
- With CONSULT-III: Drive vehicle until “ATF TEMP SEN” in “DATA MONITOR” mode of “CVT” system indicates less than 0.9V.
- Without CONSULT-III: Drive vehicle for 10 minutes.
- M/T models
- Drive vehicle for 10 minutes.

Do you have CONSULT-III?

YES >> GO TO 2.
NO >> GO TO 3.

2.IDLE AIR VOLUME LEARNING

With CONSULT-III

1. Perform Accelerator Pedal Released Position Learning. Refer to EC-29, "ACCELERATOR PEDAL RELEASED POSITION LEARNING : Special Repair Requirement".
2. Perform Throttle Valve Closed Position Learning. Refer to EC-29, "THROTTLE VALVE CLOSED POSITION LEARNING : Special Repair Requirement".
3. Start engine and warm it up to normal operating temperature.
4. Select “IDLE AIR VOL LEARN” in “WORK SUPPORT” mode.
5. Touch “START” and wait 20 seconds.

Is “CMPLT” displayed on CONSULT-III screen?

YES >> GO TO 4.
NO >> GO TO 5.

3.IDLE AIR VOLUME LEARNING

Without CONSULT-III

NOTE:
- **It is better to count the time accurately with a clock.**
- **It is impossible to switch the diagnostic mode when an accelerator pedal position sensor circuit has a malfunction.**

1. Perform Accelerator Pedal Released Position Learning. Refer to EC-29, "ACCELERATOR PEDAL RELEASED POSITION LEARNING : Special Repair Requirement".
2. Perform Throttle Valve Closed Position Learning. Refer to EC-29, "THROTTLE VALVE CLOSED POSITION LEARNING : Special Repair Requirement".
3. Start engine and warm it up to normal operating temperature.
4. Turn ignition switch OFF and wait at least 10 seconds.
5. Confirm that accelerator pedal is fully released, turn ignition switch ON and wait 3 seconds.
6. Repeat the following procedure quickly five times within 5 seconds.

- Fully depress the accelerator pedal.
- Fully release the accelerator pedal.

7. Wait 7 seconds, fully depress the accelerator pedal and keep it for approx. 20 seconds until the MIL stops blinking and turned ON.
8. Fully release the accelerator pedal within 3 seconds after the MIL turned ON.
9. Start engine and let it idle.
10. Wait 20 seconds.

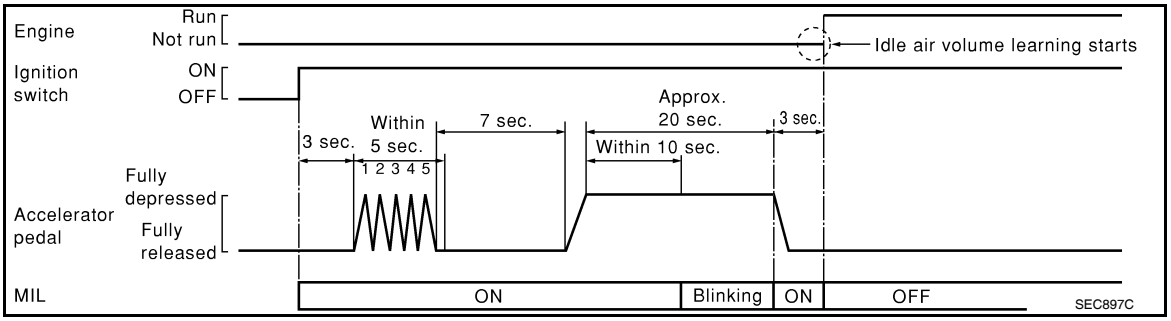

>> GO TO 4.

4. CHECK IDLE SPEED AND IGNITION TIMING

Rev up the engine two or three times and make sure that idle speed and ignition timing are within the specifications.

ITEM	SPECIFICATION
Idle speed	CVT: 650 ± 50 rpm (in P or N position) M/T: 650 ± 50 rpm (in Neutral position)
Ignition timing	CVT: 15 ± 5° (in P or N position) M/T: 15 ± 5° (in Neutral position)

Is the inspection result normal?

YES >> INSPECTION END

5. DETECT MALFUNCTIONING PART

Check the following
- Check that throttle valve is fully closed.
- Check PCV valve operation.
- Check that downstream of throttle valve is free from air leakage.

Is the inspection result normal?

YES >> GO TO 6.
NO >> Repair or replace malfunctioning part.

6. DETECT MALFUNCTIONING PART

Engine component parts and their installation condition are questionable. Check and eliminate the cause of the incident.
It is useful to perform “TROUBLE DIAGNOSIS - SPECIFICATION VALUE”. Refer to EC-136, "Description".
If any of the following conditions occur after the engine has started, eliminate the cause of the incident and perform Idle Air Volume Learning all over again:
- Engine stalls.
- Erroneous idle.

>> INSPECTION END

MIXTURE RATIO SELF-LEARNING VALUE CLEAR

MIXTURE RATIO SELF-LEARNING VALUE CLEAR : Description

INFOID:0000000004349141

This describes how to erase the mixture ratio self-learning value. For the actual procedure, follow the instructions in “Diagnosis Procedure”.

MIXTURE RATIO SELF-LEARNING VALUE CLEAR : Special Repair Requirement

INFOID:0000000004349142

1.START

With CONSULT-III

1. Start engine and warm it up to normal operating temperature.
2. Select “SELF-LEARNING CONT” in “WORK SUPPORT” mode with CONSULT-III.
3. Clear mixture ratio self-learning value by touching “CLEAR”.

With GST

1. Start engine and warm it up to normal operating temperature.
2. Turn ignition switch OFF.
3. Disconnect mass air flow sensor harness connector.
4. Restart engine and let it idle for at least 5 seconds.
5. Stop engine and reconnect mass air flow sensor harness connector.
6. Select Service $03 with GST. Make sure DTC P0102 is detected.
7. Select Service $04 with GST to erase the DTC P0102.

>> END

FUNCTION DIAGNOSIS

ENGINE CONTROL SYSTEM

System Diagram

INFOID:0000000004349143

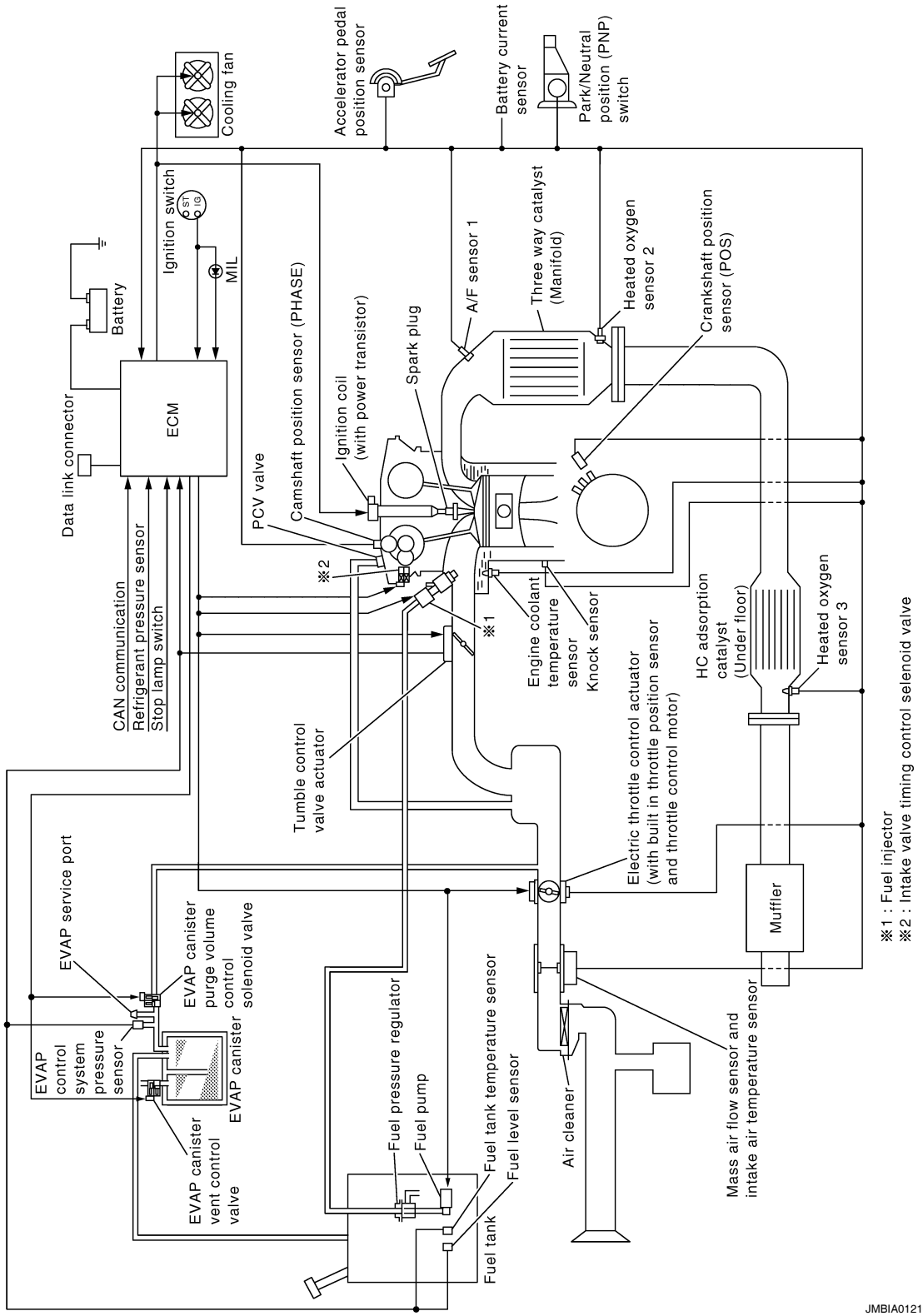

System Description

INFOID:0000000004349144

ECM performs various controls such as fuel injection control and ignition timing control.

Component Parts Location

INFOID:0000000004349145

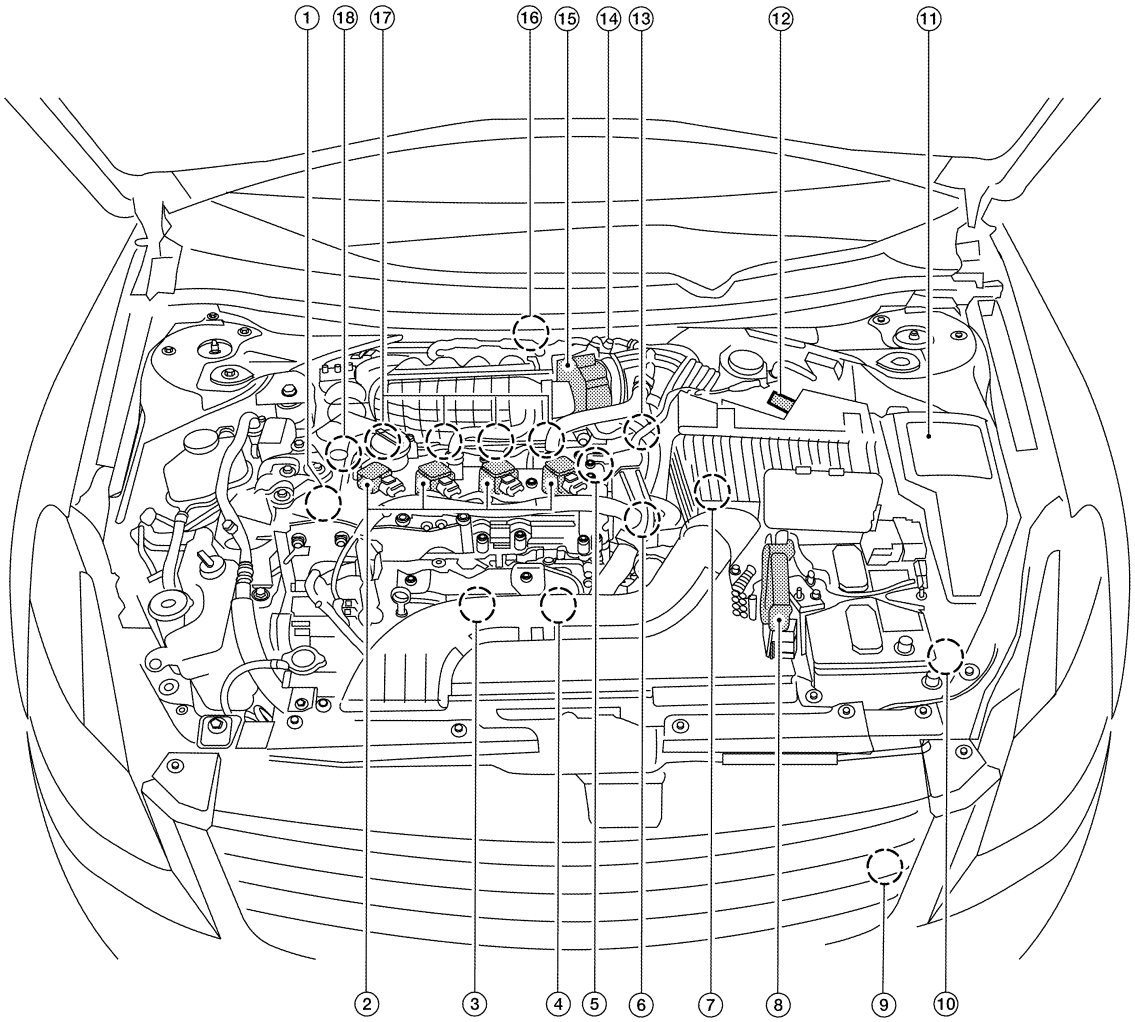

ALBIA0046ZZ

1. Intake valve timing control solenoid valve
2. Ignition coil (with power transistor) and spark plug
3. Knock sensor, Crankshaft position sensor (POS)
4. Air fuel ratio (A/F) sensor 1
5. Camshaft position sensor (PHASE)
6. Engine coolant temperature sensor
7. Park/neutral position (PNP) switch
8. ECM
9. Refrigerant pressure sensor
10. Battery current sensor
11. IPDM E/R
12. Mass air flow sensor (with intake temperature sensor)
13. Tumble control valve actuator
14. EVAP service port
15. Electric throttle control actuator (with built in throttle position sensor and throttle control motor)
16. EVAP canister purge volume control solenoid valve
17. Fuel injector
18. Power steering pressure sensor

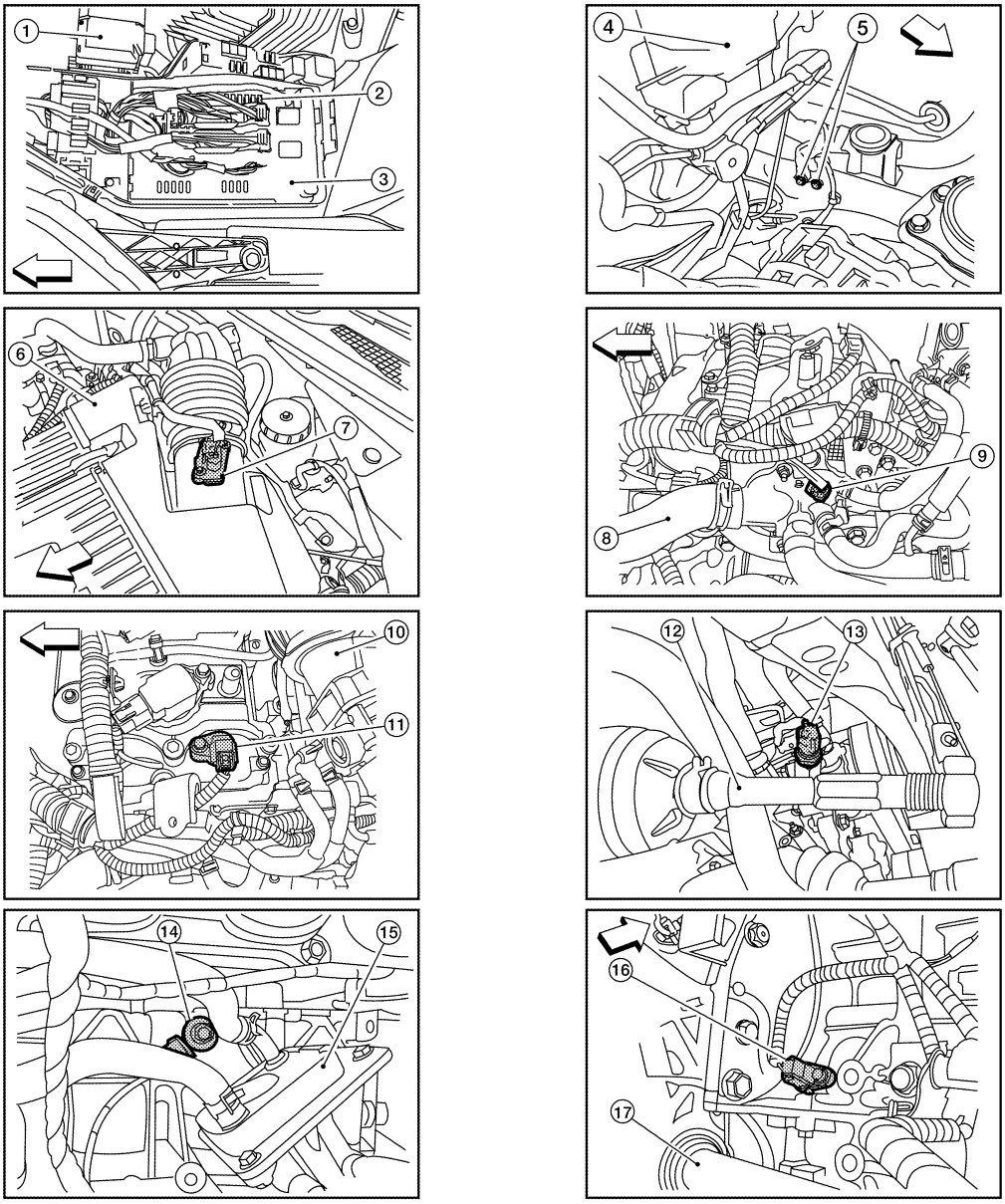

ALBIA0091ZZ

1. Battery	2. Fuel pump fuse (15A)	3. IPDM E/R
4. Brake master cylinder	5. Engine ground	6. Air cleaner assembly
7. Mass air flow sensor (with intake air temperature sensor)	8. Radiator hose (upper)	9. Engine coolant temperature sensor
10. Intake air duct	11. Camshaft position sensor (PHASE)	12. Tie rod (RH)
13. Power steering pressure sensor	14. Knock sensor	15. Engine oil cooler
16. Crankshaft position sensor (POS)	17. Drive shaft (RH)	

⇦: Vehicle front

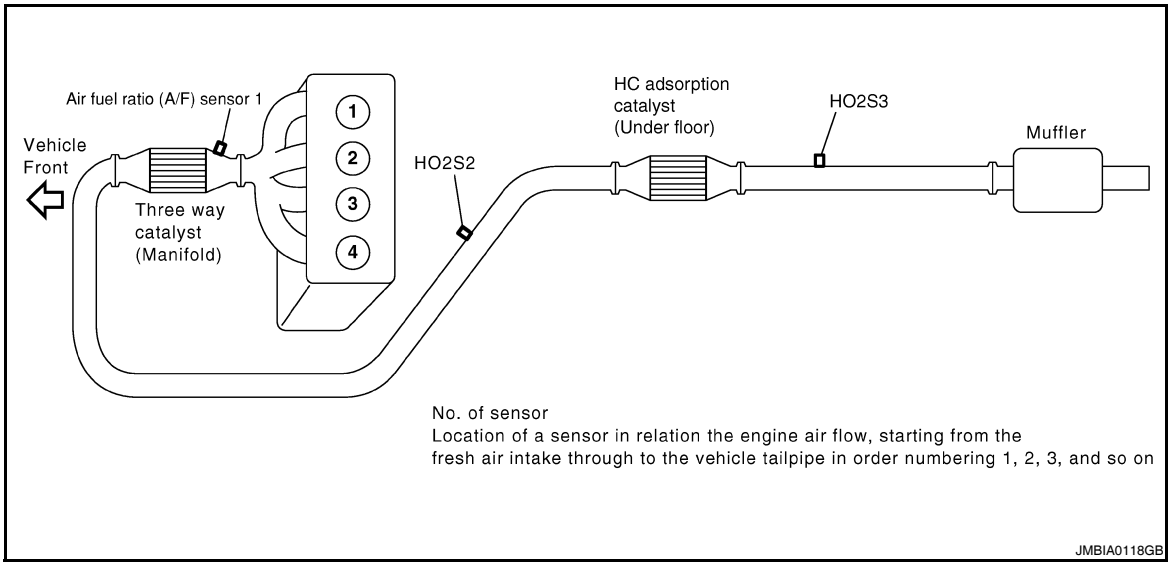

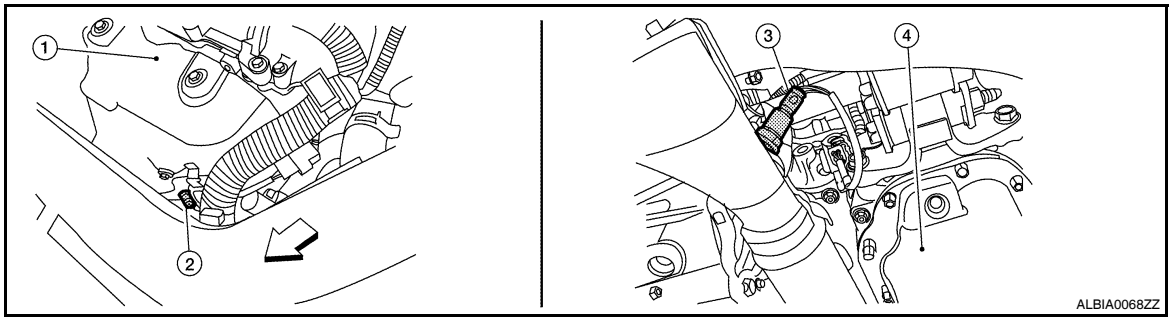

1. Exhaust manifold cover
2. Air fuel ratio (A/F) sensor 1
3. Heated oxygen sensor 2 (This illustration is a view from under vehicle.)
4. Engine oil pan

⇦: Vehicle front

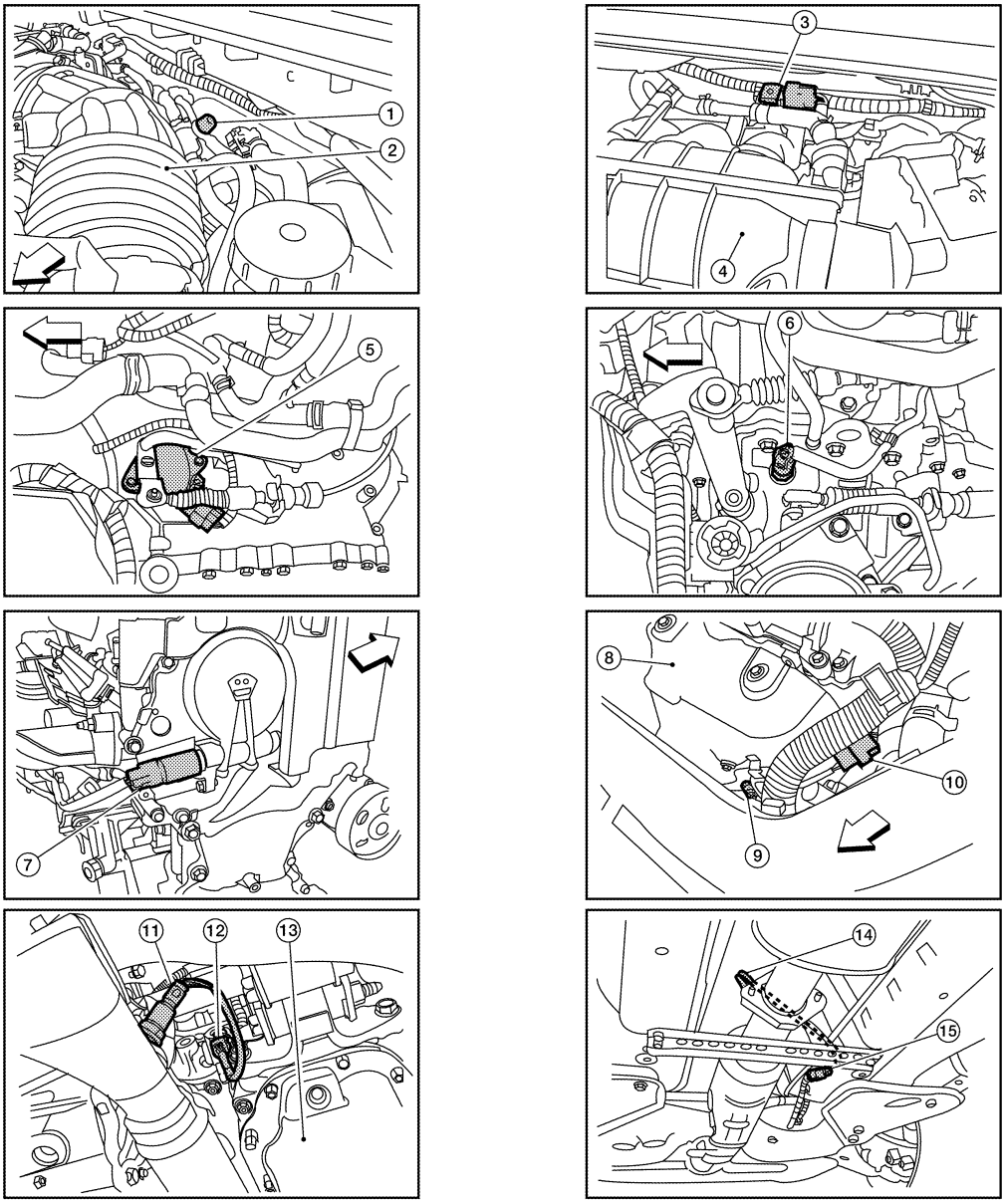

ALBIA0092ZZ

1. EVAP service port	2. Intake air duct	3. EVAP canister purge volume control solenoid valve
4. Intake manifold collector	5. Park/neutral position (PNP) switch (CVT) (This illustration is view with air cleaner assembly removed.)	6. Park/neutral position (PNP) switch (M/T) (This illustration is view with air cleaner assembly removed.)
7. Intake valve timing control solenoid valve (This illustration is view with engine removed.)	8. Exhaust manifold cover	9. Air fuel ratio (A/F) sensor 1
10. Air fuel ratio (A/F) sensor 1 harness connector	11. Heated oxygen sensor 2 (This illustration is view from under vehicle.)	12. Heated oxygen sensor 2 harness connector (This illustration is view from under vehicle.)
13. Engine oil pan	14. Heated oxygen sensor 3 (This illustration is view form under vehicle.)	15. Heated oxygen sensor 3 harness connector (This illustration is view from under vehicle.)

⇦: Vehicle front

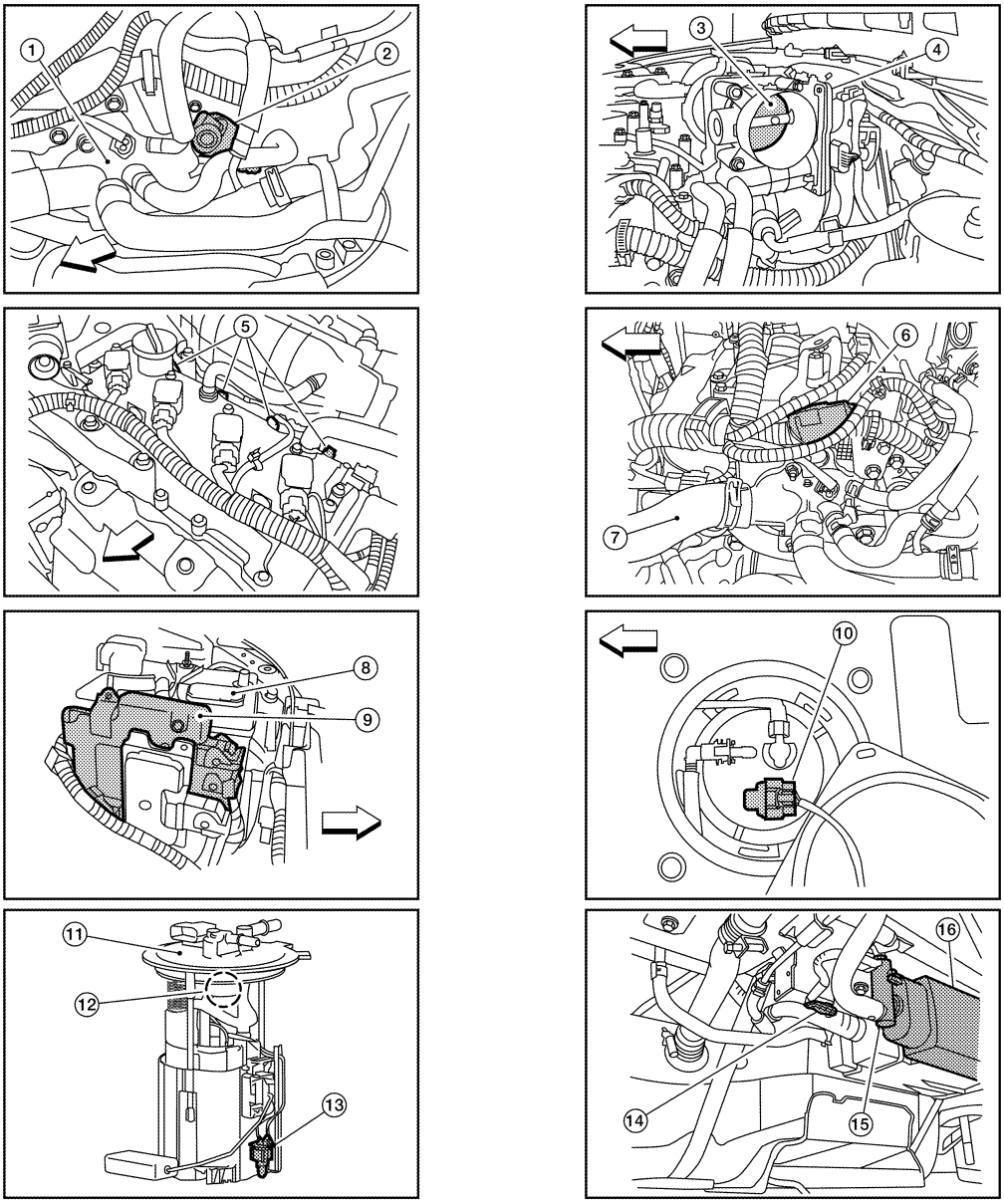

ALBIA0093ZZ

1. Thermostat housing
2. Tumble control valve actuator
3. Throttle valve (This illustration is view with intake air duct removed.)
4. Electric throttle control actuator
5. Fuel injector harness connector
6. Condenser-2
7. Radiator hose (upper)
8. Battery
9. ECM
10. Fuel level sensor unit and fuel pump harness connector (This illustration is view with rear seat cushion and inspection hole cover removed.)
11. Fuel level sensor unit and fuel pump assembly
12. Fuel pressure regulator
13. Fuel tank temperature sensor
14. EVAP control system pressure sensor (This illustration is view with rear suspension member removed.)
15. EVAP canister vent control valve (This illustration is view with rear suspension member removed.)
16. EVAP canister (This illustration is view with rear suspension member removed.)

⇦ : Vehicle front

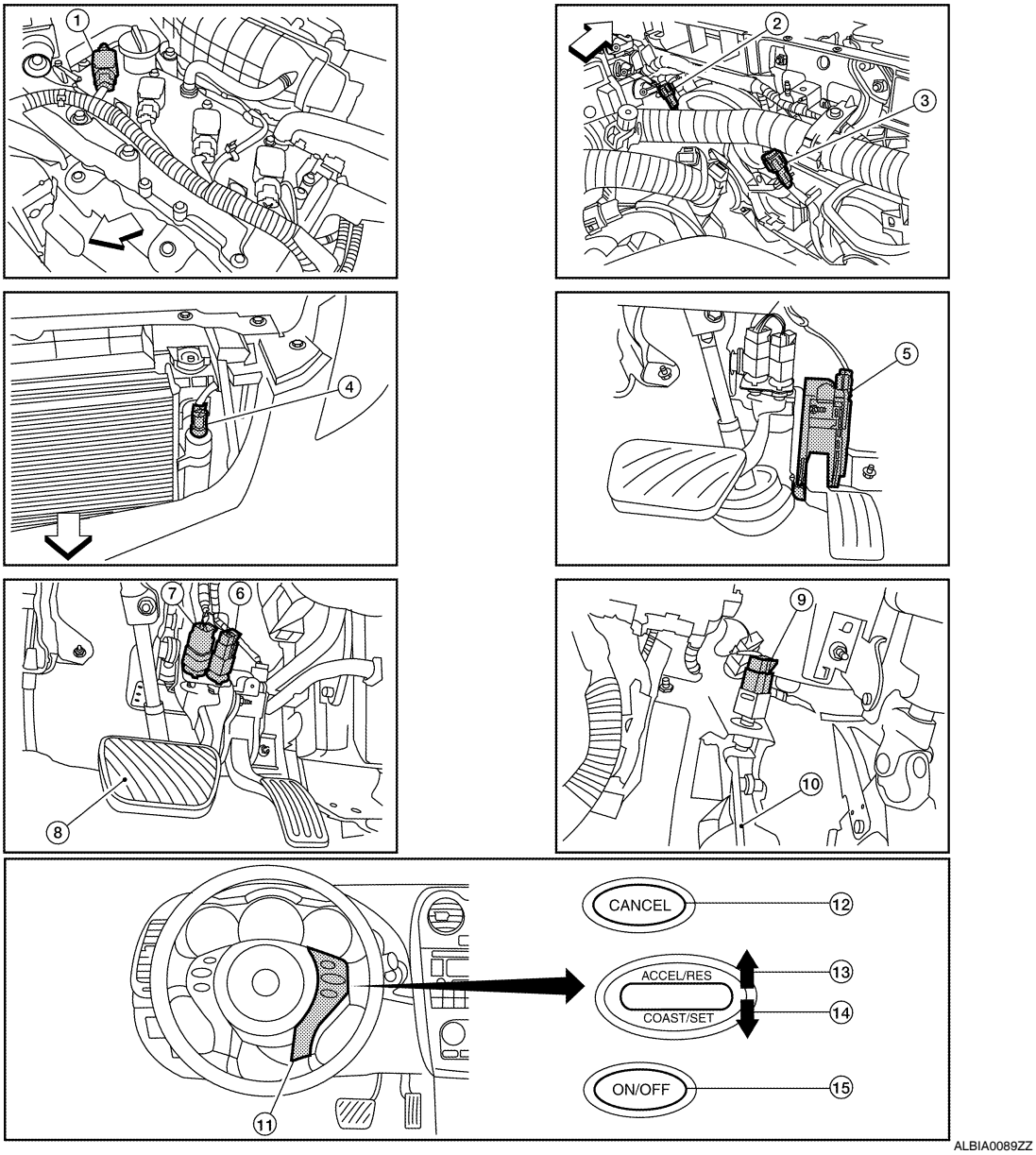

ALBIA0089ZZ

1. No.1 ignition coil
2. Cooling fan motor-1 harness connector
3. Cooling fan motor-2 harness connector
4. Refrigerant pressure sensor
5. Accelerator pedal position sensor
6. ASCD brake switch
7. Stop lamp switch
8. Brake pedal
9. ASCD clutch switch
10. Clutch pedal
11. ASCD steering switch
12. CANSEC switch
13. RESUME/ACCELERATE switch
14. SET/COAST switch
15. MAIN switch

⇦: Vehicle front

Component Description

INFOID:0000000004349146

Component	Reference
A/F sensor 1	EC-199, "Description"
A/F sensor 1 heater	EC-155, "Description"
Accelerator pedal position sensor	EC-427, "Description"
ASCD brake switch	EC-394, "Description"

Component	Reference
ASCD steering switch	EC-391, "Description"
Battery current sensor	EC-379, "Description"
Camshaft position sensor (PHASE)	EC-282, "Description"
Crankshaft position sensor (POS)	EC-278, "Description"
Cooling fan motor	EC-77, "System Description"
Electric throttle control actuator	EC-425, "Description"
Engine coolant temperature sensor	EC-184, "Description"
EVAP canister purge volume control solenoid valve	EC-301, "Description"
EVAP canister vent control valve	EC-308, "Description"
EVAP control system pressure sensor	EC-316, "Description"
Fuel injector	EC-463, "Description"
Fuel level sensor	EC-343, "Description"
Fuel pump	EC-466, "Description"
Fuel tank temperature sensor	EC-262, "Description"
Heated oxygen sensor 2	EC-214, "Description"
Heated oxygen sensor 2 heater	EC-158, "Description"
Heated oxygen sensor 3	EC-234, "Description"
Heated oxygen sensor 3 heater	EC-161, "Description"
Ignition signal	EC-470, "Description"
Intake air temperature sensor	EC-181, "Description"
Intake valve timing control solenoid valve	EC-97, "System Description"
Knock sensor	EC-276, "Description"
Mass air flow sensor	EC-168, "Description"
Park/neutral position switch	EC-365, "Description"
PCV valve	EC-481, "Description"
Power steering pressure sensor	EC-354, "Description"
Refrigerant pressure sensor	EC-482, "Description"
Stop lamp switch	EC-406, "Description"
Throttle control motor	EC-423, "Description"
Throttle control motor relay	EC-417, "Description"
Throttle position sensor	EC-189, "Description"
Tumble control valve	EC-409, "Description"
Tumble control valve position sensor	EC-414, "Description"

MULTIPORT FUEL INJECTION SYSTEM

System Diagram

INFOID:0000000004349147

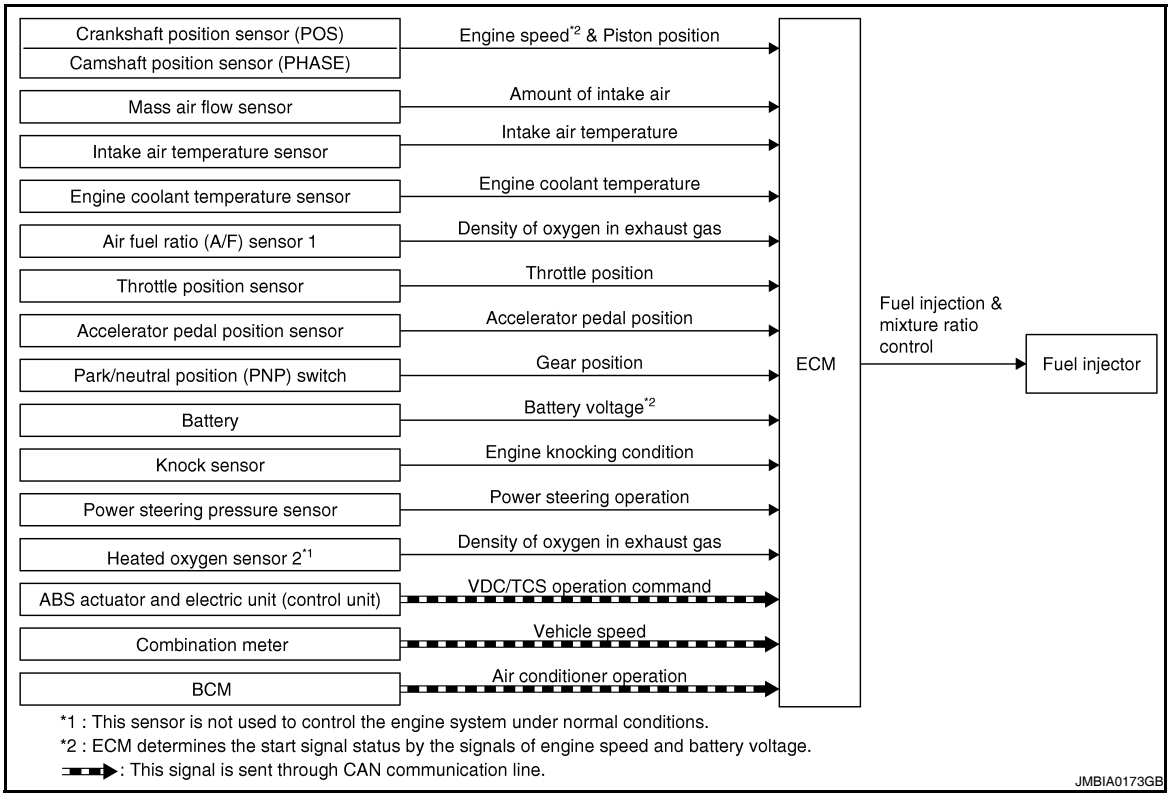

System Description

INFOID:0000000004349148

INPUT/OUTPUT SIGNAL CHART

Sensor	Input Signal to ECM	ECM function	Actuator
Crankshaft position sensor (POS)	Engine speed*3 Piston position	Fuel injection & mixture ratio control	Fuel injector
Camshaft position sensor (PHASE)			
Mass air flow sensor	Amount of intake air		
Intake air temperature sensor	Intake air temperature		
Engine coolant temperature sensor	Engine coolant temperature		
Air fuel ratio (A/F) sensor 1	Density of oxygen in exhaust gas		
Throttle position sensor	Throttle position		
Accelerator pedal position sensor	Accelerator pedal position		
Park/neutral position (PNP) switch	Gear position		
Battery	Battery voltage*3		
Knock sensor	Engine knocking condition		
Power steering pressure sensor	Power steering operation		
Heated oxygen sensor 2*1	Density of oxygen in exhaust gas		
ABS actuator and electric unit (control unit)	ABS operation command*2		
BCM	Air conditioner operation*2		
Combination meter	Vehicle speed*2		

*1: This sensor is not used to control the engine system under normal conditions.

*2: This signal is sent to the ECM through CAN communication line.

*3: ECM determines the start signal status by the signals of engine speed and battery voltage.

SYSTEM DESCRIPTION

The amount of fuel injected from the fuel injector is determined by the ECM. The ECM controls the length of time the valve remains open (injection pulse duration). The amount of fuel injected is a program value in the ECM memory. The program value is preset by engine operating conditions. These conditions are determined by input signals (for engine speed and intake air) from the crankshaft position sensor (POS), camshaft position sensor (PHASE) and the mass air flow sensor.

VARIOUS FUEL INJECTION INCREASE/DECREASE COMPENSATION

In addition, the amount of fuel injected is compensated to improve engine performance under various operating conditions as listed below.

<Fuel increase>
- During warm-up
- When starting the engine
- During acceleration
- Hot-engine operation
- When selector lever is changed from N to D (CVT models)
- High-load, high-speed operation

<Fuel decrease>
- During deceleration
- During high engine speed operation

MIXTURE RATIO FEEDBACK CONTROL (CLOSED LOOP CONTROL)

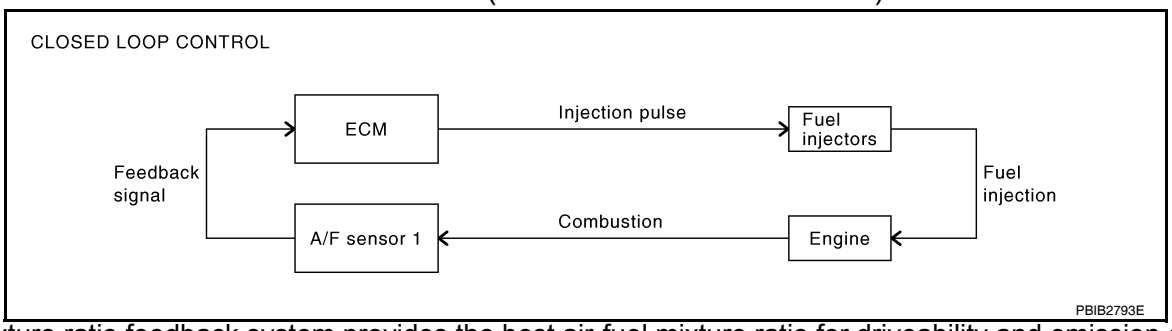

The mixture ratio feedback system provides the best air-fuel mixture ratio for driveability and emission control. The three way catalyst (manifold) can then better reduce CO, HC and NOx emissions. This system uses A/F sensor 1 in the exhaust manifold to monitor whether the engine operation is rich or lean. The ECM adjusts the injection pulse width according to the sensor voltage signal. For more information about A/F sensor 1, refer to EC-199, "DTC Logic". This maintains the mixture ratio within the range of stoichiometric (ideal air-fuel mixture).

This stage is referred to as the closed loop control condition.

Heated oxygen sensor 2 is located downstream of the three way catalyst (manifold). Even if the switching characteristics of A/F sensor 1 shift, the air-fuel ratio is controlled to stoichiometric by the signal from heated oxygen sensor 2.

- Open Loop Control
  The open loop system condition refers to when the ECM detects any of the following conditions. Feedback control stops in order to maintain stabilized fuel combustion.

- Deceleration and acceleration
- High-load, high-speed operation
- Malfunction of A/F sensor 1 or its circuit
- Insufficient activation of A/F sensor 1 at low engine coolant temperature
- High engine coolant temperature
- During warm-up
- After shifting from N to D (CVT models)
- When starting the engine

MIXTURE RATIO SELF-LEARNING CONTROL

The mixture ratio feedback control system monitors the mixture ratio signal transmitted from A/F sensor 1. This feedback signal is then sent to the ECM. The ECM controls the basic mixture ratio as close to the theoretical mixture ratio as possible. However, the basic mixture ratio is not necessarily controlled as originally

designed. Both manufacturing differences (i.e., mass air flow sensor hot wire) and characteristic changes during operation (i.e., fuel injector clogging) directly affect mixture ratio.
Accordingly, the difference between the basic and theoretical mixture ratios is monitored in this system. This is then computed in terms of “injection pulse duration” to automatically compensate for the difference between the two ratios.
“Fuel trim” refers to the feedback compensation value compared against the basic injection duration. Fuel trim includes short term fuel trim and long term fuel trim.
“Short term fuel trim” is the short-term fuel compensation used to maintain the mixture ratio at its theoretical value. The signal from A/F sensor 1 indicates whether the mixture ratio is RICH or LEAN compared to the theoretical value. The signal then triggers a reduction in fuel volume if the mixture ratio is rich, and an increase in fuel volume if it is lean.
“Long term fuel trim” is overall fuel compensation carried out long-term to compensate for continual deviation of the short term fuel trim from the central value. Such deviation will occur due to individual engine differences, wear over time and changes in the usage environment.

FUEL INJECTION TIMING

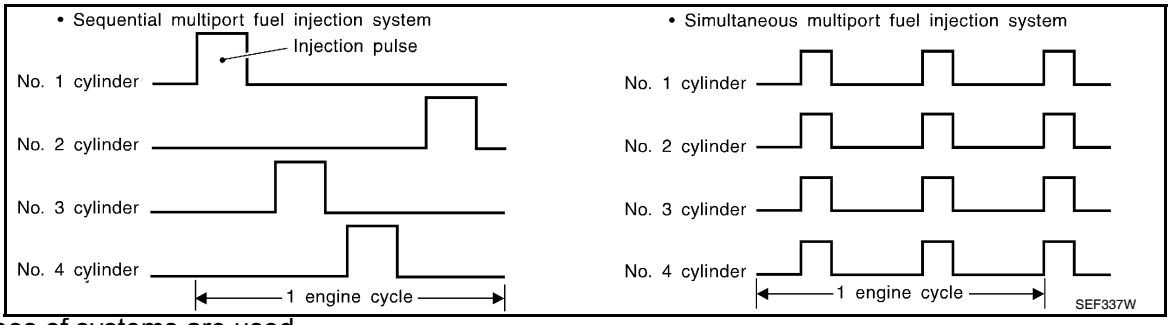

Two types of systems are used.
- Sequential Multiport Fuel Injection System
  Fuel is injected into each cylinder during each engine cycle according to the firing order. This system is used when the engine is running.
- Simultaneous Multiport Fuel Injection System
  Fuel is injected simultaneously into all four cylinders twice each engine cycle. In other words, pulse signals of the same width are simultaneously transmitted from the ECM.
  The four injectors will then receive the signals two times for each engine cycle.
  This system is used when the engine is being started and/or if the fail-safe system (CPU) is operating.

FUEL SHUT-OFF

Fuel to each cylinder is cut off during deceleration, operation of the engine at excessively high speeds or operation of the vehicle at excessively high speeds.

Component Parts Location

INFOID:0000000004349149

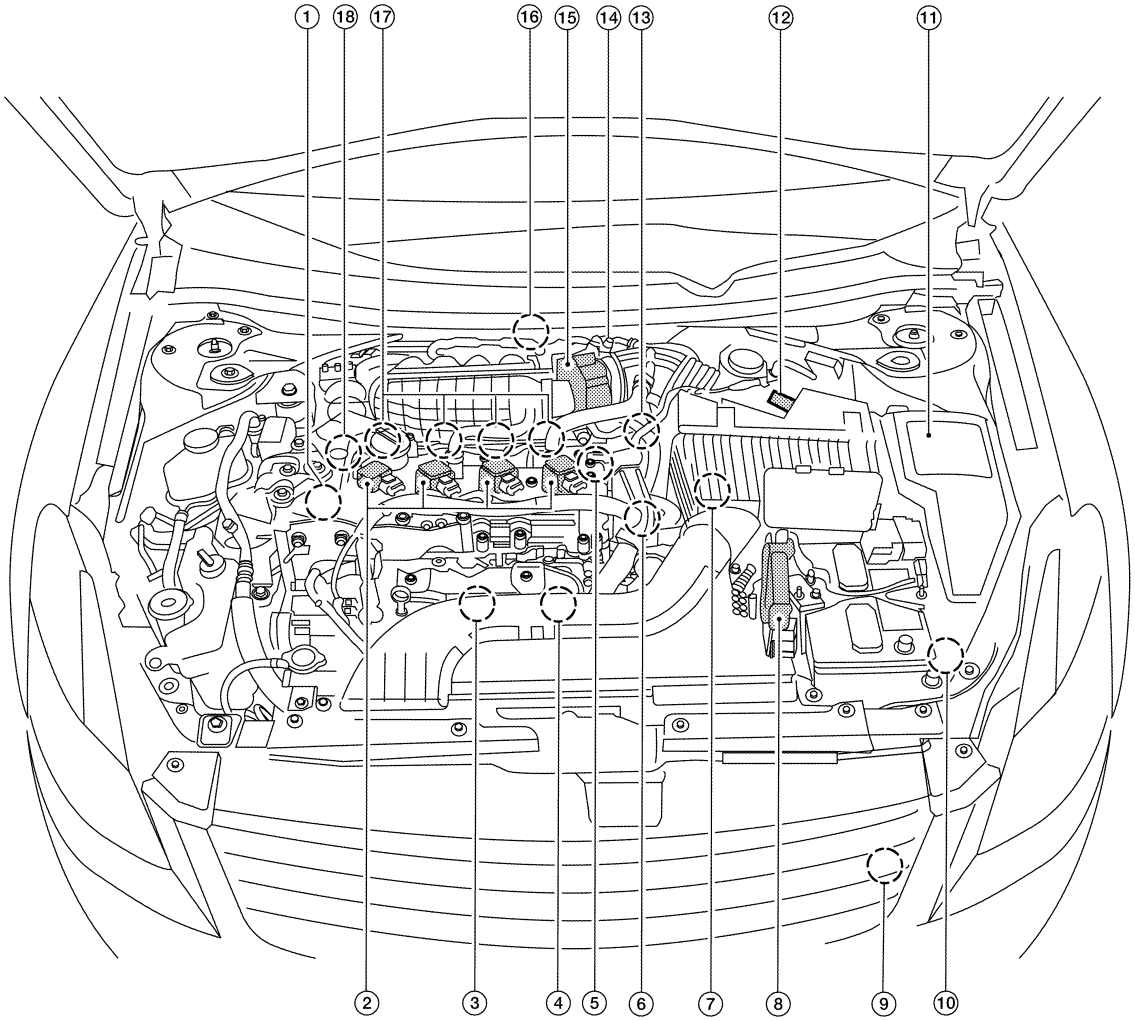

ALBIA0046ZZ

1. Intake valve timing control solenoid valve
2. Ignition coil (with power transistor) and spark plug
3. Knock sensor, Crankshaft position sensor (POS)
4. Air fuel ratio (A/F) sensor 1
5. Camshaft position sensor (PHASE)
6. Engine coolant temperature sensor
7. Park/neutral position (PNP) switch
8. ECM
9. Refrigerant pressure sensor
10. Battery current sensor
11. IPDM E/R
12. Mass air flow sensor (with intake temperature sensor)
13. Tumble control valve actuator
14. EVAP service port
15. Electric throttle control actuator (with built in throttle position sensor and throttle control motor)
16. EVAP canister purge volume control solenoid valve
17. Fuel injector
18. Power steering pressure sensor

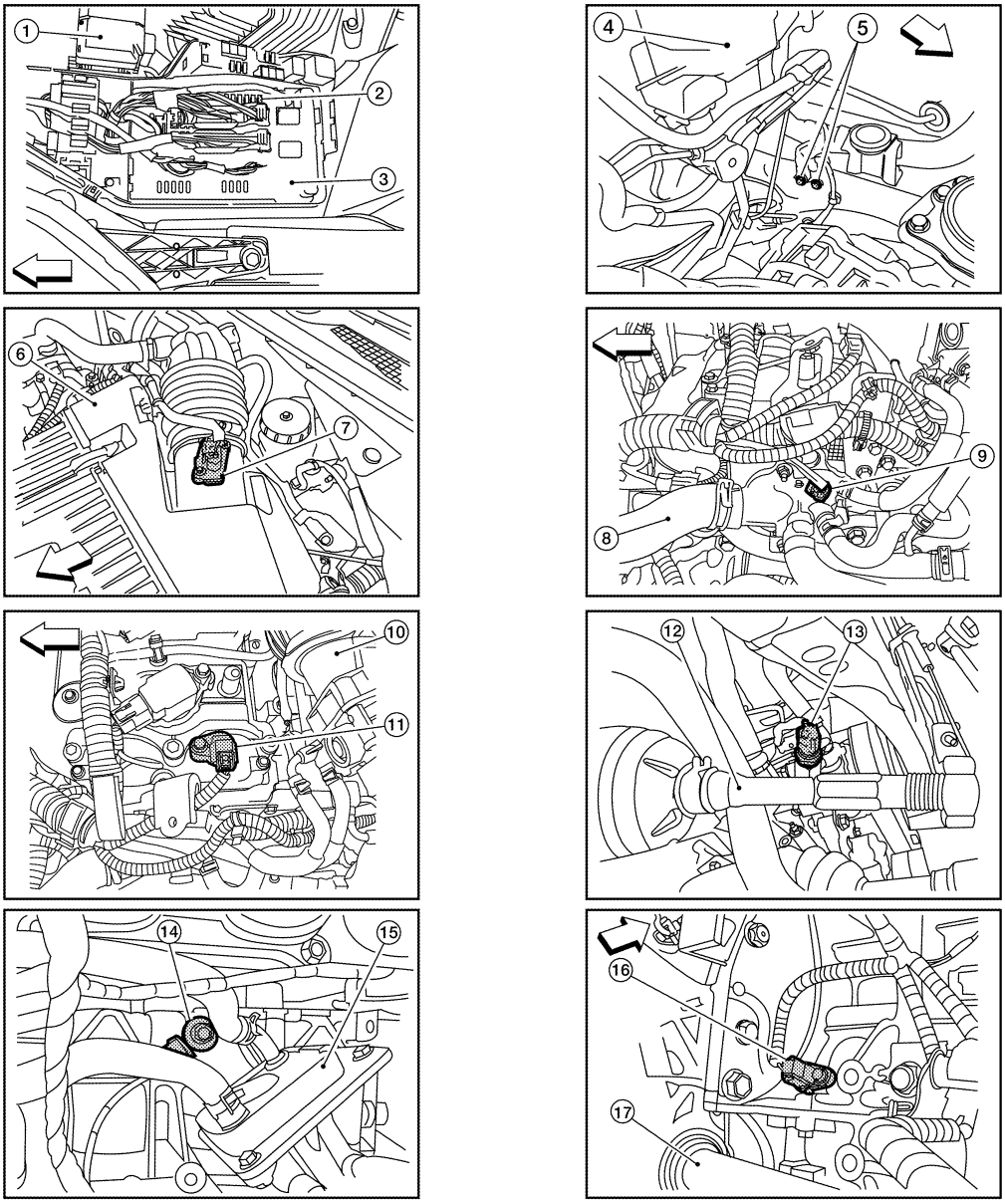

ALBIA0091ZZ

1. Battery	2. Fuel pump fuse (15A)	3. IPDM E/R
4. Brake master cylinder	5. Engine ground	6. Air cleaner assembly
7. Mass air flow sensor (with intake air temperature sensor)	8. Radiator hose (upper)	9. Engine coolant temperature sensor
10. Intake air duct	11. Camshaft position sensor (PHASE)	12. Tie rod (RH)
13. Power steering pressure sensor	14. Knock sensor	15. Engine oil cooler
16. Crankshaft position sensor (POS)	17. Drive shaft (RH)	

⇦: Vehicle front

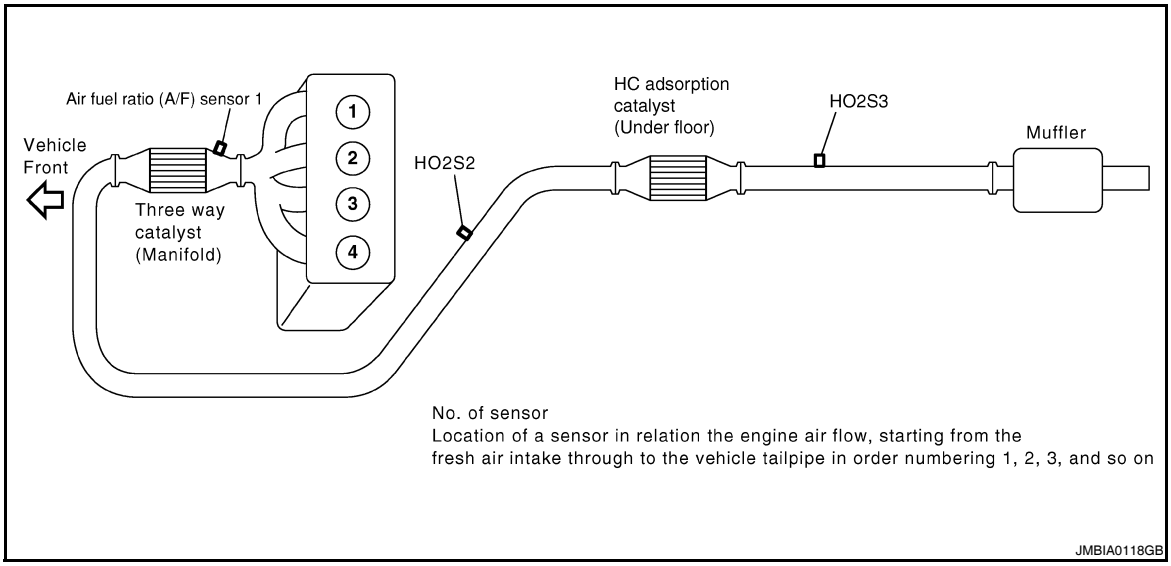

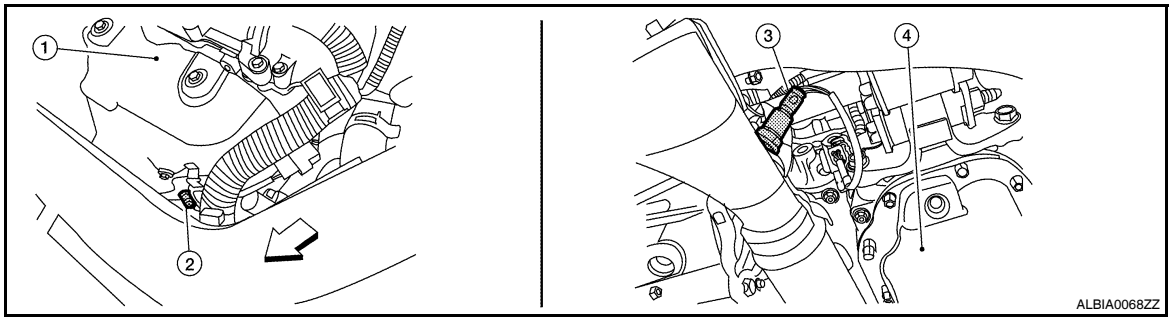

1. Exhaust manifold cover
2. Air fuel ratio (A/F) sensor 1
3. Heated oxygen sensor 2 (This illustration is a view from under vehicle.)
4. Engine oil pan

⇦: Vehicle front

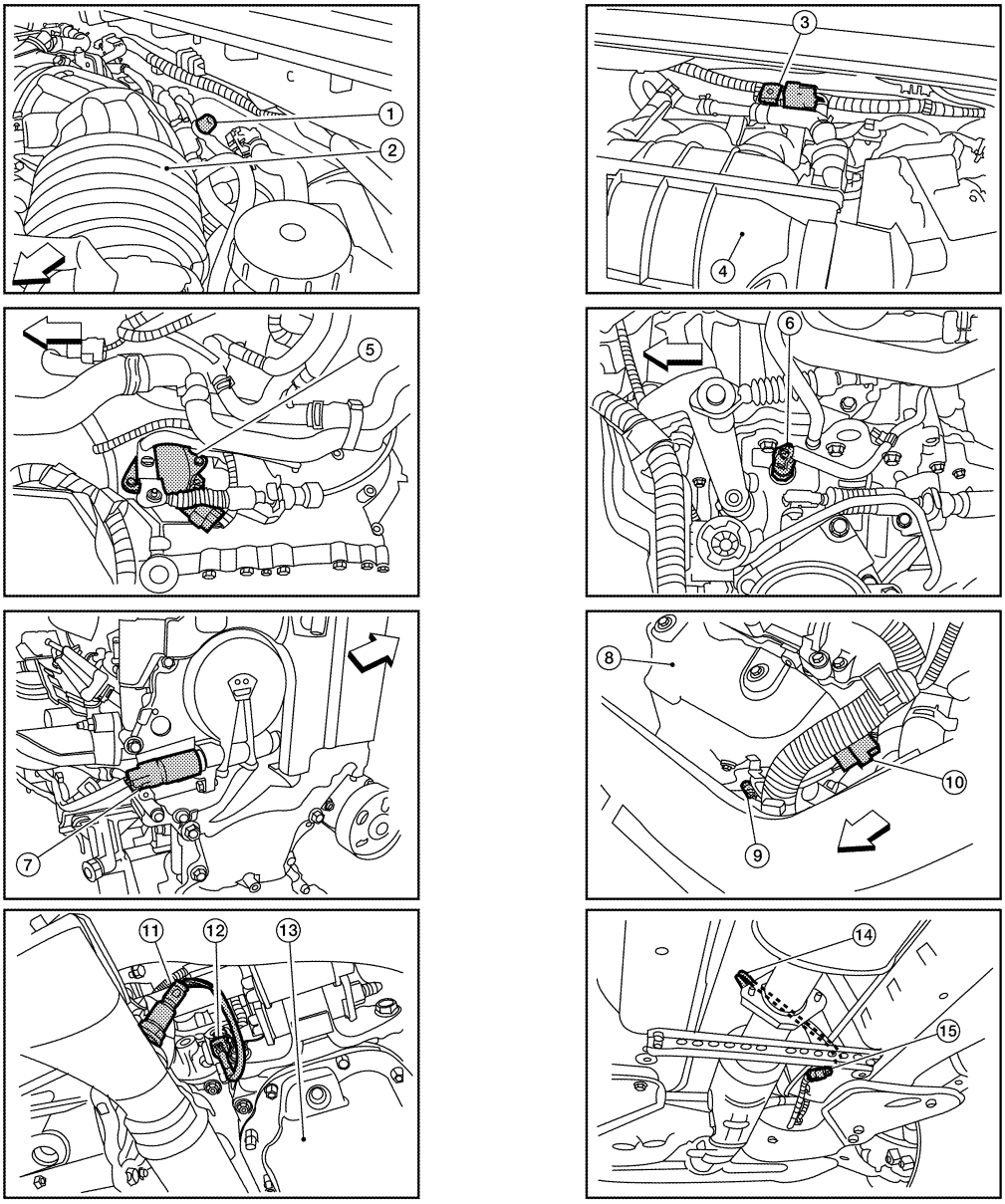

ALBIA0092ZZ

1. EVAP service port	2. Intake air duct	3. EVAP canister purge volume control solenoid valve
4. Intake manifold collector	5. Park/neutral position (PNP) switch (CVT) (This illustration is view with air cleaner assembly removed.)	6. Park/neutral position (PNP) switch (M/T) (This illustration is view with air cleaner assembly removed.)
7. Intake valve timing control solenoid valve (This illustration is view with engine removed.)	8. Exhaust manifold cover	9. Air fuel ratio (A/F) sensor 1
10. Air fuel ratio (A/F) sensor 1 harness connector	11. Heated oxygen sensor 2 (This illustration is view from under vehicle.)	12. Heated oxygen sensor 2 harness connector (This illustration is view from under vehicle.)
13. Engine oil pan	14. Heated oxygen sensor 3 (This illustration is view form under vehicle.)	15. Heated oxygen sensor 3 harness connector (This illustration is view from under vehicle.)

⇦: Vehicle front

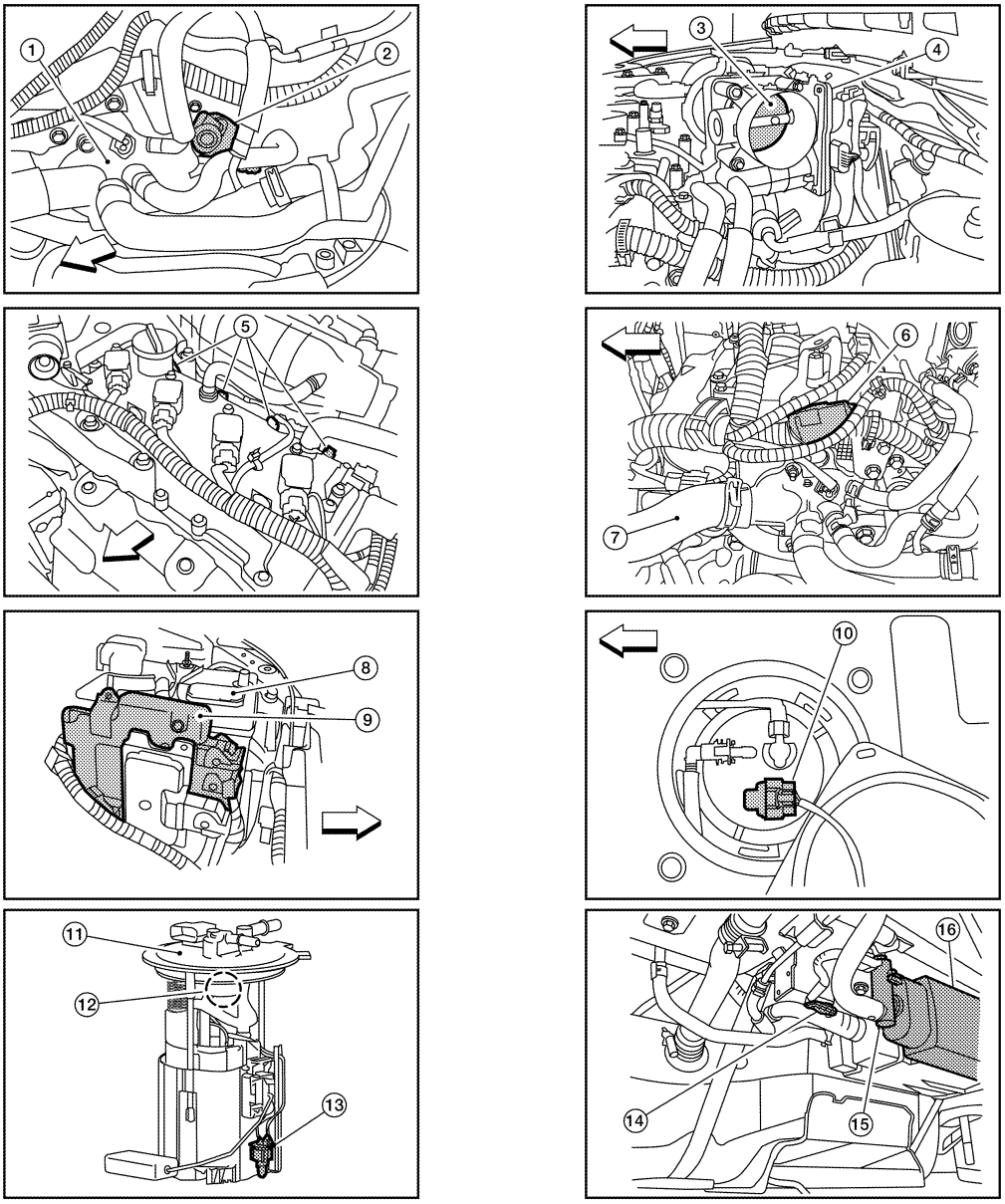

ALBIA0093ZZ

1. Thermostat housing
2. Tumble control valve actuator
3. Throttle valve (This illustration is view with intake air duct removed.)
4. Electric throttle control actuator
5. Fuel injector harness connector
6. Condenser-2
7. Radiator hose (upper)
8. Battery
9. ECM
10. Fuel level sensor unit and fuel pump harness connector (This illustration is view with rear seat cushion and inspection hole cover removed.)
11. Fuel level sensor unit and fuel pump assembly
12. Fuel pressure regulator
13. Fuel tank temperature sensor
14. EVAP control system pressure sensor (This illustration is view with rear suspension member removed.)
15. EVAP canister vent control valve (This illustration is view with rear suspension member removed.)
16. EVAP canister (This illustration is view with rear suspension member removed.)

⇦ : Vehicle front

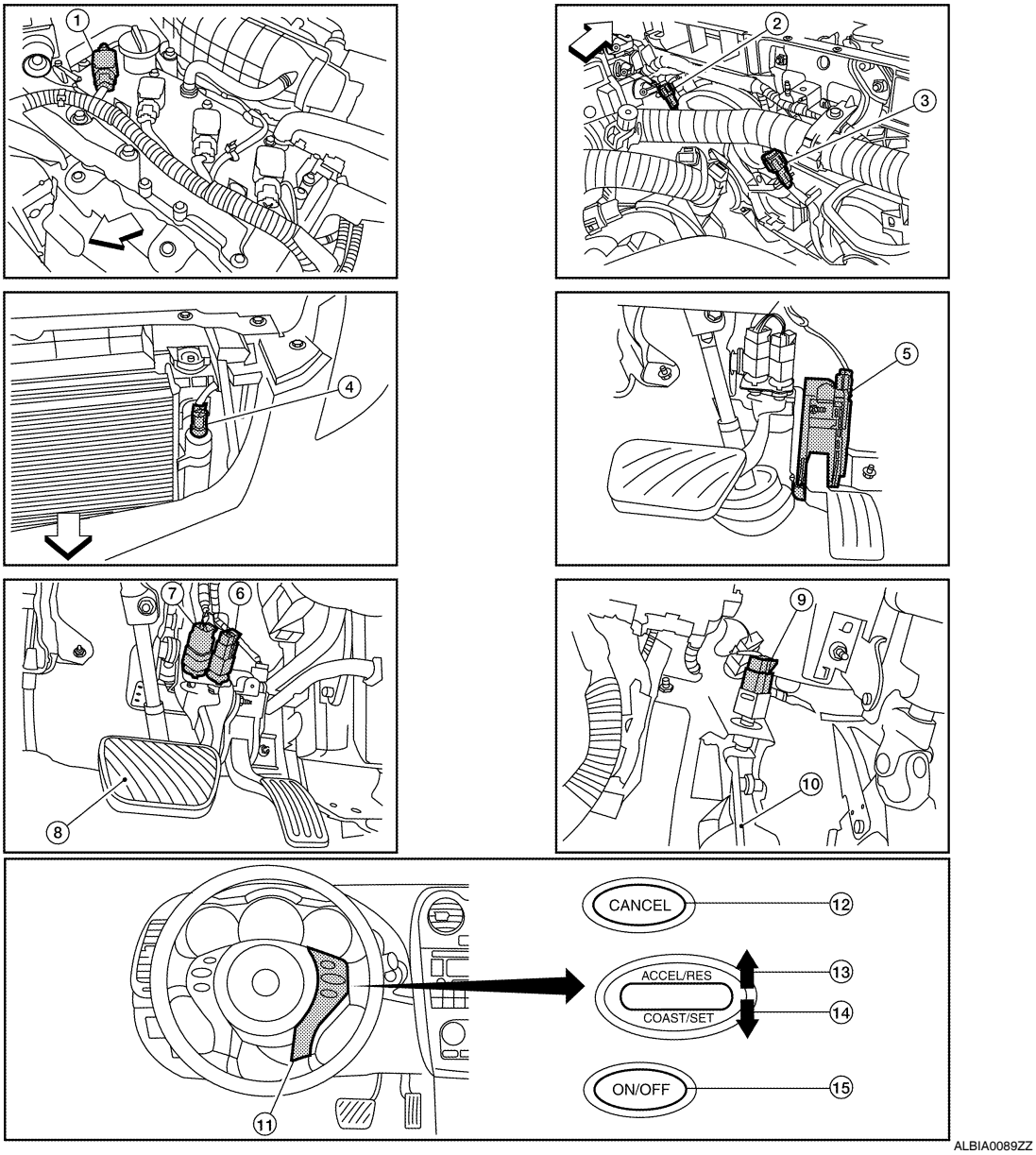

1. No.1 ignition coil
2. Cooling fan motor-1 harness connector
3. Cooling fan motor-2 harness connector
4. Refrigerant pressure sensor
5. Accelerator pedal position sensor
6. ASCD brake switch
7. Stop lamp switch
8. Brake pedal
9. ASCD clutch switch
10. Clutch pedal
11. ASCD steering switch
12. CANSEC switch
13. RESUME/ACCELERATE switch
14. SET/COAST switch
15. MAIN switch

⇦: Vehicle front

Component Description

INFOID:0000000004349150

Component	Reference
A/F sensor 1	EC-199, "Description"
Accelerator pedal position sensor	EC-427, "Description"
Camshaft position sensor (PHASE)	EC-282, "Description"
Crankshaft position sensor (POS)	EC-278, "Description"

Component	Reference
Engine coolant temperature sensor	EC-184, "Description"
Fuel injector	EC-463, "Description"
Heated oxygen sensor 2	EC-158, "Description"
Intake air temperature sensor	EC-181, "Description"
Knock sensor	EC-276, "Description"
Mass air flow sensor	EC-168, "Description"
Park/neutral position switch	EC-365, "Description"
Power steering pressure sensor	EC-354, "Description"
Throttle position sensor	EC-189, "Description"
Vehicle speed sensor	EC-348, "Description"

ELECTRIC IGNITION SYSTEM

System Diagram

INFOID:0000000004349151

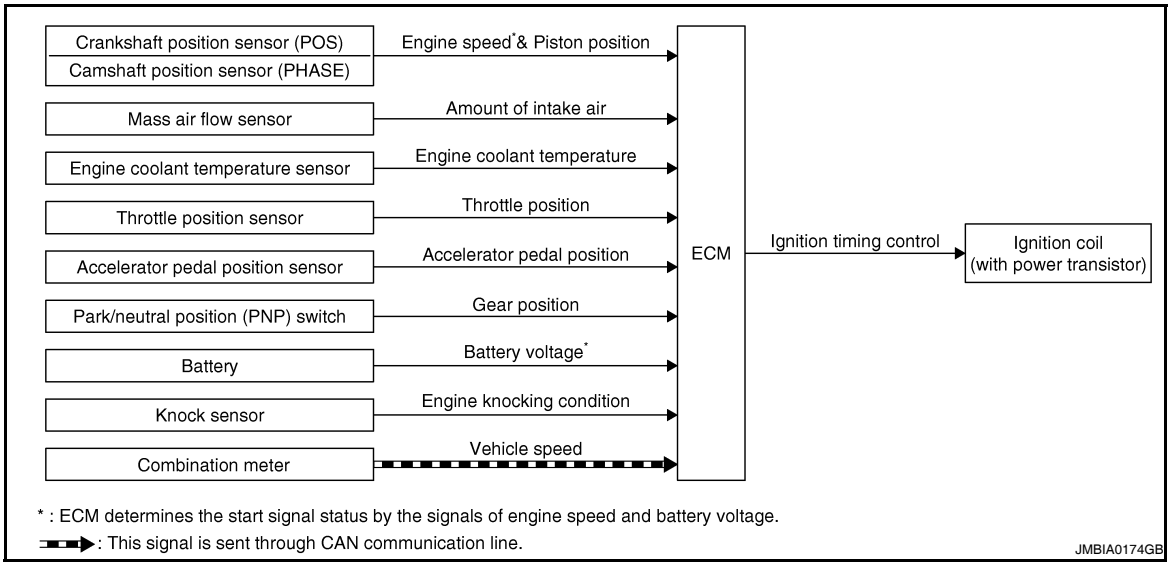

System Description

INFOID:0000000004349152

INPUT/OUTPUT SIGNAL CHART

Sensor	Input Signal to ECM	ECM function	Actuator
Crankshaft position sensor (POS)	Engine speed*2 Piston position	Ignition timing control	Ignition coil (with power transistor)
Camshaft position sensor (PHASE)			
Mass air flow sensor	Amount of intake air		
Engine coolant temperature sensor	Engine coolant temperature		
Throttle position sensor	Throttle position		
Accelerator pedal position sensor	Accelerator pedal position		
Battery	Battery voltage*2		
Knock sensor	Engine knocking		
Park/neutral position (PNP) switch	Gear position		
Combination meter	Vehicle speed*1		

*1: This signal is sent to the ECM through CAN communication line.

*2: ECM determines the start signal status by the signals of engine speed and battery voltage.

SYSTEM DESCRIPTION

Firing order: 1 - 3 - 4 - 2

The ignition timing is controlled by the ECM to maintain the best air-fuel ratio for every running condition of the engine. The ignition timing data is stored in the ECM.

The ECM receives information such as the injection pulse width and camshaft position sensor (PHASE) signal. Computing this information, ignition signals are transmitted to the power transistor.

During the following conditions, the ignition timing is revised by the ECM according to the other data stored in the ECM.

- At starting
- During warm-up
- At idle
- At low battery voltage
- During acceleration

The knock sensor retard system is designed only for emergencies. The basic ignition timing is programmed within the anti-knocking zone, if recommended fuel is used under dry conditions. The retard system does not

operate under normal driving conditions. If engine knocking occurs, the knock sensor monitors the condition. The signal is transmitted to the ECM. The ECM retards the ignition timing to eliminate the knocking condition.

Component Parts Location

INFOID:0000000004349153

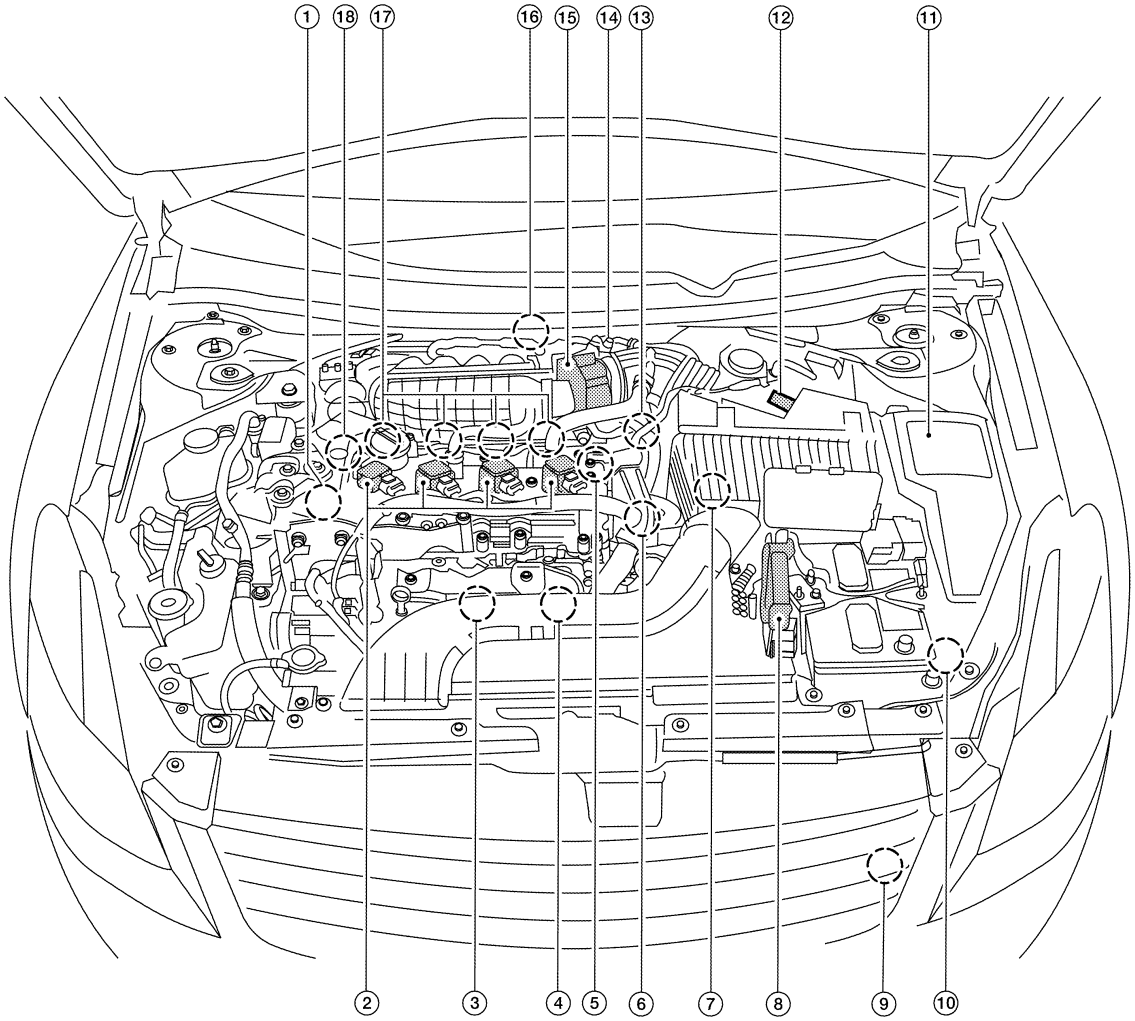

ALBIA0046ZZ

1. Intake valve timing control solenoid valve	2. Ignition coil (with power transistor) and spark plug	3. Knock sensor, Crankshaft position sensor (POS)
4. Air fuel ratio (A/F) sensor 1	5. Camshaft position sensor (PHASE)	6. Engine coolant temperature sensor
7. Park/neutral position (PNP) switch	8. ECM	9. Refrigerant pressure sensor
10. Battery current sensor	11. IPDM E/R	12. Mass air flow sensor (with intake temperature sensor)
13. Tumble control valve actuator	14. EVAP service port	15. Electric throttle control actuator (with built in throttle position sensor and throttle control motor)
16. EVAP canister purge volume control solenoid valve	17. Fuel injector	18. Power steering pressure sensor

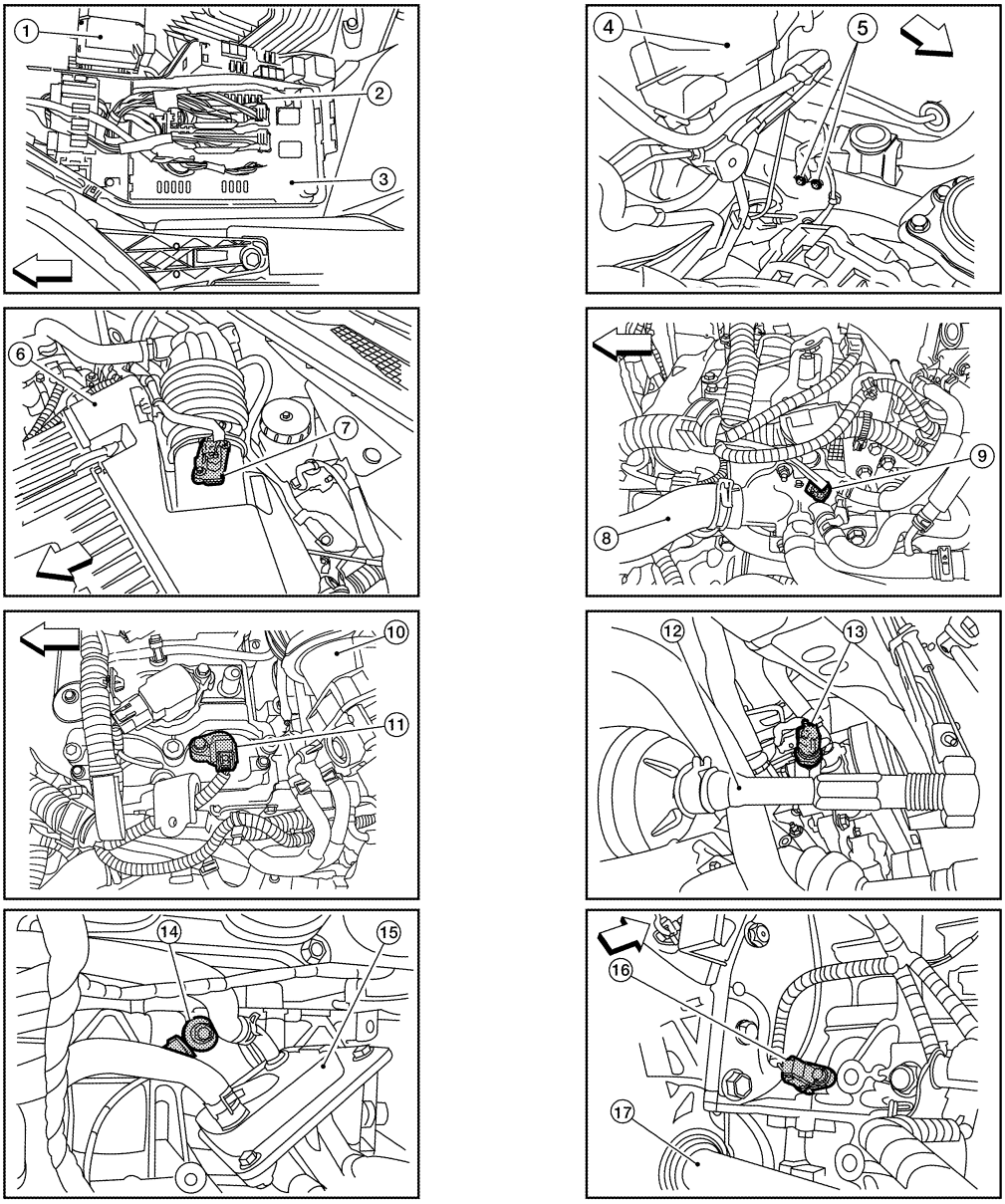

ALBIA0091ZZ

1. Battery
2. Fuel pump fuse (15A)
3. IPDM E/R
4. Brake master cylinder
5. Engine ground
6. Air cleaner assembly
7. Mass air flow sensor (with intake air temperature sensor)
8. Radiator hose (upper)
9. Engine coolant temperature sensor
10. Intake air duct
11. Camshaft position sensor (PHASE)
12. Tie rod (RH)
13. Power steering pressure sensor
14. Knock sensor
15. Engine oil cooler
16. Crankshaft position sensor (POS)
17. Drive shaft (RH)

⇦: Vehicle front

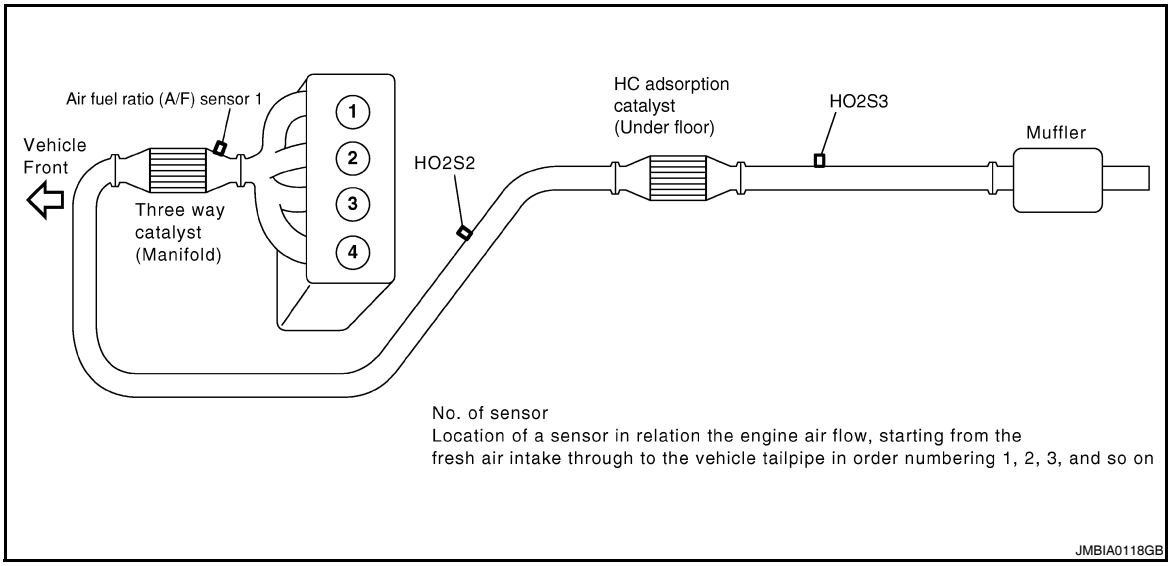

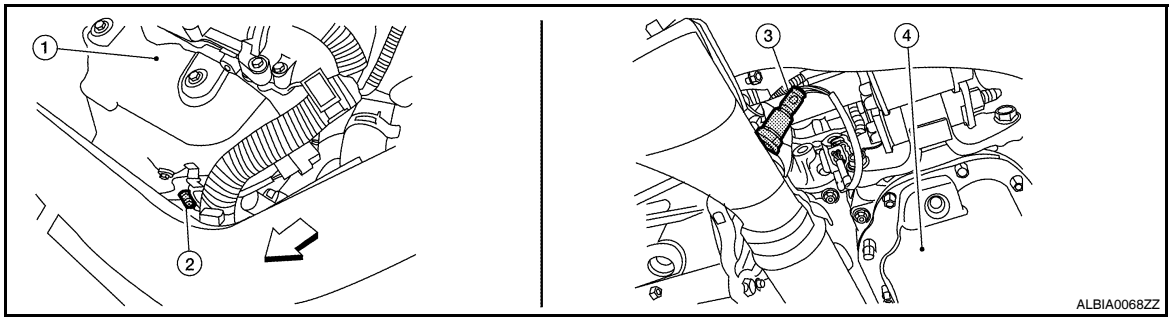

1. Exhaust manifold cover
2. Air fuel ratio (A/F) sensor 1
3. Heated oxygen sensor 2 (This illustration is a view from under vehicle.)
4. Engine oil pan

⇦: Vehicle front

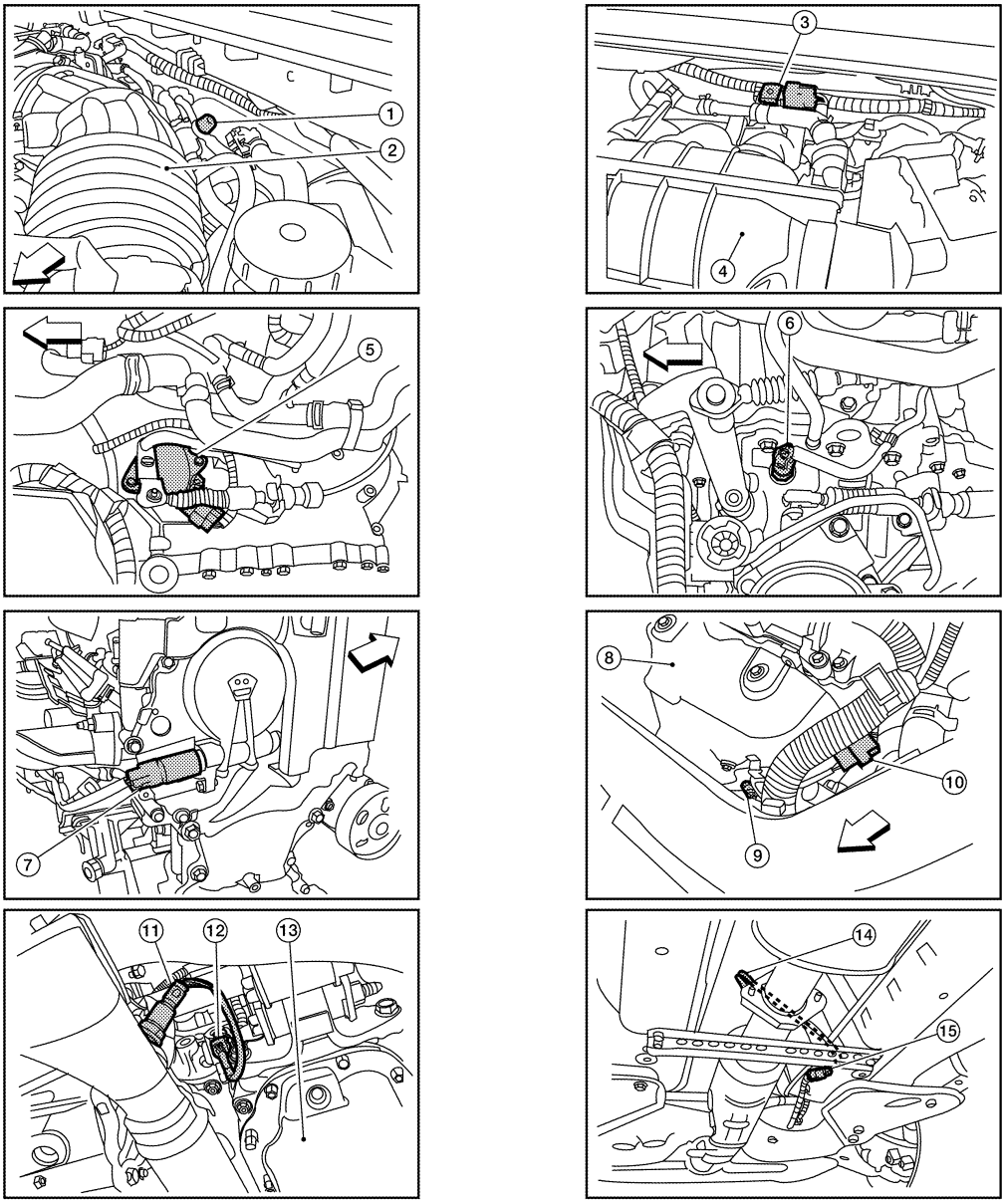

ALBIA0092ZZ

1. EVAP service port	2. Intake air duct	3. EVAP canister purge volume control solenoid valve
4. Intake manifold collector	5. Park/neutral position (PNP) switch (CVT) (This illustration is view with air cleaner assembly removed.)	6. Park/neutral position (PNP) switch (M/T) (This illustration is view with air cleaner assembly removed.)
7. Intake valve timing control solenoid valve (This illustration is view with engine removed.)	8. Exhaust manifold cover	9. Air fuel ratio (A/F) sensor 1
10. Air fuel ratio (A/F) sensor 1 harness connector	11. Heated oxygen sensor 2 (This illustration is view from under vehicle.)	12. Heated oxygen sensor 2 harness connector (This illustration is view from under vehicle.)
13. Engine oil pan	14. Heated oxygen sensor 3 (This illustration is view form under vehicle.)	15. Heated oxygen sensor 3 harness connector (This illustration is view from under vehicle.)

⇦: Vehicle front

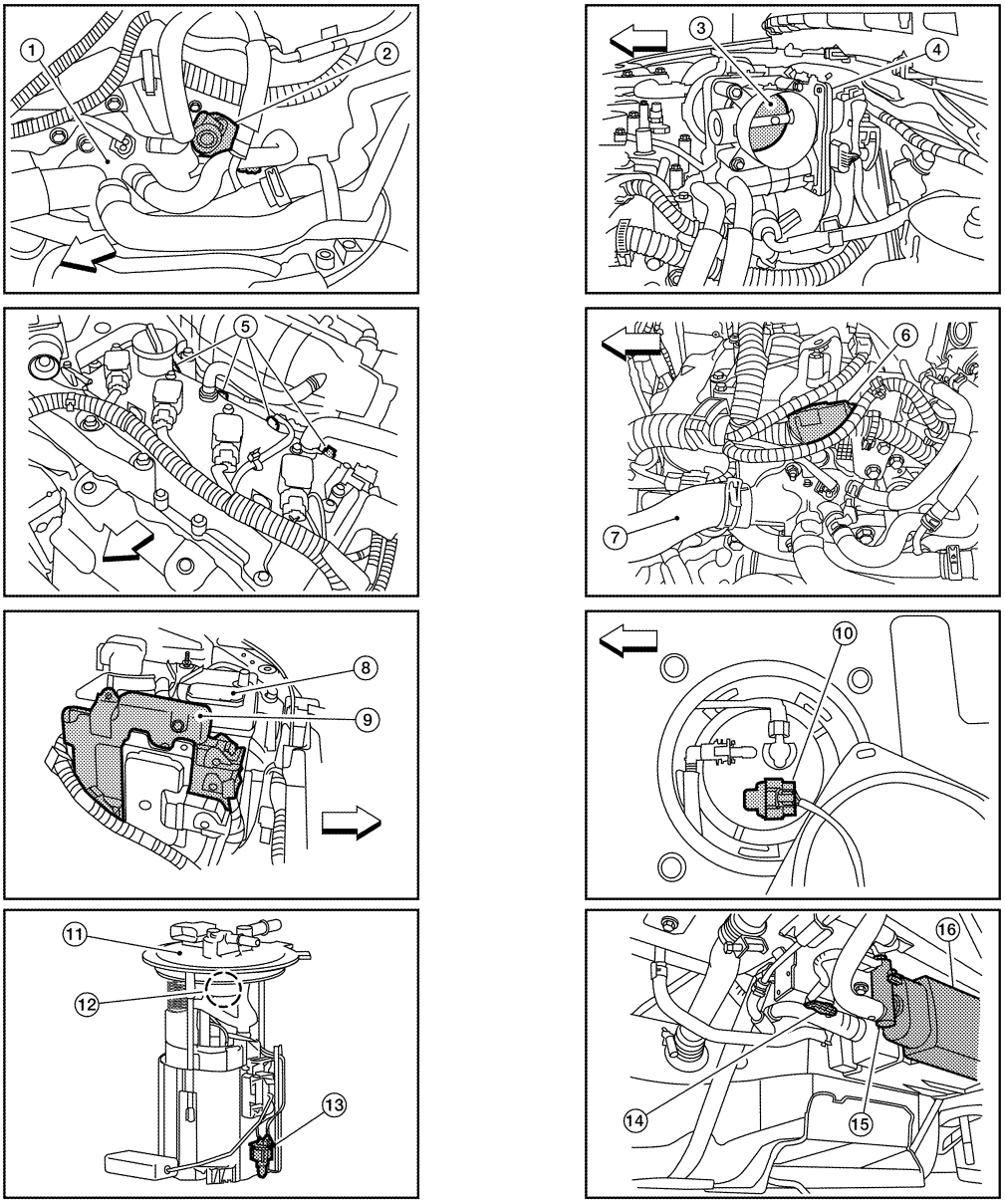

ALBIA0093ZZ

1. Thermostat housing
2. Tumble control valve actuator
3. Throttle valve (This illustration is view with intake air duct removed.)
4. Electric throttle control actuator
5. Fuel injector harness connector
6. Condenser-2
7. Radiator hose (upper)
8. Battery
9. ECM
10. Fuel level sensor unit and fuel pump harness connector (This illustration is view with rear seat cushion and inspection hole cover removed.)
11. Fuel level sensor unit and fuel pump assembly
12. Fuel pressure regulator
13. Fuel tank temperature sensor
14. EVAP control system pressure sensor (This illustration is view with rear suspension member removed.)
15. EVAP canister vent control valve (This illustration is view with rear suspension member removed.)
16. EVAP canister (This illustration is view with rear suspension member removed.)

⇦ : Vehicle front

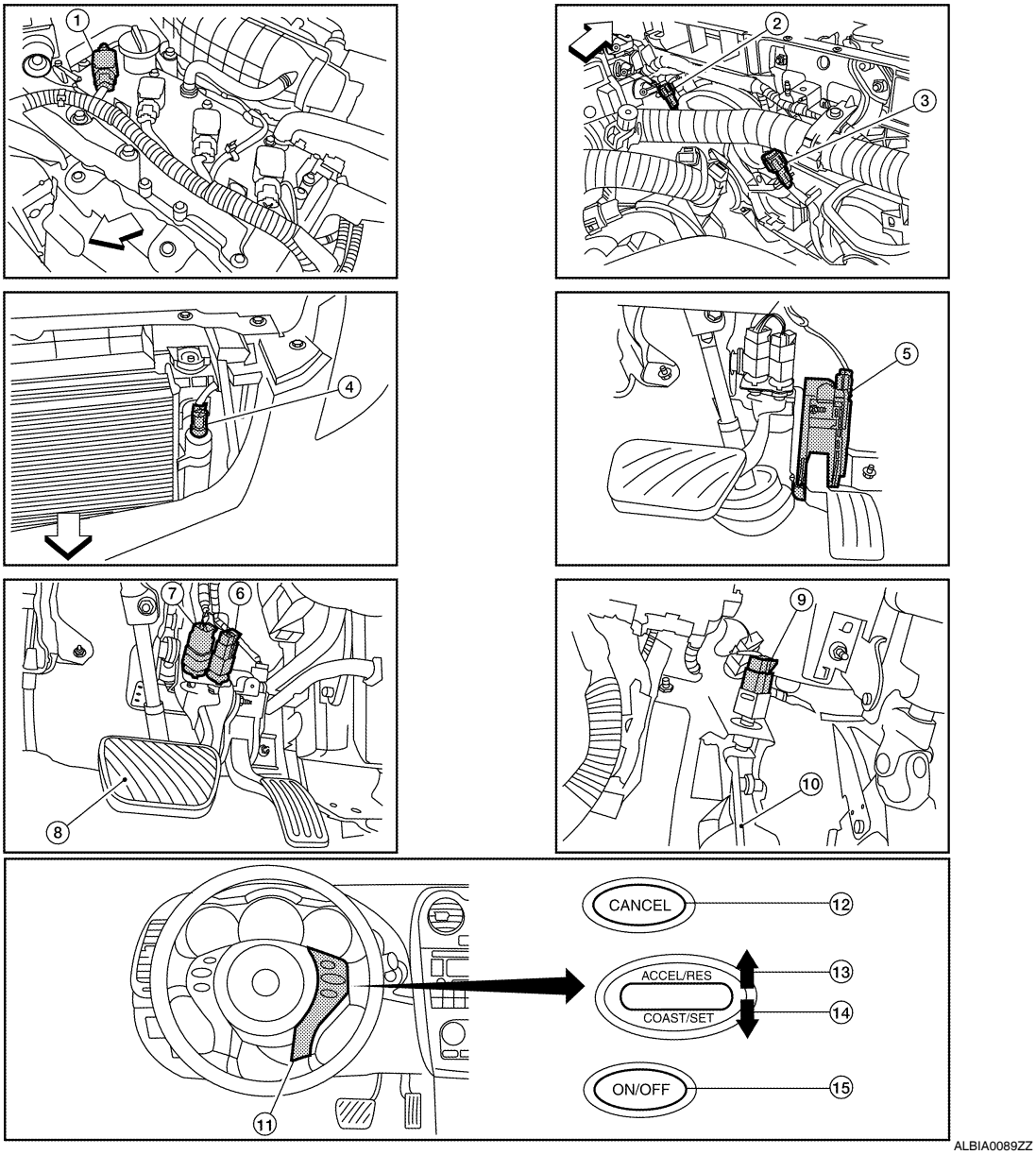

1. No.1 ignition coil
2. Cooling fan motor-1 harness connector
3. Cooling fan motor-2 harness connector
4. Refrigerant pressure sensor
5. Accelerator pedal position sensor
6. ASCD brake switch
7. Stop lamp switch
8. Brake pedal
9. ASCD clutch switch
10. Clutch pedal
11. ASCD steering switch
12. CANSEC switch
13. RESUME/ACCELERATE switch
14. SET/COAST switch
15. MAIN switch

⇦: Vehicle front

Component Description

INFOID:0000000004349154

Component	Reference
Accelerator pedal position sensor	EC-427, "Description"
Camshaft position sensor (PHASE)	EC-282, "Description"
Crankshaft position sensor (POS)	EC-278, "Description"
Engine coolant temperature sensor	EC-184, "Description"

Component	Reference
Ignition signal	EC-470, "Description"
Knock sensor	EC-276, "Description"
Mass air flow sensor	EC-168, "Description"
Park/neutral position switch	EC-365, "Description"
Throttle position sensor	EC-189, "Description"
Vehicle speed sensor	EC-348, "Description"

AIR CONDITIONING CUT CONTROL

System Diagram

INFOID:0000000004349155

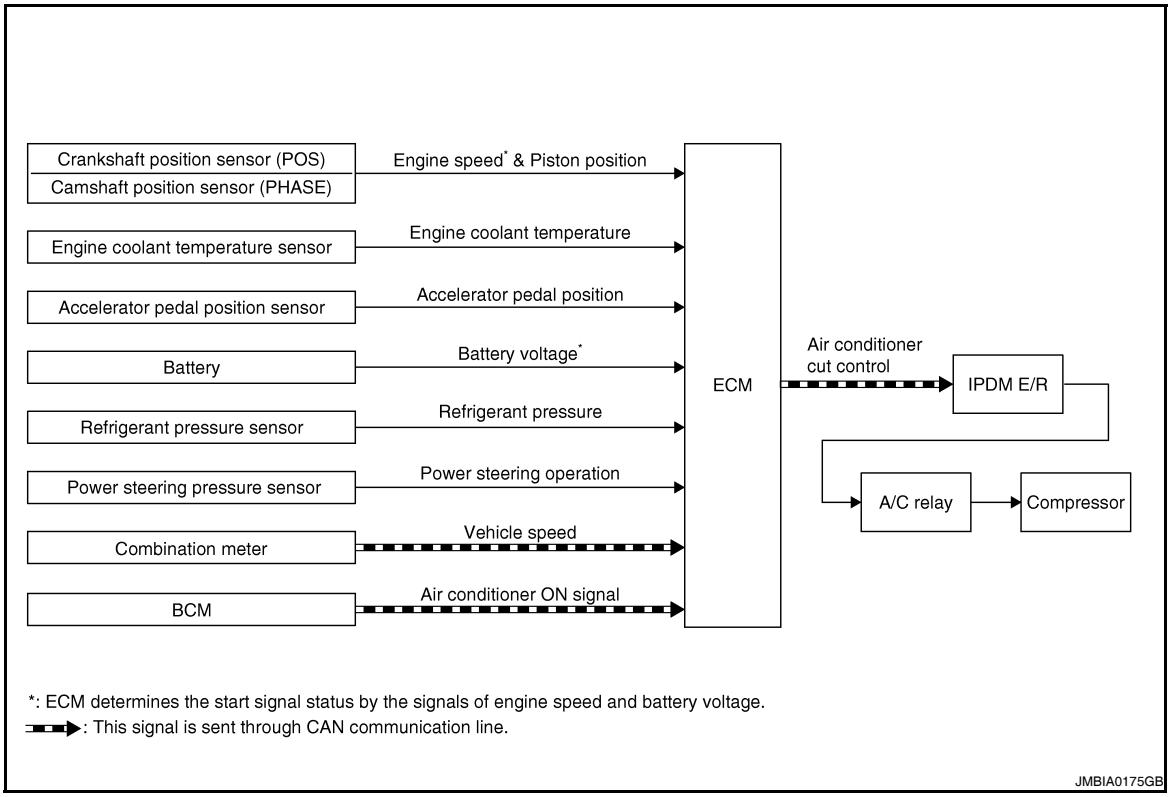

System Description

INFOID:0000000004349156

INPUT/OUTPUT SIGNAL CHART

Sensor	Input Signal to ECM	ECM function	Actuator
Air conditioner switch*1	Air conditioner ON signal	Air conditioner cut control	IPDM E/R ↓ Air conditioner relay ↓ Compressor
Accelerator pedal position sensor	Accelerator pedal position		
Crankshaft position sensor (POS) Camshaft position sensor (PHASE)	Engine speed*2		
Engine coolant temperature sensor	Engine coolant temperature		
Battery	Battery voltage*2		
Refrigerant pressure sensor	Refrigerant pressure		
Power steering pressure sensor	Power steering operation		
Combination meter	Vehicle speed*1		
BCM	Air conditioner ON signal*1		

*1: This signal is sent to the ECM through CAN communication line.

*2: ECM determines the start signal status by the signals of engine speed and battery voltage.

SYSTEM DESCRIPTION

This system improves engine operation when the air conditioner is used.
Under the following conditions, the air conditioner is turned off.

- When the accelerator pedal is fully depressed.
- When cranking the engine.
- At high engine speeds.
- When the engine coolant temperature becomes excessively high.
- When operating power steering during low engine speed or low vehicle speed.

- When engine speed is excessively low.
- When refrigerant pressure is excessively low or high.

Component Parts Location

INFOID:0000000004349157

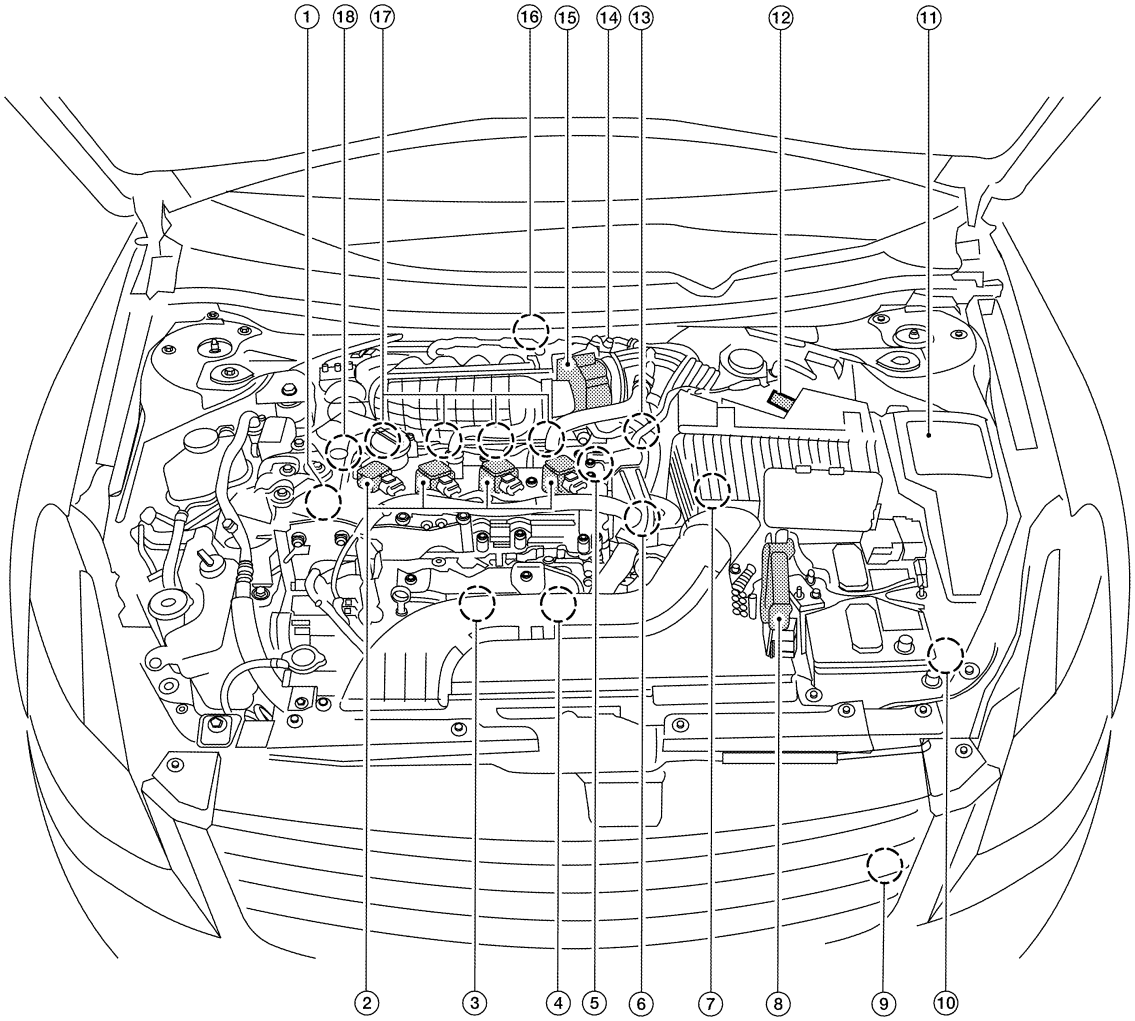

ALBIA0046ZZ

1. Intake valve timing control solenoid valve	2. Ignition coil (with power transistor) and spark plug	3. Knock sensor, Crankshaft position sensor (POS)
4. Air fuel ratio (A/F) sensor 1	5. Camshaft position sensor (PHASE)	6. Engine coolant temperature sensor
7. Park/neutral position (PNP) switch	8. ECM	9. Refrigerant pressure sensor
10. Battery current sensor	11. IPDM E/R	12. Mass air flow sensor (with intake temperature sensor)
13. Tumble control valve actuator	14. EVAP service port	15. Electric throttle control actuator (with built in throttle position sensor and throttle control motor)
16. EVAP canister purge volume control solenoid valve	17. Fuel injector	18. Power steering pressure sensor

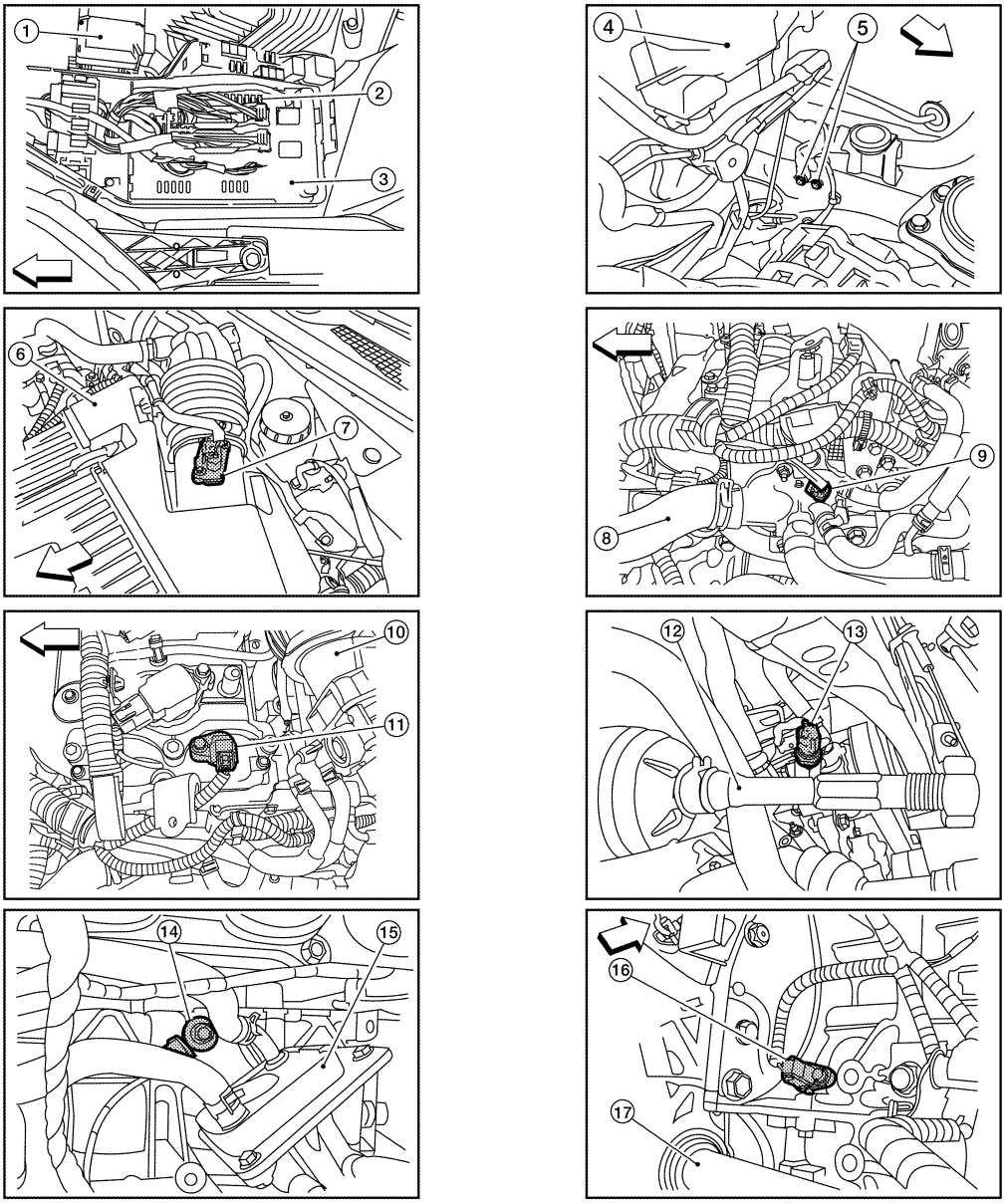

ALBIA0091ZZ

1. Battery	2. Fuel pump fuse (15A)	3. IPDM E/R
4. Brake master cylinder	5. Engine ground	6. Air cleaner assembly
7. Mass air flow sensor (with intake air temperature sensor)	8. Radiator hose (upper)	9. Engine coolant temperature sensor
10. Intake air duct	11. Camshaft position sensor (PHASE)	12. Tie rod (RH)
13. Power steering pressure sensor	14. Knock sensor	15. Engine oil cooler
16. Crankshaft position sensor (POS)	17. Drive shaft (RH)	

⇦: Vehicle front

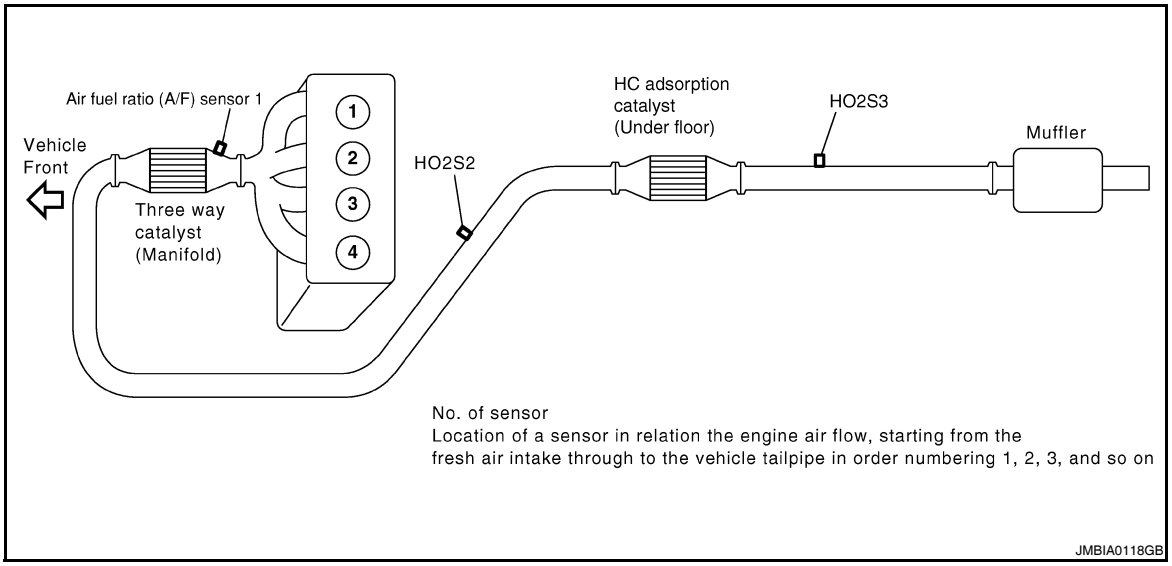

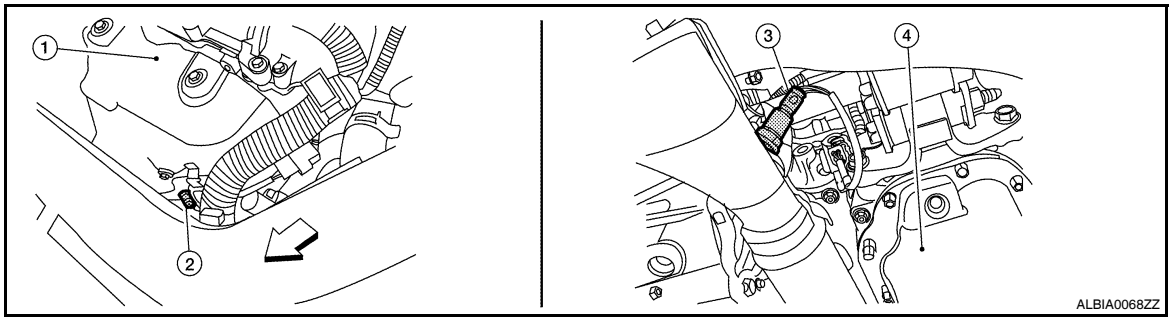

1. Exhaust manifold cover
2. Air fuel ratio (A/F) sensor 1
3. Heated oxygen sensor 2 (This illustration is a view from under vehicle.)
4. Engine oil pan

⇦: Vehicle front

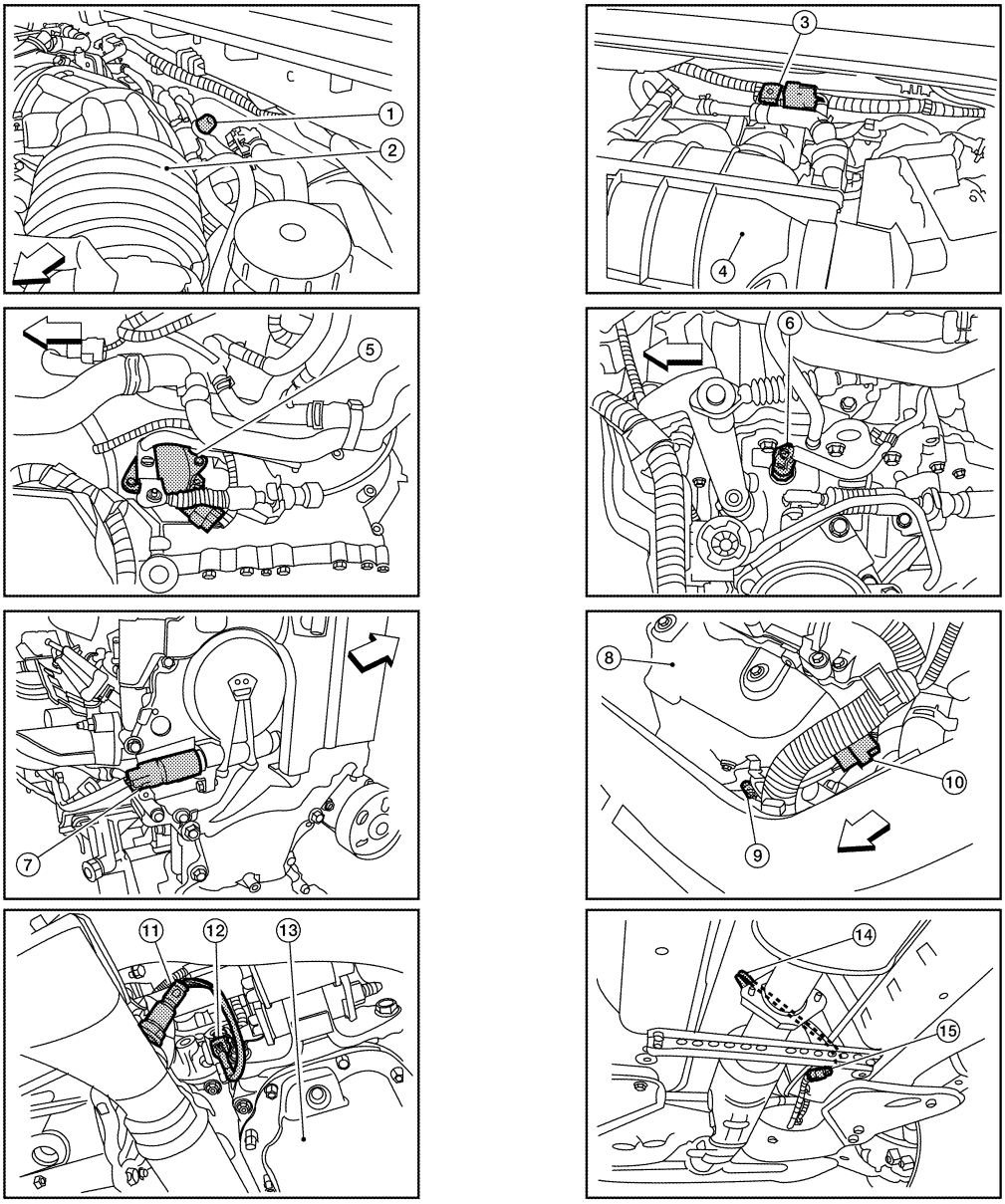

ALBIA0092ZZ

1. EVAP service port	2. Intake air duct	3. EVAP canister purge volume control solenoid valve
4. Intake manifold collector	5. Park/neutral position (PNP) switch (CVT) (This illustration is view with air cleaner assembly removed.)	6. Park/neutral position (PNP) switch (M/T) (This illustration is view with air cleaner assembly removed.)
7. Intake valve timing control solenoid valve (This illustration is view with engine removed.)	8. Exhaust manifold cover	9. Air fuel ratio (A/F) sensor 1
10. Air fuel ratio (A/F) sensor 1 harness connector	11. Heated oxygen sensor 2 (This illustration is view from under vehicle.)	12. Heated oxygen sensor 2 harness connector (This illustration is view from under vehicle.)
13. Engine oil pan	14. Heated oxygen sensor 3 (This illustration is view form under vehicle.)	15. Heated oxygen sensor 3 harness connector (This illustration is view from under vehicle.)

⇦: Vehicle front

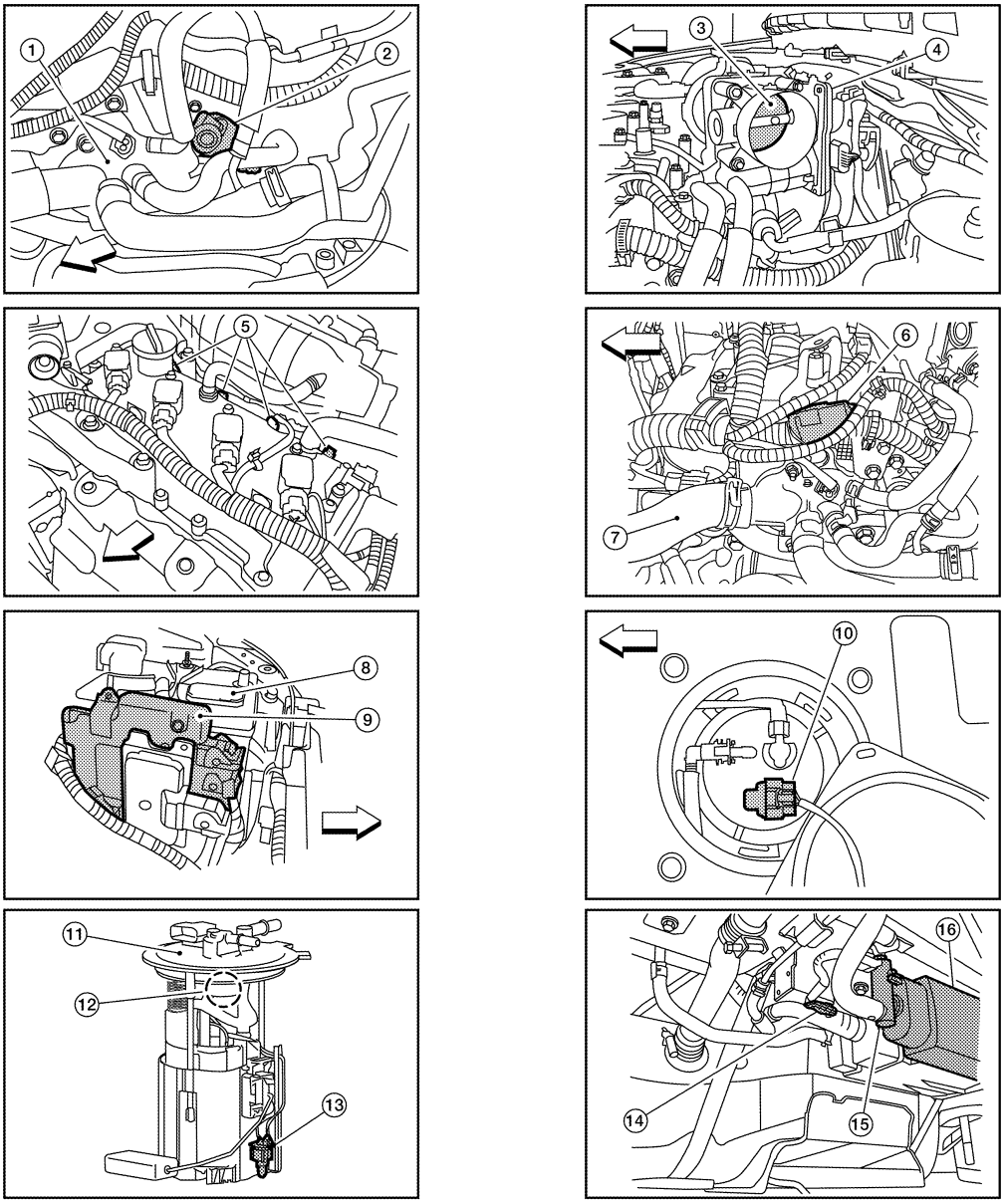

ALBIA0093ZZ

1. Thermostat housing
2. Tumble control valve actuator
3. Throttle valve (This illustration is view with intake air duct removed.)
4. Electric throttle control actuator
5. Fuel injector harness connector
6. Condenser-2
7. Radiator hose (upper)
8. Battery
9. ECM
10. Fuel level sensor unit and fuel pump harness connector (This illustration is view with rear seat cushion and inspection hole cover removed.)
11. Fuel level sensor unit and fuel pump assembly
12. Fuel pressure regulator
13. Fuel tank temperature sensor
14. EVAP control system pressure sensor (This illustration is view with rear suspension member removed.)
15. EVAP canister vent control valve (This illustration is view with rear suspension member removed.)
16. EVAP canister (This illustration is view with rear suspension member removed.)

⇦ : Vehicle front

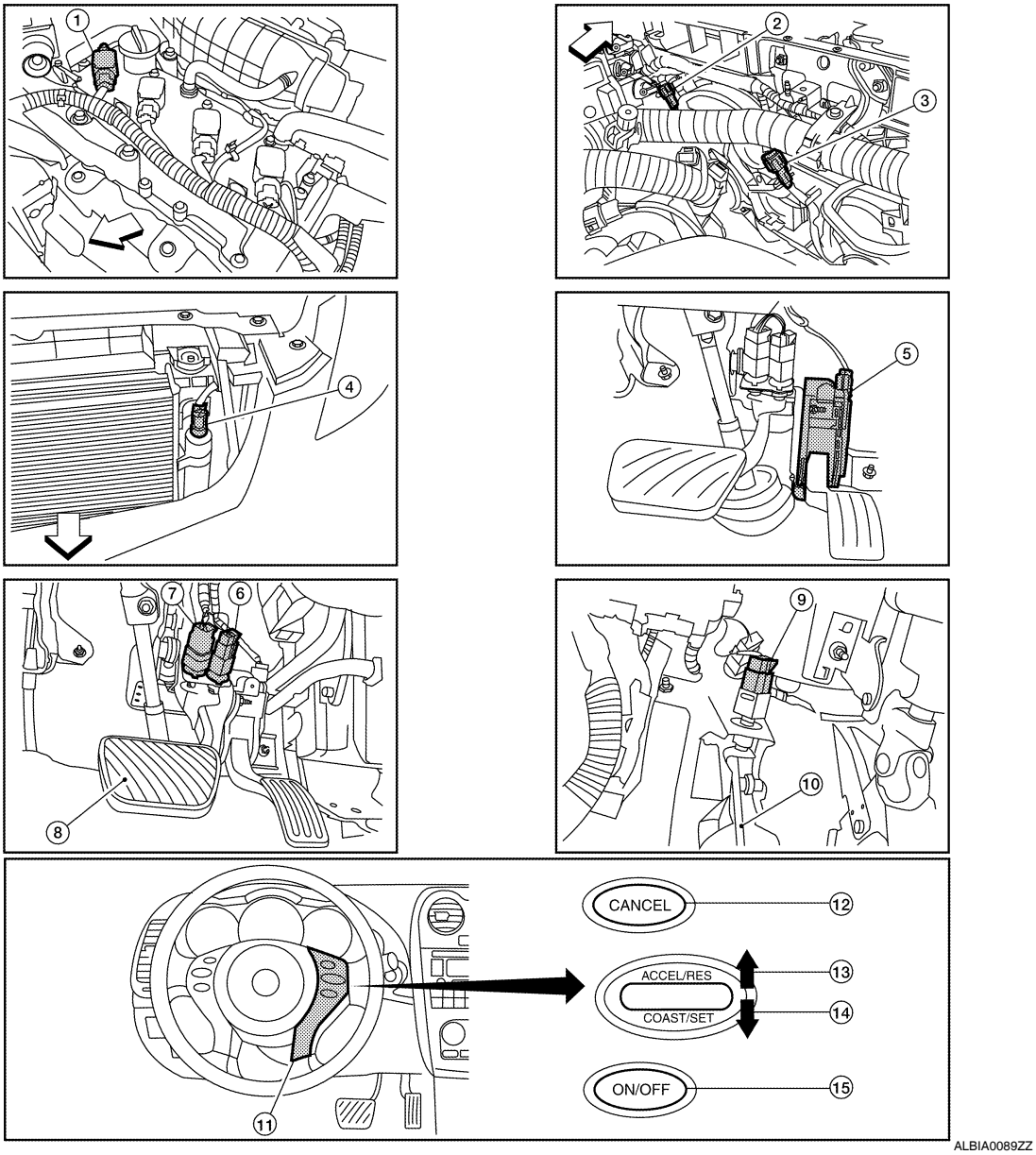

1. No.1 ignition coil
2. Cooling fan motor-1 harness connector
3. Cooling fan motor-2 harness connector
4. Refrigerant pressure sensor
5. Accelerator pedal position sensor
6. ASCD brake switch
7. Stop lamp switch
8. Brake pedal
9. ASCD clutch switch
10. Clutch pedal
11. ASCD steering switch
12. CANSEC switch
13. RESUME/ACCELERATE switch
14. SET/COAST switch
15. MAIN switch

⇦: Vehicle front

Component Description

INFOID:0000000004349158

Component	Reference
Accelerator pedal position sensor	EC-427, "Description"
Camshaft position sensor (PHASE)	EC-282, "Description"
Crankshaft position sensor (POS)	EC-278, "Description"
Engine coolant temperature sensor	EC-184, "Description"

Component	Reference
Power steering pressure sensor	EC-354, "Description"
Refrigerant pressure sensor	EC-482, "Description"
Vehicle speed sensor	EC-348, "Description"

AUTOMATIC SPEED CONTROL DEVICE (ASCD)

System Diagram

INFOID:0000000004349159

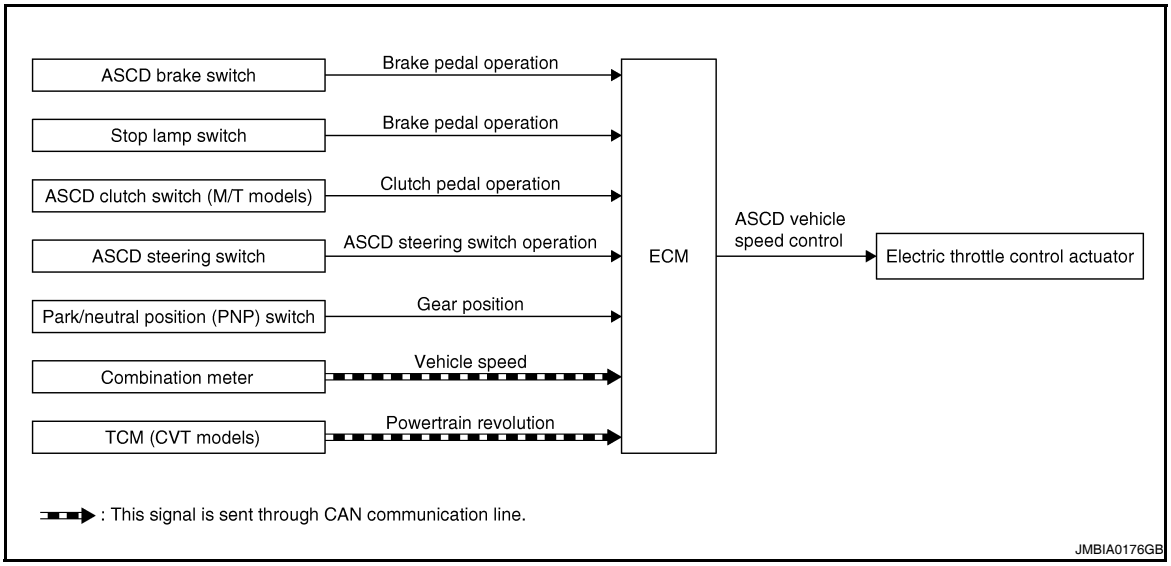

System Description

INFOID:0000000004349160

INPUT/OUTPUT SIGNAL CHART

Sensor	Input signal to ECM	ECM function	Actuator
ASCD brake switch	Brake pedal operation	ASCD vehicle speed control	Electric throttle control actuator
Stop lamp switch	Brake pedal operation		
ASCD clutch switch (M/T models)	Clutch pedal operation		
ASCD steering switch	ASCD steering switch operation		
Park/neutral position (PNP) switch	Gear position		
Combination meter	Vehicle speed*		
TCM (CVT models)	Powertrain revolution*		

*: This signal is sent to the ECM through CAN communication line

BASIC ASCD SYSTEM

Refer to Owner's Manual for ASCD operating instructions.

Automatic Speed Control Device (ASCD) allows a driver to keep vehicle at predetermined constant speed without depressing accelerator pedal. Driver can set vehicle speed in advance between approximately 40 km/h (25 MPH) and 144 km/h (89 MPH).

ECM controls throttle angle of electric throttle control actuator to regulate engine speed.

The ASCD operation status is indicated by two indicators (CRUISE and SET on the information display) on the combination meter. If any malfunction occurs in ASCD system, SET indicator blinks and ASCD control is deactivated.

NOTE:

Always drive vehicle in safe manner according to traffic conditions and obey all traffic laws.

SET OPERATION

Press MAIN switch. (CRUISE is indicated on the information display.)

When vehicle speed reaches a desired speed between approximately 40 km/h (25 MPH) and 144 km/h (89 MPH), press SET/COAST switch. (Then SET is indicated on the information display.)

ACCELERATE OPERATION

If the RESUME/ACCELERATE switch is pressed during cruise control driving, increase the vehicle speed until the switch is released or vehicle speed reaches maximum speed controlled by the system.

And then ASCD will keep the new set speed.

CANCEL OPERATION

When any of following conditions exist, cruise operation will be canceled.

- CANCEL switch is pressed
- More than 2 switches at ASCD steering switch are pressed at the same time (Set speed will be cleared)
- Brake pedal is depressed
- Clutch pedal is depressed or gear position is changed to neutral position. (M/T models)
- Selector lever is changed to N, P, R position (CVT models)
- Vehicle speed decreased to 13 km/h (8 MPH) lower than the set speed
- TCS system is operated

When the ECM detects any of the following conditions, the ECM will cancel the cruise operation and inform the driver by blinking indicators.

- Engine coolant temperature is slightly higher than the normal operating temperature, CRUISE indicator may blink slowly.
  When the engine coolant temperature decreases to the normal operating temperature, CRUISE indicator will stop blinking and the cruise operation will be able to work by pressing SET/COAST switch or RESUME/ACCELERATE switch.
- Malfunction for some self-diagnoses regarding ASCD control: SET indicator will blink quickly.

If MAIN switch is turned to OFF during ASCD is activated, all of ASCD operations will be canceled and vehicle speed memory will be erased.

COAST OPERATION

When the SET/COAST switch is pressed during cruise control driving, decrease vehicle set speed until the switch is released. And then ASCD will keep the new set speed.

RESUME OPERATION

When the RESUME/ACCELERATE switch is pressed after cancel operation other than pressing MAIN switch is performed, vehicle speed will return to last set speed. To resume vehicle set speed, vehicle condition must meet following conditions.

- Brake pedal is released
- Clutch pedal is released (M/T models)
- Selector lever is in other than P and N positions (CVT models)
- Vehicle speed is greater than 40 km/h (25 MPH) and less than 144 km/h (89 MPH)

Component Parts Location

INFOID:0000000004349161

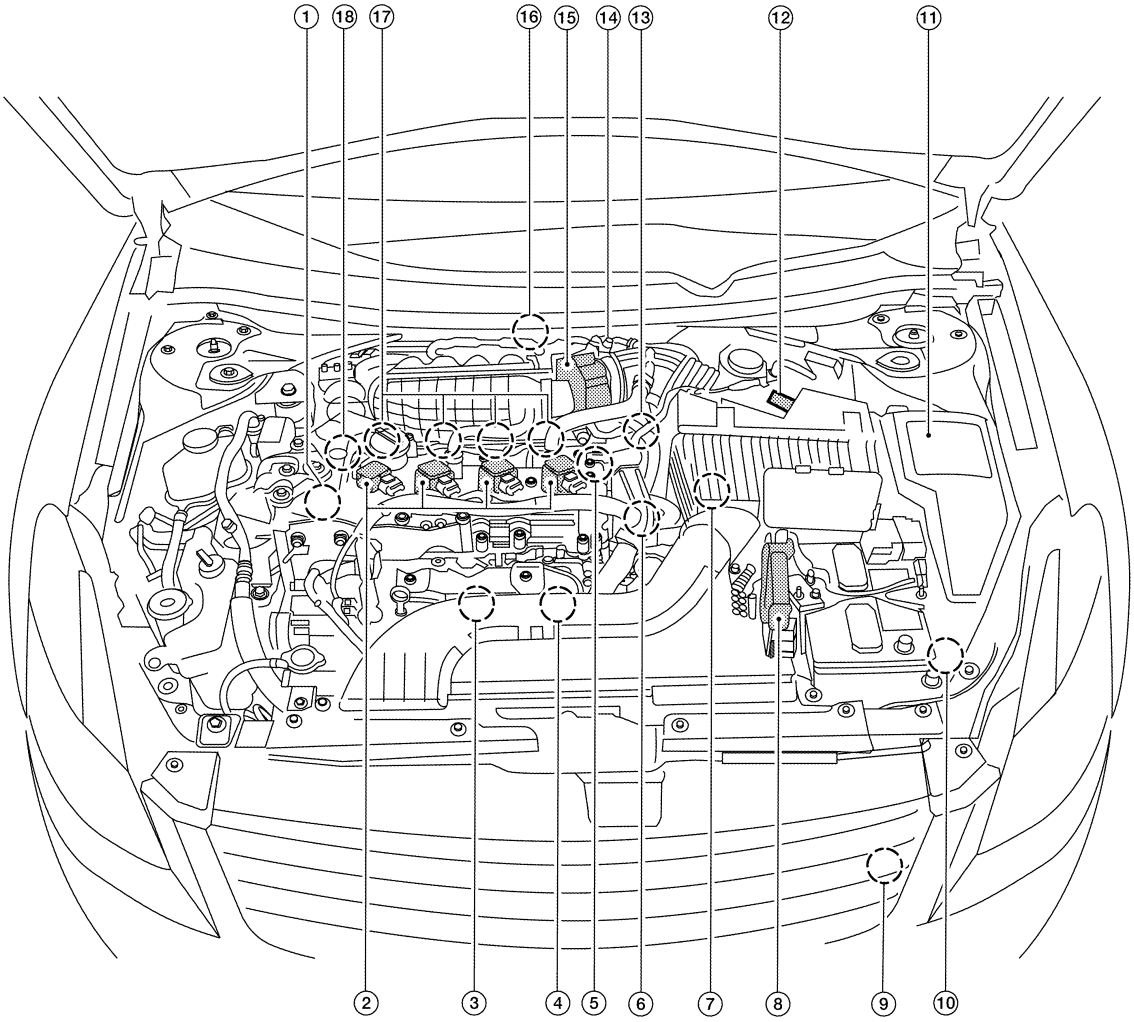

ALBIA0046ZZ

1. Intake valve timing control solenoid valve
2. Ignition coil (with power transistor) and spark plug
3. Knock sensor, Crankshaft position sensor (POS)
4. Air fuel ratio (A/F) sensor 1
5. Camshaft position sensor (PHASE)
6. Engine coolant temperature sensor
7. Park/neutral position (PNP) switch
8. ECM
9. Refrigerant pressure sensor
10. Battery current sensor
11. IPDM E/R
12. Mass air flow sensor (with intake temperature sensor)
13. Tumble control valve actuator
14. EVAP service port
15. Electric throttle control actuator (with built in throttle position sensor and throttle control motor)
16. EVAP canister purge volume control solenoid valve
17. Fuel injector
18. Power steering pressure sensor

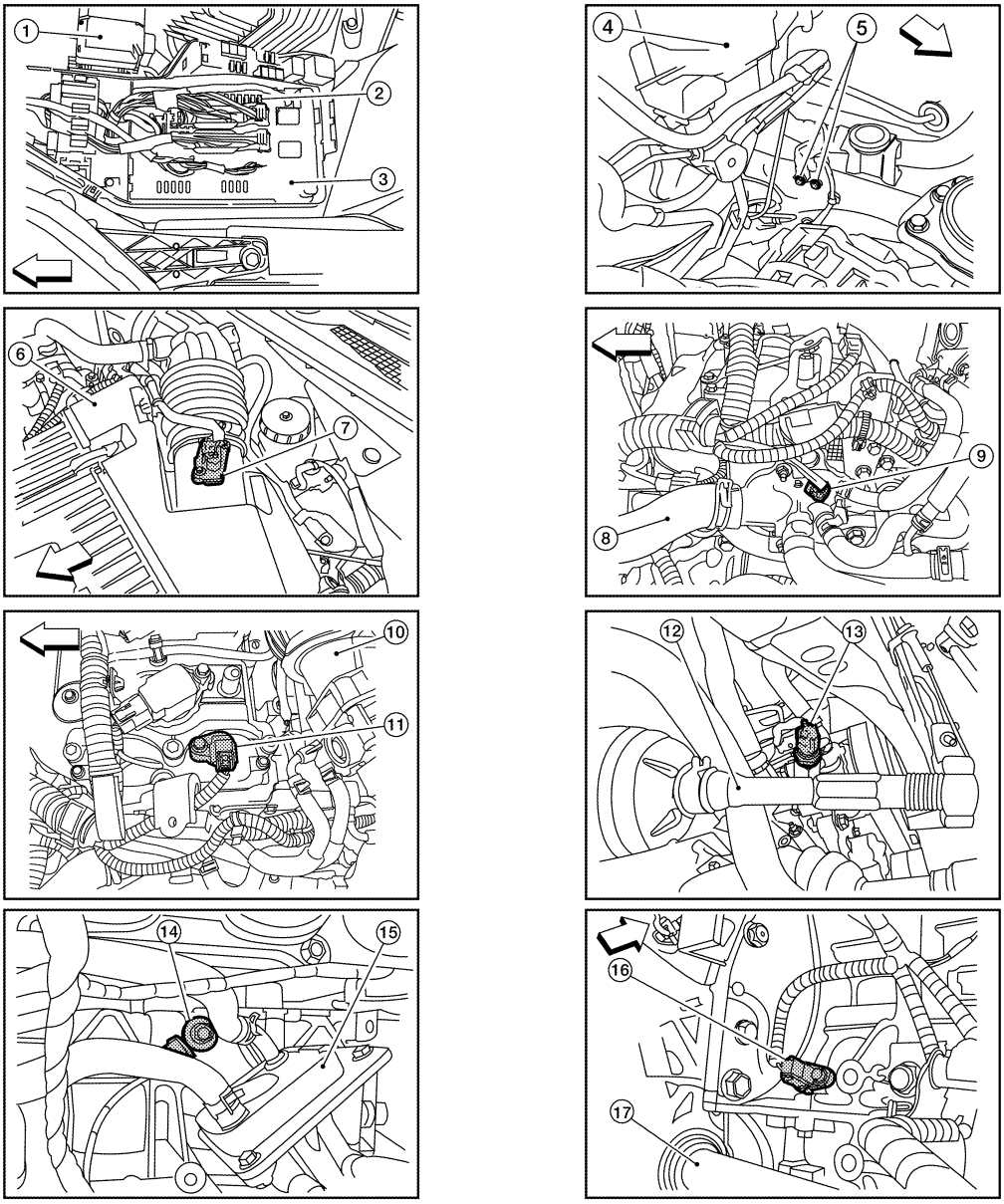

ALBIA0091ZZ

1. Battery	2. Fuel pump fuse (15A)	3. IPDM E/R
4. Brake master cylinder	5. Engine ground	6. Air cleaner assembly
7. Mass air flow sensor (with intake air temperature sensor)	8. Radiator hose (upper)	9. Engine coolant temperature sensor
10. Intake air duct	11. Camshaft position sensor (PHASE)	12. Tie rod (RH)
13. Power steering pressure sensor	14. Knock sensor	15. Engine oil cooler
16. Crankshaft position sensor (POS)	17. Drive shaft (RH)	

⇦: Vehicle front

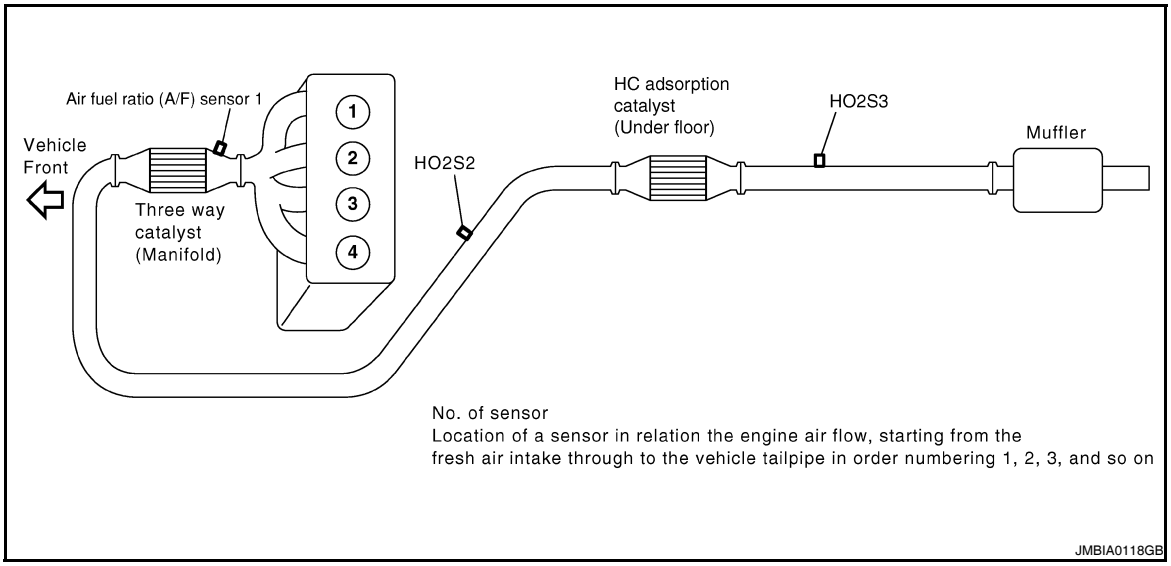

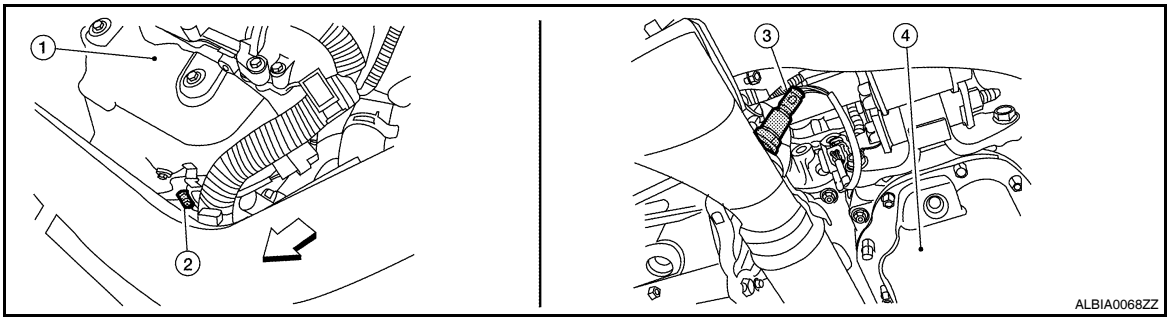

1. Exhaust manifold cover
2. Air fuel ratio (A/F) sensor 1
3. Heated oxygen sensor 2 (This illustration is a view from under vehicle.)
4. Engine oil pan

⇦: Vehicle front

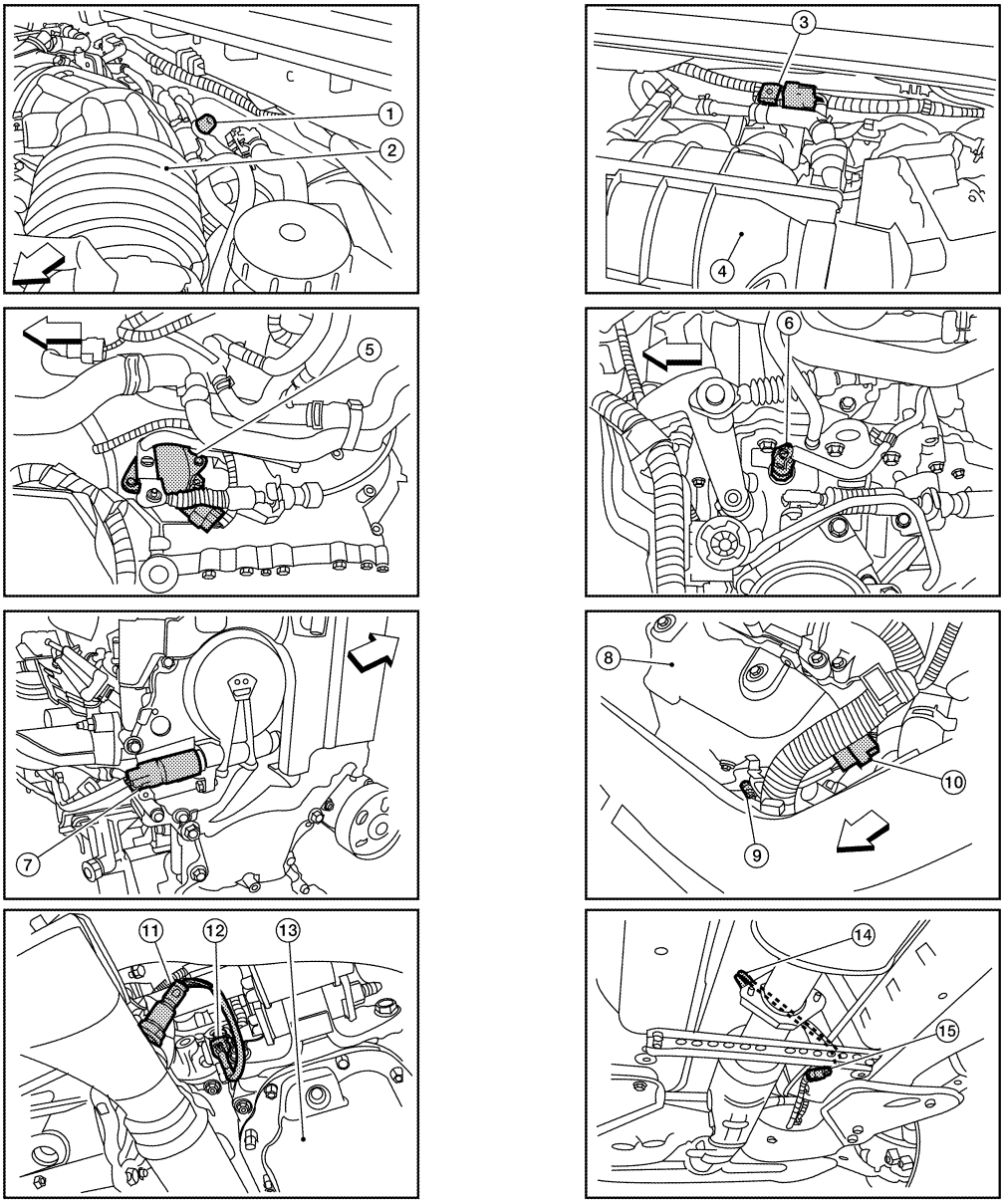

ALBIA0092ZZ

1. EVAP service port	2. Intake air duct	3. EVAP canister purge volume control solenoid valve
4. Intake manifold collector	5. Park/neutral position (PNP) switch (CVT) (This illustration is view with air cleaner assembly removed.)	6. Park/neutral position (PNP) switch (M/T) (This illustration is view with air cleaner assembly removed.)
7. Intake valve timing control solenoid valve (This illustration is view with engine removed.)	8. Exhaust manifold cover	9. Air fuel ratio (A/F) sensor 1
10. Air fuel ratio (A/F) sensor 1 harness connector	11. Heated oxygen sensor 2 (This illustration is view from under vehicle.)	12. Heated oxygen sensor 2 harness connector (This illustration is view from under vehicle.)
13. Engine oil pan	14. Heated oxygen sensor 3 (This illustration is view form under vehicle.)	15. Heated oxygen sensor 3 harness connector (This illustration is view from under vehicle.)

⇦: Vehicle front

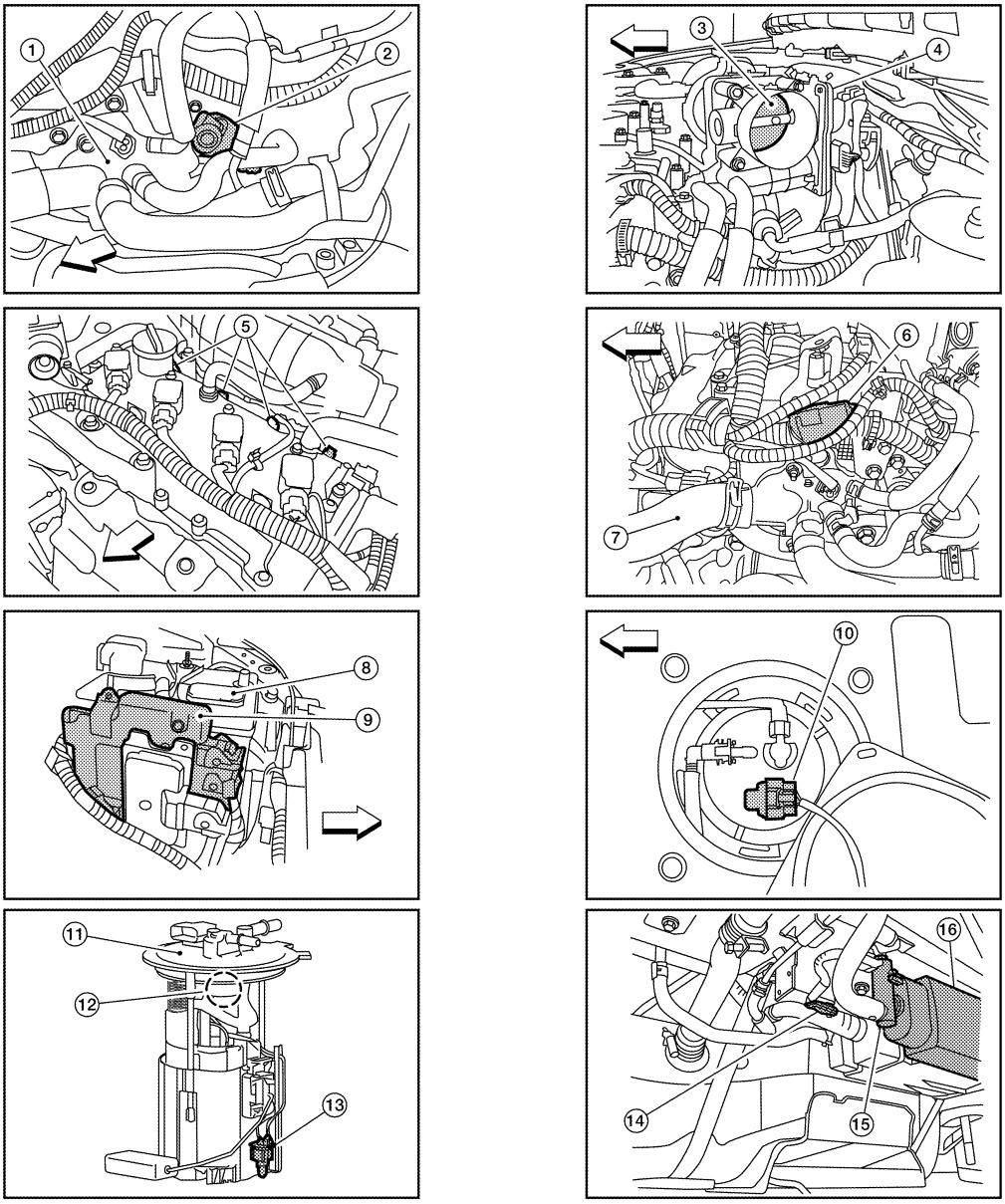

ALBIA0093ZZ

1. Thermostat housing
2. Tumble control valve actuator
3. Throttle valve (This illustration is view with intake air duct removed.)
4. Electric throttle control actuator
5. Fuel injector harness connector
6. Condenser-2
7. Radiator hose (upper)
8. Battery
9. ECM
10. Fuel level sensor unit and fuel pump harness connector (This illustration is view with rear seat cushion and inspection hole cover removed.)
11. Fuel level sensor unit and fuel pump assembly
12. Fuel pressure regulator
13. Fuel tank temperature sensor
14. EVAP control system pressure sensor (This illustration is view with rear suspension member removed.)
15. EVAP canister vent control valve (This illustration is view with rear suspension member removed.)
16. EVAP canister (This illustration is view with rear suspension member removed.)

⇦ : Vehicle front

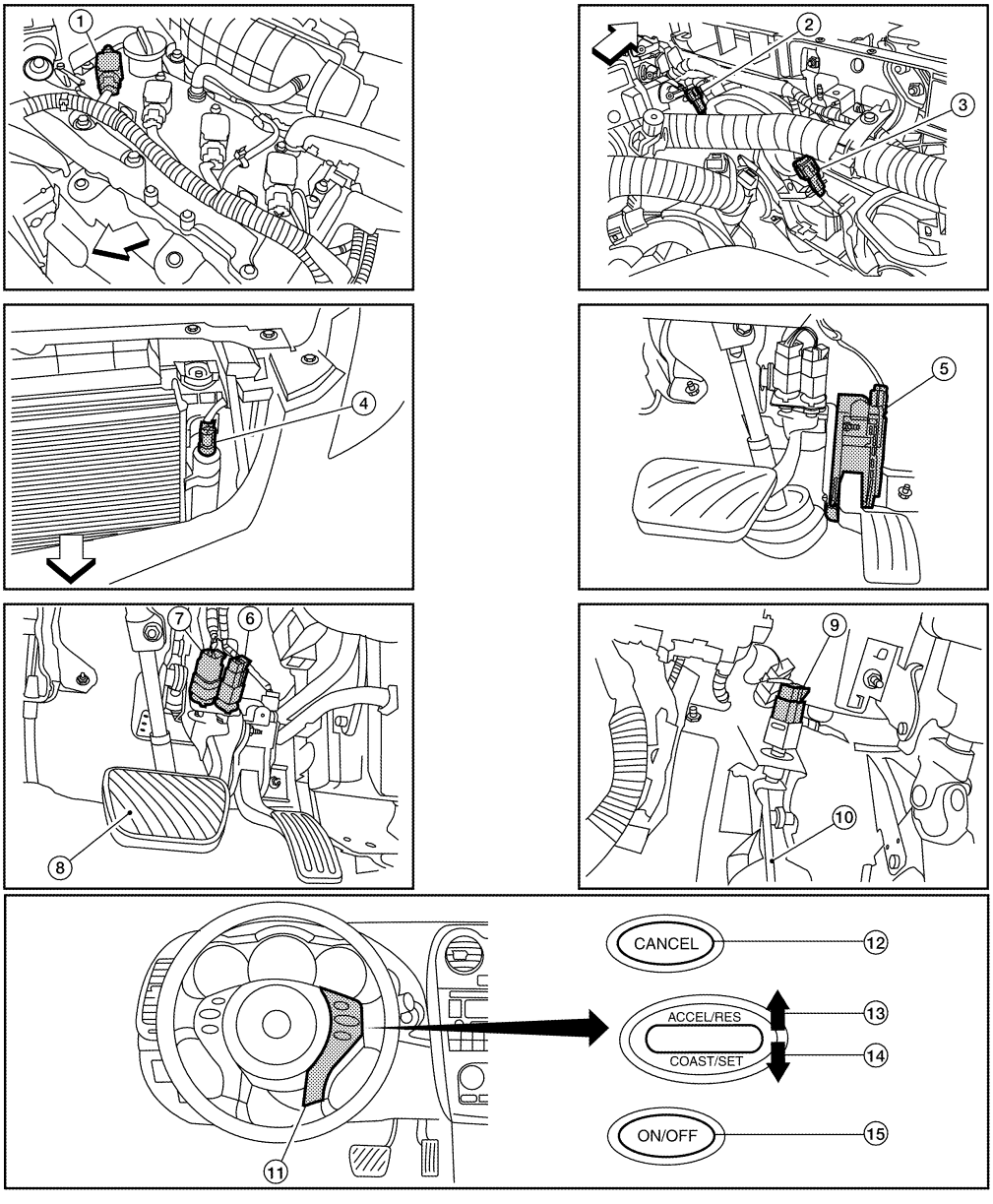

1. No.1 ignition coil
2. Cooling fan motor-1 harness connector
3. Cooling fan motor-2 harness connector
4. Refrigerant pressure sensor
5. Accelerator pedal position sensor
6. ASCD brake switch
7. Stop lamp switch
8. Brake pedal
9. ASCD clutch switch
10. Clutch pedal
11. ASCD steering switch
12. CANSEC switch
13. RESUME/ACCELERATE switch
14. SET/COAST switch
15. MAIN switch

⇦: Vehicle front

Component Description

INFOID:0000000004349162

Component	Reference
ASCD steering switch	EC-391, "Description"
ASCD clutch switch	EC-394, "Description"
ASCD brake switch	EC-394, "Description"
Stop lamp switch	EC-406, "Description"

Component	Reference
Electric throttle control actuator	EC-425, "Description"
ASCD indicator	EC-455, "Description"

CAN COMMUNICATION

System Description

INFOID:0000000004349163

CAN (Controller Area Network) is a serial communication line for real time application. It is an on-vehicle multiplex communication line with high data communication speed and excellent error detection ability. Many electronic control units are equipped onto a vehicle, and each control unit shares information and links with other control units during operation (not independent). In CAN communication, control units are connected with 2 communication lines (CAN H line, CAN L line) allowing a high rate of information transmission with less wiring. Each control unit transmits/receives data but selectively reads required data only.
Refer to LAN-25, "CAN Communication Signal Chart", about CAN communication for detail.

COOLING FAN CONTROL

System Diagram

INFOID:0000000004349164

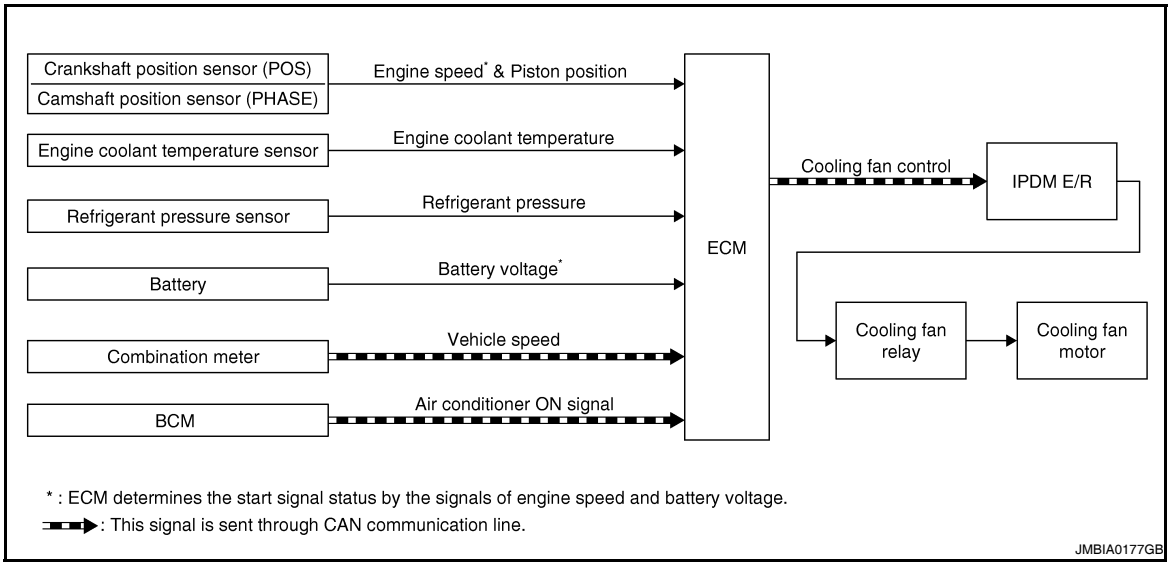

System Description

INFOID:0000000004349165

INPUT/OUTPUT SIGNAL CHART

Sensor	Input signal to ECM	ECM function	Actuator
Crankshaft position sensor (POS) Camshaft position sensor (PHASE)	Engine speed*1	Cooling fan control	IPDM E/R ↓ Cooling fan relay ↓ Cooling fan motor
Battery	Battery voltage*1		
Combination meter	Vehicle speed*2		
Engine coolant temperature sensor	Engine coolant temperature		
BCM	Air conditioner ON signal*2		
Refrigerant pressure sensor	Refrigerant pressure		

*1: The ECM determines the start signal status by the signals of engine speed and battery voltage.

*2: This signal is sent to ECM through CAN communication line.

SYSTEM DESCRIPTION

ECM controls cooling fan speed corresponding to vehicle speed, engine coolant temperature, refrigerant pressure, air conditioner ON signal. Then control system has 4-step control [HIGH/MID/LOW/OFF].

Cooling Fan Operation

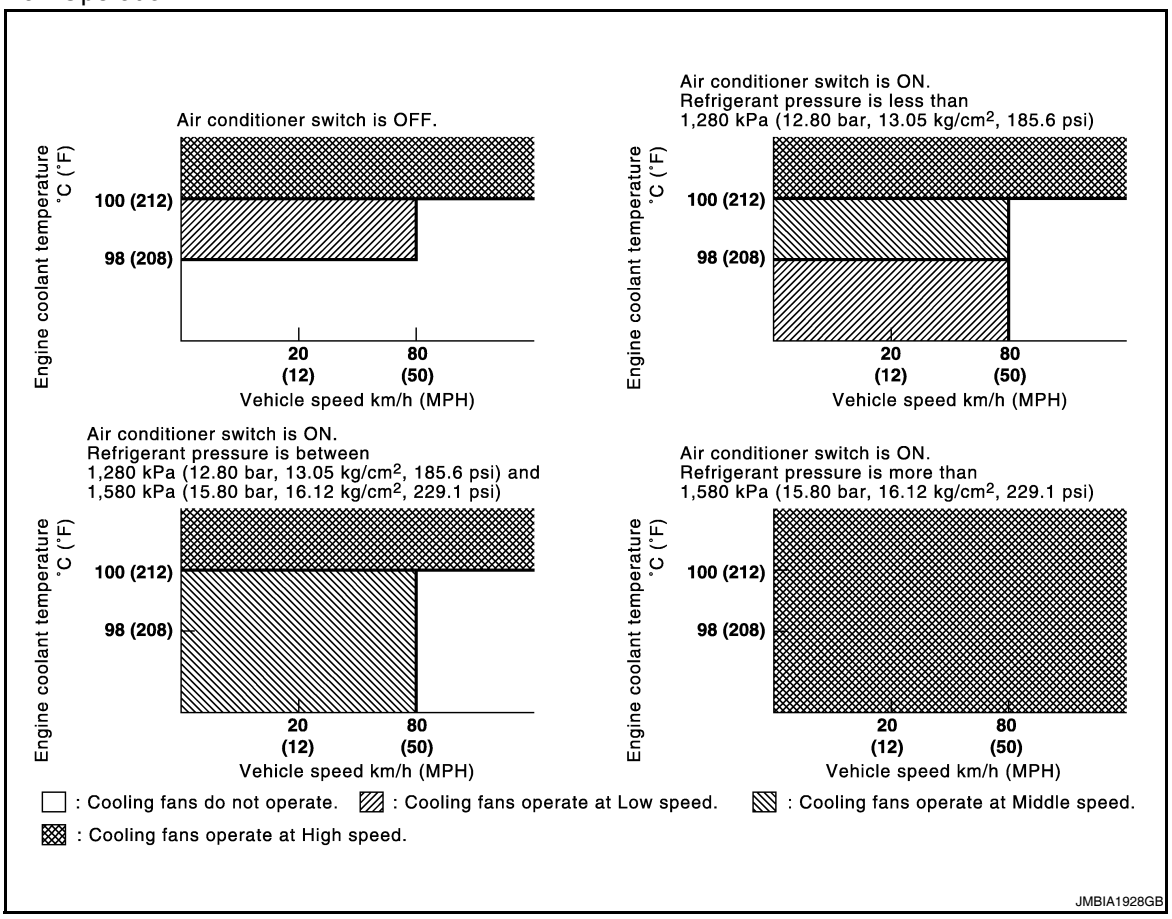

Cooling Fan Relay Operation

The ECM controls cooling fan relays through CAN communication line.

Cooling fan speed	Cooling fan relay		
	1	2	3
Stop (OFF)	OFF	OFF	OFF
Low (LOW)	ON	OFF	OFF
Middle (MID)	OFF	ON	OFF
High (HI)	OFF	ON	ON

Component Parts Location

INFOID:0000000004349166

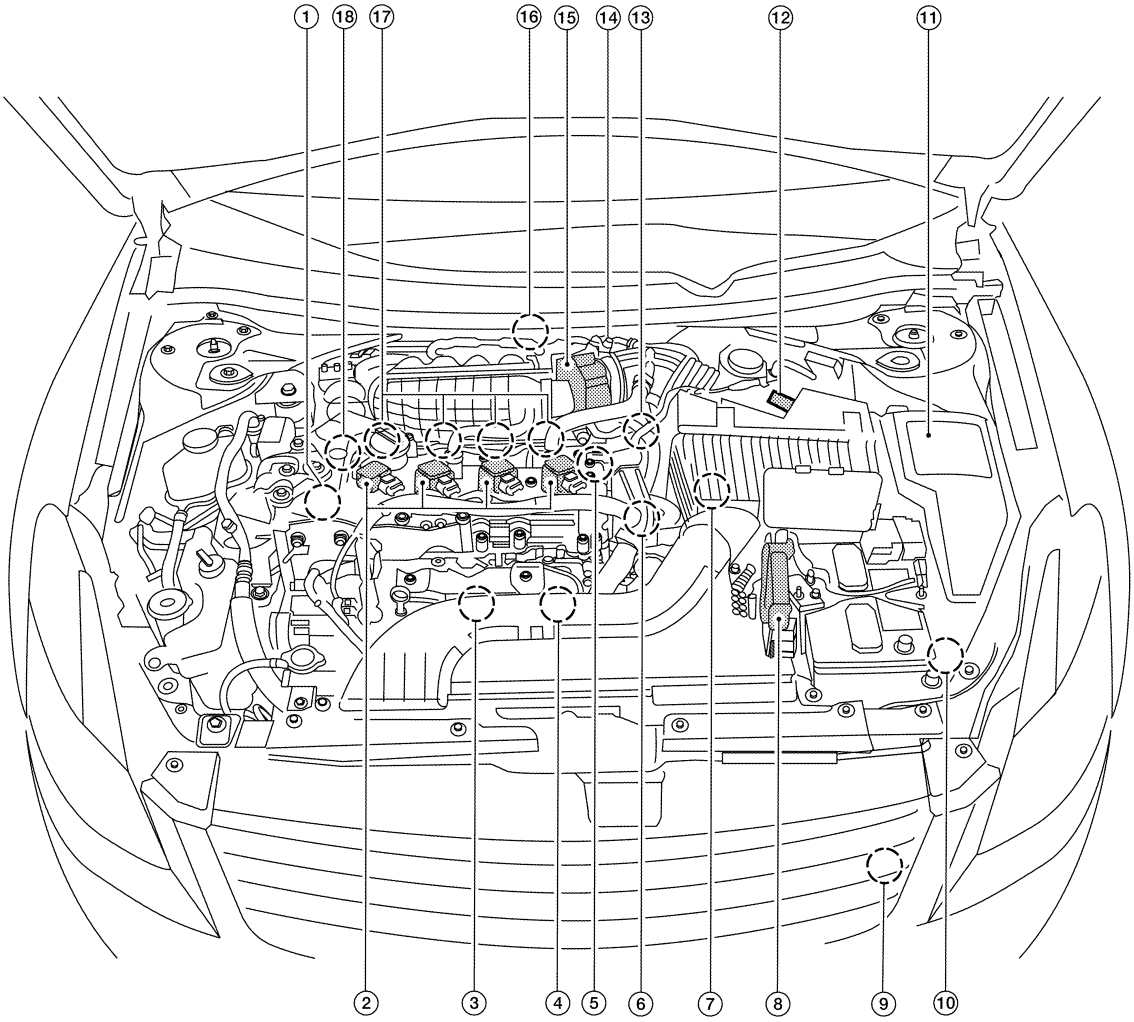

ALBIA0046ZZ

1. Intake valve timing control solenoid valve	2. Ignition coil (with power transistor) and spark plug	3. Knock sensor, Crankshaft position sensor (POS)
4. Air fuel ratio (A/F) sensor 1	5. Camshaft position sensor (PHASE)	6. Engine coolant temperature sensor
7. Park/neutral position (PNP) switch	8. ECM	9. Refrigerant pressure sensor
10. Battery current sensor	11. IPDM E/R	12. Mass air flow sensor (with intake temperature sensor)
13. Tumble control valve actuator	14. EVAP service port	15. Electric throttle control actuator (with built in throttle position sensor and throttle control motor)
16. EVAP canister purge volume control solenoid valve	17. Fuel injector	18. Power steering pressure sensor

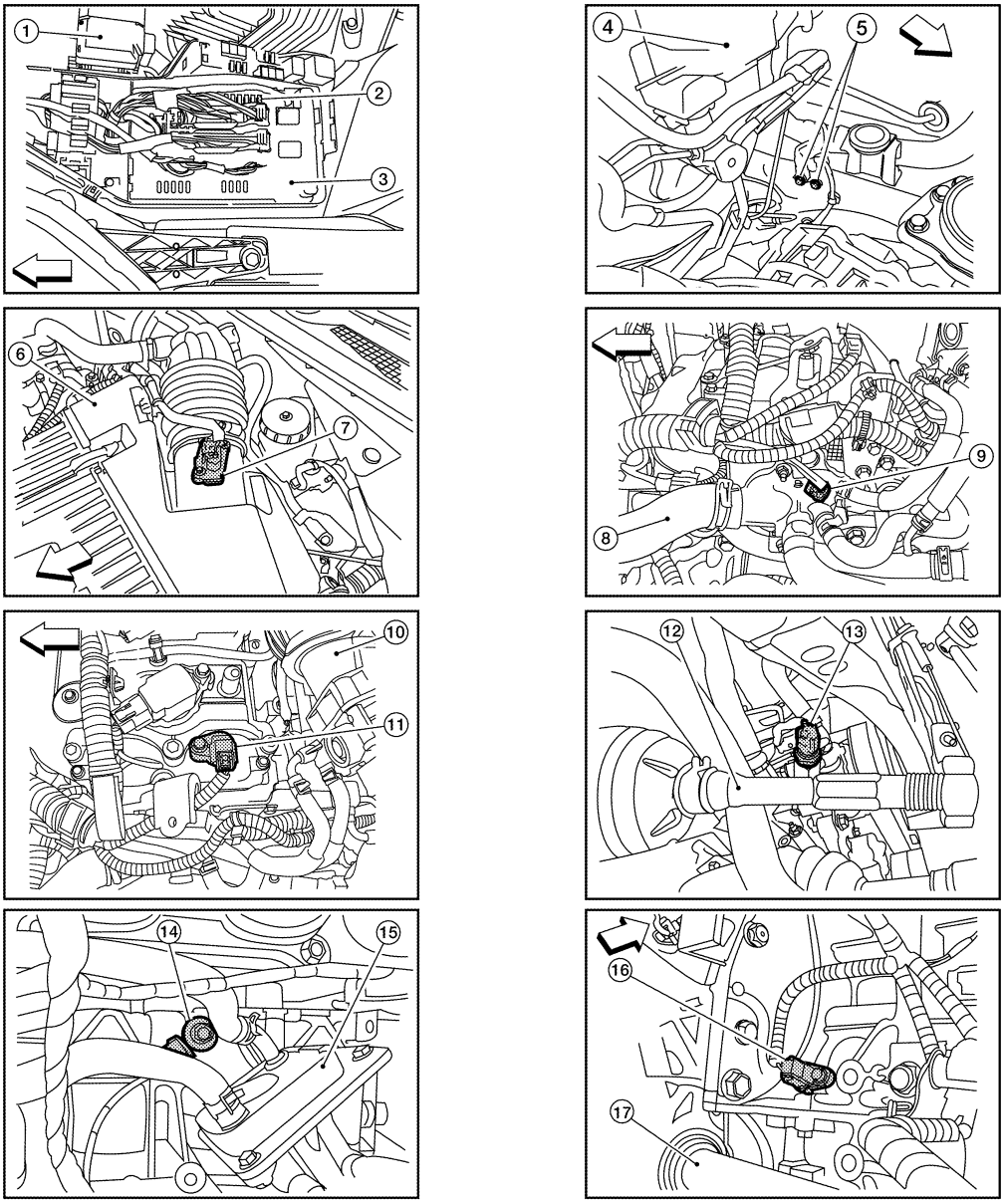

ALBIA0091ZZ

1. Battery
2. Fuel pump fuse (15A)
3. IPDM E/R
4. Brake master cylinder
5. Engine ground
6. Air cleaner assembly
7. Mass air flow sensor (with intake air temperature sensor)
8. Radiator hose (upper)
9. Engine coolant temperature sensor
10. Intake air duct
11. Camshaft position sensor (PHASE)
12. Tie rod (RH)
13. Power steering pressure sensor
14. Knock sensor
15. Engine oil cooler
16. Crankshaft position sensor (POS)
17. Drive shaft (RH)

⇦: Vehicle front

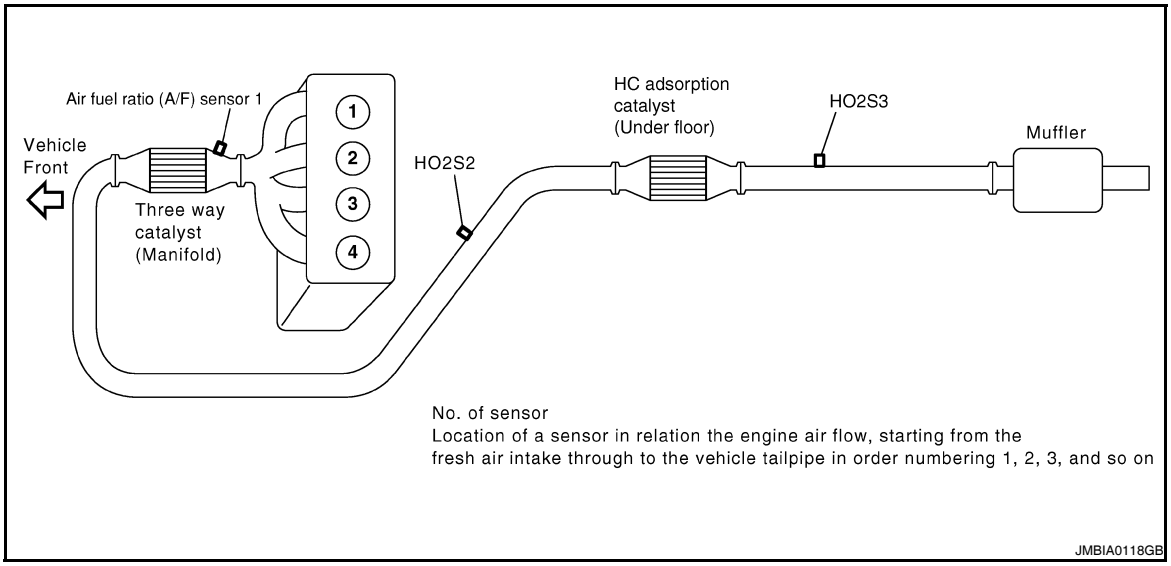

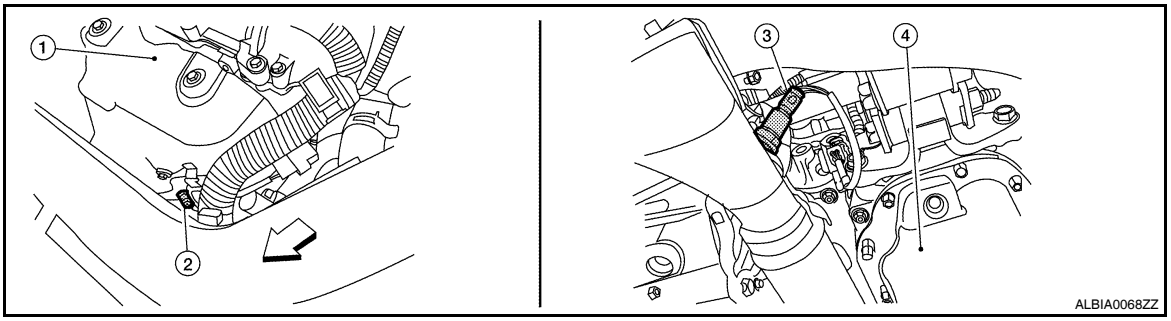

1. Exhaust manifold cover
2. Air fuel ratio (A/F) sensor 1
3. Heated oxygen sensor 2 (This illustration is a view from under vehicle.)
4. Engine oil pan

⇦: Vehicle front

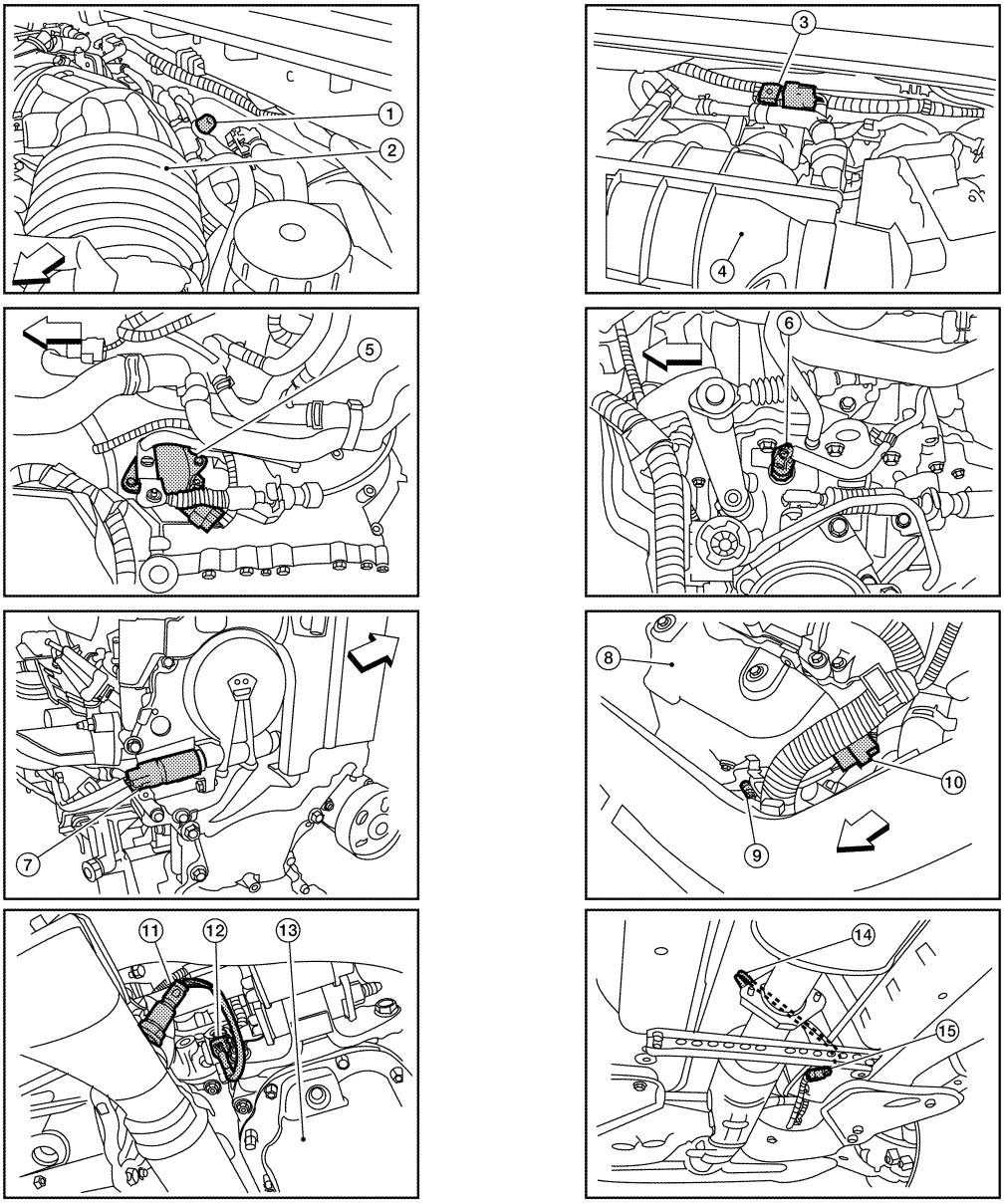

ALBIA0092ZZ

1. EVAP service port	2. Intake air duct	3. EVAP canister purge volume control solenoid valve
4. Intake manifold collector	5. Park/neutral position (PNP) switch (CVT) (This illustration is view with air cleaner assembly removed.)	6. Park/neutral position (PNP) switch (M/T) (This illustration is view with air cleaner assembly removed.)
7. Intake valve timing control solenoid valve (This illustration is view with engine removed.)	8. Exhaust manifold cover	9. Air fuel ratio (A/F) sensor 1
10. Air fuel ratio (A/F) sensor 1 harness connector	11. Heated oxygen sensor 2 (This illustration is view from under vehicle.)	12. Heated oxygen sensor 2 harness connector (This illustration is view from under vehicle.)
13. Engine oil pan	14. Heated oxygen sensor 3 (This illustration is view form under vehicle.)	15. Heated oxygen sensor 3 harness connector (This illustration is view from under vehicle.)

⇦: Vehicle front

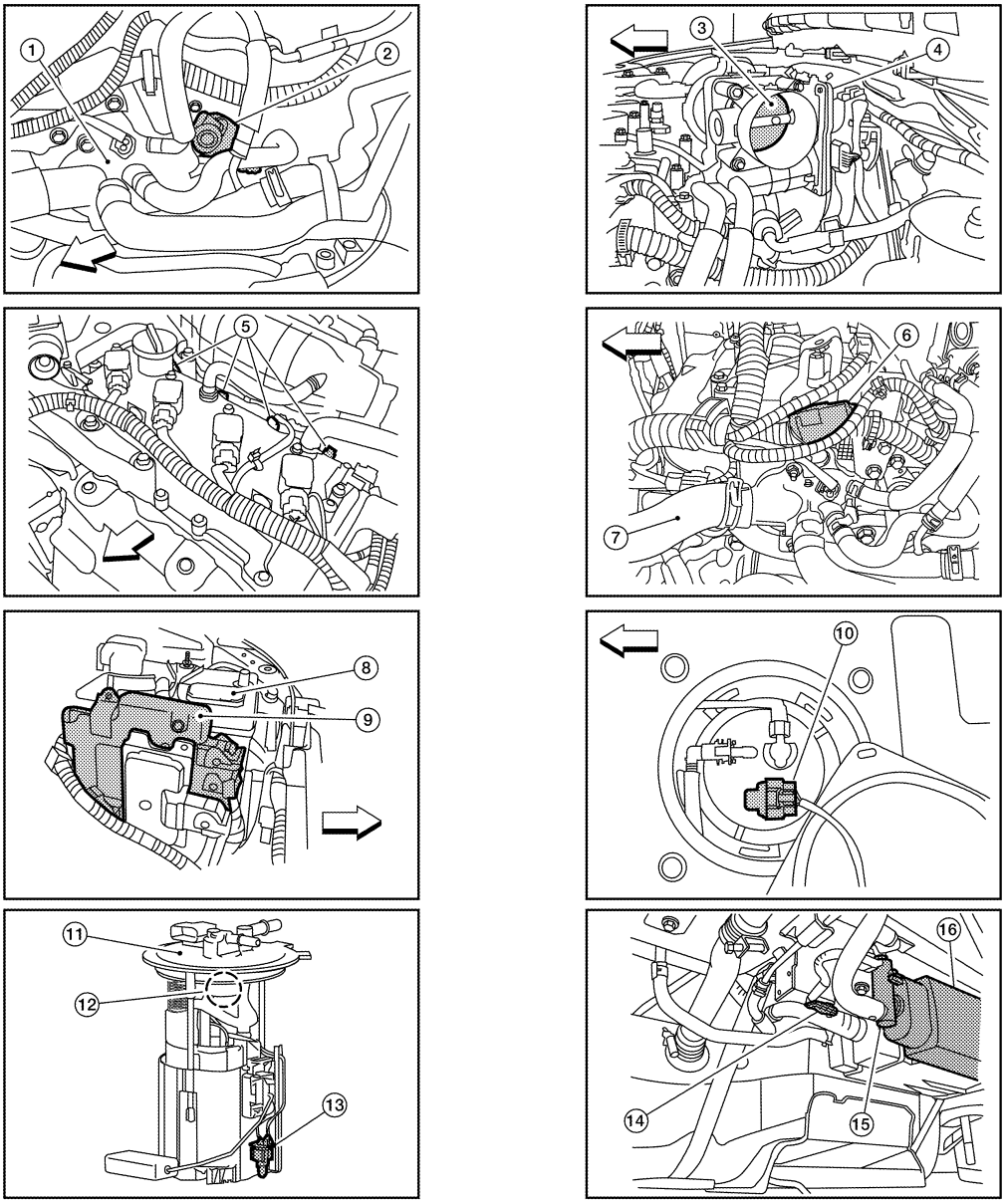

ALBIA0093ZZ

1. Thermostat housing
2. Tumble control valve actuator
3. Throttle valve (This illustration is view with intake air duct removed.)
4. Electric throttle control actuator
5. Fuel injector harness connector
6. Condenser-2
7. Radiator hose (upper)
8. Battery
9. ECM
10. Fuel level sensor unit and fuel pump harness connector (This illustration is view with rear seat cushion and inspection hole cover removed.)
11. Fuel level sensor unit and fuel pump assembly
12. Fuel pressure regulator
13. Fuel tank temperature sensor
14. EVAP control system pressure sensor (This illustration is view with rear suspension member removed.)
15. EVAP canister vent control valve (This illustration is view with rear suspension member removed.)
16. EVAP canister (This illustration is view with rear suspension member removed.)

⇦ : Vehicle front

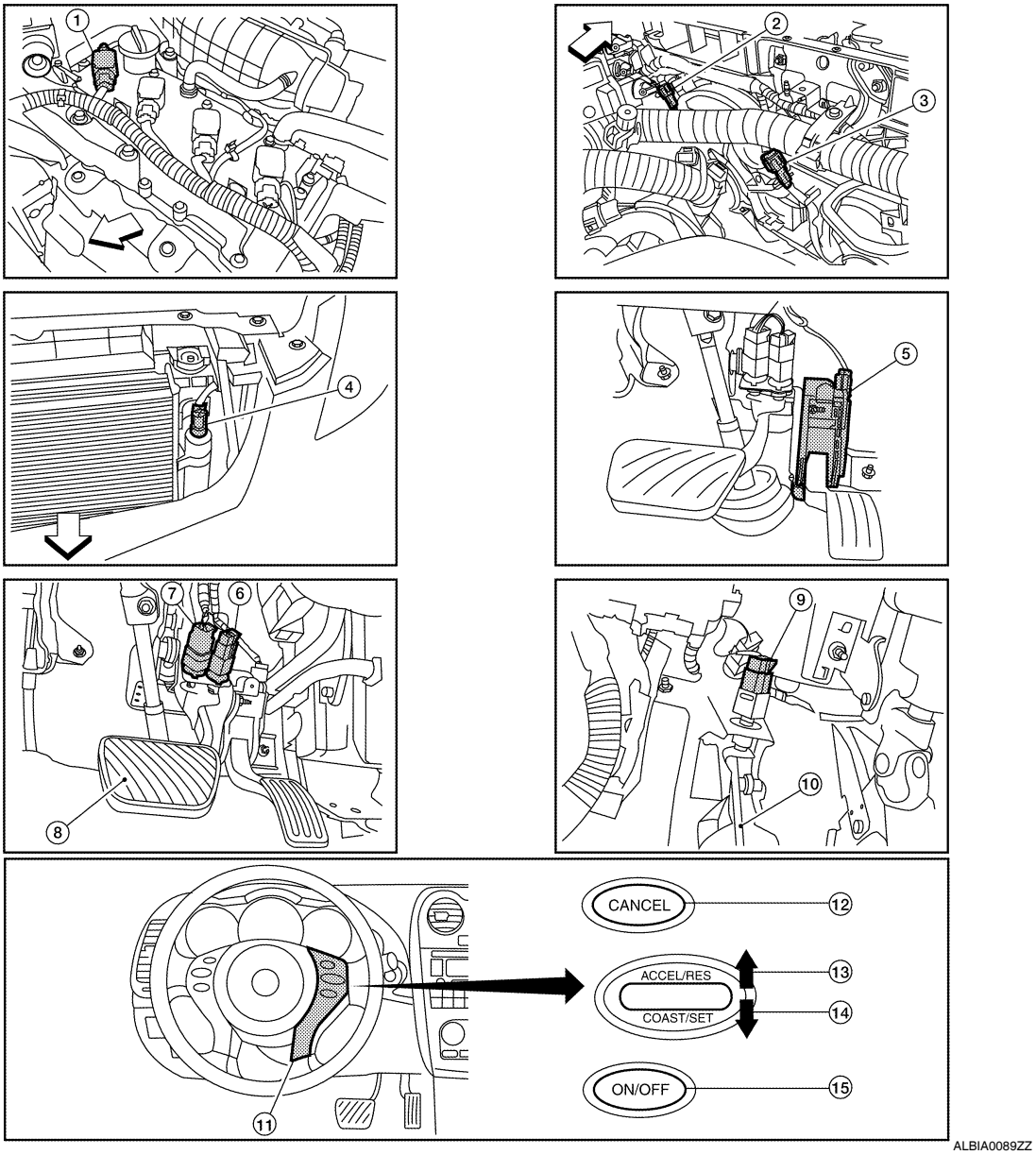

1. No.1 ignition coil	2. Cooling fan motor-1 harness connector	3. Cooling fan motor-2 harness connector
4. Refrigerant pressure sensor	5. Accelerator pedal position sensor	6. ASCD brake switch
7. Stop lamp switch	8. Brake pedal	9. ASCD clutch switch
10. Clutch pedal	11. ASCD steering switch	12. CANSEC switch
13. RESUME/ACCELERATE switch	14. SET/COAST switch	15. MAIN switch

⇦: Vehicle front

Component Description

INFOID:0000000004349167

Component	Reference
Camshaft position sensor (PHASE)	EC-282, "Description"
Crankshaft position sensor (POS)	EC-278, "Description"
Cooling fan motor	EC-77, "System Description"

Component	Reference
Engine coolant temperature sensor	EC-184, "Description"
Refrigerant pressure sensor	EC-482, "Description"

EVAPORATIVE EMISSION SYSTEM

System Diagram

INFOID:0000000004349168

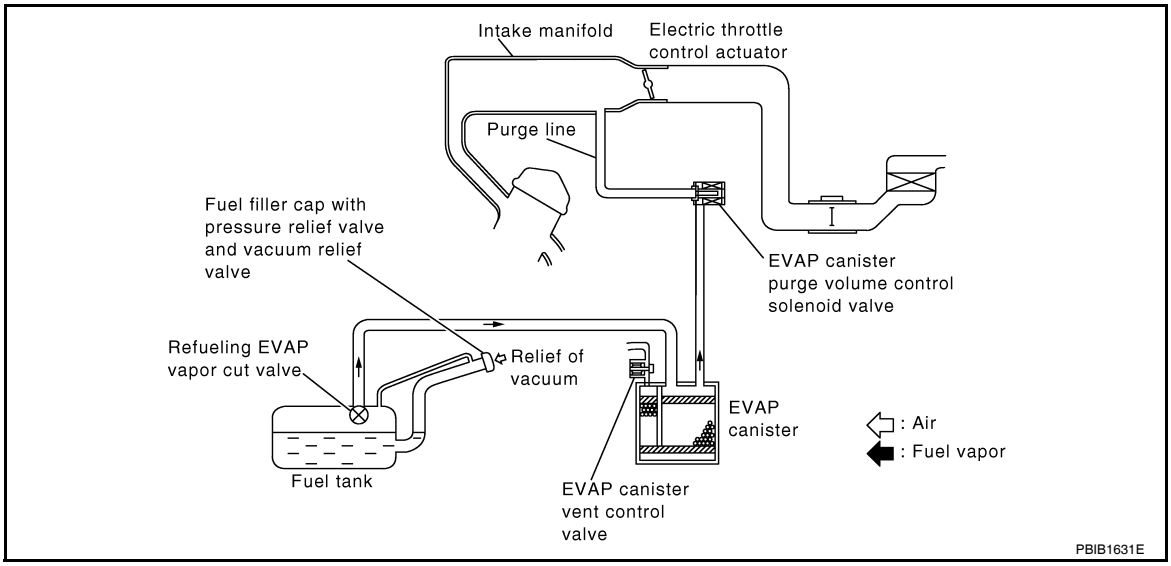

EVAPORATIVE EMISSION LINE DRAWING

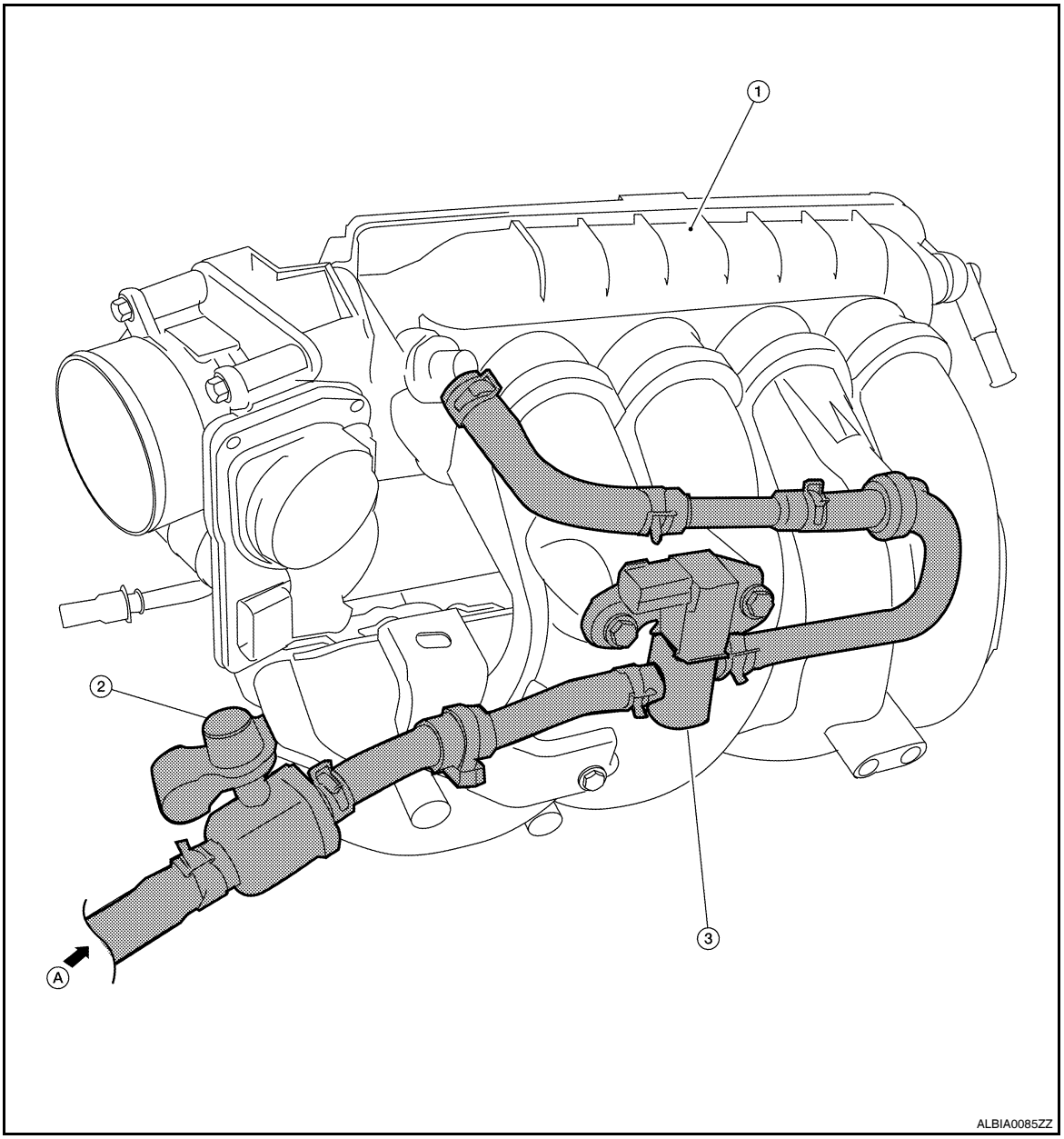

1. Intake manifold collector
2. EVAP service port
3. EVAP canister purge volume control solenoid valve

A. From next figure

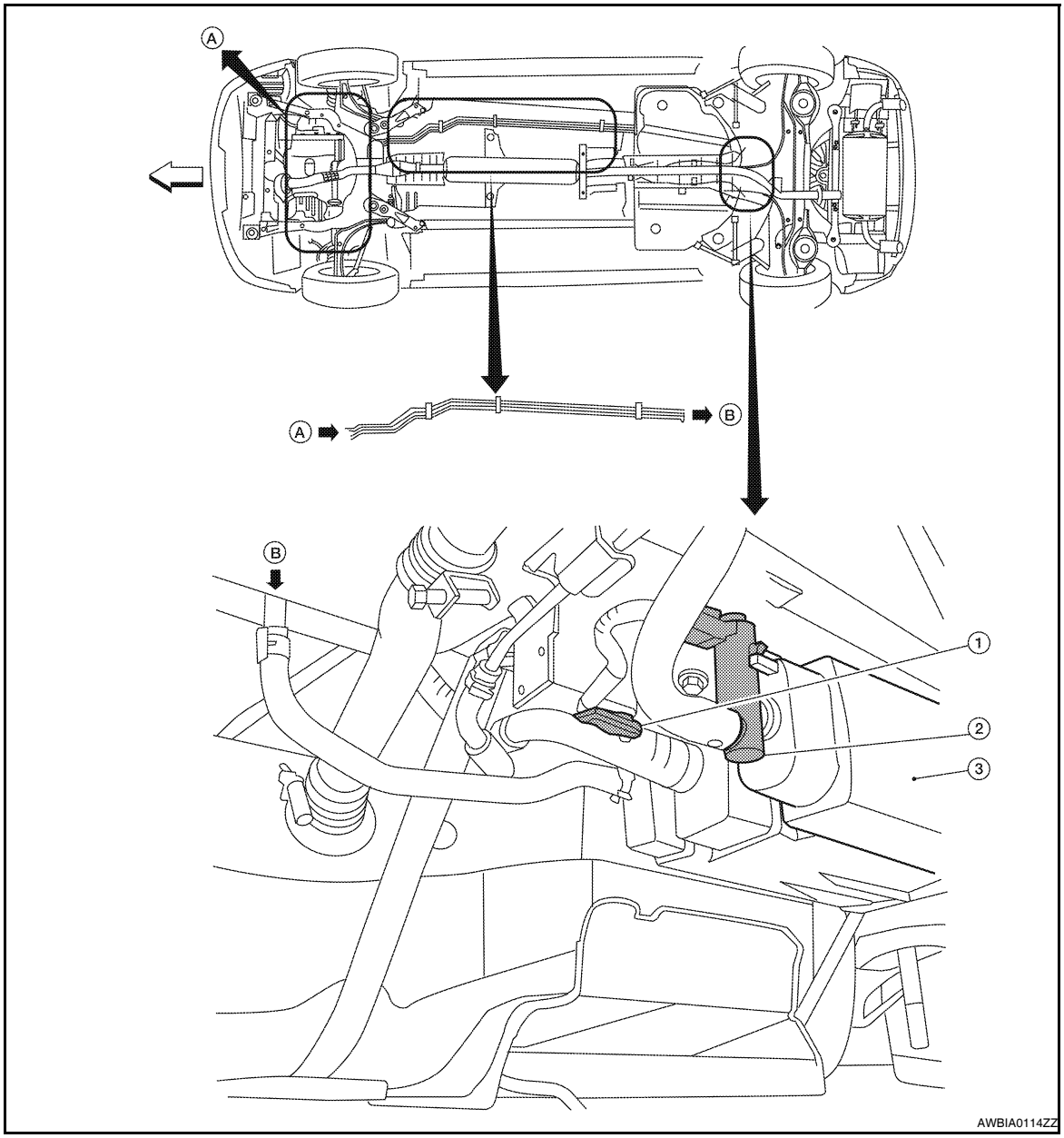

1. EVAP control system pressure sensor 2. EVAP canister vent control valve 3. EVAP canister

A. To previous figure

NOTE:
Do not use soapy water or any type of solvent while installing vacuum hose or purge hoses.

System Description

INFOID:0000000004349169

INPUT/OUTPUT SIGNAL CHART

Sensor	Input signal to ECM	ECM function	Actuator
Crankshaft position sensor (POS) Camshaft position sensor (PHASE)	Engine speed*1	EVAP canister purge flow control	EVAP canister purge volume control solenoid valve
Mass air flow sensor	Amount of intake air		
Engine coolant temperature sensor	Engine coolant temperature		
Battery	Battery voltage*1		
Throttle position sensor	Throttle position		
Accelerator pedal position sensor	Accelerator pedal position		
Air fuel ratio (A/F) sensor 1	Density of oxygen in exhaust gas (Mixture ratio feedback signal)		
Fuel tank temperature sensor	Fuel temperature in fuel tank		
EVAP control system pressure sensor	Pressure in purge line		
Combination meter	Vehicle speed*2		

*1: ECM determines the start signal status by the signals of engine speed and battery voltage.

*2: This signal is sent to the ECM through CAN communication line.

SYSTEM DESCRIPTION

The evaporative emission system is used to reduce hydrocarbons emitted into the atmosphere from the fuel system. This reduction of hydrocarbons is accomplished by activated charcoals in the EVAP canister.
The fuel vapor in the sealed fuel tank is led into the EVAP canister which contains activated carbon and the vapor is stored there when the engine is not operating or when refueling to the fuel tank.
The vapor in the EVAP canister is purged by the air through the purge line to the intake manifold when the engine is operating. EVAP canister purge volume control solenoid valve is controlled by ECM. When the engine operates, the flow rate of vapor controlled by EVAP canister purge volume control solenoid valve is proportionally regulated as the air flow increases.
EVAP canister purge volume control solenoid valve also shuts off the vapor purge line during decelerating.

Component Parts Location

INFOID:0000000004349170

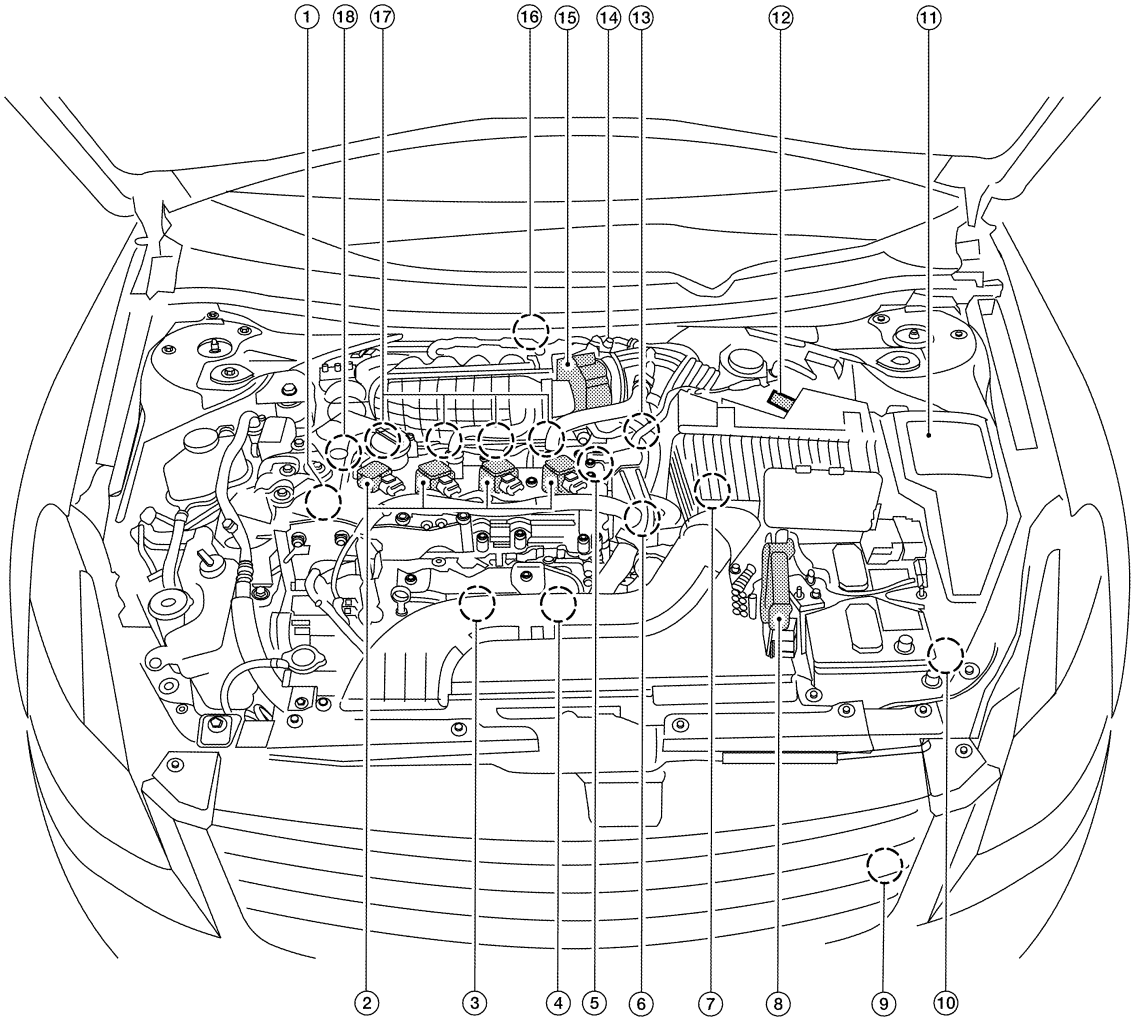

ALBIA0046ZZ

1. Intake valve timing control solenoid valve
2. Ignition coil (with power transistor) and spark plug
3. Knock sensor, Crankshaft position sensor (POS)
4. Air fuel ratio (A/F) sensor 1
5. Camshaft position sensor (PHASE)
6. Engine coolant temperature sensor
7. Park/neutral position (PNP) switch
8. ECM
9. Refrigerant pressure sensor
10. Battery current sensor
11. IPDM E/R
12. Mass air flow sensor (with intake temperature sensor)
13. Tumble control valve actuator
14. EVAP service port
15. Electric throttle control actuator (with built in throttle position sensor and throttle control motor)
16. EVAP canister purge volume control solenoid valve
17. Fuel injector
18. Power steering pressure sensor

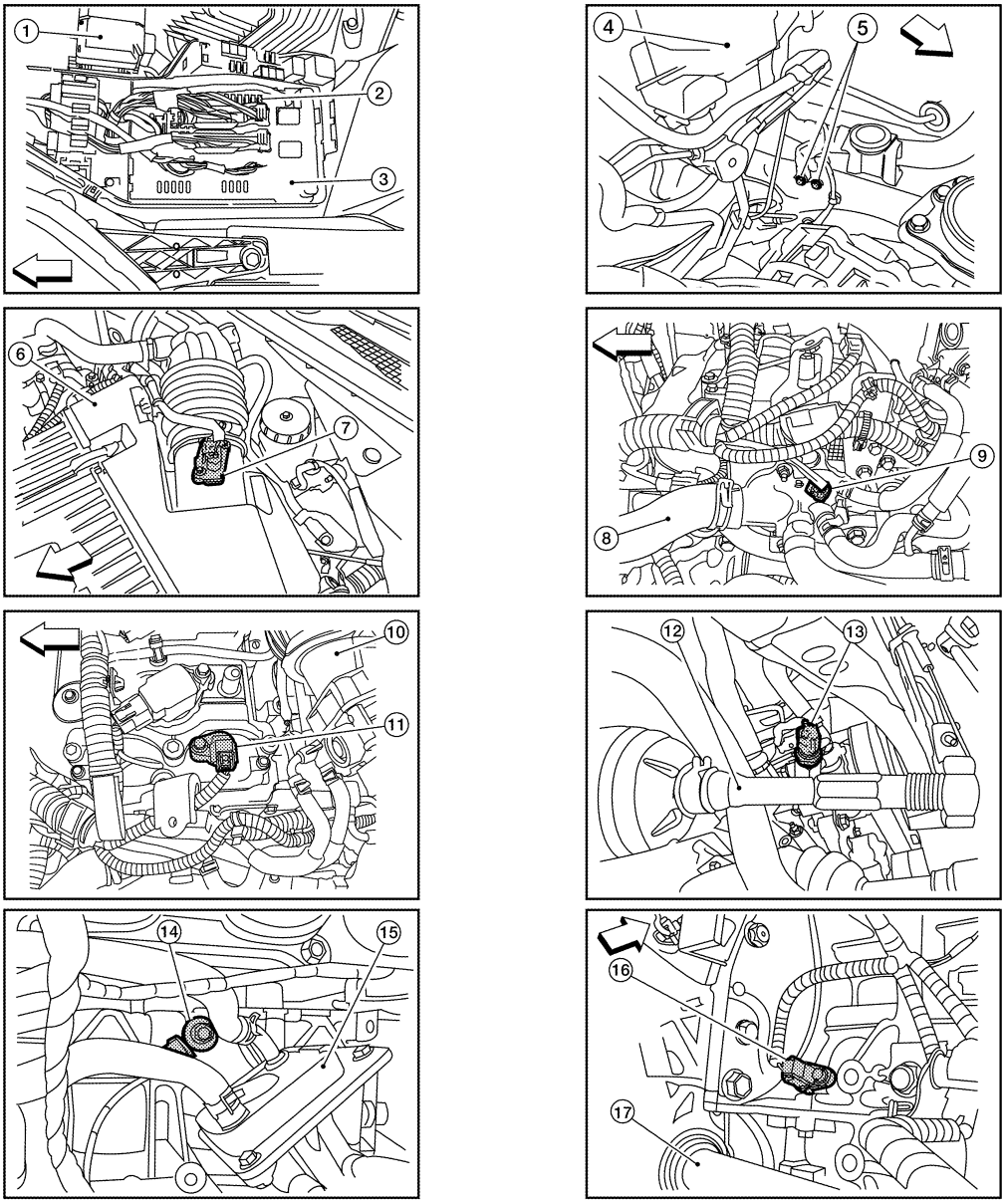

ALBIA0091ZZ

1. Battery
2. Fuel pump fuse (15A)
3. IPDM E/R
4. Brake master cylinder
5. Engine ground
6. Air cleaner assembly
7. Mass air flow sensor (with intake air temperature sensor)
8. Radiator hose (upper)
9. Engine coolant temperature sensor
10. Intake air duct
11. Camshaft position sensor (PHASE)
12. Tie rod (RH)
13. Power steering pressure sensor
14. Knock sensor
15. Engine oil cooler
16. Crankshaft position sensor (POS)
17. Drive shaft (RH)

⇦: Vehicle front

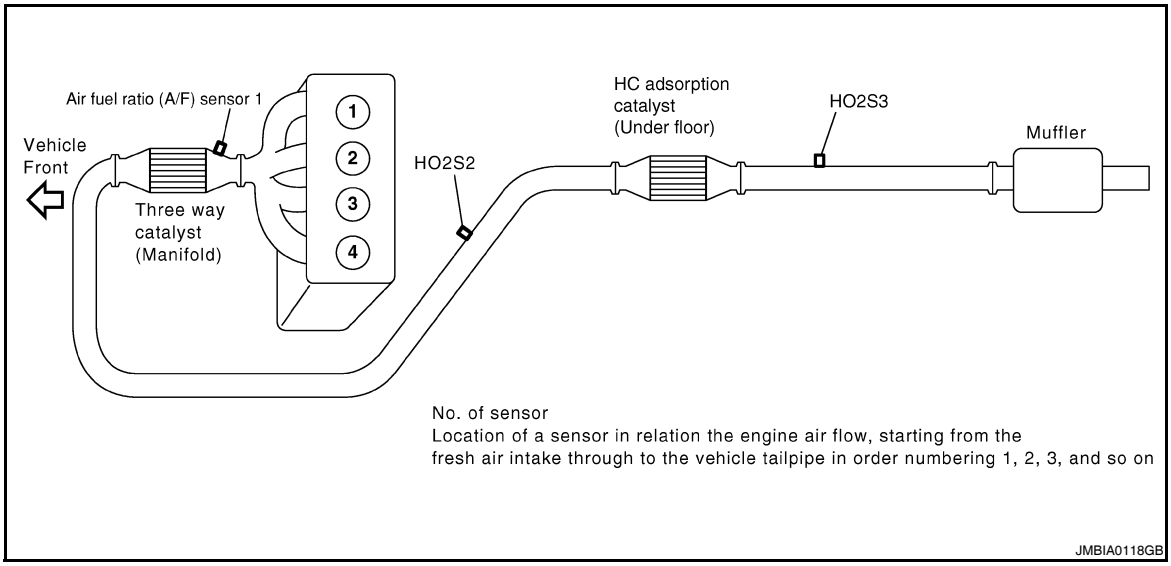

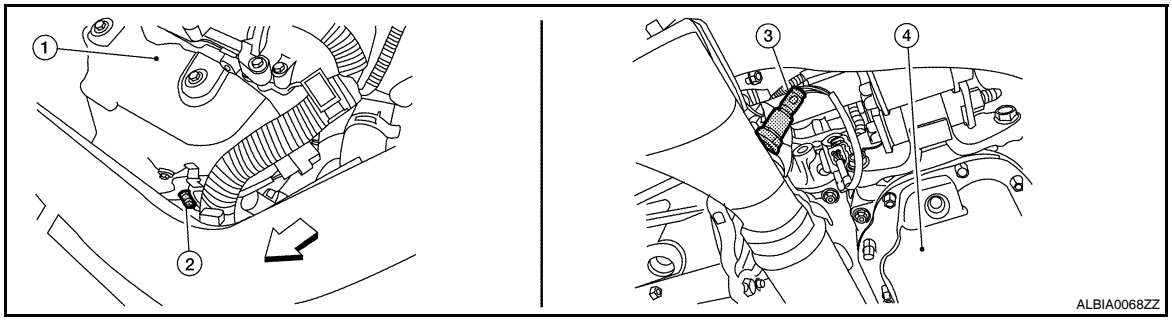

1. Exhaust manifold cover
2. Air fuel ratio (A/F) sensor 1
3. Heated oxygen sensor 2 (This illustration is a view from under vehicle.)
4. Engine oil pan

⇦: Vehicle front

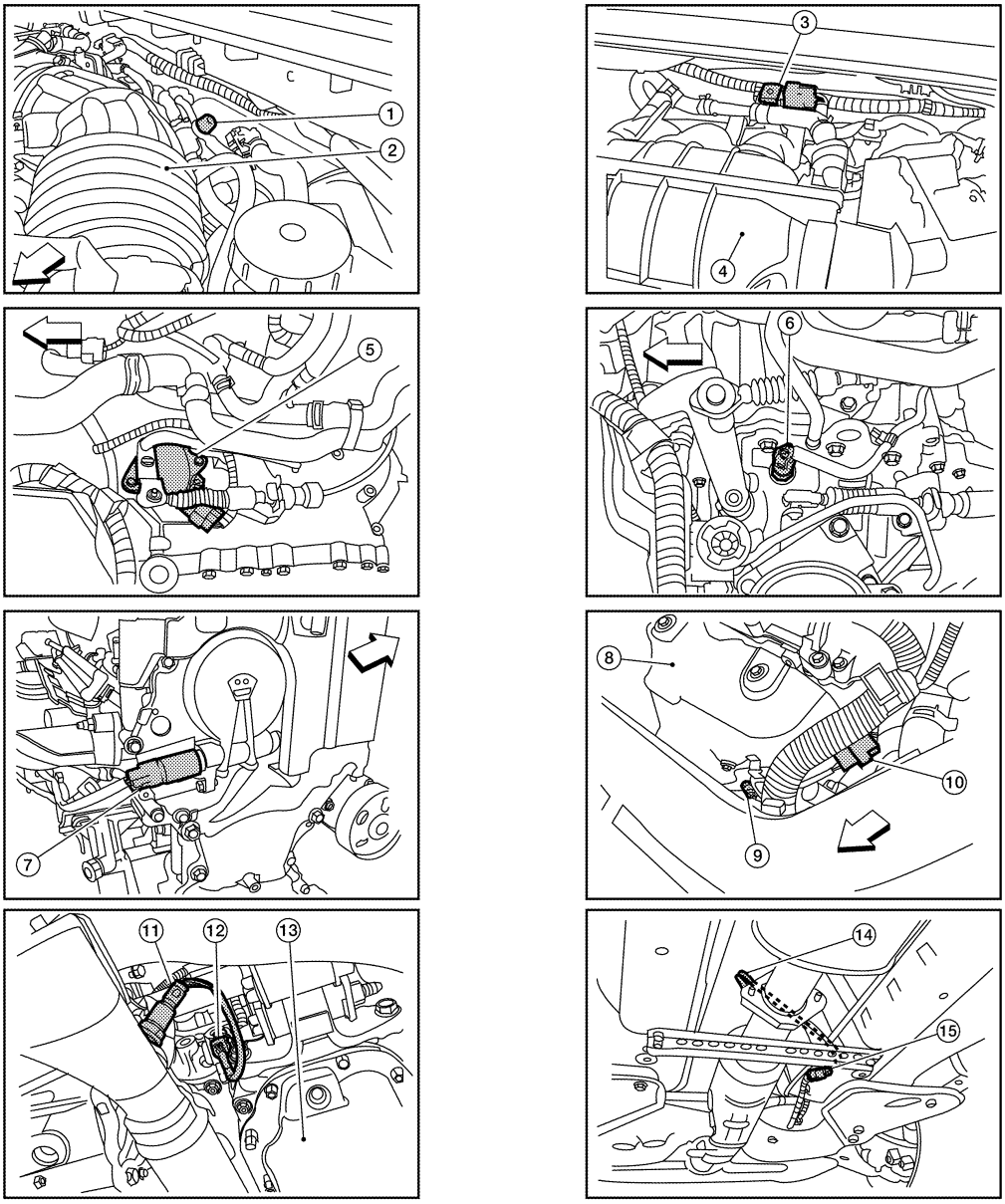

ALBIA0092ZZ

1. EVAP service port	2. Intake air duct	3. EVAP canister purge volume control solenoid valve
4. Intake manifold collector	5. Park/neutral position (PNP) switch (CVT) (This illustration is view with air cleaner assembly removed.)	6. Park/neutral position (PNP) switch (M/T) (This illustration is view with air cleaner assembly removed.)
7. Intake valve timing control solenoid valve (This illustration is view with engine removed.)	8. Exhaust manifold cover	9. Air fuel ratio (A/F) sensor 1
10. Air fuel ratio (A/F) sensor 1 harness connector	11. Heated oxygen sensor 2 (This illustration is view from under vehicle.)	12. Heated oxygen sensor 2 harness connector (This illustration is view from under vehicle.)
13. Engine oil pan	14. Heated oxygen sensor 3 (This illustration is view form under vehicle.)	15. Heated oxygen sensor 3 harness connector (This illustration is view from under vehicle.)

⇦: Vehicle front

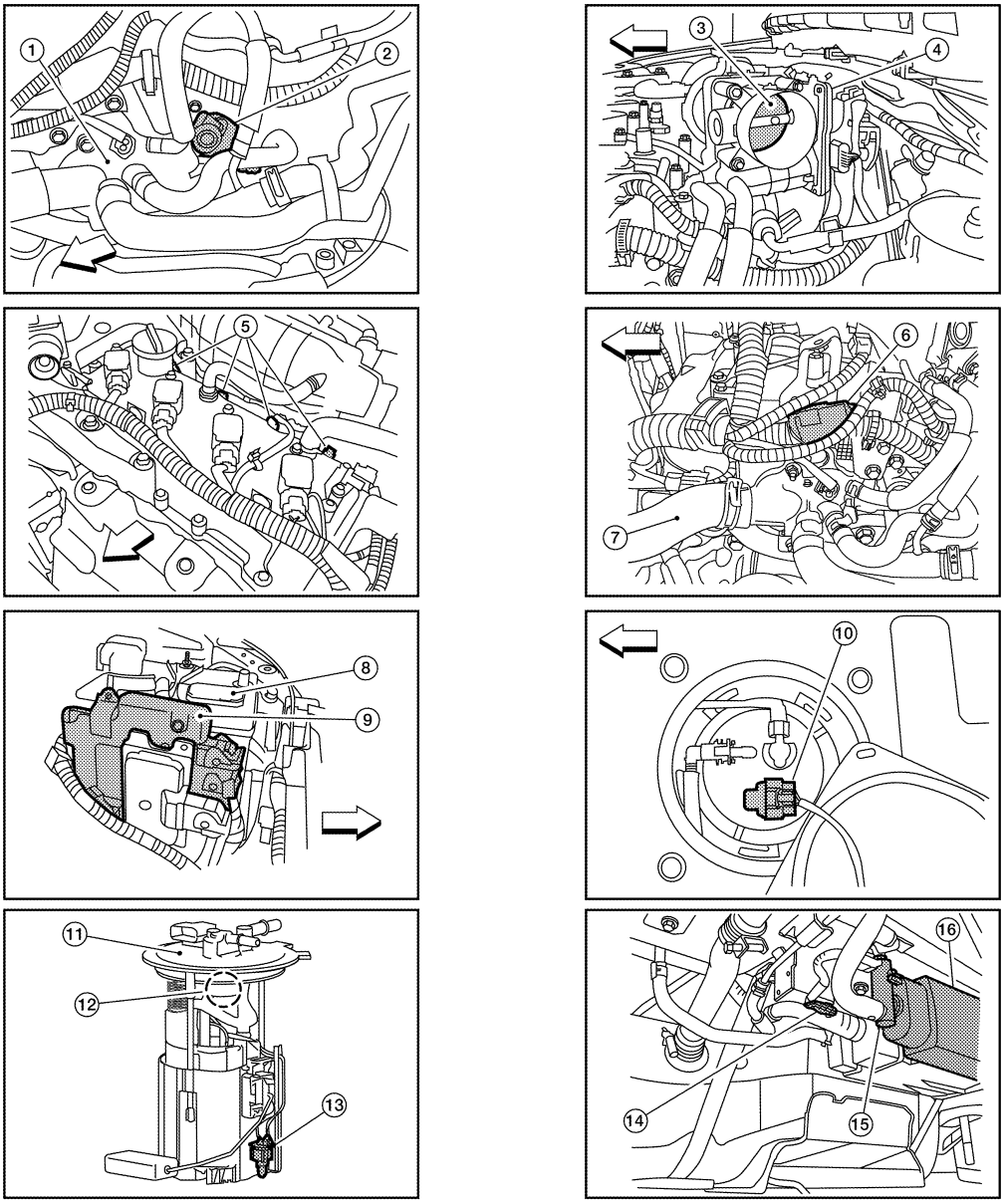

ALBIA0093ZZ

1. Thermostat housing
2. Tumble control valve actuator
3. Throttle valve (This illustration is view with intake air duct removed.)
4. Electric throttle control actuator
5. Fuel injector harness connector
6. Condenser-2
7. Radiator hose (upper)
8. Battery
9. ECM
10. Fuel level sensor unit and fuel pump harness connector (This illustration is view with rear seat cushion and inspection hole cover removed.)
11. Fuel level sensor unit and fuel pump assembly
12. Fuel pressure regulator
13. Fuel tank temperature sensor
14. EVAP control system pressure sensor (This illustration is view with rear suspension member removed.)
15. EVAP canister vent control valve (This illustration is view with rear suspension member removed.)
16. EVAP canister (This illustration is view with rear suspension member removed.)

⇦ : Vehicle front

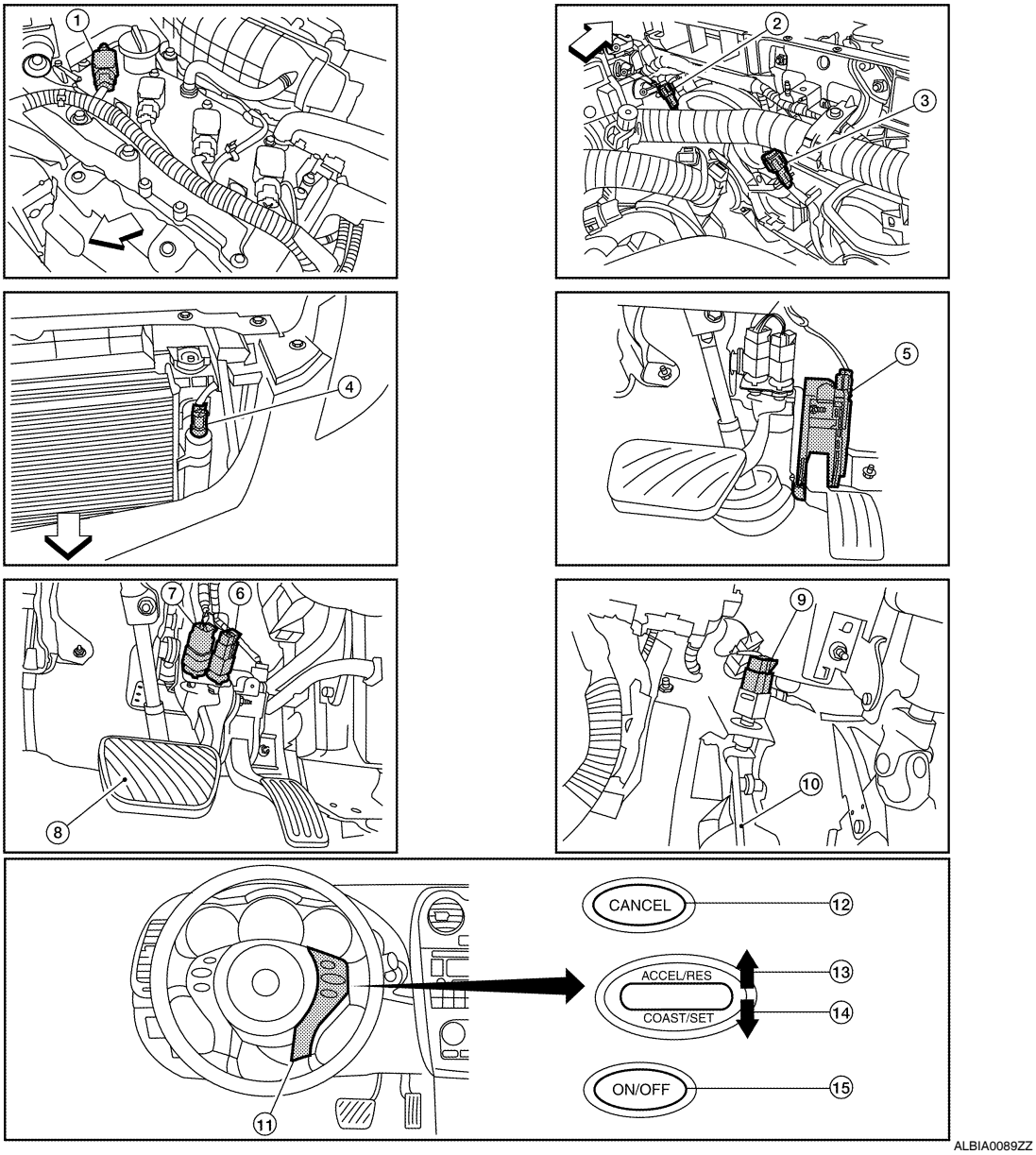

1. No.1 ignition coil
2. Cooling fan motor-1 harness connector
3. Cooling fan motor-2 harness connector
4. Refrigerant pressure sensor
5. Accelerator pedal position sensor
6. ASCD brake switch
7. Stop lamp switch
8. Brake pedal
9. ASCD clutch switch
10. Clutch pedal
11. ASCD steering switch
12. CANSEC switch
13. RESUME/ACCELERATE switch
14. SET/COAST switch
15. MAIN switch

⇦: Vehicle front

Component Description

INFOID:0000000004349171

Component	Reference
A/F sensor 1	EC-199, "Description"
Accelerator pedal position sensor	EC-427, "Description"
Camshaft position sensor (PHASE)	EC-282, "Description"
Crankshaft position sensor (POS)	EC-278, "Description"

Component	Reference
Engine coolant temperature sensor	EC-184, "Description"
EVAP canister purge volume control solenoid valve	EC-301, "Description"
EVAP control system pressure sensor	EC-316, "Description"
Fuel tank temperature sensor	EC-262, "Description"
Mass air flow sensor	EC-168, "Description"
Throttle position sensor	EC-189, "Description"
Vehicle speed sensor	EC-348, "Description"

INTAKE VALVE TIMING CONTROL

System Diagram

INFOID:0000000004349172

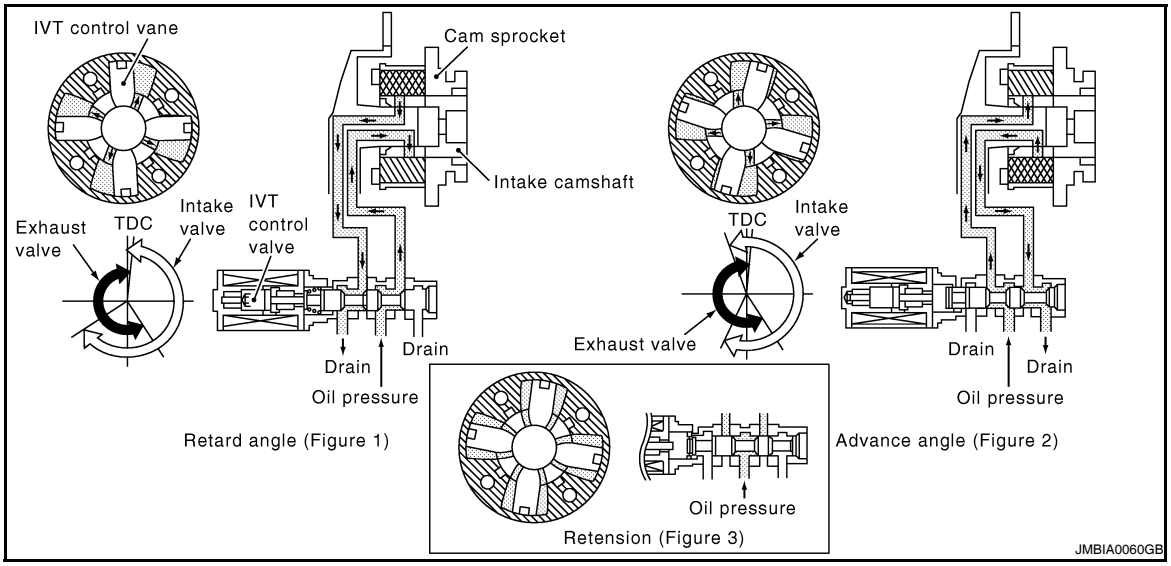

System Description

INFOID:0000000004349173

INPUT/OUTPUT SIGNAL CHART

Sensor	Input signal to ECM	ECM function	Actuator
Crankshaft position sensor (POS)	Engine speed and piston position	Intake valve timing control	Intake valve timing control solenoid valve
Camshaft position sensor (PHASE)			
Engine coolant temperature sensor	Engine coolant temperature		
Combination meter	Vehicle speed*		

*: This signal is sent to the ECM through CAN communication line

SYSTEM DESCRIPTION

This mechanism hydraulically controls cam phases continuously with the fixed operating angle of the intake valve.

The ECM receives signals such as crankshaft position, camshaft position, engine speed, and engine coolant temperature. Then, the ECM sends ON/OFF pulse duty signals to the intake valve timing (IVT) control solenoid valve depending on driving status. This makes it possible to control the shut/open timing of the intake valve to increase engine torque in low/mid speed range and output in high-speed range.

Component Parts Location

INFOID:0000000004349174

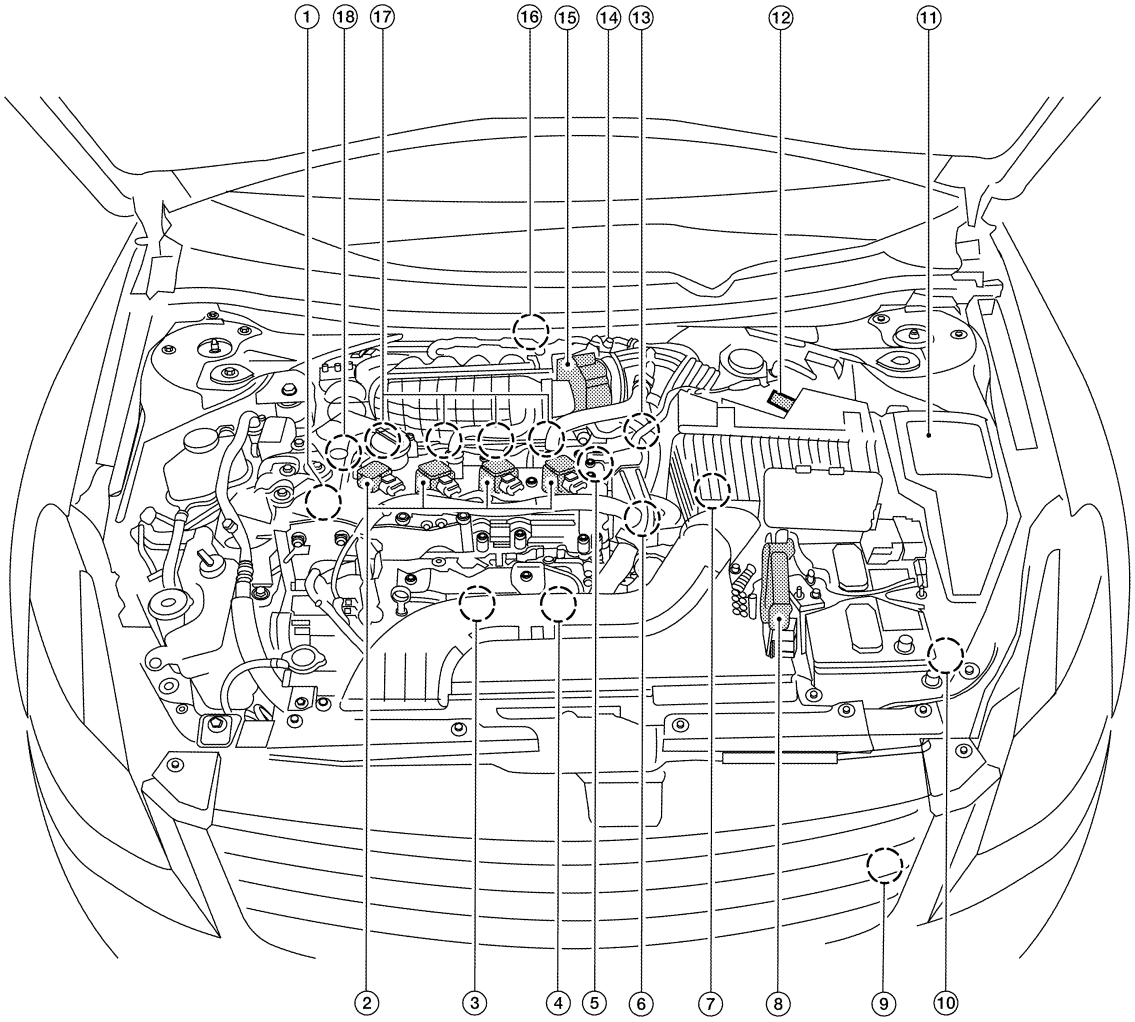

ALBIA0046ZZ

1. Intake valve timing control solenoid valve
2. Ignition coil (with power transistor) and spark plug
3. Knock sensor, Crankshaft position sensor (POS)
4. Air fuel ratio (A/F) sensor 1
5. Camshaft position sensor (PHASE)
6. Engine coolant temperature sensor
7. Park/neutral position (PNP) switch
8. ECM
9. Refrigerant pressure sensor
10. Battery current sensor
11. IPDM E/R
12. Mass air flow sensor (with intake temperature sensor)
13. Tumble control valve actuator
14. EVAP service port
15. Electric throttle control actuator (with built in throttle position sensor and throttle control motor)
16. EVAP canister purge volume control solenoid valve
17. Fuel injector
18. Power steering pressure sensor

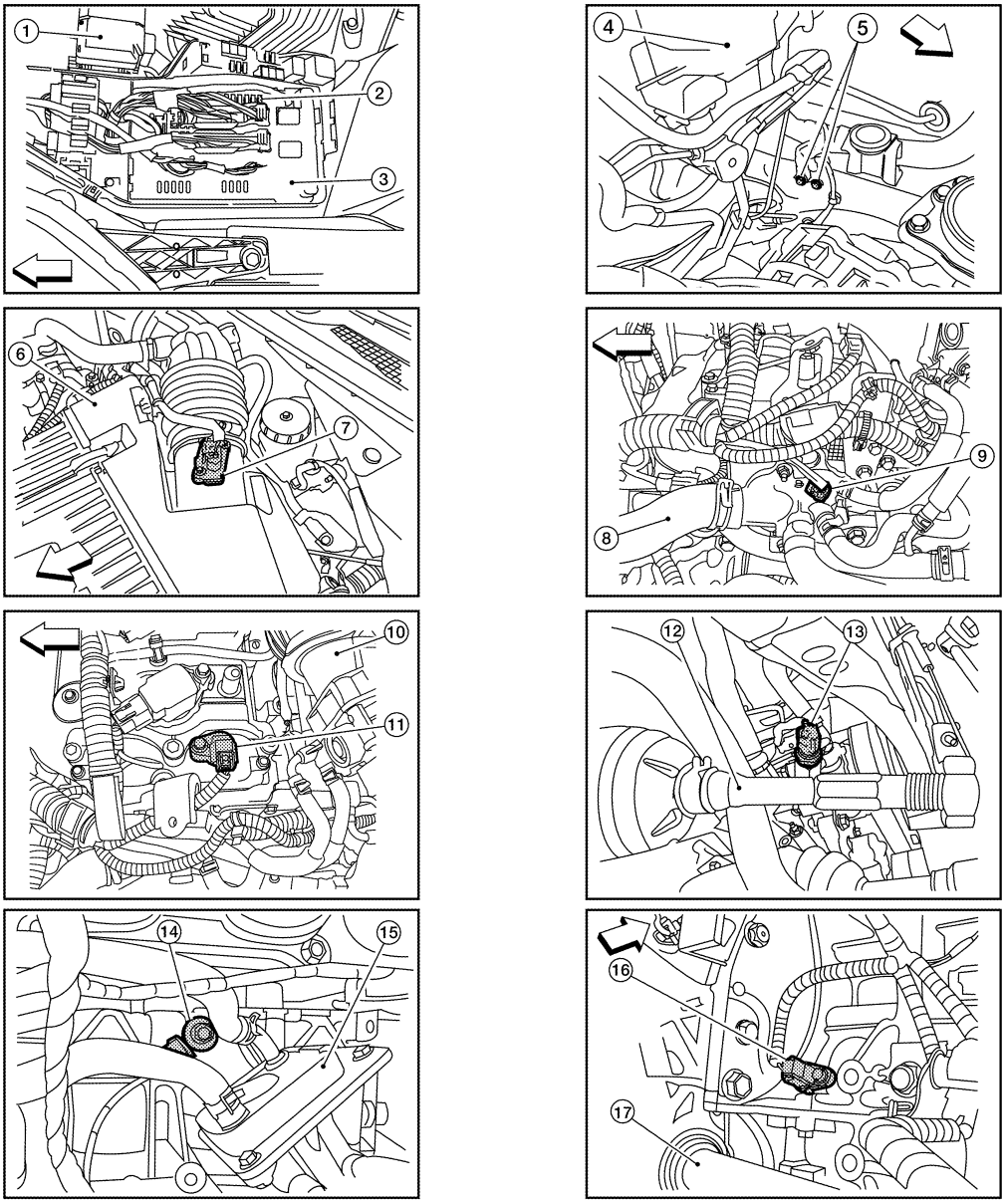

ALBIA0091ZZ

1. Battery	2. Fuel pump fuse (15A)	3. IPDM E/R
4. Brake master cylinder	5. Engine ground	6. Air cleaner assembly
7. Mass air flow sensor (with intake air temperature sensor)	8. Radiator hose (upper)	9. Engine coolant temperature sensor
10. Intake air duct	11. Camshaft position sensor (PHASE)	12. Tie rod (RH)
13. Power steering pressure sensor	14. Knock sensor	15. Engine oil cooler
16. Crankshaft position sensor (POS)	17. Drive shaft (RH)	

⇦: Vehicle front

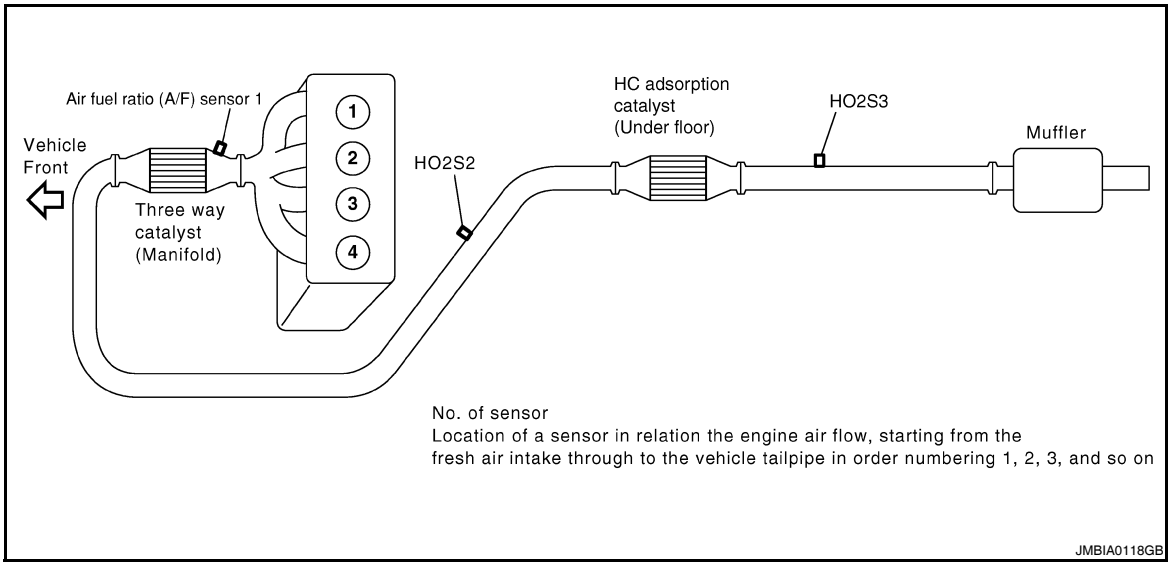

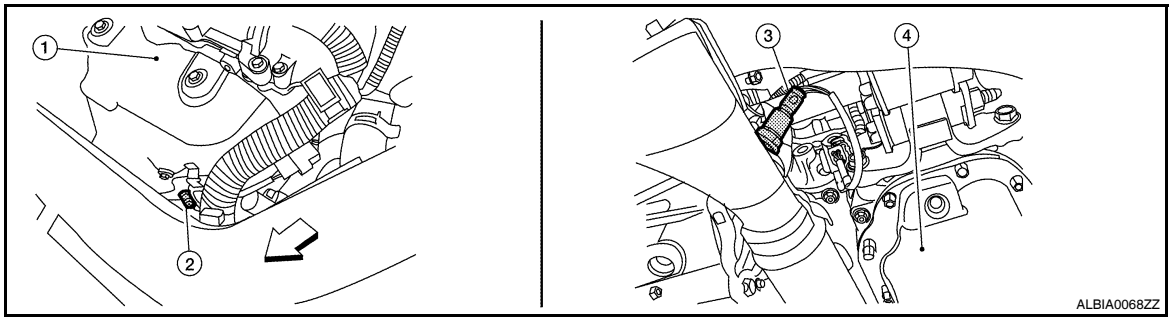

1. Exhaust manifold cover
2. Air fuel ratio (A/F) sensor 1
3. Heated oxygen sensor 2 (This illustration is a view from under vehicle.)
4. Engine oil pan

⇦: Vehicle front

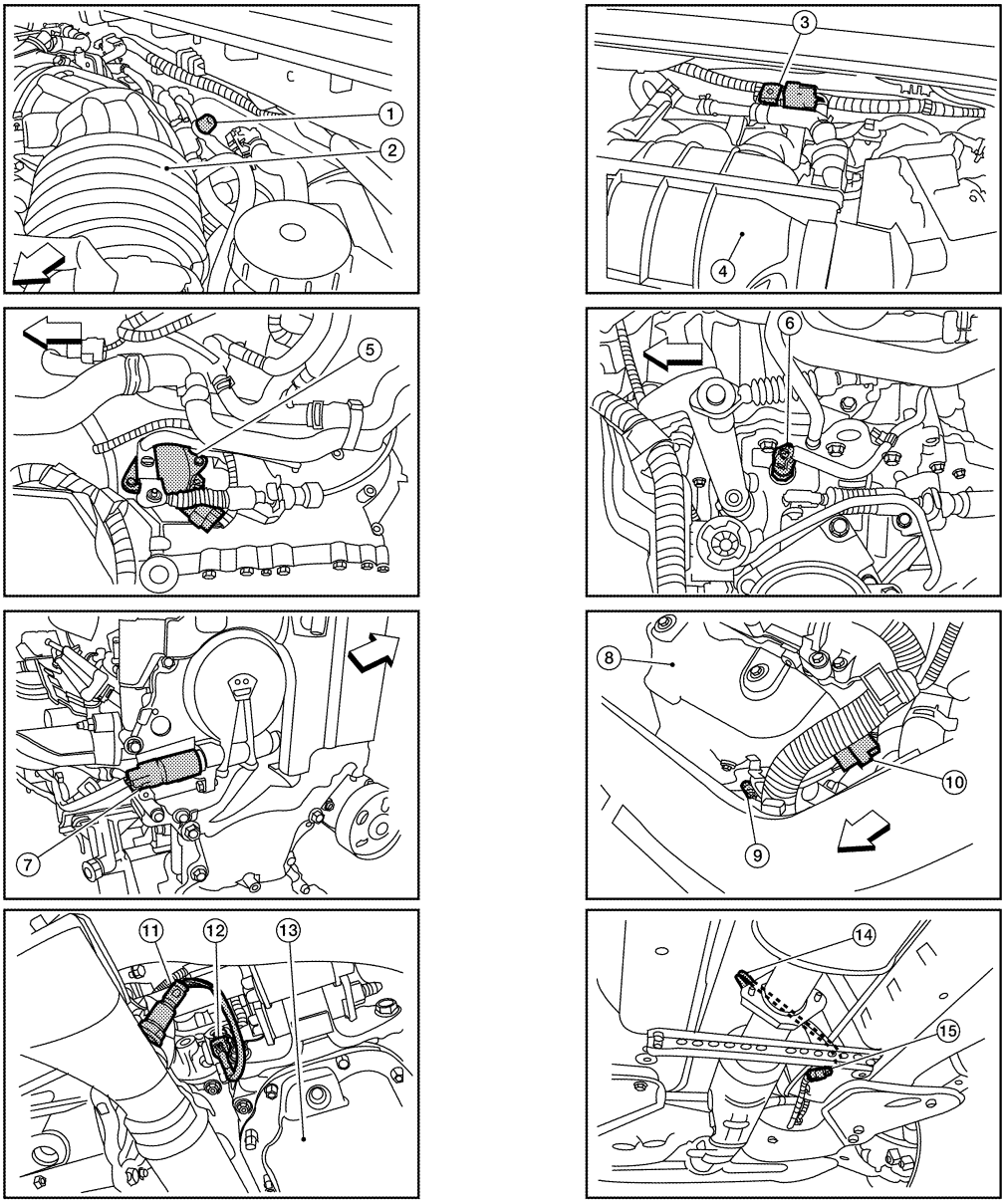

ALBIA0092ZZ

1. EVAP service port	2. Intake air duct	3. EVAP canister purge volume control solenoid valve
4. Intake manifold collector	5. Park/neutral position (PNP) switch (CVT) (This illustration is view with air cleaner assembly removed.)	6. Park/neutral position (PNP) switch (M/T) (This illustration is view with air cleaner assembly removed.)
7. Intake valve timing control solenoid valve (This illustration is view with engine removed.)	8. Exhaust manifold cover	9. Air fuel ratio (A/F) sensor 1
10. Air fuel ratio (A/F) sensor 1 harness connector	11. Heated oxygen sensor 2 (This illustration is view from under vehicle.)	12. Heated oxygen sensor 2 harness connector (This illustration is view from under vehicle.)
13. Engine oil pan	14. Heated oxygen sensor 3 (This illustration is view form under vehicle.)	15. Heated oxygen sensor 3 harness connector (This illustration is view from under vehicle.)

⇦: Vehicle front

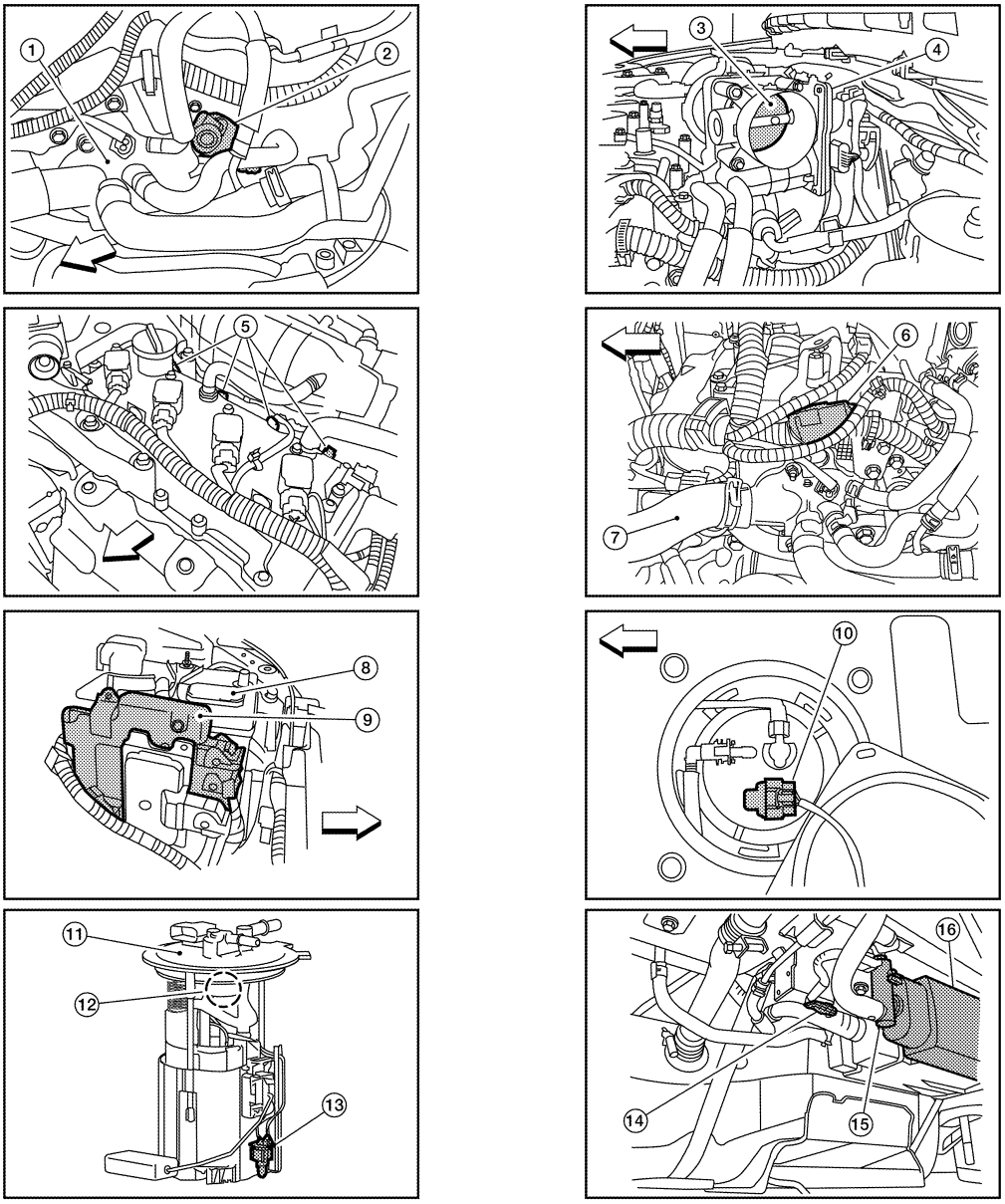

ALBIA0093ZZ

1. Thermostat housing
2. Tumble control valve actuator
3. Throttle valve (This illustration is view with intake air duct removed.)
4. Electric throttle control actuator
5. Fuel injector harness connector
6. Condenser-2
7. Radiator hose (upper)
8. Battery
9. ECM
10. Fuel level sensor unit and fuel pump harness connector (This illustration is view with rear seat cushion and inspection hole cover removed.)
11. Fuel level sensor unit and fuel pump assembly
12. Fuel pressure regulator
13. Fuel tank temperature sensor
14. EVAP control system pressure sensor (This illustration is view with rear suspension member removed.)
15. EVAP canister vent control valve (This illustration is view with rear suspension member removed.)
16. EVAP canister (This illustration is view with rear suspension member removed.)

⇦ : Vehicle front

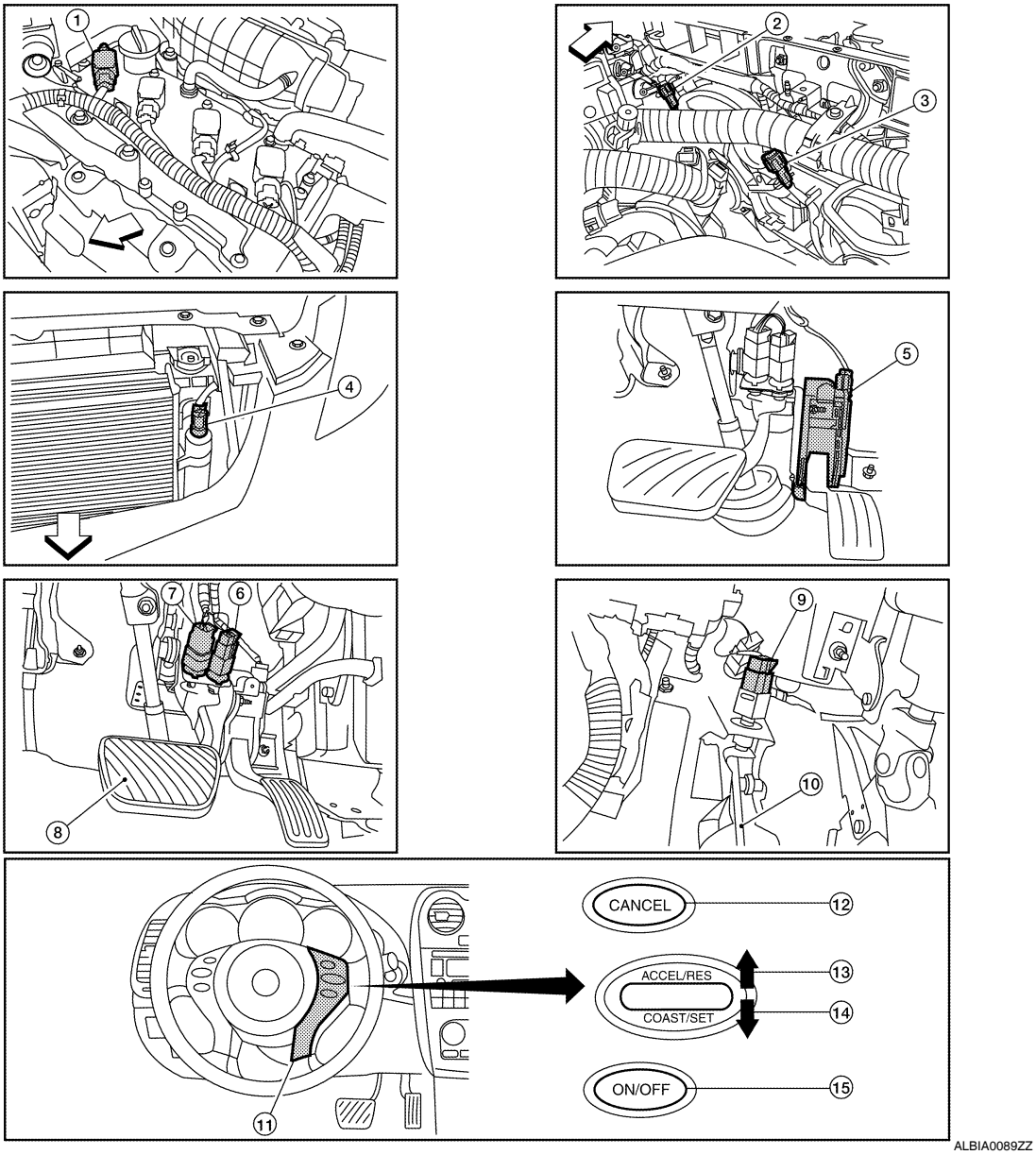

1. No.1 ignition coil
2. Cooling fan motor-1 harness connector
3. Cooling fan motor-2 harness connector
4. Refrigerant pressure sensor
5. Accelerator pedal position sensor
6. ASCD brake switch
7. Stop lamp switch
8. Brake pedal
9. ASCD clutch switch
10. Clutch pedal
11. ASCD steering switch
12. CANSEC switch
13. RESUME/ACCELERATE switch
14. SET/COAST switch
15. MAIN switch

⇦: Vehicle front

Component Description

INFOID:0000000004349175

Component	Reference
Camshaft position sensor (PHASE)	EC-282, "Description"
Crankshaft position sensor (POS)	EC-278, "Description"
Engine coolant temperature sensor	EC-184, "Description"

Component	Reference
Intake valve timing control solenoid valve	EC-97, "System Description"
Vehicle speed sensor	EC-348, "Description"

TUMBLE CONTROL VALVE CONTROL

System Diagram

INFOID:0000000004349176

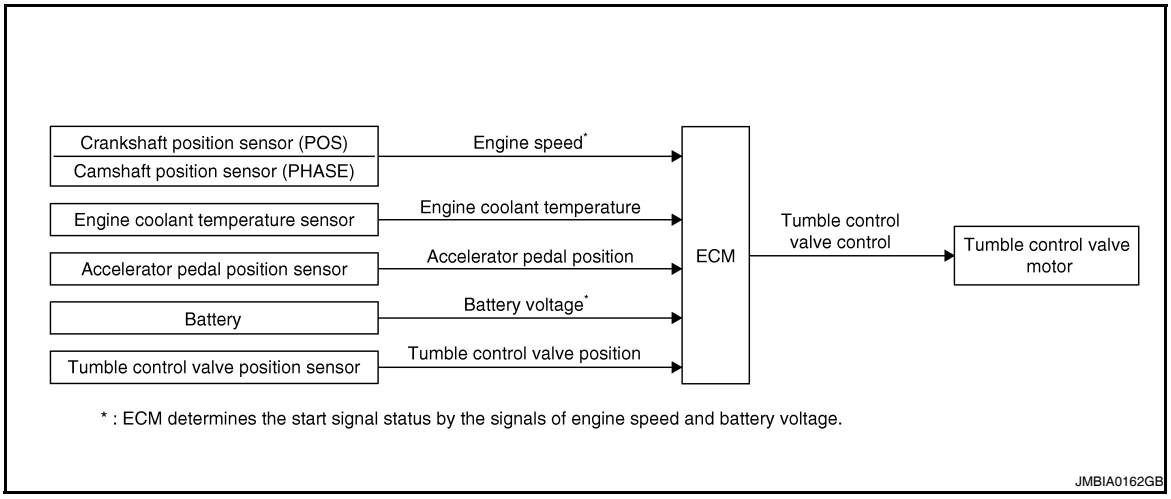

System Description

INFOID:0000000004349177

INPUT/OUTPUT SIGNAL CHART

Sensor	Input signal to ECM	ECM function	Actuator
Crankshaft position sensor (POS)	Engine speed*	Tumble control valve control	Tumble control valve motor
Camshaft position sensor (PHASE)			
Battery	Battery voltage*		
Engine coolant temperature sensor	Engine coolant temperature		
Accelerator pedal position sensor	Accelerator pedal position		
Tumble control valve position sensor	Tumble control valve position		

*: ECM determines the start signal status by the signals of engine speed and battery voltage.

SYSTEM DESCRIPTION

Tumble control valve has a valve portion in the intake passage of each cylinder.
While idling and during low engine coolant temperature, the tumble control valve closes. Thus the velocity of the air in the intake passage increases, promoting the vaporization of the fuel and producing a tumble in the combustion chamber.
Because of this operation, this system tends to increase the burning speed of the gas mixture, improve fuel consumption, and increase the stability in running conditions.
Also, except when idling and during low engine coolant temperature, this system opens the tumble control valve.
In this condition, this system tends to increase power by improving intake efficiency via reduction of intake flow resistance.
The tumble control valve is operated by the ECM.

Component Parts Location

INFOID:0000000004349178

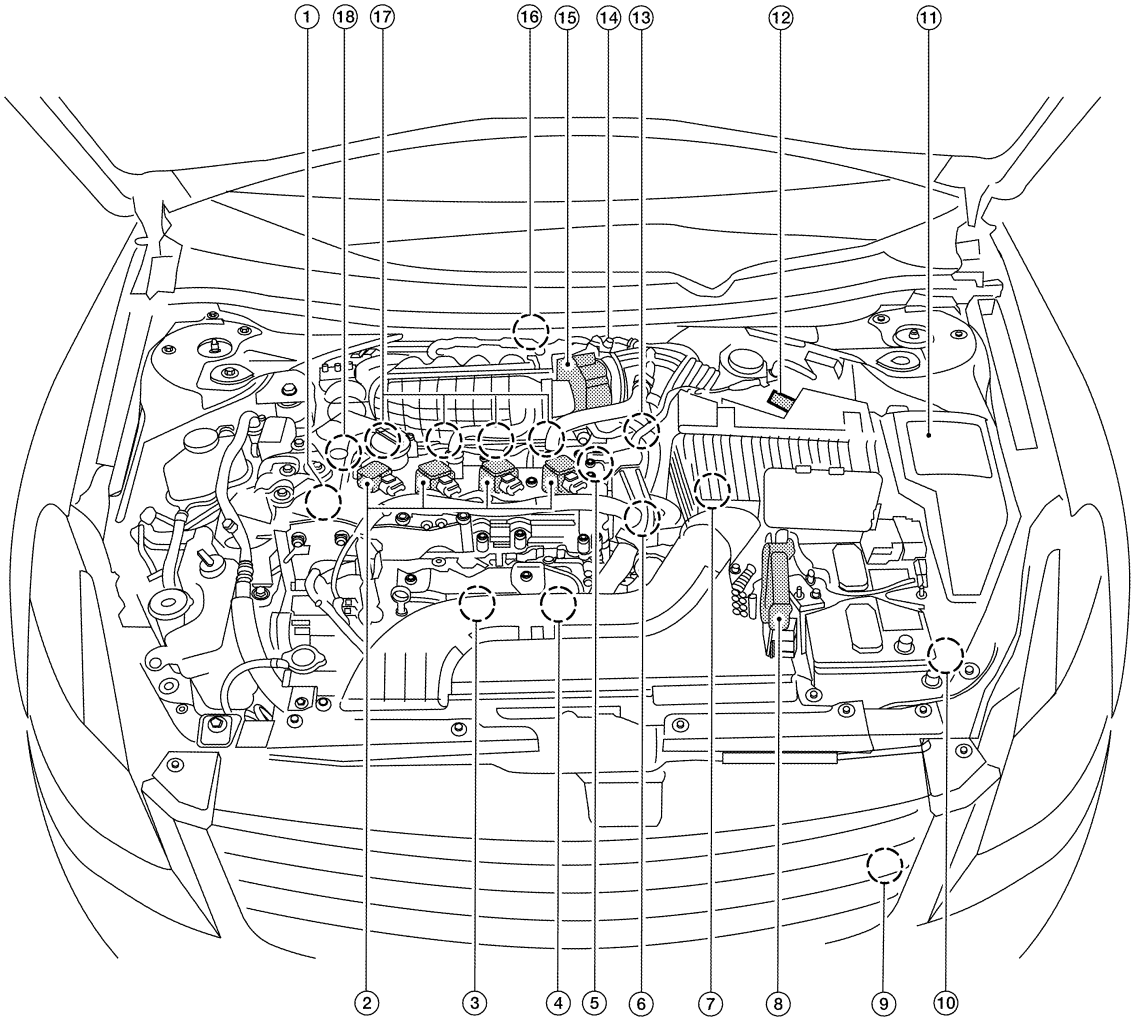

ALBIA0046ZZ

1. Intake valve timing control solenoid valve
2. Ignition coil (with power transistor) and spark plug
3. Knock sensor, Crankshaft position sensor (POS)
4. Air fuel ratio (A/F) sensor 1
5. Camshaft position sensor (PHASE)
6. Engine coolant temperature sensor
7. Park/neutral position (PNP) switch
8. ECM
9. Refrigerant pressure sensor
10. Battery current sensor
11. IPDM E/R
12. Mass air flow sensor (with intake temperature sensor)
13. Tumble control valve actuator
14. EVAP service port
15. Electric throttle control actuator (with built in throttle position sensor and throttle control motor)
16. EVAP canister purge volume control solenoid valve
17. Fuel injector
18. Power steering pressure sensor

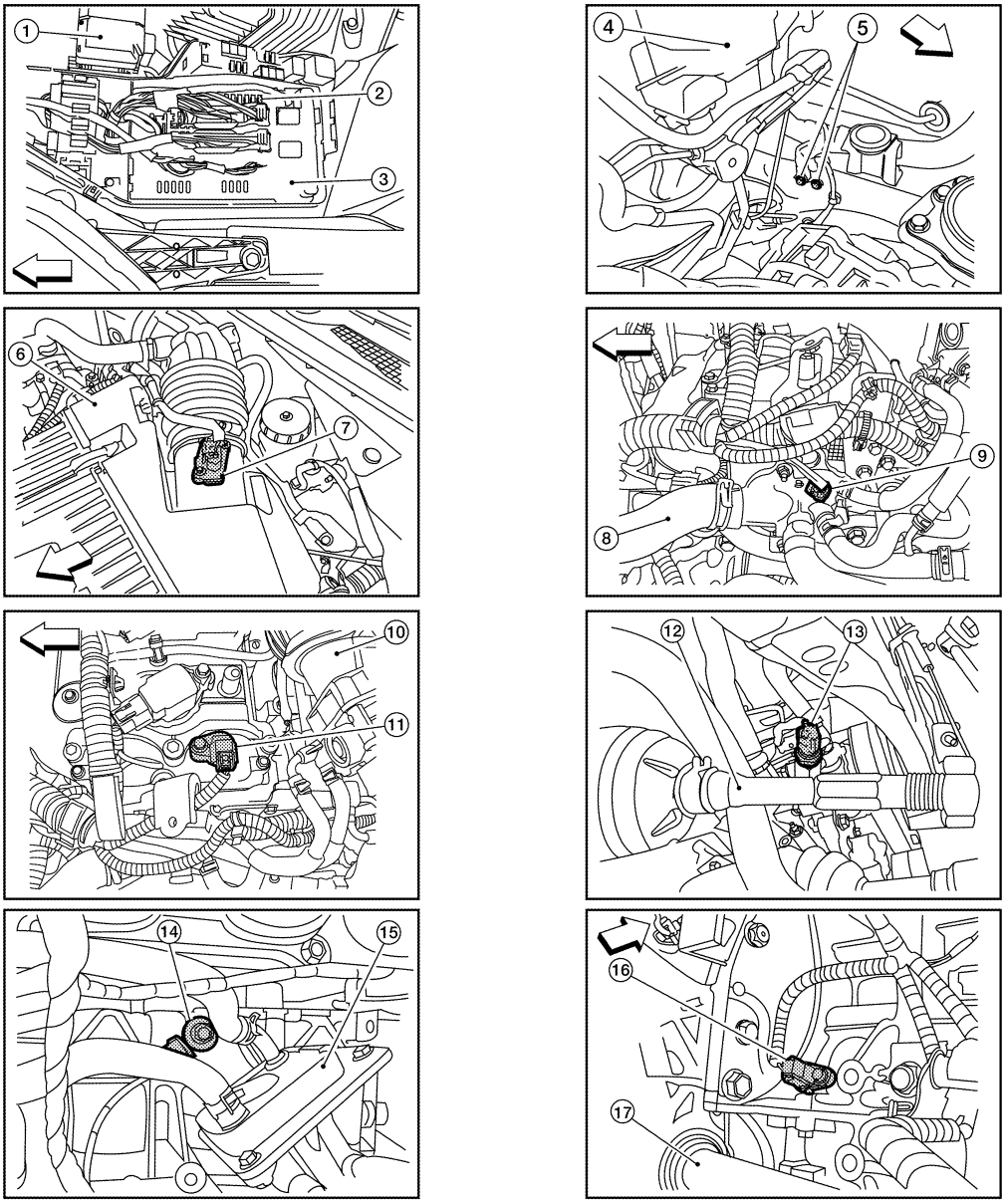

ALBIA0091ZZ

1. Battery	2. Fuel pump fuse (15A)	3. IPDM E/R
4. Brake master cylinder	5. Engine ground	6. Air cleaner assembly
7. Mass air flow sensor (with intake air temperature sensor)	8. Radiator hose (upper)	9. Engine coolant temperature sensor
10. Intake air duct	11. Camshaft position sensor (PHASE)	12. Tie rod (RH)
13. Power steering pressure sensor	14. Knock sensor	15. Engine oil cooler
16. Crankshaft position sensor (POS)	17. Drive shaft (RH)	

⇦: Vehicle front

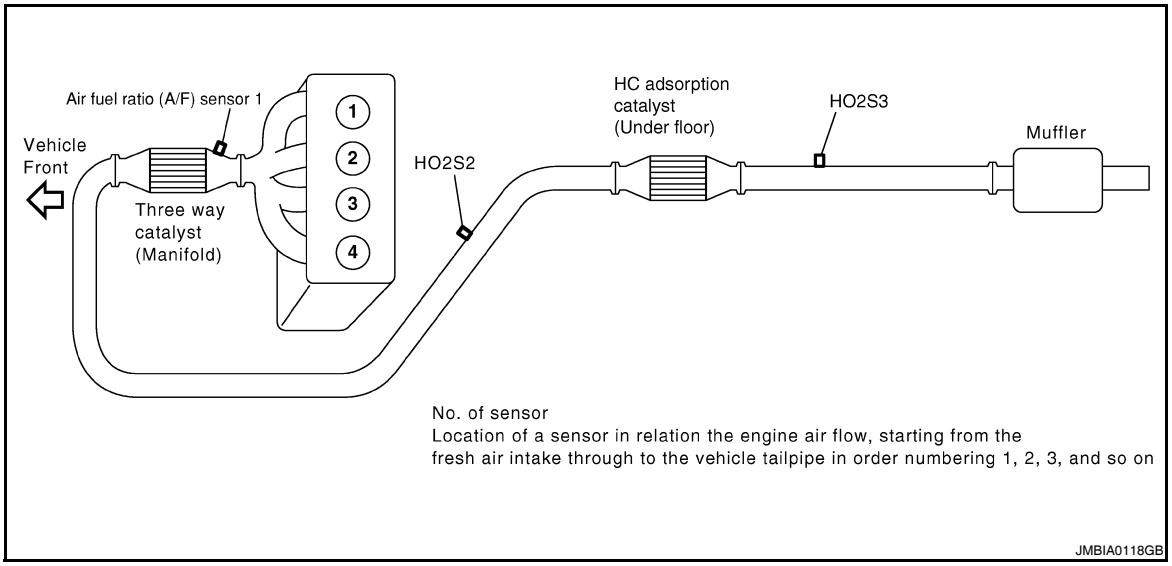

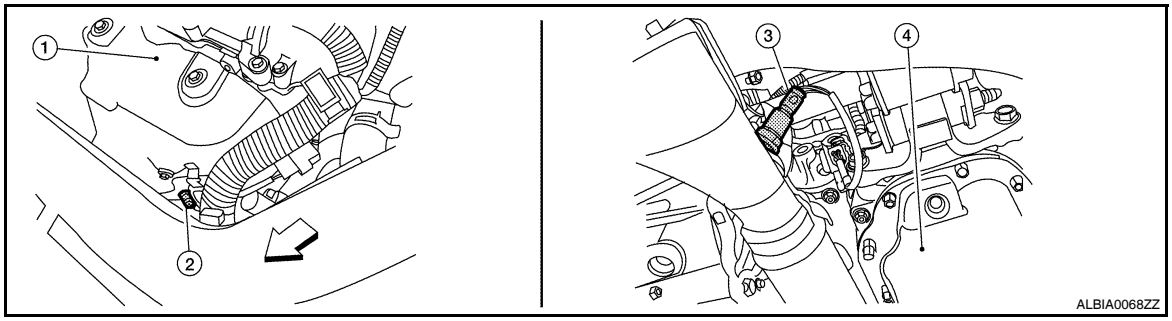

1. Exhaust manifold cover
2. Air fuel ratio (A/F) sensor 1
3. Heated oxygen sensor 2 (This illustration is a view from under vehicle.)
4. Engine oil pan

⇦: Vehicle front

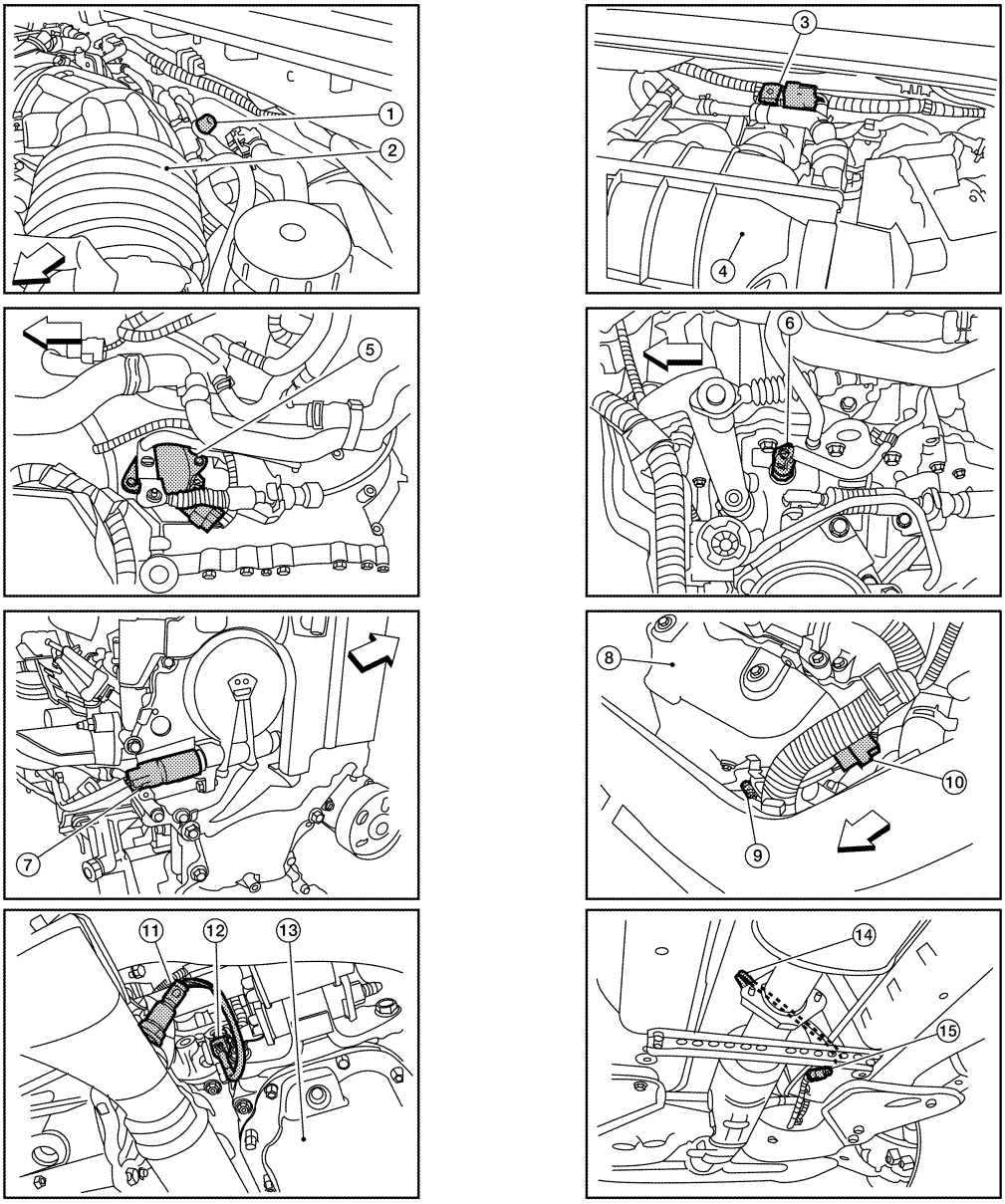

ALBIA0092ZZ

1. EVAP service port	2. Intake air duct	3. EVAP canister purge volume control solenoid valve
4. Intake manifold collector	5. Park/neutral position (PNP) switch (CVT) (This illustration is view with air cleaner assembly removed.)	6. Park/neutral position (PNP) switch (M/T) (This illustration is view with air cleaner assembly removed.)
7. Intake valve timing control solenoid valve (This illustration is view with engine removed.)	8. Exhaust manifold cover	9. Air fuel ratio (A/F) sensor 1
10. Air fuel ratio (A/F) sensor 1 harness connector	11. Heated oxygen sensor 2 (This illustration is view from under vehicle.)	12. Heated oxygen sensor 2 harness connector (This illustration is view from under vehicle.)
13. Engine oil pan	14. Heated oxygen sensor 3 (This illustration is view form under vehicle.)	15. Heated oxygen sensor 3 harness connector (This illustration is view from under vehicle.)

⇦: Vehicle front

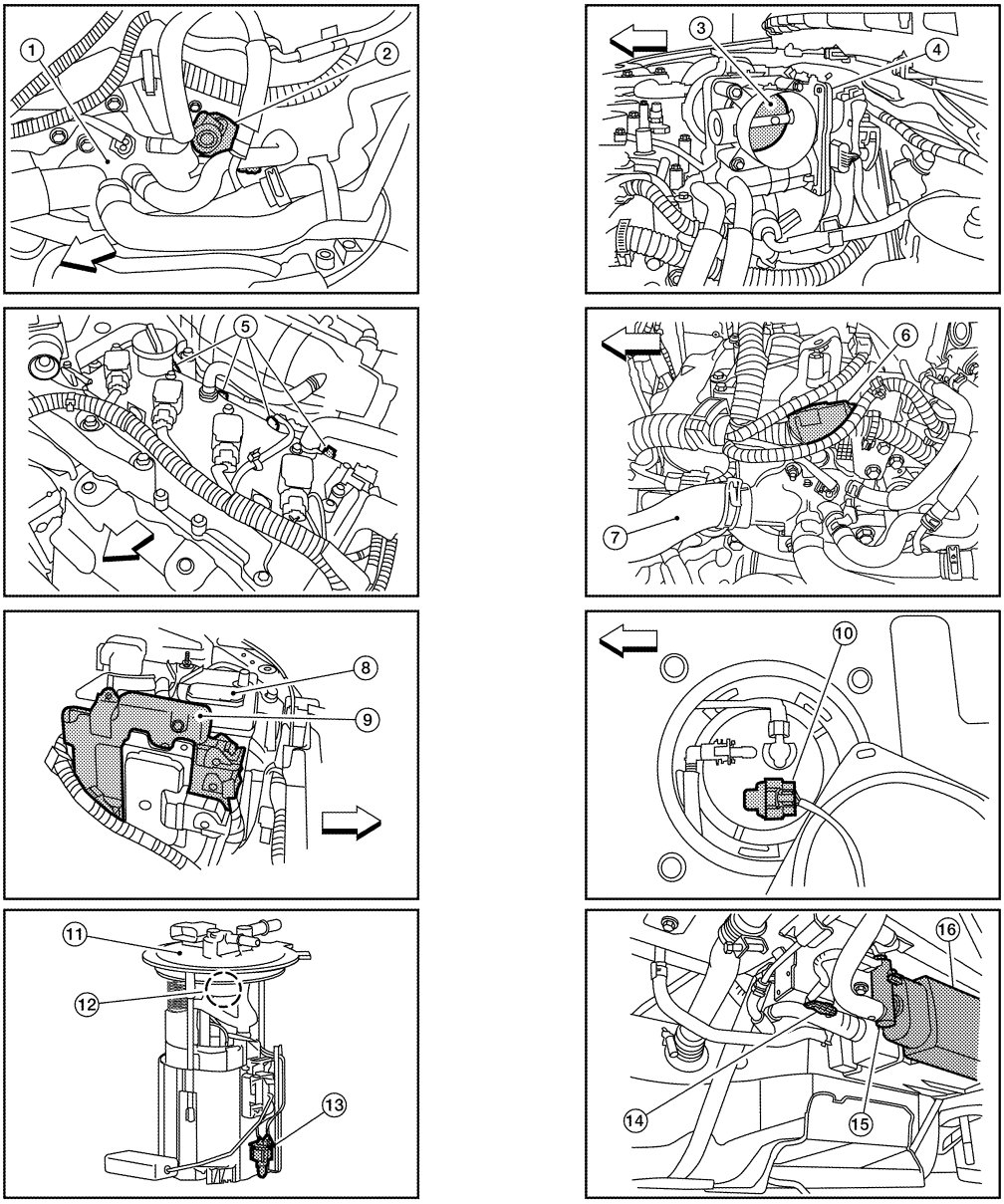

ALBIA0093ZZ

1. Thermostat housing
2. Tumble control valve actuator
3. Throttle valve (This illustration is view with intake air duct removed.)
4. Electric throttle control actuator
5. Fuel injector harness connector
6. Condenser-2
7. Radiator hose (upper)
8. Battery
9. ECM
10. Fuel level sensor unit and fuel pump harness connector (This illustration is view with rear seat cushion and inspection hole cover removed.)
11. Fuel level sensor unit and fuel pump assembly
12. Fuel pressure regulator
13. Fuel tank temperature sensor
14. EVAP control system pressure sensor (This illustration is view with rear suspension member removed.)
15. EVAP canister vent control valve (This illustration is view with rear suspension member removed.)
16. EVAP canister (This illustration is view with rear suspension member removed.)

⇦ : Vehicle front

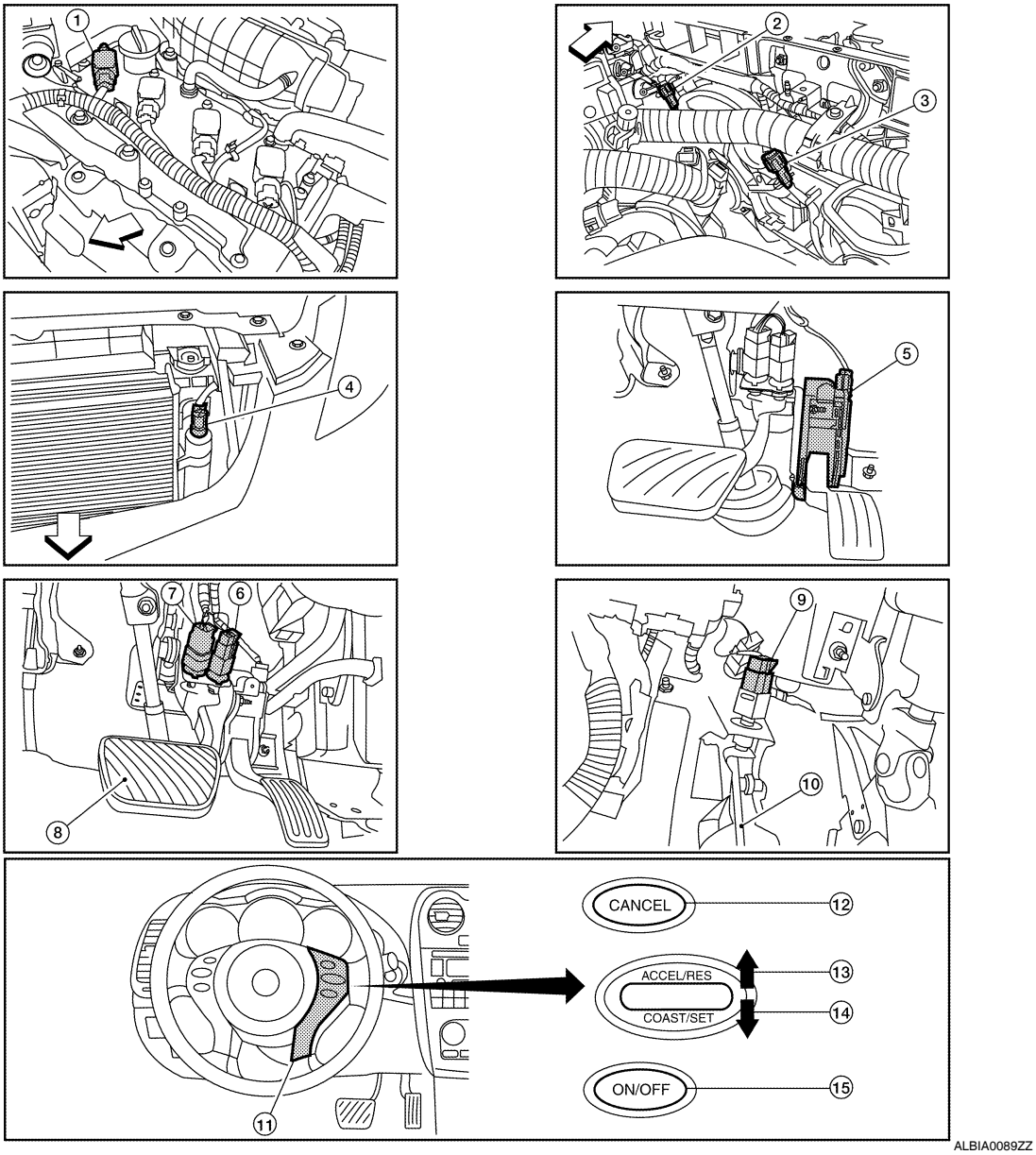

1. No.1 ignition coil
2. Cooling fan motor-1 harness connector
3. Cooling fan motor-2 harness connector
4. Refrigerant pressure sensor
5. Accelerator pedal position sensor
6. ASCD brake switch
7. Stop lamp switch
8. Brake pedal
9. ASCD clutch switch
10. Clutch pedal
11. ASCD steering switch
12. CANSEC switch
13. RESUME/ACCELERATE switch
14. SET/COAST switch
15. MAIN switch

⇦: Vehicle front

Component Description

INFOID:0000000004349179

Component	Reference
Tumble control valve	EC-409, "Description"
Tumble control valve position sensor	EC-409, "Description"

ON BOARD DIAGNOSTIC (OBD) SYSTEM

Diagnosis Description

INFOID:0000000004349180

INTRODUCTION

The ECM has an on board diagnostic system, which detects malfunctions related to engine sensors or actuators. The ECM also records various emission-related diagnostic information including:

Emission-related diagnostic information	Diagnostic service
Diagnostic Trouble Code (DTC)	Service $03 of SAE J1979
Freeze Frame data	Service $02 of SAE J1979
System Readiness Test (SRT) code	Service $01 of SAE J1979
1st Trip Diagnostic Trouble Code (1st Trip DTC)	Service $07 of SAE J1979
1st Trip Freeze Frame data	
Test values and Test limits	Service $06 of SAE J1979
Calibration ID	Service $09 of SAE J1979

The above information can be checked using procedures listed in the table below.

×: Applicable —: Not applicable

	DTC	1st trip DTC	Freeze Frame data	1st trip Freeze Frame data	SRT code	SRT status	Test value
CONSULT-III	×	×	×	×	×	×	—
GST	×	×	×	—	×	×	×
ECM	×	×*	—	—	—	×	—

*: When DTC and 1st trip DTC simultaneously appear on the display, they cannot be clearly distinguished from each other.

The malfunction indicator lamp (MIL) on the instrument panel lights up when the same malfunction is detected in two consecutive trips (Two trip detection logic), or when the ECM enters fail-safe mode. (Refer to EC-523, "Fail Safe".)

TWO TRIP DETECTION LOGIC

When a malfunction is detected for the first time, 1st trip DTC and 1st trip Freeze Frame data are stored in the ECM memory. The MIL will not light up at this stage. <1st trip>
If the same malfunction is detected again during the next drive, the DTC and Freeze Frame data are stored in the ECM memory, and the MIL lights up. The MIL lights up at the same time when the DTC is stored. <2nd trip> The “trip” in the “Two Trip Detection Logic” means a driving mode in which self-diagnosis is performed during vehicle operation. Specific on board diagnostic items will cause the ECM to light up or blink the MIL, and store DTC and Freeze Frame data, even in the 1st trip, as shown below.

×: Applicable —: Not applicable

Items	MIL				DTC		1st trip DTC	
	1st trip		2nd trip		1st trip displaying	2nd trip displaying	1st trip displaying	2nd trip displaying
	Blinking	Lighting up	Blinking	Lighting up				
Misfire (Possible three way catalyst damage) — DTC: P0300 - P0304 is being detected	×	—	—	—	—	—	×	—
Misfire (Possible three way catalyst damage) — DTC: P0300 - P0304 is being detected	—	—	×	—	—	×	—	—
One trip detection diagnoses (Refer to EC-527, "DTC Index".)	—	×	—	—	×	—	—	—
Except above	—	—	—	×	—	×	×	—

DTC AND FREEZE FRAME DATA

DTC and 1st Trip DTC

The 1st trip DTC (whose number is the same as the DTC number) is displayed for the latest self-diagnostic result obtained. If the ECM memory was cleared previously, and the 1st trip DTC did not reoccur, the 1st trip DTC will not be displayed.
If a malfunction is detected during the 1st trip, the 1st trip DTC is stored in the ECM memory. The MIL will not light up (two trip detection logic). If the same malfunction is not detected in the 2nd trip (meeting the required driving pattern), the 1st trip DTC is cleared from the ECM memory. If the same malfunction is detected in the 2nd trip, both the 1st trip DTC and DTC are stored in the ECM memory and the MIL lights up. In other words, the DTC is stored in the ECM memory and the MIL lights up when the same malfunction occurs in two consecutive trips. If a 1st trip DTC is stored and a non-diagnostic operation is performed between the 1st and 2nd trips, only the 1st trip DTC will continue to be stored. For malfunctions that blink or light up the MIL during the 1st trip, the DTC and 1st trip DTC are stored in the ECM memory.
Procedures for clearing the DTC and the 1st trip DTC from the ECM memory are described in “HOW TO ERASE EMISSION-RELATED DIAGNOSTIC INFORMATION”.
For malfunctions in which 1st trip DTCs are displayed, refer to “EMISSION-RELATED DIAGNOSTIC INFORMATION ITEMS”. These items are required by legal regulations to continuously monitor the system/component. In addition, the items monitored non-continuously are also displayed on CONSULT-III.
1st trip DTC is specified in Service $07 of SAE J1979. 1st trip DTC detection occurs without lighting up the MIL and therefore does not warn the driver of a malfunction. However, 1st trip DTC detection will not prevent the vehicle from being tested, for example during Inspection/Maintenance (I/M) tests.
When a 1st trip DTC is detected, check, print out or write down and erase (1st trip) DTC and Freeze Frame data as specified in Work Flow procedure Step 2, refer to EC-20, "Work Flow". Then perform DTC CONFIRMATION PROCEDURE or Component Function Check to try to duplicate the malfunction. If the malfunction is duplicated, the item requires repair.

Freeze Frame Data and 1st Trip Freeze Frame Data

The ECM records the driving conditions such as fuel system status, calculated load value, engine coolant temperature, short term fuel trim, long term fuel trim, engine speed, vehicle speed, absolute throttle position, base fuel schedule and intake air temperature at the moment a malfunction is detected.
Data which are stored in the ECM memory, along with the 1st trip DTC, are called 1st trip freeze frame data. The data, stored together with the DTC data, are called freeze frame data and displayed on CONSULT-III or GST. The 1st trip freeze frame data can only be displayed on the CONSULT-III screen, not on the GST.
Only one set of freeze frame data (either 1st trip freeze frame data or freeze frame data) can be stored in the ECM. 1st trip freeze frame data is stored in the ECM memory along with the 1st trip DTC. There is no priority for 1st trip freeze frame data and it is updated each time a different 1st trip DTC is detected. However, once freeze frame data (2nd trip detection/MIL on) is stored in the ECM memory, 1st trip freeze frame data is no longer stored. Remember, only one set of freeze frame data can be stored in the ECM. The ECM has the following priorities to update the data.

Priority	Items	
1	Freeze frame data	Misfire — DTC: P0300 - P0304 Fuel Injection System Function — DTC: P0171, P0172
2		Except the above items (Includes CVT related items)
3	1st trip freeze frame data	

For example, the EGR malfunction (Priority: 2) was detected and the freeze frame data was stored in the 2nd trip. After that when the misfire (Priority: 1) is detected in another trip, the freeze frame data will be updated from the EGR malfunction to the misfire. The 1st trip freeze frame data is updated each time a different malfunction is detected. There is no priority for 1st trip freeze frame data. However, once freeze frame data is stored in the ECM memory, 1st trip freeze data is no longer stored (because only one freeze frame data or 1st trip freeze frame data can be stored in the ECM). If freeze frame data is stored in the ECM memory and freeze frame data with the same priority occurs later, the first (original) freeze frame data remains unchanged in the ECM memory.
Both 1st trip freeze frame data and freeze frame data (along with the DTCs) are cleared when the ECM memory is erased. Procedures for clearing the ECM memory are described in “HOW TO ERASE EMISSION-RELATED DIAGNOSTIC INFORMATION”.

How to Read DTC and 1st Trip DTC

With CONSULT-III

With GST

CONSULT-III or GST (Generic Scan Tool) Examples: P0340, P0850, P1148, etc.
These DTCs are prescribed by SAE J2012.

(CONSULT-III also displays the malfunctioning component or system.)

No Tools

The number of blinks of the MIL in the Diagnostic Test Mode II (Self-Diagnostic Results) indicates the DTC. Example: 0340, 0850, 1148, etc.

These DTCs are controlled by NISSAN.

- **1st trip DTC No. is the same as DTC No.**
- **Output of a DTC indicates a malfunction. However, GST or the Diagnostic Test Mode II do not indicate whether the malfunction is still occurring or has occurred in the past and has returned to normal. CONSULT-III can identify malfunction status as shown below. Therefore, using CONSULT-III (if available) is recommended.**

DTC or 1st trip DTC of a malfunction is displayed in “SELF-DIAGNOSTIC RESULTS” mode of CONSULT-III. Time data indicates how many times the vehicle was driven after the last detection of a DTC.

If the DTC is being detected currently, the time data will be [0].

If a 1st trip DTC is stored in the ECM, the time data will be [1t].

How to Erase DTC and 1st Trip DTC

With CONSULT-III

NOTE:

- **If the ignition switch stays ON after repair work, be sure to turn ignition switch OFF once. Wait at least 10 seconds and then turn it ON (engine stopped) again.**
- **If the DTC is not for CVT related items (see EC-527, "DTC Index"), skip step 1.**

1. Erase DTC in TCM. Refer to TM-296, "Diagnosis Description".
2. Select “ENGINE” with CONSULT-III.
3. Select “SELF-DIAG RESULT”.
4. Touch “ERASE”. (DTC in ECM will be erased.)

With GST

The emission-related diagnostic information in the ECM can be erased by selecting Service $04 with GST.

NOTE:

If the ignition switch stays ON after repair work, be sure to turn ignition switch OFF once. Wait at least 10 seconds and then turn it ON (engine stopped) again.

1. Select Service $04 with GST (Generic Scan Tool).

No Tools

NOTE:

If the ignition switch stays ON after repair work, be sure to turn ignition switch OFF once. Wait at least 10 seconds and then turn it ON (engine stopped) again.

1. Erase DTC in ECM. Refer to HOW TO ERASE DIAGNOSTIC TEST MODE II (SELF-DIAGNOSTIC RESULTS).

- **If the battery is disconnected, the emission-related diagnostic information will be lost within 24 hours.**
- **The following data are cleared when the ECM memory is erased.**

- Diagnostic trouble codes
- 1st trip diagnostic trouble codes
- Freeze frame data
- 1st trip freeze frame data
- System readiness test (SRT) codes
- Test values

Actual work procedures are explained using a DTC as an example. Be careful so that not only the DTC, but all of the data listed above, are cleared from the ECM memory during work procedures.

SYSTEM READINESS TEST (SRT) CODE

System Readiness Test (SRT) code is specified in Service $01 of SAE J1979.

As part of an enhanced emissions test for Inspection & Maintenance (I/M), certain states require the status of SRT be used to indicate whether the ECM has completed self-diagnosis of major emission systems and components. Completion must be verified in order for the emissions inspection to proceed.

If a vehicle is rejected for a State emissions inspection due to one or more SRT items indicating “INCMP”, use the information in this Service Manual to set the SRT to “CMPLT”.

In most cases the ECM will automatically complete its self-diagnosis cycle during normal usage, and the SRT status will indicate “CMPLT” for each application system. Once set as “CMPLT”, the SRT status remains “CMPLT” until the self-diagnosis memory is erased.

Occasionally, certain portions of the self-diagnostic test may not be completed as a result of the customer's normal driving pattern; the SRT will indicate “INCMP” for these items.

NOTE:
The SRT will also indicate “INCMP” if the self-diagnosis memory is erased for any reason or if the ECM memory power supply is interrupted for several hours.
If, during the state emissions inspection, the SRT indicates “CMPLT” for all test items, the inspector will continue with the emissions test. However, if the SRT indicates “INCMP” for one or more of the SRT items the vehicle is returned to the customer untested.

NOTE:
If MIL is ON during the state emissions inspection, the vehicle is also returned to the customer untested even though the SRT indicates “CMPLT” for all test items. Therefore, it is important to check SRT (“CMPLT”) and DTC (No DTCs) before the inspection.

SRT Item
The table below shows required self-diagnostic items to set the SRT to “CMPLT”.

SRT item (CONSULT-III indication)	Performance Priority*	Required self-diagnostic items to set the SRT to “CMPLT”	Corresponding DTC No.
CATALYST	2	Three way catalyst function	P0420
		HC adsorption catalyst function	P2423
EVAP SYSTEM	2	EVAP control system purge flow monitoring	P0441
	1	EVAP control system	P0442
	2	EVAP control system	P0456
HO2S	2	Air fuel ratio (A/F) sensor 1	P0133
		Heated oxygen sensor 2	P0137
		Heated oxygen sensor 2	P0138
		Heated oxygen sensor 2	P0139
		Heated oxygen sensor 3	P0143
		Heated oxygen sensor 3	P0144
		Heated oxygen sensor 3	P0145

*: If completion of several SRTs is required, perform driving patterns (DTC CONFIRMATION PROCEDURE), one by one based on the priority for models with CONSULT-III.

SRT Set Timing
SRT is set as “CMPLT” after self-diagnosis has been performed one or more times. Completion of SRT is done regardless of whether the result is OK or NG. The set timing is different between OK and NG results and is shown in the table below.

Self-diagnosis result		Example				
		Diagnosis	Ignition cycle ← ON → OFF	← ON → OFF	← ON → OFF	← ON →
All OK	Case 1	P0400	OK (1)	— (1)	OK (2)	— (2)
		P0402	OK (1)	— (1)	— (1)	OK (2)
		P1402	OK (1)	OK (2)	— (2)	— (2)
		SRT of EGR	“CMPLT”	“CMPLT”	“CMPLT”	“CMPLT”
	Case 2	P0400	OK (1)	— (1)	— (1)	— (1)
		P0402	— (0)	— (0)	OK (1)	— (1)
		P1402	OK (1)	OK (2)	— (2)	— (2)
		SRT of EGR	“INCMP”	“INCMP”	“CMPLT”	“CMPLT”

NG exists	Case 3	P0400	OK	OK	—	—
		P0402	—	—	—	—
		P1402	NG	—	NG	NG (Consecutive NG)
		(1st trip) DTC	1st trip DTC	—	1st trip DTC	DTC (= MIL ON)
		SRT of EGR	“INCMP”	“INCMP”	“INCMP”	“CMPLT”

OK: Self-diagnosis is carried out and the result is OK.

NG: Self-diagnosis is carried out and the result is NG.

—: Self-diagnosis is not carried out.

When all SRT related self-diagnoses showed OK results in a single cycle (Ignition OFF-ON-OFF), the SRT will indicate “CMPLT”. → Case 1 above

When all SRT related self-diagnoses showed OK results through several different cycles, the SRT will indicate “CMPLT” at the time the respective self-diagnoses have at least one OK result. → Case 2 above

If one or more SRT related self-diagnoses showed NG results in 2 consecutive cycles, the SRT will also indicate “CMPLT”. → Case 3 above

The table above shows that the minimum number of cycles for setting SRT as “INCMP” is one (1) for each self-diagnosis (Case 1 & 2) or two (2) for one of self-diagnoses (Case 3). However, in preparation for the state emissions inspection, it is unnecessary for each self-diagnosis to be executed twice (Case 3) for the following reasons:

- The SRT will indicate “CMPLT” at the time the respective self-diagnoses have one (1) OK result.
- The emissions inspection requires “CMPLT” of the SRT only with OK self-diagnosis results.
- When, during SRT driving pattern, 1st trip DTC (NG) is detected prior to “CMPLT” of SRT, the self-diagnosis memory must be erased from ECM after repair.
- If the 1st trip DTC is erased, all the SRT will indicate “INCMP”.

  NOTE:

  SRT can be set as “CMPLT” together with the DTC(s). Therefore, DTC check must always be carried out prior to the state emission inspection even though the SRT indicates “CMPLT”.

SRT Service Procedure

If a vehicle has failed the state emissions inspection due to one or more SRT items indicating “INCMP”, review the flowchart diagnostic sequence on the next figure.

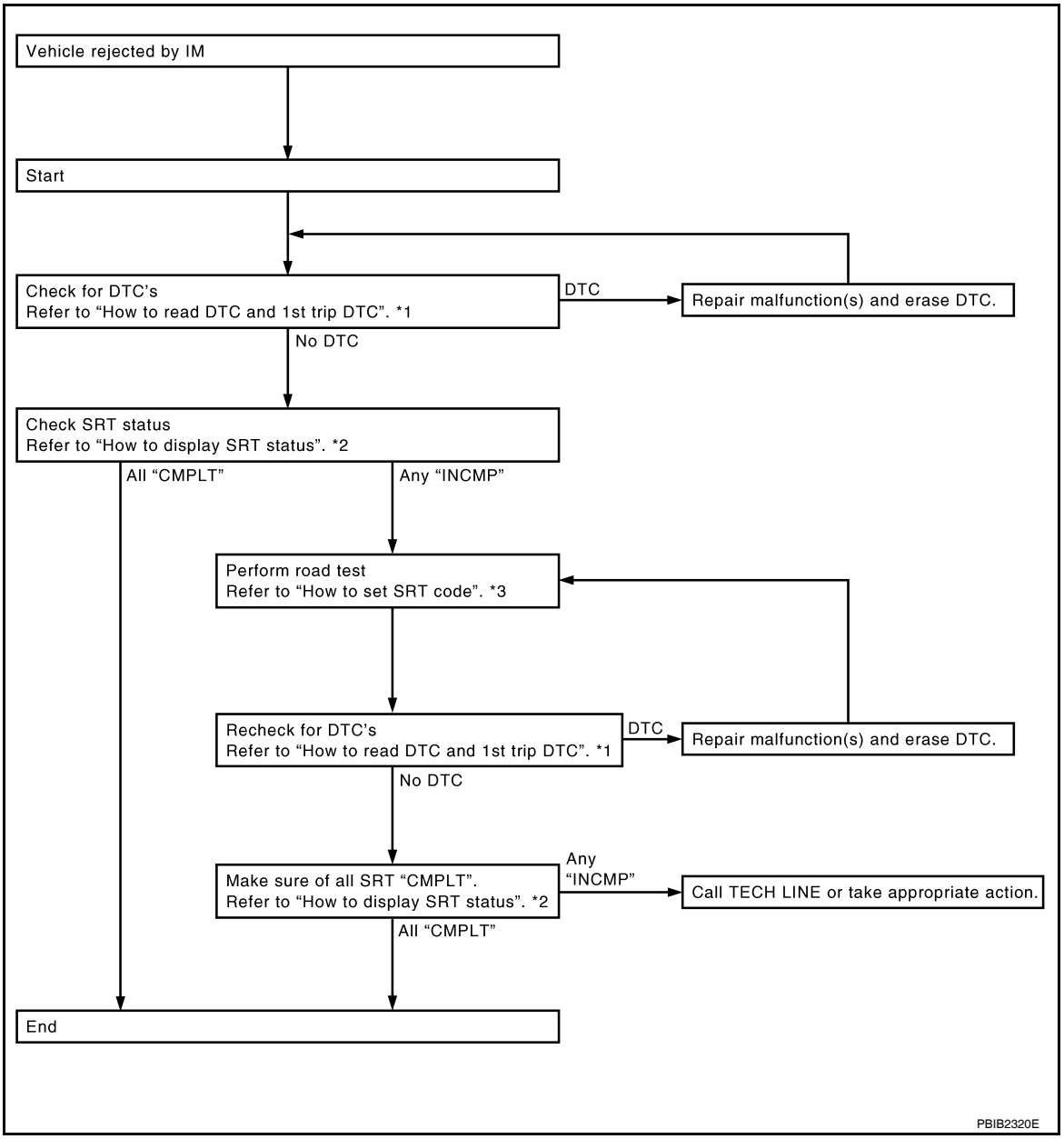

*1 "How to Read DTC and 1st Trip DTC" *2 "How to Display SRT Status" *3 "How to Set SRT Code"

How to Display SRT Status

WITH CONSULT-III

Selecting "SRT STATUS" in "DTC CONFIRMATION" mode with CONSULT-III.

For items whose SRT codes are set, a "CMPLT" is displayed on the CONSULT-III screen; for items whose SRT codes are not set, "INCMP" is displayed.

NOTE:

Though displayed on the CONSULT-III screen, "HO2S HTR" is not SRT item.

WITH GST

Selecting Service $01 with GST (Generic Scan Tool)

NO TOOLS

A SRT code itself can not be displayed while only SRT status can be.

1. Turn ignition switch ON and wait 20 seconds.
2. SRT status is indicated as shown below.
   - When all SRT codes are set, MIL lights up continuously.

- When any SRT codes are not set, MIL will flash periodically for 10 seconds.

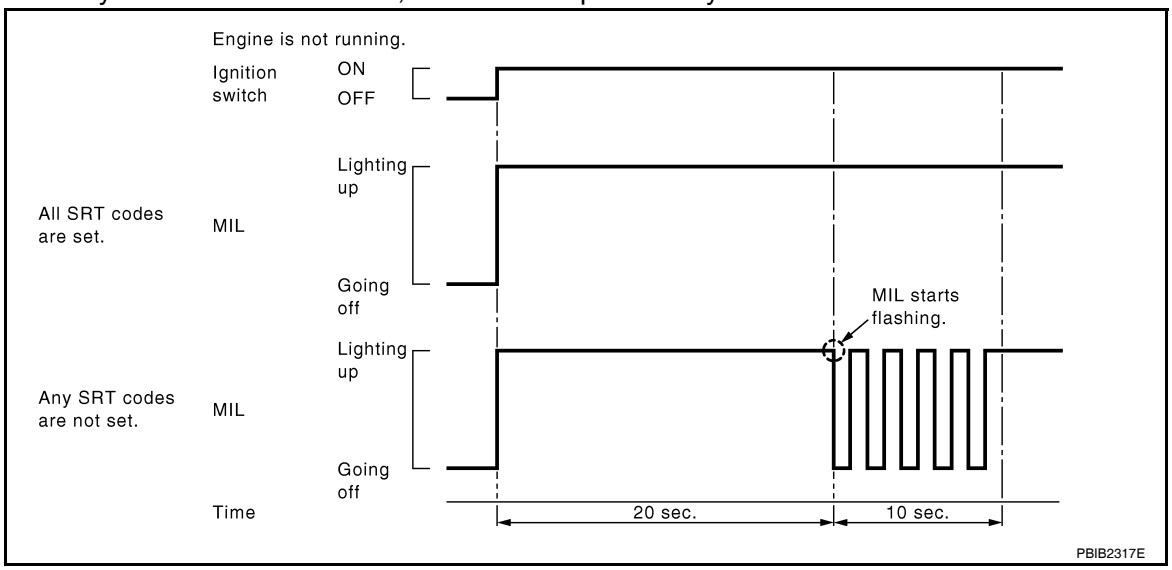

MALFUNCTION INDICATOR LAMP (MIL)

Description

The MIL is located on the instrument panel.

1. The MIL will light up when the ignition switch is turned ON without the engine running. This is a bulb check.
   If the MIL does not light up, refer to EC-475, "Component Function Check".
2. When the engine is started, the MIL should go off.
   If the MIL remains on, the on board diagnostic system has detected an engine system malfunction.

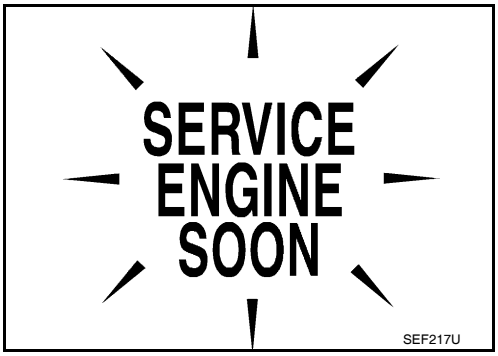

On Board Diagnostic System Function

The on board diagnostic system has the following three functions.

Diagnostic Test Mode	KEY and ENG. Status	Function	Explanation of Function
Mode I	Ignition switch in ON position Engine stopped	BULB CHECK	This function checks the MIL bulb for damage (blown, open circuit, etc.). If the MIL does not come on, check MIL circuit.
	Engine running	MALFUNCTION WARNING	This is a usual driving condition. When a malfunction is detected twice in two consecutive driving cycles (two trip detection logic), the MIL will light up to inform the driver that a malfunction has been detected. The following malfunctions will light up or blink the MIL in the 1st trip. • Misfire (Possible three way catalyst damage) • One trip detection diagnoses
Mode II	Ignition switch in ON position Engine stopped	SELF-DIAGNOSTIC RESULTS	This function allows DTCs and 1st trip DTCs to be read.

Diagnostic Test Mode I — Bulb Check

In this mode, the MIL on the instrument panel should stay ON. If it remains OFF, check the bulb. Refer to EC-475, "Component Function Check".

Diagnostic Test Mode I — Malfunction Warning

MIL	Condition
ON	When the malfunction is detected.
OFF	No malfunction.

This DTC number is clarified in Diagnostic Test Mode II (SELF-DIAGNOSTIC RESULTS)

Diagnostic Test Mode II — Self-diagnostic Results

In this mode, the DTC and 1st trip DTC are indicated by the number of blinks of the MIL as shown below.
The DTC and 1st trip DTC are displayed at the same time. If the MIL does not illuminate in diagnostic test mode I (Malfunction warning), all displayed items are 1st trip DTCs. If only one code is displayed when the MIL illuminates in diagnostic test mode II (SELF-DIAGNOSTIC RESULTS), it is a DTC; if two or more codes are displayed, they may be either DTCs or 1st trip DTCs. DTC No. is same as that of 1st trip DTC. These uniden-

tified codes can be identified by using the CONSULT-III or GST. A DTC will be used as an example for how to read a code.

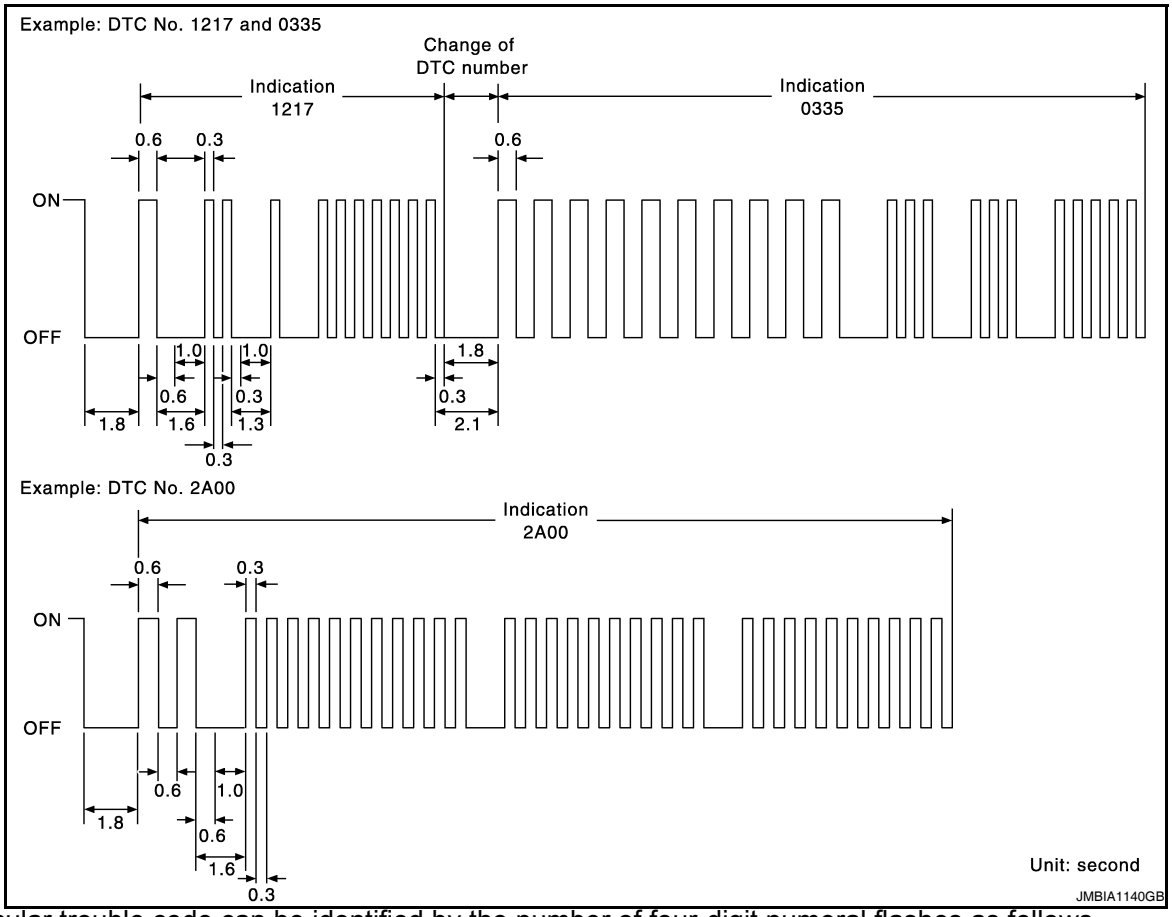

A particular trouble code can be identified by the number of four-digit numeral flashes as follows.

Number	0	1	2	3	4	5	6	7	8	9	A	B	C	D	E	F
Flashes	10	1	2	3	4	5	6	7	8	9	11	12	13	14	15	16

The length of time the 1,000th-digit numeral flashes on and off is 1.2 seconds consisting of an ON (0.6-second) - OFF (0.6-second) cycle.
The 100th-digit numeral and lower digit numerals consist of a 0.3-second ON and 0.3-second OFF cycle.
A change from one digit numeral to another occurs at an interval of 1.0-second OFF. In other words, the later numeral appears on the display 1.3 seconds after the former numeral has disappeared.
A change from one trouble code to another occurs at an interval of 1.8-second OFF.
In this way, all the detected malfunctions are classified by their DTC numbers. The DTC 0000 refers to no malfunction. (See EC-527, "DTC Index")

How to Switch Diagnostic Test Mode

NOTE:
- **It is better to count the time accurately with a clock.**
- **It is impossible to switch the diagnostic mode when an accelerator pedal position sensor circuit has a malfunction.**
- **Always ECM returns to Diagnostic Test Mode I after ignition switch is turned OFF.**

HOW TO SET DIAGNOSTIC TEST MODE II (SELF-DIAGNOSTIC RESULTS)

1. Confirm that accelerator pedal is fully released, turn ignition switch ON and wait 3 seconds.
2. Repeat the following procedure quickly five times within 5 seconds.
   - Fully depress the accelerator pedal.
   - Fully release the accelerator pedal.
3. Wait 7 seconds, fully depress the accelerator pedal and keep it for approx. 10 seconds until the MIL starts blinking.
   NOTE:
   Do not release the accelerator pedal for 10 seconds if MIL may start blinking on the halfway of this 10 seconds. This blinking is displaying SRT status and is continued for another 10 seconds.

4. Fully release the accelerator pedal.
   ECM has entered to Diagnostic Test Mode II (Self-diagnostic results).
   NOTE:
   Wait until the same DTC (or 1st trip DTC) appears to confirm all DTCs certainly.

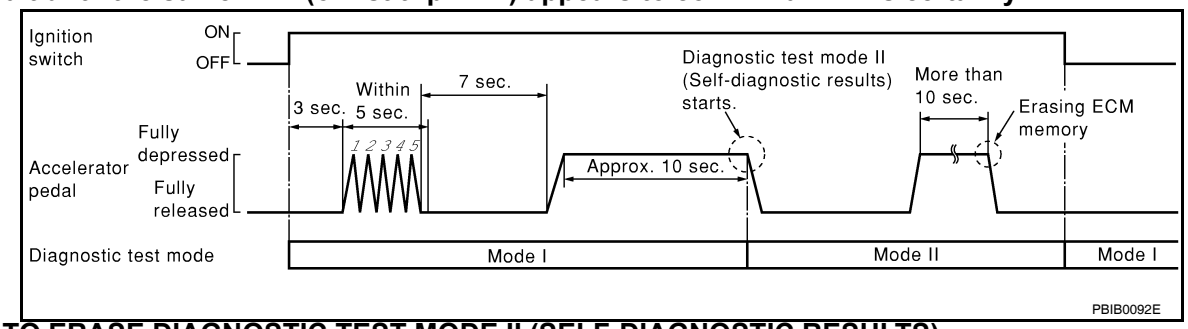

HOW TO ERASE DIAGNOSTIC TEST MODE II (SELF-DIAGNOSTIC RESULTS)

1. Set ECM in Diagnostic Test Mode II (Self-diagnostic results). Refer to “HOW TO SET DIAGNOSTIC TEST MODE II (SELF-DIAGNOSTIC RESULTS)”.
2. Fully depress the accelerator pedal and keep it for more than 10 seconds.
   The emission-related diagnostic information has been erased from the backup memory in the ECM.
3. Fully release the accelerator pedal, and confirm the DTC 0000 is displayed.

OBD System Operation Chart

Relationship Between MIL, 1st Trip DTC, DTC and Detectable Items

- When a malfunction is detected for the first time, the 1st trip DTC and the 1st trip freeze frame data are stored in the ECM memory.
- When the same malfunction is detected in two consecutive trips, the DTC and the freeze frame data are stored in the ECM memory, and the MIL will come on.
- The MIL will go off after the vehicle is driven 3 times (driving pattern B) with no malfunction. The drive is counted only when the recorded driving pattern is met (as stored in the ECM). If another malfunction occurs while counting, the counter will reset.
- The DTC and the freeze frame data will be stored until the vehicle is driven 40 times (driving pattern A) without the same malfunction recurring (except for Misfire and Fuel Injection System). For Misfire and Fuel Injection System, the DTC and freeze frame data will be stored until the vehicle is driven 80 times (driving pattern C) without the same malfunction recurring. The “TIME” in “SELF-DIAGNOSTIC RESULTS” mode of CONSULT-III will count the number of times the vehicle is driven.
- The 1st trip DTC is not displayed when the self-diagnosis results in OK for the 2nd trip.

Summary Chart

Items	Fuel Injection System	Misfire	Other
MIL (goes off)	3 (pattern B)	3 (pattern B)	3 (pattern B)
DTC, Freeze Frame Data (no display)	80 (pattern C)	80 (pattern C)	40 (pattern A)
1st Trip DTC (clear)	1 (pattern C), *1	1 (pattern C), *1	1 (pattern B)
1st Trip Freeze Frame Data (clear)	*1, *2	*1, *2	1 (pattern B)

For details about patterns B and C under “Fuel Injection System” and “Misfire”, see “EXPLANATION FOR DRIVING PATTERNS FOR “MISFIRE <EXHAUST QUALITY DETERIORATION>”, “FUEL INJECTION SYSTEM”.

For details about patterns A and B under Other, see “EXPLANATION FOR DRIVING PATTERNS FOR “MISFIRE <EXHAUST QUALITY DETERIORATION>”, “FUEL INJECTION SYSTEM”.

*1: Clear timing is at the moment OK is detected.

*2: Clear timing is when the same malfunction is detected in the 2nd trip.

Relationship Between MIL, DTC, 1st Trip DTC and Driving Patterns for “Misfire <Exhaust Quality Deterioration>”, “Fuel Injection System”

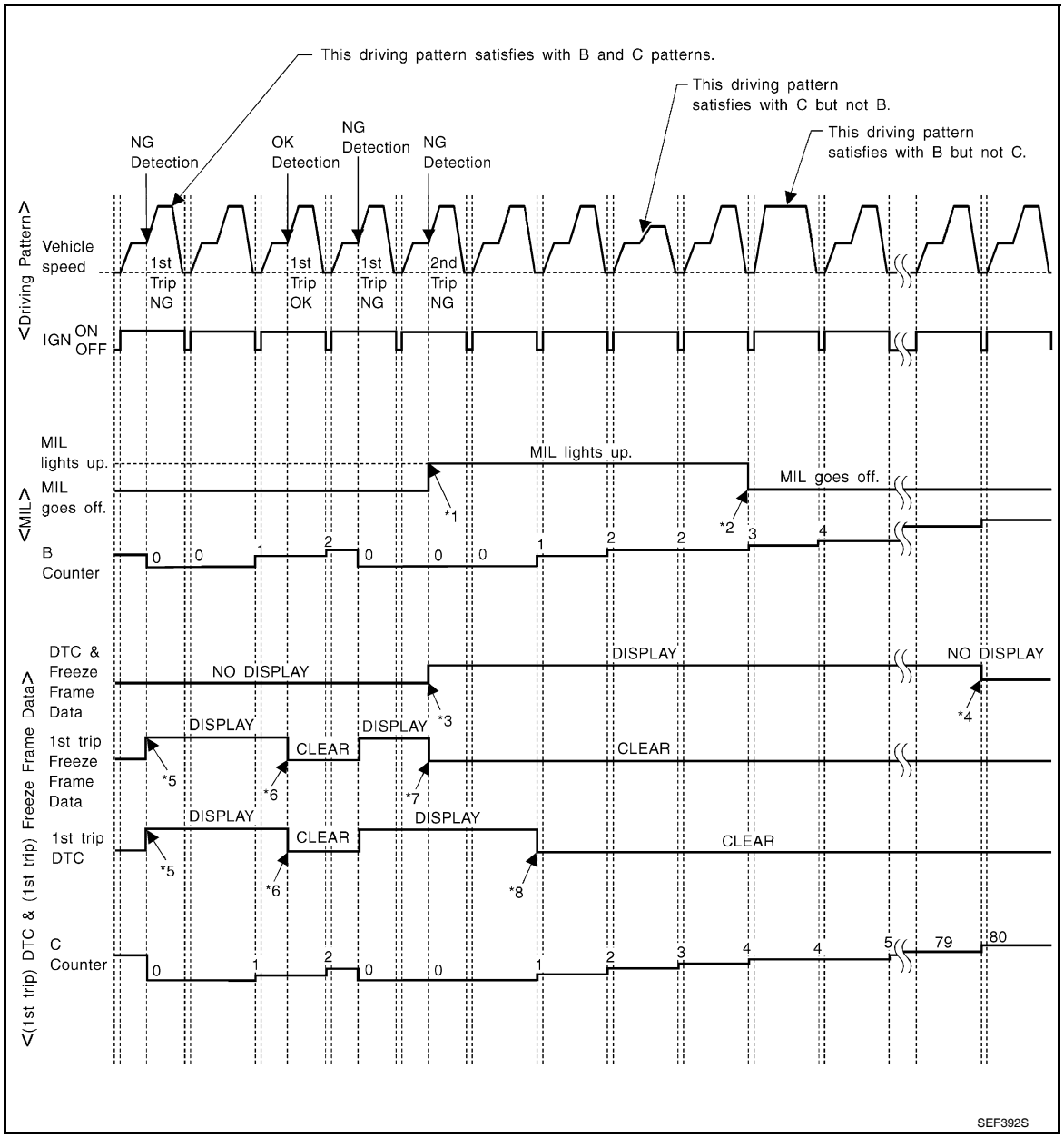

*1: When the same malfunction is detected in two consecutive trips, MIL will light up.

*2: MIL will go off after vehicle is driven 3 times (pattern B) without any malfunctions.

*3: When the same malfunction is detected in two consecutive trips, the DTC and the freeze frame data will be stored in ECM.

*4: The DTC and the freeze frame data will not be displayed any longer after vehicle is driven 80 times (pattern C) without the same malfunction. (The DTC and the freeze frame data still remain in ECM.)

*5: When a malfunction is detected for the first time, the 1st trip DTC and the 1st trip freeze frame data will be stored in ECM.

*6: The 1st trip DTC and the 1st trip freeze frame data will be cleared at the moment OK is detected.

*7: When the same malfunction is detected in the 2nd trip, the 1st trip freeze frame data will be cleared.

*8: 1st trip DTC will be cleared when vehicle is driven once (pattern C) without the same malfunction after DTC is stored in ECM.

Explanation for Driving Patterns for “Misfire <Exhaust Quality Deterioration>”, “Fuel Injection System”
<Driving Pattern B>
Driving pattern B means the vehicle operation as follows:
All components and systems should be monitored at least once by the OBD system.

- The B counter will be cleared when the malfunction is detected once regardless of the driving pattern.
- The B counter will be counted up when driving pattern B is satisfied without any malfunction.
- The MIL will go off when the B counter reaches 3. (*2 in “OBD SYSTEM OPERATION CHART”)

<Driving Pattern C>
Driving pattern C means the vehicle operation as follows:
The following conditions should be satisfied at the same time:
Engine speed: (Engine speed in the freeze frame data) ±375 rpm
Calculated load value: (Calculated load value in the freeze frame data) x (1±0.1) [%]
Engine coolant temperature (T) condition:

- When the freeze frame data shows lower than 70°C (158°F), T should be lower than 70°C (158°F).
- When the freeze frame data shows higher than or equal to 70°C (158°F), T should be higher than or equal to 70°C (158°F).

Example:
If the stored freeze frame data is as follows:
Engine speed: 850 rpm, Calculated load value: 30%, Engine coolant temperature: 80°C (176°F)
To be satisfied with driving pattern C, the vehicle should run under the following conditions:
Engine speed: 475 - 1,225 rpm, Calculated load value: 27 - 33%, Engine coolant temperature: more than 70°C (158°F)

- The C counter will be cleared when the malfunction is detected regardless of vehicle conditions above.
- The C counter will be counted up when vehicle conditions above is satisfied without the same malfunction.
- The DTC will not be displayed after C counter reaches 80.
- The 1st trip DTC will be cleared when C counter is counted once without the same malfunction after DTC is stored in ECM.

Relationship Between MIL, DTC, 1st Trip DTC and Driving Patterns Except For “Misfire <Exhaust Quality Deterioration>”, “Fuel Injection System”

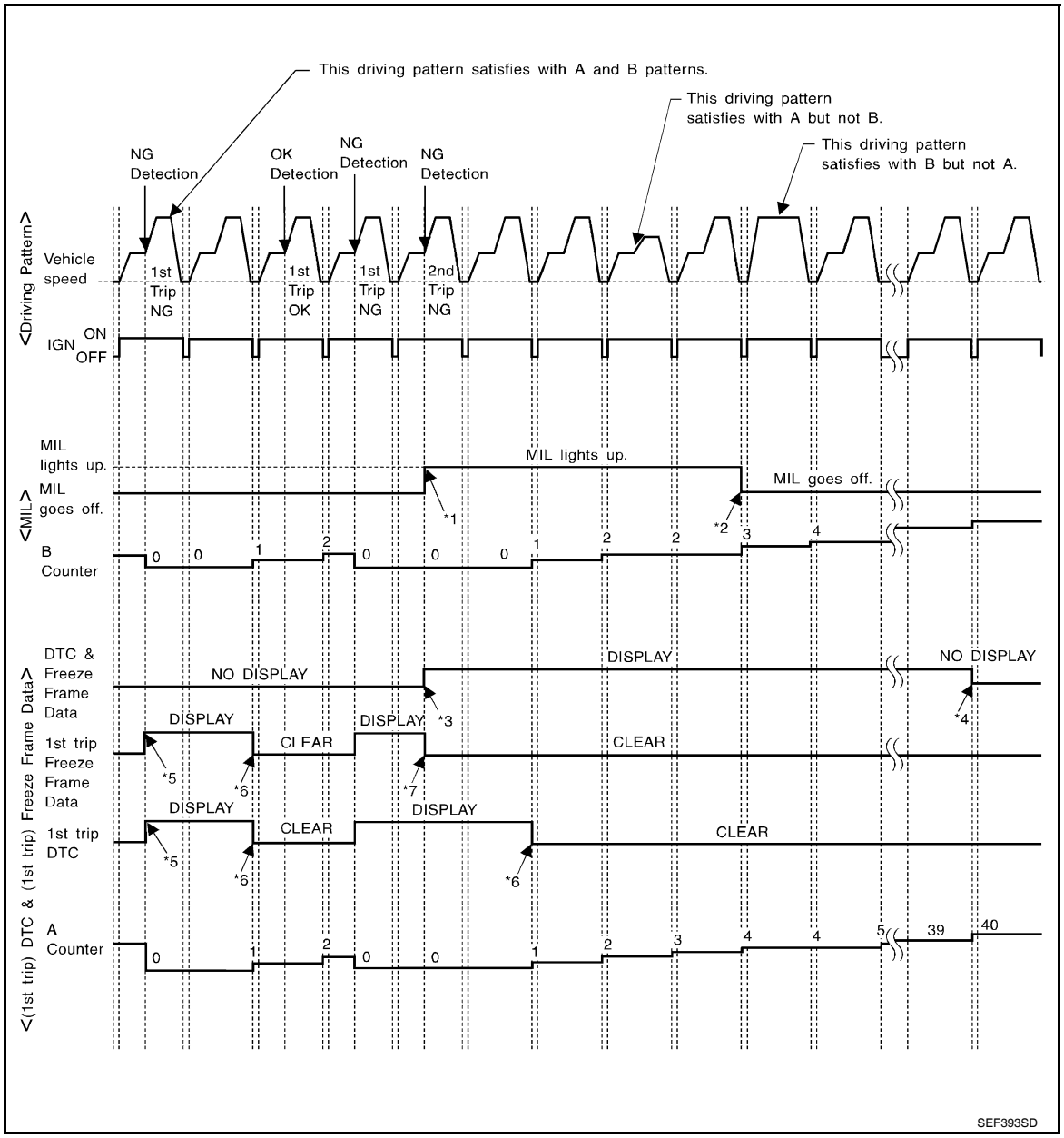

*1: When the same malfunction is detected in two consecutive trips, MIL will light up.

*2: MIL will go off after vehicle is driven 3 times (pattern B) without any malfunctions.

*3: When the same malfunction is detected in two consecutive trips, the DTC and the freeze frame data will be stored in ECM.

*4: The DTC and the freeze frame data will not be displayed any longer after vehicle is driven 40 times (pattern A) without the same malfunction. (The DTC and the freeze frame data still remain in ECM.)

*5: When a malfunction is detected for the first time, the 1st trip DTC and the 1st trip freeze frame data will be stored in ECM.

*6: 1st trip DTC will be cleared after vehicle is driven once (pattern B) without the same malfunction.

*7: When the same malfunction is detected in the 2nd trip, the 1st trip freeze frame data will be cleared.

Explanation for Driving Patterns Except for “Misfire <Exhaust Quality Deterioration>”, “Fuel Injection System”

<Driving Pattern A>

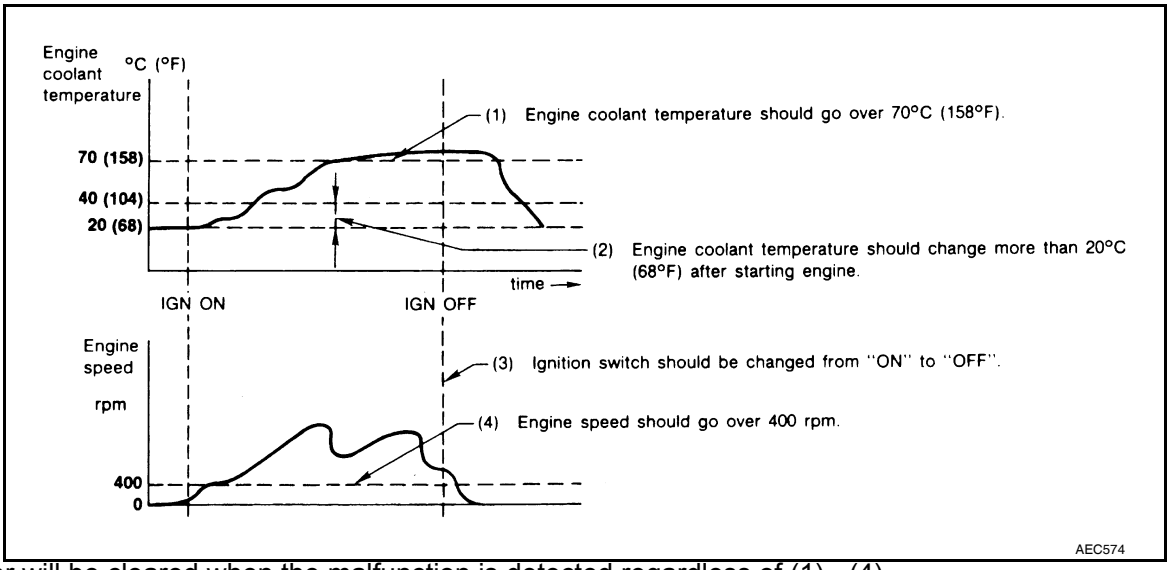

- The A counter will be cleared when the malfunction is detected regardless of (1) - (4).
- The A counter will be counted up when (1) - (4) are satisfied without the same malfunction.
- The DTC will not be displayed after the A counter reaches 40.

<Driving Pattern B>

Driving pattern B means the vehicle operation as follows:

All components and systems should be monitored at least once by the OBD system.

- The B counter will be cleared when the malfunction is detected once regardless of the driving pattern.
- The B counter will be counted up when driving pattern B is satisfied without any malfunctions.
- The MIL will go off when the B counter reaches 3 (*2 in OBD SYSTEM OPERATION CHART).

CONSULT-III Function

INFOID:0000000004349181

FUNCTION

Diagnostic test mode	Function
Work support	This mode enables a technician to adjust some devices faster and more accurately by following the indications on the CONSULT-III unit.
Self-diagnostic results	Self-diagnostic results such as 1st trip DTC, DTCs and 1st trip freeze frame data or freeze frame data can be read and erased quickly.*
Data monitor	Input/Output data in the ECM can be read.
Active test	Diagnostic Test Mode in which CONSULT-III drives some actuators apart from the ECMs and also shifts some parameters in a specified range.
DTC & SRT confirmation	The status of system monitoring tests and the self-diagnosis status/result can be confirmed.
Function test	This mode is used to inform customers when their vehicle condition requires periodic maintenance.
ECU part number	ECM part number can be read.

*: The following emission-related diagnostic information is cleared when the ECM memory is erased.

- Diagnostic trouble codes
- 1st trip diagnostic trouble codes
- Freeze frame data
- 1st trip freeze frame data
- System readiness test (SRT) codes
- Test values

ENGINE CONTROL COMPONENT PARTS/CONTROL SYSTEMS APPLICATION

Item			DIAGNOSTIC TEST MODE						
			WORK SUPPORT	SELF-DIAGNOSTIC RESULTS		DATA MONITOR	ACTIVE TEST	DTC & SRT CONFIRMATION	
				DTC*1	FREEZE FRAME DATA*2			SRT STATUS	DTC WORK SUPPORT
ENGINE CONTROL COMPONENT PARTS	INPUT	Crankshaft position sensor (POS)		×	×	×			
		Camshaft position sensor (PHASE)		×	×	×			
		Mass air flow sensor		×		×			
		Engine coolant temperature sensor		×	×	×	×		
		Air fuel ratio (A/F) sensor 1		×		×		×	×
		Heated oxygen sensor 2		×		×		×	×
		Heated oxygen sensor 3		×		×		×	
		Vehicle speed sensor		×	×	×			
		Accelerator pedal position sensor		×		×			
		Throttle position sensor		×	×	×			
		Fuel tank temperature sensor		×		×	×		
		EVAP control system pressure sensor		×		×			
		Intake air temperature sensor		×	×	×			
		Knock sensor		×					
		Refrigerant pressure sensor				×			
		Closed throttle position switch (accelerator pedal position sensor signal)				×			
		Air conditioner switch				×			
		Park/neutral position (PNP) switch		×		×			
		Stop lamp switch		×		×			
		Power steering pressure sensor		×		×			
		Battery voltage				×			
		Load signal				×			
		Primary speed sensor		×		×			
		Tumble control valve position sensor		×		×			
		Fuel level sensor		×		×			
		Battery current sensor		×		×			
		ASCD steering switch		×		×			
		ASCD brake switch		×		×			

Item			DIAGNOSTIC TEST MODE						
			WORK SUPPORT	SELF-DIAGNOSTIC RESULTS		DATA MONI-TOR	ACTIVE TEST	DTC & SRT CONFIRMATION	
				DTC*1	FREEZE FRAME DATA*2			SRT STA-TUS	DTC WORK SUP-PORT
ENGINE COTNROL COMPONENT PARTS	OUTPUT	Fuel injector				×	×		
		Power transistor (Ignition timing)				×	×		
		Throttle control motor relay		×		×			
		Throttle control motor		×					
		EVAP canister purge volume control solenoid valve		×		×	×		×
		Air conditioner relay				×			
		Fuel pump relay	×			×	×		
		Cooling fan relay		×		×	×		
		Air fuel ratio (A/F) sensor 1 heater		×		×		×*3	
		Heated oxygen sensor 2 heater		×		×		×*3	
		Heated oxygen sensor 3 heater		×		×		×*3	
		EVAP canister vent control valve	×	×		×	×		
		Intake valve timing control solenoid valve		×		×	×		
		Alternator				×	×		
		Tumble control valve motor		×		×	×		
		Calculated load value			×	×			

X: Applicable

*1: This item includes 1st trip DTCs.

*2: This mode includes 1st trip freeze frame data or freeze frame data. The items appear on CONSULT-III screen in freeze frame data mode only if a 1st trip DTC or DTC is detected. For details, refer to EC-112, "Diagnosis Description".

*3: Always “CMPLT” is displayed.

INSPECTION PROCEDURE

Refer to CONSULT-III Operators Manual.

WORK SUPPORT MODE

Work Item

WORK ITEM	CONDITION	USAGE
FUEL PRESSURE RELEASE	• FUEL PUMP WILL STOP BY TOUCHING “START” DURING IDLING. CRANK A FEW TIMES AFTER ENGINE STALLS.	When releasing fuel pressure from fuel line
IDLE AIR VOL LEARN	• THE IDLE AIR VOLUME THAT KEEPS THE ENGINE WITHIN THE SPECIFIED RANGE IS MEMORIZED IN ECM.	When learning the idle air volume
SELF-LEARNING CONT	• THE COEFFICIENT OF SELF-LEARNING CONTROL MIXTURE RATIO RETURNS TO THE ORIGINAL COEFFICIENT.	When clearing mixture ratio self-learning value

WORK ITEM	CONDITION	USAGE
EVAP SYSTEM CLOSE	CLOSE THE EVAP CANISTER VENT CONTROL VALVE IN ORDER TO MAKE EVAP SYSTEM CLOSE UNDER THE FOLLOWING CONDITIONS. • IGN SW ON • ENGINE NOT RUNNING • AMBIENT TEMPERATURE IS ABOVE 0°C (32°F). • NO VACUUM AND NO HIGH PRESSURE IN EVAP SYSTEM • FUEL TANK TEMP. IS MORE THAN 0°C (32°F). • WITHIN 10 MINUTES AFTER STARTING “EVAP SYSTEM CLOSE” • WHEN TRYING TO EXECUTE “EVAP SYSTEM CLOSE” UNDER THE CONDITION EXCEPT ABOVE, CONSULT-II WILL DISCONTINUE IT AND DISPLAY APPROPRIATE INSTRUCTION. **NOTE:** **WHEN STARTING ENGINE, CONSULT-III MAY DISPLAY “BATTERY VOLTAGE IS LOW. CHARGE BATTERY”, EVEN IN USING CHARGED BATTERY.**	When detecting EVAP vapor leak point of EVAP system
VIN REGISTRATION	• IN THIS MODE, VIN IS REGISTERED IN ECM.	When registering VIN in ECM
TARGET IDLE RPM ADJ*	• IDLE CONDITION	When setting target idle speed
TARGET IGN TIM ADJ*	• IDLE CONDITION	When adjusting target ignition timing

*: This function is not necessary in the usual service procedure.

SELF-DIAG RESULTS MODE

Self Diagnostic Item
Regarding items of DTC and 1st trip DTC, refer to EC-527, "DTC Index".)

Freeze Frame Data and 1st Trip Freeze Frame Data

Freeze frame data item*	Description
DIAG TROUBLE CODE [PXXXX]	• The engine control component part/control system has a trouble code, it is displayed as PXXXX. (Refer to EC-527, "DTC Index".)
FUEL SYS-B1	• “Fuel injection system status” at the moment a malfunction is detected is displayed. • One mode in the following is displayed. Mode2: Open loop due to detected system malfunction Mode3: Open loop due to driving conditions (power enrichment, deceleration enleanment) Mode4: Closed loop - using oxygen sensor(s) as feedback for fuel control Mode5: Open loop - has not yet satisfied condition to go to closed loop
CAL/LD VALUE [%]	• The calculated load value at the moment a malfunction is detected is displayed.
COOLANT TEMP [°C] or [°F]	• The engine coolant temperature at the moment a malfunction is detected is displayed.
L-FUEL TRM-B1 [%]	• “Long-term fuel trim” at the moment a malfunction is detected is displayed. • The long-term fuel trim indicates much more gradual feedback compensation to the base fuel schedule than short-term fuel trim.
S-FUEL TRM-B1 [%]	• “Short-term fuel trim” at the moment a malfunction is detected is displayed. • The short-term fuel trim indicates dynamic or instantaneous feedback compensation to the base fuel schedule.
ENGINE SPEED [rpm]	• The engine speed at the moment a malfunction is detected is displayed.
VEHICL SPEED [km/h] or [mph]	• The vehicle speed at the moment a malfunction is detected is displayed.
ABSOL TH·P/S [%]	• The throttle valve opening angle at the moment a malfunction is detected is displayed.
B/FUEL SCHDL [msec]	• The base fuel schedule at the moment a malfunction is detected is displayed.

Freeze frame data item*	Description
INT/A TEMP SE [°C] or [°F]	• The intake air temperature at the moment a malfunction is detected is displayed.
FUEL SYS-B2	• These items displayed but are not applicable to this model.
L-FUEL TRM-B2 [%]	
S-FUEL TRM-B2 [%]	
INT MANI PRES [kPa]	
COMBUST CONDITION	

*: The items are the same as those of 1st trip freeze frame data.

DATA MONITOR MODE

Monitored Item

×: Applicable

Monitored item	Unit	Description	Remarks
ENG SPEED	rpm	• Indicates the engine speed computed from the signal of the crankshaft position sensor (POS) and camshaft position sensor (PHASE).	• Accuracy becomes poor if engine speed drops below the idle rpm. • If the signal is interrupted while the engine is running, an abnormal value may be indicated.
MAS A/F SE-B1	V	• The signal voltage of the mass air flow sensor is displayed.	• When the engine is stopped, a certain value is indicated. • When engine is running specification range is indicated in “SPEC”.
B/FUEL SCHDL	ms	• “Base fuel schedule” indicates the fuel injection pulse width programmed into ECM, prior to any learned on board correction.	• When engine is running specification range is indicated in “SPEC”.
A/F ALPHA-B1	%	• The mean value of the air-fuel ratio feedback correction factor per cycle is indicated.	• When the engine is stopped, a certain value is indicated. • When engine is running specification range is indicated in “SPEC”. • This data also includes the data for the air-fuel ratio learning control.
COOLAN TEMP/S	°C or °F	• The engine coolant temperature (determined by the signal voltage of the engine coolant temperature sensor) is displayed.	• When the engine coolant temperature sensor is open or short-circuited, ECM enters fail-safe mode. The engine coolant temperature determined by the ECM is displayed.
A/F SEN1 (B1)	V	• The A/F signal computed from the input signal of the air fuel ratio (A/F) sensor 1 is displayed.	
HO2S2 (B1)	V	• The signal voltage of the heated oxygen sensor 2 is displayed.	
HO2S3(B1)	V	• The signal voltage of the heated oxygen sensor 3 is displayed.	
HO2S2 MNTR(B1)	RICH/LEAN	• Display of heated oxygen sensor 2 signal: RICH: means the amount of oxygen after three way catalyst is relatively small. LEAN: means the amount of oxygen after three way catalyst is relatively large.	• When the engine is stopped, a certain value is indicated.
VHCL SPEED SE	km/h or mph	• The vehicle speed computed from the vehicle speed signal sent from combination meter is displayed.	
BATTERY VOLT	V	• The power supply voltage of ECM is displayed.	
ACCEL SEN 1	V	• The accelerator pedal position sensor signal voltage is displayed.	• ACCEL SEN 2 signal is converted by ECM internally. Thus, it differs from ECM terminal voltage signal.
ACCEL SEN 2			

Monitored item	Unit	Description	Remarks
TP SEN 1-B1	V	• The throttle position sensor signal voltage is displayed.	• TP SEN 2-B1 signal is converted by ECM internally. Thus, it differs from ECM terminal voltage signal.
TP SEN 2-B1			
FUEL T/TMP SE	°C or °F	• The fuel temperature (determined by the signal voltage of the fuel tank temperature sensor) is displayed.	
INT/A TEMP SE	°C or °F	• The intake air temperature (determined by the signal voltage of the intake air temperature sensor) is indicated.	
EVAP SYS PRES	V	• The signal voltage of EVAP control system pressure sensor is displayed.	
FUEL LEVEL SE	V	• The signal voltage of the fuel level sensor is displayed.	
START SIGNAL	ON/OFF	• Indicates start signal status [ON/OFF] computed by the ECM according to the signals of engine speed and battery voltage.	• After starting the engine, [OFF] is displayed regardless of the starter signal.
CLSD THL POS	ON/OFF	• Indicates idle position [ON/OFF] computed by ECM according to the accelerator pedal position sensor signal.	
AIR COND SIG	ON/OFF	• Indicates [ON/OFF] condition of the air conditioner switch as determined by the air conditioner signal.	
P/N POSI SW	ON/OFF	• Indicates [ON/OFF] condition from the park/neutral position (PNP) switch signal.	
PW/ST SIGNAL	ON/OFF	• [ON/OFF] condition of the power steering system (determined by the signal voltage of the power steering pressure sensor) is indicated.	
LOAD SIGNAL	ON/OFF	• Indicates [ON/OFF] condition from the electrical load signal. ON: Rear window defogger switch is ON and/or lighting switch is in 2nd position. OFF: Both rear window defogger switch and lighting switch are OFF.	
IGNITION SW	ON/OFF	• Indicates [ON/OFF] condition from ignition switch signal.	
HEATER FAN SW	ON/OFF	• Indicates [ON/OFF] condition from the heater fan switch signal.	
BRAKE SW	ON/OFF	• Indicates [ON/OFF] condition from the stop lamp switch signal.	
INJ PULSE-B1	msec	• Indicates the actual fuel injection pulse width compensated by ECM according to the input signals.	• When the engine is stopped, a certain computed value is indicated.
IGN TIMING	BTDC	• Indicates the ignition timing computed by ECM according to the input signals.	• When the engine is stopped, a certain value is indicated.
CAL/LD VALUE	%	• “Calculated load value” indicates the value of the current air flow divided by peak air flow.	
MASS AIRFLOW	g·m/s	• Indicates the mass air flow computed by ECM according to the signal voltage of the mass air flow sensor.	
PURG VOL C/V	%	• Indicates the EVAP canister purge volume control solenoid valve control value computed by the ECM according to the input signals. • The opening becomes larger as the value increases.	
INT/V TIM(B1)	°CA	• Indicates [°CA] of intake camshaft advance angle.	

Monitored item	Unit	Description	Remarks
INT/V SOL(B1)	%	• The control value of the intake valve timing control solenoid valve (determined by ECM according to the input signals) is indicated. • The advance angle becomes larger as the value increases.	
SWRL CONT S/V	ON/OFF	• The control condition of the tumble control valve (determined by ECM according to the input signals) is indicated. ON: Closed OFF: Open	
TMBL POS SEN	V	• The tumble control valve position sensor signal voltage is displayed.	
AIR COND RLY	ON/OFF	• The air conditioner relay control condition (determined by ECM according to the input signals) is indicated.	
FUEL PUMP RLY	ON/OFF	• Indicates the fuel pump relay control condition determined by ECM according to the input signals.	
VENT CONT/V	ON/OFF	• The control condition of the EVAP canister vent control valve (determined by ECM according to the input signals) is indicated. ON: Closed OFF: Open	
THRTL RELAY	ON/OFF	• Indicates the throttle control motor relay control condition determined by the ECM according to the input signals.	
COOLING FAN	HI/LOW/OFF	• Indicates the condition of the cooling fan (determined by ECM according to the input signals). HI: High speed operation MID: Middle speed operation LOW: Low speed operation OFF: Stop	
HO2S2 HTR (B1)	ON/OFF	• Indicates [ON/OFF] condition of heated oxygen sensor 2 heater determined by ECM according to the input signals.	
HO2S3 HTR(B1)	ON/OFF	• Indicates [ON/OFF] condition of heated oxygen sensor 3 heater determined by ECM according to the input signals.	
I/P PULLY SPD	rpm	• Indicates the engine speed computed from the primary speed sensor signal.	
VEHICLE SPEED	km/h or mph	• The vehicle speed computed from the vehicle speed signal sent from TCM is displayed.	
IDL A/V LEARN	YET/CMPLT	• Display the condition of Idle Air Volume Learning YET: Idle air volume learning has not been performed yet. CMPLT: Idle air volume learning has already been performed successfully.	
TRVL AFTER MIL	km or mile	• Distance traveled while MIL is activated.	
A/F S1 HTR(B1)	%	• Air fuel ratio (A/F) sensor 1 heater control value computed by ECM according to the input signals. • The current flow to the heater becomes larger as the value increases.	
AC PRESS SEN	V	• The signal voltage from the refrigerant pressure sensor is displayed.	
VHCL SPEED SE	km/h or mph	• The vehicle speed computed from the vehicle speed signal sent from combination meter is displayed.	

Monitored item	Unit	Description	Remarks
SET VHCL SPD	km/h or mph	• The preset vehicle speed is displayed.	
MAIN SW	ON/OFF	• Indicates [ON/OFF] condition from MAIN switch signal.	
CANCEL SW	ON/OFF	• Indicates [ON/OFF] condition from CANCEL switch signal.	
RESUME/ACC SW	ON/OFF	• Indicates [ON/OFF] condition from RESUME/ACCELERATE switch signal.	
SET SW	ON/OFF	• Indicates [ON/OFF] condition from SET/COAST switch signal.	
BRAKE SW1	ON/OFF	• Indicates [ON/OFF] condition from ASCD brake switch signal.	
BRAKE SW2	ON/OFF	• Indicates [ON/OFF] condition of stop lamp switch signal.	
VHCL SPD CUT	NON/CUT	• Indicates the vehicle cruise condition. NON: Vehicle speed is maintained at the ASCD set speed. CUT: Vehicle speed decreased to excessively low compared with the ASCD set speed, and ASCD operation is cut off.	
LO SPEED CUT	NON/CUT	• Indicates the vehicle cruise condition. NON: Vehicle speed is maintained at the ASCD set speed. CUT: Vehicle speed decreased to excessively low, and ASCD operation is cut off.	
AT OD MONITOR	ON/OFF	• Indicates [ON/OFF] condition of A/T O/D according to the input signal from the TCM.	• For M/T models, always “OFF” is displayed.
AT OD CANCEL	ON/OFF	• Indicates [ON/OFF] condition of A/T O/D cancel request signal.	• For M/T models, always “OFF” is displayed.
CRUISE LAMP	ON/OFF	• Indicates [ON/OFF] condition of CRUISE indicator determined by the ECM according to the input signals.	
SET LAMP	ON/OFF	• Indicates [ON/OFF] condition of SET indicator determined by the ECM according to the input signals.	
BAT CUR SEN	mV	• The signal voltage of battery current sensor is displayed.	
ALT DUTY SIG	ON/OFF	• The control condition of the power generation voltage variable control (determined by ECM according to the input signals) is indicated. ON: Power generation voltage variable control is active. OFF: Power generation voltage variable control is inactive.	
A/F ADJ-B1	—	• Indicates the correction of factor stored in ECM. The factor is calculated from the difference between the target air-fuel ratio stored in ECM and the air-fuel ratio calculated from A/F sensor 1 signal.	
ALT DUTY	%	• Indicates the duty ratio of the power generation command value. The ratio is calculated by ECM based on the battery current sensor signal.	

NOTE:

Any monitored item that does not match the vehicle being diagnosed is deleted from the display automatically.

ACTIVE TEST MODE

Test Item

TEST ITEM	CONDITION	JUDGMENT	CHECK ITEM (REMEDY)
FUEL INJECTION	• Engine: Return to the original trouble condition • Change the amount of fuel injection using CONSULT-III.	If trouble symptom disappears, see CHECK ITEM.	• Harness and connectors • Fuel injector • Air fuel ratio (A/F) sensor 1
IGNITION TIMING	• Engine: Return to the original trouble condition • Timing light: Set • Retard the ignition timing using CONSULT-III.	If trouble symptom disappears, see CHECK ITEM.	• Perform Idle Air Volume Learning.
POWER BALANCE	• Engine: After warming up, idle the engine. • A/C switch OFF • Shift lever: P or N (CVT), Neutral (M/T) • Cut off each fuel injector signal one at a time using CONSULT-III.	Engine runs rough or dies.	• Harness and connectors • Compression • Fuel injector • Power transistor • Spark plug • Ignition coil
COOLING FAN*	• Ignition switch: ON • Turn the cooling fan “LOW”, “HI” and “OFF” CONSULT-III.	Cooling fan moves and stops.	• Harness and connectors • IPDM E/R (Cooling fan relay) • Cooling fan motor
ENG COOLANT TEMP	• Engine: Return to the original trouble condition • Change the engine coolant temperature using CONSULT-III.	If trouble symptom disappears, see CHECK ITEM.	• Harness and connectors • Engine coolant temperature sensor • Fuel injector
FUEL PUMP RELAY	• Ignition switch: ON (Engine stopped) • Turn the fuel pump relay “ON” and “OFF” using CONSULT-III and listen to operating sound.	Fuel pump relay makes the operating sound.	• Harness and connectors • Fuel pump relay
PURG VOL CONT/V	• Engine: After warming up, run engine at 1,500 rpm. • Change the EVAP canister purge volume control solenoid valve opening percent using CONSULT-III.	Engine speed changes according to the opening percent.	• Harness and connectors • Solenoid valve
FUEL/T TEMP SEN	• Change the fuel tank temperature using CONSULT-III.		
VENT CONTROL/V	• Ignition switch: ON (Engine stopped) • Turn solenoid valve “ON” and “OFF” with the CONSULT-III and listen to operating sound.	Solenoid valve makes an operating sound.	• Harness and connectors • Solenoid valve
V/T ASSIGN ANGLE	• Engine: Return to the original trouble condition • Change intake valve timing using CONSULT-III.	If trouble symptom disappears, see CHECK ITEM.	• Harness and connectors • Intake valve timing control solenoid valve
ALTERNATOR DUTY	• Engine: Idle • Change duty ratio using CONSULT-III.	Battery voltage changes.	• Harness and connectors • IPDM E/R • Alternator
TUMBLE CONTROL VALVE	• Ignition switch: ON • Turn tumble control valve “ON” and “OFF” with CONSULT-III and listen to operating sound.	Tumble control valve motor makes an operating sound.	• Harness and connectors • Tumble control valve motor

*: Leaving cooling fan OFF with CONSULT-III while engine is running may cause the engine to overheat.

DTC & SRT CONFIRMATION MODE

SRT STATUS Mode

For details, refer to EC-112, "Diagnosis Description".

SRT WORK SUPPORT Mode

This mode enables a technician to drive a vehicle to set the SRT while monitoring the SRT status.

DTC WORK SUPPORT Mode

Test mode	Test item	Corresponding DTC No.	Reference page
EVAPORATIVE SYSTEM	EVP SML LEAK P0442/P1442*	P0442	EC-295
		P0455	EC-330
	EVP V/S LEAK P0456/P1456*	P0456	EC-336
A/F SEN1	A/F SEN1 (B1) P1278/P1279	P0133	EC-209
	A/F SEN1 (B1) P1276	P0130	EC-199
HO2S2	HO2S2 (B1) P1146	P0138	EC-220
	HO2S2 (B1) P1147	P0137	EC-214
	HO2S2 (B1) P139	P0139	EC-228

*: DTC P1442 and P1456 does not apply to L32 models but appears in DTC Work Support Mode screens.

Diagnosis Tool Function

INFOID:0000000004349182

DESCRIPTION

Generic Scan Tool (OBD II scan tool) complying with SAE J1978 has several functions explained below.
ISO15765-4 is used as the protocol.
The name “GST” or “Generic Scan Tool” is used in this service manual.

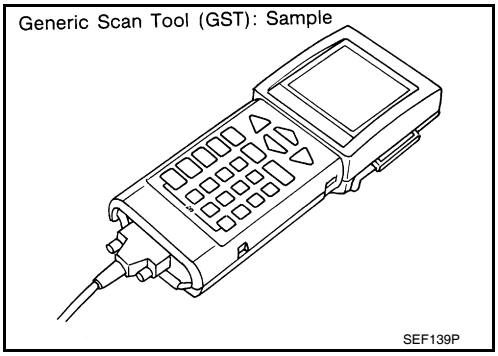

FUNCTION

Diagnostic Service		Function
Service $01	READINESS TESTS	This diagnostic service gains access to current emission-related data values, including analog inputs and outputs, digital inputs and outputs, and system status information.
Service $02	(FREEZE DATA)	This diagnostic service gains access to emission-related data value which were stored by ECM during the freeze frame. For details, refer to EC-527, "DTC Index".
Service $03	DTCs	This diagnostic service gains access to emission-related power train trouble codes which were stored by ECM.
Service $04	CLEAR DIAG INFO	This diagnostic service can clear all emission-related diagnostic information. This includes: • Clear number of diagnostic trouble codes (Service $01) • Clear diagnostic trouble codes (Service $03) • Clear trouble code for freeze frame data (Service $01) • Clear freeze frame data (Service $02) • Reset status of system monitoring test (Service $01) • Clear on board monitoring test results (Service $06 and $07)
Service $06	(ON BOARD TESTS)	This diagnostic service accesses the results of on board diagnostic monitoring tests of specific components/systems that are not continuously monitored.
Service $07	(ON BOARD TESTS)	This diagnostic service enables the off board test drive to obtain test results for emission-related powertrain components/systems that are continuously monitored during normal driving conditions.

Diagnostic Service		Function
Service $08	—	This diagnostic service can close EVAP system in ignition switch ON position (Engine stopped). When this diagnostic service is performed, EVAP canister vent control valve can be closed. In the following conditions, this diagnostic service cannot function. • Low ambient temperature • Low battery voltage • Engine running • Ignition switch OFF • Low fuel temperature • Too much pressure is applied to EVAP system
Service $09	(CALIBRATION ID)	This diagnostic service enables the off-board test device to request specific vehicle information such as Vehicle Identification Number (VIN) and Calibration IDs.

INSPECTION PROCEDURE

1. Turn ignition switch OFF.
2. Connect “GST” to data link connector (2), which is located under LH dash panel near the hood opener handle (1).
3. Turn ignition switch ON.

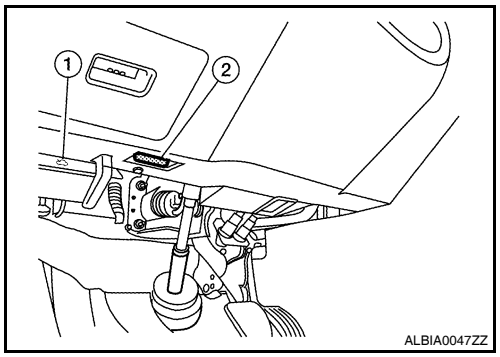

4. Enter the program according to instruction on the screen or in the operation manual.
(*: Regarding GST screens in this section, sample screens are shown.)

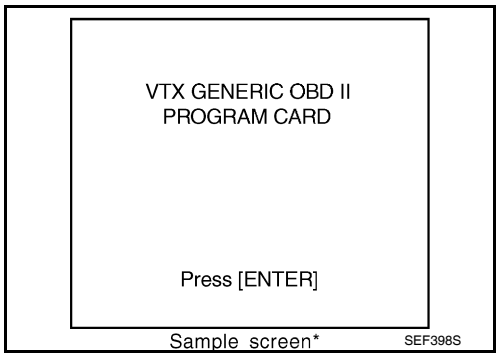

5. Perform each diagnostic mode according to each service procedure.
For further information, see the GST Operation Manual of the tool maker.

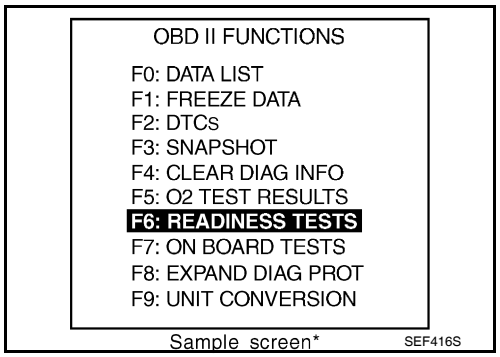

COMPONENT DIAGNOSIS

TROUBLE DIAGNOSIS - SPECIFICATION VALUE

Description

INFOID:0000000004349183

The specification (SP) value indicates the tolerance of the value that is displayed in “SPEC” of “DATA MONITOR” mode of CONSULT-III during normal operation of the Engine Control System. When the value in “SPEC” of “DATA MONITOR” mode is within the SP value, the Engine Control System is confirmed OK. When the value in “SPEC” of “DATA MONITOR” mode is NOT within the SP value, the Engine Control System may have one or more malfunctions.
The SP value is used to detect malfunctions that may affect the Engine Control System, but will not light the MIL.
The SP value will be displayed for the following three items:
- B/FUEL SCHDL (The fuel injection pulse width programmed into ECM prior to any learned on board correction)
- A/F ALPHA-B1 (The mean value of air-fuel ratio feedback correction factor per cycle)
- MAS A/F SE-B1 (The signal voltage of the mass air flow sensor)

Component Function Check

INFOID:0000000004349184

1. START

Make sure that all of the following conditions are satisfied.
- Vehicle driven distance: More than 5,000 km (3,107 miles)
- Barometric pressure: 98.3 - 104.3 kPa (1.003 - 1.064 kg/cm^2, 14.25 - 15.12 psi)
- Atmospheric temperature: 20 - 30°C (68 - 86°F)
- Engine coolant temperature: 75 - 95°C (167 - 203°F)
- Transmission: Warmed-up
  - CVT models: After the engine is warmed up to normal operating temperature, drive vehicle until “ATF TEMP SEN” (CVT fluid temperature sensor signal) indicates more than 60°C (140°F).
  - M/T models: After the engine is warmed up to normal operating temperature, drive vehicle for 5 minutes.
- Electrical load: Not applied*
- Engine speed: Idle

*: Rear window defogger switch, air conditioner switch, lighting switch are OFF. Steering wheel is straight ahead.

>> GO TO 2.

2. PERFORM “SPEC” OF “DATA MONITOR” MODE

With CONSULT-III
NOTE:
Perform “SPEC” in “DATA MONITOR” mode in maximum scale display.
1. Perform EC-24, "BASIC INSPECTION : Special Repair Requirement".
2. Select “B/FUEL SCHDL”, “A/F ALPHA-B1” and “MAS A/F SE-B1” in “SPEC” of “DATA MONITOR” mode with CONSULT-III.
3. Make sure that monitor items are within the SP value.

Is the inspection result normal?

YES >> END
NO >> Go to EC-137, "Diagnosis Procedure".

Diagnosis Procedure

INFOID:0000000004349185

OVERALL SEQUENCE

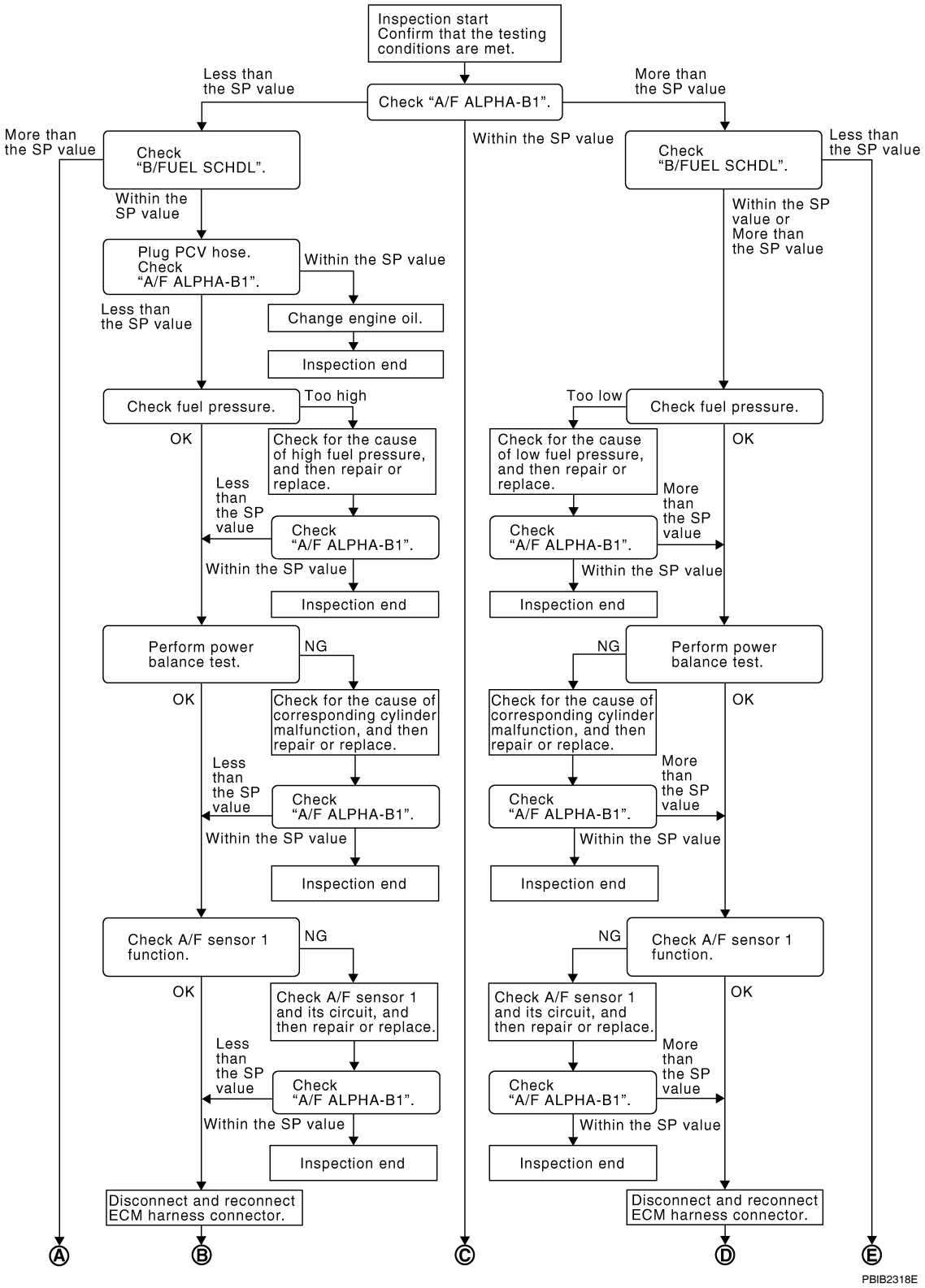

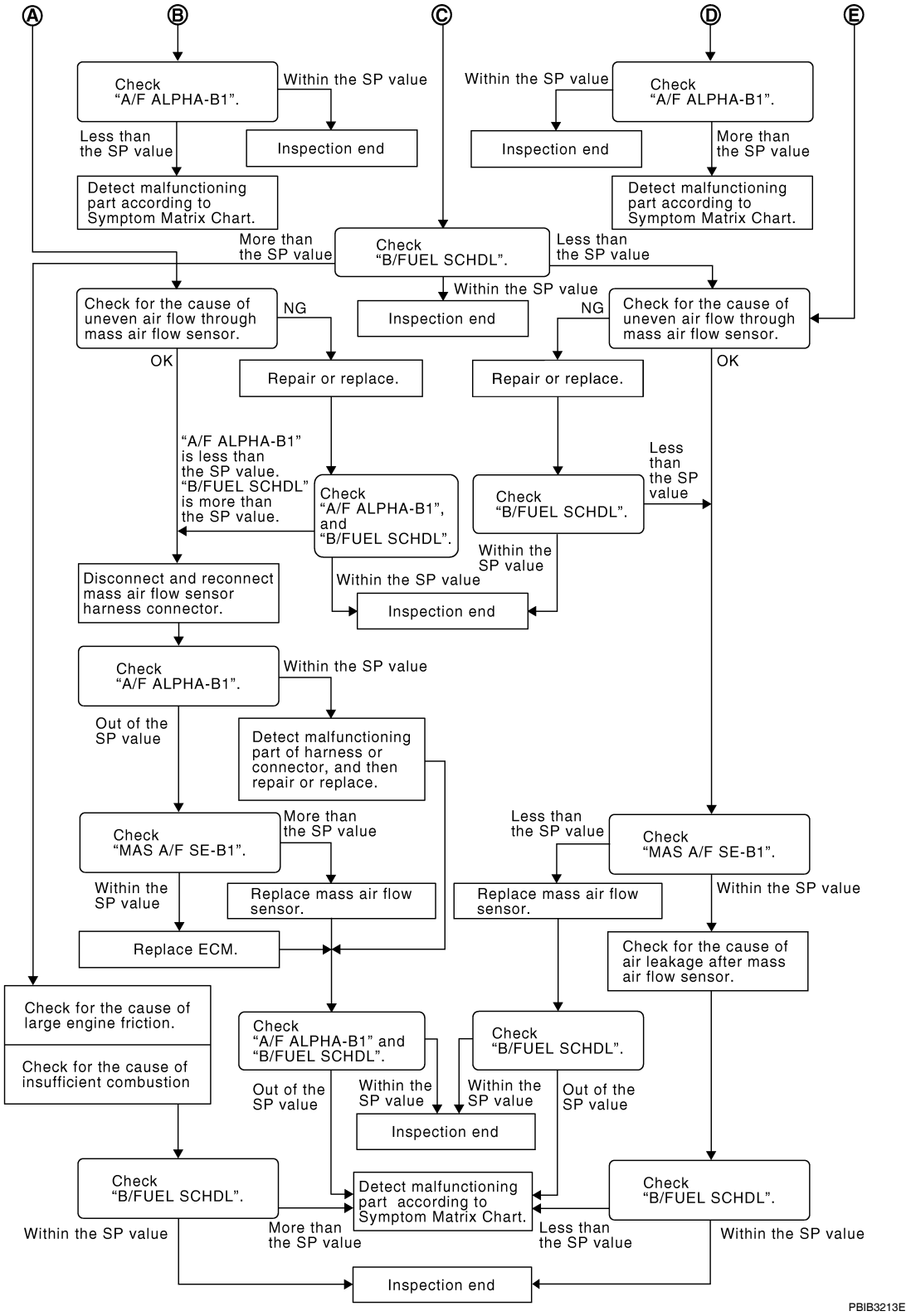

DETAILED PROCEDURE

1. CHECK "A/F ALPHA-B1"

With CONSULT-III

1. Start engine.
2. Confirm that the testing conditions are met. Refer to EC-136, "Component Function Check".
3. Select "A/F ALPHA-B1" in "SPEC" of "DATA MONITOR" mode, and make sure that the each indication is within the SP value.

NOTE:
Check “A/F ALPHA-B1” for approximately 1 minute because they may fluctuate. It is NG if the indication is out of the SP value even a little.

Is the measurement value within the SP value?

YES >> GO TO 17.
NO-1 >> Less than the SP value: GO TO 2.
NO-2 >> More than the SP value: GO TO 3.

2. CHECK “B/FUEL SCHDL”

Select “B/FUEL SCHDL” in “SPEC” of “DATA MONITOR” mode, and make sure that the indication is within the SP value.

Is the measurement value within the SP value?

YES >> GO TO 4.
NO >> More than the SP value: GO TO 19.

3. CHECK “B/FUEL SCHDL”

Select “B/FUEL SCHDL” in “SPEC” of “DATA MONITOR” mode, and make sure that the indication is within the SP value.

Is the measurement value within the SP value?

YES >> GO TO 6.
NO-1 >> More than the SP value: GO TO 6.
NO-2 >> Less than the SP value: GO TO 25.

4. CHECK “A/F ALPHA-B1”

1. Stop the engine.
2. Disconnect PCV hose, and then plug it.
3. Start engine.
4. Select “A/F ALPHA-B1” in “SPEC” of “DATA MONITOR” mode, and make sure that the indication is within the SP value.

Is the measurement value within the SP value?

YES >> GO TO 5.
NO >> GO TO 6.

5. CHANGE ENGINE OIL

1. Stop the engine.
2. Change engine oil.

NOTE:
This symptom may occur when a large amount of gasoline is mixed with engine oil because of driving conditions (such as when engine oil temperature does not rise enough since a journey distance is too short during winter). The symptom will not be detected after changing engine oil or changing driving condition.

>> **INSPECTION END**

6. CHECK FUEL PRESSURE

Check fuel pressure. (Refer to EC-550, "Inspection".)

Is the inspection result normal?

YES >> GO TO 9.
NO-1 >> Fuel pressure is too high: Replace “fuel filter and fuel pump assembly” and then GO TO 8.
NO-2 >> Fuel pressure is too low: GO TO 7.

7. DETECT MALFUNCTIONING PART

Check fuel hoses and fuel tubes for clogging

Is the inspection result normal?

YES >> Replace “fuel filter and fuel pump assembly” and then GO TO 8.
NO >> Repair or replace and then GO TO 8.

8. CHECK “A/F ALPHA-B1”

1. Start engine.
2. Select “A/F ALPHA-B1” in “SPEC” of “DATA MONITOR” mode, and make sure that the indication is within the SP value.

Is the measurement value within the SP value?

YES >> INSPECTION END
NO >> GO TO 9.

9. PERFORM POWER BALANCE TEST

1. Perform “POWER BALANCE” in “ACTIVE TEST” mode.
2. Make sure that the each cylinder produces a momentary engine speed drop.

Is the inspection result normal?

YES >> GO TO 12.
NO >> GO TO 10.

10. DETECT MALFUNCTIONING PART

Check the following.
1. Ignition coil and its circuit (Refer to EC-470, "Component Function Check".)
2. Fuel injector and its circuit (Refer to EC-463, "Component Function Check".)
3. Intake air leakage
4. Low compression pressure (Refer to EM-23, "Compression pressure".)

Is the inspection result normal?

YES >> Replace fuel injector and then GO TO 11.
NO >> Repair or replace malfunctioning part and then GO TO 11.

11. CHECK “A/F ALPHA-B1”

1. Start engine.
2. Select “A/F ALPHA-B1” in “SPEC” of “DATA MONITOR” mode, and make sure that the indication is within the SP value.

Is the measurement value within the SP value?

YES >> INSPECTION END
NO >> GO TO 12.

12. CHECK A/F SENSOR 1 FUNCTION

Perform all DTC CONFIRMATION PROCEDURE related with A/F sensor 1.
- For DTC P0130, refer to EC-199, "DTC Logic".
- For DTC P0131, refer to EC-203, "DTC Logic".
- For DTC P0132, refer to EC-206, "DTC Logic".
- For DTC P0133, refer to EC-209, "DTC Logic".
- For DTC P2A00, refer to EC-446, "DTC Logic".

Is any DTC detected?

YES >> GO TO 15.
NO >> GO TO 13.

13. CHECK A/F SENSOR 1 CIRCUIT

Perform DIAGNOSTIC PROCEDURE according to corresponding DTC.

>> GO TO 14.

14. CHECK “A/F ALPHA-B1”

1. Start engine.
2. Select “A/F ALPHA-B1” in “SPEC” of “DATA MONITOR” mode, and make sure that the each indication is within the SP value.

Is the measurement value within the SP value?

YES >> INSPECTION END
NO >> GO TO 15.

15. DISCONNECT AND RECONNECT ECM HARNESS CONNECTOR

1. Stop the engine.

2. Disconnect ECM harness connector. Check pin terminal and connector for damage, and then reconnect it.

>> GO TO 16.

16. CHECK “A/F ALPHA-B1”

1. Start engine.
2. Select “A/F ALPHA-B1” in “SPEC” of “DATA MONITOR” mode, and make sure that the indication is within the SP value.

Is the measurement value within the SP value?

YES >> INSPECTION END
NO >> Detect malfunctioning part according to EC-539, "Symptom Table".

17. CHECK “B/FUEL SCHDL”

Select “B/FUEL SCHDL” in “SPEC” of “DATA MONITOR” mode, and make sure that the indication is within the SP value.

Is the measurement value within the SP value?

YES >> INSPECTION END
NO-1 >> More than the SP value: GO TO 18.
NO-2 >> Less than the SP value: GO TO 25.

18. DETECT MALFUNCTIONING PART

1. Check for the cause of large engine friction. Refer to the following.
- Engine oil level is too high
- Engine oil viscosity
- Belt tension of power steering, alternator, A/C compressor, etc. is excessive
- Noise from engine
- Noise from transmission, etc.
2. Check for the cause of insufficient combustion. Refer to the following.
- Valve clearance malfunction
- Intake valve timing control function malfunction
- Camshaft sprocket installation malfunction, etc.

>> Repair or replace malfunctioning part, and then GO TO 30.

19. CHECK INTAKE SYSTEM

Check for the cause of uneven air flow through mass air flow sensor. Refer to the following.
- Crushed air ducts
- Malfunctioning seal of air cleaner element
- Uneven dirt of air cleaner element
- Improper specification of intake air system

Is the inspection result normal?

YES >> GO TO 21.
NO >> Repair or replace malfunctioning part, and then GO TO 20.

20. CHECK “A/F ALPHA-B1”, AND “B/FUEL SCHDL”

Select “A/F ALPHA-B1” and “B/FUEL SCHDL” in “SPEC” of “DATA MONITOR” mode, and make sure that the each indication is within the SP value.

Is the measurement value within the SP value?

YES >> **INSPECTION END**
NO >> “B/FUEL SCHDL” is more, “A/F ALPHA-B1” is less than the SP value: GO TO 21.

21. DISCONNECT AND RECONNECT MASS AIR FLOW SENSOR HARNESS CONNECTOR

1. Stop the engine.
2. Disconnect mass air flow sensor harness connector. Check pin terminal and connector for damage and then reconnect it again.

>> GO TO 22.

22. CHECK "A/F ALPHA-B1"

1. Start engine.
2. Select "A/F ALPHA-B1" in "SPEC" of "DATA MONITOR" mode, and make sure that the indication is within the SP value.

Is the measurement value within the SP value?

YES >> Detect malfunctioning part of mass air flow sensor circuit and repair it. Refer to EC-168, "DTC Logic". Then GO TO 29.
NO >> GO TO 23.

23. CHECK "MAS A/F SE-B1"

Select "MAS A/F SE-B1" in "SPEC" of "DATA MONITOR" mode, and make sure that the indication is within the SP value.

Is the measurement value within the SP value?

YES >> GO TO 24.
NO >> More than the SP value: Replace mass air flow sensor, and then GO TO 29.

24. REPLACE ECM

1. Replace ECM.
2. Go to EC-27, "ADDITIONAL SERVICE WHEN REPLACING CONTROL UNIT : Special Repair Requirement".

>> GO TO 29.

25. CHECK INTAKE SYSTEM

Check for the cause of uneven air flow through mass air flow sensor. Refer to the following.
- Crushed air ducts
- Malfunctioning seal of air cleaner element
- Uneven dirt of air cleaner element
- Improper specification of intake air system

Is the inspection result normal?

YES >> GO TO 27.
NO >> Repair or replace malfunctioning part, and then GO TO 26.

26. CHECK "B/FUEL SCHDL"

Select "B/FUEL SCHDL" in "SPEC" of "DATA MONITOR" mode, and make sure that the indication is within the SP value.

Is the measurement value within the SP value?

YES >> INSPECTION END
NO >> Less than the SP value: GO TO 27.

27. CHECK "MAS A/F SE-B1"

Select "MAS A/F SE-B1" in "SPEC" of "DATA MONITOR" mode, and make sure that the indication is within the SP value.

Is the measurement value within the SP value?

YES >> GO TO 28.
NO >> Less than the SP value: Replace mass air flow sensor, and then GO TO 30.

28. CHECK INTAKE SYSTEM

Check for the cause of air leak after the mass air flow sensor. Refer to the following.
- Disconnection, looseness, and cracks in air duct
- Looseness of oil filler cap
- Disconnection of oil level gauge
- Open stuck, breakage, hose disconnection, or cracks of PCV valve
- Disconnection or cracks of EVAP purge hose, open stuck of EVAP canister purge volume control solenoid valve
- Malfunctioning seal of rocker cover gasket
- Disconnection, looseness, or cracks of hoses, such as vacuum hose, connecting to intake air system parts

- Malfunctioning seal of intake air system, etc.

>> GO TO 30.

29. CHECK “A/F ALPHA-B1” AND “B/FUEL SCHDL”

Select “A/F ALPHA-B1” and “B/FUEL SCHDL” in “SPEC” of “DATA MONITOR” mode, and make sure that the indication is within the SP value.

Is the measurement value within the SP value?

YES >> INSPECTION END
NO >> Detect malfunctioning part according to EC-539, "Symptom Table".

30. CHECK “B/FUEL SCHDL”

Select “B/FUEL SCHDL” in “SPEC” of “DATA MONITOR” mode, and then make sure that the indication is within the SP value.

Is the measurement value within the SP value?

YES >> INSPECTION END
NO >> Detect malfunctioning part according to EC-539, "Symptom Table".

POWER SUPPLY AND GROUND CIRCUIT

Diagnosis Procedure

INFOID:0000000004349186

1. INSPECTION START

Start engine.

Is engine running?

YES >> GO TO 8.
NO >> GO TO 2.

2. CHECK ECM POWER SUPPLY CIRCUIT-I

1. Turn ignition switch OFF and then ON.
2. Check the voltage between ECM harness connector and ground.

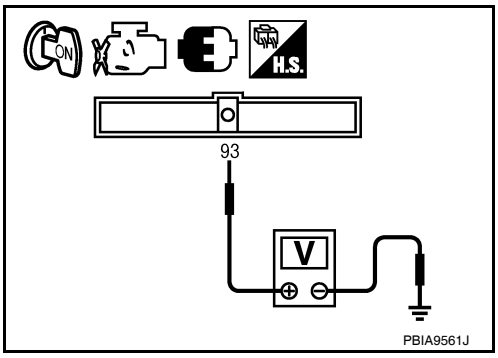

ECM		Ground	Voltage
Connector	Terminal		
E10	93	Ground	Battery voltage

Is the inspection result normal?

YES >> GO TO 4.
NO >> GO TO 3.

3. DETECT MALFUNCTIONING PART

Check the following.
- IPDM E/R harness connector E18
- 10A fuse (No. 35)
- Harness for open or short between ECM and fuse

>> Repair open circuit or short to ground or short to power in harness or connectors.

4. CHECK GROUND CONNECTION-I

1. Turn ignition switch OFF.
2. Check ground connection E9. Refer to Ground Inspection in GI-45, "Circuit Inspection".

Is the inspection result normal?

YES >> GO TO 5.
NO >> Repair or replace ground connection.

5. CHECK ECM GROUND CIRCUIT FOR OPEN AND SHORT-I

1. Disconnect ECM harness connectors.
2. Check the continuity between ECM harness connector and ground.

ECM		Ground	Continuity
Connector	Terminal		
F14	12	Ground	Existed
	16		
E10	107		
	108		
	111		
	112		

3. Also check harness for short to power.

Is the inspection result normal?

YES >> GO TO 7.

NO >> GO TO 6.

6. DETECT MALFUNCTIONING PART

Check the following.
- Harness connectors F2, E11
- Harness for open or short between ECM and ground

>> Repair open circuit or short to power in harness or connectors.

7. CHECK ECM POWER SUPPLY CIRCUIT-II

1. Reconnect ECM harness connectors.
2. Turn ignition switch ON.
3. Check the voltage between IPDM E/R harness connector and ground.

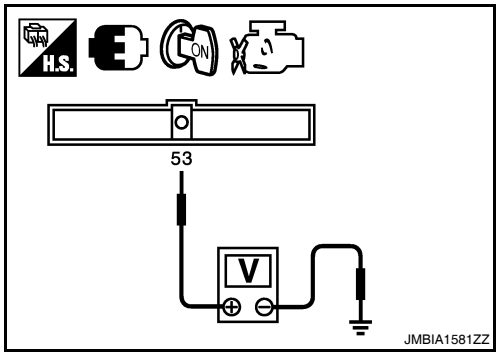

IPDM E/R		Ground	Voltage
Connector	Terminal		
F10	53	Ground	Battery voltage

Is the inspection result normal?

YES >> Go to EC-470, "Diagnosis Procedure".
NO >> GO TO 8.

8. CHECK ECM POWER SUPPLY CIRCUIT-III

1. Turn ignition switch OFF and wait at least 10 seconds.
2. Check the voltage between ECM harness connector and ground.

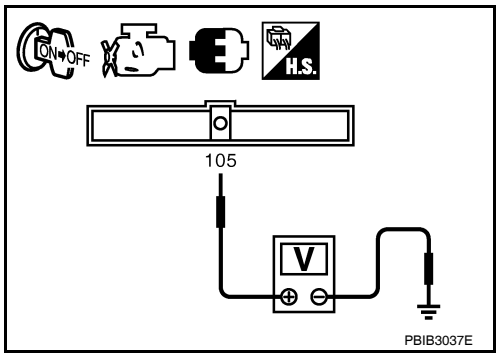

ECM		Ground	Voltage
Connector	Terminal		
E10	105	Ground	After turning ignition switch OFF, battery voltage will exist for a few seconds, then drop approximately 0 V.

Is the inspection result normal?

YES >> GO TO 14.
NO-1 >> Battery voltage does not exist: GO TO 9.
NO-2 >> Battery voltage exists for more than a few seconds: GO TO 12.

9. CHECK ECM POWER SUPPLY CIRCUIT-IV

1. Turn ignition switch OFF and wait at least 10 seconds.
2. Check the voltage between ECM harness connector and ground.

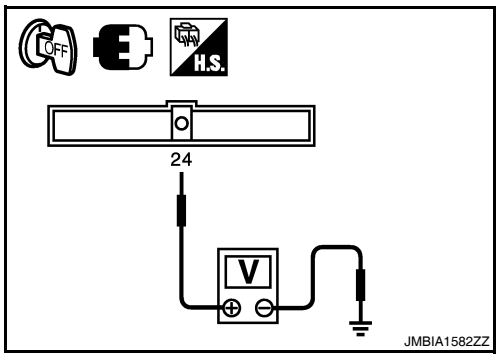

ECM		Ground	Voltage
Connector	Terminal		
F14	24	Ground	Battery voltage

Is the inspection result normal?

YES >> GO TO 10.
NO >> GO TO 12.

10. CHECK ECM POWER SUPPLY CIRCUIT-V

1. Disconnect ECM harness connector.
2. Disconnect IPDM E/R harness connector E18.
3. Check the continuity between ECM harness connector and IPDM E/R harness connector.

ECM		IPDM E/R		Continuity
Connector	Terminal	Connector	Terminal	
E10	105	E18	10	Existed

4. Also check harness for short to ground and short to power.

Is the inspection result normal?

YES >> GO TO 17.
NO >> GO TO 11.

11. DETECT MALFUNCTIONING PART

Check the following.
- Junction block connectors E44, E45
- Harness for open or short between ECM and IPDM E/R

>> Repair open circuit or short to ground or short to power in harness or connectors.

12. CHECK ECM POWER SUPPLY CIRCUIT-VI

1. Disconnect ECM harness connector.
2. Disconnect IPDM E/R harness connector F10.
3. Check the continuity between ECM harness connector and IPDM E/R harness connector.

ECM		IPDM E/R		Continuity
Connector	Terminal	Connector	Terminal	
F14	24	F10	69	Existed

4. Also check harness for short to ground and short to power.

Is the inspection result normal?

YES >> GO TO 13.
NO >> Repair open circuit or short to ground or short power in harness or connectors.

13. CHECK 15A FUSE

1. Disconnect 15A fuse (No. 42) from IPDM E/R.
2. Check 15A fuse.

Is the inspection result normal?

YES >> GO TO 17.
NO >> Replace 15A fuse.

14. CHECK GROUND CONNECTION-II

1. Turn ignition switch OFF.
2. Check ground connection E9. Refer to Ground Inspection in GI-45, "Circuit Inspection".

Is the inspection result normal?

YES >> GO TO 15.
NO >> Repair or replace ground connection.

15. CHECK ECM GROUND CIRCUIT FOR OPEN AND SHORT-II

1. Disconnect ECM harness connector.
2. Check the continuity between ECM harness connector and ground.

ECM		Ground	Continuity
Connector	Terminal		
F14	12	Ground	Existed
	16		
E10	107		
	108		
	111		
	112		

3. Also check harness for short to power.

Is the inspection result normal?

YES >> GO TO 17.
NO >> GO TO 16.

16. DETECT MALFUNCTIONING PART

Check the following.
- Harness or connectors F2, E11
- Harness for open or short between ECM and ground

>> Repair open circuit or short to power in harness or connectors.

17. CHECK INTERMITTENT INCIDENT

Refer to GI-42, "Intermittent Incident".

Is the inspection result normal?

YES >> Replace IPDM E/R.
NO >> Repair open circuit or short to power in harness or connectors.

U0101 CAN COMM CIRCUIT

Description

INFOID:0000000004349187

CAN (Controller Area Network) is a serial communication line for real time application. It is an on-vehicle multiplex communication line with high data communication speed and excellent error detection ability. Many electronic control units are equipped onto a vehicle, and each control unit shares information and links with other control units during operation (not independent). In CAN communication, control units are connected with 2 communication lines (CAN H line, CAN L line) allowing a high rate of information transmission with less wiring. Each control unit transmits/receives data but selectively reads required data only.

DTC Logic

INFOID:0000000004349188

DTC DETECTION LOGIC

DTC No.	Trouble diagnosis name	DTC detecting condition	Possible cause
U0101	Lost communication with TCM	When ECM is not transmitting or receiving CAN communication signal of OBD (emission-related diagnosis) with TCM for 2 seconds or more.	• CAN communication line between TCM and ECM (CAN communication line is open or shorted)

DTC CONFIRMATION PROCEDURE

1.PERFORM DTC CONFIRMATION PROCEDURE

1. Turn ignition switch ON and wait at least 3 seconds.
2. Check DTC.

Is DTC detected?

YES >> EC-148, "Diagnosis Procedure".
NO >> INSPECTION END

Diagnosis Procedure

INFOID:0000000004349189

Go to LAN-16, "Trouble Diagnosis Flow Chart".

U0140 CAN COMM CIRCUIT

Description

INFOID:0000000004529332

CAN (Controller Area Network) is a serial communication line for real time application. It is an on-vehicle multiplex communication line with high data communication speed and excellent error detection ability. Many electronic control units are equipped onto a vehicle, and each control unit shares information and links with other control units during operation (not independent). In CAN communication, control units are connected with 2 communication lines (CAN H line, CAN L line) allowing a high rate of information transmission with less wiring. Each control unit transmits/receives data but selectively reads required data only.

DTC Logic

INFOID:0000000004351807

DTC DETECTION LOGIC

DTC No.	Trouble diagnosis name	DTC detecting condition	Possible cause
U0140	Lost communication with BCM	When ECM is not transmitting or receiving CAN communication signal of OBD (emission related diagnosis) with BCM for 2 seconds or more.	• CAN communication line between BCM and ECM (CAN communication line is open or shorted)

DTC CONFIRMATION PROCEDURE

1.PERFORM DTC CONFIRMATION PROCEDURE

1. Turn ignition switch ON and wait at least 3 seconds.
2. Check DTC.

Is DTC detected?

YES >> EC-149, "Diagnosis Procedure".
NO >> INSPECTION END

Diagnosis Procedure

INFOID:0000000004529333

Go to LAN-16, "Trouble Diagnosis Flow Chart".

U1001 CAN COMM CIRCUIT

Description

INFOID:0000000004529334

CAN (Controller Area Network) is a serial communication line for real time application. It is an on-vehicle multiplex communication line with high data communication speed and excellent error detection ability. Many electronic control units are equipped onto a vehicle, and each control unit shares information and links with other control units during operation (not independent). In CAN communication, control units are connected with 2 communication lines (CAN H line, CAN L line) allowing a high rate of information transmission with less wiring. Each control unit transmits/receives data but selectively reads required data only.

DTC Logic

INFOID:0000000004468211

DTC DETECTION LOGIC

DTC No.	Trouble diagnosis name	DTC detecting condition	Possible cause
U1001	CAN communication line	When ECM is not transmitting or receiving CAN communication signal other than OBD (emission related diagnosis) for 2 seconds or more.	• Harness or connectors (CAN communication line is open or shorted)

DTC CONFIRMATION PROCEDURE

1.PERFORM DTC CONFIRMATION PROCEDURE

1. Turn ignition switch ON and wait at least 3 seconds.
2. Check 1st trip DTC.

Is 1st trip DTC detected?

YES >> EC-150, "Diagnosis Procedure".
NO >> INSPECTION END

Diagnosis Procedure

INFOID:0000000004529335

Go to LAN-16, "Trouble Diagnosis Flow Chart".

P0011 IVT CONTROL

DTC Logic

INFOID:0000000004349193

DTC DETECTION LOGIC

NOTE:
If DTC P0011 is displayed with DTC P0075, first perform the trouble diagnosis for EC-362, "DTC Logic".

DTC No.	Trouble diagnosis name	DTC detecting condition	Possible cause
P0011	Intake valve timing control performance	There is a gap between angle of target and phase-control angle degree.	• Crankshaft position sensor (POS) • Camshaft position sensor (PHASE) • Intake valve control solenoid valve • Accumulation of debris to the signal pick-up portion of the camshaft • Timing chain installation • Foreign matter caught in the oil groove for intake valve timing control

DTC CONFIRMATION PROCEDURE

1.PRECONDITIONING

If DTC Confirmation Procedure has been previously conducted, always turn ignition switch OFF and wait at least 10 seconds before conducting the next test.
TESTING CONDITION:
Before performing the following procedure, confirm that battery voltage is between 10V and 16V at idle.

>> GO TO 2.

2.PERFORM DTC CONFIRMATION PROCEDURE-I

With CONSULT-III
1. Turn ignition switch ON and select “DATA MONITOR” mode with CONSULT-III.
2. Start engine and warm it up to the normal operating temperature.
3. Maintain the following conditions for at least 6 consecutive seconds. Hold the accelerator pedal as steady as possible.

ENG SPEED	1,200 - 2,000 rpm
COOLAN TEMP/S	More than 60°C (140°F)
B/FUEL SCHDL	More than 3.5 msec
Shift lever	D position (CVT) 5th position (M/T)

CAUTION:
Always drive at a safe speed.
4. Stop vehicle with engine running and let engine idle for 10 seconds.
5. Check 1st trip DTC.

With GST
Follow the procedure “With CONSULT-III” above.

Is 1st trip DTC detected?

YES >> Go to EC-152, "Diagnosis Procedure"
NO >> GO TO 3.

3.PERFORM DTC CONFIRMATION PROCEDURE-II

With CONSULT-III
1. Maintain the following conditions for at least 20 consecutive seconds.

ENG SPEED	1,700 - 3,175 rpm (A constant rotation is maintained.)
COOLAN TEMP/S	More than 70°C (221°F)
Shift lever	1st or 2nd position
Driving location uphill	Driving vehicle uphill (Increased engine load will help maintain the driving conditions required for this test.)

CAUTION:
Always drive at a safe speed.

2. Check 1st trip DTC.

With GST

Follow the procedure “With CONSULT-III” above.

Is 1st trip DTC detected?

YES >> Go to EC-152, "Diagnosis Procedure"
NO >> INSPECTION END

Diagnosis Procedure

INFOID:0000000004349194

1. CHECK OIL PRESSURE WARNING LAMP

1. Start engine.
2. Check oil pressure warning lamp and confirm it is not illuminated.

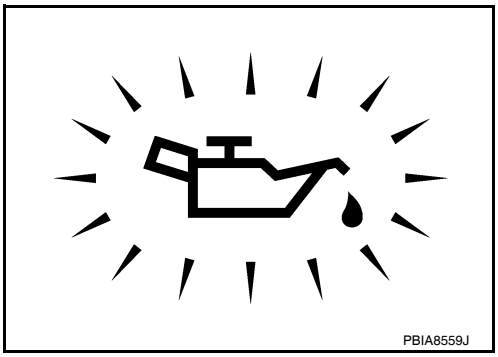

Is oil pressure warning lamp illuminated?

YES >> Go to LU-9, "Inspection".
NO >> GO TO 2.

2. CHECK INTAKE VALVE TIMING CONTROL SOLENOID VALVE

Refer to EC-153, "Component Inspection".

Is the inspection result normal?

YES >> GO TO 3.
NO >> Replace intake valve timing control solenoid valve.

3. CHECK CRANKSHAFT POSITION SENSOR (POS)

Refer to EC-281, "Component Inspection".

Is the inspection result normal?

YES >> GO TO 4.
NO >> Replace crankshaft position sensor (POS).

4. CHECK CAMSHAFT POSITION SENSOR (PHASE)

Refer to EC-284, "Component Inspection".

Is the inspection result normal?

YES >> GO TO 5.
NO >> Replace camshaft position sensor (PHASE).

5. CHECK CAMSHAFT (INTAKE)

Check the following.

- Accumulation of debris to the signal plate of camshaft (1) rear end
- Chipping signal plate of camshaft rear end

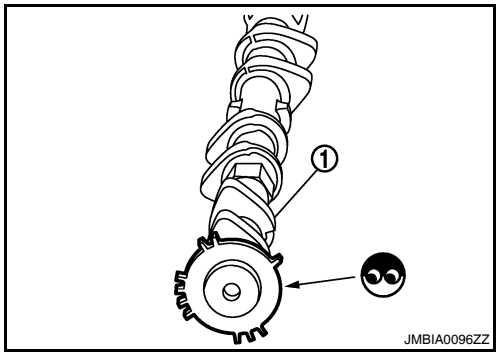

Is the inspection result normal?

YES >> GO TO 6.
NO >> Remove debris and clean the signal plate of camshaft rear end or replace camshaft.

6. CHECK TIMING CHAIN INSTALLATION

Check service records for any recent repairs that may cause timing chain misaligned.

Are there any service records that may cause timing chain misaligned?

YES >> Check timing chain installation. Refer to EM-52, "Removal and Installation".
NO >> GO TO 7.

7. CHECK LUBRICATION CIRCUIT

Refer to EM-48, "Inspection After Installation".

Is the inspection result normal?

YES >> GO TO 8.
NO >> Clean lubrication line.

8. CHECK INTERMITTENT INCIDENT

Refer to GI-42, "Intermittent Incident".

>> INSPECTION END

Component Inspection

INFOID:0000000004349195

1. CHECK INTAKE VALVE TIMING CONTROL SOLENOID VALVE-I

1. Turn ignition switch OFF.
2. Disconnect intake valve timing control solenoid valve harness connector.
3. Check resistance between intake valve timing control solenoid valve terminals as follows.

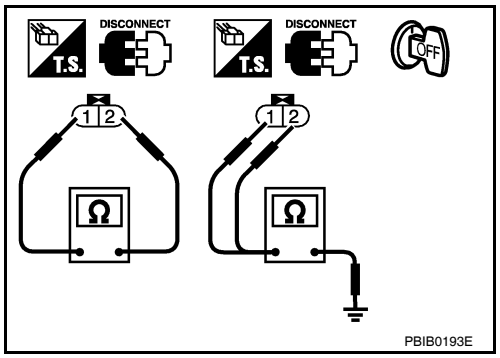

Terminals	Resistance
1 and 2	7.0 - 7.5 Ω [at 20°C (68°F)]
1 or 2 and ground	∞ Ω (Continuity should not exist)

Is the inspection result normal?

YES >> GO TO 2.
NO >> Replace intake valve timing control solenoid valve.

2. CHECK INTAKE VALVE TIMING CONTROL SOLENOID VALVE-II

1. Remove intake valve timing control solenoid valve.

2. Provide 12V DC between intake valve timing control solenoid valve terminals 1 and 2, and then interrupt it. Make sure that the plunger moves as shown in the figure.
   CAUTION:
   Do not apply 12V DC continuously for 5 seconds or more. Doing so may result in damage to the coil in intake valve timing control solenoid valve.
   NOTE:
   Always replace O-ring when intake valve timing control solenoid valve is removed.

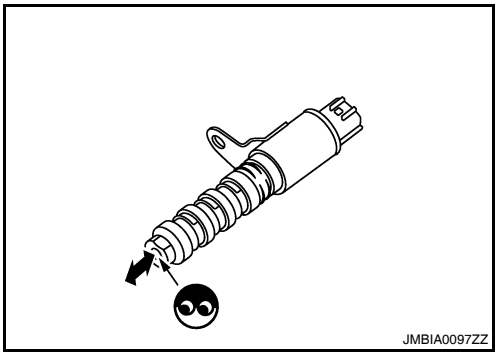

Is the inspection result normal?

YES >> INSPECTION END
NO >> Replace intake valve timing control solenoid valve.

P0031, P0032 A/F SENSOR 1 HEATER

Description

INFOID:0000000004349196

SYSTEM DESCRIPTION

Sensor	Input Signal to ECM	ECM function	Actuator
Camshaft position sensor (PHASE) Crankshaft position sensor (POS)	Engine speed	Air fuel ratio (A/F) sensor 1 heater control	Air fuel ratio (A/F) sensor 1 heater
Mass air flow sensor	Amount of intake air		

The ECM performs ON/OFF duty control of the A/F sensor 1 heater corresponding to the engine operating condition to keep the temperature of A/F sensor 1 element at the specified range.

DTC Logic

INFOID:0000000004349197

DTC DETECTION LOGIC

DTC No.	Trouble diagnosis name	DTC detecting condition	Possible cause
P0031	Air fuel ratio (A/F) sensor 1 heater control circuit low	The current amperage in the A/F sensor 1 heater circuit is out of the normal range. (An excessively low voltage signal is sent to ECM through the A/F sensor 1 heater.)	• Harness or connectors (The A/F sensor 1 heater circuit is open or shorted.) • A/F sensor 1 heater
P0032	Air fuel ratio (A/F) sensor 1 heater control circuit high	The current amperage in the A/F sensor 1 heater circuit is out of the normal range. (An excessively high voltage signal is sent to ECM through the A/F sensor 1 heater.)	• Harness or connectors (The A/F sensor 1 heater circuit is shorted.) • A/F sensor 1 heater

DTC CONFIRMATION PROCEDURE

1. PRECONDITIONING

If DTC Confirmation Procedure has been previously conducted, always turn ignition switch OFF and wait at least 10 seconds before conducting the next test.

TESTING CONDITION:

Before performing the following procedure, confirm that battery voltage is more than between 11V at idle.

>> GO TO 2.

2. PERFORM DTC CONFIRMATION PROCEDURE

1. Start engine and let it idle for at least 10 seconds.
2. Check 1st trip DTC.

Is 1st trip DTC detected?

YES >> Go to EC-155, "Diagnosis Procedure".
NO >> INSPECTION END

Diagnosis Procedure

INFOID:0000000004349198

1. CHECK GROUND CONNECTION

1. Turn ignition switch OFF.
2. Check ground connection E9. Refer to Ground Inspection in GI-45, "Circuit Inspection".

Is the inspection result normal?

YES >> GO TO 2.
NO >> Repair or replace ground connection.

2. CHECK AIR FUEL RATIO (A/F) SENSOR 1 POWER SUPPLY CIRCUIT

1. Disconnect air fuel ratio (A/F) sensor 1 harness connector.
2. Turn ignition switch ON.

3. Check the voltage between A/F sensor 1 harness connector and ground.

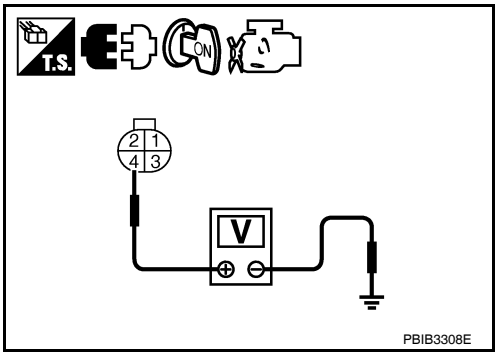

A/F sensor 1		Ground	Voltage
Connector	Terminal		
F44	4	Ground	Battery voltage

Is the inspection result normal?

YES >> GO TO 4.
NO >> GO TO 3.

3. DETECT MALFUNCTIONING PART

Check the following.
- IPDM E/R harness connector F10
- 15A fuse (No. 37)
- Harness for open or short between A/F sensor 1 and fuse

>> Repair or replace harness or connectors.

4. CHECK A/F SENSOR 1 HEATER OUTPUT SIGNAL CIRCUIT

1. Turn ignition switch OFF.
2. Disconnect ECM harness connector.
3. Check the continuity between A/F sensor 1 harness connector and ECM harness connector.

A/F sensor 1		ECM		Continuity
Connector	Terminal	Connector	Terminal	
F44	3	F14	4	Existed

4. Also check harness for short to ground and short to power.

Is the inspection result normal?

YES >> GO TO 5.
NO >> Repair open circuit or short to ground or short to power in harness or connectors.

5. CHECK A/F SENSOR 1 HEATER

Refer to EC-157, "Component Inspection".

Is the inspection result normal?

YES >> GO TO 7.
NO >> GO TO 6.

6. REPLACE AIR FUEL RATIO (A/F) SENSOR 1

Replace air fuel ratio (A/F) sensor 1.

CAUTION:
- **Discard any sensor which has been dropped from a height of more than 0.5 m (19.7 in) onto a hard surface such as a concrete floor; use a new one.**
- **Before installing new sensor, clean exhaust system threads using oxygen sensor thread cleaner [commercial service tool (J-43897-18 or J-43897-12)] and approved anti-seize lubricant (commercial service tool).**

>> INSPECTION END

7. CHECK INTERMITTENT INCIDENT

Perform GI-42, "Intermittent Incident".

>> Repair or replace.

Component Inspection

INFOID:0000000004349199

1. CHECK AIR FUEL RATIO (A/F) SENSOR 1

1. Turn ignition switch OFF.
2. Disconnect A/F sensor 1 harness connector.
3. Check resistance between A/F sensor 1 terminals as follows.

Terminals	Resistance
3 and 4	1.98 - 2.66 Ω [at 25°C (77°F)]
3 and 1, 2	∞ Ω (Continuity should not exist)
4 and 1, 2	

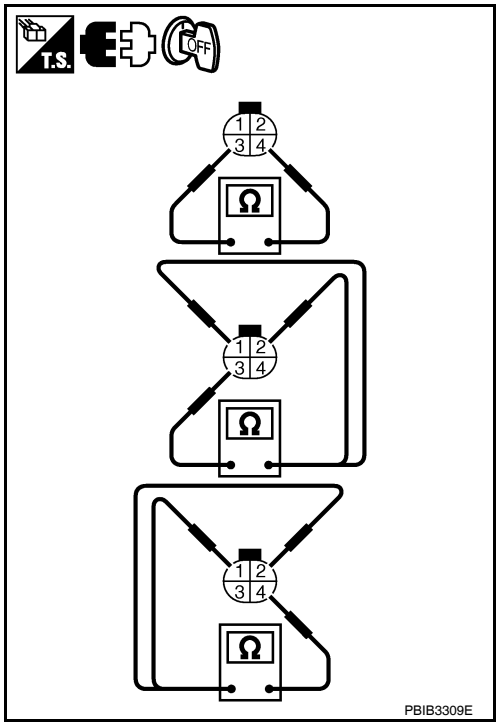

Is the inspection result normal?

YES >> INSPECTION END
NO >> GO TO 2.

2. REPLACE AIR FUEL RATIO (A/F) SENSOR 1

Replace air fuel ratio (A/F) sensor 1.

CAUTION:

- **Discard any sensor which has been dropped from a height of more than 0.5 m (19.7 in) onto a hard surface such as a concrete floor; use a new one.**
- **Before installing new sensor, clean exhaust system threads using oxygen sensor thread cleaner [commercial service tool (J-43897-18 or J-43897-12)] and approved anti-seize lubricant (commercial service tool).**

>> INSPECTION END

P0037, P0038 HO2S2 HEATER

Description

INFOID:0000000004349200

SYSTEM DESCRIPTION

Sensor	Input signal to ECM	ECM function	Actuator
Camshaft position sensor (PHASE) Crankshaft position sensor (POS)	Engine speed	Heated oxygen sensor 2 heater control	Heated oxygen sensor 2 heater
Engine coolant temperature sensor	Engine coolant temperature		
Mass air flow sensor	Amount of intake air		

The ECM performs ON/OFF control of the heated oxygen sensor 2 heater corresponding to the engine speed, amount of intake air and engine coolant temperature.

OPERATION

Engine speed	Heated oxygen sensor 2 heater
Above 3,600 rpm	OFF
Below 3,600 rpm after the following conditions are met. • Engine: After warming up • Keeping the engine speed between 3,500 and 4,000 rpm for 1 minute and at idle for 1 minute under no load	ON

DTC Logic

INFOID:0000000004349201

DTC DETECTION LOGIC

DTC No.	Trouble diagnosis name	DTC detecting condition	Possible cause
P0037	Heated oxygen sensor 2 heater control circuit low	The current amperage in the heated oxygen sensor 2 heater circuit is out of the normal range. (An excessively low voltage signal is sent to ECM through the heated oxygen sensor 2 heater.)	• Harness or connectors (The heated oxygen sensor 2 heater circuit is open or shorted.) • Heated oxygen sensor 2 heater
P0038	Heated oxygen sensor 2 heater control circuit high	The current amperage in the heated oxygen sensor 2 heater circuit is out of the normal range. (An excessively high voltage signal is sent to ECM through the heated oxygen sensor 2 heater.)	• Harness or connectors (The heated oxygen sensor 2 heater circuit is shorted.) • Heated oxygen sensor 2 heater

DTC CONFIRMATION PROCEDURE

1. PRECONDITIONING

If DTC Confirmation Procedure has been previously conducted, always turn ignition switch OFF and wait at least 10 seconds before conducting the next test.

TESTING CONDITION:

Before performing the following procedure, confirm that battery voltage is more than 11V at idle.

>> GO TO 2.

2. PERFORM DTC CONFIRMATION PROCEDURE

With CONSULT-III

1. Turn ignition switch ON and select “DATA MONITOR” mode with CONSULT-III.
2. Start engine and warm it up to the normal operating temperature.
3. Turn ignition switch OFF and wait at least 10 seconds.
4. Start engine and keep the engine speed between 3,500 and 4,000 rpm for at least 1 minute under no load.
5. Let engine idle for 1 minute.
6. Check 1st trip DTC.

With GST

Follow the procedure “With CONSULT-III” above.

Is 1st trip DTC detected?

YES >> Go to EC-159, "Diagnosis Procedure".
NO >> INSPECTION END

Diagnosis Procedure

INFOID:0000000004349202

1. CHECK GROUND CONNECTION

1. Turn ignition switch OFF.
2. Check ground connection E9. Refer to Ground Inspection in GI-45, "Circuit Inspection".

Is the inspection result normal?

YES >> GO TO 2.
NO >> Repair or replace ground connection.

2. CHECK HO2S2 POWER SUPPLY CIRCUIT

1. Disconnect heated oxygen sensor 2 harness connector.
2. Turn ignition switch ON.
3. Check the voltage between HO2S2 harness connector and ground.

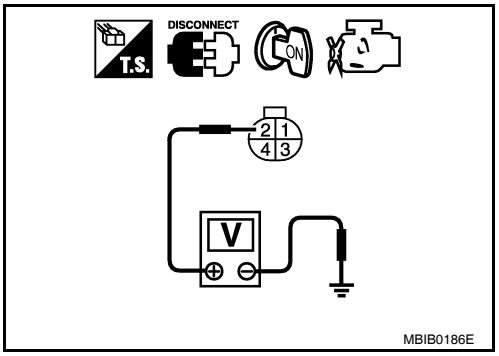

HO2S2		Ground	Voltage
Connector	Terminal		
F42	2	Ground	Battery voltage

Is the inspection result normal?

YES >> GO TO 4.
NO >> GO TO 3.

3. DETECT MALFUNCTIONING PART

Check the following.
- IPDM E/R connector F10
- 15A fuse (No. 37)
- Harness for open or short between heated oxygen sensor 2 and fuse

>> Repair open circuit or short to ground or short to power in harness or connectors.

4. CHECK HO2S2 OUTPUT SIGNAL CIRCUIT FOR OPEN AND SHORT

1. Turn ignition switch OFF.
2. Disconnect ECM harness connector.
3. Check the continuity between HO2S2 harness connector and ECM harness connector.

HO2S2		ECM		Continuity
Connector	Terminal	Connector	Terminal	
F42	3	F14	13	Existed

4. Also check harness for short to ground and short to power.

Is the inspection result normal?

YES >> GO TO 5.
NO >> Repair open circuit or short to ground or short to power in harness or connectors.

5. CHECK HEATED OXYGEN SENSOR 2 HEATER

Refer to EC-160, "Component Inspection".

Is the inspection result normal?

YES >> GO TO 7.
NO >> GO TO 6.

6. REPLACE HEATED OXYGEN SENSOR 2

Replace heated oxygen sensor 2.

CAUTION:
- **Discard any sensor which has been dropped from a height of more than 0.5 m (19.7 in) onto a hard surface such as a concrete floor; use a new one.**
- **Before installing new sensor, clean exhaust system threads using oxygen sensor thread cleaner [commercial service tool (J-43897-18 or J-43897-12)] and approved anti-seize lubricant (commercial service tool).**

>> INSPECTION END

7.CHECK INTERMITTENT INCIDENT

Refer to GI-42, "Intermittent Incident".

>> INSPECTION END

Component Inspection

INFOID:0000000004349203

1.CHECK HEATED OXYGEN SENSOR 2 HEATER

1. Turn ignition switch OFF.
2. Disconnect heated oxygen sensor 2 harness connector.
3. Check resistance between HO2S2 terminals as follows.

Terminals	Resistance
2 and 3	3.4 - 4.4 Ω [at 25°C (77°F)]
1 and 2, 3, 4	∞ Ω (Continuity should not exist)
4 and 1, 2, 3	

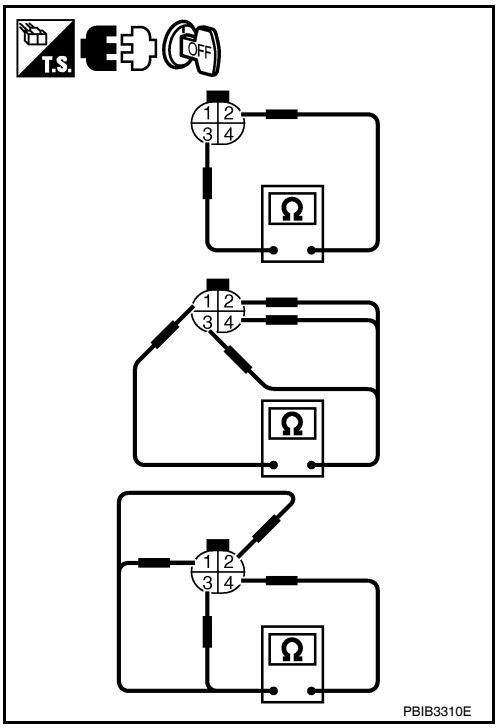

Is the inspection result normal?

YES >> INSPECTION END
NO >> GO TO 2.

2.REPLACE HEATED OXYGEN SENSOR 2

Replace heated oxygen sensor 2.

CAUTION:
- **Discard any sensor which has been dropped from a height of more than 0.5 m (19.7 in) onto a hard surface such as a concrete floor; use a new one.**
- **Before installing new sensor, clean exhaust system threads using oxygen sensor thread cleaner [commercial service tool (J-43897-18 or J-43897-12)] and approved anti-seize lubricant (commercial service tool).**

>> INSPECTION END

P0043, P0044 HO2S3 HEATER

Description

INFOID:0000000004349204

SYSTEM DESCRIPTION

Sensor	Input signal to ECM	ECM function	Actuator
Camshaft position sensor (PHASE)	Engine speed	Heated oxygen sensor 3 heater control	Heated oxygen sensor 3 heater
Crankshaft position sensor (POS)			
Engine coolant temperature sensor	Engine coolant temperature		
Mass air flow sensor	Amount of intake air		

The ECM performs ON/OFF control of the heated oxygen sensor 3 heater corresponding to the engine speed, amount of intake air and engine coolant temperature.

OPERATION

Engine speed	Heated oxygen sensor 3 heater
Above 3,600 rpm	OFF
Below 3,600 rpm after the following conditions are met. • Engine: After warming up • Driving for 3 minutes at a speed of 80 km/h (50 MPH) or more (Keep the vehicle speed as steady as possible during the cruising.)	ON

DTC Logic

INFOID:0000000004349205

DTC DETECTION LOGIC

DTC No.	Trouble diagnosis name	DTC detecting condition	Possible cause
P0043	Heated oxygen sensor 3 heater control circuit low	The current amperage in the heated oxygen sensor 3 heater circuit is out of the normal range. (An excessively low voltage signal is sent to ECM through the heated oxygen sensor 3 heater.)	• Harness or connectors (The heated oxygen sensor 3 heater circuit is open or shorted.) • Heated oxygen sensor 3 heater
P0044	Heated oxygen sensor 3 heater control circuit high	The current amperage in the heated oxygen sensor 3 heater circuit is out of the normal range. (An excessively high voltage signal is sent to ECM through the heated oxygen sensor 3 heater.)	• Harness or connectors (The heated oxygen sensor 3 heater circuit is shorted.) • Heated oxygen sensor 3 heater

DTC CONFIRMATION PROCEDURE

1.PRECONDITIONING

If DTC Confirmation Procedure has been previously conducted, always turn ignition switch OFF and wait at least 10 seconds before conducting the next test.

TESTING CONDITION:

Before performing the following procedure, confirm that battery voltage is between 10.5V and 16V at idle.

>> GO TO 2.

2.PERFORM DTC CONFIRMATION PROCEDURE

With CONSULT-III

CAUTION:

Always drive vehicle in safe manner according to traffic conditions and obey all traffic laws.

1. Start engine and warm it up to the normal operating temperature.
2. Turn ignition switch OFF and wait at least 10 seconds.
3. Start the engine and drive vehicle at a speed of 80 km/h (50 MPH) or more for at least 3 consecutive minutes.

NOTE:
Keep the vehicle speed as steady as possible during the cruising.

4. Check 1st trip DTC.

With GST

Follow the procedure “With CONSULT-III” above.

Is 1st trip DTC detected?

YES >> Go to EC-162, "Diagnosis Procedure".
NO >> INSPECTION END

Diagnosis Procedure

INFOID:0000000004349206

1. CHECK GROUND CONNECTION

1. Turn ignition switch OFF.
2. Check ground connection E9. Refer to Ground Inspection in GI-45, "Circuit Inspection".

Is the inspection result normal?

YES >> GO TO 2.
NO >> Repair or replace ground connection.

2. CHECK HO2S3 POWER SUPPLY CIRCUIT

1. Disconnect heated oxygen sensor 3 harness connector.
2. Turn ignition switch ON.
3. Check the voltage between HO2S3 harness connector and ground.

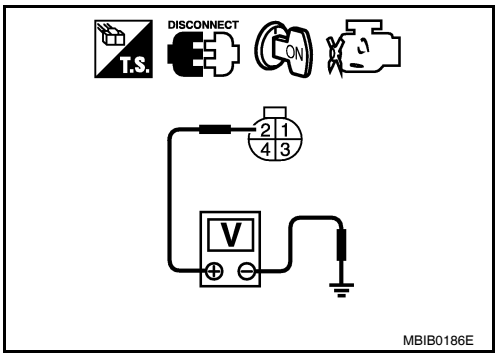

HO2S3		Ground	Voltage
Connector	Terminal		
F102	2	Ground	Battery voltage

Is the inspection result normal?

YES >> GO TO 4.
NO >> GO TO 3.

3. DETECT MALFUNCTIONING PART

Check the following.
- Harness connectors F58, F101
- IPDM E/R harness connector F10
- 15A fuse (No. 37)
- Harness for open or short between heated oxygen sensor 3 and fuse

>> Repair open circuit or short to ground or short to power in harness or connectors.

4. CHECK HO2S3 OUTPUT SIGNAL CIRCUIT FOR OPEN AND SHORT

1. Turn ignition switch OFF.
2. Disconnect ECM harness connector.
3. Check harness continuity between HO2S3 harness connector and ECM harness connector.

HO2S3		ECM		Continuity
Connector	Terminal	Connector	Terminal	
F102	3	F14	17	Existed

4. Also check harness for short to ground and short to power.

Is the inspection result normal?

YES >> GO TO 6.
NO >> GO TO 5.

5. DETECT MALFUNCTIONING PART

Check the following.

- Harness connectors F58, F101
- Harness for open or short between heated oxygen sensor 3 and ECM

>> Repair open circuit or short to ground or short to power in harness or connectors.

6. CHECK HEATED OXYGEN SENSOR 3 HEATER

Refer to EC-163, "Component Inspection".

Is the inspection result normal?

YES >> GO TO 8.
NO >> GO TO 7.

7. REPLACE HEATED OXYGEN SENSOR 3

Replace heated oxygen sensor 3.

CAUTION:

- **Discard any sensor which has been dropped from a height of more than 0.5 m (19.7 in) onto a hard surface such as a concrete floor; use a new one.**
- **Before installing new sensor, clean exhaust system threads using oxygen sensor thread cleaner [commercial service tool (J-43897-18 or J-43897-12)] and approved anti-seize lubricant (commercial service tool).**

>> INSPECTION END

8. CHECK INTERMITTENT INCIDENT

Refer to GI-42, "Intermittent Incident".

>> INSPECTION END

Component Inspection

INFOID:0000000004349207

1. CHECK HEATED OXYGEN SENSOR 3 HEATER

1. Turn ignition switch OFF.
2. Disconnect heated oxygen sensor 3 harness connector.
3. Check resistance between HO2S3 terminals as follows.

Terminal	Resistance
2 and 3	3.4 - 4.4 Ω [at 25°C (77°F)]
1 and 2, 3, 4	∞Ω (Continuity should not exist)
4 and 1, 2, 3	

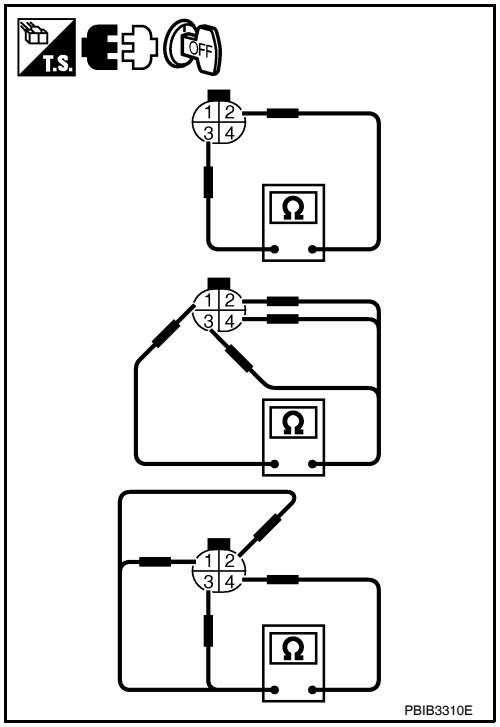

Is the inspection result normal?

YES >> INSPECTION END
NO >> GO TO 2.

2. REPLACE HEATED OXYGEN SENSOR 3

Replace heated oxygen sensor 3.

CAUTION:

- **Discard any sensor which has been dropped from a height of more than 0.5 m (19.7 in) onto a hard surface such as a concrete floor; use a new one.**
- **Before installing new sensor, clean exhaust system threads using oxygen sensor thread cleaner [commercial service tool (J-43897-18 or J-43897-12)] and approved anti-seize lubricant (commercial service tool).**

>> INSPECTION END

P0075 IVT CONTROL SOLENOID VALVE

Description

INFOID:0000000004349208

Intake valve timing control solenoid valve is activated by ON/OFF pulse duty (ratio) signals from the ECM.
The intake valve timing control solenoid valve changes the oil amount and direction of flow through intake valve timing control unit or stops oil flow.
The longer pulse width advances valve angle.
The shorter pulse width retards valve angle.
When ON and OFF pulse widths become equal, the solenoid valve stops oil pressure flow to fix the intake valve angle at the control position.

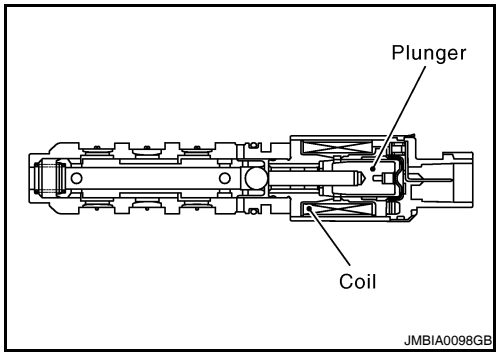

DTC Logic

INFOID:0000000004349209

DTC DETECTION LOGIC

DTC No.	Trouble diagnosis name	DTC detecting condition	Possible cause
P0075	Intake valve timing control solenoid valve circuit	An improper voltage is sent to the ECM through intake valve timing control solenoid valve.	• Harness or connectors (Intake valve timing control solenoid valve circuit is open or shorted.) • Intake valve timing control solenoid valve

DTC CONFIRMATION PROCEDURE

1. PRECONDITIONING

If DTC Confirmation Procedure has been previously conducted, always turn ignition switch OFF and wait at least 10 seconds before conducting the next test.

>> GO TO2.

2. PERFORM DTC CONFIRMATION PROCEDURE

1. Start engine and let it idle for 5 seconds.
2. Check 1st trip DTC.

Is 1st trip DTC detected?

YES >> Go to EC-165, "Diagnosis Procedure".
NO >> INSPECTION END

Diagnosis Procedure

INFOID:0000000004349210

1. CHECK INTAKE VALVE TIMING CONTROL SOLENOID VALVE POWER SUPPLY CIRCUIT

1. Turn ignition switch OFF.
2. Disconnect intake valve timing control solenoid valve harness connector.
3. Turn ignition switch ON.
4. Check the voltage between intake valve timing control solenoid valve harness connector and ground.

IVT control solenoid valve		Ground	Voltage
Connector	Terminal		
F59	1	Ground	Battery voltage

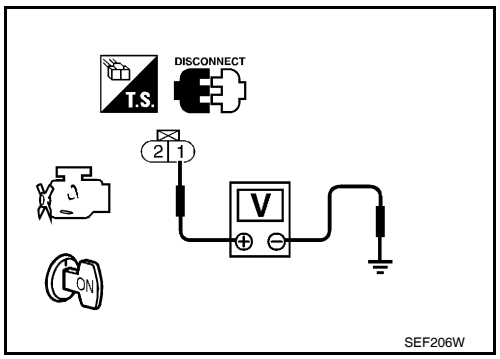

Is the inspection result normal?

YES >> GO TO 2.
NO >> Repair open circuit or short to ground or short to power in harness or connectors.

2. CHECK INTAKE VALVE TIMING CONTROL SOLENOID VALVE OUTPUT SIGNAL CIRCUIT FOR OPEN AND SHORT

1. Turn ignition switch OFF.
2. Disconnect ECM harness connector.
3. Check the continuity between intake valve timing control solenoid valve harness connector and ECM harness connector.

IVT control solenoid valve		ECM		Continuity
Connector	Terminal	Connector	Terminal	
F59	2	F13	78	Existed

4. Also check harness for short to ground and short to power.

Is the inspection result normal?

YES >> GO TO 3.
NO >> Repair open circuit or short to ground or short to power in harness or connectors.

3. CHECK INTAKE VALVE TIMING CONTROL SOLENOID VALVE

Refer to EC-153, "Component Inspection".

Is the inspection result normal?

YES >> GO TO 4.
NO >> Replace intake valve timing control solenoid valve.

4. CHECK INTERMITTENT INCIDENT

Refer to GI-42, "Intermittent Incident".

>> INSPECTION END

Component Inspection

INFOID:0000000004349211

1. CHECK INTAKE VALVE TIMING CONTROL SOLENOID VALVE-I

1. Turn ignition switch OFF.
2. Disconnect intake valve timing control solenoid valve harness connector.
3. Check resistance between intake valve timing control solenoid valve terminals as follows.

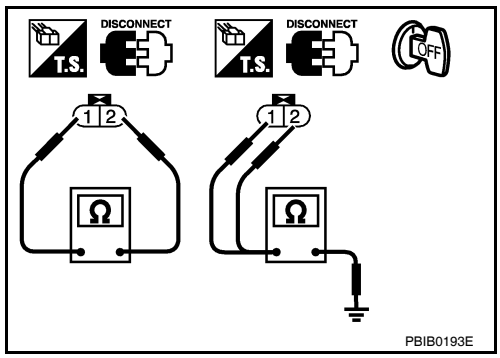

Terminals	Resistance
1 and 2	7.0 - 7.5 Ω [at 20°C (68°F)]
1 or 2 and ground	∞ Ω (Continuity should not exist)

Is the inspection result normal?

YES >> GO TO 2.
NO >> Replace intake valve timing control solenoid valve.

2. CHECK INTAKE VALVE TIMING CONTROL SOLENOID VALVE-II

1. Remove intake valve timing control solenoid valve.

2. Provide 12V DC between intake valve timing control solenoid valve terminals 1 and 2, and then interrupt it. Make sure that the plunger moves as shown in the figure.
   CAUTION:
   Do not apply 12V DC continuously for 5 seconds or more. Doing so may result in damage to the coil in intake valve timing control solenoid valve.
   NOTE:
   Always replace O-ring when intake valve timing control solenoid valve is removed.

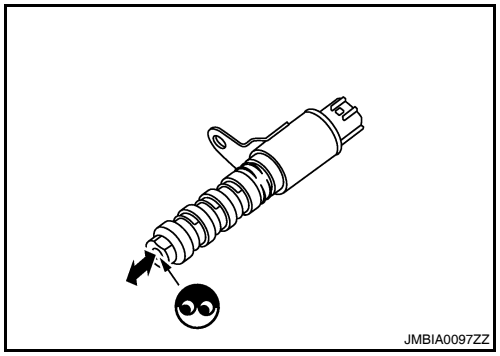

Is the inspection result normal?

YES >> INSPECTION END
NO >> Replace intake valve timing control solenoid valve.

P0101 MAF SENSOR

Description

INFOID:0000000004349212

The mass air flow sensor (1) is placed in the stream of intake air. It measures the intake flow rate by measuring a part of the entire intake flow. The mass air flow sensor controls the temperature of the hot wire to a certain amount. The heat generated by the hot wire is reduced as the intake air flows around it. The more air, the greater the heat loss.
Therefore, the electric current supplied to hot wire is changed to maintain the temperature of the hot wire as air flow increases. The ECM detects the air flow by means of this current change.

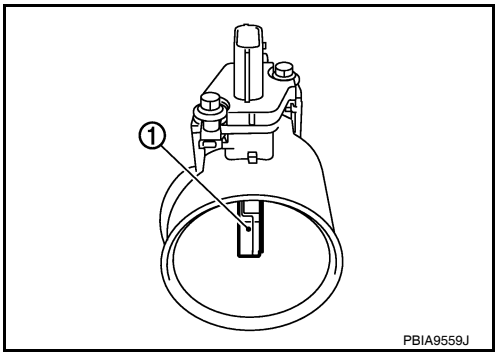

DTC Logic

INFOID:0000000004349213

DTC DETECTION LOGIC

DTC No.	Trouble diagnosis name	DTC detecting condition		Possible cause
P0101	Mass air flow sensor circuit range/performance	A)	A high voltage from the sensor is sent to ECM under light load driving condition.	• Harness or connectors (The sensor circuit is open or shorted.) • Mass air flow sensor • EVAP control system pressure sensor
		B)	A low voltage from the sensor is sent to ECM under heavy load driving condition.	• Harness or connectors (The sensor circuit is open or shorted.) • Intake air leaks • Mass air flow sensor • EVAP control system pressure sensor • Intake air temperature sensor

DTC CONFIRMATION PROCEDURE

1. PRECONDITIONING

If DTC Confirmation Procedure has been previously conducted, always turn ignition switch OFF and wait at least 10 seconds before conducting the next test.
If engine will not start or stops soon, wait at least 10 seconds with engine stopped (Ignition switch ON) instead of running engine at idle speed.

>> GO TO 2.

2. PERFORM DTC CONFIRMATION PROCEDURE FOR MALFUNCTION A

1. Start engine and warm it up to normal operating temperature.
2. Run engine for at least 10 seconds at idle speed.
3. Check 1st trip DTC.

Is 1st trip DTC detected?

YES >> Go to EC-170, "Diagnosis Procedure".
NO-1 >> With CONSULT-III: GO TO 3.
NO-2 >> Without CONSULT-III: GO TO 5.

3. CHECK MASS AIR FLOW SENSOR FUNCTION

1. Turn ignition switch ON.
2. Start engine and warm it up to normal operating temperature.
   If engine cannot be started, go to EC-170, "Diagnosis Procedure".

3. Select “DATA MONITOR” mode with CONSULT-III.
4. Check the voltage of “MAS A/F SE-B1” with “DATA MONITOR”.
5. Increases engine speed to about 4,000 rpm.
6. Monitor the linear voltage rise in response to engine speed increases.

Is the inspection result normal?

YES >> GO TO 4.
NO >> Go to EC-170, "Diagnosis Procedure".

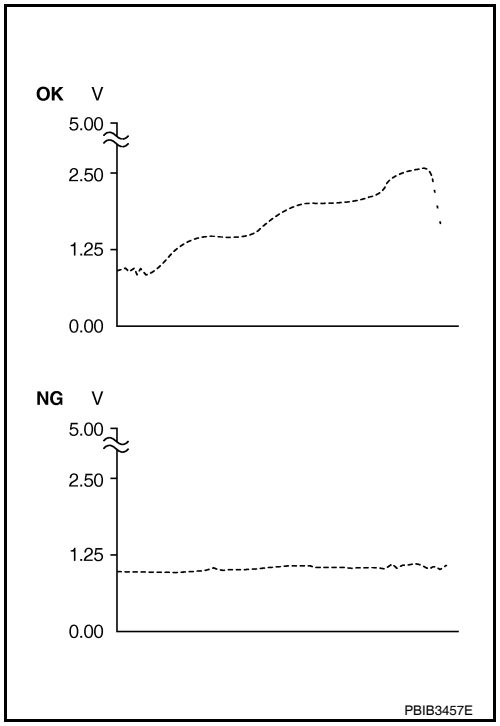

4. PERFORM DTC CONFIRMATION PROCEDURE FOR MALFUNCTION B

1. Maintain the following conditions for at least 10 consecutive seconds.

ENG SPEED	More than 1,500 rpm
THRTL SEN 1-B1	More than 3V
THRTL SEN 2-B1	More than 3V
Shift lever	Suitable position
Driving location	Driving vehicle uphill (Increased engine load) will help maintain the driving conditions required for this test.

CAUTION:
Always drive vehicle at a safe speed.

2. Check 1st trip DTC.

Is 1st trip DTC detected?

YES >> Go to EC-170, "Diagnosis Procedure".
NO >> INSPECTION END

5. PERFORM COMPONENT FUNCTION CHECK FOR MALFUNCTION B

Perform component function check. Refer to EC-169, "Component Function Check".

NOTE:
Use component function check to check the overall function of the mass air flow sensor circuit. During this check, a DTC might not be confirmed.

Is the inspection result normal?

YES >> INSPECTION END
NO >> Go to EC-170, "Diagnosis Procedure".

Component Function Check

INFOID:0000000004349214

1. PERFORM COMPONENT FUNCTION CHECK FOR MALFUNCTION B

With GST

1. Start engine and warm it up to normal operating temperature.
2. Select Service $01 with GST.

3. Check the mass air flow sensor signal with Service $01.
4. Check for linear mass air flow sensor signal value rise in response to increases to about 4,000 rpm in engine speed.

Is the inspection result normal?

YES >> INSPECTION END
NO >> Go to EC-170, "Diagnosis Procedure".

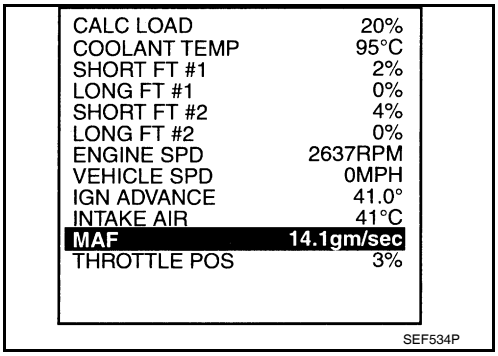

Diagnosis Procedure

INFOID:0000000004349215

1. INSPECTION START

Confirm the detected malfunction (A or B). Refer to EC-168, "DTC Logic".

Which malfunction is detected?

A >> GO TO 3.
B >> GO TO 2.

2. CHECK INTAKE SYSTEM

Check the following for connection.
- Air duct
- Vacuum hoses
- Intake air passage between air duct and intake manifold

Is the inspection result normal?

YES >> GO TO 3.
NO >> Reconnect the parts.

3. CHECK GROUND CONNECTION

1. Turn ignition switch OFF.
2. Check ground connection E9. Refer to Ground Inspection in GI-45, "Circuit Inspection".

Is the inspection result normal?

YES >> GO TO 4.
NO >> Repair or replace ground connection.

4. CHECK MAF SENSOR POWER SUPPLY CIRCUIT

1. Disconnect mass air flow (MAF) sensor harness connector.
2. Turn ignition switch ON.
3. Check the voltage between MAF sensor harness connector and ground.

MAF sensor		Ground	Voltage
Connector	Terminal		
F31	5	Ground	Battery voltage

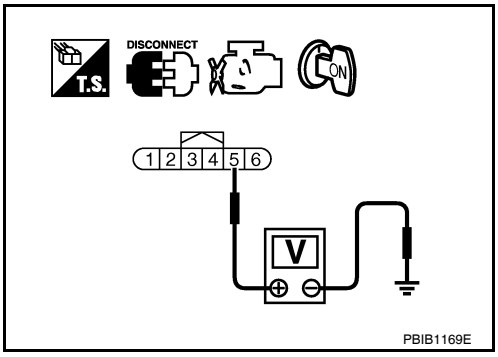

Is the inspection result normal?

YES >> GO TO 6.
NO >> GO TO 5.

5. DETECT MALFUNCTIONING PART

Check the following.
- Junction block connector E44
- Harness connector E11,F2
- 15A fuse (No. 42)
- Harness for open or short between mass air flow sensor and ECM
- Harness for open or short between mass air flow sensor and IPDM E/R

>> Repair open circuit or short to ground or short to power in harness or connectors.

6. CHECK MAF SENSOR GROUND CIRCUIT FOR OPEN AND SHORT

1. Turn ignition switch OFF.
2. Disconnect ECM harness connector.
3. Check the continuity between MAF sensor harness connector and ECM harness connector.

MAF sensor		ECM		Continuity
Connector	Terminal	Connector	Terminal	
F31	4	F13	56	Existed

4. Also check harness for short to ground and short to power.

Is the inspection result normal?

YES >> GO TO 7.
NO >> Repair open circuit or short to ground or short to power in harness or connectors.

7. CHECK MAF SENSOR INPUT SIGNAL CIRCUIT FOR OPEN AND SHORT

1. Check the continuity between MAF sensor harness connector and ECM harness connector.

MAF sensor		ECM		Continuity
Connector	Terminal	Connector	Terminal	
F31	3	F13	58	Existed

2. Also check harness for short to ground and short to power.

Is the inspection result normal?

YES >> GO TO 8.
NO >> Repair open circuit or short to ground or short to power in harness or connectors.

8. CHECK INTAKE AIR TEMPERATURE SENSOR

Check intake air temperature sensor.
Refer to EC-182, "Component Inspection".

Is the inspection result normal?

YES >> GO TO 9.
NO >> Replace mass air flow sensor (with intake air temperature sensor).

9. CHECK EVAP CONTROL SYSTEM PRESSURE SENSOR

Refer to EC-318, "Component Inspection".

Is the inspection result normal?

YES >> GO TO 10.
NO >> Replace EVAP control system pressure sensor.

10. CHECK MASS AIR FLOW SENSOR

Refer to EC-171, "Component Inspection".

Is the inspection result normal?

YES >> GO TO 11.
NO >> Replace mass air flow sensor.

11. CHECK INTERMITTENT INCIDENT

Refer to GI-42, "Intermittent Incident".

>> INSPECTION END

Component Inspection

INFOID:0000000004349216

1. CHECK MASS AIR FLOW SENSOR-I

With CONSULT-III

1. Turn ignition switch OFF.
2. Reconnect all harness connectors disconnected.
3. Start engine and warm it up to normal operating temperature.
4. Connect CONSULT-III and select “DATA MONITOR” mode.
5. Select “MAS A/F SE-B1” and check indication.

Monitor item	Condition	MAS A/F SE-B1
MAS A/F SE-B1	Ignition switch ON (Engine stopped.)	Approx. 0.4 V
	Idle (Engine is warmed-up to normal operating temperature.)	0.9 - 1.1 V
	2,500 rpm (Engine is warmed-up to normal operating temperature.)	1.4 - 1.7 V
	Idle to about 4,000 rpm	0.9 - 1.1 V to Approx. 2.4 V*

*: Check for linear voltage rise in response to engine being increased to about 4,000 rpm.

Without CONSULT-III

1. Turn ignition switch OFF.
2. Reconnect all harness connectors disconnected.
3. Start engine and warm it up to normal operating temperature.
4. Check the voltage between ECM harness connector and ground.

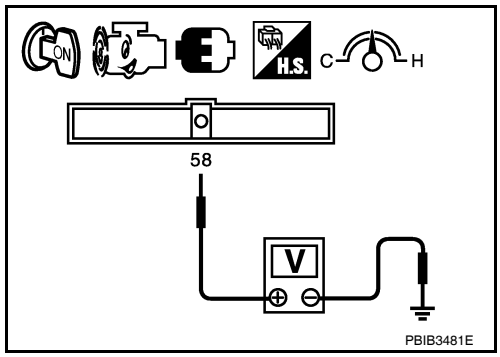

ECM		Ground	Condition	Voltage
Connector	Terminal			
F13	58 (MAF sensor signal)	Ground	Ignition switch ON (Engine stopped.)	Approx. 0.4 V
			Idle (Engine is warmed-up to normal operating temperature.)	0.9 - 1.1 V
			2,500 rpm (Engine is warmed-up to normal operating temperature.)	1.4 - 1.7 V
			Idle to about 4,000 rpm	0.9 - 1.1 V to Approx. 2.4 V*

*: Check for linear voltage rise in response to engine being increased to about 4,000 rpm.

Is the inspection result normal?

YES >> GO TO 4.
NO >> GO TO 2.

2. CHECK FOR THE CAUSE OF UNEVEN AIR FLOW THROUGH MASS AIR FLOW SENSOR

1. Turn ignition switch OFF.
2. Check for the cause of uneven air flow through mass air flow sensor. Refer to following.

- Crushed air ducts
- Malfunctioning seal of air cleaner element
- Uneven dirt of air cleaner element
- Improper specification of intake air system parts

Is the inspection result normal?

YES >> GO TO 4.
NO >> GO TO 3.

3. CHECK MASS AIR FLOW SENSOR-II

With CONSULT-III

1. Repair or replace malfunctioning part.
2. Start engine and warm it up to normal operating temperature.
3. Connect CONSULT-III and select “DATA MONITOR” mode.
4. Select “MAS A/F SE-B1” and check indication.

Monitor item	Condition	MAS A/F SE-B1
MAS A/F SE-B1	Ignition switch ON (Engine stopped.)	Approx. 0.4 V
	Idle (Engine is warmed-up to normal operating temperature.)	0.9 - 1.1 V
	2,500 rpm (Engine is warmed-up to normal operating temperature.)	1.4 - 1.7 V
	Idle to about 4,000 rpm	0.9 - 1.1 V to Approx. 2.4 V*

*: Check for linear voltage rise in response to engine being increased to about 4,000 rpm.

Without CONSULT-III

1. Repair or replace malfunctioning part.
2. Start engine and warm it up to normal operating temperature.
3. Check the voltage between ECM harness connector and ground.

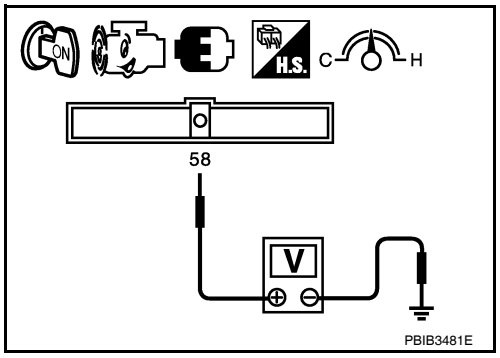

ECM		Ground	Condition	Voltage
Connector	Terminal			
F13	58 (MAF sensor signal)	Ground	Ignition switch ON (Engine stopped.)	Approx. 0.4 V
			Idle (Engine is warmed-up to normal operating temperature.)	0.9 - 1.1 V
			2,500 rpm (Engine is warmed-up to normal operating temperature.)	1.4 - 1.7 V
			Idle to about 4,000 rpm	0.9 - 1.1 V to Approx. 2.4 V*

*: Check for linear voltage rise in response to engine being increased to about 4,000 rpm.

Is the inspection result normal?

YES >> INSPECTION END
NO >> GO TO 4.

4. CHECK MASS AIR FLOW SENSOR-III

With CONSULT-III

1. Turn ignition switch OFF.
2. Disconnect mass air flow sensor harness connector and reconnect it again.
3. Start engine and warm it up to normal operating temperature.
4. Connect CONSULT-III and select “DATA MONITOR” mode.
5. Select “MAS A/F SE-B1” and check indication.

Monitor item	Condition	MAS A/F SE-B1
MAS A/F SE-B1	Ignition switch ON (Engine stopped.)	Approx. 0.4 V
	Idle (Engine is warmed-up to normal operating temperature.)	0.9 - 1.1 V
	2,500 rpm (Engine is warmed-up to normal operating temperature.)	1.4 - 1.7 V
	Idle to about 4,000 rpm	0.9 - 1.1 V to Approx. 2.4 V*

*: Check for linear voltage rise in response to engine being increased to about 4,000 rpm.

Without CONSULT-III

1. Turn ignition switch OFF.
2. Disconnect mass air flow sensor harness connector and reconnect it again.
3. Start engine and warm it up to normal operating temperature.

4. Check the voltage between ECM harness connector and ground.

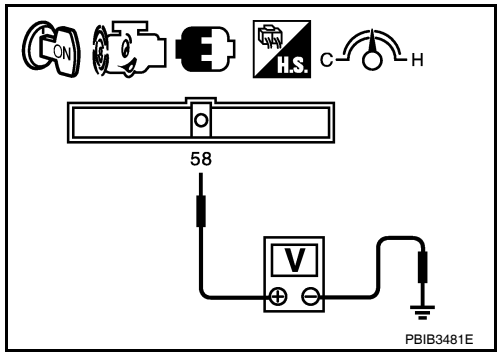

ECM		Ground	Condition	Voltage
Connector	Terminal			
F13	58 (MAF sensor signal)	Ground	Ignition switch ON (Engine stopped.)	Approx. 0.4 V
			Idle (Engine is warmed-up to normal operating temperature.)	0.9 - 1.1 V
			2,500 rpm (Engine is warmed-up to normal operating temperature.)	1.4 - 1.7 V
			Idle to about 4,000 rpm	0.9 - 1.1 V to Approx. 2.4 V*

*: Check for linear voltage rise in response to engine being increased to about 4,000 rpm.

Is the inspection result normal?

YES >> INSPECTION END
NO >> Clean or replace mass air flow sensor.

P0102, P0103 MAF SENSOR

Description

INFOID:0000000004349217

The mass air flow sensor (1) is placed in the stream of intake air. It measures the intake flow rate by measuring a part of the entire intake flow. The mass air flow sensor controls the temperature of the hot wire to a certain amount. The heat generated by the hot wire is reduced as the intake air flows around it. The more air, the greater the heat loss.
Therefore, the electric current supplied to hot wire is changed to maintain the temperature of the hot wire as air flow increases. The ECM detects the air flow by means of this current change.

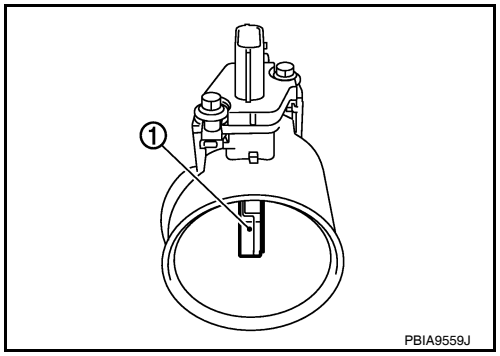

DTC Logic

INFOID:0000000004349218

DTC DETECTION LOGIC

DTC No.	Trouble diagnosis name	DTC detecting condition	Possible cause
P0102	Mass air flow sensor circuit low input	An excessively low voltage from the sensor is sent to ECM.	• Harness or connectors (The sensor circuit is open or shorted.) • Intake air leaks • Mass air flow sensor
P0103	Mass air flow sensor circuit high input	An excessively high voltage from the sensor is sent to ECM.	• Harness or connectors (The sensor circuit is open or shorted.) • Mass air flow sensor

DTC CONFIRMATION PROCEDURE

1. PRECONDITIONING

If DTC Confirmation Procedure has been previously conducted, always turn ignition switch OFF and wait at least 10 seconds before conducting the next test.

Which DTC is detected?

P0102 >> GO TO 2.
P0103 >> GO TO 3.

2. PERFORM DTC CONFIRMATION PROCEDURE FOR DTC P0102

1. Start engine and wait at least 5 seconds.
2. Check DTC.

Is DTC detected?

YES >> Go to EC-176, "Diagnosis Procedure".
NO >> INSPECTION END

3. PERFORM DTC CONFIRMATION PROCEDURE FOR DTC P0103-I

1. Turn ignition switch ON and wait at least 5 seconds.
2. Check DTC.

Is DTC detected?

YES >> Go to EC-176, "Diagnosis Procedure".
NO >> GO TO 4.

4. PERFORM DTC CONFIRMATION PROCEDURE FOR DTC P0103-II

1. Start engine and wait at least 5 seconds.
2. Check DTC.

Is DTC detected?

YES >> Go to EC-176, "Diagnosis Procedure".

NO >> INSPECTION END

Diagnosis Procedure

INFOID:0000000004349219

1. INSPECTION START

Confirm the detected DTC.

Which DTC is detected?

P0102 >> GO TO 2.
P0103 >> GO TO 3.

2. CHECK INTAKE SYSTEM

Check the following for connection.
- Air duct
- Vacuum hoses
- Intake air passage between air duct to intake manifold

Is the inspection result normal?

YES >> GO TO 3.
NO >> Reconnect the parts.

3. CHECK GROUND CONNECTION

1. Turn ignition switch OFF.
2. Check ground connection E9. Refer to Ground Inspection in GI-45, "Circuit Inspection".

Is the inspection result normal?

YES >> GO TO 4.
NO >> Repair or replace ground connection.

4. CHECK MAF SENSOR POWER SUPPLY CIRCUIT

1. Disconnect mass air flow (MAF) sensor harness connector.
2. Turn ignition switch ON.
3. Check the voltage between MAF sensor harness connector and ground.

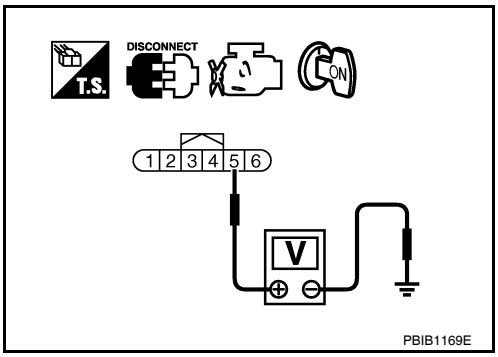

MAF sensor		Ground	Voltage
Connector	Terminal		
F31	5	Ground	Battery voltage

Is the inspection result normal?

YES >> GO TO 6.
NO >> GO TO 5.

5. DETECT MALFUNCTIONING PART

Check the following.
- Junction block connector E44
- Harness connector E11,F2
- 15A fuse (No. 42)
- Harness for open or short between mass air flow sensor and ECM
- Harness for open or short between mass air flow sensor and IPDM E/R

>> Repair open circuit or short to ground or short to power in harness or connectors.

6. CHECK MAF SENSOR GROUND CIRCUIT FOR OPEN AND SHORT

1. Turn ignition switch OFF.
2. Disconnect ECM harness connector.
3. Check the continuity between MAF sensor harness connector and ECM harness connector.

MAF sensor		ECM		Continuity
Connector	Terminal	Connector	Terminal	
F31	4	F13	56	Existed

4. Also check harness for short to ground and short to power.

Is the inspection result normal?

YES >> GO TO 7.
NO >> Repair open circuit or short to ground or short to power in harness or connectors.

7. CHECK MAF SENSOR INPUT SIGNAL CIRCUIT FOR OPEN AND SHORT

1. Check the continuity between MAF sensor harness connector and ECM harness connector.

MAF sensor		ECM		Continuity
Connector	Terminal	Connector	Terminal	
F31	3	F13	58	Existed

2. Also check harness for short to ground and short to power.

Is the inspection result normal?

YES >> GO TO 8.
NO >> Repair open circuit or short to ground or short to power in harness or connectors.

8. CHECK MASS AIR FLOW SENSOR

Refer to EC-171, "Component Inspection".

Is the inspection result normal?

YES >> GO TO 9.
NO >> Replace mass air flow sensor.

9. CHECK INTERMITTENT INCIDENT

Refer to GI-42, "Intermittent Incident".

>> INSPECTION END

Component Inspection

INFOID:0000000004349220

1. CHECK MASS AIR FLOW SENSOR-I

With CONSULT-III

1. Turn ignition switch OFF.
2. Reconnect all harness connectors disconnected.
3. Start engine and warm it up to normal operating temperature.
4. Connect CONSULT-III and select “DATA MONITOR” mode.
5. Select “MAS A/F SE-B1” and check indication.

Monitor item	Condition	MAS A/F SE-B1
MAS A/F SE-B1	Ignition switch ON (Engine stopped.)	Approx. 0.4 V
	Idle (Engine is warmed-up to normal operating temperature.)	0.9 - 1.1 V
	2,500 rpm (Engine is warmed-up to normal operating temperature.)	1.4 - 1.7 V
	Idle to about 4,000 rpm	0.9 - 1.1 V to Approx. 2.4 V*

*: Check for linear voltage rise in response to engine being increased to about 4,000 rpm.

Without CONSULT-III

1. Turn ignition switch OFF.
2. Reconnect all harness connectors disconnected.
3. Start engine and warm it up to normal operating temperature.

4. Check the voltage between ECM harness connector and ground.

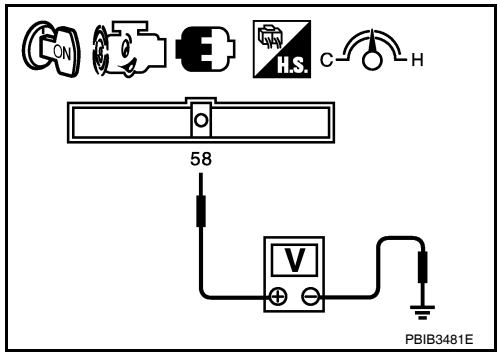

ECM		Ground	Condition	Voltage
Connector	Terminal			
F13	58 (MAF sensor signal)	Ground	Ignition switch ON (Engine stopped.)	Approx. 0.4 V
			Idle (Engine is warmed-up to normal operating temperature.)	0.9 - 1.1 V
			2,500 rpm (Engine is warmed-up to normal operating temperature.)	1.4 - 1.7 V
			Idle to about 4,000 rpm	0.9 - 1.1 V to Approx. 2.4 V*

*: Check for linear voltage rise in response to engine being increased to about 4,000 rpm.

Is the inspection result normal?

YES >> GO TO 4.
NO >> GO TO 2.

2. CHECK FOR THE CAUSE OF UNEVEN AIR FLOW THROUGH MASS AIR FLOW SENSOR

1. Turn ignition switch OFF.
2. Check for the cause of uneven air flow through mass air flow sensor. Refer to following.

- Crushed air ducts
- Malfunctioning seal of air cleaner element
- Uneven dirt of air cleaner element
- Improper specification of intake air system parts

Is the inspection result normal?

YES >> GO TO 4.
NO >> GO TO 3.

3. CHECK MASS AIR FLOW SENSOR-II

With CONSULT-III

1. Repair or replace malfunctioning part.
2. Start engine and warm it up to normal operating temperature.
3. Connect CONSULT-III and select “DATA MONITOR” mode.
4. Select “MAS A/F SE-B1” and check indication.

Monitor item	Condition	MAS A/F SE-B1
MAS A/F SE-B1	Ignition switch ON (Engine stopped.)	Approx. 0.4 V
	Idle (Engine is warmed-up to normal operating temperature.)	0.9 - 1.1 V
	2,500 rpm (Engine is warmed-up to normal operating temperature.)	1.4 - 1.7 V
	Idle to about 4,000 rpm	0.9 - 1.1 V to Approx. 2.4 V*

*: Check for linear voltage rise in response to engine being increased to about 4,000 rpm.

Without CONSULT-III

1. Repair or replace malfunctioning part.
2. Start engine and warm it up to normal operating temperature.

3. Check the voltage between ECM harness connector and ground.

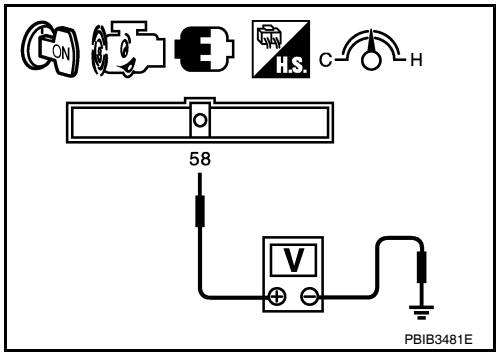

ECM		Ground	Condition	Voltage
Connector	Terminal			
F13	58 (MAF sensor signal)	Ground	Ignition switch ON (Engine stopped.)	Approx. 0.4 V
			Idle (Engine is warmed-up to normal operating temperature.)	0.9 - 1.1 V
			2,500 rpm (Engine is warmed-up to normal operating temperature.)	1.4 - 1.7 V
			Idle to about 4,000 rpm	0.9 - 1.1 V to Approx. 2.4 V*

*: Check for linear voltage rise in response to engine being increased to about 4,000 rpm.

Is the inspection result normal?

YES >> INSPECTION END
NO >> GO TO 4.

4. CHECK MASS AIR FLOW SENSOR-III

With CONSULT-III

1. Turn ignition switch OFF.
2. Disconnect mass air flow sensor harness connector and reconnect it again.
3. Start engine and warm it up to normal operating temperature.
4. Connect CONSULT-III and select “DATA MONITOR” mode.
5. Select “MAS A/F SE-B1” and check indication.

Monitor item	Condition	MAS A/F SE-B1
MAS A/F SE-B1	Ignition switch ON (Engine stopped.)	Approx. 0.4 V
	Idle (Engine is warmed-up to normal operating temperature.)	0.9 - 1.1 V
	2,500 rpm (Engine is warmed-up to normal operating temperature.)	1.4 - 1.7 V
	Idle to about 4,000 rpm	0.9 - 1.1 V to Approx. 2.4 V*

*: Check for linear voltage rise in response to engine being increased to about 4,000 rpm.

Without CONSULT-III

1. Turn ignition switch OFF.
2. Disconnect mass air flow sensor harness connector and reconnect it again.
3. Start engine and warm it up to normal operating temperature.
4. Check the voltage between ECM harness connector and ground.

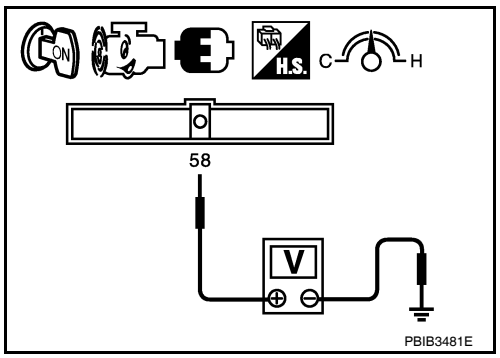

ECM		Ground	Condition	Voltage
Connector	Terminal			
F13	58 (MAF sensor signal)	Ground	Ignition switch ON (Engine stopped.)	Approx. 0.4 V
			Idle (Engine is warmed-up to normal operating temperature.)	0.9 - 1.1 V
			2,500 rpm (Engine is warmed-up to normal operating temperature.)	1.4 - 1.7 V
			Idle to about 4,000 rpm	0.9 - 1.1 V to Approx. 2.4 V*

*: Check for linear voltage rise in response to engine being increased to about 4,000 rpm.

Is the inspection result normal?

YES >> INSPECTION END
NO >> Clean or replace mass air flow sensor.

P0112, P0113 IAT SENSOR

Description

INFOID:0000000004349221

The intake air temperature sensor is built-into mass air flow sensor (1). The sensor detects intake air temperature and transmits a signal to the ECM.
The temperature sensing unit uses a thermistor which is sensitive to the change in temperature. Electrical resistance of the thermistor decreases in response to the temperature rise.

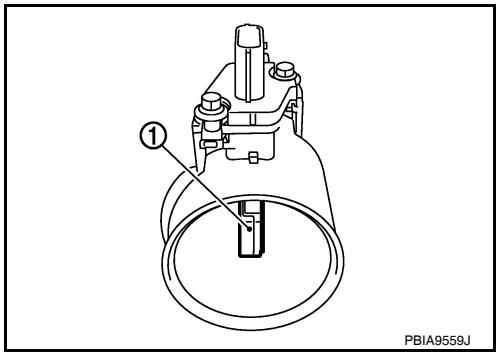

<Reference data>

Intake air temperature °C (°F)]	Voltage* V)	Resistance kΩ
25 (77)	3.3	1.800 - 2.200
80 (176)	1.2	0.283 - 0.359

*: These data are reference values and are measured between ECM terminal 50 (Intake air temperature sensor) and ground.

CAUTION:

Do not use ECM ground terminals when measuring input/output voltage. Doing so may result in damage to the ECM's transistor. Use a ground other than ECM terminals, such as the ground.

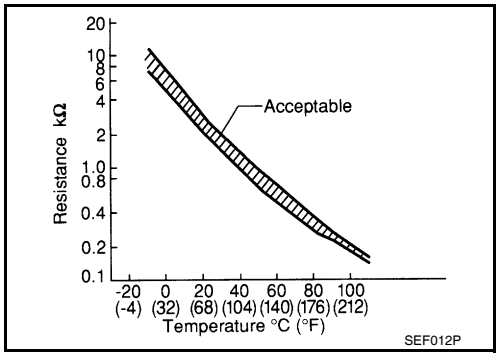

DTC Logic

INFOID:0000000004349222

DTC DETECTION LOGIC

DTC No.	Trouble diagnosis name	DTC detecting condition	Possible cause
P0112	Intake air temperature sensor circuit low input	An excessively low voltage from the sensor is sent to ECM.	• Harness or connectors (The sensor circuit is open or shorted.) • Intake air temperature sensor
P0113	Intake air temperature sensor circuit high input	An excessively high voltage from the sensor is sent to ECM.	

DTC CONFIRMATION PROCEDURE

1.PRECONDITIONING

If DTC Confirmation Procedure has been previously conducted, always turn ignition switch OFF and wait at least 10 seconds before conducting the next test.

>> GO TO 2.

2.PERFORM DTC CONFIRMATION PROCEDURE

1. Turn ignition switch ON and wait at least 5 seconds.
2. Check 1st trip DTC.

Is 1st trip DTC detected?

YES >> Go to EC-182, "Diagnosis Procedure".
NO >> INSPECTION END

Diagnosis Procedure

INFOID:0000000004349223

1. CHECK GROUND CONNECTION

1. Turn ignition switch OFF.
2. Check ground connection E9. Refer to Ground Inspection in GI-45, "Circuit Inspection".

Is the inspection result normal?

YES >> GO TO 2.
NO >> Repair or replace ground connection.

2. CHECK INTAKE AIR TEMPERATURE SENSOR POWER SUPPLY CIRCUIT

1. Disconnect mass air flow sensor (with intake air temperature sensor) harness connector.
2. Turn ignition switch ON.
3. Check the voltage between mass air flow sensor harness connector and ground.

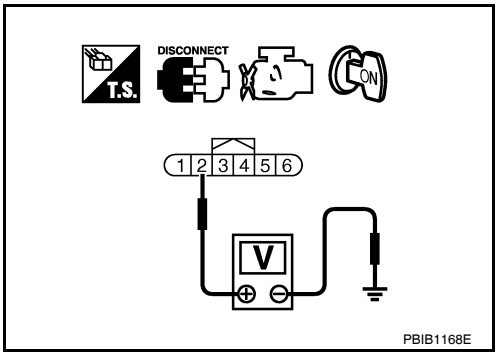

MAF sensor		Ground	Voltage
Connector	Terminal		
F31	2	Ground	Approx. 5 V

Is the inspection result normal?

YES >> GO TO 3.
NO >> Repair open circuit or short to ground or short to power in harness or connectors.

3. CHECK INTAKE AIR TEMPERATURE SENSOR GROUND CIRCUIT FOR OPEN AND SHORT

1. Turn ignition switch OFF.
2. Disconnect ECM harness connector.
3. Check the continuity between mass air flow sensor harness connector and ECM harness connector.

MAF sensor		ECM		Continuity
Connector	Terminal	Connector	Terminal	
F31	1	F13	56	Existed

4. Also check harness for short to ground and short to power.

Is the inspection result normal?

YES >> GO TO 4.
NO >> Repair open circuit or short to ground or short to power in harness or connectors.

4. CHECK INTAKE AIR TEMPERATURE SENSOR

Refer to EC-182, "Component Inspection".

Is the inspection result normal?

YES >> GO TO 5.
NO >> Replace mass air flow sensor (with intake air temperature sensor).

5. CHECK INTERMITTENT INCIDENT

Refer to GI-42, "Intermittent Incident".

>> INSPECTION END

Component Inspection

INFOID:0000000004349224

1. CHECK INTAKE AIR TEMPERATURE SENSOR

1. Turn ignition switch OFF.
2. Disconnect mass air flow sensor harness connector.

3. Check resistance between mass air flow sensor terminals as follows.

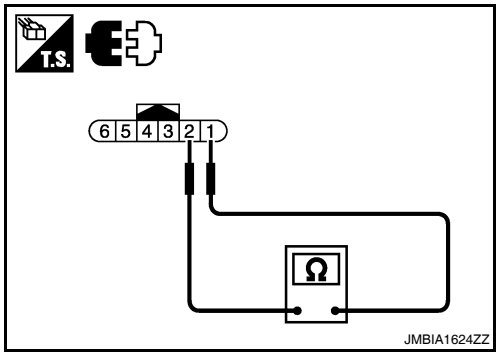

Terminals	Condition		Resistance kΩ
1 and 2	Intake air temperature °C (°F)	25 (77)	1.800 - 2.200

Is the inspection result normal?

YES >> INSPECTION END
NO >> Replace mass air flow sensor (with intake air temperature sensor).

P0116 ECT SENSOR

Description

INFOID:0000000004349225

The engine coolant temperature sensor is used to detect the engine coolant temperature. The sensor modifies a voltage signal from the ECM. The modified signal returns to the ECM as the engine coolant temperature input. The sensor uses a thermistor which is sensitive to the change in temperature. The electrical resistance of the thermistor decreases as temperature increases.

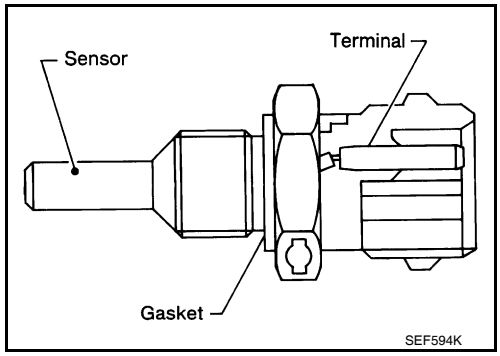

<Reference data>

Engine coolant temperature [°C (°F)]	Voltage* (V)	Resistance (kΩ)
–10 (14)	4.4	7.0 - 11.4
20 (68)	3.5	2.37 - 2.63
50 (122)	2.2	0.68 - 1.00
90 (194)	0.9	0.236 - 0.260

*: These data are reference values and are measured between ECM terminals 46 (Engine coolant temperature sensor) and ground.

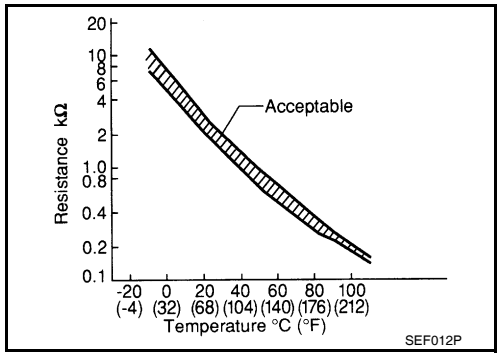

CAUTION:

Do not use ECM ground terminals when measuring input/output voltage. Doing so may result in damage to the ECM's transistor. Use a ground other than ECM terminals, such as the ground.

DTC Logic

INFOID:0000000004349226

DTC DETECTION LOGIC

NOTE:

If DTC P0116 is displayed with P0117 or P0118, first perform the trouble diagnosis for DTC P0117, P0118. Refer to EC-186, "DTC Logic".

DTC No.	Trouble diagnosis name	DTC detecting condition	Possible cause
P0116	Engine coolant temperature sensor circuit range/performance	Engine coolant temperature signal from engine coolant temperature sensor does not fluctuate, even when some time has passed after starting the engine with pre-warming up condition.	• Harness or connectors (High or low resistance in the circuit) • Engine coolant temperature sensor

DTC CONFIRMATION PROCEDURE

1.PRECONDITIONING

If DTC confirmation procedure has been previously conducted, always turn ignition switch OFF and wait at least 10 seconds before conducting the next test.

>> GO TO 2.

2.PERFORM DTC CONFIRMATION PROCEDURE

1. Start engine and warm it up to normal operating temperature.
2. Rev engine up to 2,000 rpm for more than 10 minutes.
3. Move the vehicle to a cool place, then stop engine and turn ignition switch OFF.
4. Check resistance between “fuel level sensor unit and fuel pump” terminals 4 and 5.

5. Soak the vehicle until the resistance between “fuel level sensor unit and fuel pump” terminals 4 and 5 becomes 0.5 kΩ higher than the value measured before soaking.
   CAUTION:
   Never turn ignition switch ON during the soaking time.
   NOTE:
   Soak time changes depending on ambient air temperature. It may take several hours.
6. Start engine and let it idle for 5 minutes.
7. Check 1st trip DTC.

Is 1st trip DTC detected?

YES >> EC-185, "Diagnosis Procedure".
NO >> INSPECTION END

Diagnosis Procedure

INFOID:0000000004349227

1. CHECK GROUND CONNECTION

1. Turn ignition switch OFF.
2. Check ground connection E9. Refer to GROUND INSPECTION in GI-45, "Circuit Inspection".

Is the inspection result normal?

YES >> GO TO 2.
NO >> Repair or replace ground connection.

2. CHECK ENGINE COOLANT TEMPERATURE SENSOR

Refer to EC-185, "Component Inspection".

Is the inspection result normal?

YES >> GO TO 3.
NO >> Replace engine coolant temperature sensor.

3. CHECK INTERMITTENT INCIDENT

Refer to GI-42, "Intermittent Incident".

>> INSPECTION END

Component Inspection

INFOID:0000000004349228

1. CHECK ENGINE COOLANT TEMPERATURE SENSOR

1. Turn ignition switch OFF.
2. Disconnect engine coolant temperature sensor harness connector.
3. Remove engine coolant temperature sensor.
4. Check resistance between engine coolant temperature sensor terminals as follows.

Terminals	Condition		Resistance (kΩ)
1 and 2	Temperature [°C (°F)]	20 (68)	2.37 - 2.63
		50 (122)	0.68 - 1.00
		90 (194)	0.236 - 0.260

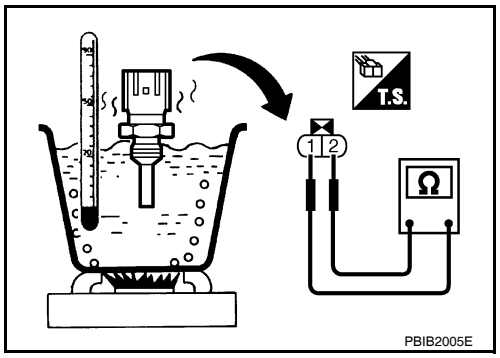

Is the inspection result normal?

YES >> INSPECTION END
NO >> Replace engine coolant temperature sensor.

P0117, P0118 ECT SENSOR

Description

INFOID:0000000004455855

The engine coolant temperature sensor is used to detect the engine coolant temperature. The sensor modifies a voltage signal from the ECM. The modified signal returns to the ECM as the engine coolant temperature input. The sensor uses a thermistor which is sensitive to the change in temperature. The electrical resistance of the thermistor decreases as temperature increases.

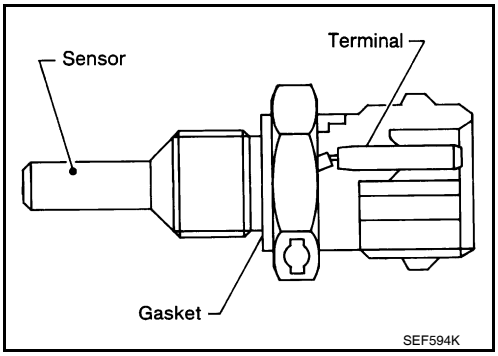

<Reference data>

Engine coolant temperature [°C (°F)]	Voltage* (V)	Resistance (kΩ)
–10 (14)	4.4	7.0 - 11.4
20 (68)	3.5	2.37 - 2.63
50 (122)	2.2	0.68 - 1.00
90 (194)	0.9	0.236 - 0.260

*: These data are reference values and are measured between ECM terminals 46 (Engine coolant temperature sensor) and ground.

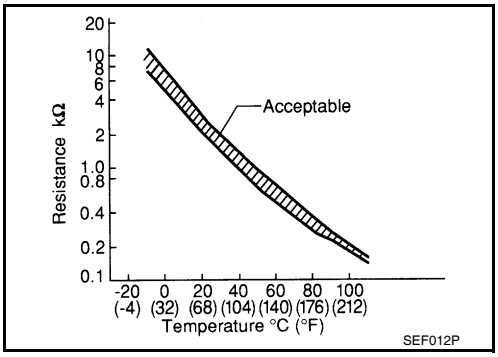

CAUTION:

Do not use ECM ground terminals when measuring input/output voltage. Doing so may result in damage to the ECM's transistor. Use a ground other than ECM terminals, such as the ground.

DTC Logic

INFOID:0000000004349230

DTC DETECTION LOGIC

DTC No.	Trouble Diagnosis Name	DTC detecting condition	Possible Cause
P0117	Engine coolant temperature sensor circuit low input	An excessively low voltage from the sensor is sent to ECM.	• Harness or connectors (The sensor circuit is open or shorted.) • Engine coolant temperature sensor
P0118	Engine coolant temperature sensor circuit high input	An excessively high voltage from the sensor is sent to ECM.	

DTC CONFIRMATION PROCEDURE

1.PRECONDITIONING

If DTC Confirmation Procedure has been previously conducted, always turn ignition switch OFF and wait at least 10 seconds before conducting the next test.

>> GO TO 2.

2.PERFORM DTC CONFIRMATION PROCEDURE

1. Turn ignition switch ON and wait at least 5 seconds.
2. Check DTC.

Is DTC detected?

YES >> Go to EC-187, "Diagnosis Procedure".
NO >> INSPECTION END

Diagnosis Procedure

INFOID:0000000004349231

1. CHECK GROUND CONNECTION

1. Turn ignition switch OFF.
2. Check ground connection E9. Refer to Ground Inspection in GI-45, "Circuit Inspection".

Is the inspection result normal?

YES >> GO TO 2.
NO >> Repair or replace ground connection.

2. CHECK ECT SENSOR POWER SUPPLY CIRCUIT

1. Disconnect engine coolant temperature (ECT) sensor harness connector.
2. Turn ignition switch ON.
3. Check the voltage between ECT sensor harness connector and ground.

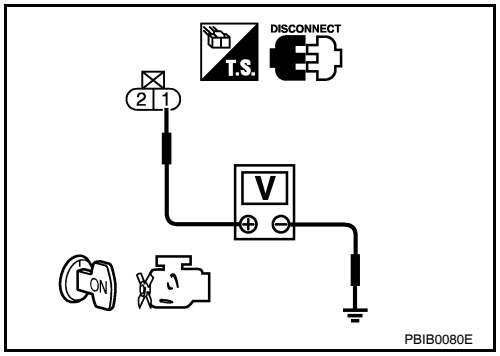

ECT sensor		Ground	Voltage
Connector	Terminal		
F11	1	Ground	Approx. 5 V

Is the inspection result normal?

YES >> GO TO 3.
NO >> Repair open circuit or short to ground or short to power in harness or connectors.

3. CHECK ECT SENSOR GROUND CIRCUIT FOR OPEN AND SHORT

1. Turn ignition switch OFF.
2. Disconnect ECM harness connector.
3. Check the continuity between ECT sensor harness connector and ECM harness connector.

ECT sensor		ECM		Continuity
Connector	Terminal	Connector	Terminal	
F11	2	F13	52	Existed

4. Also check harness for short to ground and short to power.

Is the inspection result normal?

YES >> GO TO 4.
NO >> Repair open circuit or short to ground or short to power in harness or connectors.

4. CHECK ENGINE COOLANT TEMPERATURE SENSOR

Refer to EC-187, "Component Inspection".

Is the inspection result normal?

YES >> GO TO 5.
NO >> Replace engine coolant temperature sensor.

5. CHECK INTERMITTENT INCIDENT

Refer to GI-42, "Intermittent Incident".

>> INSPECTION END

Component Inspection

INFOID:0000000004455856

1. CHECK ENGINE COOLANT TEMPERATURE SENSOR

1. Turn ignition switch OFF.
2. Disconnect engine coolant temperature sensor harness connector.
3. Remove engine coolant temperature sensor.

4. Check resistance between engine coolant temperature sensor terminals as follows.

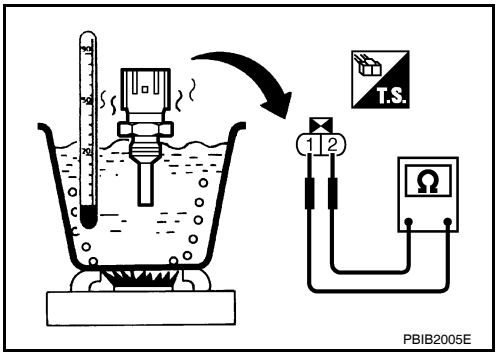

Terminals	Condition		Resistance (kΩ)
1 and 2	Temperature [°C (°F)]	20 (68)	2.37 - 2.63
		50 (122)	0.68 - 1.00
		90 (194)	0.236 - 0.260

Is the inspection result normal?

YES >> INSPECTION END
NO >> Replace engine coolant temperature sensor.

P0122, P0123 TP SENSOR

Description

INFOID:0000000004349233

Electric throttle control actuator consists of throttle control motor, throttle position sensor, etc. The throttle position sensor responds to the throttle valve movement.
The throttle position sensor has two sensors. These sensors are a kind of potentiometers which transform the throttle valve position into output voltage, and emit the voltage signal to the ECM. In addition, these sensors detect the opening and closing speed of the throttle valve and feed the voltage signals to the ECM. The ECM judges the current opening angle of the throttle valve from these signals and the ECM controls the throttle control motor to make the throttle valve opening angle properly in response to driving condition.

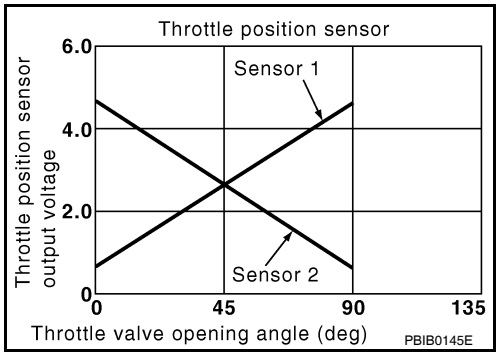

DTC Logic

INFOID:0000000004349234

DTC DETECTION LOGIC

NOTE:
If DTC P0122 or P0123 is displayed with DTC P0643, first perform the trouble diagnosis for DTC P0643. Refer to EC-362, "DTC Logic".

DTC No.	Trouble diagnosis name	DTC detecting condition	Possible cause
P0122	Throttle position sensor 2 circuit low input	An excessively low voltage from the TP sensor 2 is sent to ECM.	• Harness or connectors (TP sensor 2 circuit is open or shorted.) • Electric throttle control actuator (TP sensor 2)
P0123	Throttle position sensor 2 circuit high input	An excessively high voltage from the TP sensor 2 is sent to ECM.	

DTC CONFIRMATION PROCEDURE

1. PRECONDITIONING

If DTC Confirmation Procedure has been previously conducted, always turn ignition switch OFF and wait at least 10 seconds before conducting the next test.
TESTING CONDITION:
Before performing the following procedure, confirm that battery voltage is more than 8V at idle.

>> GO TO 2.

2. PERFORM DTC CONFIRMATION PROCEDURE

1. Start engine and let it idle for 1 second.
2. Check DTC.

Is DTC detected?

YES >> Go to EC-189, "Diagnosis Procedure".
NO >> INSPECTION END

Diagnosis Procedure

INFOID:0000000004349235

1. CHECK GROUND CONNECTION

1. Turn ignition switch OFF.
2. Check ground connection E9. Refer to Ground Inspection in GI-45, "Circuit Inspection".

Is the inspection result normal?

YES >> GO TO 2.
NO >> Repair or replace ground connection.

2. CHECK THROTTLE POSITION SENSOR 2 POWER SUPPLY CIRCUIT

1. Disconnect electric throttle control actuator harness connector.
2. Turn ignition switch ON.

3. Check the voltage between electric throttle control actuator harness connector and ground.

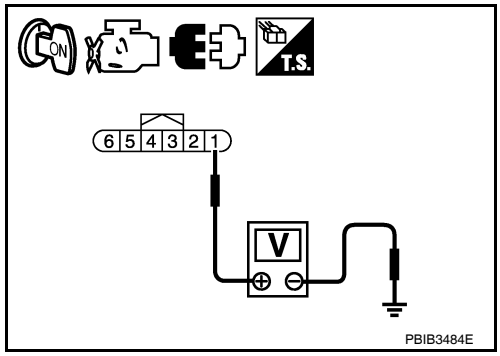

Electric throttle control actuator		Ground	Voltage
Connector	Terminal		
F57	1	Ground	Approx. 5 V

Is the inspection result normal?

YES >> GO TO 3.
NO >> Repair open circuit or short to ground or short to power in harness or connectors.

3. CHECK THROTTLE POSITION SENSOR 2 GROUND CIRCUIT FOR OPEN AND SHORT

1. Turn ignition switch OFF.
2. Disconnect ECM harness connector.
3. Check the continuity between electric throttle control actuator harness connector and ECM harness connector.

Electric throttle control actuator		ECM		Continuity
Connector	Terminal	Connector	Terminal	
F57	4	F13	36	Existed

4. Also check harness for short to ground and short to power.

Is the inspection result normal?

YES >> GO TO 4.
NO >> Repair open circuit or short to ground or short to power in harness or connectors.

4. CHECK THROTTLE POSITION SENSOR 2 INPUT SIGNAL CIRCUIT FOR OPEN AND SHORT

1. Check the continuity between electric throttle control actuator harness connector and ECM harness connector.

Electric throttle control actuator		ECM		Continuity
Connector	Terminal	Connector	Terminal	
F57	3	F13	38	Existed

2. Also check harness for short to ground and short to power.

Is the inspection result normal?

YES >> GO TO 5.
NO >> Repair open circuit or short to ground or short to power in harness or connectors.

5. CHECK THROTTLE POSITION SENSOR

Refer to EC-191, "Component Inspection".

Is the inspection result normal?

YES >> GO TO 7.
NO >> GO TO 6.

6. REPLACE ELECTRIC THROTTLE CONTROL ACTUATOR

1. Replace electric throttle control actuator.
2. Go to EC-191, "Special Repair Requirement".

>> INSPECTION END

7. CHECK INTERMITTENT INCIDENT

Refer to GI-42, "Intermittent Incident".

>> INSPECTION END

Component Inspection

INFOID:0000000004349236

1. CHECK THROTTLE POSITION SENSOR

1. Turn ignition switch OFF.
2. Reconnect all harness connectors disconnected.
3. Perform EC-29, "THROTTLE VALVE CLOSED POSITION LEARNING : Special Repair Requirement".
4. Turn ignition switch ON.
5. Set shift lever to D (CVT) or 1st (M/T) position.
6. Check the voltage between ECM harness connector and ground.

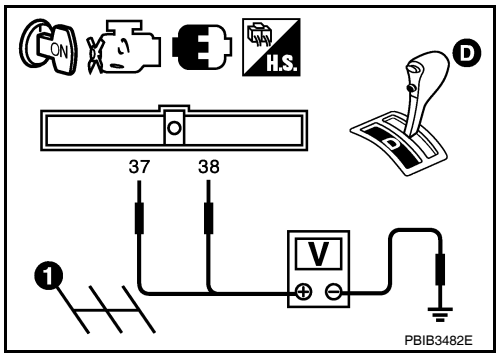

ECM		Ground	Condition		Voltage
Connector	Terminal				
F13	37 (TP sensor 1 signal)	Ground	Accelerator pedal	Fully released	More than 0.36 V
				Fully depressed	Less than 4.75 V
	38 (TP sensor 2 signal)			Fully released	Less than 4.75 V
				Fully depressed	More than 0.36 V

Is the inspection result normal?

YES >> INSPECTION END
NO >> GO TO 2.

2. REPLACE ELECTRIC THROTTLE CONTROL ACTUATOR

1. Replace electric throttle control actuator.
2. Go to EC-191, "Special Repair Requirement".

>> INSPECTION END

Special Repair Requirement

INFOID:0000000004349237

1. PERFORM THROTTLE VALVE CLOSED POSITION LEARNING

Refer to EC-29, "THROTTLE VALVE CLOSED POSITION LEARNING : Special Repair Requirement"

>> GO TO 2.

2. PERFORM IDLE AIR VOLUME LEARNING

Refer to EC-30, "IDLE AIR VOLUME LEARNING : Special Repair Requirement"

>> END

P0125 ECT SENSOR

Description

INFOID:0000000004455857

The engine coolant temperature sensor is used to detect the engine coolant temperature. The sensor modifies a voltage signal from the ECM. The modified signal returns to the ECM as the engine coolant temperature input. The sensor uses a thermistor which is sensitive to the change in temperature. The electrical resistance of the thermistor decreases as temperature increases.

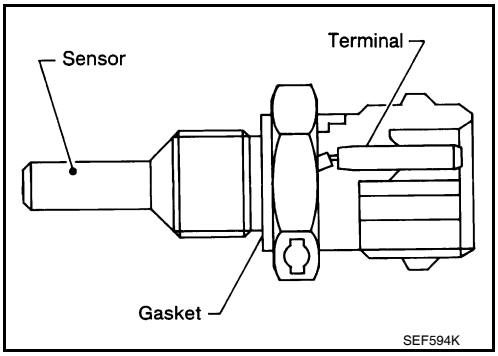

<Reference data>

Engine coolant temperature [°C (°F)]	Voltage* (V)	Resistance (kΩ)
–10 (14)	4.4	7.0 - 11.4
20 (68)	3.5	2.37 - 2.63
50 (122)	2.2	0.68 - 1.00
90 (194)	0.9	0.236 - 0.260

*: These data are reference values and are measured between ECM terminals 46 (Engine coolant temperature sensor) and ground.

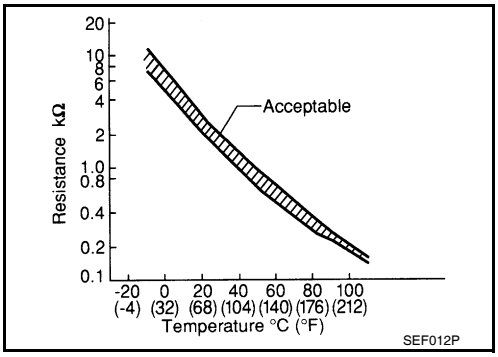

CAUTION:

Do not use ECM ground terminals when measuring input/output voltage. Doing so may result in damage to the ECM's transistor. Use a ground other than ECM terminals, such as the ground.

DTC Logic

INFOID:0000000004349239

DTC DETECTION LOGIC

NOTE:

- **If DTC P0125 is displayed with P0117 or P0118, first perform the trouble diagnosis for DTC P0117 or P0118. Refer to EC-186, "DTC Logic".**
- **If DTC P0125 is displayed with P0116, first perform the trouble diagnosis for DTC P0116. Refer to EC-184, "DTC Logic".**

DTC No.	Trouble diagnosis name	DTC detecting condition	Possible cause
P0125	Insufficient engine coolant temperature for closed loop fuel control	• Voltage sent to ECM from the sensor is not practical, even when some time has passed after starting the engine. • Engine coolant temperature is insufficient for closed loop fuel control.	• Harness or connectors (High resistance in the circuit) • Engine coolant temperature sensor • Thermostat

DTC CONFIRMATION PROCEDURE

1. PRECONDITIONING

If DTC Confirmation Procedure has been previously conducted, always turn ignition switch OFF and wait at least 10 seconds before conducting the next test.

>> GO TO 2.

2. CHECK ENGINE COOLANT TEMPERATURE SENSOR FUNCTION

With CONSULT-III

1. Turn ignition switch ON.

2. Select “DATA MONITOR” mode with CONSULT-III.
3. Check that “COOLAN TEMP/S” is above 5°C (41°F).

With GST

Follow the procedure “With CONSULT-III” above.

Is it above 5°C (41°F)?

YES >> INSPECTION END
NO >> GO TO 3.

3. PERFORM DTC CONFIRMATION PROCEDURE

With CONSULT-III

1. Start engine and run it for 65 minutes at idle speed.
2. Check 1st trip DTC.

If “COOLAN TEMP/S” increases to more than 5°C (41°F) within 65 minutes, stop engine because the test result will be OK.

CAUTION:

Be careful not to overheat engine.

With GST

Follow the procedure “With CONSULT-III” above.

Is 1st trip DTC detected?

YES >> EC-193, "Diagnosis Procedure"
NO >> INSPECTION END

Diagnosis Procedure

INFOID:0000000004349240

1. CHECK GROUND CONNECTION

1. Turn ignition switch OFF.
2. Check ground connection E9. Refer to Ground Inspection in GI-45, "Circuit Inspection".

Is the inspection result normal?

YES >> GO TO 2.
NO >> Repair or replace ground connection.

2. CHECK ENGINE COOLANT TEMPERATURE SENSOR

Refer to EC-193, "Component Inspection".

Is the inspection result normal?

YES >> GO TO 3.
NO >> Replace engine coolant temperature sensor.

3. CHECK THERMOSTAT OPERATION

When the engine is cold [lower than 70°C (158°F)] condition, grasp lower radiator hose and confirm the engine coolant does not flow.

Is the inspection result normal?

YES >> GO TO 4.
NO >> Repair or replace thermostat. Refer to CO-21, "Removal and Installation".

4. CHECK INTERMITTENT INCIDENT

Refer to GI-42, "Intermittent Incident".

>> INSPECTION END

Component Inspection

INFOID:0000000004455858

1. CHECK ENGINE COOLANT TEMPERATURE SENSOR

1. Turn ignition switch OFF.
2. Disconnect engine coolant temperature sensor harness connector.
3. Remove engine coolant temperature sensor.

4. Check resistance between engine coolant temperature sensor terminals as follows.

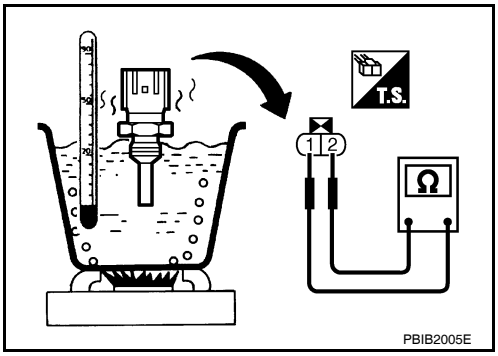

Terminals	Condition		Resistance (kΩ)
1 and 2	Temperature [°C (°F)]	20 (68)	2.37 - 2.63
		50 (122)	0.68 - 1.00
		90 (194)	0.236 - 0.260

Is the inspection result normal?

YES >> INSPECTION END
NO >> Replace engine coolant temperature sensor.

P0127 IAT SENSOR

Description

INFOID:0000000004349242

The intake air temperature sensor is built-into mass air flow sensor (1). The sensor detects intake air temperature and transmits a signal to the ECM.
The temperature sensing unit uses a thermistor which is sensitive to the change in temperature. Electrical resistance of the thermistor decreases in response to the temperature rise.

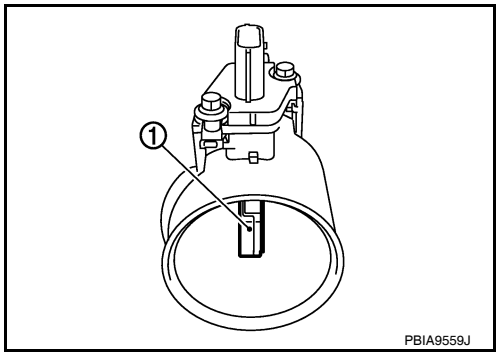

<Reference data>

Intake air temperature °C (°F)]	Voltage* V)	Resistance kΩ
25 (77)	3.3	1.800 - 2.200
80 (176)	1.2	0.283 - 0.359

*: These data are reference values and are measured between ECM terminal 50 (Intake air temperature sensor) and ground.

CAUTION:

Do not use ECM ground terminals when measuring input/output voltage. Doing so may result in damage to the ECM's transistor. Use a ground other than ECM terminals, such as the ground.

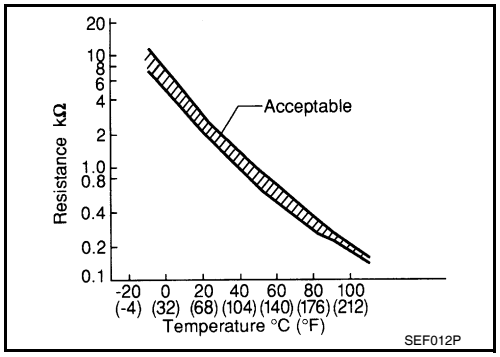

DTC Logic

INFOID:0000000004349243

DTC DETECTION LOGIC

DTC No.	Trouble diagnosis name	DTC detecting condition	Possible cause
P0127	Intake air temperature too high	Rationally incorrect voltage from the sensor is sent to ECM, compared with the voltage signal from engine coolant temperature sensor.	• Harness or connectors (The sensor circuit is open or shorted) • Intake air temperature sensor

DTC CONFIRMATION PROCEDURE

1.PRECONDITIONING

If DTC Confirmation Procedure has been previously conducted, always turn ignition switch OFF and wait at least 10 seconds before conducting the next test.

TESTING CONDITION:

This test may be conducted with the drive wheels lifted in the shop or by driving the vehicle. If a road test is expected to be easier, it is unnecessary to lift the vehicle.

>> GO TO 2.

2.PERFORM DTC CONFIRMATION PROCEDURE

With CONSULT-III

1. Wait until engine coolant temperature is less than 96°C (205°F)

- Turn ignition switch ON.
- Select “DATA MONITOR” mode with CONSULT-III.
- Check the engine coolant temperature.
- If the engine coolant temperature is not less than 96°C (205F), turn ignition switch OFF and cool down engine.

NOTE:
Perform the following steps before engine coolant temperature is above 96°C (205°F).

2. Turn ignition switch ON.
3. Select “DATA MONITOR” mode with CONSULT-III.
4. Start engine.
5. Hold vehicle speed at more than 70 km/h (43 MPH) for 95 consecutive seconds.
   CAUTION:
   Always drive vehicle at a safe speed.
6. Check 1st trip DTC.

With GST
Follow the procedure “With CONSULT-III” above.

Is 1st trip DTC detected?

YES >> Go to EC-196, "Diagnosis Procedure".
NO >> INSPECTION END

Diagnosis Procedure

INFOID:0000000004349244

1. CHECK GROUND CONNECTION

1. Turn ignition switch OFF.
2. Check ground connection E9. Refer to Ground Inspection in GI-45, "Circuit Inspection".

Is the inspection result normal?

YES >> GO TO 2.
NO >> Repair or replace ground connection.

2. CHECK INTAKE AIR TEMPERATURE SENSOR

Refer to EC-182, "Component Inspection".

Is the inspection result normal?

YES >> GO TO 3.
NO >> Replace mass air flow sensor (with intake air temperature sensor).

3. CHECK INTERMITTENT INCIDENT

Refer to GI-42, "Intermittent Incident".

>> INSPECTION END

Component Inspection

INFOID:0000000004349245

1. CHECK INTAKE AIR TEMPERATURE SENSOR

1. Turn ignition switch OFF.
2. Disconnect mass air flow sensor harness connector.
3. Check resistance between mass air flow sensor terminals as follows.

Terminals	Condition		Resistance kΩ
1 and 2	Intake air temperature °C (°F)	25 (77)	1.800 - 2.200

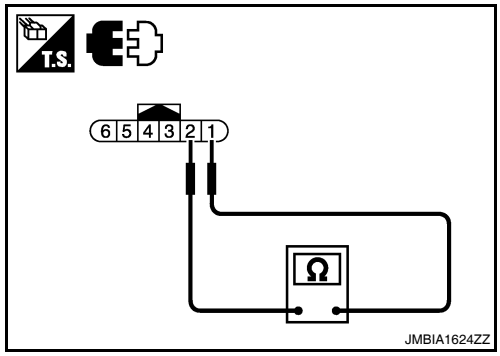

Is the inspection result normal?

YES >> INSPECTION END
NO >> Replace mass air flow sensor (with intake air temperature sensor).

P0128 THERMOSTAT FUNCTION

DTC Logic

INFOID:0000000004349246

DTC DETECTION LOGIC

NOTE:
If DTC P0128 is displayed with DTC P0300, P0301, P0302, P0303 or P0304, first perform the trouble diagnosis for DTC P0300, P0301, P0302, P0303, P0304. Refer to EC-271, "DTC Logic".
Engine coolant temperature has not risen enough to open the thermostat even though the engine has run long enough.
This is due to a leak in the seal or the thermostat stuck open.

DTC No.	Trouble diagnosis name	DTC detecting condition	Possible cause
P0128	Thermostat function	The engine coolant temperature does not reach to specified temperature even though the engine has run long enough.	• Thermostat • Leakage from sealing portion of thermostat • Engine coolant temperature sensor

DTC CONFIRMATION PROCEDURE

1.PRECONDITIONING

If DTC CONFIRMATION PROCEDURE has been previously conducted, always turn ignition switch OFF and wait at least 10 seconds before conducting the next test.
TESTING CONDITION:
- **For best results, perform at ambient temperature of –10°C (14°F) or higher.**
- **For best results, perform at engine coolant temperature of –10°C (14°F) to 52°C (126°F).**
- **Before performing the following procedure, do not fill with the fuel.**

>> GO TO 2.

2.PERFORM DTC CONFIRMATION PROCEDURE

With CONSULT-III
1. Turn A/C switch OFF.
2. Turn blower fan switch OFF.
3. Turn ignition switch ON.
4. Select “COOLAN TEMP/S” in “DATA MONITOR” mode with CONSULT-III.
5. Check the indication of “COOLAN TEMP/S”
   If it is below 52°C (126°F), go to following step.
   If it is above 52°C (126°F), cool down the engine to less than 52°C (126°F). Then go to next steps.
6. Start engine and drive vehicle for 10 consecutive minutes under the following conditions.

VHCL SPEED SE	More than 56 km/h (35 MPH)

   If “COOLAN TEMP/S” increases to more than 71°C (160°F) within 10 minutes, turn ignition switch OFF because the test result will be OK.
7. Check 1st trip DTC.

With GST
Follow the procedure “With CONSULT-III” above.

Is 1st trip DTC detected?

YES >> Go to EC-197, "Diagnosis Procedure".
NO >> INSPECTION END

Diagnosis Procedure

INFOID:0000000004349247

1.CHECK ENGINE COOLANT TEMPERATURE SENSOR

Refer to EC-198, "Component Inspection".

Is the inspection result normal?

YES >> GO TO 2.
NO >> Replace engine coolant temperature sensor.

2. CHECK THERMOSTAT

Refer to CO-21, "Removal and Installation".

Is the inspection result normal?

YES >> INSPECTION END
NO >> Replace thermostat.

Component Inspection

INFOID:0000000004455860

1. CHECK ENGINE COOLANT TEMPERATURE SENSOR

1. Turn ignition switch OFF.
2. Disconnect engine coolant temperature sensor harness connector.
3. Remove engine coolant temperature sensor.
4. Check resistance between engine coolant temperature sensor terminals as follows.

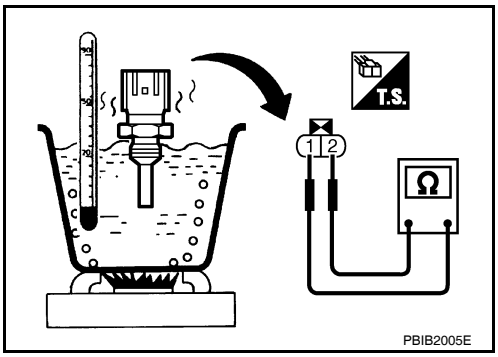

Terminals	Condition		Resistance (kΩ)
1 and 2	Temperature [°C (°F)]	20 (68)	2.37 - 2.63
		50 (122)	0.68 - 1.00
		90 (194)	0.236 - 0.260

Is the inspection result normal?

YES >> INSPECTION END
NO >> Replace engine coolant temperature sensor.

P0130 A/F SENSOR 1

Description

INFOID:0000000004349249

The air fuel ratio (A/F) sensor 1 is a planar one-cell limit current sensor. The sensor element of the A/F sensor 1 is composed an electrode layer, which transports ions. It has a heater in the element.
The sensor is capable of precise measurement λ = 1, but also in the lean and rich range. Together with its control electronics, the sensor outputs a clear, continuous signal throughout a wide λ range.
The exhaust gas components diffuse through the diffusion layer at the sensor cell. An electrode layer is applied voltage, and this current relative oxygen density in lean. Also this current relative hydrocarbon density in rich.
Therefore, the A/F sensor 1 is able to indicate air fuel ratio by this electrode layer of current. In addition, a heater is integrated in the sensor to ensure the required operating temperature of about 800°C (1,472°F).

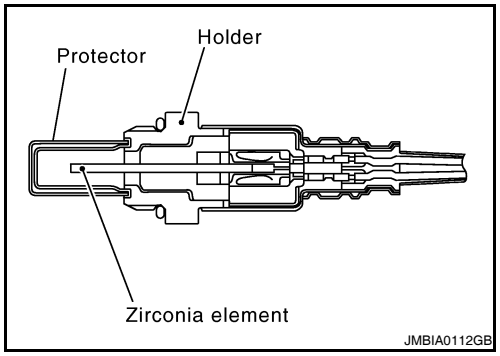

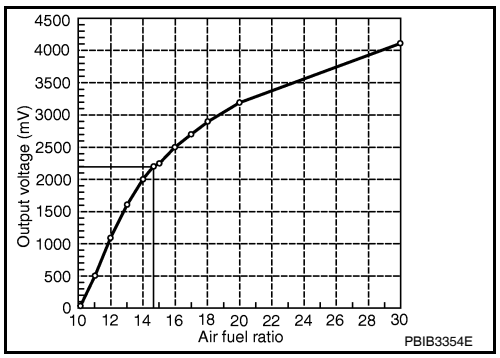

DTC Logic

INFOID:0000000004349250

DTC DETECTION LOGIC

To judge the malfunction, the diagnosis checks that the A/F signal computed by ECM from the A/F sensor 1 signal fluctuates according to fuel feedback control.

DTC No.	Trouble diagnosis name	DTC detecting condition		Possible Cause
P0130	Air fuel ratio (A/F) sensor 1 circuit	A)	The A/F signal computed by ECM from the A/F sensor 1 signal is constantly in the range other than approx. 2.2V.	• Harness or connectors (The A/F sensor 1 circuit is open or shorted.) • A/F sensor 1
		B)	The A/F signal computed by ECM from the A/F sensor 1 signal is constantly approx. 2.2V.	

DTC CONFIRMATION PROCEDURE

1. PRECONDITIONING

If DTC Confirmation Procedure has been previously conducted, always turn ignition switch OFF and wait at least 10 seconds before conducting the next test.
TESTING CONDITION:
Before performing the following procedure, confirm that battery voltage is more than 11V at idle.

>> GO TO 2.

2. PERFORM DTC CONFIRMATION PROCEDURE FOR MALFUNCTION A

With CONSULT-III
1. Start engine and warm it up to normal operating temperature.
2. Let it idle for 2 minutes.
3. Check 1st trip DTC.

Is 1st trip DTC detected?

YES >> Go to EC-201, "Diagnosis Procedure".
NO-1 >> With CONSULT-III: GO TO 3.

NO-2 >> Without CONSULT-III: GO TO 7.

3. CHECK AIR FUEL RATIO (A/F) SENSOR 1 FUNCTION

1. Select “A/F SEN1 (B1)” in “DATA MONITOR” mode with CONSULT-III.
2. Check “A/F SEN1 (B1)”indication.

Does the indication fluctuates around 2.2V?

YES >> GO TO 4.
NO >> Go to EC-201, "Diagnosis Procedure".

4. PERFORM DTC CONFIRMATION PROCEDURE FOR MALFUNCTION B-I

1. Select “A/F SEN1 (B1) P1276” of “A/F SEN1” in “DTC WORK SUPPORT” mode with CONSULT-III.
2. Touch “START”.
3. When the following conditions are met, “TESTING” will be displayed on the CONSULT-III screen.

ENG SPEED	1,000 - 3,200 rpm
VHCL SPEED SE	More than 64 km/h (40 mph)
B/FUEL SCHDL	1.0 - 11.5 msec
Shift lever	D position (CVT) 5th position (M/T)

If “TESTING” is not displayed after 20 seconds, retry from step 2.
CAUTION:
Always drive vehicle at a safe speed.

Is “TESTING” displayed on CONSULT-III screen?

YES >> GO TO 5.
NO >> Check A/F sensor 1 function again. GO TO 3.

5. PERFORM DTC CONFIRMATION PROCEDURE FOR MALFUNCTION B-II

Release accelerator pedal fully.
NOTE:
Never apply brake during releasing the accelerator pedal.

Which does “TESTING” change to?

COMPLETED>>GO TO 6.
OUT OF CONDITION>>Retry DTC CONFIRMATION PROCEDURE. GO TO 4.

6. PERFORM DTC CONFIRMATION PROCEDURE FOR MALFUNCTION B-III

Touch “SELF-DIAG RESULT”

Which is displayed on CONSULT-III screen?

YES >> INSPECTION END
NO >> Go to EC-201, "Diagnosis Procedure".

7. PERFORM COMPONENT FUNCTION CHECK FOR MALFUNCTION B

Perform Component Function Check. Refer to EC-200, "Component Function Check".
NOTE:
Use component function check to check the overall function of the A/F sensor 1 circuit. During this check, a 1st trip DTC might not be confirmed.

Is the inspection result normal?

YES >> INSPECTION END
NO >> Go to EC-201, "Diagnosis Procedure".

Component Function Check

INFOID:0000000004349251

1. PERFORM COMPONENT FUNCTION CHECK

With GST

1. Start engine and warm it up to normal operating temperature.
2. Drive the vehicle at a speed of 80 km/h (50 MPH) for a few minutes in the suitable gear position.

3. Set D (CVT) or 1st (M/T) position, then release the accelerator pedal fully until the vehicle speed decreases to 50 km/h (31 MPH).
   CAUTION:
   Always drive vehicle at a safe speed.
   NOTE:
   Never apply brake during releasing the accelerator pedal.
4. Repeat steps 2 to 3 for five times.
5. Stop the vehicle and turn ignition switch OFF.
6. Wait at least 10 seconds and restart engine.
7. Repeat steps 2 to 3 for five times.
8. Stop the vehicle and connect GST to the vehicle.
9. Check 1st trip DTC.

Is 1st trip DTC detected?

YES >> Go to EC-201, "Diagnosis Procedure".
NO >> INSPECTION END

Diagnosis Procedure

INFOID:0000000004349252

1. CHECK GROUND CONNECTION

1. Turn ignition switch OFF.
2. Check ground connection E9. Refer to Ground Inspection in GI-45, "Circuit Inspection".

Is the inspection result normal?

YES >> GO TO 2.
NO >> Repair or replace ground connection.

2. CHECK AIR FUEL RATIO (A/F) SENSOR 1 POWER SUPPLY CIRCUIT

1. Disconnect A/F sensor 1 harness connector.
2. Turn ignition switch ON.
3. Check the voltage between A/F sensor 1 harness connector and ground.

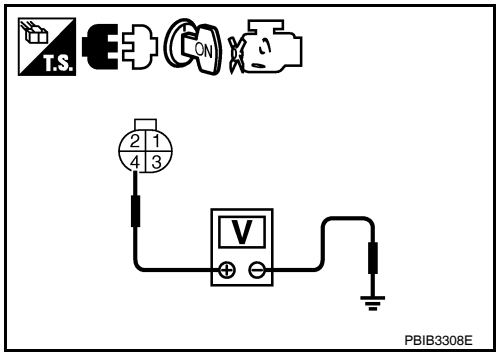

A/F sensor 1		Ground	Voltage
Connector	Terminal		
F44	4	Ground	Battery voltage

Is the inspection result normal?

YES >> GO TO 4.
NO >> GO TO 3.

3. DETECT MALFUNCTIONING PART

Check the following.
- IPDM E/R harness connector F10
- 15A fuse (No. 37)
- Harness for open or short between A/F sensor 1 and fuse

>> Repair or replace harness or connectors.

4. CHECK A/F SENSOR 1 INPUT SIGNAL CIRCUIT FOR OPEN AND SHORT

1. Turn ignition switch OFF.
2. Disconnect ECM harness connector.
3. Check the continuity between A/F sensor 1 harness connector and ECM harness connector.

A/F sensor 1		ECM		Continuity
Connector	Terminal	Connector	Terminal	
F44	1	F13	45	Existed
	2		49	

4. Check the continuity between A/F sensor 1 harness connector or ECM harness connector and ground.

A/F sensor 1		ECM		Ground	Continuity
Connector	Terminal	Connector	Terminal		
F44	1	F13	45	Ground	Not existed
	2		49		

5. Also check harness for short to power.

Is the inspection result normal?

YES >> GO TO 5.
NO >> Repair open circuit or short to ground or short to power in harness or connectors.

5. CHECK INTERMITTENT INCIDENT

Perform GI-42, "Intermittent Incident".

Is the inspection result normal?

YES >> GO TO 6.
NO >> Repair or replace.

6. REPLACE AIR FUEL RATIO (A/F) SENSOR 1

Replace air fuel ratio (A/F) sensor 1.

CAUTION:

- **Discard any sensor which has been dropped from a height of more than 0.5 m (19.7 in) onto a hard surface such as a concrete floor; use a new one.**
- **Before installing new sensor, clean exhaust system threads using oxygen sensor thread cleaner [commercial service tool (J-43897-18 or J-43897-12)] and approved anti-seize lubricant (commercial service tool).**

>> INSPECTION END

P0131 A/F SENSOR 1

Description

INFOID:0000000004349253

The air fuel ratio (A/F) sensor 1 is a planar one-cell limit current sensor. The sensor element of the A/F sensor 1 is composed an electrode layer, which transports ions. It has a heater in the element.
The sensor is capable of precise measurement λ = 1, but also in the lean and rich range. Together with its control electronics, the sensor outputs a clear, continuous signal throughout a wide λ range.
The exhaust gas components diffuse through the diffusion layer at the sensor cell. An electrode layer is applied voltage, and this current relative oxygen density in lean. Also this current relative hydrocarbon density in rich.
Therefore, the A/F sensor 1 is able to indicate air fuel ratio by this electrode layer of current. In addition, a heater is integrated in the sensor to ensure the required operating temperature of about 800°C (1,472°F).

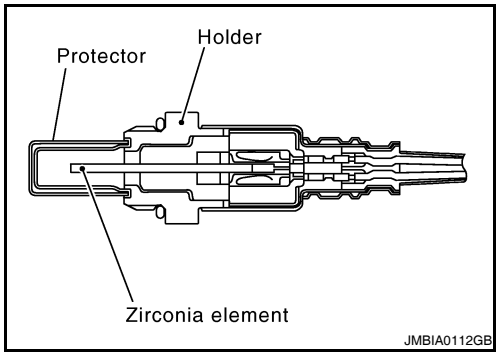

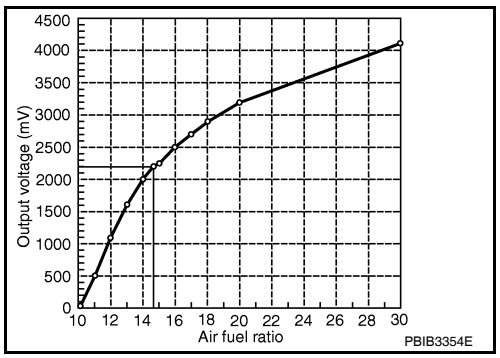

DTC Logic

INFOID:0000000004349254

DTC DETECTION LOGIC

To judge the malfunction, the diagnosis checks that the A/F signal computed by ECM from the A/F sensor 1 signal is not inordinately low.

DTC No.	Trouble diagnosis name	DTC detecting condition	Possible Cause
P0131	Air fuel ratio (A/F) sensor 1 circuit low voltage	• The A/F signal computed by ECM from the A/F sensor 1 signal is constantly approx. 0V.	• Harness or connectors (The A/F sensor 1 circuit is open or shorted.) • A/F sensor 1

DTC CONFIRMATION PROCEDURE

1. PRECONDITIONING

If DTC Confirmation Procedure has been previously conducted, always turn ignition switch OFF and wait at least 10 seconds before conducting the next test.
TESTING CONDITION:
Before performing the following procedure, confirm that battery voltage is more than 10.5V at idle.

>> GO TO 2.

2. CHECK A/F SENSOR FUNCTION

With CONSULT-III
1. Start engine and warm it up to normal operating temperature.
2. Select “A/F SEN1 (B1)” in “DATA MONITOR” mode with CONSULT-III.
3. Check “A/F SEN1 (B1)” indication.

With GST
Follow the procedure “With CONSULT-III” above.

Is the indication constantly approx. 0V?

YES >> Go to EC-204, "Diagnosis Procedure".

NO >> GO TO 3.

3. PERFORM DTC CONFIRMATION PROCEDURE

With CONSULT-III

1. Turn ignition switch OFF, wait at least 10 seconds and then restart engine.
2. Drive and accelerate vehicle to more than 40 km/h (25 MPH) within 20 seconds after restarting engine.
   CAUTION:
   Always drive vehicle at a safe speed.
3. Maintain the following conditions for about 20 consecutive seconds.

ENG SPEED	1,000 - 3,200 rpm
VHCL SPEED SE	More than 40 km/h (25 mph)
B/FUEL SCHDL	1.5 - 9.0 msec
Shift lever	Suitable position

NOTE:
- **Keep the accelerator pedal as steady as possible during the cruising.**
- **If this procedure is not completed within 1 minute after restarting engine at step 1, return to step 1.**

4. Check 1st trip DTC.

With GST

Follow the procedure “With CONSULT-III” above.

Is 1st trip DTC detected?

YES >> Go to EC-204, "Diagnosis Procedure".
NO >> INSPECTION END

Diagnosis Procedure

INFOID:0000000004349255

1. CHECK GROUND CONNECTION

1. Turn ignition switch OFF.
2. Check ground connection E9. Refer to Ground Inspection in GI-45, "Circuit Inspection".

Is the inspection result normal?

YES >> GO TO 2.
NO >> Repair or replace ground connection.

2. CHECK AIR FUEL RATIO (A/F) SENSOR 1 POWER SUPPLY CIRCUIT

1. Disconnect A/F sensor 1 harness connector.
2. Turn ignition switch ON.
3. Check the voltage between A/F sensor 1 harness connector and ground.

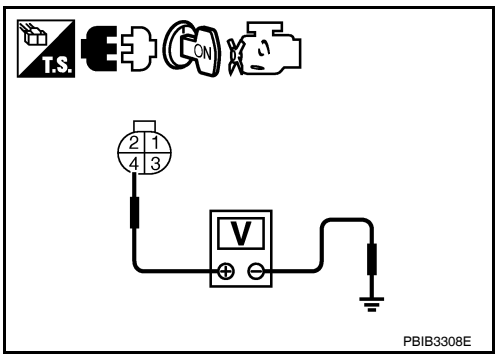

A/F sensor 1		Ground	Voltage
Connector	Terminal		
F44	4	Ground	Battery voltage

Is the inspection result normal?

YES >> GO TO 4.
NO >> GO TO 3.

3. DETECT MALFUNCTIONING PART

Check the following.
- IPDM E/R harness connector F10
- 15A fuse (No. 37)
- Harness for open or short between A/F sensor 1 and fuse

>> Repair or replace harness or connectors.

4. CHECK A/F SENSOR 1 INPUT SIGNAL CIRCUIT FOR OPEN AND SHORT

1. Turn ignition switch OFF.
2. Disconnect ECM harness connector.
3. Check the continuity between A/F sensor 1 harness connector and ECM harness connector.

A/F sensor 1		ECM		Continuity
Connector	Terminal	Connector	Terminal	
F44	1	F13	45	Existed
	2		49	

4. Check the continuity between A/F sensor 1 harness connector or ECM harness connector and ground.

A/F sensor 1		ECM		Ground	Continuity
Connector	Terminal	Connector	Terminal		
F44	1	F13	45	Ground	Not existed
	2		49		

5. Also check harness for short to power.

Is the inspection result normal?

YES >> GO TO 5.
NO >> Repair open circuit or short to ground or short to power in harness or connectors.

5. CHECK INTERMITTENT INCIDENT

Perform GI-42, "Intermittent Incident".

Is the inspection result normal?

YES >> GO TO 6.
NO >> Repair or replace.

6. REPLACE AIR FUEL RATIO (A/F) SENSOR 1

Replace air fuel ratio (A/F) sensor 1.

CAUTION:

- **Discard any sensor which has been dropped from a height of more than 0.5 m (19.7 in) onto a hard surface such as a concrete floor; use a new one.**
- **Before installing new sensor, clean exhaust system threads using oxygen sensor thread cleaner [commercial service tool (J-43897-18 or J-43897-12)] and approved anti-seize lubricant (commercial service tool).**

>> INSPECTION END

P0132 A/F SENSOR 1

Description

INFOID:0000000004349256

The air fuel ratio (A/F) sensor 1 is a planar one-cell limit current sensor. The sensor element of the A/F sensor 1 is composed an electrode layer, which transports ions. It has a heater in the element.

The sensor is capable of precise measurement λ = 1, but also in the lean and rich range. Together with its control electronics, the sensor outputs a clear, continuous signal throughout a wide λ range.

The exhaust gas components diffuse through the diffusion layer at the sensor cell. An electrode layer is applied voltage, and this current relative oxygen density in lean. Also this current relative hydrocarbon density in rich.

Therefore, the A/F sensor 1 is able to indicate air fuel ratio by this electrode layer of current. In addition, a heater is integrated in the sensor to ensure the required operating temperature of about 800°C (1,472°F).

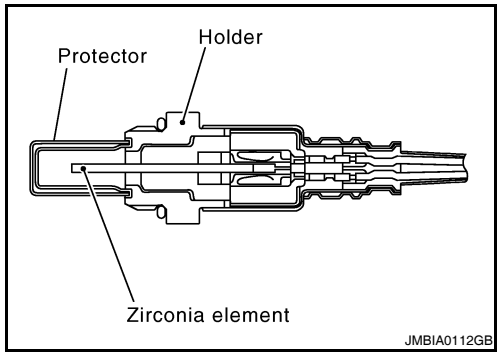

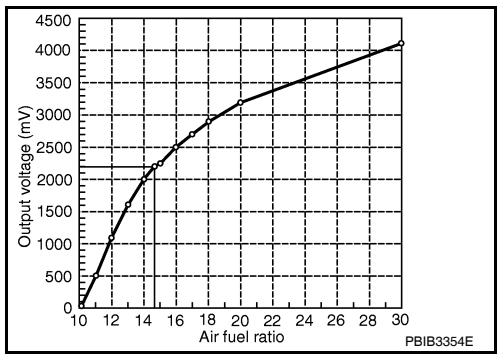

DTC Logic

INFOID:0000000004349257

DTC DETECTION LOGIC

To judge the malfunction, the diagnosis checks that the A/F signal computed by ECM from the A/F sensor 1 signal is not inordinately high.

DTC No.	Trouble diagnosis name	DTC detecting condition	Possible Cause
P0132	Air fuel ratio (A/F) sensor 1 circuit high voltage	• The A/F signal computed by ECM from the A/F sensor 1 signal is constantly approx. 5V.	• Harness or connectors (The A/F sensor 1 circuit is open or shorted.) • A/F sensor 1

DTC CONFIRMATION PROCEDURE

1. PRECONDITIONING

If DTC Confirmation Procedure has been previously conducted, always turn ignition switch OFF and wait at least 10 seconds before conducting the next test.

TESTING CONDITION:

Before performing the following procedure, confirm that battery voltage is more than 10.5V at idle.

>> GO TO 2.

2. CHECK A/F SENSOR FUNCTION

With CONSULT-III

1. Start engine and warm it up to normal operating temperature.
2. Select “A/F SEN1 (B1)” in “DATA MONITOR” mode with CONSULT-III.
3. Check “A/F SEN1 (B1)” indication.

With GST

Follow the procedure “With CONSULT-IIII” above.

Is the indication constantly approx. 5V?

YES >> Go to EC-207, "Diagnosis Procedure".

NO >> GO TO 3.

3. PERFORM DTC CONFIRMATION PROCEDURE

With CONSULT-III

1. Turn ignition switch OFF, wait at least 10 seconds and then restart engine.
2. Drive and accelerate vehicle to more than 40 km/h (25 MPH) within 20 seconds after restarting engine.
   CAUTION:
   Always drive vehicle at a safe speed.
3. Maintain the following conditions for about 20 consecutive seconds.

ENG SPEED	1,000 - 3,200 rpm
VHCL SPEED SE	More than 40 km/h (25 mph)
B/FUEL SCHDL	1.5 - 9.0 msec
Shift lever	Suitable position

NOTE:
- **Keep the accelerator pedal as steady as possible during the cruising.**
- **If this procedure is not completed within 1 minute after restarting engine at step 1, return to step 1.**

4. Check 1st trip DTC.

With GST

Follow the procedure “With CONSULT-III” above.

Is 1st trip DTC is detected?

YES >> Go to EC-207, "Diagnosis Procedure".
NO >> INSPECTION END

Diagnosis Procedure

INFOID:0000000004349258

1. CHECK GROUND CONNECTION

1. Turn ignition switch OFF.
2. Check ground connection E9. Refer to Ground Inspection in GI-45, "Circuit Inspection".

Is the inspection result normal?

YES >> GO TO 2.
NO >> Repair or replace ground connection.

2. CHECK AIR FUEL RATIO (A/F) SENSOR 1 POWER SUPPLY CIRCUIT

1. Disconnect A/F sensor 1 harness connector.
2. Turn ignition switch ON.
3. Check the voltage between A/F sensor 1 harness connector and ground.

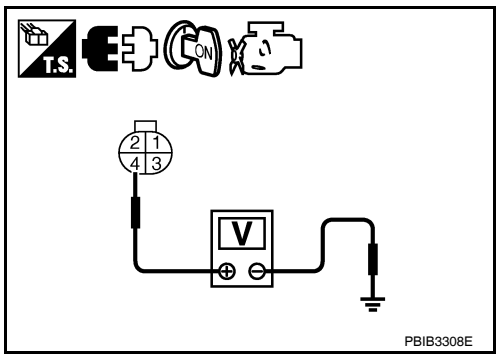

A/F sensor 1		Ground	Voltage
Connector	Terminal		
F44	4	Ground	Battery voltage

Is the inspection result normal?

YES >> GO TO 4.
NO >> GO TO 3.

3. DETECT MALFUNCTIONING PART

Check the following.
- IPDM E/R harness connector F10
- 15A fuse (No. 37)
- Harness for open or short between A/F sensor 1 and fuse

>> Repair or replace harness or connectors.

4. CHECK A/F SENSOR 1 INPUT SIGNAL CIRCUIT FOR OPEN AND SHORT

1. Turn ignition switch OFF.
2. Disconnect ECM harness connector.
3. Check the continuity between A/F sensor 1 harness connector and ECM harness connector.

A/F sensor 1		ECM		Continuity
Connector	Terminal	Connector	Terminal	
F44	1	F13	45	Existed
	2		49	

4. Check the continuity between A/F sensor 1 harness connector or ECM harness connector and ground.

A/F sensor 1		ECM		Ground	Continuity
Connector	Terminal	Connector	Terminal		
F44	1	F13	45	Ground	Not existed
	2		49		

5. Also check harness for short to power.

Is the inspection result normal?

YES >> GO TO 5.
NO >> Repair open circuit or short to ground or short to power in harness or connectors.

5. CHECK INTERMITTENT INCIDENT

Perform GI-42, "Intermittent Incident".

Is the inspection result normal?

YES >> GO TO 6.
NO >> Repair or replace.

6. REPLACE AIR FUEL RATIO (A/F) SENSOR 1

Replace air fuel ratio (A/F) sensor 1.

CAUTION:

- **Discard any sensor which has been dropped from a height of more than 0.5 m (19.7 in) onto a hard surface such as a concrete floor; use a new one.**
- **Before installing new sensor, clean exhaust system threads using oxygen sensor thread cleaner [commercial service tool (J-43897-18 or J-43897-12)] and approved anti-seize lubricant (commercial service tool).**

>> INSPECTION END

P0133 A/F SENSOR 1

Description

INFOID:0000000004349259

The air fuel ratio (A/F) sensor 1 is a planar one-cell limit current sensor. The sensor element of the A/F sensor 1 is composed an electrode layer, which transports ions. It has a heater in the element.

The sensor is capable of precise measurement λ = 1, but also in the lean and rich range. Together with its control electronics, the sensor outputs a clear, continuous signal throughout a wide λ range.

The exhaust gas components diffuse through the diffusion layer at the sensor cell. An electrode layer is applied voltage, and this current relative oxygen density in lean. Also this current relative hydrocarbon density in rich.

Therefore, the A/F sensor 1 is able to indicate air fuel ratio by this electrode layer of current. In addition, a heater is integrated in the sensor to ensure the required operating temperature of about 800°C (1,472°F).

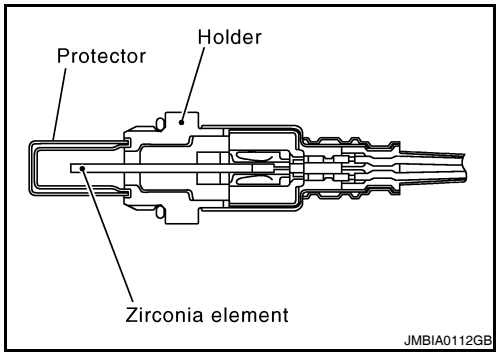

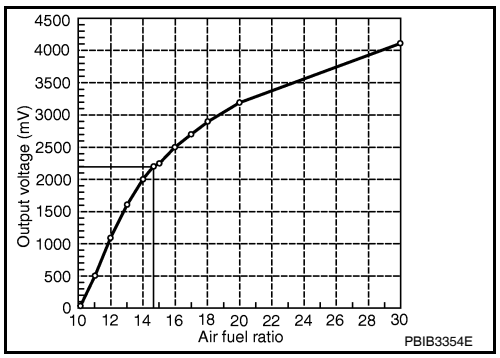

DTC Logic

INFOID:0000000004349260

DTC DETECTION LOGIC

To judge the malfunction of A/F sensor 1, this diagnosis measures response time of the A/F signal computed by ECM from the A/F sensor 1 signal. The time is compensated by engine operating (speed and load), fuel feedback control constant, and the A/F sensor 1 temperature index. Judgment is based on whether the compensated time (the A/F signal cycling time index) is inordinately long or not.

DTC No.	Trouble diagnosis name	DTC detecting condition	Possible Cause
P0133	Air fuel ratio (A/F) sensor 1 circuit slow response	• The response of the A/F signal computed by ECM from A/F sensor 1 signal takes more than the specified time.	• Harness or connectors (The A/F sensor 1 circuit is open or shorted.) • A/F sensor 1 • A/F sensor 1 heater • Fuel pressure • Fuel injector • Intake air leaks • Exhaust gas leaks • PCV • Mass air flow sensor

DTC CONFIRMATION PROCEDURE

1.PRECONDITIONING

If DTC Confirmation Procedure has been previously conducted, always turn ignition switch OFF and wait at least 10 seconds before conducting the next test.

TESTING CONDITION:

Before performing the following procedure, confirm that battery voltage is more than 11V at idle.

Do you have CONSULT-III?

YES >> GO TO 2.
NO >> GO TO 5.

2. PERFORM DTC CONFIRMATION PROCEDURE-I

With CONSULT-III

1. Start engine and warm it up to normal operating temperature.
2. Turn ignition switch OFF and wait at least 10 seconds.
3. Start engine and keep the engine speed between 3,500 and 4,000 rpm for at least 1minute under no load.
4. Let engine idle for 1 minute.
5. Select “A/F SEN1(B1) P1278/P1279” of “A/F SEN1” in “DTC WORK SUPPORT” mode with CONSULT-III.
6. Touch “START”.

Is “COMPLETED” displayed on COUSULT-III?

YES >> GO TO 3
NO >> GO TO 4.

3. PERFORM DTC CONFIRMATION PROCEDURE-II

Touch “SELF-DIAG RESULT”.

Which is displayed on CONSULT-III?

OK >> INSPECTION END
NG >> Go to EC-211, "Diagnosis Procedure".

4. PERFORM DTC CONFIRMATION PROCEDURE

1. After perform the following procedure, “TESTING” will be displayed on the CONSULT-III screen.
- Increase the engine speed up to 4,000 to 5,000 rpm and keep it for 10 seconds.
- Fully release accelerator pedal and then let engine idle for about 10 seconds.

If “TESTING” is not displayed after 10 seconds, refer to EC-136, "Component Function Check".

2. Wait for about 20 seconds at idle under the condition that “TESTING” is displayed on the CONSULT-III screen.
3. Make sure that “TESTING” changes to “COMPLETED”.
   If “TESTING” changed to “OUT OF CONDITION”, refer to EC-136, "Component Function Check".
4. Touch “SELF-DIAG RESULT”.

Which is displayed on CONSULT-III?

OK >> INSPECTION END
NG >> Go to EC-211, "Diagnosis Procedure".

5. CHECK AIR-FUEL RATIO SELF-LEARNING VALUE

With GST

1. Start engine and warm it up to normal operating temperature.
2. Select Service $01 with GST.
3. Calculate the total value of “Short term fuel trim” and “Long term fuel trim” indications.

Is the total percentage within ±15%?

YES >> GO TO 7.
NO >> GO TO 6.

6. DETECT MALFUNCTIONING PART

Check the following.

- Intake air leaks
- Exhaust gas leaks
- Incorrect fuel pressure
- Lack of fuel
- Fuel injector
- Incorrect PCV hose connection
- PCV valve
- Mass air flow sensor

>> Repair or replace malfunctioning part.

7. PERFORM DTC CONFIRMATION PROCEDURE

1. Turn ignition switch OFF and wait at least 10 seconds.
2. Start engine and keep the engine speed between 3,500 and 4,000 rpm for at least 1minute under no load.

3. Let engine idle for 1 minute.
4. Increase the engine speed up to 4,000 to 5,000 rpm and keep it for 10 seconds.
5. Fully release accelerator pedal and then let engine idle for about 1 minute.
6. Check 1st trip DTC detected?.

Is 1st trip DTC detected?

YES >> Go to EC-211, "Diagnosis Procedure".
NO >> INSPECTION END

Diagnosis Procedure

INFOID:0000000004349261

1. CHECK GROUND CONNECTION

1. Turn ignition switch OFF.
2. Check ground connection E9. Refer to Ground Inspection in GI-45, "Circuit Inspection".

Is the inspection result normal?

YES >> GO TO 2.
NO >> Repair or replace ground connection.

2. RETIGHTEN A/F SENSOR 1

Loosen and retighten the A/F sensor 1. Refer to EM-30, "Removal and Installation"

>> GO TO 3.

3. CHECK EXHAUST GAS LEAK

1. Start engine and run it at idle.
2. Listen for an exhaust gas leak before three way catalyst (manifold).

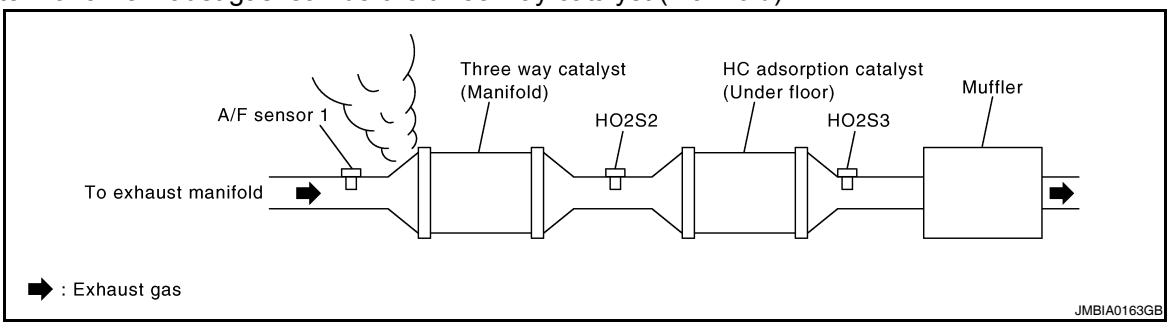

Is exhaust gas leak detected?

YES >> Repair or replace.
NO >> GO TO 4.

4. CHECK FOR INTAKE AIR LEAK

Listen for an intake air leak after the mass air flow sensor.

Is intake air leak detected?

YES >> Repair or replace.
NO >> GO TO 5.

5. CLEAR THE MIXTURE RATIO SELF-LEARNING VALUE

1. Clear the mixture ratio self-learning value. Refer to EC-32, "MIXTURE RATIO SELF-LEARNING VALUE CLEAR : Special Repair Requirement".
2. Run engine for at least 10 minutes at idle speed.

Is the 1st trip DTC P0171 or P172 detected? Is it difficult to start engine?

YES >> Perform trouble diagnosis for DTC P0171 or P0172. Refer to EC-254, "DTC Logic" or EC-258, "DTC Logic".
NO >> GO TO 6.

6. CHECK AIR FUEL RATIO (A/F) SENSOR 1 POWER SUPPLY CIRCUIT

1. Disconnect A/F sensor 1 harness connector.

2. Turn ignition switch ON.
3. Check the voltage between A/F sensor 1 harness connector and ground.

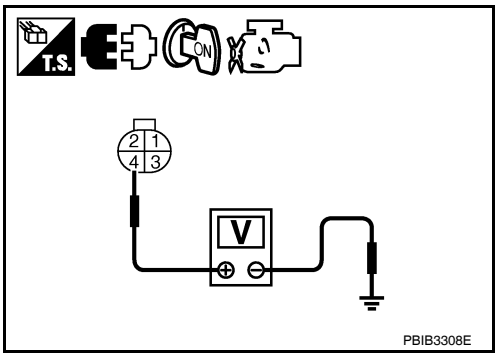

A/F sensor 1		Ground	Voltage
Connector	Terminal		
F44	4	Ground	Battery voltage

Is the inspection result normal?

YES >> GO TO 8.
NO >> GO TO 7.

7. DETECT MALFUNCTIONING PART

Check the following.
- IPDM E/R harness connector F10
- 15A fuse (No. 37)
- Harness for open or short between A/F sensor 1 and fuse

>> Repair or replace harness or connectors.

8. CHECK A/F SENSOR 1 INPUT SIGNAL CIRCUIT FOR OPEN AND SHORT

1. Turn ignition switch OFF.
2. Disconnect ECM harness connector.
3. Check the continuity between A/F sensor 1 harness connector and ECM harness connector.

A/F sensor 1		ECM		Continuity
Connector	Terminal	Connector	Terminal	
F44	1	F13	45	Existed
	2		49	

4. Check the continuity between A/F sensor 1 harness connector or ECM harness connector and ground.

A/F sensor 1		ECM		Ground	Continuity
Connector	Terminal	Connector	Terminal		
F44	1	F13	45	Ground	Not existed
	2		49		

5. Also check harness for short to power.

Is the inspection result normal?

YES >> GO TO 9.
NO >> Repair open circuit or short to ground or short to power in harness or connectors.

9. CHECK AIR FUEL RATIO (A/F) SENSOR 1 HEATER

Refer to EC-157, "Component Inspection".

Is the inspection result normal?

YES >> GO TO 10.
NO >> GO TO 13.

10. CHECK MASS AIR FLOW SENSOR

Check mass air flow sensor.
Refer to EC-171, "Component Inspection".

Is the inspection result normal?

YES >> GO TO 11.
NO >> Replace mass air flow sensor.

11. CHECK PCV VALVE

Refer to EC-481, "Component Inspection".

Is the inspection result normal?

YES >> GO TO 12.
NO >> Repair or replace PCV valve.

12. CHECK INTERMITTENT INCIDENT

Perform GI-42, "Intermittent Incident".

Is the inspection result normal?

YES >> GO TO 13.
NO >> Repair or replace.

13. REPLACE AIR FUEL RATIO (A/F) SENSOR 1

Replace air fuel ratio (A/F) sensor 1.

CAUTION:

- **Discard any sensor which has been dropped from a height of more than 0.5 m (19.7 in) onto a hard surface such as a concrete floor; use a new one.**
- **Before installing new sensor, clean exhaust system threads using oxygen sensor thread cleaner [commercial service tool (J-43897-18 or J-43897-12)] and approved anti-seize lubricant (commercial service tool).**

>> INSPECTION END

P0137 HO2S2

Description

INFOID:0000000004349262

The heated oxygen sensor 2, after three way catalyst (manifold), monitors the oxygen level in the exhaust gas on each bank.
Even if switching characteristics of the air fuel ratio (A/F) sensor 1 are shifted, the air-fuel ratio is controlled to stoichiometric, by the signal from the heated oxygen sensor 2.
This sensor is made of ceramic zirconia. The zirconia generates voltage from approximately 1V in richer conditions to 0V in leaner conditions.
Under normal conditions the heated oxygen sensor 2 is not used for engine control operation.

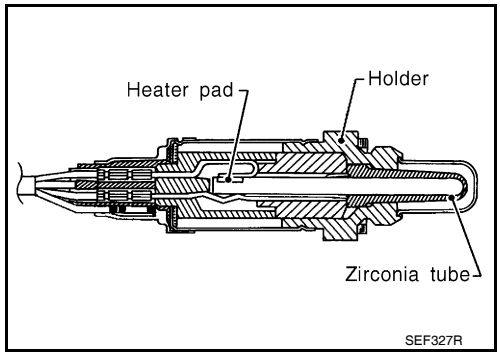

DTC Logic

INFOID:0000000004349263

DTC DETECTION LOGIC

The heated oxygen sensor 2 has a much longer switching time between rich and lean than the air fuel ratio (A/F) sensor 1. The oxygen storage capacity of the three way catalyst (manifold) causes the longer switching time. To judge the malfunctions of heated oxygen sensor 2, ECM monitors whether the maximum voltage of the sensor is sufficiently high during the various driving condition such as fuel-cut.

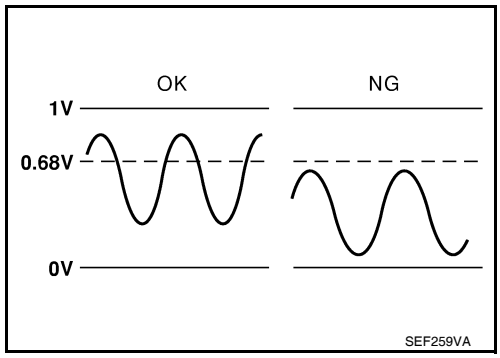

DTC No.	Trouble diagnosis name	DTC detecting condition	Possible cause
P0137	Heated oxygen sensor 2 circuit low voltage	The maximum voltage from the sensor is not reached to the specified voltage.	• Harness or connectors (The sensor circuit is open or shorted) • Heated oxygen sensor 2 • Fuel pressure • Fuel injector • Intake air leaks

DTC CONFIRMATION PROCEDURE

1. INSPECTION START

Do you have CONSULT-III?

Do you have CONSULT-III?

YES >> GO TO 2.
NO >> GO TO 5.

2. PRECONDITIONING

If DTC confirmation Procedure has been previously conducted, always turn ignition switch OFF and wait at least 10 seconds before conducting the next test.
TESTING CONDITION:
For better results, perform “DTC WORK SUPPORT” at a temperature of 0 to 30 °C (32 to 86 °F).

>> GO TO 3.

3. PERFORM DTC CONFIRMATION PROCEDURE

With CONSULT-III

1. Turn ignition switch ON and select “DATA MONITOR” mode with CONSULT-III.
2. Start engine and warm it up to the normal operating temperature.
3. Turn ignition switch OFF and wait at least 10 seconds.
4. Start engine and keep the engine speed between 3,500 and 4,000 rpm for at least 1 minute under no load.
5. Let engine idle for 1 minute.
6. Make sure that “COOLAN TEMP/S” indicates more than 70°C (158°F).
   If not, warm up engine and go to next step when “COOLAN TEMP/S” indication reaches to 70°C (158°F).
7. Open engine hood.
8. Select “HO2S2 (B1) P1147” of “HO2S2” in “DTC WORK SUPPORT” mode with CONSULT-III.
9. Follow the instruction of CONSULT-III.
   NOTE:
   It will take at most 10 minutes until “COMPLETED” is displayed.
10. Touch “SELF-DIAG RESULT”.

Which is displayed on CONSULT-III screen?

OK >> INSPECTION END
NG >> Go to EC-216, "Diagnosis Procedure".
CAN NOT BE DIAGNOSED>>GO TO 4.

4. PERFORM DTC CONFIRMATION PROCEDURE AGAIN

1. Turn ignition switch OFF and leave the vehicle in a cool place (soak the vehicle).
2. Perform DTC CONFIRMATION PROCEDURE again.

>> GO TO 3.

5. PERFORM COMPONENT FUNCTION CHECK

Perform component function check. Refer to EC-215, "Component Function Check".
NOTE:
Use component function check to check the overall function of the heated oxygen sensor 2 circuit. During this check, a 1st trip DTC might not be confirmed.

Is the inspection result normal?

YES >> INSPECTION END
NO >> Go to EC-216, "Diagnosis Procedure".

Component Function Check

INFOID:0000000004349264

1. PERFORM COMPONENT FUNCTION CHECK-I

Without CONSULT-III

1. Start engine and warm it up to the normal operating temperature.
2. Turn ignition switch OFF and wait at least 10 seconds.
3. Start engine and keep the engine speed between 3,500 and 4,000 rpm for at least 1 minute under no load.
4. Let engine idle for 1 minute.
5. Check the voltage between ECM harness connector and ground under the following condition.

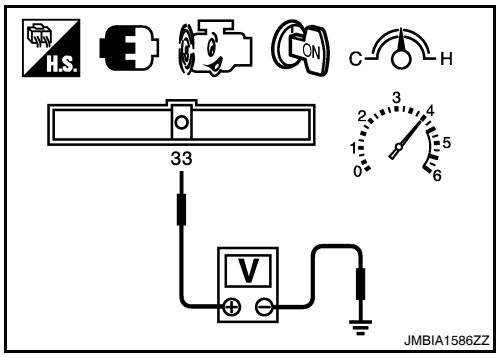

ECM		Ground	Condition	Voltage
Connector	Terminal			
F13	33 (HO2S2 signal)	Ground	Revving up to 4,000 rpm under no load at least 10 times	The voltage should be above 0.68 V at least once during this procedure.

Is the inspection result normal?

YES >> INSPECTION END
NO >> GO TO 2.

2. PERFORM COMPONENT FUNCTION CHECK-II

Check the voltage between ECM harness connector and ground under the following condition.

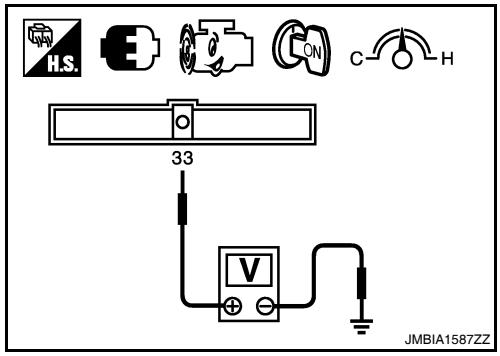

ECM		Ground	Condition	Voltage
Connector	Terminal			
F13	33 (HO2S2 signal)	Ground	Keeping engine speed at idle for 10 minutes	The voltage should be above 0.68 V at least once during this procedure.

Is the inspection result normal?

YES >> INSPECTION END
NO >> GO TO 3.

3. PERFORM COMPONENT FUNCTION CHECK-III

Check the voltage between ECM harness connector and ground under the following condition.

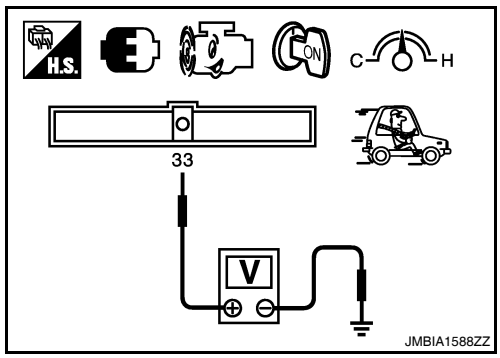

ECM		Ground	Condition	Voltage
Connector	Terminal			
F13	33 (HO2S2 signal)	Ground	Coasting from 80 km/h (50 MPH) in D position (CVT), 4th gear position (M/T)	The voltage should be above 0.68 V at least once during this procedure.

Is the inspection result normal?

YES >> INSPECTION END
NO >> Go to EC-216, "Diagnosis Procedure".

Diagnosis Procedure

INFOID:0000000004349265

1. CHECK GROUND CONNECTION

1. Turn ignition switch OFF.
2. Check ground connection E9. Refer to Ground Inspection in GI-45, "Circuit Inspection".

Is the inspection result normal?

YES >> GO TO 2.
NO >> Repair or replace ground connection.

2. CLEAR THE MIXTURE RATIO SELF-LEARNING VALUE

1. Clear the mixture ratio self-learning value. Refer to EC-32, "MIXTURE RATIO SELF-LEARNING VALUE CLEAR : Special Repair Requirement".
2. Run engine for at least 10 minutes at idle speed.

Is the 1st trip DTC P0171 detected? Is it difficult to start engine?

YES >> Perform trouble diagnosis for DTC P0171. Refer to EC-254, "DTC Logic".
NO >> GO TO 3.

3. CHECK HO2S2 GROUND CIRCUIT FOR OPEN AND SHORT

1. Turn ignition switch OFF.
2. Disconnect heated oxygen sensor 2 harness connector.
3. Disconnect ECM harness connector.
4. Check the continuity between HO2S2 harness connector and ECM harness connector.

HO2S2		ECM		Continuity
Connector	Terminal	Connector	Terminal	
F42	1	F13	35	Existed

5. Also check harness for short to ground and short to power.

Is the inspection result normal?

YES >> GO TO 4.
NO >> Repair open circuit or short to ground or short to power in harness or connectors.

4. CHECK HO2S2 INPUT SIGNAL CIRCUIT FOR OPEN AND SHORT

1. Check the continuity between HO2S2 harness connector and ECM harness connector.

HO2S2		ECM		Continuity
Connector	Terminal	Connector	Terminal	
F42	4	F13	33	Existed

2. Check the continuity between HO2S2 harness connector or ECM harness connector and ground.

HO2S2		ECM		Ground	Continuity
Connector	Terminal	Connector	Terminal		
F42	4	F13	33	Ground	Not existed

3. Also check harness for short to power.

Is the inspection result normal?

YES >> GO TO 5.
NO >> Repair open circuit or short to ground or short to power in harness or connectors.

5. CHECK HEATED OXYGEN SENSOR 2

Refer to EC-217, "Component Inspection".

Is the inspection result normal?

YES >> GO TO 7.
NO >> GO TO 6.

6. REPLACE HEATED OXYGEN SENSOR 2

Replace heated oxygen sensor 2.

CAUTION:

- **Discard any sensor which has been dropped from a height of more than 0.5 m (19.7 in) onto a hard surface such as a concrete floor; use a new one.**
- **Before installing new sensor, clean exhaust system threads using oxygen sensor thread cleaner [commercial service tool (J-43897-18 or J-43897-12)] and approved anti-seize lubricant (commercial service tool).**

>> INSPECTION END

7. CHECK INTERMITTENT INCIDENT

Refer to GI-42, "Intermittent Incident".

>> INSPECTION END

Component Inspection

INFOID:0000000004349266

1. INSPECTION START

Do you have CONSULT-III?

Do you have CONSULT-III?

YES >> GO TO 2.
NO >> GO TO 3.

2. CHECK HEATED OXYGEN SENSOR 2

With CONSULT-III

1. Turn ignition switch ON and select “DATA MONITOR” mode with CONSULT-III.
2. Start engine and warm it up to the normal operating temperature.
3. Turn ignition switch OFF and wait at least 10 seconds.
4. Start engine and keep the engine speed between 3,500 and 4,000 rpm for at least 1 minute under no load.

5. Let engine idle for 1 minute.
6. Select “FUEL INJECTION” in “ACTIVE TEST” mode, and select “HO2S2 (B1)” as the monitor item with CONSULT-III.
7. Check “HO2S2 (B1)” at idle speed when adjusting “FUEL INJECTION” to ±25%.

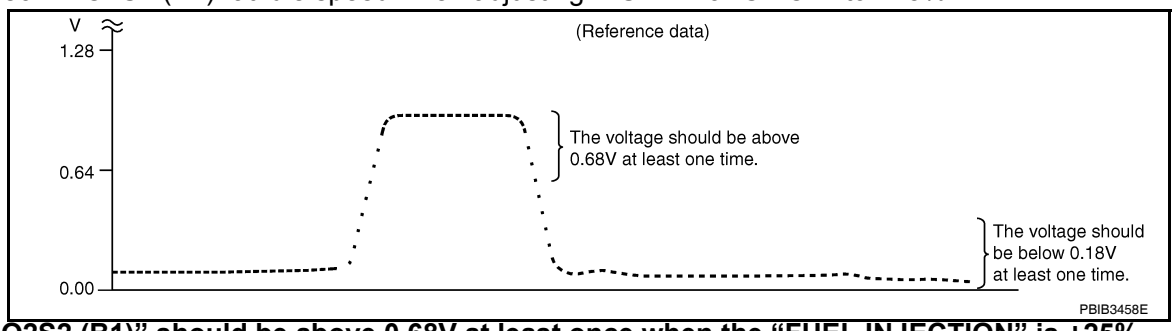

“HO2S2 (B1)” should be above 0.68V at least once when the “FUEL INJECTION” is +25%.
“HO2S2 (B1)” should be below 0.18V at least once when the “FUEL INJECTION” is –25%.

Is the inspection result normal?

YES >> INSPECTION END
NO >> GO TO 6.

3. CHECK HEATED OXYGEN SENSOR 2-I

Without CONSULT-III

1. Start engine and warm it up to the normal operating temperature.
2. Turn ignition switch OFF and wait at least 10 seconds.
3. Start engine and keep the engine speed between 3,500 and 4,000 rpm for at least 1 minute under no load.
4. Let engine idle for 1 minute.
5. Check the voltage between ECM harness connector and ground under the following condition.

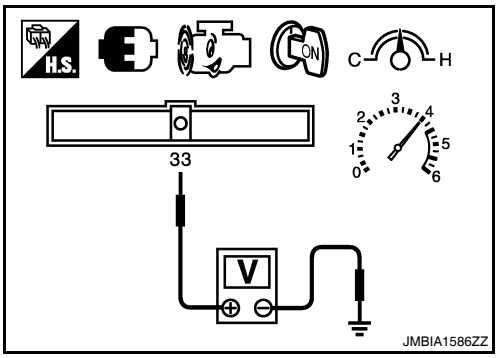

ECM		Ground	Condition	Voltage
Connector	Terminal			
F13	33 (HO2S2 signal)	Ground	Revving up to 4,000 rpm under no load at least 10 times	The voltage should be above 0.68 V at least once during this procedure. The voltage should be below 0.18 V at least once during this procedure.

Is the inspection result normal?

YES >> INSPECTION END
NO >> GO TO 4.

4. CHECK HEATED OXYGEN SENSOR 2-II

Check the voltage between ECM harness connector and ground under the following condition.

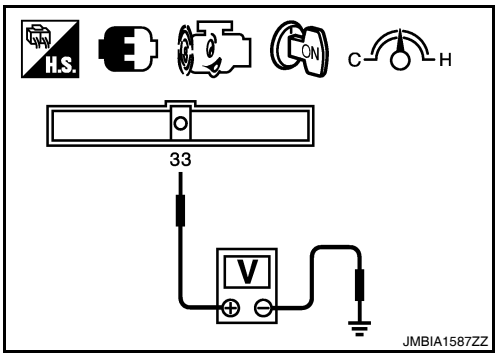

ECM		Ground	Condition	Voltage
Connector	Terminal			
F13	33 (HO2S2 signal)	Ground	Keeping engine speed at idle for 10 minutes	The voltage should be above 0.68 V at least once during this procedure. The voltage should be below 0.18 V at least once during this procedure.

Is the inspection result normal?

YES >> INSPECTION END
NO >> GO TO 5.

5. CHECK HEATED OXYGEN SENSOR 2-III

Check the voltage between ECM harness connector and ground under the following condition.

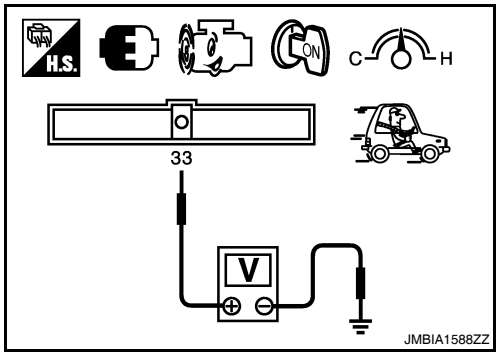

ECM		Ground	Condition	Voltage
Connector	Terminal			
F13	33 (HO2S2 signal)	Ground	Coasting from 80 km/h (50 MPH) in D position (CVT), 4th gear position (M/T)	The voltage should be above 0.68 V at least once during this procedure. The voltage should be below 0.18 V at least once during this procedure.

Is the inspection result normal?

YES >> INSPECTION END
NO >> GO TO 6.

6. REPLACE HEATED OXYGEN SENSOR 2

Replace heated oxygen sensor 2.

CAUTION:

- **Discard any sensor which has been dropped from a height of more than 0.5 m (19.7 in) onto a hard surface such as a concrete floor; use a new one.**
- **Before installing new sensor, clean exhaust system threads using oxygen sensor thread cleaner [commercial service tool (J-43897-18 or J-43897-12)] and approved anti-seize lubricant (commercial service tool).**

>> INSPECTION END

P0138 HO2S2

Description

INFOID:0000000004349267

The heated oxygen sensor 2, after three way catalyst (manifold), monitors the oxygen level in the exhaust gas on each bank.
Even if switching characteristics of the air fuel ratio (A/F) sensor 1 are shifted, the air-fuel ratio is controlled to stoichiometric, by the signal from the heated oxygen sensor 2.
This sensor is made of ceramic zirconia. The zirconia generates voltage from approximately 1V in richer conditions to 0V in leaner conditions.
Under normal conditions the heated oxygen sensor 2 is not used for engine control operation.

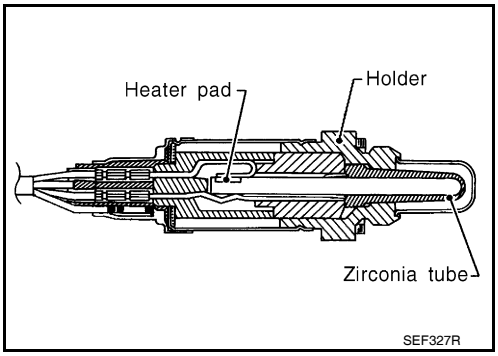

DTC Logic

INFOID:0000000004349268

DTC DETECTION LOGIC

The heated oxygen sensor 2 has a much longer switching time between rich and lean than the air fuel ratio (A/F) sensor 1. The oxygen storage capacity of the three way catalyst (manifold) causes the longer switching time.

MALFUNCTION A

To judge the malfunctions of heated oxygen sensor 2, ECM monitors whether the voltage is unusually high during the various driving condition such as fuel-cut.

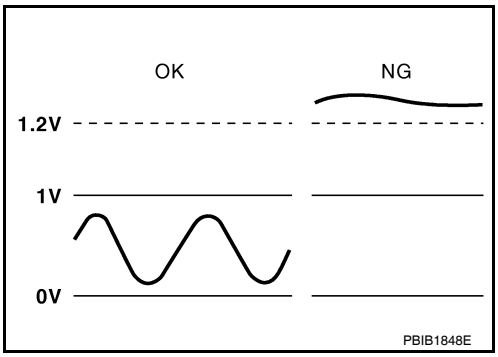

MALFUNCTION B

To judge the malfunctions of heated oxygen sensor 2, ECM monitors whether the minimum voltage of sensor is sufficiently low during the various driving condition such as fuel-cut.

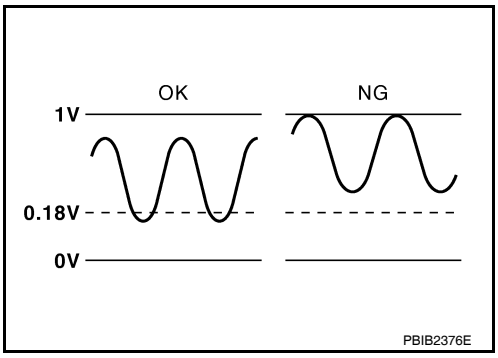

DTC No.	Trouble diagnosis name	DTC detecting condition		Possible cause
P0138	Heated oxygen sensor 2 circuit high voltage	A)	An excessively high voltage from the sensor is sent to ECM.	• Harness or connectors (The sensor circuit is open or shorted) • Heated oxygen sensor 2
		B)	The minimum voltage from the sensor is not reached to the specified voltage.	• Harness or connectors (The sensor circuit is open or shorted) • Heated oxygen sensor 2 • Fuel pressure • Fuel injector

DTC CONFIRMATION PROCEDURE

1. PRECONDITIONING

If DTC Confirmation Procedure has been previously conducted, always turn ignition switch OFF and wait at least 10 seconds before conducting the next test.

>> GO TO 2.

2. PERFORM DTC CONFIRMATION PROCEDURE FOR MALFUNCTION A

1. Start engine and warm it up to the normal operating temperature.
2. Turn ignition switch OFF and wait at least 10 seconds.
3. Start engine and keep the engine speed between 3,500 and 4,000 rpm for at least 1 minute under no load.
4. Check 1st trip DTC.

Is 1st trip DTC detected?

YES >> Go to EC-222, "Diagnosis Procedure".
NO-1 >> With CONSULT-III: GO TO 3.
NO-2 >> Without CONSULT-III: GO TO 5.

3. PERFORM DTC CONFIRMATION PROCEDURE FOR MALFUNCTION B

NOTE:
For better results, perform "DTC WORK SUPPORT" at a temperature of 0 to 30 °C (32 to 86 °F).

1. Turn ignition switch ON and select "DATA MONITOR" mode with CONSULT-III.
2. Start engine and warm it up to the normal operating temperature.
3. Turn ignition switch OFF and wait at least 10 seconds.
4. Start engine and keep the engine speed between 3,500 and 4,000 rpm for at least 1 minute under no load.
5. Let engine idle for 1 minute.
6. Make sure that "COOLAN TEMP/S" indicates more than 70°C (158°F).
   If not, warm up engine and go to next step when "COOLAN TEMP/S" indication reaches to 70°C (158°F).
7. Open engine hood.
8. Select "HO2S2 (B1) P1146" of "HO2S2" in "DTC WORK SUPPORT" mode with CONSULT-III.
9. Follow the instruction of CONSULT-III.
   NOTE:
   It will take at most 10 minutes until "COMPLETED" is displayed.
10. Touch "SELF-DIAG RESULT".

Which is displayed on CONSULT-III

OK >> INSPECTION END
NG >> Go to EC-222, "Diagnosis Procedure".
CAN NOT BE DIAGNOSED>>GO TO 4.

4. PERFORM DTC CONFIRMATION PROCEDURE FOR MALUNCTION B AGAIN

1. Turn ignition switch OFF and leave the vehicle in a cool place (soak the vehicle).
2. Perform DTC CONFIRMATION PROCEDURE again.

>> GO TO 3.

5. PERFORM COMPONENT FUNCTION CHECK FOR MALFUNCTION B

Perform component function check. Refer to EC-222, "Diagnosis Procedure".
NOTE:
Use component function check to check the overall function of the heated oxygen sensor 2 circuit. During this check, a 1st trip DTC might not be confirmed.

Is the inspection result normal?

YES >> INSPECTION END
NO >> Go to EC-222, "Diagnosis Procedure".

Component Function Check

INFOID:0000000004349269

1. PERFORM COMPONENT FUNCTION CHECK-I

Without CONSULT-III

1. Start engine and warm it up to the normal operating temperature.

2. Turn ignition switch OFF and wait at least 10 seconds.
3. Start engine and keep the engine speed between 3,500 and 4,000 rpm for at least 1 minute under no load.
4. Let engine idle for 1 minute.
5. Check the voltage between ECM harness connector and ground under the following condition.

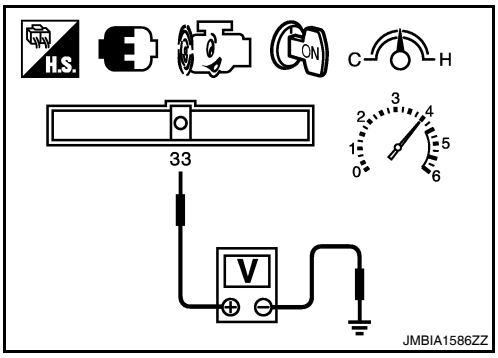

ECM		Ground	Condition	Voltage
Connector	Terminal			
F13	33 (HO2S2 signal)	Ground	Revving up to 4,000 rpm under no load at least 10 times	The voltage should be above 0.18 V at least once during this procedure.

Is the inspection result normal?

YES >> INSPECTION END
NO >> GO TO 2.

2. PERFORM COMPONENT FUNCTION CHECK-II

Check the voltage between ECM harness connector and ground under the following condition.

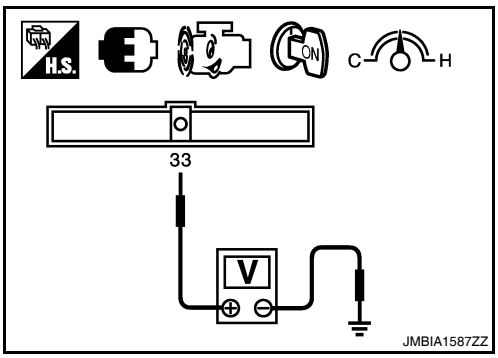

ECM		Ground	Condition	Voltage
Connector	Terminal			
F13	33 (HO2S2 signal)	Ground	Keeping engine speed at idle for 10 minutes	The voltage should be above 0.18 V at least once during this procedure.

Is the inspection result normal?

YES >> INSPECTION END
NO >> GO TO 3.

3. PERFORM COMPONENT FUNCTION CHECK-III

Check the voltage between ECM harness connector and ground under the following condition.

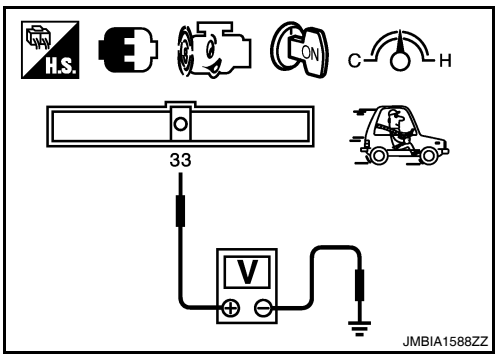

ECM		Ground	Condition	Voltage
Connector	Terminal			
F13	33 (HO2S2 signal)	Ground	Coasting from 80 km/h (50 MPH) in D position (CVT), 4th gear position (M/T)	The voltage should be above 0.18 V at least once during this procedure.

Is the inspection result normal?

YES >> INSPECTION END
NO >> Go to EC-222, "Diagnosis Procedure".

Diagnosis Procedure

INFOID:0000000004349270

1. INSPECTION START

Confirm the detected malfunction (A or B). Refer to EC-220, "DTC Logic".

Which malfunction is detected?

A >> GO TO 2.
B >> GO TO 9.

2. CHECK GROUND CONNECTION

1. Turn ignition switch OFF.
2. Check ground connection E9. Refer to Ground Inspection in GI-45, "Circuit Inspection".

Is the inspection result normal?

YES >> GO TO 3.
NO >> Repair or replace ground connection.

3. CHECK HO2S2 GROUND CIRCUIT FOR OPEN AND SHORT

1. Disconnect heated oxygen sensor 2 harness connector.
2. Disconnect ECM harness connector.
3. Check the continuity between HO2S2 harness connector and ECM harness connector.

HO2S2		ECM		Continuity
Connector	Terminal	Connector	Terminal	
F42	1	F13	35	Existed

4. Also check harness for short to ground and short to power.

Is the inspection result normal?

YES >> GO TO 4.
NO >> Repair open circuit or short to ground or short to power in harness or connectors.

4. CHECK HO2S2 INPUT SIGNAL CIRCUIT FOR OPEN AND SHORT

1. Check the continuity between HO2S2 harness connector and ECM harness connector.

HO2S2		ECM		Continuity
Connector	Terminal	Connector	Terminal	
F42	4	F13	33	Existed

2. Check the continuity between HO2S2 harness connector or ECM harness connector and ground.

HO2S2		ECM		Ground	Continuity
Connector	Terminal	Connector	Terminal		
F42	4	F13	33	Ground	Not existed

3. Also check harness for short to power.

Is the inspection result normal?

YES >> GO TO 5.
NO >> Repair open circuit or short to ground or short to power in harness or connectors.

5. CHECK HO2S2 CONNECTOR FOR WATER

Check connectors for water.

Water should not exist.

Is the inspection result normal?

YES >> GO TO 6.
NO >> Repair or replace harness or connectors.

6. CHECK HEATED OXYGEN SENSOR 2

Refer to EC-225, "Component Inspection".

Is the inspection result normal?

YES >> GO TO 8.
NO >> GO TO 7.

7. REPLACE HEATED OXYGEN SENSOR 2

Replace heated oxygen sensor 2.

CAUTION:

- **Discard any sensor which has been dropped from a height of more than 0.5 m (19.7 in) onto a hard surface such as a concrete floor; use a new one.**
- **Before installing new sensor, clean exhaust system threads using oxygen sensor thread cleaner [commercial service tool (J-43897-18 or J-43897-12)] and approved anti-seize lubricant (commercial service tool).**

>> INSPECTION END

8. CHECK INTERMITTENT INCIDENT

Refer to GI-42, "Intermittent Incident".

>> INSPECTION END

9. CHECK GROUND CONNECTION

1. Turn ignition switch OFF.
2. Check ground connection E9. Refer to Ground Inspection in GI-45, "Circuit Inspection".

Is the inspection result normal?

YES >> GO TO 10.
NO >> Repair or replace ground connection.

10. CLEAR THE MIXTURE RATIO SELF-LEARNING VALUE

1. Clear the mixture ratio self-learning value. Refer to EC-32, "MIXTURE RATIO SELF-LEARNING VALUE CLEAR : Special Repair Requirement".
2. Run engine for at least 10 minutes at idle speed.

Is the 1st trip DTC P0172 detected? Is it difficult to start engine?

YES >> Perform trouble diagnosis for DTC P0172. Refer to EC-258, "DTC Logic".
NO >> GO TO 11.

11. CHECK HO2S2 GROUND CIRCUIT FOR OPEN AND SHORT

1. Turn ignition switch OFF.
2. Disconnect heated oxygen sensor 2 harness connector.
3. Disconnect ECM harness connector.
4. Check the continuity between HO2S2 harness connector and ECM harness connector.

HO2S2		ECM		Continuity
Connector	Terminal	Connector	Terminal	
F42	1	F13	35	Existed

5. Also check harness for short to ground and short to power.

Is the inspection result normal?

YES >> GO TO 12.
NO >> Repair open circuit or short to ground or short to power in harness or connectors.

12. CHECK HO2S2 INPUT SIGNAL CIRCUIT FOR OPEN AND SHORT

1. Check the continuity between HO2S2 harness connector and ECM harness connector.

HO2S2		ECM		Continuity
Connector	Terminal	Connector	Terminal	
F42	4	F13	33	Existed

2. Check the continuity between HO2S2 harness connector or ECM harness connector and ground.

HO2S2		ECM		Ground	Continuity
Connector	Terminal	Connector	Terminal		
F42	4	F13	33	Ground	Not existed

3. Also check harness for short to power.

Is the inspection result normal?

YES >> GO TO 13.
NO >> Repair open circuit or short to ground or short to power in harness or connectors.

13. CHECK HEATED OXYGEN SENSOR 2

Refer to EC-225, "Component Inspection".

Is the inspection result normal?

YES >> GO TO 15.
NO >> GO TO 14.

14. REPLACE HEATED OXYGEN SENSOR 2

Replace heated oxygen sensor 2.

CAUTION:

- **Discard any sensor which has been dropped from a height of more than 0.5 m (19.7 in) onto a hard surface such as a concrete floor; use a new one.**
- **Before installing new sensor, clean exhaust system threads using oxygen sensor thread cleaner [commercial service tool (J-43897-18 or J-43897-12)] and approved anti-seize lubricant (commercial service tool).**

>> INSPECTION END

15. CHECK INTERMITTENT INCIDENT

Refer to GI-42, "Intermittent Incident".

>> INSPECTION END

Component Inspection

INFOID:0000000004349271

1. INSPECTION START

Do you have CONSULT-III?

Do you have CONSULT-III?

YES >> GO TO 2.
NO >> GO TO 3.

2. CHECK HEATED OXYGEN SENSOR 2

With CONSULT-III

1. Turn ignition switch ON and select “DATA MONITOR” mode with CONSULT-III.
2. Start engine and warm it up to the normal operating temperature.
3. Turn ignition switch OFF and wait at least 10 seconds.
4. Start engine and keep the engine speed between 3,500 and 4,000 rpm for at least 1 minute under no load.
5. Let engine idle for 1 minute.
6. Select “FUEL INJECTION” in “ACTIVE TEST” mode, and select “HO2S2 (B1)” as the monitor item with CONSULT-III.
7. Check “HO2S2 (B1)” at idle speed when adjusting “FUEL INJECTION” to ±25%.

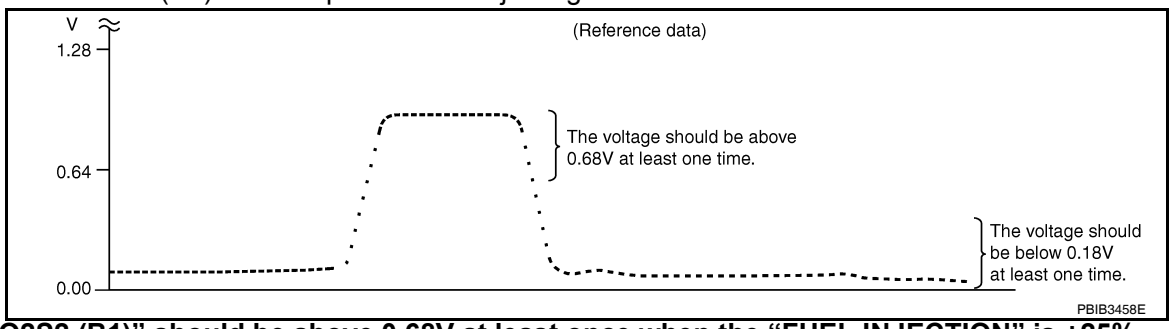

“HO2S2 (B1)” should be above 0.68V at least once when the “FUEL INJECTION” is +25%.
“HO2S2 (B1)” should be below 0.18V at least once when the “FUEL INJECTION” is –25%.

Is the inspection result normal?

YES >> INSPECTION END
NO >> GO TO 6.

3. CHECK HEATED OXYGEN SENSOR 2-I

Without CONSULT-III

1. Start engine and warm it up to the normal operating temperature.

2. Turn ignition switch OFF and wait at least 10 seconds.
3. Start engine and keep the engine speed between 3,500 and 4,000 rpm for at least 1 minute under no load.
4. Let engine idle for 1 minute.
5. Check the voltage between ECM harness connector and ground under the following condition.

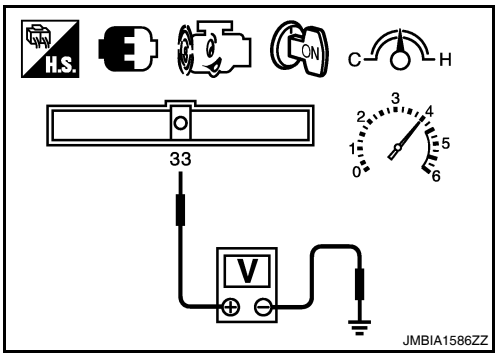

ECM		Ground	Condition	Voltage
Connector	Terminal			
F13	33 (HO2S2 signal)	Ground	Revving up to 4,000 rpm under no load at least 10 times	The voltage should be above 0.68 V at least once during this procedure. The voltage should be below 0.18 V at least once during this procedure.

Is the inspection result normal?

YES >> INSPECTION END
NO >> GO TO 4.

4. CHECK HEATED OXYGEN SENSOR 2-II

Check the voltage between ECM harness connector and ground under the following condition.

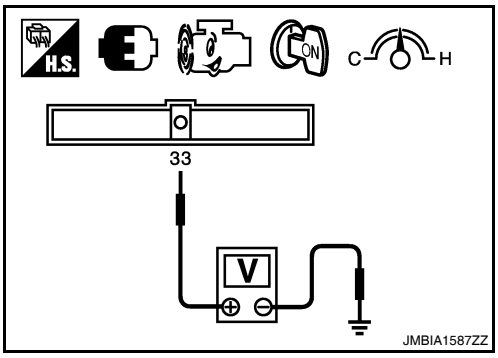

ECM		Ground	Condition	Voltage
Connector	Terminal			
F13	33 (HO2S2 signal)	Ground	Keeping engine speed at idle for 10 minutes	The voltage should be above 0.68 V at least once during this procedure. The voltage should be below 0.18 V at least once during this procedure.

Is the inspection result normal?

YES >> INSPECTION END
NO >> GO TO 5.

5. CHECK HEATED OXYGEN SENSOR 2-III

Check the voltage between ECM harness connector and ground under the following condition.

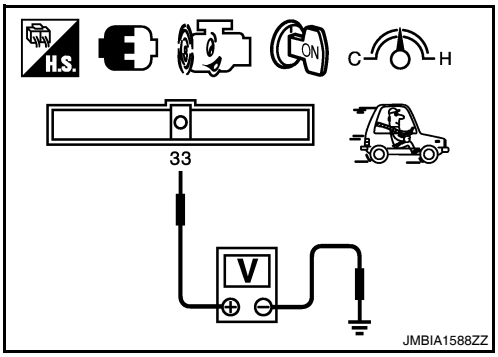

ECM		Ground	Condition	Voltage
Connector	Terminal			
F13	33 (HO2S2 signal)	Ground	Coasting from 80 km/h (50 MPH) in D position (CVT), 4th gear position (M/T)	The voltage should be above 0.68 V at least once during this procedure. The voltage should be below 0.18 V at least once during this procedure.

Is the inspection result normal?

YES >> INSPECTION END
NO >> GO TO 6.

6. REPLACE HEATED OXYGEN SENSOR 2

Replace heated oxygen sensor 2.

CAUTION:

- **Discard any sensor which has been dropped from a height of more than 0.5 m (19.7 in) onto a hard surface such as a concrete floor; use a new one.**

- **Before installing new sensor, clean exhaust system threads using oxygen sensor thread cleaner [commercial service tool (J-43897-18 or J-43897-12)] and approved anti-seize lubricant (commercial service tool).**

>> INSPECTION END

P0139 HO2S2

Description

INFOID:0000000004349272

The heated oxygen sensor 2, after three way catalyst (manifold), monitors the oxygen level in the exhaust gas on each bank.
Even if switching characteristics of the air fuel ratio (A/F) sensor 1 are shifted, the air-fuel ratio is controlled to stoichiometric, by the signal from the heated oxygen sensor 2.
This sensor is made of ceramic zirconia. The zirconia generates voltage from approximately 1V in richer conditions to 0V in leaner conditions.
Under normal conditions the heated oxygen sensor 2 is not used for engine control operation.

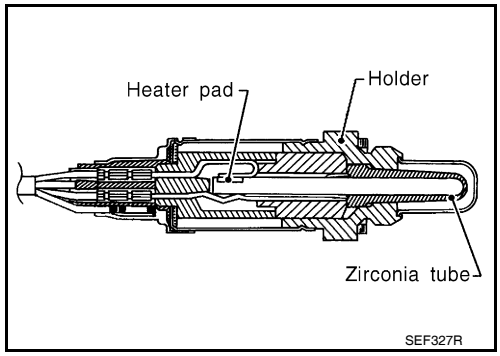

DTC Logic

INFOID:0000000004349273

DTC DETECTION LOGIC

The heated oxygen sensor 2 has a much longer switching time between rich and lean than the air fuel ratio (A/F) sensor 1. The oxygen storage capacity of the three way catalyst (manifold) causes the longer switching time. To judge the malfunctions of heated oxygen sensor 2, ECM monitors whether the switching response of the sensor's voltage is faster than specified during the various driving condition such as fuel-cut.

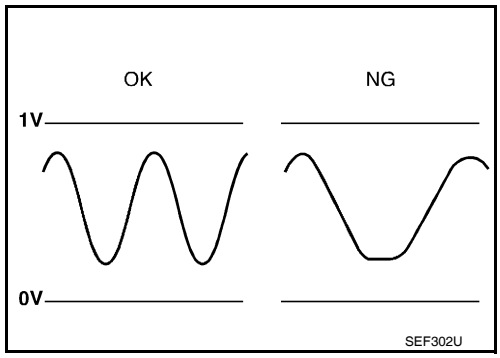

DTC No.	Trouble diagnosis name	DTC detecting condition	Possible cause
P0139	Heated oxygen sensor 2 circuit slow response	It takes more time for the sensor to respond between rich and lean than the specified time.	• Harness or connectors (The sensor circuit is open or shorted) • Heated oxygen sensor 2 • Fuel pressure • Fuel injector • Intake air leaks

DTC CONFIRMATION PROCEDURE

1. INSPECTION START

Do you have CONSULT-III?

Do you have CONSULT-III?

YES >> GO TO 2.
NO >> GO TO 5.

2. PRECONDITIONING

If DTC Confirmation Procedure has been previously conducted, always turn ignition switch OFF and wait at least 10 seconds before conducting the next test.

>> GO TO 3.

3. PERFORM DTC CONFIRMATION PROCEDURE

With CONSULT-III

1. Turn ignition switch ON and select “DATA MONITOR” mode with CONSULT-III.
2. Start engine and warm it up to the normal operating temperature.

3. Start engine and warm it up to the normal operating temperature.
4. Start engine and keep the engine speed between 3,500 and 4,000 rpm for at least 1 minute under no load.
5. Let engine idle for 1 minute.
6. Open engine hood.
7. Select “HO2S2 (B1) P0139” of “HO2S2” in “DTC WORK SUPPORT” mode with CONSULT-III.
8. Follow the instruction of CONSULT-III.
   NOTE:
   It will take at most 10 minutes until “COMPLETED” is displayed.
9. Touch “SELF-DIAG RESULT”.

Which is displayed on CONSULT-III?

OK >> INSPECTION END
NG >> GO TO 4.
CAN NOT BE DIAGNOSED>>GO TO 4.

4. PERFORM THE RESULT OF DTC CONFIRMATION PROCEDURE

1. Turn ignition switch OFF and leave the vehicle in a cool place (soak the vehicle).
2. Perform DTC CONFIRMATION PROCEDURE again.

>> GO TO 3.

5. PERFORM COMPONENT FUNCTION CHECK

Perform component function check. Refer to EC-229, "Component Function Check".
NOTE:
Use component function check to check the overall function of the heated oxygen sensor 2 circuit. During this check, a 1st trip DTC might not be confirmed.

Is the inspection result normal?

YES >> INSPECTION END
NO >> Go to EC-230, "Diagnosis Procedure".

Component Function Check

INFOID:0000000004349274

1. PERFORM COMPONENT FUNCTION CHECK-I

Without CONSULT-III

1. Start engine and warm it up to the normal operating temperature.
2. Turn ignition switch OFF and wait at least 10 seconds.
3. Start engine and keep the engine speed between 3,500 and 4,000 rpm for at least 1 minute under no load.
4. Let engine idle for 1 minute.
5. Check the voltage between ECM harness connector and ground under the following condition.

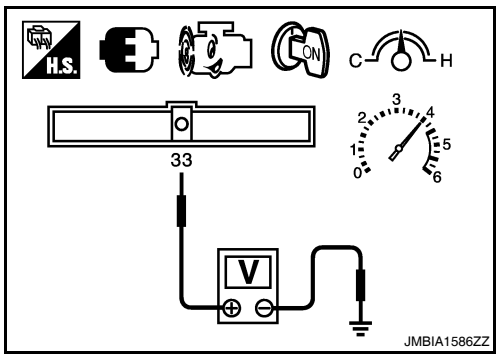

ECM		Ground	Condition	Voltage
Connector	Terminal			
F13	33 (HO2S2 signal)	Ground	Revving up to 4,000 rpm under no load at least 10 times	The voltage should be above 0.30 V at least once during this procedure.

Is the inspection result normal?

YES >> INSPECTION END
NO >> GO TO 2.

2. PERFORM COMPONENT FUNCTION CHECK-II

Check the voltage between ECM harness connector and ground under the following condition.

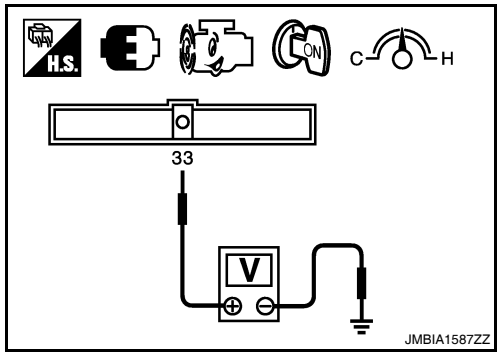

ECM		Ground	Condition	Voltage
Connector	Terminal			
F13	33 (HO2S2 signal)	Ground	Keeping engine speed at idle for 10 minutes	The voltage should be above 0.30 V at least once during this procedure.

Is the inspection result normal?

YES >> INSPECTION END
NO >> GO TO 3.

3. PERFORM COMPONENT FUNCTION CHECK-III

Check the voltage between ECM harness connector and ground under the following condition.

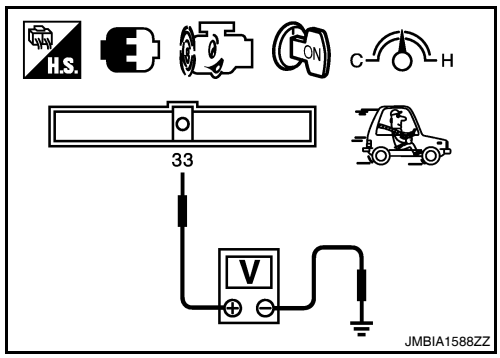

ECM		Ground	Condition	Voltage
Connector	Terminal			
F13	33 (HO2S2 signal)	Ground	Coasting from 80 km/h (50 MPH) in D position (CVT), 4th gear position (M/T)	The voltage should be above 0.30 V at least once during this procedure.

Is the inspection result normal?

YES >> INSPECTION END
NO >> Go to EC-230, "Diagnosis Procedure".

Diagnosis Procedure

INFOID:0000000004349275

1. CHECK GROUND CONNECTION

1. Turn ignition switch OFF.
2. Check ground connection E9. Refer to Ground Inspection in GI-45, "Circuit Inspection".

Is the inspection result normal?

YES >> GO TO 2.
NO >> Repair or replace ground connection.

2. CLEAR THE MIXTURE RATIO SELF-LEARNING VALUE

1. Clear the mixture ratio self-learning value. Refer to EC-32, "MIXTURE RATIO SELF-LEARNING VALUE CLEAR : Special Repair Requirement".
2. Run engine for at least 10 minutes at idle speed.

Is the 1st trip DTC P0171 or P0172 detected? Is it difficult to start engine?

YES >> Perform trouble diagnosis for DTC P0171 or P0172. Refer to EC-254, "DTC Logic" or EC-258, "DTC Logic".
NO >> GO TO 3.

3. CHECK HO2S2 GROUND CIRCUIT FOR OPEN AND SHORT

1. Turn ignition switch OFF.
2. Disconnect heated oxygen sensor 2 harness connector.
3. Disconnect ECM harness connector.
4. Check the continuity between HO2S2 harness connector and ECM harness connector.

HO2S2		ECM		Continuity
Connector	Terminal	Connector	Terminal	
F42	1	F13	35	Existed

5. Also check harness for short to ground and short to power.

Is the inspection result normal?

YES >> GO TO 4.
NO >> Repair open circuit or short to ground or short to power in harness or connectors.

4. CHECK HO2S2 INPUT SIGNAL CIRCUIT FOR OPEN AND SHORT

1. Check the continuity between HO2S2 harness connector and ECM harness connector.

HO2S2		ECM		Continuity
Connector	Terminal	Connector	Terminal	
F42	4	F13	33	Existed

2. Check the continuity between HO2S2 harness connector or ECM harness connector and ground.

HO2S2		ECM		Ground	Continuity
Connector	Terminal	Connector	Terminal		
F42	4	F13	33	Ground	Not existed

3. Also check harness for short to power.

Is the inspection result normal?

YES >> GO TO 5.
NO >> Repair open circuit or short to ground or short to power in harness or connectors.

5. CHECK HEATED OXYGEN SENSOR 2

Refer to EC-231, "Component Inspection".

Is the inspection result normal?

YES >> GO TO 7.
NO >> GO TO 6.

6. REPLACE HEATED OXYGEN SENSOR 2

Replace heated oxygen sensor 2.

CAUTION:

- **Discard any heated oxygen sensor which has been dropped from a height of more than 0.5 m (19.7 in) onto a hard surface such as a concrete floor; use a new one.**
- **Before installing new oxygen sensor, clean exhaust system threads using Oxygen Sensor Thread Cleaner tool J-43897-18 or J-43897-12 and approved anti-seize lubricant.**

>> INSPECTION END

7. CHECK INTERMITTENT INCIDENT

Refer to GI-42, "Intermittent Incident".

>> INSPECTION END

Component Inspection

INFOID:0000000004349276

1. INSPECTION START

Do you have CONSULT-III?

Do you have CONSULT-III?

YES >> GO TO 2.
NO >> GO TO 3.

2. CHECK HEATED OXYGEN SENSOR 2

With CONSULT-III

1. Turn ignition switch ON and select “DATA MONITOR” mode with CONSULT-III.
2. Start engine and warm it up to the normal operating temperature.
3. Turn ignition switch OFF and wait at least 10 seconds.
4. Start engine and keep the engine speed between 3,500 and 4,000 rpm for at least 1 minute under no load.
5. Let engine idle for 1 minute.

6. Select “FUEL INJECTION” in “ACTIVE TEST” mode, and select “HO2S2 (B1)” as the monitor item with CONSULT-III.
7. Check “HO2S2 (B1)” at idle speed when adjusting “FUEL INJECTION” to ±25%.

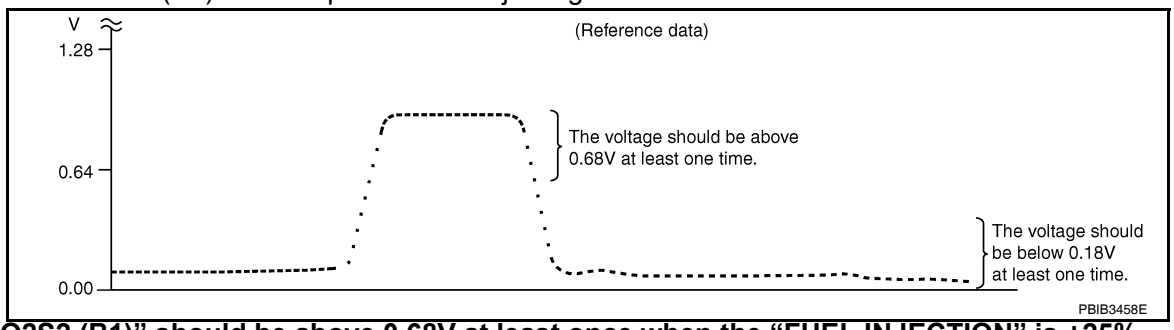

“HO2S2 (B1)” should be above 0.68V at least once when the “FUEL INJECTION” is +25%.
“HO2S2 (B1)” should be below 0.18V at least once when the “FUEL INJECTION” is –25%.

Is the inspection result normal?

YES >> INSPECTION END
NO >> GO TO 6.

3. CHECK HEATED OXYGEN SENSOR 2-I

Without CONSULT-III

1. Start engine and warm it up to the normal operating temperature.
2. Turn ignition switch OFF and wait at least 10 seconds.
3. Start engine and keep the engine speed between 3,500 and 4,000 rpm for at least 1 minute under no load.
4. Let engine idle for 1 minute.
5. Check the voltage between ECM harness connector and ground under the following condition.

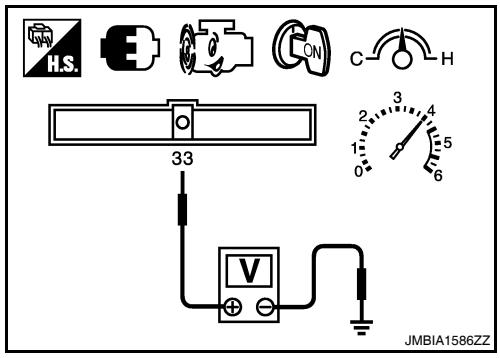

ECM		Ground	Condition	Voltage
Connector	Terminal			
F13	33 (HO2S2 signal)	Ground	Revving up to 4,000 rpm under no load at least 10 times	The voltage should be above 0.68 V at least once during this procedure. The voltage should be below 0.18 V at least once during this procedure.

Is the inspection result normal?

YES >> INSPECTION END
NO >> GO TO 4.

4. CHECK HEATED OXYGEN SENSOR 2-II

Check the voltage between ECM harness connector and ground under the following condition.

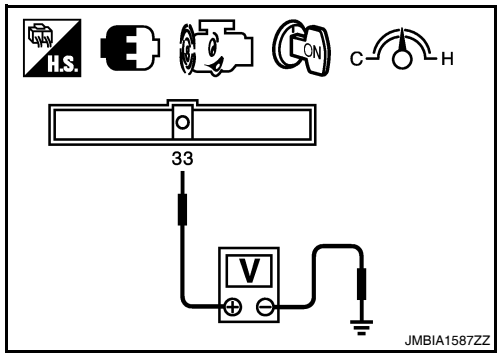

ECM		Ground	Condition	Voltage
Connector	Terminal			
F13	33 (HO2S2 signal)	Ground	Keeping engine speed at idle for 10 minutes	The voltage should be above 0.68 V at least once during this procedure. The voltage should be below 0.18 V at least once during this procedure.

Is the inspection result normal?

YES >> INSPECTION END
NO >> GO TO 5.

5. CHECK HEATED OXYGEN SENSOR 2-III

Check the voltage between ECM harness connector and ground under the following condition.

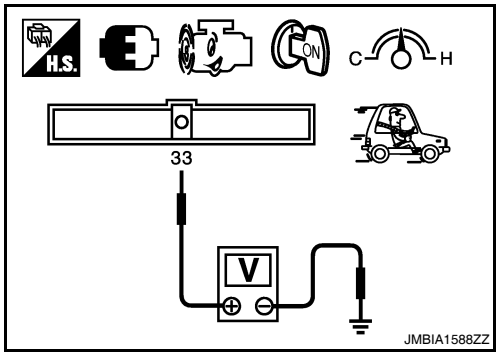

ECM		Ground	Condition	Voltage
Connector	Terminal			
F13	33 (HO2S2 signal)	Ground	Coasting from 80 km/h (50 MPH) in D position (CVT), 4th gear position (M/T)	The voltage should be above 0.68 V at least once during this procedure. The voltage should be below 0.18 V at least once during this procedure.

Is the inspection result normal?

YES >> INSPECTION END
NO >> GO TO 6.

6. REPLACE HEATED OXYGEN SENSOR 2

Replace heated oxygen sensor 2.

CAUTION:

- **Discard any sensor which has been dropped from a height of more than 0.5 m (19.7 in) onto a hard surface such as a concrete floor; use a new one.**
- **Before installing new sensor, clean exhaust system threads using oxygen sensor thread cleaner [commercial service tool (J-43897-18 or J-43897-12)] and approved anti-seize lubricant (commercial service tool).**

>> INSPECTION END

P0143 HO2S3

Description

INFOID:0000000004349277

The heated oxygen sensor 3, after HC adsorption catalyst (Under floor), monitors the oxygen level in the exhaust gas on each bank. This sensor is made of ceramic zirconia. The zirconia generates voltage from approximately 1V in richer conditions to 0V in leaner conditions.
Under normal conditions the heated oxygen sensor 3 is not used for engine control operation.

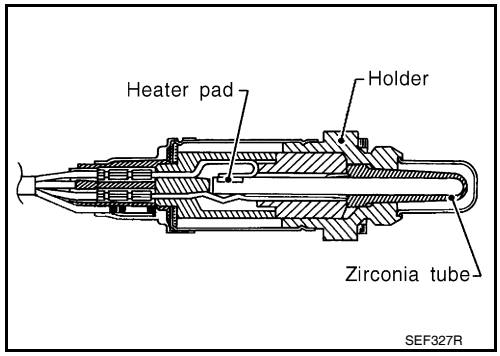

DTC Logic

INFOID:0000000004349278

DTC DETECTION LOGIC

The heated oxygen sensor 3 has a much longer switching time between rich and lean than the air fuel ratio (A/F) sensor 1. The oxygen storage capacity of the three way catalyst (manifold) causes the longer switching time. To judge the malfunctions of heated oxygen sensor 3, ECM monitors whether the minimum voltage of sensor is sufficiently low during the various driving condition such as fuel-cut.

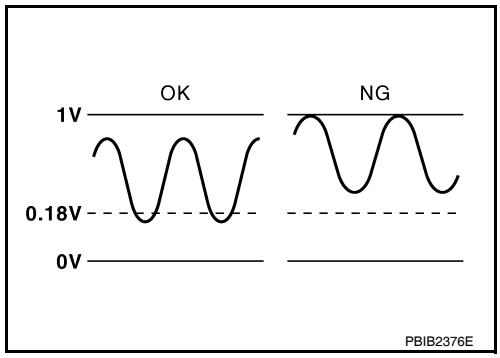

DTC No.	Trouble diagnosis name	DTC detecting condition	Possible cause
P0143	Heated oxygen sensor 3 circuit high voltage	The minimum voltage from the sensor is not reached to the specified voltage.	• Harness or connectors (The sensor circuit is open or shorted) • Heated oxygen sensor 3 • Fuel pressure • Fuel injector

DTC CONFIRMATION PROCEDURE

1.PRECONDITIONING

If DTC Confirmation Procedure has been previously conducted, always turn ignition switch OFF and wait at least 10 seconds before conducting the next test.

>> GO TO 2.

2.PERFORM DTC CONFIRMATION PROCEDURE

1. Start engine and warm it up to the normal operating temperature.
2. Repeat the following procedure 3 times.

- Drive vehicle at a speed of 80 km/h (50 MPH) or more for at least 3 consecutive minutes.

CAUTION:
Always drive vehicle in safe manner according to traffic conditions and obey all traffic laws.
NOTE:
- **Keep the vehicle speed as steady as possible during the cruising.**
- **Never raise engine sped above 3,600 rpm in this step.**

- Release accelerator pedal fully and stop vehicle with engine running.

NOTE:
Never turn ignition switch OFF.

3. Check 1st trip DTC.

Is 1st trip DTC detected?

YES >> Go to EC-235, "Diagnosis Procedure".
NO >> INSPECTION END

Diagnosis Procedure

INFOID:0000000004349279

1. CHECK GROUND CONNECTION

1. Turn ignition switch OFF.
2. Check ground connection E9. Refer to Ground Inspection in GI-45, "Circuit Inspection".

Is the inspection result normal?

YES >> GO TO 2.
NO >> Repair or replace ground connection.

2. CLEAR THE MIXTURE RATIO SELF-LEARNING VALUE

1. Clear the mixture ratio self-learning value. Refer to EC-32, "MIXTURE RATIO SELF-LEARNING VALUE CLEAR : Special Repair Requirement".
2. Run engine for at least 10 minutes at idle speed.

Is the 1st trip DTC P0172 detected? Is it difficult to start engine?

YES >> Perform trouble diagnosis for DTC P0172. Refer to EC-259, "Diagnosis Procedure".
NO >> GO TO 3.

3. CHECK HO2S3 GROUND CIRCUIT FOR OPEN AND SHORT

1. Turn ignition switch OFF.
2. Disconnect heated oxygen sensor 3 harness connector.
3. Disconnect ECM harness connector.
4. Check the continuity between HO2S3 harness connector and ECM harness connector.

HO2S3		ECM		Continuity
Connector	Terminal	Connector	Terminal	
F102	1	F13	35	Existed

5. Also check harness for short to ground and short to power.

Is the inspection result normal?

YES >> GO TO 5.
NO >> GO TO 4.

4. DETECT MALFUNCTIONING PART

Check the following.
- Harness connectors F58, F101
- Harness for open or short between heated oxygen sensor 3 and ECM

>> Repair open circuit or short to ground or short to power in harness or connectors.

5. CHECK HO2S3 INPUT SIGNAL CIRCUIT FOR OPEN AND SHORT

1. Check the continuity between HO2S3 harness connector and ECM harness connector.

HO2S3		ECM		Continuity
Connector	Terminal	Connector	Terminal	
F102	4	F13	34	Existed

2. Check the continuity between HO2S3 harness connector or ECM harness connector and ground.

HO2S3		ECM		Ground	Continuity
Connector	Terminal	Connector	Terminal		
F102	4	F13	34	Ground	Not existed

3. Also check harness for short to power.

Is the inspection result normal?

YES >> GO TO 7.
NO >> GO TO 6.

6. DETECT MALFUNCTIONING PART

Check the following.
- Harness connectors F58, F101
- Harness for open or short between heated oxygen sensor 3 and ECM

>> Repair open circuit or short to ground or short to power in harness or connectors.

7. CHECK HEATED OXYGEN SENSOR 3

Refer to EC-236, "Component Inspection".

Is the inspection result normal?

YES >> GO TO 9.
NO >> GO TO 8.

8. REPLACE HEATED OXYGEN SENSOR 3

Replace heated oxygen sensor 3.

CAUTION:
- **Discard any sensor which has been dropped from a height of more than 0.5 m (19.7 in) onto a hard surface such as a concrete floor; use a new one.**
- **Before installing new sensor, clean exhaust system threads using oxygen sensor thread cleaner [commercial service tool (J-43897-18 or J-43897-12)] and approved anti-seize lubricant (commercial service tool).**

>> INSPECTION END

9. CHECK INTERMITTENT INCIDENT

Refer to GI-42, "Intermittent Incident".

>> INSPECTION END

Component Inspection

INFOID:0000000004349280

1. INSPECTION START

Do you have CONSULT-III?

Do you have CONSULT-III?

YES >> GO TO 2.
NO >> GO TO 3.

2. CHECK HEATED OXYGEN SENSOR 3

With CONSULT-III

CAUTION:

Always drive vehicle in safe manner according to traffic conditions and obey all traffic laws.

1. Turn ignition switch ON and select “DATA MONITOR” mode with CONSULT-III.
2. Start engine and warm it up to the normal operating temperature.
3. Turn ignition switch OFF and wait at least 10 seconds.
4. Start the engine and drive vehicle at a speed of 80 km/h (50 MPH) or more for at least 3 consecutive minutes.
   NOTE:
   Keep the vehicle speed as steady as possible during the cruising.
5. Select “FUEL INJECTION” in “ACTIVE TEST” mode, and select “HO2S3 (B1)” as the monitor item with CONSULT-III.

6. Check “HO2S3 (B1)” at idle speed when adjusting “FUEL INJECTION” to ±25%.

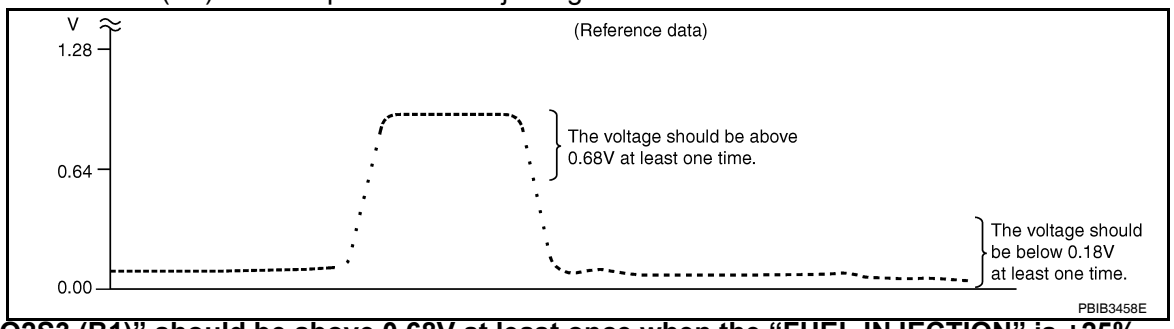

“HO2S3 (B1)” should be above 0.68V at least once when the “FUEL INJECTION” is +25%.
“HO2S3 (B1)” should be below 0.18V at least once when the “FUEL INJECTION” is –25%.

Is the inspection result normal?

YES >> INSPECTION END
NO >> GO TO 6.

3. CHECK HEATED OXYGEN SENSOR 3-I

Without CONSULT-III

CAUTION:

Always drive vehicle in safe manner according to traffic conditions and obey all traffic laws.

1. Start engine and warm it up to the normal operating temperature.
2. Turn ignition switch OFF and wait at least 10 seconds.
3. Start the engine and drive vehicle at a speed of 80 km/h (50 MPH) or more for at least 3 consecutive minutes.
   NOTE:
   Keep the vehicle speed as steady as possible during the cruising.
4. Check the voltage between ECM harness connector and ground under the following condition.

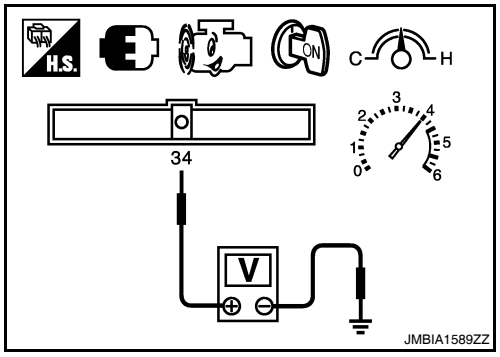

ECM		Ground	Condition	Voltage
Connector	Terminal			
F13	34 (HO2S3 signal)	Ground	Revving up to 4,000 rpm under no load at least 10 times	The voltage should be above 0.68 V at least once during this procedure. The voltage should be below 0.18 V at least once during this procedure.

Is the inspection result normal?

YES >> INSPECTION END
NO >> GO TO 4.

4. CHECK HEATED OXYGEN SENSOR 3-II

1. Keep vehicle at idling for 10 minutes.
2. Check the voltage between ECM harness connector and ground under the following condition.

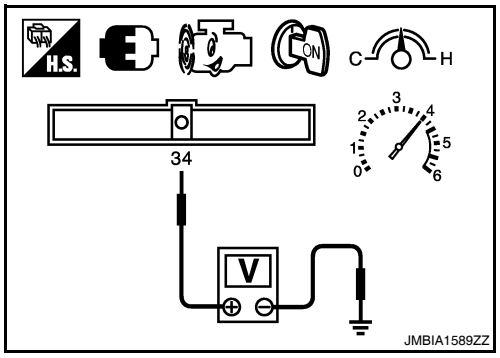

ECM		Ground	Condition	Voltage
Connector	Terminal			
F13	34 (HO2S3 signal)	Ground	Revving up to 4,000 rpm under no load at least 10 times	The voltage should be above 0.68 V at least once during this procedure. The voltage should be below 0.18 V at least once during this procedure.

Is the inspection result normal?

YES >> INSPECTION END

NO >> GO TO 5.

5. CHECK HEATED OXYGEN SENSOR 3-III

Check the voltage between ECM harness connector and ground under the following condition.

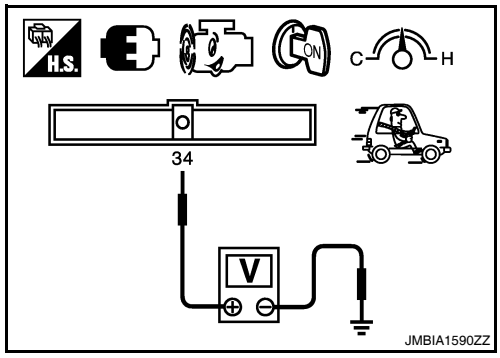

ECM		Ground	Condition	Voltage
Connector	Terminal			
F13	34 (HO2S3 signal)	Ground	Coasting from 80 km/h (50 MPH) in D position (CVT), 4th gear position (M/T)	The voltage should be above 0.68 V at least once during this procedure. The voltage should be below 0.18 V at least once during this procedure.

Is the inspection result normal?

YES >> INSPECTION END
NO >> GO TO 6.

6. REPLACE HEATED OXYGEN SENSOR 3

Replace heated oxygen sensor 3.

CAUTION:

- **Discard any sensor which has been dropped from a height of more than 0.5 m (19.7 in) onto a hard surface such as a concrete floor; use a new one.**
- **Before installing new sensor, clean exhaust system threads using oxygen sensor thread cleaner [commercial service tool (J-43897-18 or J-43897-12)] and approved anti-seize lubricant (commercial service tool).**

>> INSPECTION END

P0144 HO2S3

Description

INFOID:0000000004349281

The heated oxygen sensor 3, after HC adsorption catalyst (Under floor), monitors the oxygen level in the exhaust gas on each bank. This sensor is made of ceramic zirconia. The zirconia generates voltage from approximately 1V in richer conditions to 0V in leaner conditions.
Under normal conditions the heated oxygen sensor 3 is not used for engine control operation.

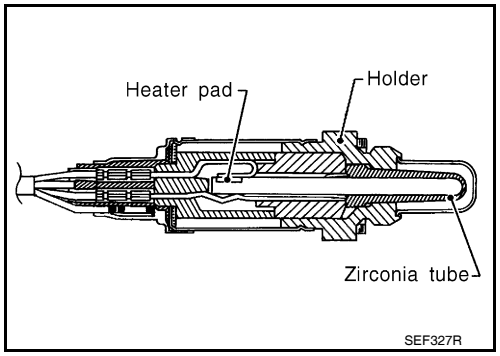

DTC Logic

INFOID:0000000004349282

DTC DETECTION LOGIC

The heated oxygen sensor 3 has a much longer switching time between rich and lean than the air fuel ratio (A/F) sensor 1. The oxygen storage capacity of the three way catalyst (manifold) causes the longer switching time. To judge the malfunctions of heated oxygen sensor 3, ECM monitors whether the maximum voltage of the sensor is sufficiently high during the various driving condition such as fuel-cut.

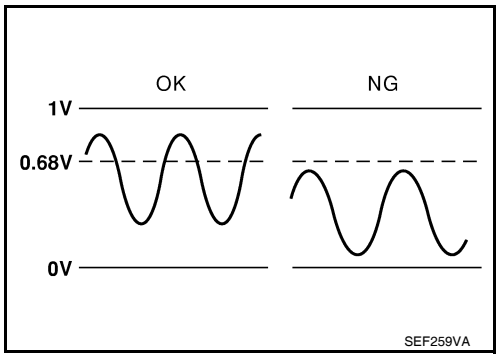

DTC No.	Trouble diagnosis name	DTC detecting condition	Possible cause
P0144	Heated oxygen sensor 3 circuit low voltage	The maximum voltage from the sensor is not reached to the specified voltage.	• Harness or connectors (The sensor circuit is open or shorted) • Heated oxygen sensor 3 • Fuel pressure • Fuel injector • Intake air leaks

DTC CONFIRMATION PROCEDURE

1.PRECONDITIONING

If DTC Confirmation Procedure has been previously conducted, always turn ignition switch OFF and wait at least 10 seconds before conducting the next test.

>> GO TO 2.

2.PERFORM DTC CONFIRMATION PROCEDURE

1. Start engine and warm it up to the normal operating temperature.
2. Repeat the following procedure 3 times.

- Drive vehicle at a speed of 80 km/h (50 MPH) or more for at least 3 consecutive minutes.

CAUTION:
Always drive vehicle in safe manner according to traffic conditions and obey all traffic laws.
NOTE:
- **Keep the vehicle speed as steady as possible during the cruising.**
- **Never raise engine sped above 3,600 rpm in this step.**

- Release accelerator pedal fully and stop vehicle with engine running.

NOTE:

Never turn ignition switch OFF.

3. Check 1st trip DTC.

Is 1st trip DTC detected?

YES >> Go to EC-240, "Diagnosis Procedure".
NO >> INSPECTION END

Diagnosis Procedure

INFOID:0000000004349283

1. CHECK GROUND CONNECTION

1. Turn ignition switch OFF.
2. Check ground connection E9. Refer to Ground Inspection in GI-45, "Circuit Inspection".

Is the inspection result normal?

YES >> GO TO 2.
NO >> Repair or replace ground connection.

2. CLEAR THE MIXTURE RATIO SELF-LEARNING VALUE

1. Clear the mixture ratio self-learning value. Refer to EC-32, "MIXTURE RATIO SELF-LEARNING VALUE CLEAR : Special Repair Requirement".
2. Run engine for at least 10 minutes at idle speed.

Is the 1st trip DTC P0171 or P0172 detected? Is it difficult to start engine?

YES >> Perform trouble diagnosis for DTC P0171 or P0172. Refer to EC-254, "DTC Logic" or EC-258, "DTC Logic".
NO >> GO TO 3.

3. CHECK HO2S3 GROUND CIRCUIT FOR OPEN AND SHORT

1. Turn ignition switch OFF.
2. Disconnect heated oxygen sensor 3 harness connector.
3. Disconnect ECM harness connector.
4. Check the continuity between HO2S3 harness connector and ECM harness connector.

HO2S3		ECM		Continuity
Connector	Terminal	Connector	Terminal	
F102	1	F13	35	Existed

5. Also check harness for short to ground and short to power.

Is the inspection result normal?

YES >> GO TO 5.
NO >> GO TO 4.

4. DETECT MALFUNCTIONING PART

Check the following.
- Harness connectors F58, F101
- Harness for open or short between heated oxygen sensor 3 and ECM

>> Repair open circuit or short to ground or short to power in harness or connectors.

5. CHECK HO2S3 INPUT SIGNAL CIRCUIT FOR OPEN AND SHORT

1. Check the continuity between HO2S3 harness connector and ECM harness connector.

HO2S3		ECM		Continuity
Connector	Terminal	Connector	Terminal	
F102	4	F13	34	Existed

2. Check the continuity between HO2S3 harness connector or ECM harness connector and ground.

HO2S3		ECM		Ground	Continuity
Connector	Terminal	Connector	Terminal		
F102	4	F13	34	Ground	Not existed

3. Also check harness for short to power.

Is the inspection result normal?

YES >> GO TO 7.
NO >> GO TO 6.

6. DETECT MALFUNCTIONING PART

Check the following.
- Harness connectors F58, F101
- Harness for open or short between heated oxygen sensor 3 and ECM

>> Repair open circuit or short to ground or short to power in harness or connectors.

7. CHECK HEATED OXYGEN SENSOR 3

Refer to EC-241, "Component Inspection".

Is the inspection result normal?

YES >> GO TO 9.
NO >> GO TO 8.

8. REPLACE HEATED OXYGEN SENSOR 3

Replace heated oxygen sensor 3.

CAUTION:
- **Discard any sensor which has been dropped from a height of more than 0.5 m (19.7 in) onto a hard surface such as a concrete floor; use a new one.**
- **Before installing new sensor, clean exhaust system threads using oxygen sensor thread cleaner [commercial service tool (J-43897-18 or J-43897-12)] and approved anti-seize lubricant (commercial service tool).**

>> INSPECTION END

9. CHECK INTERMITTENT INCIDENT

Refer to GI-42, "Intermittent Incident".

>> INSPECTION END

Component Inspection

INFOID:0000000004349284

1. INSPECTION START

Do you have CONSULT-III?

Do you have CONSULT-III?

YES >> GO TO 2.
NO >> GO TO 3.

2. CHECK HEATED OXYGEN SENSOR 3

With CONSULT-III

CAUTION:

Always drive vehicle in safe manner according to traffic conditions and obey all traffic laws.

1. Turn ignition switch ON and select “DATA MONITOR” mode with CONSULT-III.
2. Start engine and warm it up to the normal operating temperature.
3. Turn ignition switch OFF and wait at least 10 seconds.
4. Start the engine and drive vehicle at a speed of 80 km/h (50 MPH) or more for at least 3 consecutive minutes.

NOTE:

Keep the vehicle speed as steady as possible during the cruising.

5. Select “FUEL INJECTION” in “ACTIVE TEST” mode, and select “HO2S3 (B1)” as the monitor item with CONSULT-III.
6. Check “HO2S3 (B1)” at idle speed when adjusting “FUEL INJECTION” to ±25%.

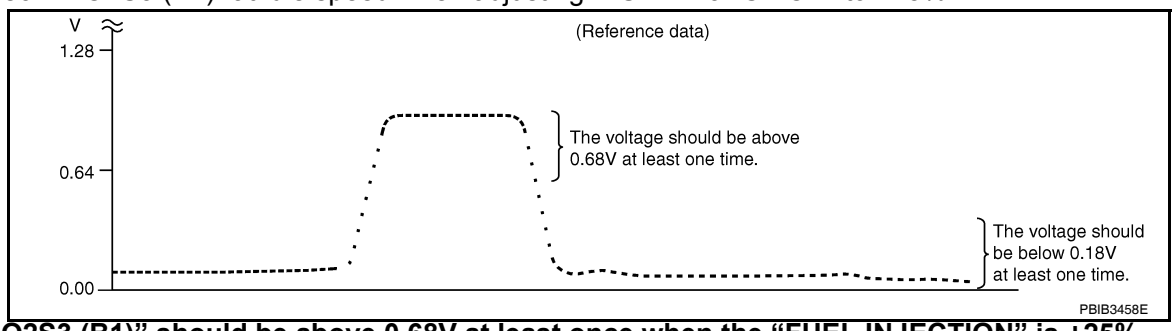

“HO2S3 (B1)” should be above 0.68V at least once when the “FUEL INJECTION” is +25%.
“HO2S3 (B1)” should be below 0.18V at least once when the “FUEL INJECTION” is –25%.

Is the inspection result normal?

YES >> INSPECTION END
NO >> GO TO 6.

3. CHECK HEATED OXYGEN SENSOR 3-I

Without CONSULT-III

CAUTION:

Always drive vehicle in safe manner according to traffic conditions and obey all traffic laws.

1. Start engine and warm it up to the normal operating temperature.
2. Turn ignition switch OFF and wait at least 10 seconds.
3. Start the engine and drive vehicle at a speed of 80 km/h (50 MPH) or more for at least 3 consecutive minutes.
   NOTE:
   Keep the vehicle speed as steady as possible during the cruising.
4. Check the voltage between ECM harness connector and ground under the following condition.

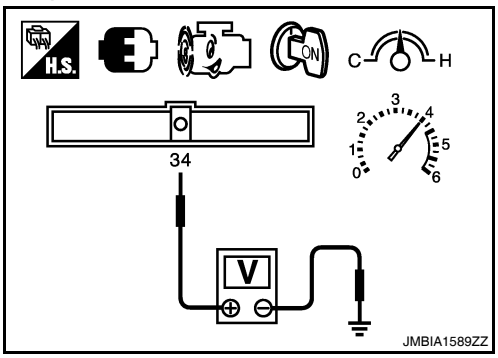

ECM		Ground	Condition	Voltage
Connector	Terminal			
F13	34 (HO2S3 signal)	Ground	Revving up to 4,000 rpm under no load at least 10 times	The voltage should be above 0.68 V at least once during this procedure. The voltage should be below 0.18 V at least once during this procedure.

Is the inspection result normal?

YES >> INSPECTION END
NO >> GO TO 4.

4. CHECK HEATED OXYGEN SENSOR 3-II

1. Keep vehicle at idling for 10 minutes.
2. Check the voltage between ECM harness connector and ground under the following condition.

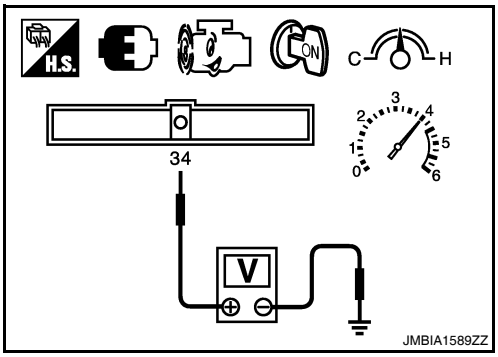

ECM		Ground	Condition	Voltage
Connector	Terminal			
F13	34 (HO2S3 signal)	Ground	Revving up to 4,000 rpm under no load at least 10 times	The voltage should be above 0.68 V at least once during this procedure. The voltage should be below 0.18 V at least once during this procedure.

Is the inspection result normal?

YES >> INSPECTION END
NO >> GO TO 5.

5. CHECK HEATED OXYGEN SENSOR 3-III

Check the voltage between ECM harness connector and ground under the following condition.

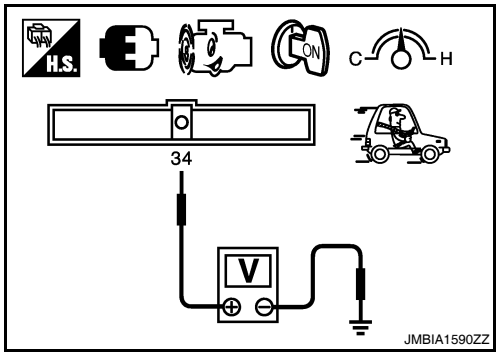

ECM		Ground	Condition	Voltage
Connector	Terminal			
F13	34 (HO2S3 signal)	Ground	Coasting from 80 km/h (50 MPH) in D position (CVT), 4th gear position (M/T)	The voltage should be above 0.68 V at least once during this procedure. The voltage should be below 0.18 V at least once during this procedure.

Is the inspection result normal?

YES >> INSPECTION END
NO >> GO TO 6.

6. REPLACE HEATED OXYGEN SENSOR 3

Replace heated oxygen sensor 3.

CAUTION:

- **Discard any sensor which has been dropped from a height of more than 0.5 m (19.7 in) onto a hard surface such as a concrete floor; use a new one.**
- **Before installing new sensor, clean exhaust system threads using oxygen sensor thread cleaner [commercial service tool (J-43897-18 or J-43897-12)] and approved anti-seize lubricant (commercial service tool).**

>> INSPECTION END

P0145 HO2S3

Description

INFOID:0000000004349285

The heated oxygen sensor 3, after HC adsorption catalyst (Under floor), monitors the oxygen level in the exhaust gas on each bank.
This sensor is made of ceramic zirconia. The zirconia generates voltage from approximately 1V in richer conditions to 0V in leaner conditions.
Under normal conditions the heated oxygen sensor 3 is not used for engine control operation.

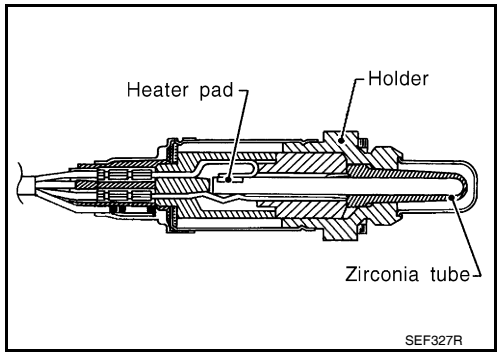

DTC Logic

INFOID:0000000004349286

DTC DETECTION LOGIC

The heated oxygen sensor 3 has a much longer switching time between rich and lean than the air fuel ratio (A/F) sensor 1. The oxygen storage capacity of the three way catalyst (manifold) causes the longer switching time. To judge the malfunctions of heated oxygen sensor 3, ECM monitors whether the switching response of the sensor's voltage is faster than specified during the various driving condition such as fuel-cut.

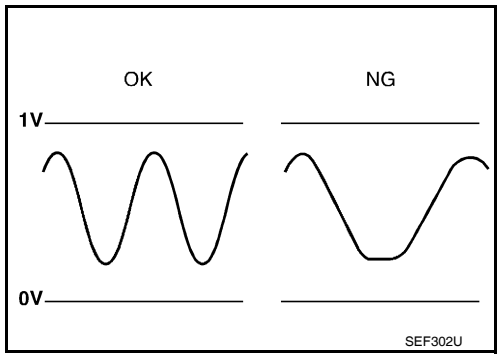

DTC No.	Trouble diagnosis name	DTC detecting condition	Possible cause
P0145	Heated oxygen sensor 3 circuit slow response	It takes more time for the sensor to respond between rich and lean than the specified time.	• Harness or connectors (The sensor circuit is open or shorted) • Heated oxygen sensor 3 • Fuel pressure • Fuel injector • Intake air leaks

DTC CONFIRMATION PROCEDURE

1.PRECONDITIONING

If DTC Confirmation Procedure has been previously conducted, always turn ignition switch OFF and wait at least 10 seconds before conducting the next test.

>> GO TO 2.

2.PERFORM DTC CONFIRMATION PROCEDURE

1. Start engine and warm it up to the normal operating temperature.
2. Repeat the following procedure 3 times.

- Drive vehicle at a speed of 80 km/h (50 MPH) or more for at least 3 consecutive minutes.

CAUTION:
Always drive vehicle in safe manner according to traffic conditions and obey all traffic laws.
NOTE:
- **Keep the vehicle speed as steady as possible during the cruising.**
- **Never raise engine sped above 3,600 rpm in this step.**

- Release accelerator pedal fully and stop vehicle with engine running.

NOTE:

Never turn ignition switch OFF.

3. Check 1st trip DTC.

Is 1st trip DTC detected?

YES >> Go to EC-245, "Diagnosis Procedure".
NO >> INSPECTION END

Diagnosis Procedure

INFOID:0000000004349287

1. CHECK GROUND CONNECTION

1. Turn ignition switch OFF.
2. Check ground connection E9. Refer to Ground Inspection in GI-45, "Circuit Inspection".

Is the inspection result normal?

YES >> GO TO 2.
NO >> Repair or replace ground connection.

2. CLEAR THE MIXTURE RATIO SELF-LEARNING VALUE

1. Clear the mixture ratio self-learning value. Refer to EC-32, "MIXTURE RATIO SELF-LEARNING VALUE CLEAR : Special Repair Requirement".
2. Run engine for at least 10 minutes at idle speed.

Is the 1st trip DTC P0171 or P0172 detected? Is it difficult to start engine?

YES >> Perform trouble diagnosis for DTC P0171 or P0172. Refer to EC-254, "DTC Logic" or EC-258, "DTC Logic".
NO >> GO TO 3.

3. CHECK HO2S3 GROUND CIRCUIT FOR OPEN AND SHORT

1. Turn ignition switch OFF.
2. Disconnect heated oxygen sensor 3 harness connector.
3. Disconnect ECM harness connector.
4. Check the continuity between HO2S3 harness connector and ECM harness connector.

HO2S3		ECM		Continuity
Connector	Terminal	Connector	Terminal	
F102	1	F13	35	Existed

5. Also check harness for short to ground and short to power.

Is the inspection result normal?

YES >> GO TO 5.
NO >> GO TO 4.

4. DETECT MALFUNCTIONING PART

Check the following.
- Harness connectors F58, F101
- Harness for open or short between heated oxygen sensor 3 and ECM

>> Repair open circuit or short to ground or short to power in harness or connectors.

5. CHECK HO2S3 INPUT SIGNAL CIRCUIT FOR OPEN AND SHORT

1. Check the continuity between HO2S3 harness connector and ECM harness connector.

HO2S3		ECM		Continuity
Connector	Terminal	Connector	Terminal	
F102	4	F13	34	Existed

2. Check the continuity between HO2S3 harness connector or ECM harness connector and ground.

HO2S3		ECM		Ground	Continuity
Connector	Terminal	Connector	Terminal		
F102	4	F13	34	Ground	Not existed

3. Also check harness for short to power.

Is the inspection result normal?

YES >> GO TO 7.
NO >> GO TO 6.

6.DETECT MALFUNCTIONING PART

Check the following.
- Harness connectors F58, F101
- Harness for open or short between heated oxygen sensor 3 and ECM

>> Repair open circuit or short to ground or short to power in harness or connectors.

7.CHECK HEATED OXYGEN SENSOR 3

Refer to EC-246, "Component Inspection".

Is the inspection result normal?

YES >> GO TO 9.
NO >> GO TO 8.

8.REPLACE HEATED OXYGEN SENSOR 3

Replace heated oxygen sensor 3.

CAUTION:
- **Discard any sensor which has been dropped from a height of more than 0.5 m (19.7 in) onto a hard surface such as a concrete floor; use a new one.**
- **Before installing new sensor, clean exhaust system threads using oxygen sensor thread cleaner [commercial service tool (J-43897-18 or J-43897-12)] and approved anti-seize lubricant (commercial service tool).**

>> INSPECTION END

9.CHECK INTERMITTENT INCIDENT

Refer to GI-45, "Circuit Inspection".

>> INSPECTION END

Component Inspection

INFOID:0000000004349288

1.INSPECTION START

Do you have CONSULT-III?

Do you have CONSULT-III?

YES >> GO TO 2.
NO >> GO TO 3.

2.CHECK HEATED OXYGEN SENSOR 3

With CONSULT-III

CAUTION:

Always drive vehicle in safe manner according to traffic conditions and obey all traffic laws.

1. Turn ignition switch ON and select “DATA MONITOR” mode with CONSULT-III.
2. Start engine and warm it up to the normal operating temperature.
3. Turn ignition switch OFF and wait at least 10 seconds.
4. Start the engine and drive vehicle at a speed of 80 km/h (50 MPH) or more for at least 3 consecutive minutes.

   NOTE:

Keep the vehicle speed as steady as possible during the cruising.

5. Select “FUEL INJECTION” in “ACTIVE TEST” mode, and select “HO2S3 (B1)” as the monitor item with CONSULT-III.
6. Check “HO2S3 (B1)” at idle speed when adjusting “FUEL INJECTION” to ±25%.

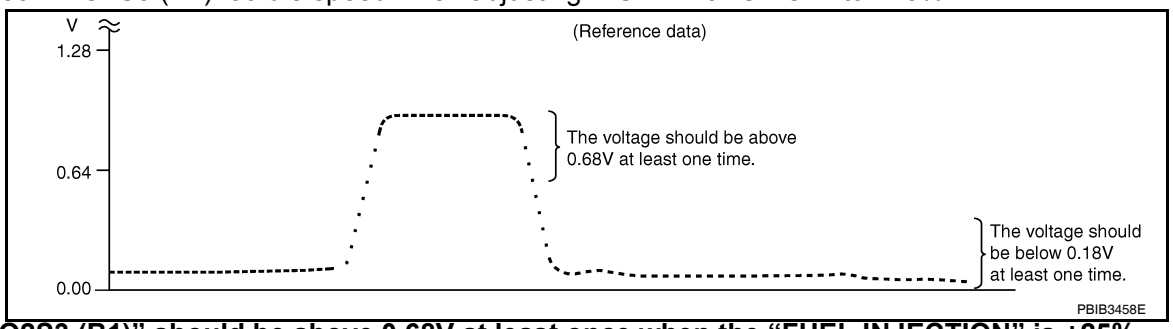

“HO2S3 (B1)” should be above 0.68V at least once when the “FUEL INJECTION” is +25%.
“HO2S3 (B1)” should be below 0.18V at least once when the “FUEL INJECTION” is –25%.

Is the inspection result normal?

YES >> INSPECTION END
NO >> GO TO 6.

3. CHECK HEATED OXYGEN SENSOR 3-I

Without CONSULT-III

CAUTION:

Always drive vehicle in safe manner according to traffic conditions and obey all traffic laws.

1. Start engine and warm it up to the normal operating temperature.
2. Turn ignition switch OFF and wait at least 10 seconds.
3. Start the engine and drive vehicle at a speed of 80 km/h (50 MPH) or more for at least 3 consecutive minutes.
   NOTE:
   Keep the vehicle speed as steady as possible during the cruising.
4. Check the voltage between ECM harness connector and ground under the following condition.

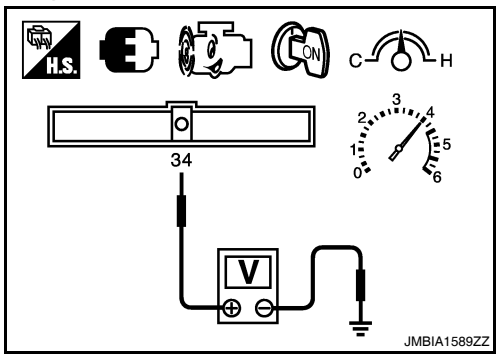

ECM		Ground	Condition	Voltage
Connector	Terminal			
F13	34 (HO2S3 signal)	Ground	Revving up to 4,000 rpm under no load at least 10 times	The voltage should be above 0.68 V at least once during this procedure. The voltage should be below 0.18 V at least once during this procedure.

Is the inspection result normal?

YES >> INSPECTION END
NO >> GO TO 4.

4. CHECK HEATED OXYGEN SENSOR 3-II

1. Keep vehicle at idling for 10 minutes.
2. Check the voltage between ECM harness connector and ground under the following condition.

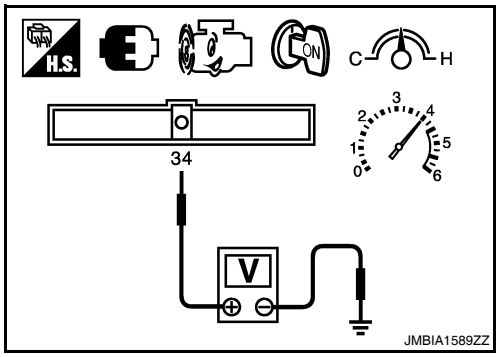

ECM		Ground	Condition	Voltage
Connector	Terminal			
F13	34 (HO2S3 signal)	Ground	Revving up to 4,000 rpm under no load at least 10 times	The voltage should be above 0.68 V at least once during this procedure. The voltage should be below 0.18 V at least once during this procedure.

Is the inspection result normal?

YES >> INSPECTION END
NO >> GO TO 5.

5. CHECK HEATED OXYGEN SENSOR 3-III

Check the voltage between ECM harness connector and ground under the following condition.

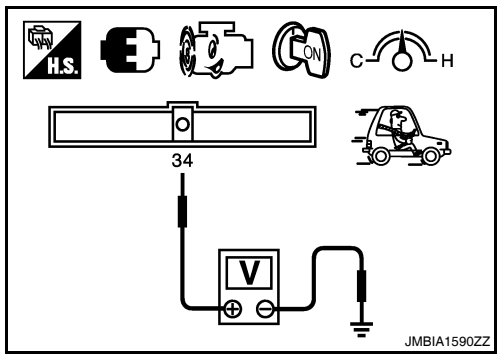

ECM		Ground	Condition	Voltage
Connector	Terminal			
F13	34 (HO2S3 signal)	Ground	Coasting from 80 km/h (50 MPH) in D position (CVT), 4th gear position (M/T)	The voltage should be above 0.68 V at least once during this procedure. The voltage should be below 0.18 V at least once during this procedure.

Is the inspection result normal?

YES >> INSPECTION END
NO >> GO TO 6.

6. REPLACE HEATED OXYGEN SENSOR 3

Replace heated oxygen sensor 3.

CAUTION:

- **Discard any sensor which has been dropped from a height of more than 0.5 m (19.7 in) onto a hard surface such as a concrete floor; use a new one.**
- **Before installing new sensor, clean exhaust system threads using oxygen sensor thread cleaner [commercial service tool (J-43897-18 or J-43897-12)] and approved anti-seize lubricant (commercial service tool).**

>> INSPECTION END

P0146 HO2S3

Description

INFOID:0000000004349289

The heated oxygen sensor 3, after HC adsorption catalyst (Under floor), monitors the oxygen level in the exhaust gas on each bank. This sensor is made of ceramic zirconia. The zirconia generates voltage from approximately 1V in richer conditions to 0V in leaner conditions.
Under normal conditions the heated oxygen sensor 3 is not used for engine control operation.

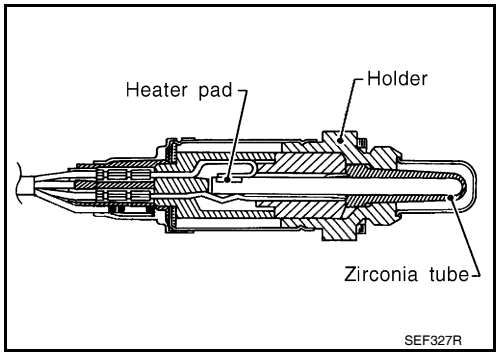

DTC Logic

INFOID:0000000004349290

DTC DETECTION LOGIC

The heated oxygen sensor 3 has a much longer switching time between rich and lean than the air fuel ratio (A/F) sensor 1. The oxygen storage capacity of the three way catalyst (manifold) causes the longer switching time. To judge the malfunctions of heated oxygen sensor 3, ECM monitors whether the voltage is unusually high during the various driving condition such as fuel-cut.

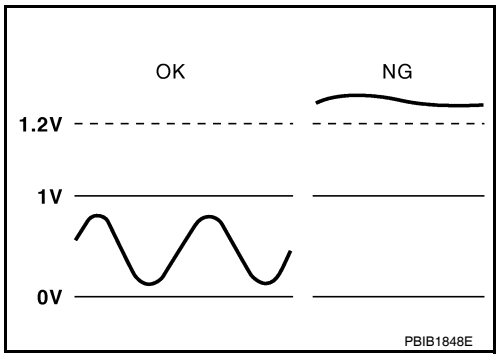

DTC No.	Trouble diagnosis name	DTC detecting condition	Possible cause
P0146	Heated oxygen sensor 3 circuit no activity detected	An excessively high voltage from the sensor is sent to ECM.	• Harness or connectors (The sensor circuit is open or shorted) • Heated oxygen sensor 3

DTC CONFIRMATION PROCEDURE

1.PRECONDITIONING

If DTC Confirmation Procedure has been previously conducted, always turn ignition switch OFF and wait at least 10 seconds before conducting the next test.

>> GO TO 2.

2.PERFORM DTC CONFIRMATION PROCEDURE

1. Start engine and warm it up to the normal operating temperature.
2. Repeat the following procedure 3 times.

- Drive vehicle at a speed of 80 km/h (50 MPH) or more for at least 3 consecutive minutes.

CAUTION:
Always drive vehicle in safe manner according to traffic conditions and obey all traffic laws.
NOTE:
- **Keep the vehicle speed as steady as possible during the cruising.**
- **Never raise engine sped above 3,600 rpm in this step.**

- Release accelerator pedal fully and stop vehicle with engine running.

NOTE:
Never turn ignition switch OFF.

3. Check 1st trip DTC.

Is 1st trip DTC detected?

YES >> Go to EC-250, "Diagnosis Procedure".
NO >> INSPECTION END

Diagnosis Procedure

INFOID:0000000004349291

1. CHECK GROUND CONNECTION

1. Turn ignition switch OFF.
2. Check ground connection E9. Refer to Ground Inspection in GI-45, "Circuit Inspection".

Is the inspection result normal?

YES >> GO TO 2.
NO >> Repair or replace ground connection.

2. CHECK HO2S3 GROUND CIRCUIT FOR OPEN AND SHORT

1. Turn ignition switch OFF.
2. Disconnect heated oxygen sensor 3 harness connector.
3. Disconnect ECM harness connector.
4. Check the continuity between HO2S3 harness connector and ECM harness connector.

HO2S3		ECM		Continuity
Connector	Terminal	Connector	Terminal	
F102	1	F13	35	Existed

5. Also check harness for short to ground and short to power.

Is the inspection result normal?

YES >> GO TO 4.
NO >> GO TO 3.

3. DETECT MALFUNCTIONING PART

Check the following.
- Harness connectors F58, F101
- Harness for open or short between heated oxygen sensor 3 and ECM

>> Repair open circuit or short to ground or short to power in harness or connectors.

4. CHECK HO2S3 INPUT SIGNAL CIRCUIT FOR OPEN AND SHORT

1. Check the continuity between HO2S3 harness connector and ECM harness connector.

HO2S3		ECM		Continuity
Connector	Terminal	Connector	Terminal	
F102	4	F13	34	Existed

2. Check the continuity between HO2S3 harness connector or ECM harness connector and ground.

HO2S3		ECM		Ground	Continuity
Connector	Terminal	Connector	Terminal		
F102	4	F13	34	Ground	Not existed

3. Also check harness for short to power.

Is the inspection result normal?

YES >> GO TO 6.
NO >> GO TO 5.

5. DETECT MALFUNCTIONING PART

Check the following.
- Harness connectors F58, F101
- Harness for open or short between heated oxygen sensor 3 and ECM

>> Repair open circuit or short to ground or short to power in harness or connectors.

6. CHECK HO2S3 CONNECTOR FOR WATER

Check connectors for water.

Water should not exist.

Is the inspection result normal?

YES >> GO TO 7.
NO >> Repair or replace harness or connectors.

7. CHECK HEATED OXYGEN SENSOR 3

Refer to EC-251, "Component Inspection".

Is the inspection result normal?

YES >> GO TO 9.
NO >> GO TO 8.

8. REPLACE HEATED OXYGEN SENSOR 3

Replace heated oxygen sensor 3.

CAUTION:

- **Discard any sensor which has been dropped from a height of more than 0.5 m (19.7 in) onto a hard surface such as a concrete floor; use a new one.**
- **Before installing new sensor, clean exhaust system threads using oxygen sensor thread cleaner [commercial service tool (J-43897-18 or J-43897-12)] and approved anti-seize lubricant (commercial service tool).**

>> INSPECTION END

9. CHECK INTERMITTENT INCIDENT

Refer to GI-42, "Intermittent Incident".

>> INSPECTION END

Component Inspection

INFOID:0000000004349292

1. INSPECTION START

Do you have CONSULT-III?

Do you have CONSULT-III?

YES >> GO TO 2.
NO >> GO TO 3.

2. CHECK HEATED OXYGEN SENSOR 3

With CONSULT-III

CAUTION:

Always drive vehicle in safe manner according to traffic conditions and obey all traffic laws.

1. Turn ignition switch ON and select “DATA MONITOR” mode with CONSULT-III.
2. Start engine and warm it up to the normal operating temperature.
3. Turn ignition switch OFF and wait at least 10 seconds.
4. Start the engine and drive vehicle at a speed of 80 km/h (50 MPH) or more for at least 3 consecutive minutes.
   NOTE:
   Keep the vehicle speed as steady as possible during the cruising.
5. Select “FUEL INJECTION” in “ACTIVE TEST” mode, and select “HO2S3 (B1)” as the monitor item with CONSULT-III.

6. Check “HO2S3 (B1)” at idle speed when adjusting “FUEL INJECTION” to ±25%.

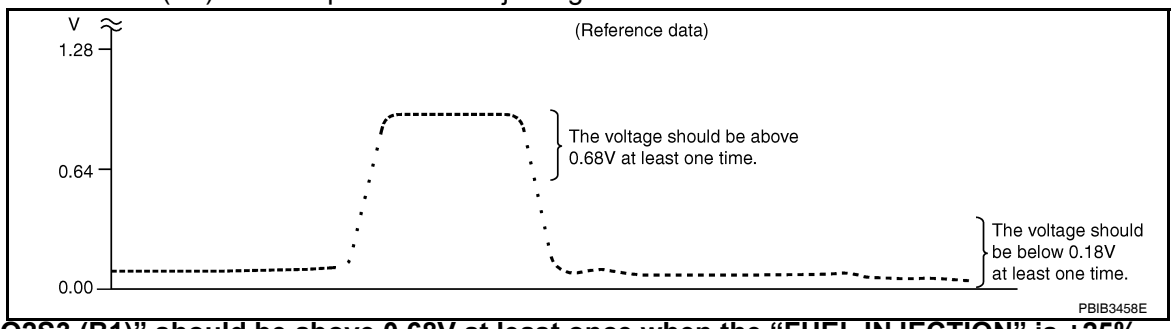

“HO2S3 (B1)” should be above 0.68V at least once when the “FUEL INJECTION” is +25%.
“HO2S3 (B1)” should be below 0.18V at least once when the “FUEL INJECTION” is –25%.

Is the inspection result normal?

YES >> INSPECTION END
NO >> GO TO 6.

3. CHECK HEATED OXYGEN SENSOR 3-I

Without CONSULT-III

CAUTION:

Always drive vehicle in safe manner according to traffic conditions and obey all traffic laws.

1. Start engine and warm it up to the normal operating temperature.
2. Turn ignition switch OFF and wait at least 10 seconds.
3. Start the engine and drive vehicle at a speed of 80 km/h (50 MPH) or more for at least 3 consecutive minutes.
   NOTE:
   Keep the vehicle speed as steady as possible during the cruising.
4. Check the voltage between ECM harness connector and ground under the following condition.

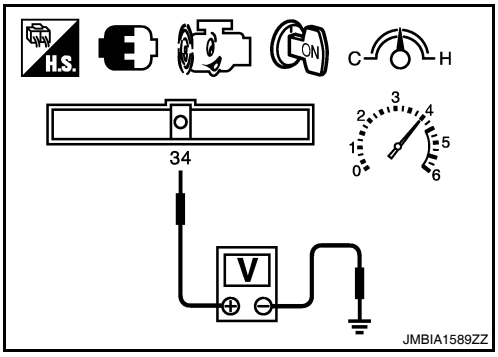

ECM		Ground	Condition	Voltage
Connector	Terminal			
F13	34 (HO2S3 signal)	Ground	Revving up to 4,000 rpm under no load at least 10 times	The voltage should be above 0.68 V at least once during this procedure. The voltage should be below 0.18 V at least once during this procedure.

Is the inspection result normal?

YES >> INSPECTION END
NO >> GO TO 4.

4. CHECK HEATED OXYGEN SENSOR 3-II

1. Keep vehicle at idling for 10 minutes.
2. Check the voltage between ECM harness connector and ground under the following condition.

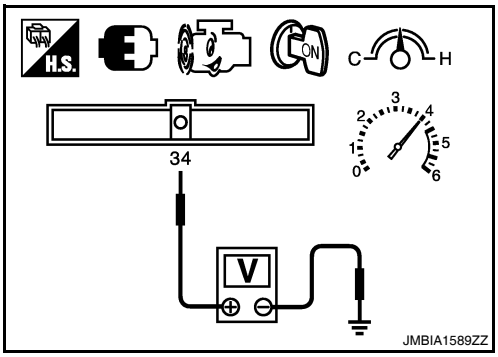

ECM		Ground	Condition	Voltage
Connector	Terminal			
F13	34 (HO2S3 signal)	Ground	Revving up to 4,000 rpm under no load at least 10 times	The voltage should be above 0.68 V at least once during this procedure. The voltage should be below 0.18 V at least once during this procedure.

Is the inspection result normal?

YES >> INSPECTION END

NO >> GO TO 5.

5. CHECK HEATED OXYGEN SENSOR 3-III

Check the voltage between ECM harness connector and ground under the following condition.

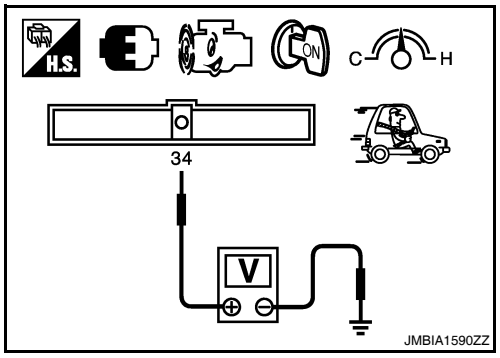

ECM		Ground	Condition	Voltage
Connector	Terminal			
F13	34 (HO2S3 signal)	Ground	Coasting from 80 km/h (50 MPH) in D position (CVT), 4th gear position (M/T)	The voltage should be above 0.68 V at least once during this procedure. The voltage should be below 0.18 V at least once during this procedure.

Is the inspection result normal?

YES >> INSPECTION END
NO >> GO TO 6.

6. REPLACE HEATED OXYGEN SENSOR 3

Replace heated oxygen sensor 3.

CAUTION:

- **Discard any sensor which has been dropped from a height of more than 0.5 m (19.7 in) onto a hard surface such as a concrete floor; use a new one.**
- **Before installing new sensor, clean exhaust system threads using oxygen sensor thread cleaner [commercial service tool (J-43897-18 or J-43897-12)] and approved anti-seize lubricant (commercial service tool).**

>> INSPECTION END

P0171 FUEL INJECTION SYSTEM FUNCTION

DTC Logic

INFOID:0000000004349293

DTC DETECTION LOGIC

With the Air/Fuel Mixture Ratio Self-Learning Control, the actual mixture ratio can be brought closely to the theoretical mixture ratio based on the mixture ratio feedback signal from the A/F sensors 1. The ECM calculates the necessary compensation to correct the offset between the actual and the theoretical ratios.
In case the amount of the compensation value is extremely large (The actual mixture ratio is too lean.), the ECM judges the condition as the fuel injection system malfunction and lights up the MIL (2 trip detection logic).

Sensor	Input signal to ECM	ECM function	Actuator
A/F sensor 1	Density of oxygen in exhaust gas (Mixture ratio feedback signal)	Fuel injection control	Fuel injector

DTC No.	Trouble diagnosis name	DTC detecting condition	Possible cause
P0171	Fuel injection system too lean	• Fuel injection system does not operate properly. • The amount of mixture ratio compensation is too large. (The mixture ratio is too lean.)	• Intake air leaks • A/F sensor 1 • Fuel injector • Exhaust gas leaks • Incorrect fuel pressure • Lack of fuel • Mass air flow sensor • Incorrect PCV hose connection

DTC CONFIRMATION PROCEDURE

1.PRECONDITIONING

If DTC Confirmation Procedure has been previously conducted, always turn ignition switch OFF and wait at least 10 seconds before conducting the next test.

>> GO TO 2.

2.PERFORM DTC CONFIRMATION PROCEDURE-I

1. Clear the mixture ratio self-learning value. Refer to EC-32, "MIXTURE RATIO SELF-LEARNING VALUE CLEAR : Special Repair Requirement".
2. Start engine.

Is it difficult to start engine?

YES >> GO TO 3.
NO >> GO TO 4.

3.RESTART ENGINE

If it is difficult to start engine, the fuel injection system has a malfunction, too.
Crank engine while depressing accelerator pedal.
NOTE:
When depressing accelerator pedal three-fourths (3/4) or more, the control system does not start the engine. Do not depress accelerator pedal.

Does engine start?

YES >> Go to EC-255, "Diagnosis Procedure".
NO >> Check exhaust and intake air leak visually.

4.PERFORM DTC CONFIRMATION PROCEDURE-II

1. Start engine and let it idle for at least 5 minutes.
2. Check 1st trip DTC.

Is 1st trip DTC detected?

YES >> Go to EC-255, "Diagnosis Procedure".
NO >> GO TO 5.

5. PERFORM DTC CONFIRMATION PROCEDURE-III

1. Turn ignition switch OFF and wait at least 10 seconds.
2. Start engine.
3. Maintain the following conditions for at least 10 consecutive minutes.
   Hold the accelerator pedal as steady as possible.

VHCL SPEED SE	50 - 120 km/h (31 - 75 MPH)

CAUTION:
Always drive vehicle at a safe speed.

4. Check 1st trip DTC.

Is 1st trip DTC detected?

YES >> Go to EC-255, "Diagnosis Procedure".
NO >> INSPECTION END

Diagnosis Procedure

INFOID:0000000004349294

1. CHECK EXHAUST GAS LEAK

1. Start engine and run it at idle.
2. Listen for an exhaust gas leak before three way catalyst (manifold).

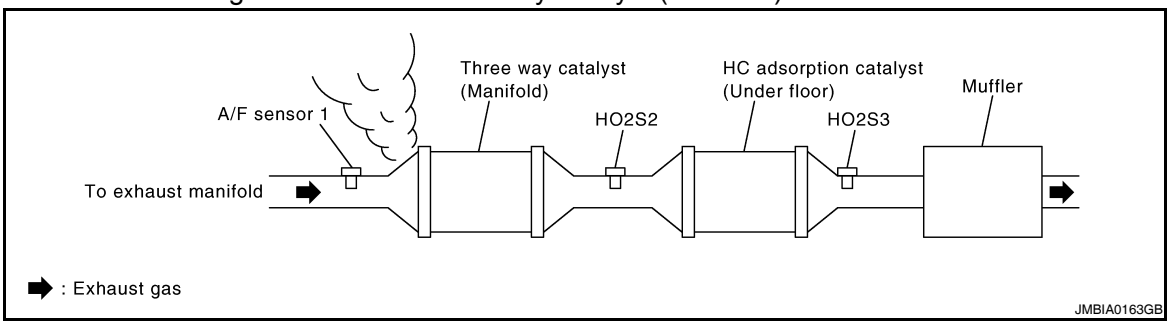

Is exhaust gas leak detected?

YES >> Repair or replace.
NO >> GO TO 2.

2. CHECK FOR INTAKE AIR LEAK

1. Listen for an intake air leak after the mass air flow sensor.
2. Check PCV hose connection.

Intake air leak detected?

YES >> Repair or replace.
NO >> GO TO 3.

3. CHECK A/F SENSOR 1 INPUT SIGNAL CIRCUIT

1. Turn ignition switch OFF.
2. Disconnect corresponding A/F sensor 1 harness connector.
3. Disconnect ECM harness connector.
4. Check the continuity between A/F sensor 1 harness connector and ECM harness connector.

A/F sensor 1		ECM		Continuity
Connector	Terminal	Connector	Terminal	
F44	1	F14	45	Existed
	2		49	

5. Check the continuity between A/F sensor 1 harness connector or ECM harness connector and ground.

A/F sensor 1		ECM		Ground	Continuity
Connector	Terminal	Connector	Terminal		
F44	1	F14	45	Ground	Not existed
	2		49		

6. Also check harness for short to power.

Is the inspection result normal?

YES >> GO TO 4.
NO >> Repair open circuit or short to ground or short to power in harness or connectors.

4. CHECK FUEL PRESSURE

1. Check fuel pressure. Refer to EC-550, "Inspection".

Is the inspection result normal?

YES >> GO TO 6.
NO >> GO TO 5.

5. DETECT MALFUNCTIONING PART

Check fuel hoses and fuel tubes for clogging.

Is the inspection result normal?

YES >> Replace “fuel filter and fuel pump assembly”.
NO >> Repair or replace

6. CHECK MASS AIR FLOW SENSOR

With CONSULT-III

1. Install all removed parts.
2. Check “MASS AIR FLOW” in “DATA MONITOR” mode with CONSULT-III.
3. For specification, refer to EC-555, "Mass Air Flow Sensor".

With GST

1. Install all removed parts.
2. Check mass air flow sensor signal in Service $01 with GST.
3. For specification, refer to EC-555, "Mass Air Flow Sensor".

Is the measurement value within the specification?

YES >> GO TO 7.
NO >> Check connectors for rusted terminals or loose connections in the mass air flow sensor circuit or grounds. Refer to EC-168, "DTC Logic".

7. CHECK FUNCTION OF FUEL INJECTOR

With CONSULT-III

1. Start engine.
2. Perform “POWER BALANCE” in “ACTIVE TEST” mode with CONSULT-III.
3. Make sure that each circuit produces a momentary engine speed drop.

Without CONSULT-III

1. Let engine idle.
2. Listen to each fuel injector operating sound.

Clicking noise should be heard.

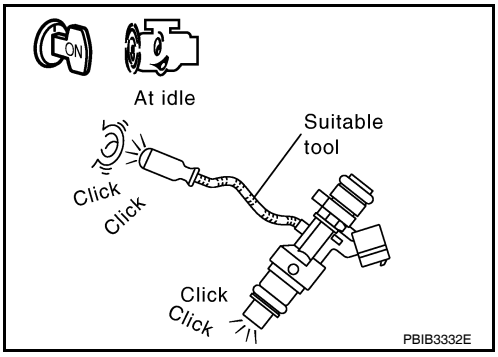

Is the inspection result normal?

YES >> GO TO 8.
NO >> Perform trouble diagnosis for FUEL INJECTOR, refer to EC-463, "Component Function Check".

8. CHECK FUEL INJECTOR

1. Turn ignition switch OFF.
2. Confirm that the engine is cooled down and there are no fire hazards near the vehicle.
3. Disconnect all fuel injector harness connectors.
4. Remove fuel tube assembly. Refer to EM-36, "Removal and Installation".
   Keep fuel hose and all fuel injectors connected to fuel tube.
5. Disconnect all ignition coil harness connectors.
6. Prepare pans or saucers under each fuel injector.
7. Crank engine for about 3 seconds.

Fuel should be sprayed evenly for each fuel injector.

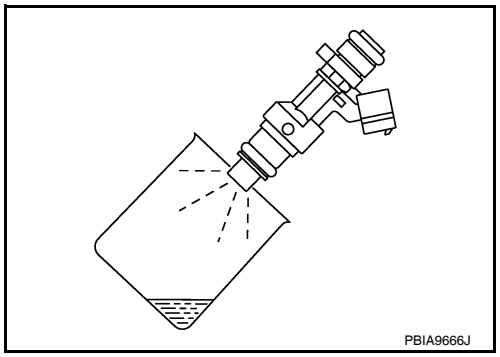

Is the inspection result normal?

YES >> GO TO 9.
NO >> Replace fuel injectors from which fuel does not spray out. Always replace O-ring with new ones.

9. CHECK INTERMITTENT INCIDENT

Refer to GI-42, "Intermittent Incident".

>> INSPECTION END

P0172 FUEL INJECTION SYSTEM FUNCTION

DTC Logic

INFOID:0000000004349295

DTC DETECTION LOGIC

With the Air/Fuel Mixture Ratio Self-Learning Control, the actual mixture ratio can be brought closely to the theoretical mixture ratio based on the mixture ratio feedback signal from the A/F sensors 1. The ECM calculates the necessary compensation to correct the offset between the actual and the theoretical ratios.
In case the amount of the compensation value is extremely large (The actual mixture ratio is too rich.), the ECM judges the condition as the fuel injection system malfunction and lights up the MIL (2 trip detection logic).

Sensor	Input signal to ECM	ECM function	Actuator
A/F sensor 1	Density of oxygen in exhaust gas (Mixture ratio feedback signal)	Fuel injection control	Fuel injector

DTC No.	Trouble diagnosis name	DTC detecting condition	Possible cause
P0172	Fuel injection system too rich	• Fuel injection system does not operate properly. • The amount of mixture ratio compensation is too large. (The mixture ratio is too rich.)	• A/F sensor 1 • Fuel injector • Exhaust gas leaks • Incorrect fuel pressure • Mass air flow sensor

DTC CONFIRMATION PROCEDURE

1.PRECONDITIONING

If DTC Confirmation Procedure has been previously conducted, always turn ignition switch OFF and wait at least 10 seconds before conducting the next test.

>> GO TO 2.

2.PERFORM DTC CONFIRMATION PROCEDURE-I

1. Clear the mixture ratio self-learning value. Refer to EC-32, "MIXTURE RATIO SELF-LEARNING VALUE CLEAR : Special Repair Requirement".
2. Start engine.

Is it difficult to start engine?

YES >> GO TO 3.
NO >> GO TO 4.

3.RESTART ENGINE

If it is difficult to start engine, the fuel injection system has a malfunction, too.
Crank engine while depressing accelerator pedal.
NOTE:
When depressing accelerator pedal three-fourths (3/4) or more, the control system does not start the engine. Do not depress accelerator pedal.

Does engine start?

YES >> Go to EC-259, "Diagnosis Procedure".
NO >> Remove spark plugs and check for fouling, etc.

4.PERFORM DTC CONFIRMATION PROCEDURE-II

1. Start engine and let it idle for at least 10 minutes.

Is 1st trip DTC detected?

YES >> Go to EC-259, "Diagnosis Procedure".
NO >> GO TO 5.

5.PERFORM DTC CONFIRMATION PROCEDURE-III

1. Turn ignition switch OFF and wait at least 10 seconds.
2. Start engine.
3. Maintain the following conditions for at least 10 consecutive minutes.

Hold the accelerator pedal as steady as possible.

VHCL SPEED SE	50 - 120 km/h (31 - 75 MPH)

CAUTION:
Always drive vehicle at a safe speed.

4. Check 1st trip DTC.

Is 1st trip DTC detected?

YES >> Go to EC-259, "Diagnosis Procedure".
NO >> INSPECTION END

Diagnosis Procedure

INFOID:0000000004349296

1. CHECK EXHAUST GAS LEAK

1. Start engine and run it at idle.
2. Listen for an exhaust gas leak before three way catalyst (manifold).

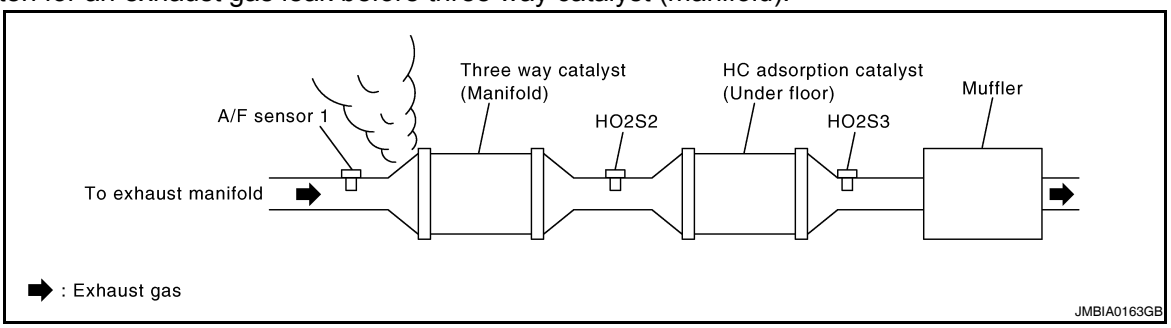

Is exhaust gas leak detected?

YES >> Repair or replace.
NO >> GO TO 2.

2. CHECK FOR INTAKE AIR LEAK

Listen for an intake air leak after the mass air flow sensor.

Is intake air leak detected?

YES >> Repair or replace.
NO >> GO TO 3.

3. CHECK A/F SENSOR 1 INPUT SIGNAL CIRCUIT

1. Turn ignition switch OFF.
2. Disconnect corresponding A/F sensor 1 harness connector.
3. Disconnect ECM harness connector.
4. Check the continuity between A/F sensor 1 harness connector and ECM harness connector.

A/F sensor 1		ECM		Continuity
Connector	Terminal	Connector	Terminal	
F44	1	F14	45	Existed
	2		49	

5. Check the continuity between A/F sensor 1 harness connector or ECM harness connector and ground.

A/F sensor 1		ECM		Ground	Continuity
Connector	Terminal	Connector	Terminal		
F44	1	F14	45	Ground	Not existed
	2		49		

6. Also check harness for short to power.

Is the inspection result normal?

YES >> GO TO 4.

NO >> Repair open circuit or short to ground or short to power in harness or connectors.

4. CHECK FUEL PRESSURE

1. Check fuel pressure. Refer to EC-550, "Inspection".

Is the inspection result normal?

YES >> GO TO 6.
NO >> GO TO 5.

5. DETECT MALFUNCTIONING PART

Check fuel hoses and fuel tubes for clogging.

Is the inspection result normal?

YES >> Replace “fuel filter and fuel pump assembly”.
NO >> Repair or replace

6. CHECK MASS AIR FLOW SENSOR

With CONSULT-III

1. Install all removed parts.
2. Check “MASS AIR FLOW” in “DATA MONITOR” mode with CONSULT-III.
3. For specification, refer to EC-555, "Mass Air Flow Sensor".

With GST

1. Install all removed parts.
2. Check mass air flow sensor signal in “Service $01” with GST.
3. For specification, refer to EC-555, "Mass Air Flow Sensor".

Is the measurement value within the specification?

YES >> GO TO 7.
NO >> Check connectors for rusted terminals or loose connections in the mass air flow sensor circuit or grounds. Refer to EC-168, "DTC Logic".

7. CHECK FUNCTION OF FUEL INJECTOR

With CONSULT-III

1. Start engine.
2. Perform “POWER BALANCE” in “ACTIVE TEST” mode with CONSULT-III.
3. Make sure that each circuit produces a momentary engine speed drop.

Without CONSULT-III

1. Let engine idle.
2. Listen to each fuel injector operating sound.

Clicking noise should be heard.

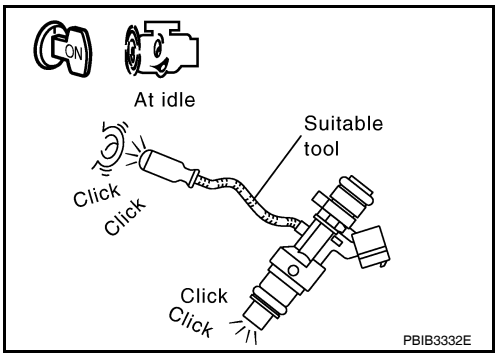

Is the inspection result normal?

YES >> GO TO 8.
NO >> Perform trouble diagnosis for FUEL INJECTOR, refer to EC-463, "Component Function Check".

8. CHECK FUEL INJECTOR

1. Remove fuel injector assembly. Refer to EM-36, "Removal and Installation".
   Keep fuel hose and all fuel injectors connected to fuel tube.
2. Confirm that the engine is cooled down and there are no fire hazards near the vehicle.
3. Disconnect all fuel injector harness connectors.
4. Disconnect all ignition coil harness connectors.
5. Prepare pans or saucers under each fuel injectors.
6. Crank engine for about 3 seconds.
   Make sure fuel does not drip from fuel injector.

Is the inspection result normal?

YES >> GO TO 9.
NO >> Replace the fuel injectors from which fuel is dripping. Always replace O-ring with new one.

9. CHECK INTERMITTENT INCIDENT

Refer to GI-42, "Intermittent Incident".

>> INSPECTION END

P0181 FTT SENSOR

Description

INFOID:0000000004349297

The fuel tank temperature sensor is used to detect the fuel temperature inside the fuel tank. The sensor modifies a voltage signal from the ECM. The modified signal returns to the ECM as the fuel temperature input. The sensor uses a thermistor which is sensitive to the change in temperature. The electrical resistance of the thermistor decreases as temperature increases.

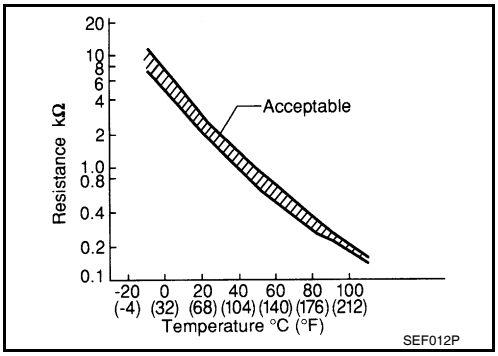

<Reference data>

Fluid temperature °C (°F)]	Voltage* (V)	Resistance (kΩ
20 (68)	3.5	2.3 - 2.7
50 (122)	2.2	0.79 - 0.90

*: These data are reference values and are measured between ECM terminal 95 (Fuel tank temperature sensor) and ground.

CAUTION:

Do not use ECM ground terminals when measuring input/output voltage. Doing so may result in damage to the ECM's transistor. Use a ground other than ECM terminals, such as the ground.

DTC Logic

INFOID:0000000004349298

DTC DETECTION LOGIC

DTC No.	Trouble diagnosis name	DTC detecting condition	Possible cause
P0181	Fuel tank temperature sensor circuit range/performance	Rationally incorrect voltage from the sensor is sent to ECM, compared with the voltage signals from engine coolant temperature sensor and intake air temperature sensor.	• Harness or connectors (The sensor circuit is open or shorted) • Fuel tank temperature sensor

DTC CONFIRMATION PROCEDURE

1. PRECONDITIONING

If DTC Confirmation Procedure has been previously conducted, always turn ignition switch OFF and wait at least 10 seconds before conducting the next test.

>> GO TO 2.

2. PERFORM DTC CONFIRMATION PROCEDURE-I

1. Turn ignition switch and wait at least 10 seconds.
2. Check 1st trip DTC.

Is 1st trip DTC detected?

YES >> Go to EC-263, "Diagnosis Procedure".
NO >> GO TO 3.

3. CHECK ENGINE COOLANT TEMPERATURE

With CONSULT-III

1. Select “COOLAN TEMP/S” in “DATA MONITOR” mode with CONSULT-III.
2. Check “COOLAN TEMP/S” value.

With GST

Follow the procedure “With CONSULT-III” above.

“COOLAN TEMP/S” less than 60°C (140°F)?

YES >> INSPECTION END
NO >> GO TO 4.

4. PERFORM DTC CONFIRMATION PROCEDURE-II

With CONSULT-III

1. Cool engine down until “COOLAN TEMP/S” is less than 60°C (140°F).
2. Wait at least 10 seconds.
3. Check 1st trip DTC.

With GST

Follow the procedure “With CONSULT-III” above.

Is 1st trip DTC detected?

YES >> Go to EC-263, "Diagnosis Procedure".
NO >> INSPECTION END

Diagnosis Procedure

INFOID:0000000004349299

1. CHECK GROUND CONNECTION

1. Turn ignition switch OFF.
2. Check ground connection E9. Refer to Ground Inspection in GI-45, "Circuit Inspection".

Is the inspection result normal?

YES >> GO TO 2.
NO >> Repair or replace ground connection.

2. CHECK FUEL TANK TEMPERATURE SENSOR POWER SUPPLY CIRCUIT

1. Turn ignition switch OFF.
2. Disconnect “fuel level sensor unit and fuel pump” harness connector.
3. Turn ignition switch ON.
4. Check the voltage between “fuel level sensor unit and fuel pump” harness connector and ground.

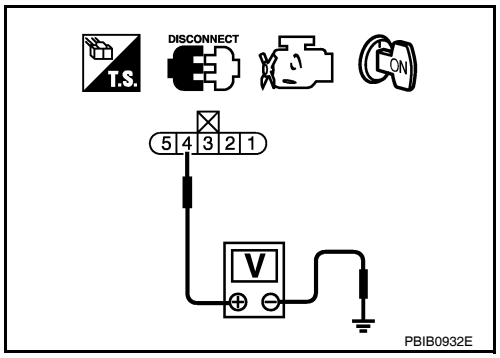

Fuel level sensor unit and fuel pump		Ground	Voltage
Connector	Terminal		
B42	4	Ground	Approx. 5 V

Is the inspection result normal?

YES >> GO TO 4.
NO >> GO TO 3.

3. DETECT MALFUNCTIONING PART

Check the following.

- Harness connectors E29, B10
- Harness for open or short between ECM and “fuel level sensor unit and fuel pump”

>> Repair open circuit or short to ground or short to power in harness or connector.

4. CHECK FUEL TANK TEMPERATURE SENSOR GROUND CIRCUIT FOR OPEN AND SHORT

1. Turn ignition switch OFF.
2. Check the continuity between “fuel level sensor unit and fuel pump” harness connector and ECM harness connector.

Fuel level sensor unit and fuel pump		ECM		Continuity
Connector	Terminal	Connector	Terminal	
B42	5	E10	104	Existed

3. Also check harness for short to ground and short to power.

Is the inspection result normal?

YES >> GO TO 6.
NO >> GO TO 5.

5. DETECT MALFUNCTIONING PART

Check the following.
- Harness connectors B1, M6
- Harness connectors E30, M1
- Harness for open or short between “fuel level sensor unit and fuel pump” and ECM

>> Repair open circuit or short to ground or short to power in harness or connector.

6. CHECK FUEL TANK TEMPERATURE SENSOR

Refer to EC-264, "Component Inspection".

Is the inspection result normal?

YES >> GO TO 7.
NO >> Replace “fuel level sensor unit and fuel pump”.

7. CHECK INTERMITTENT INCIDENT

Refer to GI-42, "Intermittent Incident".

>> INSPECTION END

Component Inspection

INFOID:0000000004349300

1. CHECK FUEL TANK TEMPERATURE SENSOR

1. Turn ignition switch OFF.
2. Disconnect “fuel level sensor unit and fuel pump” harness connector.
3. Remove fuel level sensor unit.
4. Check resistance between “fuel level sensor unit and fuel pump” terminals by heating with hot water as shown in the figure.

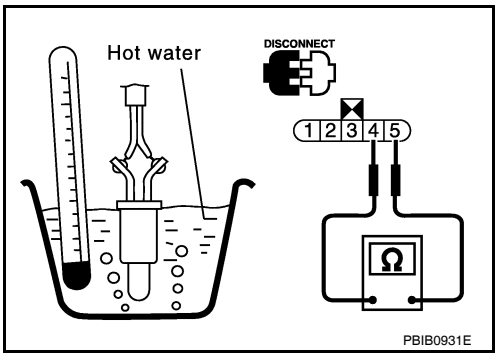

Terminals	Condition		Resistance
4 and 5	Temperature °C (°F)	20 (68)	2.3 - 2.7 kΩ
		50 (122)	0.79 - 0.90 kΩ

Is the inspection result normal?

YES >> INSPECTION END
NO >> Replace “fuel level sensor unit and fuel pump”.

P0182, P0183 FTT SENSOR

Description

INFOID:0000000004349301

The fuel tank temperature sensor is used to detect the fuel temperature inside the fuel tank. The sensor modifies a voltage signal from the ECM. The modified signal returns to the ECM as the fuel temperature input. The sensor uses a thermistor which is sensitive to the change in temperature. The electrical resistance of the thermistor decreases as temperature increases.

<Reference data>

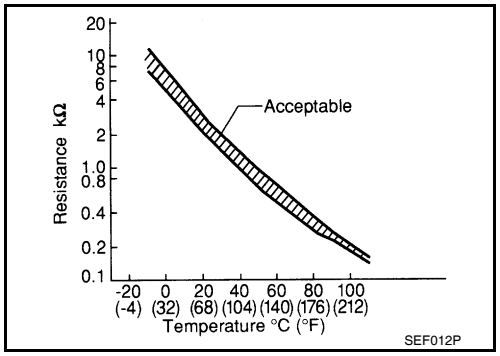

Fluid temperature °C (°F)]	Voltage* (V)	Resistance (kΩ
20 (68)	3.5	2.3 - 2.7
50 (122)	2.2	0.79 - 0.90

*: These data are reference values and are measured between ECM terminal 95 (Fuel tank temperature sensor) and ground.

CAUTION:

Do not use ECM ground terminals when measuring input/output voltage. Doing so may result in damage to the ECM's transistor. Use a ground other than ECM terminals, such as the ground.

DTC Logic

INFOID:0000000004349302

DTC DETECTION LOGIC

DTC No.	Trouble diagnosis name	DTC detecting condition	Possible cause
P0182	Fuel tank temperature sensor circuit low input	An excessively low voltage from the sensor is sent to ECM.	• Harness or connectors (The sensor circuit is open or shorted.) • Fuel tank temperature sensor
P0183	Fuel tank temperature sensor circuit high input	An excessively high voltage from the sensor is sent to ECM.	

DTC CONFIRMATION PROCEDURE

1.PRECONDITIONING

If DTC Confirmation Procedure has been previously conducted, always turn ignition switch OFF and wait at least 10 seconds before conducting the next test.

>> GO TO 2.

2.PERFORM DTC CONFIRMATION PROCEDURE

1. Turn ignition switch ON and wait at least 5 seconds.
2. Check 1st trip DTC.

Is 1st trip DTC detected?

YES >> Go to EC-265, "Diagnosis Procedure".
NO >> INSPECTION END

Diagnosis Procedure

INFOID:0000000004349303

1.CHECK GROUND CONNECTION

1. Turn ignition switch OFF.
2. Check ground connection E9. Refer to Ground Inspection in GI-45, "Circuit Inspection".

Is the inspection result normal?

YES >> GO TO 2.
NO >> Repair or replace ground connection.

2.CHECK FUEL TANK TEMPERATURE SENSOR POWER SUPPLY CIRCUIT

1. Turn ignition switch OFF.
2. Disconnect “fuel level sensor unit and fuel pump” harness connector.
3. Turn ignition switch ON.
4. Check the voltage between “fuel level sensor unit and fuel pump” harness connector and ground.

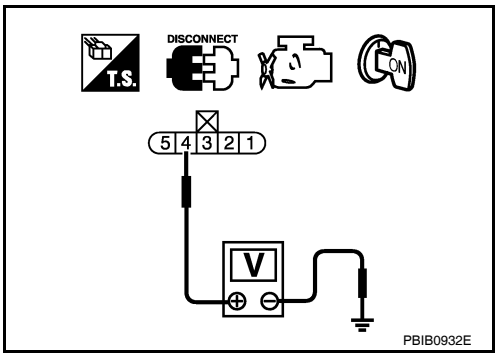

Fuel level sensor unit and fuel pump		Ground	Voltage
Connector	Terminal		
B42	4	Ground	Approx. 5 V

Is the inspection result normal?

YES >> GO TO 4.
NO >> GO TO 3.

3. DETECT MALFUNCTIONING PART

Check the following.
- Harness connectors E29, B10
- Harness for open or short between ECM and “fuel level sensor unit and fuel pump”

>> Repair open circuit or short to ground or short to power in harness or connector.

4. CHECK FUEL TANK TEMPERATURE SENSOR GROUND CIRCUIT FOR OPEN AND SHORT

1. Turn ignition switch OFF.
2. Check the continuity between “fuel level sensor unit and fuel pump” harness connector and ECM harness connector.

Fuel level sensor unit and fuel pump		ECM		Continuity
Connector	Terminal	Connector	Terminal	
B42	5	E10	104	Existed

3. Also check harness for short to ground and short to power.

Is the inspection result normal?

YES >> GO TO 6.
NO >> GO TO 5.

5. DETECT MALFUNCTIONING PART

Check the following.
- Harness connectors B1, M6
- Harness connectors E30, M1
- Harness for open or short between “fuel level sensor unit and fuel pump” and ECM

>> Repair open circuit or short to ground or short to power in harness or connector.

6. CHECK FUEL TANK TEMPERATURE SENSOR

Refer to EC-264, "Component Inspection".

Is the inspection result normal?

YES >> GO TO 7.
NO >> Replace “fuel level sensor unit and fuel pump”.

7. CHECK INTERMITTENT INCIDENT

Refer to GI-42, "Intermittent Incident".

>> INSPECTION END

Component Inspection

INFOID:0000000004349304

1. CHECK FUEL TANK TEMPERATURE SENSOR

1. Turn ignition switch OFF.
2. Disconnect “fuel level sensor unit and fuel pump” harness connector.
3. Remove fuel level sensor unit.
4. Check resistance between “fuel level sensor unit and fuel pump” terminals by heating with hot water as shown in the figure.

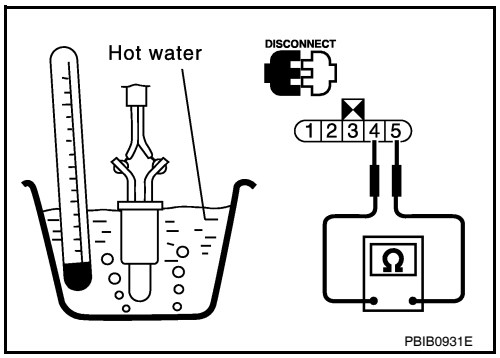

Terminals	Condition		Resistance
4 and 5	Temperature °C (°F)	20 (68)	2.3 - 2.7 kΩ
		50 (122)	0.79 - 0.90 kΩ

Is the inspection result normal?

YES >> INSPECTION END
NO >> Replace “fuel level sensor unit and fuel pump”.

P0222, P0223 TP SENSOR

Description

INFOID:0000000004455875

Electric throttle control actuator consists of throttle control motor, throttle position sensor, etc. The throttle position sensor responds to the throttle valve movement.
The throttle position sensor has two sensors. These sensors are a kind of potentiometers which transform the throttle valve position into output voltage, and emit the voltage signal to the ECM. In addition, these sensors detect the opening and closing speed of the throttle valve and feed the voltage signals to the ECM. The ECM judges the current opening angle of the throttle valve from these signals and the ECM controls the throttle control motor to make the throttle valve opening angle properly in response to driving condition.

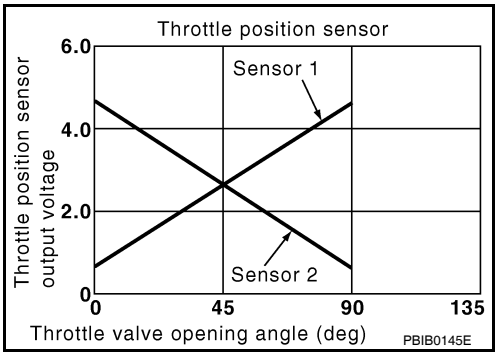

DTC Logic

INFOID:0000000004349306

DTC DETECTION LOGIC

DTC No.	Trouble diagnosis name	DTC detecting condition	Possible cause
P0222	Throttle position sensor 1 circuit low input	An excessively low voltage from the TP sensor 1 is sent to ECM.	• Harness or connectors (TP sensor 1 circuit is open or shorted.) • Electric throttle control actuator (TP sensor 1)
P0223	Throttle position sensor 1 circuit high input	An excessively high voltage from the TP sensor 1 is sent to ECM.	

DTC CONFIRMATION PROCEDURE

1. PRECONDITIONING

If DTC Confirmation Procedure has been previously conducted, always turn ignition switch OFF and wait at least 10 seconds before conducting the next test.
TESTING CONDITION:
Before performing the following procedure, confirm that battery voltage is more than 8V at idle.

>> GO TO 2.

2. PERFORM DTC CONFIRMATION PROCEDURE

1. Start engine and let it idle for 1 second.
2. Check DTC.

Is DTC detected?

YES >> Go to EC-268, "Diagnosis Procedure".
NO >> INSPECTION END

Diagnosis Procedure

INFOID:0000000004349307

1. CHECK GROUND CONNECTION

1. Turn ignition switch OFF.
2. Check ground connection E9. Refer to Ground Inspection in GI-45, "Circuit Inspection".

Is the inspection result normal?

YES >> GO TO 2.
NO >> Repair or replace ground connection.

2. CHECK THROTTLE POSITION SENSOR 1 POWER SUPPLY CIRCUIT

1. Disconnect electric throttle control actuator harness connector.
2. Turn ignition switch ON.

3. Check the voltage between electric throttle control actuator harness connector and ground.

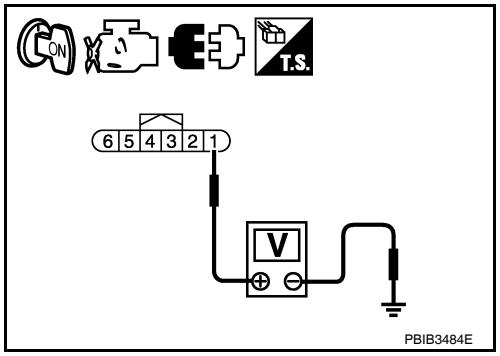

Electric throttle control actuator		Ground	Voltage
Connector	Terminal		
F57	1	Ground	Approx. 5 V

Is the inspection result normal?

YES >> GO TO 3.
NO >> Repair open circuit or short to ground or short to power in harness or connectors.

3. CHECK THROTTLE POSITION SENSOR 1 GROUND CIRCUIT FOR OPEN AND SHORT

1. Turn ignition switch OFF.
2. Disconnect ECM harness connector.
3. Check the continuity between electric throttle control actuator harness connector and ECM harness connector.

Electric throttle control actuator		ECM		Continuity
Connector	Terminal	Connector	Terminal	
F57	4	F13	36	Existed

4. Also check harness for short to ground and short to power.

Is the inspection result normal?

YES >> GO TO 4.
NO >> Repair open circuit or short to ground or short to power in harness or connectors.

4. CHECK THROTTLE POSITION SENSOR 1 INPUT SIGNAL CIRCUIT FOR OPEN AND SHORT

1. Check the continuity between electric throttle control actuator harness connector and ECM harness connector.

Electric throttle control actuator		ECM		Continuity
Connector	Terminal	Connector	Terminal	
F57	2	F13	37	Existed

2. Also check harness for short to ground and short to power.

Is the inspection result normal?

YES >> GO TO 5.
NO >> Repair open circuit or short to ground or short to power in harness or connectors.

5. CHECK THROTTLE POSITION SENSOR

Refer to EC-270, "Component Inspection".

Is the inspection result normal?

YES >> GO TO 7.
NO >> GO TO 6.

6. REPLACE ELECTRIC THROTTLE CONTROL ACTUATOR

1. Replace electric throttle control actuator.
2. Go to EC-29, "THROTTLE VALVE CLOSED POSITION LEARNING : Special Repair Requirement".

>> INSPECTION END

7. CHECK INTERMITTENT INCIDENT

Refer to GI-42, "Intermittent Incident".

>> INSPECTION END

Component Inspection

INFOID:0000000004349308

1. CHECK THROTTLE POSITION SENSOR

1. Turn ignition switch OFF.
2. Reconnect all harness connectors disconnected.
3. Perform EC-29, "THROTTLE VALVE CLOSED POSITION LEARNING : Special Repair Requirement".
4. Turn ignition switch ON.
5. Set shift lever to D (CVT) or 1st (M/T) position.
6. Check the voltage between ECM harness connector and ground.

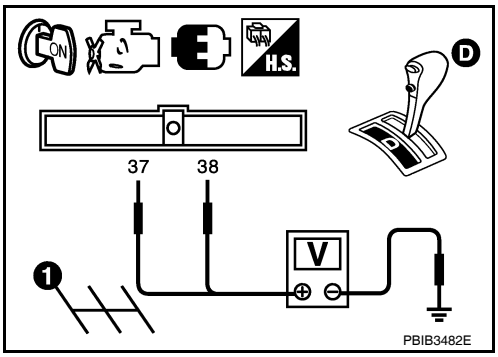

ECM		Ground	Condition		Voltage
Connector	Terminal				
F13	37 (TP sensor 1 signal)	Ground	Accelerator pedal	Fully released	More than 0.36 V
				Fully de-pressed	Less than 4.75 V
	38 (TP sensor 2 signal)			Fully released	Less than 4.75 V
				Fully de-pressed	More than 0.36 V

Is the inspection result normal?

YES >> INSPECTION END
NO >> GO TO 2.

2. REPLACE ELECTRIC THROTTLE CONTROL ACTUATOR

1. Replace electric throttle control actuator.
2. Go to EC-29, "THROTTLE VALVE CLOSED POSITION LEARNING : Special Repair Requirement".

>> INSPECTION END

Special Repair Requirement

INFOID:0000000004349309

1. PERFORM THROTTLE VALVE CLOSED POSITION LEARNING

Refer to EC-29, "THROTTLE VALVE CLOSED POSITION LEARNING : Special Repair Requirement"

>> GO TO 2.

2. PERFORM IDLE AIR VOLUME LEARNING

Refer to EC-30, "IDLE AIR VOLUME LEARNING : Special Repair Requirement"

>> END

P0300, P0301, P0302, P0303, P0304 MISFIRE

DTC Logic

INFOID:0000000004349310

DTC DETECTION LOGIC

When a misfire occurs, engine speed will fluctuate. If the engine speed fluctuates enough to cause the crankshaft position (CKP) sensor (POS) signal to vary, ECM can determine that a misfire is occurring.

Sensor	Input signal to ECM	ECM function
Crankshaft position sensor (POS)	Engine speed	On board diagnosis of misfire

The misfire detection logic consists of the following two conditions.

1. One Trip Detection Logic (Three Way Catalyst Damage)
   On the 1st trip, when a misfire condition occurs that can damage the three way catalyst (TWC) due to overheating, the MIL will blink.
   When a misfire condition occurs, the ECM monitors the CKP sensor signal every 200 engine revolutions for a change.
   When the misfire condition decreases to a level that will not damage the TWC, the MIL will turn off.
   If another misfire condition occurs that can damage the TWC on a second trip, the MIL will blink.
   When the misfire condition decreases to a level that will not damage the TWC, the MIL will remain on.
   If another misfire condition occurs that can damage the TWC, the MIL will begin to blink again.
2. Two Trip Detection Logic (Exhaust quality deterioration)
   For misfire conditions that will not damage the TWC (but will affect vehicle emissions), the MIL will only light when the misfire is detected on a second trip. During this condition, the ECM monitors the CKP sensor signal every 1,000 engine revolutions.
   A misfire malfunction can be detected on any one cylinder or on multiple cylinders.

DTC No.	Trouble diagnosis name	DTC detecting condition	Possible cause
P0300	Multiple cylinder misfire detected	Multiple cylinder misfire.	• Improper spark plug • Insufficient compression • Incorrect fuel pressure • The fuel injector circuit is open or shorted • Fuel injector • Intake air leak • The ignition signal circuit is open or shorted • Lack of fuel • Signal plate • A/F sensor 1 • Incorrect PCV hose connection
P0301	No.1 cylinder misfire detected	No. 1 cylinder misfires.	
P0302	No. 2 cylinder misfire detected	No. 2 cylinder misfires.	
P0303	No. 3 cylinder misfire detected	No. 3 cylinder misfires.	
P0304	No. 4 cylinder misfire detected	No. 4 cylinder misfires.	

DTC CONFIRMATION PROCEDURE

1. PRECONDITIONING

If DTC Confirmation Procedure has been previously conducted, always turn ignition switch OFF and wait at least 10 seconds before conducting the next test.

>> GO TO 2.

2. PERFORM DTC CONFIRMATION PROCEDURE-I

1. Start engine and warm it up to normal operating temperature.
2. Turn ignition switch OFF and wait at least 10 seconds.
3. Restart engine and let it idle for about 15 minutes.
4. Check 1st trip DTC.

Is 1st trip DTC detected?

YES >> Go to EC-272, "Diagnosis Procedure".
NO >> GO TO 3.

3. PERFORM DTC CONFIRMATION PROCEDURE-II

1. Turn ignition switch OFF and wait at least 10 seconds.

2. Start engine and drive the vehicle under the similar conditions to (1st trip) Freeze Frame Data for a certain time. Refer to the table below.
Hold the accelerator pedal as steady as possible.
The similar conditions to (1st trip) Freeze Frame Data means the vehicle operation that the following conditions should be satisfied at the same time.
CAUTION:
Always drive vehicle in safe manner according to traffic conditions and obey all traffic laws when driving.

Engine speed	Engine speed in the freeze frame data ± 400 rpm
Vehicle speed	Vehicle speed in the freeze frame data ± 10km/h (6 MPH)
Basic fuel schedule	Basic fuel schedule in freeze frame data × (1 ± 0.1)
Engine coolant temperature (T) condition	When the freeze frame data shows lower than 70 °C (158 °F), T should be lower than 70 °C (158 °F).
	When the freeze frame data shows higher than or equal to 70 °C (158 °F), T should be higher than or equal to 70 °C (158 °F).

The time to driving varies according to the engine speed in the freeze frame data.

Engine speed	Time
Around 1,000 rpm	Approximately 10 minutes
Around 2,000 rpm	Approximately 5 minutes
More than 3,000 rpm	Approximately 3.5 minutes

3. Check 1st trip DTC.

Is 1st trip DTC detected?

YES >> Go to EC-272, "Diagnosis Procedure".
NO >> INSPECTION END

Diagnosis Procedure

INFOID:0000000004349311

1. CHECK FOR INTAKE AIR LEAK AND PCV HOSE

1. Start engine and run it at idle speed.
2. Listen for the sound of the intake air leak.
3. Check PCV hose connection.

Is intake air leak detected?

YES >> Discover air leak location and repair.
NO >> GO TO 2.

2. CHECK FOR EXHAUST SYSTEM CLOGGING

Stop engine and visually check exhaust tube, three way catalyst and muffler for dents.

Is the inspection result normal?

YES-1 >> With CONSULT-III: GO TO 3.
YES-2 >> Without CONSULT-III: GO TO 4.
NO >> Repair or replace it.

3. PERFORM POWER BALANCE TEST

With CONSULT-III

1. Start engine.
2. Perform “POWER BALANCE” in “ACTIVE TEST” mode with CONSULT-III.
3. Make sure that each circuit produces a momentary engine speed drop.

Is the inspection result normal?

YES >> GO TO 9.
NO >> GO TO 4.

4. CHECK FUNCTION OF FUEL INJECTOR

1. Start engine and let engine idle.

2. Listen to each fuel injector operating sound.

Clicking noise should be heard.

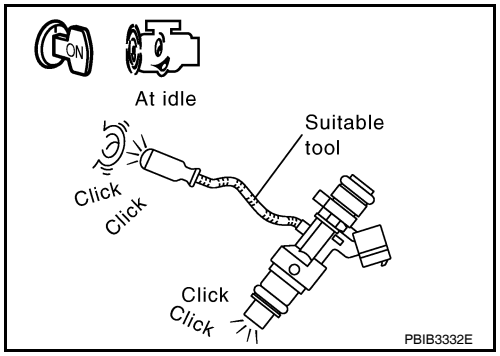

Is the inspection result normal?

YES >> GO TO 5.
NO >> Perform trouble diagnosis for FUEL INJECTOR, refer to EC-464, "Component Inspection".

5. CHECK FUNCTION OF IGNITION COIL-I

CAUTION:
Do the following procedure in the place where ventilation is good without the combustible.

1. Turn ignition switch OFF.
2. Remove fuel pump fuse in IPDM E/R to release fuel pressure.
   NOTE:
   Do not use CONSULT-III to release fuel pressure, or fuel pressure applies again during the following procedure.
3. Start engine.
4. After engine stalls, crank it two or three times to release all fuel pressure.
5. Turn ignition switch OFF.
6. Remove all ignition coil harness connectors to avoid the electrical discharge from the ignition coils.
7. Remove ignition coil and spark plug of the cylinder to be checked.
8. Crank engine for 5 seconds or more to remove combustion gas in the cylinder.
9. Connect spark plug and harness connector to ignition coil.
10. Fix ignition coil using a rope etc. with gap of 13 - 17 mm (0.52 - 0.66 in) between the edge of the spark plug and grounded metal portion as shown in the figure.
11. Crank engine for about 3 seconds, and check whether spark is generated between the spark plug and the grounded metal portion.

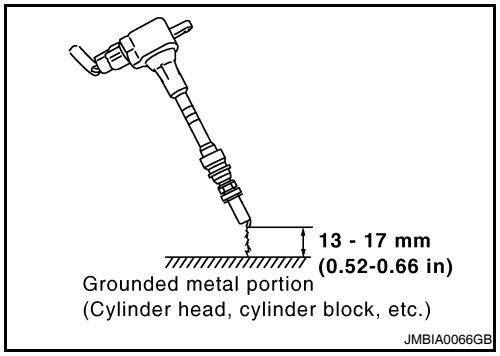

Spark should be generated.

CAUTION:
- **Do not approach to the spark plug and the ignition coil within 50 cm (19.7 in). Be careful not to get an electrical shock while checking, because the electrical discharge voltage becomes 20kV or more.**
- **It might cause to damage the ignition coil if the gap of more than 17 mm (0.66 in) is taken.**

NOTE:
When the gap is less than 13 mm (0.52 in), the spark might be generated even if the coil is malfunctioning.

Is the inspection result normal?

YES >> GO TO 9.
NO >> GO TO 6.

6. CHECK FUNCTION OF IGNITION COIL-II

1. Turn ignition switch OFF.
2. Disconnect spark plug and connect a known-good spark plug.
3. Crank engine for about 3 seconds, and recheck whether spark is generated between the spark plug and the grounded metal portion.

Spark should be generated.

Is the inspection result normal?

YES >> GO TO 7.
NO >> Check ignition coil, power transistor and their circuits. Refer to EC-470, "Component Function Check".

7. CHECK SPARK PLUG

Check the initial spark plug for fouling, etc.

Is the inspection result normal?

YES >> Replace spark plug(s) with standard type one(s). For spark plug type, refer to EM-99, "Standard and Limit".
NO >> Repair or clean spark plug. Then GO TO 8.

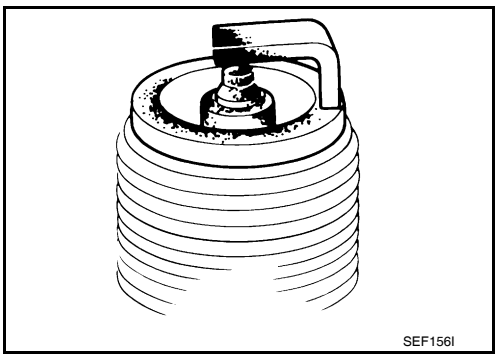

8. CHECK FUNCTION OF IGNITION COIL-III

1. Reconnect the initial spark plugs.
2. Crank engine for about 3 seconds, and recheck whether spark is generated between the spark plug and the grounded portion.

Spark should be generated.

Is the inspection result normal?

YES >> INSPECTION END
NO >> Replace spark plug(s) with standard type one(s). For spark plug type, refer to EM-99, "Standard and Limit".

9. CHECK COMPRESSION PRESSURE

Check compression pressure. Refer to EM-23, "Compression pressure".

Is the inspection result normal?

YES >> GO TO 10.
NO >> Check pistons, piston rings, valves, valve seats and cylinder head gaskets.

10. CHECK FUEL PRESSURE

1. Install all removed parts.
2. Check fuel pressure. Refer to EC-550, "Inspection".

Is the inspection result normal?

YES >> GO TO 12.
NO >> GO TO 11.

11. DETECT MALFUNCTIONING PART

Check fuel hoses and fuel tubes for clogging.

Is the inspection result normal?

YES >> Replace “fuel filter and fuel pump assembly”.
NO >> Repair or replace.

12. CHECK IGNITION TIMING

Check the following items. Refer to EC-24, "BASIC INSPECTION : Special Repair Requirement".
For specification, refer to EC-555, "Ignition Timing".

Is the inspection result normal?

YES >> GO TO 13.
NO >> Follow the EC-24, "BASIC INSPECTION : Special Repair Requirement".

13. CHECK A/F SENSOR 1 INPUT SIGNAL CIRCUIT

1. Turn ignition switch OFF.
2. Disconnect corresponding A/F sensor 1 harness connector.
3. Disconnect ECM harness connector.
4. Check the continuity between A/F sensor 1 harness connector and ECM harness connector.

A/F sensor 1		ECM		Continuity
Connector	Terminal	Connector	Terminal	
F44	1	F13	45	Existed
	2		49	

5. Check the continuity between A/F sensor 1 harness connector or ECM harness connector and ground.

A/F sensor 1		ECM		Ground	Continuity
Connector	Terminal	Connector	Terminal		
F44	1	F13	45	Ground	Not existed
	2		49		

6. Also check harness for short to power.

Is the inspection result normal?

YES >> GO TO 14.
NO >> Repair open circuit or short to ground or short to power in harness or connectors.

14. CHECK A/F SENSOR 1 HEATER

Refer to EC-157, "Component Inspection".

Is the inspection result normal?

YES >> GO TO 15.
NO >> Replace A/F sensor 1.

15. CHECK MASS AIR FLOW SENSOR

With CONSULT-III
Check “MASS AIR FLOW” in “DATA MONITOR” mode with CONSULT-III.
For specification, refer toEC-555, "Mass Air Flow Sensor".

With GST
Check mass air flow sensor signal in Service $01 with GST.
For specification, refer toEC-555, "Mass Air Flow Sensor".

Is the measurement value within the specification?

YES >> GO TO 16.
NO >> Check connectors for rusted terminals or loose connections in the mass air flow sensor circuit or ground. Refer to EC-168, "DTC Logic".

16. CHECK SYMPTOM TABLE

Check items on the rough idle symptom in EC-539, "Symptom Table".

Is the inspection result normal?

YES >> GO TO 17.
NO >> Repair or replace.

17. ERASE THE 1ST TRIP DTC

Some tests may cause a 1st trip DTC to be set.
Erase the 1st trip DTC from the ECM memory after performing the tests. Refer to EC-112, "Diagnosis Description".

>> GO TO 18.

18. CHECK INTERMITTENT INCIDENT

Refer to GI-42, "Intermittent Incident".

>> INSPECTION END

P0327, P0328 KS

Description

INFOID:0000000004349312

The knock sensor is attached to the cylinder block. It senses engine knocking using a piezoelectric element. A knocking vibration from the cylinder block is sensed as vibrational pressure. This pressure is converted into a voltage signal and sent to the ECM.

DTC Logic

INFOID:0000000004349313

DTC DETECTION LOGIC

DTC No.	Trouble diagnosis name	DTC detected condition	Possible cause
P0327	Knock sensor circuit low input	An excessively low voltage from the sensor is sent to ECM.	• Harness or connectors (The sensor circuit is open or shorted.) • Knock sensor
P0328	Knock sensor circuit high input	An excessively high voltage from the sensor is sent to ECM.	

DTC CONFIRMATION PROCEDURE

1.PRECONDITIONING

If DTC Confirmation Procedure has been previously conducted, always turn ignition switch OFF and wait at least 10 seconds before conducting the next test.
TESTING CONDITION:
Before performing the following procedure, confirm that battery voltage is more than 10V at idle.

>> GO TO 2.

2.PERFORM DTC CONFIRMATION PROCEDURE

1. Start engine and run it for at least 5 seconds at idle speed.
2. Check 1st trip DTC.

Is 1st trip DTC detected?

YES >> Go to EC-276, "Diagnosis Procedure".
NO >> INSPECTION END

Diagnosis Procedure

INFOID:0000000004349314

1.CHECK GROUND CONNECTION

1. Turn ignition switch OFF.
2. Check ground connection E9. Refer to Ground Inspection in GI-45, "Circuit Inspection".

Is the inspection result normal?

YES >> GO TO 2.
NO >> Repair or replace ground connection.

2.CHECK KNOCK SENSOR GROUND CIRCUIT FOR OPEN AND SHORT

1. Disconnect knock sensor harness connector and disconnect ECM harness connector.
2. Check the continuity between knock sensor harness connector and ECM harness connector.

Knock sensor		ECM		Continuity
Connector	Terminal	Connector	Terminal	
F45	2	F13	67	Existed

3. Also check harness for short to ground and short to power.

Is the inspection result normal?

YES >> GO TO 3.
NO >> Repair open circuit or short to ground or short to power in harness or connectors.

3. CHECK KNOCK SENSOR INPUT SIGNAL CIRCUIT FOR OPEN AND SHORT

1. Check the continuity between knock sensor harness connector and ECM harness connector.

Knock sensor		ECM		Continuity
Connector	Terminal	Connector	Terminal	
F45	1	F13	61	Existed

2. Also check harness for short to ground and short to power.

Is the inspection result normal?

YES >> GO TO 4.
NO >> Repair open circuit or short to ground or short to power in harness or connectors.

4. CHECK KNOCK SENSOR

Refer to EC-277, "Component Inspection".

Is the inspection result normal?

YES >> GO TO 5.
NO >> Replace knock sensor.

5. CHECK INTERMITTENT INCIDENT

Refer to GI-42, "Intermittent Incident".

>> INSPECTION END

Component Inspection

INFOID:0000000004349315

1. CHECK KNOCK SENSOR

1. Turn ignition switch OFF.
2. Disconnect knock sensor harness connector.
3. Check resistance between knock sensor terminals as follows.

NOTE:
It is necessary to use an ohmmeter which can measure more than 10 MΩ.

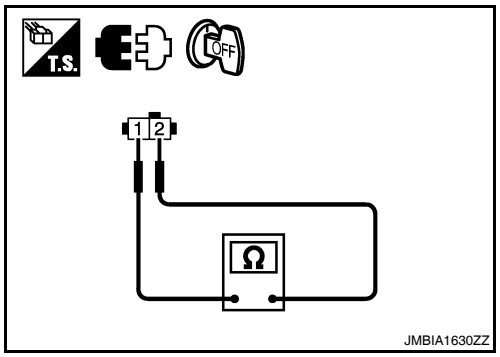

Terminals	Resistance
1 and 2	Approx. 532 - 588 kΩ [at 20°C (68°F)]

CAUTION:
Do not use any knock sensors that have been dropped or physically damaged. Use only new ones.

Is the inspection result normal?

YES >> INSPECTION END
NO >> Replace knock sensor.

P0335 CKP SENSOR (POS)

Description

INFOID:0000000004349316

The crankshaft position sensor (POS) is located on the oil pan facing the gear teeth (cogs) of the signal plate. It detects the fluctuation of the engine revolution.
The sensor consists of a permanent magnet and Hall IC.
When the engine is running, the high and low parts of the teeth cause the gap with the sensor to change.
The changing gap causes the magnetic field near the sensor to change.
Due to the changing magnetic field, the voltage from the sensor changes.
The ECM receives the voltage signal and detects the fluctuation of the engine revolution.
ECM receives the signals as shown in the figure.

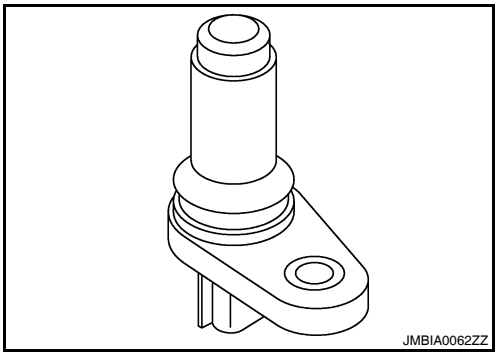

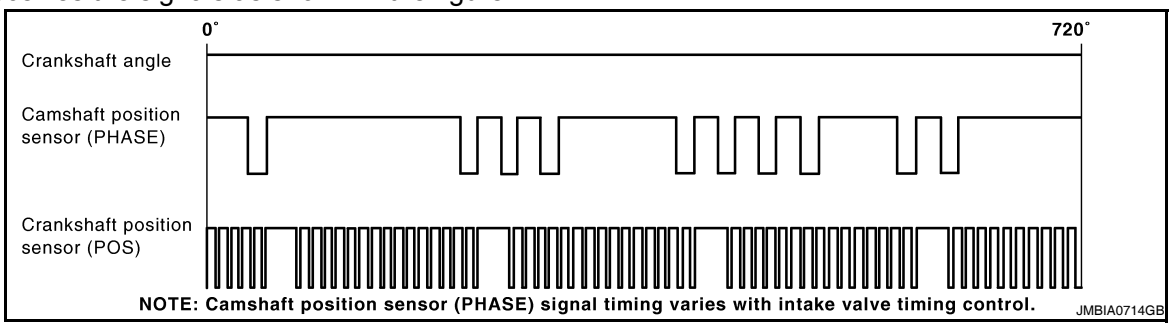

DTC Logic

INFOID:0000000004349317

DTC DETECTION LOGIC

DTC No.	Trouble diagnosis name	DTC detecting condition	Possible cause
P0335	Crankshaft position sensor (POS) circuit	• The crankshaft position sensor (POS) signal is not detected by the ECM during the first few seconds of engine cranking. • The proper pulse signal from the crankshaft position sensor (POS) is not sent to ECM while the engine is running. • The crankshaft position sensor (POS) signal is not in the normal pattern during engine running.	• Harness or connectors [Crankshaft position sensor (POS) circuit is open or shorted.] (Refrigerant pressure sensor circuit is shorted.) (Accelerator pedal position sensor circuit is shorted.) (EVAP control system pressure sensor circuit is shorted.) (Tumble control valve position sensor circuit is shorted.) • Crankshaft position sensor (POS) • Refrigerant pressure sensor • Accelerator pedal position sensor • EVAP control system pressure sensor • Tumble control valve position sensor • Signal plate

DTC CONFIRMATION PROCEDURE

1.PRECONDITIONING

If DTC Confirmation Procedure has been previously conducted, always turn ignition switch OFF and wait at least 10 seconds before conducting the next test.
TESTING CONDITION:
Before performing the following procedure, confirm that battery voltage is more than 10.5V with ignition switch ON.

>> GO TO 2.

2. PERFORM DTC CONFIRMATION PROCEDURE

1. Start engine and let it idle for at least 5 seconds.
   If engine does not start, crank engine for at least 2 seconds.
2. Check 1st trip DTC.

Is 1st trip DTC detected?

YES >> Go to EC-279, "Diagnosis Procedure".
NO >> INSPECTION END

Diagnosis Procedure

INFOID:0000000004349318

1. CHECK GROUND CONNECTION

1. Turn ignition switch OFF.
2. Check ground connection E9. Refer to Ground Inspection in GI-45, "Circuit Inspection".

Is the inspection result normal?

YES >> GO TO 2.
NO >> Repair or replace ground connection.

2. CHECK CRANKSHAFT POSITION (CKP) SENSOR (POS) POWER SUPPLY CIRCUIT-I

1. Disconnect crankshaft position (CKP) sensor (POS) harness connector.
2. Turn ignition switch ON.
3. Check the voltage between CKP sensor (POS) harness connector and ground.

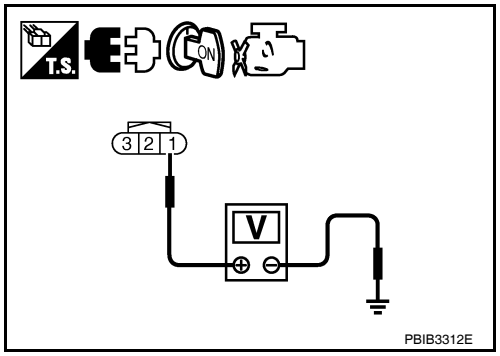

CKP sensor (POS)		Ground	Voltage
Connector	Terminal		
F30	1	Ground	Approx. 5 V

Is the inspection result normal?

YES >> GO TO 8.
NO >> GO TO 3.

3. CHECK CRANKSHAFT POSITION (CKP) SENSOR (POS) POWER SUPPLY CIRCUIT-II

1. Turn ignition switch ON.
2. Disconnect ECM harness connector.
3. Check the continuity between CKP sensor (POS) harness connector and ECM harness connector.

CKP sensor (POS)		ECM		Continuity
Connector	Terminal	Connector	Terminal	
F30	1	F13	76	Existed

Is the inspection result normal?

YES >> GO TO 4.
NO >> Repair open circuit.

4. CHECK CRANKSHAFT POSITION (CKP) SENSOR (POS) POWER SUPPLY CIRCUIT-III

Check harness for short to power and short to ground, between the following terminals.

ECM		Sensor		
Connector	Terminal	Name	Connector	Terminal
F13	72	Tumble control valve position sensor	F43	1
		Refrigerant pressure sensor	E219	1
	76	CKP sensor (POS)	F30	1
E10	87	APP sensor	E40	6
	91	EVAP control system pressure sensor	B41	3

Is the inspection result normal?

YES >> GO TO 5.
NO >> Repair short to ground or short to power in harness or connectors.

5. CHECK COMPONENTS

Check the following.
- Refrigerant pressure sensor (Refer to EC-482, "Diagnosis Procedure".)
- EVAP control system pressure sensor (Refer to EC-318, "Component Inspection".)
- Tumble control valve position sensor (Refer to EC-410, "Diagnosis Procedure".)

Is the inspection result normal?

YES >> GO TO 6.
NO >> Replace malfunctioning components.

6. CHECK APP SENSOR

Refer to EC-441, "Component Inspection".

Is the inspection result normal?

YES >> GO TO 12.
NO >> GO TO 7.

7. REPLACE ACCELERATOR PEDAL ASSEMBLY

1. Replace accelerator pedal assembly.
2. Go to EC-29, "ACCELERATOR PEDAL RELEASED POSITION LEARNING : Special Repair Requirement".

>> INSPECTION END

8. CHECK CKP SENSOR (POS) GROUND CIRCUIT FOR OPEN AND SHORT

1. Turn ignition switch OFF.
2. Check the continuity between CKP sensor (POS) harness connector and ECM harness connector.

CKP sensor (POS)		ECM		Continuity
Connector	Terminal	Connector	Terminal	
F30	2	F13	60	Existed

3. Also check harness for short to ground and short to power.

Is the inspection result normal?

YES >> GO TO 9.
NO >> Repair open circuit or short to ground or short to power in harness or connectors.

9. CHECK CKP SENSOR (POS) INPUT SIGNAL CIRCUIT FOR OPEN AND SHORT

1. Disconnect ECM harness connector.
2. Check the continuity between CKP sensor (POS) harness connector and ECM harness connector.

CKP sensor (POS)		ECM		Continuity
Connector	Terminal	Connector	Terminal	
F30	3	F13	65	Existed

3. Also check harness for short to ground and short to power.

Is the inspection result normal?

YES >> GO TO 10.
NO >> Repair open circuit or short to ground or short to power in harness or connectors.

10. CHECK CRANKSHAFT POSITION SENSOR (POS)

Refer to EC-281, "Component Inspection".

Is the inspection result normal?

YES >> GO TO 11.
NO >> Replace crankshaft position sensor (POS).

11. CHECK GEAR TOOTH

Visually check for chipping signal plate gear tooth.

Is the inspection result normal?

YES >> GO TO 12.
NO >> Replace the signal plate.

12. CHECK INTERMITTENT INCIDENT

Refer to GI-42, "Intermittent Incident".

>> INSPECTION END

Component Inspection

INFOID:0000000004349319

1. CHECK CRANKSHAFT POSITION SENSOR (POS)-I

1. Turn ignition switch OFF.
2. Loosen the fixing bolt of the sensor.
3. Disconnect crankshaft position sensor (POS) harness connector.
4. Remove the sensor.
5. Visually check the sensor for chipping.

Is the inspection result normal?

YES >> GO TO 2.
NO >> Replace crankshaft position sensor (POS).

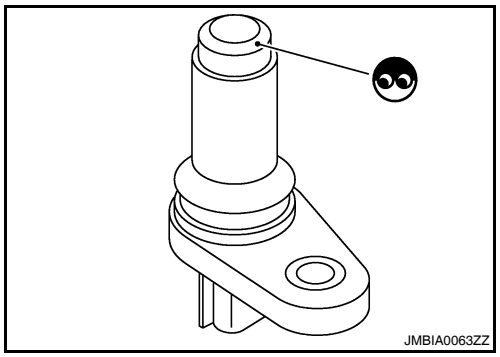

2. CHECK CRANKSHAFT POSITION SENSOR (POS)-II

Check resistance between crankshaft position sensor (POS) terminals as follows.

Terminals (Polarity)	Resistance Ω [at 25°C (77°F)]
1 (+) - 2 (-)	Except 0 or ∞
1 (+) - 3 (-)	
2 (+) - 3 (-)	

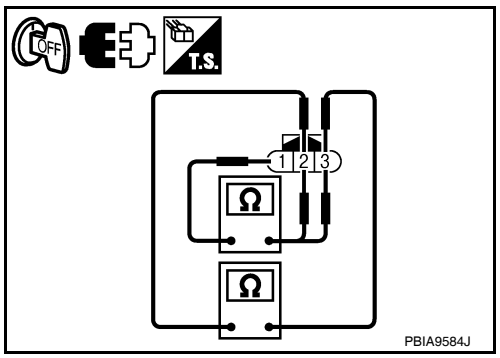

Is the inspection result normal?

YES >> INSPECTION END
NO >> Replace crankshaft position sensor (POS).

P0340 CMP SENSOR (PHASE)

Description

INFOID:0000000004349320

The camshaft position sensor (PHASE) senses the retraction of camshaft (INT) to identify a particular cylinder. The camshaft position sensor (PHASE) senses the piston position.
When the crankshaft position sensor (POS) system becomes inoperative, the camshaft position sensor (PHASE) provides various controls of engine parts instead, utilizing timing of cylinder identification signals.
The sensor consists of a permanent magnet and Hall IC.
When engine is running, the high and low parts of the teeth cause the gap with the sensor to change.
The changing gap causes the magnetic field near the sensor to change.
Due to the changing magnetic field, the voltage from the sensor changes.
ECM receives the signals as shown in the figure.

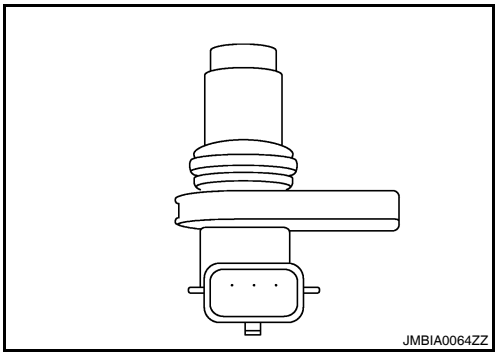

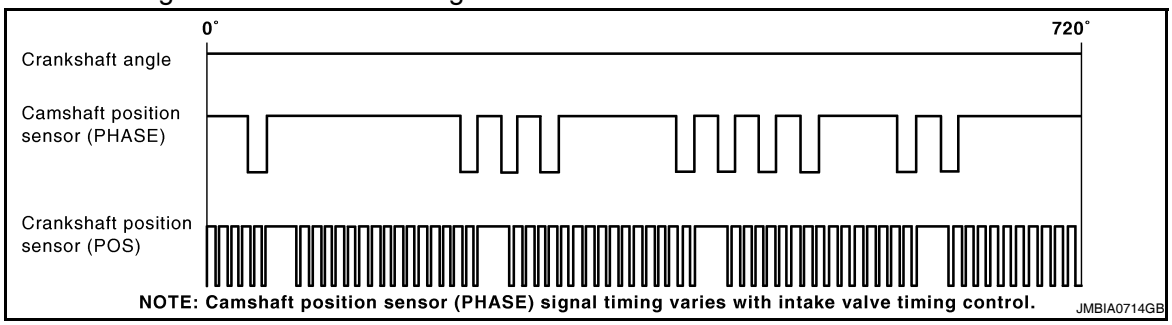

DTC Logic

INFOID:0000000004349321

DTC DETECTION LOGIC

NOTE:
If DTC P0340 is displayed with DTC P0643, first perform the trouble diagnosis for DTC P0643. Refer to EC-362, "DTC Logic".

DTC No.	Trouble diagnosis name	DTC detecting condition	Possible cause
P0340	Camshaft position sensor (PHASE) circuit	• The cylinder No. signal is not sent to ECM for the first few seconds during engine cranking. • The cylinder No. signal is not sent to ECM during engine running. • The cylinder No. signal is not in the normal pattern during engine running.	• Harness or connectors (The sensor circuit is open or shorted) • Camshaft position sensor (PHASE) • Camshaft (INT) • Starter motor (Refer to STR-6, "System Diagram".) • Starting system circuit (Refer to STR-6, "System Diagram".) • Dead (Weak) battery

DTC CONFIRMATION PROCEDURE

1. PRECONDITIONING

If DTC Confirmation Procedure has been previously conducted, always turn ignition switch OFF and wait at least 10 seconds before conducting the next test.
TESTING CONDITION:
Before performing the following procedure, confirm that battery voltage is more than 10.5V with ignition switch ON.

>> GO TO 2.

2. PERFORM DTC CONFIRMATION PROCEDURE-I

1. Start engine and let it idle for at least 5 seconds.

If engine does not start, crank engine for at least 2 seconds.
2. Check 1st trip DTC.

Is 1st trip DTC detected?

YES >> Go to EC-283, "Diagnosis Procedure".
NO >> GO TO 3.

3. PERFORM DTC CONFIRMATION PROCEDURE-I

1. Maintaining engine speed at more than 800 rpm for at least 5 seconds.
2. Check 1st trip DTC.

Is 1st trip DTC detected?

YES >> Go to EC-283, "Diagnosis Procedure".
NO >> INSPECTION END

Diagnosis Procedure

INFOID:0000000004349322

1. CHECK STARTING SYSTEM

Turn ignition switch to START position.

Does the engine turn over? Does the starter motor operate?

YES >> GO TO 2.
NO >> Check starting system.

2. CHECK GROUND CONNECTION

1. Turn ignition switch OFF.
2. Check ground connection E9. Refer to Ground Inspection in GI-45, "Circuit Inspection".

Is the inspection result normal?

YES >> GO TO 3.
NO >> Repair or replace ground connection.

3. CHECK CAMSHAFT POSITION (CMP) SENSOR (PHASE) POWER SUPPLY CIRCUIT

1. Disconnect camshaft position (CMP) sensor (PHASE) harness connector.
2. Turn ignition switch ON.
3. Check the voltage between CMP sensor (PHASE) harness connector and ground.

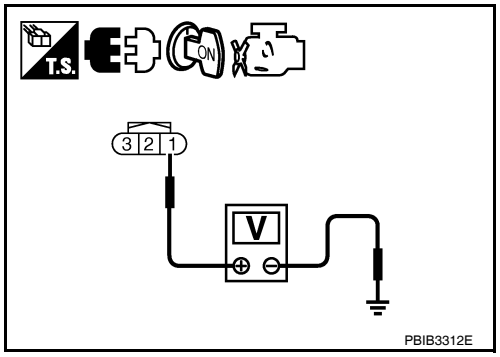

CMP sensor (PHASE)		Ground	Voltage
Connector	Terminal		
F55	1	Ground	Approx. 5 V

Is the inspection result normal?

YES >> GO TO 4.
NO >> Repair open circuit or short to ground or short to power in harness or connectors.

4. CHECK CMP SENSOR (PHASE) GROUND CIRCUIT FOR OPEN AND SHORT

1. Turn ignition switch OFF.
2. Check the continuity between CMP sensor (PHASE) harness connector and ECM harness connector.

CMP sensor (PHASE)		ECM		Continuity
Connector	Terminal	Connector	Terminal	
F55	2	F13	64	Existed

3. Also check harness for short to power.

Is the inspection result normal?

YES >> GO TO 5.
NO >> Repair open circuit or short to ground or short to power in harness or connectors.

5. CHECK CMP SENSOR (PHASE) INPUT SIGNAL CIRCUIT FOR OPEN AND SHORT

1. Disconnect ECM harness connector.
2. Check the continuity between CMP sensor (PHASE) harness connector and ECM harness connector.

CMP sensor (PHASE)		ECM		Continuity
Connector	Terminal	Connector	Terminal	
F55	3	F13	69	Existed

3. Also check harness for short to ground and short to power.

Is the inspection result normal?

YES >> GO TO 6.
NO >> Repair open circuit or short to ground or short to power in harness or connectors.

6. CHECK CAMSHAFT POSITION SENSOR (PHASE)

Refer to EC-284, "Component Inspection".

Is the inspection result normal?

YES >> GO TO 7.
NO >> Replace camshaft position sensor (PHASE).

7. CHECK CAMSHAFT (INT)

Check the following.
- Accumulation of debris to the signal plate of camshaft (1) rear end
- Chipping signal plate of camshaft rear end

Is the inspection result normal?

YES >> GO TO 8.
NO >> Remove debris and clean the signal plate of camshaft rear end or replace camshaft.

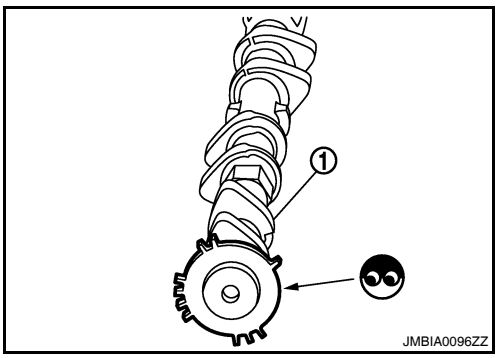

8. CHECK INTERMITTENT INCIDENT

Refer to GI-42, "Intermittent Incident".

>> INSPECTION END

Component Inspection

INFOID:0000000004349323

1. CHECK CAMSHAFT POSITION SENSOR (PHASE)-I

1. Turn ignition switch OFF.
2. Loosen the fixing bolt of the sensor.
3. Disconnect camshaft position sensor (PHASE) harness connector.
4. Remove the sensor.
5. Visually check the sensor for chipping.

Is the inspection result normal?

YES >> GO TO 2.
NO >> Replace camshaft position sensor (PHASE).

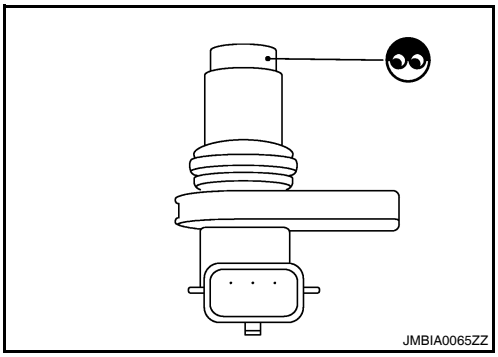

2. CHECK CAMSHAFT POSITION SENSOR (PHASE)-II

Check resistance camshaft position sensor (PHASE) terminals as follows.

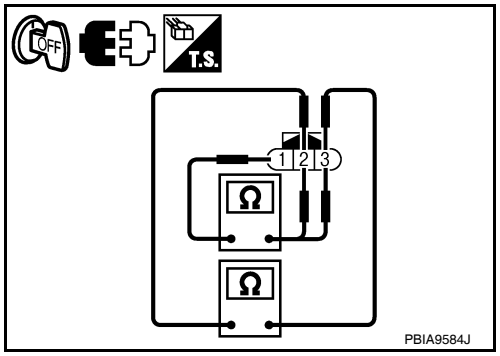

Terminals (Polarity)	Resistance
1 (+) - 2 (-)	Except 0 or ∞Ω [at 25°C (77°F)]
1 (+) - 3 (-)	
2 (+) - 3 (-)	

Is the inspection result normal?

YES >> INSPECTION END
NO >> Replace camshaft position sensor (PHASE).

P0420 THREE WAY CATALYST FUNCTION

DTC Logic

INFOID:0000000004349324

DTC DETECTION LOGIC

The ECM monitors the switching frequency ratio of air fuel ratio (A/F) sensor 1 and heated oxygen sensor 2.
A three way catalyst (manifold) with high oxygen storage capacity will indicate a low switching frequency of heated oxygen sensor 2. As oxygen storage capacity decreases, the heated oxygen sensor 2 switching frequency will increase.
When the frequency ratio of A/F sensor 1 and heated oxygen sensor 2 approaches a specified limit value, the three way catalyst (manifold) malfunction is diagnosed.

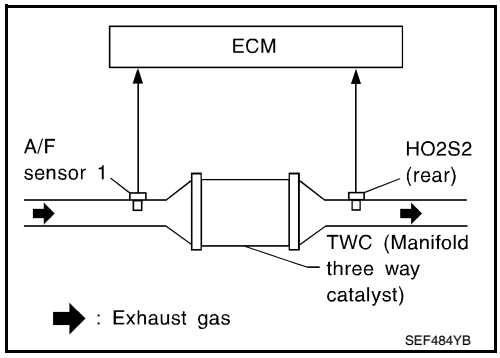

DTC No.	Trouble diagnosis name	DTC detecting condition	Possible cause
P0420	Catalyst system efficiency below threshold	• Three way catalyst (manifold) does not operate properly. • Three way catalyst (manifold) does not have enough oxygen storage capacity.	• Three way catalyst (manifold) • Exhaust tube • Intake air leaks • Fuel injector • Fuel injector leaks • Spark plug • Improper ignition timing

DTC CONFIRMATION PROCEDURE

1.PRECONDITIONING

If DTC Confirmation Procedure has been previously conducted, always turn ignition switch OFF and wait at least 10 seconds before conducting the next test.
TESTING CONDITION:
Do not hold engine speed for more than the specified minutes below.

>> GO TO 2.

2.PERFORM DTC CONFIRMATION PROCEDURE-I

CAUTION:
Always drive vehicle in safe manner according to traffic conditions and obey all traffic laws.

With CONSULT-III

1. Start engine and warm it up to the normal operating temperature.
2. Repeat the following procedure 3 times.
- Drive vehicle at a speed of 80 km/h (50 MPH) or more for at least 3 consecutive minutes.
  NOTE:
  Keep the vehicle speed as steady as possible during the cruising.
- Stop vehicle with engine running.
  NOTE:
  Never turn ignition switch OFF.
3. Select “DTC & SRT CONFIRMATION” then “SRT WORK SUPPORT” mode with CONSULT-III.
4. Drive vehicle at a speed of 80 km/h (50MPH) or more until “INCMP” of “CATALYST”changes to“CMPLT”.
   NOTE:
   - **Keep the vehicle speed as steady as possible during the cruising.**
   - **It will take at most 3 minutes until “INCMP” of “CATALYST” changes to “CMPLT”.**
5. Check 1st trip DTC.

With GST

1. Start engine and warm it up to the normal operating temperature.
2. Repeat the following procedure 3 times.
- Drive vehicle at a speed of 80 km/h (50 MPH) or more for at least 3 consecutive minutes.

NOTE:
Keep the vehicle speed as steady as possible during the cruising.

- Stop vehicle with engine running.

NOTE:
Never turn ignition switch OFF.

3. Check 1st trip DTC.

Is the inspection result normal?

YES >> Go to EC-287, "Diagnosis Procedure".
NO >> INSPECTION END

Diagnosis Procedure

INFOID:0000000004349326

1. CHECK EXHAUST SYSTEM

Visually check exhaust tubes and muffler for dent.

Is the inspection result normal?

YES >> GO TO 2.
NO >> Repair or replace.

2. CHECK EXHAUST GAS LEAK

1. Start engine and run it at idle.
2. Listen for an exhaust gas leak before the three way catalyst (manifold).

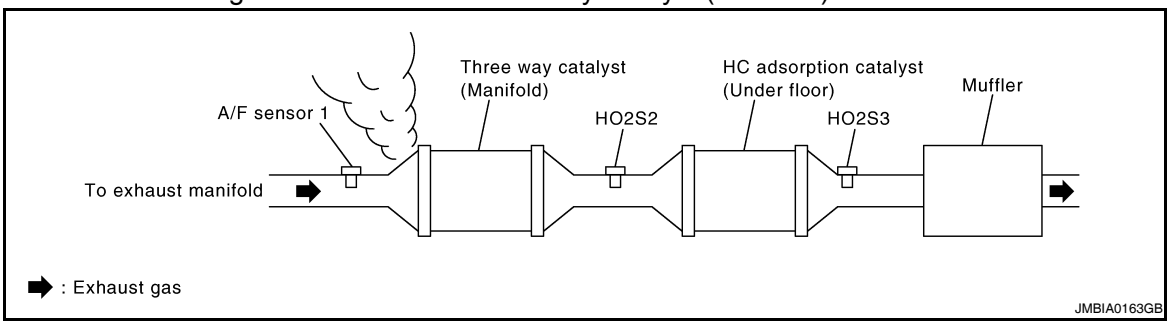

Is exhaust gas leak detected?

YES >> Repair or replace.
NO >> GO TO 3.

3. CHECK INTAKE AIR LEAK

Listen for an intake air leak after the mass air flow sensor.

Is intake air leak detected?

YES >> Repair or replace.
NO >> GO TO 4.

4. CHECK IGNITION TIMING

For procedure, refer to EC-28, "IGNITION TIMING : Special Repair Requirement".
For specification, refer to EC-555, "Idle Speed" and EC-555, "Ignition Timing".

Is the inspection result normal?

YES >> GO TO 5.
NO >> Follow the EC-24, "BASIC INSPECTION : Special Repair Requirement".

5. CHECK FUEL INJECTOR

1. Stop engine and then turn ignition switch ON.

2. Check the voltage between ECM harness connector and ground.

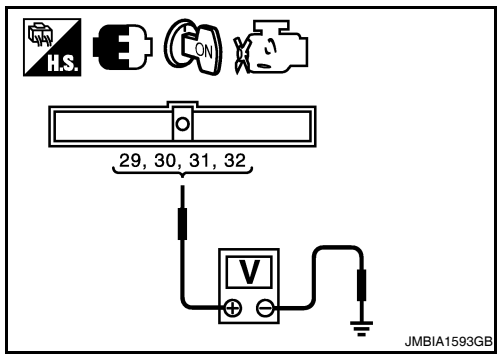

ECM		Ground	Voltage
Connector	Terminal		
F14	29	Ground	Battery voltage
	30		
	31		
	32		

Is the inspection result normal?

YES >> GO TO 6.
NO >> Perform EC-463, "Diagnosis Procedure".

6. CHECK FUNCTION OF IGNITION COIL-I

CAUTION:
Do the following procedure in the place where ventilation is good without the combustible.

1. Turn ignition switch OFF.
2. Remove fuel pump fuse in IPDM E/R to release fuel pressure.
   NOTE:
   Do not use CONSULT-III to release fuel pressure, or fuel pressure applies again during the following procedure.
3. Start engine.
4. After engine stalls, crank it two or three times to release all fuel pressure.
5. Turn ignition switch OFF.
6. Remove all ignition coil harness connectors to avoid the electrical discharge from the ignition coils.
7. Remove ignition coil and spark plug of the cylinder to be checked.
8. Crank engine for 5 seconds or more to remove combustion gas in the cylinder.
9. Connect spark plug and harness connector to ignition coil.
10. Fix ignition coil using a rope etc. with gap of 13 - 17 mm (0.52 - 0.66 in) between the edge of the spark plug and grounded metal portion as shown in the figure.
11. Crank engine for about 3 seconds, and check whether spark is generated between the spark plug and the grounded metal portion.

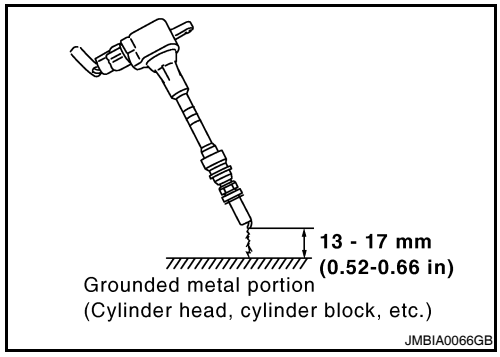

Spark should be generated.

CAUTION:
- **Do not approach to the spark plug and the ignition coil within 50 cm (19.7 in). Be careful not to get an electrical shock while checking, because the electrical discharge voltage becomes 20kV or more.**
- **It might cause to damage the ignition coil if the gap of more than 17 mm (0.66 in) is taken.**

NOTE:
When the gap is less than 13 mm (0.52 in), the spark might be generated even if the coil is malfunctioning.

Is the inspection result normal?

YES >> GO TO 10.
NO >> GO TO 7.

7. CHECK FUNCTION OF IGNITION COIL-II

1. Turn ignition switch OFF.
2. Disconnect spark plug and connect a known-good spark plug.
3. Crank engine for about 3 seconds, and recheck whether spark is generated between the spark plug and the grounded metal portion.

Spark should be generated.

Is the inspection result normal?

YES >> GO TO 8.
NO >> Check ignition coil, power transistor and their circuits. Refer to EC-470, "Diagnosis Procedure".

8. CHECK SPARK PLUG

Check the initial spark plug for fouling, etc.

Is the inspection result normal?

YES >> Replace spark plug(s) with standard type one(s). For spark plug type, refer to EM-99, "Standard and Limit".
NO >> Repair or clean spark plug. Then GO TO 9.

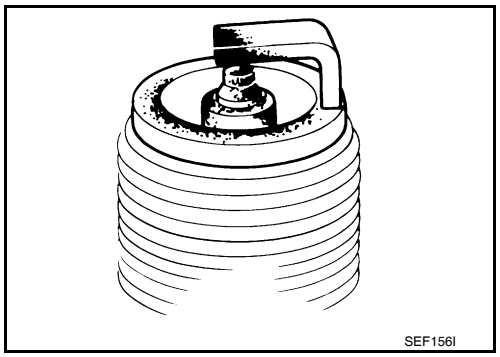

9. CHECK FUNCTION OF IGNITION COIL-III

1. Reconnect the initial spark plugs.
2. Crank engine for about three seconds, and recheck whether spark is generated between the spark plug and the grounded portion.

Spark should be generated.

Is the inspection result normal?

YES >> INSPECTION END
NO >> Replace spark plug(s) with standard type one(s). For spark plug type, refer to EM-99, "Standard and Limit".

10. CHECK FUEL INJECTOR

1. Turn ignition switch OFF.
2. Remove fuel injector assembly.
   Refer to EM-36, "Removal and Installation".
   Keep fuel hose and all fuel injectors connected to fuel tube.
3. Disconnect all ignition coil harness connectors.
4. Reconnect all fuel injector harness connectors disconnected.
5. Turn ignition switch ON.

Does fuel drip from fuel injector?

YES >> GO TO 11.
NO >> Replace the fuel injector(s) from which fuel is dripping.

11. CHECK INTERMITTENT INCIDENT

Refer to GI-42, "Intermittent Incident".

Is the inspection result normal?

YES >> Replace three way catalyst assembly.
NO >> Repair or replace harness or connector.

P0441 EVAP CONTROL SYSTEM

DTC Logic

INFOID:0000000004349327

DTC DETECTION LOGIC

NOTE:

If DTC P0441 is displayed with other DTC such as P2122, P2123, P2127, P2128 or P2138, first perform trouble diagnosis for other DTC.

In this evaporative emission (EVAP) control system, purge flow occurs during non-closed throttle conditions. Purge volume is related to air intake volume. Under normal purge conditions (non-closed throttle), the EVAP canister purge volume control solenoid valve is open to admit purge flow. Purge flow exposes the EVAP control system pressure sensor to intake manifold vacuum.

Under normal conditions (non-closed throttle), sensor output voltage indicates if pressure drop and purge flow are adequate. If not, a malfunction is determined.

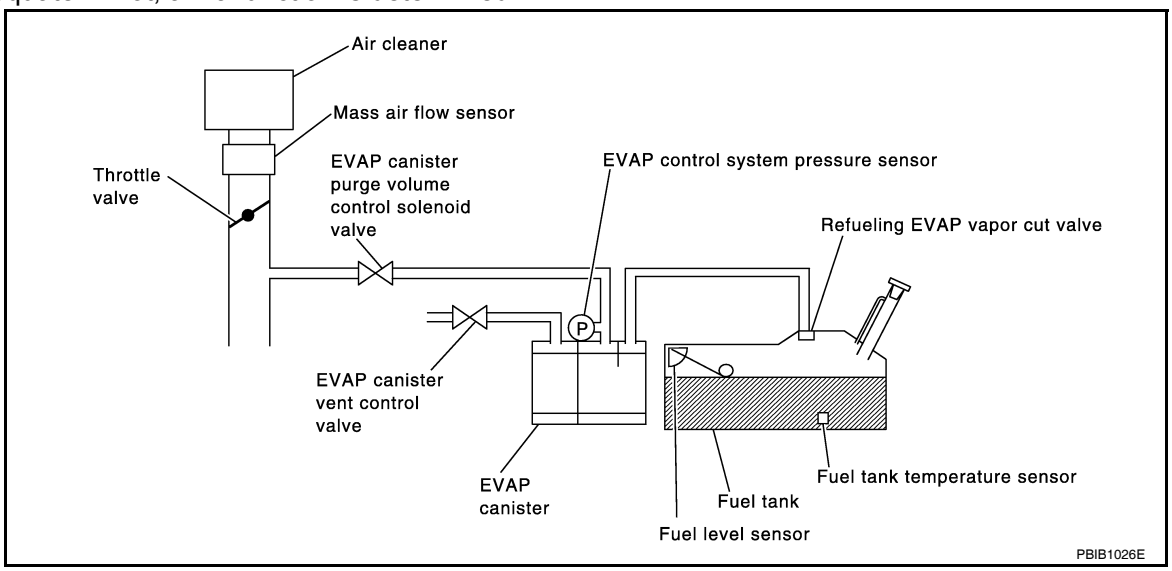

DTC No.	Trouble diagnosis name	DTC detecting condition	Possible cause
P0441	EVAP control system incorrect purge flow	EVAP control system does not operate properly, EVAP control system has a leak between intake manifold and EVAP control system pressure sensor.	• EVAP canister purge volume control solenoid valve stuck closed • EVAP control system pressure sensor and the circuit • Loose, disconnected or improper connection of rubber tube • Blocked rubber tube • Cracked EVAP canister • EVAP canister purge volume control solenoid valve circuit • Accelerator pedal position sensor • Blocked purge port • EVAP canister vent control valve

DTC CONFIRMATION PROCEDURE

1.INSPECTION START

Do you have CONSULT-III?

Do you have CONSULT-III?

YES >> GO TO 2.
NO >> GO TO 6.

2.PRECONDITIONING

If DTC Confirmation Procedure has been previously conducted, always turn ignition switch OFF and wait at least 10 seconds before conducting the next test.

TESTING CONDITION:

Always perform test at a temperature of 5°C (41°F) or more.

>> GO TO 3.

3. PERFORM DTC CONFIRMATION PROCEDURE-I

With CONSULT-III

1. Start engine and warm it up to normal operating temperature.
2. Turn ignition switch OFF and wait at least 10 seconds.
3. Start engine and let it idle for at least 70 seconds.
4. Select “PURG FLOW P0441” of “EVAPORATIVE SYSTEM” in “DTC WORK SUPPORT” mode with CONSULT-III.
5. Touch “START”.

Is COMPLETED displayed on CONSULT-III screen?

YES >> GO TO 5.
NO >> GO TO 4.

4. PERFORM DTC CONFIRMATION PROCEDURE-II

When the following conditions are met, “TESTING” will be displayed on the CONSULT-III screen. Maintain the conditions continuously until “TESTING” changes to “COMPLETED”. (It will take at least 35 seconds.)

Selector lever	Suitable position
VHCL SPEED SE	32 - 120 km/h (20 - 75 mph)
ENG SPEED	500 - 3,800 rpm
B/FUEL SCHDL	1.0 - 10.0 msec
COOLAN TEMP/S	More than 0°C (32°F)

CAUTION:
Always drive vehicle at a safe speed.
If “TESTING” is not changed for a long time, retry from step 2.

Is “COMPLETED” displayed on CONSULT-III screen?

YES >> GO TO 5.
NO >> Perform DTC CONFIRMATION PROCEDURE again. GO TO 3.

5. PERFORM DTC CONFIRMATION PROCEDURE-II

Touch “SELF-DIAG RESULT”.

Which is displayed on CONSULT-III screen?

OK >> INSPECTION END
NG >> Go to EC-292, "Diagnosis Procedure".

6. PERFORM COMPONENT FUNCTION CHECK

Perform component function check. Refer to EC-291, "Component Function Check".

NOTE:
Use component function check to check the overall monitoring function of the EVAP control system purge flow monitoring. During this check, a 1st trip DTC might not be confirmed.

Is the inspection result normal?

YES >> INSPECTION END
NO >> Go to EC-292, "Diagnosis Procedure".

Component Function Check

INFOID:0000000004349328

1. PERFORM COMPONENT FUNCTION CHECK

Without CONSULT-III

1. Lift up drive wheels.
2. Start engine and warm it up to normal operating temperature.
3. Turn ignition switch OFF, wait at least 10 seconds.
4. Start engine and wait at least 70 seconds.

5. Set voltmeter probes to ECM harness connector and ground.

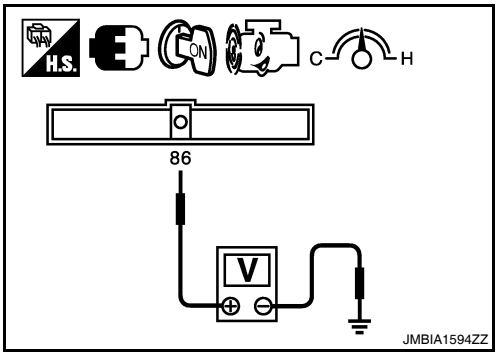

ECM		Ground
Connector	Terminal	
E10	86 (EVAP control system pressure sensor signal)	Ground

6. Check EVAP control system pressure sensor value at idle speed and note it.
7. Establish and maintain the following conditions for at least 1 minute.

Air conditioner switch	ON
Headlamp switch	ON
Rear window defogger switch	ON
Engine speed	Approx. 3,000 rpm
Shift lever	Any position other than P, N or R

8. Verify that EVAP control system pressure sensor value stays 0.1V less than the value at idle speed (measured at step 6) for at least 1 second.

Is the inspection result normal?

YES >> INSPECTION END
NO >> Go to EC-292, "Diagnosis Procedure".

Diagnosis Procedure

INFOID:0000000004349329

1. CHECK EVAP CANISTER

1. Turn ignition switch OFF.
2. Check EVAP canister for cracks.

Is the inspection result normal?

YES-1 >> With CONSULT-III: GO TO 2.
YES-2 >> Without CONSULT-III: GO TO 3.
NO >> Replace EVAP canister.

2. CHECK PURGE FLOW

With CONSULT-III

1. Disconnect vacuum hose connected to EVAP canister purge volume control solenoid valve at EVAP service port and install vacuum gauge. For the location of EVAP service port, refer to EC-86, "System Diagram".
2. Start engine and let it idle.
3. Select “PURG VOL CONT/V” in “ACTIVE TEST” mode with CONSULT-III.
4. Rev engine up to 2,000 rpm.
5. Touch “Qd” and “Qu” on CONSULT-III screen to adjust “PURG VOL CONT/V” opening and check vacuum existence.

PURG VOL CONT/V	Vacuum
100%	Existed
0%	Not existed

Is the inspection result normal?

YES >> GO TO 7.
NO >> GO TO 4.

3. CHECK PURGE FLOW

Without CONSULT-III

1. Start engine and warm it up to normal operating temperature.
2. Stop engine.

3. Disconnect vacuum hose connected to EVAP canister purge volume control solenoid valve at EVAP service port and install vacuum gauge. For the location of EVAP service port, refer to EC-86, "System Diagram".
4. Start engine and let it idle.
   Do not depress accelerator pedal even slightly.
5. Check vacuum gauge indication before 60 seconds passed after starting engine.

   Vacuum should not exist.

6. Revving engine up to 2,000rpm after 100 seconds passed after starting engine.

   Vacuum should exist.

Is the inspection result normal?

YES >> GO TO 7.
NO >> GO TO 4.

4. CHECK EVAP PURGE LINE

1. Turn ignition switch OFF.
2. Check EVAP purge line for improper connection or disconnection.
   Refer to EC-86, "System Diagram".

Is the inspection result normal?

YES >> GO TO 5.
NO >> Repair it.

5. CHECK EVAP PURGE HOSE AND PURGE PORT

1. Disconnect purge hoses connected to EVAP service port **A** and EVAP canister purge volume control solenoid valve **B**.
2. Blow air into each hose and EVAP purge port **C**.

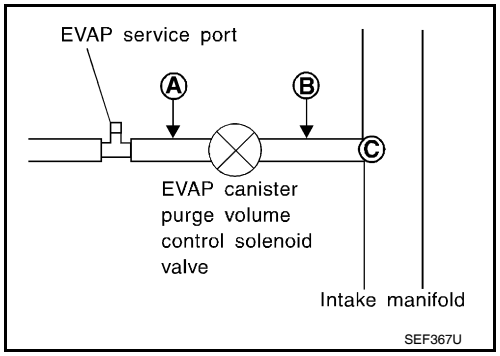

3. Check that air flows freely.

Is the inspection result normal?

YES-1 >> With CONSULT-III: GO TO 6.
YES-2 >> Without CONSULT-III: GO TO 7.
NO >> Repair or clean hoses and/or purge port.

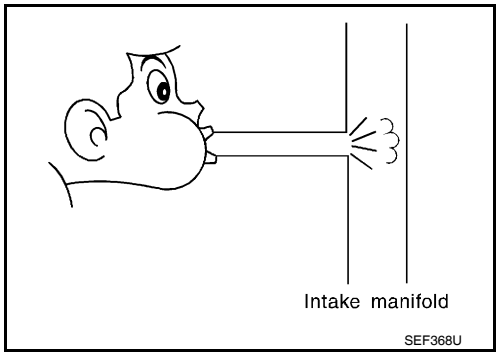

6. CHECK EVAP CANISTER PURGE VOLUME CONTROL SOLENOID VALVE

With CONSULT-III

1. Start engine.
2. Perform “PURG VOL CONT/V” in “ACTIVE TEST” mode with CONSULT-III. Check that engine speed varies according to the valve opening.

Is the inspection result normal?

YES >> GO TO 8.
NO >> GO TO 7.

7. CHECK EVAP CANISTER PURGE VOLUME CONTROL SOLENOID VALVE

Refer to EC-304, "Component Inspection".

Is the inspection result normal?

YES >> GO TO 8.
NO >> Replace EVAP canister purge volume control solenoid valve.

8. CHECK EVAP CONTROL SYSTEM PRESSURE SENSOR CONNECTOR

1. Disconnect EVAP control system pressure sensor harness connector.
2. Check connectors for water.

Water should not exist.

Is the inspection result normal?

YES >> GO TO 9.
NO >> Replace EVAP control system pressure sensor.

9. CHECK EVAP CONTROL SYSTEM PRESSURE SENSOR FUNCTION

Refer to EC-319, "DTC Logic" for DTC P0452, EC-324, "DTC Logic" for DTC P0453.

Is the inspection result normal?

YES >> GO TO 10.
NO >> Replace EVAP control system pressure sensor.

10. CHECK RUBBER TUBE FOR CLOGGING

1. Disconnect rubber tube connected to EVAP canister vent control valve.
2. Check the rubber tube for clogging.

Is the inspection result normal?

YES >> GO TO 11.
NO >> Clean the rubber tube using an air blower.

11. CHECK EVAP CANISTER VENT CONTROL VALVE

Refer to EC-310, "Component Inspection".

Is the inspection result normal?

YES >> GO TO 12.
NO >> Replace EVAP canister vent control valve.

12. CHECK EVAP PURGE LINE

Inspect EVAP purge line (pipe and rubber tube). Check for evidence of leaks.
Refer to EC-86, "System Diagram".

Is the inspection result normal?

YES >> GO TO 13.
NO >> Replace it.

13. CLEAN EVAP PURGE LINE

Clean EVAP purge line (pipe and rubber tube) using air blower.

>> GO TO 14.

14. CHECK INTERMITTENT INCIDENT

Refer to GI-42, "Intermittent Incident".

>> INSPECTION END

P0442 EVAP CONTROL SYSTEM

DTC Logic

INFOID:0000000004349330

DTC DETECTION LOGIC

NOTE:

If DTC P0442 is displayed with DTC P0456, first perform the trouble diagnosis for DTC P0456. Refer to **EC-336, "DTC Logic"**.

This diagnosis detects leaks in the EVAP purge line using engine intake manifold vacuum.

If pressure does not increase, the ECM will check for leaks in the line between the fuel tank and EVAP canister purge volume control solenoid valve, under the following “Vacuum test” conditions.

The EVAP canister vent control valve is closed to shut the EVAP purge line off. The EVAP canister purge volume control solenoid valve will then be opened to depressurize the EVAP purge line using intake manifold vacuum. After this occurs, the EVAP canister purge volume control solenoid valve will be closed.

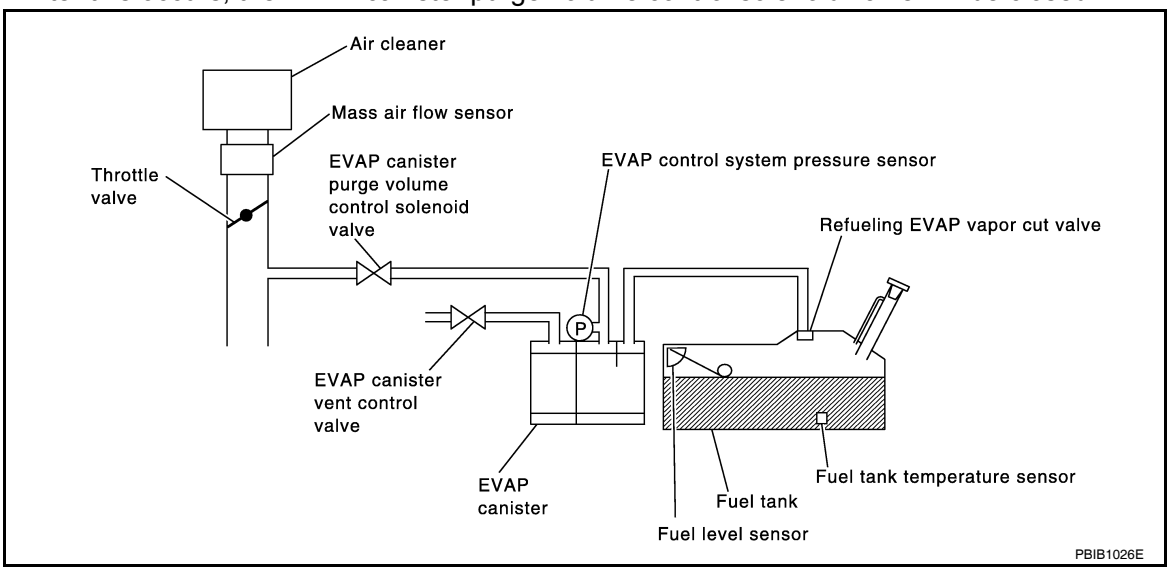

DTC No.	Trouble diagnosis name	DTC detecting condition	Possible cause
P0442	EVAP control system small leak detected (negative pressure)	EVAP control system has a leak, EVAP control system does not operate properly.	• Incorrect fuel tank vacuum relief valve • Incorrect fuel filler cap used • Fuel filler cap remains open or fails to close. • Foreign matter caught in fuel filler cap. • Leak is in line between intake manifold and EVAP canister purge volume control solenoid valve. • Foreign matter caught in EVAP canister vent control valve. • EVAP canister or fuel tank leaks • EVAP purge line (pipe and rubber tube) leaks • EVAP purge line rubber tube bent • Loose or disconnected rubber tube • EVAP canister vent control valve and the circuit • EVAP canister purge volume control solenoid valve and the circuit • Fuel tank temperature sensor • O-ring of EVAP canister vent control valve is missing or damaged • EVAP canister is saturated with water • EVAP control system pressure sensor • Fuel level sensor and the circuit • Refueling EVAP vapor cut valve • ORVR system leaks

CAUTION:

- **Use only a genuine NISSAN fuel filler cap as a replacement. If an incorrect fuel filler cap is used, the MIL may come on.**
- **If the fuel filler cap is not tightened properly, the MIL may come on.**

- **Use only a genuine NISSAN rubber tube as a replacement.**

DTC CONFIRMATION PROCEDURE

1.PRECONDITIONING

If DTC Confirmation Procedure has been previously conducted, always turn ignition switch OFF and wait at least 10 seconds before conducting the next test.

TESTING CONDITION:

- **Perform "DTC WORK SUPPORT" when the fuel level is between 1/4 and 3/4 full, and vehicle is placed on flat level surface.**
- **Always perform test at a temperature of 0 to 30°C (32 to 86°F).**

NOTE:

Make sure that EVAP hoses are connected to EVAP canister purge volume control solenoid valve properly.

Do you have CONSULT-III?

YES >> GO TO 2.
NO >> GO TO 3.

2.PERFORM DTC CONFIRMATION PROCEDURE

With CONSULT-III

1. Turn ignition switch ON.
2. Turn ignition switch OFF and wait at least 10 seconds.
3. Turn ignition switch ON and select "DATA MONITOR" mode with CONSULT-III.
4. Make sure that the following conditions are met.
   COOLAN TEMP/S: 0 - 70°C (32 - 158°F)
   INT/A TEMP SE: 0 - 30°C (32 - 86°F)
5. Select "EVAP SML LEAK P0442/P1442" of "EVAPORATIVE SYSTEM" in "DTC WORK SUPPORT" mode with CONSULT-III.
   Follow the instruction displayed.
   NOTE:
   If the engine speed cannot be maintained within the range displayed on the CONSULT-III screen, go to EC-24, "BASIC INSPECTION : Special Repair Requirement".

Which is displayed on CONSULT-III screen?

OK >> INSPECTION END
NG >> Go to EC-296, "Diagnosis Procedure".

3.PERFORM COMPONENT FUNCTION CHECK

With GST

NOTE:

Be sure to read the explanation of DRIVING PATTERN in EC-530, "How to Set SRT Code" before driving vehicle.

1. Start engine.
2. Drive vehicle according to DRIVING PATTERN.
3. Stop vehicle.
4. Turn ignition switch OFF, wait at least 10 seconds and then turn ON.
5. Select Service $07 with GST.

Is 1st trip DTC displayed?

YES-1 >> P0441: Go to EC-292, "Diagnosis Procedure".
YES-2 >> P0442: Go to EC-296, "Diagnosis Procedure".
NO >> INSPECTION END

Diagnosis Procedure

INFOID:0000000004349331

1.CHECK FUEL FILLER CAP DESIGN

1. Turn ignition switch OFF.

2. Check for genuine NISSAN fuel filler cap design.

Is the inspection result normal?

YES >> GO TO 2.
NO >> Replace with genuine NISSAN fuel filler cap.

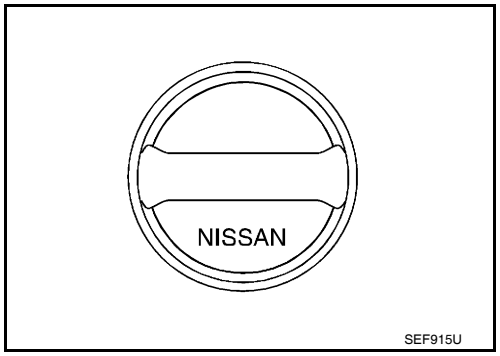

2. CHECK FUEL FILLER CAP INSTALLATION

Check that the cap is tightened properly by rotating the cap clockwise.

Is the inspection result normal?

YES >> GO TO 3.
NO >> Open fuel filler cap, then clean cap and fuel filler neck threads using air blower. Then retighten until ratcheting sound is heard.

3. CHECK FUEL FILLER CAP FUNCTION

Check for air releasing sound while opening the fuel filler cap.

Is the inspection result normal?

YES >> GO TO 5.
NO >> GO TO 4.

4. CHECK FUEL TANK VACUUM RELIEF VALVE

Refer to EC-300, "Component Inspection".

Is the inspection result normal?

YES >> GO TO 5.
NO >> Replace fuel filler cap with a genuine one.

5. CHECK FOR EVAP LEAK

Refer to EC-86, "System Diagram".

Is there any leak in EVAP line?

YES >> Repair or replace.
NO >> GO TO 6.

6. CHECK EVAP CANISTER VENT CONTROL VALVE

Check the following.

- EVAP canister vent control valve is installed properly.
  Refer to EC-553, "Exploded View".
- EVAP canister vent control valve.
  Refer to EC-310, "Component Inspection".

Is the inspection result normal?

YES >> GO TO 7.
NO >> Repair or replace EVAP canister vent control valve and O-ring.

7. CHECK IF EVAP CANISTER SATURATED WITH WATER

1. Remove EVAP canister with EVAP canister vent control valve and EVAP control system pressure sensor attached.

2. Does water drain from the EVAP canister?

Does water drain from the EVAP canister?

YES >> GO TO 8.
NO-1 >> With CONSULT-III: GO TO 10.
NO-2 >> Without CONSULT-III: GO TO 11.

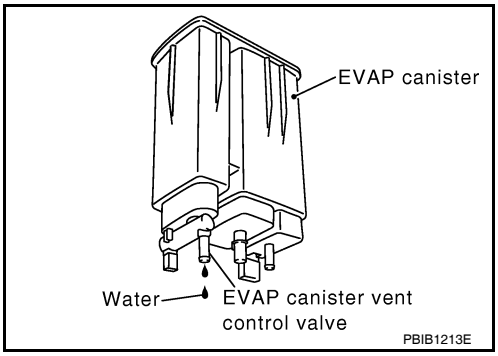

8. CHECK EVAP CANISTER

Weigh the EVAP canister with the EVAP canister vent control valve and EVAP control system pressure sensor attached.

The weight should be less than 2.1 kg (4.6 lb).

Is the inspection result normal?

YES-1 >> With CONSULT-III: GO TO 10.
YES-2 >> Without CONSULT-III: GO TO 11.
NO >> GO TO 9.

9. DETECT MALFUNCTIONING PART

Check the following.
- EVAP canister for damage
- EVAP hose between EVAP canister and vehicle frame for clogging or poor connection

>> Repair hose or replace EVAP canister.

10. CHECK EVAP CANISTER PURGE VOLUME CONTROL SOLENOID VALVE OPERATION

With CONSULT-III

1. Disconnect vacuum hose to EVAP canister purge volume control solenoid valve at EVAP service port.
2. Start engine.
3. Perform “PURG VOL CONT/V” in “ACTIVE TEST” mode.
4. Touch “Qu” on CONSULT-III screen to increase “PURG VOL CONT/V” opening to 100%.
5. Check vacuum hose for vacuum.

Vacuum should exist.

Is the inspection result normal?

YES >> GO TO 13.
NO >> GO TO 12.

11. CHECK EVAP CANISTER PURGE VOLUME CONTROL SOLENOID VALVE OPERATION

Without CONSULT-III

1. Start engine and warm it up to normal operating temperature.
2. Stop engine.
3. Disconnect vacuum hose to EVAP canister purge volume control solenoid valve at EVAP service port.
4. Start engine and let it idle for at least 80 seconds.
5. Check vacuum hose for vacuum when revving engine up to 2,000 rpm.

Vacuum should exist.

Is the inspection result normal?

YES >> GO TO 13.
NO >> GO TO 12.

12. CHECK VACUUM HOSE

Check vacuum hoses for clogging or disconnection. Refer to EC-86, "System Diagram".

Is the inspection result normal?

YES >> GO TO 13.
NO >> Repair or reconnect the hose.

13. CHECK EVAP CANISTER PURGE VOLUME CONTROL SOLENOID VALVE

Refer to EC-304, "Component Inspection".

Is the inspection result normal?

YES >> GO TO 14.
NO >> Replace EVAP canister purge volume control solenoid valve.

14. CHECK FUEL TANK TEMPERATURE SENSOR

Refer to EC-264, "Component Inspection".

Is the inspection result normal?

YES >> GO TO 15.
NO >> Replace fuel level sensor unit.

15. CHECK EVAP CONTROL SYSTEM PRESSURE SENSOR

Refer to EC-316, "DTC Logic".

Is the inspection result normal?

YES >> GO TO 16.
NO >> Replace EVAP control system pressure sensor.

16. CHECK EVAP PURGE LINE

Check EVAP purge line (pipe, rubber tube, fuel tank and EVAP canister) for cracks or improper connection. Refer to EC-86, "System Diagram".

Is the inspection result normal?

YES >> GO TO 17.
NO >> Repair or reconnect the hose.

17. CLEAN EVAP PURGE LINE

Clean EVAP purge line (pipe and rubber tube) using air blower.

>> GO TO 18.

18. CHECK EVAP/ORVR LINE

Check EVAP/ORVR line between EVAP canister and fuel tank for clogging, kink, looseness and improper connection. For location, refer to EC-476, "Description".

Is the inspection result normal?

YES >> GO TO 19.
NO >> Repair or replace hoses and tubes.

19. CHECK RECIRCULATION LINE

Check recirculation line between fuel filler tube and fuel tank for clogging, kink, cracks, looseness and improper connection.

Is the inspection result normal?

YES >> GO TO 20.
NO >> Repair or replace hose, tube or fuel filler tube.

20. CHECK REFUELING EVAP VAPOR CUT VALVE

Refer to EC-479, "Component Inspection".

Is the inspection result normal?

YES >> GO TO 21.
NO >> Replace refueling EVAP vapor cut valve with fuel tank.

21. CHECK FUEL LEVEL SENSOR

Refer to MWI-47, "Component Inspection".

Is the inspection result normal?

YES >> GO TO 22.

NO >> Replace fuel level sensor unit.

22. CHECK INTERMITTENT INCIDENT

Refer to GI-42, "Intermittent Incident".

>> INSPECTION END

Component Inspection

INFOID:0000000004349332

1. CHECK FUEL TANK VACUUM RELIEF VALVE

1. Turn ignition switch OFF.
2. Remove fuel filler cap.
3. Wipe clean valve housing.

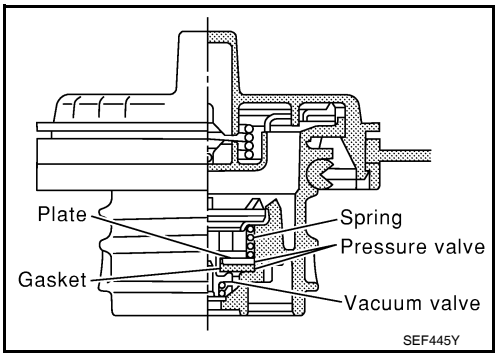

4. Install fuel filler cap adapter (commercial service tool) to fuel filler cap.
5. Check valve opening pressure and vacuum.

Pressure: **15.3 - 20.0 kPa (0.156 - 0.204 kg/cm^2, 2.22 - 2.90 psi)**

Vacuum: **−6.0 to −3.3 kPa (−0.061 to −0.034 kg/cm^2, −0.87 to −0.48 psi)**

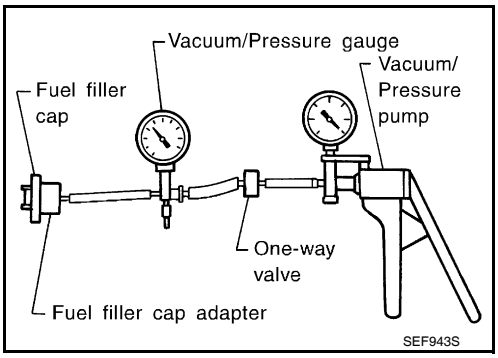

Is the inspection result normal?

YES >> INSPECTION END
NO >> GO TO 2.

2. REPLACE FUEL FILLER CAP

Replace fuel filler cap.

CAUTION:

Use only a genuine fuel filler cap as a replacement. If an incorrect fuel filler cap is used, the MIL may come on.

>> INSPECTION END

P0443 EVAP CANISTER PURGE VOLUME CONTROL SOLENOID VALVE

Description

INFOID:0000000004349333

The EVAP canister purge volume control solenoid valve uses a ON/OFF duty to control the flow rate of fuel vapor from the EVAP canister. The EVAP canister purge volume control solenoid valve is moved by ON/OFF pulses from the ECM. The longer the ON pulse, the greater the amount of fuel vapor that will flow through the valve.

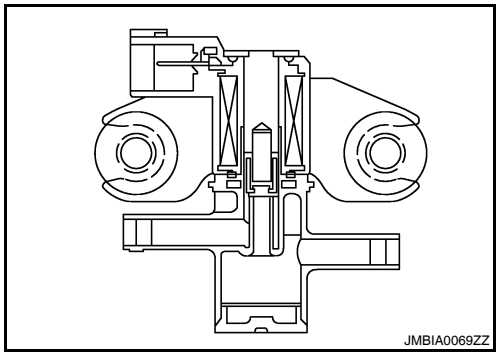

DTC Logic

INFOID:0000000004349334

DTC DETECTION LOGIC

DTC No.	Trouble diagnosis name	DTC detecting condition	Possible cause
P0443	EVAP canister purge volume control solenoid valve	The canister purge flow is detected during the specified driving conditions, even when EVAP canister purge volume control solenoid valve is completely closed.	• EVAP control system pressure sensor • EVAP canister purge volume control solenoid valve (The valve is stuck open.) • EVAP canister vent control valve • EVAP canister • Hoses (Hoses are connected incorrectly or clogged.)

DTC CONFIRMATION PROCEDURE

1. PRECONDITIONING

If DTC Confirmation Procedure has been previously conducted, always turn ignition switch OFF and wait at least 10 seconds before conducting the next test.

TESTING CONDITION:

Always perform test at a temperature of 5°C (41°F) or more.

Do you have CONSULT-III

YES >> GO TO 2.
NO >> GO TO 3.

2. PERFORM DTC CONFIRMATION PROCEDURE

With CONSULT-III

1. Start engine and warm it up to normal operating temperature.
2. Turn ignition switch OFF and wait at least 10 seconds.
3. Turn ignition switch ON.
4. Select “PURG VOL CN/V P1444” of “EVAPORATIVE SYSTEM” in “DTC WORK SUPPORT” mode with CONSULT-III.
5. Touch “START”.
6. Start engine and let it idle until “TESTING” on CONSULT-III changes to “COMPLETED”. (It will take approximately 10 seconds.)
   If “TESTING” is not displayed after 5 minutes, retry from step 2.
7. Touch “SELF-DIAG RESULT”.

Which is displayed on CONSULT-III?

OK >> INSPECTION END
NG >> Go to EC-302, "Diagnosis Procedure".

3. PERFORM DTC CONFIRMATION PROCEDURE

With GST

1. Start engine and warm it up to normal operating temperature.
2. Turn ignition switch OFF and wait at least 10 seconds.
3. Start engine and let it idle for at least 20 seconds.
4. Check 1st trip DTC.

Is 1st trip DTC displayed?

YES >> Go to EC-302, "Diagnosis Procedure".
NO >> INSPECTION END

Diagnosis Procedure

INFOID:0000000004349335

1. CHECK EVAP CANISTER PURGE VOLUME CONTROL SOLENOID VALVE POWER SUPPLY CIRCUIT

1. Turn ignition switch OFF.
2. Disconnect EVAP canister purge volume control solenoid valve harness connector.
3. Turn ignition switch ON.
4. Check the voltage between EVAP canister purge volume control solenoid valve harness connector and ground.

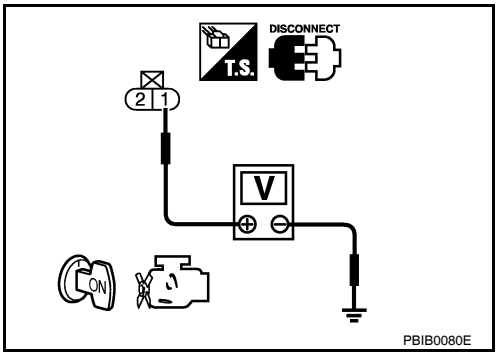

EVAP canister purge volume control solenoid valve		Ground	Voltage
Connector	Terminal		
F29	1	Ground	Battery voltage

Is the inspection result normal?

YES >> GO TO 3.
NO >> GO TO 2.

2. DETECT MALFUNCTIONING PART

Check the following.

- Junction block E44, E45
- Harness connectors E11, F2
- 15A fuse (No.42)
- Harness for open or short between EVAP canister purge volume control solenoid valve and IPDM E/R
- Harness for open or short between EVAP canister purge volume control solenoid valve and ECM

>> Repair open circuit or short to ground or short to power in harness or connectors.

3. CHECK EVAP CANISTER PURGE VOLUME CONTROL SOLENOID VALVE OUTPUT SIGNAL CIRCUIT FOR OPEN AND SHORT

1. Turn ignition switch OFF.
2. Disconnect ECM harness connector.
3. Check the continuity between EVAP canister purge volume control solenoid valve harness connector and ECM harness connector.

EVAP canister purge volume control solenoid valve		ECM		Continuity
Connector	Terminal	Connector	Terminal	
F29	2	F14	25	Existed

4. Also check harness for short to ground and short to power.

Is the inspection result normal?

YES >> GO TO 4.
NO >> Repair open circuit or short to ground or short to power in harness or connectors.

4. CHECK EVAP CONTROL SYSTEM PRESSURE SENSOR CONNECTOR

1. Disconnect EVAP control system pressure sensor harness connector.
2. Check connectors for water.

Water should not exist.

Is the inspection result normal?

YES >> GO TO 5.
NO >> Replace EVAP control system pressure sensor.

5. CHECK EVAP CONTROL SYSTEM PRESSURE SENSOR

Refer to EC-318, "Component Inspection".

Is the inspection result normal?

YES-1 >> With CONSULT-III: GO TO 6.
YES-2 >> Without CONSULT-III: GO TO 7.
NO >> Replace EVAP control system pressure sensor.

6. CHECK EVAP CANISTER PURGE VOLUME CONTROL SOLENOID VALVE

With CONSULT-III

1. Turn ignition switch OFF.
2. Reconnect harness connectors disconnected.
3. Start engine.
4. Perform “PURG VOL CONT/V” in “ACTIVE TEST” mode with CONSULT-III. Check that engine speed varies according to the valve opening.

Is the inspection result normal?

YES >> GO TO 8.
NO >> GO TO 7.

7. CHECK EVAP CANISTER PURGE VOLUME CONTROL SOLENOID VALVE

Refer to EC-304, "Component Inspection".

Is the inspection result normal?

YES >> GO TO 8.
NO >> Replace EVAP canister purge volume control solenoid valve.

8. CHECK RUBBER TUBE FOR CLOGGING

1. Disconnect rubber tube connected to EVAP canister vent control valve.
2. Check the rubber tube for clogging.

Is the inspection result normal?

YES >> GO TO 9.
NO >> Clean the rubber tube using an air blower.

9. CHECK EVAP CANISTER VENT CONTROL VALVE

Refer to EC-310, "Component Inspection".

Is the inspection result normal?

YES >> GO TO 10.
NO >> Replace EVAP canister vent control valve.

10. CHECK IF EVAP CANISTER SATURATED WITH WATER

1. Remove EVAP canister with EVAP canister vent control valve and EVAP control system pressure sensor attached.
2. Check if water will drain from EVAP canister.

Does water drain from the EVAP canister?

YES >> GO TO 11.
NO >> GO TO 13.

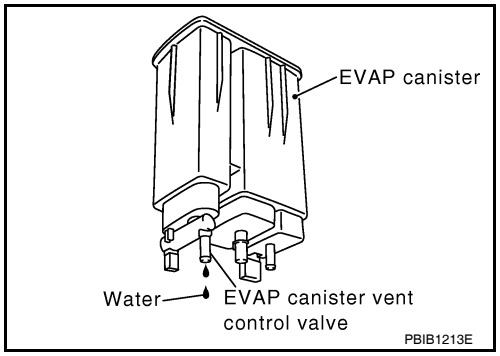

11. CHECK EVAP CANISTER

Weigh the EVAP canister with the EVAP canister vent control valve and EVAP control system pressure sensor attached.

The weight should be less than 2.1 kg (4.6 lb).

Is the inspection result normal?

YES >> GO TO 13.
NO >> GO TO 12.

12. DETECT MALFUNCTIONING PART

Check the following.
- EVAP canister for damage
- EVAP hose between EVAP canister and vehicle frame for clogging or poor connection

>> Repair hose or replace EVAP canister.

13. CHECK INTERMITTENT INCIDENT

Refer to GI-42, "Intermittent Incident".

>> INSPECTION END

Component Inspection

INFOID:0000000004349336

1. CHECK EVAP CANISTER PURGE VOLUME CONTROL SOLENOID VALVE

With CONSULT-III

1. Turn ignition switch OFF.
2. Reconnect all harness connectors disconnected.
3. Disconnect EVAP purge hoses connected to EVAP canister purge volume control solenoid valve.
4. Turn ignition switch ON.
5. Select “PURG VOL CONT/V” in “ACTIVE TEST” mode with CONSULT-III.
6. Touch “Qd” and “Qu” on CONSULT-III screen to adjust “PURG VOL CONT/V” opening and check air passage continuity of EVAP canister purge volume control solenoid valve under the following conditions.

Condition (PURG VOL CONT/V value)	Air passage continuity between (A) and (B)
100%	Existed
0%	Not existed

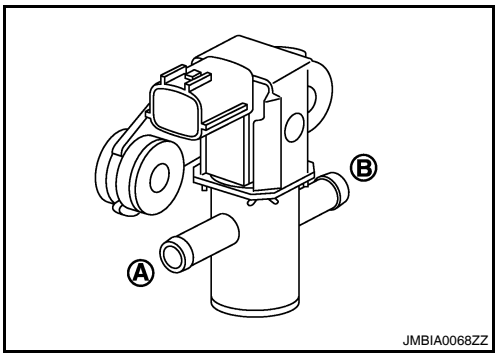

Without CONSULT-III

1. Turn ignition switch OFF.
2. Disconnect EVAP canister purge volume control solenoid valve harness connector.
3. Disconnect EVAP purge hoses connected to EVAP canister purge volume control solenoid valve.
4. Check air passage continuity of EVAP canister purge volume control solenoid valve under the following conditions.

Condition	Air passage continuity between (A) and (B)
12V direct current supply between terminals 1 and 2	Existed
No supply	Not existed

Is the inspection result normal?

YES >> INSPECTION END
NO >> Replace EVAP canister purge volume control solenoid valve

P0444, P0445 EVAP CANISTER PURGE VOLUME CONTROL SOLENOID VALVE

Description

INFOID:0000000004349337

The EVAP canister purge volume control solenoid valve uses a ON/OFF duty to control the flow rate of fuel vapor from the EVAP canister. The EVAP canister purge volume control solenoid valve is moved by ON/OFF pulses from the ECM. The longer the ON pulse, the greater the amount of fuel vapor that will flow through the valve.

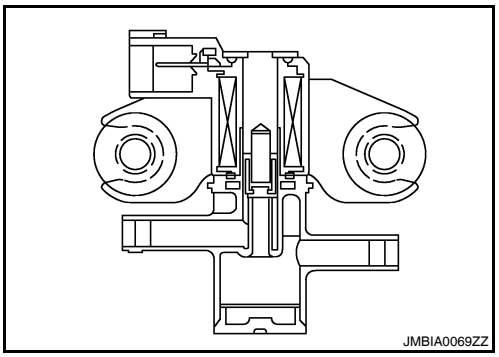

DTC Logic

INFOID:0000000004349338

DTC DETECTION LOGIC

DTC No.	Trouble diagnosis name	DTC detecting condition	Possible cause
P0444	EVAP canister purge volume control solenoid valve circuit open	An excessively low voltage signal is sent to ECM through the valve	• Harness or connectors (The solenoid valve circuit is open or shorted.) • EVAP canister purge volume control solenoid valve
P0445	EVAP canister purge volume control solenoid valve circuit shorted	An excessively high voltage signal is sent to ECM through the valve	• Harness or connectors (The solenoid valve circuit is shorted.) • EVAP canister purge volume control solenoid valve

DTC CONFIRMATION PROCEDURE

1. CONDITIONING

If DTC Confirmation Procedure has been previously conducted, always turn ignition switch OFF and wait at least 10 seconds before conducting the next test.

TESTING CONDITION:

Before performing the following procedure, confirm battery voltage is more than 11V at idle.

>> GO TO 2.

2. PERFORM DTC CONFIRMATION PROCEDURE

1. Start engine and let it idle for at least 13 seconds.
2. Check 1st trip DTC.

Is 1st trip DTC detected?

YES >> Go to EC-305, "Diagnosis Procedure".
NO >> INSPECTION END

Diagnosis Procedure

INFOID:0000000004349339

1. CHECK EVAP CANISTER PURGE VOLUME CONTROL SOLENOID VALVE POWER SUPPLY CIRCUIT

1. Turn ignition switch OFF.
2. Disconnect EVAP canister purge volume control solenoid valve harness connector.
3. Turn ignition switch ON.

4. Check the voltage between EVAP canister purge volume control solenoid valve harness connector and ground.

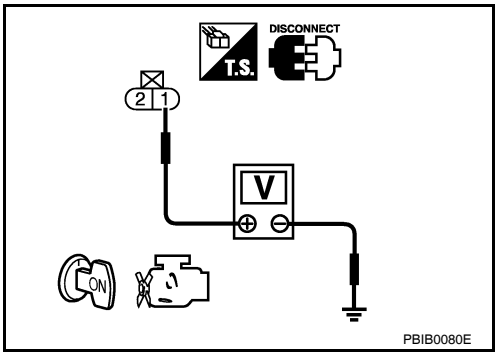

EVAP canister purge volume control solenoid valve		Ground	Voltage
Connector	Terminal		
F29	1	Ground	Battery voltage

Is the inspection result normal?

YES >> GO TO 3.
NO >> GO TO 2.

2. DETECT MALFUNCTIONING PART

Check the following.
- Junction block E44, E45
- Harness connectors E11, F2
- 15A fuse (No.42)
- Harness for open or short between EVAP canister purge volume control solenoid valve and IPDM E/R
- Harness for open or short between EVAP canister purge volume control solenoid valve and ECM

>> Repair open circuit or short to ground or short to power in harness or connectors.

3. CHECK EVAP CANISTER PURGE VOLUME CONTROL SOLENOID VALVE OUTPUT SIGNAL CIRCUIT FOR OPEN AND SHORT

1. Turn ignition switch OFF.
2. Disconnect ECM harness connector.
3. Check the continuity between EVAP canister purge volume control solenoid valve harness connector and ECM harness connector.

EVAP canister purge volume control solenoid valve		ECM		Continuity
Connector	Terminal	Connector	Terminal	
F29	2	F14	25	Existed

4. Also check harness for short to ground and short to power.

Is the inspection result normal?

YES-1 >> With CONSULT-III: GO TO 4.
YES-2 >> Without CONSULT-III: GO TO 5.
NO >> Repair open circuit or short to ground or short to power in harness or connectors.

4. CHECK EVAP CANISTER PURGE VOLUME CONTROL SOLENOID VALVE OPERATION

With CONSULT-III

1. Reconnect all harness connectors disconnected.
2. Start engine.
3. Perform “PURG VOL CONT/V” in “ACTIVE TEST” mode with CONSULT-III. Check that engine speed varies according to the valve opening.

Is the inspection result normal?

YES >> GO TO 6.
NO >> GO TO 5.

5. CHECK EVAP CANISTER PURGE VOLUME CONTROL SOLENOID VALVE

Refer to EC-307, "Component Inspection".

Is the inspection result normal?

YES >> GO TO 6.
NO >> Replace EVAP canister purge volume control solenoid valve.

6. CHECK INTERMITTENT INCIDENT

Refer to GI-42, "Intermittent Incident".

>> INSPECTION END

Component Inspection

INFOID:0000000004349340

1. CHECK EVAP CANISTER PURGE VOLUME CONTROL SOLENOID VALVE

With CONSULT-III

1. Turn ignition switch OFF.
2. Reconnect all harness connectors disconnected.
3. Disconnect EVAP purge hoses connected to EVAP canister purge volume control solenoid valve.
4. Turn ignition switch ON.
5. Select “PURG VOL CONT/V” in “ACTIVE TEST” mode with CONSULT-III.
6. Touch “Qd” and “Qu” on CONSULT-III screen to adjust “PURG VOL CONT/V” opening and check air passage continuity of EVAP canister purge volume control solenoid valve under the following conditions.

Condition (PURG VOL CONT/V value)	Air passage continuity between (A) and (B)
100%	Existed
0%	Not existed

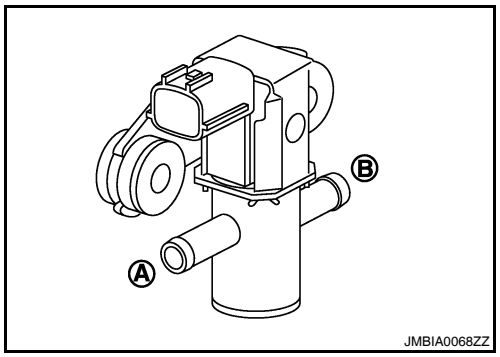

Without CONSULT-III

1. Turn ignition switch OFF.
2. Disconnect EVAP canister purge volume control solenoid valve harness connector.
3. Disconnect EVAP purge hoses connected to EVAP canister purge volume control solenoid valve.
4. Check air passage continuity of EVAP canister purge volume control solenoid valve under the following conditions.

Condition	Air passage continuity between (A) and (B)
12V direct current supply between terminals 1 and 2	Existed
No supply	Not existed

Is the inspection result normal?

YES >> INSPECTION END
NO >> Replace EVAP canister purge volume control solenoid valve

P0447 EVAP CANISTER VENT CONTROL VALVE

Description

INFOID:0000000004349341

The EVAP canister vent control valve is located on the EVAP canister and is used to seal the canister vent.
This solenoid valve responds to signals from the ECM. When the ECM sends an ON signal, the coil in the solenoid valve is energized. A plunger will then move to seal the canister vent. The ability to seal the vent is necessary for the on board diagnosis of other evaporative emission control system components.
This solenoid valve is used only for diagnosis, and usually remains opened.
When the vent is closed, under normal purge conditions, the evaporative emission control system is depressurized and allows “EVAP Control System” diagnosis.

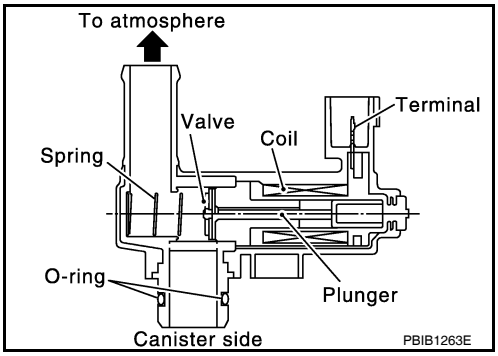

DTC Logic

INFOID:0000000004349342

DTC DETECTION LOGIC

DTC No.	Trouble diagnosis name	DTC detecting condition	Possible cause
P0447	EVAP canister vent control valve circuit open	An improper voltage signal is sent to ECM through EVAP canister vent control valve.	• Harness or connectors (The valve circuit is open or shorted.) • EVAP canister vent control valve

DTC CONFIRMATION PROCEDURE

1.PRECONDITIONING

If DTC Confirmation Procedure has been previously conducted, always turn ignition switch OFF and wait at least 10 seconds before conducting the next test.
TESTING CONDITION:
Before performing the following procedure, confirm battery voltage is more than 11V at idle.

>> GO TO 2.

2.PERFORM DTC CONFIRMATION PROCEDURE

1. Start engine and wait at least 8 seconds.
2. Check 1st trip DTC.

Is 1st trip DTC detected?

YES >> Go to EC-308, "Diagnosis Procedure".
NO >> INSPECTION END

Diagnosis Procedure

INFOID:0000000004349343

1.INSPECTION START

Do you have CONSULT-III?

Do you have CONSULT-III?

YES >> GO TO 2.
NO >> GO TO 3.

2.CHECK EVAP CANISTER VENT CONTROL VALVE CIRCUIT

With CONSULT-III

1. Turn ignition switch OFF and then turn ON.
2. Select “VENT CONTROL/V” in “ACTIVE TEST” mode with CONSULT-III.
3. Touch “ON/OFF” on CONSULT-III screen.
4. Check for operating sound of the valve.

Clicking sound should be heard.

Is the inspection result normal?

YES >> GO TO 7.
NO >> GO TO 3.

3. CHECK EVAP CANISTER VENT CONTROL VALVE POWER SUPPLY CIRCUIT

1. Turn ignition switch OFF.
2. Disconnect EVAP canister vent control valve harness connector.
3. Turn ignition switch ON.
4. Check the voltage between EVAP canister vent control valve harness connector and ground.

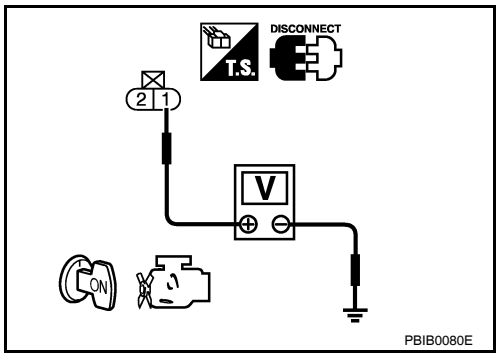

EVAP canister vent control valve		Ground	Voltage
Connector	Terminal		
B39	1	Ground	Battery voltage

Is the inspection result normal?

YES >> GO TO 5.
NO >> GO TO 4.

4. DETECT MALFUNCTIONING PART

Check the following.
- Harness connectors E11, F2
- Harness connectors E29, B10
- 15A fuse (No.42)
- Harness for open or short between EVAP canister vent control valve and IPDM E/R

>> Repair open circuit or short to ground or short to power in harness or connectors.

5. CHECK EVAP CANISTER VENT CONTROL VALVE OUTPUT SIGNAL CIRCUIT FOR OPEN AND SHORT

1. Turn ignition switch OFF.
2. Disconnect ECM harness connector.
3. Check the continuity between EVAP canister vent control valve harness connector and ECM harness connector.

EVAP canister vent control valve		ECM		Continuity
Connector	Terminal	Connector	Terminal	
B39	2	E10	109	Existed

4. Also check harness for short to ground and short to power.

Is the inspection result normal?

YES >> GO TO 7.
NO >> GO TO 6.

6. DETECT MALFUNCTIONING PART

Check the following.
- Junction block connector E44, E45
- Harness connectors E29, B10
- Harness for open or short between EVAP canister vent control valve and ECM

>> Repair open circuit or short to ground or short to power in harness or connectors.

7. CHECK RUBBER TUBE FOR CLOGGING

1. Disconnect rubber tube connected to EVAP canister vent control valve.
2. Check the rubber tube for clogging.

Is the inspection result normal?

YES >> GO TO 8.
NO >> Clean the rubber tube using an air blower.

8. CHECK EVAP CANISTER VENT CONTROL VALVE

Refer to EC-310, "Component Inspection".

Is the inspection result normal?

YES >> GO TO 9.
NO >> Replace EVAP canister vent control valve.

9. CHECK INTERMITTENT INCIDENT

Refer to GI-42, "Intermittent Incident".

>> INSPECTION END

Component Inspection

INFOID:0000000004349344

1. CHECK EVAP CANISTER VENT CONTROL VALVE-I

1. Turn ignition switch OFF.
2. Remove EVAP canister vent control valve from EVAP canister.
3. Check portion (A) of EVAP canister vent control valve for being rusted.

Is it rusted?

YES >> Replace EVAP canister vent control valve
NO >> GO TO 2.

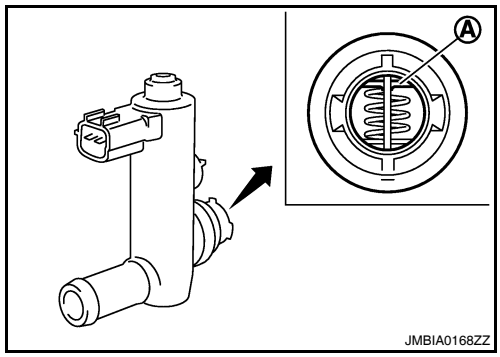

2. CHECK EVAP CANISTER VENT CONTROL VALVE-II

With CONSULT-III

1. Reconnect harness connectors disconnected.
2. Turn ignition switch ON.
3. Perform “VENT CONTROL/V” in “ACTIVE TEST” mode.
4. Check air passage continuity and operation delay time.
   Make sure new O-ring is installed properly.

Condition VENT CONTROL/V	Air passage continuity between (A) and (B)
ON	Not existed
OFF	Existed

Operation takes less than 1 second.

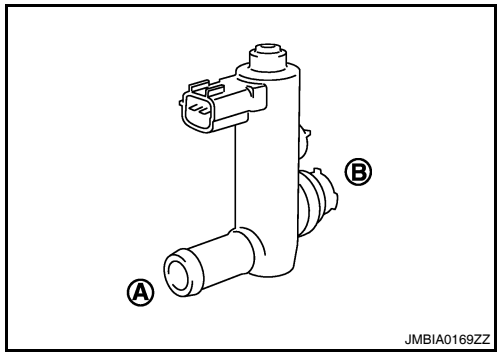

Without CONSULT-III

Check air passage continuity and operation delay time under the following conditions.
Make sure new O-ring is installed properly.

Condition	Air passage continuity between (A) and (B)
12V direct current supply between terminals (1) and (2)	Not existed
OFF	Existed

Operation takes less than 1 second.

Is the inspection result normal?

YES >> INSPECTION END
NO >> GO TO 3.

3. CHECK EVAP CANISTER VENT CONTROL VALVE-III

With CONSULT-III

1. Clean the air passage [portion (A) to (B)] of EVAP canister vent control valve using an air blower.
2. Perform “VENT CONTROL/V” in “ACTIVE TEST” mode.
3. Check air passage continuity and operation delay time.
   Make sure new O-ring is installed properly.

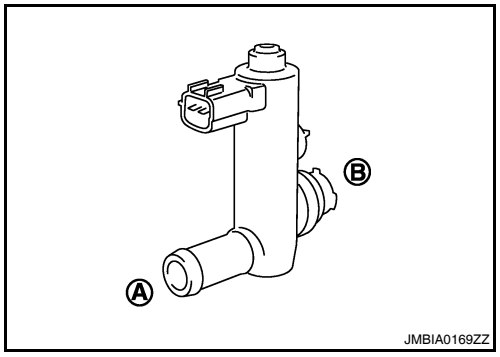

Condition VENT CONTROL/V	Air passage continuity between (A) and (B)
ON	Not existed
OFF	Existed

Operation takes less than 1 second.

Without CONSULT-III

1. Clean the air passage [portion (A) to (B)] of EVAP canister vent control valve using an air blower.
2. Check air passage continuity and operation delay time under the following conditions.
   Make sure new O-ring is installed properly.

Condition	Air passage continuity between (A) and (B)
12V direct current supply between terminals (1) and (2)	Not existed
OFF	Existed

Operation takes less than 1 second.

Is the inspection result normal?

YES >> INSPECTION END
NO >> Replace EVAP canister vent control valve

P0448 EVAP CANISTER VENT CONTROL VALVE

Description

INFOID:0000000004349345

The EVAP canister vent control valve is located on the EVAP canister and is used to seal the canister vent.
This solenoid valve responds to signals from the ECM. When the ECM sends an ON signal, the coil in the solenoid valve is energized. A plunger will then move to seal the canister vent. The ability to seal the vent is necessary for the on board diagnosis of other evaporative emission control system components.
This solenoid valve is used only for diagnosis, and usually remains opened.
When the vent is closed, under normal purge conditions, the evaporative emission control system is depressurized and allows “EVAP Control System” diagnosis.

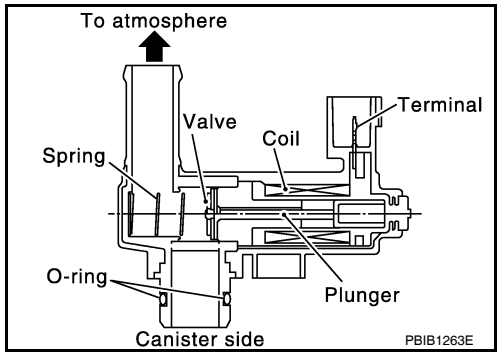

DTC Logic

INFOID:0000000004349346

DTC DETECTION LOGIC

DTC No.	Trouble diagnosis name	DTC detecting condition	Possible cause
P0448	EVAP canister vent control valve close	EVAP canister vent control valve remains closed under specified driving conditions.	• EVAP canister vent control valve • EVAP control system pressure sensor and the circuit • Blocked rubber tube to EVAP canister vent control valve • EVAP canister is saturated with water

DTC CONFIRMATION PROCEDURE

1. PRECONDITIONING

If DTC Confirmation Procedure has been previously conducted, always turn ignition switch OFF and wait at least 10 seconds before conducting the next test.

>> GO TO 2.

2. PERFORM DTC CONFIRMATION PROCEDURE

With CONSULT-III

1. Turn ignition switch ON and wait at least 5 seconds.
2. Turn ignition switch OFF and wait at least 10 seconds.
3. Turn ignition switch ON and select “DATA MONITOR” mode with CONSULT-III.
4. Start engine and let it idle for at least 1 minute.
5. Repeat next procedures three times.
- Increase the engine speed up to 3,000 to 3,500 rpm and keep it for 2 minutes and 50 seconds to 3 minutes.

Never exceed 3 minutes.

- Fully released accelerator pedal and keep engine idle for about 5 seconds.

6. Repeat next procedure 20 times.
- Quickly increase the engine speed up to 4,000 to 4,500 rpm or more and keep it for 25 to 30 seconds.

- Fully released accelerator pedal and keep engine idle for at least 35 seconds.

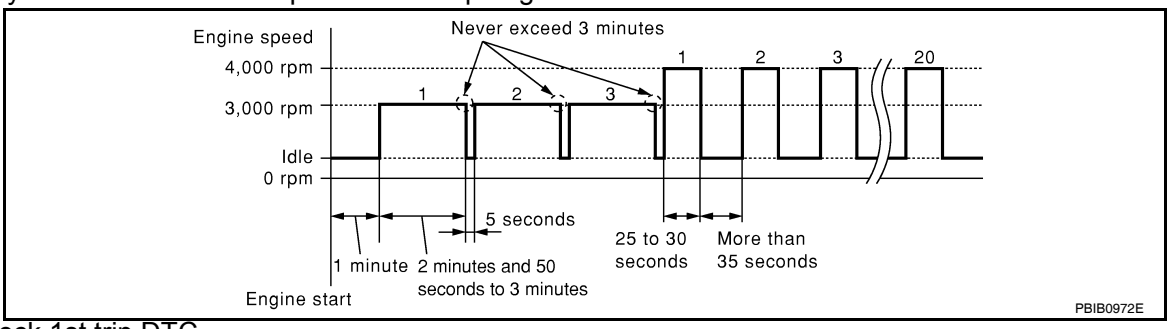

7. Check 1st trip DTC.

With GST

Follow the procedure "With CONSULT-III" above.

Is 1st trip DTC detected?

YES >> Go to EC-313, "Diagnosis Procedure".
NO >> INSPECTION END

Diagnosis Procedure

INFOID:0000000004349347

1. CHECK RUBBER TUBE

1. Turn ignition switch OFF.
2. Disconnect rubber tube connected to EVAP canister vent control valve.
3. Check the rubber tube for clogging.

Is the inspection result normal?

YES >> GO TO 2.
NO >> Clean rubber tube using an air blower.

2. CHECK EVAP CANISTER VENT CONTROL VALVE

Refer to EC-314, "Component Inspection".

Is the inspection result normal?

YES >> GO TO 3.
NO >> Replace EVAP canister vent control valve.

3. CHECK IF EVAP CANISTER SATURATED WITH WATER

1. Remove EVAP canister with EVAP canister vent control valve and EVAP control system pressure sensor attached.
2. Check if water will drain from the EVAP canister.

Does water drain from EVAP canister?

YES >> GO TO 4.
NO >> GO TO 6.

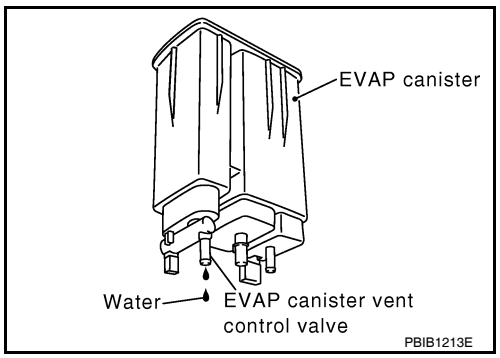

4. CHECK EVAP CANISTER

Weigh the EVAP canister with the EVAP canister vent control valve and EVAP control system pressure sensor attached.

The weight should be less than 2.1 kg (4.6 lb).

Is the inspection result normal?

YES >> GO TO 6.
NO >> GO TO 5.

5. DETECT MALFUNCTIONING PART

Check the following.
- EVAP canister for damage
- EVAP hose between EVAP canister and vehicle frame for clogging or poor connection

>> Repair hose or replace EVAP canister.

6. CHECK EVAP CONTROL SYSTEM PRESSURE SENSOR CONNECTOR

1. Disconnect EVAP control system pressure sensor harness connector.
2. Check connectors for water.

Water should not exist.

Is the inspection result normal?

YES >> GO TO 7.
NO >> Replace EVAP control system pressure sensor.

7. CHECK EVAP CONTROL SYSTEM PRESSURE SENSOR

Refer to EC-318, "Component Inspection".

Is the inspection result normal?

YES >> GO TO 8.
NO >> Replace EVAP control system pressure sensor.

8. CHECK INTERMITTENT INCIDENT

Refer to GI-42, "Intermittent Incident".

>> INSPECTION END

Component Inspection

INFOID:0000000004349348

1. CHECK EVAP CANISTER VENT CONTROL VALVE-I

1. Turn ignition switch OFF.
2. Remove EVAP canister vent control valve from EVAP canister.
3. Check portion (A) of EVAP canister vent control valve for being rusted.

Is it rusted?

YES >> Replace EVAP canister vent control valve
NO >> GO TO 2.

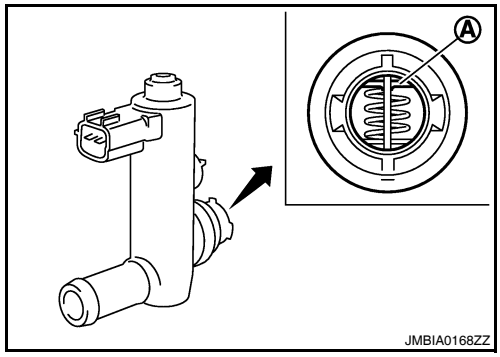

2. CHECK EVAP CANISTER VENT CONTROL VALVE-II

With CONSULT-III

1. Reconnect harness connectors disconnected.
2. Turn ignition switch ON.
3. Perform “VENT CONTROL/V” in “ACTIVE TEST” mode.

4. Check air passage continuity and operation delay time.
Make sure new O-ring is installed properly.

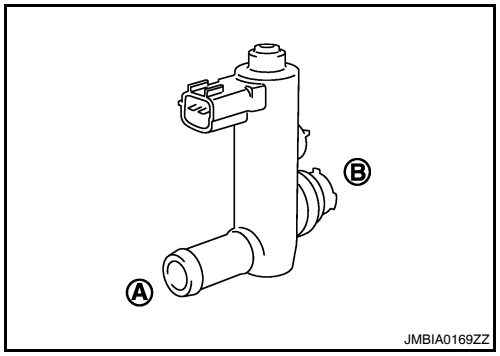

Condition VENT CONTROL/V	Air passage continuity between (A) and (B)
ON	Not existed
OFF	Existed

Operation takes less than 1 second.

Without CONSULT-III

Check air passage continuity and operation delay time under the following conditions.
Make sure new O-ring is installed properly.

Condition	Air passage continuity between (A) and (B)
12V direct current supply between terminals (1) and (2)	Not existed
OFF	Existed

Operation takes less than 1 second.

Is the inspection result normal?

YES >> INSPECTION END
NO >> GO TO 3.

3. CHECK EVAP CANISTER VENT CONTROL VALVE-III

With CONSULT-III

1. Clean the air passage [portion (A) to (B)] of EVAP canister vent control valve using an air blower.
2. Perform “VENT CONTROL/V” in “ACTIVE TEST” mode.
3. Check air passage continuity and operation delay time.
Make sure new O-ring is installed properly.

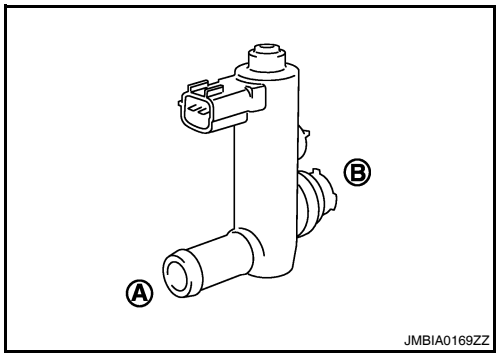

Condition VENT CONTROL/V	Air passage continuity between (A) and (B)
ON	Not existed
OFF	Existed

Operation takes less than 1 second.

Without CONSULT-III

1. Clean the air passage [portion (A) to (B)] of EVAP canister vent control valve using an air blower.
2. Check air passage continuity and operation delay time under the following conditions.
Make sure new O-ring is installed properly.

Condition	Air passage continuity between (A) and (B)
12V direct current supply between terminals (1) and (2)	Not existed
OFF	Existed

Operation takes less than 1 second.

Is the inspection result normal?

YES >> INSPECTION END
NO >> Replace EVAP canister vent control valve

P0451 EVAP CONTROL SYSTEM PRESSURE SENSOR

Description

INFOID:0000000004349349

The EVAP control system pressure sensor detects pressure in the purge line. The sensor output voltage to the ECM increases as pressure increases.

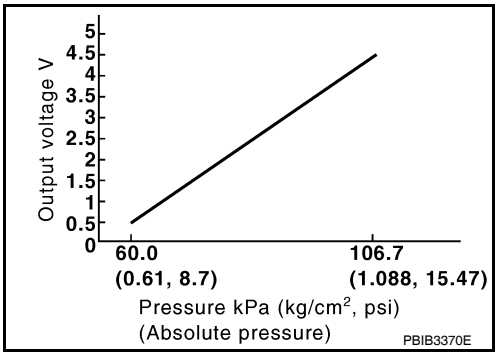

DTC Logic

INFOID:0000000004349350

DTC DETECTION LOGIC

DTC No.	Trouble diagnosis name	DTC detecting condition	Possible cause
P0451	EVAP control system pressure sensor performance	ECM detects a sloshing signal from the EVAP control system pressure sensor	• Harness or connectors (EVAP control system pressure sensor circuit is shorted.) [Crankshaft position sensor (POS) circuit is shorted.] (Accelerator pedal position sensor circuit is shorted.) (Refrigerant pressure sensor circuit is shorted.) (Tumble control valve position sensor circuit is shorted.) • EVAP control system pressure sensor • Crankshaft position sensor (POS) • Accelerator pedal position sensor • Refrigerant pressure sensor • Tumble control valve position sensor

DTC CONFIRMATION PROCEDURE

1.PRECONDITIONING

If DTC Confirmation Procedure has been previously conducted, always turn ignition switch OFF and wait at least 10 seconds before conducting the next test.

>> GO TO 2.

2.PERFORM DTC CONFIRMATION PROCEDURE

1. Turn ignition switch OFF and wait at least 10 seconds.
2. Start engine and wait at least 40 seconds.
   NOTE:
   Do not depress accelerator pedal even slightly.
3. Check 1st trip DTC.

Is 1st trip DTC detected?

YES >> Go to EC-316, "Diagnosis Procedure".
NO >> INSPECTION END

Diagnosis Procedure

INFOID:0000000004349351

1.CHECK GROUND CONNECTION

1. Turn ignition switch OFF.

2. Check ground connection E9. Refer to Ground Inspection in GI-45, "Circuit Inspection".

Is the inspection result normal?

YES >> GO TO 2.
NO >> Repair or replace ground connection.

2. CHECK EVAP CONTROL SYSTEM PRESSURE SENSOR CONNECTOR FOR WATER

1. Disconnect EVAP control system pressure sensor harness connector.
2. Check sensor harness connector for water.

Water should not exist.

Is the inspection result normal?

YES >> GO TO 3.
NO >> Repair or replace harness connector.

3. CHECK EVAP CONTROL SYSTEM PRESSURE SENSOR POWER SUPPLY CIRCUIT

1. Turn ignition switch ON.
2. Check the voltage between EVAP control system pressure sensor harness connector and ground.

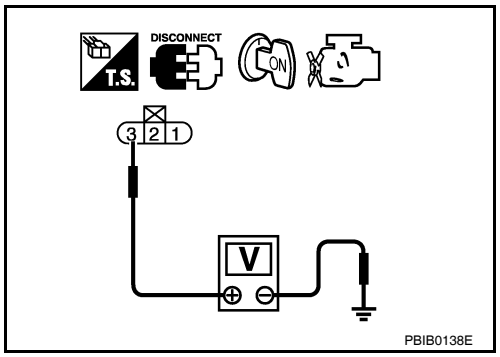

EVAP control system pressure sensor		Ground	Voltage
Connector	Terminal		
B41	3	Ground	Approx. 5 V

Is the inspection result normal?

YES >> GO TO 8.
NO >> GO TO 4.

4. CHECK SENSOR POWER SUPPLY CIRCUITS

Check harness for short to power and short to ground, between the following terminals.

ECM		Sensor		
Connector	Terminal	Name	Connector	Terminal
F13	72	Tumble control valve position sensor	F43	1
		Refrigerant pressure sensor	E219	1
	76	CKP sensor (POS)	F30	1
E10	87	APP sensor	E40	6
	91	EVAP control system pressure sensor	B41	3

Is the inspection result normal?

YES >> GO TO 5.
NO >> Repair short to ground or short to power in harness or connectors.

5. CHECK COMPONENTS

Check the following.
- Crankshaft position sensor (POS) (Refer to EC-281, "Component Inspection".)
- Refrigerant pressure sensor (Refer to EC-482, "Diagnosis Procedure".)
- Tumble control valve position sensor (Refer to EC-410, "Diagnosis Procedure".)

Is the inspection result normal?

YES >> GO TO 6.
NO >> Replace malfunctioning component.

6. CHECK APP SENSOR

Refer to EC-429, "Component Inspection".

Is the inspection result normal?

YES >> GO TO 9.

NO >> GO TO 7.

7. REPLACE ACCELERATOR PEDAL ASSEMBLY

1. Replace accelerator pedal assembly
2. Go to EC-29, "ACCELERATOR PEDAL RELEASED POSITION LEARNING : Special Repair Requirement".

>> INSPECTION END

8. CHECK EVAP CONTROL SYSTEM PRESSURE SENSOR

Refer to EC-318, "Component Inspection".

Is the inspection result normal?

YES >> GO TO 9.
NO >> Replace EVAP control system pressure sensor.

9. CHECK INTERMITTENT INCIDENT

Refer to GI-42, "Intermittent Incident".

>> INSPECTION END

Component Inspection

INFOID:0000000004349352

1. CHECK EVAP CONTROL SYSTEM PRESSURE SENSOR

1. Turn ignition switch OFF.
2. Remove EVAP control system pressure sensor with its harness connector connected from EVAP canister. **Always replace O-ring with a new one.**
3. Install a vacuum pump to EVAP control system pressure sensor.
4. Turn ignition switch ON and check output voltage between ECM harness connector and ground under the following conditions.

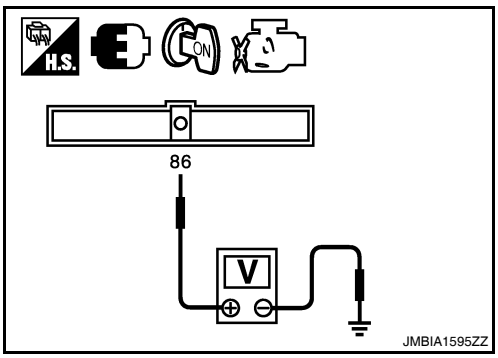

ECM		Condition [Applied vacuum kPa (kg/cm^2, psi)	Voltage
Connector	Terminal		
E10	86 (EVAP control system pressure sensor signal)	Not applied	1.8 - 4.8 V
		-26.7 (-0.272, -3.87)	2.1 to 2.5 V lower than above value

CAUTION:
- **Always calibrate the vacuum pump gauge when using it.**
- **Do not apply below -93.3 kPa (-0.952 kg/cm^2, -13.53 psi) or pressure over 101.3 kPa (1.033 kg/cm^2, 14.69 psi).**

Is the inspection result normal?

YES >> INSPECTION END
NO >> Replace EVAP control system pressure sensor

P0452 EVAP CONTROL SYSTEM PRESSURE SENSOR

Description

INFOID:0000000004349353

The EVAP control system pressure sensor detects pressure in the purge line. The sensor output voltage to the ECM increases as pressure increases.

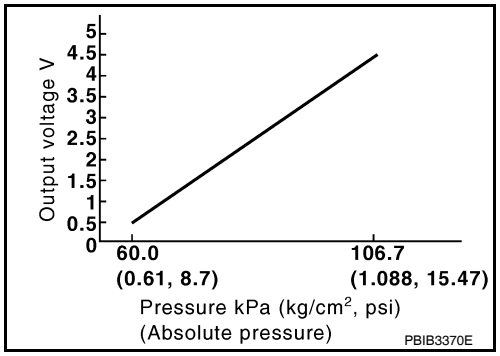

DTC Logic

INFOID:0000000004349354

DTC DETECTION LOGIC

DTC No.	Trouble diagnosis name	DTC detecting condition	Possible cause
P0452	EVAP control system pressure sensor low input	An excessively low voltage from the sensor is sent to ECM.	• Harness or connectors (EVAP control system pressure sensor circuit is open or shorted.) [Crankshaft position sensor (POS) circuit is shorted.) (Accelerator pedal position sensor circuit is shorted.) (Refrigerant pressure sensor circuit is shorted.) (Tumble control valve position sensor circuit is shorted.) • EVAP control system pressure sensor • Crankshaft position sensor (POS) • Accelerator pedal position sensor • Refrigerant pressure sensor • Tumble control valve position sensor

DTC CONFIRMATION PROCEDURE

1. PRECONDITIONING

If DTC Confirmation Procedure has been previously conducted, always turn ignition switch OFF and wait at least 10 seconds before conducting the next test.

TESTING CONDITION:

Always perform test at a temperature of 5°C (41°F) or more.

>> GO TO 2.

2. PERFORM DTC CONFIRMATION PROCEDURE

With CONSULT-III

1. Start engine and warm it up to normal operating temperature.
2. Turn ignition switch OFF and wait at least 10 seconds.
3. Turn ignition switch ON.
4. Select “DATA MONITOR” mode with CONSULT-III.
5. Make sure that “FUEL T/TMP SE” is more than 0°C (32°F).
6. Start engine and wait at least 20 seconds.
7. Check 1st trip DTC.

With GST

1. Start engine and warm it up to normal operating temperature.

2. Set voltmeter probes to ECM harness connector and ground as follows.

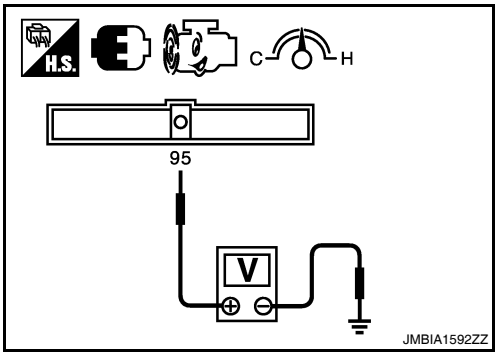

ECM		Ground
Connector	Terminal	
E10	95 (Fuel tank temperature sensor signal)	Ground

3. Make sure that the voltage is less than 4.2V.
4. Turn ignition switch OFF and wait at least 10 seconds.
5. Start engine and wait at least 20 seconds.
6. Check 1st trip DTC.

Is 1st trip DTC detected?

YES >> Go to EC-320, "Diagnosis Procedure".
NO >> INSPECTION END

Diagnosis Procedure

INFOID:0000000004349355

1. CHECK GROUND CONNECTION

1. Turn ignition switch OFF.
2. Check ground connection E9. Refer to Ground Inspection in GI-45, "Circuit Inspection".

Is the inspection result normal?

YES >> GO TO 2.
NO >> Repair or replace ground connection.

2. CHECK CONNECTOR

1. Disconnect EVAP control system pressure sensor harness connector.
2. Check sensor harness connector for water.

Water should not exist.

Is the inspection result normal?

YES >> GO TO 3.
NO >> Repair or replace harness connector.

3. CHECK EVAP CONTROL SYSTEM PRESSURE SENSOR POWER SUPPLY CIRCUIT-I

1. Turn ignition switch ON.
2. Check the voltage between EVAP control system pressure sensor harness connector and ground.

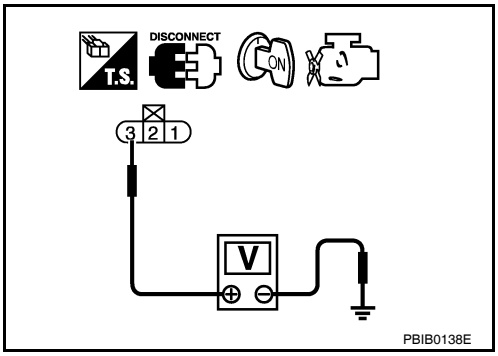

EVAP control system pressure sensor		Ground	Voltage
Connector	Terminal		
B41	3	Ground	Approx. 5 V

Is the inspection result normal?

YES >> GO TO 10.
NO >> GO TO 4.

4. CHECK EVAP CONTROL SYSTEM PRESSURE SENSOR POWER SUPPLY CIRCUIT-II

1. Turn ignition switch OFF.
2. Disconnect ECM harness connector.
3. Check the continuity between EVAP control system pressure sensor harness connector and ECM harness connector.

EVAP control system pressure sensor		ECM		Continuity
Connector	Terminal	Connector	Terminal	
B41	3	E10	91	Existed

Is the inspection result normal?

YES >> GO TO 6.
NO >> GO TO 5.

5. DETECT MALFUNCTIONING PART

Check the following.
- Harness connectors B10, E29
- Harness for open or short between EVAP control system pressure sensor and ECM

>> Repair open circuit or short to ground or short to power in harness or connectors.

6. CHECK SENSOR POWER SUPPLY CIRCUITS

Check harness for short to power and short to ground, between the following terminals.

ECM		Sensor		
Connector	Terminal	Name	Connector	Terminal
F13	72	Tumble control valve position sensor	F43	1
		Refrigerant pressure sensor	E219	1
	76	CKP sensor (POS)	F30	1
E10	87	APP sensor	E40	6
	91	EVAP control system pressure sensor	B41	3

Is the inspection result normal?

YES >> GO TO 7.
NO >> Repair short to ground or short to power in harness or connectors.

7. CHECK COMPONENTS

Check the following.
- Crankshaft position sensor (POS) (Refer to EC-281, "Component Inspection".)
- Refrigerant pressure sensor (Refer to EC-482, "Diagnosis Procedure".)
- Tumble control valve position sensor (Refer to EC-410, "Diagnosis Procedure".)

Is the inspection result normal?

YES >> GO TO 8.
NO >> Replace malfunctioning component.

8. CHECK APP SENSOR

Refer to EC-441, "Component Inspection".

Is the inspection result normal?

YES >> GO TO 10.
NO >> GO TO 9.

9. REPLACE ACCELERATOR PEDAL ASSEMBLY

1. Replace accelerator pedal assembly
2. Go to EC-29, "ACCELERATOR PEDAL RELEASED POSITION LEARNING : Special Repair Requirement".

>> INSPECTION END

10. CHECK EVAP CONTROL SYSTEM PRESSURE SENSOR GROUND CIRCUIT FOR OPEN AND SHORT

1. Turn ignition switch OFF.
2. Disconnect ECM harness connector.
3. Check the continuity between EVAP control system pressure sensor harness connector and ECM harness connector.

EVAP control system pressure sensor		ECM		Continuity
Connector	Terminal	Connector	Terminal	
B41	1	E10	96	Existed

4. Also check harness for short to ground and short to power.

Is the inspection result normal?

YES >> GO TO 12.
NO >> GO TO 11.

11. DETECT MALFUNCTIONING PART

Check the following.
- Harness connectors B10, E29
- Harness for open or short between EVAP control system pressure sensor and ECM

>> Repair open circuit or short to ground or short to power in harness or connectors.

12. CHECK EVAP CONTROL SYSTEM PRESSURE SENSOR INPUT SIGNAL CIRCUIT FOR OPEN AND SHORT

1. Check the continuity between EVAP control system pressure sensor harness connector and ECM harness connector.

EVAP control system pressure sensor		ECM		Continuity
Connector	Terminal	Connector	Terminal	
B41	2	E10	86	Existed

2. Also check harness for short to ground and short to power.

Is the inspection result normal?

YES >> GO TO 14.
NO >> GO TO 13.

13. DETECT MALFUNCTIONING PART

Check the following.
- Harness connectors B10, E29
- Harness for open or short between EVAP control system pressure sensor and ECM

>> Repair open circuit or short to ground or short to power in harness or connectors.

14. CHECK EVAP CONTROL SYSTEM PRESSURE SENSOR

Refer to EC-323, "Component Inspection".

Is the inspection result normal?

YES >> GO TO 15.
NO >> Replace EVAP control system pressure sensor.

15. CHECK INTERMITTENT INCIDENT

Refer to GI-42, "Intermittent Incident".

>> INSPECTION END

Component Inspection

INFOID:0000000004349356

1. CHECK EVAP CONTROL SYSTEM PRESSURE SENSOR

1. Turn ignition switch OFF.
2. Remove EVAP control system pressure sensor with its harness connector connected from EVAP canister. **Always replace O-ring with a new one.**
3. Install a vacuum pump to EVAP control system pressure sensor.
4. Turn ignition switch ON and check output voltage between ECM harness connector and ground under the following conditions.

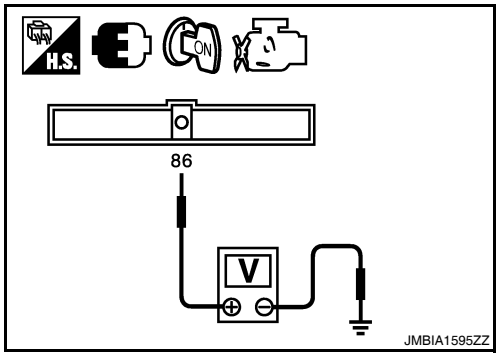

ECM		Condition [Applied vacuum kPa (kg/cm^2, psi)	Voltage
Connector	Terminal		
E10	86 (EVAP control system pressure sensor signal)	Not applied	1.8 - 4.8 V
		-26.7 (-0.272, -3.87)	2.1 to 2.5 V lower than above value

CAUTION:
- **Always calibrate the vacuum pump gauge when using it.**
- **Do not apply below -93.3 kPa (-0.952 kg/cm^2, -13.53 psi) or pressure over 101.3 kPa (1.033 kg/cm^2, 14.69 psi).**

Is the inspection result normal?

YES >> INSPECTION END
NO >> Replace EVAP control system pressure sensor

P0453 EVAP CONTROL SYSTEM PRESSURE SENSOR

Description

INFOID:0000000004349357

The EVAP control system pressure sensor detects pressure in the purge line. The sensor output voltage to the ECM increases as pressure increases.

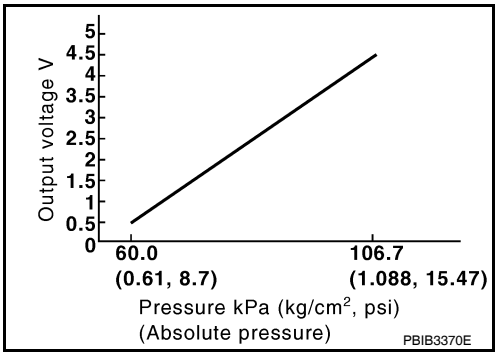

DTC Logic

INFOID:0000000004349358

DTC DETECTION LOGIC

DTC No.	Trouble diagnosis name	DTC detecting condition	Possible cause
P0453	EVAP control system pressure sensor high input	An excessively high voltage from the sensor is sent to ECM.	• Harness or connectors (EVAP control system pressure sensor circuit is open or shorted.) [Crankshaft position sensor (POS) circuit is shorted.] (Accelerator pedal circuit is shorted.) (Refrigerant pressure sensor circuit is shorted.) (Tumble control valve position sensor circuit is shorted.) • EVAP control system pressure sensor • Crankshaft position sensor (POS) • Accelerator pedal position sensor • Refrigerant pressure sensor • Tumble control valve position sensor • EVAP canister vent control valve • EVAP canister • Rubber hose from EVAP canister vent control valve to vehicle frame

DTC CONFIRMATION PROCEDURE

1. PRECONDITIONING

If DTC Confirmation Procedure has been previously conducted, always turn ignition switch OFF and wait at least 10 seconds before conducting the next test.

TESTING CONDITION:

Always perform test at a temperature of 5°C (41°F) or more.

>> GO TO 2.

2. PERFORM DTC CONFIRMATION PROCEDURE

With CONSULT-III

1. Start engine and warm it up to normal operating temperature.
2. Turn ignition switch OFF and wait at least 10 seconds.
3. Turn ignition switch ON.
4. Select “DATA MONITOR” mode with CONSULT-III.
5. Make sure that “FUEL T/TMP SE” is more than 0°C (32°F).
6. Start engine and wait at least 20 seconds.
7. Check 1st trip DTC.

With GST

1. Start engine and warm it up to normal operating temperature.
2. Set voltmeter probes to ECM harness connector and ground as follows.

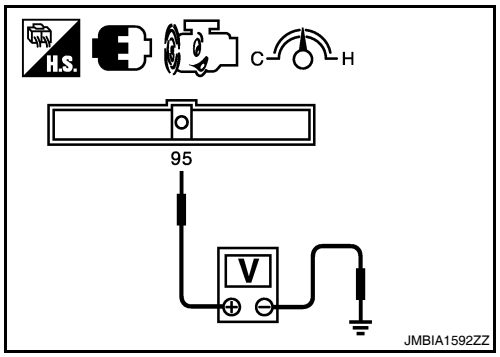

ECM		Ground
Connector	Terminal	
E10	95 (Fuel tank temperature sensor signal)	Ground

3. Make sure that the voltage is less than 4.2V.
4. Turn ignition switch OFF and wait at least 10 seconds.
5. Start engine and wait at least 20 seconds.
6. Check 1st trip DTC.

Is 1st trip DTC detected?

YES >> Go to EC-325, "Diagnosis Procedure".
NO >> INSPECTION END

Diagnosis Procedure

INFOID:0000000004349359

1. CHECK GROUND CONNECTION

1. Turn ignition switch OFF.
2. Check ground connection E9. Refer to Ground Inspection in GI-45, "Circuit Inspection".

Is the inspection result normal?

YES >> GO TO 2.
NO >> Repair or replace ground connection.

2. CHECK CONNECTOR

1. Disconnect EVAP control system pressure sensor harness connector.
2. Check sensor harness connector for water.

Water should not exist.

Is the inspection result normal?

YES >> GO TO 3.
NO >> Repair or replace harness connector.

3. CHECK EVAP CONTROL SYSTEM PRESSURE SENSOR POWER SUPPLY CIRCUIT

1. Turn ignition switch ON.
2. Check the voltage between EVAP control system pressure sensor harness connector and ground.

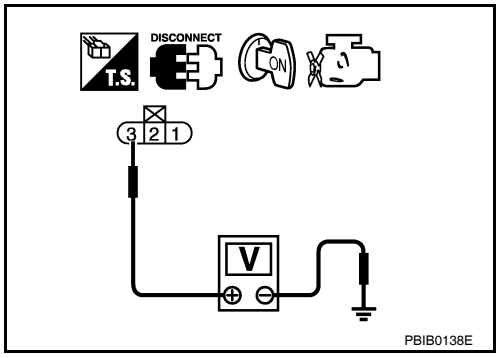

EVAP control system pressure sensor		Ground	Voltage
Connector	Terminal		
B41	3	Ground	Approx. 5 V

Is the inspection result normal?

YES >> GO TO 10.
NO >> GO TO 4.

4. CHECK EVAP CONTROL SYSTEM PRESSURE SENSOR POWER SUPPLY CIRCUIT-II

1. Turn ignition switch OFF.
2. Disconnect ECM harness connector.
3. Check the continuity between EVAP control system pressure sensor harness connector and ECM harness connector.

EVAP control system pressure sensor		ECM		Continuity
Connector	Terminal	Connector	Terminal	
B41	3	E10	91	Existed

Is the inspection result normal?

YES >> GO TO 6.
NO >> GO TO 5.

5. DETECT MALFUNCTIONING PART

Check the following.
- Harness connectors B10, E29
- Harness for open or short between EVAP control system pressure sensor and ECM

>> Repair open circuit or short to ground or short to power in harness or connectors.

6. CHECK SENSOR POWER SUPPLY CIRCUITS

Check harness for short to power and short to ground, between the following terminals.

ECM		Sensor		
Connector	Terminal	Name	Connector	Terminal
F13	72	Tumble control valve position sensor	F43	1
		Refrigerant pressure sensor	E219	1
	76	CKP sensor (POS)	F30	1
E10	87	APP sensor	E40	6
	91	EVAP control system pressure sensor	B41	3

Is the inspection result normal?

YES >> GO TO 7.
NO >> Repair short to ground or short to power in harness or connectors.

7. CHECK COMPONENTS

Check the following.
- Crankshaft position sensor (POS) (Refer to EC-281, "Component Inspection".)
- Refrigerant pressure sensor (Refer to EC-482, "Diagnosis Procedure".)
- Tumble control valve position sensor (Refer to EC-410, "Diagnosis Procedure".)

Is the inspection result normal?

YES >> GO TO 8.
NO >> Replace malfunctioning component.

8. CHECK APP SENSOR

Refer to EC-441, "Component Inspection".

Is the inspection result normal?

YES >> GO TO 10.
NO >> GO TO 9.

9. REPLACE ACCELERATOR PEDAL ASSEMBLY

1. Replace accelerator pedal assembly
2. Go to EC-29, "ACCELERATOR PEDAL RELEASED POSITION LEARNING : Special Repair Requirement".

>> INSPECTION END

10. CHECK EVAP CONTROL SYSTEM PRESSURE SENSOR GROUND CIRCUIT FOR OPEN AND SHORT

1. Turn ignition switch OFF.
2. Disconnect ECM harness connector.
3. Check the continuity between EVAP control system pressure sensor harness connector and ECM harness connector.

EVAP control system pressure sensor		ECM		Continuity
Connector	Terminal	Connector	Terminal	
B41	1	E10	96	Existed

4. Also check harness for short to ground and short to power.

Is the inspection result normal?

YES >> GO TO 12.
NO >> GO TO 11.

11. DETECT MALFUNCTIONING PART

Check the following.
- Harness connectors B10, E29
- Harness for open or short between EVAP control system pressure sensor and ECM

>> Repair open circuit or short to ground or short to power in harness or connectors.

12. CHECK EVAP CONTROL SYSTEM PRESSURE SENSOR INPUT SIGNAL CIRCUIT FOR OPEN AND SHORT

1. Check the continuity between EVAP control system pressure sensor harness connector and ECM harness connector.

EVAP control system pressure sensor		ECM		Continuity
Connector	Terminal	Connector	Terminal	
B41	2	E10	86	Existed

2. Also check harness for short to ground and short to power.

Is the inspection result normal?

YES >> GO TO 14.
NO >> GO TO 13.

13. DETECT MALFUNCTIONING PART

Check the following.
- Harness connectors B10, E29
- Harness for open or short between EVAP control system pressure sensor and ECM

>> Repair open circuit or short to ground or short to power in harness or connectors.

14. CHECK RUBBER TUBE

1. Disconnect rubber tube connected to EVAP canister vent control valve.
2. Check the rubber tube for clogging.

Is the inspection result normal?

YES >> GO TO 15.
NO >> Clean the rubber tube using an air blower, repair or replace rubber tube.

15. CHECK EVAP CANISTER VENT CONTROL VALVE

Refer to EC-310, "Component Inspection".

Is the inspection result normal?

YES >> GO TO 16.
NO >> Replace EVAP canister vent control valve.

16. CHECK EVAP CONTROL SYSTEM PRESSURE SENSOR

Refer to EC-328, "Component Inspection".

Is the inspection result normal?

YES >> GO TO 17.
NO >> Replace EVAP control system pressure sensor.

17. CHECK IF EVAP CANISTER SATURATED WITH WATER

1. Remove EVAP canister with EVAP canister vent control valve and EVAP control system pressure sensor attached.
2. Check if water will drain from the EVAP canister.

Does water drain from EVAP canister?

YES >> GO TO 18.
NO >> GO TO 20.

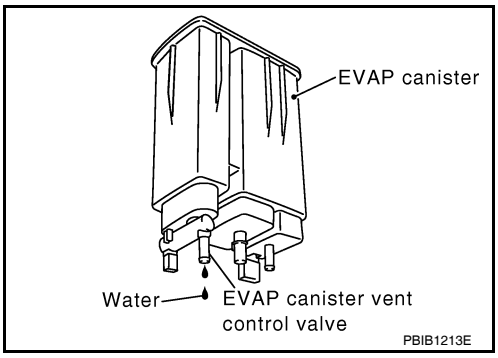

18. CHECK EVAP CANISTER

Weigh the EVAP canister with the EVAP canister vent control valve and EVAP control system pressure sensor attached.

The weight should be less than 2.1 kg (4.6 lb).

Is the inspection result normal?

YES >> GO TO 15.
NO >> GO TO 14.

19. DETECT MALFUNCTIONING PART

Check the following.
- EVAP canister for damage
- EVAP hose between EVAP canister and vehicle frame for clogging or poor connection

>> Repair hose or replace EVAP canister.

20. CHECK INTERMITTENT INCIDENT

Refer to GI-42, "Intermittent Incident".

>> INSPECTION END

Component Inspection

INFOID:0000000004349360

1. CHECK EVAP CONTROL SYSTEM PRESSURE SENSOR

1. Turn ignition switch OFF.
2. Remove EVAP control system pressure sensor with its harness connector connected from EVAP canister. **Always replace O-ring with a new one.**
3. Install a vacuum pump to EVAP control system pressure sensor.

4. Turn ignition switch ON and check output voltage between ECM harness connector and ground under the following conditions.

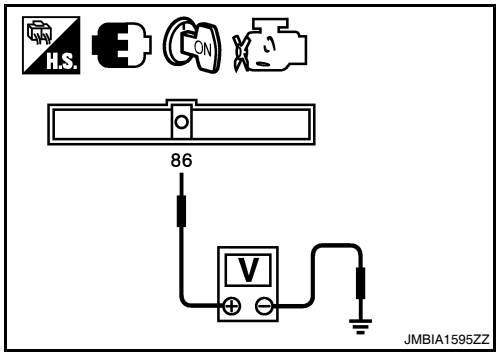

ECM		Condition [Applied vacuum kPa (kg/cm^2, psi)	Voltage
Connector	Terminal		
E10	86 (EVAP control system pressure sensor signal)	Not applied	1.8 - 4.8 V
		-26.7 (-0.272, -3.87)	2.1 to 2.5 V lower than above value

CAUTION:
- **Always calibrate the vacuum pump gauge when using it.**
- **Do not apply below -93.3 kPa (-0.952 kg/cm^2, -13.53 psi) or pressure over 101.3 kPa (1.033 kg/cm^2, 14.69 psi).**

Is the inspection result normal?

YES >> INSPECTION END
NO >> Replace EVAP control system pressure sensor

P0455 EVAP CONTROL SYSTEM

DTC Logic

INFOID:0000000004349361

DTC DETECTION LOGIC

This diagnosis detects a very large leak (fuel filler cap fell off etc.) in EVAP system between the fuel tank and EVAP canister purge volume control solenoid valve.

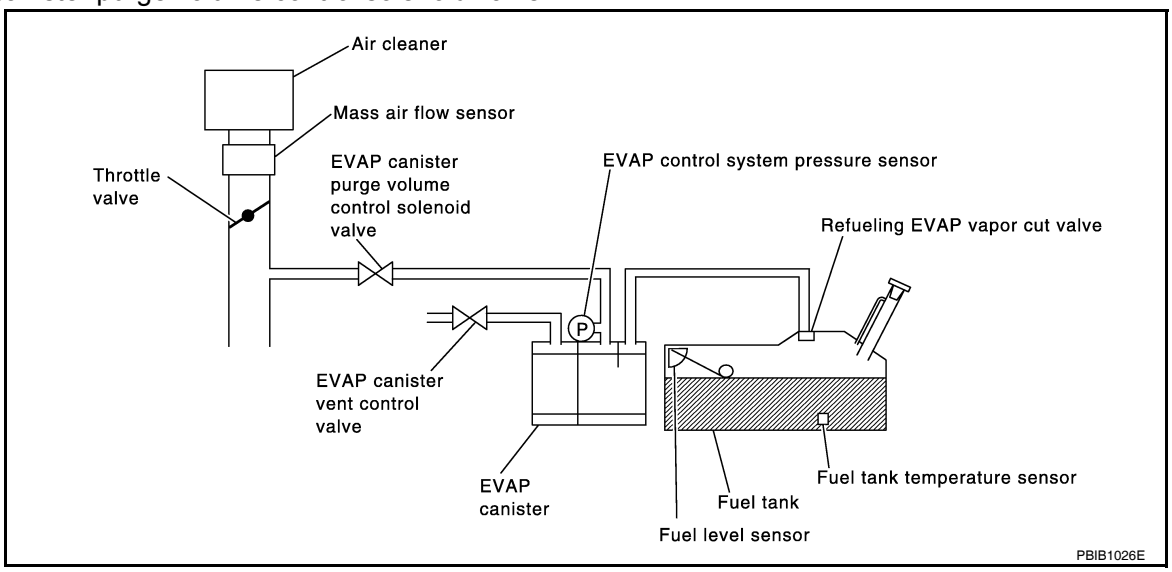

DTC No.	Trouble diagnosis name	DTC detecting condition	Possible cause
P0455	EVAP control system gross leak detected	EVAP control system has a very large leak such as fuel filler cap fell off, EVAP control system does not operate properly.	• Fuel filler cap remains open or fails to close. • Incorrect fuel tank vacuum relief valve • Incorrect fuel filler cap used • Foreign matter caught in fuel filler cap. • Leak is in line between intake manifold and EVAP canister purge volume control solenoid valve. • Foreign matter caught in EVAP canister vent control valve. • EVAP canister or fuel tank leaks • EVAP purge line (pipe and rubber tube) leaks • EVAP purge line rubber tube bent. • Loose or disconnected rubber tube • EVAP canister vent control valve and the circuit • EVAP canister purge volume control solenoid valve and the circuit • Fuel tank temperature sensor • O-ring of EVAP canister vent control valve is missing or damaged. • EVAP control system pressure sensor • Refueling EVAP vapor cut valve • ORVR system leaks

CAUTION:
- **Use only a genuine NISSAN fuel filler cap as a replacement. If an incorrect fuel filler cap is used, the MIL may come on.**
- **If the fuel filler cap is not tightened properly, the MIL may come on.**
- **Use only a genuine NISSAN rubber tube as a replacement.**

DTC CONFIRMATION PROCEDURE

1.PRECONDITIONING

CAUTION:

Never remove fuel filler cap during the DTC CONFIRMATION PROCEDURE.
If DTC Confirmation Procedure has been previously conducted, always turn ignition switch OFF and wait at least 10 seconds before conducting the next test.
NOTE:
Make sure that EVAP hoses are connected to EVAP canister purge volume control solenoid valve properly.
TESTING CONDITION:
- **Perform "DTC WORK SUPPORT" when the fuel level is between 1/4 and 3/4 full, and vehicle is placed on flat level surface.**
- **Open engine hood before conducting the following procedures.**

Do you have CONSULT-III?

YES >> GO TO 2.
NO >> GO TO 4.

2. PERFORM DTC CONFIRMATION PROCEDURE

With CONSULT-III
1. Tighten fuel filler cap securely until ratcheting sound is heard.
2. Turn ignition switch ON.
3. Turn ignition switch OFF and wait at least 10 seconds.
4. Turn ignition switch ON and select "DATA MONITOR" mode with CONSULT-III.
5. Make sure that the following conditions are met.
   COOLAN TEMP/S: 0 - 70°C (32 - 158°F)
   INT/A TEMP SE: 0 - 60°C (32 - 140°F)
6. Select "EVAP SML LEAK P0442/P1442" of "EVAPORATIVE SYSTEM" in "DTC WORK SUPPORT" mode with CONSULT-III.
   Follow the instruction displayed.
   NOTE:
   If the engine speed cannot be maintained within the range displayed on the CONSULT-III screen, go to EC-24, "BASIC INSPECTION : Special Repair Requirement".

Which is displayed on CONSULT-III screen?

OK >> INSPECTION END
NG >> GO TO 3.

3. CHECK DTC

Check DTC.

Which DTC is detected?

P0455 >> Go to EC-331, "Diagnosis Procedure".
P0442 >> Go to EC-296, "Diagnosis Procedure".

4. PERFORM DTC CONFIRMATION PROCEDURE

With GST
NOTE:
Be sure to read the explanation of DIRVING PATTERN in EC-530, "How to Set SRT Code" before driving vehicle.
1. Start engine.
2. Drive vehicle according to DRIVING PATTERN.
3. Stop vehicle.
4. Turn ignition switch OFF, wait at least 10 seconds and then turn ON.
5. Check 1st trip DTC.

Is 1st trip DTC detected?

YES-1 >> P0455: Go to EC-331, "Diagnosis Procedure".
YES-2 >> P0442: Go to EC-296, "Diagnosis Procedure".
YES-3 >> P0441: Go to EC-292, "Diagnosis Procedure".
NO >> INSPECTION END

Diagnosis Procedure

INFOID:0000000004349362

1. CHECK FUEL FILLER CAP DESIGN

1. Turn ignition switch OFF.

2. Check for genuine NISSAN fuel filler cap design.

Is the inspection result normal?

YES >> GO TO 2.
NO >> Replace with genuine NISSAN fuel filler cap.

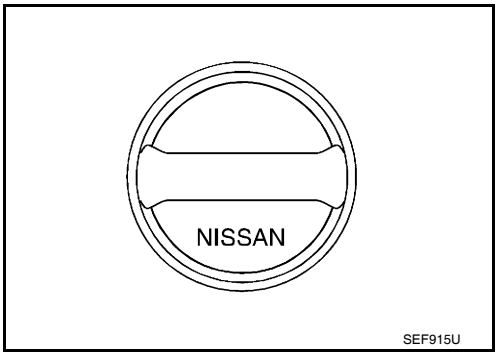

2. CHECK FUEL FILLER CAP INSTALLATION

Check that the cap is tightened properly by rotating the cap clockwise.

Is the inspection result normal?

YES >> GO TO 3.
NO >> Open fuel filler cap, then clean cap and fuel filler neck threads using air blower. Then retighten until ratcheting sound is heard.

3. CHECK FUEL FILLER CAP FUNCTION

Check for air releasing sound while opening the fuel filler cap.

Is the inspection result normal?

YES >> GO TO 5.
NO >> GO TO 4.

4. CHECK FUEL TANK VACUUM RELIEF VALVE

Refer to EC-334, "Component Inspection".

Is the inspection result normal?

YES >> GO TO 5.
NO >> Replace fuel filler cap with a genuine one.

5. CHECK EVAP PURGE LINE

Check EVAP purge line (pipe, rubber tube, fuel tank and EVAP canister) for cracks, improper connection or disconnection.
Refer to EC-86, "System Diagram".

Is the inspection result normal?

YES >> GO TO 6.
NO >> Repair or reconnect the hose.

6. CLEAN EVAP PURGE LINE

Clean EVAP purge line (pipe and rubber tube) using air blower.

>> GO TO 7.

7. CHECK EVAP CANISTER VENT CONTROL VALVE

Check the following.
- EVAP canister vent control valve is installed properly.
  Refer to EC-553, "Exploded View".
- EVAP canister vent control valve.
  Refer to EC-310, "Component Inspection".

Is the inspection result normal?

YES >> GO TO 8.
NO >> Repair or replace EVAP canister vent control valve and O-ring.

8. CHECK FOR EVAP LEAK

Refer to EC-86, "System Diagram".

Is there any leak in EVAP line?

YES >> Repair or replace.
NO-1 >> With CONSULT-III: GO TO 9.
NO-2 >> Without CONSULT-III: GO TO 10.

9. CHECK EVAP CANISTER PURGE VOLUME CONTROL SOLENOID VALVE OPERATION

With CONSULT-III

1. Disconnect vacuum hose to EVAP canister purge volume control solenoid valve at EVAP service port.
2. Start engine.
3. Perform “PURG VOL CONT/V” in “ACTIVE TEST” mode.
4. Touch “Qu” on CONSULT-III screen to increase “PURG VOL CONT/V” opening to 100%.
5. Check vacuum hose for vacuum.

Vacuum should exist.

Is the inspection result normal?

YES >> GO TO 12.
NO >> GO TO 11.

10. CHECK EVAP CANISTER PURGE VOLUME CONTROL SOLENOID VALVE OPERATION

Without CONSULT-III

1. Start engine and warm it up to normal operating temperature.
2. Stop engine.
3. Disconnect vacuum hose to EVAP canister purge volume control solenoid valve at EVAP service port.
4. Start engine and let it idle for at least 80 seconds.
5. Check vacuum hose for vacuum when revving engine up to 2,000 rpm.

Vacuum should exist.

Is the inspection result normal?

YES >> GO TO 13.
NO >> GO TO 11.

11. CHECK VACUUM HOSE

Check vacuum hoses for clogging or disconnection. Refer to EC-86, "System Diagram".

Is the inspection result normal?

YES-1 >> With CONSULT-III: GO TO 12.
YES-2 >> Without CONSULT-III: GO TO 13.
NO >> Repair or reconnect the hose.

12. CHECK EVAP CANISTER PURGE VOLUME CONTROL SOLENOID VALVE

With CONSULT-III

1. Start engine.
2. Perform “PURG VOL CONT/V” in “ACTIVE TEST” mode with CONSULT-III. Check that engine speed varies according to the valve opening.

Does engine speed vary according to the valve opening?

YES >> GO TO 14.
NO >> GO TO 13.

13. CHECK EVAP CANISTER PURGE VOLUME CONTROL SOLENOID VALVE

Refer to EC-304, "Component Inspection".

Is the inspection result normal?

YES >> GO TO 14.
NO >> Replace EVAP canister purge volume control solenoid valve.

14. CHECK FUEL TANK TEMPERATURE SENSOR

Refer to EC-264, "Component Inspection".

Is the inspection result normal?

YES >> GO TO 15.
NO >> Replace fuel level sensor unit.

15. CHECK EVAP CONTROL SYSTEM PRESSURE SENSOR

Refer to EC-318, "Component Inspection".

Is the inspection result normal?

YES >> GO TO 16.
NO >> Replace EVAP control system pressure sensor.

16. CHECK EVAP/ORVR LINE

Check EVAP/ORVR line between EVAP canister and fuel tank for clogging, kink, looseness and improper connection. For location, refer to EC-476, "Description".

Is the inspection result normal?

YES >> GO TO 17.
NO >> Repair or replace hoses and tubes.

17. CHECK RECIRCULATION LINE

Check recirculation line between fuel filler tube and fuel tank for clogging, kink, cracks, looseness and improper connection.

Is the inspection result normal?

YES >> GO TO 18.
NO >> Repair or replace hose, tube or fuel filler tube.

18. CHECK REFUELING EVAP VAPOR CUT VALVE

Refer to EC-479, "Component Inspection".

Is the inspection result normal?

YES >> GO TO 19.
NO >> Replace refueling EVAP vapor cut valve with fuel tank.

19. CHECK INTERMITTENT INCIDENT

Refer to GI-42, "Intermittent Incident".

>> INSPECTION END

Component Inspection

INFOID:0000000004349363

1. CHECK FUEL TANK VACUUM RELIEF VALVE

1. Turn ignition switch OFF.
2. Remove fuel filler cap.
3. Wipe clean valve housing.

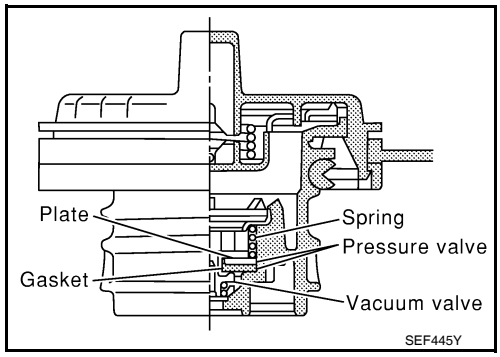

4. Install fuel filler cap adapter (commercial service tool) to fuel filler cap.

5. Check valve opening pressure and vacuum.

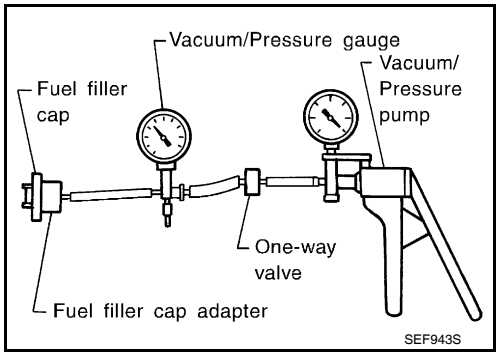

Pressure: **15.3 - 20.0 kPa (0.156 - 0.204 kg/cm^2, 2.22 - 2.90 psi)**

Vacuum: **–6.0 to –3.3 kPa (–0.061 to –0.034 kg/cm^2, –0.87 to –0.48 psi)**

Is the inspection result normal?

YES >> INSPECTION END
NO >> GO TO 2.

2. REPLACE FUEL FILLER CAP

Replace fuel filler cap.

CAUTION:
Use only a genuine fuel filler cap as a replacement. If an incorrect fuel filler cap is used, the MIL may come on.

>> INSPECTION END

P0456 EVAP CONTROL SYSTEM

DTC Logic

INFOID:0000000004349364

DTC DETECTION LOGIC

This diagnosis detects very small leaks in the EVAP line between fuel tank and EVAP canister purge volume control solenoid valve, using the intake manifold vacuum in the same way as conventional EVAP small leak diagnosis.
If ECM judges a leak which corresponds to a very small leak, the very small leak P0456 will be detected.
If ECM judges a leak equivalent to a small leak, EVAP small leak P0442 will be detected.
If ECM judges there are no leaks, the diagnosis will be OK.

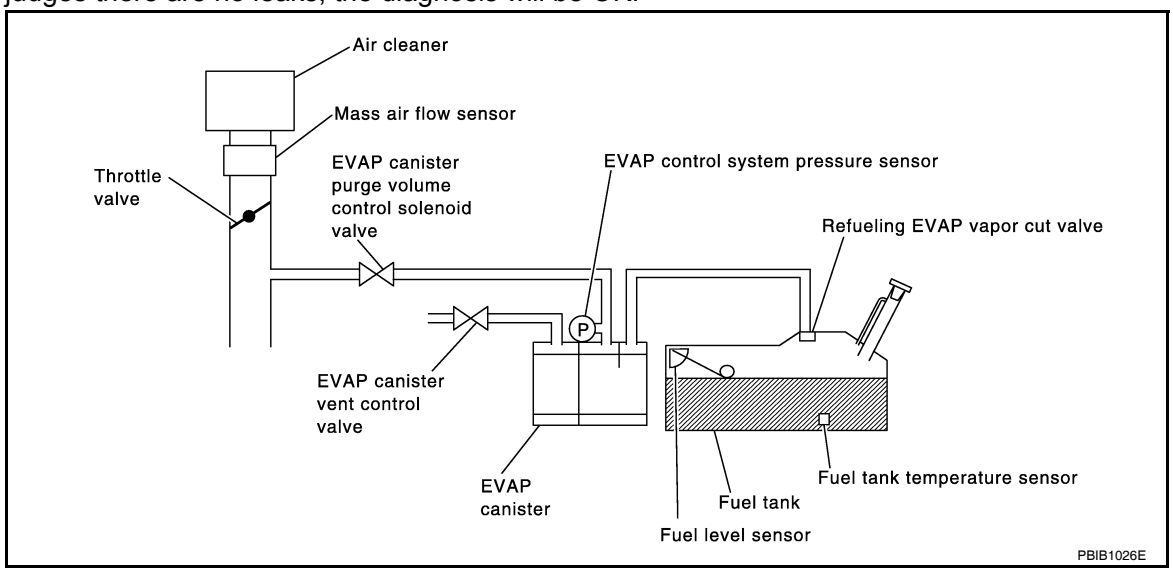

DTC No.	Trouble diagnosis name	DTC detecting condition	Possible cause
P0456	Evaporative emission control system very small leak (negative pressure check)	• EVAP system has a very small leak. • EVAP system does not operate properly.	• Incorrect fuel tank vacuum relief valve • Incorrect fuel filler cap used • Fuel filler cap remains open or fails to close. • Foreign matter caught in fuel filler cap. • Leak is in line between intake manifold and EVAP canister purge volume control solenoid valve. • Foreign matter caught in EVAP canister vent control valve. • EVAP canister or fuel tank leaks • EVAP purge line (pipe and rubber tube) leaks • EVAP purge line rubber tube bent • Loose or disconnected rubber tube • EVAP canister vent control valve and the circuit • EVAP canister purge volume control solenoid valve and the circuit • Fuel tank temperature sensor • O-ring of EVAP canister vent control valve is missing or damaged • EVAP canister is saturated with water • EVAP control system pressure sensor • Refueling EVAP vapor cut valve • ORVR system leaks • Fuel level sensor and the circuit • Foreign matter caught in EVAP canister purge volume control solenoid valve

CAUTION:
- **Use only a genuine NISSAN fuel filler cap as a replacement. If an incorrect fuel filler cap is used, the MIL may come on.**
- **If the fuel filler cap is not tightened properly, the MIL may come on.**
- **Use only a genuine NISSAN rubber tube as a replacement.**

DTC CONFIRMATION PROCEDURE

1. INSPECTION START

Do you have CONSULT-III?

Do you have CONSULT-III?

YES >> GO TO 2.
NO >> GO TO 4.

2. PRECONDITIONING

If DTC Confirmation Procedure has been previously conducted, always turn ignition switch OFF and wait at least 10 seconds before conducting the next test.

NOTE:
- **If DTC P0456 is displayed with P0442, first perform trouble diagnosis for DTC P0456.**
- **After repair, make sure that the hoses and clips are installed properly.**
- **Make sure that EVAP hoses are connected to EVAP canister purge volume control solenoid valve properly.**

TESTING CONDITION:
- **Open engine hood before conducting following procedure.**
- **If any of following conditions are met just before the DTC CONFIRMATION PROCEDURE, leave the vehicle for more than 1 hour.**
  - **Fuel filler cap is removed.**
  - **Fuel is refilled or drained.**
  - **EVAP component parts is/are removed.**
- **Before performing the following procedure, confirm that battery voltage is more than 11V at idle.**

>> GO TO 3.

3. PERFORM DTC CONFIRMATION PROCEDURE

With CONSULT-III

1. Turn ignition switch ON and select “DATA MONITOR” mode with CONSULT-III.
2. Make sure the following conditions are met.
   FUEL LEVEL SE: 0.25 - 1.4V
   COOLAN TEMP/S: 0 - 32°C (32 - 90°F)
   FUEL T/TMP SE: 0 - 35°C (32 - 95°F)
   INT A/TEMP SE: More than 0°C (32°F)
   If NG, turn ignition switch OFF and leave the vehicle in a cool place (soak the vehicle) or refilling/draining fuel until the output voltage condition of the “FUEL LEVEL SE” meets within the range above and leave the vehicle for more than 1 hour. Then start from step 1).
3. Turn ignition switch OFF and wait at least 10 seconds.
4. Turn ignition switch ON.
5. Select “EVAP V/S LEAK P0456/P1456” of “EVAPORATIVE SYSTEM” in “DTC WORK SUPPORT” mode with CONSULT-III.
   Follow the instruction displayed.
   NOTE:
   If the engine speed cannot be maintained within the range displayed on CONSULT-III screen, go to EC-24, "BASIC INSPECTION : Special Repair Requirement".

Which is displayed on CONSULT-III?

OK >> INSPECTION END
NG >> Go to EC-338, "Diagnosis Procedure".

4. PERFORM COMPONENT FUNCTION CHECK

Perform component function check. Refer to EC-338, "Component Function Check".

NOTE:
Use component function check to check the overall function of the EVAP very small leak function. During this check, a 1st trip DTC might not be confirmed.

Is the inspection result normal?

YES >> INSPECTION END
NO >> Go to EC-338, "Diagnosis Procedure".

Component Function Check

INFOID:0000000004349365

1. PERFORM COMPONENT FUNCTION CHECK

With GST

CAUTION:

- **Do not use compressed air, doing so may damage the EVAP system.**
- **Do not start engine.**
- **Do not exceeded 4.12 kPa (0.042 kg/cm^2, 0.6 psi).**

1. Attach the EVAP service port adapter [commercial service tool: (J-41413-OBD)] securely to the EVAP service port.
2. Set the pressure pump and a hose.
3. Also set a vacuum gauge via 3-way connector and a hose.
4. Turn ignition switch ON.
5. Connect GST and select Service $08.
6. Using Service $08 control the EVAP canister vent control valve (close).
7. Apply pressure and make sure the following conditions are satisfied.

   Pressure to be applied: 2.7 kPa (0.028 kg/cm^2, 0.39 psi)
   Time to be waited after the pressure drawn in to the EVAP system and the pressure to be dropped: 60 seconds and the pressure should not be dropped more than 0.4 kPa (0.004 kg/cm^2, 0.06 psi).

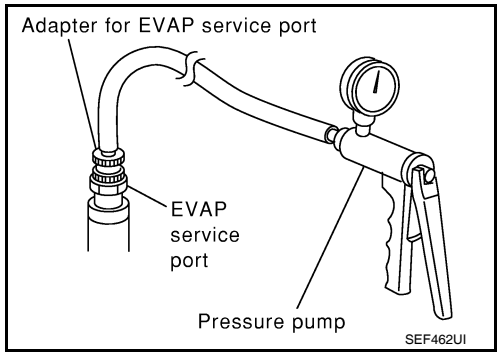

Is the inspection result normal?

YES >> GO TO 2.
NO >> Go to EC-338, "Diagnosis Procedure".

2. RELEASE PRESSURE

1. Disconnect GST.
2. Start engine and warm it up to normal operating temperature.
3. Turn ignition switch OFF and wait at least 10 seconds.
4. Restart engine and let it idle for 90 seconds.
5. Keep engine speed at 2,000 rpm for 30 seconds.
6. Turn ignition switch OFF.

   NOTE:
   For more information, refer to GST Instruction Manual.

>> INSPECTION END

Diagnosis Procedure

INFOID:0000000004349366

1. CHECK FUEL FILLER CAP DESIGN

1. Turn ignition switch OFF.
2. Check for genuine NISSAN fuel filler cap design.

Is the inspection result normal?

YES >> GO TO 2.
NO >> Replace with genuine NISSAN fuel filler cap.

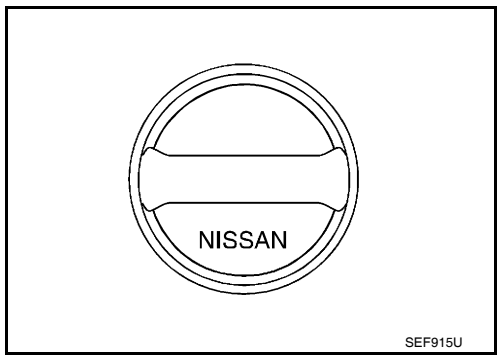

2. CHECK FUEL FILLER CAP INSTALLATION

Check that the cap is tightened properly by rotating the cap clockwise.

Is the inspection result normal?

YES >> GO TO 3.
NO >> Open fuel filler cap, then clean cap and fuel filler neck threads using air blower. Then retighten until ratcheting sound is heard.

3. CHECK FUEL FILLER CAP FUNCTION

Check for air releasing sound while opening the fuel filler cap.

Is the inspection result normal?

YES >> GO TO 5.
NO >> GO TO 4.

4. CHECK FUEL TANK VACUUM RELIEF VALVE

Refer to EC-341, "Component Inspection".

Is the inspection result normal?

YES >> GO TO 5.
NO >> Replace fuel filler cap with a genuine one.

5. CHECK FOR EVAP LEAK

Refer to EC-86, "System Diagram".

Is there any leak in EVAP line?

YES >> Repair or replace.
NO >> GO TO 6.

6. CHECK EVAP CANISTER VENT CONTROL VALVE

Check the following.

- EVAP canister vent control valve is installed properly.
  Refer to EC-553, "Exploded View".
- EVAP canister vent control valve.
  Refer to EC-310, "Component Inspection".

Is the inspection result normal?

YES >> GO TO 7.
NO >> Repair or replace EVAP canister vent control valve and O-ring.

7. CHECK IF EVAP CANISTER SATURATED WITH WATER

1. Remove EVAP canister with EVAP canister vent control valve and EVAP control system pressure sensor attached.
2. Check if water will drain from the EVAP canister.

Does water drain from EVAP canister?

YES >> GO TO 8.
NO-1 >> With CONSULT-III: GO TO 10.
NO-2 >> Without CONSULT-III: GO TO 11.

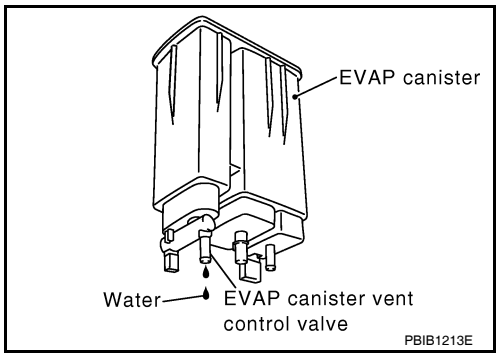

8. CHECK EVAP CANISTER

Weigh the EVAP canister with the EVAP canister vent control valve and EVAP control system pressure sensor attached.

The weight should be less than 2.1 kg (4.6 lb).

Is the inspection result normal?

YES-1 >> With CONSULT-III: GO TO 10.
YES-2 >> Without CONSULT-III: GO TO 11.
NO >> GO TO 9.

9. DETECT MALFUNCTIONING PART

Check the following.
- EVAP canister for damage
- EVAP hose between EVAP canister and vehicle frame for clogging or poor connection

>> Repair hose or replace EVAP canister.

10. CHECK EVAP CANISTER PURGE VOLUME CONTROL SOLENOID VALVE OPERATION

With CONSULT-III

1. Disconnect vacuum hose to EVAP canister purge volume control solenoid valve at EVAP service port.
2. Start engine.
3. Perform “PURG VOL CONT/V” in “ACTIVE TEST” mode.
4. Touch “Qu” on CONSULT-III screen to increase “PURG VOL CONT/V” opening to 100%.
5. Check vacuum hose for vacuum.

Vacuum should exist.

Is the inspection result normal?

YES >> GO TO 13.
NO >> GO TO 12.

11. CHECK EVAP CANISTER PURGE VOLUME CONTROL SOLENOID VALVE OPERATION

Without CONSULT-III

1. Start engine and warm it up to normal operating temperature.
2. Stop engine.
3. Disconnect vacuum hose to EVAP canister purge volume control solenoid valve at EVAP service port.
4. Start engine and let it idle for at least 80 seconds.
5. Check vacuum hose for vacuum when revving engine up to 2,000 rpm.

Vacuum should exist.

Is the inspection result normal?

YES >> GO TO 14.
NO >> GO TO 12.

12. CHECK VACUUM HOSE

Check vacuum hoses for clogging or disconnection. Refer to EC-86, "System Diagram".

Is the inspection result normal?

YES >> GO TO 13.
NO >> Repair or reconnect the hose.

13. CHECK EVAP CANISTER PURGE VOLUME CONTROL SOLENOID VALVE

Refer to EC-302, "Diagnosis Procedure".

Is the inspection result normal?

YES >> GO TO 14.
NO >> Replace EVAP canister purge volume control solenoid valve.

14. CHECK FUEL TANK TEMPERATURE SENSOR

Refer to EC-264, "Component Inspection".

Is the inspection result normal?

YES >> GO TO 15.
NO >> Replace fuel level sensor unit.

15. CHECK EVAP CONTROL SYSTEM PRESSURE SENSOR

Refer to EC-318, "Component Inspection".

Is the inspection result normal?

YES >> GO TO 16.
NO >> Replace EVAP control system pressure sensor.

16. CHECK EVAP PURGE LINE

Check EVAP purge line (pipe, rubber tube, fuel tank and EVAP canister) for cracks or improper connection. Refer to EC-86, "System Diagram".

Is the inspection result normal?

YES >> GO TO 17.
NO >> Repair or reconnect the hose.

17. CLEAN EVAP PURGE LINE

Clean EVAP purge line (pipe and rubber tube) using air blower.

>> GO TO 18.

18. CHECK EVAP/ORVR LINE

Check EVAP/ORVR line between EVAP canister and fuel tank for clogging, kink, looseness and improper connection. For location, refer to EC-476, "Description".

Is the inspection result normal?

YES >> GO TO 19.
NO >> Repair or replace hoses and tubes.

19. CHECK RECIRCULATION LINE

Check recirculation line between fuel filler tube and fuel tank for clogging, kink, cracks, looseness and improper connection.

Is the inspection result normal?

YES >> GO TO 20.
NO >> Repair or replace hose, tube or fuel filler tube.

20. CHECK REFUELING EVAP VAPOR CUT VALVE

Refer to EC-479, "Component Inspection".

Is the inspection result normal?

YES >> GO TO 21.
NO >> Replace refueling EVAP vapor cut valve with fuel tank.

21. CHECK FUEL LEVEL SENSOR

Refer to MWI-47, "Component Inspection".

Is the inspection result normal?

YES >> GO TO 22.
NO >> Replace fuel level sensor unit.

22. CHECK INTERMITTENT INCIDENT

Refer to GI-42, "Intermittent Incident".

>> INSPECTION END

Component Inspection

INFOID:0000000004349367

1. CHECK FUEL TANK VACUUM RELIEF VALVE

1. Turn ignition switch OFF.
2. Remove fuel filler cap.

3. Wipe clean valve housing.

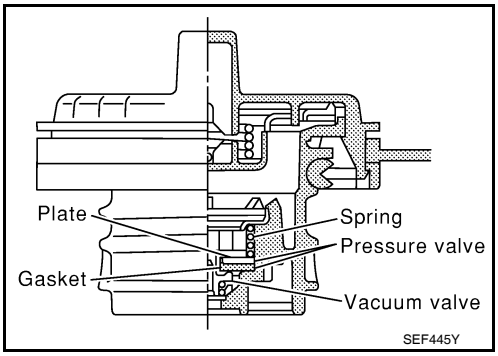

4. Install fuel filler cap adapter (commercial service tool) to fuel filler cap.
5. Check valve opening pressure and vacuum.

Pressure: **15.3 - 20.0 kPa (0.156 - 0.204 kg/cm^2, 2.22 - 2.90 psi)**

Vacuum: **−6.0 to −3.3 kPa (−0.061 to −0.034 kg/cm^2, −0.87 to −0.48 psi)**

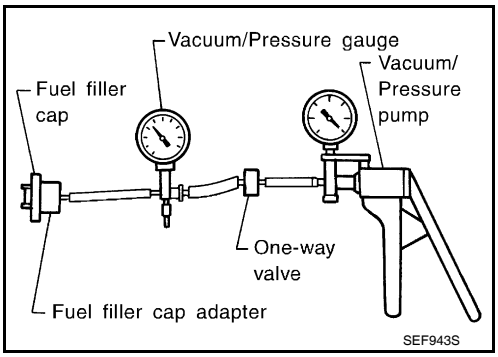

Is the inspection result normal?

YES >> INSPECTION END
NO >> GO TO 2.

2. REPLACE FUEL FILLER CAP

Replace fuel filler cap.

CAUTION:

Use only a genuine fuel filler cap as a replacement. If an incorrect fuel filler cap is used, the MIL may come on.

>> INSPECTION END

P0460 FUEL LEVEL SENSOR

Description

INFOID:0000000004349368

The fuel level sensor is mounted in the fuel level sensor unit.
The sensor detects a fuel level in the fuel tank and transmits a signal to the combination meter. The combination meter sends the fuel level sensor signal to the ECM through CAN communication line.
It consists of two parts, one is mechanical float and the other is variable resistor. Fuel level sensor output voltage changes depending on the movement of the fuel mechanical float.

DTC Logic

INFOID:0000000004349369

DTC DETECTION LOGIC

NOTE:
- **If DTC P0460 is displayed with DTC UXXXX, first perform the trouble diagnosis for DTC UXXXX.**
- **If DTC P0460 is displayed with DTC P0607, first perform the trouble diagnosis for DTC P0607. Refer to EC-361, "DTC Logic".**

When the vehicle is parked, naturally the fuel level in the fuel tank is stable. It means that output signal of the fuel level sensor does not change. If ECM senses sloshing signal from the sensor, fuel level sensor malfunction is detected.

DTC No.	Trouble diagnosis name	DTC detecting condition	Possible cause
P0460	Fuel level sensor circuit noise	Even though the vehicle is parked, a signal being varied is sent from the fuel level sensor to ECM.	• Harness or connectors (The CAN communication line is open or shorted) • Harness or connectors (The sensor circuit is open or shorted) • Combination meter • Fuel level sensor

DTC CONFIRMATION PROCEDURE

1. PRECONDITIONING

If DTC Confirmation Procedure has been previously conducted, always turn ignition switch OFF and wait at least 10 seconds before conducting the next test.

>> GO TO 2.

2. PERFORM DTC CONFIRMATION PROCEDURE

1. Start engine and wait maximum of 2 consecutive minutes.
2. Check 1st trip DTC.

Is 1st trip DTC detected?

YES >> Go to EC-343, "Diagnosis Procedure".
NO >> INSPECTION END

Diagnosis Procedure

INFOID:0000000004349370

1. CHECK COMBINATION METER FUNCTION

Refer to MWI-46, "Component Function Check".

Is the inspection result normal?

YES >> GO TO 2.
NO >> Go to EC-343, "Diagnosis Procedure".

2. CHECK INTERMITTENT INCIDENT

Refer to GI-42, "Intermittent Incident".

>> INSPECTION END

P0461 FUEL LEVEL SENSOR

Description

INFOID:0000000004349371

The fuel level sensor is mounted in the fuel level sensor unit.
The sensor detects a fuel level in the fuel tank and transmits a signal to the combination meter. The combination meter sends the fuel level sensor signal to the ECM through CAN communication line.
It consists of two parts, one is mechanical float and the other is variable resistor. Fuel level sensor output voltage changes depending on the movement of the fuel mechanical float.

DTC Logic

INFOID:0000000004349372

DTC DETECTION LOGIC

NOTE:
- **If DTC P0461 is displayed with DTC UXXXX, first perform the trouble diagnosis for DTC UXXXX.**
- **If DTC P0461 is displayed with DTC P0607, first perform the trouble diagnosis for DTC P0607. Refer to EC-361, "DTC Logic".**

Driving long distances naturally affect fuel gauge level.
This diagnosis detects the fuel gauge malfunction of the gauge not moving even after a long distance has been driven.

DTC No.	Trouble diagnosis name	DTC detecting condition	Possible cause
P0461	Fuel level sensor circuit range/performance	The output signal of the fuel level sensor does not change within the specified range even though the vehicle has been driven a long distance.	• Harness or connectors (The CAN communication line is open or shorted) • Harness or connectors (The sensor circuit is open or shorted) • Combination meter • Fuel level sensor

DTC CONFIRMATION PROCEDURE

1. PERFORM COMPONENT FUNCTION CHECK

Perform component function check. Refer to EC-344, "Component Function Check".
Use component function check to check the overall function of the fuel level sensor function. During this check, a 1st trip DTC might not be confirmed.

Is the inspection result normal?

YES >> INSPECTION END
NO >> Go to EC-345, "Diagnosis Procedure".

Component Function Check

INFOID:0000000004349373

1. PRECONDITIONING

WARNING:
When performing following procedure, be sure to observe the handling of the fuel. Refer to FL-6, "Removal and Installation".
TESTING CONDITION:
Before starting component function check, preparation of draining fuel and refilling fuel is required.

Do you have CONSULT-III?

YES >> GO TO 2.
NO >> GO TO 3.

2. PERFORM COMPONENT FUNCTION CHECK

With CONSULT-III
NOTE:
Start from step 10, if it is possible to confirm that the fuel cannot be drained by 30 ℓ (7-7/8 US gal, 6-5/8 Imp gal) in advance.

1. Prepare a fuel container and a spare hose.

2. Release fuel pressure from fuel line, refer to EC-550, "Inspection".
3. Remove the fuel feed hose on the fuel level sensor unit.
4. Connect a spare fuel hose where the fuel feed hose was removed.
5. Turn ignition switch OFF and wait at least 10 seconds then turn ON.
6. Select “FUEL LEVEL SE” in “DATA MONITOR” mode with CONSULT-III.
7. Check “FUEL LEVEL SE” output voltage and note it.
8. Select “FUEL PUMP RELAY” in “ACTIVE TEST” mode with CONSULT-III.
9. Touch “ON” and drain fuel approximately 30 ℓ (7-7/8 US gal, 6-5/8 Imp gal) and stop it.
10. Check “FUEL LEVEL SE” output voltage and note it.
11. Fill fuel into the fuel tank for 30 ℓ (7-7/8 US gal, 6-5/8 Imp gal).
12. Check “FUEL LEVEL SE” output voltage and note it.
13. Confirm whether the voltage changes more than 0.03V during step 7 to 10 and 10 to 12.

Is the inspection result normal?

YES >> INSPECTION END
NO >> Go to EC-345, "Diagnosis Procedure".

3. PERFORM COMPONENT FUNCTION CHECK

Without CONSULT-III
NOTE:
Start from step 8, if it is possible to confirm that the fuel cannot be drained by 30 ℓ (7-7/8 US gal, 6-5/8 Imp gal) in advance.

1. Prepare a fuel container and a spare hose.
2. Release fuel pressure from fuel line. Refer to EC-550, "Inspection".
3. Remove the fuel feed hose on the fuel level sensor unit.
4. Connect a spare fuel hose where the fuel feed hose was removed.
5. Turn ignition switch ON.
6. Drain fuel by 30 ℓ (7-7/8 US gal, 6-5/8 Imp gal) from the fuel tank using proper equipment.
7. Confirm that the fuel gauge indication varies.
8. Fill fuel into the fuel tank for 30 ℓ (7-7/8 US gal, 6-5/8 Imp gal).
9. Confirm that the fuel gauge indication varies.

Is the inspection result normal?

YES >> INSPECTION END
NO >> Go to EC-345, "Diagnosis Procedure".

Diagnosis Procedure

INFOID:0000000004349374

1. CHECK COMBINATION METER FUNCTION

Refer to MWI-46, "Component Function Check".

Is the inspection result normal?

YES >> GO TO 2.
NO >> Go to EC-343, "Diagnosis Procedure".

2. CHECK INTERMITTENT INCIDENT

Refer to GI-42, "Intermittent Incident".

>> INSPECTION END

P0462, P0463 FUEL LEVEL SENSOR

Description

INFOID:0000000004349375

The fuel level sensor is mounted in the fuel level sensor unit.
The sensor detects a fuel level in the fuel tank and transmits a signal to the combination meter. The combination meter sends the fuel level sensor signal to the ECM through CAN communication line.
It consists of two parts, one is mechanical float and the other is variable resistor. Fuel level sensor output voltage changes depending on the movement of the fuel mechanical float.

DTC Logic

INFOID:0000000004349376

DTC DETECTION LOGIC

NOTE:
- **If DTC P0462 or P0463 is displayed with DTC UXXXX, first perform the trouble diagnosis for DTC UXXXX.**
- **If DTC P0462 or P0463 is displayed with DTC P0607, first perform the trouble diagnosis for DTC P0607. Refer to EC-361, "DTC Logic".**

This diagnosis indicates the former, to detect open or short circuit malfunction.

DTC No.	Trouble diagnosis name	DTC detecting condition	Possible cause
P0462	Fuel level sensor circuit low input	An excessively low voltage from the sensor is sent to ECM.	• Harness or connectors (The CAN communication line is open or shorted) • Harness or connectors (The sensor circuit is open or shorted) • Combination meter • Fuel level sensor
P0463	Fuel level sensor circuit high input	An excessively high voltage from the sensor is sent to ECM.	

DTC CONFIRMATION PROCEDURE

1.PRECONDITIONING

If DTC Confirmation Procedure has been previously conducted, always turn ignition switch OFF and wait at least 10 seconds before conducting the next test.
TESTING CONDITION:
Before performing the following procedure, confirm that battery voltage is between 11V and 16V at ignition switch ON.

>> GO TO 2.

2.PERFORM DTC CONFIRMATION PROCEDURE

1. Turn ignition switch ON and wait at least 5 seconds.
2. Check 1st trip DTC.

Is 1st trip DTC detected?

YES >> Go to EC-346, "Diagnosis Procedure".
NO >> INSPECTION END

Diagnosis Procedure

INFOID:0000000004349377

1.CHECK COMBINATION METER FUNCTION

Refer to MWI-46, "Component Function Check".

Is the inspection result normal?

YES >> GO TO 2.
NO >> Go to EC-343, "Diagnosis Procedure".

2.CHECK INTERMITTENT INCIDENT

Refer to GI-42, "Intermittent Incident".

>> INSPECTION END

P0500 VSS

Description

INFOID:0000000004349378

The vehicle speed signal is sent to the combination meter from the “ABS actuator and electric unit (control unit)” by CAN communication line. The combination meter then sends a signal to the ECM by CAN communication line.

DTC Logic

INFOID:0000000004349379

DTC DETECTION LOGIC

NOTE:
- **If DTC P0500 is displayed with DTC UXXXX, first perform the trouble diagnosis for DTC UXXXX.**
- **If DTC P0500 is displayed with DTC P0607, first perform the trouble diagnosis for DTC P0607. Refer to EC-361, "DTC Logic".**

DTC No.	Trouble diagnosis name	DTC detecting condition	Possible cause
P0500	Vehicle speed sensor	The almost 0 km/h (0 MPH) signal from vehicle speed sensor is sent to ECM even when vehicle is being driven.	• Harness or connectors (The CAN communication line is open or shorted) • Harness or connectors (The vehicle speed signal circuit is open or shorted) • Wheel sensor • Combination meter • ABS actuator and electric unit (control unit)

DTC CONFIRMATION PROCEDURE

1. INSPECTION START

Do you have CONSULT-III?

Do you have CONSULT-III?

YES >> GO TO 2.
NO >> GO TO 5.

2. PRECONDITIONING

If DTC Confirmation Procedure has been previously conducted, always turn ignition switch OFF and wait at least 10 seconds before conducting the next test.

>> GO TO 3.

3. CHECK VEHICLE SPEED SIGNAL

NOTE:
This procedure may be conducted with the drive wheels lifted in the shop or by driving the vehicle. If a road test is expected to be easier, it is unnecessary to lift the vehicle.

With CONSULT-III

1. Start engine.
2. Read “VHCL SPEED SE” in “DATA MONITOR” mode with CONSULT-III. The vehicle speed on CONSULT-III should exceed 10 km/h (6 mph) when rotating wheels with suitable gear position.

Is the inspection result normal?

YES >> GO TO 2.
NO >> Go to EC-349, "Diagnosis Procedure".

4. PERFORM DTC CONFIRMATION PROCEDURE

1. Select “DATA MONITOR” mode with CONSULT-III.
2. Warm engine up to normal operating temperature.
3. Maintain the following conditions for at least 50 consecutive seconds.
   CAUTION:
   Always drive vehicle at a safe speed.

ENG SPEED	CVT: 1,350 - 6,000 rpm M/T: 1,650 - 6,000 rpm
COOLAN TEMP/S	More than 70°C (158°F)
B/FUEL SCHDL	CVT: 5.5 - 31.8 msec M/T: 4.8 - 31.8 msec
Shift lever	Except P or N position (CVT) Except Neutral position (M/T)
PW/ST SIGNAL	OFF

4. Check 1st trip DTC.

Is 1st trip DTC detected?

YES >> Go to EC-349, "Diagnosis Procedure".
NO >> INSPECTION END

5. PERFORM COMPONENT FUNCTION CHECK

Perform component function check. Refer to EC-349, "Component Function Check".
Use component function check to check the overall function of the vehicle speed signal circuit. During this check, a 1st trip DTC might not be confirmed.

Is the inspection result normal?

YES >> INSPECTION END
NO >> Go to EC-349, "Diagnosis Procedure".

Component Function Check

INFOID:0000000004349380

1. PERFORM COMPONENT FUNCTION CHECK

With GST

1. Lift up drive wheels.
2. Start engine.
3. Read vehicle speed signal in Service $01 with GST.
   The vehicle speed signal on GST should be able to exceed 10 km/h (6 MPH) when rotating wheels with suitable gear position.

Is the inspection result normal?

YES >> INSPECTION END
NO >> Go to EC-349, "Diagnosis Procedure".

Diagnosis Procedure

INFOID:0000000004349381

1. CHECK DTC WITH “ABS ACTUATOR AND ELECTRIC UNIT (CONTROL UNIT)”

Refer to BRC-12, "CONSULT-III Function (ABS)".

Is the inspection result normal?

YES >> GO TO 2.
NO >> Repair or replace.

2. CHECK COMBINATION METER

Refer to MWI-38, "CONSULT-III Function (METER/M&A)".

>> INSPECTION END

P0506 ISC SYSTEM

Description

INFOID:0000000004349382

The ECM controls the engine idle speed to a specified level through the fine adjustment of the air, which is let into the intake manifold, by operating the electric throttle control actuator. The operating of the throttle valve is varied to allow for optimum control of the engine idling speed. The crankshaft position sensor (POS) detects the actual engine speed and sends a signal to the ECM.
The ECM controls the electric throttle control actuator so that the engine speed coincides with the target value memorized in the ECM. The target engine speed is the lowest speed at which the engine can operate steadily. The optimum value stored in the ECM is determined by taking into consideration various engine conditions, such as during warming up, deceleration, and engine load (air conditioner, power steering and cooling fan operation, etc.).

DTC Logic

INFOID:0000000004349383

DTC DETECTION LOGIC

NOTE:
If DTC P0506 is displayed with other DTC, first perform the trouble diagnosis for the other DTC.

DTC No.	Trouble diagnosis name	DTC detecting condition	Possible cause
P0506	Idle speed control system RPM lower than expected	The idle speed is less than the target idle speed by 100 rpm or more.	• Electric throttle control actuator • Intake air leak

DTC CONFIRMATION PROCEDURE

1.PRECONDITIONING

If DTC Confirmation Procedure has been previously conducted, always turn ignition switch OFF and wait at least 10 seconds before conducting the next test.
If the target idle speed is out of the specified value, perform EC-30, "IDLE AIR VOLUME LEARNING : Special Repair Requirement", before conducting DTC Confirmation Procedure.
TESTING CONDITION:
- **Before performing the following procedure, confirm that battery voltage is more than 11V at idle.**
- **Always perform the test at a temperature above –10°C(14°F).**

>> GO TO 2.

2.PERFORM DTC CONFIRMATION PROCEDURE

1. Start engine and warm it up to normal operating temperature.
2. Turn ignition switch OFF and wait at least 10 seconds.
3. Start engine and run it for at least 1 minute at idle speed.
4. Check 1st trip DTC.

Is 1st trip DTC detected?

YES >> Go to EC-350, "Diagnosis Procedure".
NO >> INSPECTION END

Diagnosis Procedure

INFOID:0000000004349384

1.CHECK INTAKE AIR LEAK

1. Start engine and let it idle.
2. Listen for an intake air leak after the mass air flow sensor.

Is intake air leak detected?

YES >> Discover air leak location and repair.
NO >> GO TO 2.

2.REPLACE ECM

1. Stop engine.

2. Replace ECM.
3. Go to EC-27, "ADDITIONAL SERVICE WHEN REPLACING CONTROL UNIT : Special Repair Requirement".

>> INSPECTION END

P0507 ISC SYSTEM

Description

INFOID:0000000004349385

The ECM controls the engine idle speed to a specified level through the fine adjustment of the air, which is let into the intake manifold, by operating the electric throttle control actuator. The operating of the throttle valve is varied to allow for optimum control of the engine idling speed. The crankshaft position sensor (POS) detects the actual engine speed and sends a signal to the ECM.
The ECM controls the electric throttle control actuator so that the engine speed coincides with the target value memorized in the ECM. The target engine speed is the lowest speed at which the engine can operate steadily. The optimum value stored in the ECM is determined by taking into consideration various engine conditions, such as during warming up, deceleration, and engine load (air conditioner, power steering and cooling fan operation, etc.).

DTC Logic

INFOID:0000000004349386

DTC DETECTION LOGIC

NOTE:
If DTC P0507 is displayed with other DTC, first perform the trouble diagnosis for the other DTC.

DTC No.	Trouble diagnosis name	DTC detecting condition	Possible cause
P0507	Idle speed control system RPM higher than expected	The idle speed is more than the target idle speed by 200 rpm or more.	• Electric throttle control actuator • Intake air leak • PCV system

DTC CONFIRMATION PROCEDURE

1.PRECONDITIONING

If DTC Confirmation Procedure has been previously conducted, always turn ignition switch OFF and wait at least 10 seconds before conducting the next test.
If the target idle speed is out of the specified value, perform EC-30, "IDLE AIR VOLUME LEARNING : Special Repair Requirement", before conducting DTC Confirmation Procedure.
TESTING CONDITION:
- **Before performing the following procedure, confirm that battery voltage is more than 11V at idle.**
- **Always perform the test at a temperature above –10°C(14°F).**

>> GO TO 2.

2.PERFORM DTC CONFIRMATION PROCEDURE

1. Start engine and warm it up to normal operating temperature.
2. Turn ignition switch OFF and wait at least 10 seconds.
3. Start engine and run it for at least 1 minute at idle speed.
4. Check 1st trip DTC.

Is 1st trip DTC detected?

YES >> Go to EC-352, "Diagnosis Procedure".
NO >> INSPECTION END

Diagnosis Procedure

INFOID:0000000004349387

1.CHECK PCV HOSE CONNECTION

Confirm that PCV hose is connected correctly.

Is the inspection result normal?

YES >> GO TO 2.
NO >> Repair or replace.

2.CHECK INTAKE AIR LEAK

1. Start engine and let it idle.
2. Listen for an intake air leak after the mass air flow sensor.

Is intake air leak detected?

YES >> Discover air leak location and repair.
NO >> GO TO 3.

3. REPLACE ECM

1. Stop engine.
2. Replace ECM.
3. Go to EC-27, "ADDITIONAL SERVICE WHEN REPLACING CONTROL UNIT : Special Repair Requirement".

>> INSPECTION END

P0550 PSP SENSOR

Description

INFOID:0000000004349388

Power steering pressure (PSP) sensor is installed to the power steering high-pressure tube and detects a power steering load.
This sensor is a potentiometer which transforms the power steering load into output voltage, and emits the voltage signal to the ECM. The ECM controls the electric throttle control actuator and adjusts the throttle valve opening angle to increase the engine speed and adjusts the idle speed for the increased load.

DTC Logic

INFOID:0000000004349389

DTC DETECTION LOGIC

NOTE:
If DTC P0550 is displayed with DTC P0643, first perform the trouble diagnosis for DTC P0643. Refer to EC-362, "DTC Logic".

DTC No.	Trouble diagnosis name	DTC detecting condition	Possible cause
P0550	Power steering pressure sensor circuit	An excessively low or high voltage from the sensor is sent to ECM.	• Harness or connectors (The sensor circuit is open or shorted) • Power steering pressure sensor

DTC CONFIRMATION PROCEDURE

1.PRECONDITIONING

If DTC Confirmation Procedure has been previously conducted, always turn ignition switch OFF and wait at least 10 seconds before conducting the next test.

>> GO TO 2.

2.PERFORM DTC CONFIRMATION PROCEDURE

1. Start engine and let it idle for at least 5 seconds.
2. Check 1st trip DTC.

Is 1st trip DTC detected?

YES >> Go to EC-354, "Diagnosis Procedure".
NO >> INSPECTION END

Diagnosis Procedure

INFOID:0000000004349390

1.CHECK GROUND CONNECTION

1. Turn ignition switch OFF.
2. Check ground connection E9. Refer to Ground Inspection in GI-45, "Circuit Inspection".

Is the inspection result normal?

YES >> GO TO 2.
NO >> Repair or replace ground connection.

2.CHECK PSP SENSOR POWER SUPPLY CIRCUIT

1. Disconnect power steering pressure (PSP) sensor harness connector.
2. Turn ignition switch ON.

3. Check the voltage between PSP sensor harness connector and ground.

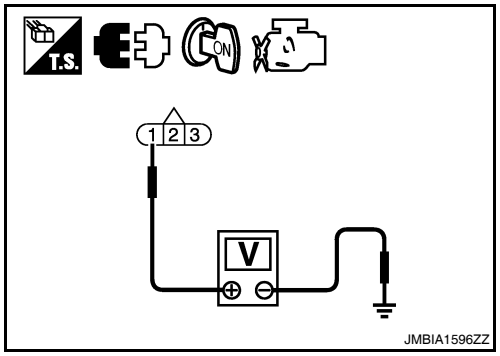

PSP sensor		Ground	Voltage
Connector	Terminal		
F40	1	Ground	Approx. 5 V

Is the inspection result normal?

YES >> GO TO 3.
NO >> Repair open circuit or short to ground or short to power in harness or connectors.

3. CHECK PSP SENSOR GROUND CIRCUIT FOR OPEN AND SHORT

1. Turn ignition switch OFF.
2. Disconnect ECM harness connector.
3. Check the continuity between PSP sensor harness connector and ECM harness connector.

PSP sensor		ECM		Continuity
Connector	Terminal	Connector	Terminal	
F40	3	F13	48	Existed

4. Also check harness for short to ground and short to power.

Is the inspection result normal?

YES >> GO TO 4.
NO >> Repair open circuit or short to ground short to power in harness or connectors.

4. CHECK PSP SENSOR INPUT SIGNAL CIRCUIT FOR OPEN AND SHORT

1. Check the continuity between PSP sensor harness connector and ECM harness connector.

PSP sensor		ECM		Continuity
Connector	Terminal	Connector	Terminal	
F40	2	F13	41	Existed

2. Also check harness for short to ground and short to power.

Is the inspection result normal?

YES >> GO TO 5.
NO >> Repair open circuit or short to ground or short to power in harness or connectors.

5. CHECK PSP SENSOR

Refer to EC-355, "Component Inspection".

Is the inspection result normal?

YES >> GO TO 6.
NO >> Replace PSP sensor.

6. CHECK INTERMITTENT INCIDENT

Refer to GI-42, "Intermittent Incident".

>> INSPECTION END

Component Inspection

INFOID:0000000004349391

1. CHECK POWER STEERING PRESSURE SENSOR

1. Turn ignition switch OFF.
2. Reconnect all harness connectors disconnected.
3. Start engine and let it idle.

4. Check the voltage between ECM harness connector and ground under the following conditions.

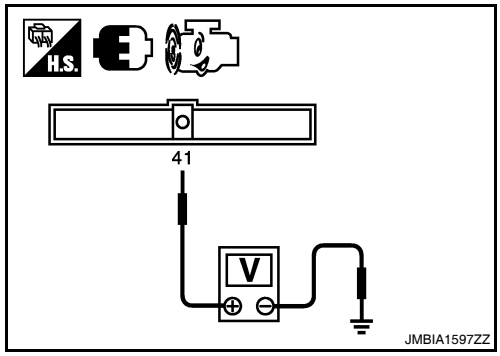

ECM		Condition		Voltage
Connector	Terminal			
F13	41 (Power steering pressure sensor signal)	Steering wheel	Being turned.	0.5 - 4.5 V
			Not being turned.	0.4 - 0.8 V

Is the inspection result normal?

YES >> INSPECTION END
NO >> Replace power steering pressure sensor.

P0603 ECM POWER SUPPLY

Description

INFOID:0000000004349392

Battery voltage is supplied to the ECM even when the ignition switch is turned OFF for the ECM memory function of the DTC memory, the air-fuel ratio feedback compensation value memory, the idle air volume learning value memory, etc.

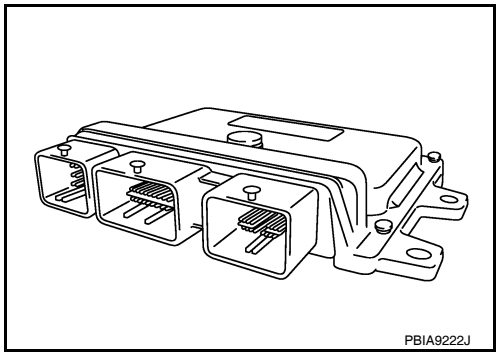

DTC Logic

INFOID:0000000004349393

DTC DETECTION LOGIC

DTC No.	Trouble diagnosis name	DTC detecting condition	Possible cause
P0603	ECM power supply circuit	ECM back-up RAM system does not function properly.	• Harness or connectors [ECM power supply (back-up) circuit is open or shorted.] • ECM

DTC CONFIRMATION PROCEDURE

1.PRECONDITIONING

If DTC Confirmation Procedure has been previously conducted, always turn ignition switch OFF and wait at least 10 seconds before conducting the next test.

>> GO TO 2.

2.PERFORM DTC CONFIRMATION PROCEDURE

1. Turn ignition switch ON and wait at least 1 second.
2. Start engine and let it idle for 1 second.
3. Turn ignition switch OFF, wait at least 10 seconds, and then turn ON.
4. Repeat steps 2 and 3 for four times.
5. Check 1st trip DTC.

Is 1st trip DTC detected?

YES >> Go to EC-357, "Diagnosis Procedure".
NO >> INSPECTION END

Diagnosis Procedure

INFOID:0000000004349394

1.CHECK ECM POWER SUPPLY

1. Turn ignition switch OFF.
2. Disconnect ECM harness connector.

3. Check the voltage between ECM harness connector and ground.

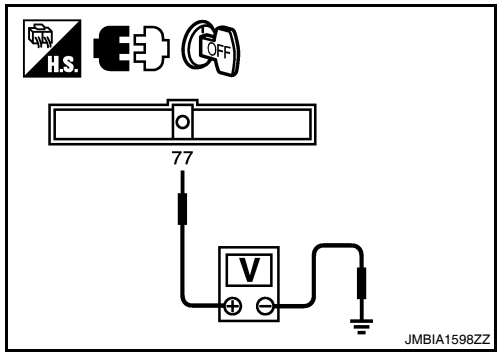

ECM		Ground	Voltage
Connector	Terminal		
F13	77	Ground	Battery voltage

Is the inspection result normal?

YES >> GO TO 3.
NO >> GO TO 2.

2. DETECT MALFUNCTIONING PART

Check the following.
- 15A fuse (No. 42)
- IPDM E/R harness connector F10
- Harness for open or short between ECM and battery

>> Repair or replace harness or connectors.

3. CHECK INTERMITTENT INCIDENT

Refer to GI-42, "Intermittent Incident".

Is the inspection result normal?

YES >> GO TO 4.
NO >> Repair or replace harness or connectors.

4. PERFORM DTC CONFIRMATION PROCEDURE

With CONSULT-III
1. Turn ignition switch ON.
2. Select “SELF-DIAG RESULTS” mode with CONSULT-III.
3. Touch “ERASE”.
4. **Perform DTC CONFIRMATION PROCEDURE.**
   See EC-357, "DTC Logic".

With GST
1. Turn ignition switch ON.
2. Select Service $04 with GST.
3. **Perform DTC CONFIRMATION PROCEDURE.**
   See EC-357, "DTC Logic".

Is the 1st trip DTC P0603 displayed again?

YES >> GO TO 5.
NO >> INSPECTION END

5. REPLACE ECM

1. Replace ECM.
2. Go to EC-27, "ADDITIONAL SERVICE WHEN REPLACING CONTROL UNIT : Special Repair Requirement".

>> INSPECTION END

P0605 ECM

Description

INFOID:0000000004349395

The ECM consists of a microcomputer and connectors for signal input and output and for power supply. The ECM controls the engine.

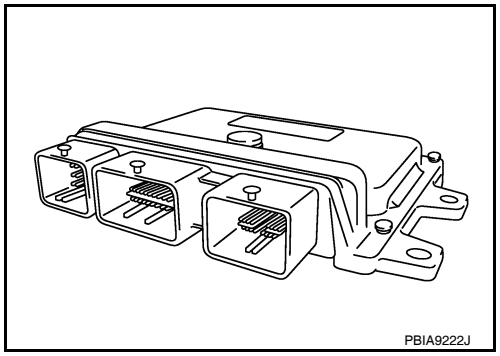

DTC Logic

INFOID:0000000004349396

DTC DETECTION LOGIC

DTC No.	Trouble diagnosis name	DTC detecting condition		Possible cause
P0605	Engine control module	A)	ECM calculation function is malfunctioning.	• ECM
		B)	ECM EEP-ROM system is malfunctioning.	
		C)	ECM self shut-off function is malfunctioning.	

DTC CONFIRMATION PROCEDURE

1.PRECONDITIONING

If DTC Confirmation Procedure has been previously conducted, always turn ignition switch OFF and wait at least 10 seconds before conducting the next test.

>> GO TO 2.

2.PERFORM DTC CONFIRMATION PROCEDURE FOR MALFUNCTION A

1. Turn ignition switch ON.
2. Check 1st trip DTC.

Is 1st trip DTC detected?

YES >> Go to EC-360, "Diagnosis Procedure".
NO >> GO TO 3.

3.PERFORM DTC CONFIRMATION PROCEDURE FOR MALFUNCTION B

1. wait at least 1 second.
2. Turn ignition switch OFF, wait at least 10 seconds, and then turn ON.
3. Check 1st trip DTC.

Is 1st trip DTC detected?

YES >> Go to EC-360, "Diagnosis Procedure".
NO >> GO TO 4.

4.PERFORM DTC CONFIRMATION PROCEDURE FOR MALFUNCTION C

1. wait at least 1 second.
2. Turn ignition switch OFF, wait at least 10 seconds, and then turn ON.
3. Repeat step 2 for 32 times.
4. Check 1st trip DTC.

Is 1st trip DTC detected?

YES >> Go to EC-360, "Diagnosis Procedure".
NO >> INSPECTION END

Diagnosis Procedure

INFOID:0000000004349397

1. INSPECTION START

With CONSULT-III

1. Turn ignition switch ON.
2. Select “SELF-DIAG RESULTS” mode with CONSULT-III.
3. Touch “ERASE”.
4. **Perform DTC CONFIRMATION PROCEDURE.**
   See EC-359, "DTC Logic".

With GST

1. Turn ignition switch ON.
2. Select Service $04 with GST.
3. **Perform DTC CONFIRMATION PROCEDURE.**
   See EC-359, "DTC Logic".

Is the 1st trip DTC P0605 displayed again?

YES >> GO TO 2.
NO >> INSPECTION END

2. REPLACE ECM

1. Replace ECM.
2. Go to EC-27, "ADDITIONAL SERVICE WHEN REPLACING CONTROL UNIT : Special Repair Requirement".

>> INSPECTION END

P0607 ECM

Description

INFOID:0000000004468252

CAN (Controller Area Network) is a serial communication line for real time application. It is an on-vehicle multiplex communication line with high data communication speed and excellent error detection ability. Many electronic control units are equipped onto a vehicle, and each control unit shares information and links with other control units during operation (not independent). In CAN communication, control units are connected with 2 communication lines (CAN H line, CAN L line) allowing a high rate of information transmission with less wiring. Each control unit transmits/receives data but selectively reads required data only.

DTC Logic

INFOID:0000000004349399

DTC DETECTION LOGIC

DTC No.	Trouble diagnosis name	DTC detecting condition	Possible cause
P0607	CAN communication bus	When detecting error during the initial diagnosis of CAN controller of ECM.	• ECM

DTC CONFIRMATION PROCEDURE

1.PERFORM DTC CONFIRMATION PROCEDURE

1. Turn ignition switch ON.
2. Check DTC.

Is DTC detected?

YES >> Go to EC-361, "Diagnosis Procedure".
NO >> INSPECTION END

Diagnosis Procedure

INFOID:0000000004349400

1.INSPECTION START

With CONSULT-III

1. Turn ignition switch ON.
2. Select “SELF-DIAG RESULTS” mode with CONSULT-III.
3. Touch “ERASE”.
4. Perform DTC CONFIRMATION PROCEDURE.
   See EC-361, "DTC Logic".
5. Check DTC.

With GST

1. Turn ignition switch ON.
2. Select “Service $04” with GST.
3. Perform DTC CONFIRMATION PROCEDURE.
   See EC-361, "DTC Logic".
4. Check DTC.

Is the DTC P0607 displayed again?

YES >> GO TO 2.
NO >> INSPECTION END

2.REPLACE ECM

1. Replace ECM.
2. Go to EC-27, "ADDITIONAL SERVICE WHEN REPLACING CONTROL UNIT : Special Repair Requirement".

>> INSPECTION END

P0643 SENSOR POWER SUPPLY

DTC Logic

INFOID:0000000004349401

DTC DETECTION LOGIC

DTC No.	Trouble diagnosis name	DTC detecting condition	Possible cause
P0643	Sensor power supply circuit short	ECM detects a voltage of power source for sensor is excessively low or high.	• Harness or connectors (APP sensor 1 circuit is shorted.) (TP sensor circuit is shorted.) (Battery current sensor circuit is shorted.) (PSP sensor circuit is shorted.) [Camshaft position sensor (PHASE) circuit is shorted.] • Accelerator pedal position sensor • Throttle position sensor • Battery current sensor • Power steering pressure sensor • Camshaft position sensor (PHASE)

DTC CONFIRMATION PROCEDURE

1.PRECONDITIONING

If DTC Confirmation Procedure has been previously conducted, always turn ignition switch OFF and wait at least 10 seconds before conducting the next test.

TESTING CONDITION:

Before performing the following procedure, confirm that battery voltage is more than 8V at idle.

>> GO TO 2.

2.PERFORM DTC CONFIRMATION PROCEDURE

1. Start engine and let it idle for 1 second.
2. Check DTC.

Is DTC detected?

YES >> Go to EC-362, "Diagnosis Procedure".
NO >> INSPECTION END

Diagnosis Procedure

INFOID:0000000004349402

1.CHECK GROUND CONNECTION

1. Turn ignition switch OFF.
2. Check ground connection E9. Refer to Ground Inspection in GI-45, "Circuit Inspection".

Is the inspection result normal?

YES >> GO TO 2.
NO >> Repair or replace ground connection.

2.CHECK ACCELERATOR PEDAL POSITION SENSOR 1 POWER SUPPLY CIRCUIT

1. Disconnect accelerator pedal position (APP) sensor harness connector.
2. Turn ignition switch ON.

3. Check the voltage between APP sensor harness connector and ground.

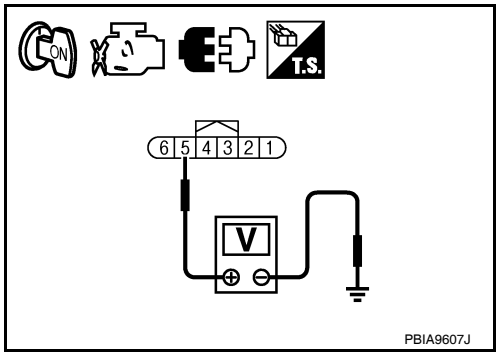

APP sensor		Ground	Voltage
Connector	Terminal		
E40	5	Ground	Approx. 5 V

Is the inspection result normal?

YES >> GO TO 7.
NO >> GO TO 3.

3. CHECK SENSOR POWER SUPPLY CIRCUITS

Check harness for short to power and short to ground, between the following terminals.

ECM		Sensor		
Connector	Terminal	Name	Connector	Terminal
F13	47	Electric throttle control actuator	F57	1
	51	Battery current sensor	F5	1
	55	PSP sensor	F40	1
	59	CMP sensor (PHASE)	F55	1
E10	83	APP sensor	E40	5

Is the inspection result normal?

YES >> GO TO 4.
NO >> Repair short to ground or short to power in harness or connectors.

4. CHECK COMPONENTS

Check the following.
- Battery current sensor (Refer to EC-380, "Component Inspection".)
- Power steering pressure sensor (Refer to EC-355, "Component Inspection".)
- Camshaft position sensor (PHASE) (Refer to EC-284, "Component Inspection".)

Is the inspection result normal?

YES >> GO TO 5.
NO >> Replace malfunctioning component.

5. CHECK TP SENSOR

Refer to EC-191, "Component Inspection".

Is the inspection result normal?

YES >> GO TO 9.
NO >> GO TO 6.

6. REPLACE ELECTRIC THROTTLE CONTROL ACTUATOR

1. Replace electric throttle control actuator.
2. Go to EC-29, "ACCELERATOR PEDAL RELEASED POSITION LEARNING : Special Repair Requirement".

>> INSPECTION END

7. CHECK APP SENSOR

Refer to EC-429, "Component Inspection".

Is the inspection result normal?

YES >> GO TO 9.
NO >> GO TO 8.

8. REPLACE ACCELERATOR PEDAL ASSEMBLY

1. Replace accelerator pedal assembly.

2. Go to EC-29, "ACCELERATOR PEDAL RELEASED POSITION LEARNING : Special Repair Requirement".

>> INSPECTION END

9. CHECK INTERMITTENT INCIDENT

Refer to GI-42, "Intermittent Incident".

>> INSPECTION END

P0850 PNP SWITCH

Description

INFOID:0000000004349403

When the shift lever position is P or N (CVT), Neutral position (M/T), park/neutral position (PNP) switch is ON. ECM detects the position because the continuity of the line (the ON signal) exists.

DTC Logic

INFOID:0000000004349404

DTC DETECTION LOGIC

DTC No.	Trouble diagnosis name	DTC detecting condition	Possible cause
P0850	Park/neutral position switch	The signal of the park/neutral position (PNP) switch is not changed in the process of engine starting and driving.	• Harness or connectors [The park/neutral position (PNP) switch circuit is open or shorted.] • Park/neutral position (PNP) switch

DTC CONFIRMATION PROCEDURE

1. INSPECTION START

Do you have CONSULT-III?

Do you have CONSULT-III?

YES >> GO TO 2.
NO >> GO TO 5.

2. PRECONDITIONING

If DTC Confirmation Procedure has been previously conducted, always turn ignition switch OFF and wait at least 10 seconds before conducting the next test.

>> GO TO 3.

3. CHECK PNP SWITCH FUNCTION

With CONSULT-III

1. Turn ignition switch ON.
2. Select “P/N POSI SW” in “DATA MONITOR” mode with CONSULT-III. Then check the “P/N POSI SW” signal under the following conditions.

Position (Shift lever)	Known-good signal
N or P position (CVT) Neutral position (M/T)	ON
Except above position	OFF

Is the inspection result normal?

YES >> GO TO 4.
NO >> Go to EC-366, "Diagnosis Procedure".

4. PERFORM DTC CONFIRMATION PROCEDURE

1. Select “DATA MONITOR” mode with CONSULT-III.
2. Start engine and warm it up to normal operating temperature.
3. Maintain the following conditions for at least 50 consecutive seconds.
   CAUTION:
   Always drive vehicle at a safe speed.

ENG SPEED	CVT: 1,300 - 6,375 rpm M/T: 1,500 - 6,375 rpm
COOLAN TEMP/S	More than 70°C (158°F)

B/FUEL SCHDL	CVT: 3.0 - 31.8 msec M/T: 2.1 - 31.8 msec
VHCL SPEED SE	More than 64 km/h (40 mph)
Shift lever	Suitable position

4. Check 1st trip DTC.

Is 1st trip DTC detected?

YES >> Go to EC-366, "Diagnosis Procedure".
NO >> INSPECTION END

5. PERFORM COMPONENT FUNCTION CHECK

Perform component function check. Refer to EC-366, "Component Function Check".

NOTE:
Use component function check the overall function of the park/neutral position (PNP) switch circuit. During this check, a 1st trip DTC might not be confirmed.

Is the inspection result normal?

YES >> INSPECTION END
NO >> Go to EC-366, "Diagnosis Procedure".

Component Function Check

INFOID:0000000004349405

1. PERFORM COMPONENT FUNCTION CHECK

1. Turn ignition switch ON.
2. Check the voltage between ECM harness connector and ground.

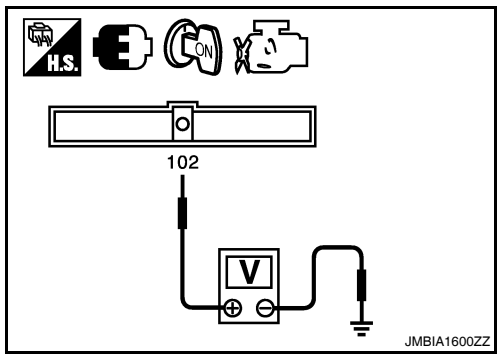

ECM		Ground	Condition		Voltage
Connector	Terminal				
E10	102 (PNP switch signal)	Ground	Shift lever	P or N (CVT) Neutral (M/T)	Approx. 0 V
				Except above	BATTERY VOLTAGE

Is the inspection result normal?

YES >> INSPECTION END
NO >> Go to EC-366, "Diagnosis Procedure".

Diagnosis Procedure

INFOID:0000000004349406

1. CHECK PNP SWITCH POWER SUPPLY CIRCUIT

1. Turn ignition switch OFF.
2. Disconnect Park/neutral position (PNP) switch harness connector.
3. Turn ignition switch ON.
4. Check the voltage between PNP switch harness connector and ground.

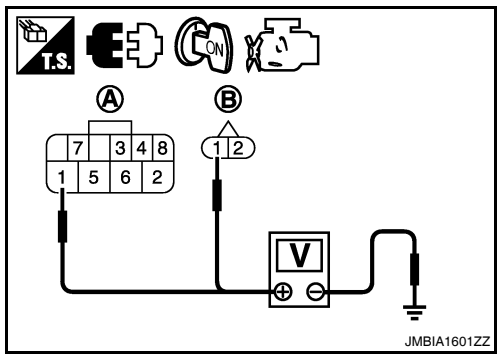

PNP switch		Ground	Voltage
Connector	Terminal		
F25 (CVT) (A) F32 (M/T) (B)	1	Ground	Battery voltage

Is the inspection result normal?

YES >> GO TO 2.
NO >> Repair open circuit or short to ground or short to power in harness or connectors.

2. CHECK PNP SWITCH INPUT SIGNAL CIRCUIT FOR OPEN AND SHORT-I

1. Turn ignition switch OFF.
2. Disconnect ECM harness connector.
3. Check the continuity between PNP switch harness connector and ECM harness connector.

PNP switch		ECM		Continuity
Connector	Terminal	Connector	Terminal	
F25 (CVT) F32 (M/T)	2	E10	102	Existed

4. Also check harness for short to ground and short to power.

Is the inspection result normal?

YES >> GO TO 4.
NO-1 >> Repair open circuit or short to ground or short to power in harness or connectors.
NO-2 >> CVT: GO TO 3.

3. CHECK PNP SWITCH INPUT SIGNAL CIRCUIT FOR OPEN AND SHORT-II

1. Check the continuity between PNP switch harness connector and ECM harness connector.

PNP switch		IPDM E/R		Continuity
Connector	Terminal	Connector	Terminal	
F25	2	F10	72	Existed

2. Check the continuity between IPDM E/R harness connector and ECM harness connector.

ECM		IPDM		Continuity
Connector	Terminal	Connector	Terminal	
F10	102	E18	30	Existed

3. Also check harness for short to ground and short to power.

Is the inspection result normal?

YES >> GO TO 4.
NO >> Repair open circuit or short to ground or short to power in harness or connectors.

4. CHECK PNP SWITCH

Refer to TM-308, "Component Inspection (Park/Neutral Position Switch)" (CVT) or TM-20, "Inspection" (M/T).

Is the inspection result normal?

YES >> GO TO 5.
NO >> Replace PNP switch.

5. CHECK INTERMITTENT INCIDENT

Refer to GI-42, "Intermittent Incident".

>> INSPECTION END

P1148 CLOSED LOOP CONTROL

DTC Logic

INFOID:0000000004349407

DTC DETECTION LOGIC

NOTE:
DTC P1148 is displayed with another DTC for A/F sensor 1.
Perform the trouble diagnosis for the corresponding DTC.

DTC No.	Trouble diagnosis name	DTC detecting condition	Possible cause
P1148	Closed loop control function	The closed loop control function for bank 1 does not operate even when vehicle is driving in the specified condition.	• Harness or connectors (The A/F sensor 1 circuit is open or shorted.) • A/F sensor 1 • A/F sensor 1 heater
		The closed loop control function for bank 2 does not operate even when vehicle is driving in the specified condition.	

P1217 ENGINE OVER TEMPERATURE

DTC Logic

INFOID:0000000004349408

DTC DETECTION LOGIC

NOTE:
- **If DTC P1217 is displayed with DTC UXXXX, first perform the trouble diagnosis for DTC UXXXX.**
- **If DTC P1217 is displayed with DTC P0607, first perform the trouble diagnosis for DTC P0607. Refer to EC-361, "DTC Logic".**

If the cooling fan or another component in the cooling system malfunctions, engine coolant temperature will rise.
When the engine coolant temperature reaches an abnormally high temperature condition, a malfunction is indicated.

DTC No.	Trouble diagnosis name	DTC detecting condition	Possible cause
P1217	Engine over temperature (Overheat)	• Cooling fan does not operate properly (Overheat). • Cooling fan system does not operate properly (Overheat). • Engine coolant was not added to the system using the proper filling method. • Engine coolant is not within the specified range.	• Harness or connectors (The cooling fan circuit is open or shorted.) • IPDM E/R (Cooling fan relay-1) • Cooling fan relays-2 and -3 • Cooling fan motor • Radiator hose • Radiator • Radiator cap • Reservoir tank • Water pump • Thermostat • Water control valve

CAUTION:
When a malfunction is indicated, be sure to replace the coolant. Refer to CO-12, "Changing Engine Coolant". Also, replace the engine oil. Refer to LU-10, "Changing Engine Oil".
1. **Fill radiator with coolant up to specified level with a filling speed of 2 liters per minute. Be sure to use coolant with the proper mixture ratio. Refer to MA-12, "Engine Oil Recommendation".**
2. **After refilling coolant, run engine to ensure that no water-flow noise is emitted.**

DTC CONFIRMATION PROCEDURE

1.PERFORM COMPONENT FUNCTION CHECK

Perform component function check. Refer to EC-369, "Component Function Check".
NOTE:
Use component function check to check the overall function of the cooling fan. During this check, a DTC might not be confirmed.

Is the inspection result normal?

YES >> INSPECTION END
NO >> Go to EC-370, "Diagnosis Procedure".

Component Function Check

INFOID:0000000004349409

1.PERFORM COMPONENT FUNCTION CHECK-I

WARNING:
Never remove the radiator cap when the engine is hot. Serious burns could be caused by high pressure fluid escaping from the radiator.
Wrap a thick cloth around cap. Carefully remove the cap by turning it a quarter turn to allow built-up pressure to escape. Then turn the cap all the way off.

Check the coolant level in the reservoir tank and radiator.
Allow engine to cool before checking coolant level.

Is the coolant level in the reservoir tank and/or radiator below the proper range?

YES >> Go to EC-370, "Diagnosis Procedure".
NO >> GO TO 2.

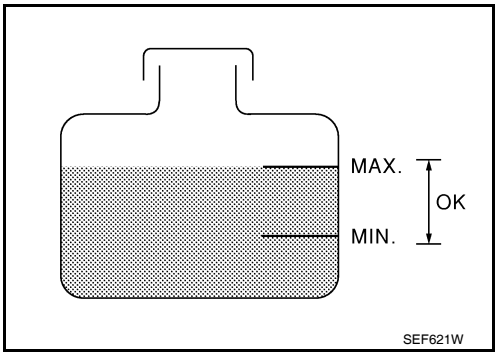

2. PERFORM COMPONENT FUNCTION CHECK-II

Confirm whether customer filled the coolant or not.

Did customer fill the coolant?

YES >> Go to EC-370, "Diagnosis Procedure".
NO >> GO TO 3.

3. PERFORM COMPONENT FUNCTION CHECK-III

With CONSULT-III

1. Turn ignition switch ON.
2. Perform “COOLING FAN” in “ACTIVE TEST” mode with CONSULT-III.
3. Make sure that cooling fan motors-1 and -2 operate at each speed (LOW/HI).

Without CONSULT-III

Perform IPDM E/R auto active test and check cooling fan motors operation, refer to PCS-14, "Diagnosis Description".

Is the inspection result normal?

YES >> INSPECTION END
NO >> Go to EC-370, "Diagnosis Procedure".

Diagnosis Procedure

INFOID:0000000004349410

1. CHECK COOLING FAN OPERATION

With CONSULT-III

1. Turn ignition switch ON.
2. Perform “COOLING FAN” in “ACTIVE TEST” mode with CONSULT-III.
3. Make sure that cooling fan motors-1 and -2 operate at each speed (LOW/HI).

Without CONSULT-III

1. Perform IPDM E/R auto active test and check cooling fan motors operation, refer to PCS-14, "Diagnosis Description".
2. Make sure that cooling fan motors-1 and -2 operate at each speed (Low/High).

Is the inspection result normal?

YES >> GO TO 2.
NO >> Go to EC-456, "Diagnosis Procedure".

2. CHECK COOLING SYSTEM FOR LEAK-I

Check cooling system for leak. Refer to CO-11, "System Inspection".

Is leakage detected?

YES >> GO TO 3.
NO >> GO TO 4.

3. CHECK COOLING SYSTEM FOR LEAK-II

Check the following for leak. Refer to CO-11, "System Inspection".

- Hose
- Radiator
- Water pump

>> Repair or replace malfunctioning part.

4. CHECK RADIATOR CAP

Check radiator cap. Refer to CO-11, "System Inspection".

Is the inspection result normal?

YES >> GO TO 5.
NO >> Replace radiator cap.

5. CHECK THERMOSTAT

Check thermostat. Refer to CO-21, "Removal and Installation".

Is the inspection result normal?

YES >> GO TO 6.
NO >> Replace thermostat.

6. CHECK WATER CONTROL VALVE

Check water control valve. Refer to CO-23, "Removal and Installation".

Is the inspection result normal?

YES >> GO TO 7.
NO >> Replace water control valve

7. CHECK ENGINE COOLANT TEMPERATURE SENSOR

Refer to EC-182, "Component Inspection".

Is the inspection result normal?

YES >> GO TO 8.
NO >> Replace engine coolant temperature sensor.

8. CHECK MAIN 13 CAUSES

If the cause cannot be isolated, check the following.

Engine	Step	Inspection item	Equipment	Standard	Reference page
OFF	1	• Blocked radiator • Blocked condenser • Blocked radiator grille • Blocked bumper	• Visual	No blocking	—
	2	• Coolant mixture	• Coolant tester	MA-12, "Engine Oil Recommendation"	
	3	• Coolant level	• Visual	Coolant up to MAX level in reservoir tank and radiator filler neck	CO-12, "Changing Engine Coolant"
	4	• Radiator cap	• Pressure tester	CO-11, "System Inspection"	
ON*2	5	• Coolant leaks	• Visual	No leaks	CO-11, "System Inspection"
ON*2	6	• Thermostat	• Touch the upper and lower radiator hoses	Both hoses should be hot	CO-21, "Removal and Installation"
ON*1	7	• Cooling fan motor	• CONSULT-III	Operating	EC-369, "Component Function Check"
OFF	8	• Combustion gas leak	• Color checker chemical tester 4 Gas analyzer	Negative	—
ON*3	9	• Coolant temperature gauge	• Visual	Gauge less than 3/4 when driving	—
		• Coolant overflow to reservoir tank	• Visual	No overflow during driving and idling	CO-11, "System Inspection"
OFF*4	10	• Coolant return from reservoir tank to radiator	• Visual	Should be initial level in reservoir tank	CO-11, "System Inspection"
OFF	11	• Water control valve	• Remove and inspect the valve	Within the specified value	CO-23, "Removal and Installation"

Engine	Step	Inspection item	Equipment	Standard	Reference page
OFF	12	• Cylinder head	• Straight gauge feeler gauge	0.1 mm (0.004 in) Maximum distortion (warping)	EM-68, "Inspection After Disassembly"
	13	• Cylinder block and pistons	• Visual	No scuffing on cylinder walls or piston	EM-83, "Inspection After Disassembly"

*1: Turn the ignition switch ON.

*2: Engine running at 3,000 rpm for 10 minutes.

*3: Drive at 90 km/h (56 MPH) for 30 minutes and then let idle for 10 minutes.

*4: After 60 minutes of cool down time.

For more information, refer to CO-9, "Troubleshooting Chart".

>> INSPECTION END

P1225 TP SENSOR

Description

INFOID:0000000004349411

Electric throttle control actuator consists of throttle control motor, throttle position sensor, etc. The throttle position sensor responds to the throttle valve movement.
The throttle position sensor has two sensors. These sensors are a kind of potentiometers which transform the throttle valve position into output voltage, and emit the voltage signal to the ECM. In addition, these sensors detect the opening and closing speed of the throttle valve and feed the voltage signals to the ECM. The ECM judges the current opening angle of the throttle valve from these signals and the ECM controls the throttle control motor to make the throttle valve opening angle properly in response to driving condition.

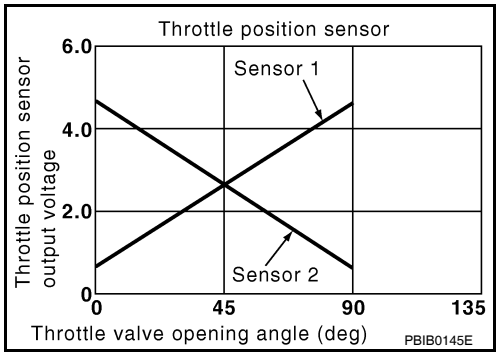

DTC Logic

INFOID:0000000004349412

DTC DETECTION LOGIC

DTC No.	Trouble diagnosis name	DTC detecting condition	Possible cause
P1225	Closed throttle position learning performance	Closed throttle position learning value is excessively low.	• Electric throttle control actuator (TP sensor 1 and 2)

DTC CONFIRMATION PROCEDURE

1.PRECONDITIONING

If DTC Confirmation Procedure has been previously conducted, always turn ignition switch OFF and wait at least 10 seconds before conducting the next test.
TESTING CONDITION:
Before performing the following procedure, confirm that battery voltage is more than 10V at idle.

>> GO TO 2.

2.PERFORM DTC CONFIRMATION PROCEDURE

1. Turn ignition switch ON.
2. Turn ignition switch OFF and wait at least 10 seconds.
3. Turn ignition switch ON.
4. Check 1st trip DTC.

Is 1st trip DTC detected?

YES >> Go to EC-373, "Diagnosis Procedure".
NO >> INSPECTION END

Diagnosis Procedure

INFOID:0000000004349413

1.CHECK ELECTRIC THROTTLE CONTROL ACTUATOR VISUALLY

1. Turn ignition switch OFF.
2. Remove the intake air duct.

3. Check if foreign matter is caught between the throttle valve (1) and the housing.

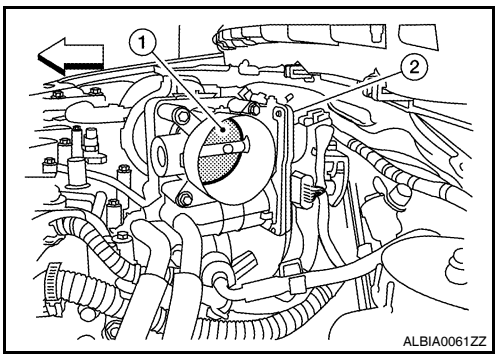

2. Electric throttle control actuator

⇦ : Vehicle front

Is the inspection result normal?

YES >> GO TO 2.
NO >> Remove the foreign matter and clean the electric throttle control actuator inside.

2.REPLACE ELECTRIC THROTTLE CONTROL ACTUATOR

1. Replace electric throttle control actuator.
2. Go to EC-426, "Special Repair Requirement".

>> INSPECTION END

Special Repair Requirement

INFOID:0000000004349414

1.PERFORM THROTTLE VALVE CLOSED POSITION LEARNING

Refer to EC-29, "THROTTLE VALVE CLOSED POSITION LEARNING : Special Repair Requirement"

>> GO TO 2.

2.PERFORM IDLE AIR VOLUME LEARNING

Refer to EC-30, "IDLE AIR VOLUME LEARNING : Special Repair Requirement"

>> END

P1226 TP SENSOR

Description

INFOID:0000000004349415

Electric throttle control actuator consists of throttle control motor, throttle position sensor, etc. The throttle position sensor responds to the throttle valve movement.
The throttle position sensor has two sensors. These sensors are a kind of potentiometers which transform the throttle valve position into output voltage, and emit the voltage signal to the ECM. In addition, these sensors detect the opening and closing speed of the throttle valve and feed the voltage signals to the ECM. The ECM judges the current opening angle of the throttle valve from these signals and the ECM controls the throttle control motor to make the throttle valve opening angle properly in response to driving condition.

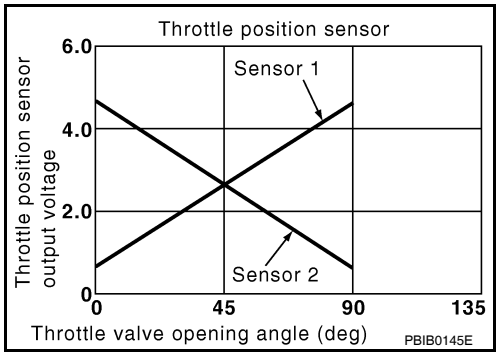

DTC Logic

INFOID:0000000004349416

DTC DETECTION LOGIC

DTC No.	Trouble diagnosis name	DTC detecting condition	Possible cause
P1226	Closed throttle position learning performance	Closed throttle position learning is not performed successfully, repeatedly.	• Electric throttle control actuator (TP sensor 1 and 2)

DTC CONFIRMATION PROCEDURE

1.PRECONDITIONING

If DTC Confirmation Procedure has been previously conducted, always turn ignition switch OFF and wait at least 10 seconds before conducting the next test.
TESTING CONDITION:
Before performing the following procedure, confirm that battery voltage is more than 10V at idle.

>> GO TO 2.

2.PERFORM DTC CONFIRMATION PROCEDURE

1. Turn ignition switch ON.
2. Turn ignition switch OFF, wait at least 10 seconds.
3. Turn ignition switch ON.
4. Repeat steps 2 and 3 for 32 times.
5. Check 1st trip DTC.

Is 1st trip DTC detected?

YES >> Go to EC-375, "Diagnosis Procedure".
NO >> INSPECTION END

Diagnosis Procedure

INFOID:0000000004349417

1.CHECK ELECTRIC THROTTLE CONTROL ACTUATOR VISUALLY

1. Turn ignition switch OFF.
2. Remove the intake air duct.

3. Check if foreign matter is caught between the throttle valve (1) and the housing.

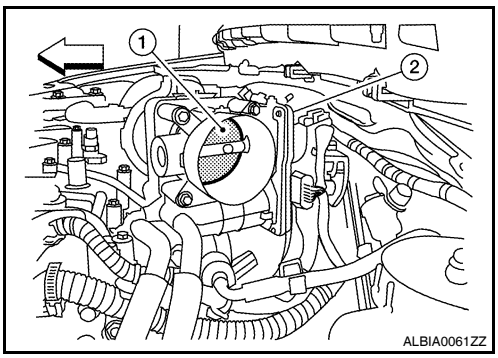

2. Electric throttle control actuator

⇦ : Vehicle front

Is the inspection result normal?

YES >> GO TO 2.
NO >> Remove the foreign matter and clean the electric throttle control actuator inside.

2.REPLACE ELECTRIC THROTTLE CONTROL ACTUATOR

1. Replace electric throttle control actuator.
2. Go to EC-376, "Special Repair Requirement".

>> INSPECTION END

Special Repair Requirement

INFOID:0000000004349418

1.PERFORM THROTTLE VALVE CLOSED POSITION LEARNING

Refer to EC-29, "THROTTLE VALVE CLOSED POSITION LEARNING : Special Repair Requirement"

>> GO TO 2.

2.PERFORM IDLE AIR VOLUME LEARNING

Refer to EC-30, "IDLE AIR VOLUME LEARNING : Special Repair Requirement"

>> END

P1421 COLD START CONTROL

Description

INFOID:0000000004349419

ECM controls ignition timing and engine idle speed when engine is started with prewarming up condition. This control promotes the activation of three way catalyst by heating the catalyst and reduces emissions.

DTC Logic

INFOID:0000000004349420

DTC DETECTION LOGIC

NOTE:
If DTC P1421 is displayed with other DTC, first perform the trouble diagnosis for other DTC.

DTC No.	Trouble diagnosis name	DTC detecting condition	Possible cause
P1421	Cold start emission reduction strategy monitoring	ECM does not control ignition timing and engine idle speed properly when engine is started with prewarming up condition.	• Lack of intake air volume • Fuel injection system • ECM

DTC CONFIRMATION PROCEDURE

1.PRECONDITIONING

If DTC Confirmation Procedure has been previously conducted, always turn ignition switch OFF and wait at least 10 seconds before conducting the next test.
TESTING CONDITION:
Before performing the following procedure, confirm that battery voltage is more than 11V at idle.

>> GO TO 2.

2.PERFORM DTC CONFIRMATION PROCEDURE

With CONSULT-III
1. Turn ignition switch OFF and wait at least 10 seconds.
2. Turn ignition switch ON.
3. Select “DATA MONITOR” mode with CONSULT-III.
4. Check that the “COOLAN TEMP/S” indication is between 4°C (39°F) and 36°C (97°F).
   If “COOLAN TEMP/S” indication is within the specified value, go to the following step.
   If “COOLAN TEMP/S” indication is out of the specified value, cool engine down or warm engine up and go to step 1.
5. Start engine and let it idle for 5 minutes.
6. Check 1st trip DTC.

With GST
Follow the procedure “With CONSULT-III” above.

Is 1st trip DTC detected?

YES >> Go to EC-377, "Diagnosis Procedure".
NO >> INSPECTION END

Diagnosis Procedure

INFOID:0000000004349421

1.PERFORM IDLE AIR VOLUME LEARNING

Perform EC-30, "IDLE AIR VOLUME LEARNING : Special Repair Requirement".

Is Idle Air Volume Learning carried out successfully?

YES >> GO TO 2.
NO >> Follow the instruction of Idle Air Volume Learning.

2.CHECK INTAKE SYSTEM

Check for the cause of intake air volume lacking. Refer to the following.
- Crushed intake air passage
- Intake air passage clogging

Is the inspection result normal?

YES >> GO TO 3.
NO >> Repair or replace malfunctioning part

3. CHECK FUEL INJECTION SYSTEM FUNCTION

Perform DTC CONFIRMATION PROCEDURE for DTC P0171. Refer to EC-254, "DTC Logic".

Is the inspection result normal?

YES >> GO TO 4.
NO >> Go to EC-255, "Diagnosis Procedure" for DTC P0171.

4. PERFORM DTC CONFIRMATION PROCEDURE

With CONSULT-III

1. Turn ignition switch ON.
2. Select “SELF DIAG RESULTS” mode with CONSULT-III.
3. Touch “ERASE”.
4. **Perform DTC CONFIRMATION PROCEDURE.**
   See EC-377, "DTC Logic".

With GST

1. Turn ignition switch ON.
2. Select Service $04 with GST.
3. **Perform DTC CONFIRMATION PROCEDURE.**
   See EC-377, "DTC Logic".

Is the 1st trip DTC P1421 displayed again?

YES >> GO TO 5.
NO >> INSPECTION END

5. REPLACE ECM

1. Replace ECM.
2. Go to EC-27, "ADDITIONAL SERVICE WHEN REPLACING CONTROL UNIT : Special Repair Requirement".

>> INSPECTION END

P1550 BATTERY CURRENT SENSOR

Description

INFOID:0000000004349422

The power generation voltage variable control enables fuel consumption to be decreased by reducing the engine load which is caused by the power generation of the generator. The battery current sensor is installed to the battery cable at the negative terminal. The sensor measures the charging/discharging current of the battery. Based on the sensor signal, ECM judges whether or not the power generation voltage variable control is performed. When performing the power generation voltage variable control, ECM calculates the target power generation voltage based on the sensor signal. And ECM sends the calculated value as the power generation command value to IPDM E/R. For the details of the power generation voltage variable control, refer to CHG-5, "System Description".

CAUTION:

Do not connect the electrical component or the ground wire directly to the battery terminal. The connection causes the malfunction of the power generation voltage variable control, and then the battery discharge may occur.

DTC Logic

INFOID:0000000004349423

DTC DETECTION LOGIC

NOTE:

If DTC P1550 is displayed with DTC P0643, first perform the trouble diagnosis for DTC P0643. Refer to EC-362, "DTC Logic".

DTC No.	Trouble diagnosis name	DTC detecting condition	Possible cause
P1550	Battery current sensor circuit range/performance	The output voltage of the battery current sensor remains within the specified range while engine is running.	• Harness or connectors (The sensor circuit is open or shorted.) • Battery current sensor

DTC CONFIRMATION PROCEDURE

1. PRECONDITIONING

If DTC Confirmation Procedure has been previously conducted, always turn ignition switch OFF and wait at least 10 seconds before conducting the next test.

TESTING CONDITION:

Before performing the following procedure, confirm that battery voltage is more than 8V at idle.

>> GO TO 2.

2. PERFORM DTC CONFIRMATION PROCEDURE

1. Start engine and wait at least 10 seconds.
2. Check 1st trip DTC.

Is 1st trip DTC detected?

YES >> Go to EC-379, "Diagnosis Procedure".
NO >> INSPECTION END

Diagnosis Procedure

INFOID:0000000004349424

1. CHECK GROUND CONNECTION

1. Turn ignition switch OFF.
2. Check ground connection E9. Refer to Ground Inspection in GI-45, "Circuit Inspection".

Is the inspection result normal?

YES >> GO TO 2.
NO >> Repair or replace ground connection.

2. CHECK BATTERY CURRENT SENSOR POWER SUPPLY CIRCUIT

1. Disconnect battery current sensor harness connector.
2. Turn ignition switch ON.

3. Check the voltage between battery current sensor harness connector and ground.

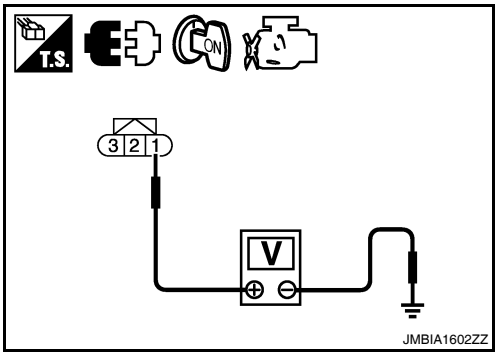

Battery current sensor		Ground	Voltage
Connector	Terminal		
F5	1	Ground	Approx. 5 V

Is the inspection result normal?

YES >> GO TO 3.
NO >> Repair open circuit or sort to ground or short to power in harness or connectors.

3. CHECK BATTERY CURRENT SENSOR GROUND CIRCUIT FOR OPEN AND SHORT

1. Turn ignition switch OFF.
2. Disconnect ECM harness connector.
3. Check the continuity between battery current sensor harness connector and ECM harness connector.

Battery current sensor		ECM		Continuity
Connector	Terminal	Connector	Terminal	
F5	2	F13	44	Existed

4. Also check harness for short to ground and short to power.

Is the inspection result normal?

YES >> GO TO 4.
NO >> Repair open circuit or sort to ground or short to power in harness or connectors.

4. CHECK BATTERY CURRENT SENSOR INPUT SIGNAL CIRCUIT FOR OPEN AND SHORT

1. Check the continuity between battery current sensor harness connector and ECM harness connector.

Battery current sensor		ECM		Continuity
Connector	Terminal	Connector	Terminal	
F5	3	F13	42	Existed

2. Also check harness for short to ground and short to power.

Is the inspection result normal?

YES >> GO TO 5.
NO >> Repair open circuit or sort to ground or short to power in harness or connectors.

5. CHECK BATTERY CURRENT SENSOR

Refer to EC-380, "Component Inspection".

Is the inspection result normal?

YES >> GO TO 6.
NO >> Replace battery negative cable assembly.

6. CHECK INTERMITTENT INCIDENT

Refer to GI-42, "Intermittent Incident".

>> INSPECTION END

Component Inspection

INFOID:0000000004349425

1. CHECK BATTERY CURRENT SENSOR

1. Reconnect harness connectors disconnected.

2. Disconnect battery negative cable (1).

   ⬅: To body ground

3. Install jumper cable (A) between battery negative terminal and body ground.
4. Turn ignition switch ON.

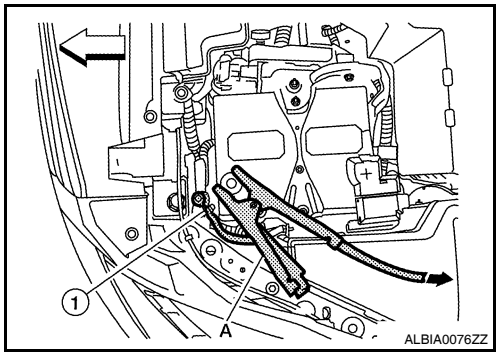

5. Check the voltage between ECM harness connector and ground.

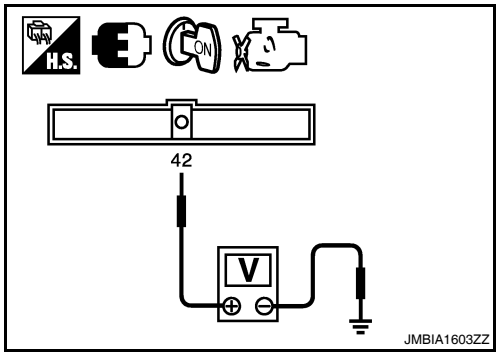

ECM		Ground	Voltage
Connector	Terminal		
F13	42 (Battery current sensor signal)	Ground	Approx. 2.5 V

Is the inspection result normal?

YES >> INSPECTION END
NO >> Replace battery negative cable assembly.

P1551, P1552 BATTERY CURRENT SENSOR

Description

INFOID:0000000004349426

The power generation voltage variable control enables fuel consumption to be decreased by reducing the engine load which is caused by the power generation of the generator. The battery current sensor is installed to the battery cable at the negative terminal. The sensor measures the charging/discharging current of the battery. Based on the sensor signal, ECM judges whether or not the power generation voltage variable control is performed. When performing the power generation voltage variable control, ECM calculates the target power generation voltage based on the sensor signal. And ECM sends the calculated value as the power generation command value to IPDM E/R. For the details of the power generation voltage variable control, refer to CHG-5, "System Description".

CAUTION:

Do not connect the electrical component or the ground wire directly to the battery terminal. The connection causes the malfunction of the power generation voltage variable control, and then the battery discharge may occur.

DTC Logic

INFOID:0000000004349427

DTC DETECTION LOGIC

NOTE:

If DTC P1551 or P1552 is displayed with DTC P0643, first perform the trouble diagnosis for DTC P0643. Refer to EC-362, "DTC Logic".

DTC No.	Trouble diagnosis name	DTC detecting condition	Possible cause
P1551	Battery current sensor circuit low input	An excessively low voltage from the sensor is sent to ECM.	• Harness or connectors (The sensor circuit is open or shorted.) • Battery current sensor
P1552	Battery current sensor circuit high input	An excessively high voltage from the sensor is sent to ECM.	

DTC CONFIRMATION PROCEDURE

1. PRECONDITIONING

If DTC Confirmation Procedure has been previously conducted, always turn ignition switch OFF and wait at least 10 seconds before conducting the next test.

TESTING CONDITION:

Before performing the following procedure, confirm that battery voltage is more than 8V with ignition switch ON

>> GO TO 2.

2. PERFORM DTC CONFIRMATION PROCEDURE

1. Turn ignition switch ON wait at least 10 seconds.
2. Check 1st trip DTC.

Is 1st trip DTC detected?

YES >> Go to EC-382, "Diagnosis Procedure".
NO >> INSPECTION END

Diagnosis Procedure

INFOID:0000000004349428

1. CHECK GROUND CONNECTION

1. Turn ignition switch OFF.
2. Check ground connection E9. Refer to Ground Inspection in GI-45, "Circuit Inspection".

Is the inspection result normal?

YES >> GO TO 2.
NO >> Repair or replace ground connection.

2. CHECK BATTERY CURRENT SENSOR POWER SUPPLY CIRCUIT

1. Disconnect battery current sensor harness connector.
2. Turn ignition switch ON.
3. Check the voltage between battery current sensor harness connector and ground.

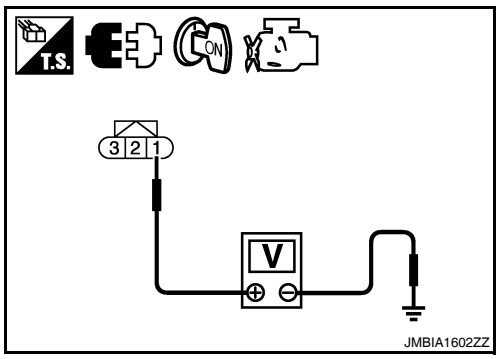

Battery current sensor		Ground	Voltage
Connector	Terminal		
F5	1	Ground	Approx. 5 V

Is the inspection result normal?

YES >> GO TO 3.
NO >> Repair open circuit or sort to ground or short to power in harness or connectors.

3. CHECK BATTERY CURRENT SENSOR GROUND CIRCUIT FOR OPEN AND SHORT

1. Turn ignition switch OFF.
2. Disconnect ECM harness connector.
3. Check the continuity between battery current sensor harness connector and ECM harness connector.

Battery current sensor		ECM		Continuity
Connector	Terminal	Connector	Terminal	
F5	2	F13	44	Existed

4. Also check harness for short to ground and short to power.

Is the inspection result normal?

YES >> GO TO 4.
NO >> Repair open circuit or sort to ground or short to power in harness or connectors.

4. CHECK BATTERY CURRENT SENSOR INPUT SIGNAL CIRCUIT FOR OPEN AND SHORT

1. Check the continuity between battery current sensor harness connector and ECM harness connector.

Battery current sensor		ECM		Continuity
Connector	Terminal	Connector	Terminal	
F5	3	F13	42	Existed

2. Also check harness for short to ground and short to power.

Is the inspection result normal?

YES >> GO TO 5.
NO >> Repair open circuit or sort to ground or short to power in harness or connectors.

5. CHECK BATTERY CURRENT SENSOR

Refer to EC-383, "Component Inspection".

Is the inspection result normal?

YES >> GO TO 6.
NO >> Replace battery negative cable assembly.

6. CHECK INTERMITTENT INCIDENT

Refer to GI-42, "Intermittent Incident".

>> INSPECTION END

Component Inspection

INFOID:0000000004349429

1. CHECK BATTERY CURRENT SENSOR

1. Reconnect harness connectors disconnected.

2. Disconnect battery negative cable (1).

   ⬅: To body ground

3. Install jumper cable (A) between battery negative terminal and body ground.
4. Turn ignition switch ON.

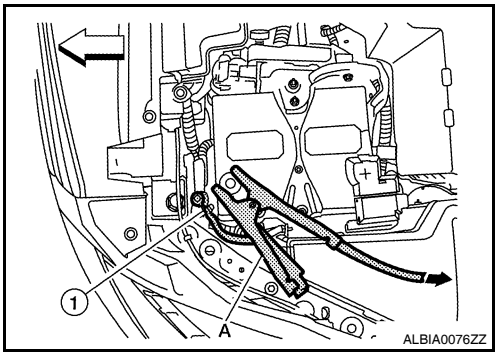

5. Check the voltage between ECM harness connector and ground.

ECM		Ground	Voltage
Connector	Terminal		
F13	42 (Battery current sensor signal)	Ground	Approx. 2.5 V

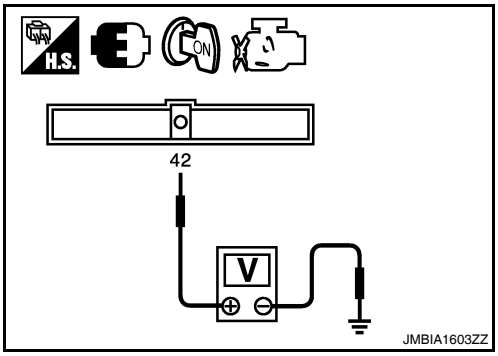

Is the inspection result normal?

YES >> INSPECTION END
NO >> Replace battery negative cable assembly.

P1553 BATTERY CURRENT SENSOR

Description

INFOID:0000000004349430

The power generation voltage variable control enables fuel consumption to be decreased by reducing the engine load which is caused by the power generation of the generator. The battery current sensor is installed to the battery cable at the negative terminal. The sensor measures the charging/discharging current of the battery. Based on the sensor signal, ECM judges whether or not the power generation voltage variable control is performed. When performing the power generation voltage variable control, ECM calculates the target power generation voltage based on the sensor signal. And ECM sends the calculated value as the power generation command value to IPDM E/R. For the details of the power generation voltage variable control, refer to CHG-5, "System Description".

CAUTION:

Do not connect the electrical component or the ground wire directly to the battery terminal. The connection causes the malfunction of the power generation voltage variable control, and then the battery discharge may occur.

DTC Logic

INFOID:0000000004349431

DTC DETECTION LOGIC

NOTE:

If DTC P1553 is displayed with DTC P0643, first perform the trouble diagnosis for DTC P0643. Refer to EC-362, "DTC Logic".

DTC No.	Trouble diagnosis name	DTC detecting condition	Possible cause
P1553	Battery current sensor performance	The signal voltage transmitted from the sensor to ECM is higher than the amount of the maximum power generation.	• Harness or connectors (The sensor circuit is open or shorted.) • Battery current sensor

DTC CONFIRMATION PROCEDURE

1. PRECONDITIONING

If DTC Confirmation Procedure has been previously conducted, always turn ignition switch OFF and wait at least 10 seconds before conducting the next test.

TESTING CONDITION:

Before performing the following procedure, confirm that battery voltage is more than 8V at idle.

>> GO TO 2.

2. PERFORM DTC CONFIRMATION PROCEDURE

1. Start engine and wait at least 10 seconds.
2. Check 1st trip DTC.

Is 1st trip DTC detected?

YES >> Go to EC-385, "Diagnosis Procedure".
NO >> INSPECTION END

Diagnosis Procedure

INFOID:0000000004349432

1. CHECK GROUND CONNECTION

1. Turn ignition switch OFF.
2. Check ground connection E9. Refer to Ground Inspection in GI-45, "Circuit Inspection".

Is the inspection result normal?

YES >> GO TO 2.
NO >> Repair or replace ground connection.

2. CHECK BATTERY CURRENT SENSOR POWER SUPPLY CIRCUIT

1. Disconnect battery current sensor harness connector.
2. Turn ignition switch ON.

3. Check the voltage between battery current sensor harness connector and ground.

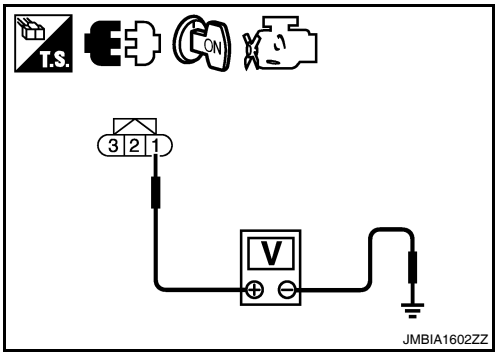

Battery current sensor		Ground	Voltage
Connector	Terminal		
F5	1	Ground	Approx. 5 V

Is the inspection result normal?

YES >> GO TO 3.
NO >> Repair open circuit or sort to ground or short to power in harness or connectors.

3. CHECK BATTERY CURRENT SENSOR GROUND CIRCUIT FOR OPEN AND SHORT

1. Turn ignition switch OFF.
2. Disconnect ECM harness connector.
3. Check the continuity between battery current sensor harness connector and ECM harness connector.

Battery current sensor		ECM		Continuity
Connector	Terminal	Connector	Terminal	
F5	2	F13	44	Existed

4. Also check harness for short to ground and short to power.

Is the inspection result normal?

YES >> GO TO 4.
NO >> Repair open circuit or sort to ground or short to power in harness or connectors.

4. CHECK BATTERY CURRENT SENSOR INPUT SIGNAL CIRCUIT FOR OPEN AND SHORT

1. Check the continuity between battery current sensor harness connector and ECM harness connector.

Battery current sensor		ECM		Continuity
Connector	Terminal	Connector	Terminal	
F5	3	F13	42	Existed

2. Also check harness for short to ground and short to power.

Is the inspection result normal?

YES >> GO TO 5.
NO >> Repair open circuit or sort to ground or short to power in harness or connectors.

5. CHECK BATTERY CURRENT SENSOR

Refer to EC-386, "Component Inspection".

Is the inspection result normal?

YES >> GO TO 6.
NO >> Replace battery negative cable assembly.

6. CHECK INTERMITTENT INCIDENT

Refer to GI-42, "Intermittent Incident".

>> INSPECTION END

Component Inspection

INFOID:0000000004349433

1. CHECK BATTERY CURRENT SENSOR

1. Reconnect harness connectors disconnected.

2. Disconnect battery negative cable (1).

   ⬅: To body ground

3. Install jumper cable (A) between battery negative terminal and body ground.
4. Turn ignition switch ON.

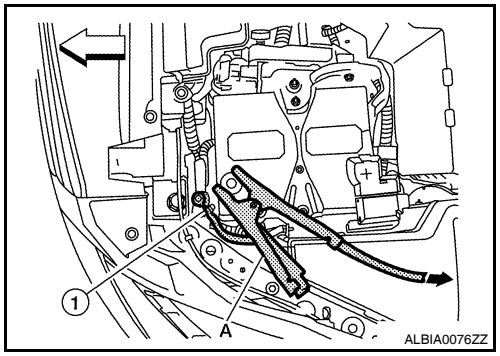

5. Check the voltage between ECM harness connector and ground.

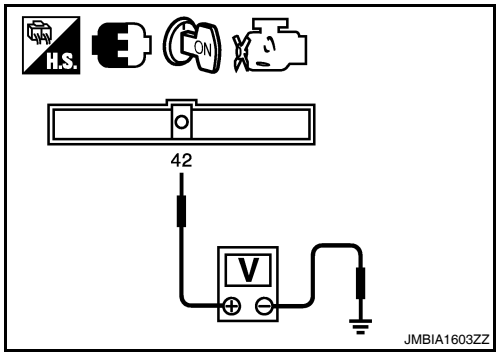

ECM		Ground	Voltage
Connector	Terminal		
F13	42 (Battery current sensor signal)	Ground	Approx. 2.5 V

Is the inspection result normal?

YES >> INSPECTION END
NO >> Replace battery negative cable assembly.

P1554 BATTERY CURRENT SENSOR

Description

INFOID:0000000004349434

The power generation voltage variable control enables fuel consumption to be decreased by reducing the engine load which is caused by the power generation of the generator. The battery current sensor is installed to the battery cable at the negative terminal. The sensor measures the charging/discharging current of the battery. Based on the sensor signal, ECM judges whether or not the power generation voltage variable control is performed. When performing the power generation voltage variable control, ECM calculates the target power generation voltage based on the sensor signal. And ECM sends the calculated value as the power generation command value to IPDM E/R. For the details of the power generation voltage variable control, refer to CHG-5, "System Description".

CAUTION:

Do not connect the electrical component or the ground wire directly to the battery terminal. The connection causes the malfunction of the power generation voltage variable control, and then the battery discharge may occur.

DTC Logic

INFOID:0000000004349435

DTC DETECTION LOGIC

NOTE:

If DTC P1554 is displayed with DTC P0643, first perform the trouble diagnosis for DTC P0643. Refer to EC-362, "DTC Logic".

DTC No.	Trouble diagnosis name	DTC detecting condition	Possible cause
P1554	Battery current sensor performance	The output voltage of the battery current sensor is lower than the specified value while the battery voltage is high enough.	• Harness or connectors (The sensor circuit is open or shorted.) • Battery current sensor

DTC CONFIRMATION PROCEDURE

1. PERFORM COMPONENT FUNCTION CHECK

Perform component function check. Refer to EC-388, "Component Function Check".

NOTE:

Use component function check to check the overall function of the battery current sensor circuit. During this check, a 1st trip DTC might not be confirmed.

Is the inspection result normal?

YES >> INSPECTION END
NO >> Go to EC-389, "Diagnosis Procedure".

Component Function Check

INFOID:0000000004349436

1. PRECONDITIONING

TESTING CONDITION:

- **Before performing the following procedure, confirm that battery voltage is more than 12.8V at idle.**
- **Before performing the following procedure, confirm that all load switches and A/C switch are turned OFF.**

>> GO TO 2.

2. PERFORM COMPONENT FUNCTION CHECK

With CONSULT-III

1. Start engine and let it idle.
2. Select “BAT CUR SEN” in “DATA MONITOR” mode with CONSULT-III.
3. Check “BAT CUR SEN” indication for 10 seconds.
   “BAT CUR SEN” should be above 2,300mV at least once.

Without CONSULT-III

1. Start engine and let it idle.

2. Check the voltage between ECM harness connector and ground.

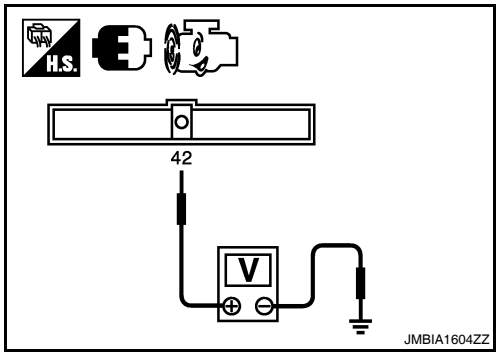

ECM		Ground	Voltage
Connector	Terminal		
F13	42 (Battery current sensor signal)	Ground	Above 2.3 V at least once

Is the inspection result normal?

YES >> INSPECTION END
NO >> Go to EC-389, "Diagnosis Procedure".

Diagnosis Procedure

INFOID:0000000004349437

1. CHECK GROUND CONNECTION

1. Turn ignition switch OFF.
2. Check ground connection E9. Refer to Ground Inspection in GI-45, "Circuit Inspection".

Is the inspection result normal?

YES >> GO TO 2.
NO >> Repair or replace ground connection.

2. CHECK BATTERY CURRENT SENSOR POWER SUPPLY CIRCUIT

1. Disconnect battery current sensor harness connector.
2. Turn ignition switch ON.
3. Check the voltage between battery current sensor harness connector and ground.

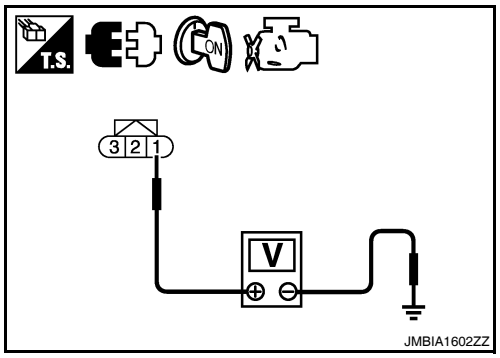

Battery current sensor		Ground	Voltage
Connector	Terminal		
F5	1	Ground	Approx. 5 V

Is the inspection result normal?

YES >> GO TO 3.
NO >> Repair open circuit or sort to ground or short to power in harness or connectors.

3. CHECK BATTERY CURRENT SENSOR GROUND CIRCUIT FOR OPEN AND SHORT

1. Turn ignition switch OFF.
2. Disconnect ECM harness connector.
3. Check the continuity between battery current sensor harness connector and ECM harness connector.

Battery current sensor		ECM		Continuity
Connector	Terminal	Connector	Terminal	
F5	2	F13	44	Existed

4. Also check harness for short to ground and short to power.

Is the inspection result normal?

YES >> GO TO 4.
NO >> Repair open circuit or sort to ground or short to power in harness or connectors.

4. CHECK BATTERY CURRENT SENSOR INPUT SIGNAL CIRCUIT FOR OPEN AND SHORT

1. Check the continuity between battery current sensor harness connector and ECM harness connector.

Battery current sensor		ECM		Continuity
Connector	Terminal	Connector	Terminal	
F5	3	F13	42	Existed

2. Also check harness for short to ground and short to power.

Is the inspection result normal?

YES >> GO TO 5.
NO >> Repair open circuit or sort to ground or short to power in harness or connectors.

5. CHECK BATTERY CURRENT SENSOR

Refer to EC-390, "Component Inspection".

Is the inspection result normal?

YES >> GO TO 6.
NO >> Replace battery negative cable assembly.

6. CHECK INTERMITTENT INCIDENT

Refer to GI-42, "Intermittent Incident".

>> INSPECTION END

Component Inspection

INFOID:0000000004349438

1. CHECK BATTERY CURRENT SENSOR

1. Reconnect harness connectors disconnected.
2. Disconnect battery negative cable (1).

   ⬅: To body ground

3. Install jumper cable (A) between battery negative terminal and body ground.
4. Turn ignition switch ON.

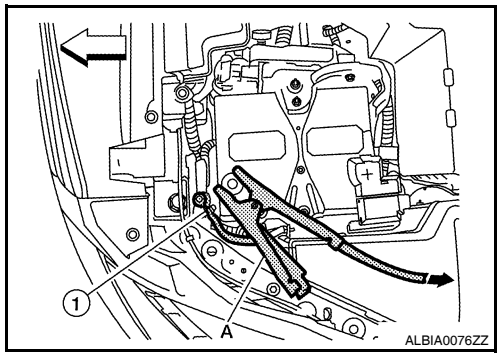

5. Check the voltage between ECM harness connector and ground.

ECM		Ground	Voltage
Connector	Terminal		
F13	42 (Battery current sensor signal)	Ground	Approx. 2.5 V

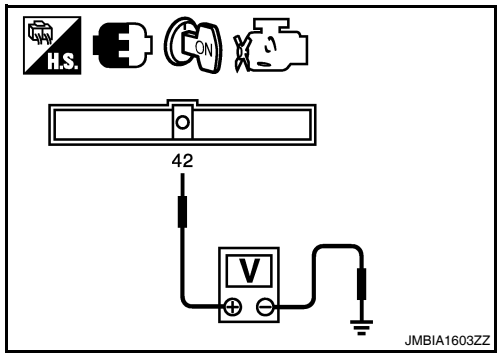

Is the inspection result normal?

YES >> INSPECTION END
NO >> Replace battery negative cable assembly.

P1564 ASCD STEERING SWITCH

Description

INFOID:0000000004349439

ASCD steering switch has variant values of electrical resistance for each button. ECM reads voltage variation of switch, and determines which button is operated.
Refer to EC-67, "System Description" for the ASCD function.

DTC Logic

INFOID:0000000004349440

DTC DETECTION LOGIC

NOTE:
If DTC P1564 is displayed with DTC P0605, first perform the trouble diagnosis for DTC P0605. Refer to EC-359, "DTC Logic".

DTC No.	Trouble diagnosis name	DTC detecting condition	Possible cause
P1564	ASCD steering switch	• An excessively high voltage signal from the ASCD steering switch is sent to ECM. • ECM detects that input signal from the ASCD steering switch is out of the specified range. • ECM detects that the ASCD steering switch is stuck ON.	• Harness or connectors (The switch circuit is open or shorted.) • ASCD steering switch • ECM

DTC CONFIRMATION PROCEDURE

1. PRECONDITIONING

If DTC Confirmation Procedure has been previously conducted, always turn ignition switch OFF and wait at least 10 seconds before conducting the next test.

>> GO TO 2.

2. PERFORM DTC CONFIRMATION PROCEDURE

1. Turn ignition switch ON.
2. Wait at least 10 seconds.
3. Press MAIN switch for at least 10 seconds, then release it and wait at least 10 seconds.
4. Press CANCEL switch for at least 10 seconds, then release it and wait at least 10 seconds.
5. Press RESUME/ACCELERATE switch for at least 10 seconds, then release it and wait at least 10 seconds.
6. Press SET/COAST switch for at least 10 seconds, then release it and wait at least 10 seconds.
7. Check DTC.

Is DTC detected?

YES >> Go to EC-391, "Diagnosis Procedure".
NO >> INSPECTION END

Diagnosis Procedure

INFOID:0000000004349441

1. CHECK GROUND CONNECTION

1. Turn ignition switch OFF.
2. Check ground connection E9. Refer to Ground Inspection in GI-45, "Circuit Inspection".

Is the inspection result normal?

YS >> GO TO 2.
NO >> Repair or replace ground connection.

2. CHECK ASCD STEERING SWITCH CIRCUIT

With CONSULT-III

1. Turn ignition switch ON.

2. Select “MAIN SW”, “CANCEL SW”, “RESUME/ACC SW” and “SET SW” in “DATA MONITOR” mode with CONSULT-III.
3. Check each item indication under the following conditions.

Monitor item	Condition		Indication
MAIN SW	MAIN switch	Pressed	ON
		Released	OFF
CANCEL SW	CANCEL switch	Pressed	ON
		Released	OFF
RESUME/ACC SW	RESUME/ACCELERATE switch	Pressed	ON
		Released	OFF
SET SW	SET/COAST switch	Pressed	ON
		Released	OFF

Without CONSULT-III

1. Turn ignition switch ON.
2. Check the voltage between ECM harness connector and ground.

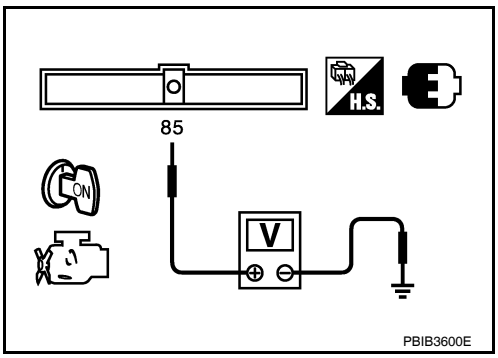

ECM		Ground	Condition	Voltage
Connector	Terminal			
E10	85 (ASCD steering switch signal)	Ground	MAIN switch: Pressed	Approx. 0 V
			CANCEL switch: Pressed	Approx. 1 V
			SET/COAST switch: Pressed	Approx. 2 V
			RESUME/ACCELERATE switch: Pressed	Approx. 3 V
			All ASCD steering switches: Released	Approx. 4 V

Is the inspection result normal?

YES >> GO TO 8.
NO >> GO TO 3.

3. CHECK ASCD STEERING SWITCH GROUND CIRCUIT FOR OPEN AND SHORT

1. Turn ignition switch OFF.
2. Disconnect ECM harness connector.
3. Disconnect combination switch harness connector M88.
4. Check the continuity between combination switch and ECM harness connector.

Combination switch	ECM		Continuity
Terminal	Connector	Terminal	
16	E10	92	Existed

5. Also check harness for short to ground and short to power.

Is the inspection result normal?

YES >> GO TO 5.
NO >> GO TO 4.

4. DETECT MALFUNCTIONING PART

Check the following.
- Harness connectors M1, E30
- Combination switch (spiral cable)
- Harness for open and short between ECM and combination switch

>> Repair open circuit or short to ground or short to power in harness or connectors.

5. CHECK ASCD STEERING SWITCH INPUT SIGNAL CIRCUIT FOR OPEN AND SHORT

1. Check the continuity between ECM harness connector and combination switch.

Combination switch	ECM		Continuity
Terminal	Connector	Terminal	
13	E10	85	Existed

2. Also check harness for short to ground and short to power.

Is the inspection result normal?

YES >> GO TO 7.
NO >> GO TO 6.

6. DETECT MALFUNCTIONING PART

Check the following.
- Harness connectors M1, E30
- Combination switch (spiral cable)
- Harness for open and short between ECM and combination switch

>> Repair open circuit or short to ground or short to power in harness or connectors.

7. CHECK ASCD STEERING SWITCH

Refer to EC-393, "Component Inspection".

Is the inspection result normal?

YES >> GO TO 8.
NO >> Replace ASCD steering switch.

8. CHECK INTERMITTENT INCIDENT

Refer to GI-42, "Intermittent Incident".

>> INSPECTION END

Component Inspection

INFOID:0000000004349442

1. CHECK ASCD STEERING SWITCH

1. Disconnect combination switch (spiral cable) harness connector M303.
2. Check the continuity between combination switch harness connector terminals under following conditions.

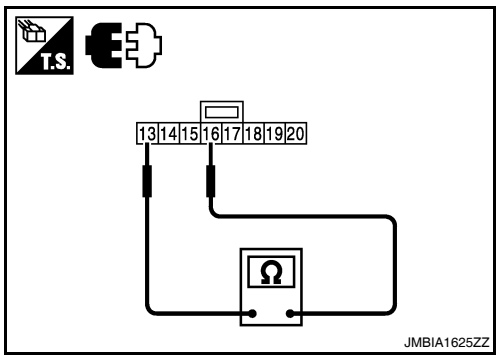

Combination meter		Condition	Resistance
Connector	Terminals		
M88	13 and 16	MAIN switch: Pressed	Approx. 0 Ω
		CANCEL switch: Pressed	Approx. 250 Ω
		SET/COAST switch: Pressed	Approx. 660 Ω
		RESUME/ACCELERATE switch: Pressed	Approx. 1,480 Ω
		All ASCD steering switches: Released	Approx. 4,000 Ω

Is the inspection result normal?

YES >> INSPECTION END
NO >> Replace ASCD steering switch

P1572 ASCD BRAKE SWITCH

Description

INFOID:0000000004349443

When the brake pedal is depressed, ASCD brake switch is turned OFF and stop lamp switch is turned ON. ECM detects the state of the brake pedal by this input of two kinds (ON/OFF signal).
Refer to EC-67, "System Description" for the ASCD function.

DTC Logic

INFOID:0000000004349444

DTC DETECTION LOGIC

NOTE:
- **If DTC P1572 is displayed with DTC P0605, first perform the trouble diagnosis for DTC P0605. Refer to EC-359, "DTC Logic".**
- **This self-diagnosis has the one trip detection logic. When malfunction A is detected, DTC is not stored in ECM memory. And in that case, 1st trip DTC and 1st trip freeze frame data are displayed. 1st trip DTC is erased when ignition switch OFF. And even when malfunction A is detected in two consecutive trips, DTC is not stored in ECM memory.**

DTC No.	Trouble diagnosis name	DTC detecting condition		Possible cause
P1572	ASCD brake switch	A)	When the vehicle speed is above 30 km/h (19 MPH), ON signals from the stop lamp switch and the ASCD brake switch are sent to the ECM at the same time.	• Harness or connectors (The stop lamp switch circuit is shorted.) • Harness or connectors (The ASCD brake switch circuit is shorted.) • Harness or connectors (The ASCD clutch switch circuit is shorted.) (M/T) • Stop lamp switch • ASCD brake switch • ASCD clutch switch (M/T) • Incorrect stop lamp switch installation • Incorrect ASCD brake switch installation • Incorrect ASCD clutch switch installation (M/T) • ECM
		B)	ASCD brake switch signal is not sent to ECM for extremely long time while the vehicle is driving.	

DTC CONFIRMATION PROCEDURE

1. PRECONDITIONING

If DTC Confirmation Procedure has been previously conducted, always turn ignition switch OFF and wait at least 10 seconds before conducting the next test.
NOTE:
Procedure for malfunction B is not described here. It takes extremely long time to complete procedure for malfunction B. By performing procedure for malfunction A, the incident that causes malfunction B can be detected.

>> GO TO 2.

2. PERFORM DTC CONFIRMATION PROCEDURE FOR MALFUNCTION A

With CONSULT-III
1. Start engine.
2. Select “DATA MONITOR” mode with CONSULT-III.
3. Press MAIN switch and make sure that CRUISE indicator is displayed in combination meter.
4. Drive the vehicle for at least 5 consecutive seconds under the following conditions.
   CAUTION:
   Always drive vehicle at a safe speed.
   NOTE:
   This procedure may be conducted with the drive wheels lifted in the shop or by driving the vehicle. If a road test is expected to be easier, it is unnecessary to lift the vehicle.

VHCL SPEED SE	More than 30 km/h (19 mph)
Shift lever	Suitable position

5. Check 1st trip DTC.

With GST

Follow the procedure “With CONSULT-III” above.

Is 1st trip DTC detected?

YES >> Go to EC-395, "Diagnosis Procedure".
NO >> GO TO 3.

3. PERFORM DTC CONFIRMATION PROCEDURE FOR MALFUNCTION B

With CONSULT-III

1. Drive the vehicle for at least 5 consecutive seconds under the following conditions.

   CAUTION:
   Always drive vehicle at a safe speed.
   NOTE:
   This procedure may be conducted with the drive wheels lifted in the shop or by driving the vehicle. If a road test is expected to be easier, it is unnecessary to lift the vehicle.

VHCL SPEED SE	More than 30 km/h (19 mph)
Selector lever	Suitable position
Driving location	Depress the brake pedal for more than five seconds so as not to come off from the above-mentioned vehicle speed.

2. Check 1st trip DTC.

With GST

Follow the procedure “With CONSULT-III” above.

Is 1st trip DTC detected?

YES >> Go to EC-395, "Diagnosis Procedure".
NO >> INSPECTION END

Diagnosis Procedure

INFOID:0000000004349445

1. CHECK OVERALL FUNCTION-I

With CONSULT-III

1. Turn ignition switch ON.
2. Select “BRAKE SW1” in “DATA MONITOR” mode with CONSULT-III.
3. Check “BRAKE SW1” indication under the following conditions.

Monitor item	Condition		Indication
BRAKE SW1	Brake pedal (CVT) Brake pedal and clutch pedal (M/T)	Slightly depressed	OFF
		Fully released	ON

Without CONSULT-III

1. Turn ignition switch ON.
2. Check the voltage between ECM harness connector and ground.

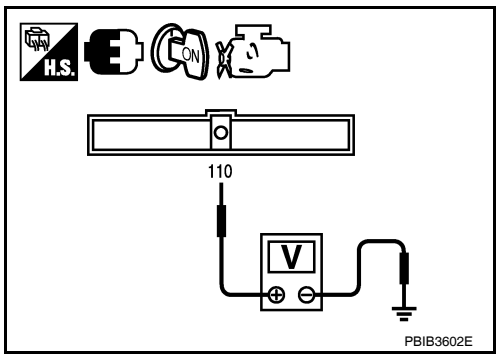

ECM		Ground	Condition		Voltage
Connector	Terminal				
E10	110 (ASCD brake switch signal)	Ground	Brake pedal (CVT) Brake pedal and clutch pedal (M/T)	Slightly depressed	Approx. 0 V
				Fully released	Battery voltage

Is the inspection result normal?

YES >> GO TO 2.
NO-1 >> CVT models: GO TO 3.
NO-1 >> M/T models: GO TO 7.

2. CHECK OVERALL FUNCTION-II

With CONSULT-III

Select “BRAKE SW2” and check indication in “DATA MONITOR” mode.

Monitor item	Condition		Indication
BRAKE SW2	Brake pedal (CVT) Brake pedal and clutch pedal (M/T)	Slightly depressed	ON
		Fully released	OFF

Without CONSULT-III

Check the voltage between ECM harness connector and ground.

ECM		Ground	Condition		Voltage
Connector	Terminal				
E10	110 (ASCD brake switch signal)	Ground	Brake pedal (CVT) Brake pedal and clutch pedal (M/T)	Slightly depressed	Approx. 0 V
				Fully released	Battery voltage

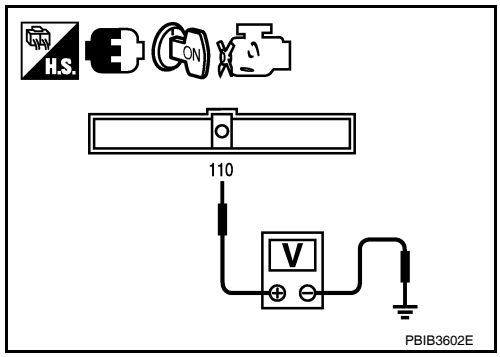

Is the inspection result normal?

YES >> GO TO 19.
NO >> GO TO 14.

3. CHECK ASCD BRAKE SWITCH POWER SUPPLY CIRCUIT

1. Turn ignition switch OFF.
2. Disconnect ASCD brake switch harness connector.
3. Turn ignition switch ON.
4. Check the voltage between ASCD brake switch harness connector and ground.

ASCD brake switch		Ground	Voltage
Connector	Terminal		
E37	1	Ground	Battery voltage

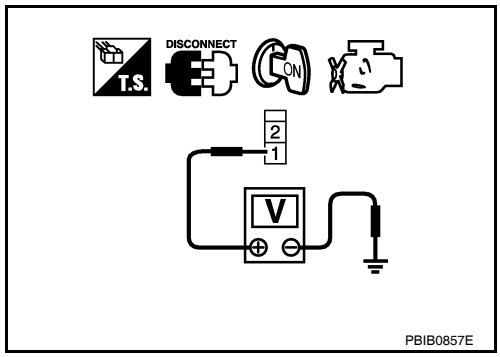

Is the inspection result normal?

YES >> GO TO 5.
NO >> GO TO 4.

4. DETECT MALFUNCTIONING PART

Check the following.

- Fuse block (J/B) connector E6
- Junction block connector E44, E46
- 10A fuse (No.3)
- Harness for open or short between ASCD brake switch and fuse

>> Repair open circuit or short to ground or short to power in harness or connectors.

5. CHECK ASCD BRAKE SWITCH INPUT SIGNAL CIRCUIT FOR OPEN AND SHORT

1. Turn ignition switch OFF.
2. Disconnect ECM ASCD harness connector.

3. Check the continuity between ASCD brake switch harness connector and ECM harness connector.

ASCD brake switch		ECM		Continuity
Connector	Terminal	Connector	Terminal	
E37	2	E10	110	Existed

4. Also check harness for short to ground and short to power.

Is the inspection result normal?

YES >> GO TO 6.
NO >> Repair open circuit or short to ground or short to power in harness or connectors.

6. CHECK ASCD BRAKE SWITCH

Refer to EC-399, "Component Inspection (ASCD Brake Switch)".

Is the inspection result normal?

YES >> GO TO 19.
NO >> Replace ASCD brake switch.

7. CHECK ASCD BRAKE SWITCH CIRCUIT

1. Turn ignition switch OFF.
2. Disconnect ASCD clutch switch harness connector.
3. Turn ignition switch ON.
4. Check the voltage between ASCD clutch switch harness connector and ground.

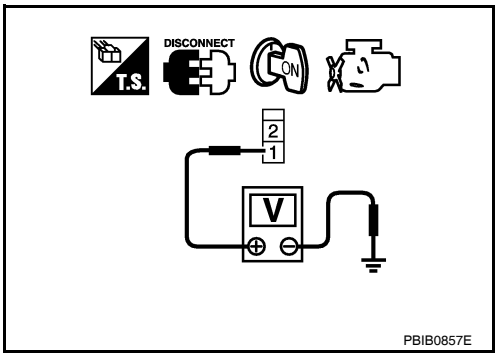

ASCD clutch switch		Ground	Condition		Voltage (V)
Connector	Terminal				
E39	1	Ground	Brake pedal	Slightly depressed	Approx. 0
				Fully released	Battery voltage

Is the inspection result normal?

YES >> GO TO 12.
NO >> GO TO 8.

8. CHECK ASCD BRAKE SWITCH POWER SUPPLY CIRCUIT

1. Turn ignition switch OFF.
2. Disconnect ASCD brake switch harness connector.
3. Turn ignition switch ON.
4. Check the voltage between ASCD brake switch harness connector and ground.

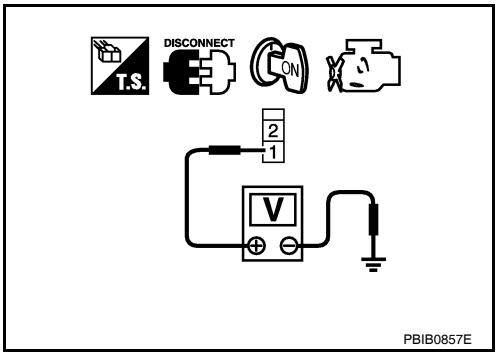

ASCD brake switch		Ground	Voltage
Connector	Terminal		
E37	1	Ground	Battery voltage

Is the inspection result normal?

YES >> GO TO 10.
NO >> GO TO 9.

9. DETECT MALFUNCTIONING PART

Check the following.
- Fuse block (J/B) connector E6
- Junction block connector E44, E46
- 10A fuse (No.3)
- Harness for open or short between ASCD brake switch and fuse

>> Repair open circuit or short to ground or short to power in harness or connectors.

10. CHECK ASCD BRAKE SWITCH INPUT SIGNAL CIRCUIT FOR OPEN AND SHORT

1. Turn ignition switch OFF.
2. Disconnect ECM harness connector.
3. Check the continuity between ASCD brake switch harness connector and ASCD clutch switch harness connector.

ASCD brake switch		ASCD clutch switch		Continuity
Connector	Terminal	Connector	Terminal	
E37	2	E39	1	Existed

4. Also check harness for short to ground and short to power.

Is the inspection result normal?

YES >> GO TO 11.
NO >> Repair open circuit or short to ground or short to power in harness or connectors.

11. CHECK ASCD BRAKE SWITCH

Refer to EC-399, "Component Inspection (ASCD Brake Switch)".

Is the inspection result normal?

YES >> GO TO 19.
NO >> Replace ASCD brake switch.

12. CHECK ASCD BRAKE SWITCH INPUT SIGNAL CIRCUIT FOR OPEN AND SHORT

1. Turn ignition switch OFF.
2. Disconnect ECM harness connector.
3. Check the continuity between ECM harness connector and ASCD clutch switch harness connector.

ECM		ASCD clutch switch		Continuity
Connector	Terminal	Connector	Terminal	
E10	110	E37	2	Existed

4. Also check harness for short to ground and short to power.

Is the inspection result normal?

YES >> GO TO 13.
NO >> Repair open circuit or short to ground or short to power in harness or connectors.

13. CHECK ASCD CLUTCH SWITCH

Refer to EC-400, "Component Inspection (ASCD Clutch Switch)".

Is the inspection result normal?

YES >> GO TO 19.
NO >> Replace ASCD clutch switch.

14. CHECK STOP LAMP SWITCH POWER SUPPLY CIRCUIT

1. Turn ignition switch OFF.
2. Disconnect stop lamp switch harness connector.
3. Check the voltage between stop lamp switch harness connector and ground.

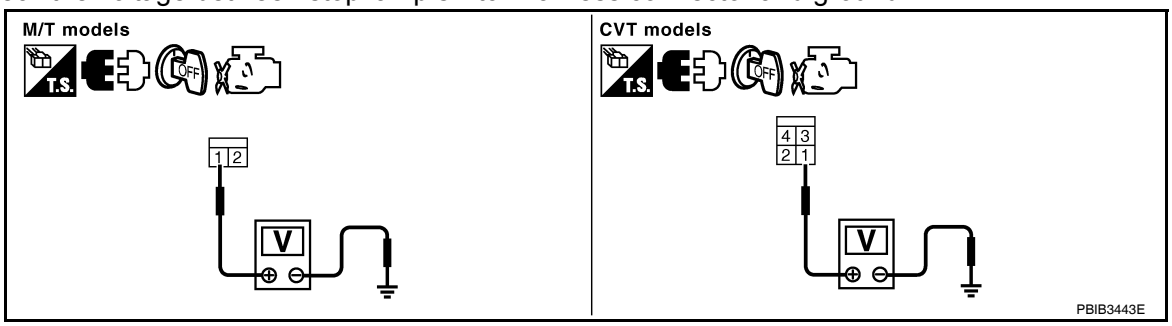

Stop lamp switch		Ground	Voltage
Connector	Terminal		
E38	1	Ground	Battery voltage

Is the inspection result normal?

YES >> GO TO 16.
NO >> GO TO 15.

15. DETECT MALFUNCTIONING PART

Check the following.
- Fuse block (J/B) connector E6
- 10A fuse (No.7)
- Harness for open or short between stop lamp switch and battery

>> Repair open circuit or short to ground or short to power in harness or connectors.

16. CHECK STOP LAMP SWITCH INPUT SIGNAL CIRCUIT FOR OPEN AND SHORT

1. Disconnect ECM harness connector.
2. Check the continuity between ECM harness connector and stop lamp switch harness connector.

ECM		ASCD clutch switch		Continuity
Connector	Terminal	Connector	Terminal	
E10	106	E38	2	Existed

3. Also check harness for short to ground and short to power.

Is the inspection result normal?

YES >> GO TO 18.
NO >> GO TO 17.

17. DETECT MALFUNCTIONING PART

Check the following.
- Fuse block (J/B) connector E6
- Harness for open or short between ECM and stop lamp switch

>> Repair open circuit or short to ground or short to power in harness or connectors.

18. CHECK STOP LAMP SWITCH

Refer to EC-401, "Component Inspection (Stop Lamp Switch)".

Is the inspection result normal?

YES >> GO TO 19.
NO >> Replace stop lamp switch.

19. CHECK INTERMITTENT INCIDENT

Refer to GI-42, "Intermittent Incident".

>> INSPECTION END

Component Inspection (ASCD Brake Switch)

INFOID:0000000004349446

1. CHECK ASCD BRAKE SWITCH-I

1. Turn ignition switch OFF.
2. Disconnect ASCD brake switch harness connector.

3. Check the continuity between ASCD brake switch terminals under the following conditions.

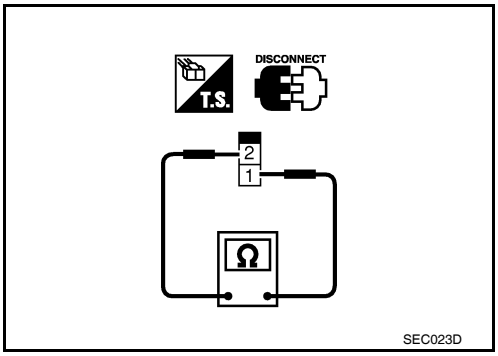

Terminals	Condition		Continuity
1 and 2	Brake pedal	Fully released	Existed
		Slightly depressed	Not existed

Is the inspection result normal?

YES >> INSPECTION END
NO >> GO TO 2.

2. CHECK ASCD BRAKE SWITCH-II

1. Adjust ASCD brake switch installation. Refer to BR-13, "Inspection and Adjustment".
2. Check the continuity between ASCD brake switch terminals under the following conditions.

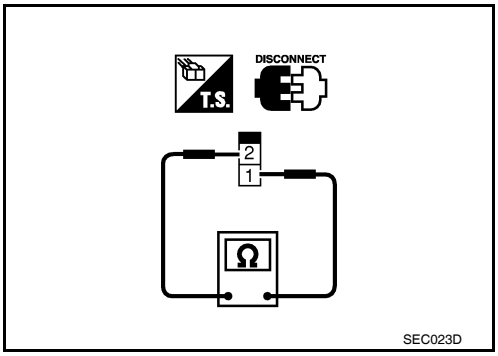

Terminals	Condition		Continuity
1 and 2	Brake pedal	Fully released	Existed
		Slightly depressed	Not existed

Is the inspection result normal?

YES >> INSPECTION END
NO >> Replace ASCD brake switch.

Component Inspection (ASCD Clutch Switch)

INFOID:0000000004349447

1. CHECK ASCD CLUTCH SWITCH-I

1. Turn ignition switch OFF.
2. Disconnect ASCD clutch switch harness connector.
3. Check the continuity between ASCD clutch switch terminals under the following conditions.

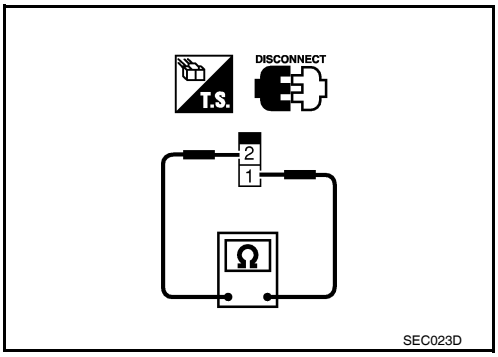

Terminals	Condition		Continuity
1 and 2	Clutch pedal	Fully released	Existed
		Slightly depressed	Not existed

Is the inspection result normal?

YES >> INSPECTION END
NO >> GO TO 2.

2. CHECK ASCD CLUTCH SWITCH-II

1. Adjust ASCD clutch switch installation. Refer to BR-13, "Inspection and Adjustment".
2. Check the continuity between ASCD clutch switch terminals under the following conditions.

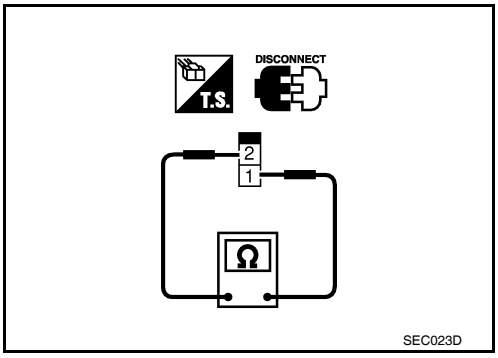

Terminals	Condition		Continuity
1 and 2	Clutch pedal	Fully released	Existed
		Slightly depressed	Not existed

Is the inspection result normal?

YES >> INSPECTION END
NO >> Replace ASCD clutch switch.

Component Inspection (Stop Lamp Switch)

INFOID:0000000004349448

1. CHECK STOP LAMP SWITCH-I

1. Turn ignition switch OFF.
2. Disconnect stop lamp switch harness connector.
3. Check the continuity between stop lamp switch terminals under the following conditions.

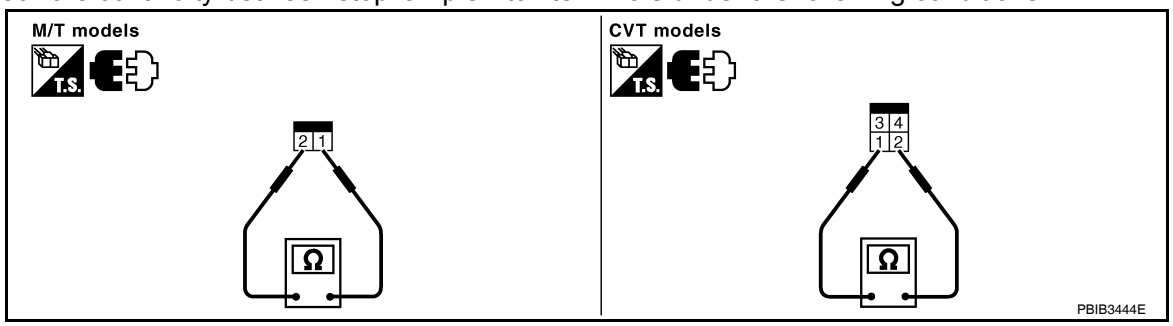

Terminals	Condition		Continuity
1 and 2	Brake pedal	Fully released	Not existed
		Slightly depressed	Existed

Is the inspection result normal?

YES >> INSPECTION END
NO >> GO TO 2.

2. CHECK STOP LAMP SWITCH-II

1. Adjust stop lamp switch installation. Refer to BR-13, "Inspection and Adjustment".
2. Check the continuity between stop lamp switch terminals under the following conditions.

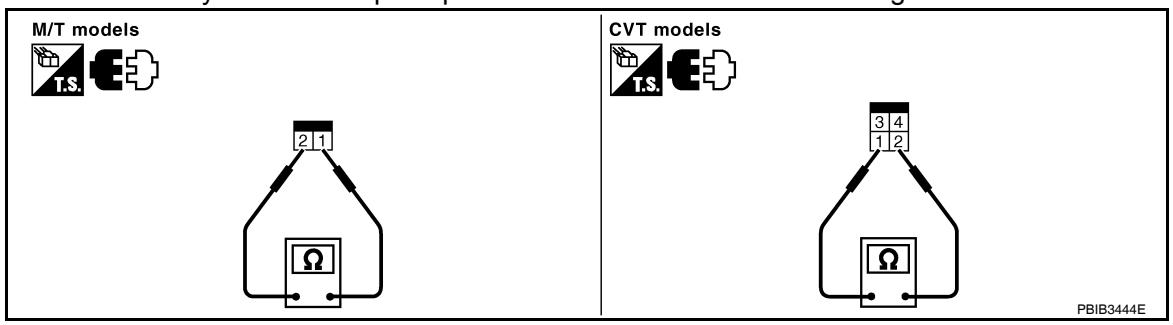

Terminals	Condition		Continuity
1 and 2	Brake pedal	Fully released	Not existed
		Slightly depressed	Existed

Is the inspection result normal?

YES >> INSPECTION END
NO >> Replace stop lamp switch.

P1574 ASCD VEHICLE SPEED SENSOR

Description

INFOID:0000000004349449

The ECM receives two vehicle speed signals via CAN communication line. One is sent from combination meter, and the other is from TCM (Transmission control module). The ECM uses these signals for ASCD control. Refer to EC-67, "System Description" for ASCD functions.

DTC Logic

INFOID:0000000004349450

DTC DETECTION LOGIC

NOTE:
- **If DTC P1574 is displayed with DTC UXXXX, first perform the trouble diagnosis for DTC UXXXX.**
- **If DTC P1574 is displayed with DTC P0500, first perform the trouble diagnosis for DTC P0500. Refer to EC-348, "DTC Logic"**
- **If DTC P1574 is displayed with DTC P0605, first perform the trouble diagnosis for DTC P0605. Refer to EC-359, "DTC Logic"**
- **If DTC P1574 is displayed with DTC P0607, first perform the trouble diagnosis for DTC P0607. Refer to EC-361, "DTC Logic".**

DTC No.	Trouble diagnosis name	DTC detecting condition	Possible cause
P1574	ASCD vehicle speed sensor	ECM detects a difference between two vehicle speed signals is out of the specified range.	• Harness or connectors (The CAN communication line is open or shorted.) (Combination meter circuit is open or shorted.) • Combination meter • ABS actuator and electric unit (control unit) • Wheel sensor • TCM (CVT models) • ECM

DTC CONFIRMATION PROCEDURE

1.PRECONDITIONING

If DTC Confirmation Procedure has been previously conducted, always turn ignition switch OFF and wait at least 10 seconds before conducting the next test.

>> GO TO 2.

2.PERFORM DTC CONFIRMATION PROCEDURE

1. Start engine.
2. Drive the vehicle at more than 40 km/h (25 MPH).
   CAUTION:
   Always drive vehicle at a safe speed.
   NOTE:
   This procedure may be conducted with the drive wheels lifted in the shop or by driving the vehicle. If a road test is expected to be easier, it is unnecessary to lift the vehicle.
3. Check DTC.

Is DTC detected?

YES >> Go to EC-402, "Diagnosis Procedure".
NO >> INSPECTION END

Diagnosis Procedure

INFOID:0000000004349451

1.CHECK DTC WITH TCM

Check DTC with TCM. Refer to TM-296, "Diagnosis Description".

Is the inspection result normal?

YES >> GO TO 2.
NO >> Perform trouble shooting relevant to DTC indicated.

2. CHECK DTC WITH “ABS ACTUATOR AND ELECTRIC UNIT (CONTROL UNIT)”

Refer to BRC-12, "CONSULT-III Function (ABS)".

Is the inspection result normal?

YES >> GO TO 3.
NO >> Repair or replace.

3. CHECK COMBINATION METER

Check combination meter function.
Refer to MWI-38, "CONSULT-III Function (METER/M&A)".

>> INSPECTION END

P1715 INPUT SPEED SENSOR (PRIMARY SPEED SENSOR)

Description

INFOID:0000000004349452

ECM receives primary speed sensor signal from TCM through CAN communication line. ECM uses this signal for engine control.

DTC Logic

INFOID:0000000004349453

DTC DETECTION LOGIC

NOTE:
- **If DTC P1715 is displayed with DTC UXXXX, first perform the trouble diagnosis for DTC UXXXX.**
- **If DTC P1715 is displayed with DTC P0335, first perform the trouble diagnosis for DTC P0335. Refer to EC-278, "DTC Logic".**
- **If DTC P1715 is displayed with DTC P0340, first perform the trouble diagnosis for DTC P0340. Refer to EC-282, "DTC Logic".**
- **If DTC P1715 is displayed with DTC P0605, first perform the trouble diagnosis for DTC P0605. Refer to EC-359, "DTC Logic".**
- **If DTC P1715 is displayed with DTC P0607, first perform the trouble diagnosis for DTC P0607. Refer to EC-361, "DTC Logic".**

DTC No.	Trouble diagnosis name	DTC detecting condition	Possible cause
P1715	Input speed sensor (Primary speed sensor) (TCM output)	Primary speed sensor signal is different from the theoretical value calculated by ECM from secondary speed sensor signal and engine rpm signal.	• Harness or connectors (The CAN communication line is open or shorted) • Harness or connectors (Primary speed sensor circuit is open or shorted) • TCM

DTC CONFIRMATION PROCEDURE

1.PRECONDITIONING

If DTC Confirmation Procedure has been previously conducted, always turn ignition switch OFF and wait at least 10 seconds before conducting the next test.

>> GO TO 2.

2.PERFORM DTC CONFIRMATION PROCEDURE

1. Start engine and drive the vehicle at more than 50 km/h (31 MPH) for at least 5 seconds.
   CAUTION:
   Always drive vehicle at a safe speed.
2. Check 1st trip DTC.

Is 1st trip DTC detected?

YES >> Go to EC-404, "Diagnosis Procedure".
NO >> INSPECTION END

Diagnosis Procedure

INFOID:0000000004349454

1.CHECK DTC WITH TCM

Check DTC with TCM. Refer to TM-296, "Diagnosis Description".

Is the inspection result normal?

YES >> GO TO 2.
NO >> Perform trouble shooting relevant to DTC indicated.

2.REPLACE TCM

Replace TCM.

>> INSPECTION END

P1805 BRAKE SWITCH

Description

INFOID:0000000004349455

Brake switch signal is applied to the ECM through the stop lamp switch when the brake pedal is depressed. This signal is used mainly to decrease the engine speed when the vehicle is driving.

DTC Logic

INFOID:0000000004349456

DTC DETECTION LOGIC

DTC No.	Trouble diagnosis name	DTC detecting condition	Possible cause
P1805	Brake switch	A brake switch signal is not sent to ECM for extremely long time while the vehicle is driving.	• Harness or connectors (Stop lamp switch circuit is open or shorted.) • Stop lamp switch

DTC CONFIRMATION PROCEDURE

1.PERFORM DTC CONFIRMATION PROCEDURE

1. Turn ignition switch ON.
2. Fully depress the brake pedal for at least 5 seconds.
3. Erase the DTC with CONSULT-III.
4. Check 1st trip DTC.

Is 1st trip DTC detected?

YES >> Go to EC-406, "Diagnosis Procedure".
NO >> INSPECTION END

Diagnosis Procedure

INFOID:0000000004349457

1.CHECK STOP LAMP SWITCH CIRCUIT

1. Turn ignition switch OFF.
2. Check the stop lamp when depressing and releasing the brake pedal.

Brake pedal	Stop lamp
Fully released	Not illuminated
Slightly depressed	Illuminated

Is 1st trip DTC detected?

YES >> GO TO 4.
NO >> GO TO 2.

2.CHECK STOP LAMP SWITCH POWER SUPPLY CIRCUIT

1. Turn ignition switch OFF.
2. Disconnect stop lamp switch harness connector.
3. Check the voltage between stop lamp switch harness connector and ground.

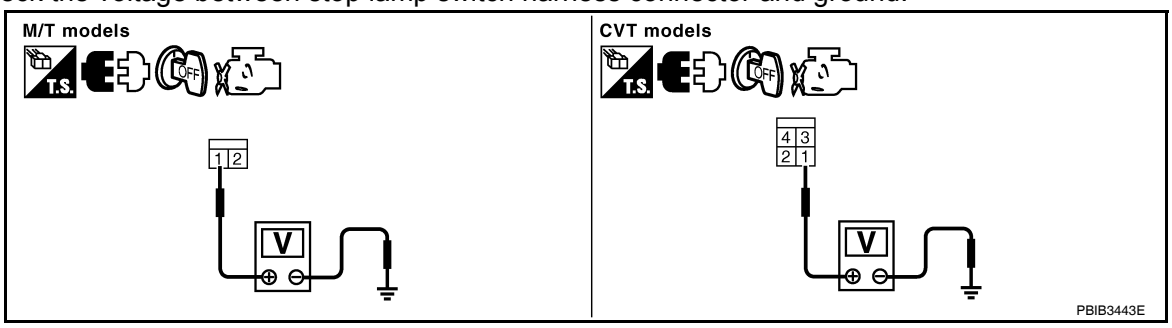

Stop lamp switch		Ground	Voltage
Connector	Terminal		
E38	1	Ground	Battery voltage

Is the inspection result normal?

YES >> GO TO 4.
NO >> GO TO 3.

3. DETECT MALFUNCTIONING PART

Check the following.
- Junction block connector E6
- 10A fuse (No. 7)
- Harness for open or short between stop lamp switch and battery

>> Repair open circuit or short to ground or short to power in harness or connectors.

4. CHECK STOP LAMP SWITCH INPUT SIGNAL CIRCUIT FOR OPEN AND SHORT

1. Disconnect ECM harness connector.
2. Check the continuity between ECM harness connector and stop lamp switch harness connector.

ECM		Stop lamp switch		Continuity
Connector	Terminal	Connector	Terminal	
E10	106	E38	2	Existed

3. Also check harness for short to ground and short to power.

Is the inspection result normal?

YES >> GO TO 6.
NO >> GO TO 5.

5. DETECT MALFUNCTIONING PART

Check the following.
- Junction block connector E44, E45
- Harness for open or short between ECM and stop lamp switch

>> Repair open circuit or short to ground or short to power in harness or connectors.

6. CHECK STOP LAMP SWITCH

Refer to EC-407, "Component Inspection (Stop Lamp Switch)".

Is the inspection result normal?

YES >> GO TO 7.
NO >> Replace stop lamp switch.

7. CHECK INTERMITTENT INCIDENT

Refer to GI-42, "Intermittent Incident".

>> INSPECTION END

Component Inspection (Stop Lamp Switch)

INFOID:0000000004349458

1. CHECK STOP LAMP SWITCH-I

1. Turn ignition switch OFF.
2. Disconnect stop lamp switch harness connector.

3. Check the continuity between stop lamp switch terminals under the following conditions.

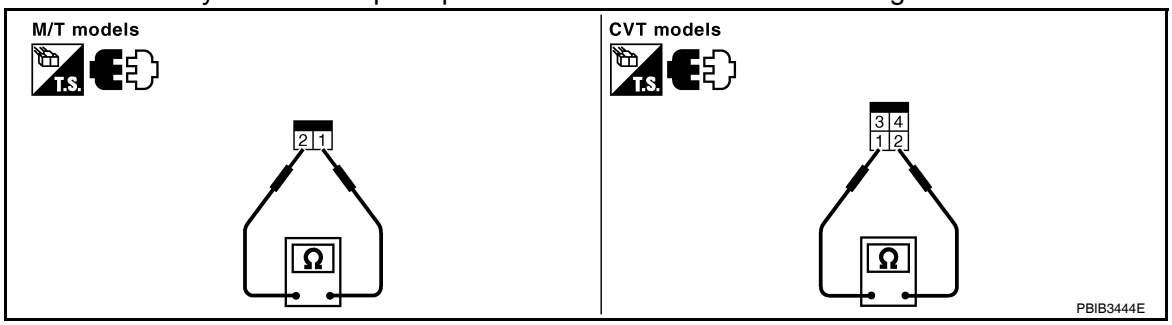

Terminals	Condition		Continuity
1 and 2	Brake pedal	Fully released	Not existed
		Slightly depressed	Existed

Is the inspection result normal?

YES >> INSPECTION END
NO >> GO TO 2.

2. CHECK STOP LAMP SWITCH-II

1. Adjust stop lamp switch installation. Refer to BR-13, "Inspection and Adjustment".
2. Check the continuity between stop lamp switch terminals under the following conditions.

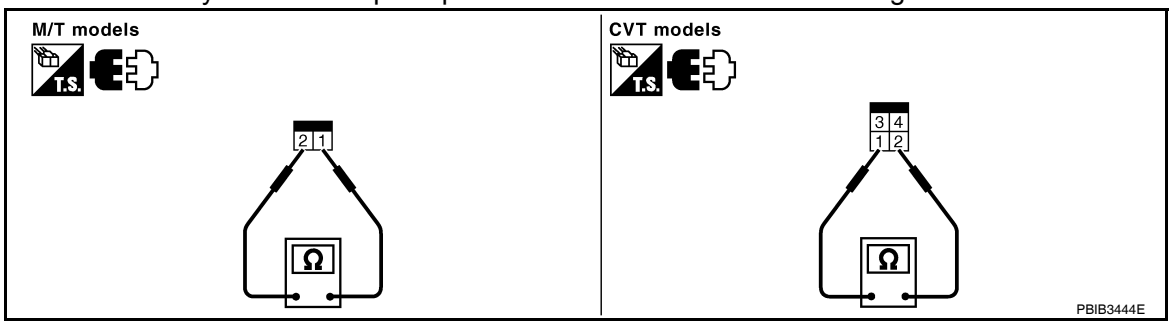

Terminals	Condition		Continuity
1 and 2	Brake pedal	Fully released	Not existed
		Slightly depressed	Existed

Is the inspection result normal?

YES >> INSPECTION END
NO >> Replace stop lamp switch.

P2004 TUMBLE CONTROL VALVE

Description

INFOID:0000000004349459

Tumble control valve (3) is installed in the intake manifold adapter (1).
Tumble control valve actuator (2) is connected to the front end of the valve shaft.
Tumble control valve actuator consists of motor and position sensor, etc.
The motor opens or closes the valve by the output signal of the ECM.
The sensor consists of a permanent magnet and Hall IC. It senses the valve shaft movement and feeds the voltage signals to the ECM.

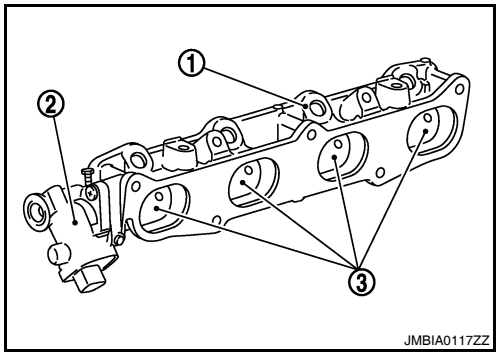

DTC Logic

INFOID:0000000004349460

DTC DETECTION LOGIC

DTC No.	Trouble diagnosis name	DTC detecting condition	Possible cause
P2004	Tumble control valve stuck	The target angle of tumble control valve controlled by ECM and the input signal from tumble control valve position sensor is not in the normal range.	• Harness or connectors (Tumble control valve motor circuit is open or shorted.) (Tumble control valve position sensor circuit is open or shorted.) (Accelerator pedal position sensor 2 circuit is shorted.) [Crankshaft position sensor (POS) circuit is shorted.] (EVAP control system pressure sensor circuit is shorted.) (Refrigerant pressure sensor circuit is shorted.) • Tumble control valve actuator (Tumble control valve motor) (Tumble control valve position sensor) • Accelerator pedal position sensor (APP sensor 2) • Crankshaft position sensor (POS) • EVAP control system pressure sensor • Refrigerant pressure sensor

DTC CONFIRMATION PROCEDURE

1. PRECONDITIONING

If DTC Confirmation Procedure has been previously conducted, always turn ignition switch OFF and wait at least 10 seconds before conducting the next test.

TESTING CONDITION:

- **Before performing the following procedure, confirm that battery voltage is more than 11V at idle.**
- **Always perform the test at a temperature above 0°C (32°F)**

>> GO TO 2.

2. PERFORM DTC CONFIRMATION PROCEDURE

With CONSULT-III

1. Turn ignition switch ON.
2. Select “DATA MONITOR” mode with CONSULT-III.
3. Make sure that “COOLAN TEMP/S” indicates between 5°C (41°F) to 60°C (140°F).
   If not, cool engine down or warm engine up until “COOLAN TEMP/S” indicates between 5°C (41°F) to 60°C (140°F). Then go to the following steps.

4. Fully release accelerator pedal and wait at least 5 seconds.
5. Depress accelerator pedal and wait at least 5 seconds.
6. Check 1st trip DTC.

With GST

Following the procedure “With CONSULT-III” above.

Is 1st trip DTC detected?

YES >> Go to EC-410, "Diagnosis Procedure".
NO >> INSPECTION END

Diagnosis Procedure

INFOID:0000000004349461

1. CHECK GROUND CONNECTION

1. Turn ignition switch OFF.
2. Check ground connection E9. Refer to Ground Inspection in GI-45, "Circuit Inspection".

Is the inspection result normal?

YES >> GO TO 2.
NO >> Repair or replace ground connection.

2. CHECK TUMBLE CONTROL VALVE MOTOR POWER SUPPLY CIRCUIT-I

Check the voltage between ECM harness connector and ground.

ECM		Ground	Condition	Voltage
Connector	Terminal			
F14	7	Ground	Ignition switch OFF	Approx. 0 V
			Ignition switch ON	Battery voltage

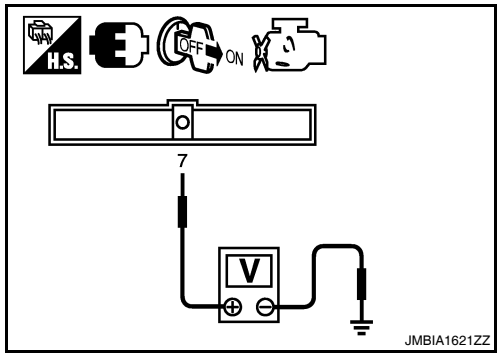

Is the inspection result normal?

YES >> GO TO 4.
NO >> GO TO 3.

3. CHECK TUMBLE CONTROL VALVE MOTOR POWER SUPPLY CIRCUIT-II

1. Turn ignition switch OFF.
2. Disconnect ECM harness connector.
3. Disconnect IPDM E/R harness connector.
4. Check the continuity between IPDM E/R harness connector and ECM harness connector.

IPDM E/R		ECM		Continuity
Connector	Terminal	Connector	Terminal	
F10	53	F14	7	Existed

5. Also check harness for short to ground and short to power.

Is the inspection result normal?

YES >> Refer to EC-144, "Diagnosis Procedure".
NO >> Repair open circuit or short to ground or short to power in harness or connectors.

4. CHECK TUMBLE CONTROL VALVE MOTOR OUTPUT SIGNAL CIRCUIT FOR OPEN AND SHORT

1. Disconnect tumble control valve actuator harness connector.
2. Disconnect ECM harness connector.
3. Check the continuity between tumble control valve actuator harness connector and ECM harness connector.

Tumble control valve actuator		ECM		Continuity
Connector	Terminal	Connector	Terminal	
F43	4	F14	1	Not existed
			3	Existed
	5		1	Existed
			3	Not existed

4. Also check harness for short to ground and short to power.

Is the inspection result normal?

YES >> GO TO 5.
NO >> Repair open circuit or short to ground or short to power in harness or connectors.

5. CHECK TUMBLE CONTROL VALVE POSITION SENSOR POWER SUPPLY CIRCUIT-I

1. Reconnect ECM harness connector disconnected.
2. Turn ignition switch ON.
3. Check the voltage between tumble control valve actuator harness connector and ground.

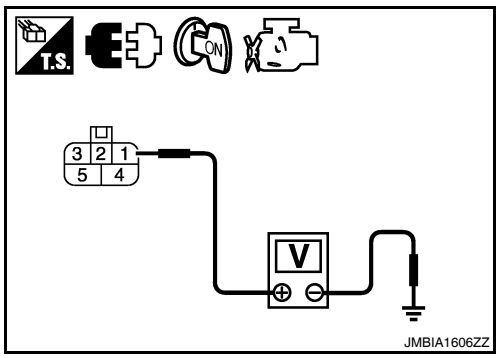

Tumble control valve actuator		Ground	Voltage
Connector	Terminal		
F43	1	Ground	Approx. 5 V

Is the inspection result normal?

YES >> GO TO 11.
NO >> GO TO 6.

6. CHECK TUMBLE CONTROL VALVE POSITION SENSOR POWER SUPPLY CIRCUIT-II

1. Turn ignition switch OFF.
2. Disconnect ECM harness connector.
3. Check the continuity between tumble control valve actuator harness connector and ECM harness connector.

Tumble control valve actuator		ECM		Continuity
Connector	Terminal	Connector	Terminal	
F43	1	F13	72	Existed

Is the inspection result normal?

YES >> GO TO 7.
NO >> Repair open circuit.

7. CHECK TUMBLE CONTROL VALVE POSITION SENSOR POWER SUPPLY CIRCUIT-III

Check harness for short to power and short to ground, between the following terminals.

ECM		Sensor		
Connector	Terminal	Name	Connector	Terminal
F13	72	Tumble control valve actuator	F43	1
		Refrigerant pressure sensor	E219	1
	76	CKP sensor (POS)	F30	1
E10	87	APP sensor	E40	6
	91	EVAP control system pressure sensor	B41	3

Is the inspection result normal?

YES >> GO TO 8.
NO >> Repair short to ground or short to power in harness or connectors.

8. CHECK COMPONENTS

Check the following.
- Refrigerant pressure sensor (Refer to EC-482, "Diagnosis Procedure".)
- Crankshaft position sensor (POS) (Refer to EC-281, "Component Inspection".)
- EVAP control system pressure sensor (Refer to EC-318, "Component Inspection".)

Is the inspection result normal?

YES >> GO TO 9.
NO >> Replace malfunctioning components.

9. CHECK APP SENSOR

Refer to EC-429, "Component Inspection".

Is the inspection result normal?

YES >> GO TO 14.
NO >> GO TO 10.

10. REPLACE ACCELERATOR PEDAL ASSEMBLY

1. Replace accelerator pedal assembly.
2. Refer to EC-429, "Special Repair Requirement".

>> INSPECTION END

11. CHECK TUMBLE CONTROL VALVE POSITION SENSOR GROUND CIRCUIT FOR OPEN AND SHORT

1. Turn ignition switch OFF.
2. Disconnect ECM harness connector.
3. Check the continuity between tumble control valve actuator harness connector and ECM harness connector.

Tumble control valve actuator		ECM		Continuity
Connector	Terminal	Connector	Terminal	
F43	2	F13	52	Existed

4. Also check harness for short to ground and short to power.

Is the inspection result normal?

YES >> GO TO 12.
NO >> Repair open circuit or short to ground or short to power in harness or connectors.

12. CHECK TUMBLE CONTROL VALVE POSITION SENSOR INPUT SIGNAL CIRCUIT FOR OPEN AND SHORT

1. Check the continuity between tumble control valve actuator harness connector and ECM harness connector.

Tumble control valve actuator		ECM		Continuity
Connector	Terminal	Connector	Terminal	
F43	3	F13	54	Existed

2. Also check harness for short to ground and short to power.

Is the inspection result normal?

YES >> GO TO 13.
NO >> Repair open circuit or short to ground or short to power in harness or connectors.

13. CHECK TUMBLE CONTROL VALVE

Refer to EC-413, "Component Inspection".

Is the inspection result normal?

YES >> GO TO 14.
NO >> Replace intake manifold adapter.

14. CHECK INTERMITTENT INCIDENT

Refer to GI-42, "Intermittent Incident".

Is the inspection result normal?

YES >> Replace intake manifold adapter.
NO >> Repair or replace harness or connectors.

Component Inspection

INFOID:0000000004349462

1. CHECK TUMBLE CONTROL VALVE

With CONSULT-III

1. Turn ignition switch OFF.
2. Remove intake manifold adapter. Refer to EM-26, "Removal and Installation".
3. Visually check the valve for damage and check if foreign matter is caught between the valve and the housing.
4. Connect tumble control valve actuator harness connector.
5. Turn ignition switch ON.
6. Perform “TUMBLE CONTROL VALVE” in “ACTIVE TEST” mode with CONSULT-III.
7. Touch “ON/OFF” and check that the valve opens and closes.

Without CONSULT-III

1. Turn ignition switch OFF.
2. Remove intake manifold adapter. Refer to EM-26, "Removal and Installation".
3. Visually check the valve for damage and check if foreign matter is caught between the valve and the housing.
4. Supply tumble control valve actuator terminals with battery voltage within 2 seconds and check operation.

Tumble control valve actuator		Operation
Terminal		
(+)	(-)	
4	5	Open
5	4	Close

CAUTION:
Do not apply 12V DC continuously for 30 seconds or more. Doing so may result in damage to the coil in tumble control valve motor.

Is the inspection result normal?

YES >> INSPECTION END
NO >> Replace intake manifold adaptor.

P2014 TUMBLE CONTROL VALVE POSITION SENSOR

Description

INFOID:0000000004349463

Tumble control valve position sensor is built into the tumble control valve actuator (2).

1 : Intake manifold adapter
3 : Tumble control valve

The sensor consists of a permanent magnet and Hall IC. It senses the valve shaft movement and feeds the voltage signals to the ECM.

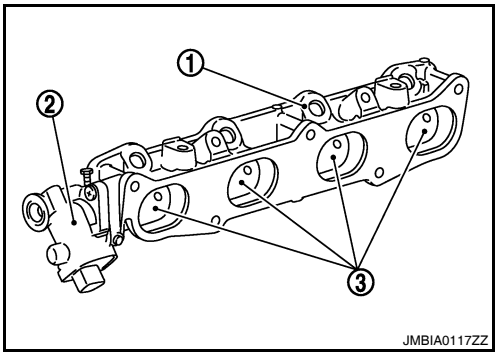

DTC Logic

INFOID:0000000004349464

DTC DETECTION LOGIC

DTC No.	Trouble diagnosis name	DTC detecting condition	Possible cause
P2014	Tumble control valve position sensor circuit	An excessively low or high voltage from the sensor is sent to ECM.	• Harness or connectors (Tumble control valve position sensor circuit is open or shorted.) (Accelerator pedal position sensor 2 circuit is shorted.) [Crankshaft position sensor (POS) circuit is shorted.] (EVAP control system pressure sensor circuit is shorted.) (Refrigerant pressure sensor circuit is shorted.) • Tumble control valve actuator (Tumble control valve position sensor) • Accelerator pedal position sensor (APP sensor 2) • Crankshaft position sensor (POS) • EVAP control system pressure sensor • Refrigerant pressure sensor

DTC CONFIRMATION PROCEDURE

1.PRECONDITIONING

If DTC Confirmation Procedure has been previously conducted, always turn ignition switch OFF and wait at least 10 seconds before conducting the next test.

TESTING CONDITION:

Before performing the following procedure, confirm that battery voltage is more than 11V at idle.

>> GO TO 2.

2.PERFORM DTC CONFIRMATION PROCEDURE

1. Start engine and let it idle for 5 seconds.
2. Check 1st trip DTC.

Is 1st trip DTC detected?

YES >> Go to EC-414, "Diagnosis Procedure".
NO >> INSPECTION END

Diagnosis Procedure

INFOID:0000000004349465

1.CHECK GROUND CONNECTION

1. Turn ignition switch OFF.
2. Check ground connection E9. Refer to Ground Inspection in GI-45, "Circuit Inspection".

Is the inspection result normal?

YES >> GO TO 2.
NO >> Repair or replace ground connection.

2. CHECK TUMBLE CONTROL VALVE POSITION SENSOR POWER SUPPLY CIRCUIT-I

1. Reconnect ECM harness connector disconnected.
2. Turn ignition switch ON.
3. Check the voltage between tumble control valve actuator harness connector and ground.

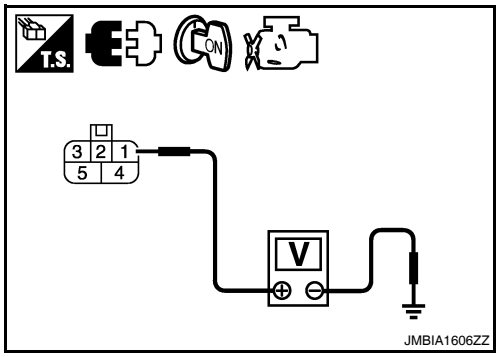

Tumble control valve actuator		Ground	Voltage
Connector	Terminal		
F43	1	Ground	Approx. 5 V

Is the inspection result normal?

YES >> GO TO 8.
NO >> GO TO 3.

3. CHECK TUMBLE CONTROL VALVE POSITION SENSOR POWER SUPPLY CIRCUIT-II

1. Turn ignition switch OFF.
2. Disconnect ECM harness connector.
3. Check the continuity between tumble control valve actuator harness connector and ECM harness connector.

Tumble control valve actuator		ECM		Continuity
Connector	Terminal	Connector	Terminal	
F43	1	F13	72	Existed

Is the inspection result normal?

YES >> GO TO 4.
NO >> Repair open circuit.

4. CHECK TUMBLE CONTROL VALVE POSITION SENSOR POWER SUPPLY CIRCUIT-III

Check harness for short to power and short to ground, between the following terminals.

ECM		Sensor		
Connector	Terminal	Name	Connector	Terminal
F13	72	Tumble control valve actuator	F43	1
		Refrigerant pressure sensor	E219	1
	76	CKP sensor (POS)	F30	1
E10	87	APP sensor	E40	6
	91	EVAP control system pressure sensor	B41	3

Is the inspection result normal?

YES >> GO TO 5.
NO >> Repair short to ground or short to power in harness or connectors.

5. CHECK COMPONENTS

Check the following.
- Refrigerant pressure sensor (Refer to EC-482, "Diagnosis Procedure".)
- Crankshaft position sensor (POS) (Refer to EC-281, "Component Inspection".)
- EVAP control system pressure sensor (Refer to EC-318, "Component Inspection".)

Is the inspection result normal?

YES >> GO TO 6.

NO >> Replace malfunctioning components.

6. CHECK APP SENSOR

Refer to EC-429, "Component Inspection".

Is the inspection result normal?

YES >> GO TO 10.
NO >> GO TO 7.

7. REPLACE ACCELERATOR PEDAL ASSEMBLY

1. Replace accelerator pedal assembly.
2. Go to EC-429, "Special Repair Requirement".

>> INSPECTION END

8. CHECK TUMBLE CONTROL VALVE POSITION SENSOR GROUND CIRCUIT FOR OPEN AND SHORT

1. Turn ignition switch OFF.
2. Disconnect ECM harness connector.
3. Check the continuity between tumble control valve actuator harness connector and ECM harness connector.

Tumble control valve actuator		ECM		Continuity
Connector	Terminal	Connector	Terminal	
F43	2	F13	52	Existed

4. Also check harness for short to ground and short to power.

Is the inspection result normal?

YES >> GO TO 9.
NO >> Repair open circuit or short to ground or short to power in harness or connectors.

9. CHECK TUMBLE CONTROL VALVE POSITION SENSOR INPUT SIGNAL CIRCUIT FOR OPEN AND SHORT

1. Check the continuity between tumble control valve actuator harness connector and ECM harness connector.

Tumble control valve actuator		ECM		Continuity
Connector	Terminal	Connector	Terminal	
F43	3	F13	54	Existed

2. Also check harness for short to ground and short to power.

Is the inspection result normal?

YES >> GO TO 10.
NO >> Repair open circuit or short to ground or short to power in harness or connectors.

10. CHECK INTERMITTENT INCIDENT

Refer to GI-42, "Intermittent Incident".

Is the inspection result normal?

YES >> Replace intake manifold adapter.
NO >> Repair or replace harness or connectors.

P2100, P2103 THROTTLE CONTROL MOTOR RELAY

Description

INFOID:0000000004349466

Power supply for the throttle control motor is provided to the ECM via throttle control motor relay. The throttle control motor relay is ON/OFF controlled by the ECM. When the ignition switch is turned ON, the ECM sends an ON signal to throttle control motor relay and battery voltage is provided to the ECM. When the ignition switch is turned OFF, the ECM sends an OFF signal to throttle control motor relay and battery voltage is not provided to the ECM.

DTC Logic

INFOID:0000000004349467

DTC DETECTION LOGIC

DTC No.	Trouble diagnosis name	DTC detecting condition	Possible cause
P2100	Throttle control motor relay circuit open	ECM detects a voltage of power source for throttle control motor is excessively low.	• Harness or connectors (Throttle control motor relay circuit is open) • Throttle control motor relay
P2103	Throttle control motor relay circuit short	ECM detect the throttle control motor relay is stuck ON.	• Harness or connectors (Throttle control motor relay circuit is shorted) • Throttle control motor relay

DTC CONFIRMATION PROCEDURE

1.PRECONDITIONING

If DTC Confirmation Procedure has been previously conducted, always turn ignition switch OFF and wait at least 10 seconds before conducting the next test.

TESTING CONDITION:

Before performing the following procedure, confirm that battery voltage is more than 8V.

Witch DTC is detected?

P2100 >> GO TO 2.
P2103 >> GO TO 3.

2.PERFORM DTC CONFIRMATION PROCEDURE FOR DTC P2100

1. Turn ignition switch ON and wait at least 2 seconds.
2. Start engine and let it idle for 5 seconds.
3. Check DTC.

Is DTC detected?

YES >> Go to EC-417, "Diagnosis Procedure".
NO >> INSPECTION END

3.PERFORM DTC CONFIRMATION PROCEDURE FOR DTC P2103

1. Turn ignition switch ON and wait at least 1 second.
2. Check DTC.

Is DTC detected?

YES >> Go to EC-417, "Diagnosis Procedure".
NO >> INSPECTION END

Diagnosis Procedure

INFOID:0000000004349468

1.CHECK THROTTLE CONTROL MOTOR RELAY POWER SUPPLY CIRCUIT

1. Turn ignition switch OFF.
2. Disconnect ECM harness connector.
3. Disconnect IPDM E/R harness connector F10.
4. Check the continuity between ECM harness connector and IPDM E/R harness connector.

ECM		IPDM E/R		Continuity
Connector	Terminal	Connector	Terminal	
F14	15	F10	70	Existed

5. Also check harness for short to ground and short to power.

Is the inspection result normal?

YES >> GO TO 2.
NO >> Repair open circuit or short to ground or short to power in harness or connectors.

2. CHECK THROTTLE CONTROL MOTOR RELAY INPUT SIGNAL CIRCUIT

1. Check the continuity between ECM harness connector and IPDM E/R harness connector.

ECM		IPDM E/R		Continuity
Connector	Terminal	Connector	Terminal	
F14	2	F10	54	Existed

2. Also check harness for short to ground and short to power.

Is the inspection result normal?

YES >> GO TO 3.
NO >> Repair open circuit or short to ground or short to power in harness or connectors.

3. CHECK FUSE

1. Disconnect 15A fuse (No. 42) from IPDM E/R.
2. Check 15A fuse for blown.

Is the inspection result normal?

YES >> GO TO 4.
NO >> Replace 15A fuse.

4. CHECK INTERMITTENT INCIDENT

Refer to GI-42, "Intermittent Incident".

Is the inspection result normal?

YES >> Replace IPDM E/R.
NO >> Repair or replace harness or connectors.

P2101 ELECTRIC THROTTLE CONTROL FUNCTION

Description

INFOID:0000000004349469

Electric throttle control actuator consists of throttle control motor, throttle position sensor, etc.
The throttle control motor is operated by the ECM and it opens and closes the throttle valve.
The current opening angle of the throttle valve is detected by the throttle position sensor and it provides feedback to the ECM to control the throttle control motor to make the throttle valve opening angle properly in response to driving condition.

DTC Logic

INFOID:0000000004349470

DTC DETECTION LOGIC

NOTE:
If DTC P2101 is displayed with DTC P2100 or P2119, first perform the trouble diagnosis for DTC P2100 or P2119. Refer to EC-417, "DTC Logic" or EC-425, "DTC Logic".

DTC No.	Trouble diagnosis name	DTC detecting condition	Possible cause
P2101	Electric throttle control performance	Electric throttle control function does not operate properly.	• Harness or connectors (Throttle control motor circuit is open or shorted) • Electric throttle control actuator

DTC CONFIRMATION PROCEDURE

1.PRECONDITIONING

If DTC Confirmation Procedure has been previously conducted, always turn ignition switch OFF and wait at least 10 seconds before conducting the next test.
TESTING CONDITION:
Before performing the following procedure, confirm that battery voltage is more than 11V when engine is running.

>> GO TO 2.

2.PERFORM DTC CONFIRMATION PROCEDURE

1. Turn ignition switch ON and wait at least 2 seconds.
2. Start engine and let it idle for 5 seconds.
3. Check DTC.

Is DTC detected?

YES >> Go to EC-419, "Diagnosis Procedure".
NO >> INSPECTION END

Diagnosis Procedure

INFOID:0000000004349471

1.CHECK GROUND CONNECTION

1. Turn ignition switch OFF.
2. Check ground connection E9. Refer to Ground Inspection in GI-45, "Circuit Inspection".

Is the inspection result normal?

YES >> GO TO 2.
NO >> Repair or replace ground connection.

2.CHECK THROTTLE CONTROL MOTOR RELAY INPUT SIGNAL CIRCUIT-I

Check the voltage between ECM harness connector and ground.

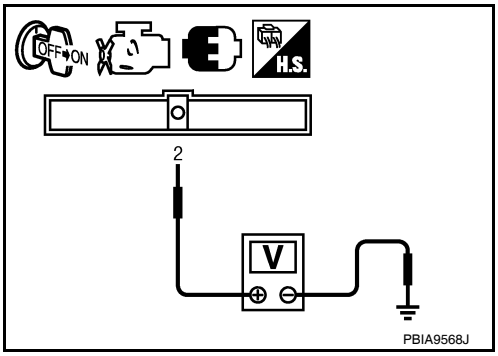

ECM		Ground	Condition	Voltage
Connector	Terminal			
F14	2	Ground	Ignition switch OFF	Approx. 0 V
			Ignition switch ON	Battery voltage

Is the inspection result normal?

YES >> GO TO 7.
NO >> GO TO 3.

3. CHECK THROTTLE CONTROL MOTOR RELAY POWER SUPPLY CIRCUIT

1. Disconnect ECM harness connector.
2. Disconnect IPDM E/R harness connector F10.
3. Check the continuity between ECM harness connector and IPDM E/R harness connector.

IPDM E/R		ECM		Continuity
Connector	Terminal	Connector	Terminal	
F10	70	F14	15	Existed

4. Also check harness for short to ground and short to power.

Is the inspection result normal?

YES >> GO TO 4.
NO >> Repair open circuit or short to ground or short to power in harness or connectors.

4. CHECK THROTTLE CONTROL MOTOR RELAY INPUT SIGNAL CIRCUIT-II

1. Check the continuity between ECM harness connector and IPDM E/R harness connector.

IPDM E/R		ECM		Continuity
Connector	Terminal	Connector	Terminal	
F10	54	F14	2	Existed

2. Also check harness for short to ground and short to power.

Is the inspection result normal?

YES >> GO TO 5.
NO >> Repair open circuit or short to ground or short to power in harness or connectors.

5. CHECK FUSE

1. Disconnect 15A fuse (No. 42) from IPDM E/R.
2. Check 15A fuse for blown.

Is the inspection result normal?

YES >> GO TO 6.
NO >> Replace 15A fuse.

6. CHECK INTERMITTENT INCIDENT

Refer to GI-42, "Intermittent Incident".

Is the inspection result normal?

YES >> Replace IPDM E/R.
NO >> Repair or replace harness or connectors.

7. CHECK THROTTLE CONTROL MOTOR OUTPUT SIGNAL CIRCUIT FOR OPEN OR SHORT

1. Turn ignition switch OFF.
2. Disconnect electric throttle control actuator harness connector.
3. Disconnect ECM harness connector.
4. Check the continuity between electric throttle control actuator harness connector and ECM harness connector.

Electric throttle control actuator		ECM		Continuity
Connector	Terminal	Connector	Terminal	
F57	5	F14	5	Not existed
			6	Existed
	6		5	Existed
			6	Not existed

5. Also check harness for short to ground and short to power.

Is the inspection result normal?

YES >> GO TO 8.
NO >> Repair or replace.

8. CHECK ELECTRIC THROTTLE CONTROL ACTUATOR VISUALLY

1. Remove the intake air duct.
2. Check if foreign matter is caught between the throttle valve (1) and the housing.

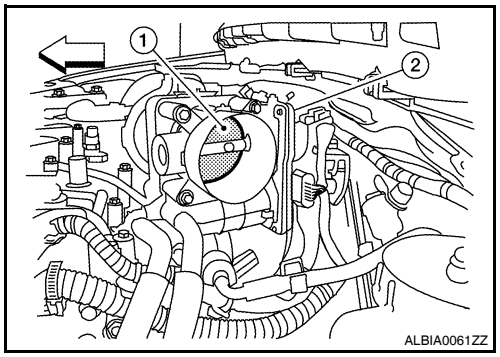

2. Electric throttle control actuator

⇦ : Vehicle front

Is the inspection result normal?

YES >> GO TO 9.
NO >> Remove the foreign matter and clean the electric throttle control actuator inside.

9. CHECK THROTTLE CONTROL MOTOR

Refer to EC-421, "Component Inspection".

Is the inspection result normal?

YES >> GO TO 10.
NO >> GO TO 11.

10. CHECK INTERMITTENT INCIDENT

Refer to GI-42, "Intermittent Incident".

Is the inspection result normal?

YES >> GO TO 11.
NO >> Repair or replace harness or connectors.

11. REPLACE ELECTRIC THROTTLE CONTROL ACTUATOR

1. Replace malfunction electric throttle control actuator.
2. Go to EC-422, "Special Repair Requirement".

>> INSPECTION END

Component Inspection

INFOID:0000000004349472

1. CHECK THROTTLE CONTROL MOTOR

1. Disconnect electric throttle control actuator harness connector.

2. Check resistance between electric throttle control actuator terminals as follows.

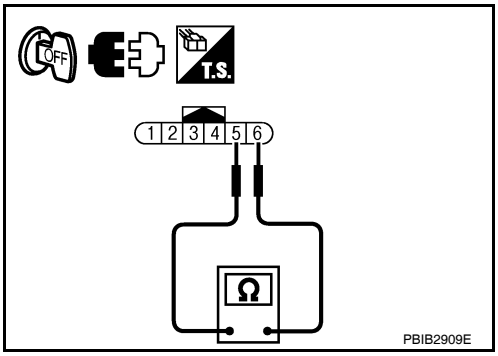

Terminals	Resistance
5 and 6	Approx. 1 - 15 Ω [at 25 °C (77°F)]

Is the inspection result normal?

YES >> INSPECTION END
NO >> GO TO 2.

2. REPLACE ELECTRIC THROTTLE CONTROL ACTUATOR

1. Replace electric throttle control actuator.
2. Go to EC-422, "Special Repair Requirement".

>> INSPECTION END

Special Repair Requirement

INFOID:0000000004349473

1. PERFORM THROTTLE VALVE CLOSED POSITION LEARNING

Refer to EC-29, "THROTTLE VALVE CLOSED POSITION LEARNING : Special Repair Requirement"

>> GO TO 2.

2. PERFORM IDLE AIR VOLUME LEARNING

Refer to EC-30, "IDLE AIR VOLUME LEARNING : Special Repair Requirement"

>> END

P2118 THROTTLE CONTROL MOTOR

Description

INFOID:0000000004349474

The throttle control motor is operated by the ECM and it opens and closes the throttle valve.
The current opening angle of the throttle valve is detected by the throttle position sensor and it provides feedback to the ECM to control the throttle control motor to make the throttle valve opening angle properly in response to driving condition.

DTC Logic

INFOID:0000000004349475

DTC DETECTION LOGIC

DTC No.	Trouble diagnosis name	DTC detecting condition	Possible cause
P2118	Throttle control motor circuit short	ECM detects short in both circuits between ECM and throttle control motor.	• Harness or connectors (Throttle control motor circuit is shorted.) • Electric throttle control actuator (Throttle control motor)

DTC CONFIRMATION PROCEDURE

1.PRECONDITIONING

If DTC Confirmation Procedure has been previously conducted, always turn ignition switch OFF and wait at least 10 seconds before conducting the next test.

>> GO TO 2.

2.PERFORM DTC CONFIRMATION PROCEDURE

1. Turn ignition switch ON and wait at least 2 seconds.
2. Start engine and let it idle for 5 seconds.
3. Check DTC.

Is DTC detected?

YES >> Go to EC-423, "Diagnosis Procedure".
NO >> INSPECTION END

Diagnosis Procedure

INFOID:0000000004349476

1.CHECK GROUND CONNECTION

1. Turn ignition switch OFF.
2. Check ground connection E9. Refer to Ground Inspection in GI-45, "Circuit Inspection".

Is the inspection result normal?

YES >> GO TO 2.
NO >> Repair or replace ground connection.

2.CHECK THROTTLE CONTROL MOTOR OUTPUT SIGNAL CIRCUIT FOR OPEN AND SHORT

1. Disconnect electric throttle control actuator harness connector.
2. Disconnect ECM harness connector.
3. Check the continuity between electric throttle control actuator harness connector and ECM harness connector.

Electric throttle control actuator		ECM		Continuity
Connector	Terminal	Connector	Terminal	
F57	5	F14	5	Not existed
			6	Existed
	6		5	Existed
			6	Not existed

4. Also check harness for short to ground and short to power.

Is the inspection result normal?

YES >> GO TO 3.
NO >> Repair or replace.

3. CHECK THROTTLE CONTROL MOTOR

Refer to EC-424, "Component Inspection".

Is the inspection result normal?

YES >> GO TO 4.
NO >> GO TO 5.

4. CHECK INTERMITTENT INCIDENT

Refer to GI-42, "Intermittent Incident".

Is the inspection result normal?

YES >> GO TO 5.
NO >> Repair or replace harness or connectors.

5. REPLACE ELECTRIC THROTTLE CONTROL ACTUATOR

1. Replace electric throttle control actuator.
2. Go to EC-424, "Special Repair Requirement".

>> INSPECTION END

Component Inspection

INFOID:0000000004349477

1. CHECK THROTTLE CONTROL MOTOR

1. Disconnect electric throttle control actuator harness connector.
2. Check resistance between electric throttle control actuator terminals as follows.

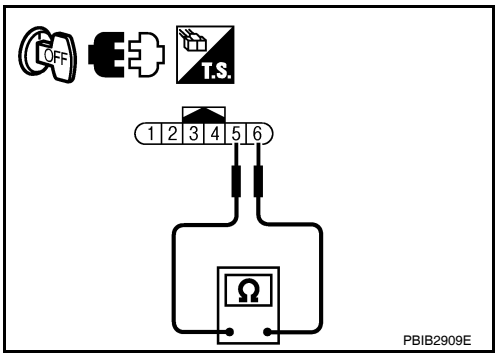

Terminals	Resistance
5 and 6	Approx. 1 - 15 Ω [at 25 °C (77°F)]

Is the inspection result normal?

YES >> INSPECTION END
NO >> GO TO 2.

2. REPLACE ELECTRIC THROTTLE CONTROL ACTUATOR

1. Replace electric throttle control actuator.
2. Go to EC-424, "Special Repair Requirement".

>> INSPECTION END

Special Repair Requirement

INFOID:0000000004349478

1. PERFORM THROTTLE VALVE CLOSED POSITION LEARNING

Refer to EC-29, "THROTTLE VALVE CLOSED POSITION LEARNING : Special Repair Requirement"

>> GO TO 2.

2. PERFORM IDLE AIR VOLUME LEARNING

Refer to EC-30, "IDLE AIR VOLUME LEARNING : Special Repair Requirement"

>> END

P2119 ELECTRIC THROTTLE CONTROL ACTUATOR

Description

INFOID:0000000004349479

Electric throttle control actuator consists of throttle control motor, throttle position sensor, etc.
The throttle control motor is operated by the ECM and it opens and closes the throttle valve.
The throttle position sensor detects the throttle valve position, and the opening and closing speed of the throttle valve and feeds the voltage signals to the ECM. The ECM judges the current opening angle of the throttle valve from these signals and the ECM controls the throttle control motor to make the throttle valve opening angle properly in response to driving condition.

DTC Logic

INFOID:0000000004349480

DTC DETECTION LOGIC

DTC No.	Trouble diagnosis name	DTC detecting condition		Possible cause
P2119	Electric throttle control actuator	A)	Electric throttle control actuator does not function properly due to the return spring malfunction.	• Electric throttle control actuator
		B)	Throttle valve opening angle in fail-safe mode is not in specified range.	
		C)	ECM detect the throttle valve is stuck open.	

DTC CONFIRMATION PROCEDURE

1.PRECONDITIONING

If DTC Confirmation Procedure has been previously conducted, always turn ignition switch OFF and wait at least 10 seconds before conducting the next test.

>> GO TO 2.

2.PERFORM DTC CONFIRMATION PROCEDURE FOR MALFUNCTION A AND B

1. Turn ignition switch ON and wait at least 1 second.
2. Set shift lever to D (CVT) or 1st (M/T) position and wait at least 3 seconds.
3. Set shift lever to P (CVT) or Neutral (M/T) position.
4. Turn ignition switch OFF and wait at least 10 seconds.
5. Turn ignition switch ON and wait at least 1 second.
6. Set shift lever to D (CVT) or 1st (M/T) position and wait at least 3 seconds.
7. Set shift lever to P (CVT) or Neutral (M/T) position.
8. Turn ignition switch OFF, wait at least 10 seconds, and then turn ON.
9. Check DTC.

Is DTC detected?

YES >> Go to EC-425, "Diagnosis Procedure".
NO >> GO TO 3.

3.PERFORM DTC CONFIRMATION PROCEDURE FOR MALFUNCTION C

1. Turn ignition switch ON and wait at least 1 second.
2. Set shift lever to D (CVT) or 1st (M/T) position and wait at least 3 seconds.
3. Set shift lever to N, P (CVT) or Neutral (M/T) position.
4. Start engine and let it idle for 3 seconds.
5. Check DTC.

Is DTC detected?

YES >> Go to EC-425, "Diagnosis Procedure".
NO >> INSPECTION END

Diagnosis Procedure

INFOID:0000000004349481

1.CHECK ELECTRIC THROTTLE CONTROL ACTUATOR VISUALLY

1. Turn ignition switch OFF.
2. Remove the intake air duct.
3. Check if foreign matter is caught between the throttle valve (1) and the housing.

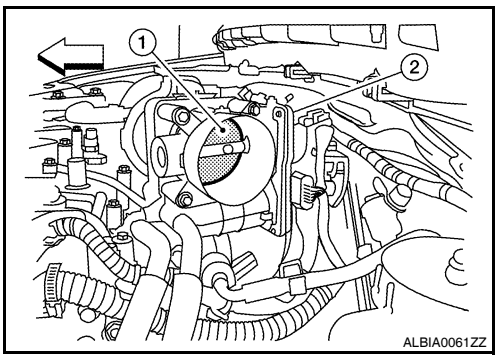

2. Electric throttle control actuator

⇦ : Vehicle front

Is the inspection result normal?

YES >> GO TO 2.
NO >> Remove the foreign matter and clean the electric throttle control actuator inside.

2.REPLACE ELECTRIC THROTTLE CONTROL ACTUATOR

1. Replace electric throttle control actuator.
2. Go to EC-426, "Special Repair Requirement".

>> INSPECTION END

Special Repair Requirement

INFOID:0000000004349482

1.PERFORM THROTTLE VALVE CLOSED POSITION LEARNING

Refer to EC-29, "THROTTLE VALVE CLOSED POSITION LEARNING : Special Repair Requirement"

>> GO TO 2.

2.PERFORM IDLE AIR VOLUME LEARNING

Refer to EC-30, "IDLE AIR VOLUME LEARNING : Special Repair Requirement"

>> END

P2122, P2123 APP SENSOR

Description

INFOID:0000000004349483

The accelerator pedal position sensor is installed on the upper end of the accelerator pedal assembly. The sensor detects the accelerator position and sends a signal to the ECM.
Accelerator pedal position sensor has two sensors. These sensors are a kind of potentiometers which transform the accelerator pedal position into output voltage, and emit the voltage signal to the ECM. In addition, these sensors detect the opening and closing speed of the accelerator pedal and feed the voltage signals to the ECM. The ECM judges the current opening angle of the accelerator pedal from these signals and controls the throttle control motor based on these signals.

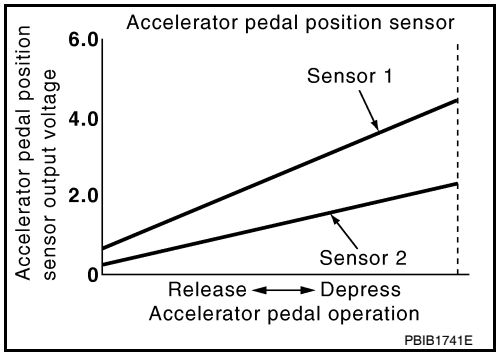

Idle position of the accelerator pedal is determined by the ECM receiving the signal from the accelerator pedal position sensor. The ECM uses this signal for the engine operation such as fuel cut.

DTC Logic

INFOID:0000000004349484

DTC DETECTION LOGIC

NOTE:
If DTC P2122 or P2123 is displayed with DTC P0643, first perform the trouble diagnosis for DTC P0643. Refer to EC-362, "DTC Logic".

DTC No.	Trouble diagnosis name	DTC detecting condition	Possible cause
P2122	Accelerator pedal position sensor 1 circuit low input	An excessively low voltage from the APP sensor 1 is sent to ECM.	• Harness or connectors (APP sensor 1 circuit is open or shorted.) • Accelerator pedal position sensor (APP sensor 1)
P2123	Accelerator pedal position sensor 1 circuit high input	An excessively high voltage from the APP sensor 1 is sent to ECM.	

DTC CONFIRMATION PROCEDURE

1. PRECONDITIONING

If DTC Confirmation Procedure has been previously conducted, always turn ignition switch OFF and wait at least 10 seconds before conducting the next test.
TESTING CONDITION:
Before performing the following procedure, confirm that battery voltage is more than 8V at idle.

>> GO TO 2.

2. PERFORM DTC CONFIRMATION PROCEDURE

1. Start engine and let it idle for 1 second.
2. Check DTC.

Is DTC detected?

YES >> Go to EC-427, "Diagnosis Procedure".
NO >> INSPECTION END

Diagnosis Procedure

INFOID:0000000004349485

1. CHECK GROUND CONNECTION

1. Turn ignition switch OFF.
2. Check ground connection E9. Refer to Ground Inspection in GI-45, "Circuit Inspection".

Is the inspection result normal?

YES >> GO TO 2.

NO >> Repair or replace ground connection.

2. CHECK APP SENSOR 1 POWER SUPPLY CIRCUIT

1. Disconnect accelerator pedal position (APP) sensor harness connector.
2. Turn ignition switch ON.
3. Check the voltage between APP sensor harness connector and ground.

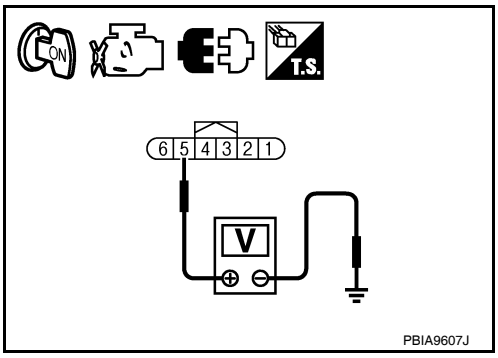

APP sensor		Ground	Voltage
Connector	Terminal		
E40	5	Ground	Approx. 5 V

Is the inspection result normal?

YES >> GO TO 3.
NO >> Repair open circuit or short to ground or short to power in harness or connectors.

3. CHECK APP SENSOR 1 GROUND CIRCUIT FOR OPEN AND SHORT

1. Turn ignition switch OFF.
2. Disconnect ECM harness connector.
3. Check the continuity between APP sensor harness connector and ECM harness connector.

APP sensor		ECM		Continuity
Connector	Terminal	Connector	Terminal	
E40	4	E10	84	Existed

4. Also check harness for short to ground and short to power.

Is the inspection result normal?

YES >> GO TO 4.
NO >> Repair open circuit or short to ground or short to power in harness or connectors.

4. CHECK APP SENSOR INPUT SIGNAL CIRCUIT FOR OPEN AND SHORT

1. Check the continuity between APP sensor harness connector and ECM harness connector.

APP sensor		ECM		Continuity
Connector	Terminal	Connector	Terminal	
E40	3	E10	81	Existed

2. Also check harness for short to ground and short to power.

Is the inspection result normal?

YES >> GO TO 5.
NO >> Repair open circuit or short to ground or short to power in harness or connectors.

5. CHECK APP SENSOR

Refer to EC-429, "Component Inspection".

Is the inspection result normal?

YES >> GO TO 7.
NO >> GO TO 6.

6. REPLACE ACCELERATOR PEDAL ASSEMBLY

1. Replace accelerator pedal assembly.
2. Go to EC-429, "Special Repair Requirement".

>> INSPECTION END

7. CHECK INTERMITTENT INCIDENT

Refer to GI-42, "Intermittent Incident".

>> INSPECTION END

Component Inspection

INFOID:0000000004349486

1. CHECK ACCELERATOR PEDAL POSITION SENSOR

1. Reconnect all harness connectors disconnected.
2. Turn ignition switch ON.
3. Check the voltage between ECM harness connector and ground.

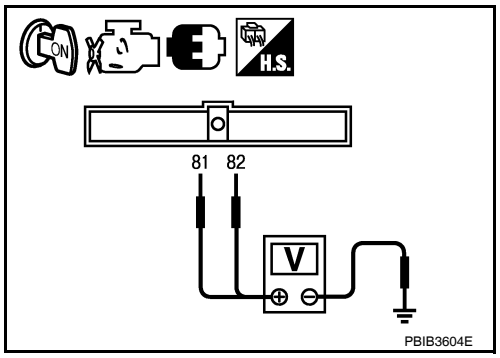

ECM		Ground	Condition		Voltage
Connector	Terminal				
E40	81 (APP sensor 1 signal)	Ground	Accelerator pedal	Fully released	0.5 - 1.0 V
				Fully depressed	4.2 - 4.8 V
	82 (APP sensor 2 signal)			Fully released	0.25 - 0.5 V
				Fully depressed	2.0 - 2.5 V

Is the inspection result normal?

YES >> INSPECTION END
NO >> GO TO 2.

2. REPLACE ACCELERATOR PEDAL ASSEMBLY

1. Replace accelerator pedal assembly.
2. Go to EC-429, "Special Repair Requirement".

>> INSPECTION END

Special Repair Requirement

INFOID:0000000004349487

1. PERFORM ACCELERATOR PEDAL RELEASED POSITION LEARNING

Refer to EC-29, "ACCELERATOR PEDAL RELEASED POSITION LEARNING : Special Repair Requirement".

>> GO TO 2.

2. PERFORM THROTTLE VALVE CLOSED POSITION LEARNING

Refer to EC-29, "THROTTLE VALVE CLOSED POSITION LEARNING : Special Repair Requirement".

>> GO TO 3.

3. PERFORM IDLE AIR VOLUME LEARNING

Refer to EC-30, "IDLE AIR VOLUME LEARNING : Special Repair Requirement".

>> END

P2127, P2128 APP SENSOR

Description

INFOID:0000000004349488

The accelerator pedal position sensor is installed on the upper end of the accelerator pedal assembly. The sensor detects the accelerator position and sends a signal to the ECM.
Accelerator pedal position sensor has two sensors. These sensors are a kind of potentiometers which transform the accelerator pedal position into output voltage, and emit the voltage signal to the ECM. In addition, these sensors detect the opening and closing speed of the accelerator pedal and feed the voltage signals to the ECM. The ECM judges the current opening angle of the accelerator pedal from these signals and controls the throttle control motor based on these signals.

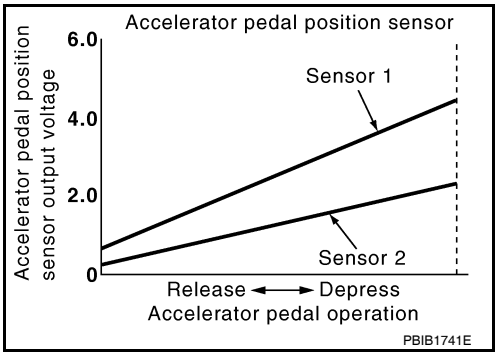

Idle position of the accelerator pedal is determined by the ECM receiving the signal from the accelerator pedal position sensor. The ECM uses this signal for the engine operation such as fuel cut.

DTC Logic

INFOID:0000000004349489

DTC DETECTION LOGIC

DTC No.	Trouble diagnosis name	DTC detecting condition	Possible cause
P2127	Accelerator pedal position sensor 2 circuit low input	An excessively low voltage from the APP sensor 2 is sent to ECM.	• Harness or connectors (APP sensor 2 circuit is open or shorted.) [Crankshaft position sensor (POS) circuit is shorted.] (Refrigerant pressure sensor circuit is shorted.) (EVAP control system pressure sensor circuit is shorted.) (Tumble control valve position sensor circuit is shorted.) • Accelerator pedal position sensor (APP sensor 2) • Crankshaft position sensor (POS) • Refrigerant pressure sensor • EVAP control system pressure sensor • Tumble control valve position sensor
P2128	Accelerator pedal position sensor 2 circuit high input	An excessively high voltage from the APP sensor 2 is sent to ECM.	

DTC CONFIRMATION PROCEDURE

1. PRECONDITIONING

If DTC Confirmation Procedure has been previously conducted, always turn ignition switch OFF and wait at least 10 seconds before conducting the next test.
TESTING CONDITION:
Before performing the following procedure, confirm that battery voltage is more than 8V at idle.

>> GO TO 2.

2. PERFORM DTC CONFIRMATION PROCEDURE

1. Start engine and let it idle for 1 second.
2. Check DTC.

Is DTC detected?

YES >> Go to EC-431, "Diagnosis Procedure".
NO >> INSPECTION END

Diagnosis Procedure

INFOID:0000000004349490

1. CHECK GROUND CONNECTION

1. Turn ignition switch OFF.
2. Check ground connection E9. Refer to Ground Inspection in GI-45, "Circuit Inspection".

Is the inspection result normal?

YES >> GO TO 2.
NO >> Repair or replace ground connection.

2. CHECK APP SENSOR 2 POWER SUPPLY CIRCUIT-I

1. Disconnect accelerator pedal position (APP) sensor harness connector.
2. Turn ignition switch ON.
3. Check the voltage between APP sensor harness connector and ground.

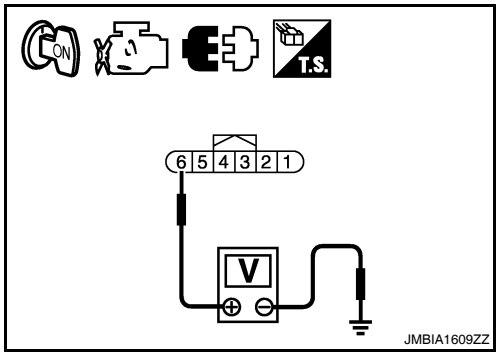

APP sensor		Ground	Voltage
Connector	Terminal		
E40	6	Ground	Approx. 5 V

Is the inspection result normal?

YES >> GO TO 6.
NO >> GO TO 3.

3. CHECK APP SENSOR 2 POWER SUPPLY CIRCUIT-II

1. Turn ignition switch OFF.
2. Disconnect ECM harness connector.
3. Check the continuity between APP sensor harness connector and ECM harness connector.

APP sensor		ECM		Continuity
Connector	Terminal	Connector	Terminal	
E40	6	E10	87	Existed

Is the inspection result normal?

YES >> GO TO 4.
NO >> Repair open circuit or short to ground or short to power in harness or connectors.

4. CHECK APP SENSOR 2 POWER SUPPLY CIRCUIT-III

Check harness for short to power and short to ground, between the following terminals.

ECM		Sensor		
Connector	Terminal	Name	Connector	Terminal
F13	72	Tumble control valve position sensor	F43	1
		Refrigerant pressure sensor	E219	3
	76	CKP sensor (POS)	F30	1
E10	87	APP sensor	E40	6
	91	EVAP control system pressure sensor	B41	3

Is the inspection result normal?

YES >> GO TO 5.
NO >> Repair short to ground or short to power in harness or connectors.

5. CHECK COMPONENTS

Check the following.
- Crankshaft position sensor (POS) (Refer to EC-281, "Component Inspection".)
- EVAP control system pressure sensor (Refer to EC-318, "Component Inspection".)

- Refrigerant pressure sensor (Refer to EC-482, "Diagnosis Procedure".)
- Tumble control valve position sensor (Refer to EC-410, "Diagnosis Procedure".)

Is the inspection result normal?

YES >> GO TO 10.
NO >> Replace malfunctioning component.

6. CHECK APP SENSOR 2 GROUND CIRCUIT FOR OPEN AND SHORT

1. Turn ignition switch OFF.
2. Disconnect ECM harness connector.
3. Check the continuity between APP sensor harness connector and ECM harness connector.

APP sensor		ECM		Continuity
Connector	Terminal	Connector	Terminal	
E40	2	E10	100	Existed

4. Also check harness for short to ground and short to power.

Is the inspection result normal?

YES >> GO TO 7.
NO >> Repair open circuit or short to ground or short to power in harness or connectors.

7. CHECK APP SENSOR 2 INPUT SIGNAL CIRCUIT FOR OPEN AND SHORT

1. Check the continuity between APP sensor harness connector and ECM harness connector.

APP sensor		ECM		Continuity
Connector	Terminal	Connector	Terminal	
E40	1	E10	82	Existed

2. Also check harness for short to ground and short to power.

Is the inspection result normal?

YES >> GO TO 8.
NO >> Repair open circuit or short to ground or short to power in harness or connectors.

8. CHECK APP SENSOR

Refer to EC-432, "Component Inspection".

Is the inspection result normal?

YES >> GO TO 10.
NO >> GO TO 9.

9. REPLACE ACCELERATOR PEDAL ASSEMBLY

1. Replace accelerator pedal assembly.
2. Go to EC-433, "Special Repair Requirement".

>> INSPECTION END

10. CHECK INTERMITTENT INCIDENT

Refer to GI-42, "Intermittent Incident".

>> INSPECTION END

Component Inspection

INFOID:0000000004349491

1. CHECK ACCELERATOR PEDAL POSITION SENSOR

1. Reconnect all harness connectors disconnected.
2. Turn ignition switch ON.

3. Check the voltage between ECM harness connector and ground.

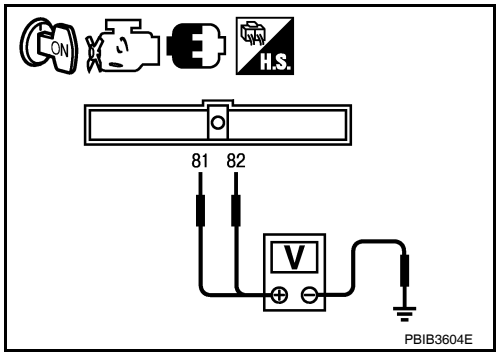

ECM		Ground	Condition		Voltage
Connector	Terminal				
E40	81 (APP sensor 1 signal)	Ground	Accelerator pedal	Fully released	0.5 - 1.0 V
				Fully depressed	4.2 - 4.8 V
	82 (APP sensor 2 signal)			Fully released	0.25 - 0.5 V
				Fully depressed	2.0 - 2.5 V

Is the inspection result normal?

YES >> INSPECTION END
NO >> GO TO 2.

2. REPLACE ACCELERATOR PEDAL ASSEMBLY

1. Replace accelerator pedal assembly.
2. Go to EC-433, "Special Repair Requirement".

>> INSPECTION END

Special Repair Requirement

INFOID:0000000004349492

1. PERFORM ACCELERATOR PEDAL RELEASED POSITION LEARNING

Refer to EC-29, "ACCELERATOR PEDAL RELEASED POSITION LEARNING : Special Repair Requirement".

>> GO TO 2.

2. PERFORM THROTTLE VALVE CLOSED POSITION LEARNING

Refer to EC-29, "THROTTLE VALVE CLOSED POSITION LEARNING : Special Repair Requirement".

>> GO TO 3.

3. PERFORM IDLE AIR VOLUME LEARNING

Refer to EC-30, "IDLE AIR VOLUME LEARNING : Special Repair Requirement".

>> END

P2135 TP SENSOR

Description

INFOID:0000000004349493

Electric throttle control actuator consists of throttle control motor, throttle position sensor, etc. The throttle position sensor responds to the throttle valve movement.
The throttle position sensor has two sensors. These sensors are a kind of potentiometers which transform the throttle valve position into output voltage, and emit the voltage signal to the ECM. In addition, these sensors detect the opening and closing speed of the throttle valve and feed the voltage signals to the ECM. The ECM judges the current opening angle of the throttle valve from these signals and the ECM controls the throttle control motor to make the throttle valve opening angle properly in response to driving condition.

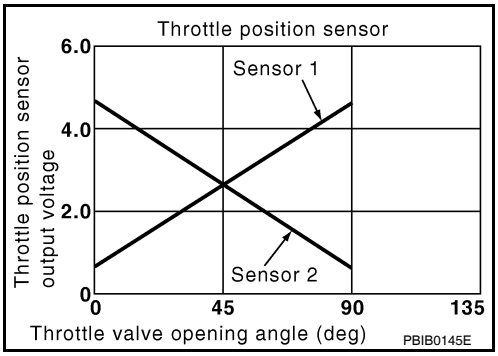

DTC Logic

INFOID:0000000004349494

DTC DETECTION LOGIC

NOTE:
If DTC P2135 is displayed with DTC P0643, first perform the trouble diagnosis for DTC P0643. Refer to EC-362, "DTC Logic".

DTC No.	Trouble diagnosis name	DTC detecting condition	Possible cause
P2135	Throttle position sensor circuit range/performance	Rationally incorrect voltage is sent to ECM compared with the signals from TP sensor 1 and TP sensor 2.	• Harness or connector (TP sensor 1 and 2 circuit is open or shorted.) • Electric throttle control actuator (TP sensor 1 and 2)

DTC CONFIRMATION PROCEDURE

1.PRECONDITIONING

If DTC Confirmation Procedure has been previously conducted, always turn ignition switch OFF and wait at least 10 seconds before conducting the next test.
TESTING CONDITION:
Before performing the following procedure, confirm that battery voltage is more than 8V at idle.

>> GO TO 2.

2.PERFORM DTC CONFIRMATION PROCEDURE

1. Start engine and let it idle for 1 second.
2. Check DTC.

Is DTC detected?

YES >> Go to EC-434, "Diagnosis Procedure".
NO >> INSPECTION END

Diagnosis Procedure

INFOID:0000000004349495

1.CHECK GROUND CONNECTION

1. Turn ignition switch OFF.
2. Check ground connection E9. Refer to Ground Inspection in GI-45, "Circuit Inspection".

Is the inspection result normal?

YES >> GO TO 2.
NO >> Repair or replace ground connection.

2.CHECK THROTTLE POSITION SENSOR POWER SUPPLY CIRCUIT-I

1. Disconnect electric throttle control actuator harness connector.

2. Turn ignition switch ON.
3. Check the voltage between electric throttle control actuator harness connector and ground.

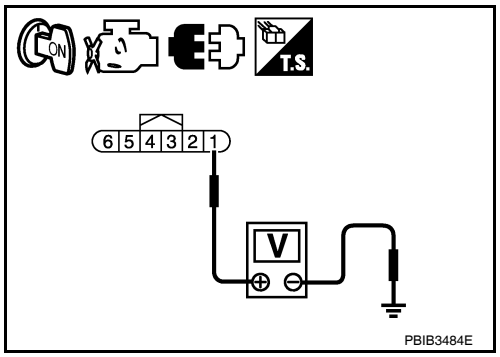

Electric throttle control actuator		Ground	Voltage
Connector	Terminal		
F57	1	Ground	Approx. 5 V

Is the inspection result normal?

YES >> GO TO 4.
NO >> GO TO 3.

3. CHECK THROTTLE POSITION SENSOR POWER SUPPLY CIRCUIT-II

1. Turn ignition switch OFF.
2. Disconnect ECM harness connector.
3. Check the continuity between electric throttle control actuator harness connector and ground.

Electric throttle control actuator		ECM		Continuity
Connector	Terminal	Connector	Terminal	
F57	1	F13	47	Existed

Is the inspection result normal?

YES >> GO TO 4.
NO >> Repair open circuit.

4. CHECK THROTTLE POSITION SENSOR GROUND CIRCUIT FOR OPEN AND SHORT

1. Turn ignition switch OFF.
2. Disconnect ECM harness connector.
3. Check the continuity between electric throttle control actuator harness connector and ground.

Electric throttle control actuator		ECM		Continuity
Connector	Terminal	Connector	Terminal	
F57	4	F13	36	Existed

4. Also check harness for short to ground and short to power.

Is the inspection result normal?

YES >> GO TO 5.
NO >> Repair open circuit or short to ground or short to power in harness or connectors.

5. CHECK THROTTLE POSITION SENSOR INPUT SIGNAL CIRCUIT FOR OPEN AND SHORT

1. Check the continuity between electric throttle control actuator harness connector and ground.

Electric throttle control actuator		ECM		Continuity
Connector	Terminal	Connector	Terminal	
F57	2	F13	37	Existed
	3		38	

2. Also check harness for short to ground and short to power.

Is the inspection result normal?

YES >> GO TO 6.
NO >> Repair open circuit or short to ground or short to power in harness or connectors.

6. CHECK THROTTLE POSITION SENSOR

Refer to EC-436, "Component Inspection".

Is the inspection result normal?

YES >> GO TO 8.

NO >> GO TO 7.

7. REPLACE ELECTRIC THROTTLE CONTROL ACTUATOR

1. Replace electric throttle control actuator.
2. EC-436, "Special Repair Requirement"

>> INSPECTION END

8. CHECK INTERMITTENT INCIDENT

Refer to GI-42, "Intermittent Incident".

>> INSPECTION END

Component Inspection

INFOID:0000000004349496

1. CHECK THROTTLE POSITION SENSOR

1. Turn ignition switch OFF.
2. Reconnect all harness connectors disconnected.
3. Perform EC-436, "Special Repair Requirement".
4. Turn ignition switch ON.
5. Set shift lever to D (CVT) or 1st (M/T) position.
6. Check the voltage between ECM harness connector and ground.

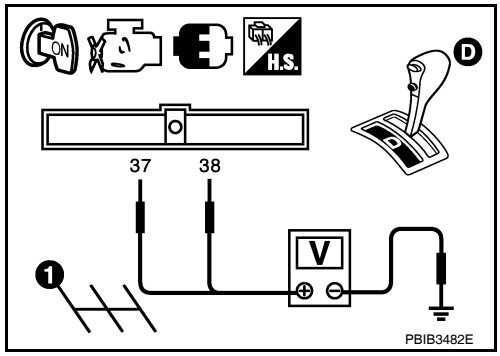

ECM		Ground	Condition		Voltage
Connector	Terminal				
F13	37 (TP sensor 1 signal)	Ground	Accelerator pedal	Fully released	More than 0.36 V
				Fully depressed	Less than 4.75 V
	38 (TP sensor 2 signal)			Fully released	Less than 4.75 V
				Fully depressed	More than 0.36 V

Is the inspection result normal?

YES >> INSPECTION END
NO >> GO TO 2.

2. REPLACE ELECTRIC THROTTLE CONTROL ACTUATOR

1. Replace electric throttle control actuator.
2. Go to EC-436, "Special Repair Requirement".

>> INSPECTION END

Special Repair Requirement

INFOID:0000000004349497

1. PERFORM THROTTLE VALVE CLOSED POSITION LEARNING

Refer to EC-29, "THROTTLE VALVE CLOSED POSITION LEARNING : Special Repair Requirement"

>> GO TO 2.

2. PERFORM IDLE AIR VOLUME LEARNING

Refer to EC-30, "IDLE AIR VOLUME LEARNING : Special Repair Requirement"

>> END

P2138 APP SENSOR

Description

INFOID:0000000004349498

The accelerator pedal position sensor is installed on the upper end of the accelerator pedal assembly. The sensor detects the accelerator position and sends a signal to the ECM.
Accelerator pedal position sensor has two sensors. These sensors are a kind of potentiometers which transform the accelerator pedal position into output voltage, and emit the voltage signal to the ECM. In addition, these sensors detect the opening and closing speed of the accelerator pedal and feed the voltage signals to the ECM. The ECM judges the current opening angle of the accelerator pedal from these signals and controls the throttle control motor based on these signals.

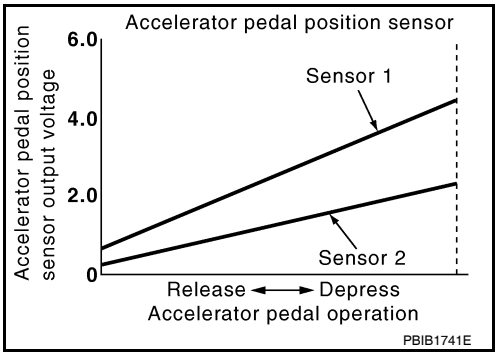

Idle position of the accelerator pedal is determined by the ECM receiving the signal from the accelerator pedal position sensor. The ECM uses this signal for the engine operation such as fuel cut.

DTC Logic

INFOID:0000000004349499

DTC DETECTION LOGIC

NOTE:
If DTC P2138 is displayed with DTC P0643, first perform the trouble diagnosis for DTC P0643. Refer to EC-362, "DTC Logic".

DTC No.	Trouble diagnosis name	DTC detecting condition	Possible cause
P2138	Accelerator pedal position sensor circuit range/performance	Rationally incorrect voltage is sent to ECM compared with the signals from APP sensor 1 and APP sensor 2.	• Harness or connector (APP sensor 1 and 2 circuit is open or shorted.) [Crankshaft position sensor (POS) circuit is shorted.) (Refrigerant pressure sensor circuit is shorted.) (EVAP control system sensor circuit is shorted.) (Tumble control valve position sensor circuit is shorted.) • Accelerator pedal position sensor (APP sensor 1 and 2) • Crankshaft position sensor (POS) • Refrigerant pressure sensor • EVAP control system pressure sensor • Tumble control valve position sensor

DTC CONFIRMATION PROCEDURE

1. PRECONDITIONING

If DTC Confirmation Procedure has been previously conducted, always turn ignition switch OFF and wait at least 10 seconds before conducting the next test.
TESTING CONDITION:
Before performing the following procedure, confirm that battery voltage is more than 8V at idle.

>> GO TO 2.

2. PERFORM DTC CONFIRMATION PROCEDURE

1. Start engine and let it idle for 1 second.
2. Check DTC.

Is DTC detected?

YES >> Go to EC-439, "Diagnosis Procedure".
NO >> INSPECTION END

Diagnosis Procedure

INFOID:0000000004349500

1. CHECK GROUND CONNECTION

1. Turn ignition switch OFF.
2. Check ground connection E9. Refer to Ground Inspection in GI-45, "Circuit Inspection".

Is the inspection result normal?

YES >> GO TO 2.
NO >> Repair or replace ground connection.

2. CHECK APP SENSOR 1 POWER SUPPLY CIRCUIT

1. Disconnect accelerator pedal position (APP) sensor harness connector.
2. Turn ignition switch ON.
3. Check the voltage between APP sensor harness connector and ground.

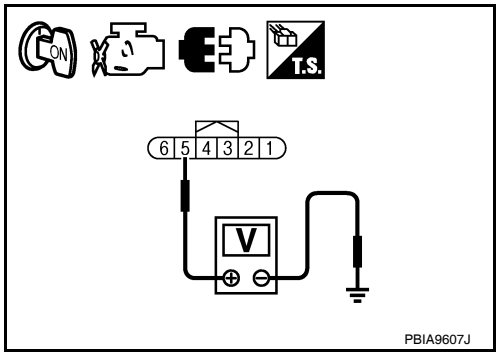

APP sensor		Ground	Voltage
Connector	Terminal		
E40	5	Ground	Approx. 5 V

Is the inspection result normal?

YES >> GO TO 3.
NO >> Repair open circuit or short to ground or shot to power in harness or connectors.

3. CHECK APP SENSOR 2 POWER SUPPLY CIRCUIT-I

1. Turn ignition switch ON.
2. Check the voltage between APP sensor harness connector and ground.

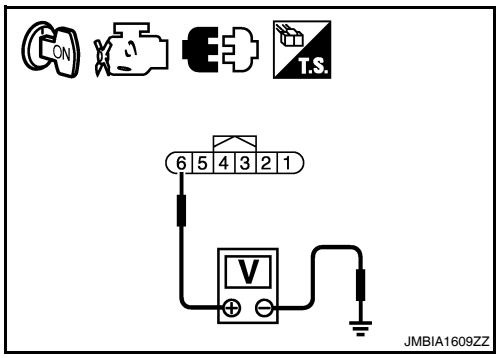

APP sensor		Ground	Voltage
Connector	Terminal		
E40	6	Ground	Approx. 5 V

Is the inspection result normal?

YES >> GO TO 7.
NO >> GO TO 4.

4. CHECK APP SENSOR 2 POWER SUPPLY CIRCUIT-II

1. Turn ignition switch OFF.
2. Disconnect ECM harness connector.
3. Check the continuity between APP sensor harness connector and ECM harness connector.

APP sensor		ECM		Continuity
Connector	Terminal	Connector	Terminal	
E40	6	E10	87	Existed

Is the inspection result normal?

YES >> GO TO 5.
NO >> Repair open circuit or short to ground or shot to power in harness or connectors.

5. CHECK APP SENSOR 2 POWER SUPPLY CIRCUIT-III

Check harness for short to power and short to ground, between the following terminals.

ECM		Sensor		
Connector	Terminal	Name	Connector	Terminal
F13	72	Tumble control valve position sensor	F43	1
		Refrigerant pressure sensor	E219	3
	76	CKP sensor (POS)	F30	1
E10	87	APP sensor	E40	6
	91	EVAP control system pressure sensor	B41	3

Is the inspection result normal?

YES >> GO TO 6.
NO >> Repair short to ground or short to power in harness or connectors.

6. CHECK COMPONENTS

Check the following.
- Crankshaft position sensor (POS) (Refer to EC-281, "Component Inspection".)
- EVAP control system pressure sensor (Refer to EC-318, "Component Inspection".)
- Refrigerant pressure sensor (Refer to EC-482, "Diagnosis Procedure".)
- Tumble control valve position sensor (Refer to EC-410, "Diagnosis Procedure".)

Is the inspection result normal?

YES >> GO TO 11.
NO >> Replace malfunctioning component.

7. CHECK APP SENSOR GROUND CIRCUIT FOR OPEN AND SHORT

1. Turn ignition switch OFF.
2. Disconnect ECM harness connector.
3. Check the continuity between APP sensor harness connector and ECM harness connector as follows.

APP sensor		ECM		Continuity
Connector	Terminal	Connector	Terminal	
E40	2	F10	84	Existed
	4		100	

4. Also check harness for short to ground and short to power.

Is the inspection result normal?

YES >> GO TO 8.
NO >> Repair open circuit or short to ground or shot to power in harness or connectors.

8. CHECK APP SENSOR INPUT SIGNAL CIRCUIT FOR OPEN AND SHORT

1. Check the continuity between APP sensor harness connector and ECM harness connector as follows.

APP sensor		ECM		Continuity
Connector	Terminal	Connector	Terminal	
E40	1	F10	82	Existed
	3		81	

2. Also check harness for short to ground and short to power.

Is the inspection result normal?

YES >> GO TO 9.
NO >> Repair open circuit or short to ground or shot to power in harness or connectors.

9. CHECK APP SENSOR

Refer to EC-432, "Component Inspection".

Is the inspection result normal?

YES >> GO TO 11.

NO >> GO TO 10.

10. REPLACE ACCELERATOR PEDAL ASSEMBLY

1. Replace accelerator pedal assembly.
2. Go to EC-29, "ACCELERATOR PEDAL RELEASED POSITION LEARNING : Special Repair Requirement".

>> INSPECTION END

11. CHECK INTERMITTENT INCIDENT

Refer to GI-42, "Intermittent Incident".

>> INSPECTION END

Component Inspection

INFOID:0000000004349501

1. CHECK ACCELERATOR PEDAL POSITION SENSOR

1. Reconnect all harness connectors disconnected.
2. Turn ignition switch ON.
3. Check the voltage between ECM harness connector and ground.

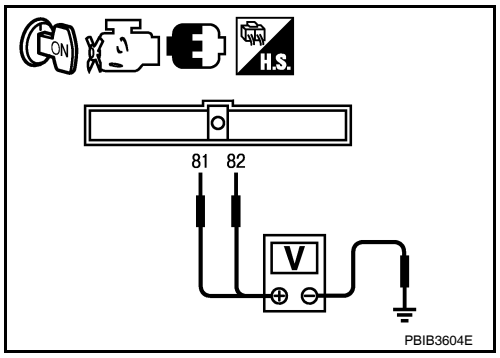

ECM		Ground	Condition		Voltage
Connector	Terminal				
E40	81 (APP sensor 1 signal)	Ground	Accelerator pedal	Fully released	0.5 - 1.0 V
				Fully depressed	4.2 - 4.8 V
	82 (APP sensor 2 signal)			Fully released	0.25 - 0.5 V
				Fully depressed	2.0 - 2.5 V

Is the inspection result normal?

YES >> INSPECTION END
NO >> GO TO 2.

2. REPLACE ACCELERATOR PEDAL ASSEMBLY

1. Replace accelerator pedal assembly.
2. Go to EC-441, "Special Repair Requirement".

>> INSPECTION END

Special Repair Requirement

INFOID:0000000004349502

1. PERFORM ACCELERATOR PEDAL RELEASED POSITION LEARNING

Refer to EC-29, "ACCELERATOR PEDAL RELEASED POSITION LEARNING : Special Repair Requirement".

>> GO TO 2.

2. PERFORM THROTTLE VALVE CLOSED POSITION LEARNING

Refer to EC-29, "THROTTLE VALVE CLOSED POSITION LEARNING : Special Repair Requirement".

>> GO TO 3.

3. PERFORM IDLE AIR VOLUME LEARNING

Refer to EC-30, "IDLE AIR VOLUME LEARNING : Special Repair Requirement".

>> END

P2423 HC ADSORPTION CATALYST FUNCTION

DTC Logic

INFOID:0000000004349503

DTC DETECTION LOGIC

The ECM monitors the phase gap between heated oxygen sensor 2 signal and heated oxygen sensor 3 signal.
The phase gap between heated oxygen sensor 2 signal and heated oxygen sensor 3 signal becomes small as the HC adsorption catalyst (under floor) is deteriorated.
When the phase gap between heated oxygen sensor 2 signal and heated oxygen sensor 3 signal approaches a specified limit value, the HC adsorption catalyst (under floor) malfunction is diagnosed.

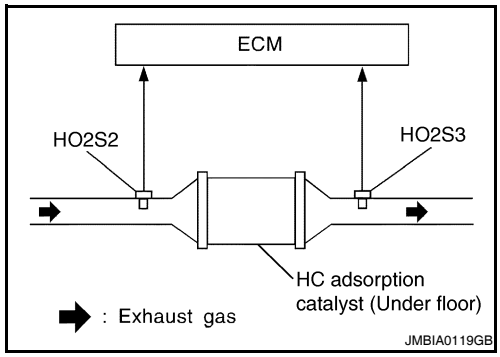

DTC No.	Trouble diagnosis name	DTC detecting condition	Possible cause
P2423	HC adsorption catalyst efficiency below threshold	• HC adsorption catalyst (under floor) does not operate properly. • HC adsorption catalyst (under floor) does not have enough oxygen storage capacity.	• HC adsorption catalyst (under floor) • Exhaust tube • Intake air leaks • Fuel injector • Fuel injector leaks • Spark plug • Improper ignition timing

DTC CONFIRMATION PROCEDURE

1. PRECONDITIONING

If DTC Confirmation Procedure has been previously conducted, always turn ignition switch OFF and wait at least 10 seconds before conducting the next test.
TESTING CONDITION:
Do not hold engine speed for more than the specified minutes below.

>> GO TO 2.

2. PERFORM DTC CONFIRMATION PROCEDURE-I

CAUTION:
Always drive vehicle in safe manner according to traffic conditions and obey all traffic laws.

With CONSULT-III

1. Start engine and warm it up to the normal operating temperature.
2. Repeat the following procedure 3 times.
- Drive vehicle at a speed of 80 km/h (50 MPH) or more for at least 3 consecutive minutes.
  NOTE:
  Keep the vehicle speed as steady as possible during the cruising.
- Stop vehicle with engine running.
  NOTE:
  Never turn ignition switch OFF.
3. Select “DTC & SRT CONFIRMATION” then “SRT WORK SUPPORT” mode with CONSULT-III.
4. Drive vehicle at a speed of 80 km/h (50MPH) or more until “INCMP” of “CATALYST”changes to“CMPLT”.
   NOTE:
   - **Keep the vehicle speed as steady as possible during the cruising.**
   - **It will take at most 3 minutes until “INCMP” of “CATALYST” changes to “CMPLT”.**
5. Check 1st trip DTC.

With GST

1. Start engine and warm it up to the normal operating temperature.
2. Repeat the following procedure 3 times.
- Drive vehicle at a speed of 80 km/h (50 MPH) or more for at least 3 consecutive minutes.
  NOTE:
  Keep the vehicle speed as steady as possible during the cruising.

- Stop vehicle with engine running.

NOTE:
Never turn ignition switch OFF.

3. Check 1st trip DTC.

Is the inspection result normal?

YES >> Go to EC-443, "Diagnosis Procedure".
NO >> INSPECTION END

Diagnosis Procedure

INFOID:0000000004349504

1. CHECK EXHAUST SYSTEM

Visually check exhaust tubes and muffler for dent.

Is the inspection result normal?

YES >> GO TO 2.
NO >> Repair or replace.

2. CHECK EXHAUST GAS LEAK

1. Start engine and run it at idle.
2. Listen for an exhaust gas leak before the HC adsorption catalyst (under floor).

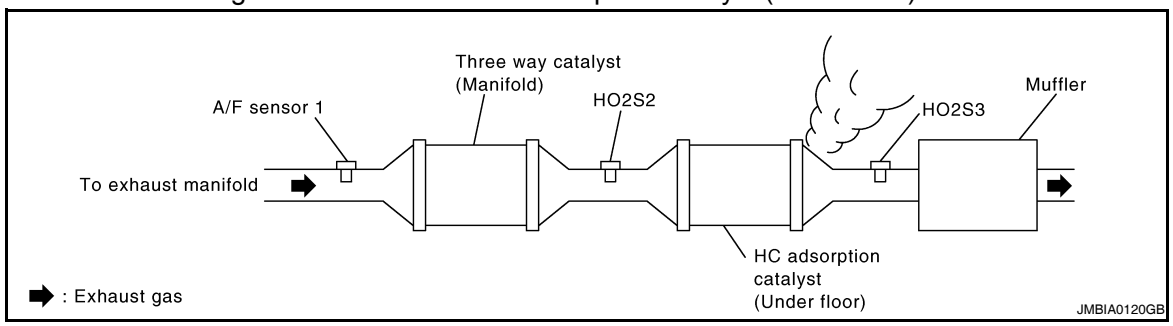

Is exhaust gas leak detected?

OK >> Repair or replace.
NG >> GO TO 3.

3. CHECK INTAKE AIR LEAK

Listen for an intake air leak after the mass air flow sensor.

Is intake air leak detected?

YES >> Repair or replace.
NO >> GO TO 4.

4. CHECK IGNITION TIMING

For procedure, refer to EC-28, "IGNITION TIMING : Special Repair Requirement".For specification, refer to EC-555, "Idle Speed" and EC-555, "Ignition Timing".

Is the inspection result normal?

YES >> GO TO 5.
NO >> Follow the EC-24, "BASIC INSPECTION : Special Repair Requirement".

5. CHECK FUEL INJECTOR

1. Stop engine and then turn ignition switch ON.

2. Check the voltage between ECM harness connector and ground.

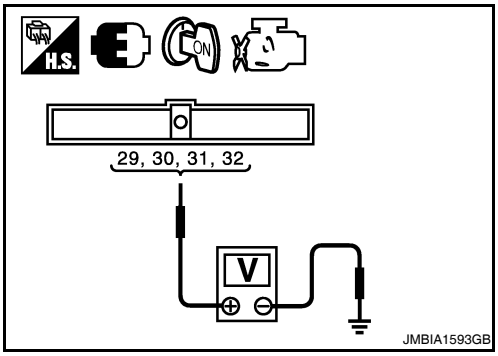

ECM		Ground	Voltage
Connector	Terminal		
F14	29	Ground	Battery voltage
	30		
	31		
	32		

Is the inspection result normal?

YES >> GO TO 6.
NO >> Perform EC-463, "Diagnosis Procedure".

6. CHECK FUNCTION OF IGNITION COIL-I

CAUTION:
Do the following procedure in the place where ventilation is good without the combustible.

1. Turn ignition switch OFF.
2. Remove fuel pump fuse in IPDM E/R to release fuel pressure.
   NOTE:
   Do not use CONSULT-III to release fuel pressure, or fuel pressure applies again during the following procedure.
3. Start engine.
4. After engine stalls, crank it two or three times to release all fuel pressure.
5. Turn ignition switch OFF.
6. Remove all ignition coil harness connectors to avoid the electrical discharge from the ignition coils.
7. Remove ignition coil and spark plug of the cylinder to be checked.
8. Crank engine for 5 seconds or more to remove combustion gas in the cylinder.
9. Connect spark plug and harness connector to ignition coil.
10. Fix ignition coil using a rope etc. with gap of 13 - 17 mm (0.52 - 0.66 in) between the edge of the spark plug and grounded metal portion as shown in the figure.
11. Crank engine for about 3 seconds, and check whether spark is generated between the spark plug and the grounded metal portion.

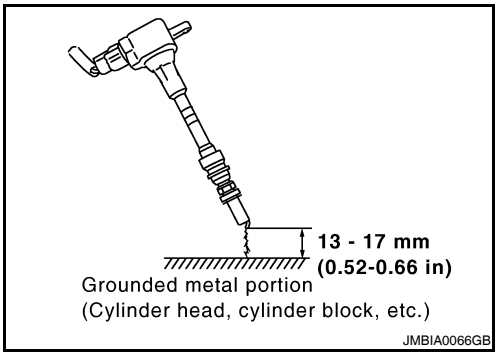

Spark should be generated.

CAUTION:
- **Do not approach to the spark plug and the ignition coil within 50 cm (19.7 in). Be careful not to get an electrical shock while checking, because the electrical discharge voltage becomes 20kV or more.**
- **It might cause to damage the ignition coil if the gap of more than 17 mm (0.66 in) is taken.**

NOTE:
When the gap is less than 13 mm (0.52 in), the spark might be generated even if the coil is malfunctioning.

Is the inspection result normal?

YES >> GO TO 10.
NO >> GO TO 7.

7. CHECK FUNCTION OF IGNITION COIL-II

1. Turn ignition switch OFF.
2. Disconnect spark plug and connect a known-good spark plug.
3. Crank engine for about 3 seconds, and recheck whether spark is generated between the spark plug and the grounded metal portion.

Spark should be generated.

Is the inspection result normal?

YES >> GO TO 8.
NO >> Check ignition coil, power transistor and their circuits. Refer to EC-470, "Diagnosis Procedure".

8. CHECK SPARK PLUG

Check the initial spark plug for fouling, etc.

Is the inspection result normal?

YES >> Replace spark plug(s) with standard type one(s). For spark plug type, refer to EM-99, "Standard and Limit".
NO >> Repair or clean spark plug. Then GO TO 9.

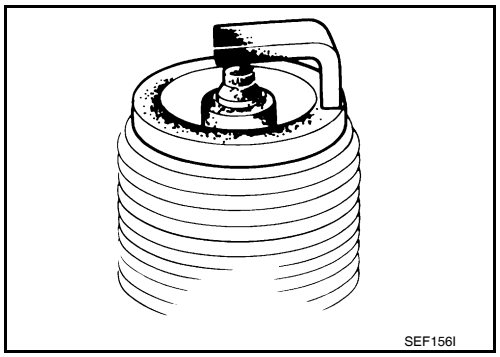

9. CHECK FUNCTION OF IGNITION COIL-III

1. Reconnect the initial spark plugs.
2. Crank engine for about three seconds, and recheck whether spark is generated between the spark plug and the grounded portion.

Spark should be generated.

Is the inspection result normal?

YES >> INSPECTION END
NO >> Replace spark plug(s) with standard type one(s). For spark plug type, refer to EM-99, "Standard and Limit".

10. CHECK FUEL INJECTOR

1. Turn ignition switch OFF.
2. Remove fuel injector assembly.
   Refer to EM-36, "Removal and Installation".
   Keep fuel hose and all fuel injectors connected to fuel tube.
3. Disconnect all ignition coil harness connectors.
4. Reconnect all fuel injector harness connectors disconnected.
5. Turn ignition switch ON.
   Make sure fuel does not drip from fuel injector.

Is the inspection result normal?

YES >> GO TO 11.
NO >> Replace the fuel injector(s) from which fuel is dripping.

11. CHECK INTERMITTENT INCIDENT

Refer to GI-42, "Intermittent Incident".

Is the trouble fixed?

YES >> INSPECTION END
NO >> Replace HC adsorption catalyst (under floor).

P2A00 A/F SENSOR 1

Description

INFOID:0000000004349505

The air fuel ratio (A/F) sensor 1 is a planar one-cell limit current sensor. The sensor element of the A/F sensor 1 is composed an electrode layer, which transports ions. It has a heater in the element.

The sensor is capable of precise measurement λ = 1, but also in the lean and rich range. Together with its control electronics, the sensor outputs a clear, continuous signal throughout a wide λ range.

The exhaust gas components diffuse through the diffusion layer at the sensor cell. An electrode layer is applied voltage, and this current relative oxygen density in lean. Also this current relative hydrocarbon density in rich.

Therefore, the A/F sensor 1 is able to indicate air fuel ratio by this electrode layer of current. In addition, a heater is integrated in the sensor to ensure the required operating temperature of about 800°C (1,472°F).

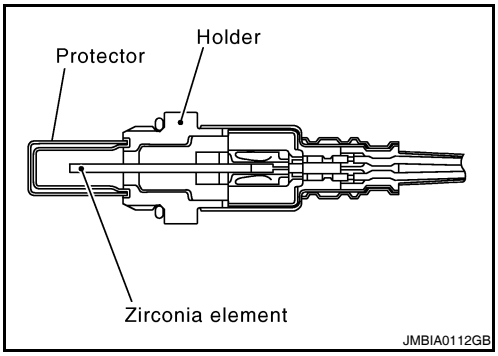

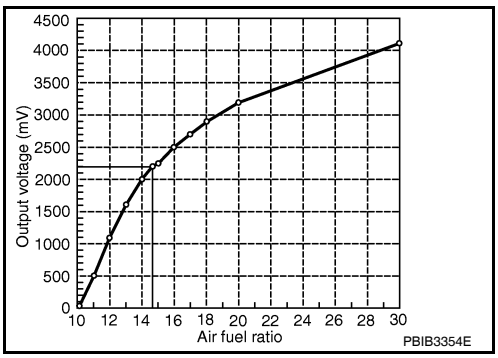

DTC Logic

INFOID:0000000004349506

DTC DETECTION LOGIC

To judge the malfunction, the A/F signal computed by ECM from the A/F sensor 1 signal is monitored not to be shifted to LEAN side or RICH side.

DTC No.	Trouble diagnosis name	DTC detecting condition	Possible Cause
P2A00	Air fuel ratio (A/F) sensor 1 circuit range/performance	• The output voltage computed by ECM from the A/F sensor 1 signal is shifted to the lean side for a specified period. • The A/F signal computed by ECM from the A/F sensor 1 signal is shifted to the rich side for a specified period.	• A/F sensor 1 • A/F sensor 1 heater • Fuel pressure • Fuel injector • Intake air leaks

DTC CONFIRMATION PROCEDURE

1. PRECONDITIONING

If DTC Confirmation Procedure has been previously conducted, always turn ignition switch OFF and wait at least 10 seconds before conducting the next test.

TESTING CONDITION:

Before performing the following procedure, confirm that battery voltage is more than 11V at idle.

>> GO TO 2.

2. PERFORM DTC CONFIRMATION PROCEDURE

1. Clear the mixture ratio self-learning value. Refer to EC-32, "MIXTURE RATIO SELF-LEARNING VALUE CLEAR : Special Repair Requirement".
2. Turn ignition switch OFF and wait at least 10 seconds.
3. Start engine and keep the engine speed between 3,500 and 4,000 rpm for 1 minute under no load.
4. Let engine idle for 1 minute.
5. Keep engine speed between 2,500 and 3,000 rpm for 20 minutes.
6. Check 1st trip DTC$.

Is 1st trip DTC detected?

YES >> Go to EC-447, "Diagnosis Procedure".
NO >> INSPECTION END

Diagnosis Procedure

INFOID:0000000004349507

1. CHECK GROUND CONNECTION

1. Turn ignition switch OFF.
2. Check ground connection E9. Refer to Ground Inspection in GI-45, "Circuit Inspection".

Is the inspection result normal?

YES >> GO TO 2.
NO >> Repair or replace ground connection.

2. RETIGHTEN A/F SENSOR 1

1. Loosen and retighten the A/F sensor 1.

Tightening torque: 50 N-m (5.1 kg-m, 37 ft-lb)

>> GO TO 3.

3. CHECK FOR INTAKE AIR LEAK

1. Start engine and run it at idle.
2. Listen for an intake air leak after the mass air flow sensor.

Is intake air leak detected?

YES >> GO TO 4.
NO >> Repair or replace.

4. CLEAR THE MIXTURE RATIO SELF-LEARNING VALUE

1. Clear the mixture ratio self-learning value. Refer to EC-32, "MIXTURE RATIO SELF-LEARNING VALUE CLEAR : Special Repair Requirement".
2. Run engine for at least 10 minutes at idle speed.

Is the 1st trip DTC P0171 or P0172 detected? Is it difficult to start engine?

YES >> Perform trouble diagnosis for DTC P0171or P0172. Refer to EC-254, "DTC Logic" or EC-258, "DTC Logic".
NO >> GO TO 5.

5. CHECK HARNESS CONNECTOR

1. Turn ignition switch OFF.
2. Disconnect A/F sensor 1 harness connector.
3. Check harness connector for water.

Water should not exit.

Is the inspection result normal?

YES >> GO TO 6.
NO >> Repair or replace harness connector.

6. CHECK A/F SENSOR 1 POWER SUPPLY CIRCUIT

1. Turn ignition switch ON.

2. Check the voltage between A/F sensor 1 harness connector and ground.

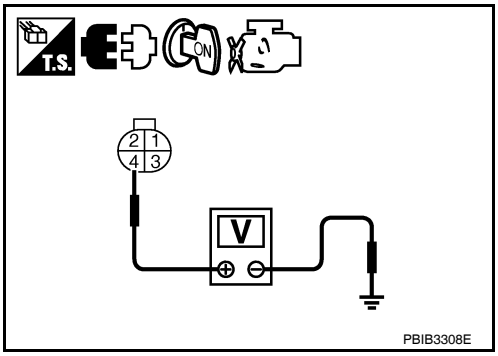

A/F sensor 1		Ground	Voltage
Connector	Terminal		
F44	4	Ground	Battery voltage

Is the inspection result normal?

YES >> GO TO 8.
NO >> GO TO 7.

7. DETECT MALFUNCTIONING PART

Check the following.
- IPDM E/R harness connector F10
- 15A fuse (No. 37)
- Harness for open or short between A/F sensor 1 and fuse

>> Repair or replace harness or connectors.

8. CHECK A/F SENSOR 1 INPUT SIGNAL CIRCUIT FOR OPEN AND SHORT

1. Turn ignition switch OFF.
2. Disconnect ECM harness connector.
3. Check the continuity between A/F sensor 1 harness connector and ECM harness connector.

A/F sensor 1		ECM		Continuity
Connector	Terminal	Connector	Terminal	
F44	1	F13	45	Existed
	2		49	

4. Check the continuity between ECM harness connector or A/F sensor 1 harness connector and ground.

A/F sensor 1		ECM		Ground	Continuity
Connector	Terminal	Connector	Terminal		
F44	1	F13	45	Ground	Not existed
	2		49		

5. Also check harness for short to power.

Is the inspection result normal?

YES >> GO TO 9.
NO >> Repair open circuit or short to ground or short to power in harness or connectors.

9. CHECK A/F SENSOR 1 HEATER

Refer to EC-157, "Component Inspection".

Is the inspection result normal?

YES >> GO TO 10.
NO >> GO TO 11.

10. CHECK INTERMITTENT INCIDENT

Perform GI-42, "Intermittent Incident".

Is the inspection result normal?

YES >> GO TO 11.
NO >> Repair or replace.

11. REPLACE AIR FUEL RATIO (A/F) SENSOR 1

Replace air fuel ratio (A/F) sensor 1.

CAUTION:

- **Discard any sensor which has been dropped from a height of more than 0.5 m (19.7 in) onto a hard surface such as a concrete floor; use a new one.**
- **Before installing new sensor, clean exhaust system threads using oxygen sensor thread cleaner [commercial service tool: (J-43897-18 or J-43897-12)] and approved anti-seize lubricant (commercial service tool).**

Do you have CONSULT-III?

YES >> GO TO 12.
NO >> GO TO 13.

12. CONFIRM A/F ADJUSTMENT DATA

With CONSULT-III

1. Turn ignition switch ON.
2. Select “A/F ADJ-B1” in “DATA MONITOR” mode with CONSULT-III.
3. Make sure that “0.000” is displayed on CONSULT-III screen.

Is “0.000” displayed?

YES >> INSPECTION END
NO >> GO TO 13.

13. CLEAR THE MIXTURE RATIO SELF-LEARNING VALUE

Clear the mixture ratio self-learning value. Refer to EC-32, "MIXTURE RATIO SELF-LEARNING VALUE CLEAR : Special Repair Requirement".

Do you have CONSULT-III?

YES >> GO TO 14.
NO >> INSPECTION END

14. CONFIRM A/F ADJUSTMENT DATA

With CONSULT-III

1. Turn ignition switch ON.
2. Select “A/F ADJ-B1” in “DATA MONITOR” mode with CONSULT-III.
3. Make sure that “0.000” is displayed on CONSULT-III screen.

>> INSPECTION END

ASCD BRAKE SWITCH

Description

INFOID:0000000004349508

When the brake pedal is depressed, ASCD brake switch is turned OFF and stop lamp switch is turned ON. ECM detects the state of the brake pedal by this input of two kinds (ON/OFF signal).
Refer to EC-67, "System Description" for the ASCD function.

Component Function Check

INFOID:0000000004349509

1. CHECK FOR ASCD BRAKE SWITCH FUNCTION

With CONSULT-III

1. Turn ignition switch ON.
2. Select “BRAKE SW1” in “DATA MONITOR” mode with CONSULT-III.
3. Check “BRAKE SW1” indication under the following conditions.

Monitor item	Condition		Indication
BRAKE SW1	Brake pedal (CVT) Brake pedal and clutch pedal (M/T)	Slightly depressed	OFF
		Fully released	ON

Without CONSULT-III

1. Turn ignition switch ON.
2. Check the voltage between ECM harness connector and ground.

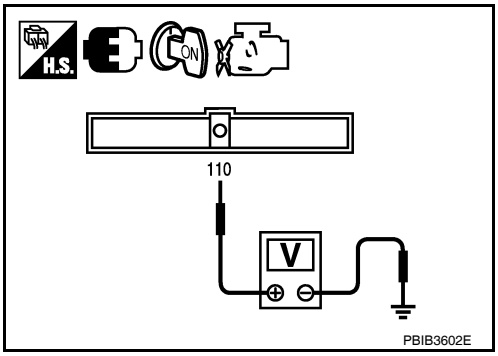

ECM		Ground	Condition		Voltage
Connector	Terminal				
E10	110 (ASCD brake switch signal)	Ground	Brake pedal (CVT) Brake pedal and clutch pedal (M/T)	Slightly depressed	Approx. 0 V
				Fully released	Battery voltage

Is the inspection result normal?

YES >> INSPECTION END.
NO >> Refer to EC-450, "Diagnosis Procedure".

Diagnosis Procedure

INFOID:0000000004349510

1. CHECK OVERALL FUNCTION-I

Check which type of transmission the vehicle is equipped with.

Is the inspection result normal?

CVT >> GO TO 2.
M/T >> GO TO 6.

2. CHECK ASCD BRAKE SWITCH POWER SUPPLY CIRCUIT

1. Turn ignition switch OFF.
2. Disconnect ASCD brake switch harness connector.
3. Turn ignition switch ON.

4. Check the voltage between ASCD brake switch harness connector and ground.

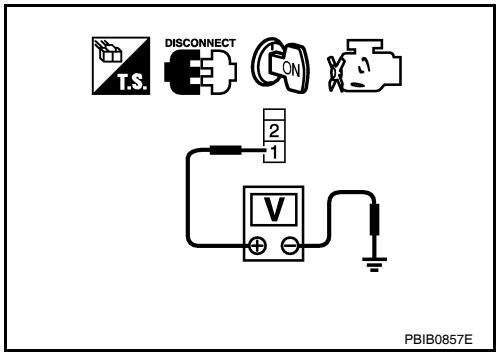

ASCD brake switch		Ground	Voltage
Connector	Terminal		
E37	1	Ground	Battery voltage

Is the inspection result normal?

YES >> GO TO 4.
NO >> GO TO 3.

3. DETECT MALFUNCTIONING PART

Check the following.
- Fuse block (J/B) connector E6
- Junction block connector E44, E46
- 10A fuse (No. 3)
- Harness for open or short between ASCD brake switch and fuse

>> Repair open circuit or short to ground or short to power in harness or connectors.

4. CHECK ASCD BRAKE SWITCH INPUT SIGNAL CIRCUIT FOR OPEN AND SHORT

1. Turn ignition switch OFF.
2. Disconnect ECM harness connector.
3. Check the continuity between ASCD brake switch harness connector and ECM harness connector.

ASCD brake switch		ECM		Continuity
Connector	Terminal	Connector	Terminal	
E37	2	E10	110	Existed

4. Also check harness for short to ground and short to power.

Is the inspection result normal?

YES >> GO TO 5.
NO >> Repair open circuit or short to ground or short to power in harness or connectors.

5. CHECK ASCD BRAKE SWITCH

Refer to EC-453, "Component Inspection (ASCD Brake Switch)".

Is the inspection result normal?

YES >> GO TO 13.
NO >> Replace ASCD brake switch.

6. CHECK ASCD BRAKE SWITCH CIRCUIT

1. Turn ignition switch OFF.
2. Disconnect ASCD clutch switch harness connector.
3. Turn ignition switch ON.
4. Check the continuity between ASCD clutch switch harness connector and ground.

ASCD clutch switch		Ground	Condition		Voltage (V)
Connector	Terminal				
E39	1	Ground	Brake pedal	Slightly depressed	Approx. 0
				Fully released	Battery voltage

5. Also check harness for short to ground and short to power.

Is the inspection result normal?

YES >> GO TO 11.
NO >> GO TO 7.

7. CHECK ASCD BRAKE SWITCH POWER SUPPLY CIRCUIT

1. Turn ignition switch OFF.
2. Disconnect ASCD brake switch harness connector.
3. Turn ignition switch ON.
4. Check the voltage between ASCD brake switch harness connector and ground.

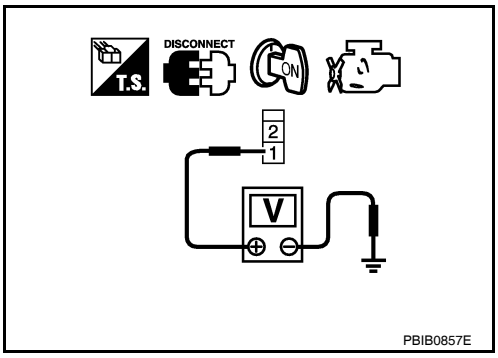

ASCD brake switch		Ground	Voltage
Connector	Terminal		
E37	1	Ground	Battery voltage

Is the inspection result normal?

YES >> GO TO 9.
NO >> GO TO 8.

8. DETECT MALFUNCTIONING PART

Check the following.
- Fuse block (J/B) connector E6
- Junction block connector E44, E46
- 10A fuse (No. 3)
- Harness for open or short between ASCD brake switch and fuse

>> Repair open circuit or short to ground or short to power in harness or connectors.

9. CHECK ASCD BRAKE SWITCH INPUT SIGNAL CIRCUIT FOR OPEN AND SHORT

1. Turn ignition switch OFF.
2. Check the continuity between ASCD brake switch harness connector and ASCD clutch switch harness connector.

ASCD brake switch		ASCD clutch switch		Continuity
Connector	Terminal	Connector	Terminal	
E37	2	E39	1	Existed

3. Also check harness for short to ground and short to power.

Is the inspection result normal?

YES >> GO TO 10.
NO >> Repair open circuit or short to ground or short to power in harness or connectors.

10. CHECK ASCD BRAKE SWITCH

Refer to EC-453, "Component Inspection (ASCD Brake Switch)".

Is the inspection result normal?

YES >> GO TO 13.
NO >> Replace ASCD brake switch.

11. CHECK ASCD BRAKE SWITCH INPUT SIGNAL CIRCUIT FOR OPEN AND SHORT

1. Turn ignition switch OFF.
2. Disconnect ECM harness connector
3. Check the continuity between ASCD clutch switch harness connector and ECM harness connector.

ASCD clutch switch		ECM		Continuity
Connector	Terminal	Connector	Terminal	
E39	2	E10	110	Existed

4. Also check harness for short to ground and short to power.

Is the inspection result normal?

YES >> GO TO 12.

NO >> Repair open circuit or short to ground or short to power in harness or connectors.

12. CHECK ASCD CLUTCH SWITCH

Refer to EC-453, "Component Inspection (ASCD Clutch Switch)".

Is the inspection result normal?

YES >> GO TO 13.
NO >> Replace ASCD clutch switch.

13. CHECK INTERMITTENT INCIDENT

Refer to GI-42, "Intermittent Incident".

>> INSPECTION END

Component Inspection (ASCD Brake Switch)

INFOID:0000000004349511

1. CHECK ASCD BRAKE SWITCH-I

1. Turn ignition switch OFF.
2. Disconnect ASCD brake switch harness connector.
3. Check the continuity between ASCD brake switch terminals under the following conditions.

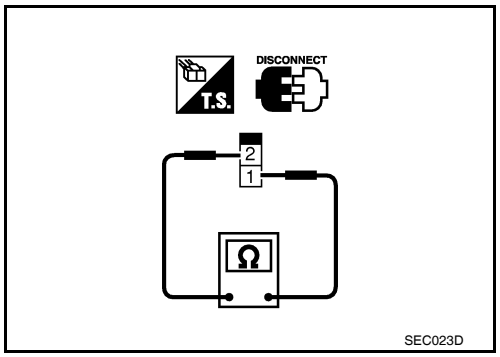

Terminals	Condition		Continuity
1 and 2	Brake pedal	Fully released	Existed
		Slightly depressed	Not existed

Is the inspection result normal?

YES >> INSPECTION END
NO >> GO TO 2.

2. CHECK ASCD BRAKE SWITCH-II

1. Adjust ASCD brake switch installation. Refer to BR-13, "Inspection and Adjustment".
2. Check the continuity between ASCD brake switch terminals under the following conditions.

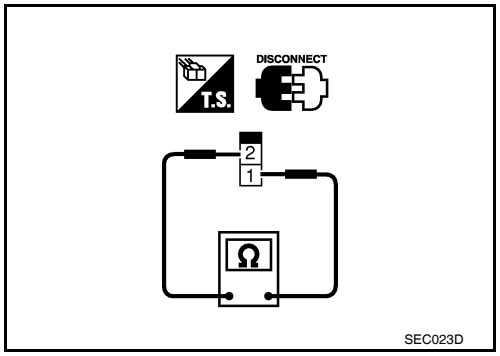

Terminals	Condition		Continuity
1 and 2	Brake pedal	Fully released	Existed
		Slightly depressed	Not existed

Is the inspection result normal?

YES >> INSPECTION END
NO >> Replace ASCD brake switch.

Component Inspection (ASCD Clutch Switch)

INFOID:0000000004349512

1. CHECK ASCD CLUTCH SWITCH-I

1. Turn ignition switch OFF.
2. Disconnect ASCD clutch switch harness connector.

3. Check the continuity between ASCD clutch switch terminals under the following conditions.

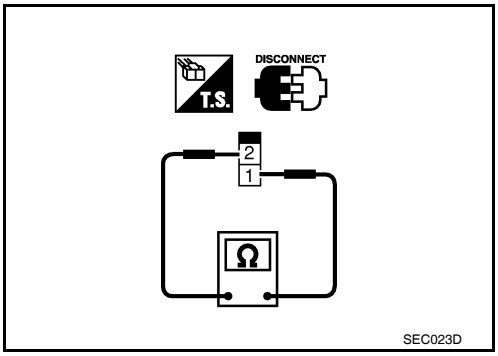

Terminals	Condition		Continuity
1 and 2	Clutch pedal	Fully released	Existed
		Slightly depressed	Not existed

Is the inspection result normal?

YES >> INSPECTION END
NO >> GO TO 2.

2. CHECK ASCD CLUTCH SWITCH-II

1. Adjust ASCD clutch switch installation. Refer to BR-13, "Inspection and Adjustment".
2. Check the continuity between ASCD clutch switch terminals under the following conditions.

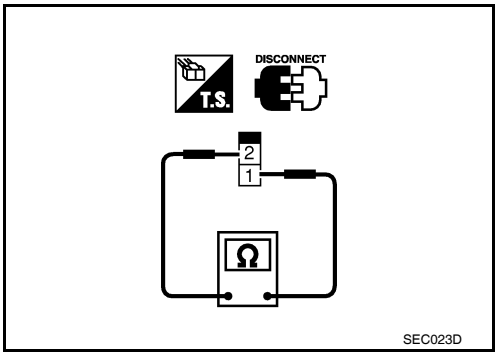

Terminals	Condition		Continuity
1 and 2	Clutch pedal	Fully released	Existed
		Slightly depressed	Not existed

Is the inspection result normal?

YES >> INSPECTION END
NO >> Replace ASCD clutch switch.

ASCD INDICATOR

Description

INFOID:0000000004349513

The ASCD operation status is indicated by two indicators, (CRUISE and SET on the information display) on the combination meter.
CRUISE indicator is displayed to indicate that ASCD system is ready for operation when MAIN switch on ASCD steering switch is turned ON.
SET indicator is displayed when the following conditions are met.
- CRUISE indicator is displayed.
- SET/COAST switch on ASCD steering switch is turned ON while vehicle speed is within the range of ASCD setting.

SET indicator is displayed during ASCD control.
Refer to EC-67, "System Description" for the ASCD function.

Component Function Check

INFOID:0000000004349514

1.ASCD INDICATOR FUNCTION

Check ASCD indicator under the following conditions.

ASCD INDICATOR	CONDITION		SPECIFICATION
CRUISE	• Ignition switch: ON	• MAIN switch: Pressed at the 1st time →at the 2nd time	ON → OFF
SET	• MAIN switch: ON • When vehicle speed: Between 40 km/h (25 MPH) and 144 km/h (89 MPH)	• ASCD: Operating	ON
		• ASCD: Not operating	OFF

Is the inspection result normal?
YES >> INSPECTION END
NO >> Go to EC-455, "Diagnosis Procedure".

Diagnosis Procedure

INFOID:0000000004349515

1.CHECK DTC

Check that DTC UXXXX is not displayed.
Is the inspection result normal?
YES >> GO TO 2.
NO >> Perform trouble diagnosis for DTC UXXXX.

2.CHECK COMBINATION METER OPERATION

Refer to MWI-38, "CONSULT-III Function (METER/M&A)".
Is the inspection result normal?
YES >> GO TO 3.
NO >> Check combination meter circuit. Refer to MWI-5, "METER SYSTEM : System Diagram".

3.CHECK INTERMITTENT INCIDENT

Refer to GI-42, "Intermittent Incident".

>> INSPECTION END

COOLING FAN

Description

INFOID:0000000004349516

The ECM controls the cooling fan corresponding to the vehicle speed, engine colant temperature, refrigerant pressure, and air conditioner ON signal. The control system has 4-step control [HIGH/MIDDLE/LOW/OFF].

COOLING FAN MOTOR

The cooling fan operates at each speed when the current flows in the cooling fan motor as follows.

Cooling fan Speed	Cooling fan motor terminals	
	(+)	(–)
Middle (MID)	1	3 and 4
	2	3 and 4
	1 and 2	3
	1 and 2	4
High (HI)	1 and 2	3 and 4

The cooling fan operates at low (LOW) speed when cooling fan motors-1 and -2 are circuited in series and middle speed condition.
Refer to EC-77, "System Diagram".

Component Function Check

INFOID:0000000004349517

1.CHECK COOLING FAN FUNCTION

With CONSULT-III

1. Turn ignition switch ON.
2. Perform “COOLING FAN” in “ACTIVE TEST” mode with CONSULT-III.
3. Touch “LOW”“MID” “Hi” on the CONSULT-III screen.
4. Check that cooling fan operates.

Without CONSULT-III

1. Perform IPDM E/R auto active test and check cooling fan motors operation, refer to PCS-14, "Diagnosis Description".
2. Check that cooling fan operates.

Is the inspection result normal?

YES >> INSPECTION END
NO >> Refer to EC-456, "Diagnosis Procedure".

Diagnosis Procedure

INFOID:0000000004349518

1.CHECK COOLING FAN RELAY POWER SUPPLY CIRCUIT

1. Turn ignition switch OFF.
2. Disconnect cooling fan relays-2, -3.
3. Turn ignition switch ON.
4. Check the voltage between cooling fan relays-2, -3 harness connectors and ground.

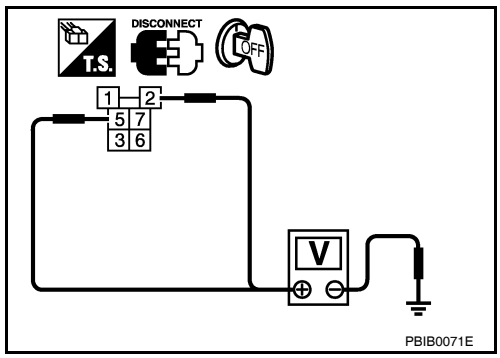

Cooling fan relay		Ground	Voltage
Connector	Terminal		
E42 (cooling fan relay-2)	2	Ground	Battery voltage
	5		
E43 (cooling fan relay-3)	2		
	5		

Is the inspection result normal?

YES >> GO TO 3.
NO >> GO TO 2.

2. DETECT MALFUNCTIONING PART

Check the following.
- 10 A fuse (No. 33)
- 40 A fusible link (letter K)
- IPDM E/R harness connector E18
- Harness for open or short between cooling fan relay-2 and battery
- Harness for open or short between cooling fan relay-3 and battery
- Harness for open or short between cooling fan relay-2 and IPDM E/R
- Harness for open or short between cooling fan relay-3 and IPDM E/R

>> Repair open circuit, short to ground or short to power in harness or connectors.

3. CHECK COOLING FAN RELAY OUTPUT SIGNAL CIRCUIT

1. Turn ignition switch OFF.
2. Disconnect IPDM E/R harness connectors.
3. Check the continuity between cooling fan relay-2, -3 harness connectors and IPDM E/R harness connector.

Cooling fan relay		IPDM E/R		Continuity
Connector	Terminal	Connector	Terminal	
E42 (cooling fan relay-2)	1	E17	42	Existed
E43 (cooling fan relay-3)	1	E18	34	

4. Also check harness for short to ground and short to power.

Is the inspection result normal?

YES >> GO TO 5.
NO >> GO TO 4.

4. DETECT MALFUNCTIONING PART

Check the following.
- Harness for open or short between cooling fan relay-2 and IPDM E/R
- Harness for open or short between cooling fan relay-3 and IPDM E/R

>> Repair open circuit, short to ground or short to power in harness or connectors.

5. CHECK COOLING FAN MOTOR POWER SUPPLY CIRCUIT

1. Disconnect cooling fan motor-1 harness connector.
2. Check the voltage between cooling fan motor-1 harness connector and ground.

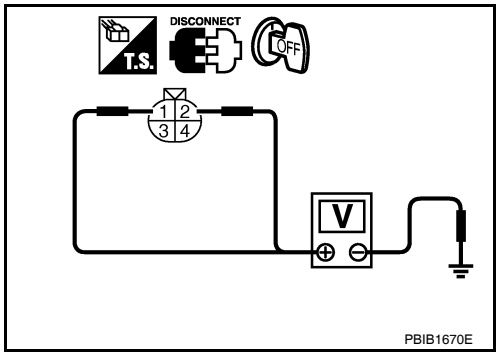

Cooling fan motor-1		Ground	Voltage
Connector	Terminal		
E220	1	Ground	Battery voltage
	2		

Is the inspection result normal?

YES >> GO TO 7.
NO >> GO TO 6.

6. DETECT MALFUNCTIONING PART

Check the following.
- 40 A fusible link (letter M)
- Harness connector E12, E203

• Harness for open or short between cooling fan motor-1 and battery

>> Repair open circuit, short to ground or short to power in harness or connectors.

7. CHECK COOLING FAN MOTOR CIRCUIT-I

1. Disconnect cooling fan motor-2 harness connector.
2. Check the continuity between cooling fan relay-2, -3 harness connectors and cooling fan motor-1, -2 harness connectors.

Cooling fan relay		Cooling fan motor		Continuity
Connector	Terminal	Connector	Terminal	
E42 (cooling fan relay-2)	3	E221 (Cooling fan motor-2)	2	Existed
	7	E220 (Cooling fan motor-1)	3	
E43 (cooling fan relay-3)	3	E221 (Cooling fan motor-2)	1	
	7	E220 (Cooling fan motor-1)	4	

3. Also check harness for short to ground and short to power.

Is the inspection result normal?

YES >> GO TO 9.
NO >> GO TO 8.

8. DETECT MALFUNCTIONING PART

Check the following.
• Harness connector E12, E203
• Harness for open or short between cooling fan motor-1 and cooling fan relay-2
• Harness for open or short between cooling fan motor-1 and cooling fan relay-3
• Harness for open or short between cooling fan motor-2 and cooling fan relay-2
• Harness for open or short between cooling fan motor-2 and cooling fan relay-3

>> Repair open circuit, short to ground or short to power in harness or connectors.

9. CHECK COOLING FAN MOTOR CIRCUIT-II

1. Check the continuity between IPDM E/R harness connector and cooling fan motor-1, -2 harness connector.

IPDM E/R		Cooling fan motor		Continuity
Connector	Terminal	Connector	Terminal	
E18	35	E220 (Cooling fan motor-1)	4	Existed
	38	E221 (Cooling fan motor-2)	1	

2. Also check harness for short to ground and short to power.

Is the inspection result normal?

YES >> GO TO 11.
NO >> GO TO 10.

10. DETECT MALFUNCTIONING PART

Check the following.
• Harness connector E12, E203
• Harness for open or short between cooling fan motor-1 and IPDM E/R
• Harness for open or short between cooling fan motor-2 and IPDM E/R

>> Repair open circuit, short to ground or short to power in harness or connectors.

11. CHECK COOLING FAN MOTOR CIRCUIT-III

1. Check the continuity between cooling fan relay-2, -3 harness connectors and ground.

Cooling fan motor		Ground	Continuity
Connector	Terminal		
E42 (cooling fan relay-2)	6	Ground	Existed
E43 (cooling fan relay-3)	6		

2. Also check harness for short to ground and short to power.

Is the inspection result normal?

YES >> GO TO 12.
NO >> Repair open circuit, short to ground or short to power in harness or connectors.

12. CHECK COOLING FAN MOTOR CIRCUIT-IV

1. Check the continuity between cooling fan motor-2 harness connector and ground.

Cooling fan motor-2		Ground	Continuity
Connector	Terminal		
E221	3	Ground	Existed
	4		

2. Also check harness for short to ground and short to power.

Is the inspection result normal?

YES >> GO TO 13.
NO >> Repair open circuit, short to ground or short to power in harness or connectors.

13. CHECK COOLING FAN RELAY-2 AND -3

Refer to EC-460, "Component Inspection (Cooling Fan Relay)".

Is the inspection result normal?

YES >> GO TO 14.
NO >> Replace malfunctioning cooling fan relay.

14. CHECK COOLING FAN MOTORS-1 AND -2

Refer to EC-459, "Component Inspection (Cooling Fan Motor)".

Is the inspection result normal?

YES >> GO TO 15.
NO >> Replace malfunctioning cooling fan motor.

15. CHECK INTERMITTENT INCIDENT

Perform GI-42, "Intermittent Incident".

Is the inspection result normal?

YES >> Replace IPDM E/R.
NO >> Repair or replace harness connectors.

Component Inspection (Cooling Fan Motor)

INFOID:0000000004349519

1. CHECK COOLING FAN MOTOR

1. Turn ignition switch OFF.
2. Disconnect cooling fan motor harness connector.

3. Supply cooling fan motor terminals with battery voltage and check operation.

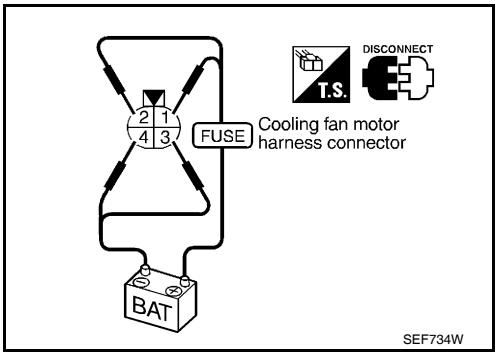

	Condition	Terminals	
		+	–
Cooling fan motor	A	1	3 and 4
		2	3 and 4
		1 and 2	3
		1 and 2	4
	B	1, 2	3, 4

Check that cooling fan speed of condition B is higher than that of A.

Is the inspection result normal?

YES >> INSPECTION END
NO >> Replace cooling fan motor.

Component Inspection (Cooling Fan Relay)

INFOID:0000000004349520

1. CHECK COOLING FAN RELAYS

1. Turn ignition switch OFF.
2. Remove cooling fan relay.
3. Check the continuity between cooling fan relay terminals under the following conditions.

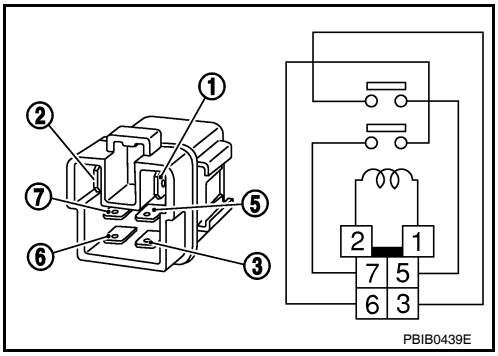

Terminals	Conditions	Continuity
3 and 5	12V direct current supply between terminals 1 and 2	Existed
	No current supply	Not existed
6 and 7	12V direct current supply between terminals 1 and 2	Existed
	No current supply	Not existed

Is the inspection result normal?

YES >> INSPECTION END
NO >> Replace cooling fan relay.

ELECTRICAL LOAD SIGNAL

Description

INFOID:0000000004349521

The electrical load signal (Headlamp switch signal, rear window defogger switch signal, etc.) is transferred through the CAN communication line.

Component Function Check

INFOID:0000000004349522

1. CHECK REAR WINDOW DEFOGGER SWITCH FUNCTION

1. Turn ignition switch ON.
2. Connect CONSULT-III and select “DATA MONITOR” mode.
3. Select “LOAD SIGNAL” and check indication under the following conditions.

Monitor item	Condition		Indication
LOAD SIGNAL	Rear window defogger switch	ON	ON
		OFF	OFF

Is the inspection result normal?

YES >> GO TO 2.
NO >> Go to EC-461, "Diagnosis Procedure".

2. CHECK LIGHTING SWITCH FUNCTION

Check “LOAD SIGNAL” indication under the following conditions.

Monitor item	Condition		Indication
LOAD SIGNAL	Lighting switch	ON at 2nd position	ON
		OFF	OFF

Is the inspection result normal?

YES >> GO TO 3.
NO >> Go to EC-461, "Diagnosis Procedure".

3. CHECK HEATER FAN CONTROL SWITCH FUNCTION

Select “HEATER FAN SW” and check indication under the following conditions.

Monitor item	Condition		Indication
HEATER FAN SW	Heater fan control switch	ON	ON
		OFF	OFF

Is the inspection result normal?

YES >> INSPECTION END
NO >> Go to EC-461, "Diagnosis Procedure".

Diagnosis Procedure

INFOID:0000000004349523

1. INSPECTION START

Confirm the malfunctioning circuit (rear window defogger, headlamp or heater fan). Refer to EC-461, "Component Function Check".

Which circuit is related to the incident?

Rear window defogger>>GO TO 2.
Headlamp>>GO TO 3.
Heater fan>>GO TO 4.

2. CHECK REAR WINDOW DEFOGGER SYSTEM

Refer to DEF-6, "System Diagram".

>> INSPECTION END

3. CHECK HEADLAMP SYSTEM

Refer to EXL-7, "System Diagram" (XENON TYPE) or EXL-9, "System Diagram" (HALOGEN TYPE).

>> INSPECTION END

4. CHECK HEATER FAN CONTROL SYSTEM

Refer to HAC-42, "Diagnosis Procedure" (automatic air conditioner) or HAC-127, "Diagnosis Procedure" (manual air conditioner).

>> INSPECTION END

FUEL INJECTOR

Description

INFOID:0000000004349524

The fuel injector is a small, precise solenoid valve. When the ECM supplies a ground to the fuel injector circuit, the coil in the fuel injector is energized. The energized coil pulls the ball valve back and allows fuel to flow through the fuel injector into the intake manifold. The amount of fuel injected depends upon the injection pulse duration. Pulse duration is the length of time the fuel injector remains open. The ECM controls the injection pulse duration based on engine fuel needs.

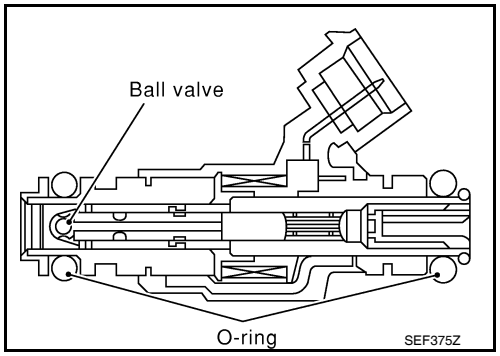

Component Function Check

INFOID:0000000004349525

1. INSPECTION START

Turn ignition switch to START.

Is any cylinder ignited?

YES >> GO TO 2.
NO >> Go to EC-463, "Diagnosis Procedure".

2. CHECK FUEL INJECTOR FUNCTION

With CONSULT-III

1. Start engine.
2. Perform “POWER BALANCE” in “ACTIVE TEST” mode with CONSULT-III.
3. Make sure that each circuit produces a momentary engine speed drop.

Without CONSULT-III

1. Let engine idle.
2. Listen to each fuel injector operating sound.

Clicking noise should be heard.

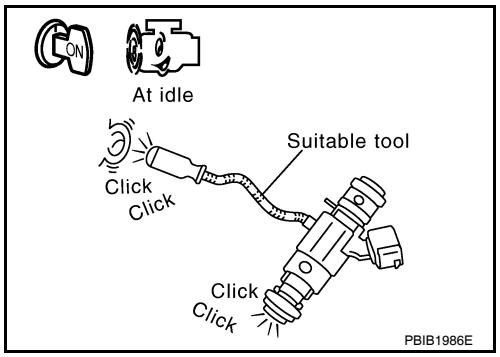

Is the inspection result normal?

YES >> INSPECTION END
NO >> Go to EC-463, "Diagnosis Procedure".

Diagnosis Procedure

INFOID:0000000004349526

1. CHECK FUEL INJECTOR POWER SUPPLY CIRCUIT

1. Turn ignition switch OFF.
2. Disconnect fuel injector harness connector.
3. Turn ignition switch ON.

4. Check the voltage between fuel injector harness connector and ground.

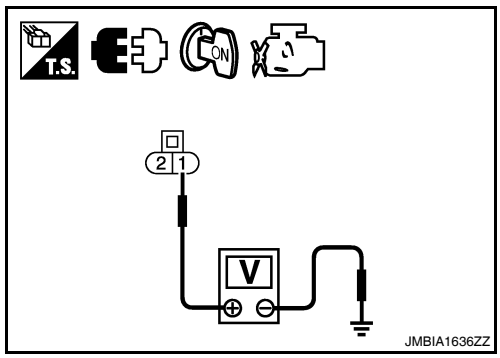

Fuel injector			Ground	Voltage
Cylinder	Connector	Terminal		
1	F17	1	Ground	Battery voltage
2	F18	1		
3	F19	1		
4	F20	1		

Is the inspection result normal?

YES >> GO TO 3.
NO >> GO TO 2.

2. DETECT MALFUNCTIONING PART

Check the following.
- IPDM E/R harness connector F10
- 10A fuse (No. 35)
- Harness for open or short between fuel injector and fuse

>> Repair open circuit or short to ground or short to power in harness or connectors.

3. CHECK FUEL INJECTOR OUTPUT SIGNAL CIRCUIT FOR OPEN AND SHORT

1. Turn ignition switch OFF.
2. Disconnect ECM harness connector.
3. Check the continuity between fuel injector harness connector and ECM harness connector.

Fuel injector			ECM		Continuity
Cylinder	Connector	Terminal	Connector	Terminal	
1	F17	2	F14	32	Existed
2	F18	2		31	
3	F19	2		30	
4	F20	2		29	

4. Also check harness for short to ground and short to power.

Is the inspection result normal?

YES >> GO TO 4.
NO >> Repair open circuit or short to ground or short to power in harness or connectors.

4. CHECK FUEL INJECTOR

Refer to EC-464, "Component Inspection".

Is the inspection result normal?

YES >> GO TO 5.
NO >> Replace malfunctioning fuel injector.

5. CHECK INTERMITTENT INCIDENT

Refer to GI-42, "Intermittent Incident".

Is the inspection result normal?

YES >> Replace IPDM E/R.
NO >> Repair open circuit or short to ground or short to power in harness or connectors.

Component Inspection

INFOID:0000000004349527

1. CHECK FUEL INJECTOR

1. Turn ignition switch OFF.

2. Disconnect fuel injector harness connector.
3. Check resistance between fuel injector terminals as follows.

Terminals	Resistance
1 and 2	11.1 - 14.3 Ω [at 10 -60°C (50 - 140°F)]

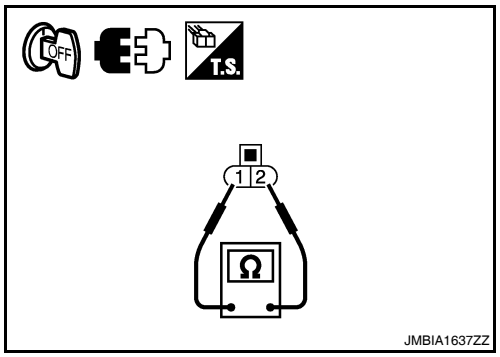

Is the inspection result normal?

YES >> INSPECTION END
NO >> Replace malfunctioning fuel injector.

FUEL PUMP

Description

INFOID:0000000004349528

Sensor	Input signal to ECM	ECM Function	Actuator
Crankshaft position sensor (POS) Camshaft position sensor (PHASE)	Engine speed*	Fuel pump control	Fuel pump relay ↓ Fuel pump
Battery	Battery voltage*		

*: ECM determines the start signal status by the signals of engine speed and battery voltage.

The ECM activates the fuel pump for several seconds after the ignition switch is turned ON to improve engine start ability. If the ECM receives a engine speed signal from the camshaft position sensor (PHASE), it knows that the engine is rotating, and causes the pump to operate. If the engine speed signal is not received when the ignition switch is ON, the engine stalls. The ECM stops pump operation and prevents battery discharging, thereby improving safety. The ECM does not directly drive the fuel pump. It controls the ON/OFF fuel pump relay, which in turn controls the fuel pump.

Condition	Fuel pump operation
Ignition switch is turned to ON.	Operates for 1 second.
Engine running and cranking	Operates.
When engine is stopped	Stops in 1.5 seconds.
Except as shown above	Stops.

Component Function Check

INFOID:0000000004349529

1.CHECK FUEL PUMP FUNCTION

1. Turn ignition switch ON.
2. Pinch fuel feed hose (2) with two fingers.

1 : Air cleaner assembly

⇦ : Vehicle front

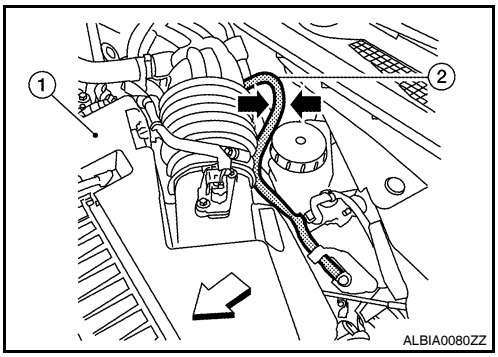

Fuel pressure pulsation should be felt on the fuel feed hose for 1 second after ignition switch is turned ON.

Is the inspection result normal?

YES >> INSPECTION END
NO >> EC-466, "Diagnosis Procedure".

Diagnosis Procedure

INFOID:0000000004349530

1.CHECK FUEL PUMP POWER SUPPLY CIRCUIT-I

1. Turn ignition switch OFF.
2. Disconnect ECM harness connector.
3. Turn ignition switch ON.

4. Check the voltage between ECM harness connector and ground.

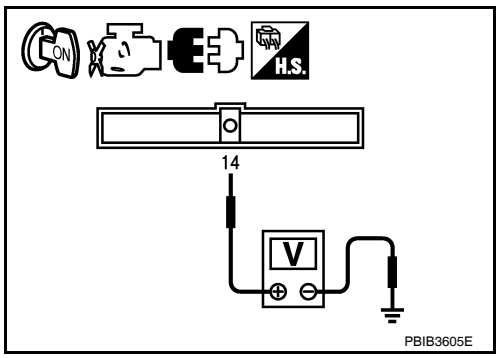

ECM		Ground	Voltage
Connector	Terminal		
F14	14	Ground	Battery voltage

Is the inspection result normal?

YES >> GO TO 4.
NO >> GO TO 2.

2. CHECK FUEL PUMP POWER SUPPLY CIRCUIT-II

1. Turn ignition switch OFF.
2. Disconnect IDPDM E/R harness connector F10.
3. Check the continuity between IPDM E/R harness connector and ECM harness connector.

ECM		IPDM E/R		Continuity
Connector	Terminal	Connector	Terminal	
F14	14	F10	77	Existed

Is the inspection result normal?

YES >> GO TO 3.
NO >> Repair open circuit or short to ground or short to power in harness or connectors.

3. CHECK CONDENSER-1 POWER SUPPLY CIRCUIT-I

1. Reconnect all harness connectors disconnected.
2. Disconnect condenser-1 harness connector.
3. Turn ignition switch ON.
4. Check the voltage between condenser-1 harness connector and ground.

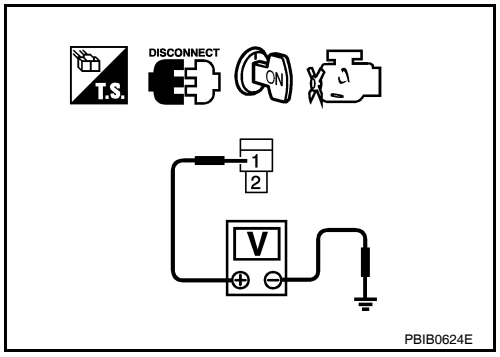

Condenser-1		Ground	Voltage
Connector	Terminal		
B17	1	Ground	Battery voltage should exist for 1 second after ignition switch is turned ON.

Is the inspection result normal?

YES >> GO TO 5.
NO >> GO TO 4.

4. CHECK 15A FUSE

1. Turn ignition switch OFF.
2. Disconnect 15A fuse (No. 32) from IPDM E/R.
3. Check 15A fuse.

Is the inspection result normal?

YES >> GO TO 6.
NO >> Replace fuse.

5. CHECK CONDENSER-1 POWER SUPPLY CIRCUIT-II

1. Disconnect IPDM E/R harness connector E18.
2. Check the continuity between IPDM E/R harness connector and condenser-1 harness connector.

IPDM E/R		Condenser-I		Continuity
Connector	Terminal	Connector	Terminal	
F18	13	B17	1	Existed

3. Also check harness for short to ground and short to power.

Is the inspection result normal?

YES >> GO TO 13.
NO >> GO TO 7.

6. DETECT MALFUNCTIONING PART

Check the following.
- Harness connectors E29, B10
- IPDM E/R connector F10
- Harness for open or short between IPDM E/R and condenser-I

>> Repair open circuit or short to power in harness or connectors.

7. CHECK CONDENSER GROUND CIRCUIT

1. Turn ignition switch OFF.
2. Disconnect dropping resistor harness connector.
3. Check the continuity between condenser-I harness connector and ground.

Condenser-I		Ground	Continuity
Connector	Terminal		
B17	2	Ground	Existed

4. Also check harness for short to ground and short to power.

Is the inspection result normal?

YES >> GO TO 8.
NO >> Repair open circuit or short to power in harness or connectors.

8. CHECK CONDENSER-1

Refer to EC-469, "Component Inspection (Condenser-1)".

Is the inspection result normal?

YES >> GO TO 9.
NO >> Replace condenser-1.

9. CHECK FUEL PUMP POWER SUPPLY CIRCUIT-III

1. Disconnect “fuel level sensor unit and fuel pump” harness connector.
2. Check the continuity between IPDM E/R harness connector and “fuel level sensor unit and fuel pump” and ground.

IPDM E/R		Fuel level sensor unit and fuel pump		Continuity
Connector	Terminal	Connector	Terminal	
E18	13	B42	1	Existed

Is the inspection result normal?

YES >> GO TO 11.
NO >> GO TO 10.

10. DETECT MALFUNCTIONING PART

Check the following.
- Harness connector E29, B10
- Harness for open or short between “fuel level sensor unit and fuel pump” and IPDM E/R
- Harness for open or short between “fuel level sensor unit and fuel pump” and ground

>> Repair open circuit or short to power in harness or connectors.

11. CHECK FUEL PUMP GROUND CIRCUIT

1. Check the continuity between “fuel level sensor unit and fuel pump” and ground.

Fuel level sensor unit and fuel pump		Ground	Continuity
Connector	Terminal		
B42	3	Ground	Existed

2. Also heck harness for short to power.

Is the inspection result normal?

YES >> GO TO 12.
NO >> Repair open circuit or short to power in harness or connectors.

12. CHECK FUEL PUMP

Refer to EC-469, "Component Inspection (Fuel Pump)".

Is the inspection result normal?

YES >> GO TO 13.
NO >> Replace fuel pump.

13. CHECK INTERMITTENT INCIDENT

Refer to GI-42, "Intermittent Incident".

Is the inspection result normal?

YES >> Replace IPDM E/R.
NO >> Repair or replace harness or connectors.

Component Inspection (Fuel Pump)

INFOID:0000000004349531

1. CHECK FUEL PUMP

1. Turn ignition switch OFF.
2. Disconnect “fuel level sensor unit and fuel pump” harness connector.
3. Check resistance between “fuel level sensor unit and fuel pump” terminals as follows.

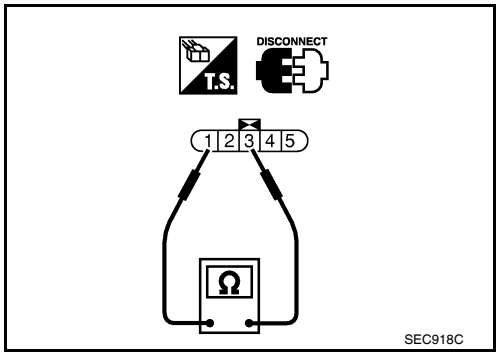

Terminals	Resistance
1 and 3	0.2 - 5.0 Ω [at 25°C (77°F)]

Is the inspection result normal?

YES >> INSPECTION END
NO >> Replace “fuel level sensor unit and fuel pump”.

Component Inspection (Condenser-1)

INFOID:0000000004349532

1. CHECK CONDENSER

1. Turn ignition switch OFF.
2. Disconnect condenser-1 harness connector.
3. Check resistance between condenser-1 terminals as follows.

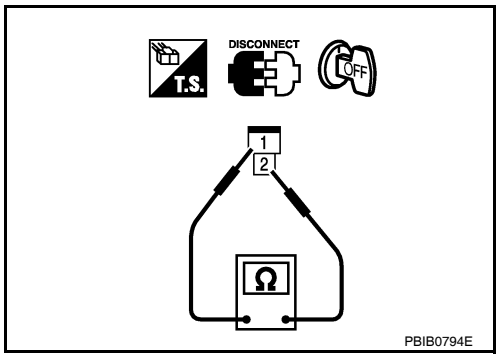

Terminal	Resistance
1 and 2	Above 1 MΩ [at 25°C (77°F)]

Is the inspection result normal?

YES >> INSPECTION END
NO >> Replace condenser-1.

IGNITION SIGNAL

Description

INFOID:0000000004349533

The ignition signal from the ECM is sent to and amplified by the power transistor. The power transistor turns ON and OFF the ignition coil primary circuit. This ON/OFF operation induces the proper high voltage in the coil secondary circuit.

Component Function Check

INFOID:0000000004349534

1. INSPECTION START

Turn ignition switch OFF, and restart engine.

Does the engine start?

YES-1 >> With CONSULT-III: GO TO 2.
YES-2 >> Without CONSULT-III: GO TO 3.
NO >> Go to EC-470, "Diagnosis Procedure".

2. IGNITION SIGNAL FUNCTION

With CONSULT-III

1. Perform “POWER BALANCE” in “ACTIVE TEST” mode with CONSULT-III.
2. Make sure that each circuit produces a momentary engine speed drop.

Is the inspection result normal?

YES >> INSPECTION END
NO >> Go to EC-470, "Diagnosis Procedure".

3. IGNITION SIGNAL FUNCTION

Without CONSULT-III

1. Let engine idle.
2. Read the voltage signal between ECM harness connector and ground.

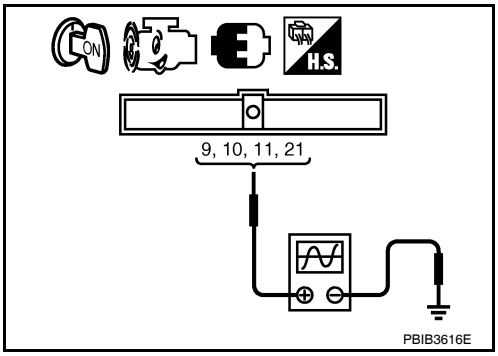

ECM		Ground	Voltage signal
Connector	Terminal		
F14	9	Ground	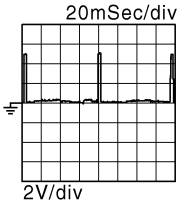
	10		
	11		
	21		

NOTE:
The pulse cycle changes depending on rpm at idle.

Is the inspection result normal?

YES >> INSPECTION END
NO >> Go to EC-470, "Diagnosis Procedure".

Diagnosis Procedure

INFOID:0000000004349535

1. CHECK IGNITION COIL POWER SUPPLY CIRCUIT-I

1. Turn ignition switch OFF, wait at least 10 seconds and then turn ON.

2. Check the voltage between ECM harness connector and ground.

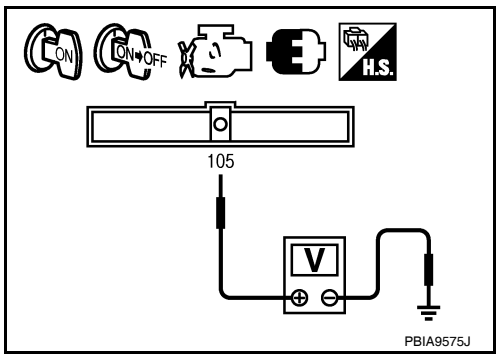

ECM		Ground	Voltage
Connector	Terminal		
E10	105	Ground	Battery voltage

Is the inspection result normal?

YES >> GO TO 2.
NO >> Go to EC-144, "Diagnosis Procedure".

2. CHECK IGNITION COIL POWER SUPPLY CIRCUIT-II

1. Turn ignition switch OFF.
2. Disconnect condenser-2 harness connector.
3. Turn ignition switch ON.
4. Check the voltage between condenser-2 harness connector and ground.

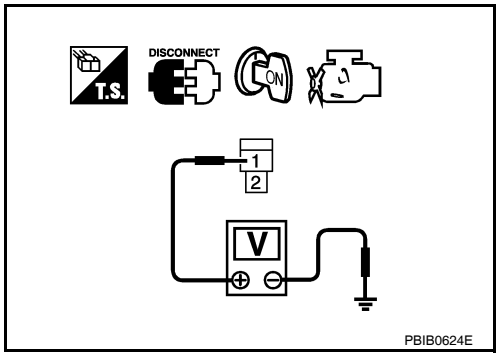

Condenser		Ground	Voltage
Connector	Terminal		
F26	1	Ground	Battery voltage

Is the inspection result normal?

YES >> GO TO 4.
NO >> GO TO 3.

3. CHECK IGNITION COIL POWER SUPPLY CIRCUIT-III

1. Turn ignition switch OFF.
2. Disconnect IPDM E/R harness connector F10.
3. Check the continuity between IPDM E/R harness connector and condenser-2 harness connector.

IPDM E/R		Condenser-2		Continuity
Connector	Terminal	Connector	Terminal	
F10	53	F26	1	Existed

4. Also check harness for short to ground and short to power.

Is the inspection result normal?

YES >> Go to EC-144, "Diagnosis Procedure".
NO >> Repair open circuit or short to ground or short to power in harness or connectors.

4. CHECK CONDENSER-2 GROUND CIRCUIT FOR OPEN AND SHORT

1. Turn ignition switch OFF.
2. Check the continuity between condenser-2 harness connector and ground.

Condenser-2		Ground	Continuity
Connector	Terminal		
F26	2	Ground	Existed

3. Also check harness for short to power.

Is the inspection result normal?

YES >> GO TO 5.
NO >> Repair open circuit or short to ground or short to power in harness or connectors.

5. CHECK CONDENSER

Refer to EC-474, "Component Inspection (Condenser-2)"

Is the inspection result normal?

YES >> GO TO 6.
NO >> Replace condenser.

6. CHECK IGNITION COIL POWER SUPPLY CIRCUIT-V

1. Reconnect all harness connectors disconnected.
2. Disconnect ignition coil harness connector.
3. Turn ignition switch ON.
4. Check the voltage between ignition coil harness connector and ground.

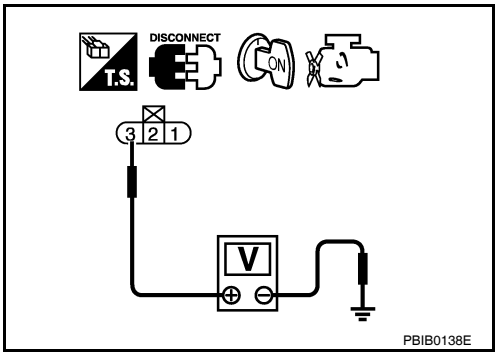

Ignition coil			Ground	Voltage
Cylinder	Connector	Terminal		
1	F34	3	Ground	Battery voltage
2	F35	3		
3	F36	3		
4	F37	3		

Is the inspection result normal?

YES >> GO TO 7.
NO >> Repair open circuit or short to ground or short to power in harness or connectors.

7. CHECK IGNITION COIL GROUND CIRCUIT FOR OPEN AND SHORT

1. Turn ignition switch OFF.
2. Check the continuity between ignition coil harness connector and ground.

Ignition coil			Ground	Continuity
Cylinder	Connector	Terminal		
1	F34	2	Ground	Existed
2	F35	2		
3	F36	2		
4	F37	2		

3. Also check harness for short to power.

Is the inspection result normal?

YES >> GO TO 8.
NO >> Repair open circuit or short to ground or short to power in harness or connectors.

8. CHECK IGNITION COIL OUTPUT SIGNAL CIRCUIT FOR OPEN AND SHORT

1. Disconnect ECM harness connector.
2. Check the continuity between ECM harness connector and ignition coil harness connector.

Ignition coil			ECM		Continuity
Cylinder	Connector	Terminal	Connector	Terminal	
1	F34	1	F14	11	Existed
2	F35	1		10	
3	F36	1		9	
4	F37	1		21	

3. Also check harness for short to ground and short to power.

Is the inspection result normal?

YES >> GO TO 9.
NO >> Repair open circuit or short to ground or short to power in harness or connectors.

9. CHECK IGNITION COIL WITH POWER TRANSISTOR

Refer to EC-473, "Component Inspection (Ignition Coil with Power Transistor)".

Is the inspection result normal?

YES >> GO TO 10.
NO >> Replace malfunctioning ignition coil with power transistor.

10. CHECK INTERMITTENT INCIDENT

Refer to GI-42, "Intermittent Incident".

>> INSPECTION END

Component Inspection (Ignition Coil with Power Transistor)

INFOID:0000000004349536

1. CHECK IGNITION COIL WITH POWER TRANSISTOR-I

1. Turn ignition switch OFF.
2. Disconnect ignition coil harness connector.
3. Check resistance between ignition coil terminals as follows.

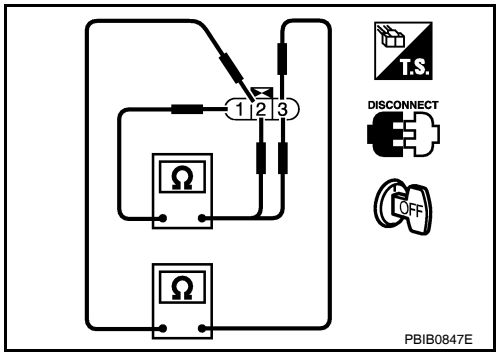

Terminals	Resistance Ω [at 25°C (77°F)]
1 and 2	Except 0 or ∞
1 and 3	Except 0
2 and 3	

Is the inspection result normal?

YES >> GO TO 2.
NO >> Replace malfunctioning ignition coil with power transistor.

2. CHECK IGNITION COIL WITH POWER TRANSISTOR-II

CAUTION:
Do the following procedure in the place where ventilation is good without the combustible.

1. Turn ignition switch OFF.
2. Reconnect all harness connectors disconnected.
3. Remove fuel pump fuse in IPDM E/R to release fuel pressure.
   NOTE:
   Do not use CONSULT-III to release fuel pressure, or fuel pressure applies again during the following procedure.
4. Start engine.
5. After engine stalls, crank it two or three times to release all fuel pressure.
6. Turn ignition switch OFF.
7. Remove all ignition coil harness connectors to avoid the electrical discharge from the ignition coils.
8. Remove ignition coil and spark plug of the cylinder to be checked.
9. Crank engine for 5 seconds or more to remove combustion gas in the cylinder.
10. Connect spark plug and harness connector to ignition coil.
11. Fix ignition coil using a rope etc. with gap of 13 - 17 mm (0.52 - 0.66 in) between the edge of the spark plug and grounded metal portion as shown in the figure.
12. Crank engine for about three seconds, and check whether spark is generated between the spark plug and the grounded metal portion.

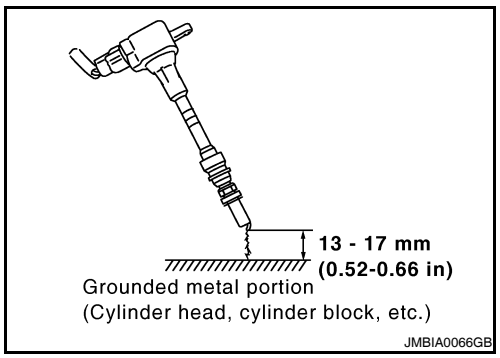

Spark should be generated.

CAUTION:
- **Do not approach to the spark plug and the ignition coil within 50 cm (19.7 in). Be careful not to get an electrical shock while checking, because the electrical discharge voltage becomes 20kV or more.**
- **It might cause to damage the ignition coil if the gap of more than 17 mm (0.66 in) is taken.**

NOTE:

When the gap is less than 13 mm (0.52 in), the spark might be generated even if the coil is malfunctioning.

Is the inspection result normal?

YES >> INSPECTION END
NO >> Replace malfunctioning ignition coil with power transistor.

Component Inspection (Condenser-2)

INFOID:0000000004349537

1. CHECK CONDENSER-2

1. Turn ignition switch OFF.
2. Disconnect condenser-2 harness connector.
3. Check resistance between condenser-2 terminals as follows.

Terminals	Resistance
1 and 2	Above 1 MΩ [at 25°C (77°F)]

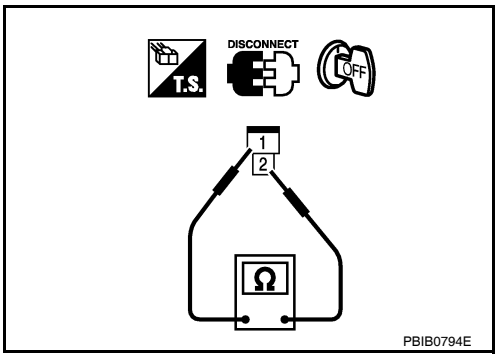

Is the inspection result normal?

YES >> INSPECTION END
NO >> Replace condenser-2.

MALFUNCTION INDICATOR LAMP

Description

INFOID:0000000004349538

The Malfunction Indicator Lamp (MIL) is located on the combination meter.
The MIL will light up when the ignition switch is turned ON without the engine running. This is a bulb check.
When the engine is started, the MIL should go off. If the MIL remains on, the on board diagnostic system has detected an engine system malfunction.
For details, refer to EC-475, "Diagnosis Procedure".

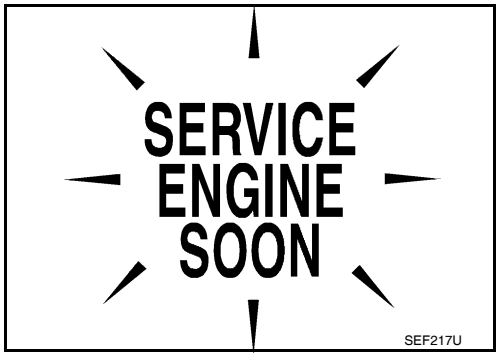

Component Function Check

INFOID:0000000004349539

1. CHECK MIL FUNCTION

1. Turn ignition switch ON.
2. Make sure that MIL lights up.

Is the inspection result normal?

YES >> INSPECTION END
NO >> Go to EC-475, "Diagnosis Procedure".

Diagnosis Procedure

INFOID:0000000004349540

1. CHECK DTC

Check that DTC UXXXX is not displayed.

Is the inspection result normal?

YES >> GO TO 2.
NO >> Perform trouble diagnosis for DTC UXXXX.

2. CHECK DTC WITH METER

Refer to MWI-38, "CONSULT-III Function (METER/M&A)".

Is the inspection result normal?

YES >> GO TO 3.
NO >> Repair or replace.

3. CHECK INTERMITTENT INCIDENT

Refer to GI-42, "Intermittent Incident".

Is the inspection result normal?

YES >> Replace combination meter.
NO >> Repair or replace.

ON BOARD REFUELING VAPOR RECOVERY (ORVR)

Description

INFOID:0000000004349541

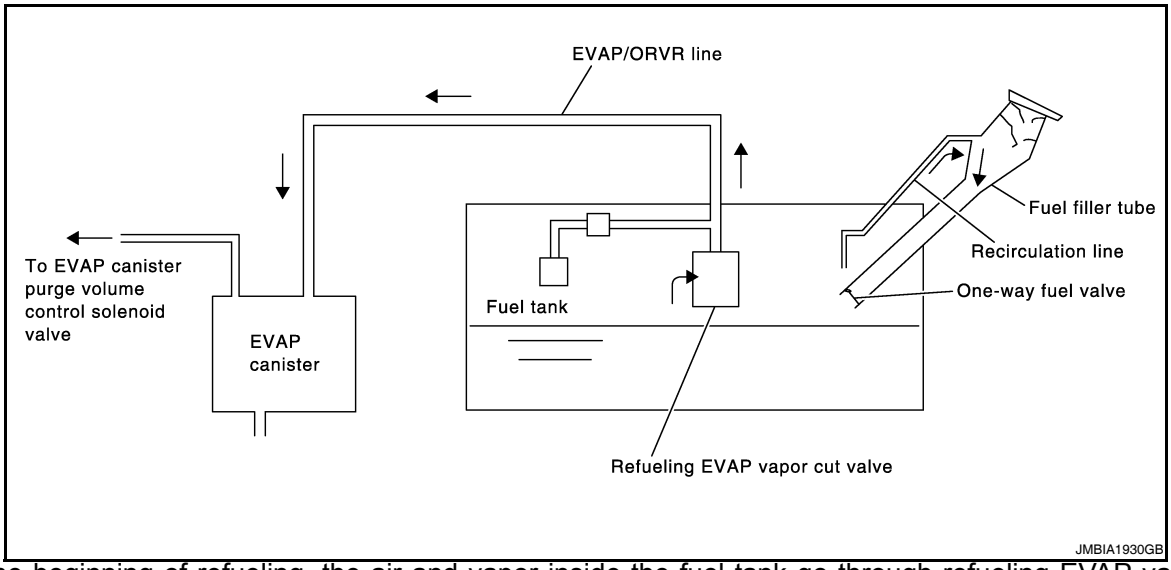

From the beginning of refueling, the air and vapor inside the fuel tank go through refueling EVAP vapor cut valve and EVAP/ORVR line to the EVAP canister. The vapor is absorbed by the EVAP canister and the air is released to the atmosphere.
When the refueling has reached the full level of the fuel tank, the refueling EVAP vapor cut valve is closed and refueling is stopped because of auto shut-off. The vapor which was absorbed by the EVAP canister is purged during driving.

WARNING:
When conducting inspections below, be sure to observe the following:
- **Put a “CAUTION: FLAMMABLE” sign in workshop.**
- **Do not smoke while servicing fuel system. Keep open flames and sparks away from work area.**
- **Be sure to furnish the workshop with a CO_2 fire extinguisher.**

CAUTION:
- **Before removing fuel line parts, carry out the following procedures:**
- **Put drained fuel in an explosion-proof container and put lid on securely.**
- **Release fuel pressure from fuel line. Refer to EC-550, "Inspection".**
- **Disconnect battery ground cable.**
- **Always replace O-ring when the fuel gauge retainer is removed.**
- **Do not kink or twist hose and tube when they are installed.**
- **Do not tighten hose and clamps excessively to avoid damaging hoses.**
- **After installation, run engine and check for fuel leaks at connection.**
- **Do not attempt to top off the fuel tank after the fuel pump nozzle shuts off automatically. Continued refueling may cause fuel overflow, resulting in fuel spray and possibly a fire.**

Component Function Check

INFOID:0000000004349542

1. CHECK ORVR FUNCTION

Check whether the following symptoms are present.
- Fuel odor from EVAP canister is strong.
- Cannot refuel/Fuel odor from the fuel filler opening is strong while refueling.

Is any symptom present?

YES >> Go to EC-476, "Diagnosis Procedure".
NO >> INSPECTION END

Diagnosis Procedure

INFOID:0000000004349543

1. INSPECTION START

Check whether the following symptoms are present.
A: Fuel odor from EVAP canister is strong.

B: Cannot refuel/Fuel odor from the fuel filler opening is strong while refueling.

Which symptom is present?

A >> GO TO 2.
B >> GO TO 7.

2. CHECK EVAP CANISTER

1. Remove EVAP canister with EVAP canister vent control valve and EVAP control system pressure sensor attached.
2. Weigh the EVAP canister with EVAP canister vent control valve and EVAP control system pressure sensor attached.
   The weight should be less than 2.1 kg (4.6 lb).

Is the inspection result normal?

YES >> GO TO 3.
NO >> GO TO 4.

3. CHECK IF EVAP CANISTER SATURATED WITH WATER

Check if water will drain from EVAP canister.

Does water drain from the EVAP canister?

YES >> GO TO 4.
NO >> GO TO 6.

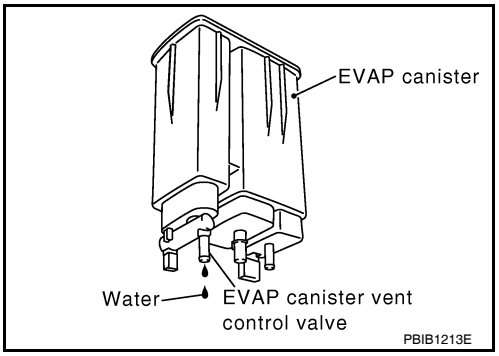

4. REPLACE EVAP CANISTER

Replace EVAP canister with a new one.

>> GO TO 5.

5. DETECT MALFUNCTIONING PART

Check the EVAP hose between EVAP canister and vehicle frame for clogging or poor connection.

>> Repair or replace EVAP hose.

6. CHECK REFUELING EVAP VAPOR CUT VALVE

Refer to EC-479, "Component Inspection".

Is the inspection result normal?

YES >> INSPECTION END
NO >> Replace refueling EVAP vapor cut valve with fuel tank.

7. CHECK EVAP CANISTER

1. Remove EVAP canister with EVAP canister vent control valve and EVAP control system pressure sensor attached.
2. Weigh the EVAP canister with EVAP canister vent control valve and EVAP control system pressure sensor attached.
   The weight should be less than 2.1 kg (4.6 lb).

Is the inspection result normal?

YES >> GO TO 8.
NO >> GO TO 9.

8. CHECK IF EVAP CANISTER SATURATED WITH WATER

Check if water will drain from EVAP canister.

Does water drain from the EVAP canister?

YES >> GO TO 9.
NO >> GO TO 11.

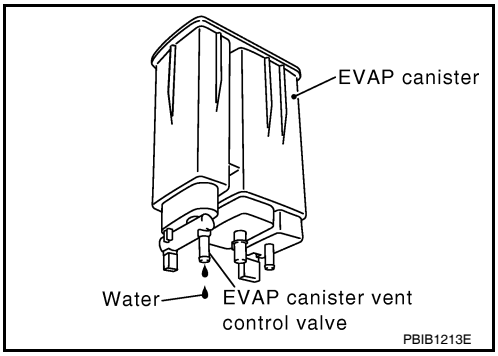

9. REPLACE EVAP CANISTER

Replace EVAP canister with a new one.

>> GO TO 10.

10. DETECT MALFUNCTIONING PART

Check the EVAP hose between EVAP canister and vehicle frame for clogging or poor connection.

>> Repair or replace EVAP hose.

11. CHECK VENT HOSES AND VENT TUBES

Check hoses and tubes between EVAP canister and refueling control valve for clogging, kink, looseness and improper connection.

Is the inspection result normal?

YES >> GO TO 12.
NO >> Repair or replace hoses and tubes.

12. CHECK RECIRCULATION LINE

Check recirculation line for clogging, dents and cracks.

Is the inspection result normal?

YES >> GO TO 13.
NO >> Replace fuel filler tube.

13. CHECK REFUELING EVAP VAPOR CUT VALVE

Refer to EC-479, "Component Inspection".

Is the inspection result normal?

YES >> GO TO 14.
NO >> Replace refueling EVAP vapor cut valve with fuel tank.

14. CHECK FUEL FILLER TUBE

Check fuel filler tube and hose connected to the fuel tank for clogging, dents and cracks.

Is the inspection result normal?

YES >> GO TO 15.
NO >> Replace fuel filler tube.

15. CHECK ONE-WAY FUEL VALVE-I

Check one-way valve for clogging.

Is the inspection result normal?

YES >> GO TO 16.
NO >> Repair or replace one-way fuel valve with fuel tank.

16. CHECK ONE-WAY FUEL VALVE-II

1. Make sure that fuel is drained from the tank.
2. Remove fuel filler tube and hose.

3. Check one-way fuel valve for operation as follows.
When a stick is inserted, the valve should open, when removing stick it should close.
Do not drop any material into the tank.

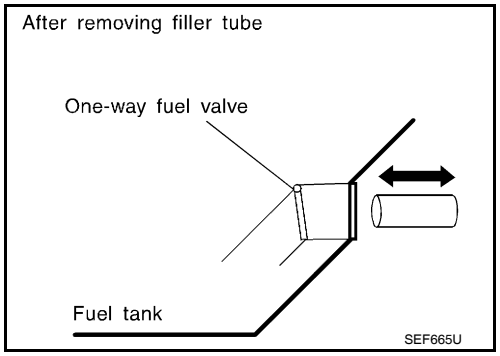

Is the inspection result normal?

YES >> INSPECTION END
NO >> Replace fuel filler tube or replace one-way fuel valve with fuel tank.

Component Inspection

INFOID:0000000004349544

1. INSPECTION START

Do you have CONSULT-III?

Do you have CONSULT-III?

YES >> GO TO 2.
NO >> GO TO 3.

2. CHECK REFUELING EVAP VAPOR CUT VALVE

With CONSULT-III

1. Remove fuel tank. Refer to FL-10, "Removal and Installation".
2. Drain fuel from the tank as follows:
- Remove fuel feed hose located on the fuel gauge retainer.
- Connect a spare fuel hose, one side to fuel gauge retainer where the hose was removed and the other side to a fuel container.
- Drain fuel using “FUEL PUMP RELAY” in “ACTIVE TEST” mode with CONSULT-III.
3. Check refueling EVAP vapor cut valve for being stuck to close as follows.
Blow air into the refueling EVAP vapor cut valve (from the end of EVAP/ORVR line hose), and check that the air flows freely into the tank.
4. Check refueling EVAP vapor cut valve for being stuck to open as follows.
- Connect vacuum pump to hose end.
- Remove fuel gauge retainer with fuel gauge unit.

Always replace O-ring with new one.

- Put fuel tank upside down.
- Apply vacuum pressure to hose end [–13.3 kPa (–0.136 kg/cm^3, –1.93 psi)] with fuel gauge retainer remaining open and check that the pressure is applicable.

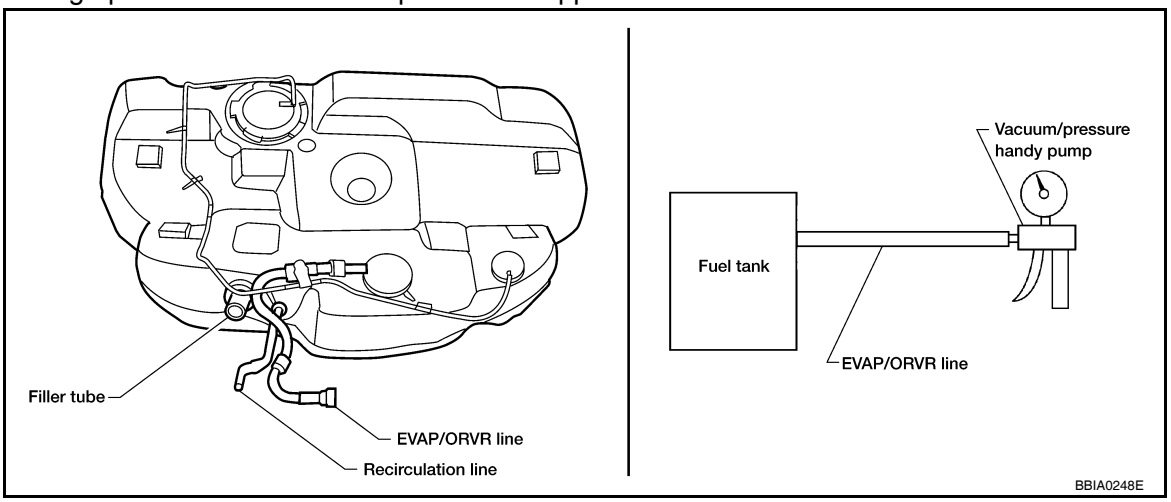

Is the inspection result normal?

YES >> INSPECTION END
NO >> Replace refueling EVAP vapor cut valve with fuel tank.

3. CHECK REFUELING EVAP VAPOR CUT VALVE

Without CONSULT-III

1. Remove fuel tank. Refer to FL-10, "Removal and Installation".
2. Drain fuel from the tank as follows:
- Remove fuel gauge retainer.
- Drain fuel from the tank using a handy pump into a fuel container.
3. Check refueling EVAP vapor cut valve for being stuck to close as follows.
   Blow air into the refueling EVAP vapor cut valve (from the end of EVAP/ORVR line hose), and check that the air flows freely into the tank.
4. Check refueling EVAP vapor cut valve for being stuck to open as follows.
- Connect vacuum pump to hose end.
- Remove fuel gauge retainer with fuel gauge unit.

Always replace O-ring with new one.

- Put fuel tank upside down.
- Apply vacuum pressure to hose end [–13.3 kPa (–0.136 kg/cm^3, –1.93 psi)] with fuel gauge retainer remaining open and check that the pressure is applicable.

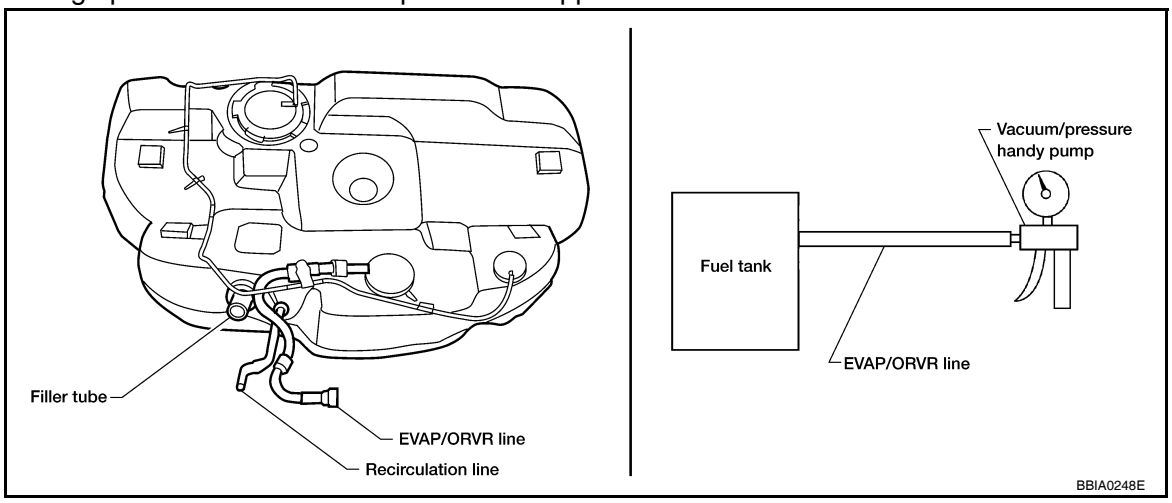

Is the inspection result normal?

YES >> INSPECTION END
NO >> Replace refueling EVAP vapor cut valve with fuel tank.

POSITIVE CRANKCASE VENTILATION

Description

INFOID:0000000004349545

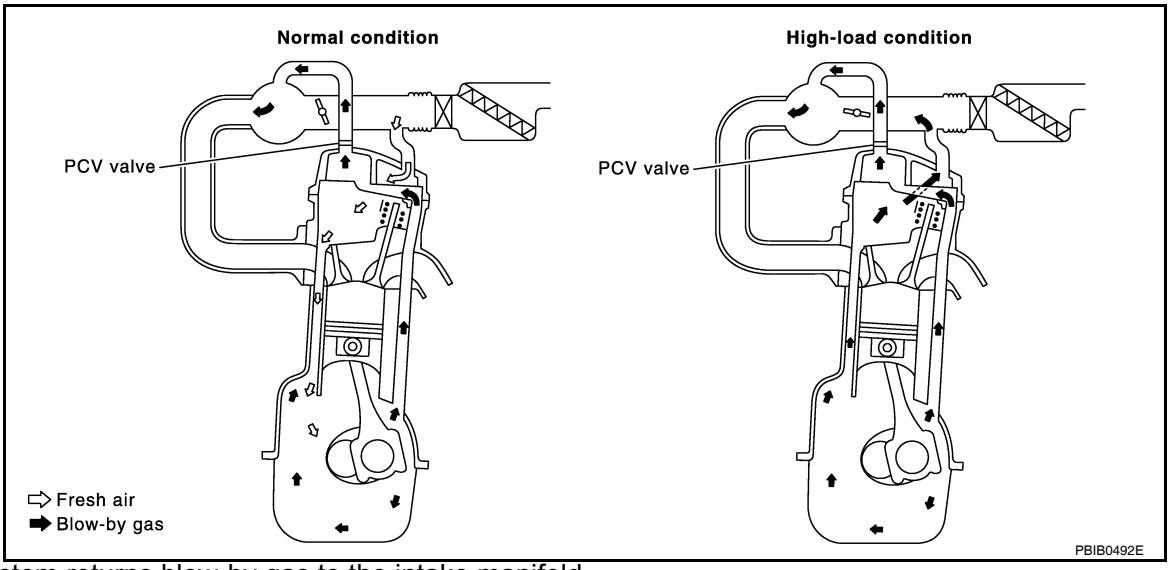

This system returns blow-by gas to the intake manifold.
The positive crankcase ventilation (PCV) valve is provided to conduct crankcase blow-by gas to the intake manifold.
During partial throttle operation of the engine, the intake manifold sucks the blow-by gas through the PCV valve.
Normally, the capacity of the valve is sufficient to handle any blow-by and a small amount of ventilating air.
The ventilating air is drawn from the air inlet tubes into the crankcase. In this process the air passes through the hose connecting air inlet tubes to rocker cover.
Under full-throttle condition, the manifold vacuum is insufficient to draw the blow-by flow through the valve. The flow goes through the hose connection in the reverse direction.
On vehicles with an excessively high blow-by, the valve does not meet the requirement. This is because some of the flow will go through the hose connection to the air inlet tubes under all conditions.

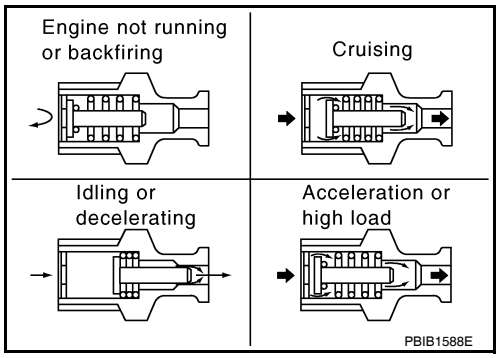

Component Inspection

INFOID:0000000004349546

1. CHECK PCV VALVE

With engine running at idle, remove PCV valve from rocker cover. A properly working valve makes a hissing noise as air passes through it. A strong vacuum should be felt immediately when a finger is placed over valve inlet.

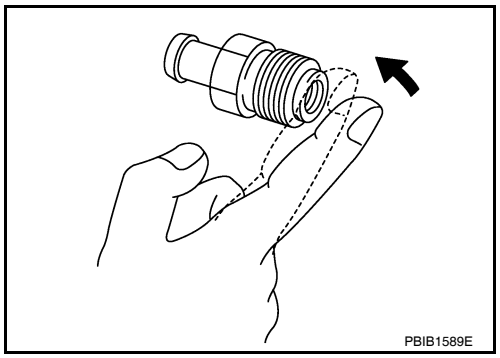

Is the inspection result normal?

YES >> INSPECTION END
NO >> Replace PCV valve.

REFRIGERANT PRESSURE SENSOR

Description

INFOID:0000000004349547

The refrigerant pressure sensor is installed at the condenser of the air conditioner system. The sensor uses an electrostatic volume pressure transducer to convert refrigerant pressure to voltage. The voltage signal is sent to ECM, and ECM controls cooling fan system.

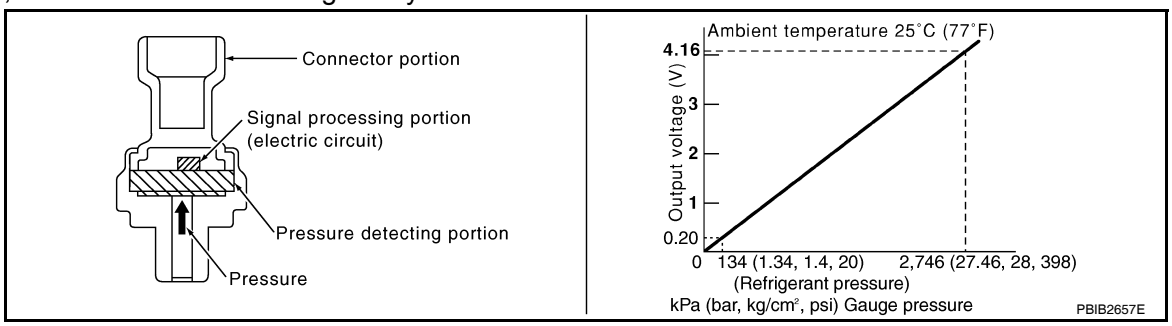

Component Function Check

INFOID:0000000004349548

1. CHECK REFRIGERANT PRESSURE SENSOR OVERALL FUNCTION

1. Start engine and warm it up to normal operating temperature.
2. Turn A/C switch and blower fan switch ON.
3. Check the voltage between ECM harness connector and ground.

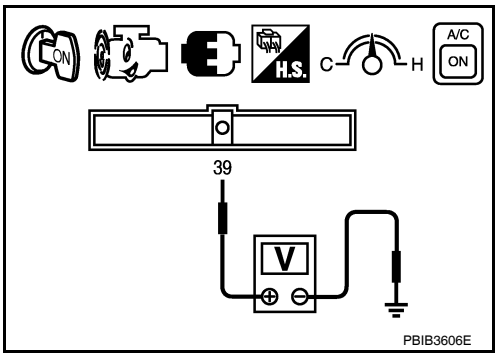

ECM		Ground	Voltage
Connector	Terminal		
F13	39 (Refrigerant pressure sensor signal)	Ground	1.0 - 4.0 V

Is the inspection result normal?

YES >> INSPECTION END
NO >> Go to EC-482, "Diagnosis Procedure".

Diagnosis Procedure

INFOID:0000000004349549

1. CHECK GROUND CONNECTION

1. Turn A/C switch and blower fan switch OFF.
2. Stop engine.
3. Turn ignition switch OFF.
4. Check ground connection E9. Refer to Ground Inspection in GI-45, "Circuit Inspection".

Is the inspection result normal?

YES >> GO TO 2.
NO >> Repair or replace ground connection.

2. CHECK REFRIGERANT PRESSURE SENSOR POWER SUPPLY CIRCUIT

1. Disconnect refrigerant pressure sensor harness connector.
2. Turn ignition switch ON.

3. Check the voltage between refrigerant pressure sensor harness connector and ground.

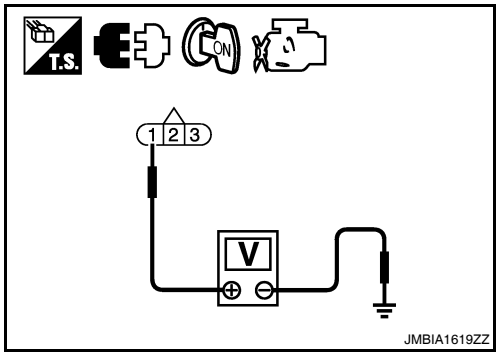

Refrigerant pressure sensor		Ground	Voltage
Connector	Terminal		
E219	1	Ground	Approx. 5 V

Is the inspection result normal?

YES >> GO TO 4.
NO >> GO TO 3.

3. DETECT MALFUNCTIONING PART

Check the following.
- Harness connectors F1, E3
- Harness for open or short between ECM and refrigerant pressure sensor

>> Repair open circuit or short to ground or short to power in harness or connectors.

4. CHECK REFRIGERANT PRESSURE SENSOR GROUND CIRCUIT FOR OPEN AND SHORT

1. Turn ignition switch OFF.
2. Disconnect ECM harness connector.
3. Check the continuity between refrigerant pressure sensor harness connector and ECM harness connector.

Refrigerant pressure sensor		ECM		Continuity
Connector	Terminal	Connector	Terminal	
E219	3	F13	40	Existed

4. Also check harness for short to ground and short to power.

Is the inspection result normal?

YES >> GO TO 6.
NO >> GO TO 5.

5. DETECT MALFUNCTIONING PART

Check the following.
- Harness connectors F1, E3
- Harness for open or short between ECM and refrigerant pressure sensor

>> Repair open circuit or short to ground or short to power in harness or connectors.

6. CHECK REFRIGERANT PRESSURE SENSOR INPUT SIGNAL CIRCUIT FOR OPEN AND SHORT

1. Check the continuity between ECM harness connector and refrigerant pressure sensor harness connector.

Refrigerant pressure sensor		ECM		Continuity
Connector	Terminal	Connector	Terminal	
E219	2	F13	39	Existed

2. Also check harness for short to ground and short to power.

Is the inspection result normal?

YES >> GO TO 8.
NO >> GO TO 7.

7. DETECT MALFUNCTIONING PART

Check the following.
- Harness connectors F1, E3
- Harness for open or short between ECM and refrigerant pressure sensor

>> Repair open circuit or short to ground or short to power in harness or connectors.

8. CHECK INTERMITTENT INCIDENT

Refer to GI-42, "Intermittent Incident".

Is the inspection result normal?

YES >> Replace refrigerant pressure sensor.
NO >> Repair or replace.

ECU DIAGNOSIS

ECM

Reference Value

INFOID:0000000004349550

VALUES ON THE DIAGNOSIS TOOL

Remarks:
- Specification data are reference values.
- Specification data are output/input values which are detected or supplied by the ECM at the connector.
  * Specification data may not be directly related to their components signals/values/operations.
  I.e. Adjust ignition timing with a timing light before monitoring IGN TIMING, because the monitor may show the specification data in spite of the ignition timing not being adjusted to the specification data. this IGN TIMING monitors the data calculated by the ECM according to the signals input from the camshaft position sensor and other ignition timing related sensors.

Monitor Item	Condition		Values/Status
ENG SPEED	• Run engine and compare CONSULT-III value with the tachometer indication.		Almost the same speed as the tachometer indication.
MAS A/F SE-B1	See EC-137, "Diagnosis Procedure".		
B/FUEL SCHDL	See EC-137, "Diagnosis Procedure".		
A/F ALPHA-B1	See EC-137, "Diagnosis Procedure".		
COOLAN TEMP/S	• Engine: After warming up		More than 70°C (158°F)
A/F SEN1 (B1)	• Engine: After warming up	Maintaining engine speed at 2,000 rpm	Fluctuates around 2.2 V
HO2S2 (B1)	• Revving engine from idle up to 3,000 rpm quickly after the following conditions are met. - Engine: After warming up - After keeping engine speed between 3,500 and 4,000 rpm for 1 minute and at idle for 1 minute under no load		0 - 0.3V ←→ Approx. 0.6 - 1.0V
HO2S3(B1)	• Revving engine from idle up to 3,000 rpm quickly after the following conditions are met. - Engine: After warming up - Driving for 3 minutes at a speed of 80 km/h (50 MPH) or more (Keep the vehicle speed as steady as possible during the cruising.)		0 - 0.3V ←→ Approx. 0.6 - 1.0V
HO2S2 MNTR(B1)	• Revving engine from idle up to 3,000 rpm quickly after the following conditions are met. - Engine: After warming up - After keeping engine speed between 3,500 and 4,000 rpm for 1 minute and at idle for 1 minute under no load		LEAN ←→ RICH
VHCL SPEED SE	• Turn drive wheels and compare CONSULT-III value with the speedometer indication.		Almost the same speed as speedometer indication
BATTERY VOLT	• Ignition switch: ON (Engine stopped)		11 - 14V
ACCEL SEN 1	• Ignition switch: ON (Engine stopped)	Accelerator pedal: Fully released	0.5 - 1.0V
		Accelerator pedal: Fully depressed	4.2 - 4.8V
ACCEL SEN 2*1	• Ignition switch: ON (Engine stopped)	Accelerator pedal: Fully released	0.5 - 1.0V
		Accelerator pedal: Fully depressed	4.2 - 4.8V
TP SEN 1-B1	• Ignition switch: ON (Engine stopped) • Shift lever: D (CVT), 1st (M/T)	Accelerator pedal: Fully released	More than 0.36V
		Accelerator pedal: Fully depressed	Less than 4.75V
TP SEN 2-B1*1	• Ignition switch: ON (Engine stopped) • Shift lever: D (CVT), 1st (M/T)	Accelerator pedal: Fully released	More than 0.36V
		Accelerator pedal: Fully depressed	Less than 4.75V
FUEL T/TMP SE	• Ignition switch: ON		Indicates fuel tank temperature
INT/A TEMP SE	• Ignition switch: ON		Indicates intake air temperature
EVAP SYS PRES	• Ignition switch: ON		Approx. 1.8 - 4.8V

Monitor Item	Condition		Values/Status
FUEL LEVEL SE	• Ignition switch: ON		Depending on fuel level of fuel tank
START SIGNAL	• Ignition switch: ON → START → ON		OFF → ON → OFF
CLSD THL POS	• Ignition switch: ON (Engine stopped)	Accelerator pedal: Fully released	ON
		Accelerator pedal: Slightly depressed	OFF
AIR COND SIG	• Engine: After warming up, idle the engine	Air conditioner switch: OFF	OFF
		Air conditioner switch: ON (Compressor operates.)	ON
P/N POSI SW	• Ignition switch: ON	Shift lever: P or N (CVT), Neutral (M/T)	ON
		Selector lever: Except above	OFF
PW/ST SIGNAL	• Engine: After warming up, idle the engine	Steering wheel: Not being turned	OFF
		Steering wheel: Being turned	ON
LOAD SIGNAL	• Ignition switch: ON	Rear window defogger switch: ON and/or Lighting switch: 2nd position	ON
		Rear window defogger switch and lighting switch: OFF	OFF
IGNITION SW	• Ignition switch: ON → OFF → ON		ON → OFF → ON
HEATER FAN SW	• Engine: After warming up, idle the engine	Heater fan switch: ON	ON
		Heater fan switch: OFF	OFF
BRAKE SW	• Ignition switch: ON	Brake pedal: Fully released	OFF
		Brake pedal: Slightly depressed	ON
INJ PULSE-B1	• Engine: After warming up • Shift lever: P or N (CVT), Neutral (M/T) • Air conditioner switch: OFF • No load	Idle	2.0 - 3.0 msec
		2,000 rpm	1.9 - 2.9 msec
IGN TIMING	• Engine: After warming up • Shift lever: P or N (CVT), Neutral (M/T) • Air conditioner switch: OFF • No load	Idle	10° - 20° BTDC
		2,000 rpm	25° - 45° BTDC
CAL/LD VALUE	• Engine: After warming up • Shift lever: P or N (CVT), Neutral (M/T) • Air conditioner switch: OFF • No load	Idle	10% - 35%
		2,500 rpm	10% - 35%
MASS AIRFLOW	• Engine: After warming up • Shift lever: P or N (CVT), Neutral (M/T) • Air conditioner switch: OFF • No load	Idle	1.0 - 4.0 g·m/s
		2,500 rpm	4.0 - 10.0 g·m/s
PURG VOL C/V	• Engine: After warming up • Shift lever: P or N (CVT), Neutral (M/T) • Air conditioner switch: OFF • No load	Idle (Accelerator pedal: Not depressed even slightly, after engine starting.)	0%
		2,000 rpm	20% - 90%
INT/V TIM(B1)	• Engine: After warming up • Shift lever: P or N (CVT), Neutral (M/T) • Air conditioner switch: OFF • No load	Idle	–5° - 5°CA
		2,000 rpm	Approx. 0° - 20°CA

Monitor Item	Condition		Values/Status
INT/V SOL(B1)	• Engine: After warming up • Shift lever: P or N (CVT), Neutral (M/T) • Air conditioner switch: OFF • No load	Idle	0%
		2,000 rpm	Approx. 0% - 60%
SWRL CONT S/V	• Ignition switch: ON • Engine coolant temperature: Between 5°C (41°F) and 40°C (104°F)	Accelerator pedal: Fully released	ON
		Accelerator pedal: Slightly depressed	OFF
AIR COND RLY	• Engine: After warming up, idle the engine	Air conditioner switch: OFF	OFF
		Air conditioner switch: ON (Compressor operates)	ON
FUEL PUMP RLY	• For 1 seconds after turning ignition switch: ON • Engine running or cranking		ON
	• Except above		OFF
VENT CONT/V	• Ignition switch: ON		OFF
THRTL RELAY	• Ignition switch: ON		ON
COOLING FAN	• Engine: After warming up, idle the engine • Air conditioner switch: OFF	Engine coolant temperature is 97°C (207°F) or less	OFF
		Engine coolant temperature between 98°C (208°F) and 99°C (210°F) or more	LOW
		Engine coolant temperature between 100°C (212°F) or more	HIGH
	• Engine: After warming up, idle the engine • Air conditioner switch: ON • Refrigerant pressure is less than 1,280 kPa (12.80 bar, 13.05 kg/cm^2, 185.6 psi)	Engine coolant temperature is 97°C (207°F) or less	ON
		Engine coolant temperature between 97°C (207°F) and 99°C (210°F) or more	MID
		Engine coolant temperature between 100°C (212°F) or more	HIGH
HO2S2 HTR (B1)	• Engine speed: Below 3,600 rpm after the following conditions are met. - Engine: After warming up - Keeping the engine speed between 3,500 and 4,000 rpm for 1 minute and at idle for 1 minute under no load		ON
	• Engine speed: Above 3,600 rpm		OFF
HO2S3 HTR(B1)	• Engine speed: Below 3,600 rpm after the following conditions are met. - Engine: After warming up - Driving for 3 minutes at a speed of 80 km/h (50 MPH) or more (Keep the vehicle speed as steady as possible during the cruising.)		ON
	• Engine speed: Above 3,600 rpm		OFF
I/P PULLY SPD	• Vehicle speed: More than 20 km/h (12 MPH)		Almost the same speed as the tachometer indication
VEHICLE SPEED	• Turn drive wheels and compare CONSULT-III value with the speedometer indication.		Almost the same speed as the speedometer indication
IDL A/V LEARN	• Engine: running	Idle air volume learning has not been performed yet.	YET
		Idle air volume learning has already been performed successfully.	CMPLT
TRVL AFTER MIL	• Ignition switch: ON	Vehicle has traveled after MIL has turned ON.	0 - 65,535 km (0 - 40,723 miles)
A/F S1 HTR(B1)	• Engine: After warming up, idle the engine (More than 140 seconds after starting engine.)		4 - 100%
AC PRESS SEN	• Engine: Idle • Both A/C switch and blower fan switch: ON (Compressor operates)		1.0 - 4.0V

Monitor Item	Condition		Values/Status
VHCL SPEED SE	• Turn drive wheels and compare CONSULT-III value with the speedometer indication.		Almost the same speed as the speedometer indication
SET VHCL SPD	• Engine: Running	ASCD: Operating	The preset vehicle speed is displayed
MAIN SW	• Ignition switch: ON	MAIN switch: Pressed	ON
		MAIN switch: Released	OFF
CANCEL SW	• Ignition switch: ON	CANCEL switch: Pressed	ON
		CANCEL switch: Released	OFF
RESUME/ACC SW	• Ignition switch: ON	RESUME/ACCELERATE switch: Pressed	ON
		RESUME/ACCELERATE switch: Released	OFF
SET SW	• Ignition switch: ON	SET/COAST switch: Pressed	ON
		SET/COAST switch: Released	OFF
BRAKE SW1 (ASCD brake switch)	• Ignition switch: ON	• Brake pedal: Fully released (CVT) • Brake pedal and clutch pedal: Fully released (M/T)	ON
		• Brake pedal: Slightly depressed (CVT) • Brake pedal and/or clutch pedal: Slightly depressed (M/T)	OFF
BRAKE SW2 (Stop lamp switch)	• Ignition switch: ON	Brake pedal: Fully released	OFF
		Brake pedal: Slightly depressed	ON
VHCL SPD CUT	• Ignition switch: ON		NON
LO SPEED CUT	• Ignition switch: ON		NON
AT OD MONITOR	• Ignition switch: ON		OFF
AT OD CANCEL	• Ignition switch: ON		OFF
CRUISE LAMP	• Ignition switch: ON	MAIN switch: Pressed at the 1st time → at the 2nd time	ON → OFF
SET LAMP	• MAIN switch: ON • When vehicle speed: Between 40 km/h (25 MPH) and 144 km/h (89 MPH)	ASCD: Operating	ON
		ASCD: Not operating	OFF
ALT DUTY	• Engine: Idle		0 - 80%
BAT CUR SEN	• Engine speed: Idle • Battery: Fully charged*2 • Shift lever: P or N (CVT), Neutral (M/T) • Air conditioner switch: OFF • No load		Approx. 2,600 - 3,500mV
ALT DUTY SIG	• Power generation voltage variable control: Operating		ON
	• Power generation voltage variable control: Not operating		OFF
A/F ADJ-B1	• Engine: running		–0.330 - 0.330
TMBL POS SEN	• Ignition switch: ON • Engine coolant temperature: Between 5°C (41°F) and 60°C (140°F)	Accelerator pedal: Fully released	Less than 1.2V
		Accelerator pedal: Slightly depressed	More than 2.9V

*1: Accelerator pedal position sensor 2 signal and throttle position sensor 2 signal are converted by ECM internally. Thus, they differ from ECM terminals voltage signal.

*2: Before measuring the terminal voltage, confirm that the battery is fully charged. Refer to PG-3, "How to Handle Battery".

TERMINAL LAYOUT

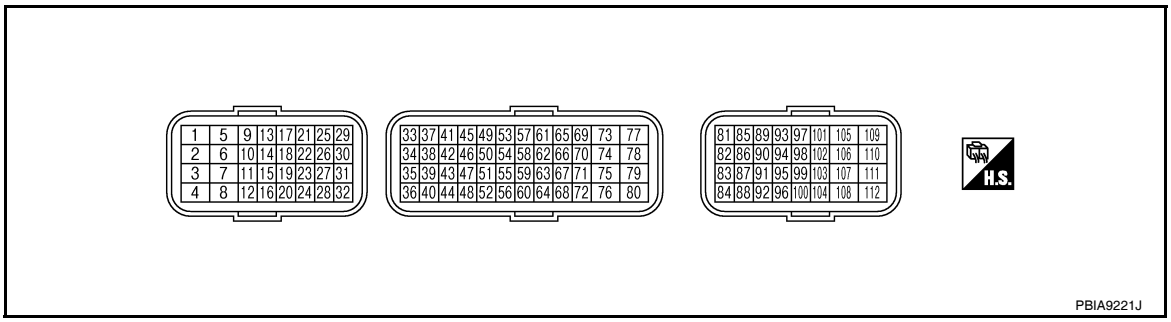

PHYSICAL VALUES

NOTE:
- ECM is located behind the passenger side instrument lower panel. For this inspection, remove passenger side instrument lower panel.
- Specification data are reference values and are measured between each terminal and ground.
- Pulse signal is measured by CONSULT-III.

CAUTION:
Do not use ECM ground terminals when measuring input/output voltage. Doing so may result in damage to the ECMs transistor. Use a ground other than ECM terminals, such as the ground.

Terminal No.		Wire color	Description		Condition	Value (Approx.)
+	—		Signal name	Input/ Output		
1	Ground	L/G	Tumble control valve motor (Close)	Output	[Ignition switch ON] • Engine coolant temperature: Between 5°C (41°F) and 60°C (140°F) • Accelerator pedal: Depressed → fully released	Battery voltage appears for about 1 second.
2	Ground	G/W	Throttle control motor relay power supply	Input	[Ignition switch: ON]	BATTERY VOLTAGE (11 - 14V)
3	Ground	L/R	Tumble control valve motor (Open)	Output	[Ignition switch ON] • Engine coolant temperature: Between 5°C (41°F) and 60°C (140°F) • Accelerator pedal: Fully released → depressed	Battery voltage appears for about 1 second.
4	Ground	BR/Y	A/F sensor 1 heater	Output	[Engine is running] • Warm-up condition • Idle speed	2.9 - 8.8V★ 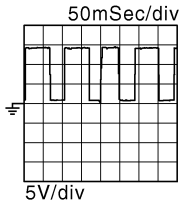
5	Ground	L	Throttle control motor (Open)	Output	[Ignition switch: ON] • Engine stopped • Shift lever: D (CVT), 1st (M/T) • Accelerator pedal: Fully depressed	0 - 14V★ 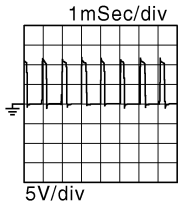

Terminal No.		Wire color	Description		Condition	Value (Approx.)
+	–		Signal name	Input/ Output		
6	Ground	P	Throttle control motor (Close)	Output	[Ignition switch: ON] • Engine stopped • Shift lever: D (CVT), 1st (M/T) • Accelerator pedal: Fully released	0 - 14V★ 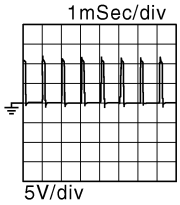 JMBIA0084GB
7	Ground	R	Tumble control valve motor power supply	Input	[Ignition switch: ON]	BATTERY VOLTAGE (11 - 14V)
9 10 11 21	Ground	L/B G/R Y/R G/Y	Ignition signal No. 3 Ignition signal No. 2 Ignition signal No. 1 Ignition signal No. 4	Output	[Engine is running] • Warm-up condition • Idle speed **NOTE:** The pulse cycle changes depending on rpm at idle	0 - 0.1V★ 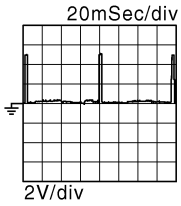 JMBIA0085GB
					[Engine is running] • Warm-up condition • Engine speed: 2,000 rpm	0 - 0.2V★ 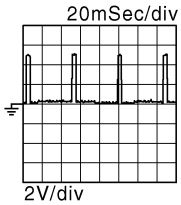 JMBIA0086GB
12 16	Ground	B	ECM ground	—	[Engine is running] • Idle speed	Body ground
13	Ground	R	Heated oxygen sensor 2 heater	Output	[Engine is running] • Engine speed: Below 3,600 rpm after the following conditions are met - Engine: after warming up - Keeping the engine speed between 3,500 and 4,000 rpm for 1 minute and at idle for 1 minute under no load	10V★ 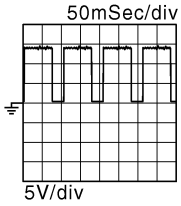 JMBIA0037GB
					[Ignition switch: ON] • Engine stopped [Engine is running] • Engine speed: Above 3,600 rpm	BATTERY VOLTAGE (11 - 14V)
14	Ground	B/R	Fuel pump relay	Output	[Ignition switch: ON] • For 1 second after turning ignition switch ON [Engine is running]	0 - 1.0V
					[Ignition switch: ON] • More than 1 second after turning ignition switch ON	BATTERY VOLTAGE (11 - 14V)

Terminal No. +	Terminal No. —	Wire color	Description: Signal name	Description: Input/Output	Condition	Value (Approx.)
15	Ground	O	Throttle control motor relay	Output	[Ignition switch: ON → OFF]	0 - 1.0V ↓ BATTERY VOLTAGE (11 - 14V) ↓ 0V
					[Ignition switch: ON]	0 - 1.0V
17	Ground	L	Heated oxygen sensor 3 heater	Output	[Engine is running] • Engine speed: Below 3,600 rpm after the following conditions are met - Engine: after warming up - Driving for 3 minutes at a speed of 80 km/h (50 MPH) or more (Keep the vehicle speed as steady as possible during the cruising.)	10V★ 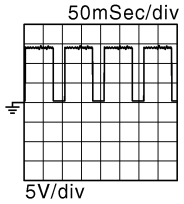
					[Ignition switch: ON] • Engine stopped [Engine is running] • Engine speed: Above 3,600 rpm	BATTERY VOLTAGE (11 - 14V)
24	Ground	W/B	ECM relay (Self shut-off)	Output	[Engine is running] [Ignition switch: OFF] • A few seconds after turning ignition switch OFF	0 - 1.0V
					[Ignition switch: OFF] • More than a few seconds after turning ignition switch OFF	BATTERY VOLTAGE (11 - 14V)
25	Ground	P/L	EVAP canister purge volume control solenoid valve	Output	[Engine is running] • Idle speed • Accelerator pedal: Not depressed even slightly, after engine starting	BATTERY VOLTAGE (11 - 14V)★ 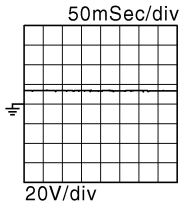
					[Engine is running] • Engine speed: About 2,000 rpm (More than 100 seconds after starting engine.)	BATTERY VOLTAGE (11 - 14V)★ 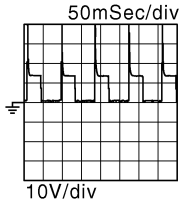

Terminal No.		Wire color	Description		Condition	Value (Approx.)
+	—		Signal name	Input/ Output		
29 30 31 32	Ground	LG/R R/Y R/W R/B	Fuel injector No. 4 Fuel injector No. 3 Fuel injector No. 2 Fuel injector No. 1	Output	[Engine is running] • Warm-up condition • Idle speed **NOTE:** The pulse cycle changes depending on rpm at idle	BATTERY VOLTAGE (11 - 14V)★ 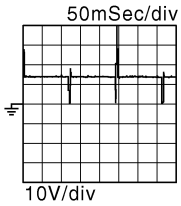 JMBIA0089GB
					[Engine is running] • Warm-up condition • Engine speed: 2,000 rpm	BATTERY VOLTAGE (11 - 14V)★ 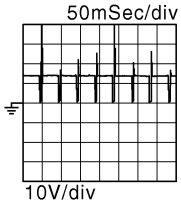 JMBIA0090GB
33	Ground	LG	Heated oxygen sensor 2	Input	[Engine is running] • Revving engine from idle to 3,000 rpm quickly after the following conditions are met - Engine: after warming up - Keeping the engine speed between 3,500 and 4,000 rpm for 1 minute and at idle for 1 minute under no load	0 - 1.0V
34	Ground	W/L	Heated oxygen sensor 3	Input	[Engine is running] • Revving engine from idle to 3,000 rpm quickly after the following conditions are met - Engine: after warming up - Driving for 3 minutes at a speed of 80 km/h (50 MPH) or more (Keep the vehicle speed as steady as possible during the cruising.)	0 - 1.0V
35	Ground	B/Y	Sensor ground (Heated oxygen sensor 2, Heated oxygen sensor 3)	—	[Engine is running] • Warm-up condition • Idle speed	0V
36	Ground	B	Sensor ground (Throttle position sensor)	—	[Engine is running] • Warm-up condition • Idle speed	0V
37	Ground	W	Throttle position sensor 1	Input	[Ignition switch: ON] • Engine stopped • Shift lever: D (CVT), 1st (M/T) • Accelerator pedal: Fully released	More than 0.36V
					[Ignition switch: ON] • Engine stopped • Shift lever: D (CVT), 1st (M/T) • Accelerator pedal: Fully depressed	Less than 4.75V

Terminal No. +	Terminal No. –	Wire color	Description: Signal name	Description: Input/Output	Condition	Value (Approx.)
38	Ground	R	Throttle position sensor 2	Input	[Ignition switch: ON] • Engine stopped • Shift lever: D (CVT), 1st (M/T) • Accelerator pedal: Fully released	Less than 4.75V
					[Ignition switch: ON] • Engine stopped • Shift lever: D (CVT), 1st (M/T) • Accelerator pedal: Fully depressed	More than 0.36V
39	Ground	R	Refrigerant pressure sensor	Input	[Engine is running] • Warm-up condition • Both A/C switch and blower fan motor switch: ON (Compressor operates)	1.0 - 4.0V
40	Ground	G	Sensor ground (Refrigerant pressure sensor)	—	[Engine is running] • Warm-up condition • Idle speed	0V
41	Ground	O/B	Power steering pressure sensor	Output	[Engine is running] • Steering wheel: Being turned	0.5 - 4.0V
					[Engine is running] • Steering wheel: Not being turned	0.4 - 0.8V
42	Ground	G/R	Battery current sensor	Input	[Engine is running] • Battery: Fully charged* • Idle speed	2.6 - 3.5V
44	Ground	R/B	Sensor ground (Battery current sensor)	—	[Engine is running] • Warm-up condition • Idle speed	0V
45	Ground	B/W	A/F sensor 1 (bank 1)	Input	[Ignition switch: ON]	2.2V
46	Ground	Y	Engine coolant temperature sensor	Input	[Engine is running]	0 - 4.8V Output voltage varies with engine coolant temperature.
47	Ground	G	Sensor power supply (Throttle position sensor)	—	[Ignition switch: ON]	5V
48	Ground	B/P	Sensor ground (Power steering pressure sensor)	—	[Engine is running] • Warm-up condition • Idle speed	0V
49	Ground	L	A/F sensor 1	Input	[Engine is running] • Warm-up condition • Engine speed: 2,000 rpm	1.8V Output voltage varies with air fuel ratio.
50	Ground	L/Y	Intake air temperature sensor	Input	[Engine is running]	0 - 4.8V Output voltage varies with intake air temperature.
51	Ground	O/L	Sensor power supply	—	[Ignition switch: ON]	5V
52	Ground	LG	Sensor ground (Tumble control valve position sensor, Engine coolant temperature sensor)	—	[Engine is running] • Warm-up condition • Idle speed	0V

Terminal No.		Wire color	Description		Condition	Value (Approx.)
+	–		Signal name	Input/ Output		
54	Ground	V	Tumble control valve position sensor	Input	[Ignition switch ON] • Engine coolant temperature: Between 5°C (41°F) and 40°C (104°F) • Accelerator pedal: Fully released	Less than 1.2V
					[Ignition switch ON] • Engine coolant temperature: Between 5°C (41°F) and 40°C (104°F) • Accelerator pedal: Slightly depressed	More than 2.9V
55	Ground	R/L	Sensor power supply (Power steering pressure sensor)	—	[Ignition switch: ON]	5V
56	Ground	G/B	Sensor ground (Mass air flow sensor, Intake air temperature sensor)	—	[Engine is running] • Warm-up condition • Idle speed	0V
58	Ground	O	Mass air flow sensor	Input	[Engine is running] • Warm-up condition • Idle speed	0.9 - 1.1V
					[Engine is running] • Warm-up condition • Engine speed: 2,500 rpm	1.4 - 1.7V
59	Ground	G/W	Sensor power supply [Camshaft position sensor (PHASE)]	—	[Ignition switch: ON]	5V
60	Ground	Y/B	Sensor ground [Crankshaft position sensor (POS)]	—	[Engine is running] • Warm-up condition • Idle speed	0V
61	Ground	W	Knock sensor	Input	[Engine is running] • Idle speed	2.5V
64	Ground	B/R	Sensor ground [Camshaft position sensor (PHASE)]	—	[Engine is running] • Warm-up condition • Idle speed	0V
65	Ground	W	Crankshaft position sensor (POS)	Input	[Engine is running] • Warm-up condition • Idle speed **NOTE:** The pulse cycle changes depending on rpm at idle	3.0V★ 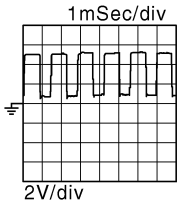 JMBIA0091GB
					[Engine is running] • Engine speed: 2,000 rpm	3.0V★ 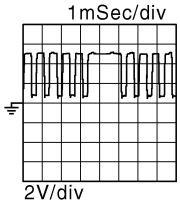 JMBIA0092GB
67	Ground	—	Sensor ground (Knock sensor)	—	[Engine is running] • Warm-up condition • Idle speed	0V

Terminal No. +	Terminal No. —	Wire color	Description: Signal name	Description: Input/Output	Condition	Value (Approx.)
69	Ground	W/R	Camshaft position sensor (PHASE)	Input	[Engine is running] • Warm-up condition • Idle speed **NOTE:** The pulse cycle changes depending on rpm at idle	1.0 - 4.0★ 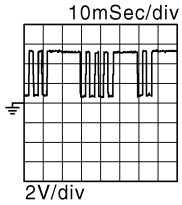 JMBIA0093GB
					[Engine is running] • Engine speed is 2,000 rpm	1.0 - 4.0★ 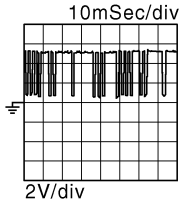 JMBIA0094GB
72	Ground	LG/B	Sensor power supply (Tumble control valve position sensor, Refrigerant pressure sensor)	—	[Ignition switch: ON]	5V
76	Ground	R/G	Sensor power supply [Crankshaft position sensor (POS)]	—	[Ignition switch: ON]	5V
77	Ground	W/L	Power supply for ECM (Back-up)	Input	[Ignition switch: OFF]	BATTERY VOLTAGE (11 - 14V)
78	Ground	R/L	Intake valve timing control solenoid valve	Output	[Engine is running] • Warm-up condition • Idle speed	0V
					[Engine is running] • Warm-up condition • Engine speed: 2,000rpm	7 - 10V★ 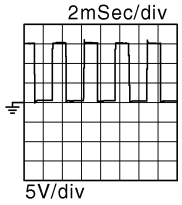 JMBIA0095GB
81	Ground	W	Accelerator pedal position sensor 1	Input	[Ignition switch: ON] • Engine stopped • Accelerator pedal: Fully released	0.5 - 1.0V
					[Ignition switch: ON] • Engine stopped • Accelerator pedal: Fully depressed	4.2 - 4.8V
82	Ground	O	Accelerator pedal position sensor 2	Input	[Ignition switch: ON] • Engine stopped • Accelerator pedal: Fully released	0.25 - 0.5V
					[Ignition switch: ON] • Engine stopped • Accelerator pedal: Fully depressed	2.0 - 2.5V
83	Ground	GR	Sensor power supply (Accelerator pedal position sensor 1)	—	[Ignition switch: ON]	5V

Terminal No.		Wire color	Description		Condition	Value (Approx.)
+	–		Signal name	Input/ Output		
84	Ground	B	Sensor ground (Accelerator pedal position sensor 1)	—	[Engine is running] • Warm-up condition • Idle speed	0V
85	Ground	G/Y	ASCD steering switch	Input	[Ignition switch: ON] • ASCD steering switch: OFF	4V
					[Ignition switch: ON] • MAIN switch: Pressed	0V
					[Ignition switch: ON] • CANCEL switch: Pressed	1V
					[Ignition switch: ON] • RESUME/ACCELERATE switch: Pressed	3V
					[Ignition switch: ON] • SET/COAST switch: Pressed	2V
86	Ground	SB	EVAP control system pressure sensor	Input	[Ignition switch: ON]	1.8 - 4.8V
87	Ground	BR	Sensor power supply (Accelerator pedal position sensor 2)	—	[Ignition switch: ON]	5V
88	—	O	Data link connector	Input/ Output	—	—
91	Ground	V	Sensor power supply (EVAP control system pressure sensor)	—	[Ignition switch: ON]	5V
92	Ground	R	Sensor ground (ASCD steering switch)	—	[Engine is running] • Warm-up condition • Idle speed	0V
93	Ground	Y	Ignition switch	Input	[Ignition switch: OFF]	0V
					[Ignition switch: ON]	BATTERY VOLTAGE (11 - 14V)
94	—	V/W	Engine speed signal output	Output	—	—
95	Ground	Y	Fuel tank temperature sensor	Input	[Engine is running]	0 - 4.8V Output voltage varies with fuel tank temperature.
96	Ground	GR	Sensor ground (EVAP control system pressure sensor)	—	[Engine is running] • Warm-up condition • Idle speed	0V
97	—	P	CAN communication line	Input/ Output	—	—
98	—	L	CAN communication line	Input/ Output	—	—
100	Ground	G	Sensor ground (Accelerator pedal position sensor 2)	—	[Engine is running] • Warm-up condition • Idle speed	0V
102	Ground	R/B	PNP switch	Input	[Ignition switch: ON] • Shift lever: P or N (CVT), Neutral (M/T)	BATTERY VOLTAGE (11 - 14V)
					[Ignition switch: ON] • Shift lever: Except above	0V
104	Ground	P	Sensor ground (Fuel tank temperature sensor)	—	[Engine is running] • Warm-up condition • Idle speed	0V

Terminal No.		Wire color	Description		Condition	Value (Approx.)
+	–		Signal name	Input/ Output		
105	Ground	V	Power supply for ECM	Input	[Ignition switch: ON]	BATTERY VOLTAGE (11 - 14V)
106	Ground	SB	Stop lamp switch	Input	[Ignition switch: OFF] • Brake pedal: Fully released	0V
					[Ignition switch: OFF] • Brake pedal: Slightly depressed	BATTERY VOLTAGE (11 - 14V)
107 108	Ground	B	ECM ground	—	[Engine is running] • Idle speed	Body ground
109	Ground	W	EVAP canister vent control valve	Output	[Ignition switch: ON]	BATTERY VOLTAGE (11 - 14V)
110	Ground	G/B	ASCD brake switch	Input	[Ignition switch: ON] • Brake pedal: Slightly depressed (CVT) • Brake pedal and clutch pedal: Slightly depressed (M/T)	0V
					[Ignition switch: ON] • Brake pedal: Fully released (CVT) • Brake pedal and/or clutch pedal: Fully released (M/T)	BATTERY VOLTAGE (11 - 14V)
111 112	Ground	B	ECM ground	—	[Engine is running] • Idle speed	Body ground

★: Average voltage for pulse signal (Actual pulse signal can be confirmed by oscilloscope.)

**: Before measuring the terminal voltage, confirm that the battery is fully charged. Refer to PG-3, "How to Handle Battery"

Wiring Diagram — ENGINE CONTROL SYSTEM —

INFOID:0000000004349551

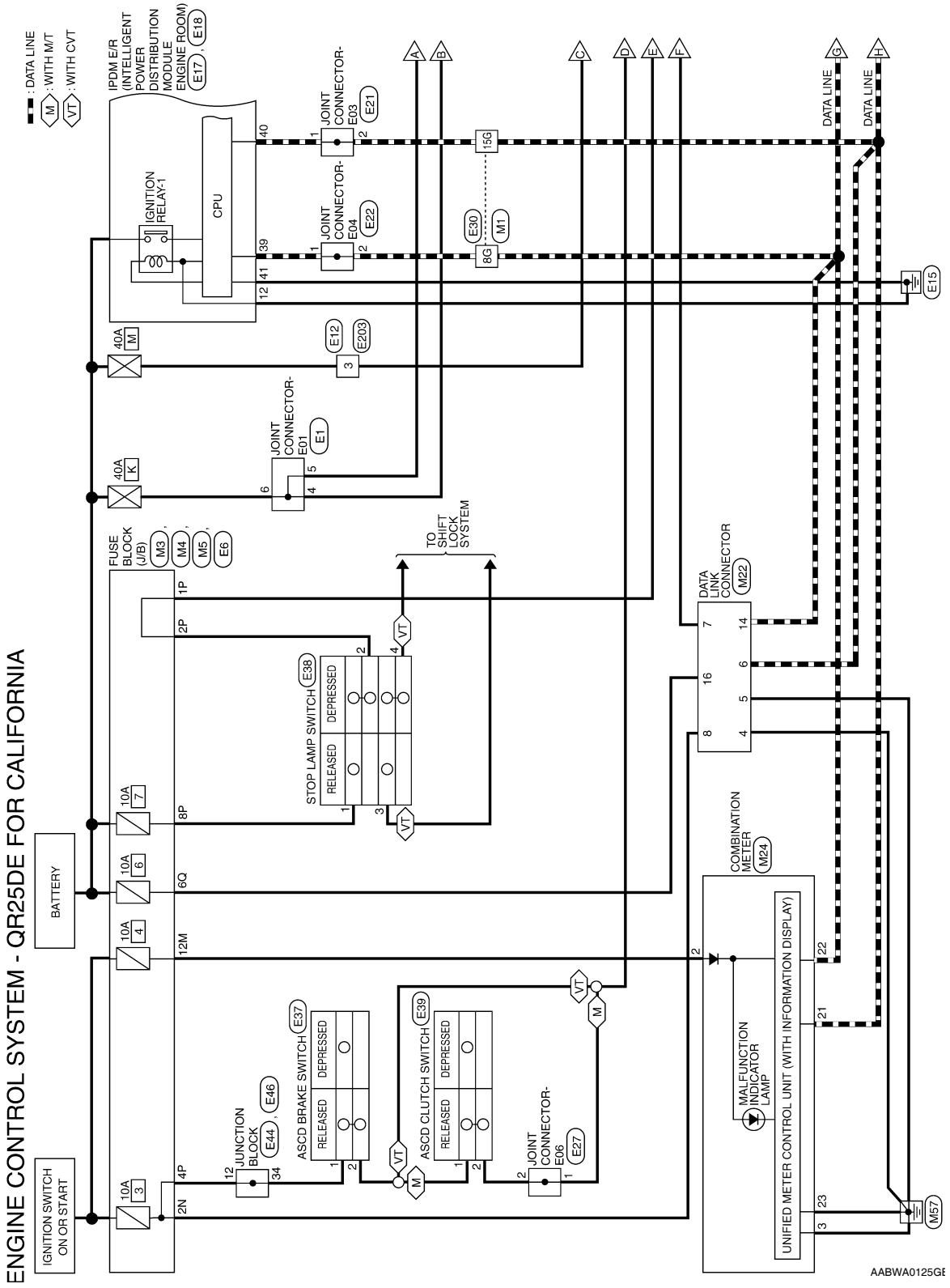

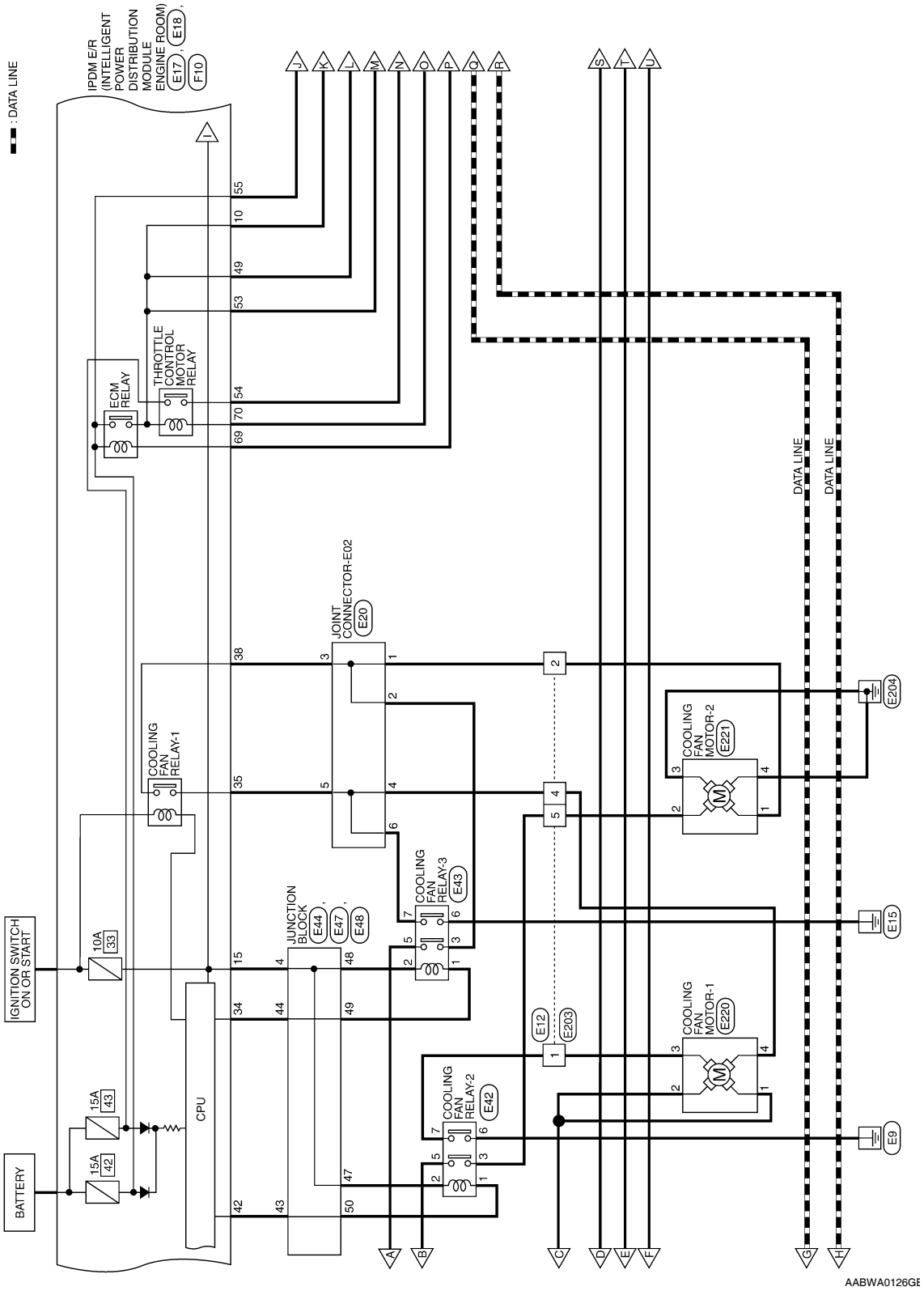
: DATA LINE
IPDM E/R (INTELLIGENT POWER DISTRIBUTION MODULE ENGINE ROOM)
E17, E18, F10
ECM RELAY
THROTTLE CONTROL MOTOR RELAY
JOINT CONNECTOR-E02
E20
COOLING FAN RELAY-1
COOLING FAN RELAY-3
E43
JUNCTION BLOCK
E44, E47, E48
COOLING FAN RELAY-2
E42
COOLING FAN MOTOR-2
E221
COOLING FAN MOTOR-1
E220
E12
E203
E204
E15
E9
DATA LINE
DATA LINE
IGNITION SWITCH ON OR START
10A
33
15A
43
15A
42
BATTERY
CPU
AABWA0126GB

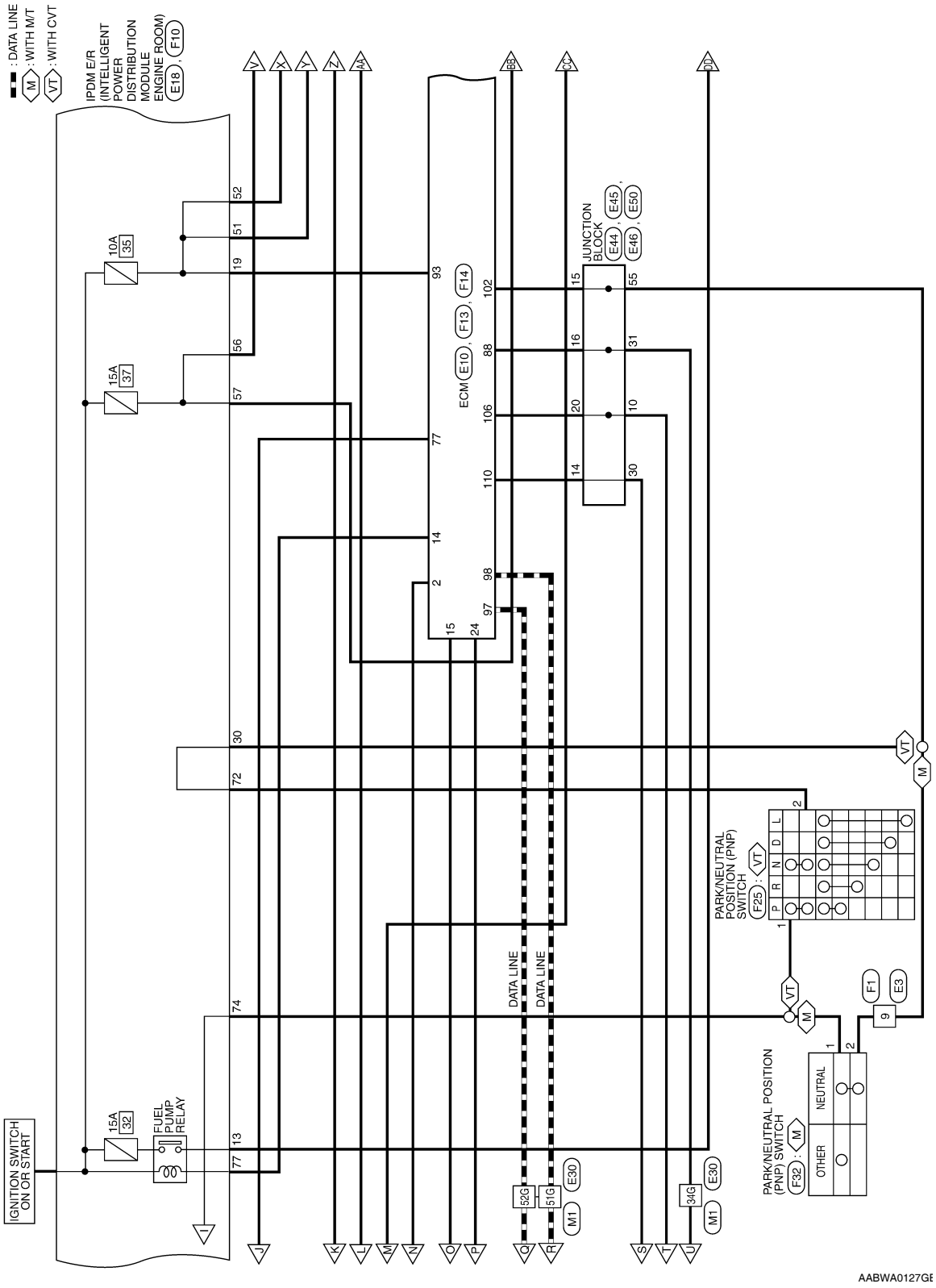
: DATA LINE
M : WITH M/T
VT : WITH CVT
IPDM E/R (INTELLIGENT POWER DISTRIBUTION MODULE ENGINE ROOM)
E18, F10
10A 35
15A 37
15A 32
FUEL PUMP RELAY
IGNITION SWITCH ON OR START
ECM E10, F13, F14
JUNCTION BLOCK
E44, E45, E46, E50
DATA LINE
DATA LINE
52G
51G
34G
M1
E30
PARK/NEUTRAL POSITION (PNP) SWITCH
F25 : VT
PARK/NEUTRAL POSITION (PNP) SWITCH
F32 : M
NEUTRAL
OTHER
F1
E3
9
AABWA0127GB

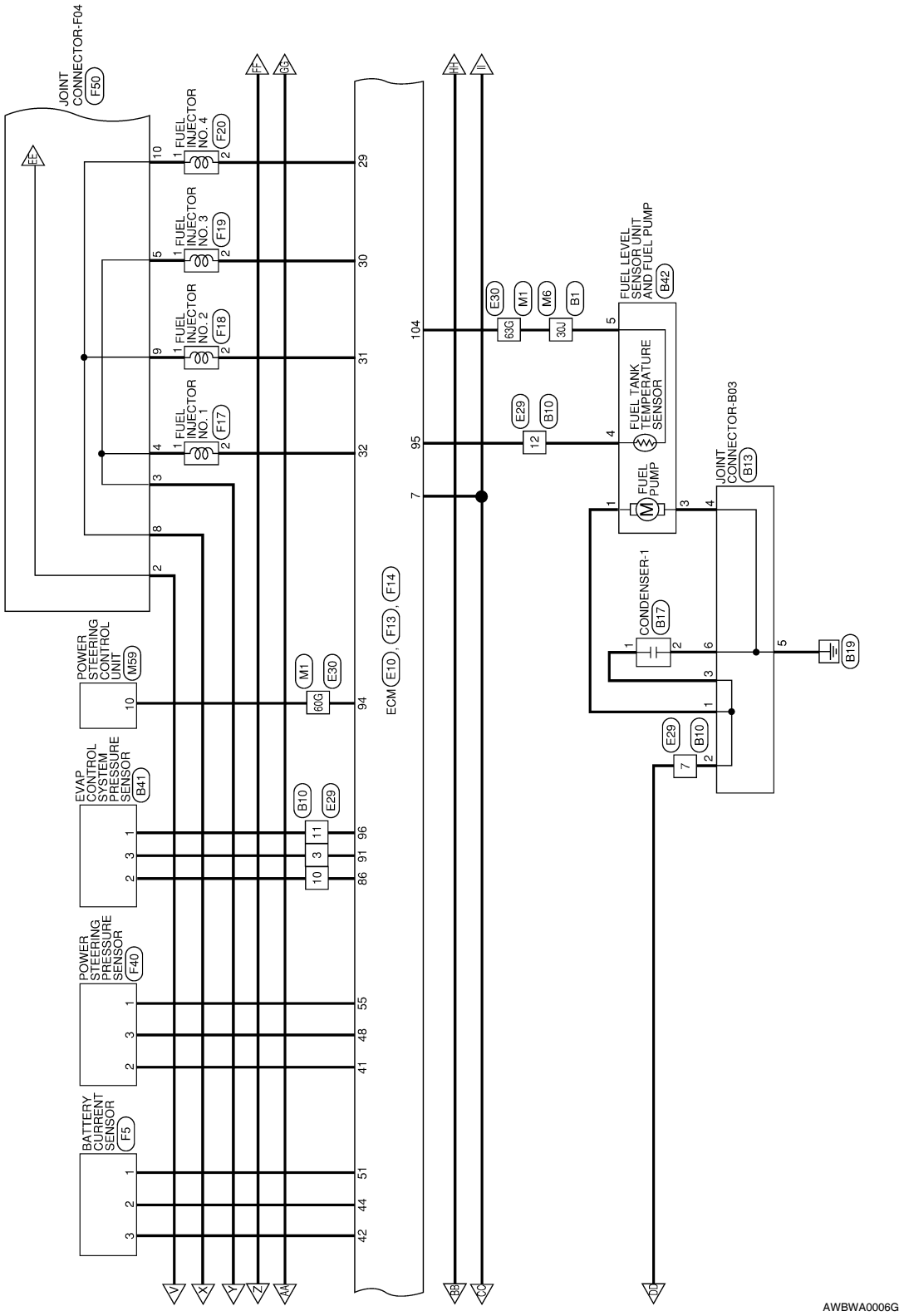
JOINT CONNECTOR-F04 (F50)
FUEL INJECTOR NO.4 (F20)
FUEL INJECTOR NO.3 (F19)
FUEL INJECTOR NO.2 (F18)
FUEL INJECTOR NO.1 (F17)
POWER STEERING CONTROL UNIT (M59)
EVAP CONTROL SYSTEM PRESSURE SENSOR (B41)
POWER STEERING PRESSURE SENSOR (F40)
BATTERY CURRENT SENSOR (F5)
ECM (E10), (F13), (F14)
FUEL LEVEL SENSOR UNIT AND FUEL PUMP (B42)
FUEL TANK TEMPERATURE SENSOR
FUEL PUMP
CONDENSER-1 (B17)
JOINT CONNECTOR-B03 (B13)
(B19)
AWBWA0006G

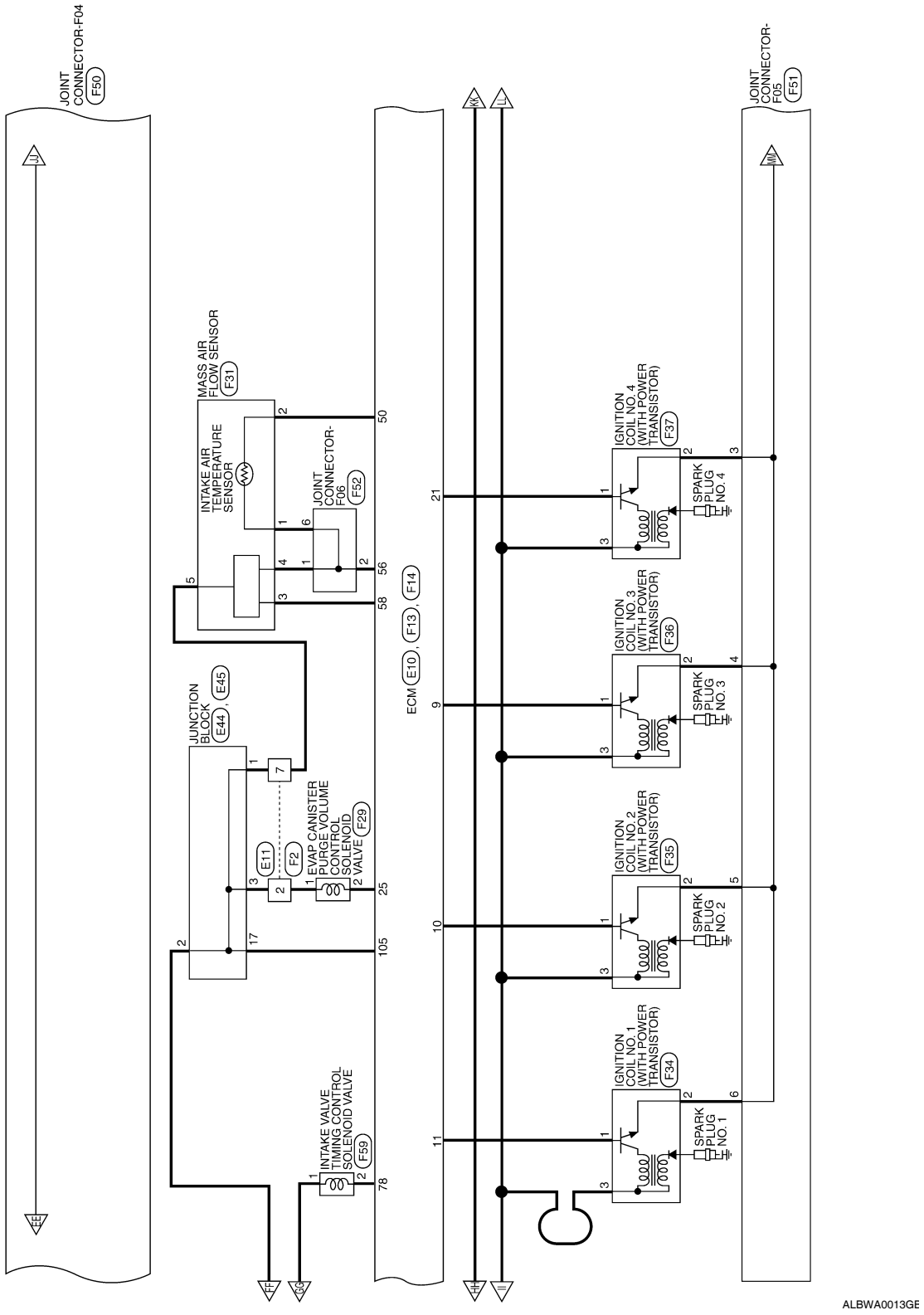
JOINT CONNECTOR-F04
F50
MASS AIR FLOW SENSOR
F31
INTAKE AIR TEMPERATURE SENSOR
JOINT CONNECTOR-F06
F52
JUNCTION BLOCK
E44, E45
E11
F2
EVAP CANISTER PURGE VOLUME CONTROL SOLENOID VALVE
F29
INTAKE VALVE TIMING CONTROL SOLENOID VALVE
F59
ECM
E10, F13, F14
50
56
58
25
105
78
21
9
10
11
IGNITION COIL NO. 4 (WITH POWER TRANSISTOR)
F37
SPARK PLUG NO. 4
IGNITION COIL NO. 3 (WITH POWER TRANSISTOR)
F36
SPARK PLUG NO. 3
IGNITION COIL NO. 2 (WITH POWER TRANSISTOR)
F35
SPARK PLUG NO. 2
IGNITION COIL NO. 1 (WITH POWER TRANSISTOR)
F34
SPARK PLUG NO. 1
JOINT CONNECTOR-F05
F51
ALBWA0013GE

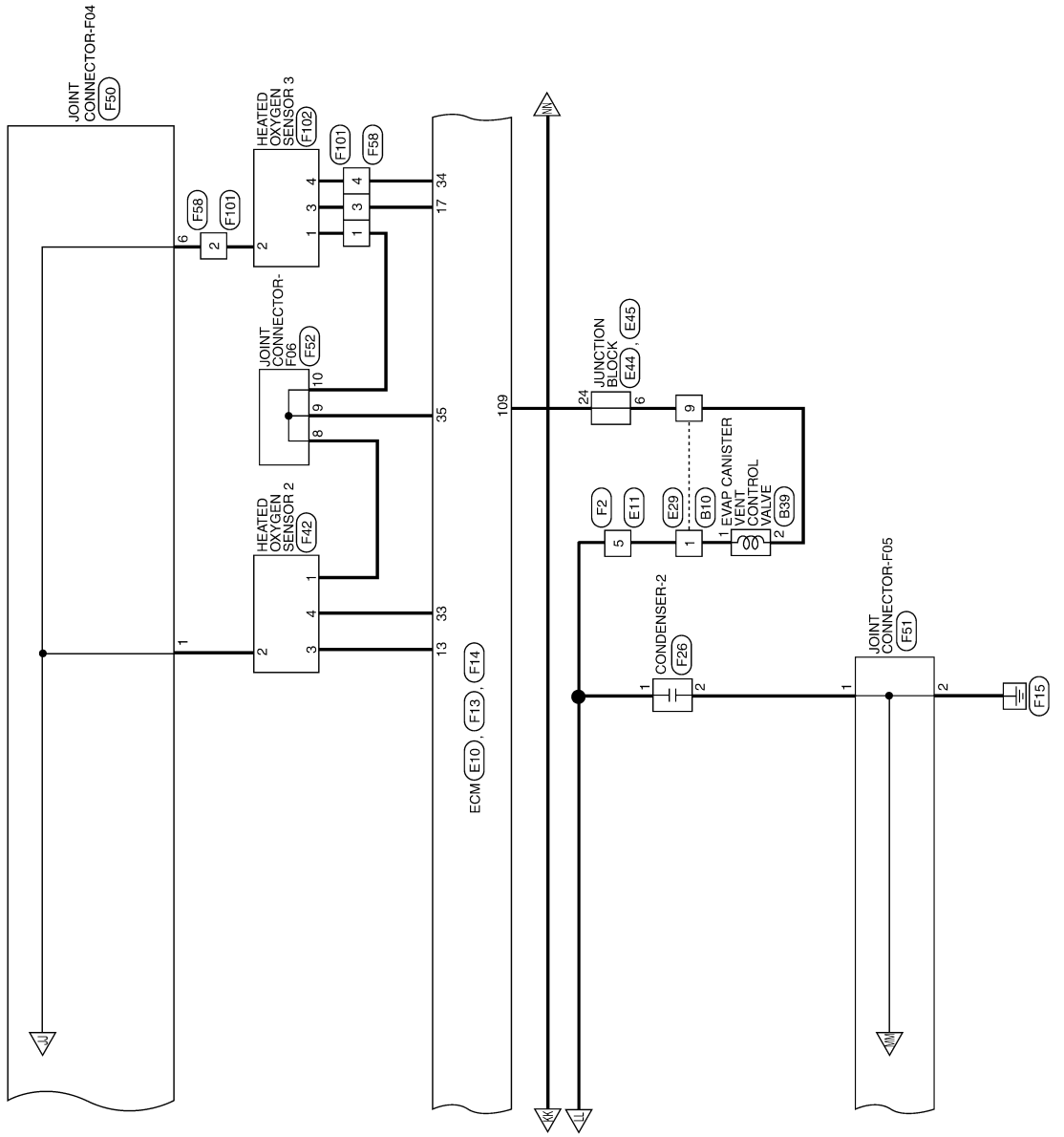

ALBWA0014GE

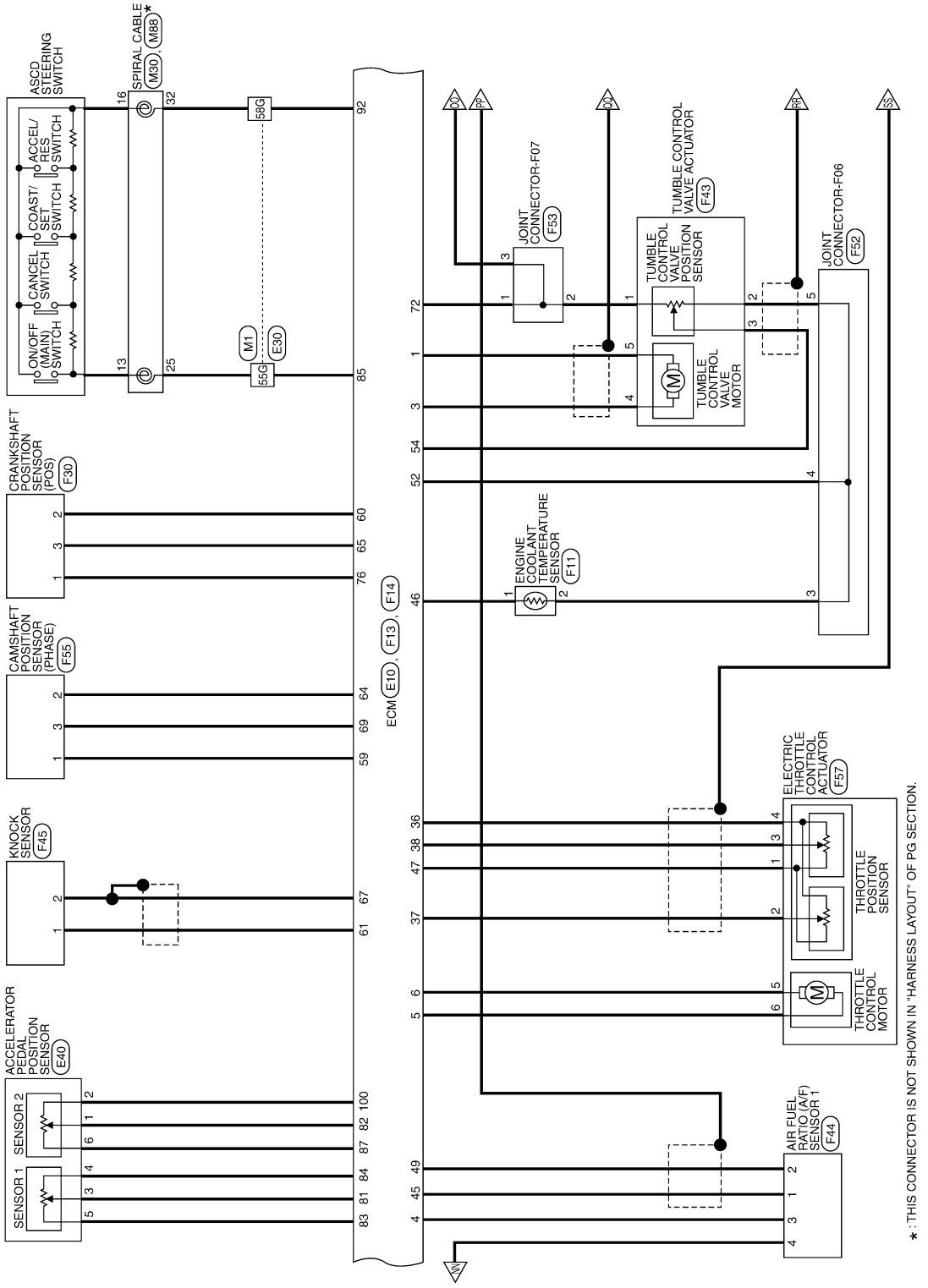
ASCD STEERING SWITCH
ON/OFF (MAIN) SWITCH
CANCEL SWITCH
COAST/ SET SWITCH
ACCEL/ RES SWITCH
SPIRAL CABLE (M30), (M88)*
58G
M1
55G
E30
CRANKSHAFT POSITION SENSOR (POS) (F30)
CAMSHAFT POSITION SENSOR (PHASE) (F55)
KNOCK SENSOR (F45)
ACCELERATOR PEDAL POSITION SENSOR (E40)
SENSOR 1
SENSOR 2
ECM (E10), (F13), (F14)
JOINT CONNECTOR-F07 (F53)
TUMBLE CONTROL VALVE POSITION SENSOR
TUMBLE CONTROL VALVE MOTOR
TUMBLE CONTROL VALVE ACTUATOR (F43)
JOINT CONNECTOR-F06 (F52)
ENGINE COOLANT TEMPERATURE SENSOR (F11)
ELECTRIC THROTTLE CONTROL ACTUATOR (F57)
THROTTLE POSITION SENSOR
THROTTLE CONTROL MOTOR
AIR FUEL RATIO (A/F) SENSOR 1 (F44)
CQ
PP
QX
RR
SS
VN
* : THIS CONNECTOR IS NOT SHOWN IN "HARNESS LAYOUT" OF PG SECTION.
AABWA0128GE

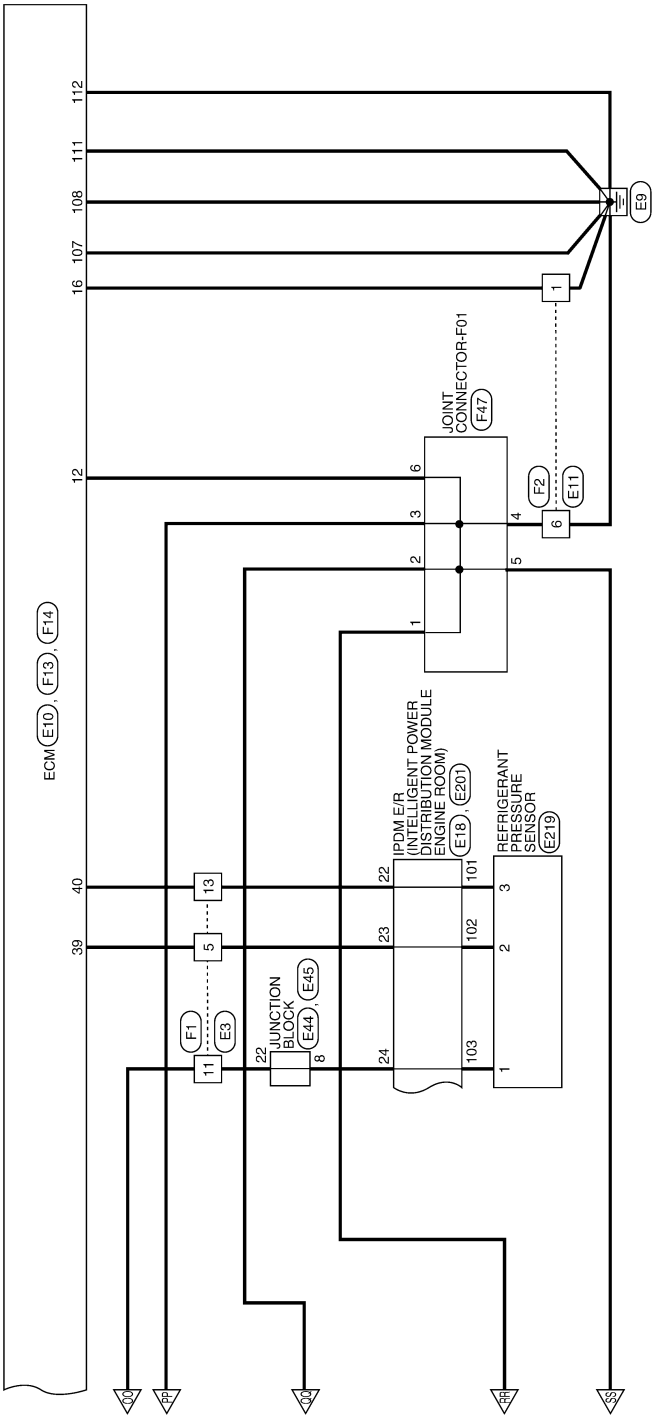

AABWA0129GE

ENGINE CONTROL SYSTEM CONNECTORS - QR25DE EXCEPT FOR CALIFORNIA

Connector No.	M1
Connector Name	WIRE TO WIRE
Connector Color	WHITE

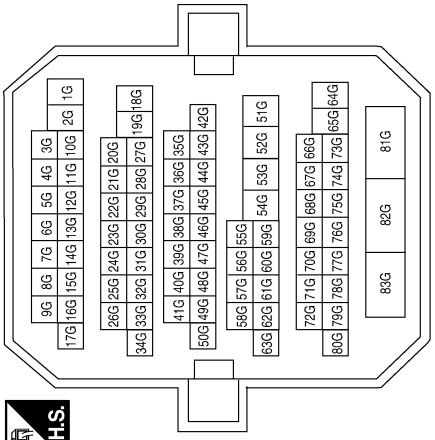

Terminal No.	Color of wire	Signal Name
8G	P	–
15G	L	–
34G	O	–
51G	L	–
52G	P	–
55G	G/Y	–
58G	R	–
60G	V/W	–
63G	B/W	–

Connector No.	M3
Connector Name	FUSE BLOCK (J/B)
Connector Color	WHITE

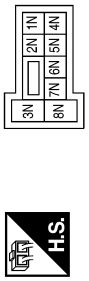

Terminal No.	Color of wire	Signal Name
2N	G	–

Connector No.	M4
Connector Name	FUSE BLOCK (J/B)
Connector Color	WHITE

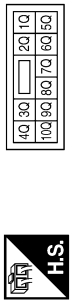

Terminal No.	Color of wire	Signal Name
6Q	Y/R	–

Connector No.	M5
Connector Name	FUSE BLOCK (J/B)
Connector Color	WHITE

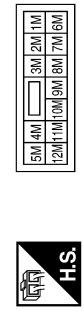

Terminal No.	Color of wire	Signal Name
12M	P	–

AABIA0111GB

Connector No.	M6
Connector Name	WIRE TO WIRE
Connector Color	WHITE

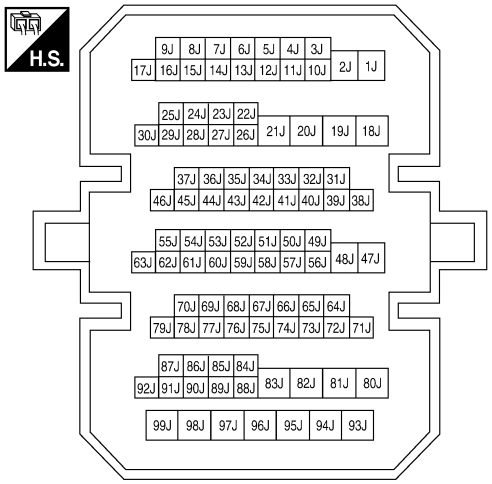

Terminal No.	Color of wire	Signal Name
30J	B/W	–

Connector No.	M22
Connector Name	DATA LINK CONNECTOR
Connector Color	WHITE

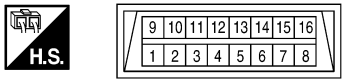

Terminal No.	Color of Wire	Signal Name
4	B	GND
5	B	GND
6	L	CAN-H
7	O	KLINE
8	G	IGN_SW
14	P	CAN-L
16	Y/R	BATT

Connector No.	M24
Connector Name	COMBINATION METER
Connector Color	WHITE

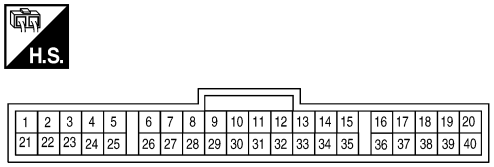

Terminal No.	Color of Wire	Signal Name
2	O	IGN
3	B	GND
21	L	CAN-H
22	P	CAN-L
23	B	GND

Connector No.	M30
Connector Name	SPIRAL CABLE
Connector Color	GRAY

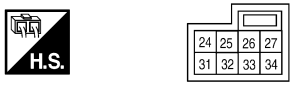

Terminal No.	Color of Wire	Signal Name
25	G/Y	ASCD_SW
32	R	ASCD_GND

AABIA0112GB

Connector No.	M59
Connector Name	POWER STEERING CONTROL UNIT
Connector Color	WHITE

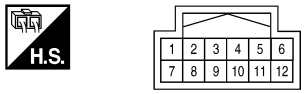

Terminal No.	Color of Wire	Signal Name
10	V/W	ENG_TACHO

Connector No.	M88
Connector Name	SPIRAL CABLE
Connector Color	GRAY

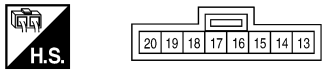

Terminal No.	Color of Wire	Signal Name
13	Y	ASCD_SW
16	B	ASCD_GND

Connector No.	E1
Connector Name	JOINT CONNECTOR-E01
Connector Color	WHITE

Terminal No.	Color of Wire	Signal Name
4	Y	–
5	Y	–
6	Y	–

Connector No.	E3
Connector Name	WIRE TO WIRE
Connector Color	WHITE

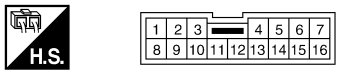

Terminal No.	Color of Wire	Signal Name
5	GR	–
9	BR	–
11	GR	–
13	SB	–

Connector No.	E6
Connector Name	FUSE BLOCK (J/B)
Connector Color	WHITE

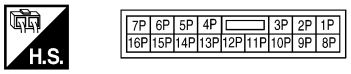

Terminal No.	Color of Wire	Signal Name
1P	SB	–
2P	LG	–
4P	G/R	–
8P	R	–

AABIA0113GB

Connector No.	E10
Connector Name	ECM
Connector Color	BLACK

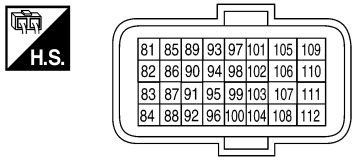

Terminal No.	Color of Wire	Signal Name
81	W	APS1
82	O	APS2
83	GR	AVCC1-APS1
84	B	GNDA-APS1
85	G/Y	ASCDSW
86	SB	FTPRES
87	BR	AVCC2-APS2
88	O	KLINE
89	–	–
90	–	–
91	V	AVCC2-FTPRES

Terminal No.	Color of Wire	Signal Name
92	R	GNDA-ASCDSW
93	Y	IGNSW
94	V/W	TACHO (CABIN)
95	Y	TF
96	GR	GNDA-FTPRES
97	P	CAN-L
98	L	CAN-H
99	–	–
100	G	GNDA-APS2
101	–	–
102	R/B	NEUT-H
103	–	–
104	P	GNDA-TF
105	V	VBR
106	SB	BRAKE
107	B	GND
108	B	GND
109	W	CDCV
110	G/B	BNCSW
111	B	GND
112	B	GND

Connector No.	E11
Connector Name	WIRE TO WIRE
Connector Color	WHITE

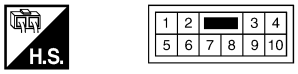

Terminal No.	Color of Wire	Signal Name
1	B	–
2	L	–
5	R	–
6	B	–
7	O	–

Connector No.	E12
Connector Name	WIRE TO WIRE
Connector Color	WHITE

Terminal No.	Color of Wire	Signal Name
1	R	–
2	GR	–
3	BR	–
4	P	–
5	L	–

AABIA0114GB

Connector No.	E17
Connector Name	IPDM E/R (INTELLIGENT POWER DISTRIBUTION MODULE ENGINE ROOM)
Connector Color	WHITE

Terminal No.	Color of Wire	Signal Name
39	P	CAN-L
40	L	CAN-H
41	B	GND (SIGNAL)
42	SB	MOTOR_FAN_RLY_MID

Connector No.	E18
Connector Name	IPDM E/R (INTELLIGENT POWER DISTRIBUTION MODULE ENGINE ROOM)
Connector Color	WHITE

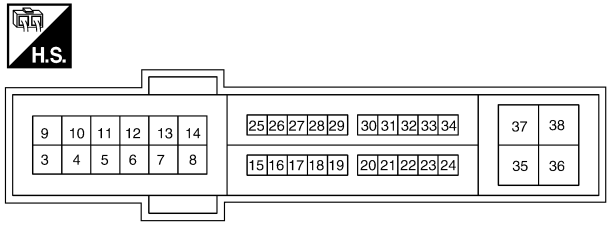

Terminal No.	Color of Wire	Signal Name
10	BR	ECM_VB
12	B	P-GND
13	SB	FUEL_PUMP
15	W	START_IG-E/R
19	Y	BCM_IGNSW
22	SB	PD_SENS_GND-E/R
23	GR	PD_SENS_SIG-E/R
24	BR/W	PD_SENSPWRE/R
30	BR	CLUTCH_I/L_SW
34	O	MOTOR_FAN_RLY_HI
35	P	MOTOR_FAN_LO
38	GR	F/L_MOTOR_FAN

Connector No.	E20
Connector Name	JOINT CONNECTOR-E02
Connector Color	WHITE

Terminal No.	Color of Wire	Signal Name
1	GR	–
2	GR	–
3	GR	–
4	P	–
5	P	–
6	P	–

Connector No.	E21
Connector Name	JOINT CONNECTOR-E03
Connector Color	WHITE

Terminal No.	Color of Wire	Signal Name
1	L	–
2	L	–

Connector No.	E22
Connector Name	JOINT CONNECTOR-E04
Connector Color	WHITE

Terminal No.	Color of Wire	Signal Name
1	P	–
2	P	–

AABIA0115GB

Connector No.	E27
Connector Name	JOINT CONNECTOR-E06
Connector Color	WHITE

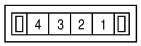

Terminal No.	Color of Wire	Signal Name
1	W	–
2	W	–

Connector No.	E29
Connector Name	WIRE TO WIRE
Connector Color	WHITE

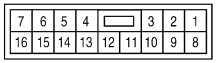

Terminal No.	Color of Wire	Signal Name
1	R	–
3	V	–
7	SB	–
9	W	–
10	SB	–
11	GR	–
12	Y	–

Connector No.	E30
Connector Name	WIRE TO WIRE
Connector Color	WHITE

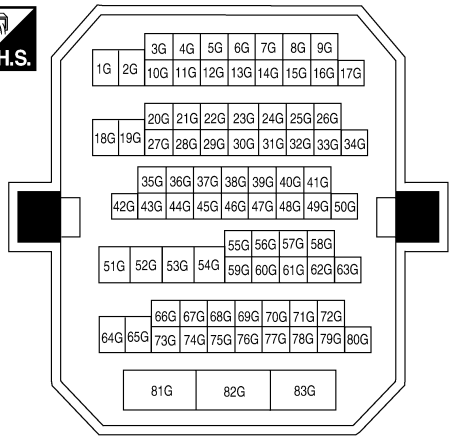

AABIA0116GB

Terminal No.	Color of Wire	Signal Name
8G	P	–
15G	L	–
34G	O	–
51G	L	–
52G	P	–
55G	Y	–
58G	BR	–
60G	V/W	–
63G	P	–

Connector No.	E37
Connector Name	ASCD BRAKE SWITCH
Connector Color	BROWN

Terminal No.	Color of Wire	Signal Name
1	L	–
2	W	– (WITH CVT)
2	BR	– (WITH M/T)

Connector No.	E38
Connector Name	STOP LAMP SWITCH (WITH CVT)
Connector Color	WHITE

Terminal No.	Color of Wire	Signal Name
1	R	–
2	LG	–
3	G/R	–
4	R/W	–

Connector No.	E38
Connector Name	STOP LAMP SWITCH (WITH M/T)
Connector Color	BLACK

Terminal No.	Color of Wire	Signal Name
1	R	–
2	LG	–

Connector No.	E39
Connector Name	ASCD CLUTCH SWITCH
Connector Color	BROWN

Terminal No.	Color of Wire	Signal Name
1	BR	–
2	W	–

Connector No.	E40
Connector Name	ACCELERATOR PEDAL POSITION SENSOR
Connector Color	BLACK

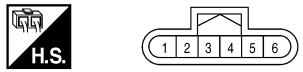

Terminal No.	Color of Wire	Signal Name
1	O	APS2
2	G	GND-A2
3	W	APS1
4	B	GND-A1
5	GR	AVCC1
6	BR	AVCC2

Connector No.	E42
Connector Name	COOLING FAN RELAY-2
Connector Color	BROWN

Terminal No.	Color of Wire	Signal Name
1	SB	–
2	G	–
3	L	–
5	Y	–
6	B	–
7	R	–

Connector No.	E43
Connector Name	COOLING FAN RELAY-3
Connector Color	BROWN

Terminal No.	Color of Wire	Signal Name
1	O	–
2	Y	–
3	GR	–
5	Y	–
6	B	–
7	P	–

AABIA0117GB

Connector No.	E44
Connector Name	JUNCTION BLOCK
Connector Color	BROWN

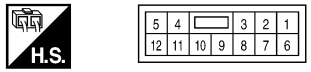

Terminal No.	Color of Wire	Signal Name
1	O	–
2	BR	–
3	L	–
4	W	–
6	W	–
8	G	–
10	SB	–
12	G/R	–

Connector No.	E45
Connector Name	JUNCTION BLOCK
Connector Color	WHITE

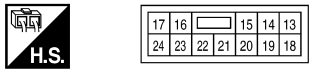

Terminal No.	Color of Wire	Signal Name
14	G	–
15	R	–
16	O	–
17	V	–
20	SB	–
22	GR	–
24	W	–

Connector No.	E46
Connector Name	JUNCTION BLOCK
Connector Color	WHITE

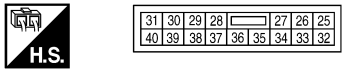

Terminal No.	Color of Wire	Signal Name
30	W	–
31	O	–
34	L	–

Connector No.	E47
Connector Name	JUNCTION BLOCK
Connector Color	WHITE

Terminal No.	Color of Wire	Signal Name
43	SB	–
44	O	–

Connector No.	E48
Connector Name	JUNCTION BLOCK
Connector Color	WHITE

Terminal No.	Color of Wire	Signal Name
47	G	–
48	Y	–
49	O	–
50	SB	–

Connector No.	E50
Connector Name	JUNCTION BLOCK
Connector Color	WHITE

Terminal No.	Color of Wire	Signal Name
55	BR	–

AABIA0118GB

Connector No.	E201
Connector Name	IPDM E/R (INTELLIGENT POWER DISTRIBUTION MODULE ENGINE ROOM)
Connector Color	WHITE

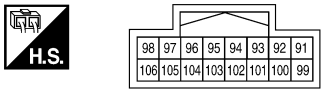

Terminal No.	Color of Wire	Signal Name
101	O/L	PD_SENS_GND
102	R/B	PD_SENS_SIG
103	P	PD_SEND_PWR

Connector No.	E203
Connector Name	WIRE TO WIRE
Connector Color	WHITE

Terminal No.	Color of Wire	Signal Name
1	R	–
2	R/W	–
3	R/Y	–
4	L/B	–
5	L	–

Connector No.	E219
Connector Name	REFRIGERANT PRESSURE SENSOR
Connector Color	BLACK

Terminal No.	Color of Wire	Signal Name
1	P	AVCC2
2	R	SIGNAL
3	W	GND

Connector No.	E220
Connector Name	COOLING FAN MOTOR-1
Connector Color	GRAY

Terminal No.	Color of Wire	Signal Name
1	R/Y	LO +
2	R/Y	HI +
3	R	HI -
4	L/B	LO -

Connector No.	E221
Connector Name	COOLING FAN MOTOR-2
Connector Color	GRAY

Terminal No.	Color of Wire	Signal Name
1	R/W	LO +
2	L	HI +
3	B	HI -
4	B	LO -

Connector No.	F1
Connector Name	WIRE TO WIRE
Connector Color	WHITE

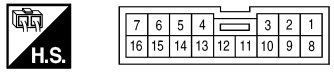

Terminal No.	Color of Wire	Signal Name
5	R	–
9	R/B	–
11	LG/B	–
13	G	–

AABIA0119GB

Connector No.	F2
Connector Name	WIRE TO WIRE
Connector Color	WHITE

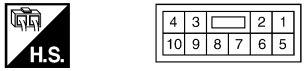

Terminal No.	Color of Wire	Signal Name
1	B	–
2	R/W	–
5	R/B	–
6	B	–
7	R/G	–

Connector No.	F5
Connector Name	BATTERY CURRENT SENSOR
Connector Color	BLACK

Terminal No.	Color of Wire	Signal Name
1	O/L	AVCC1
2	R/B	GND
3	G/R	SIGNAL

Connector No.	F10
Connector Name	IPDM E/R (INTELLIGENT POWER DISTRIBUTION MODULE ENGINE ROOM)
Connector Color	WHITE

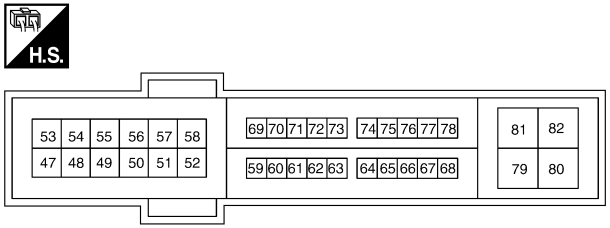

AABIA0120GB

Terminal No.	Color of wire	Signal Name
47	–	–
48	–	–
49	B/R	ENG_SOL
50	–	–
51	LG	INJECTOR_#1
52	Y/G	INJECTOR_#2
53	R/B	IGN_COIL
54	G/W	ETC
55	W/L	ECM_BAT
56	R/Y	O2_SENS_#1
57	O	O2_SENS_#2
58	–	–
59	–	–
60	–	–
61	–	–
62	–	–
63	–	–
64	–	–

Terminal No.	Color of wire	Signal Name
65	–	–
66	–	–
67	–	–
68	–	–
69	W/B	SSOFF
70	O	MOTRLY
71	–	–
72	R/B	NPSW
73	–	–
74	Y	START_IG_EGI
75	–	–
76	–	–
77	BR	FPR
78	–	–
79	–	–
80	–	–
81	–	–
82	–	–

Connector No.	F11
Connector Name	ENGINE COOLANT TEMPERATURE SENSOR
Connector Color	GRAY

Terminal No.	Color of Wire	Signal Name
1	Y	TW
2	B/G	GND

Connector No.	F13
Connector Name	ECM
Connector Color	BROWN

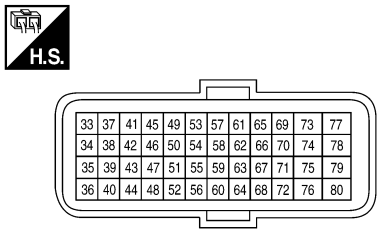

Terminal No.	Color of wire	Signal Name
33	LG	OSR1
34	W/L	3RDO2S
35	B/Y	GNDA-O2SR2
36	B	GNDA-TPS-B1
37	W	TPS1-B1
38	R	TPS2-B1
39	R	PDPRES
40	G	GNDA-PDPRES
41	O/B	PSPRES
42	G/R	CURSEN
43	–	–
44	R/B	GNDA-CURSEN
45	B/W	AF+1
46	Y	TW
47	G	AVCC1-TPS-B1
48	B/P	GNDA-PSPRES
49	L	AF-1
50	L/Y	TA1
51	O/L	AVCC1-CURSEN
52	LG	GNDA-TW

Terminal No.	Color of wire	Signal Name
53	–	–
54	V	SCVPOS
55	R/L	AVCC1-PSPRES
56	G/B	GNDA-TA1
57	–	–
58	O	QA1+
59	G/W	AVCC1-PHASE#1
60	Y/B	GND-POS
61	W	KNK1
62	–	–
63	–	–
64	B/R	GND-PHASE#1
65	W	POS
66	–	–
67	–	GNDA-KNK 1
68	–	–
69	W/R	PHASE#1
70	–	–
71	–	–
72	LG/B	AVCC2-PDPRES
73	–	–
74	–	–
75	–	–
76	R/G	AVCC2-POS
77	W/L	BATT
78	R/L	CVTC#1
79	–	–
80	–	–

AABIA0121GB

Connector No.	F14
Connector Name	ECM
Connector Color	GRAY

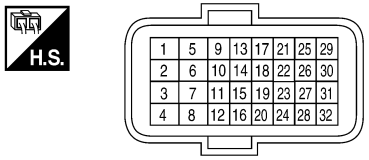

Terminal No.	Color of wire	Signal Name
1	L/G	SCV2
2	G/W	VMOT-B1
3	L/R	SCV1
4	BR/Y	AFH1
5	L	MOTOR1-B1
6	P	MOTOR2-B1
7	R	VSCV
8	–	–
9	L/B	IGN #3
10	G/R	IGN #2
11	Y/R	IGN #1
12	B	GND
13	R	O2HR1
14	B/R	FRR
15	O	MOTRLY-B1
16	B	GND

Terminal No.	Color of wire	Signal Name
17	L	SRDO2H
18	–	–
19	–	–
20	–	–
21	G/Y	IGN #4
22	–	–
23	–	–
24	W/B	SSOF
25	P/L	EVAP
26	–	–
27	–	–
28	–	–
29	LG/R	INJ #4
30	R/Y	INJ #3
31	R/W	INJ #2
32	R/B	INJ #1

Connector No.	F17
Connector Name	FUEL INJECTOR NO. 1
Connector Color	GRAY

Terminal No.	Color of wire	Signal Name
1	LG	IGN
2	R/B	C/U

Connector No.	F18
Connector Name	FUEL INJECTOR NO. 2
Connector Color	GRAY

Terminal No.	Color of wire	Signal Name
1	Y/G	IGN
2	R/W	C/U

Connector No.	F19
Connector Name	FUEL INJECTOR NO. 3
Connector Color	GRAY

Terminal No.	Color of wire	Signal Name
1	LG	IGN
2	R/Y	C/U

AABIA0122GB

Connector No.	F20
Connector Name	FUEL INJECTOR NO. 4
Connector Color	GRAY

H.S.

Terminal No.	Color of wire	Signal Name
1	Y/G	IGN
2	LG/R	C/U

Connector No.	F25
Connector Name	PARK/NEUTRAL POSITION (PNP) SWITCH
Connector Color	BLACK

H.S.

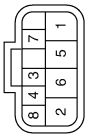

Terminal No.	Color of wire	Signal Name
1	Y	–
2	R/B	–

Connector No.	F26
Connector Name	CONDENSER-2
Connector Color	GRAY

H.S.

Terminal No.	Color of wire	Signal Name
1	R/G	VBR
2	B	GND

Connector No.	F29
Connector Name	EVAP CANISTER PURGE VOLUME CONTROL SOLENOID VALVE
Connector Color	GRAY

H.S.

Terminal No.	Color of wire	Signal Name
1	R/W	VBR
2	P/L	C/U

Connector No.	F30
Connector Name	CRANKSHAFT POSITION SENSOR (POS)
Connector Color	BLACK

H.S.

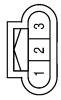

Terminal No.	Color of wire	Signal Name
1	R/G	AVCC2
2	Y/B	GND
3	W	POS

Connector No.	F31
Connector Name	MASS AIR FLOW SENSOR
Connector Color	BLACK

H.S.

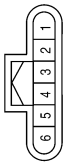

Terminal No.	Color of wire	Signal Name
1	G/B	TA-
2	L/Y	TA+
3	O	QA+
4	G/B	GND
5	R/G	VB

AABIA0123GB

Connector No.	F32
Connector Name	PARK/NEUTRAL POSITION (PNP) SWITCH
Connector Color	WHITE

Terminal No.	Color of wire	Signal Name
1	Y	–
2	R/B	–

Connector No.	F34
Connector Name	IGNITION COIL NO. 1 (WITH POWER TRANSISTOR)
Connector Color	GRAY

Terminal No.	Color of wire	Signal Name
1	Y/R	SIGNAL
2	B	GND
3	R/W	VBR

Connector No.	F35
Connector Name	IGNITION COIL NO. 2 (WITH POWER TRANSISTOR)
Connector Color	GRAY

Terminal No.	Color of wire	Signal Name
1	G/R	SIGNAL
2	B	GND
3	R/W	VBR

Connector No.	F36
Connector Name	IGNITION COIL NO. 3 (WITH POWER TRANSISTOR)
Connector Color	GRAY

Terminal No.	Color of Wire	Signal Name
1	L/B	SIGNAL
2	B	GND
3	R/W	VBR

Connector No.	F37
Connector Name	IGNITION COIL NO. 4 (WITH POWER TRANSISTOR)
Connector Color	GRAY

Terminal No.	Color of Wire	Signal Name
1	G/Y	SIGNAL
2	B	GND
3	R/W	VBR

Connector No.	F40
Connector Name	POWER STEERING PRESSURE SENSOR
Connector Color	BLACK

Terminal No.	Color of Wire	Signal Name
1	R/L	AVCC1
2	O/B	OUTPUT
3	B/P	GND

AABIA0124GB

Connector No.	F42
Connector Name	HEATED OXYGEN SENSOR 2
Connector Color	BLACK

Terminal No.	Color of Wire	Signal Name
1	B/Y	SENSOR(-)
2	R/Y	HEATER(+)
3	R	HEATER(-)
4	LG	SENSOR(+)

Connector No.	F43
Connector Name	TUMBLE CONTROL VALVE ACTUATOR
Connector Color	GRAY

Terminal No.	Color of Wire	Signal Name
1	LG/B	VDD
2	LG	GND
3	V	OUT
4	L/R	OPEN
5	L/G	CLOSE

Connector No.	F44
Connector Name	AIR FUEL RATIO (A/F) SENSOR 1
Connector Color	GRAY

Terminal No.	Color of Wire	Signal Name
1	B/W	AF(+)
2	L	AF(-)
3	BR/Y	HEATER(-)
4	O	HEATER(+)

Connector No.	F45
Connector Name	KNOCK SENSOR
Connector Color	GRAY

Terminal No.	Color of Wire	Signal Name
1	W	KNK
2	–	GND

Connector No.	F47
Connector Name	JOINT CONNECTOR-F01
Connector Color	BLACK

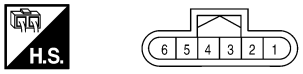

Terminal No.	Color of Wire	Signal Name
1	SHIELD	–
2	SHIELD	–
3	SHIELD	–
4	B	–
5	SHIELD	–
6	B	–

Connector No.	F50
Connector Name	JOINT CONNECTOR-F04
Connector Color	BLACK

Terminal No.	Color of Wire	Signal Name
1	R/Y	–
2	R/Y	–
3	LG	–
4	LG	–
5	LG	–
6	R/Y	–
8	Y/G	–
9	Y/G	–
10	Y/G	–

AABIA0125GB

Connector No.	F51
Connector Name	JOINT CONNECTOR-F05
Connector Color	BLACK

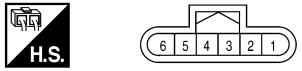

Terminal No.	Color of Wire	Signal Name
1	B	–
2	B	–
3	B	–
4	B	–
5	B	–
6	B	–

Connector No.	F52
Connector Name	JOINT CONNECTOR-F06
Connector Color	BLACK

Terminal No.	Color of Wire	Signal Name
1	G/B	–
2	G/B	–
3	LG	–
4	LG	–
5	LG	–
6	G/B	–
8	B/Y	–
9	B/Y	–
10	B/L	–

Connector No.	F53
Connector Name	JOINT CONNECTOR-F07
Connector Color	BLACK

Terminal No.	Color of Wire	Signal Name
1	LG/B	–
2	LG/B	–
3	LG/B	–

Connector No.	F55
Connector Name	CAMSHAFT POSITION SENSOR (PHASE)
Connector Color	BLACK

Terminal No.	Color of wire	Signal Name
1	G/W	AVCC1
2	B/R	GND
3	W/R	PHASE

Connector No.	F57
Connector Name	ELECTRIC THROTTLE CONTROL ACTUATOR
Connector Color	BLACK

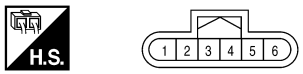

Terminal No.	Color of wire	Signal Name
1	G	INPUT
2	W	OUTPUT1
3	R	OUTPUT2
4	B	GND
5	P	MOTOR2
6	L	MOTOR1

Connector No.	F58
Connector Name	WIRE TO WIRE
Connector Color	BLACK

Terminal No.	Color of wire	Signal Name
1	B	–
2	R/Y	–
3	L	–
4	W	–

AABIA0126GB

Connector No.	F59
Connector Name	INTAKE VALVE TIMING CONTROL SOLENOID VALVE
Connector Color	GREEN

H.S.

Terminal No.	Color of wire	Signal Name
1	B/R	VB
2	R/L	C/U

Connector No.	F101
Connector Name	WIRE TO WIRE
Connector Color	BLACK

H.S.

Terminal No.	Color of wire	Signal Name
1	B	–
2	R/Y	–
3	L	–
4	W	–

Connector No.	F102
Connector Name	HEATED OXYGEN SENSOR 3
Connector Color	GRAY

H.S.

Terminal No.	Color of wire	Signal Name
1	B	SENSOR(-)
2	R/Y	HEATER(+)
3	L	HEATER(-)
4	W	SENSOR(+)

Connector No.	B1
Connector Name	WIRE TO WIRE
Connector Color	WHITE

H.S.

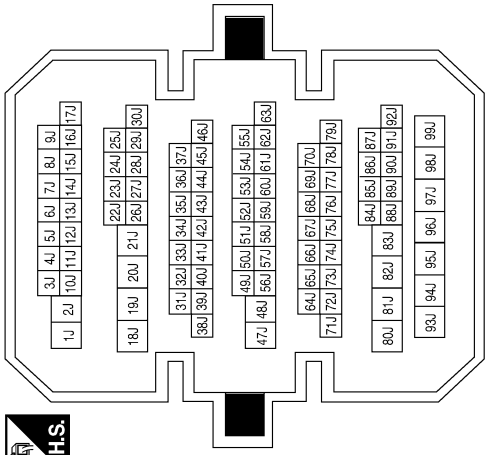

Terminal No.	Color of Wire	Signal Name
30J	B/W	–

Connector No.	B10
Connector Name	WIRE TO WIRE
Connector Color	WHITE

H.S.

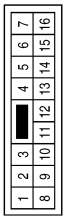

Terminal No.	Color of Wire	Signal Name
1	R	–
3	BR/L	–
7	SB	–
9	LG/W	–
10	LG	–
11	V	–
12	R/Y	–

AABIA0127GB

Connector No.	B13
Connector Name	JOINT CONNECTOR-B03
Connector Color	WHITE

H.S.

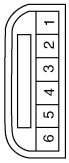

Terminal No.	Color of Wire	Signal Name
1	SB	–
2	SB	–
3	W	–
4	B/Y	–
5	B/Y	–
6	B/Y	–

Connector No.	B17
Connector Name	CONDENSER-1
Connector Color	WHITE

H.S.

Terminal No.	Color of Wire	Signal Name
1	W	(+)
2	B/Y	(-)

Connector No.	B39
Connector Name	EVAP CANISTER VENT CONTROL VALVE
Connector Color	BLACK

H.S.

Terminal No.	Color of Wire	Signal Name
1	R	BATT
2	LG/W	C/U

Connector No.	B41
Connector Name	EVAP CONTROL SYSTEM PRESSURE SENSOR
Connector Color	GRAY

H.S.

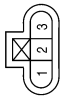

Terminal No.	Color of Wire	Signal Name
1	V	GND
2	LG	SIGNAL
3	BR/L	AVCC2

Connector No.	B42
Connector Name	FUEL LEVEL SENSOR UNIT AND FUEL PUMP
Connector Color	GRAY

H.S.

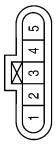

Terminal No.	Color of Wire	Signal Name
1	S/B	IGN
3	B/Y	GND
4	R/Y	TEMP_SENS
5	B/W	SENSOR -

ABBIA0183GB

Fail Safe

INFOID:0000000004349552

NON DTC RELATED ITEM

Engine operating condition in fail-safe mode	Detected items	Remarks	Reference page
Engine speed will not rise more than 2,500 rpm due to the fuel cut	Malfunction indicator lamp circuit	When there is an open circuit on MIL circuit, the ECM cannot warn the driver by lighting up MIL when there is malfunction on engine control system. Therefore, when electrical controlled throttle and part of ECM related diagnoses are continuously detected as NG for 5 trips, ECM warns the driver that engine control system malfunctions and MIL circuit is open by means of operating fail-safe function. The fail-safe function also operates when above diagnoses except MIL circuit are detected and demands the driver to repair the malfunction.	EC-475

DTC RELATED ITEM

DTC No.	Detected items	Engine operating condition in fail-safe mode	
P0011	Intake valve timing control	The signal is not energized to the intake valve timing control solenoid valve and the valve control does not function.	
P0102 P0103	Mass air flow sensor circuit	Engine speed will not rise more than 2,400 rpm due to the fuel cut.	
P0117 P0118	Engine coolant temperature sensor circuit	Engine coolant temperature will be determined by ECM based on the following condition. CONSULT-III displays the engine coolant temperature decided by ECM.	
		Condition	Engine coolant temperature decided (CONSULT-III display)
		Just as ignition switch is turned ON or START	40°C (104°F)
		More than approx. 4 minutes after engine starting	80°C (176°F)
		Except as shown above	40 - 80°C (104 - 176°F) (Depends on the time)
		When the fail-safe system for engine coolant temperature sensor is activated, the cooling fan operates while engine is running.	
P0122 P0123 P0222 P0223 P2132 P2133 P2135	Throttle position sensor	The ECM controls the electric throttle control actuator in regulating the throttle opening in order for the idle position to be within +10 degrees. The ECM regulates the opening speed of the throttle valve to be slower than the normal condition. So, the acceleration will be poor.	
P0500	Vehicle speed sensor	The cooling fan operates (High) while engine is running.	
P0643	Sensor power supply	ECM stops the electric throttle control actuator control, throttle valve is maintained at a fixed opening (approx. 5 degrees) by the return spring.	
P0605	ECM	(When ECM calculation function is malfunctioning:) ECM stops the electric throttle control actuator control, throttle valve is maintained at a fixed opening (approx. 5 degrees) by the return spring. ECM deactivates ASCD operation.	
P1805	Brake switch	ECM controls the electric throttle control actuator by regulating the throttle opening to a small range. Therefore, acceleration will be poor.	
		Vehicle condition	Driving condition
		When engine is idling	Normal
		When accelerating	Poor acceleration
P2100 P2103	Throttle control motor relay	ECM stops the electric throttle control actuator control, throttle valve is maintained at a fixed opening (approx. 5 degrees) by the return spring.	
P2101	Electric throttle control function	ECM stops the electric throttle control actuator control, throttle valve is maintained at a fixed opening (approx. 5 degrees) by the return spring.	

DTC No.	Detected items	Engine operating condition in fail-safe mode
P2118	Throttle control motor	ECM stops the electric throttle control actuator control, throttle valve is maintained at a fixed opening (approx. 5 degrees) by the return spring.
P2119	Electric throttle control actuator	(When electric throttle control actuator does not function properly due to the return spring malfunction:) ECM controls the electric throttle actuator by regulating the throttle opening around the idle position. The engine speed will not rise more than 2,000 rpm.
		(When throttle valve opening angle in fail-safe mode is not in specified range:) ECM controls the electric throttle control actuator by regulating the throttle opening to 20 degrees or less.
		(When ECM detects the throttle valve is stuck open:) While the vehicle is driving, it slows down gradually by fuel cut. After the vehicle stops, the engine stalls. The engine can restart in N or P (CVT), Neutral (M/T) position, and engine speed will not exceed 1,000 rpm or more.
P2122 P2123 P2127 P2128 P2138	Accelerator pedal position sensor	The ECM controls the electric throttle control actuator in regulating the throttle opening in order for the idle position to be within +10 degrees. The ECM regulates the opening speed of the throttle valve to be slower than the normal condition. So, the acceleration will be poor.

DTC Inspection Priority Chart

INFOID:0000000004349553

If some DTCs are displayed at the same time, perform inspections one by one based on the following priority chart.

Priority	Detected items (DTC)
1	• U0101 U0140 U1001 CAN communication line • P0101 P0102 P0103 Mass air flow sensor • P0112 P0113 P0127 Intake air temperature sensor • P0116 P0117 P0118 P0125 Engine coolant temperature sensor • P0122 P0123 P0222 P0223 P1225 P1226 P2135 Throttle position sensor • P0128 Thermostat function • P0181 P0182 P0183 Fuel tank temperature sensor • P0327 P0328 Knock sensor • P0335 Crankshaft position sensor (POS) • P0340 Camshaft position sensor (PHASE) • P0460 P0461 P0462 P0463 Fuel level sensor • P0500 Vehicle speed sensor • P0605 P0607 ECM • P0643 Sensor power supply • P0705 P0850 Park/neutral position (PNP) switch • P1550 P1551 P1552 P1553 P1554 Battery current sensor • P1610 - P1615 NATS • P2122 P2123 P2127 P2128 P2138 Accelerator pedal position sensor
2	• P0031 P0032 Air fuel ratio (A/F) sensor 1 heater • P0037 P0038 Heated oxygen sensor 2 heater • P0043 P0044 Heated oxygen sensor 3 heater • P0075 Intake valve timing control solenoid valve • P0130 P0131 P0132 P0133 P2A00 Air fuel ratio (A/F) sensor 1 • P0137 P0138 P0139 Heated oxygen sensor 2 • P0143 P0144 P0145 P0146 Heated oxygen sensor 3 • P0441 EVAP control system purge flow monitoring • P0443 P0444 P0445 EVAP canister purge volume control solenoid valve • P0447 P0448 EVAP canister vent control valve • P0451 P0452 P0453 EVAP control system pressure sensor • P0550 Power steering pressure sensor • P0603 ECM power supply • P0710 P0715 P0720 P0740 P0744 P0745 P0746 P0776 P0778 P0840 P0845 P1740 P1777 P1778 CVT related sensors, solenoid valves and switches • P1217 Engine over temperature (OVERHEAT) • P1805 Brake switch • P2004 Tumble control valve motor • P2014 Tumble control valve position sensor • P2100 P2103 Throttle control motor relay • P2101 Electric throttle control function • P2118 Throttle control motor
3	• P0011 Intake valve timing control • P0171 P0172 Fuel injection system function • P0300 - P0304 Misfire • P0420 Three way catalyst function • P0442 P0456 EVAP control system (SMALL LEAK, VERY SMALL LEAK) • P0455 EVAP control system (GROSS LEAK) • P0506 P0507 Idle speed control system • P1148 Closed loop control • P1421 Cold start control • P1564 ASCD steering switch • P1572 ASCD brake switch • P1574 ASCD vehicle speed sensor • P1715 Primary speed sensor • P2119 Electric throttle control actuator • P2423 HC adsorption catalyst

DTC Index

INFOID:0000000004349554

×:Applicable —: Not applicable

Items (CONSULT-III screen terms)	DTC*1		SRT code	Trip	MIL	Reference page
	CONSULT-III GST*2	ECM*3				
LOST COMM (TCM)	U0101	0101*4	—	1	×	EC-148
LOST COMM (BCM)	U0140	0140*4	—	1	×	EC-149
CAN COMM CIRCUIT	U1001	1001*4	—	2	—	EC-148
NO DTC IS DETECTED. FURTHER TESTING MAY BE REQUIRED.	**P0000**	**0000**	—	—	**Flashing*7**	**—**
INT/V TIM CONT-B1	P0011	0011	—	2	×	EC-151
A/F SEN1 HTR (B1)	P0031	0031	—	2	×	EC-155
A/F SEN1 HTR (B1)	P0032	0032	—	2	×	EC-155
HO2S2 HTR (B1)	P0037	0037	—	2	×	EC-158
HO2S2 HTR (B1)	P0038	0038	—	2	×	EC-158
HO2S3 HTR (B1)	P0043	0043	—	2	×	EC-161
HO2S3 HTR (B1)	P0044	0044	—	2	×	EC-161
INT/V TIM V/CIR-B1	P0075	0075	—	2	×	EC-165
MAF SEN/CIRCUIT-B1	P0101	0101	—	2	×	EC-168
MAF SEN/CIRCUIT-B1	P0102	0102	—	1	×	EC-175
MAF SEN/CIRCUIT-B1	P0103	0103	—	1	×	EC-175
IAT SEN/CIRCUIT-B1	P0112	0112	—	2	×	EC-181
IAT SEN/CIRCUIT-B1	P0113	0113	—	2	×	EC-181
ECT SEN/CIRC	P0116	0116	—	2	×	EC-184
ECT SEN/CIRC	P0117	0117	—	1	×	EC-186
ECT SEN/CIRC	P0118	0118	—	1	×	EC-186
TP SEN 2/CIRC-B1	P0122	0122	—	1	×	EC-189
TP SEN 2/CIRC-B1	P0123	0123	—	1	×	EC-189
ECT SENSOR	P0125	0125	—	2	×	EC-192
IAT SENSOR-B1	P0127	0127	—	2	×	EC-195
THERMSTAT FNCTN	P0128	0128	—	2	×	EC-197
A/F SENSOR1 (B1)	P0130	0130	—	2	×	EC-199
A/F SENSOR1 (B1)	P0131	0131	—	2	×	EC-203
A/F SENSOR1 (B1)	P0132	0132	—	2	×	EC-206
A/F SENSOR1 (B1)	P0133	0133	×	2	×	EC-209
HO2S2 (B1)	P0137	0137	×	2	×	EC-214
HO2S2 (B1)	P0138	0138	×	2	×	EC-220
HO2S2 (B1)	P0139	0139	×	2	×	EC-228
HO2S3 (B1)	P0143	0143	×	2	×	EC-234
HO2S3 (B1)	P0144	0144	×	2	×	EC-239
HO2S3 (B1)	P0145	0145	×	2	×	EC-244
HO2S3 (B1)	P0146	0146	—	2	×	EC-249
FUEL SYS-LEAN-B1	P0171	0171	—	2	×	EC-254
FUEL SYS-RICH-B1	P0172	0172	—	2	×	EC-258

Items (CONSULT-III screen terms)	DTC*1		SRT code	Trip	MIL	Reference page
	CONSULT-III GST*2	ECM*3				
FTT SENSOR	P0181	0181	—	2	×	EC-262
FTT SEN/CIRCUIT	P0182	0182	—	2	×	EC-265
FTT SEN/CIRCUIT	P0183	0183	—	2	×	EC-265
TP SEN 1/CIRC-B1	P0222	0222	—	1	×	EC-268
TP SEN 1/CIRC-B1	P0223	0223	—	1	×	EC-268
MULTI CYL MISFIRE	P0300	0300	—	2	×	EC-271
CYL 1 MISFIRE	P0301	0301	—	2	×	EC-271
CYL 2 MISFIRE	P0302	0302	—	2	×	EC-271
CYL 3 MISFIRE	P0303	0303	—	2	×	EC-271
CYL 4 MISFIRE	P0304	0304	—	2	×	EC-271
KNOCK SEN/CIRC-B1	P0327	0327	—	2	—	EC-276
KNOCK SEN/CIRC-B1	P0328	0328	—	2	—	EC-276
CKP SEN/CIRCUIT	P0335	0335	—	2	×	EC-278
CMP SEN/CIRC-B1	P0340	0340	—	2	×	EC-282
TW CATALYST SYS-B1	P0420	0420	×	2	×	EC-286
EVAP PURG FLOW/MON	P0441	0441	×	2	×	EC-290
EVAP SMALL LEAK	P0442	0442	×	2	×	EC-295
PURG VOLUME CONT/V	P0443	0443	—	2	×	EC-301
PURG VOLUME CONT/V	P0444	0444	—	2	×	EC-305
PURG VOLUME CONT/V	P0445	0445	—	2	×	EC-305
VENT CONTROL VALVE	P0447	0447	—	2	×	EC-308
VENT CONTROL VALVE	P0448	0448	—	2	×	EC-312
EVAP SYS PRES SEN	P0451	0451	—	2	×	EC-316
EVAP SYS PRES SEN	P0452	0452	—	2	×	EC-319
EVAP SYS PRES SEN	P0453	0453	—	2	×	EC-324
EVAP GROSS LEAK	P0455	0455	—	2	×	EC-330
EVAP VERY SML LEAK	P0456	0456	×*6	2	×	EC-336
FUEL LEV SEN SLOSH	P0460	0460	—	2	×	EC-343
FUEL LEVEL SENSOR	P0461	0461	—	2	×	EC-344
FUEL LEVL SEN/CIRC	P0462	0462	—	2	×	EC-346
FUEL LEVL SEN/CIRC	P0463	0463	—	2	×	EC-346
VEH SPEED SEN/CIRC*5	P0500	0500	—	2	×	EC-348
ISC SYSTEM	P0506	0506	—	2	×	EC-350
ISC SYSTEM	P0507	0507	—	2	×	EC-352
PW ST P SEN/CIRC	P0550	0550	—	2	—	EC-354
ECM BACK UP/CIRCUIT	P0603	0603	—	2	×	EC-357
ECM	P0605	0605	—	1 or 2	× or —	EC-359
ECM	P0607	0607	—	1 (CVT) 2 (M/T)	× (CVT) — (M/T)	EC-361
SENSOR POWER/CIRC	P0643	0643	—	1	×	EC-362
PNP SW/CIRC	P0705	0705	—	2	×	TM-307
ATF TEMP SEN/CIRC*8	P0710	0710	—	1	×	TM-310

Items (CONSULT-III screen terms)	DTC*1		SRT code	Trip	MIL	Reference page
	CONSULT-III GST*2	ECM*3				
INPUT SPD SEN/CIRC	P0715	0715	—	2	×	TM-313
VEH SPD SEN/CIR AT*5	P0720	0720	—	2	×	TM-318
TCC SOLENOID/CIRC	P0740	0740	—	2	×	TM-324
A/T TCC S/V FNCTN	P0744	0744	—	2	×	TM-327
L/PRESS SOL/CIRC	P0745	0745	—	2	×	TM-329
PRS CNT SOL/A FCTN	P0746	0746	—	1	×	TM-331
PRS CNT SOL/B FCTN	P0776	0776	—	2	×	TM-333
PRS CNT SOL/B CIRC	P0778	0778	—	2	×	TM-336
TR PRS SENS/A CIRC	P0840	0840	—	2	×	TM-341
P-N POS SW/CIRCUIT	P0850	0850	—	2	×	EC-365
CLOSED LOOP-B1	P1148	1148	—	1	×	EC-368
ENG OVER TEMP	P1217	1217	—	1	×	EC-369
CTP LEARNING-B1	P1225	1225	—	2	—	EC-373
CTP LEARNING-B1	P1226	1226	—	2	—	EC-375
COLD START CONTROL	P1421	1421	—	2	×	EC-377
BAT CURRENT SENSOR	P1550	1550	—	2	—	EC-379
BAT CURRENT SENSOR	P1551	1551	—	2	—	EC-382
BAT CURRENT SENSOR	P1552	1552	—	2	—	EC-382
BAT CURRENT SENSOR	P1553	1553	—	2	—	EC-385
BAT CURRENT SENSOR	P1554	1554	—	2	—	EC-388
ASCD SW	P1564	1564	—	1	—	EC-391
ASCD BRAKE SW	P1572	1572	—	1	—	EC-394
ASCD VHL SPD SEN	P1574	1574	—	1	—	EC-402
LOCK MODE	P1610	1610	—	2	—	SEC-64 (Coupe) SEC-263 (Sedan)
ID DISCORD, IMMU-ECM	P1611	1611	—	2	—	SEC-68 (Coupe) SEC-267 (Sedan)
CHAIN OF ECM-IMMU	P1612	1612	—	2	—	SEC-69 (Coupe) SEC-268 (Sedan)
DIFFERENCE OF KEY	P1615	1615	—	2	—	SEC-67 (Coupe) SEC-266 (Sedan)
IN PULY SPEED	P1715	1715	—	2	—	EC-404
LU-SLCT SOL/CIRC	P1740	1740	—	2	×	TM-358
STEP MOTOR CIRC	P1777	1777	—	1	×	TM-361
STEP MOTOR FNCT	P1778	1778	—	2	×	TM-364
BRAKE SW/CIRCUIT	P1805	1805	—	2	—	EC-406
TUMBLE CONT/V	P2004	2004	—	2	×	EC-409
TUMBLE POS SEN	P2014	2014	—	2	×	EC-414

Items (CONSULT-III screen terms)	DTC*1		SRT code	Trip	MIL	Reference page
	CONSULT-III GST*2	ECM*3				
ETC MOT PWR-B1	P2100	2100	—	1	×	EC-417
ETC FNCTN/CIRC-B1	P2101	2101	—	1	×	EC-419
ETC MOT PWR	P2103	2103	—	1	×	EC-417
ETC MOT-B1	P2118	2118	—	1	×	EC-423
ETC ACTR-B1	P2119	2119	—	1	×	EC-425
APP SEN 1/CIRC	P2122	2122	—	1	×	EC-427
APP SEN 1/CIRC	P2123	2123	—	1	×	EC-427
APP SEN 2/CIRC	P2127	2127	—	1	×	EC-430
APP SEN 2/CIRC	P2128	2128	—	1	×	EC-430
TP SENSOR-B1	P2135	2135	—	1	×	EC-434
APP SENSOR	P2138	2138	—	1	×	EC-438
HC ADS CATALYST-B1	P2423	2423	—	2	×	EC-442
A/F SENSOR1 (B1)	P2A00	2A00	—	2	×	EC-446

*1: 1st trip DTC No. is the same as DTC No.

*2: This number is prescribed by SAE J2012.

*3: In Diagnostic Test Mode II (Self-diagnostic results), this number is controlled by NISSAN.

*4: The troubleshooting for this DTC needs CONSULT-III.

*5: When the fail-safe operations for both self-diagnoses occur, the MIL illuminates.

*6: SRT code will not be set if the self-diagnostic result is NG.

*7: When the ECM is in the mode of displaying SRT status, MIL may flash. For the details, refer to “How to Display SRT Status”.

*7: When erasing this DTC, always use CONSULT-III or GST.

How to Set SRT Code

INFOID:0000000004349555

To set all SRT codes, self-diagnosis for the items indicated above must be performed one or more times. Each diagnosis may require a long period of actual driving under various conditions.

WITH CONSULT-III

Perform corresponding DTC CONFIRMATION PROCEDURE one by one based on Performance Priority in the table on “SRT Item”.

WITHOUT CONSULT-III

The most efficient driving pattern in which SRT codes can be properly set is explained below. The driving pattern should be performed one or more times to set all SRT codes.

DRIVING PATTERN

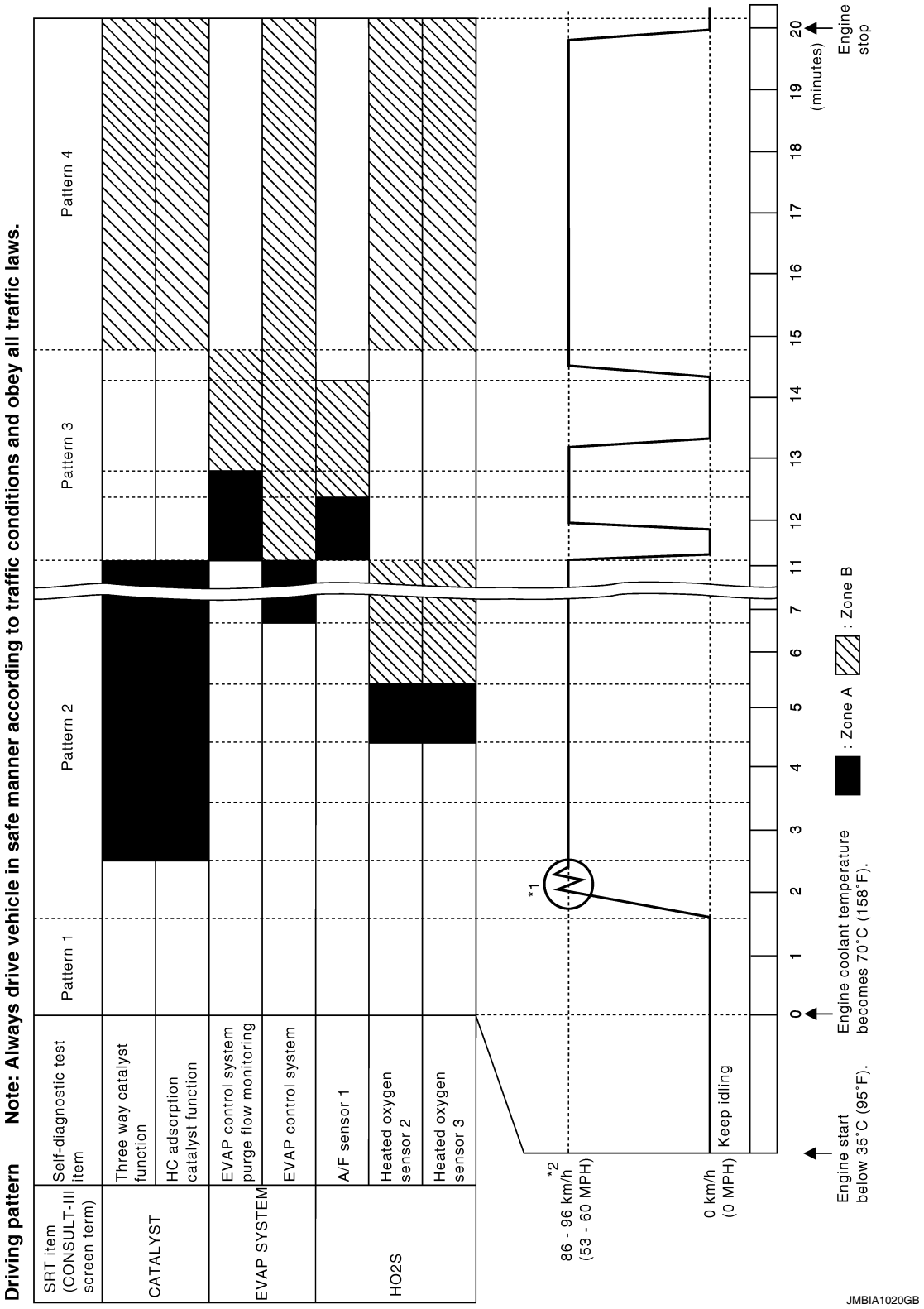

- The time required for each diagnosis varies with road surface conditions, weather, altitude, individual driving habits, etc.
  Zone A refers to the range where the time, required for the diagnosis under normal conditions*, is the shortest.
  Zone B refers to the range where the diagnosis can still be performed if the diagnosis is not completed within zone A.

*: Normal conditions refer to the following:

- Sea level
- Flat road
- Ambient air temperature: 20 - 30°C (68 - 86°F)
- Diagnosis is performed as quickly as possible under normal conditions.
  Under different conditions [For example: ambient air temperature other than 20 - 30°C (68 - 86°F)], diagnosis may also be performed.

Pattern 1:

- **The engine is started at the engine coolant temperature of −10 to 35°C (14 to 95°F) (where the voltage between the ECM terminal 46 and ground is 3.0 - 4.3V).**
- **The engine must be operated at idle speed until the engine coolant temperature is greater than 70°C (158°F) (where the voltage between the ECM terminal 46 and ground is lower than 1.4V).**
- **The engine is started at the fuel tank temperature of warmer than 0°C (32°F) (where the voltage between the ECM terminal 95 and ground is less than 4.1V).**

Pattern 2:

- When steady-state driving is performed again even after it is interrupted, each diagnosis can be conducted. In this case, the time required for diagnosis may be extended.

Pattern 3:

- Operate vehicle following the driving pattern shown in the figure.
- Release the accelerator pedal during decelerating vehicle speed from 90 km/h (56 MPH) to 0 km/h (0 MPH).

Pattern 4:

- The accelerator pedal must be held very steady during steady-state driving.
- If the accelerator pedal is moved, the test must be conducted all over again.

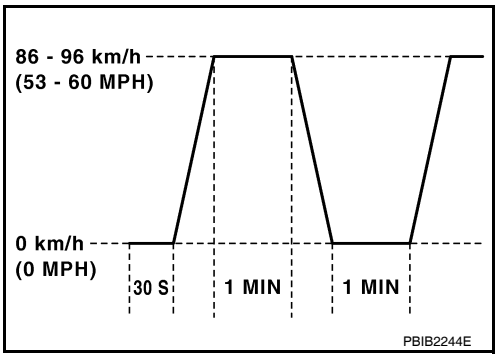

*1: Depress the accelerator pedal until vehicle speed is 90 km/h (56 MPH), then release the accelerator pedal and keep it released for more than 10 seconds. Depress the accelerator pedal until vehicle speed is 90 km/h (56 MPH) again.
*2: Checking the vehicle speed with GST is advised.

Suggested Transmission Gear Position for CVT Models
Set the selector lever in the D position.

Suggested Upshift Speeds for M/T Models
Shown below are suggested vehicle speeds for shifting into a higher gear. These suggestions relate to fuel economy and vehicle performance. Actual upshift speeds will vary according to road conditions, the weather and individual driving habits.

	For normal acceleration in low altitude areas [less than 1,219 m (4,000 ft)]:		For quick acceleration in low altitude areas and high altitude areas [over 1,219 m (4,000 ft)]:
Gear change	ACCEL shift position km/h (MPH)	CRUISE shift point km/h (MPH)	km/h (MPH)
1st to 2nd	24 (15)	13 (8)	13 (8)
2nd to 3rd	40 (25)	27 (17)	27 (17)
3rd to 4th	53 (33)	40 (25)	40 (25)
4th to 5th	71 (44)	58 (36)	58 (36)
5th to 6th	82 (51)	82 (51)	82 (51)

Test Value and Test Limit

INFOID:0000000004351801

The following is the information specified in Service $06 of SAE J1979.
The test value is a parameter used to determine whether a system/circuit diagnostic test is OK or NG while being monitored by the ECM during self-diagnosis. The test limit is a reference value which is specified as the maximum or minimum value and is compared with the test value being monitored.
These data (test value and test limit) are specified by On Board Monitor ID(OBDMID), Test ID (TID), Unit and Scaling ID and can be displayed on the GST screen.
The items of the test value and test limit will be displayed with GST screen which items are provided by the ECM. (eg., if bank 2 is not applied on this vehicle, only the items of bank 1 are displayed)

Item	OBD-MID	Self-diagnostic test item	DTC	Test value and Test limit (GST display)		Description
				TID	Unit and Scaling ID	
HO2S	01H	Air fuel ratio (A/F) sensor 1 (Bank 1)	P0131	83H	0BH	Minimum sensor output voltage for test cycle
			P0131	84H	0BH	Maximum sensor output voltage for test cycle
			P0130	85H	0BH	Minimum sensor output voltage for test cycle
			P0130	86H	0BH	Maximum sensor output voltage for test cycle
			P0133	87H	04H	Response rate: Response ratio (Lean to Rich)
			P0133	88H	04H	Response rate: Response ratio (Rich to Lean)
			P2A00	89H	84H	The amount of shift in air fuel ratio
			P2A00	8AH	84H	The amount of shift in air fuel ratio
			P0130	8BH	0BH	Difference in sensor output voltage
			P0133	8CH	83H	Response gain at the limited frequency
	02H	Heated oxygen sensor 2 (Bank 1)	P0138	07H	0CH	Minimum sensor output voltage for test cycle
			P0137	08H	0CH	Maximum sensor output voltage for test cycle
			P0138	80H	0CH	Sensor output voltage
			P0139	81H	0CH	Difference in sensor output voltage
	03H	Heated oxygen sensor 3 (Bank 1)	P0143	07H	0CH	Minimum sensor output voltage for test cycle
			P0144	08H	0CH	Maximum sensor output voltage for test cycle
			P0146	80H	0CH	Sensor output voltage
			P0145	81H	0CH	Difference in sensor output voltage

Item	OBD-MID	Self-diagnostic test item	DTC	Test value and Test limit (GST display)		Description
				TID	Unit and Scaling ID	
HO2S	05H	Air fuel ratio (A/F) sensor 1 (Bank 2)	P0151	83H	0BH	Minimum sensor output voltage for test cycle
			P0151	84H	0BH	Maximum sensor output voltage for test cycle
			P0150	85H	0BH	Minimum sensor output voltage for test cycle
			P0150	86H	0BH	Maximum sensor output voltage for test cycle
			P0153	87H	04H	Response rate: Response ratio (Lean to Rich)
			P0153	88H	04H	Response rate: Response ratio (Rich to Lean)
			P2A03	89H	84H	The amount of shift in air fuel ratio
			P2A03	8AH	84H	The amount of shift in air fuel ratio
			P0150	8BH	0BH	Difference in sensor output voltage
			P0153	8CH	83H	Response gain at the limited frequency
	06H	Heated oxygen sensor 2 (Bank 2)	P0158	07H	0CH	Minimum sensor output voltage for test cycle
			P0157	08H	0CH	Maximum sensor output voltage for test cycle
			P0158	80H	0CH	Sensor output voltage
			P0159	81H	0CH	Difference in sensor output voltage
	07H	Heated oxygen sensor 3 (Bank2)	P0163	07H	0CH	Minimum sensor output voltage for test cycle
			P0164	08H	0CH	Maximum sensor output voltage for test cycle
			P0166	80H	0CH	Sensor output voltage
			P0165	81H	0CH	Difference in sensor output voltage
CATA-LYST	21H	Three way catalyst function (Bank1)	P0420	80H	01H	O2 storage index
			P0420	82H	01H	Switching time lag engine exhaust index value
			P2423	83H	0CH	Difference in 3rd O2 sensor output voltage
			P2423	84H	84H	O2 storage index in HC trap catalyst
	22H	Three way catalyst function (Bank2)	P0430	80H	01H	O2 storage index
			P0430	82H	01H	Switching time lag engine exhaust index value
			P2424	83H	0CH	Difference in 3rd O2 sensor output voltage
			P2424	84H	84H	O2 storage index in HC trap catalyst

Item	OBD-MID	Self-diagnostic test item	DTC	Test value and Test limit (GST display)		Description
				TID	Unit and Scaling ID	
EGR SYSTEM	31H	EGR function	P0400	80H	96H	Low Flow Faults: EGR temp change rate (short term)
			P0400	81H	96H	Low Flow Faults: EGR temp change rate (long term)
			P0400	82H	96H	Low Flow Faults: Difference between max EGR temp and EGR temp under idling condition
			P0400	83H	96H	Low Flow Faults: Max EGR temp
			P1402	84H	96H	High Flow Faults: EGR temp increase rate
VVT SYSTEM	35H	VVT Monitor (Bank1)	P0011	80H	9DH	VTC intake function diagnosis (VTC alignment check diagnosis)
			P0014	81H	9DH	VTC exhaust function diagnosis (VTC alignment check diagnosis)
			P0011	82H	9DH	VTC intake function diagnosis (VTC drive failure diagnosis)
			P0014	83H	9DH	VTC exhaust function diagnosis (VTC drive failure diagnosis)
	36H	VVT Monitor (Bank2)	P0021	80H	9DH	VTC intake function diagnosis (VTC alignment check diagnosis)
			P0024	81H	9DH	VTC exhaust function diagnosis (VTC alignment check diagnosis)
			P0021	82H	9DH	VTC intake function diagnosis (VTC drive failure diagnosis)
			P0024	83H	9DH	VTC exhaust function diagnosis (VTC drive failure diagnosis)
EVAP SYSTEM	39H	EVAP control system leak (Cap Off)	P0455	80H	0CH	Difference in pressure sensor output voltage before and after pull down
	3BH	EVAP control system leak (Small leak)	P0442	80H	05H	Leak area index (for more than 0.04 inch)
	3CH	EVAP control system leak (Very small leak)	P0456	80H	05H	Leak area index (for more than 0.02 inch)
			P0456	81H	FDH	Maximum internal pressure of EVAP system during monitoring
	3DH	Purge flow system	P0441	83H	0CH	Difference in pressure sensor output voltage before and after vent control valve close
O2 SENSOR HEATER	41H	A/F sensor 1 heater (Bank 1)	Low Input:P0031 High Input:P0032	81H	0BH	Converted value of Heater electric current to voltage
	42H	Heated oxygen sensor 2 heater (Bank 1)	Low Input:P0037 High Input:P0038	80H	0CH	Converted value of Heater electric current to voltage
	43H	Heated oxygen sensor 3 heater (Bank 1)	P0043	80H	0CH	Converted value of Heater electric current to voltage
	45H	A/F sensor 1 heater (Bank 2)	Low Input:P0051 High Input:P0052	81H	0BH	Converted value of Heater electric current to voltage
	46H	Heated oxygen sensor 2 heater (Bank 2)	Low Input:P0057 High Input:P0058	80H	0CH	Converted value of Heater electric current to voltage
	47H	Heated oxygen sensor 3 heater (Bank 2)	P0063	80H	0CH	Converted value of Heater electric current to voltage

Item	OBD-MID	Self-diagnostic test item	DTC	Test value and Test limit (GST display)		Description
				TID	Unit and Scaling ID	
SECOND-ARY AIR	71H	Secondary Air system	P0411	80H	01H	Secondary Air Injection System Incorrect Flow Detected
			Bank1: P0491 Bank2: P0492	81H	01H	Secondary Air Injection System Insufficient Flow
			P2445	82H	01H	Secondary Air Injection System Pump Stuck Off
			P2448	83H	01H	Secondary Air Injection System High Airflow
			Bank1: P2440 Bank2: P2442	84H	01H	Secondary Air Injection System Switching Valve Stuck Open
			P2440	85H	01H	Secondary Air Injection System Switching Valve Stuck Open
			P2444	86H	01H	Secondary Air Injection System Pump Stuck On
FUEL SYSTEM	81H	Fuel injection system function (Bank 1)	P0171 or P0172	80H	2FH	Long term fuel trim
			P0171 or P0172	81H	24H	The number of lambda control clamped
	82H	Fuel injection system function (Bank 2)	P0174 or P0175	80H	2FH	Long term fuel trim
			P0174 or P0175	81H	24H	The number of lambda control clamped

Item	OBD-MID	Self-diagnostic test item	DTC	Test value and Test limit (GST display)		Description
				TID	Unit and Scaling ID	
MISFIRE	A1H	Multiple Cylinder Misfires	P0301	80H	24H	Misfiring counter at 1000 revolution of the first cylinder
			P0302	81H	24H	Misfiring counter at 1000 revolution of the second cylinder
			P0303	82H	24H	Misfiring counter at 1000 revolution of the third cylinder
			P0304	83H	24H	Misfiring counter at 1000 revolution of the fourth cylinder
			P0305	84H	24H	Misfiring counter at 1000 revolution of the fifth cylinder
			P0306	85H	24H	Misfiring counter at 1000 revolution of the sixth cylinder
			P0307	86H	24H	Misfiring counter at 1000 revolution of the seventh cylinder
			P0308	87H	24H	Misfiring counter at 1000 revolution of the eighth cylinder
			P0300	88H	24H	Misfiring counter at 1000 revolution of the multiple cylinders
			P0301	89H	24H	Misfiring counter at 200 revolution of the first cylinder
			P0302	8AH	24H	Misfiring counter at 200 revolution of the second cylinder
			P0303	8BH	24H	Misfiring counter at 200 revolution of the third cylinder
			P0304	8CH	24H	Misfiring counter at 200 revolution of the fourth cylinder
			P0305	8DH	24H	Misfiring counter at 200 revolution of the fifth cylinder
			P0306	8EH	24H	Misfiring counter at 200 revolution of the sixth cylinder
			P0307	8FH	24H	Misfiring counter at 200 revolution of the seventh cylinder
			P0308	90H	24H	Misfiring counter at 200 revolution of the eighth cylinder
			P0300	91H	24H	Misfiring counter at 1000 revolution of the single cylinder
			P0300	92H	24H	Misfiring counter at 200 revolution of the single cylinder
			P0300	93H	24H	Misfiring counter at 200 revolution of the multiple cylinders

Item	OBD-MID	Self-diagnostic test item	DTC	Test value and Test limit (GST display)		Description
				TID	Unit and Scaling ID	
MISFIRE	A2H	No. 1 Cylinder Misfire	P0301	0BH	24H	EWMA (Exponential Weighted Moving Average) misfire counts for last 10 driving cycles
			P0301	0CH	24H	Misfire counts for last/current driving cycles
	A3H	No. 2 Cylinder Misfire	P0302	0BH	24H	EWMA (Exponential Weighted Moving Average) misfire counts for last 10 driving cycles
			P0302	0CH	24H	Misfire counts for last/current driving cycles
	A4H	No. 3 Cylinder Misfire	P0303	0BH	24H	EWMA (Exponential Weighted Moving Average) misfire counts for last 10 driving cycles
			P0303	0CH	24H	Misfire counts for last/current driving cycles
	A5H	No. 4 Cylinder Misfire	P0304	0BH	24H	EWMA (Exponential Weighted Moving Average) misfire counts for last 10 driving cycles
			P0304	0CH	24H	Misfire counts for last/current driving cycles
	A6H	No. 5 Cylinder Misfire	P0305	0BH	24H	EWMA (Exponential Weighted Moving Average) misfire counts for last 10 driving cycles
			P0305	0CH	24H	Misfire counts for last/current driving cycles
	A7H	No. 6 Cylinder Misfire	P0306	0BH	24H	EWMA (Exponential Weighted Moving Average) misfire counts for last 10 driving cycles
			P0306	0CH	24H	Misfire counts for last/current driving cycles
	A8H	No. 7 Cylinder Misfire	P0307	0BH	24H	EWMA (Exponential Weighted Moving Average) misfire counts for last 10 driving cycles
			P0307	0CH	24H	Misfire counts for last/current driving cycles
	A9H	No. 8 Cylinder Misfire	P0308	0BH	24H	EWMA (Exponential Weighted Moving Average) misfire counts for last 10 driving cycles
			P0308	0CH	24H	Misfire counts for last/current driving cycles

SYMPTOM DIAGNOSIS

ENGINE CONTROL SYSTEM SYMPTOMS

Symptom Table

INFOID:0000000004349557

SYSTEM — BASIC ENGINE CONTROL SYSTEM

		SYMPTOM													Reference page
		HARD/NO START/RESTART (EXCP. HA)	ENGINE STALL	HESITATION/SURGING/FLAT SPOT	SPARK KNOCK/DETONATION	LACK OF POWER/POOR ACCELERATION	HIGH IDLE/LOW IDLE	ROUGH IDLE/HUNTING	IDLING VIBRATION	SLOW/NO RETURN TO IDLE	OVERHEATS/WATER TEMPERATURE HIGH	EXCESSIVE FUEL CONSUMPTION	EXCESSIVE OIL CONSUMPTION	BATTERY DEAD (UNDER CHARGE)	
Warranty symptom code		AA	AB	AC	AD	AE	AF	AG	AH	AJ	AK	AL	AM	HA	
Fuel	Fuel pump circuit	1	1	2	3	2		2	2			3		2	EC-466
	Fuel pressure regulator system	3	3	4	4	4	4	4	4	4		4			EC-550
	Fuel injector circuit	1	1	2	3	2		2	2			2			EC-463
	Evaporative emission system	3	3	4	4	4	4	4	4	4		4			EC-86
Air	Positive crankcase ventilation system	3	3	4	4	4	4	4	4	4		4	1		EC-481
	Incorrect idle speed adjustment						1	1	1	1		1			EC-28
	Electric throttle control actuator	1	1	2	3	3	2	2	2	2		2		2	EC-419, EC-425
Ignition	Incorrect ignition timing adjustment	3	3	1	1	1		1	1			1			EC-28
	Ignition circuit	1	1	2	2	2		2	2			2			EC-470
Main power supply and ground circuit		2	2	3	3	3		3	3		2	3			EC-144
Mass air flow sensor circuit		1	1	2	2	2		2	2			2			EC-168, EC-175
Engine coolant temperature sensor circuit					3		3			3					EC-186, EC-192
Air fuel ratio (A/F) sensor 1 circuit			1	2	3	2		2	2			2			EC-199, EC-203, EC-206, EC-209, EC-446
Throttle position sensor circuit							2			2					EC-189, EC-268, EC-373, EC-375, EC-434
Accelerator pedal position sensor circuit				3	2	1									EC-427, EC-430, EC-438
Knock sensor circuit				2								3			EC-276

	SYMPTOM													Reference page
	HARD/NO START/RESTART (EXCP. HA)	ENGINE STALL	HESITATION/SURGING/FLAT SPOT	SPARK KNOCK/DETONATION	LACK OF POWER/POOR ACCELERATION	HIGH IDLE/LOW IDLE	ROUGH IDLE/HUNTING	IDLING VIBRATION	SLOW/NO RETURN TO IDLE	OVERHEATS/WATER TEMPERATURE HIGH	EXCESSIVE FUEL CONSUMPTION	EXCESSIVE OIL CONSUMPTION	BATTERY DEAD (UNDER CHARGE)	
Warranty symptom code	AA	AB	AC	AD	AE	AF	AG	AH	AJ	AK	AL	AM	HA	
Crankshaft position sensor (POS) circuit	2	2												EC-278
Camshaft position sensor (PHASE) circuit	3	2												EC-282
Vehicle speed signal circuit		2	3		3						3			EC-348
Power steering pressure sensor circuit		2					3	3						EC-354
ECM	2	2	3	3	3	3	3	3	3	3	3			EC-357, EC-359
Intake valve timing control solenoid valve circuit		3	2		1	3	2	2	3		3			EC-165
PNP switch circuit			3		3		3	3			3			EC-365
Refrigerant pressure sensor circuit		2				3			3		4			EC-482
Electrical load signal circuit							3							EC-461
Tumble control valve motor					4	4								EC-410
Tumble control valve position sensor														EC-414
Air conditioner circuit	2	2	3	3	3	3	3	3	3		3		2	HAC-83, HAC-155
ABS actuator and electric unit (control unit)			4											BRC-53

1 - 6: The numbers refer to the order of inspection.

(continued on next table)

SYSTEM — ENGINE MECHANICAL & OTHER

		SYMPTOM													Reference page
		HARD/NO START/RESTART (EXCP. HA)	ENGINE STALL	HESITATION/SURGING/FLAT SPOT	SPARK KNOCK/DETONATION	LACK OF POWER/POOR ACCELERATION	HIGH IDLE/LOW IDLE	ROUGH IDLE/HUNTING	IDLING VIBRATION	SLOW/NO RETURN TO IDLE	OVERHEATS/WATER TEMPERATURE HIGH	EXCESSIVE FUEL CONSUMPTION	EXCESSIVE OIL CONSUMPTION	BATTERY DEAD (UNDER CHARGE)	
Warranty symptom code		AA	AB	AC	AD	AE	AF	AG	AH	AJ	AK	AL	AM	HA	
Fuel	Fuel tank	5	5												FL-10
	Fuel piping			5	5	5		5	5			5			EM-36
	Vapor lock														—
	Valve deposit	5		5	5	5		5	5			5			—
	Poor fuel (Heavy weight gasoline, Low octane)														—
Air	Air duct		5	5		5		5	5			5			EM-25
	Air cleaner														
	Air leakage from air duct (Mass air flow sensor — electric throttle control actuator)	5			5		5			5					
	Electric throttle control actuator														EM-26
	Air leakage from intake manifold/Collector/Gasket														
Cranking	Battery	1	1	1		1		1	1			1		1	PG-68 (Coupe) PG-139 (Sedan)
	Generator circuit														CHG-5
	Starter circuit	3													STR-6
	Signal plate	6													EM-76
	PNP switch	4													TM-20 (M/T) TM-307 (CVT)
Engine	Cylinder head	5	5	5	5	5		5	5			5			EM-68
	Cylinder head gasket										4		3		
	Cylinder block	6	6	6	6	6		6	6			6	4		EM-76
	Piston														
	Piston ring														
	Connecting rod														
	Bearing														
	Crankshaft														

		SYMPTOM													Reference page
		HARD/NO START/RESTART (EXCP. HA)	ENGINE STALL	HESITATION/SURGING/FLAT SPOT	SPARK KNOCK/DETONATION	LACK OF POWER/POOR ACCELERATION	HIGH IDLE/LOW IDLE	ROUGH IDLE/HUNTING	IDLING VIBRATION	SLOW/NO RETURN TO IDLE	OVERHEATS/WATER TEMPERATURE HIGH	EXCESSIVE FUEL CONSUMPTION	EXCESSIVE OIL CONSUMPTION	BATTERY DEAD (UNDER CHARGE)	
Warranty symptom code		AA	AB	AC	AD	AE	AF	AG	AH	AJ	AK	AL	AM	HA	
Valve mechanism	Timing chain	5	5	5	5	5		5	5			5			EM-52
	Camshaft														EM-41
	Intake valve timing control														EM-52
	Intake valve												3		EM-68
	Exhaust valve														
Exhaust	Exhaust manifold/Tube/Muffler/Gasket	5	5	5	5	5		5	5			5			EM-30, EX-6
	Three way catalyst														
	HC adsorption catalyst														
Lubrication	Oil pan/Oil strainer/Oil pump/Oil filter/Oil gallery/Oil cooler	5	5	5	5	5		5	5			5			EM-32, LU-12, LU-11, LU-7, LU-15
	Oil level (Low)/Filthy oil														LU-9
Cooling	Radiator/Hose/Radiator filler cap	5	5	5	5	5		5	5		4	5			CO-15
	Thermostat									5					CO-21
	Water pump														CO-19
	Water gallery														CO-7
	Cooling fan									5					CO-17
	Coolant level (Low)/Contaminated coolant														CO-11
NVIS (NISSAN Vehicle Immobilizer System — NATS)		1	1												SEC-22 (Coupe) SEC-221 (Sedan)

1 - 6: The numbers refer to the order of inspection.

NORMAL OPERATING CONDITION

Description

INFOID:0000000004349558

FUEL CUT CONTROL (AT NO LOAD AND HIGH ENGINE SPEED)

If the engine speed is above 1,800 rpm under no load (for example, the selector lever position is neutral and engine speed is over 1,800 rpm) fuel will be cut off after some time. The exact time when the fuel is cut off varies based on engine speed.
Fuel cut will be operated until the engine speed reaches 1,500 rpm, then fuel cut will be cancelled.

NOTE:
This function is different from deceleration control listed under Multiport Fuel Injection (MFI) System, EC-41, "System Description".

PRECAUTION

PRECAUTIONS

Precaution for Supplemental Restraint System (SRS) "AIR BAG" and "SEAT BELT PRE-TENSIONER"

INFOID:0000000004351922

The Supplemental Restraint System such as “AIR BAG” and “SEAT BELT PRE-TENSIONER”, used along with a front seat belt, helps to reduce the risk or severity of injury to the driver and front passenger for certain types of collision. This system includes seat belt switch inputs and dual stage front air bag modules. The SRS system uses the seat belt switches to determine the front air bag deployment, and may only deploy one front air bag, depending on the severity of a collision and whether the front occupants are belted or unbelted.
Information necessary to service the system safely is included in the SR and SB section of this Service Manual.

WARNING:

- **To avoid rendering the SRS inoperative, which could increase the risk of personal injury or death in the event of a collision which would result in air bag inflation, all maintenance must be performed by an authorized NISSAN/INFINITI dealer.**
- **Improper maintenance, including incorrect removal and installation of the SRS, can lead to personal injury caused by unintentional activation of the system. For removal of Spiral Cable and Air Bag Module, see the SR section.**
- **Do not use electrical test equipment on any circuit related to the SRS unless instructed to in this Service Manual. SRS wiring harnesses can be identified by yellow and/or orange harnesses or harness connectors.**

Precaution for Procedure without Cowl Top Cover

INFOID:0000000004351924

When performing the procedure after removing cowl top cover, cover the lower end of windshield with urethane, etc.

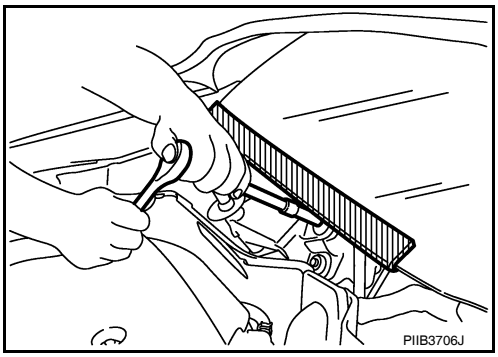

On Board Diagnostic (OBD) System of Engine and CVT

INFOID:0000000004349562

The ECM has an on board diagnostic system. It will light up the malfunction indicator lamp (MIL) to warn the driver of a malfunction causing emission deterioration.

CAUTION:

- **Be sure to turn the ignition switch OFF and disconnect the negative battery cable before any repair or inspection work. The open/short circuit of related switches, sensors, solenoid valves, etc. will cause the MIL to light up.**
- **Be sure to connect and lock the connectors securely after work. A loose (unlocked) connector will cause the MIL to light up due to the open circuit. (Be sure the connector is free from water, grease, dirt, bent terminals, etc.)**
- **Certain systems and components, especially those related to OBD, may use a new style slide-locking type harness connector. For description and how to disconnect, refer to PG-58, "Description" (coupe) or PG-129, "Description" (sedan).**
- **Be sure to route and secure the harnesses properly after work. The interference of the harness with a bracket, etc. may cause the MIL to light up due to the short circuit.**
- **Be sure to connect rubber tubes properly after work. A misconnected or disconnected rubber tube may cause the MIL to light up due to the malfunction of the EVAP system or fuel injection system, etc.**
- **Be sure to erase the unnecessary malfunction information (repairs completed) from the ECM and TCM (Transmission control module) before returning the vehicle to the customer.**

General Precautions

INFOID:0000000004349563

- **Always use a 12 volt battery as power source.**
- **Do not attempt to disconnect battery cables while engine is running.**
- **Before connecting or disconnecting the ECM harness connector, turn ignition switch OFF and disconnect negative battery cable. Failure to do so may damage the ECM because battery voltage is applied to ECM even if ignition switch is turned OFF.**
- **Before removing parts, turn ignition switch OFF and then disconnect battery ground cable.**

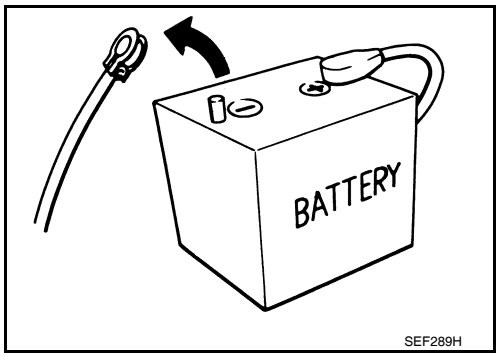

- **Do not disassemble ECM.**
- **If a battery cable is disconnected, the memory will return to the ECM value.**
  The ECM will now start to self-control at its initial value. Engine operation can vary slightly when the terminal is disconnected. However, this is not an indication of a malfunction. Do not replace parts because of a slight variation.
- **If the battery is disconnected, the following emission-related diagnostic information will be lost within 24 hours.**
- **Diagnostic trouble codes**
- **1st trip diagnostic trouble codes**
- **Freeze frame data**
- **1st trip freeze frame data**
- **System readiness test (SRT) codes**
- **Test values**

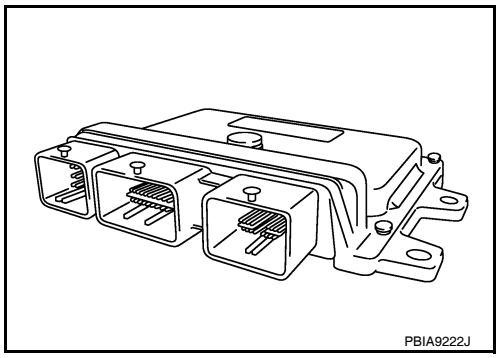

- **When connecting ECM harness connector (1), fasten (B) it securely with a lever as far as it will go as shown in the figure.**

2. ECM
A. Loosen

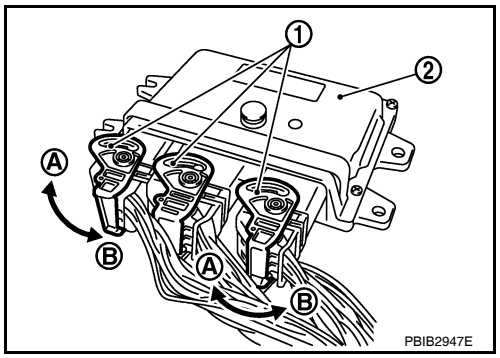

- **When connecting or disconnecting pin connectors into or from ECM, take care not to damage pin terminals (bend or break).**
  Make sure that there are not any bends or breaks on ECM pin terminal, when connecting pin connectors.
- **Securely connect ECM harness connectors.**
  A poor connection can cause an extremely high (surge) voltage to develop in coil and condenser, thus resulting in damage to ICs.
- **Keep engine control system harness at least 10 cm (4 in) away from adjacent harness, to prevent engine control system malfunctions due to receiving external noise, degraded operation of ICs, etc.**
- **Keep engine control system parts and harness dry.**

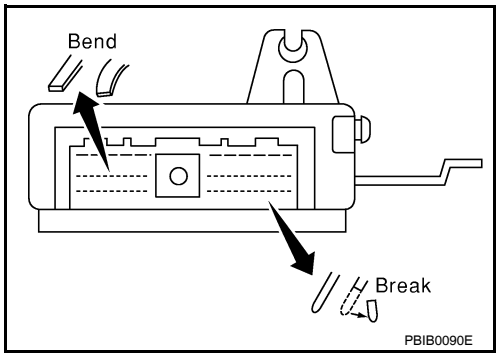

- **Before replacing ECM, perform ECM Terminals and Reference Value inspection and make sure ECM functions properly. Refer to EC-485, "Reference Value".**
- **Handle mass air flow sensor carefully to avoid damage.**
- **Do not clean mass air flow sensor with any type of detergent.**
- **Do not disassemble electric throttle control actuator.**
- **Even a slight leak in the air intake system can cause serious incidents.**
- **Do not shock or jar the camshaft position sensor (PHASE), crankshaft position sensor (POS).**

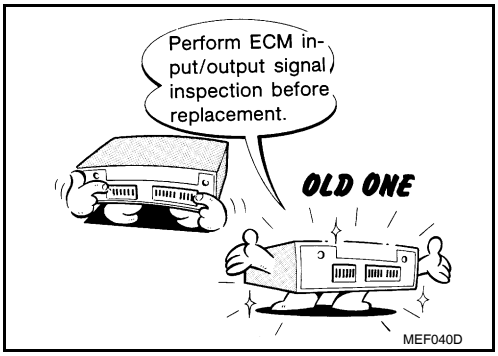

- **After performing each TROUBLE DIAGNOSIS, perform DTC CONFIRMATION PROCEDURE or Component Function Check.** The DTC should not be displayed in the DTC Confirmation Procedure if the repair is completed. The Component Function Check should be a good result if the repair is completed.

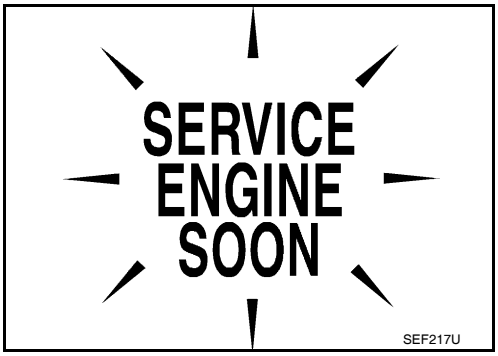

- **When measuring ECM signals with a circuit tester, never allow the two tester probes to contact.**
  Accidental contact of probes will cause a short circuit and damage the ECM power transistor.
- **Do not use ECM ground terminals when measuring input/output voltage. Doing so may result in damage to the ECM's transistor. Use a ground other than ECM terminals, such as the ground.**

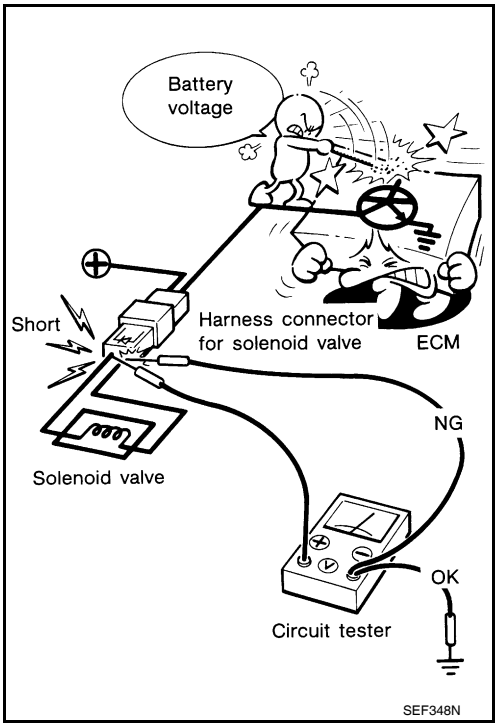

- **Do not operate fuel pump when there is no fuel in lines.**
- **Tighten fuel hose clamps to the specified torque.**

- **Do not depress accelerator pedal when starting.**
- **Immediately after starting, do not rev up engine unnecessarily.**
- **Do not rev up engine just prior to shutdown.**

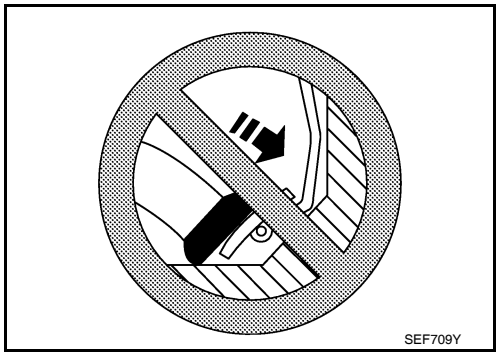

- **When installing C.B. ham radio or a mobile phone, be sure to observe the following as it may adversely affect electronic control systems depending on installation location.**
  - **Keep the antenna as far as possible from the electronic control units.**
  - **Keep the antenna feeder line more than 20 cm (8 in) away from the harness of electronic controls.**
    Do not let them run parallel for a long distance.
  - **Adjust the antenna and feeder line so that the standing-wave ratio can be kept smaller.**
  - **Be sure to ground the radio to vehicle body.**

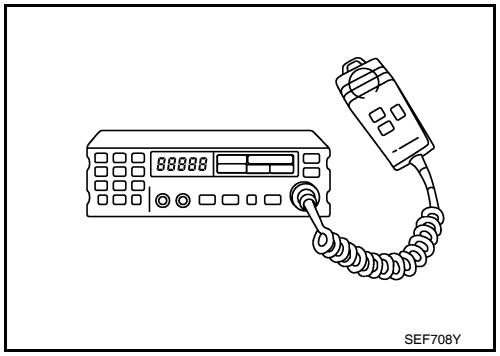

PREPARATION

PREPARATION

Special Service Tools

INFOID:0000000004349564

NOTE:
The actual shapes of Kent-Moore tools may differ from those of special service tools illustrated here.

Tool number (Kent-Moore No.) Tool name	Description
(J-44321) Fuel pressure gauge kit 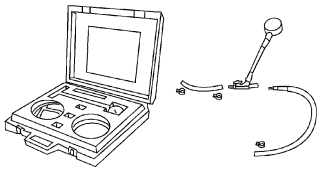 LEC642	Checking fuel pressure

Commercial Service Tools

INFOID:0000000004349565

Tool name (Kent-Moore No.)	Description
Leak detector i.e.: (J-41416) 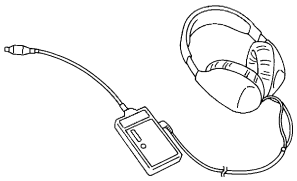 S-NT703	Locating the EVAP leak
EVAP service port adapter i.e.: (J-41413-OBD) 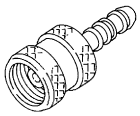 S-NT704	Applying positive pressure through EVAP service port
Fuel filler cap adapter i.e.: (MLR-8382) S-NT815	Checking fuel tank vacuum relief valve opening pressure
Socket wrench 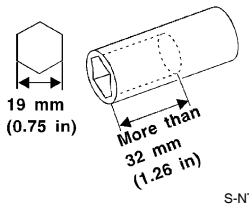 S-NT705	Removing and installing engine coolant temperature sensor

Tool name (Kent-Moore No.)		Description
Oxygen sensor thread cleaner i.e.: (J-43897-18) (J-43897-12)	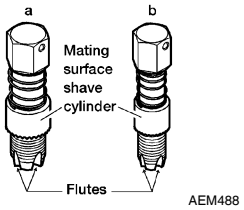	Reconditioning the exhaust system threads before installing a new oxygen sensor. Use with anti-seize lubricant shown below. **a: 18 mm diameter with pitch 1.5 mm for Zirconia Oxygen Sensor** **b: 12 mm diameter with pitch 1.25 mm for Titania Oxygen Sensor**
Anti-seize lubricant i.e.: (Permatex™ 133AR or equivalent meeting MIL specification MIL-A-907)	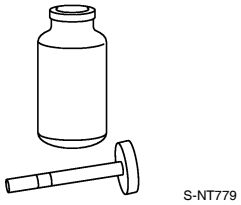	Lubricating oxygen sensor thread cleaning tool when reconditioning exhaust system threads.

ON-VEHICLE MAINTENANCE

FUEL PRESSURE

Inspection

INFOID:0000000004349566

FUEL PRESSURE RELEASE

With CONSULT-III

1. Turn ignition switch ON.
2. Perform “FUEL PRESSURE RELEASE” in “WORK SUPPORT” mode with CONSULT-III.
3. Start engine.
4. After engine stalls, crank it two or three times to release all fuel pressure.
5. Turn ignition switch OFF.

With CONSULT-III

1. Remove fuel pump fuse located in IPDM E/R.
2. Start engine.
3. After engine stalls, crank it two or three times to release all fuel pressure.
4. Turn ignition switch OFF.
5. Reinstall fuel pump fuse after servicing fuel system.

FUEL PRESSURE CHECK

CAUTION:

Before disconnecting fuel line, release fuel pressure from fuel line to eliminate danger.

NOTE:

- **Prepare pans or saucers under the disconnected fuel line because the fuel may spill out. The fuel pressure cannot be completely released because L32 models do not have fuel return system.**
- **Use fuel pressure gauge kit [SST: (J-44321)] to check fuel pressure.**

1. Release fuel pressure to zero.
2. Connect fuel tube (B) adapter to quick connector.

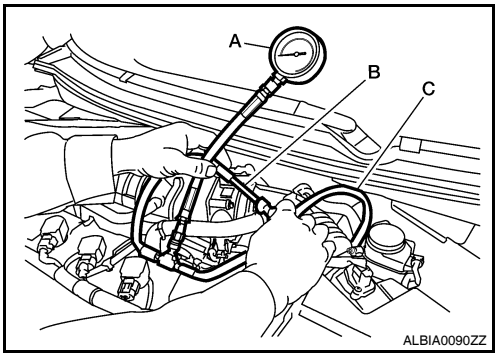

A : Fuel pressure gauge
C : Fuel feed hose

3. Turn ignition switch ON and check for fuel leakage.
4. Start engine and check for fuel leakage.
5. Read the indication of fuel pressure gauge.

At idling : Approximately 350 kPa (3.57 kg/cm^2, 51 psi)

6. If result is unsatisfactory, check fuel hoses and fuel tubes for clogging.
   If OK, Replace “fuel filter and fuel pump assembly”.
   If NG, Repair or replace.

EVAP LEAK CHECK

Inspection

INFOID:0000000004349567

CAUTION:
- **Do not use compressed air or a high pressure pump.**
- **Do not exceed 4.12 kPa (0.042 kg/cm^2, 0.6 psi) of pressure in EVAP system.**

NOTE:
- Do not start engine.
- Improper installation of EVAP service port adapter [commercial service tool: (J-41413-OBD)] to the EVAP service port may cause a leak.

WITH CONSULT-III

1. To locate the EVAP leak, install EVAP service port adapter [commercial service tool: (J-41413-OBD)] and pressure pump to EVAP service port.
2. Turn ignition switch ON.
3. Select the “EVAP SYSTEM CLOSE” of “WORK SUPPORT” mode with CONSULT-III.
4. Touch “START”. A bar graph (Pressure indicating display) will appear on the screen.
5. Apply positive pressure to the EVAP system until the pressure indicator reaches the middle of the bar graph.
6. Remove EVAP service port adapter [commercial service tool: (J-41413-OBD)] and hose with pressure pump.
7. Locate the leak using a leak detector [commercial service tool: (J-41416)]. Refer to EC-86, "System Diagram".

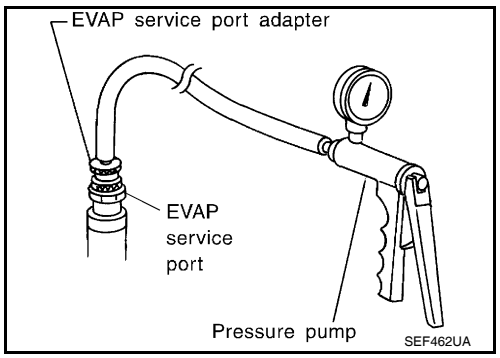

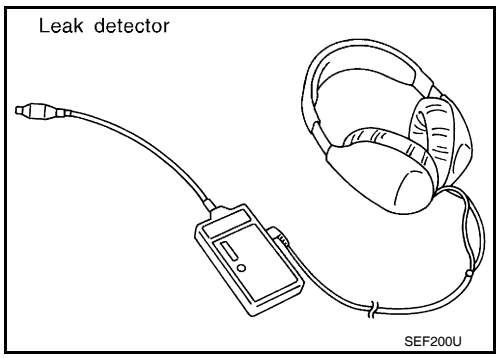

WITHOUT CONSULT-III

1. To locate the EVAP leak, install EVAP service port adapter [commercial service tool: (J-41413-OBD)] and pressure pump to EVAP service port.
2. Apply battery voltage between the terminals of EVAP canister vent control valve to make a closed EVAP system.
3. To locate the leak, deliver positive pressure to the EVAP system until pressure gauge points reach 1.38 to 2.76 kPa (0.014 to 0.028 kg/cm^2, 0.2 to 0.4 psi).
4. Remove EVAP service port adapter [commercial service tool: (J-41413-OBD)] and hose with pressure pump.

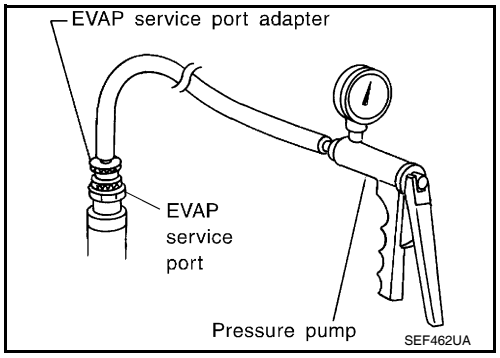

5. Locate the leak using a leak detector [commercial service tool: (J-41416)]. Refer to EC-86, "System Diagram".

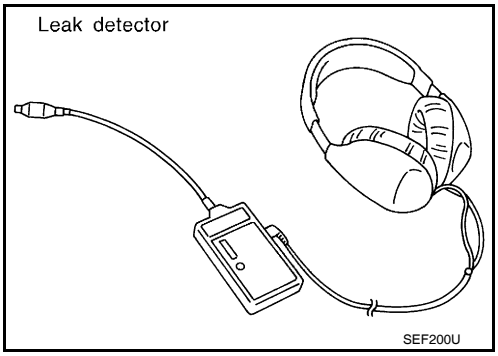

ON-VEHICLE REPAIR

EVAP CANISTER

Exploded View

INFOID:0000000004349568

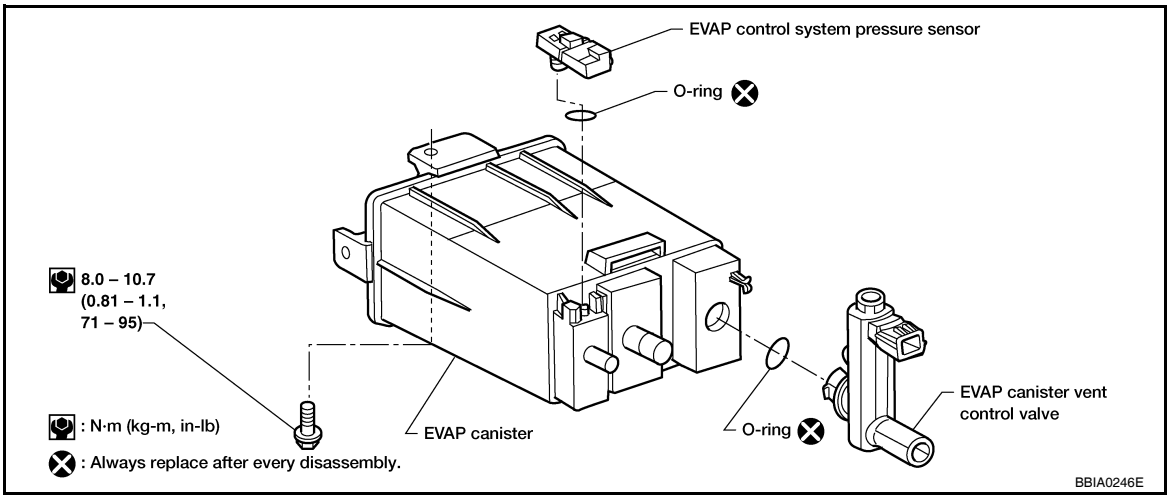

Removal and Installation

INFOID:0000000004349569

REMOVAL

1. Lift up the vehicle.
2. Remove EVAP canister fixing bolt.
3. Remove EVAP canister.

NOTE:
The EVAP canister vent control valve and EVAP canister system pressure sensor can be removed without removing the EVAP canister.

INSTALLATION

Install in the reverse order of removal.
NOTE:
Tighten EVAP canister fixing bolt to the specified torque.

DISASSEMBLY

1. Turn EVAP canister vent control valve counterclockwise.

   A : Lock
   B : Unlock

2. Remove the EVAP canister vent control valve.

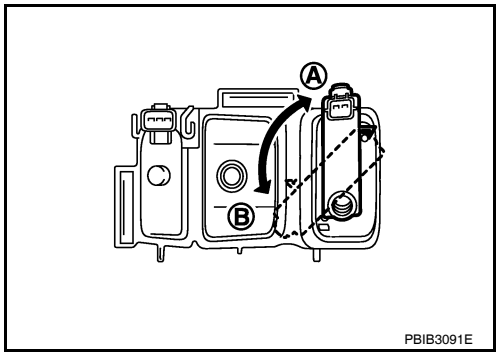

ASSEMBLY

Assemble in the reverse order of disassembly.
CAUTION:
Always replace O-ring with a new one.

Inspection

INFOID:0000000004349570

Check EVAP canister as follows:

1. Block port (B).
2. Blow air into port (A) and check that it flows freely out of port (C).
3. Release blocked port (B).
4. Apply vacuum pressure to port (B) and check that vacuum pressure exists at the ports (A) and (C).
5. Block port (A) and (B).
6. Apply pressure to port (C) and check that there is no leakage.

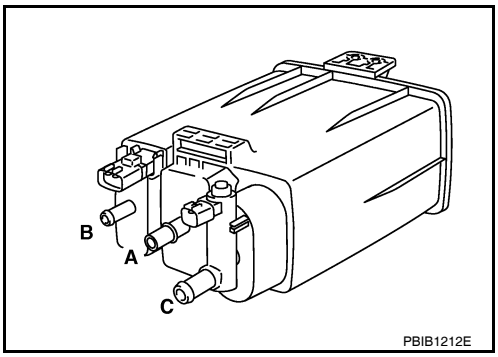

SERVICE DATA AND SPECIFICATIONS (SDS)

SERVICE DATA AND SPECIFICATIONS (SDS)

Idle Speed

INFOID:0000000004349571

Transmission	Condition	Specification
CVT	No load* (in P or N position)	650 ± 50 rpm
M/T	No load* (in Neutral position)	650 ± 50 rpm

*: Under the following conditions
- A/C switch: OFF
- Electric load: OFF (Lights, heater fan & rear window defogger)
- Steering wheel: Kept in straight-ahead position

Ignition Timing

INFOID:0000000004349572

Transmission	Condition	Specification
CVT	No load* (in P or N position)	15 ± 5° BTDC
M/T	No load* (in Neutral position)	15 ± 5° BTDC

*: Under the following conditions
- A/C switch: OFF
- Electric load: OFF (Lights, heater fan & rear window defogger)
- Steering wheel: Kept in straight-ahead position

Calculated Load Value

INFOID:0000000004349573

Condition	Specification (Using CONSULT-III or GST)
At idle	10 – 35 %
At 2,500 rpm	10 – 35 %

Mass Air Flow Sensor

INFOID:0000000004349574

Supply voltage	Battery voltage (11 – 14 V)
Output voltage at idle	0.8 – 1.2V*
Mass air flow (Using CONSULT-III or GST)	1.0 – 4.0 g·m/sec at idle* 4.0 – 10.0 g·m/sec at 2,500 rpm*

*: Engine is warmed up to normal operating temperature and running under no load.

BASIC INSPECTION

DIAGNOSIS AND REPAIR WORK FLOW

Work Flow

INFOID:0000000004349575

OVERALL SEQUENCE

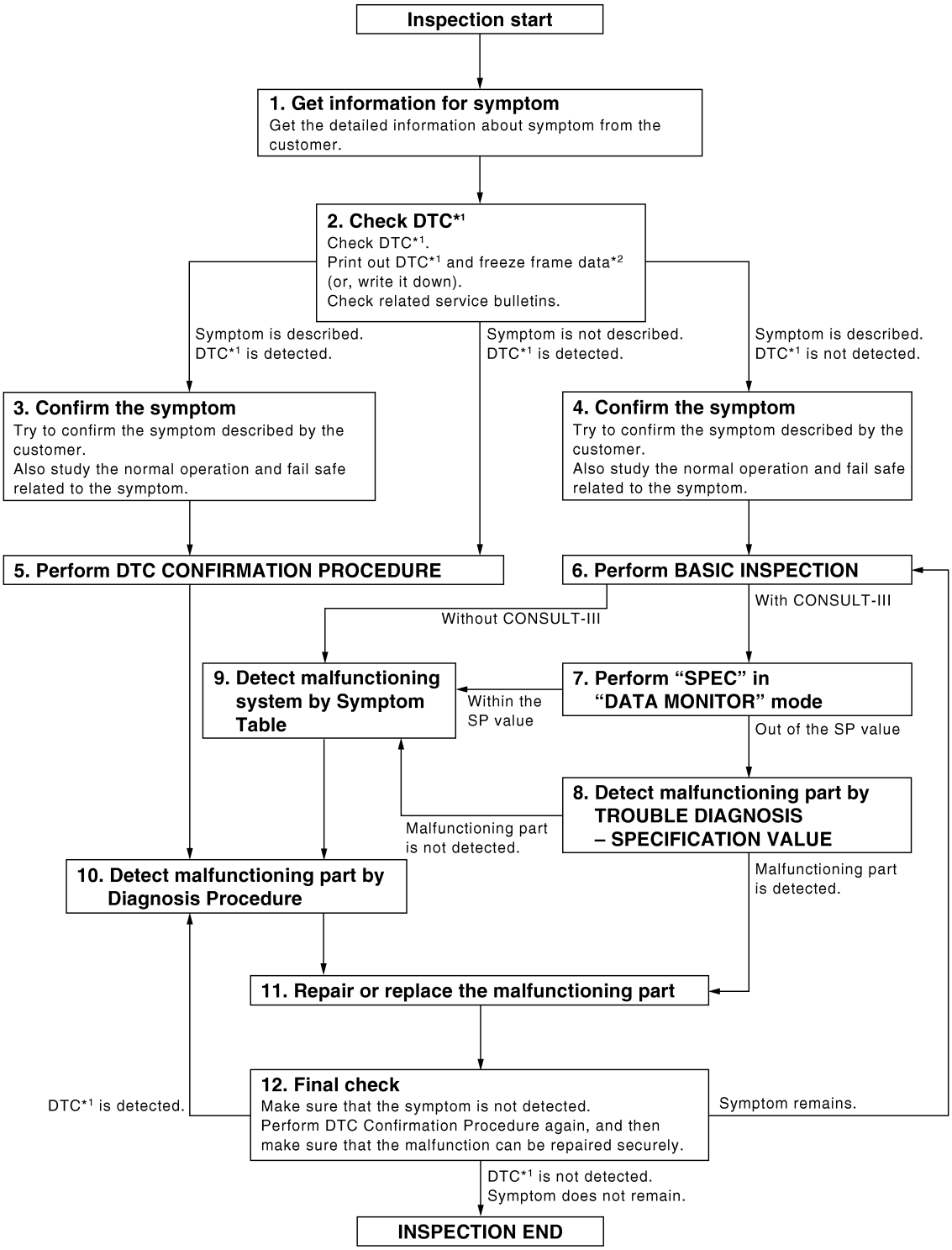

*1: Include 1st trip DTC.
*2: Include 1st trip freeze frame data.

JMBIA0078GB

DETAILED FLOW

1. GET INFORMATION FOR SYMPTOM

Get the detailed information from the customer about the symptom (the condition and the environment when the incident/malfunction occurred) using the “Diagnostic Work Sheet”. (Refer to EC-558, "Diagnostic Work Sheet".)

>> GO TO 2.

2. CHECK DTC

1. Check DTC.
2. Perform the following procedure if DTC is displayed.
- Record DTC and freeze frame data. (Print them out with CONSULT-III or GST.)
- Erase DTC. (Refer to EC-641, "Diagnosis Description".)
- Study the relationship between the cause detected by DTC and the symptom described by the customer. (Symptom Table is useful. Refer to EC-1027, "Symptom Table".)
3. Check related service bulletins for information.

Is any symptom described and is any DTC detected?

Symptom is described, DTC is detected>>GO TO 3.
Symptom is described, DTC is not detected>>GO TO 4.
Symptom is not described, DTC is detected>>GO TO 5.

3. CONFIRM THE SYMPTOM

Try to confirm the symptom described by the customer (except MIL ON).
Also study the normal operation and fail safe related to the symptom. Refer to EC-1031, "Description" and EC-1012, "Fail Safe".
Diagnosis Work Sheet is useful to verify the incident.
Verify relation between the symptom and the condition when the symptom is detected.

>> GO TO 5.

4. CONFIRM THE SYMPTOM

Try to confirm the symptom described by the customer.
Also study the normal operation and fail safe related to the symptom. Refer to EC-1031, "Description" and EC-1012, "Fail Safe".
Diagnosis Work Sheet is useful to verify the incident.
Verify relation between the symptom and the condition when the symptom is detected.

>> GO TO 6.

5. PERFORM DTC CONFIRMATION PROCEDURE

Perform DTC CONFIRMATION PROCEDURE for the displayed DTC, and then make sure that DTC is detected again.
If two or more DTCs are detected, refer to EC-1014, "DTC Inspection Priority Chart" and determine trouble diagnosis order.

NOTE:
- Freeze frame data is useful if the DTC is not detected.
- Perform Component Function Check if DTC CONFIRMATION PROCEDURE is not included on Service Manual. This simplified check procedure is an effective alternative though DTC cannot be detected during this check.
  If the result of Component Function Check is NG, it is the same as the detection of DTC by DTC CONFIRMATION PROCEDURE.

Is DTC detected?

YES >> GO TO 10.
NO >> Check according to GI-42, "Intermittent Incident".

6. PERFORM BASIC INSPECTION

Perform EC-560, "BASIC INSPECTION : Special Repair Requirement".

Do you have CONSULT-III?

YES >> GO TO 7.
NO >> GO TO 9.

7. PERFORM SPEC IN DATA MONITOR MODE

With CONSULT-III

Make sure that “MAS A/F SE-B1”, “B/FUEL SCHDL” and “A/F ALPHA-B1” are within the SP value using CONSULT-III in “SPEC” of “DATA MONITOR” mode. Refer to EC-665, "Component Function Check".

Is the measurement value within the SP value?

YES >> GO TO 9.
NO >> GO TO 8.

8. DETECT MALFUNCTIONING PART BY TROUBLE DIAGNOSIS - SPECIFICATION VALUE

Detect malfunctioning part according to EC-666, "Diagnosis Procedure".

Is malfunctioning part detected?

YES >> GO TO 11.
NO >> GO TO 9.

9. DETECT MALFUNCTIONING SYSTEM BY SYMPTOM TABLE

Detect malfunctioning system according to EC-1027, "Symptom Table" based on the confirmed symptom in step 4, and determine the trouble diagnosis order based on possible causes and symptom.

>> GO TO 10.

10. DETECT MALFUNCTIONING PART BY DIAGNOSIS PROCEDURE

Inspect according to Diagnosis Procedure of the system.

NOTE:

The Diagnosis Procedure in EC section described based on open circuit inspection. A short circuit inspection is also required for the circuit check in the Diagnosis Procedure. For details, refer to Circuit Inspection in GI-45, "Circuit Inspection".

Is malfunctioning part detected?

YES >> GO TO 11.
NO >> Monitor input data from related sensors or check the voltage of related ECM terminals using CONSULT-III. Refer to EC-978, "Reference Value".

11. REPAIR OR REPLACE THE MALFUNCTIONING PART

1. Repair or replace the malfunctioning part.
2. Reconnect parts or connectors disconnected during Diagnosis Procedure again after repair and replacement.
3. Check DTC. If DTC is displayed, erase it. Refer to EC-641, "Diagnosis Description".

>> GO TO 12.

12. FINAL CHECK

When DTC was detected in step 2, perform DTC CONFIRMATION PROCEDURE or Component Function Check again, and then make sure that the malfunction have been repaired securely.
When symptom was described from the customer, refer to confirmed symptom in step 3 or 4, and make sure that the symptom is not detected.

Is DTC detected and does symptom remain?

YES-1 >> DTC is detected: GO TO 10.
YES-2 >> Symptom remains: GO TO 6.
NO >> Before returning the vehicle to the customer, make sure to erase unnecessary DTC in ECM and TCM (Transmission Control Module). (Refer to EC-641, "Diagnosis Description".) If the completion of SRT is needed, drive vehicle under the specific DRIVING PATTERN in EC-1018, "How to Set SRT Code".

Diagnostic Work Sheet

INFOID:0000000004349576

DESCRIPTION

There are many operating conditions that lead to the malfunction of engine components. A good grasp of such conditions can make troubleshooting faster and more accurate.
In general, each customer feels differently about an incident. It is important to fully understand the symptoms or conditions for a customer complaint.
Utilize a diagnostic worksheet like the one on the WORKSHEET SAMPLE in order to organize all the information for troubleshooting.
Some conditions may cause the MIL to come on steady or blink and DTC to be detected. Examples:
- Vehicle ran out of fuel, which caused the engine to misfire.
- Fuel filler cap was left off or incorrectly screwed on, allowing fuel to evaporate into the atmosphere.

KEY POINTS

WHAT ..... Vehicle & engine model
WHEN ..... Date, Frequencies
WHERE..... Road conditions
HOW ..... Operating conditions, Weather conditions, Symptoms

SEF907L

WORKSHEET SAMPLE

Customer name MR/MS		Model & Year	VIN
Engine #		Trans.	Mileage
Incident Date		Manuf. Date	In Service Date
Fuel and fuel filler cap		☐ Vehicle ran out of fuel causing misfire ☐ Fuel filler cap was left off or incorrectly screwed on.	
Symptoms	☐ Startability	☐ Impossible to start ☐ No combustion ☐ Partial combustion ☐ Partial combustion affected by throttle position ☐ Partial combustion NOT affected by throttle position ☐ Possible but hard to start ☐ Others [ ]	
	☐ Idling	☐ No fast idle ☐ Unstable ☐ High idle ☐ Low idle ☐ Others [ ]	
	☐ Driveability	☐ Stumble ☐ Surge ☐ Knock ☐ Lack of power ☐ Intake backfire ☐ Exhaust backfire ☐ Others [ ]	
	☐ Engine stall	☐ At the time of start ☐ While idling ☐ While accelerating ☐ While decelerating ☐ Just after stopping ☐ While loading	
Incident occurrence		☐ Just after delivery ☐ Recently ☐ In the morning ☐ At night ☐ In the daytime	
Frequency		☐ All the time ☐ Under certain conditions ☐ Sometimes	
Weather conditions		☐ Not affected	
	Weather	☐ Fine ☐ Raining ☐ Snowing ☐ Others [ ]	
	Temperature	☐ Hot ☐ Warm ☐ Cool ☐ Cold ☐ Humid ˚F	
Engine conditions		☐ Cold ☐ During warm-up ☐ After warm-up Engine speed 0 2,000 4,000 6,000 8,000 rpm	
Road conditions		☐ In town ☐ In suburbs ☐ Highway ☐ Off road (up/down)	
Driving conditions		☐ Not affected ☐ At starting ☐ While idling ☐ At racing ☐ While accelerating ☐ While cruising ☐ While decelerating ☐ While turning (RH/LH) Vehicle speed 0 10 20 30 40 50 60 MPH	
Malfunction indicator lamp		☐ Turned on ☐ Not turned on	

MTBL0017

INSPECTION AND ADJUSTMENT
BASIC INSPECTION

BASIC INSPECTION : Special Repair Requirement

INFOID:0000000004349577

1. INSPECTION START

1. Check service records for any recent repairs that may indicate a related malfunction, or a current need for scheduled maintenance.
2. Open engine hood and check the following:
- Harness connectors for improper connections
- Wiring harness for improper connections, pinches and cut
- Vacuum hoses for splits, kinks and improper connections
- Hoses and ducts for leaks
- Air cleaner clogging
- Gasket
3. Confirm that electrical or mechanical loads are not applied.
- Headlamp switch is OFF.
- Air conditioner switch is OFF.
- Rear window defogger switch is OFF.
- Steering wheel is in the straight-ahead position, etc.
4. Start engine and warm it up until engine coolant temperature indicator points the middle of gauge.
   Ensure engine stays below 1,000 rpm.

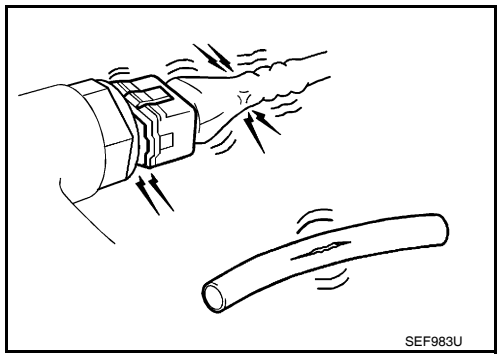

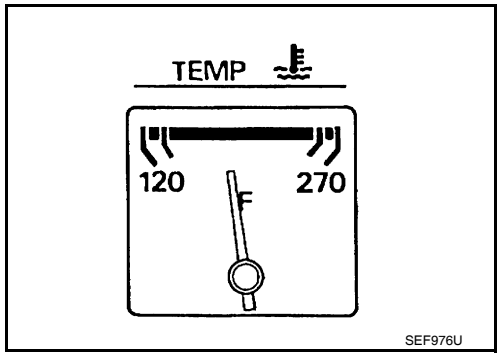

5. Run engine at about 2,000 rpm for about 2 minutes under no load.
6. Make sure that no DTC is displayed with CONSULT-III or GST.

Is any DTC detected?

YES >> GO TO 2.
NO >> GO TO 3.

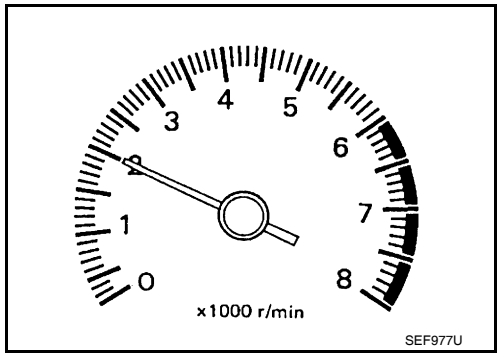

2. REPAIR OR REPLACE

Repair or replace components as necessary according to corresponding Diagnostic Procedure.

>> GO TO 3

3. CHECK TARGET IDLE SPEED

1. Run engine at about 2,000 rpm for about 2 minutes under no load.

2. Rev engine (2,000 to 3,000 rpm) two or three times under no load, then run engine at idle speed for about 1 minute.
3. Check idle speed.
For procedure, refer to EC-564, "IDLE SPEED : Special Repair Requirement".For specification, refer to EC-1043, "Idle Speed".

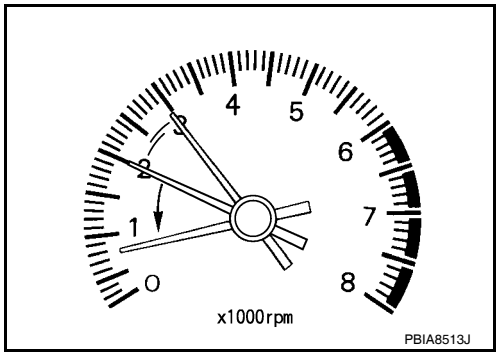

Is the inspection result normal?

YES >> GO TO 10.
NO >> GO TO 4.

4. PERFORM ACCELERATOR PEDAL RELEASED POSITION LEARNING

1. Stop engine.
2. Perform EC-565, "ACCELERATOR PEDAL RELEASED POSITION LEARNING : Special Repair Requirement".

>> GO TO 5.

5. PERFORM THROTTLE VALVE CLOSED POSITION LEARNING

Perform EC-565, "THROTTLE VALVE CLOSED POSITION LEARNING : Special Repair Requirement".

>> GO TO 6.

6. PERFORM IDLE AIR VOLUME LEARNING

Perform EC-566, "IDLE AIR VOLUME LEARNING : Special Repair Requirement".

Is Idle Air Volume Learning carried out successfully?

YES >> GO TO 7.
NO >> Follow the instruction of Idle Air Volume Learning. Then GO TO 4.

7. CHECK TARGET IDLE SPEED AGAIN

1. Start engine and warm it up to normal operating temperature.
2. Check idle speed.
For procedure, refer to EC-564, "IDLE SPEED : Special Repair Requirement".For specification, refer to EC-1043, "Idle Speed".

Is the inspection result normal?

YES >> GO TO 10.
NO >> GO TO 8.

8. DETECT MALFUNCTIONING PART

Check the Following.
- Check camshaft position sensor (PHASE) and circuit. Refer to EC-787, "DTC Logic".
- Check crankshaft position sensor (POS) and circuit. Refer to EC-783, "DTC Logic".

Is the inspection result normal?

YES >> GO TO 9.
NO >> Repair or replace. Then GO TO 4.

9. CHECK ECM FUNCTION

1. Substitute another known-good ECM to check ECM function. (ECM may be the cause of an incident, but this is a rare case.)
2. Perform initialization of NVIS (NATS) system and registration of all NVIS (NATS) ignition key IDs. Refer to EC-563, "ADDITIONAL SERVICE WHEN REPLACING CONTROL UNIT : Special Repair Requirement".

>> GO TO 4.

10. CHECK IGNITION TIMING

1. Run engine at idle.

2. Check ignition timing with a timing light.
For procedure, refer to EC-564, "IGNITION TIMING : Special Repair Requirement".For specification, refer to EC-1043, "Ignition Timing".

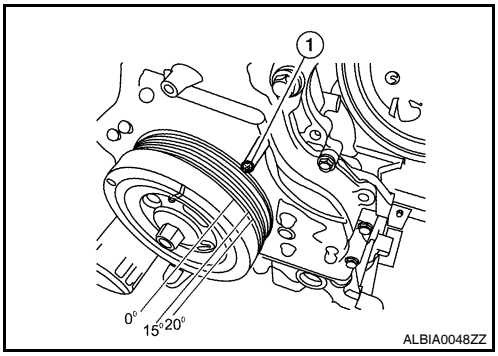

1 : Timing indicator

Is the inspection result normal?

YES >> GO TO 19.
NO >> GO TO 11.

11. PERFORM ACCELERATOR PEDAL RELEASED POSITION LEARNING

1. Stop engine.
2. Perform EC-565, "ACCELERATOR PEDAL RELEASED POSITION LEARNING : Special Repair Requirement".

>> GO TO 12.

12. PERFORM THROTTLE VALVE CLOSED POSITION LEARNING

Perform EC-565, "THROTTLE VALVE CLOSED POSITION LEARNING : Special Repair Requirement".

>> GO TO 13.

13. PERFORM IDLE AIR VOLUME LEARNING

Perform EC-566, "IDLE AIR VOLUME LEARNING : Special Repair Requirement".

Is Idle Air Volume Learning carried out successfully?

YES >> GO TO 14.
NO >> Follow the instruction of Idle Air Volume Learning. Then GO TO 4.

14. CHECK TARGET IDLE SPEED AGAIN

1. Start engine and warm it up to normal operating temperature.
2. Check idle speed.
For procedure, refer to EC-564, "IDLE SPEED : Special Repair Requirement".For specification, refer to EC-1043, "Idle Speed".

Is the inspection result normal?

YES >> GO TO 15.
NO >> GO TO 17.

15. CHECK IGNITION TIMING AGAIN

1. Run engine at idle.
2. Check ignition timing with a timing light.
For procedure, refer to EC-564, "IGNITION TIMING : Special Repair Requirement".For specification, refer to EC-1043, "Ignition Timing".

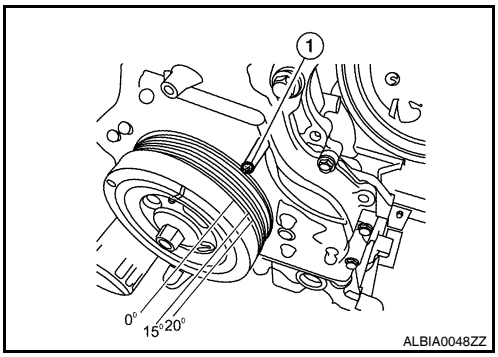

1 : Timing indicator

Is the inspection result normal?

YES >> GO TO 19.
NO >> GO TO 16.

16. CHECK TIMING CHAIN INSTALLATION

Check timing chain installation. Refer to EM-52, "Removal and Installation".

Is the inspection result normal?

YES >> GO TO 17.
NO >> Repair the timing chain installation. Then GO TO 4.

17. DETECT MALFUNCTIONING PART

Check the following.
- Check camshaft position sensor (PHASE) and circuit. Refer to EC-787, "DTC Logic".
- Check crankshaft position sensor (POS) and circuit. Refer to EC-783, "DTC Logic".

Is the inspection result normal?

YES >> GO TO 18.
NO >> Repair or replace. Then GO TO 4.

18. CHECK ECM FUNCTION

1. Substitute another known-good ECM to check ECM function. (ECM may be the cause of an incident, but this is a rare case.)
2. Perform initialization of NVIS (NATS) system and registration of all NVIS (NATS) ignition key IDs. Refer to EC-563, "ADDITIONAL SERVICE WHEN REPLACING CONTROL UNIT : Special Repair Requirement".

>> GO TO 4.

19. INSPECTION END

If ECM is replaced during this BASIC INSPECTION procedure, go to EC-27, "ADDITIONAL SERVICE WHEN REPLACING CONTROL UNIT : Special Repair Requirement".

>> INSPECTION END

ADDITIONAL SERVICE WHEN REPLACING CONTROL UNIT

ADDITIONAL SERVICE WHEN REPLACING CONTROL UNIT : Description

INFOID:0000000004349578

When replacing ECM, this procedure must be performed.

ADDITIONAL SERVICE WHEN REPLACING CONTROL UNIT : Special Repair Requirement

INFOID:0000000004349579

1. PERFORM INITIALIZATION OF NATS SYSTEM AND REGISTRATION OF ALL NATS IGNITION KEY IDS

Refer to EC-563, "ADDITIONAL SERVICE WHEN REPLACING CONTROL UNIT : Special Repair Requirement".

>> GO TO 2.

2. PERFORM VIN REGISTRATION

Refer to EC-565, "VIN REGISTRATION : Special Repair Requirement".

>> GO TO 3.

3. PERFORM ACCELERATOR PEDAL RELEASED POSITION LEARNING

Refer to EC-565, "ACCELERATOR PEDAL RELEASED POSITION LEARNING : Special Repair Requirement".

>> GO TO 4.

4. PERFORM THROTTLE VALVE CLOSED POSITION LEARNING

Refer to EC-565, "THROTTLE VALVE CLOSED POSITION LEARNING : Special Repair Requirement".

>> GO TO 5.

5. PERFORM IDLE AIR VOLUME LEARNING

Refer to EC-566, "IDLE AIR VOLUME LEARNING : Special Repair Requirement".

>> END

IDLE SPEED

IDLE SPEED : Description

INFOID:0000000004349580

This describes how to check the idle speed. For the actual procedure, follow the instructions in “BASIC INSPECTION”.

IDLE SPEED : Special Repair Requirement

INFOID:0000000004349581

1.CHECK IDLE SPEED

With CONSULT-III
Check idle speed in “DATA MONITOR” mode with CONSULT-III.
With GST
Check idle speed with Service $01 of GST.

>> INSPECTION END

IGNITION TIMING

IGNITION TIMING : Description

INFOID:0000000004349582

This describes how to check the ignition timing. For the actual procedure, follow the instructions in “BASIC INSPECTION”.

IGNITION TIMING : Special Repair Requirement

INFOID:0000000004349583

1.CHECK IGNITION TIMING

1. Attach timing light to No. 1 igniton coil (1) wire as shown.

2 : Timing light
⇦ : Vehicle front

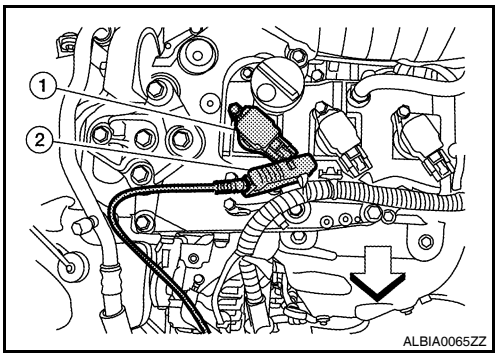

2. Check ignition timing.

1 : Timing indicator

>> INSPECTION END

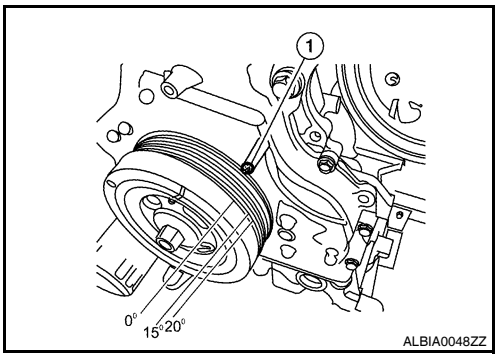

VIN REGISTRATION

VIN REGISTRATION : Description

INFOID:0000000004349584

VIN Registration is an operation to registering VIN in ECM. It must be performed each time ECM is replaced.
NOTE:
Accurate VIN which is registered in ECM may be required for Inspection & Maintenance (I/M).

VIN REGISTRATION : Special Repair Requirement

INFOID:0000000004349585

1. CHECK VIN

Check the VIN of the vehicle and note it. Refer to GI-22, "Identification Number - Sedan" or GI-23, "Identification Number - Coupe".

>> GO TO 2.

2. PERFORM VIN REGISTRATION

With CONSULT-III

1. Turn ignition switch ON and engine stopped.
2. Select “VIN REGISTRATION” in “WORK SUPPORT” mode.
3. Follow the instruction of CONSULT-III display.

>> END

ACCELERATOR PEDAL RELEASED POSITION LEARNING

ACCELERATOR PEDAL RELEASED POSITION LEARNING : Description

INFOID:0000000004349586

Accelerator Pedal Released Position Learning is a function of ECM to learn the fully released position of the accelerator pedal by monitoring the accelerator pedal position sensor output signal. It must be performed each time harness connector of accelerator pedal position sensor or ECM is disconnected.

ACCELERATOR PEDAL RELEASED POSITION LEARNING : Special Repair Requirement

INFOID:0000000004349587

1. START

1. Make sure that accelerator pedal is fully released.
2. Turn ignition switch ON and wait at least 2 seconds.
3. Turn ignition switch OFF and wait at least 10 seconds.
4. Turn ignition switch ON and wait at least 2 seconds.
5. Turn ignition switch OFF and wait at least 10 seconds.

>> END

THROTTLE VALVE CLOSED POSITION LEARNING

THROTTLE VALVE CLOSED POSITION LEARNING : Description

INFOID:0000000004349588

Throttle Valve Closed Position Learning is a function of ECM to learn the fully closed position of the throttle valve by monitoring the throttle position sensor output signal. It must be performed each time harness connector of electric throttle control actuator or ECM is disconnected.

THROTTLE VALVE CLOSED POSITION LEARNING : Special Repair Requirement

INFOID:0000000004349589

1. START

1. Make sure that accelerator pedal is fully released.
2. Turn ignition switch ON.
3. Turn ignition switch OFF and wait at least 10 seconds.
   Make sure that throttle valve moves during above 10 seconds by confirming the operating sound.

>> END

IDLE AIR VOLUME LEARNING

IDLE AIR VOLUME LEARNING : Description

INFOID:0000000004349590

Idle Air Volume Learning is a function of ECM to learn the idle air volume that keeps each engine idle speed within the specific range. It must be performed under any of the following conditions:
- Each time electric throttle control actuator or ECM is replaced.
- Idle speed or ignition timing is out of specification.

IDLE AIR VOLUME LEARNING : Special Repair Requirement

INFOID:0000000004349591

1.PRECONDITIONING

Make sure that all of the following conditions are satisfied.
Learning will be cancelled if any of the following conditions are missed for even a moment.
- Battery voltage: More than 12.9V (At idle)
- Engine coolant temperature: 70 - 100°C (158 - 212°F)
- Selector lever: P or N (CVT), Neutral (M/T)
- Electric load switch: OFF
  (Air conditioner, headlamp, rear window defogger)
  On vehicles equipped with daytime light systems, if the parking brake is applied before the engine is started the headlamp will not be illuminated.
- Steering wheel: Neutral (Straight-ahead position)
- Vehicle speed: Stopped
- Transmission: Warmed-up
- CVT models
- With CONSULT-III: Drive vehicle until “ATF TEMP SEN” in “DATA MONITOR” mode of “CVT” system indicates less than 0.9V.
- Without CONSULT-III: Drive vehicle for 10 minutes.
- M/T models
- Drive vehicle for 10 minutes.

Do you have CONSULT-III?

YES >> GO TO 2.
NO >> GO TO 3.

2.IDLE AIR VOLUME LEARNING

With CONSULT-III

1. Perform Accelerator Pedal Released Position Learning. Refer to EC-565, "ACCELERATOR PEDAL RELEASED POSITION LEARNING : Special Repair Requirement".
2. Perform Throttle Valve Closed Position Learning. Refer to EC-565, "THROTTLE VALVE CLOSED POSITION LEARNING : Special Repair Requirement".
3. Start engine and warm it up to normal operating temperature.
4. Select “IDLE AIR VOL LEARN” in “WORK SUPPORT” mode.
5. Touch “START” and wait 20 seconds.

Is “CMPLT” displayed on CONSULT-III screen?

YES >> GO TO 4.
NO >> GO TO 5.

3.IDLE AIR VOLUME LEARNING

Without CONSULT-III

NOTE:
- **It is better to count the time accurately with a clock.**
- **It is impossible to switch the diagnostic mode when an accelerator pedal position sensor circuit has a malfunction.**

1. Perform Accelerator Pedal Released Position Learning. Refer to EC-565, "ACCELERATOR PEDAL RELEASED POSITION LEARNING : Special Repair Requirement".
2. Perform Throttle Valve Closed Position Learning. Refer to EC-565, "THROTTLE VALVE CLOSED POSITION LEARNING : Special Repair Requirement".
3. Start engine and warm it up to normal operating temperature.
4. Turn ignition switch OFF and wait at least 10 seconds.
5. Confirm that accelerator pedal is fully released, turn ignition switch ON and wait 3 seconds.
6. Repeat the following procedure quickly five times within 5 seconds.

- Fully depress the accelerator pedal.
- Fully release the accelerator pedal.

7. Wait 7 seconds, fully depress the accelerator pedal and keep it for approx. 20 seconds until the MIL stops blinking and turned ON.
8. Fully release the accelerator pedal within 3 seconds after the MIL turned ON.
9. Start engine and let it idle.
10. Wait 20 seconds.

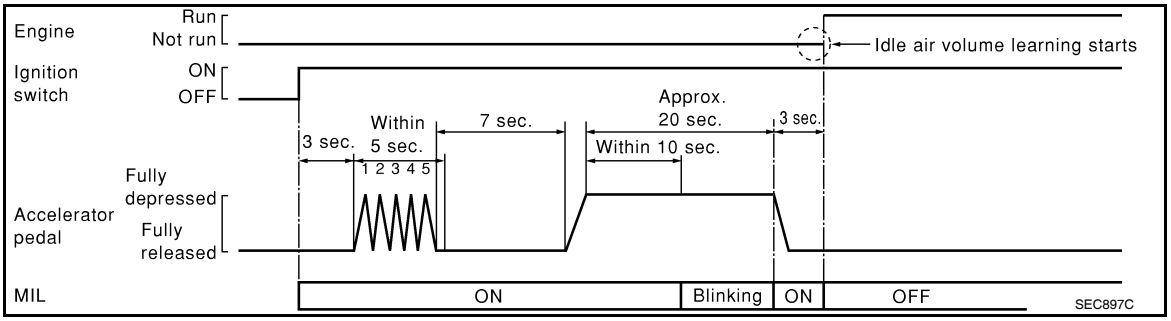

>> GO TO 4.

4. CHECK IDLE SPEED AND IGNITION TIMING

Rev up the engine two or three times and make sure that idle speed and ignition timing are within the specifications.

ITEM	SPECIFICATION
Idle speed	CVT: 650 ± 50 rpm (in P or N position) M/T: 650 ± 50 rpm (in Neutral position)
Ignition timing	CVT: 15 ± 5° (in P or N position) M/T: 15 ± 5° (in Neutral position)

Is the inspection result normal?

YES >> INSPECTION END

5. DETECT MALFUNCTIONING PART

Check the following
- Check that throttle valve is fully closed.
- Check PCV valve operation.
- Check that downstream of throttle valve is free from air leakage.

Is the inspection result normal?

YES >> GO TO 6.
NO >> Repair or replace malfunctioning part.

6. DETECT MALFUNCTIONING PART

Engine component parts and their installation condition are questionable. Check and eliminate the cause of the incident.
It is useful to perform “TROUBLE DIAGNOSIS - SPECIFICATION VALUE”. Refer to EC-665, "Description".
If any of the following conditions occur after the engine has started, eliminate the cause of the incident and perform Idle Air Volume Learning all over again:
- Engine stalls.
- Erroneous idle.

>> INSPECTION END

MIXTURE RATIO SELF-LEARNING VALUE CLEAR

MIXTURE RATIO SELF-LEARNING VALUE CLEAR : Description

INFOID:0000000004349592

This describes how to erase the mixture ratio self-learning value. For the actual procedure, follow the instructions in “Diagnosis Procedure”.

MIXTURE RATIO SELF-LEARNING VALUE CLEAR : Special Repair Requirement

INFOID:0000000004349593

1.START

With CONSULT-III

1. Start engine and warm it up to normal operating temperature.
2. Select “SELF-LEARNING CONT” in “WORK SUPPORT” mode with CONSULT-III.
3. Clear mixture ratio self-learning value by touching “CLEAR”.

With GST

1. Start engine and warm it up to normal operating temperature.
2. Turn ignition switch OFF.
3. Disconnect mass air flow sensor harness connector.
4. Restart engine and let it idle for at least 5 seconds.
5. Stop engine and reconnect mass air flow sensor harness connector.
6. Select Service $03 with GST. Make sure DTC P0102 is detected.
7. Select Service $04 with GST to erase the DTC P0102.

>> END

FUNCTION DIAGNOSIS

ENGINE CONTROL SYSTEM

System Diagram

INFOID:0000000004349600

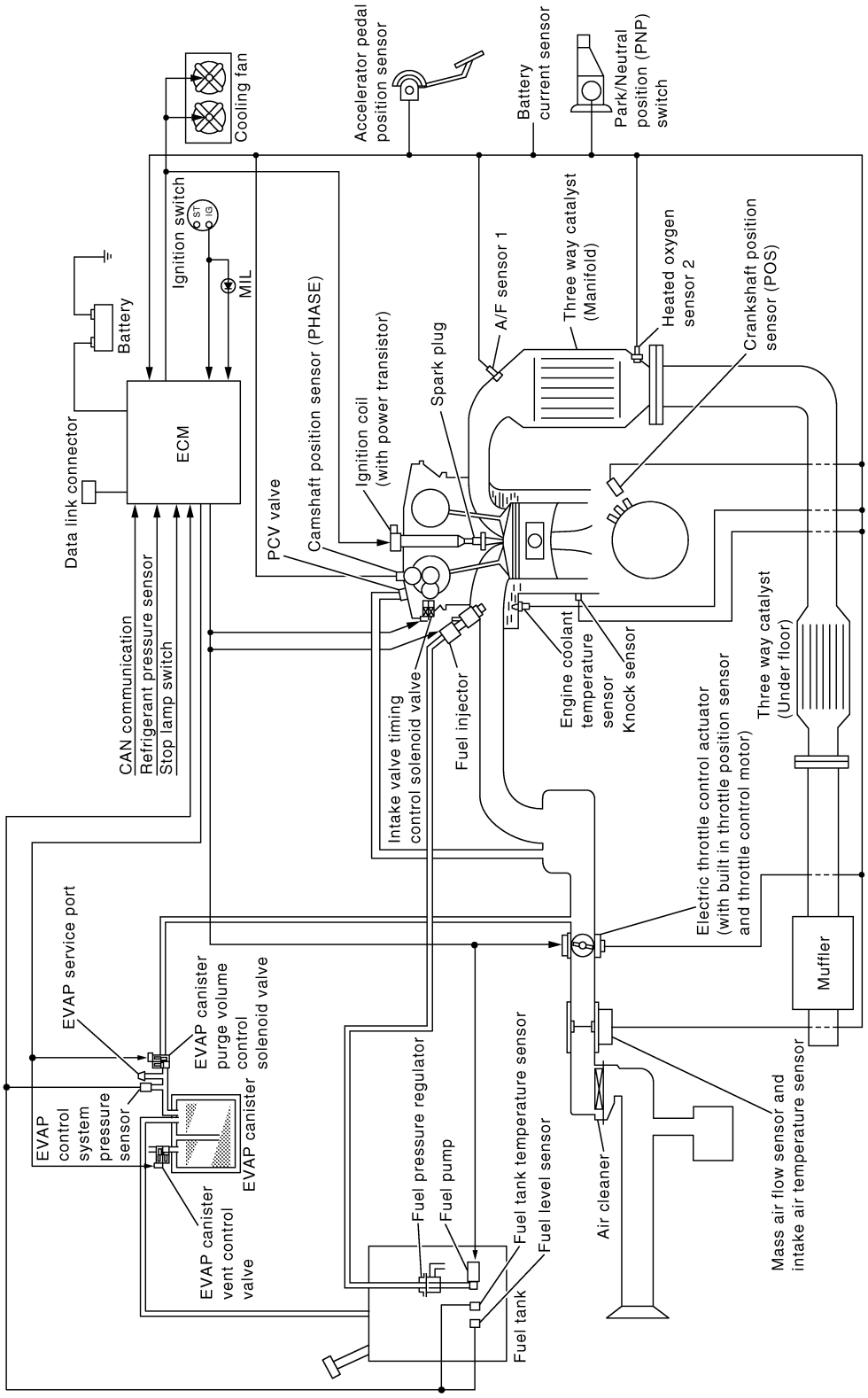

System Description

INFOID:0000000004349601

ECM performs various controls such as fuel injection control and ignition timing control.

Component Parts Location

INFOID:0000000004349602

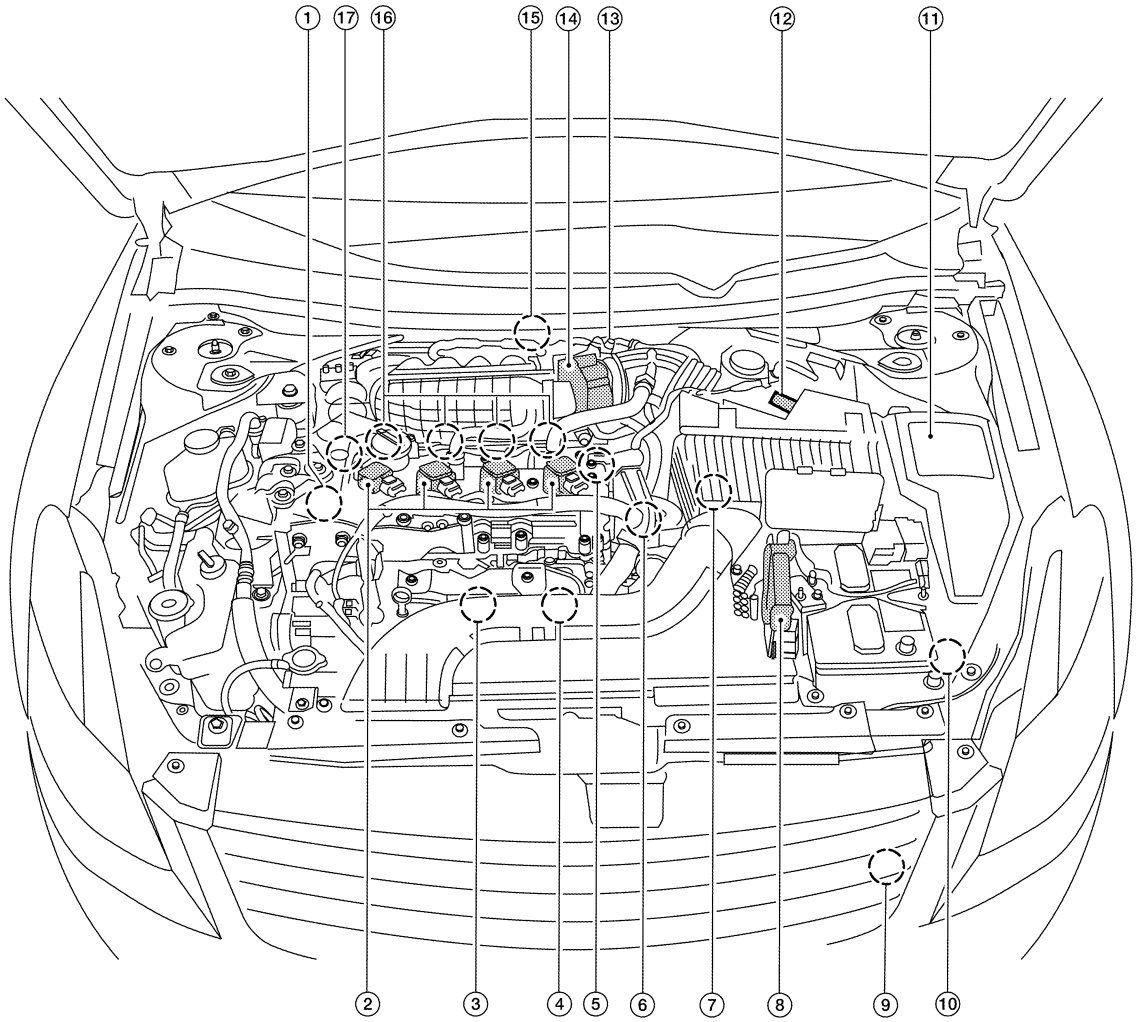

ALBIA0094ZZ

1. Intake valve timing control solenoid valve
2. Ignition coil (with power transistor) and spark plug
3. Knock sensor, Crankshaft position sensor (POS)
4. Air fuel ratio (A/F) sensor 1
5. Camshaft position sensor (PHASE)
6. Engine coolant temperature sensor
7. Park/neutral position (PNP) switch
8. ECM
9. Refrigerant pressure sensor
10. Battery current sensor
11. IPDM E/R
12. Mass air flow sensor (with intake temperature sensor)
13. EVAP service port
14. Electric throttle control actuator (with built in throttle position sensor and throttle control motor)
15. EVAP canister purge volume control solenoid valve
16. Fuel injector
17. Power steering pressure sensor

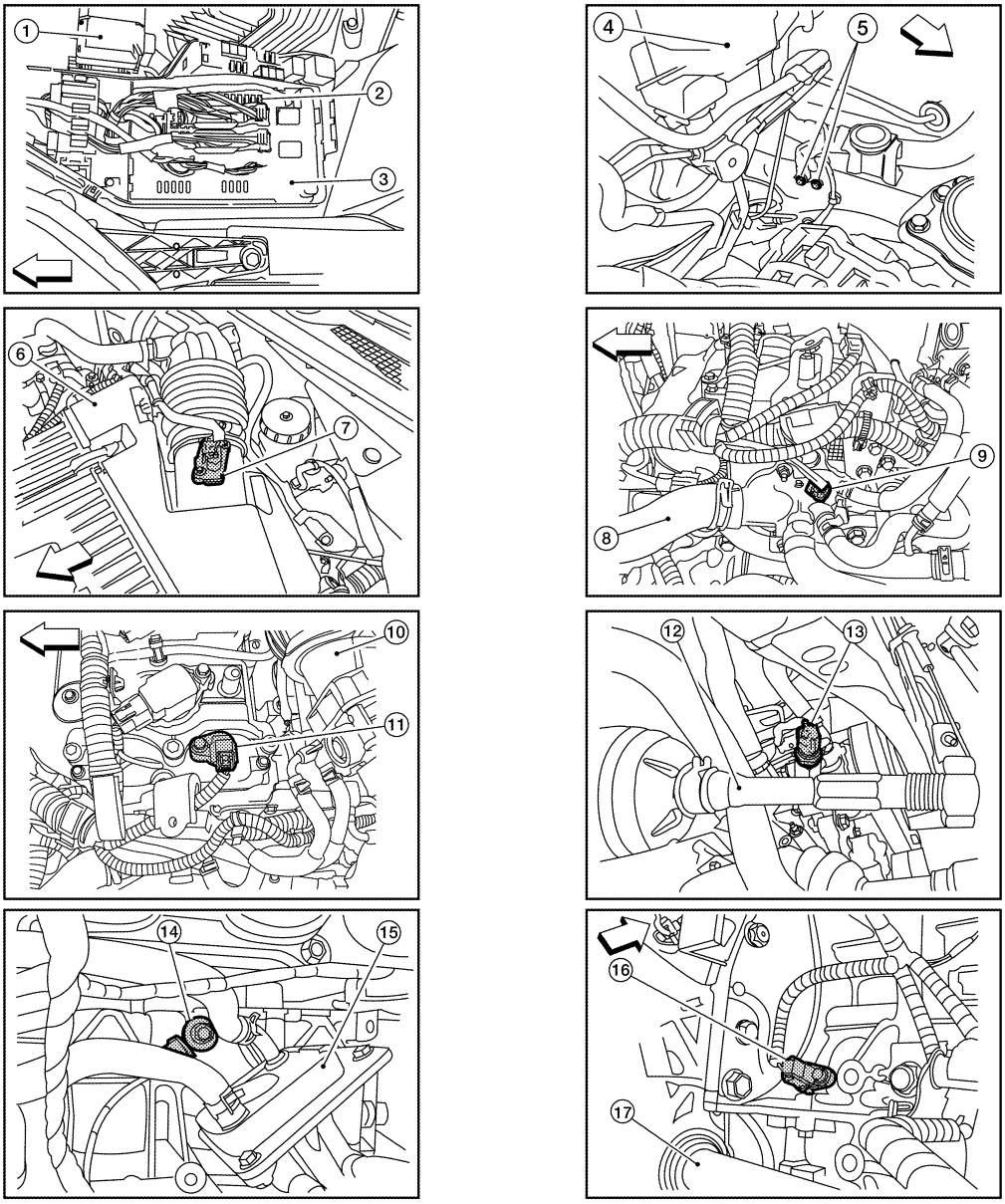

ALBIA0091ZZ

1. Battery	2. Fuel pump fuse (15A)	3. IPDM E/R
4. Brake master cylinder	5. Engine ground	6. Air cleaner assembly
7. Mass air flow sensor (with intake air temperature sensor)	8. Radiator hose (upper)	9. Engine coolant temperature sensor
10. Intake air duct	11. Camshaft position sensor (PHASE)	12. Tie rod (RH)
13. Power steering pressure sensor	14. Knock sensor	15. Engine oil cooler
16. Crankshaft position sensor (POS)	17. Drive shaft (RH)	

⇦: Vehicle front

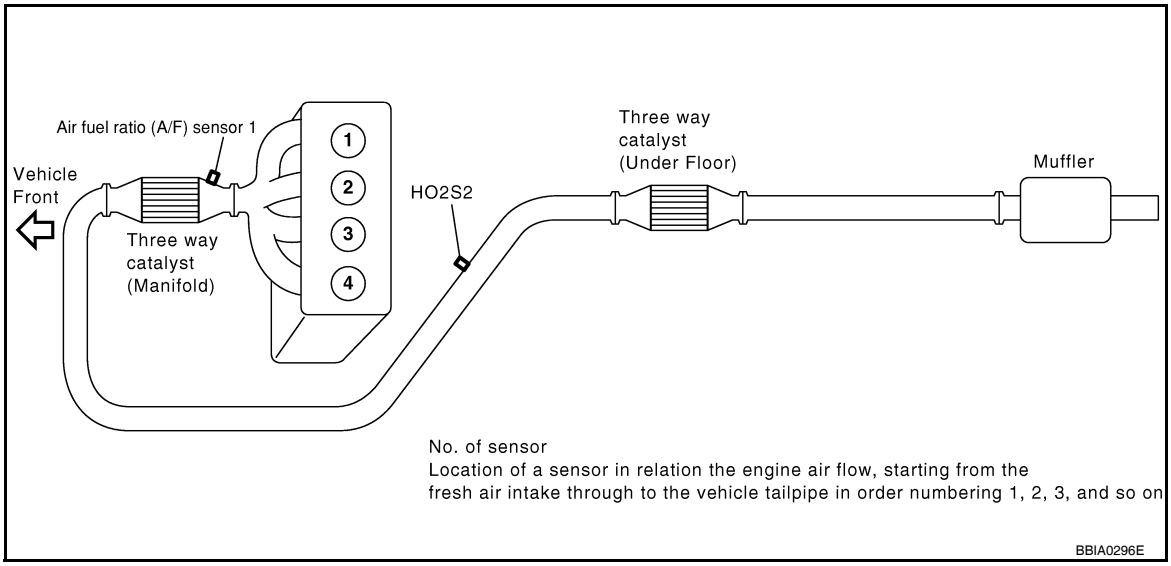

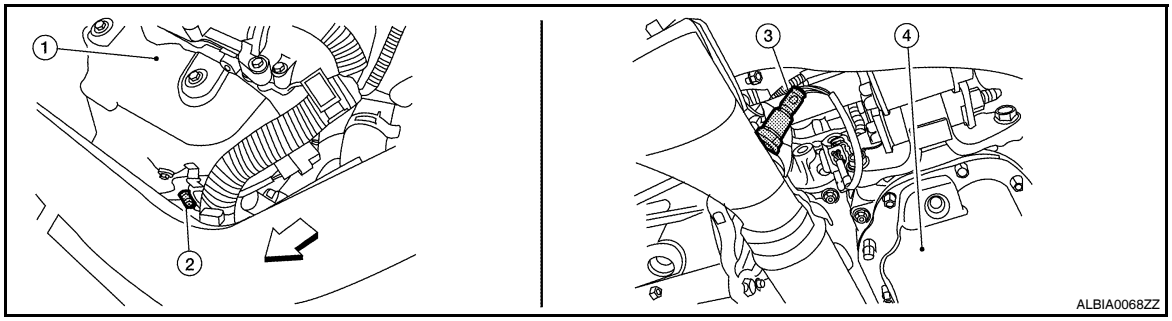

1. Exhaust manifold cover
2. Air fuel ratio (A/F) sensor 1
3. Heated oxygen sensor 2 (This illustration is a view from under vehicle.)
4. Engine oil pan

⇦: Vehicle front

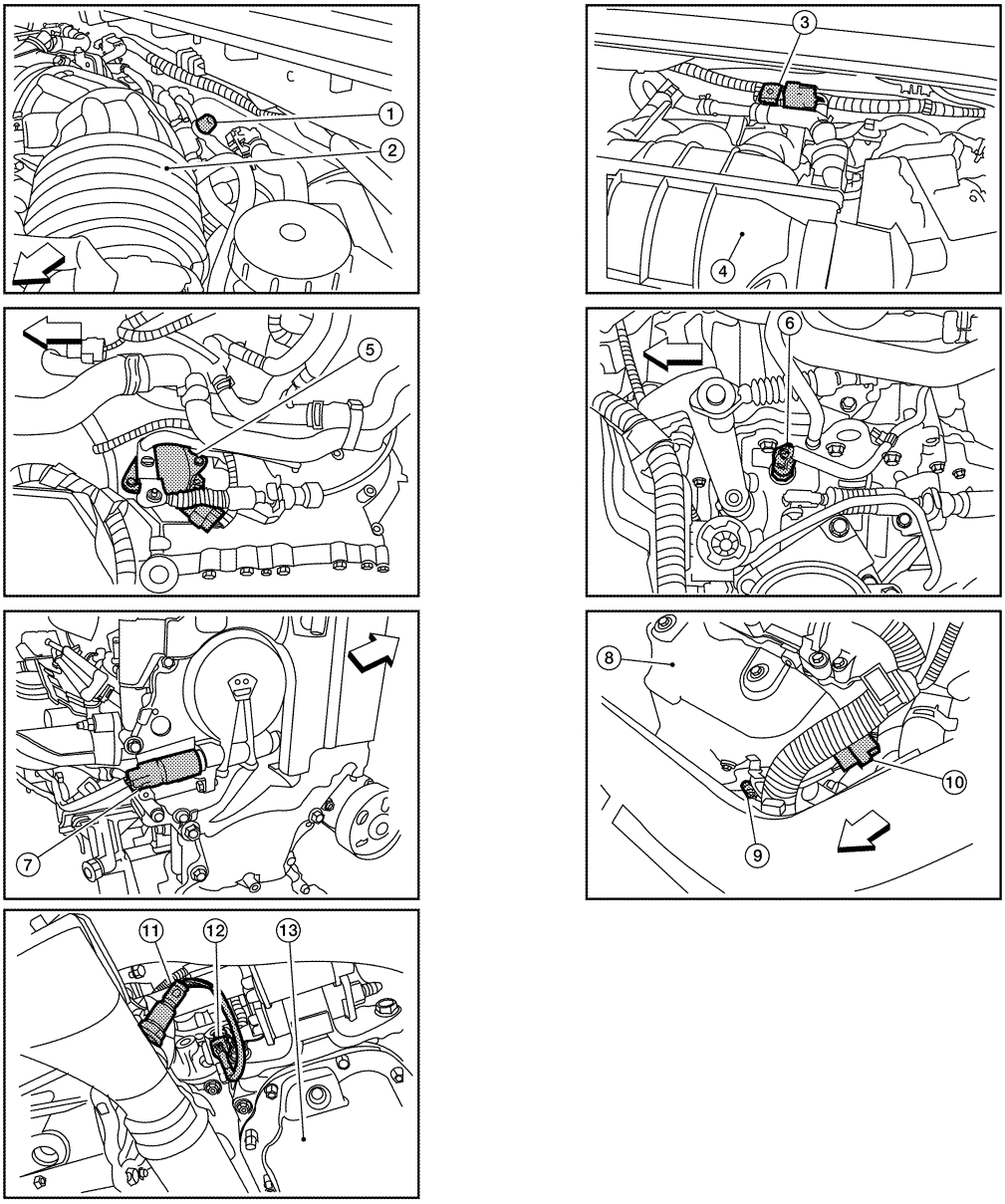

ALBIA0095ZZ

1. EVAP service port
2. Intake air duct
3. EVAP canister purge volume control solenoid valve
4. Intake manifold collector
5. Park/neutral position (PNP) switch (CVT) (This illustration is view with air cleaner assembly removed.)
6. Park/neutral position (PNP) switch (M/T) (This illustration is view with air cleaner assembly removed.)
7. Intake valve timing control solenoid valve (This illustration is view with engine removed.)
8. Exhaust manifold cover
9. Air fuel ratio (A/F) sensor 1
10. Air fuel ratio (A/F) sensor 1 harness connector
11. Heated oxygen sensor 2 (This illustration is view from under vehicle.)
12. Heated oxygen sensor 2 harness connector (This illustration is view from under vehicle.)
13. Engine oil pan

⇦: Vehicle front

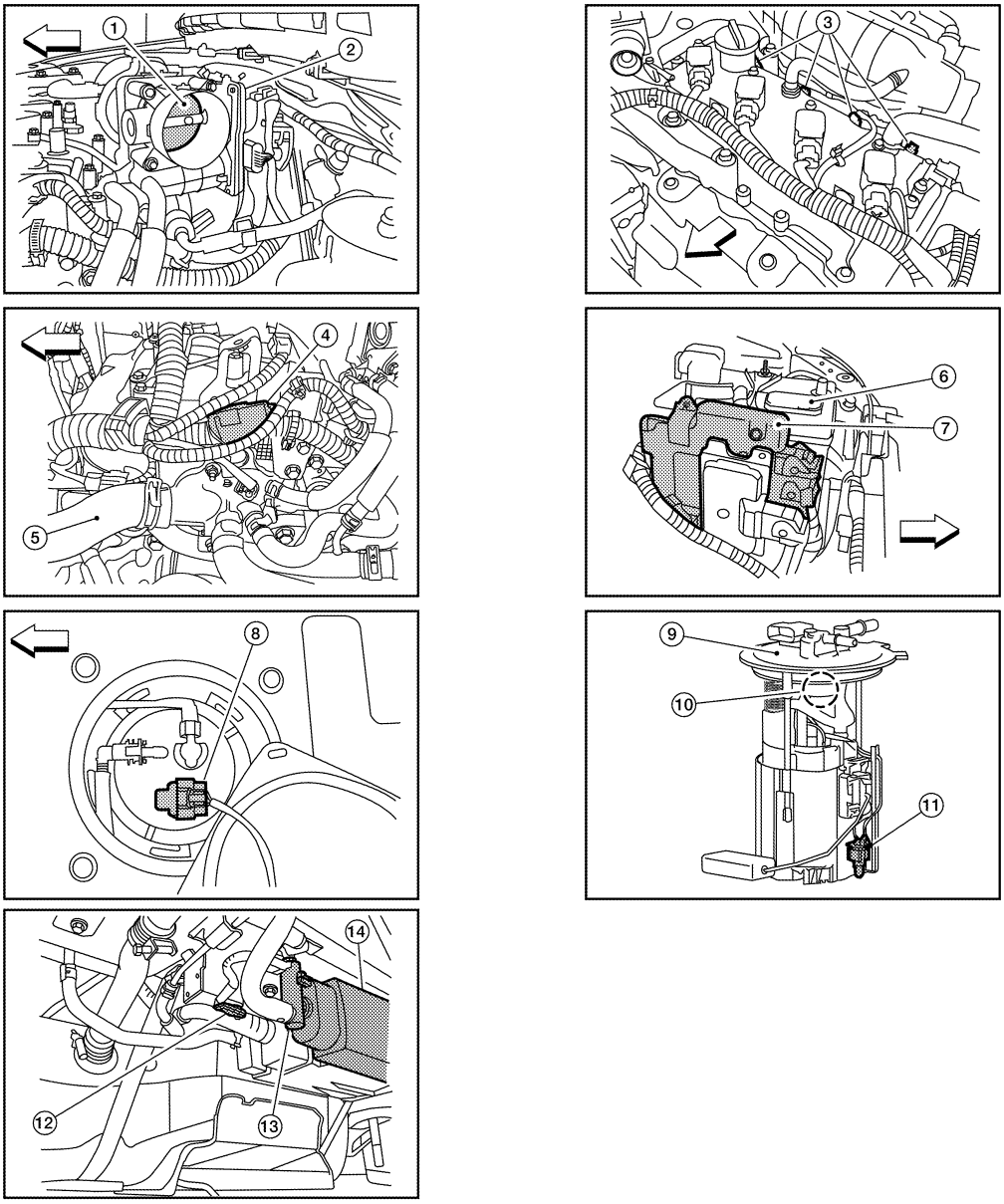

ALBIA0096ZZ

1. Throttle valve (This illustration is view with intake air duct removed.)
2. Electric throttle control actuator
3. Fuel injector harness connector
4. Condenser-2
5. Radiator hose (upper)
6. Battery
7. ECM
8. Fuel level sensor unit and fuel pump harness connector (This illustration is view with rear seat cushion and inspection hole cover removed.)
9. Fuel level sensor unit and fuel pump assembly
10. Fuel pressure regulator
11. Fuel tank temperature sensor
12. EVAP control system pressure sensor (This illustration is view with rear suspension member removed.)
13. EVAP canister vent control valve (This illustration is view with rear suspension member removed.)
14. EVAP canister (This illustration is view with rear suspension member removed.)

⇦ : Vehicle front

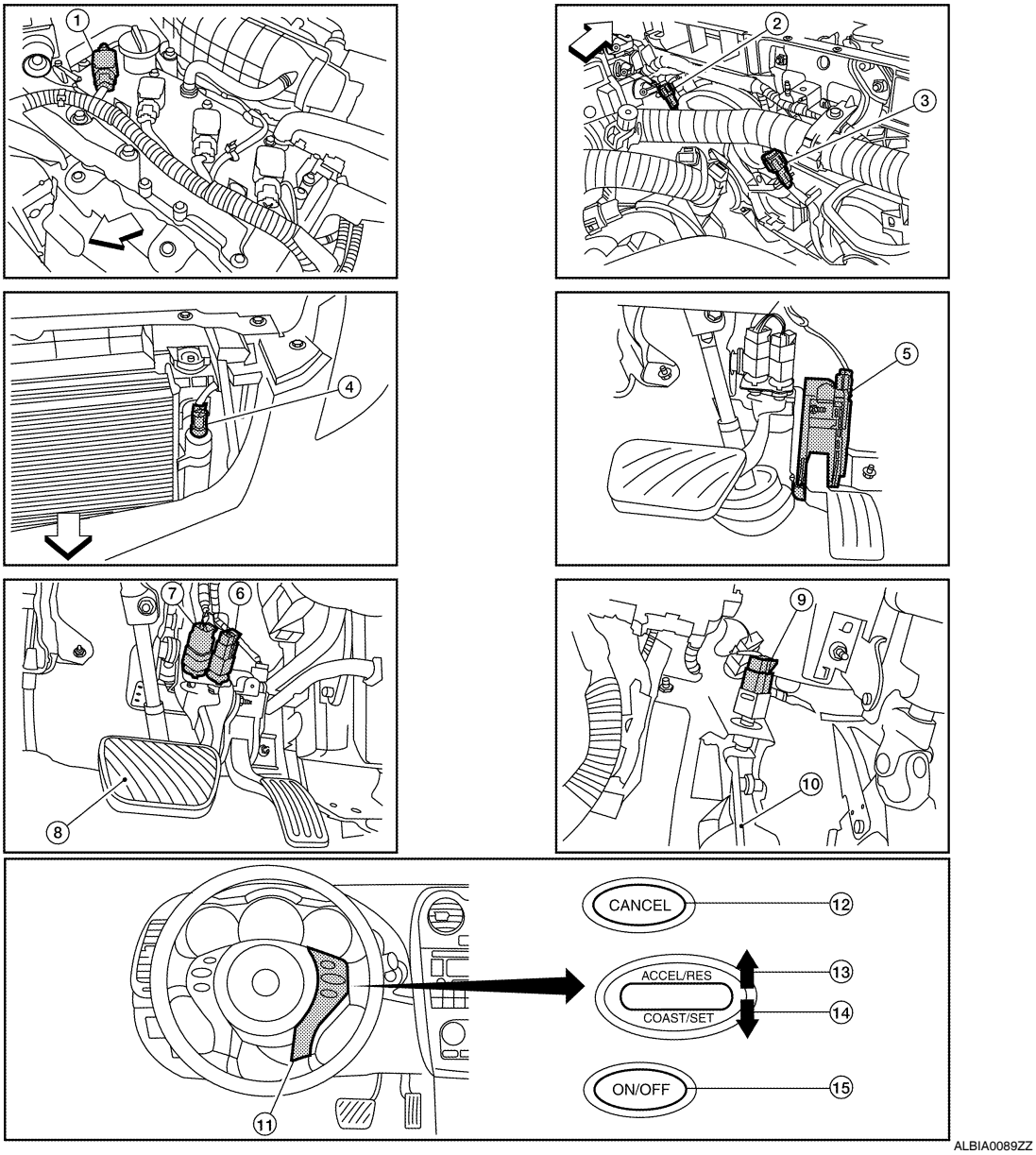

1. No.1 ignition coil
2. Cooling fan motor-1 harness connector
3. Cooling fan motor-2 harness connector
4. Refrigerant pressure sensor
5. Accelerator pedal position sensor
6. ASCD brake switch
7. Stop lamp switch
8. Brake pedal
9. ASCD clutch switch
10. Clutch pedal
11. ASCD steering switch
12. CANSEC switch
13. RESUME/ACCELERATE switch
14. SET/COAST switch
15. MAIN switch

⇦: Vehicle front

Component Description

INFOID:0000000004349603

Component	Reference
A/F sensor 1	EC-724, "Description"
A/F sensor 1 heater	EC-684, "Description"
Accelerator pedal position sensor	EC-924, "Description"
ASCD brake switch	EC-899, "Description"

Component	Reference
ASCD steering switch	EC-896, "Description"
Battery current sensor	EC-884, "Description"
Camshaft position sensor (PHASE)	EC-787, "Description"
Crankshaft position sensor (POS)	EC-783, "Description"
Cooling fan motor	EC-613, "System Description"
Electric throttle control actuator	EC-922, "Description"
Engine coolant temperature sensor	EC-711, "Description"
EVAP canister purge volume control solenoid valve	EC-807, "Description"
EVAP canister vent control valve	EC-814, "Description"
EVAP control system pressure sensor	EC-822, "Description"
Fuel injector	EC-956, "Description"
Fuel level sensor	EC-848, "Description"
Fuel pump	EC-959, "Description"
Fuel tank temperature sensor	EC-767, "Description"
Heated oxygen sensor 2	EC-739, "Description"
Heated oxygen sensor 2 heater	EC-687, "Description"
Ignition signal	EC-963, "Description"
Intake air temperature sensor	EC-706, "Description"
Intake valve timing control solenoid valve	EC-633, "System Description"
Knock sensor	EC-781, "Description"
Mass air flow sensor	EC-693, "Description"
Park/neutral position switch	EC-870, "Description"
PCV valve	EC-974, "Description"
Power steering pressure sensor	EC-859, "Description"
Refrigerant pressure sensor	EC-975, "Description"
Stop lamp switch	EC-911, "Description"
Throttle control motor	EC-920, "Description"
Throttle control motor relay	EC-914, "Description"
Throttle position sensor	EC-714, "Description"

MULTIPORT FUEL INJECTION SYSTEM

System Diagram

INFOID:0000000004349604

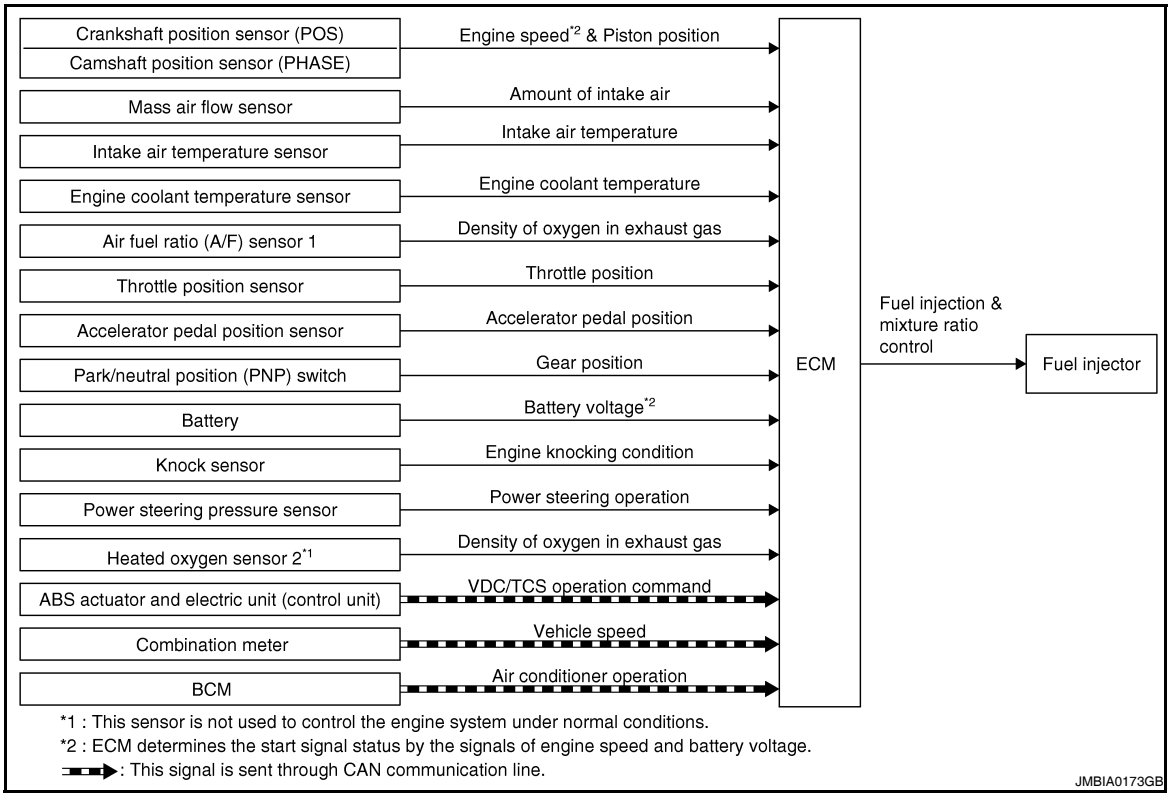

System Description

INFOID:0000000004349605

INPUT/OUTPUT SIGNAL CHART

Sensor	Input Signal to ECM	ECM function	Actuator
Crankshaft position sensor (POS)	Engine speed*3 Piston position	Fuel injection & mixture ratio control	Fuel injector
Camshaft position sensor (PHASE)			
Mass air flow sensor	Amount of intake air		
Intake air temperature sensor	Intake air temperature		
Engine coolant temperature sensor	Engine coolant temperature		
Air fuel ratio (A/F) sensor 1	Density of oxygen in exhaust gas		
Throttle position sensor	Throttle position		
Accelerator pedal position sensor	Accelerator pedal position		
Park/neutral position (PNP) switch	Gear position		
Battery	Battery voltage*3		
Knock sensor	Engine knocking condition		
Power steering pressure sensor	Power steering operation		
Heated oxygen sensor 2*1	Density of oxygen in exhaust gas		
ABS actuator and electric unit (control unit)*2	ABS operation command		
BCM	Air conditioner operation*2		
Combination meter	Vehicle speed*2		

*1: This sensor is not used to control the engine system under normal conditions.

*2: This signal is sent to the ECM through CAN communication line.

*3: ECM determines the start signal status by the signals of engine speed and battery voltage.

SYSTEM DESCRIPTION

The amount of fuel injected from the fuel injector is determined by the ECM. The ECM controls the length of time the valve remains open (injection pulse duration). The amount of fuel injected is a program value in the ECM memory. The program value is preset by engine operating conditions. These conditions are determined by input signals (for engine speed and intake air) from the crankshaft position sensor (POS), camshaft position sensor (PHASE) and the mass air flow sensor.

VARIOUS FUEL INJECTION INCREASE/DECREASE COMPENSATION

In addition, the amount of fuel injected is compensated to improve engine performance under various operating conditions as listed below.

<Fuel increase>
- During warm-up
- When starting the engine
- During acceleration
- Hot-engine operation
- When selector lever is changed from N to D (CVT models)
- High-load, high-speed operation

<Fuel decrease>
- During deceleration
- During high engine speed operation

MIXTURE RATIO FEEDBACK CONTROL (CLOSED LOOP CONTROL)

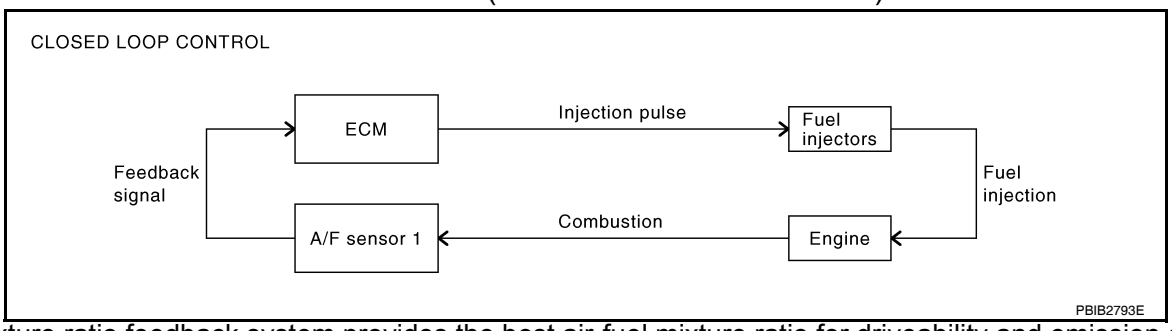

The mixture ratio feedback system provides the best air-fuel mixture ratio for driveability and emission control. The three way catalyst (manifold) can then better reduce CO, HC and NOx emissions. This system uses A/F sensor 1 in the exhaust manifold to monitor whether the engine operation is rich or lean. The ECM adjusts the injection pulse width according to the sensor voltage signal. For more information about A/F sensor 1, refer to EC-724, "DTC Logic". This maintains the mixture ratio within the range of stoichiometric (ideal air-fuel mixture).

This stage is referred to as the closed loop control condition.

Heated oxygen sensor 2 is located downstream of the three way catalyst (manifold). Even if the switching characteristics of A/F sensor 1 shift, the air-fuel ratio is controlled to stoichiometric by the signal from heated oxygen sensor 2.

- Open Loop Control
  The open loop system condition refers to when the ECM detects any of the following conditions. Feedback control stops in order to maintain stabilized fuel combustion.

- Deceleration and acceleration
- High-load, high-speed operation
- Malfunction of A/F sensor 1 or its circuit
- Insufficient activation of A/F sensor 1 at low engine coolant temperature
- High engine coolant temperature
- During warm-up
- After shifting from N to D (CVT models)
- When starting the engine

MIXTURE RATIO SELF-LEARNING CONTROL

The mixture ratio feedback control system monitors the mixture ratio signal transmitted from A/F sensor 1. This feedback signal is then sent to the ECM. The ECM controls the basic mixture ratio as close to the theoretical mixture ratio as possible. However, the basic mixture ratio is not necessarily controlled as originally

designed. Both manufacturing differences (i.e., mass air flow sensor hot wire) and characteristic changes during operation (i.e., fuel injector clogging) directly affect mixture ratio.
Accordingly, the difference between the basic and theoretical mixture ratios is monitored in this system. This is then computed in terms of “injection pulse duration” to automatically compensate for the difference between the two ratios.
“Fuel trim” refers to the feedback compensation value compared against the basic injection duration. Fuel trim includes short term fuel trim and long term fuel trim.
“Short term fuel trim” is the short-term fuel compensation used to maintain the mixture ratio at its theoretical value. The signal from A/F sensor 1 indicates whether the mixture ratio is RICH or LEAN compared to the theoretical value. The signal then triggers a reduction in fuel volume if the mixture ratio is rich, and an increase in fuel volume if it is lean.
“Long term fuel trim” is overall fuel compensation carried out long-term to compensate for continual deviation of the short term fuel trim from the central value. Such deviation will occur due to individual engine differences, wear over time and changes in the usage environment.

FUEL INJECTION TIMING

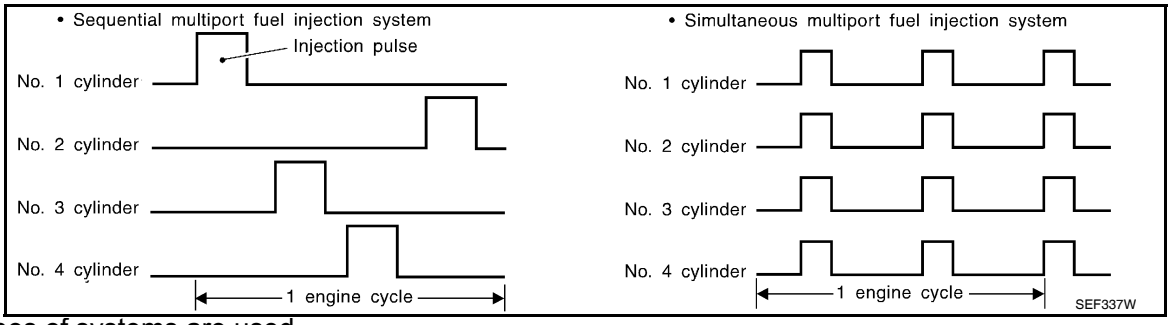

Two types of systems are used.
- Sequential Multiport Fuel Injection System
  Fuel is injected into each cylinder during each engine cycle according to the firing order. This system is used when the engine is running.
- Simultaneous Multiport Fuel Injection System
  Fuel is injected simultaneously into all four cylinders twice each engine cycle. In other words, pulse signals of the same width are simultaneously transmitted from the ECM.
  The four injectors will then receive the signals two times for each engine cycle.
  This system is used when the engine is being started and/or if the fail-safe system (CPU) is operating.

FUEL SHUT-OFF

Fuel to each cylinder is cut off during deceleration, operation of the engine at excessively high speeds or operation of the vehicle at excessively high speeds.

Component Parts Location

INFOID:0000000004349606

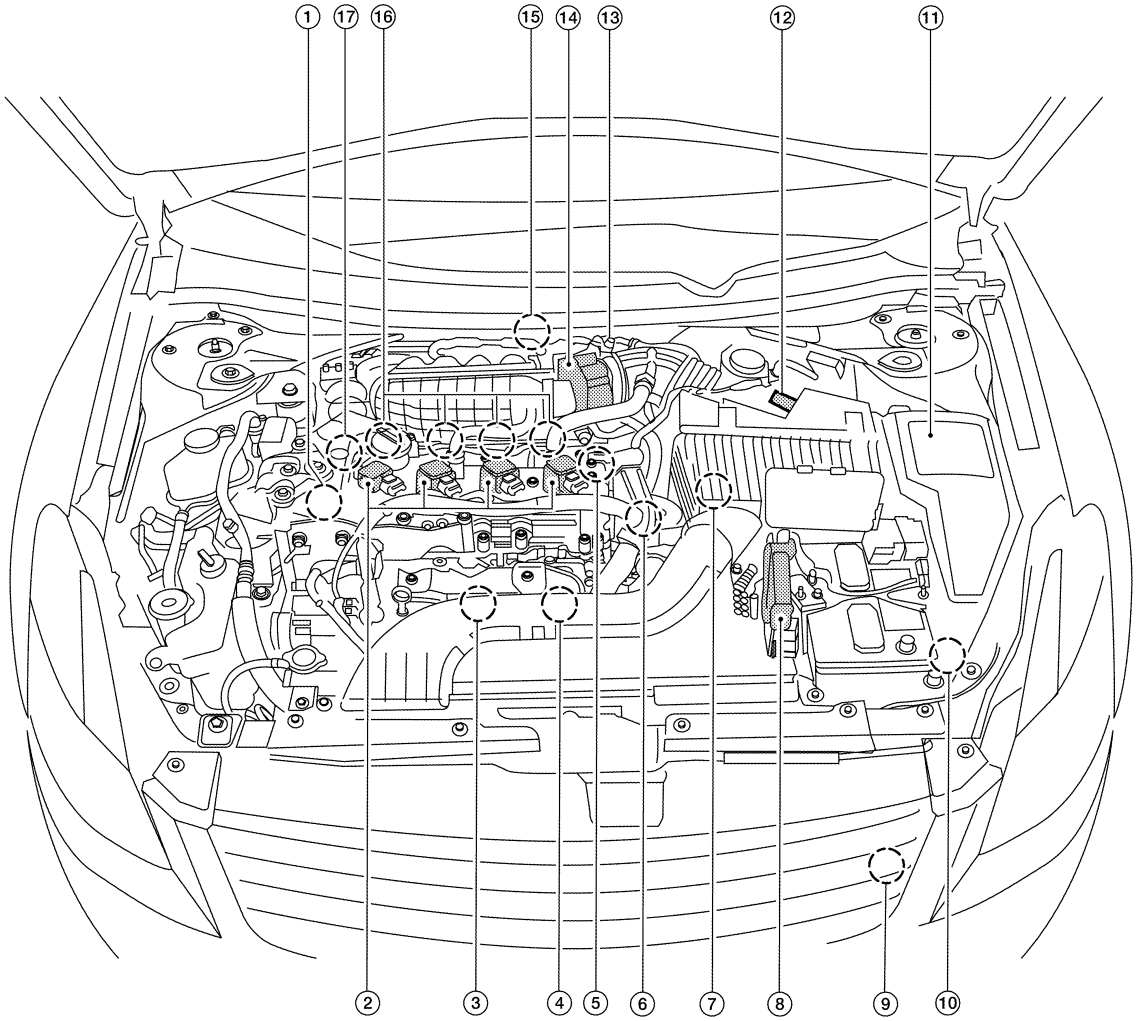

ALBIA0094ZZ

1. Intake valve timing control solenoid valve
2. Ignition coil (with power transistor) and spark plug
3. Knock sensor, Crankshaft position sensor (POS)
4. Air fuel ratio (A/F) sensor 1
5. Camshaft position sensor (PHASE)
6. Engine coolant temperature sensor
7. Park/neutral position (PNP) switch
8. ECM
9. Refrigerant pressure sensor
10. Battery current sensor
11. IPDM E/R
12. Mass air flow sensor (with intake temperature sensor)
13. EVAP service port
14. Electric throttle control actuator (with built in throttle position sensor and throttle control motor)
15. EVAP canister purge volume control solenoid valve
16. Fuel injector
17. Power steering pressure sensor

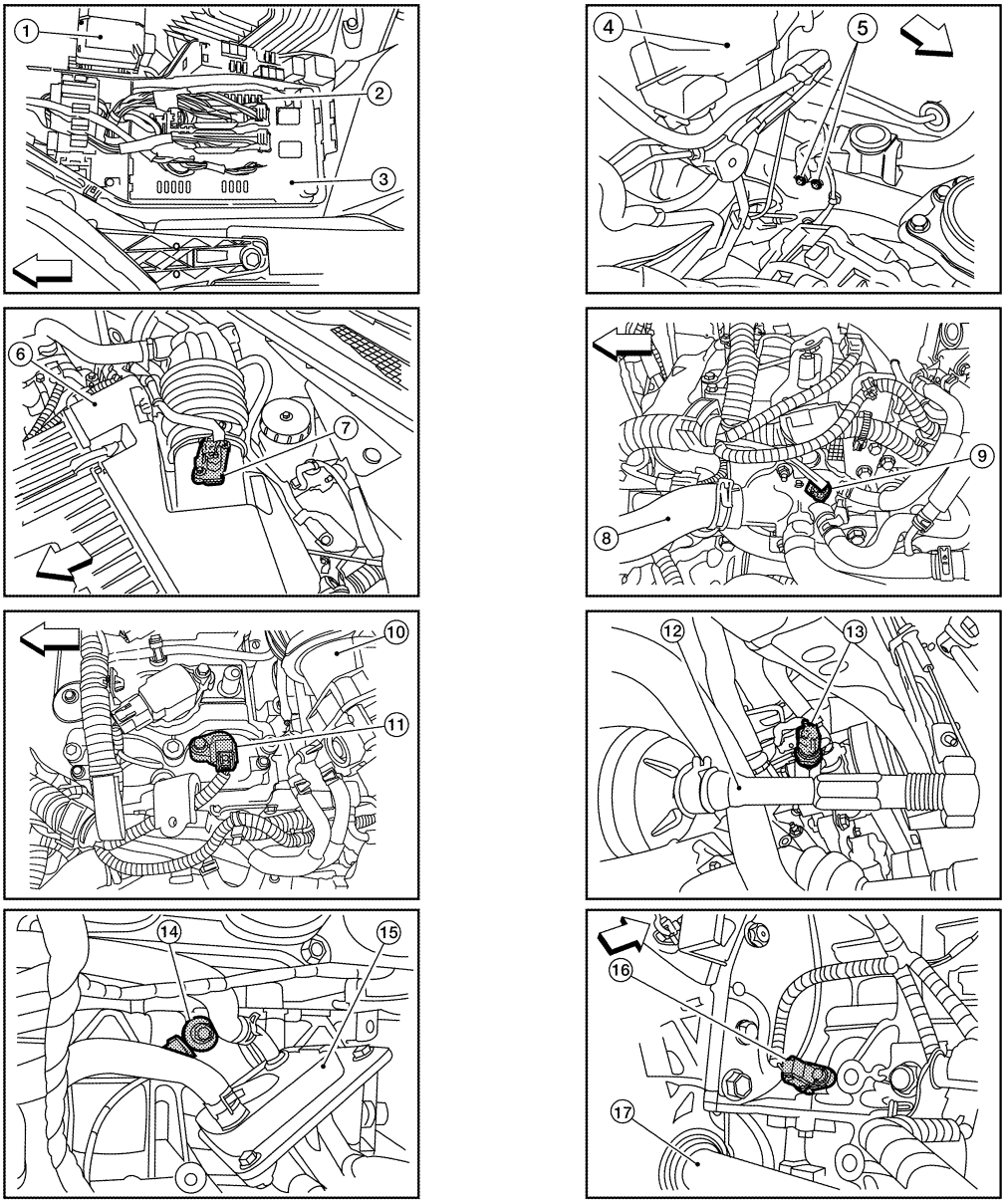

ALBIA0091ZZ

1. Battery	2. Fuel pump fuse (15A)	3. IPDM E/R
4. Brake master cylinder	5. Engine ground	6. Air cleaner assembly
7. Mass air flow sensor (with intake air temperature sensor)	8. Radiator hose (upper)	9. Engine coolant temperature sensor
10. Intake air duct	11. Camshaft position sensor (PHASE)	12. Tie rod (RH)
13. Power steering pressure sensor	14. Knock sensor	15. Engine oil cooler
16. Crankshaft position sensor (POS)	17. Drive shaft (RH)	

⇦: Vehicle front

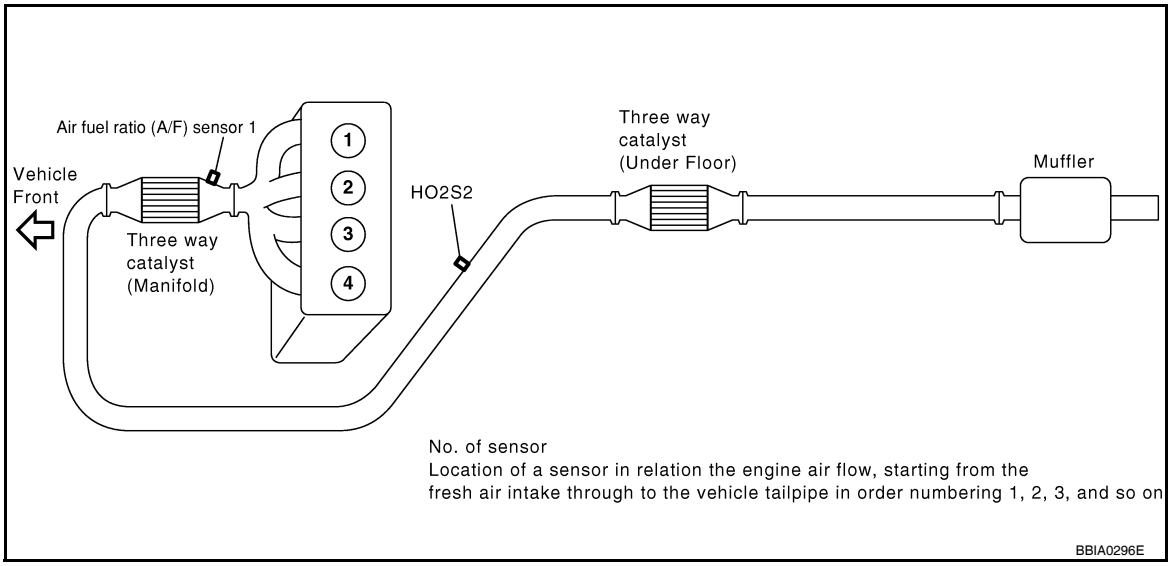

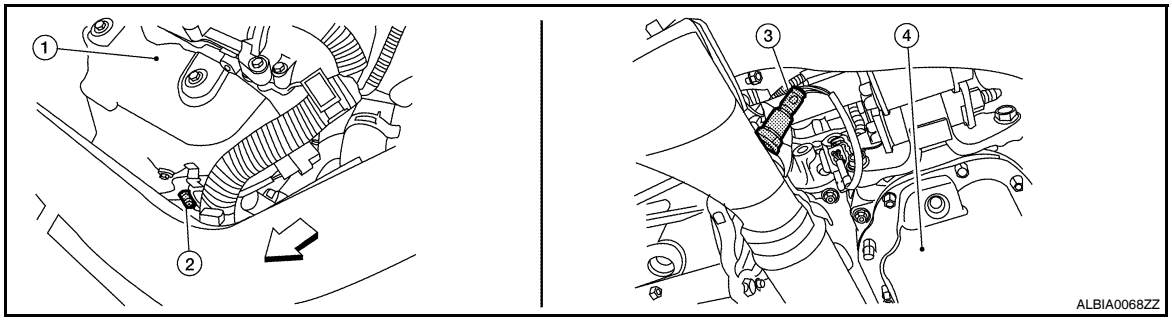

1. Exhaust manifold cover
2. Air fuel ratio (A/F) sensor 1
3. Heated oxygen sensor 2 (This illustration is a view from under vehicle.)
4. Engine oil pan

⇦: Vehicle front

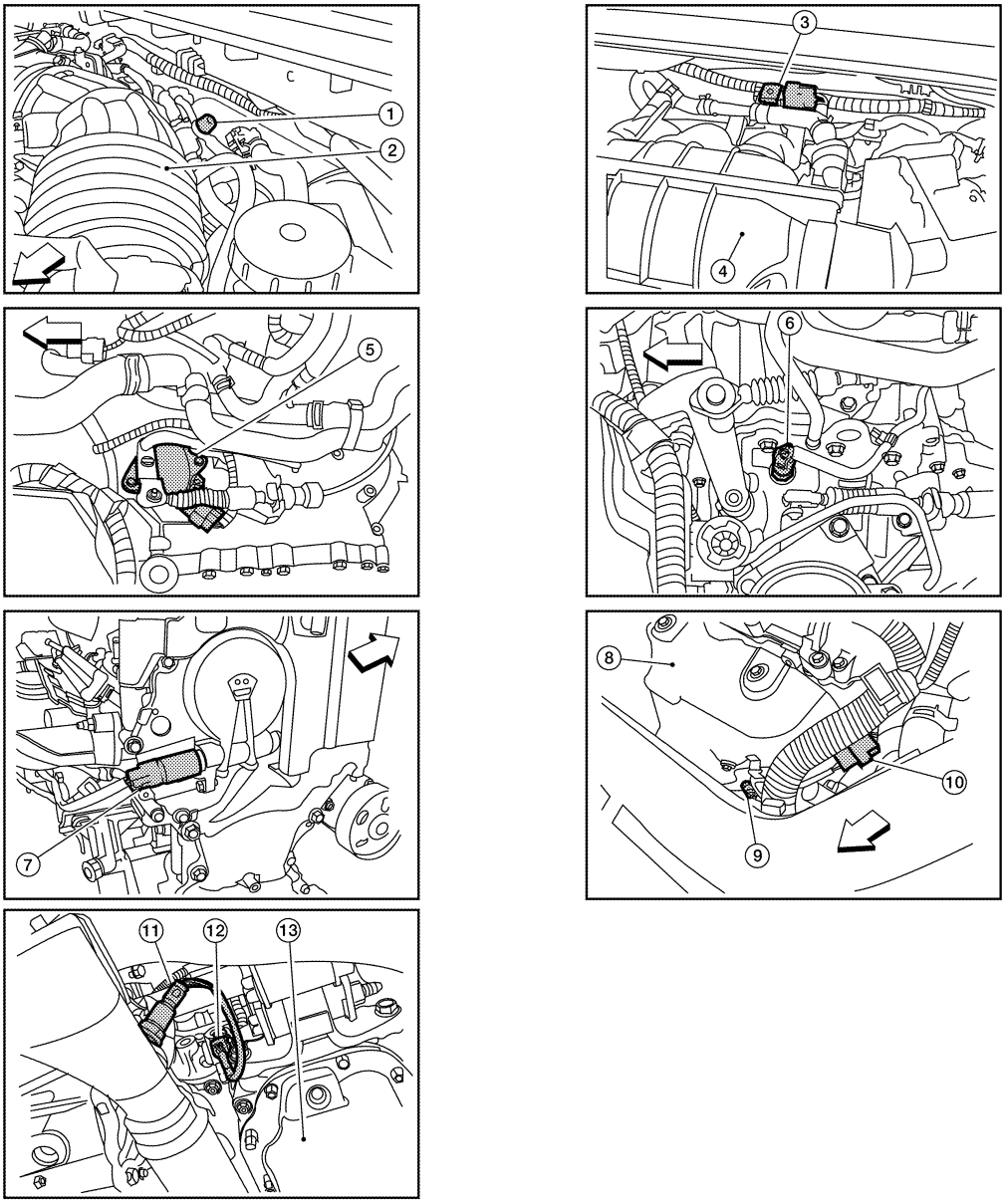

ALBIA0095ZZ

1. EVAP service port
2. Intake air duct
3. EVAP canister purge volume control solenoid valve
4. Intake manifold collector
5. Park/neutral position (PNP) switch (CVT) (This illustration is view with air cleaner assembly removed.)
6. Park/neutral position (PNP) switch (M/T) (This illustration is view with air cleaner assembly removed.)
7. Intake valve timing control solenoid valve (This illustration is view with engine removed.)
8. Exhaust manifold cover
9. Air fuel ratio (A/F) sensor 1
10. Air fuel ratio (A/F) sensor 1 harness connector
11. Heated oxygen sensor 2 (This illustration is view from under vehicle.)
12. Heated oxygen sensor 2 harness connector (This illustration is view from under vehicle.)
13. Engine oil pan

⇦: Vehicle front

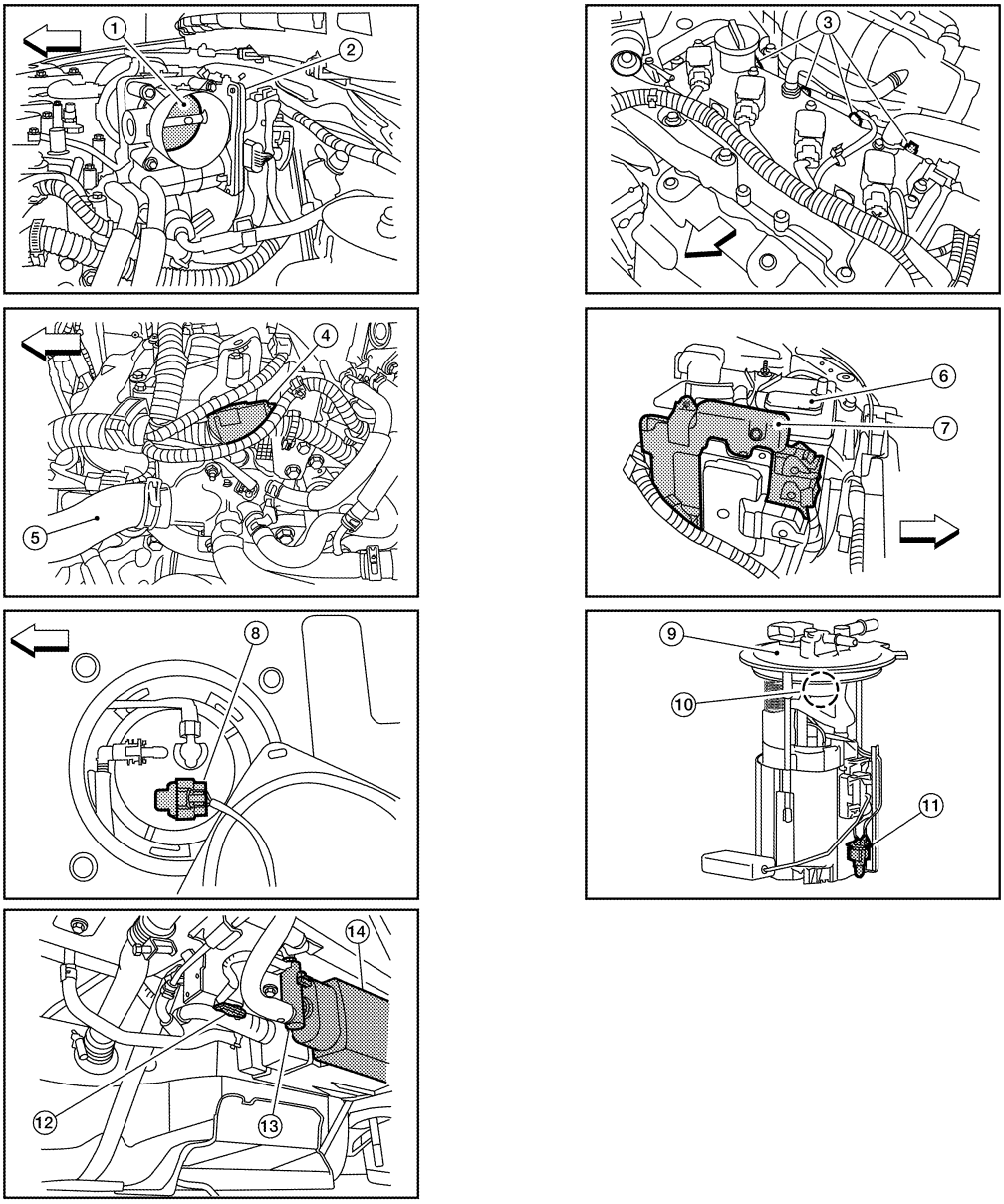

1. Throttle valve (This illustration is view with intake air duct removed.)
2. Electric throttle control actuator
3. Fuel injector harness connector
4. Condenser-2
5. Radiator hose (upper)
6. Battery
7. ECM
8. Fuel level sensor unit and fuel pump harness connector (This illustration is view with rear seat cushion and inspection hole cover removed.)
9. Fuel level sensor unit and fuel pump assembly
10. Fuel pressure regulator
11. Fuel tank temperature sensor
12. EVAP control system pressure sensor (This illustration is view with rear suspension member removed.)
13. EVAP canister vent control valve (This illustration is view with rear suspension member removed.)
14. EVAP canister (This illustration is view with rear suspension member removed.)

⇦ : Vehicle front

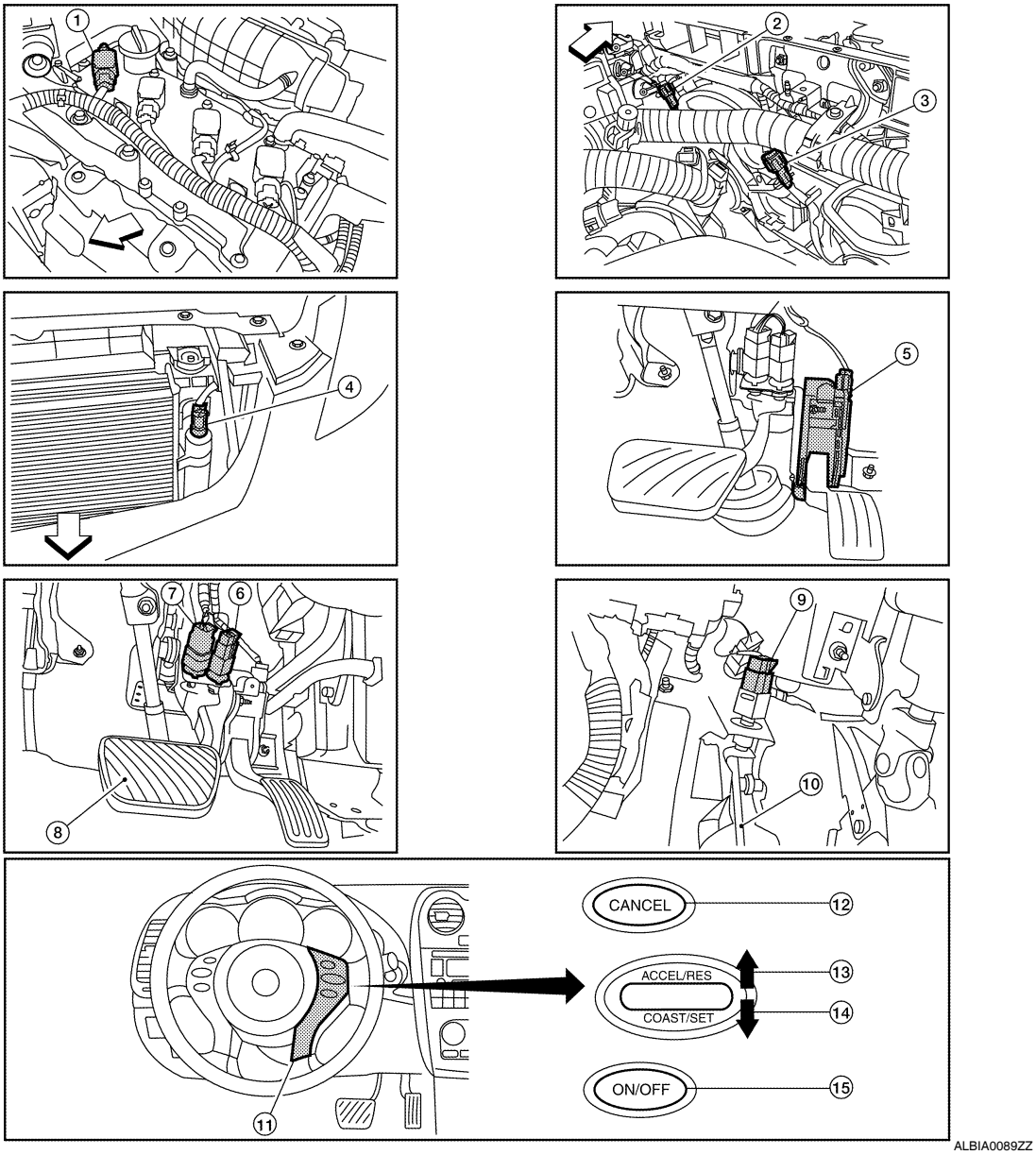

1. No.1 ignition coil
2. Cooling fan motor-1 harness connector
3. Cooling fan motor-2 harness connector
4. Refrigerant pressure sensor
5. Accelerator pedal position sensor
6. ASCD brake switch
7. Stop lamp switch
8. Brake pedal
9. ASCD clutch switch
10. Clutch pedal
11. ASCD steering switch
12. CANSEC switch
13. RESUME/ACCELERATE switch
14. SET/COAST switch
15. MAIN switch

⇦: Vehicle front

Component Description

INFOID:0000000004349607

Component	Reference
A/F sensor 1	EC-724, "Description"
Accelerator pedal position sensor	EC-924, "Description"
Camshaft position sensor (PHASE)	EC-787, "Description"
Crankshaft position sensor (POS)	EC-783, "Description"

Component	Reference
Engine coolant temperature sensor	EC-711, "Description"
Fuel injector	EC-956, "Description"
Heated oxygen sensor 2	EC-739, "Description"
Intake air temperature sensor	EC-706, "Description"
Knock sensor	EC-781, "Description"
Mass air flow sensor	EC-693, "Description"
Park/neutral position switch	EC-870, "Description"
Power steering pressure sensor	EC-859, "Description"
Throttle position sensor	EC-714, "Description"
Vehicle speed sensor	EC-853, "Description"

ELECTRIC IGNITION SYSTEM

System Diagram

INFOID:0000000004349608

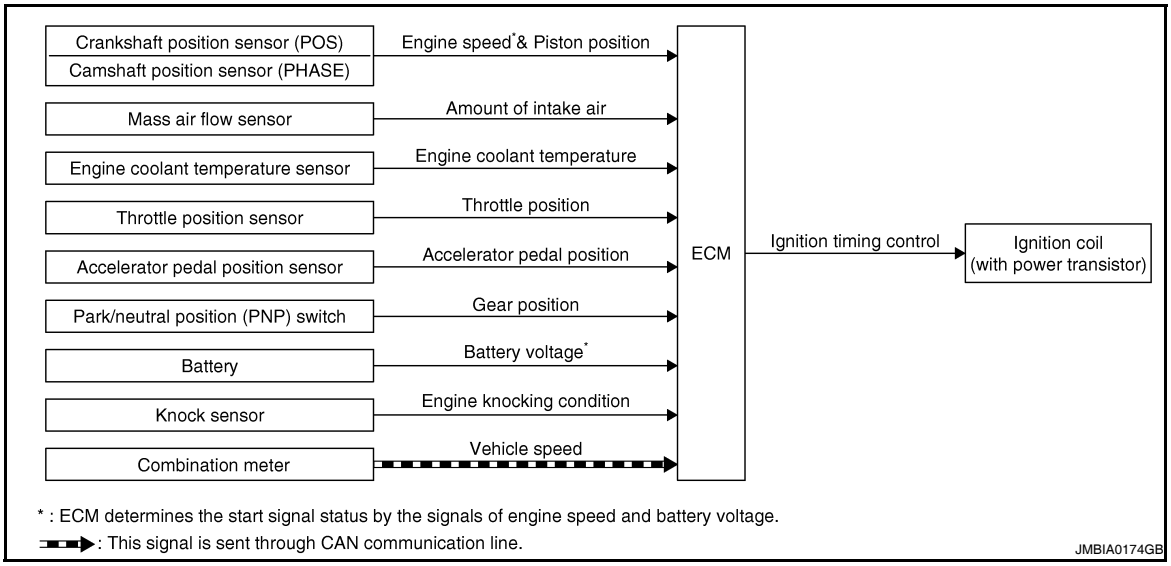

System Description

INFOID:0000000004349609

INPUT/OUTPUT SIGNAL CHART

Sensor	Input Signal to ECM	ECM function	Actuator
Crankshaft position sensor (POS)	Engine speed*2 Piston position	Ignition timing control	Ignition coil (with power transistor)
Camshaft position sensor (PHASE)			
Mass air flow sensor	Amount of intake air		
Engine coolant temperature sensor	Engine coolant temperature		
Throttle position sensor	Throttle position		
Accelerator pedal position sensor	Accelerator pedal position		
Battery	Battery voltage*2		
Knock sensor	Engine knocking		
Park/neutral position (PNP) switch	Gear position		
Combination meter	Vehicle speed*1		

*1: This signal is sent to the ECM through CAN communication line.

*2: ECM determines the start signal status by the signals of engine speed and battery voltage.

SYSTEM DESCRIPTION

Firing order: 1 - 3 - 4 - 2

The ignition timing is controlled by the ECM to maintain the best air-fuel ratio for every running condition of the engine. The ignition timing data is stored in the ECM.

The ECM receives information such as the injection pulse width and camshaft position sensor (PHASE) signal. Computing this information, ignition signals are transmitted to the power transistor.

During the following conditions, the ignition timing is revised by the ECM according to the other data stored in the ECM.

- At starting
- During warm-up
- At idle
- At low battery voltage
- During acceleration

The knock sensor retard system is designed only for emergencies. The basic ignition timing is programmed within the anti-knocking zone, if recommended fuel is used under dry conditions. The retard system does not

operate under normal driving conditions. If engine knocking occurs, the knock sensor monitors the condition. The signal is transmitted to the ECM. The ECM retards the ignition timing to eliminate the knocking condition.

Component Parts Location

INFOID:0000000004349610

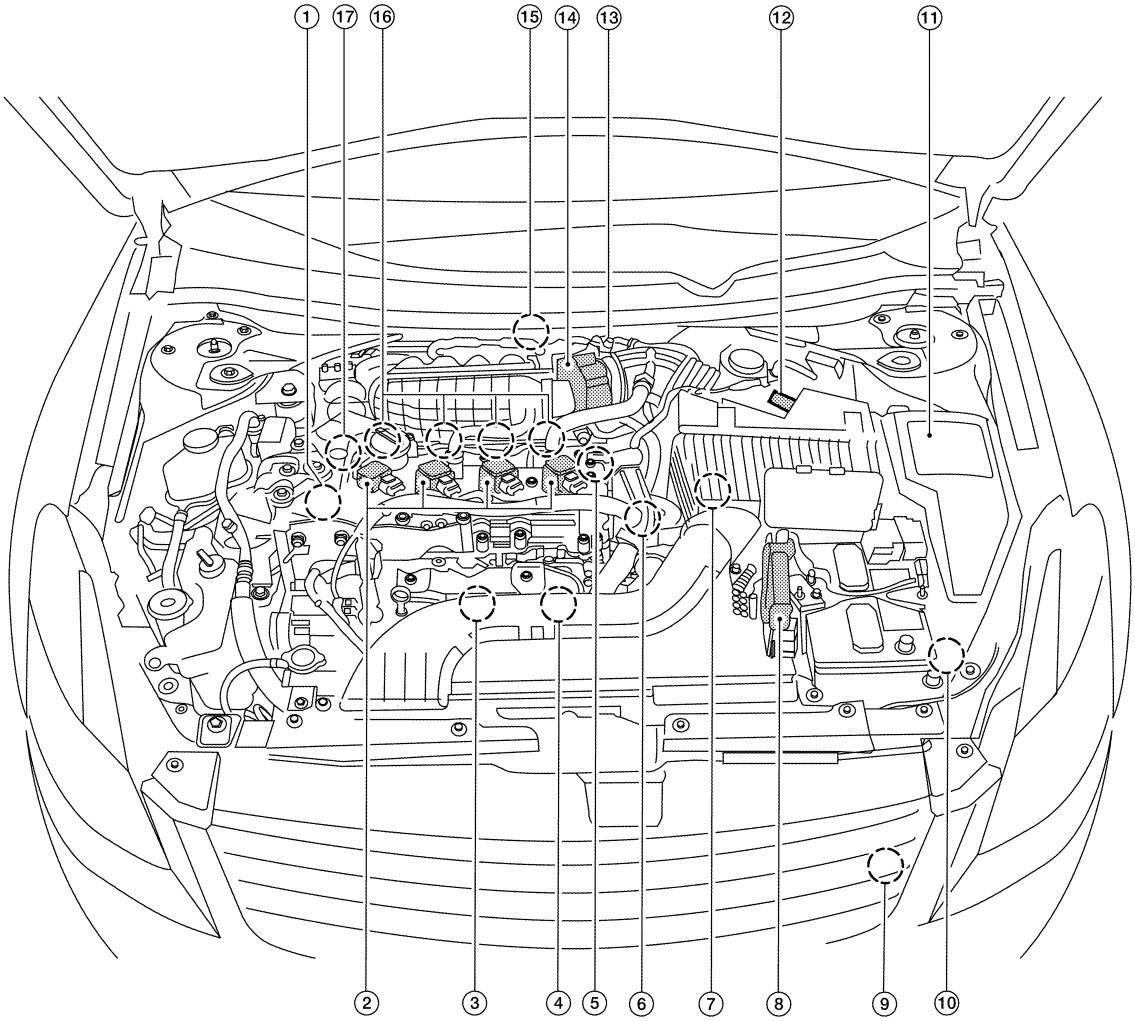

ALBIA0094ZZ

1. Intake valve timing control solenoid valve	2. Ignition coil (with power transistor) and spark plug	3. Knock sensor, Crankshaft position sensor (POS)
4. Air fuel ratio (A/F) sensor 1	5. Camshaft position sensor (PHASE)	6. Engine coolant temperature sensor
7. Park/neutral position (PNP) switch	8. ECM	9. Refrigerant pressure sensor
10. Battery current sensor	11. IPDM E/R	12. Mass air flow sensor (with intake temperature sensor)
13. EVAP service port	14. Electric throttle control actuator (with built in throttle position sensor and throttle control motor)	15. EVAP canister purge volume control solenoid valve
16. Fuel injector	17. Power steering pressure sensor	

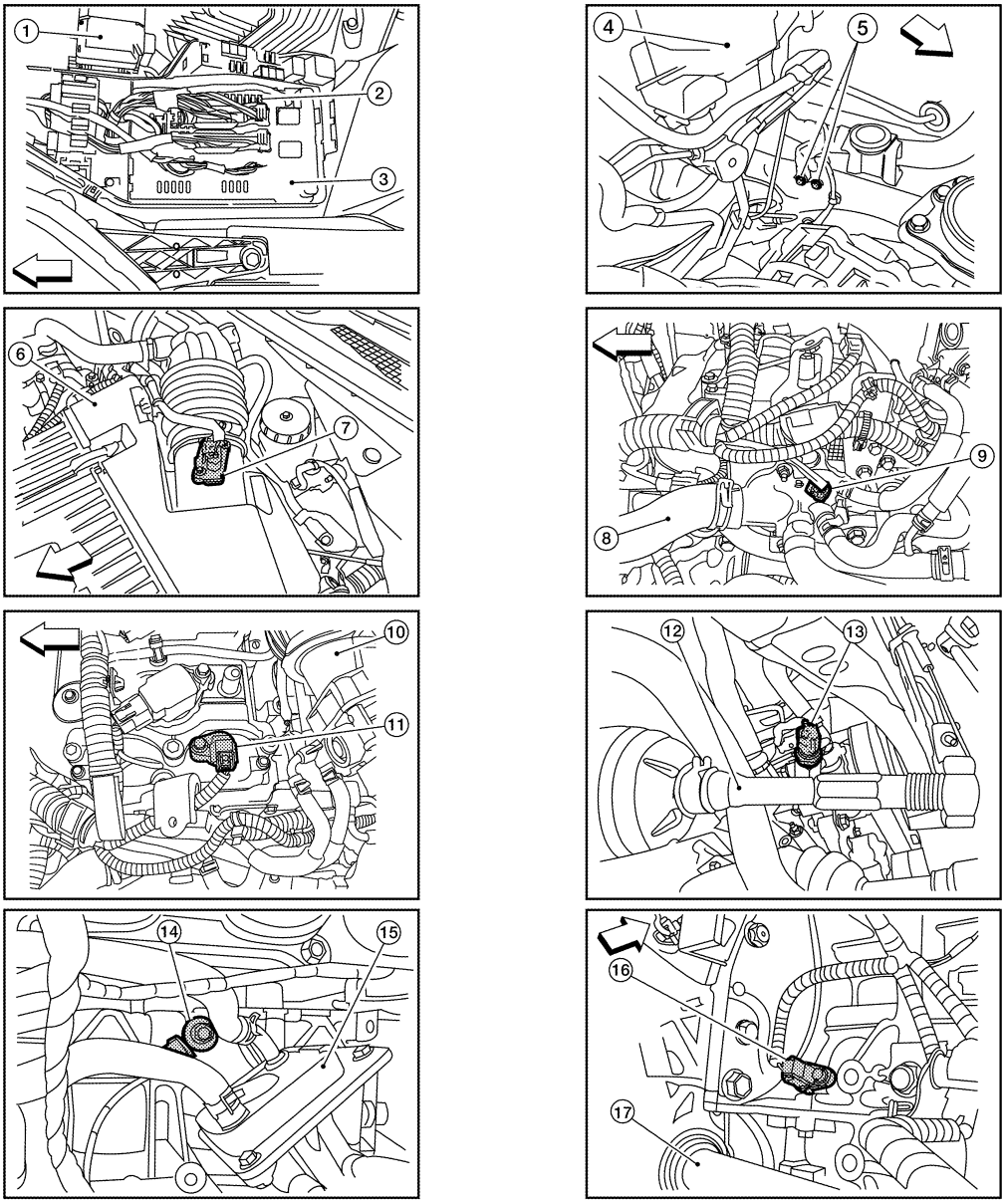

ALBIA0091ZZ

1. Battery	2. Fuel pump fuse (15A)	3. IPDM E/R
4. Brake master cylinder	5. Engine ground	6. Air cleaner assembly
7. Mass air flow sensor (with intake air temperature sensor)	8. Radiator hose (upper)	9. Engine coolant temperature sensor
10. Intake air duct	11. Camshaft position sensor (PHASE)	12. Tie rod (RH)
13. Power steering pressure sensor	14. Knock sensor	15. Engine oil cooler
16. Crankshaft position sensor (POS)	17. Drive shaft (RH)	

⇦: Vehicle front

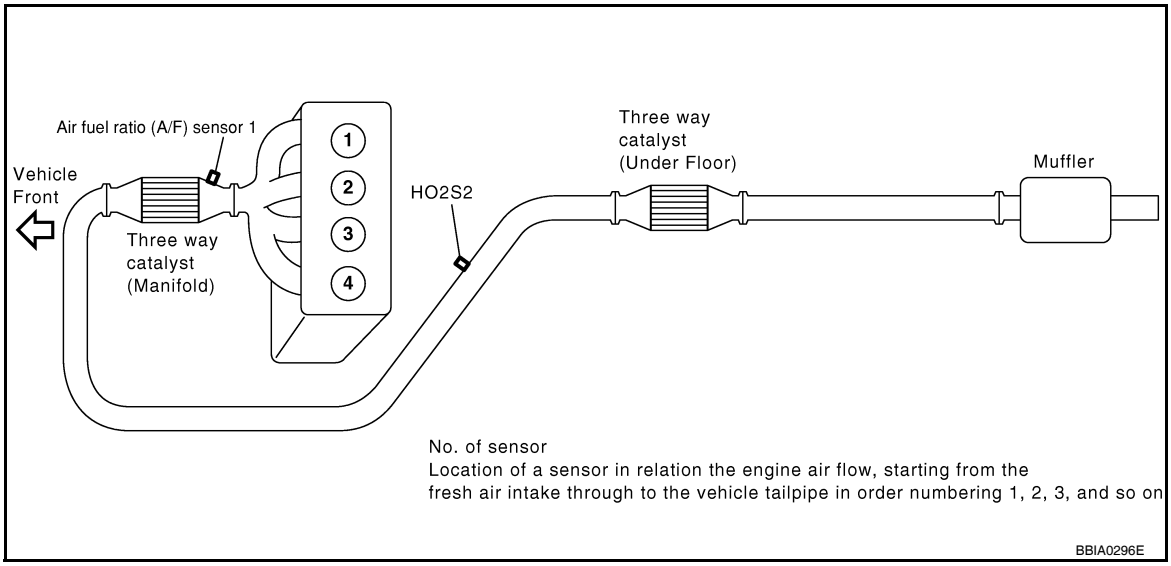

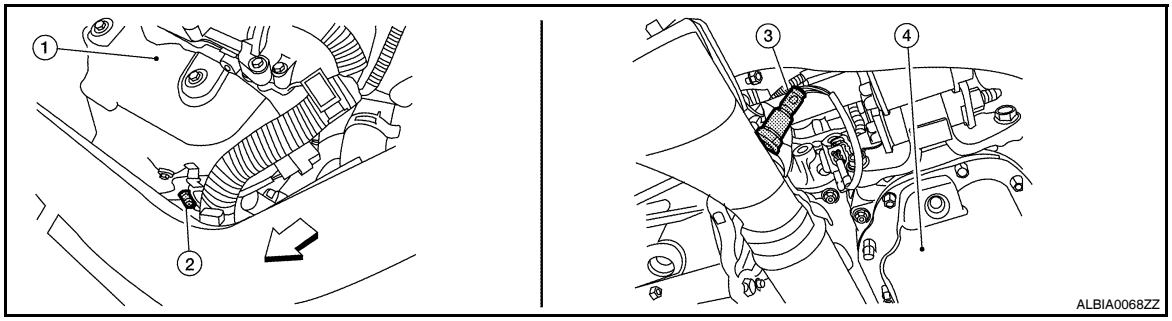

1. Exhaust manifold cover
2. Air fuel ratio (A/F) sensor 1
3. Heated oxygen sensor 2 (This illustration is a view from under vehicle.)
4. Engine oil pan

⇦: Vehicle front

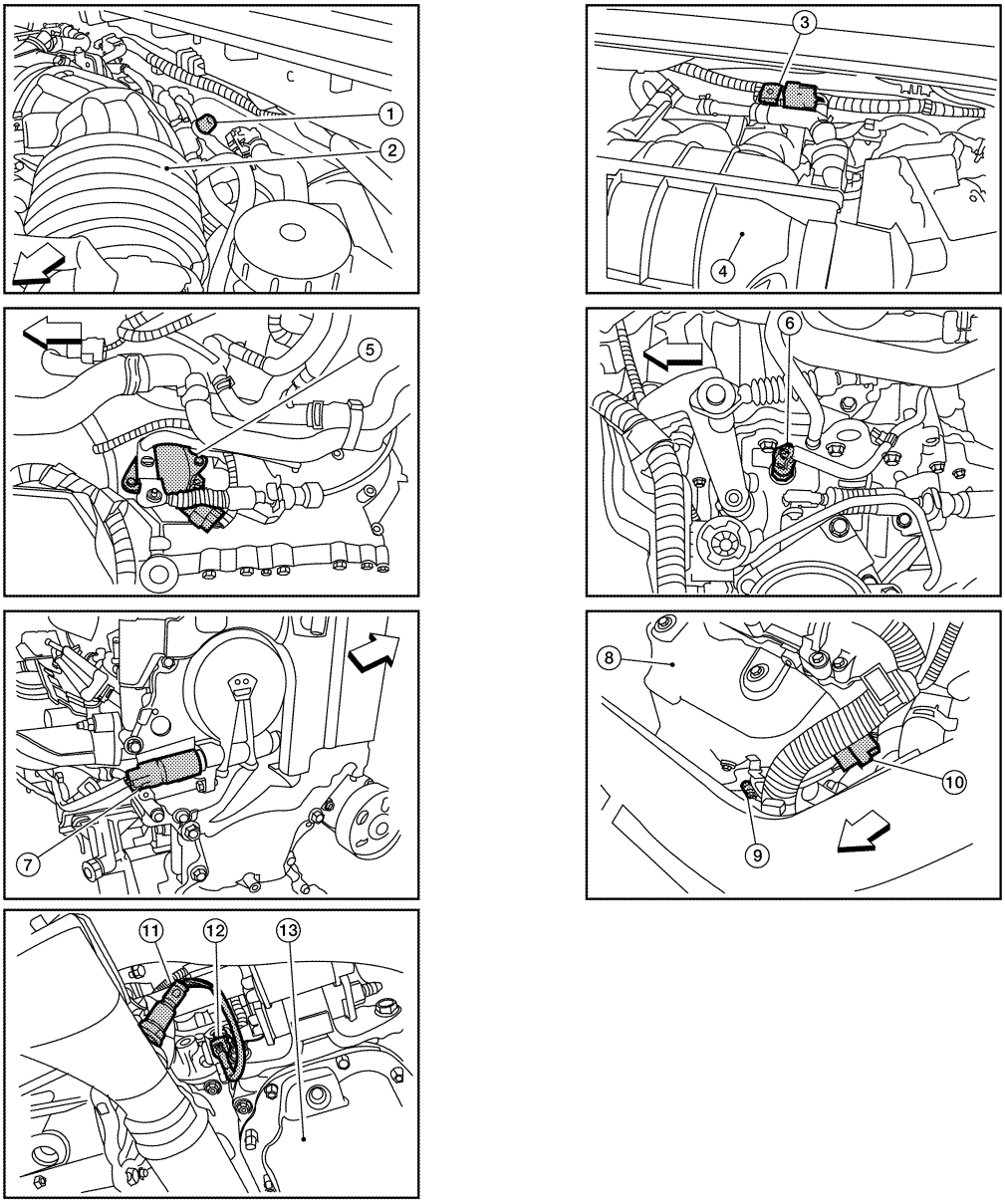

ALBIA0095ZZ

1. EVAP service port
2. Intake air duct
3. EVAP canister purge volume control solenoid valve
4. Intake manifold collector
5. Park/neutral position (PNP) switch (CVT) (This illustration is view with air cleaner assembly removed.)
6. Park/neutral position (PNP) switch (M/T) (This illustration is view with air cleaner assembly removed.)
7. Intake valve timing control solenoid valve (This illustration is view with engine removed.)
8. Exhaust manifold cover
9. Air fuel ratio (A/F) sensor 1
10. Air fuel ratio (A/F) sensor 1 harness connector
11. Heated oxygen sensor 2 (This illustration is view from under vehicle.)
12. Heated oxygen sensor 2 harness connector (This illustration is view from under vehicle.)
13. Engine oil pan

⇦: Vehicle front

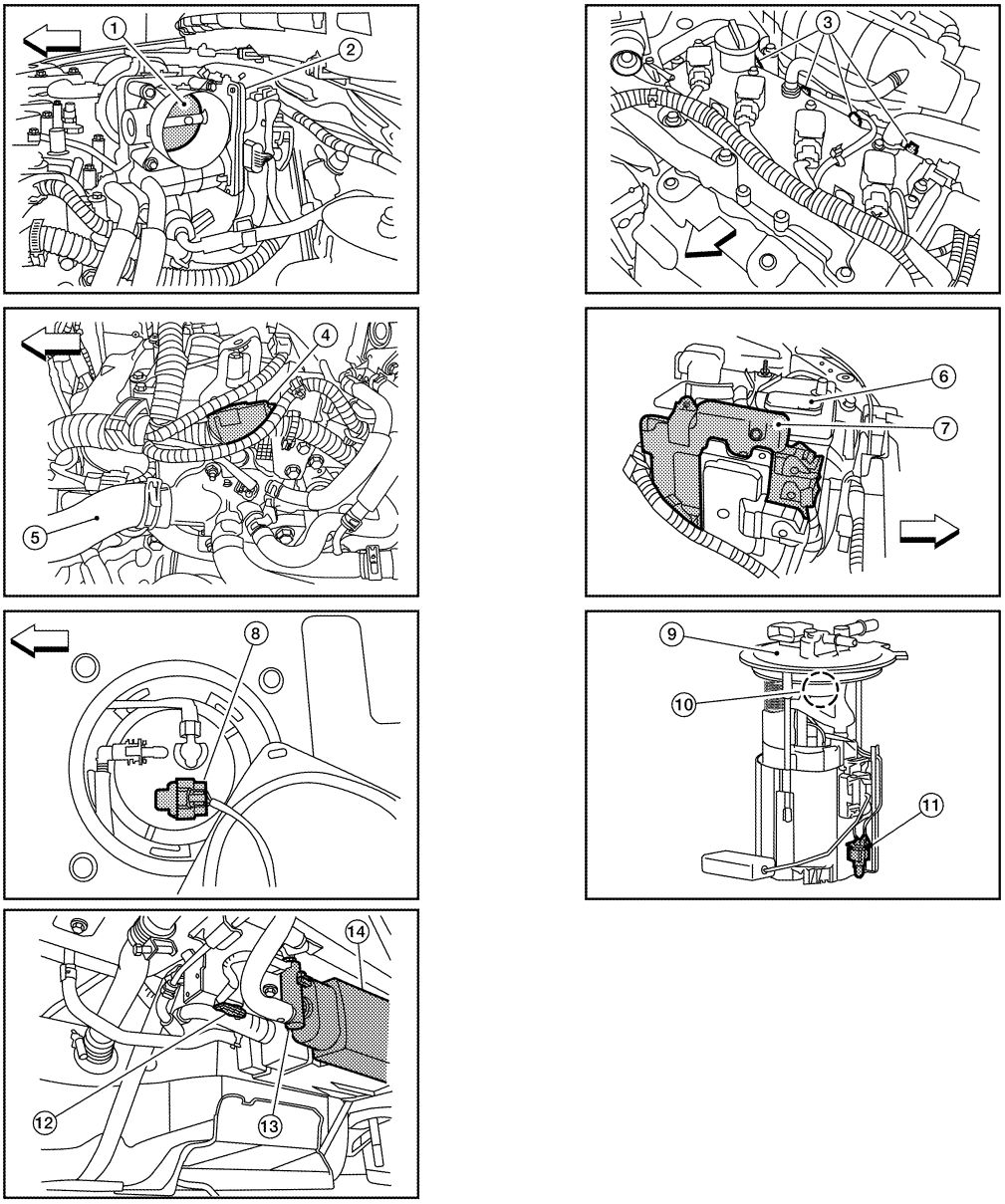

ALBIA0096ZZ

1. Throttle valve (This illustration is view with intake air duct removed.)
2. Electric throttle control actuator
3. Fuel injector harness connector
4. Condenser-2
5. Radiator hose (upper)
6. Battery
7. ECM
8. Fuel level sensor unit and fuel pump harness connector (This illustration is view with rear seat cushion and inspection hole cover removed.)
9. Fuel level sensor unit and fuel pump assembly
10. Fuel pressure regulator
11. Fuel tank temperature sensor
12. EVAP control system pressure sensor (This illustration is view with rear suspension member removed.)
13. EVAP canister vent control valve (This illustration is view with rear suspension member removed.)
14. EVAP canister (This illustration is view with rear suspension member removed.)

⇦ : Vehicle front

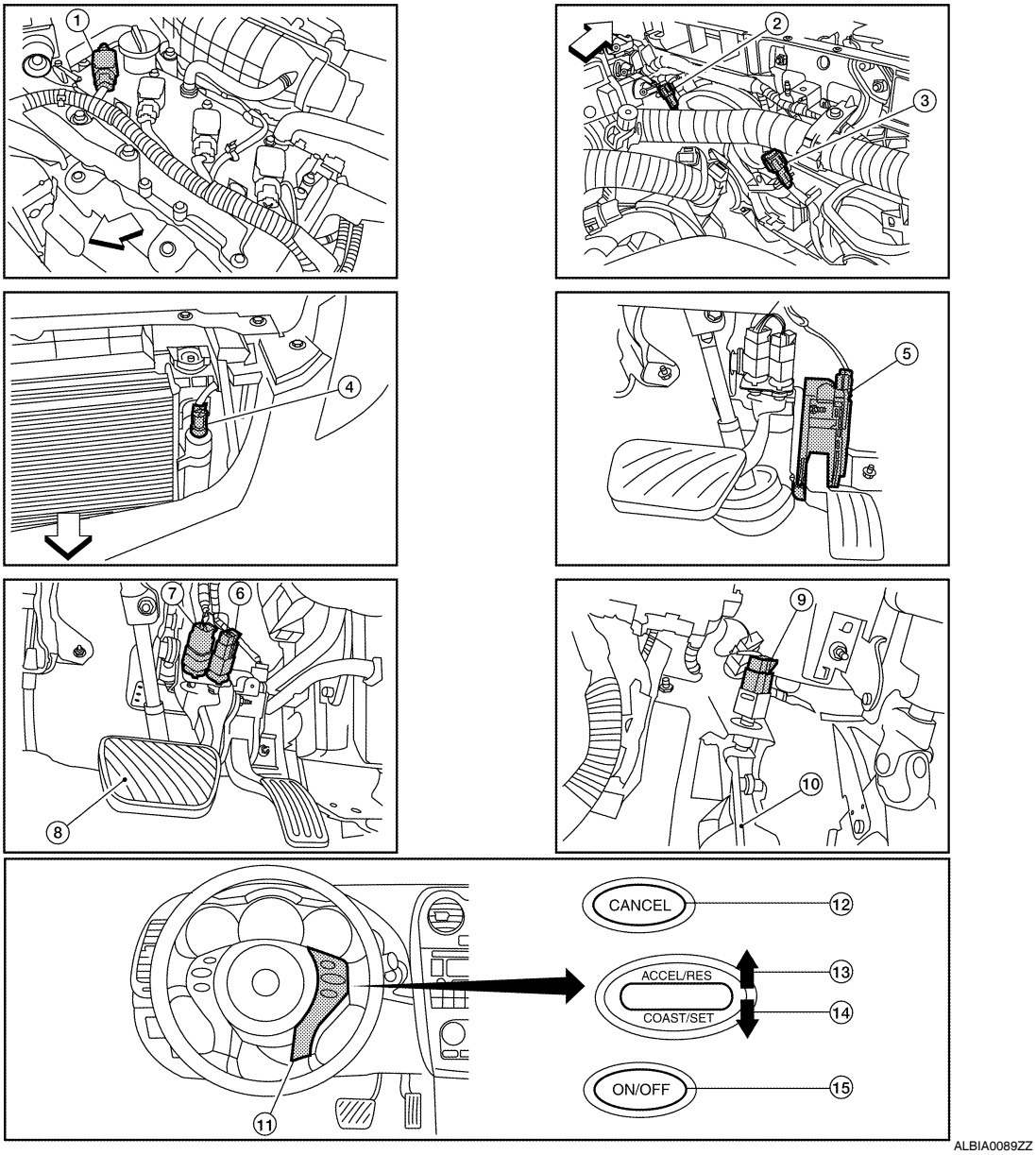

1. No.1 ignition coil
2. Cooling fan motor-1 harness connector
3. Cooling fan motor-2 harness connector
4. Refrigerant pressure sensor
5. Accelerator pedal position sensor
6. ASCD brake switch
7. Stop lamp switch
8. Brake pedal
9. ASCD clutch switch
10. Clutch pedal
11. ASCD steering switch
12. CANSEC switch
13. RESUME/ACCELERATE switch
14. SET/COAST switch
15. MAIN switch

⇦: Vehicle front

Component Description

INFOID:0000000004349611

Component	Reference
Accelerator pedal position sensor	EC-924, "Description"
Camshaft position sensor (PHASE)	EC-787, "Description"
Crankshaft position sensor (POS)	EC-783, "Description"
Engine coolant temperature sensor	EC-711, "Description"

Component	Reference
Ignition signal	EC-963, "Description"
Knock sensor	EC-781, "Description"
Mass air flow sensor	EC-693, "Description"
Park/neutral position switch	EC-870, "Description"
Throttle position sensor	EC-714, "Description"
Vehicle speed sensor	EC-853, "Description"

AIR CONDITIONING CUT CONTROL

System Diagram

INFOID:0000000004349612

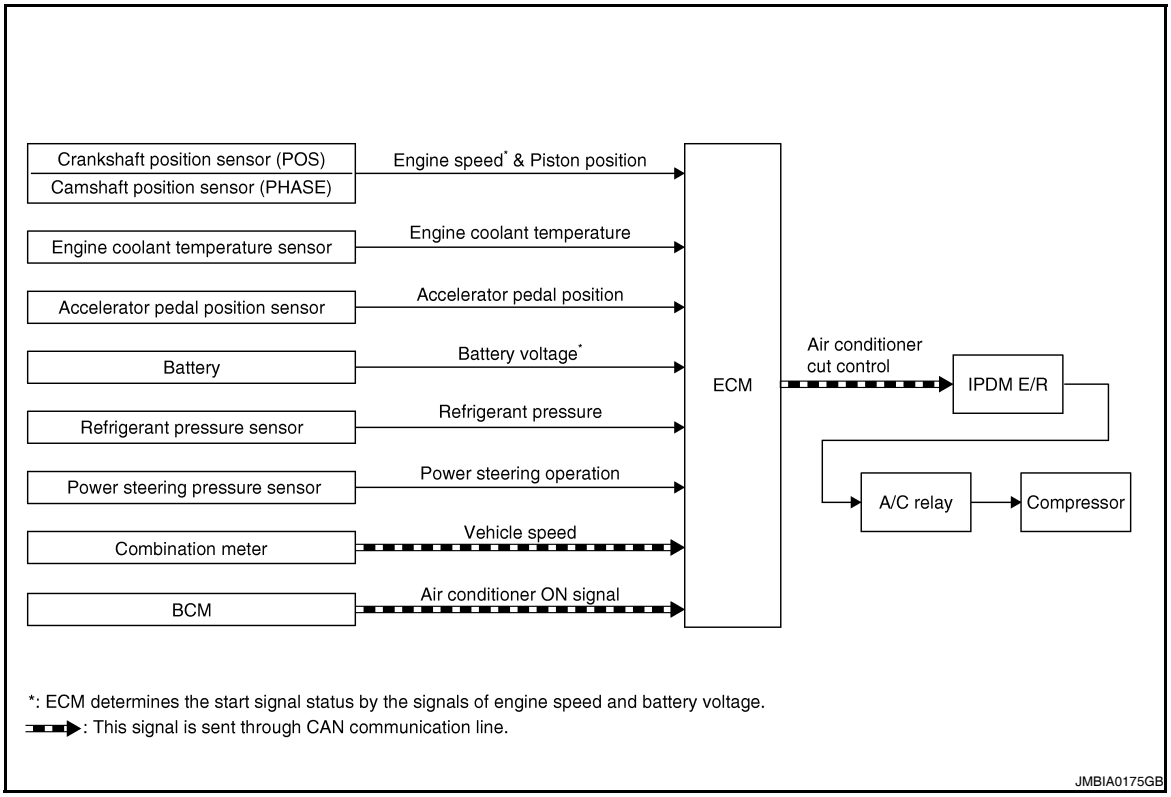

System Description

INFOID:0000000004349613

INPUT/OUTPUT SIGNAL CHART

Sensor	Input Signal to ECM	ECM function	Actuator
Air conditioner switch*1	Air conditioner ON signal	Air conditioner cut control	IPDM E/R ↓ Air conditioner relay ↓ Compressor
Accelerator pedal position sensor	Accelerator pedal position		
Crankshaft position sensor (POS) Camshaft position sensor (PHASE)	Engine speed*2		
Engine coolant temperature sensor	Engine coolant temperature		
Battery	Battery voltage*2		
Refrigerant pressure sensor	Refrigerant pressure		
Power steering pressure sensor	Power steering operation		
Combination meter	Vehicle speed*1		
BCM	Air conditioner ON signal*1		

*1: This signal is sent to the ECM through CAN communication line.

*2: ECM determines the start signal status by the signals of engine speed and battery voltage.

SYSTEM DESCRIPTION

This system improves engine operation when the air conditioner is used.
Under the following conditions, the air conditioner is turned off.

- When the accelerator pedal is fully depressed.
- When cranking the engine.
- At high engine speeds.
- When the engine coolant temperature becomes excessively high.
- When operating power steering during low engine speed or low vehicle speed.

- When engine speed is excessively low.
- When refrigerant pressure is excessively low or high.

Component Parts Location

INFOID:0000000004349614

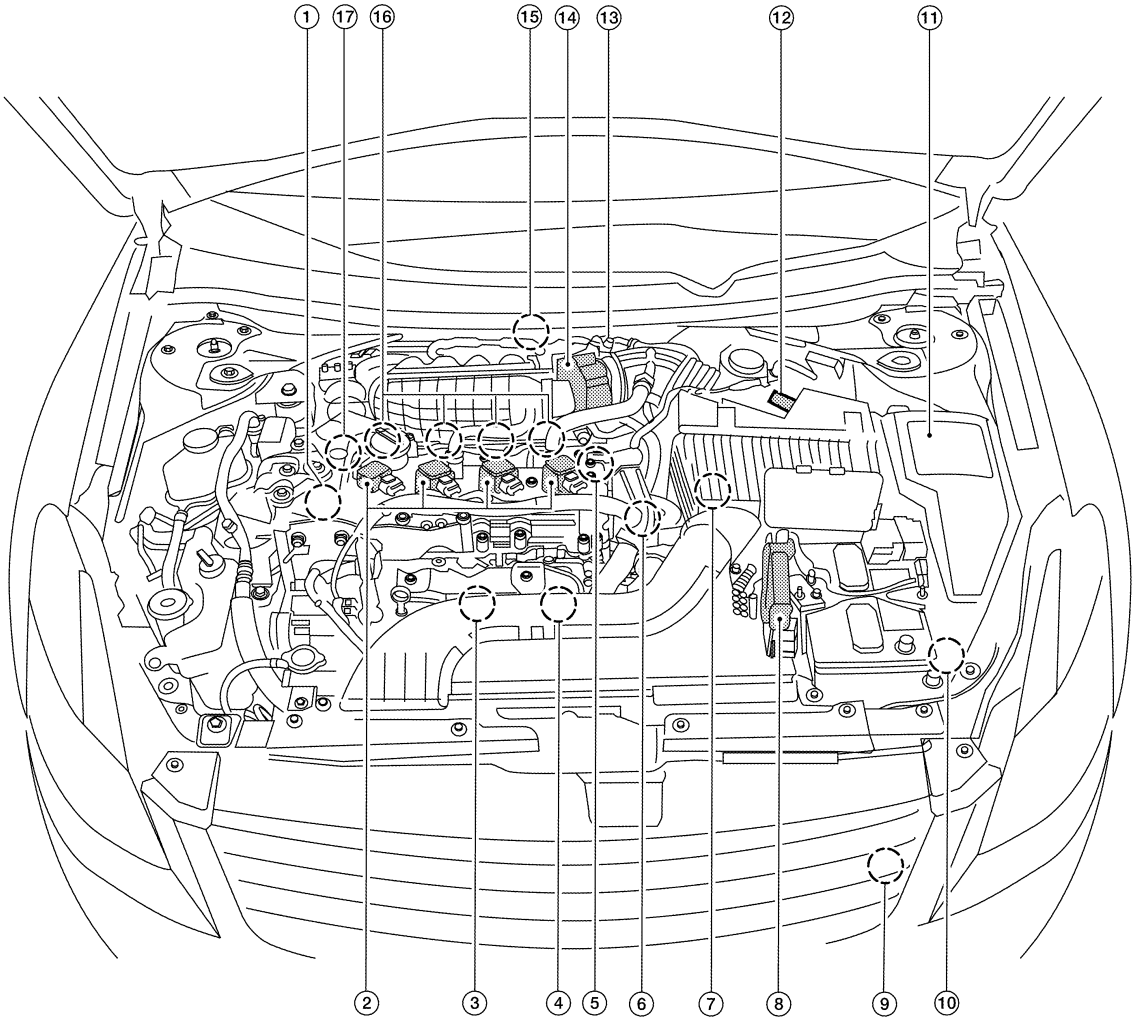

ALBIA0094ZZ

1. Intake valve timing control solenoid valve	2. Ignition coil (with power transistor) and spark plug	3. Knock sensor, Crankshaft position sensor (POS)
4. Air fuel ratio (A/F) sensor 1	5. Camshaft position sensor (PHASE)	6. Engine coolant temperature sensor
7. Park/neutral position (PNP) switch	8. ECM	9. Refrigerant pressure sensor
10. Battery current sensor	11. IPDM E/R	12. Mass air flow sensor (with intake temperature sensor)
13. EVAP service port	14. Electric throttle control actuator (with built in throttle position sensor and throttle control motor)	15. EVAP canister purge volume control solenoid valve
16. Fuel injector	17. Power steering pressure sensor	

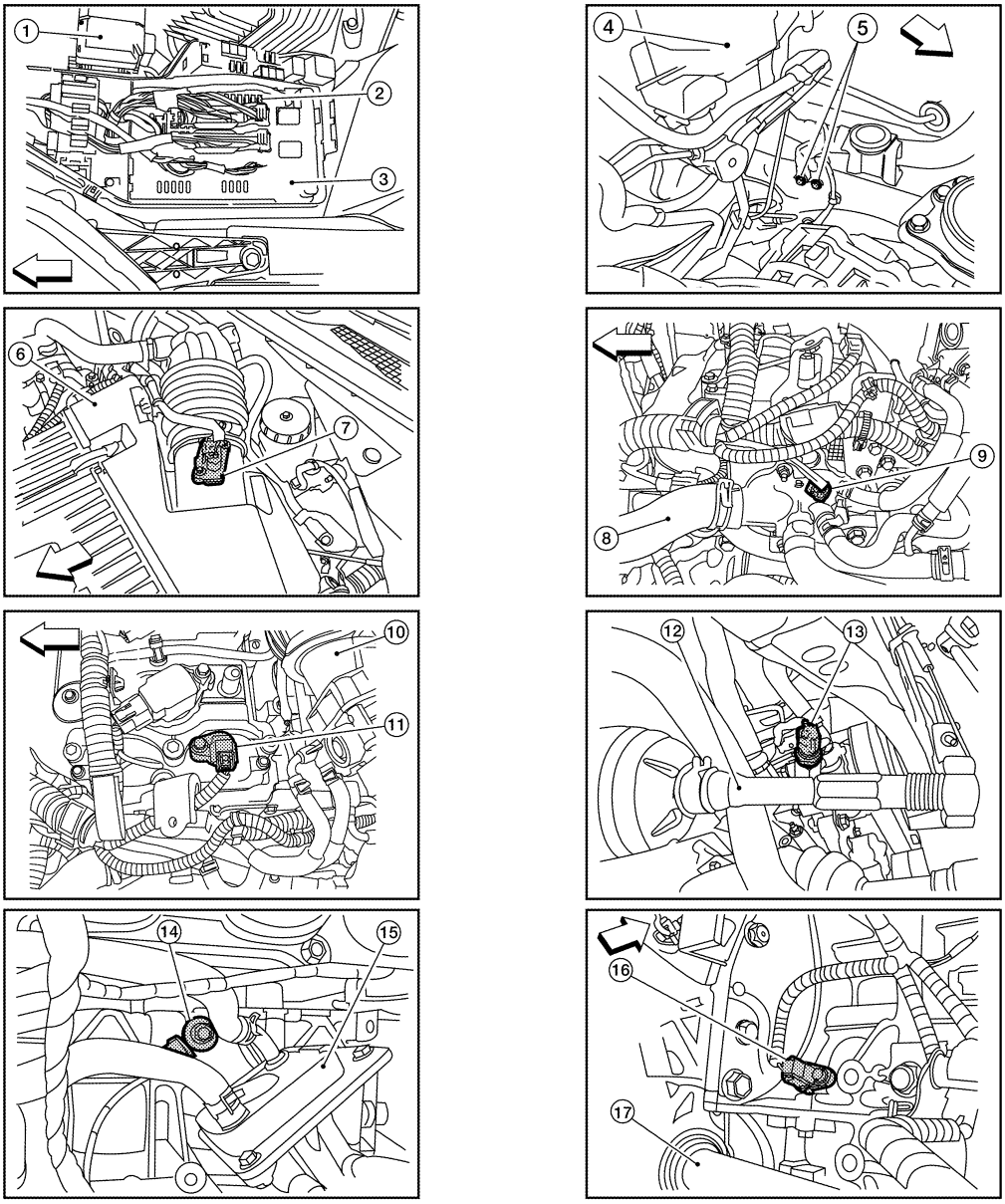

ALBIA0091ZZ

1. Battery	2. Fuel pump fuse (15A)	3. IPDM E/R
4. Brake master cylinder	5. Engine ground	6. Air cleaner assembly
7. Mass air flow sensor (with intake air temperature sensor)	8. Radiator hose (upper)	9. Engine coolant temperature sensor
10. Intake air duct	11. Camshaft position sensor (PHASE)	12. Tie rod (RH)
13. Power steering pressure sensor	14. Knock sensor	15. Engine oil cooler
16. Crankshaft position sensor (POS)	17. Drive shaft (RH)	

⇦: Vehicle front

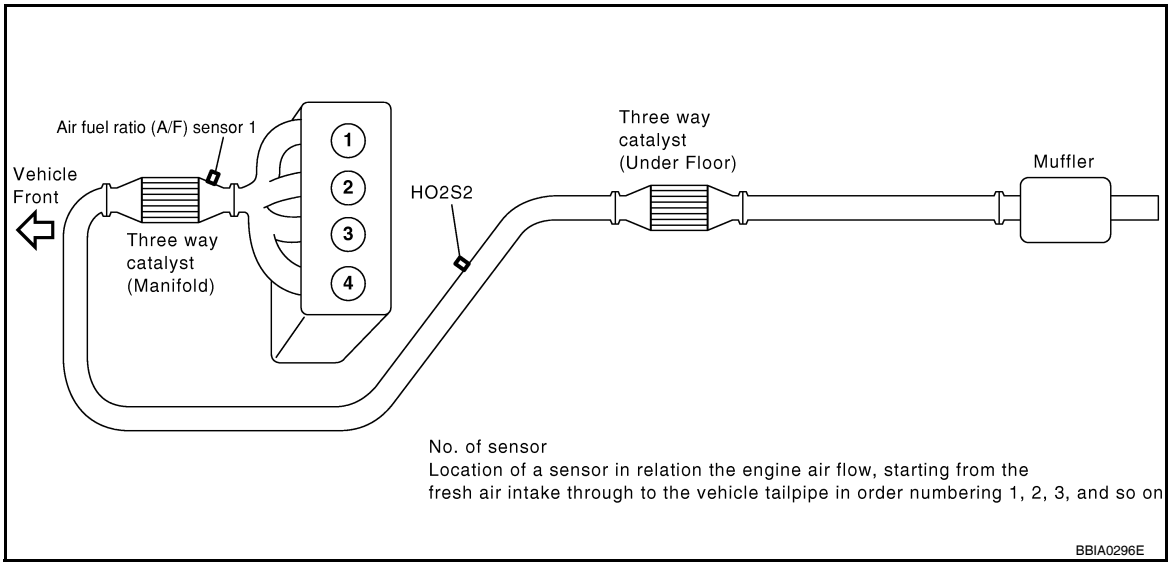

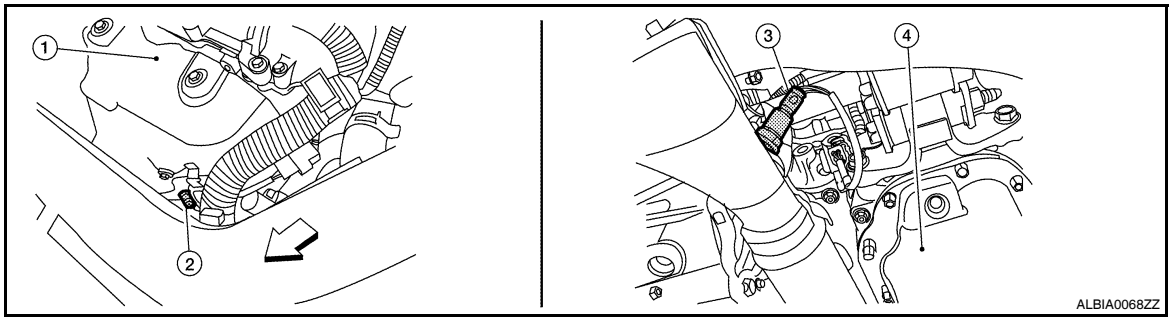

1. Exhaust manifold cover
2. Air fuel ratio (A/F) sensor 1
3. Heated oxygen sensor 2 (This illustration is a view from under vehicle.)
4. Engine oil pan

⇦: Vehicle front

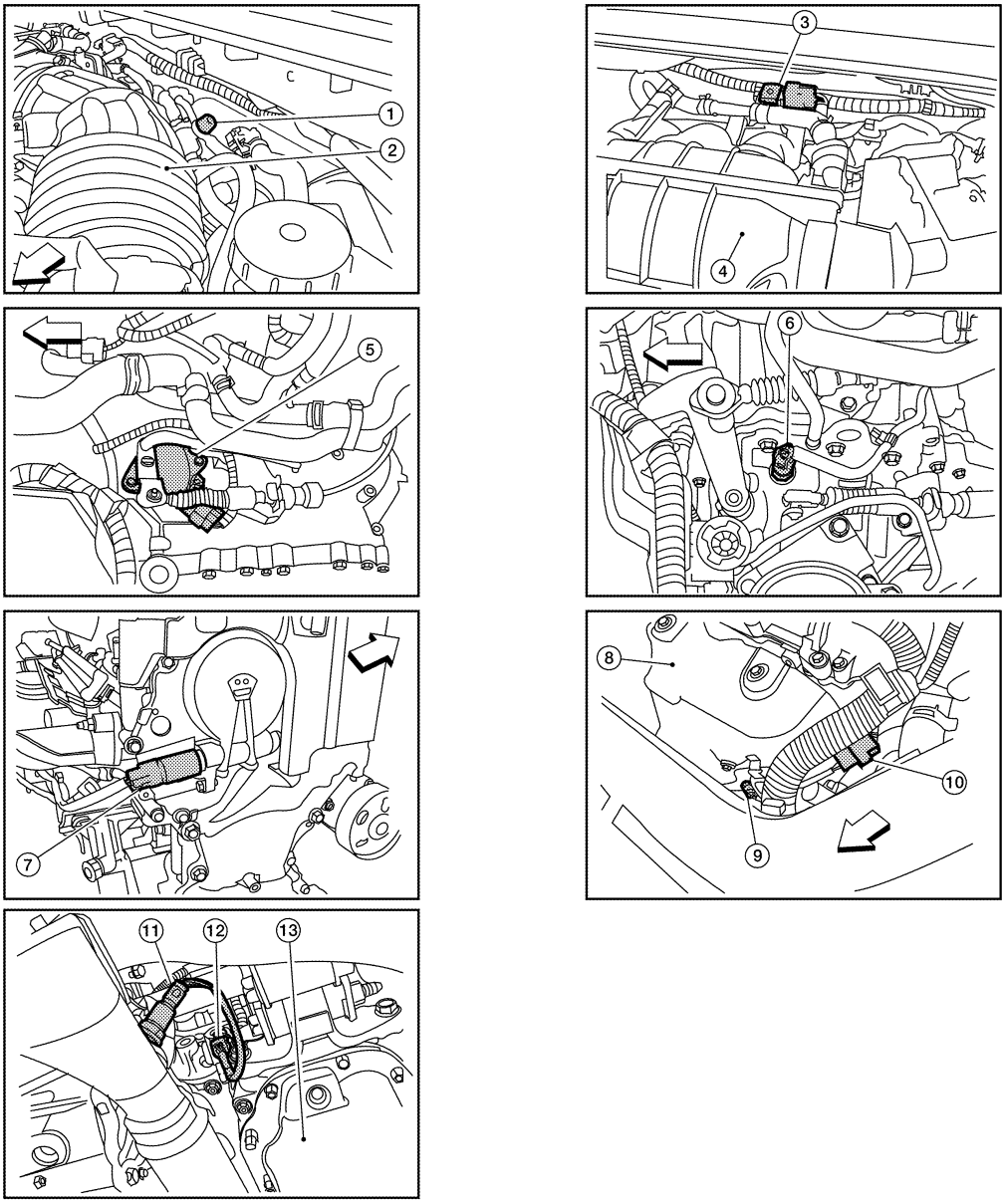

ALBIA0095ZZ

1. EVAP service port
2. Intake air duct
3. EVAP canister purge volume control solenoid valve
4. Intake manifold collector
5. Park/neutral position (PNP) switch (CVT) (This illustration is view with air cleaner assembly removed.)
6. Park/neutral position (PNP) switch (M/T) (This illustration is view with air cleaner assembly removed.)
7. Intake valve timing control solenoid valve (This illustration is view with engine removed.)
8. Exhaust manifold cover
9. Air fuel ratio (A/F) sensor 1
10. Air fuel ratio (A/F) sensor 1 harness connector
11. Heated oxygen sensor 2 (This illustration is view from under vehicle.)
12. Heated oxygen sensor 2 harness connector (This illustration is view from under vehicle.)
13. Engine oil pan

⇦: Vehicle front

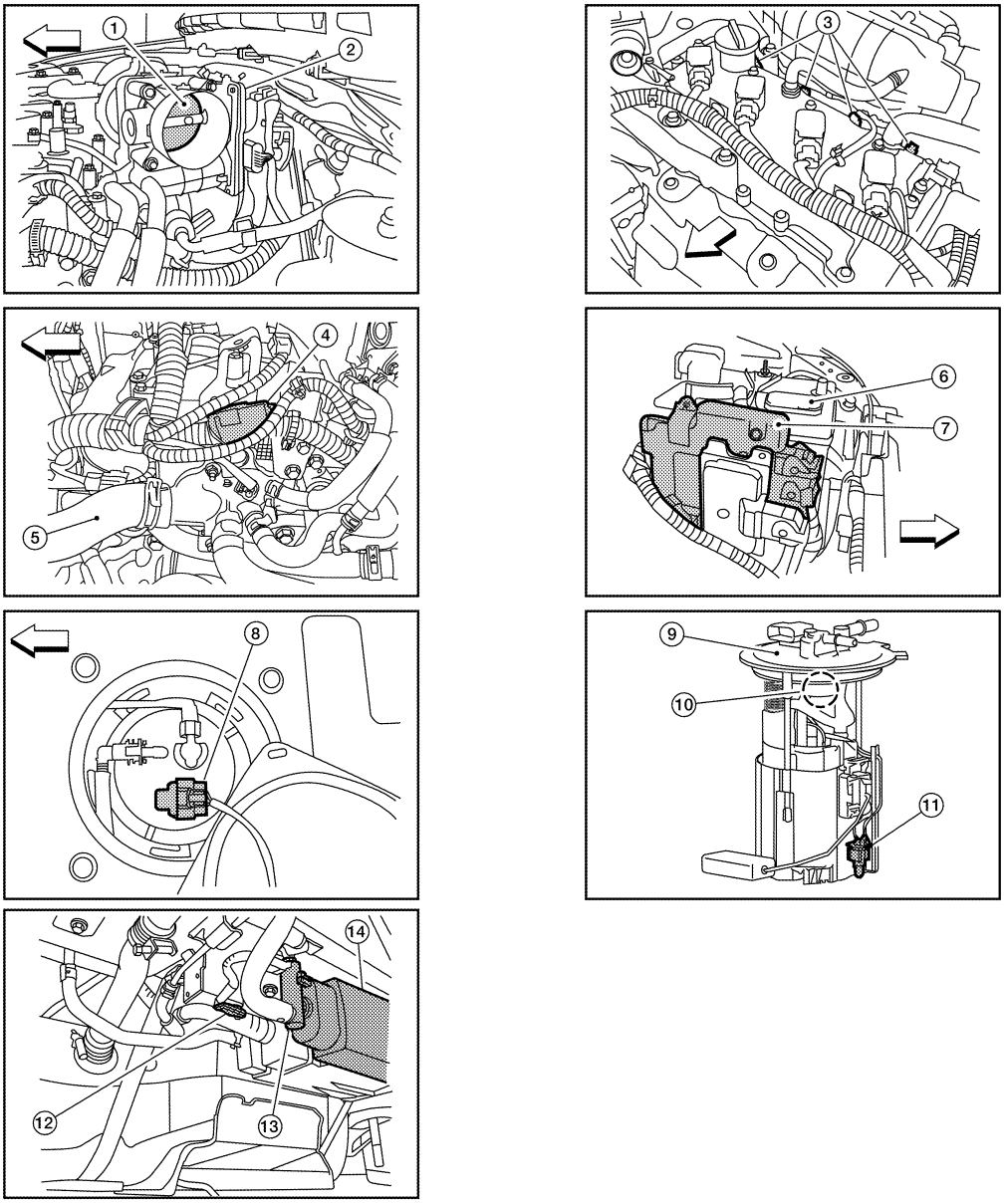

ALBIA0096ZZ

1. Throttle valve (This illustration is view with intake air duct removed.)
2. Electric throttle control actuator
3. Fuel injector harness connector
4. Condenser-2
5. Radiator hose (upper)
6. Battery
7. ECM
8. Fuel level sensor unit and fuel pump harness connector (This illustration is view with rear seat cushion and inspection hole cover removed.)
9. Fuel level sensor unit and fuel pump assembly
10. Fuel pressure regulator
11. Fuel tank temperature sensor
12. EVAP control system pressure sensor (This illustration is view with rear suspension member removed.)
13. EVAP canister vent control valve (This illustration is view with rear suspension member removed.)
14. EVAP canister (This illustration is view with rear suspension member removed.)

⇦ : Vehicle front

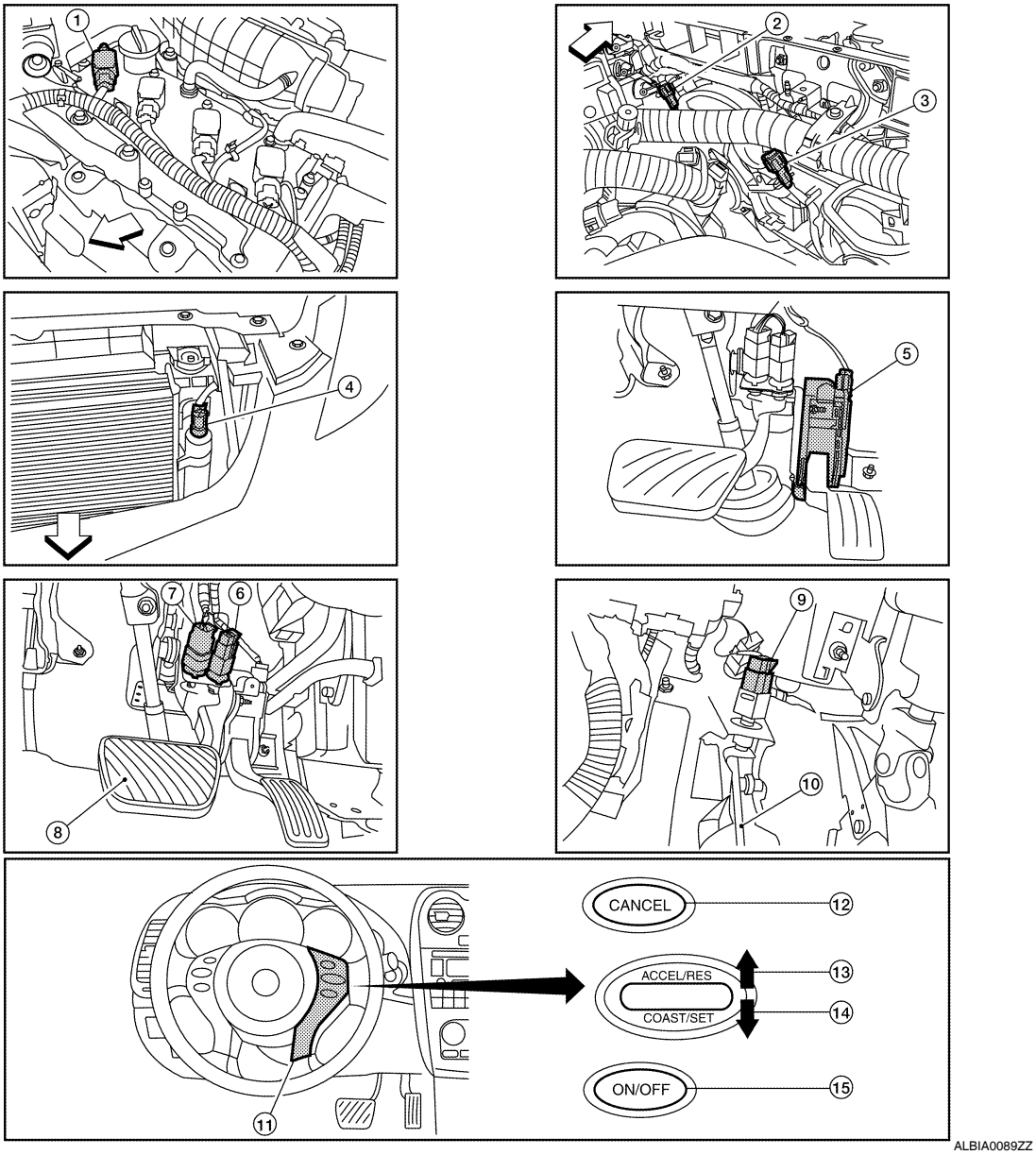

1. No.1 ignition coil
2. Cooling fan motor-1 harness connector
3. Cooling fan motor-2 harness connector
4. Refrigerant pressure sensor
5. Accelerator pedal position sensor
6. ASCD brake switch
7. Stop lamp switch
8. Brake pedal
9. ASCD clutch switch
10. Clutch pedal
11. ASCD steering switch
12. CANSEC switch
13. RESUME/ACCELERATE switch
14. SET/COAST switch
15. MAIN switch

⇦: Vehicle front

Component Description

INFOID:0000000004349615

Component	Reference
Accelerator pedal position sensor	EC-924, "Description"
Camshaft position sensor (PHASE)	EC-787, "Description"
Crankshaft position sensor (POS)	EC-783, "Description"
Engine coolant temperature sensor	EC-711, "Description"

Component	Reference
Power steering pressure sensor	EC-859, "Description"
Refrigerant pressure sensor	EC-975, "Description"
Vehicle speed sensor	EC-853, "Description"

AUTOMATIC SPEED CONTROL DEVICE (ASCD)

System Diagram

INFOID:0000000004349616

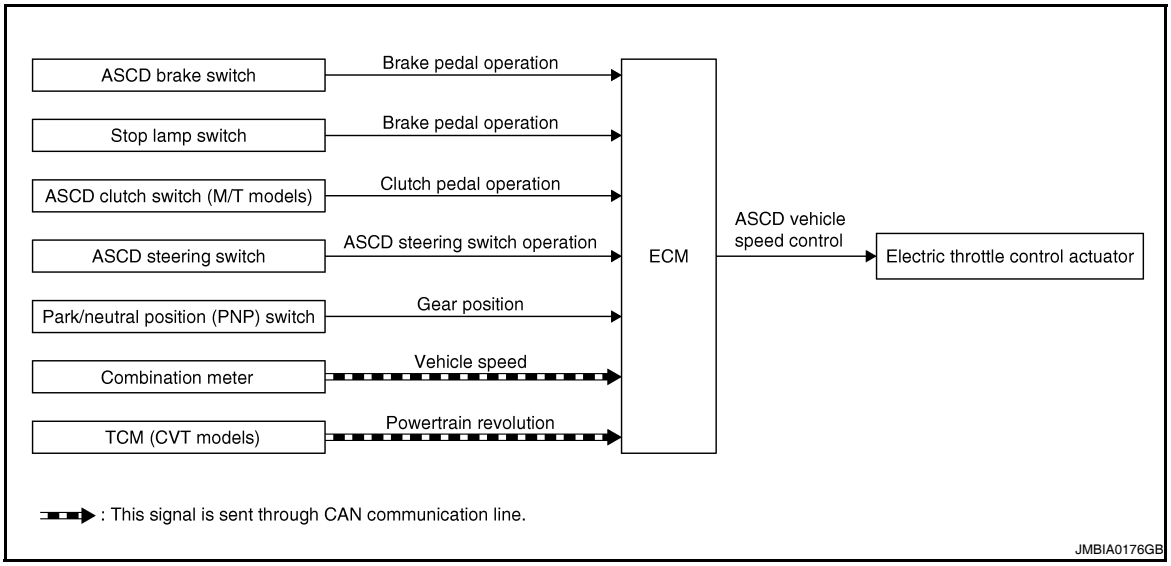

System Description

INFOID:0000000004349617

INPUT/OUTPUT SIGNAL CHART

Sensor	Input signal to ECM	ECM function	Actuator
ASCD brake switch	Brake pedal operation	ASCD vehicle speed control	Electric throttle control actuator
Stop lamp switch	Brake pedal operation		
ASCD clutch switch (M/T models)	Clutch pedal operation		
ASCD steering switch	ASCD steering switch operation		
Park/neutral position (PNP) switch	Gear position		
Combination meter	Vehicle speed*		
TCM (CVT models)	Powertrain revolution*		

*: This signal is sent to the ECM through CAN communication line

BASIC ASCD SYSTEM

Refer to Owner's Manual for ASCD operating instructions.

Automatic Speed Control Device (ASCD) allows a driver to keep vehicle at predetermined constant speed without depressing accelerator pedal. Driver can set vehicle speed in advance between approximately 40 km/h (25 MPH) and 144 km/h (89 MPH).

ECM controls throttle angle of electric throttle control actuator to regulate engine speed.

The ASCD operation status is indicated by two indicators (CRUISE and SET on the information display) on the combination meter. If any malfunction occurs in ASCD system, SET indicator blinks and ASCD control is deactivated.

NOTE:

Always drive vehicle in safe manner according to traffic conditions and obey all traffic laws.

SET OPERATION

Press MAIN switch. (CRUISE is indicated on the information display.)

When vehicle speed reaches a desired speed between approximately 40 km/h (25 MPH) and 144 km/h (89 MPH), press SET/COAST switch. (Then SET is indicated on the information display.)

ACCELERATE OPERATION

If the RESUME/ACCELERATE switch is pressed during cruise control driving, increase the vehicle speed until the switch is released or vehicle speed reaches maximum speed controlled by the system.

And then ASCD will keep the new set speed.

CANCEL OPERATION

When any of following conditions exist, cruise operation will be canceled.

- CANCEL switch is pressed
- More than 2 switches at ASCD steering switch are pressed at the same time (Set speed will be cleared)
- Brake pedal is depressed
- Clutch pedal is depressed or gear position is changed to neutral position. (M/T models)
- Selector lever is changed to N, P, R position (CVT models)
- Vehicle speed decreased to 13 km/h (8 MPH) lower than the set speed
- TCS system is operated

When the ECM detects any of the following conditions, the ECM will cancel the cruise operation and inform the driver by blinking indicators.

- Engine coolant temperature is slightly higher than the normal operating temperature, CRUISE indicator may blink slowly.
  When the engine coolant temperature decreases to the normal operating temperature, CRUISE indicator will stop blinking and the cruise operation will be able to work by pressing SET/COAST switch or RESUME/ACCELERATE switch.
- Malfunction for some self-diagnoses regarding ASCD control: SET indicator will blink quickly.

If MAIN switch is turned to OFF during ASCD is activated, all of ASCD operations will be canceled and vehicle speed memory will be erased.

COAST OPERATION

When the SET/COAST switch is pressed during cruise control driving, decrease vehicle set speed until the switch is released. And then ASCD will keep the new set speed.

RESUME OPERATION

When the RESUME/ACCELERATE switch is pressed after cancel operation other than pressing MAIN switch is performed, vehicle speed will return to last set speed. To resume vehicle set speed, vehicle condition must meet following conditions.

- Brake pedal is released
- Clutch pedal is released (M/T models)
- Selector lever is in other than P and N positions (CVT models)
- Vehicle speed is greater than 40 km/h (25 MPH) and less than 144 km/h (89 MPH)

Component Parts Location

INFOID:0000000004349618

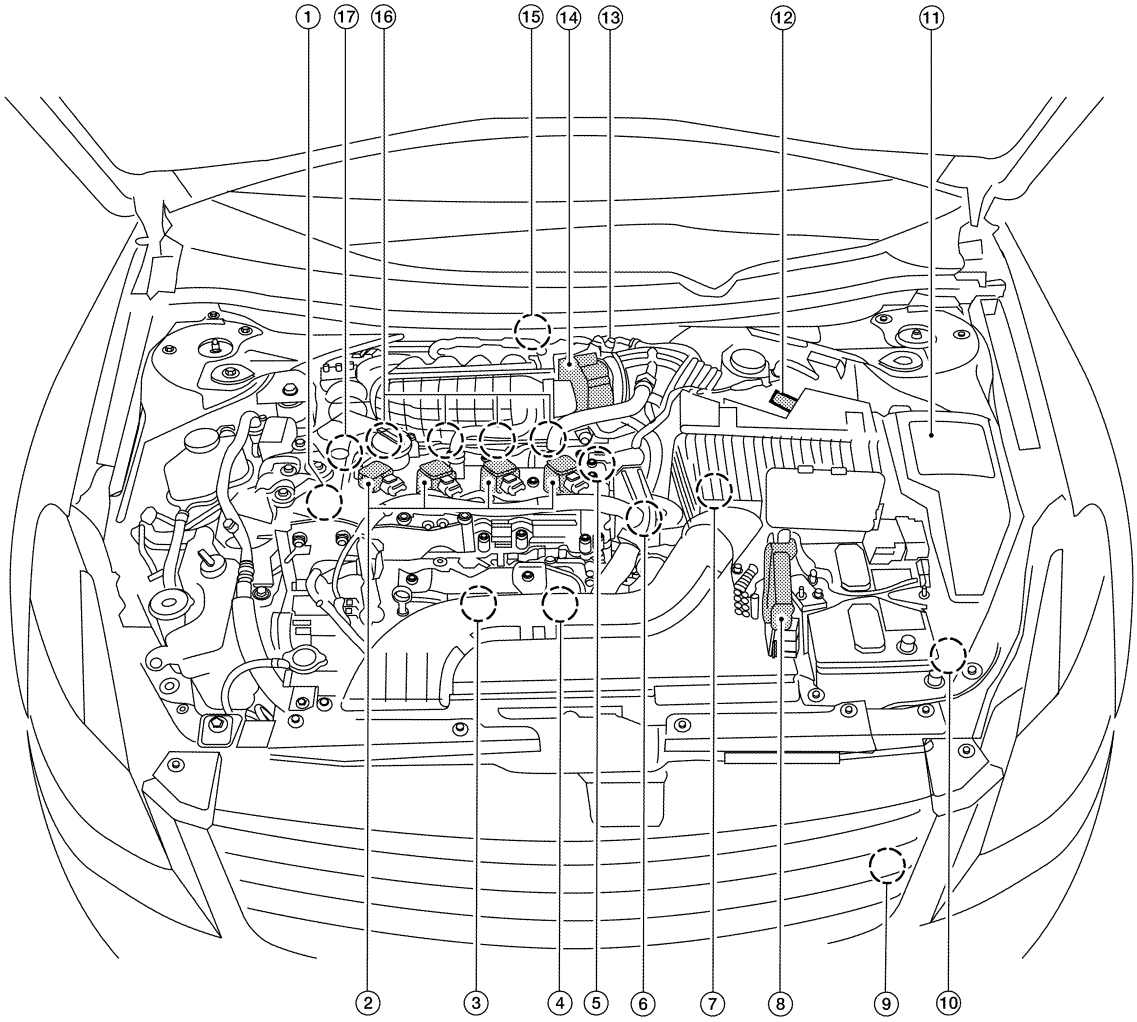

ALBIA0094ZZ

1. Intake valve timing control solenoid valve
2. Ignition coil (with power transistor) and spark plug
3. Knock sensor, Crankshaft position sensor (POS)
4. Air fuel ratio (A/F) sensor 1
5. Camshaft position sensor (PHASE)
6. Engine coolant temperature sensor
7. Park/neutral position (PNP) switch
8. ECM
9. Refrigerant pressure sensor
10. Battery current sensor
11. IPDM E/R
12. Mass air flow sensor (with intake temperature sensor)
13. EVAP service port
14. Electric throttle control actuator (with built in throttle position sensor and throttle control motor)
15. EVAP canister purge volume control solenoid valve
16. Fuel injector
17. Power steering pressure sensor

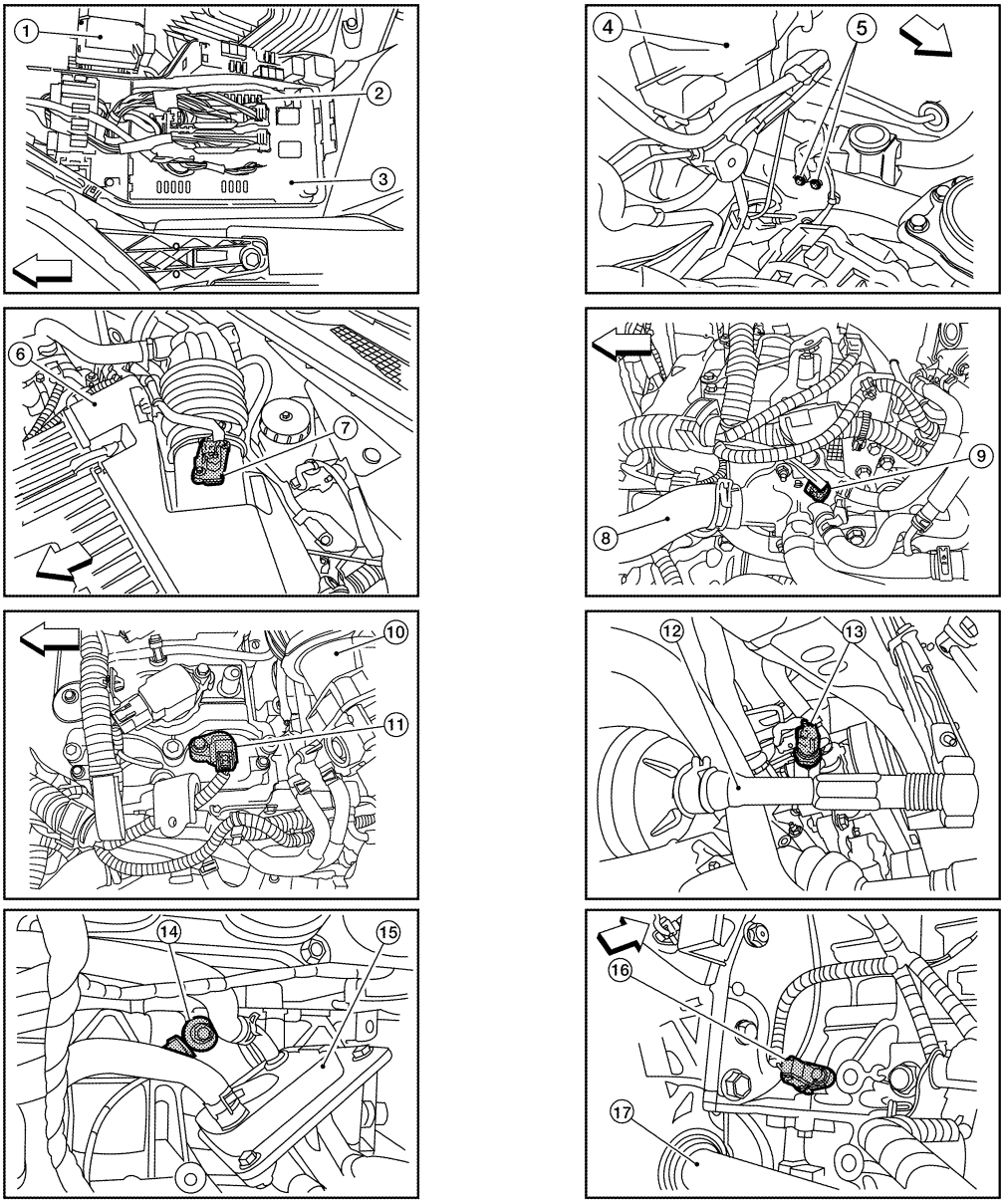

ALBIA0091ZZ

1. Battery
2. Fuel pump fuse (15A)
3. IPDM E/R
4. Brake master cylinder
5. Engine ground
6. Air cleaner assembly
7. Mass air flow sensor (with intake air temperature sensor)
8. Radiator hose (upper)
9. Engine coolant temperature sensor
10. Intake air duct
11. Camshaft position sensor (PHASE)
12. Tie rod (RH)
13. Power steering pressure sensor
14. Knock sensor
15. Engine oil cooler
16. Crankshaft position sensor (POS)
17. Drive shaft (RH)

⇦: Vehicle front

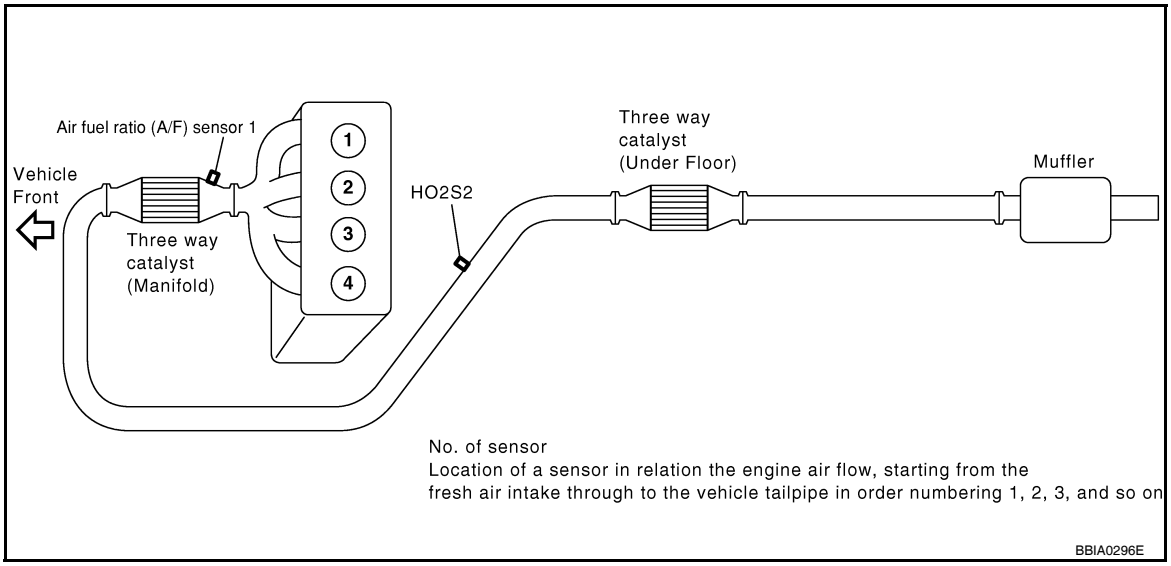

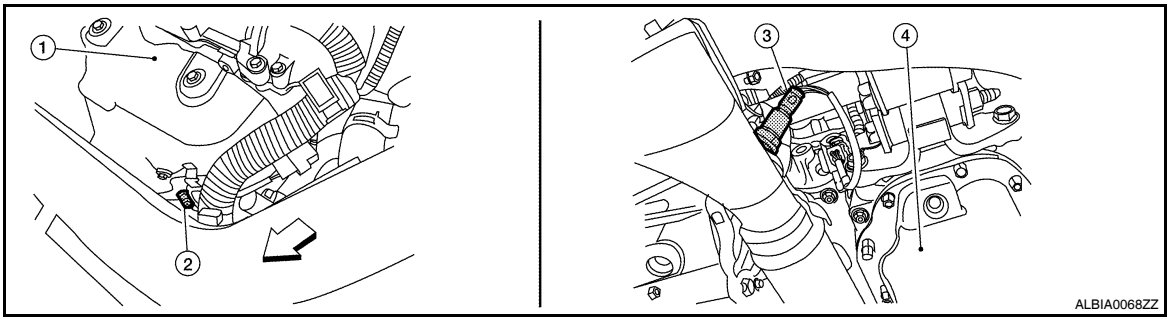

1. Exhaust manifold cover
2. Air fuel ratio (A/F) sensor 1
3. Heated oxygen sensor 2 (This illustration is a view from under vehicle.)
4. Engine oil pan

⇦: Vehicle front

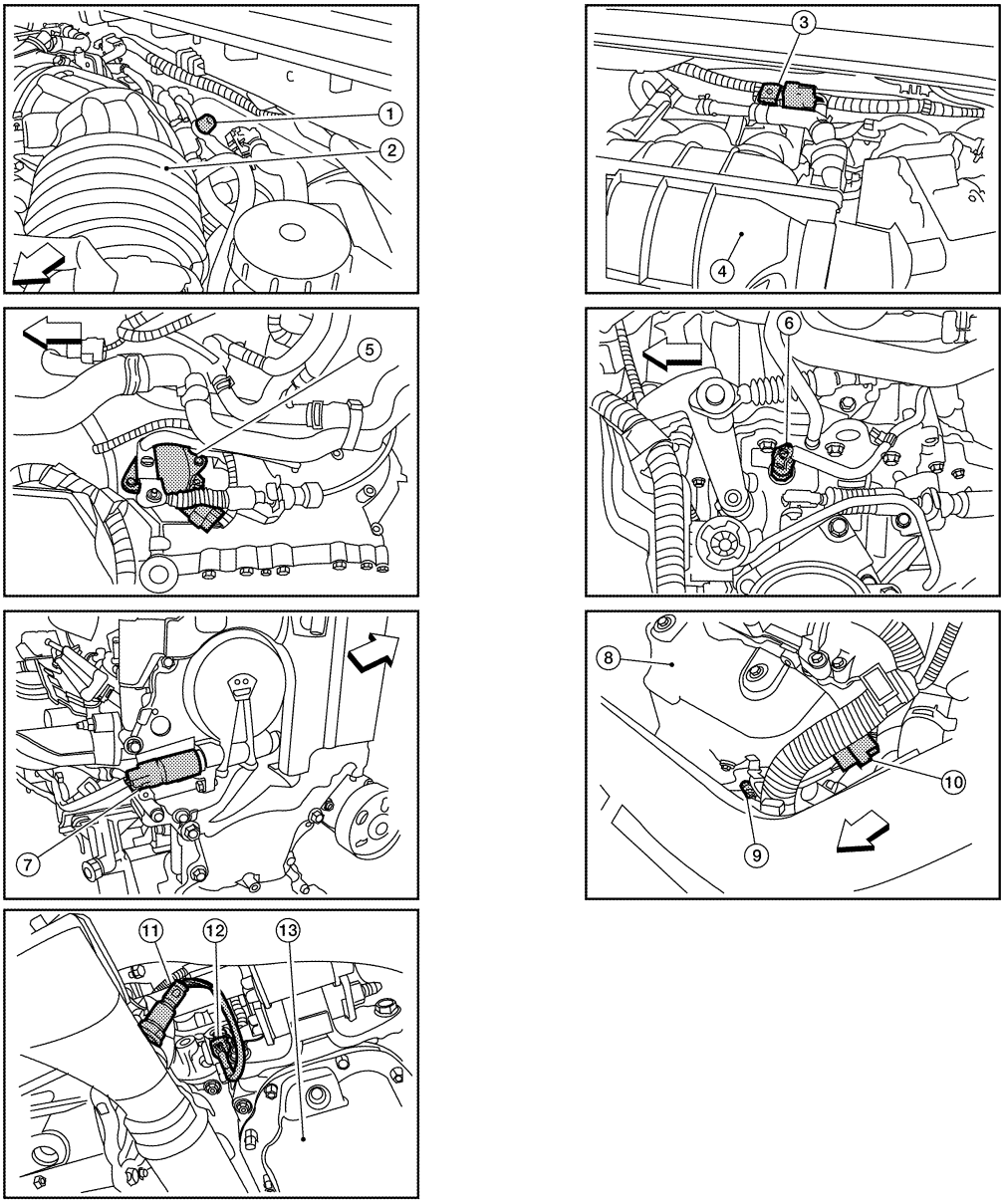

ALBIA0095ZZ

1. EVAP service port
2. Intake air duct
3. EVAP canister purge volume control solenoid valve
4. Intake manifold collector
5. Park/neutral position (PNP) switch (CVT) (This illustration is view with air cleaner assembly removed.)
6. Park/neutral position (PNP) switch (M/T) (This illustration is view with air cleaner assembly removed.)
7. Intake valve timing control solenoid valve (This illustration is view with engine removed.)
8. Exhaust manifold cover
9. Air fuel ratio (A/F) sensor 1
10. Air fuel ratio (A/F) sensor 1 harness connector
11. Heated oxygen sensor 2 (This illustration is view from under vehicle.)
12. Heated oxygen sensor 2 harness connector (This illustration is view from under vehicle.)
13. Engine oil pan

⇦: Vehicle front

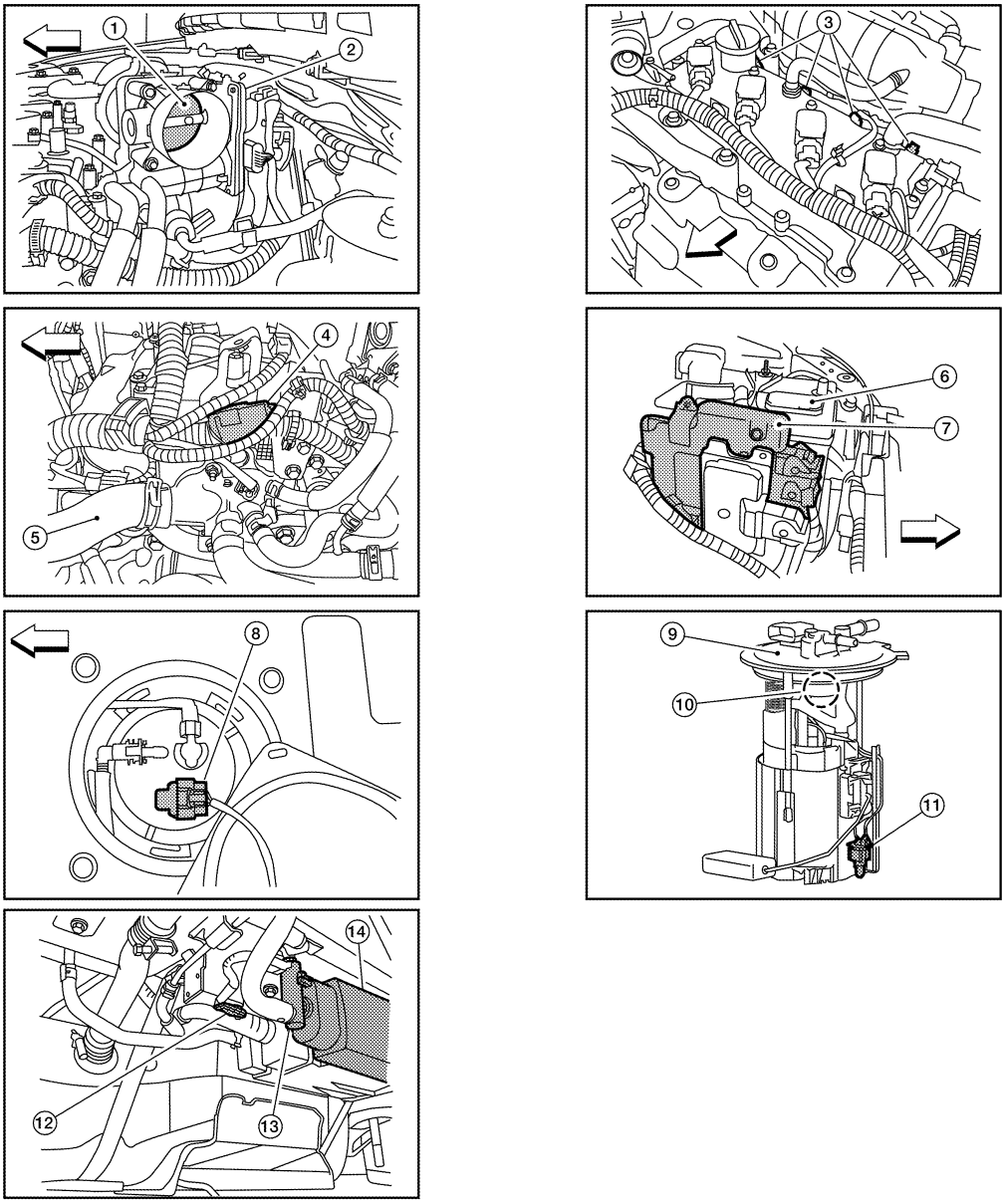

ALBIA0096ZZ

1. Throttle valve (This illustration is view with intake air duct removed.)
2. Electric throttle control actuator
3. Fuel injector harness connector
4. Condenser-2
5. Radiator hose (upper)
6. Battery
7. ECM
8. Fuel level sensor unit and fuel pump harness connector (This illustration is view with rear seat cushion and inspection hole cover removed.)
9. Fuel level sensor unit and fuel pump assembly
10. Fuel pressure regulator
11. Fuel tank temperature sensor
12. EVAP control system pressure sensor (This illustration is view with rear suspension member removed.)
13. EVAP canister vent control valve (This illustration is view with rear suspension member removed.)
14. EVAP canister (This illustration is view with rear suspension member removed.)

⇦ : Vehicle front

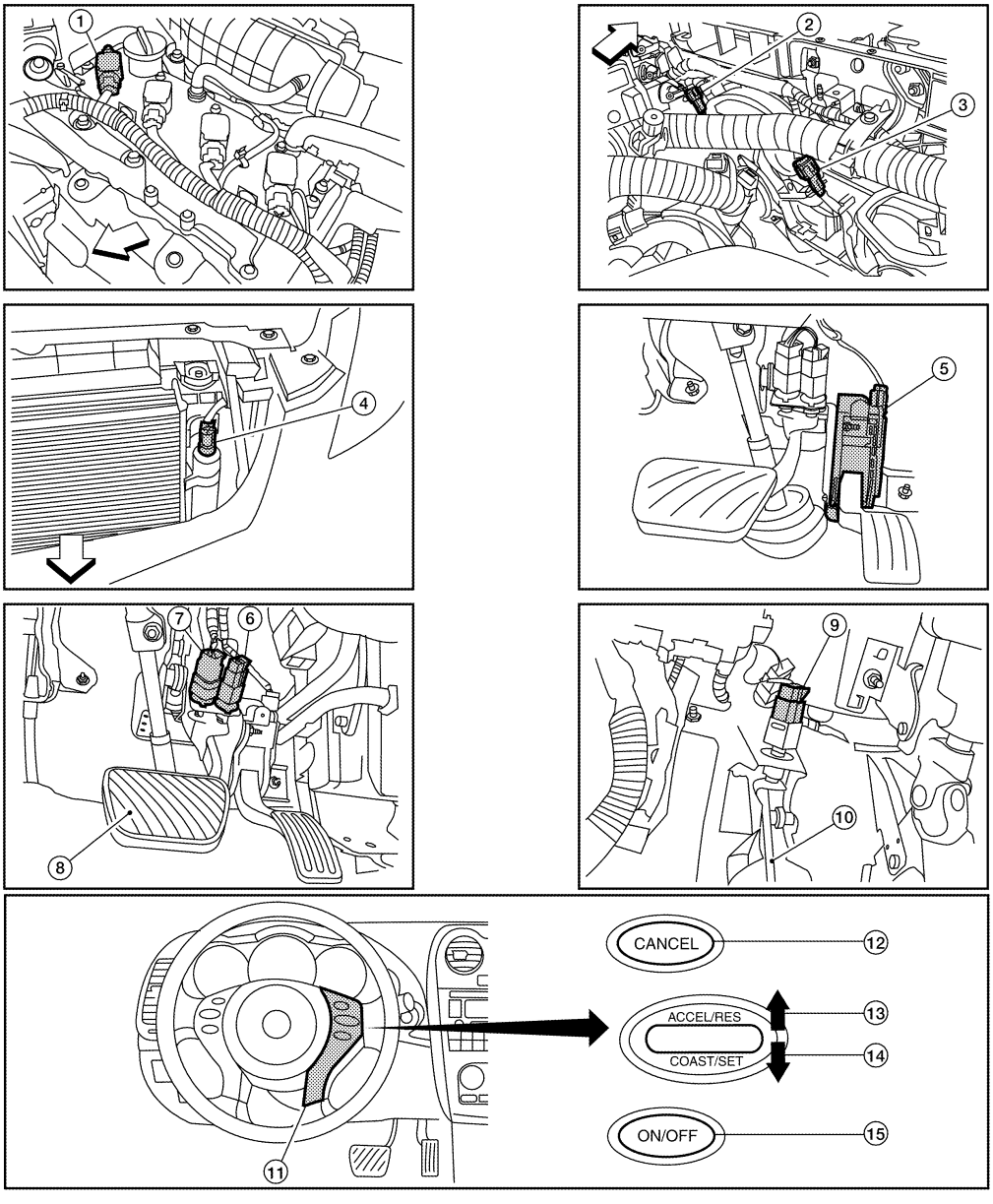

1. No.1 ignition coil
2. Cooling fan motor-1 harness connector
3. Cooling fan motor-2 harness connector
4. Refrigerant pressure sensor
5. Accelerator pedal position sensor
6. ASCD brake switch
7. Stop lamp switch
8. Brake pedal
9. ASCD clutch switch
10. Clutch pedal
11. ASCD steering switch
12. CANSEC switch
13. RESUME/ACCELERATE switch
14. SET/COAST switch
15. MAIN switch

⇦: Vehicle front

Component Description

INFOID:0000000004349619

Component	Reference
ASCD steering switch	EC-896, "Description"
ASCD clutch switch	EC-899, "Description"
ASCD brake switch	EC-899, "Description"
Stop lamp switch	EC-911, "Description"

Component	Reference
Electric throttle control actuator	EC-922, "Description"
ASCD indicator	EC-948, "Description"

CAN COMMUNICATION

System Description

INFOID:0000000004349620

CAN (Controller Area Network) is a serial communication line for real time application. It is an on-vehicle multiplex communication line with high data communication speed and excellent error detection ability. Many electronic control units are equipped onto a vehicle, and each control unit shares information and links with other control units during operation (not independent). In CAN communication, control units are connected with 2 communication lines (CAN H line, CAN L line) allowing a high rate of information transmission with less wiring. Each control unit transmits/receives data but selectively reads required data only.
Refer to LAN-25, "CAN Communication Signal Chart", about CAN communication for detail..

COOLING FAN CONTROL

System Diagram

INFOID:0000000004349621

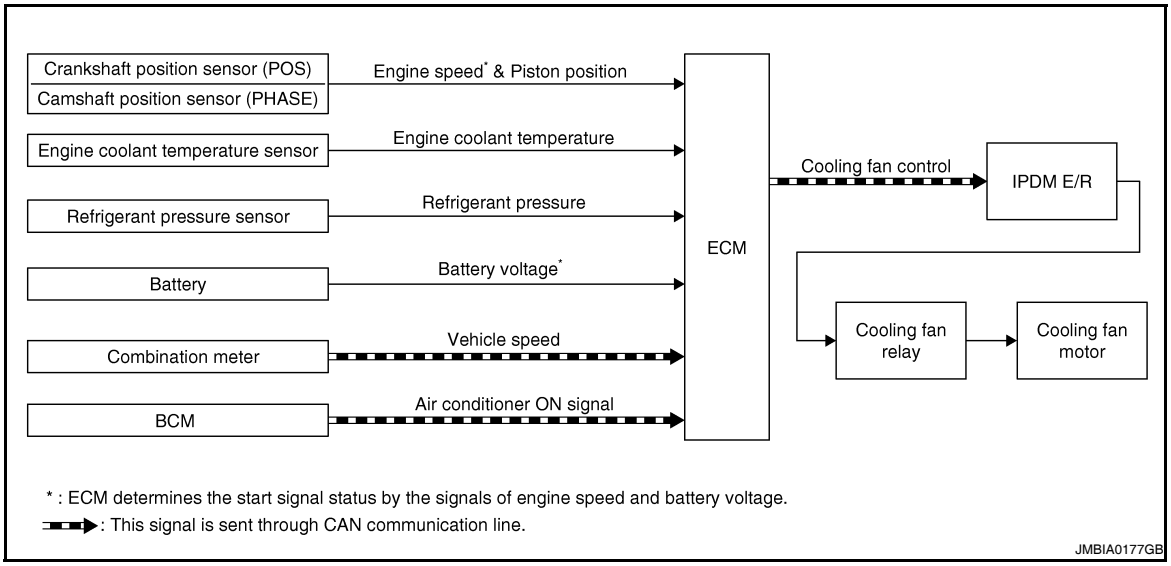

System Description

INFOID:0000000004349622

INPUT/OUTPUT SIGNAL CHART

Sensor	Input signal to ECM	ECM function	Actuator
Crankshaft position sensor (POS) Camshaft position sensor (PHASE)	Engine speed*1	Cooling fan control	IPDM E/R ↓ Cooling fan relay ↓ Cooling fan motor
Battery	Battery voltage*1		
Combination meter	Vehicle speed*2		
Engine coolant temperature sensor	Engine coolant temperature		
BCM	Air conditioner ON signal*2		
Refrigerant pressure sensor	Refrigerant pressure		

*1: The ECM determines the start signal status by the signals of engine speed and battery voltage.

*2: This signal is sent to ECM through CAN communication line.

SYSTEM DESCRIPTION

ECM controls cooling fan speed corresponding to vehicle speed, engine coolant temperature, refrigerant pressure, air conditioner ON signal. Then control system has 4-step control [HIGH/MIDDLE/LOW/OFF].

Cooling Fan Operation

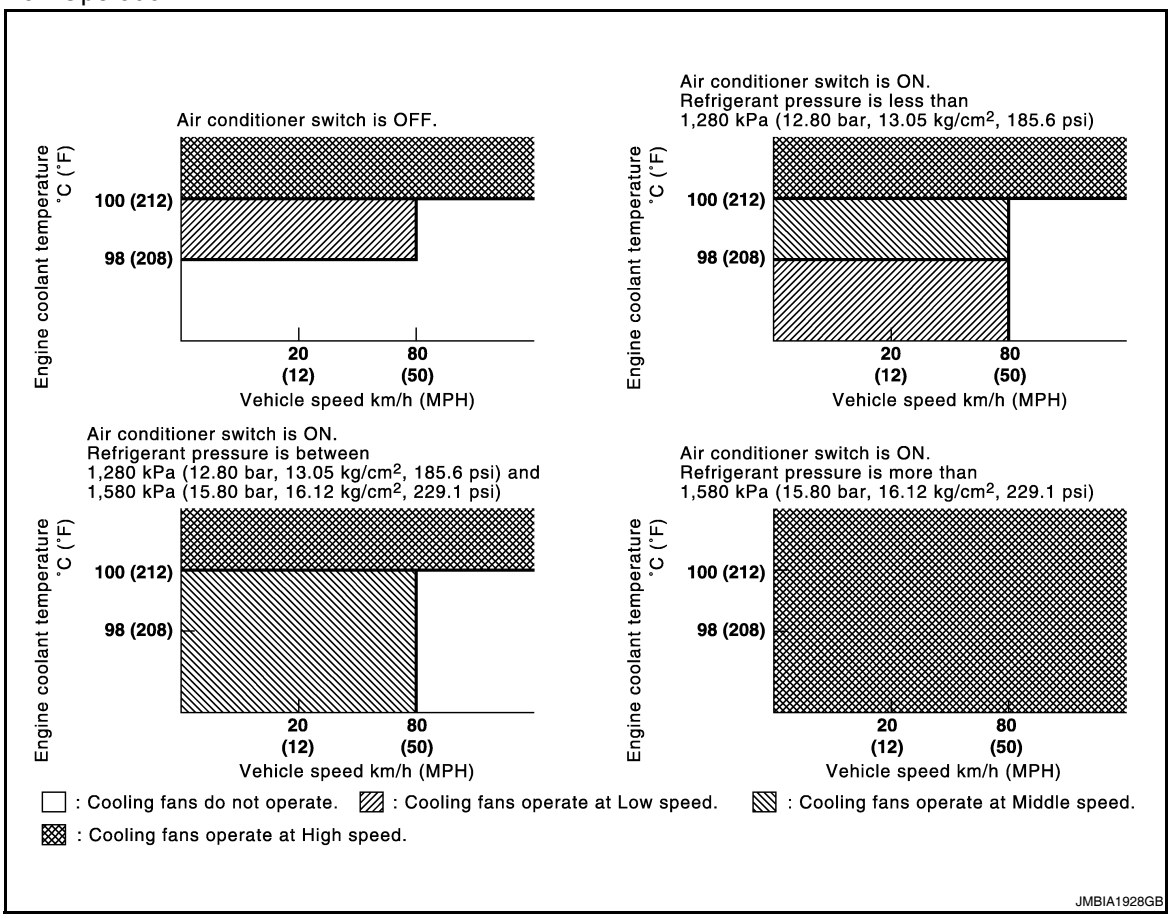

Cooling Fan Relay Operation

The ECM controls cooling fan relays through CAN communication line.

Cooling fan speed	Cooling fan relay		
	1	2	3
Stop (OFF)	OFF	OFF	OFF
Low (LOW)	ON	OFF	OFF
Middle (MID)	OFF	ON	OFF
High (HI)	OFF	ON	ON

Component Parts Location

INFOID:0000000004349623

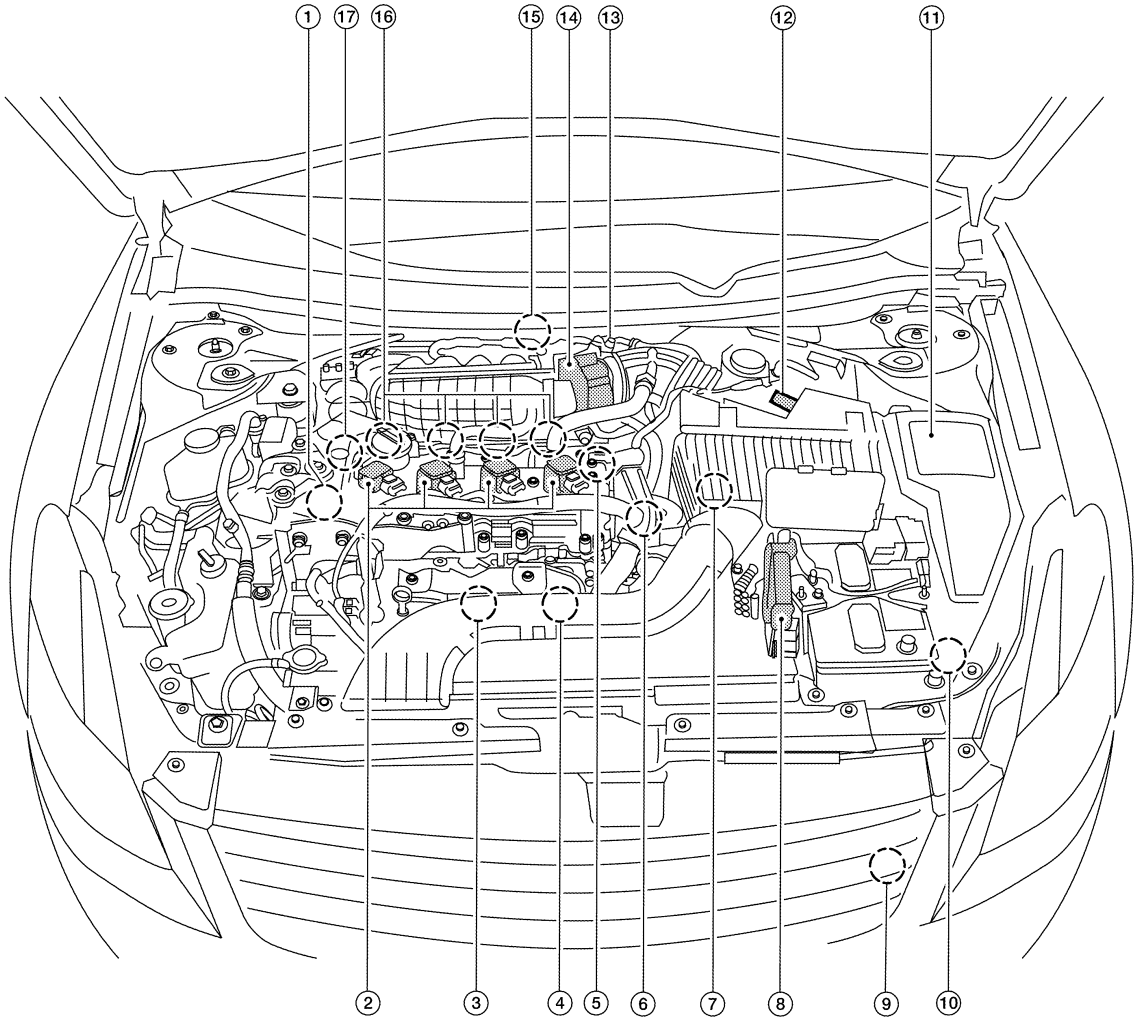

ALBIA0094ZZ

1. Intake valve timing control solenoid valve
2. Ignition coil (with power transistor) and spark plug
3. Knock sensor, Crankshaft position sensor (POS)
4. Air fuel ratio (A/F) sensor 1
5. Camshaft position sensor (PHASE)
6. Engine coolant temperature sensor
7. Park/neutral position (PNP) switch
8. ECM
9. Refrigerant pressure sensor
10. Battery current sensor
11. IPDM E/R
12. Mass air flow sensor (with intake temperature sensor)
13. EVAP service port
14. Electric throttle control actuator (with built in throttle position sensor and throttle control motor)
15. EVAP canister purge volume control solenoid valve
16. Fuel injector
17. Power steering pressure sensor

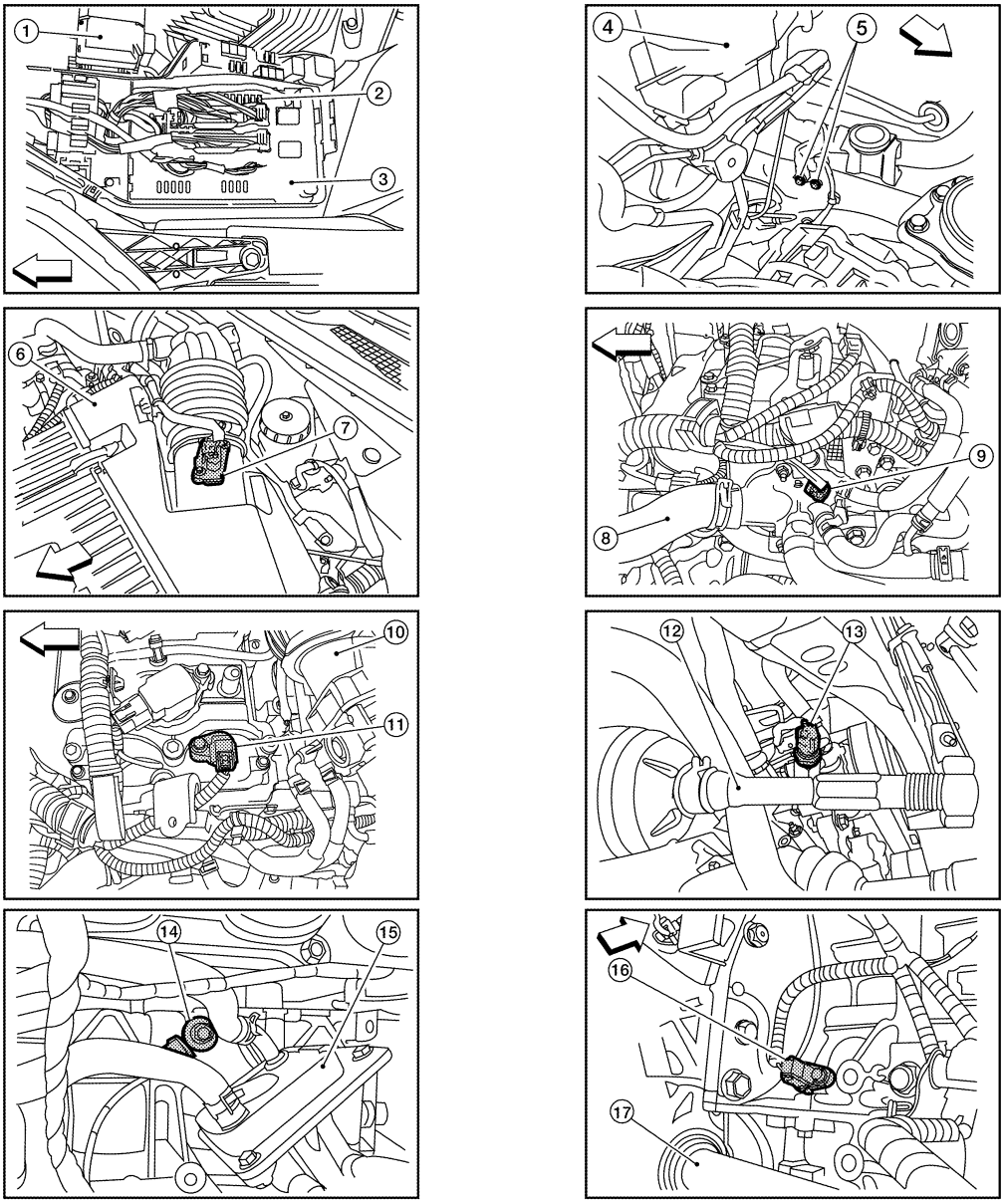

ALBIA0091ZZ

1. Battery
2. Fuel pump fuse (15A)
3. IPDM E/R
4. Brake master cylinder
5. Engine ground
6. Air cleaner assembly
7. Mass air flow sensor (with intake air temperature sensor)
8. Radiator hose (upper)
9. Engine coolant temperature sensor
10. Intake air duct
11. Camshaft position sensor (PHASE)
12. Tie rod (RH)
13. Power steering pressure sensor
14. Knock sensor
15. Engine oil cooler
16. Crankshaft position sensor (POS)
17. Drive shaft (RH)

⇦: Vehicle front

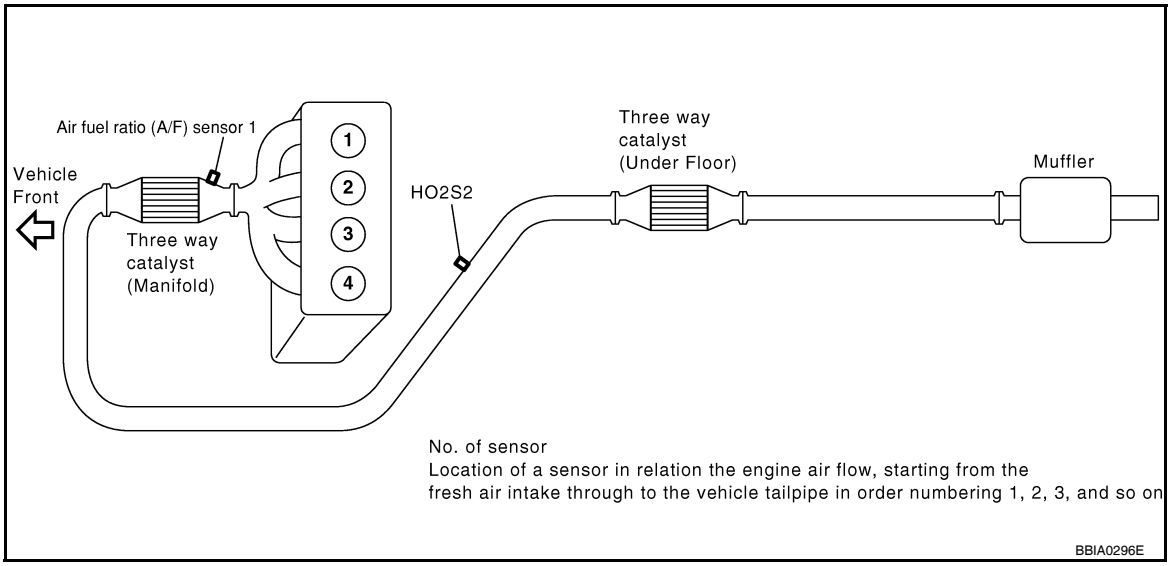

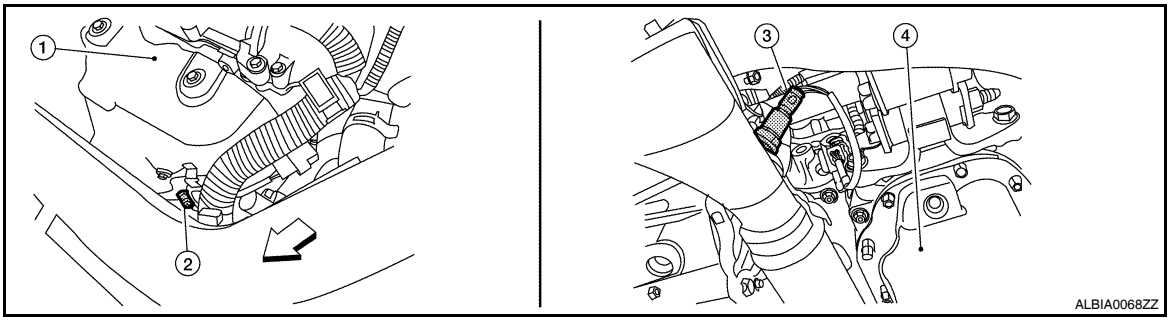

1. Exhaust manifold cover
2. Air fuel ratio (A/F) sensor 1
3. Heated oxygen sensor 2 (This illustration is a view from under vehicle.)
4. Engine oil pan

⇦: Vehicle front

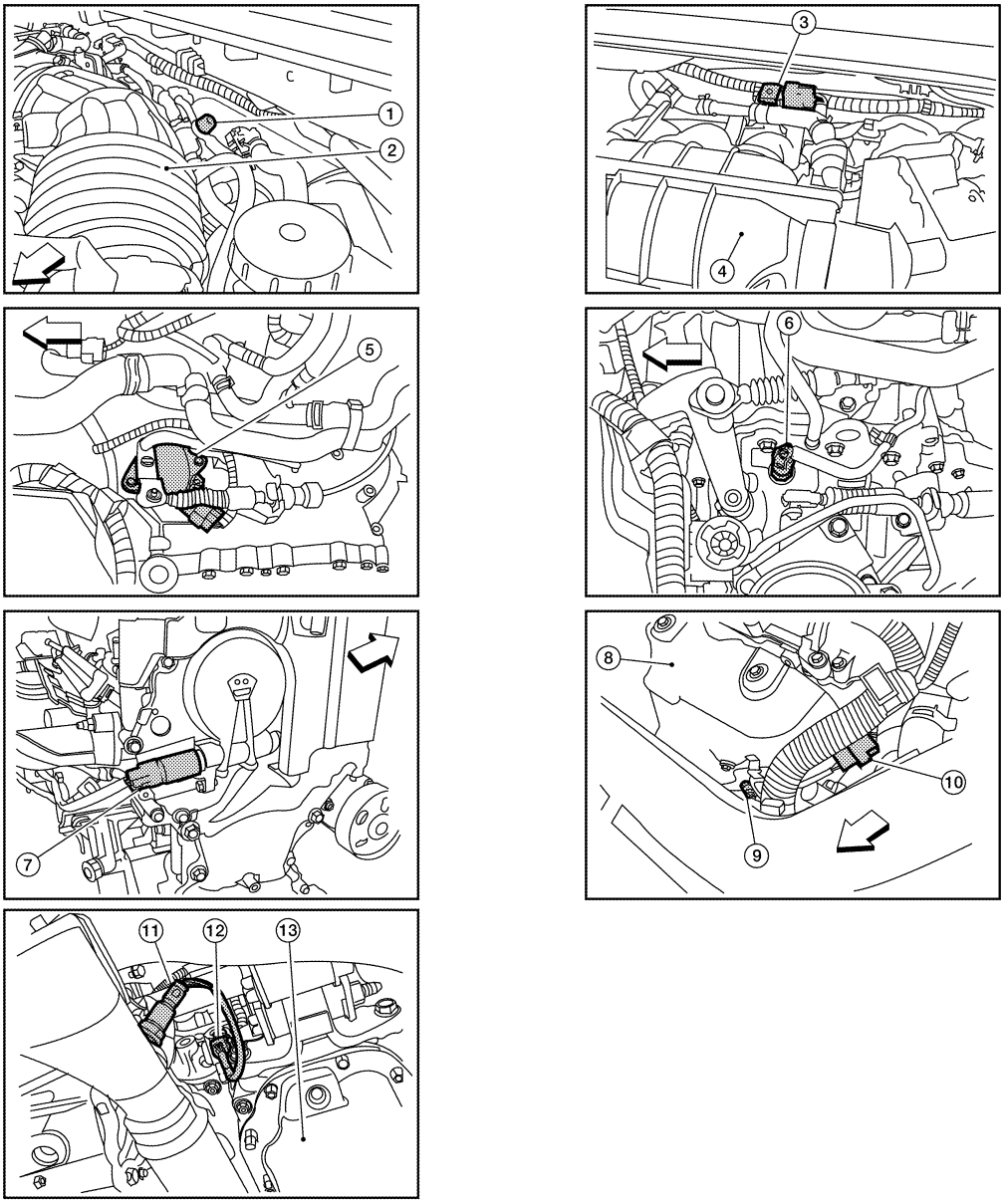

ALBIA0095ZZ

1. EVAP service port
2. Intake air duct
3. EVAP canister purge volume control solenoid valve
4. Intake manifold collector
5. Park/neutral position (PNP) switch (CVT) (This illustration is view with air cleaner assembly removed.)
6. Park/neutral position (PNP) switch (M/T) (This illustration is view with air cleaner assembly removed.)
7. Intake valve timing control solenoid valve (This illustration is view with engine removed.)
8. Exhaust manifold cover
9. Air fuel ratio (A/F) sensor 1
10. Air fuel ratio (A/F) sensor 1 harness connector
11. Heated oxygen sensor 2 (This illustration is view from under vehicle.)
12. Heated oxygen sensor 2 harness connector (This illustration is view from under vehicle.)
13. Engine oil pan

⇦: Vehicle front

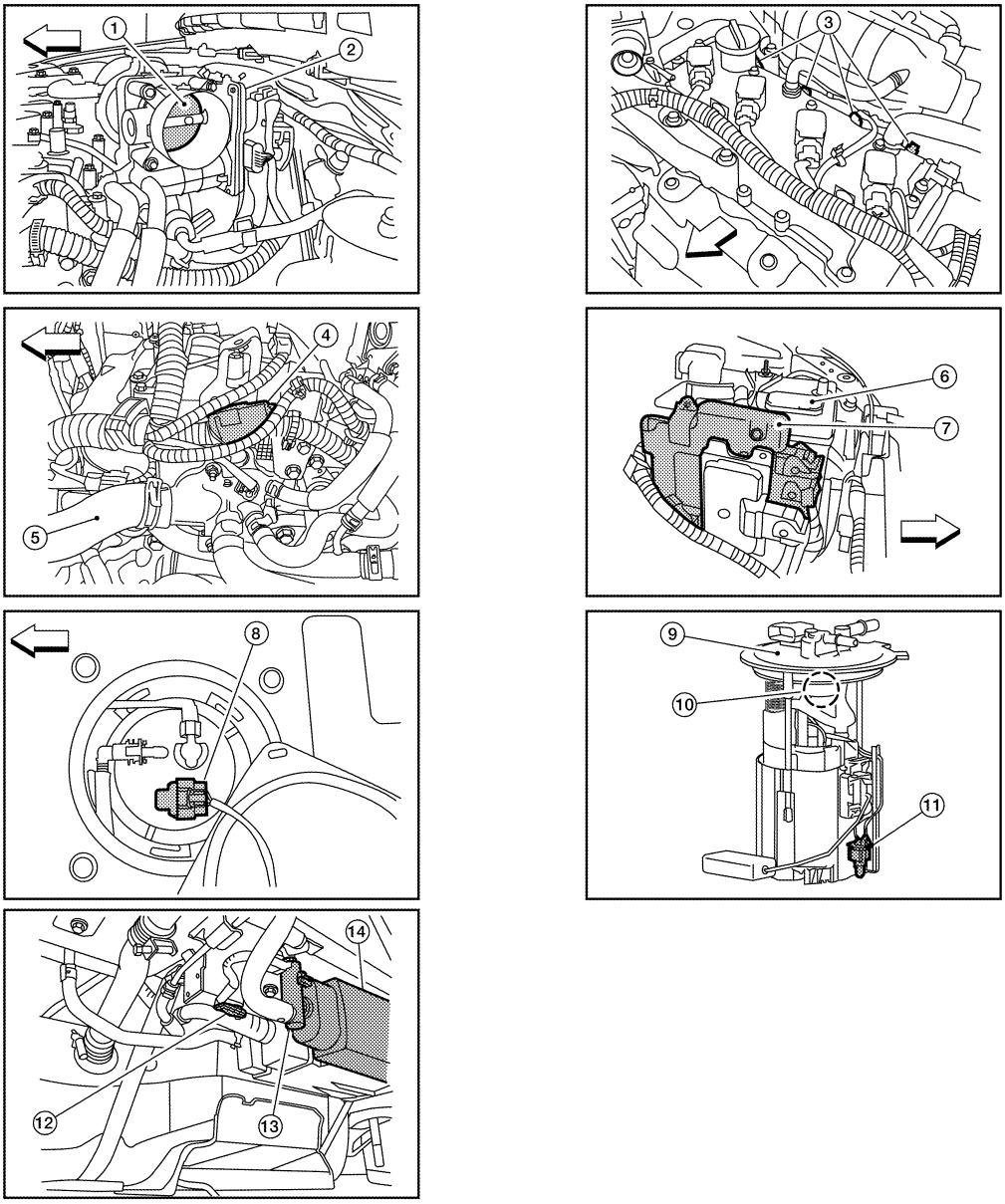

ALBIA0096ZZ

1. Throttle valve (This illustration is view with intake air duct removed.)
2. Electric throttle control actuator
3. Fuel injector harness connector
4. Condenser-2
5. Radiator hose (upper)
6. Battery
7. ECM
8. Fuel level sensor unit and fuel pump harness connector (This illustration is view with rear seat cushion and inspection hole cover removed.)
9. Fuel level sensor unit and fuel pump assembly
10. Fuel pressure regulator
11. Fuel tank temperature sensor
12. EVAP control system pressure sensor (This illustration is view with rear suspension member removed.)
13. EVAP canister vent control valve (This illustration is view with rear suspension member removed.)
14. EVAP canister (This illustration is view with rear suspension member removed.)

⇦ : Vehicle front

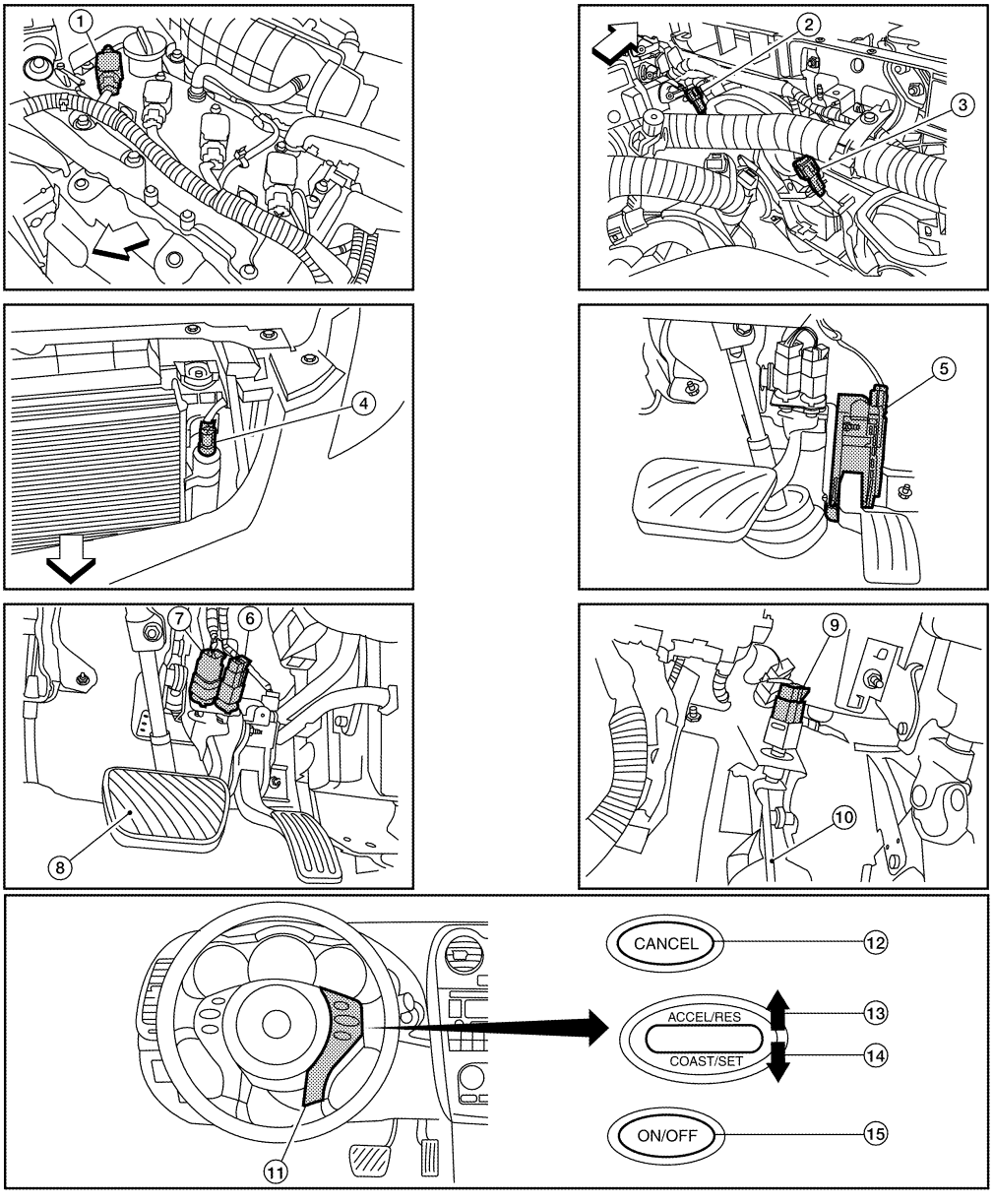

1. No.1 ignition coil
2. Cooling fan motor-1 harness connector
3. Cooling fan motor-2 harness connector
4. Refrigerant pressure sensor
5. Accelerator pedal position sensor
6. ASCD brake switch
7. Stop lamp switch
8. Brake pedal
9. ASCD clutch switch
10. Clutch pedal
11. ASCD steering switch
12. CANSEC switch
13. RESUME/ACCELERATE switch
14. SET/COAST switch
15. MAIN switch

⇦: Vehicle front

Component Description

INFOID:0000000004349624

Component	Reference
Camshaft position sensor (PHASE)	EC-787, "Description"
Crankshaft position sensor (POS)	EC-783, "Description"
Cooling fan motor	EC-613, "System Description"

Component	Reference
Engine coolant temperature sensor	EC-711, "Description"
Refrigerant pressure sensor	EC-975, "Description"

EVAPORATIVE EMISSION SYSTEM

System Diagram

INFOID:0000000004349625

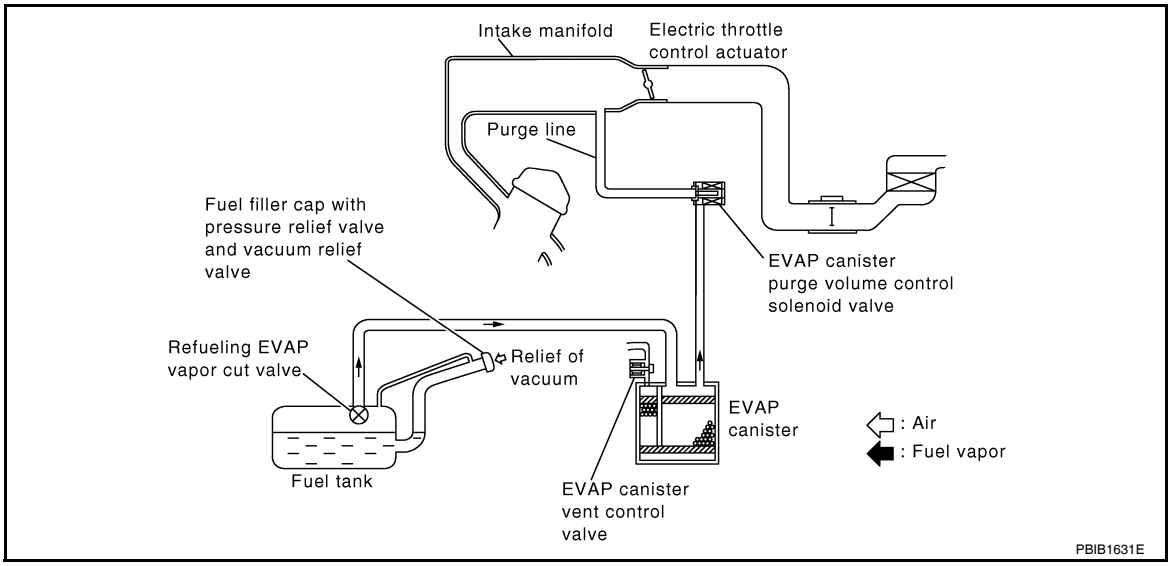

EVAPORATIVE EMISSION LINE DRAWING

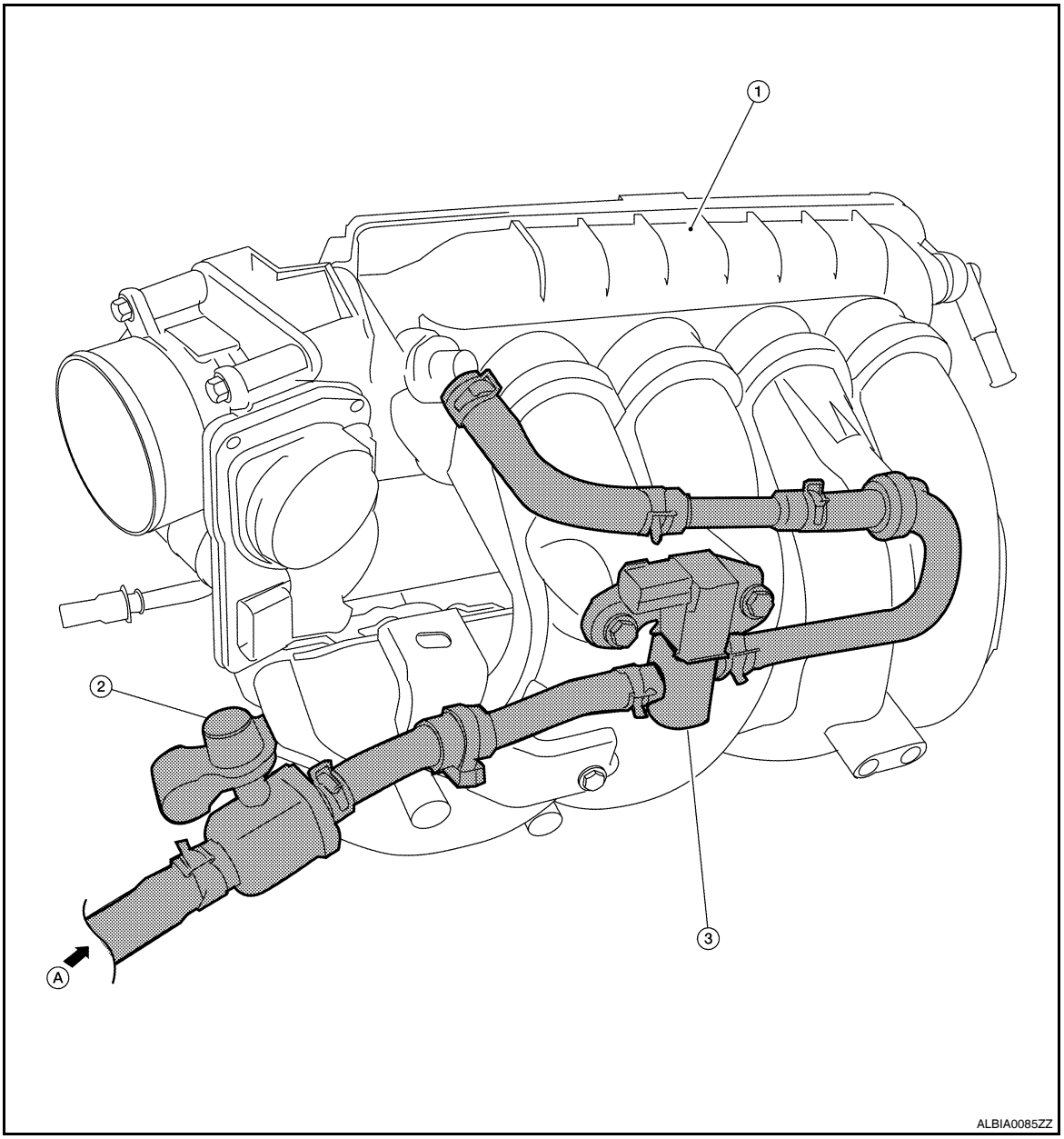

1. Intake manifold collector
2. EVAP service port
3. EVAP canister purge volume control solenoid valve

A. From next figure

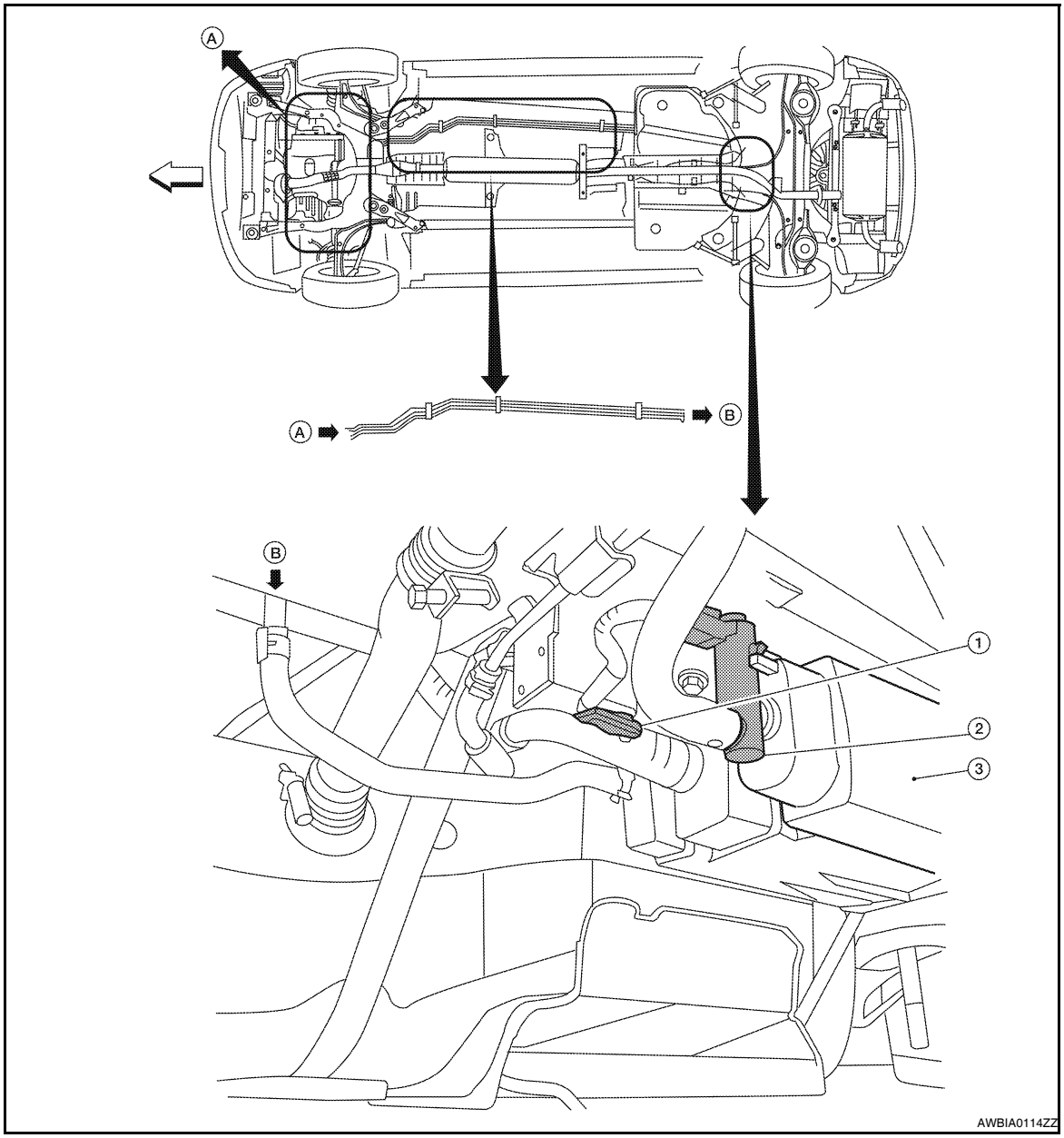

1. EVAP control system pressure sensor 2. EVAP canister vent control valve 3. EVAP canister

A. To previous figure

NOTE:
Do not use soapy water or any type of solvent while installing vacuum hose or purge hoses.

System Description

INFOID:0000000004349626

INPUT/OUTPUT SIGNAL CHART

Sensor	Input signal to ECM	ECM function	Actuator
Crankshaft position sensor (POS) Camshaft position sensor (PHASE)	Engine speed*1	EVAP canister purge flow control	EVAP canister purge volume control solenoid valve
Mass air flow sensor	Amount of intake air		
Engine coolant temperature sensor	Engine coolant temperature		
Battery	Battery voltage*1		
Throttle position sensor	Throttle position		
Accelerator pedal position sensor	Accelerator pedal position		
Air fuel ratio (A/F) sensor 1	Density of oxygen in exhaust gas (Mixture ratio feedback signal)		
Fuel tank temperature sensor	Fuel temperature in fuel tank		
EVAP control system pressure sensor	Pressure in purge line		
Combination meter	Vehicle speed*2		

*1: ECM determines the start signal status by the signals of engine speed and battery voltage.

*2: This signal is sent to the ECM through CAN communication line.

SYSTEM DESCRIPTION

The evaporative emission system is used to reduce hydrocarbons emitted into the atmosphere from the fuel system. This reduction of hydrocarbons is accomplished by activated charcoals in the EVAP canister.
The fuel vapor in the sealed fuel tank is led into the EVAP canister which contains activated carbon and the vapor is stored there when the engine is not operating or when refueling to the fuel tank.
The vapor in the EVAP canister is purged by the air through the purge line to the intake manifold when the engine is operating. EVAP canister purge volume control solenoid valve is controlled by ECM. When the engine operates, the flow rate of vapor controlled by EVAP canister purge volume control solenoid valve is proportionally regulated as the air flow increases.
EVAP canister purge volume control solenoid valve also shuts off the vapor purge line during decelerating.

Component Parts Location

INFOID:0000000004349627

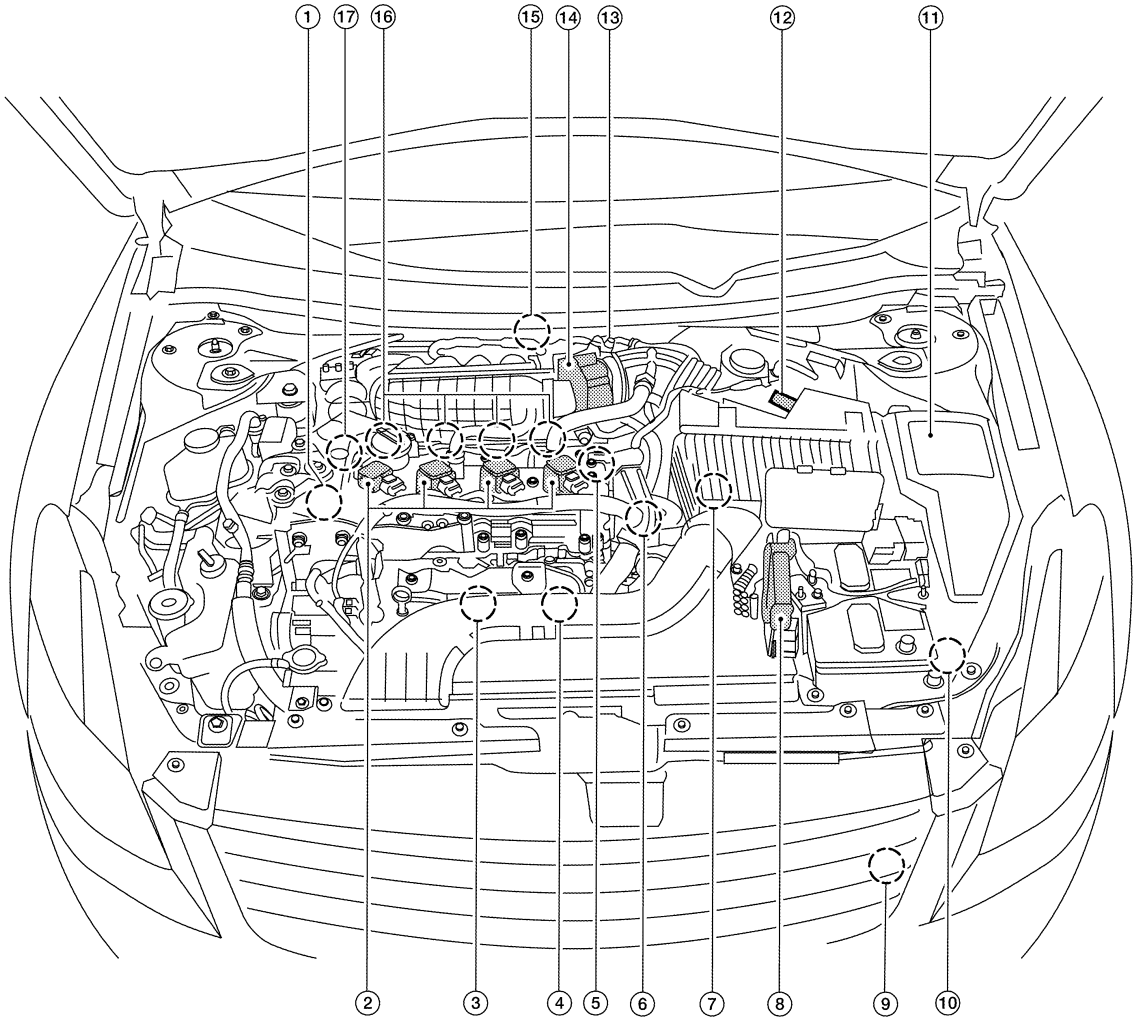

ALBIA0094ZZ

1. Intake valve timing control solenoid valve
2. Ignition coil (with power transistor) and spark plug
3. Knock sensor, Crankshaft position sensor (POS)
4. Air fuel ratio (A/F) sensor 1
5. Camshaft position sensor (PHASE)
6. Engine coolant temperature sensor
7. Park/neutral position (PNP) switch
8. ECM
9. Refrigerant pressure sensor
10. Battery current sensor
11. IPDM E/R
12. Mass air flow sensor (with intake temperature sensor)
13. EVAP service port
14. Electric throttle control actuator (with built in throttle position sensor and throttle control motor)
15. EVAP canister purge volume control solenoid valve
16. Fuel injector
17. Power steering pressure sensor

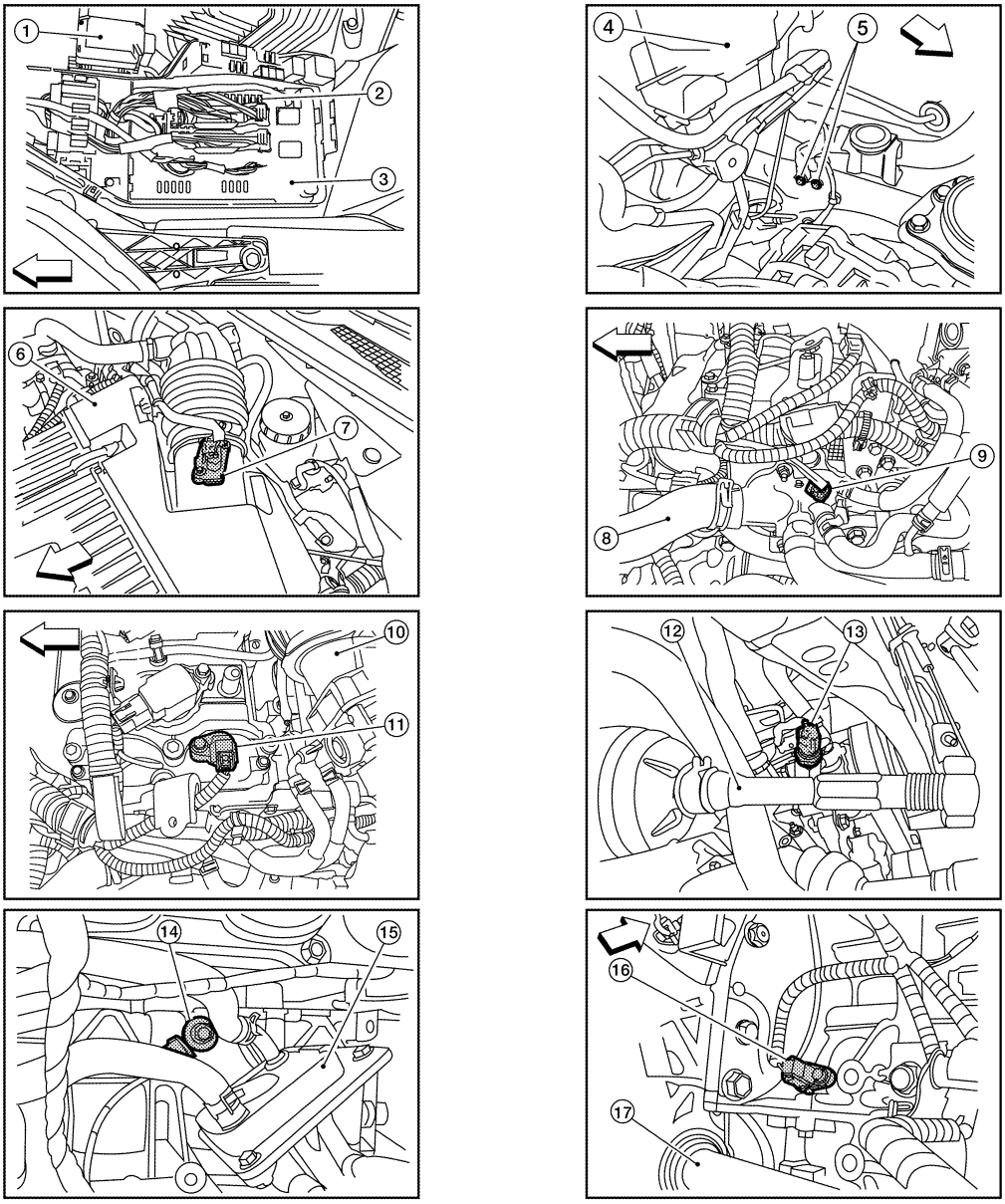

ALBIA0091ZZ

1. Battery	2. Fuel pump fuse (15A)	3. IPDM E/R
4. Brake master cylinder	5. Engine ground	6. Air cleaner assembly
7. Mass air flow sensor (with intake air temperature sensor)	8. Radiator hose (upper)	9. Engine coolant temperature sensor
10. Intake air duct	11. Camshaft position sensor (PHASE)	12. Tie rod (RH)
13. Power steering pressure sensor	14. Knock sensor	15. Engine oil cooler
16. Crankshaft position sensor (POS)	17. Drive shaft (RH)	

⇦: Vehicle front

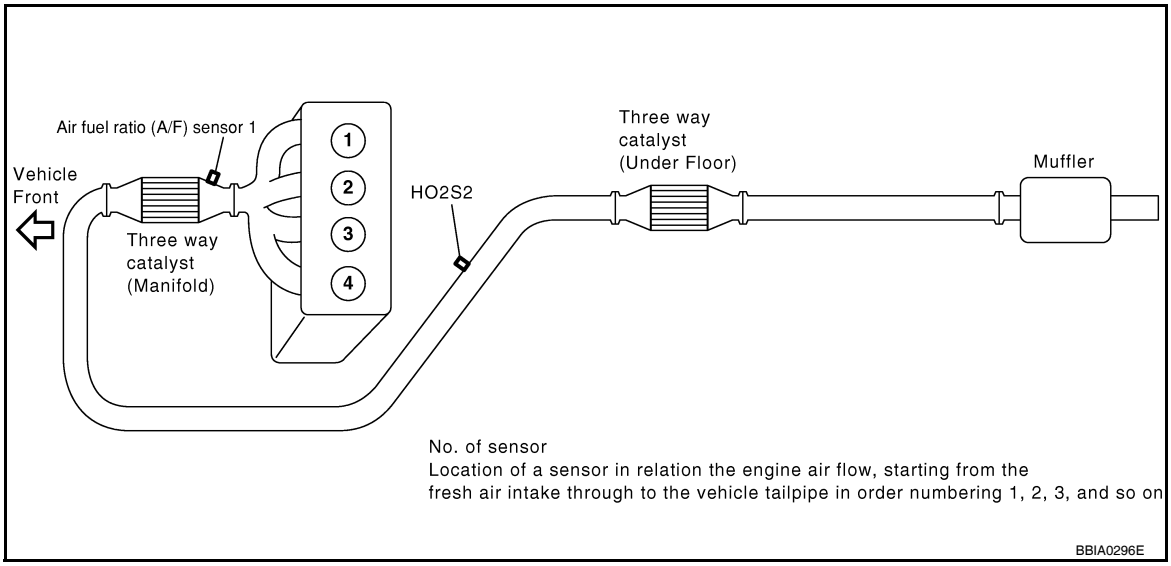

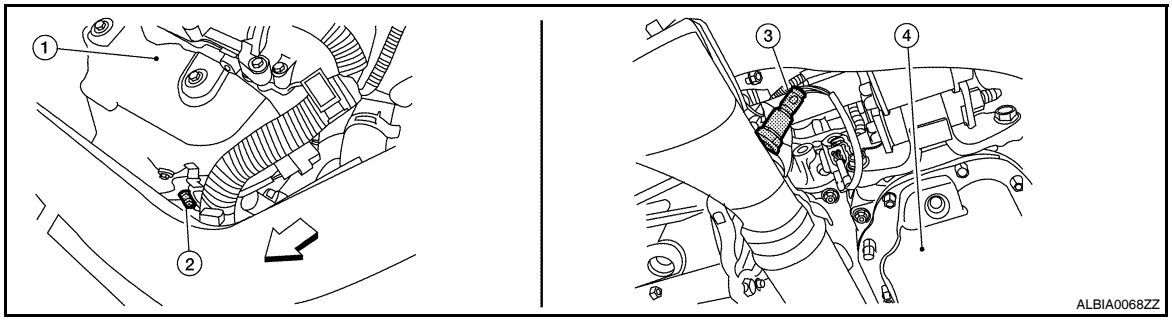

1. Exhaust manifold cover
2. Air fuel ratio (A/F) sensor 1
3. Heated oxygen sensor 2 (This illustration is a view from under vehicle.)
4. Engine oil pan

⇦: Vehicle front

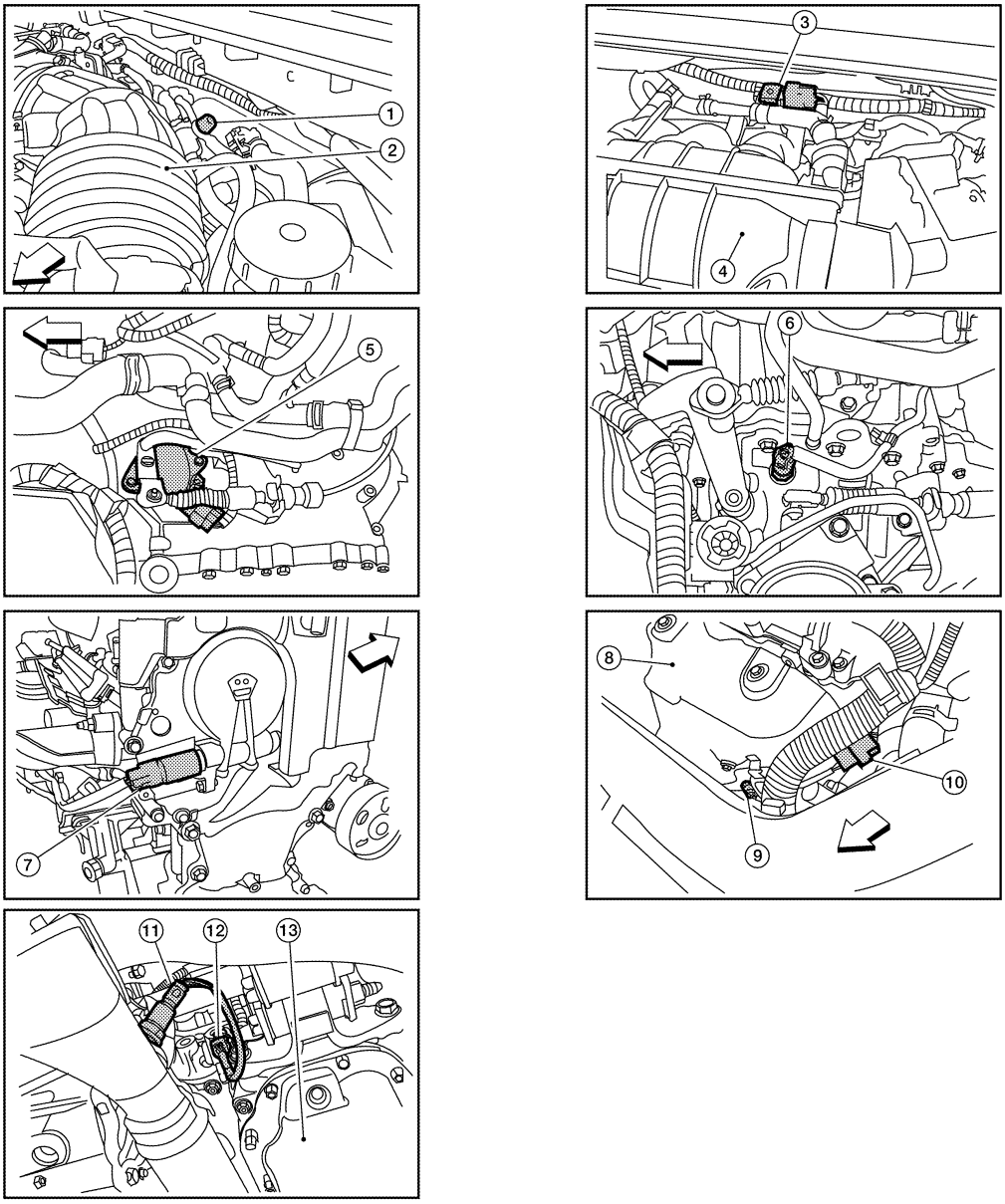

ALBIA0095ZZ

1. EVAP service port
2. Intake air duct
3. EVAP canister purge volume control solenoid valve
4. Intake manifold collector
5. Park/neutral position (PNP) switch (CVT) (This illustration is view with air cleaner assembly removed.)
6. Park/neutral position (PNP) switch (M/T) (This illustration is view with air cleaner assembly removed.)
7. Intake valve timing control solenoid valve (This illustration is view with engine removed.)
8. Exhaust manifold cover
9. Air fuel ratio (A/F) sensor 1
10. Air fuel ratio (A/F) sensor 1 harness connector
11. Heated oxygen sensor 2 (This illustration is view from under vehicle.)
12. Heated oxygen sensor 2 harness connector (This illustration is view from under vehicle.)
13. Engine oil pan

⇦: Vehicle front

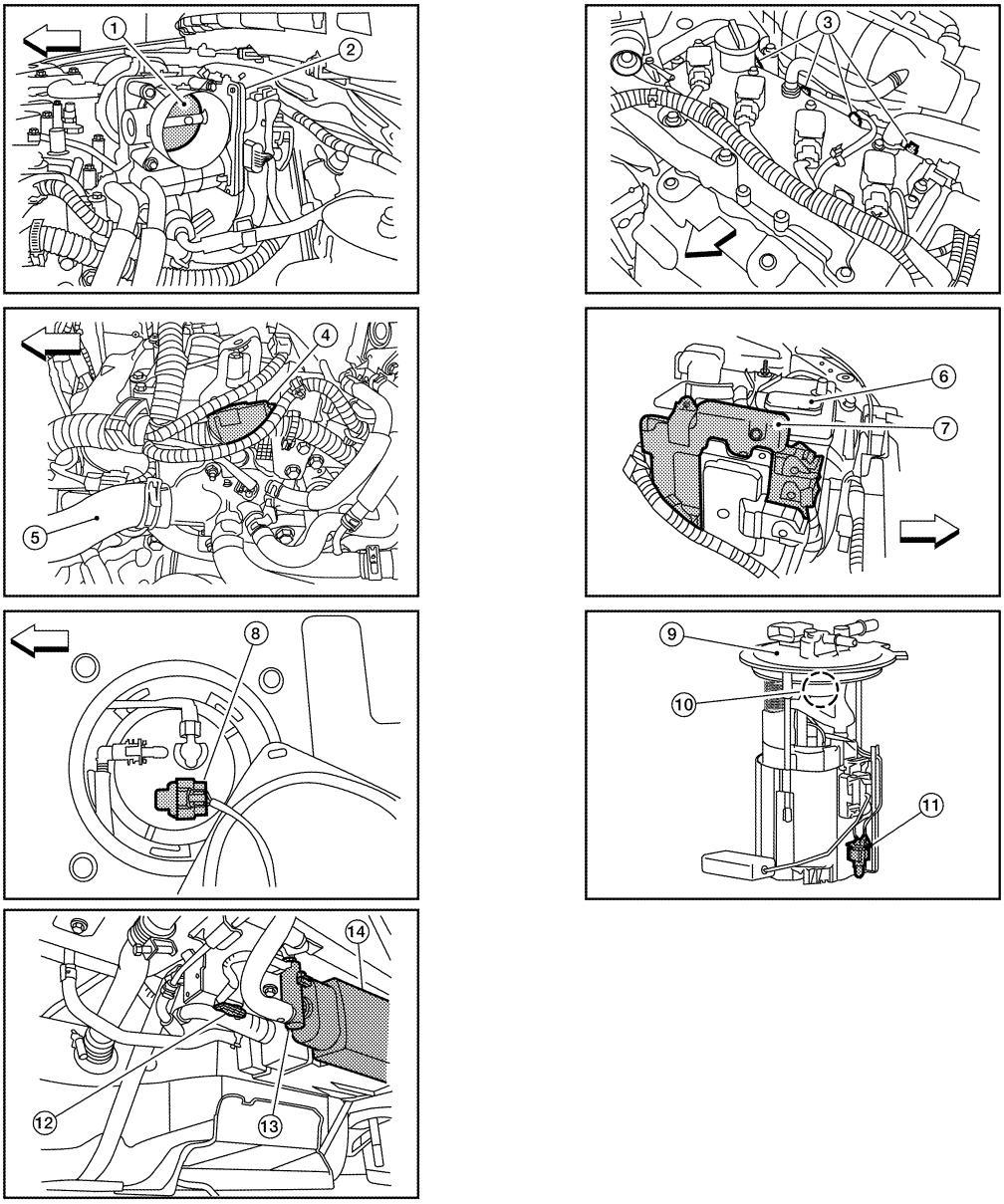

ALBIA0096ZZ

1. Throttle valve (This illustration is view with intake air duct removed.)
2. Electric throttle control actuator
3. Fuel injector harness connector
4. Condenser-2
5. Radiator hose (upper)
6. Battery
7. ECM
8. Fuel level sensor unit and fuel pump harness connector (This illustration is view with rear seat cushion and inspection hole cover removed.)
9. Fuel level sensor unit and fuel pump assembly
10. Fuel pressure regulator
11. Fuel tank temperature sensor
12. EVAP control system pressure sensor (This illustration is view with rear suspension member removed.)
13. EVAP canister vent control valve (This illustration is view with rear suspension member removed.)
14. EVAP canister (This illustration is view with rear suspension member removed.)

⇦ : Vehicle front

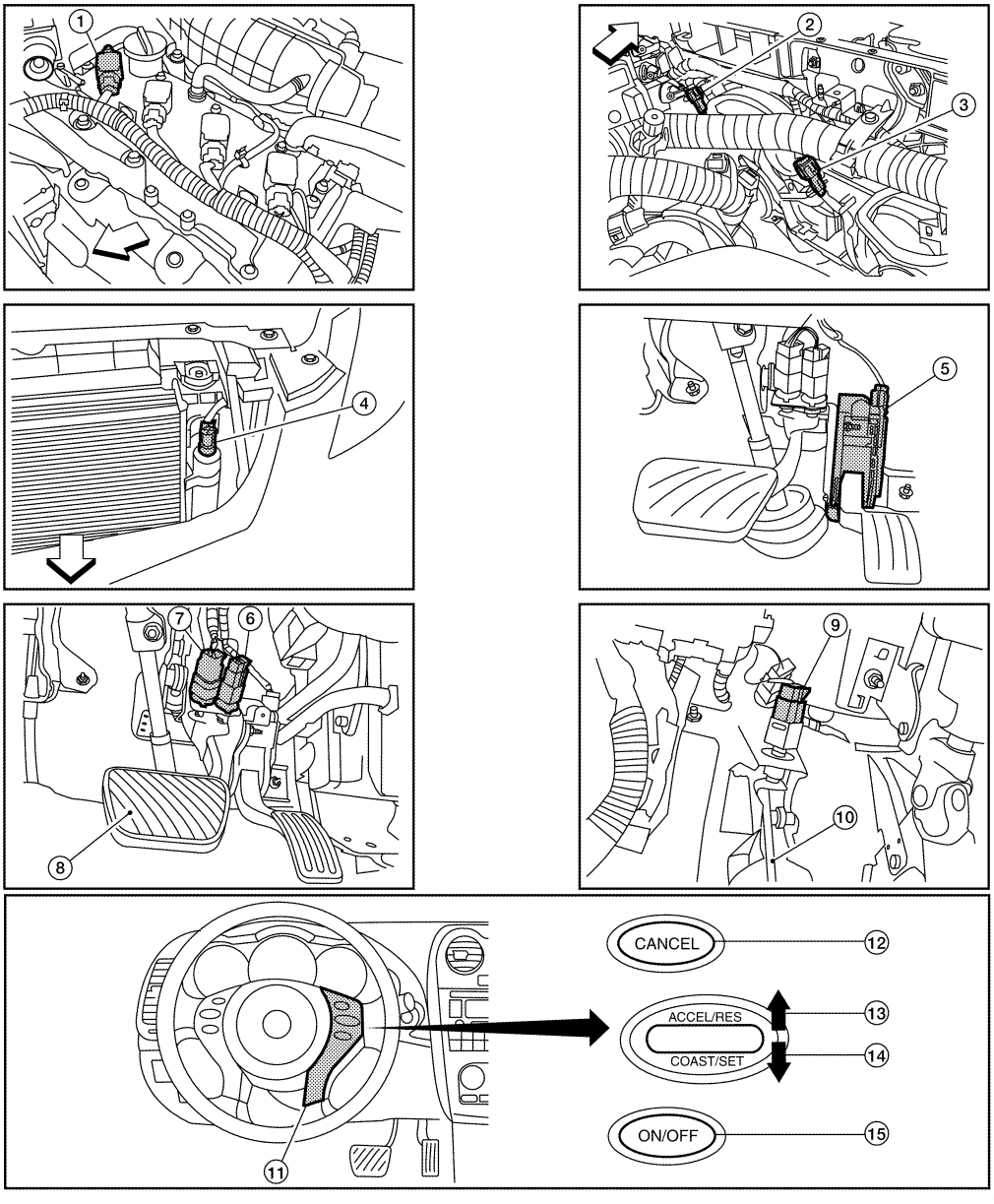

1. No.1 ignition coil
2. Cooling fan motor-1 harness connector
3. Cooling fan motor-2 harness connector
4. Refrigerant pressure sensor
5. Accelerator pedal position sensor
6. ASCD brake switch
7. Stop lamp switch
8. Brake pedal
9. ASCD clutch switch
10. Clutch pedal
11. ASCD steering switch
12. CANSEC switch
13. RESUME/ACCELERATE switch
14. SET/COAST switch
15. MAIN switch

⇦: Vehicle front

Component Description

INFOID:0000000004349628

Component	Reference
A/F sensor 1	EC-724, "Description"
Accelerator pedal position sensor	EC-924, "Description"
Camshaft position sensor (PHASE)	EC-787, "Description"
Crankshaft position sensor (POS)	EC-783, "Description"

Component	Reference
Engine coolant temperature sensor	EC-711, "Description"
EVAP canister purge volume control solenoid valve	EC-807, "Description"
EVAP control system pressure sensor	EC-822, "Description"
Fuel tank temperature sensor	EC-767, "Description"
Mass air flow sensor	EC-693, "Description"
Throttle position sensor	EC-714, "Description"
Vehicle speed sensor	EC-853, "Description"

INTAKE VALVE TIMING CONTROL

System Diagram

INFOID:0000000004349629

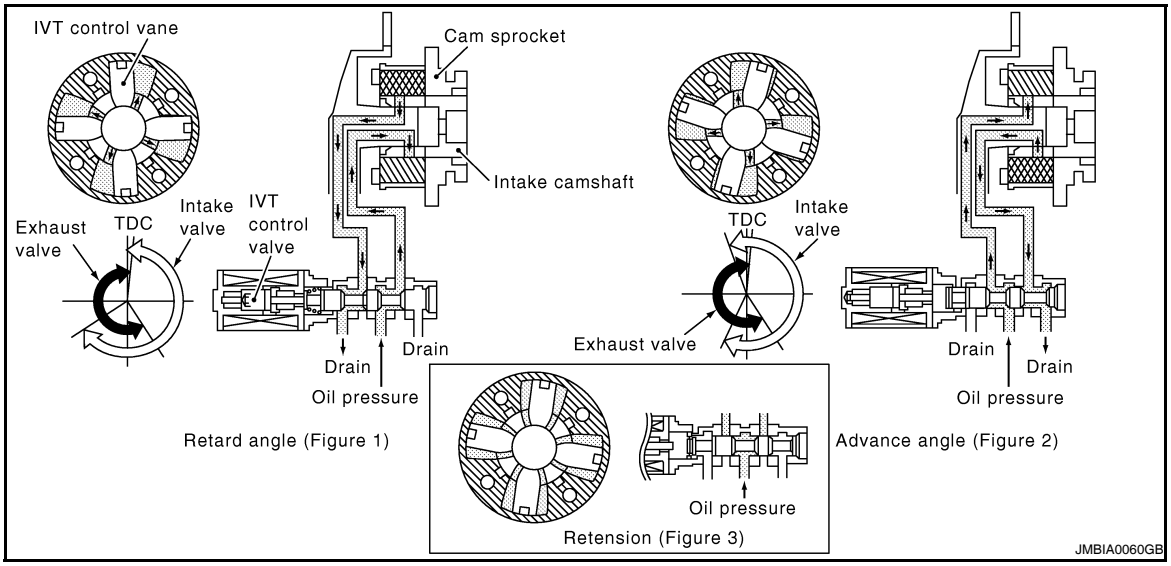

System Description

INFOID:0000000004349630

INPUT/OUTPUT SIGNAL CHART

Sensor	Input signal to ECM	ECM function	Actuator
Crankshaft position sensor (POS)	Engine speed and piston position	Intake valve timing control	Intake valve timing control solenoid valve
Camshaft position sensor (PHASE)			
Engine coolant temperature sensor	Engine coolant temperature		
Combination meter	Vehicle speed*		

*: This signal is sent to the ECM through CAN communication line

SYSTEM DESCRIPTION

This mechanism hydraulically controls cam phases continuously with the fixed operating angle of the intake valve.

The ECM receives signals such as crankshaft position, camshaft position, engine speed, and engine coolant temperature. Then, the ECM sends ON/OFF pulse duty signals to the intake valve timing (IVT) control solenoid valve depending on driving status. This makes it possible to control the shut/open timing of the intake valve to increase engine torque in low/mid speed range and output in high-speed range.

Component Parts Location

INFOID:0000000004349631

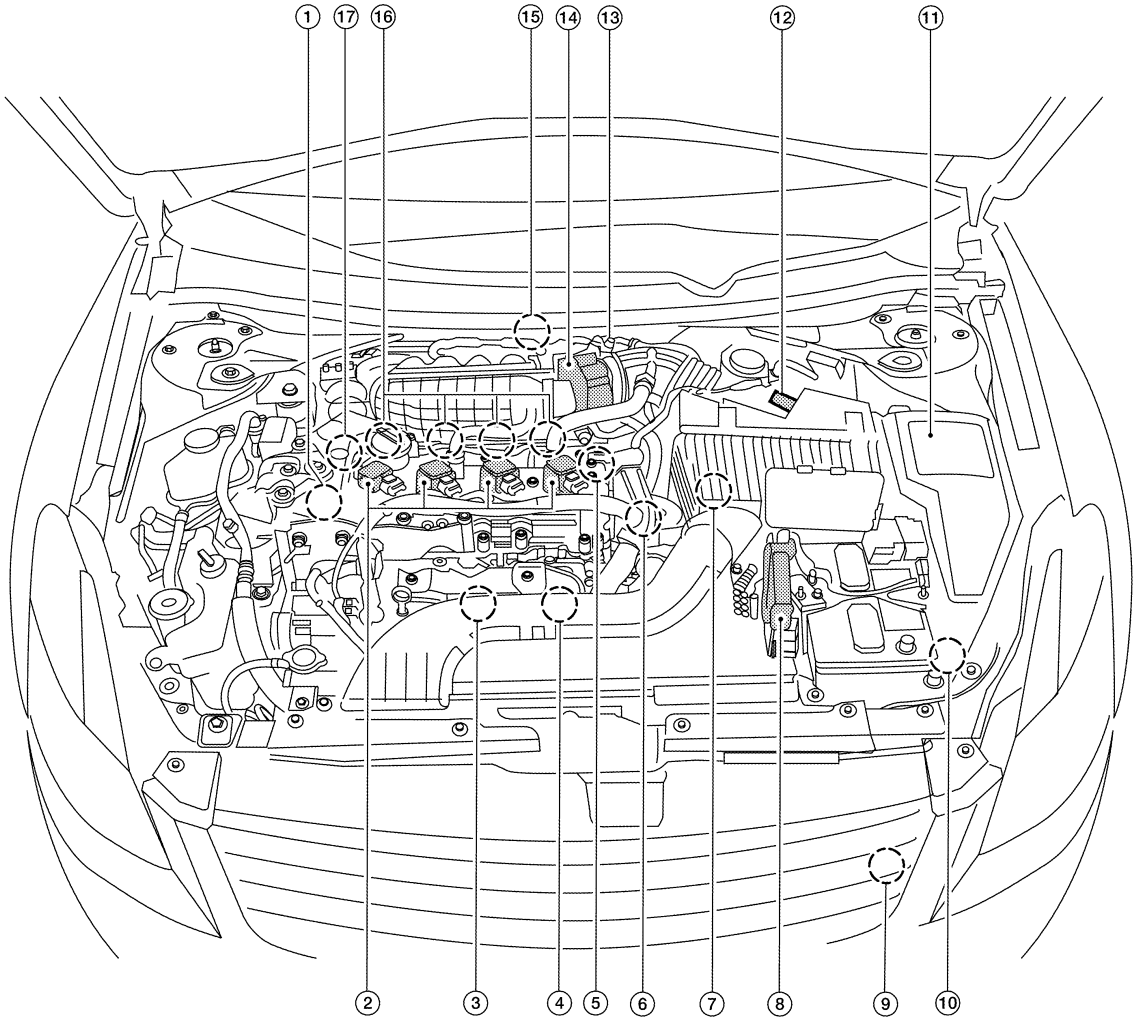

ALBIA0094ZZ

1. Intake valve timing control solenoid valve
2. Ignition coil (with power transistor) and spark plug
3. Knock sensor, Crankshaft position sensor (POS)
4. Air fuel ratio (A/F) sensor 1
5. Camshaft position sensor (PHASE)
6. Engine coolant temperature sensor
7. Park/neutral position (PNP) switch
8. ECM
9. Refrigerant pressure sensor
10. Battery current sensor
11. IPDM E/R
12. Mass air flow sensor (with intake temperature sensor)
13. EVAP service port
14. Electric throttle control actuator (with built in throttle position sensor and throttle control motor)
15. EVAP canister purge volume control solenoid valve
16. Fuel injector
17. Power steering pressure sensor

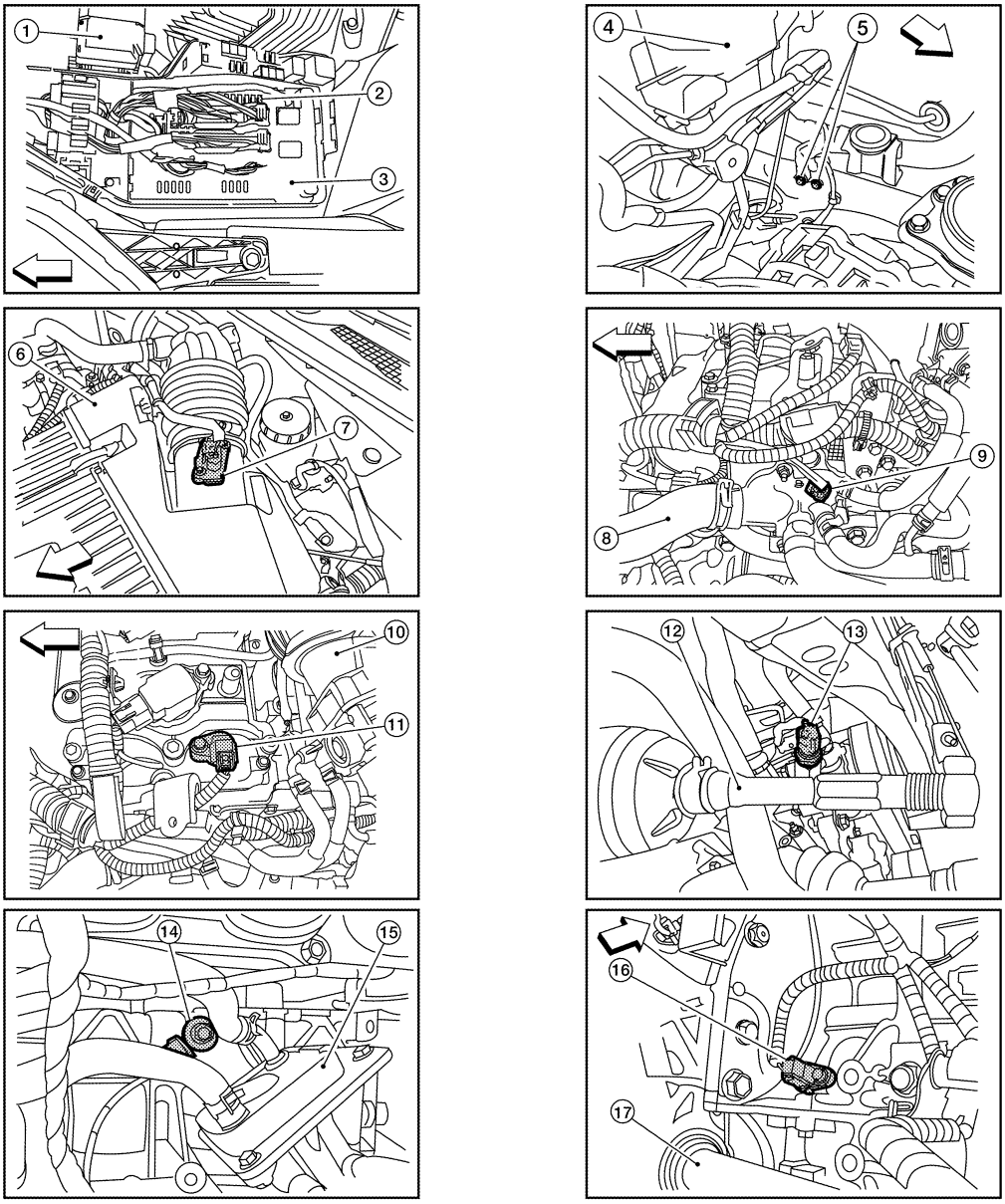

ALBIA0091ZZ

1. Battery	2. Fuel pump fuse (15A)	3. IPDM E/R
4. Brake master cylinder	5. Engine ground	6. Air cleaner assembly
7. Mass air flow sensor (with intake air temperature sensor)	8. Radiator hose (upper)	9. Engine coolant temperature sensor
10. Intake air duct	11. Camshaft position sensor (PHASE)	12. Tie rod (RH)
13. Power steering pressure sensor	14. Knock sensor	15. Engine oil cooler
16. Crankshaft position sensor (POS)	17. Drive shaft (RH)	

⇦: Vehicle front

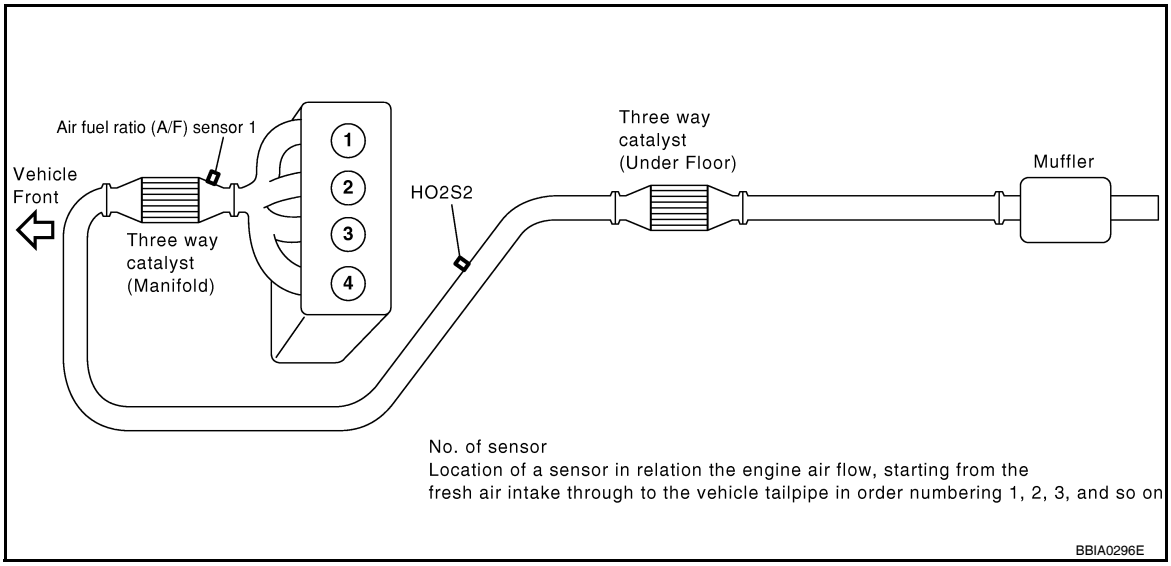

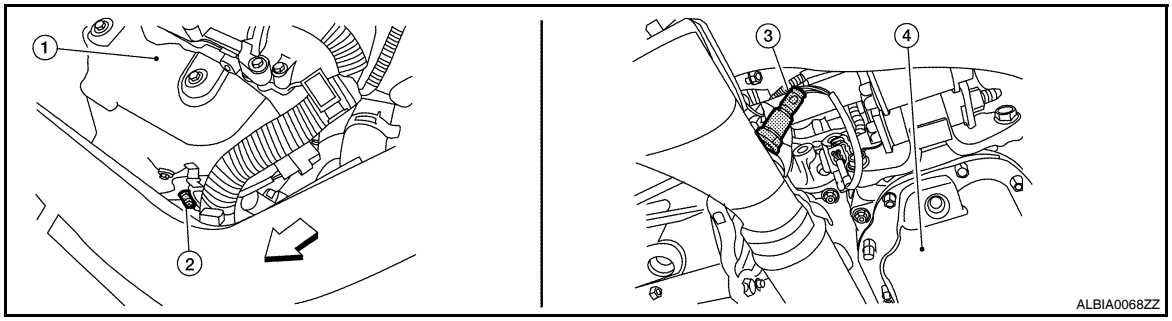

1. Exhaust manifold cover
2. Air fuel ratio (A/F) sensor 1
3. Heated oxygen sensor 2 (This illustration is a view from under vehicle.)
4. Engine oil pan

⇦: Vehicle front

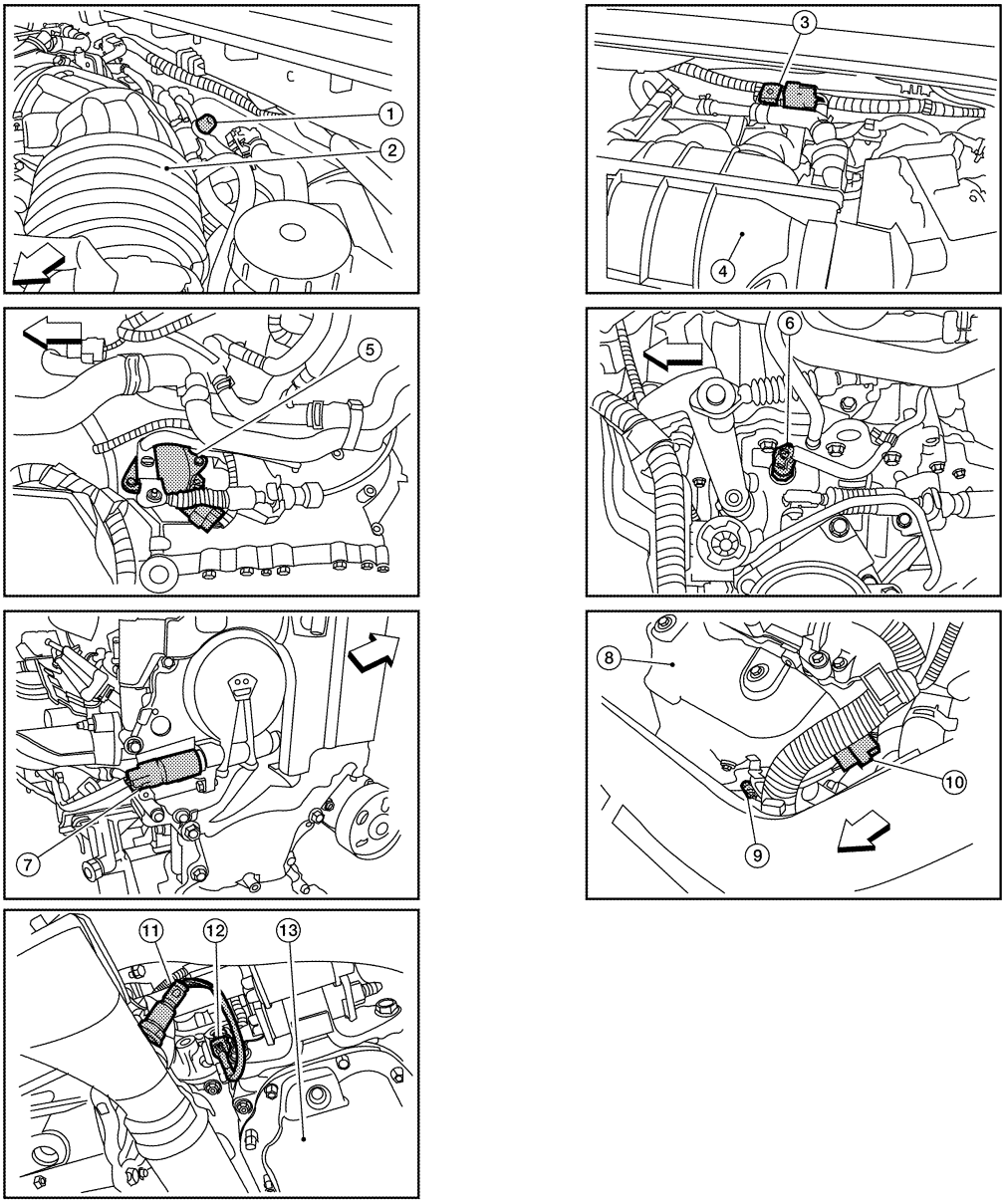

ALBIA0095ZZ

1. EVAP service port
2. Intake air duct
3. EVAP canister purge volume control solenoid valve
4. Intake manifold collector
5. Park/neutral position (PNP) switch (CVT) (This illustration is view with air cleaner assembly removed.)
6. Park/neutral position (PNP) switch (M/T) (This illustration is view with air cleaner assembly removed.)
7. Intake valve timing control solenoid valve (This illustration is view with engine removed.)
8. Exhaust manifold cover
9. Air fuel ratio (A/F) sensor 1
10. Air fuel ratio (A/F) sensor 1 harness connector
11. Heated oxygen sensor 2 (This illustration is view from under vehicle.)
12. Heated oxygen sensor 2 harness connector (This illustration is view from under vehicle.)
13. Engine oil pan

⇦: Vehicle front

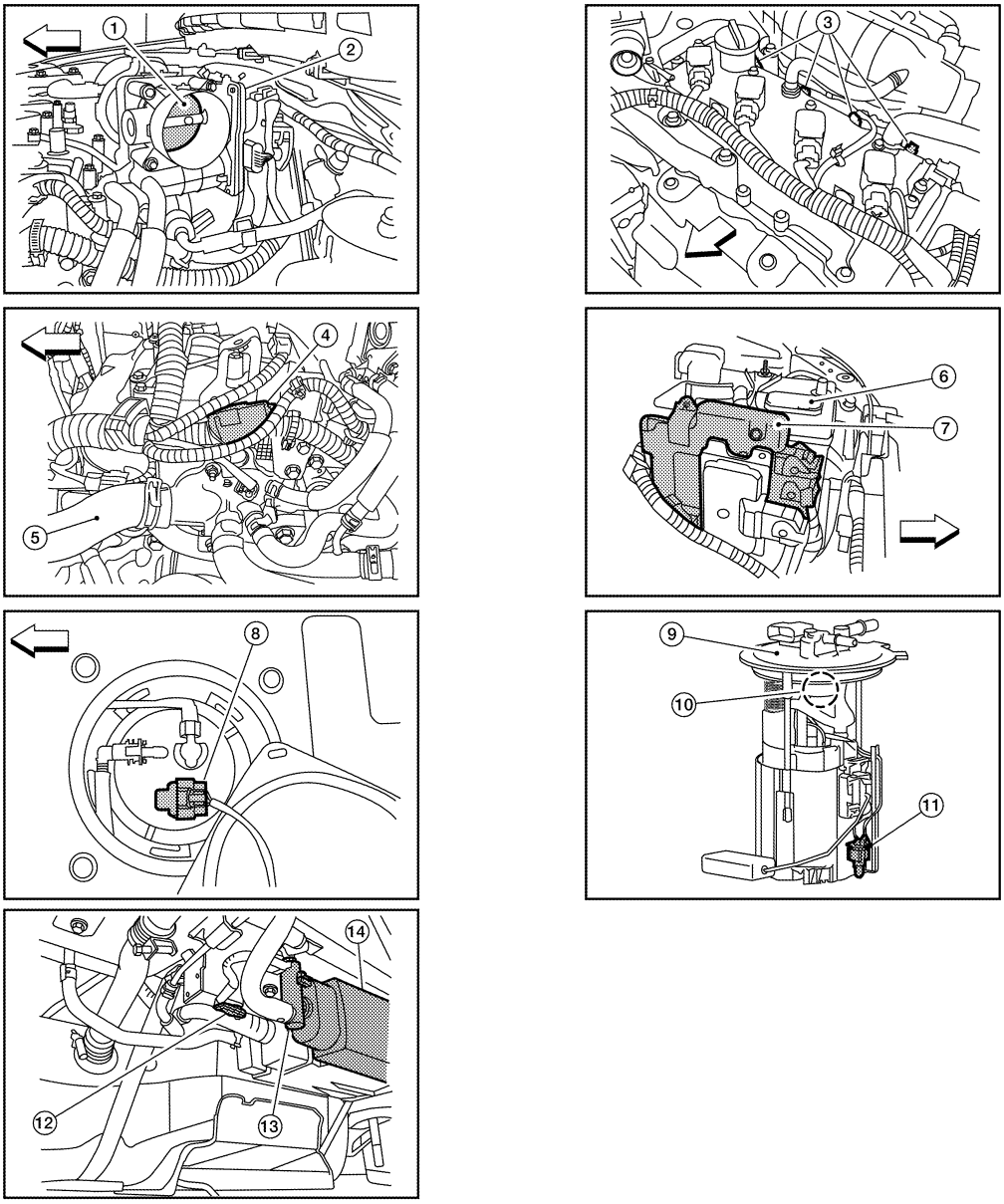

ALBIA0096ZZ

1. Throttle valve (This illustration is view with intake air duct removed.)
2. Electric throttle control actuator
3. Fuel injector harness connector
4. Condenser-2
5. Radiator hose (upper)
6. Battery
7. ECM
8. Fuel level sensor unit and fuel pump harness connector (This illustration is view with rear seat cushion and inspection hole cover removed.)
9. Fuel level sensor unit and fuel pump assembly
10. Fuel pressure regulator
11. Fuel tank temperature sensor
12. EVAP control system pressure sensor (This illustration is view with rear suspension member removed.)
13. EVAP canister vent control valve (This illustration is view with rear suspension member removed.)
14. EVAP canister (This illustration is view with rear suspension member removed.)

⇦ : Vehicle front

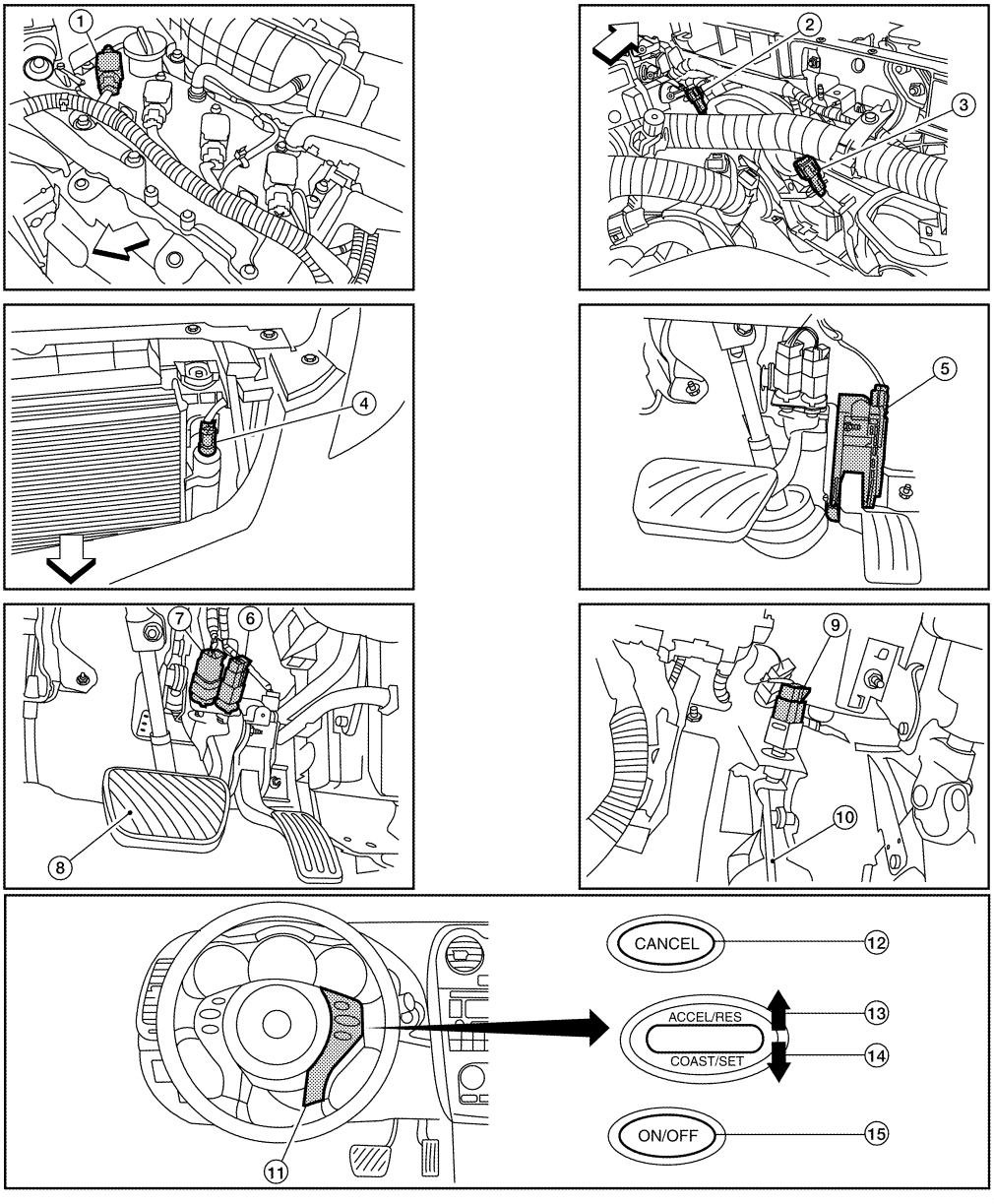

ALBIA0089ZZ

1. No.1 ignition coil
2. Cooling fan motor-1 harness connector
3. Cooling fan motor-2 harness connector
4. Refrigerant pressure sensor
5. Accelerator pedal position sensor
6. ASCD brake switch
7. Stop lamp switch
8. Brake pedal
9. ASCD clutch switch
10. Clutch pedal
11. ASCD steering switch
12. CANSEC switch
13. RESUME/ACCELERATE switch
14. SET/COAST switch
15. MAIN switch

⇦: Vehicle front

Component Description

INFOID:0000000004349632

Component	Reference
Camshaft position sensor (PHASE)	EC-787, "Description"
Crankshaft position sensor (POS)	EC-783, "Description"
Engine coolant temperature sensor	EC-711, "Description"

Component	Reference
Intake valve timing control solenoid valve	EC-633, "System Description"
Vehicle speed sensor	EC-853, "Description"

ON BOARD DIAGNOSTIC (OBD) SYSTEM

Diagnosis Description

INFOID:0000000004349633

INTRODUCTION

The ECM has an on board diagnostic system, which detects malfunctions related to engine sensors or actuators. The ECM also records various emission-related diagnostic information including:

Emission-related diagnostic information	Diagnostic service
Diagnostic Trouble Code (DTC)	Service $03 of SAE J1979
Freeze Frame data	Service $02 of SAE J1979
System Readiness Test (SRT) code	Service $01 of SAE J1979
1st Trip Diagnostic Trouble Code (1st Trip DTC)	Service $07 of SAE J1979
1st Trip Freeze Frame data	
Test values and Test limits	Service $06 of SAE J1979
Calibration ID	Service $09 of SAE J1979

The above information can be checked using procedures listed in the table below.

×: Applicable —: Not applicable

	DTC	1st trip DTC	Freeze Frame data	1st trip Freeze Frame data	SRT code	SRT status	Test value
CONSULT-III	×	×	×	×	×	×	—
GST	×	×	×	—	×	×	×
ECM	×	×*	—	—	—	×	—

*: When DTC and 1st trip DTC simultaneously appear on the display, they cannot be clearly distinguished from each other.

The malfunction indicator lamp (MIL) on the instrument panel lights up when the same malfunction is detected in two consecutive trips (Two trip detection logic), or when the ECM enters fail-safe mode. (Refer to EC-1012, "Fail Safe".)

TWO TRIP DETECTION LOGIC

When a malfunction is detected for the first time, 1st trip DTC and 1st trip Freeze Frame data are stored in the ECM memory. The MIL will not light up at this stage. <1st trip>

If the same malfunction is detected again during the next drive, the DTC and Freeze Frame data are stored in the ECM memory, and the MIL lights up. The MIL lights up at the same time when the DTC is stored. <2nd trip> The “trip” in the “Two Trip Detection Logic” means a driving mode in which self-diagnosis is performed during vehicle operation. Specific on board diagnostic items will cause the ECM to light up or blink the MIL, and store DTC and Freeze Frame data, even in the 1st trip, as shown below.

×: Applicable —: Not applicable

Items	MIL				DTC		1st trip DTC	
	1st trip		2nd trip		1st trip displaying	2nd trip displaying	1st trip displaying	2nd trip displaying
	Blinking	Lighting up	Blinking	Lighting up				
Misfire (Possible three way catalyst damage) — DTC: P0300 - P0304 is being detected	×	—	—	—	—	—	×	—
Misfire (Possible three way catalyst damage) — DTC: P0300 - P0304 is being detected	—	—	×	—	—	×	—	—
One trip detection diagnoses (Refer to EC-1015, "DTC Index".)	—	×	—	—	×	—	—	—
Except above	—	—	—	×	—	×	×	—

DTC AND FREEZE FRAME DATA

DTC and 1st Trip DTC

The 1st trip DTC (whose number is the same as the DTC number) is displayed for the latest self-diagnostic result obtained. If the ECM memory was cleared previously, and the 1st trip DTC did not reoccur, the 1st trip DTC will not be displayed.
If a malfunction is detected during the 1st trip, the 1st trip DTC is stored in the ECM memory. The MIL will not light up (two trip detection logic). If the same malfunction is not detected in the 2nd trip (meeting the required driving pattern), the 1st trip DTC is cleared from the ECM memory. If the same malfunction is detected in the 2nd trip, both the 1st trip DTC and DTC are stored in the ECM memory and the MIL lights up. In other words, the DTC is stored in the ECM memory and the MIL lights up when the same malfunction occurs in two consecutive trips. If a 1st trip DTC is stored and a non-diagnostic operation is performed between the 1st and 2nd trips, only the 1st trip DTC will continue to be stored. For malfunctions that blink or light up the MIL during the 1st trip, the DTC and 1st trip DTC are stored in the ECM memory.
Procedures for clearing the DTC and the 1st trip DTC from the ECM memory are described in “HOW TO ERASE EMISSION-RELATED DIAGNOSTIC INFORMATION”.
For malfunctions in which 1st trip DTCs are displayed, refer to “EMISSION-RELATED DIAGNOSTIC INFORMATION ITEMS”. These items are required by legal regulations to continuously monitor the system/component. In addition, the items monitored non-continuously are also displayed on CONSULT-III.
1st trip DTC is specified in Service $07 of SAE J1979. 1st trip DTC detection occurs without lighting up the MIL and therefore does not warn the driver of a malfunction. However, 1st trip DTC detection will not prevent the vehicle from being tested, for example during Inspection/Maintenance (I/M) tests.
When a 1st trip DTC is detected, check, print out or write down and erase (1st trip) DTC and Freeze Frame data as specified in Work Flow procedure Step 2, refer to EC-556, "Work Flow". Then perform DTC CONFIRMATION PROCEDURE or Component Function Check to try to duplicate the malfunction. If the malfunction is duplicated, the item requires repair.

Freeze Frame Data and 1st Trip Freeze Frame Data

The ECM records the driving conditions such as fuel system status, calculated load value, engine coolant temperature, short term fuel trim, long term fuel trim, engine speed, vehicle speed, absolute throttle position, base fuel schedule and intake air temperature at the moment a malfunction is detected.
Data which are stored in the ECM memory, along with the 1st trip DTC, are called 1st trip freeze frame data. The data, stored together with the DTC data, are called freeze frame data and displayed on CONSULT-III or GST. The 1st trip freeze frame data can only be displayed on the CONSULT-III screen, not on the GST.
Only one set of freeze frame data (either 1st trip freeze frame data or freeze frame data) can be stored in the ECM. 1st trip freeze frame data is stored in the ECM memory along with the 1st trip DTC. There is no priority for 1st trip freeze frame data and it is updated each time a different 1st trip DTC is detected. However, once freeze frame data (2nd trip detection/MIL on) is stored in the ECM memory, 1st trip freeze frame data is no longer stored. Remember, only one set of freeze frame data can be stored in the ECM. The ECM has the following priorities to update the data.

Priority	Items	
1	Freeze frame data	Misfire — DTC: P0300 - P0304 Fuel Injection System Function — DTC: P0171, P0172
2		Except the above items (Includes CVT related items)
3	1st trip freeze frame data	

For example, the EGR malfunction (Priority: 2) was detected and the freeze frame data was stored in the 2nd trip. After that when the misfire (Priority: 1) is detected in another trip, the freeze frame data will be updated from the EGR malfunction to the misfire. The 1st trip freeze frame data is updated each time a different malfunction is detected. There is no priority for 1st trip freeze frame data. However, once freeze frame data is stored in the ECM memory, 1st trip freeze data is no longer stored (because only one freeze frame data or 1st trip freeze frame data can be stored in the ECM). If freeze frame data is stored in the ECM memory and freeze frame data with the same priority occurs later, the first (original) freeze frame data remains unchanged in the ECM memory.
Both 1st trip freeze frame data and freeze frame data (along with the DTCs) are cleared when the ECM memory is erased. Procedures for clearing the ECM memory are described in “HOW TO ERASE EMISSION-RELATED DIAGNOSTIC INFORMATION”.

How to Read DTC and 1st Trip DTC

With CONSULT-III

With GST

CONSULT-III or GST (Generic Scan Tool) Examples: P0340, P0850, P1148, etc.
These DTCs are prescribed by SAE J2012.

(CONSULT-III also displays the malfunctioning component or system.)

No Tools

The number of blinks of the MIL in the Diagnostic Test Mode II (Self-Diagnostic Results) indicates the DTC. Example: 0340, 0850, 1148, etc.

These DTCs are controlled by NISSAN.

- **1st trip DTC No. is the same as DTC No.**
- **Output of a DTC indicates a malfunction. However, GST or the Diagnostic Test Mode II do not indicate whether the malfunction is still occurring or has occurred in the past and has returned to normal. CONSULT-III can identify malfunction status as shown below. Therefore, using CONSULT-III (if available) is recommended.**

DTC or 1st trip DTC of a malfunction is displayed in “SELF-DIAGNOSTIC RESULTS” mode of CONSULT-III. Time data indicates how many times the vehicle was driven after the last detection of a DTC.

If the DTC is being detected currently, the time data will be [0].

If a 1st trip DTC is stored in the ECM, the time data will be [1t].

How to Erase DTC and 1st Trip DTC

With CONSULT-III

NOTE:

- **If the ignition switch stays ON after repair work, be sure to turn ignition switch OFF once. Wait at least 10 seconds and then turn it ON (engine stopped) again.**
- **If the DTC is not for CVT related items (EC-1015, "DTC Index"), skip step 1.**

1. Erase DTC in TCM. Refer to TM-296, "Diagnosis Description".
2. Select “ENGINE” with CONSULT-III.
3. Select “SELF-DIAG RESULT”.
4. Touch “ERASE”. (DTC in ECM will be erased.)

With GST

The emission-related diagnostic information in the ECM can be erased by selecting Service $04 with GST.

NOTE:

If the ignition switch stays ON after repair work, be sure to turn ignition switch OFF once. Wait at least 10 seconds and then turn it ON (engine stopped) again.

1. Select Service $04 with GST (Generic Scan Tool).

No Tools

NOTE:

If the ignition switch stays ON after repair work, be sure to turn ignition switch OFF once. Wait at least 10 seconds and then turn it ON (engine stopped) again.

1. Erase DTC in ECM. Refer to HOW TO ERASE DIAGNOSTIC TEST MODE II (SELF-DIAGNOSTIC RESULTS).

- **If the battery is disconnected, the emission-related diagnostic information will be lost within 24 hours.**
- **The following data are cleared when the ECM memory is erased.**

- Diagnostic trouble codes
- 1st trip diagnostic trouble codes
- Freeze frame data
- 1st trip freeze frame data
- System readiness test (SRT) codes
- Test values

Actual work procedures are explained using a DTC as an example. Be careful so that not only the DTC, but all of the data listed above, are cleared from the ECM memory during work procedures.

SYSTEM READINESS TEST (SRT) CODE

System Readiness Test (SRT) code is specified in Service $01 of SAE J1979.

As part of an enhanced emissions test for Inspection & Maintenance (I/M), certain states require the status of SRT be used to indicate whether the ECM has completed self-diagnosis of major emission systems and components. Completion must be verified in order for the emissions inspection to proceed.

If a vehicle is rejected for a State emissions inspection due to one or more SRT items indicating “INCMP”, use the information in this Service Manual to set the SRT to “CMPLT”.

In most cases the ECM will automatically complete its self-diagnosis cycle during normal usage, and the SRT status will indicate “CMPLT” for each application system. Once set as “CMPLT”, the SRT status remains “CMPLT” until the self-diagnosis memory is erased.

Occasionally, certain portions of the self-diagnostic test may not be completed as a result of the customer's normal driving pattern; the SRT will indicate “INCMP” for these items.

NOTE:
The SRT will also indicate “INCMP” if the self-diagnosis memory is erased for any reason or if the ECM memory power supply is interrupted for several hours.
If, during the state emissions inspection, the SRT indicates “CMPLT” for all test items, the inspector will continue with the emissions test. However, if the SRT indicates “INCMP” for one or more of the SRT items the vehicle is returned to the customer untested.
NOTE:
If MIL is ON during the state emissions inspection, the vehicle is also returned to the customer untested even though the SRT indicates “CMPLT” for all test items. Therefore, it is important to check SRT (“CMPLT”) and DTC (No DTCs) before the inspection.

SRT Item
The table below shows required self-diagnostic items to set the SRT to “CMPLT”.

SRT item (CONSULT-III indication)	Performance Priority*	Required self-diagnostic items to set the SRT to “CMPLT”	Corresponding DTC No.
CATALYST	2	Three way catalyst function	P0420
EVAP SYSTEM	2	EVAP control system purge flow monitoring	P0441
	1	EVAP control system	P0442
	2	EVAP control system	P0456
HO2S	2	Air fuel ratio (A/F) sensor 1	P0133
		Heated oxygen sensor 2	P0137
		Heated oxygen sensor 2	P0138
		Heated oxygen sensor 2	P0139

*: If completion of several SRTs is required, perform driving patterns (DTC CONFIRMATION PROCEDURE), one by one based on the priority for models with CONSULT-III.

SRT Set Timing
SRT is set as “CMPLT” after self-diagnosis has been performed one or more times. Completion of SRT is done regardless of whether the result is OK or NG. The set timing is different between OK and NG results and is shown in the table below.

Self-diagnosis result		Example				
		Diagnosis	Ignition cycle ← ON → OFF	← ON → OFF	← ON → OFF	← ON →
All OK	Case 1	P0400	OK (1)	— (1)	OK (2)	— (2)
		P0402	OK (1)	— (1)	— (1)	OK (2)
		P1402	OK (1)	OK (2)	— (2)	— (2)
		SRT of EGR	“CMPLT”	“CMPLT”	“CMPLT”	“CMPLT”
	Case 2	P0400	OK (1)	— (1)	— (1)	— (1)
		P0402	— (0)	— (0)	OK (1)	— (1)
		P1402	OK (1)	OK (2)	— (2)	— (2)
		SRT of EGR	“INCMP”	“INCMP”	“CMPLT”	“CMPLT”
NG exists	Case 3	P0400	OK	OK	—	—
		P0402	—	—	—	—
		P1402	NG	—	NG	NG (Consecutive NG)
		(1st trip) DTC	1st trip DTC	—	1st trip DTC	DTC (= MIL ON)
		SRT of EGR	“INCMP”	“INCMP”	“INCMP”	“CMPLT”

OK: Self-diagnosis is carried out and the result is OK.
NG: Self-diagnosis is carried out and the result is NG.
—: Self-diagnosis is not carried out.

When all SRT related self-diagnoses showed OK results in a single cycle (Ignition OFF-ON-OFF), the SRT will indicate “CMPLT”. → Case 1 above
When all SRT related self-diagnoses showed OK results through several different cycles, the SRT will indicate “CMPLT” at the time the respective self-diagnoses have at least one OK result. → Case 2 above
If one or more SRT related self-diagnoses showed NG results in 2 consecutive cycles, the SRT will also indicate “CMPLT”. → Case 3 above
The table above shows that the minimum number of cycles for setting SRT as “INCMP” is one (1) for each self-diagnosis (Case 1 & 2) or two (2) for one of self-diagnoses (Case 3). However, in preparation for the state emissions inspection, it is unnecessary for each self-diagnosis to be executed twice (Case 3) for the following reasons:

- The SRT will indicate “CMPLT” at the time the respective self-diagnoses have one (1) OK result.
- The emissions inspection requires “CMPLT” of the SRT only with OK self-diagnosis results.
- When, during SRT driving pattern, 1st trip DTC (NG) is detected prior to “CMPLT” of SRT, the self-diagnosis memory must be erased from ECM after repair.
- If the 1st trip DTC is erased, all the SRT will indicate “INCMP”.

  NOTE:
  SRT can be set as “CMPLT” together with the DTC(s). Therefore, DTC check must always be carried out prior to the state emission inspection even though the SRT indicates “CMPLT”.

SRT Service Procedure

If a vehicle has failed the state emissions inspection due to one or more SRT items indicating “INCMP”, review the flowchart diagnostic sequence on the next figure.

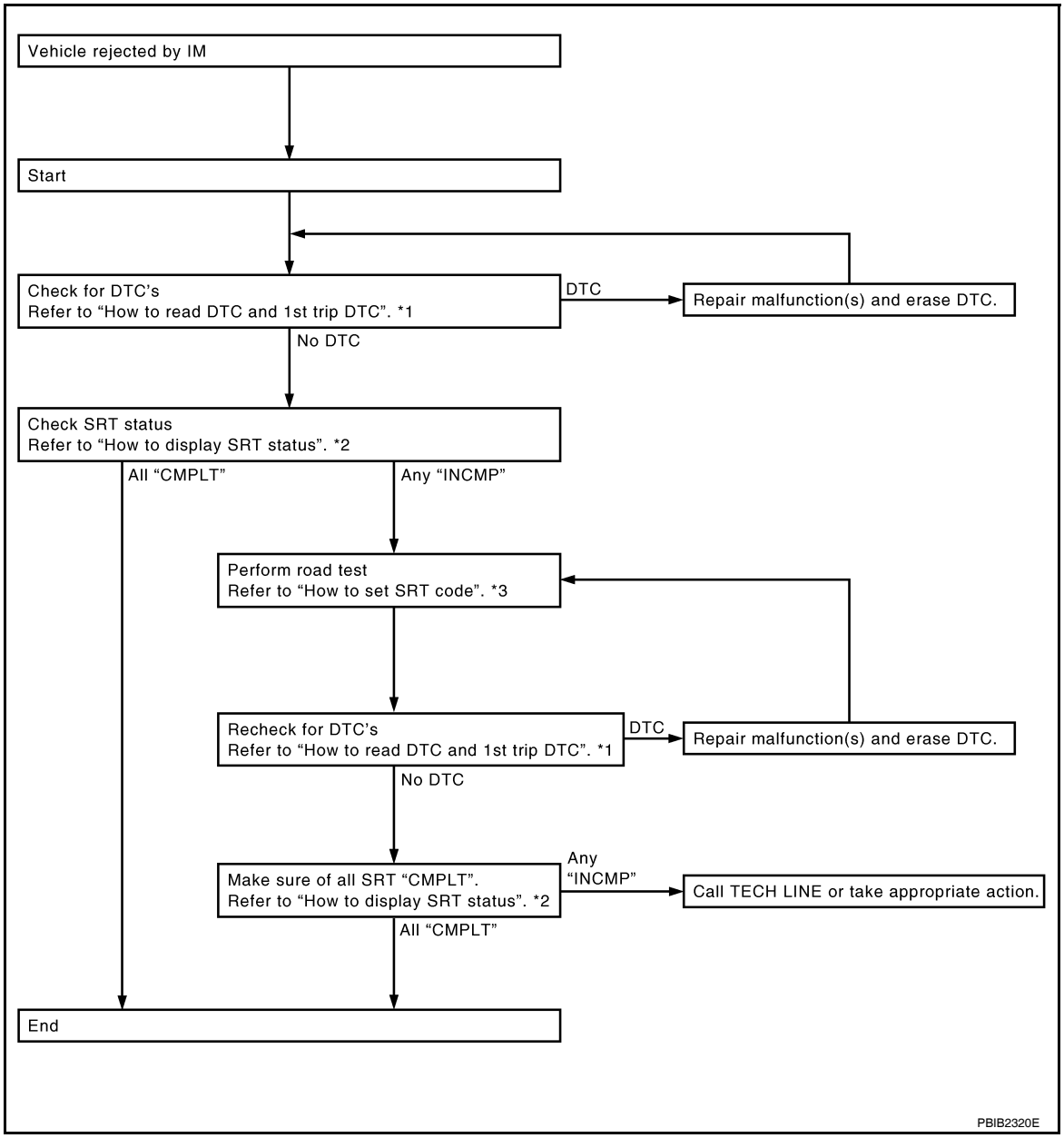

*1 "How to Read DTC and 1st Trip DTC" *2 "How to Display SRT Status" *3 "How to Set SRT Code"

How to Display SRT Status

WITH CONSULT-III

Selecting "SRT STATUS" in "DTC CONFIRMATION" mode with CONSULT-III.

For items whose SRT codes are set, a "CMPLT" is displayed on the CONSULT-III screen; for items whose SRT codes are not set, "INCMP" is displayed.

NOTE:

Though displayed on the CONSULT-III screen, "HO2S HTR" is not SRT item.

WITH GST

Selecting Service $01 with GST (Generic Scan Tool)

NO TOOLS

A SRT code itself can not be displayed while only SRT status can be.

1. Turn ignition switch ON and wait 20 seconds.
2. SRT status is indicated as shown below.
   - When all SRT codes are set, MIL lights up continuously.

- When any SRT codes are not set, MIL will flash periodically for 10 seconds.

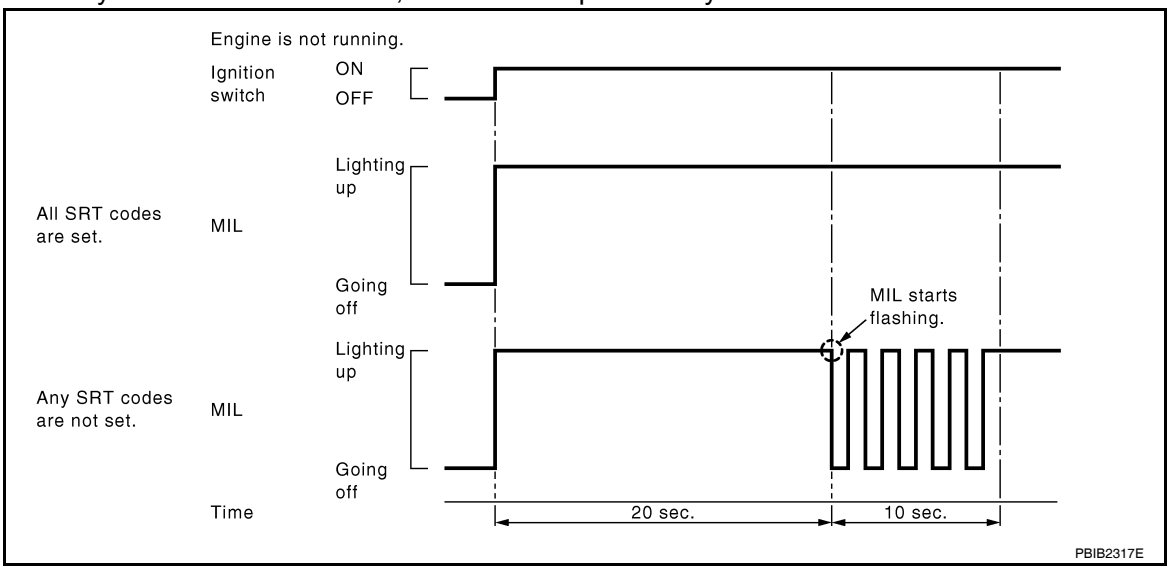

MALFUNCTION INDICATOR LAMP (MIL)

Description

The MIL is located on the instrument panel.

1. The MIL will light up when the ignition switch is turned ON without the engine running. This is a bulb check.
   If the MIL does not light up, refer to EC-968, "Component Function Check".
2. When the engine is started, the MIL should go off.
   If the MIL remains on, the on board diagnostic system has detected an engine system malfunction.

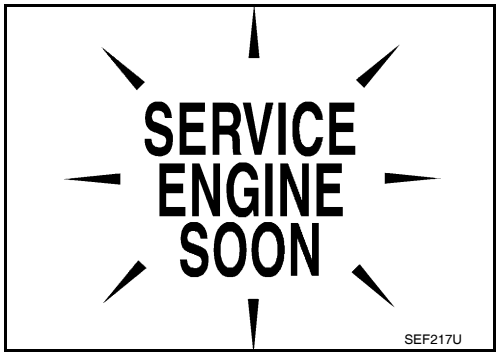

On Board Diagnostic System Function

The on board diagnostic system has the following three functions.

Diagnostic Test Mode	KEY and ENG. Status	Function	Explanation of Function
Mode I	Ignition switch in ON position Engine stopped	BULB CHECK	This function checks the MIL bulb for damage (blown, open circuit, etc.). If the MIL does not come on, check MIL circuit.
	Engine running	MALFUNCTION WARNING	This is a usual driving condition. When a malfunction is detected twice in two consecutive driving cycles (two trip detection logic), the MIL will light up to inform the driver that a malfunction has been detected. The following malfunctions will light up or blink the MIL in the 1st trip. • Misfire (Possible three way catalyst damage) • One trip detection diagnoses
Mode II	Ignition switch in ON position Engine stopped	SELF-DIAGNOSTIC RESULTS	This function allows DTCs and 1st trip DTCs to be read.

Diagnostic Test Mode I — Bulb Check

In this mode, the MIL on the instrument panel should stay ON. If it remains OFF, check the bulb. Refer to EC-968, "Description".

Diagnostic Test Mode I — Malfunction Warning

MIL	Condition
ON	When the malfunction is detected.
OFF	No malfunction.

This DTC number is clarified in Diagnostic Test Mode II (SELF-DIAGNOSTIC RESULTS)

Diagnostic Test Mode II — Self-diagnostic Results

In this mode, the DTC and 1st trip DTC are indicated by the number of blinks of the MIL as shown below.
The DTC and 1st trip DTC are displayed at the same time. If the MIL does not illuminate in diagnostic test mode I (Malfunction warning), all displayed items are 1st trip DTCs. If only one code is displayed when the MIL illuminates in diagnostic test mode II (SELF-DIAGNOSTIC RESULTS), it is a DTC; if two or more codes are displayed, they may be either DTCs or 1st trip DTCs. DTC No. is same as that of 1st trip DTC. These uniden-

tified codes can be identified by using the CONSULT-III or GST. A DTC will be used as an example for how to read a code.

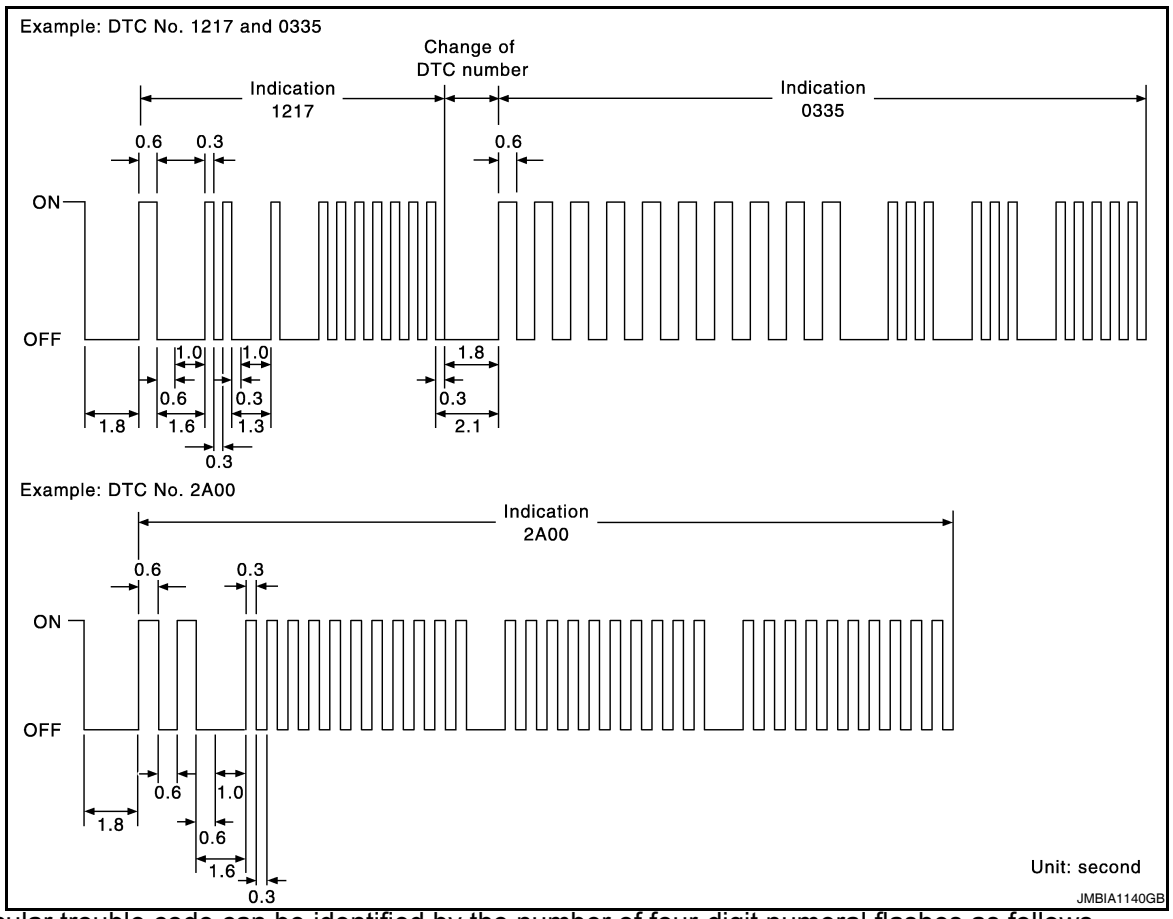

A particular trouble code can be identified by the number of four-digit numeral flashes as follows.

Number	0	1	2	3	4	5	6	7	8	9	A	B	C	D	E	F
Flashes	10	1	2	3	4	5	6	7	8	9	11	12	13	14	15	16

The length of time the 1,000th-digit numeral flashes on and off is 1.2 seconds consisting of an ON (0.6-second) - OFF (0.6-second) cycle.
The 100th-digit numeral and lower digit numerals consist of a 0.3-second ON and 0.3-second OFF cycle.
A change from one digit numeral to another occurs at an interval of 1.0-second OFF. In other words, the later numeral appears on the display 1.3 seconds after the former numeral has disappeared.
A change from one trouble code to another occurs at an interval of 1.8-second OFF.
In this way, all the detected malfunctions are classified by their DTC numbers. The DTC 0000 refers to no malfunction. (See EC-1015, "DTC Index")

How to Switch Diagnostic Test Mode

NOTE:
- **It is better to count the time accurately with a clock.**
- **It is impossible to switch the diagnostic mode when an accelerator pedal position sensor circuit has a malfunction.**
- **Always ECM returns to Diagnostic Test Mode I after ignition switch is turned OFF.**

HOW TO SET DIAGNOSTIC TEST MODE II (SELF-DIAGNOSTIC RESULTS)

1. Confirm that accelerator pedal is fully released, turn ignition switch ON and wait 3 seconds.
2. Repeat the following procedure quickly five times within 5 seconds.
   - Fully depress the accelerator pedal.
   - Fully release the accelerator pedal.
3. Wait 7 seconds, fully depress the accelerator pedal and keep it for approx. 10 seconds until the MIL starts blinking.
   NOTE:
   Do not release the accelerator pedal for 10 seconds if MIL may start blinking on the halfway of this 10 seconds. This blinking is displaying SRT status and is continued for another 10 seconds.

4. Fully release the accelerator pedal.
   ECM has entered to Diagnostic Test Mode II (Self-diagnostic results).
   NOTE:
   Wait until the same DTC (or 1st trip DTC) appears to confirm all DTCs certainly.

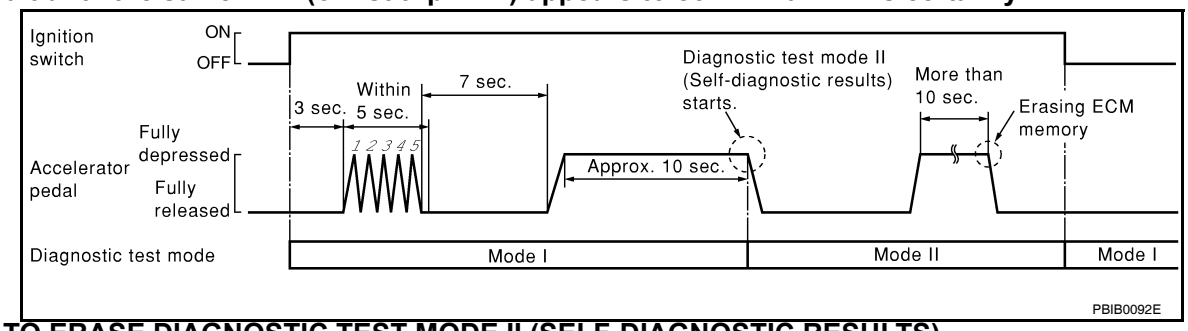

HOW TO ERASE DIAGNOSTIC TEST MODE II (SELF-DIAGNOSTIC RESULTS)

1. Set ECM in Diagnostic Test Mode II (Self-diagnostic results). Refer to “”.
2. Fully depress the accelerator pedal and keep it for more than 10 seconds.
   The emission-related diagnostic information has been erased from the backup memory in the ECM.
3. Fully release the accelerator pedal, and confirm the DTC 0000 is displayed.

OBD System Operation Chart

Relationship Between MIL, 1st Trip DTC, DTC and Detectable Items

- When a malfunction is detected for the first time, the 1st trip DTC and the 1st trip freeze frame data are stored in the ECM memory.
- When the same malfunction is detected in two consecutive trips, the DTC and the freeze frame data are stored in the ECM memory, and the MIL will come on.
- The MIL will go off after the vehicle is driven 3 times (driving pattern B) with no malfunction. The drive is counted only when the recorded driving pattern is met (as stored in the ECM). If another malfunction occurs while counting, the counter will reset.
- The DTC and the freeze frame data will be stored until the vehicle is driven 40 times (driving pattern A) without the same malfunction recurring (except for Misfire and Fuel Injection System). For Misfire and Fuel Injection System, the DTC and freeze frame data will be stored until the vehicle is driven 80 times (driving pattern C) without the same malfunction recurring. The “TIME” in “SELF-DIAGNOSTIC RESULTS” mode of CONSULT-III will count the number of times the vehicle is driven.
- The 1st trip DTC is not displayed when the self-diagnosis results in OK for the 2nd trip.

Summary Chart

Items	Fuel Injection System	Misfire	Other
MIL (goes off)	3 (pattern B)	3 (pattern B)	3 (pattern B)
DTC, Freeze Frame Data (no display)	80 (pattern C)	80 (pattern C)	40 (pattern A)
1st Trip DTC (clear)	1 (pattern C), *1	1 (pattern C), *1	1 (pattern B)
1st Trip Freeze Frame Data (clear)	*1, *2	*1, *2	1 (pattern B)

For details about patterns B and C under “Fuel Injection System” and “Misfire”, see “EXPLANATION FOR DRIVING PATTERNS FOR “MISFIRE <EXHAUST QUALITY DETERIORATION>”, “FUEL INJECTION SYSTEM”.

For details about patterns A and B under Other, see “EXPLANATION FOR DRIVING PATTERNS FOR “MISFIRE <EXHAUST QUALITY DETERIORATION>”, “FUEL INJECTION SYSTEM”.

*1: Clear timing is at the moment OK is detected.

*2: Clear timing is when the same malfunction is detected in the 2nd trip.

Relationship Between MIL, DTC, 1st Trip DTC and Driving Patterns for “Misfire <Exhaust Quality Deterioration>”, “Fuel Injection System”

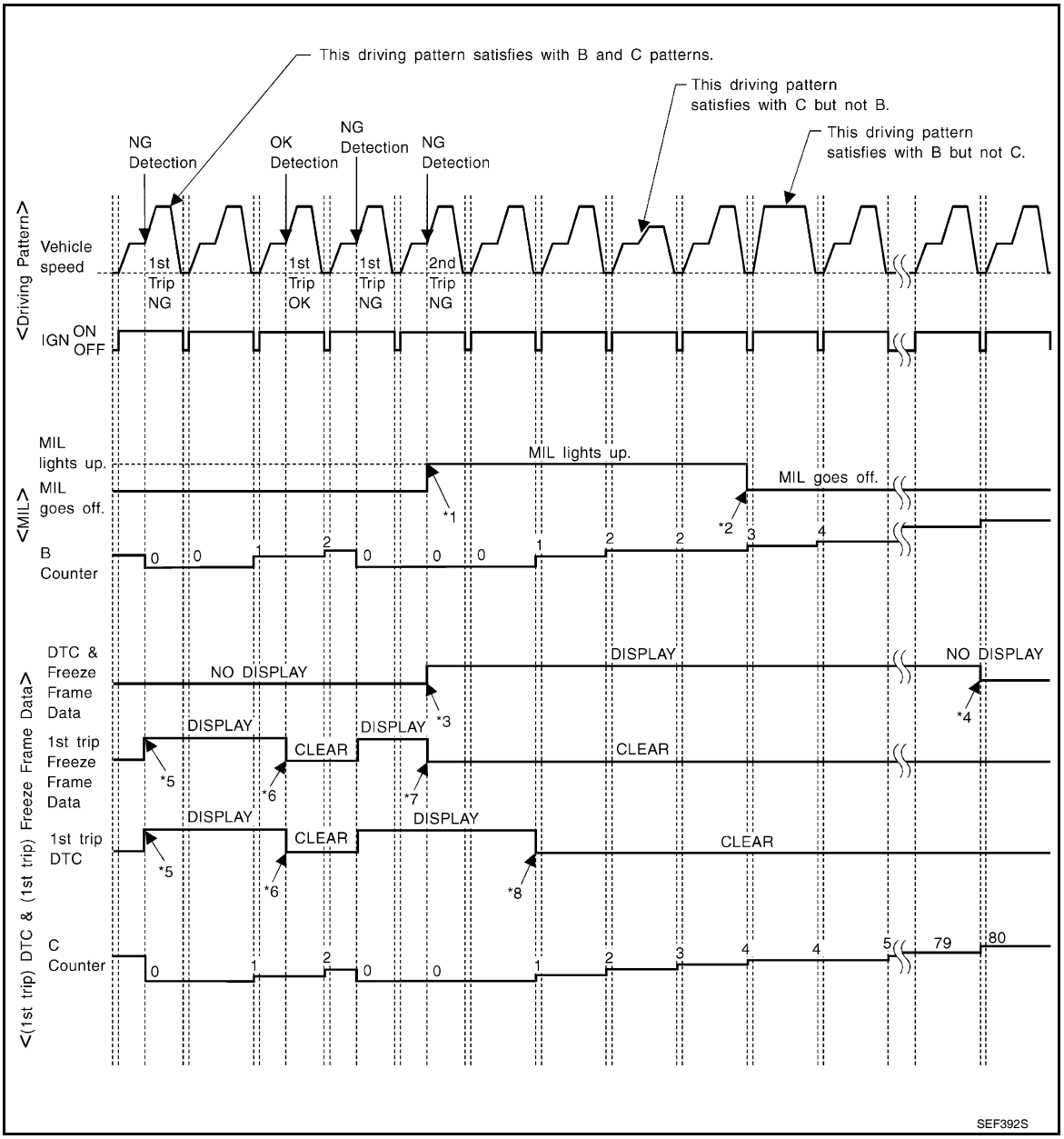

*1: When the same malfunction is detected in two consecutive trips, MIL will light up.

*2: MIL will go off after vehicle is driven 3 times (pattern B) without any malfunctions.

*3: When the same malfunction is detected in two consecutive trips, the DTC and the freeze frame data will be stored in ECM.

*4: The DTC and the freeze frame data will not be displayed any longer after vehicle is driven 80 times (pattern C) without the same malfunction. (The DTC and the freeze frame data still remain in ECM.)

*5: When a malfunction is detected for the first time, the 1st trip DTC and the 1st trip freeze frame data will be stored in ECM.

*6: The 1st trip DTC and the 1st trip freeze frame data will be cleared at the moment OK is detected.

*7: When the same malfunction is detected in the 2nd trip, the 1st trip freeze frame data will be cleared.

*8: 1st trip DTC will be cleared when vehicle is driven once (pattern C) without the same malfunction after DTC is stored in ECM.

Explanation for Driving Patterns for “Misfire <Exhaust Quality Deterioration>”, “Fuel Injection System”
<Driving Pattern B>
Driving pattern B means the vehicle operation as follows:
All components and systems should be monitored at least once by the OBD system.

- The B counter will be cleared when the malfunction is detected once regardless of the driving pattern.
- The B counter will be counted up when driving pattern B is satisfied without any malfunction.
- The MIL will go off when the B counter reaches 3. (*2 in “OBD SYSTEM OPERATION CHART”)

<Driving Pattern C>
Driving pattern C means the vehicle operation as follows:
The following conditions should be satisfied at the same time:
Engine speed: (Engine speed in the freeze frame data) ±375 rpm
Calculated load value: (Calculated load value in the freeze frame data) x (1±0.1) [%]
Engine coolant temperature (T) condition:

- When the freeze frame data shows lower than 70°C (158°F), T should be lower than 70°C (158°F).
- When the freeze frame data shows higher than or equal to 70°C (158°F), T should be higher than or equal to 70°C (158°F).

Example:
If the stored freeze frame data is as follows:
Engine speed: 850 rpm, Calculated load value: 30%, Engine coolant temperature: 80°C (176°F)
To be satisfied with driving pattern C, the vehicle should run under the following conditions:
Engine speed: 475 - 1,225 rpm, Calculated load value: 27 - 33%, Engine coolant temperature: more than 70°C (158°F)

- The C counter will be cleared when the malfunction is detected regardless of vehicle conditions above.
- The C counter will be counted up when vehicle conditions above is satisfied without the same malfunction.
- The DTC will not be displayed after C counter reaches 80.
- The 1st trip DTC will be cleared when C counter is counted once without the same malfunction after DTC is stored in ECM.

Relationship Between MIL, DTC, 1st Trip DTC and Driving Patterns Except For “Misfire <Exhaust Quality Deterioration>”, “Fuel Injection System”

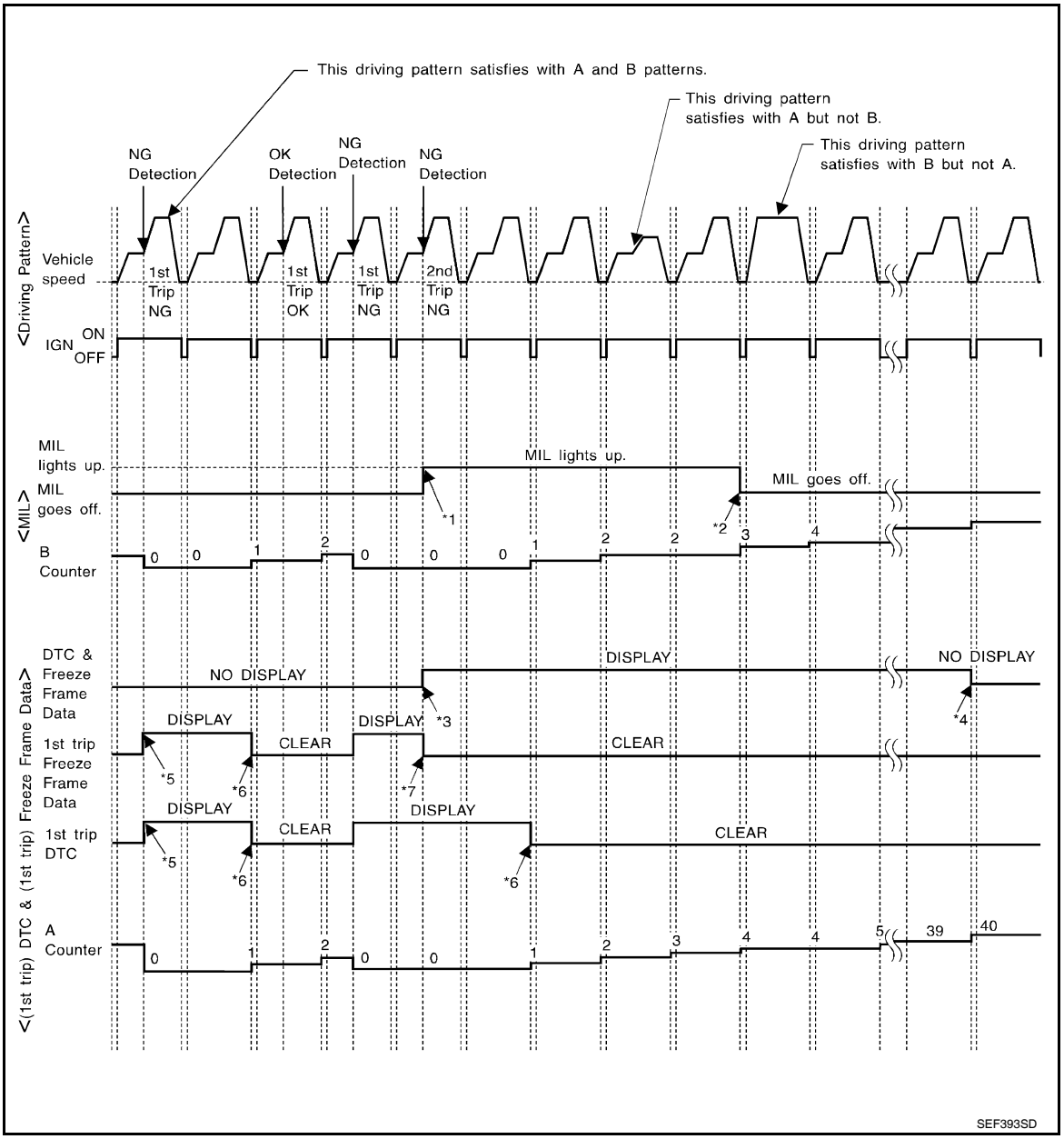

*1: When the same malfunction is detected in two consecutive trips, MIL will light up.

*2: MIL will go off after vehicle is driven 3 times (pattern B) without any malfunctions.

*3: When the same malfunction is detected in two consecutive trips, the DTC and the freeze frame data will be stored in ECM.

*4: The DTC and the freeze frame data will not be displayed any longer after vehicle is driven 40 times (pattern A) without the same malfunction. (The DTC and the freeze frame data still remain in ECM.)

*5: When a malfunction is detected for the first time, the 1st trip DTC and the 1st trip freeze frame data will be stored in ECM.

*6: 1st trip DTC will be cleared after vehicle is driven once (pattern B) without the same malfunction.

*7: When the same malfunction is detected in the 2nd trip, the 1st trip freeze frame data will be cleared.

Explanation for Driving Patterns Except for “Misfire <Exhaust Quality Deterioration>”, “Fuel Injection System”

<Driving Pattern A>

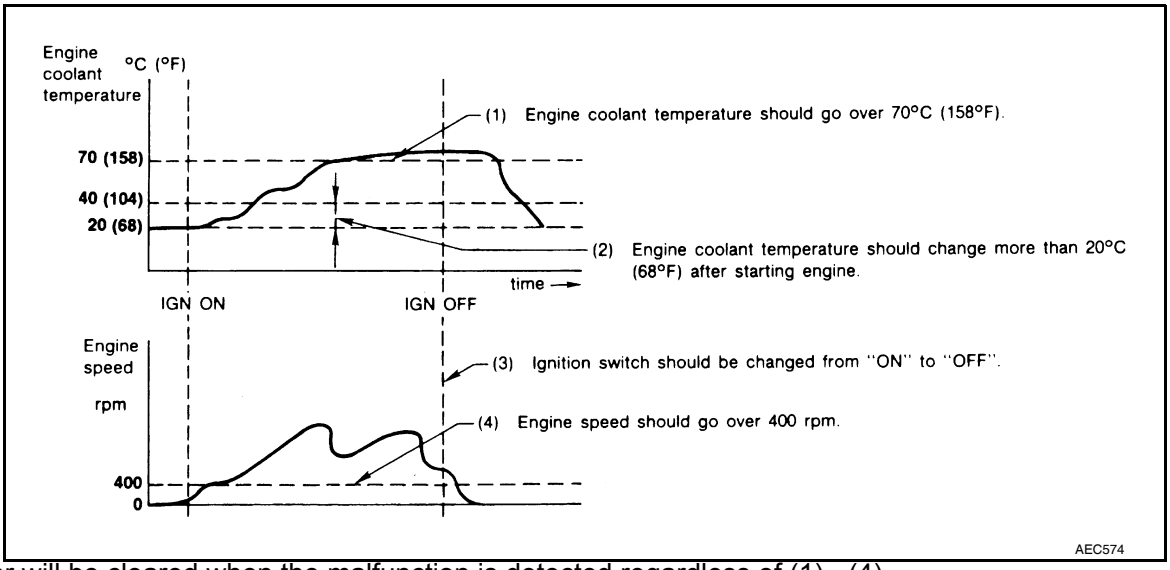

- The A counter will be cleared when the malfunction is detected regardless of (1) - (4).
- The A counter will be counted up when (1) - (4) are satisfied without the same malfunction.
- The DTC will not be displayed after the A counter reaches 40.

<Driving Pattern B>

Driving pattern B means the vehicle operation as follows:

All components and systems should be monitored at least once by the OBD system.

- The B counter will be cleared when the malfunction is detected once regardless of the driving pattern.
- The B counter will be counted up when driving pattern B is satisfied without any malfunctions.
- The MIL will go off when the B counter reaches 3 (*2 in OBD SYSTEM OPERATION CHART).

CONSULT-III Function

INFOID:0000000004349634

FUNCTION

Diagnostic test mode	Function
Work support	This mode enables a technician to adjust some devices faster and more accurately by following the indications on the CONSULT-III unit.
Self-diagnostic results	Self-diagnostic results such as 1st trip DTC, DTCs and 1st trip freeze frame data or freeze frame data can be read and erased quickly.*
Data monitor	Input/Output data in the ECM can be read.
Active test	Diagnostic Test Mode in which CONSULT-III drives some actuators apart from the ECMs and also shifts some parameters in a specified range.
DTC & SRT confirmation	The status of system monitoring tests and the self-diagnosis status/result can be confirmed.
Function test	This mode is used to inform customers when their vehicle condition requires periodic maintenance.
ECU part number	ECM part number can be read.

*: The following emission-related diagnostic information is cleared when the ECM memory is erased.

- Diagnostic trouble codes
- 1st trip diagnostic trouble codes
- Freeze frame data
- 1st trip freeze frame data
- System readiness test (SRT) codes
- Test values

ENGINE CONTROL COMPONENT PARTS/CONTROL SYSTEMS APPLICATION

Item			DIAGNOSTIC TEST MODE						
			WORK SUPPORT	SELF-DIAGNOSTIC RESULTS		DATA MONITOR	ACTIVE TEST	DTC & SRT CONFIRMATION	
				DTC*1	FREEZE FRAME DATA*2			SRT STATUS	DTC WORK SUPPORT
ENGINE CONTROL COMPONENT PARTS	INPUT	Crankshaft position sensor (POS)		×	×	×			
		Camshaft position sensor (PHASE)		×	×	×			
		Mass air flow sensor		×		×			
		Engine coolant temperature sensor		×	×	×	×		
		Air fuel ratio (A/F) sensor 1		×		×		×	×
		Heated oxygen sensor 2		×		×		×	×
		Vehicle speed sensor		×	×	×			
		Accelerator pedal position sensor		×		×			
		Throttle position sensor		×	×	×			
		Fuel tank temperature sensor		×		×	×		
		EVAP control system pressure sensor		×		×			
		Intake air temperature sensor		×	×	×			
		Knock sensor		×					
		Refrigerant pressure sensor				×			
		Closed throttle position switch (accelerator pedal position sensor signal)				×			
		Air conditioner switch				×			
		Park/neutral position (PNP) switch		×		×			
		Stop lamp switch		×		×			
		Power steering pressure sensor		×		×			
		Battery voltage				×			
		Load signal				×			
		Primary speed sensor		×		×			
		Fuel level sensor		×		×			
		Battery current sensor		×		×			
		ASCD steering switch		×		×			
		ASCD brake switch		×		×			

Item			DIAGNOSTIC TEST MODE						
			WORK SUPPORT	SELF-DIAGNOSTIC RESULTS		DATA MONITOR	ACTIVE TEST	DTC & SRT CONFIRMATION	
				DTC*1	FREEZE FRAME DATA*2			SRT STATUS	DTC WORK SUPPORT
ENGINE CONTROL COMPONENT PARTS	OUTPUT	Fuel injector				×	×		
		Power transistor (Ignition timing)				×	×		
		Throttle control motor relay		×		×			
		Throttle control motor		×					
		EVAP canister purge volume control solenoid valve		×		×	×		×
		Air conditioner relay				×			
		Fuel pump relay	×			×	×		
		Cooling fan relay		×		×	×		
		Air fuel ratio (A/F) sensor 1 heater		×		×		×*3	
		Heated oxygen sensor 2 heater		×		×		×*3	
		EVAP canister vent control valve	×	×		×	×		
		Intake valve timing control solenoid valve		×		×	×		
		Alternator				×	×		
		Calculated load value			×	×			

X: Applicable

*1: This item includes 1st trip DTCs.

*2: This mode includes 1st trip freeze frame data or freeze frame data. The items appear on CONSULT-III screen in freeze frame data mode only if a 1st trip DTC or DTC is detected. For details, refer to EC-641, "Diagnosis Description".

*3: Always “CMPLT” is displayed.

WORK SUPPORT MODE

Work Item

WORK ITEM	CONDITION	USAGE
FUEL PRESSURE RELEASE	• FUEL PUMP WILL STOP BY TOUCHING “START” DURING IDLING. CRANK A FEW TIMES AFTER ENGINE STALLS.	When releasing fuel pressure from fuel line
IDLE AIR VOL LEARN	• THE IDLE AIR VOLUME THAT KEEPS THE ENGINE WITHIN THE SPECIFIED RANGE IS MEMORIZED IN ECM.	When learning the idle air volume
SELF-LEARNING CONT	• THE COEFFICIENT OF SELF-LEARNING CONTROL MIXTURE RATIO RETURNS TO THE ORIGINAL COEFFICIENT.	When clearing mixture ratio self-learning value

WORK ITEM	CONDITION	USAGE
EVAP SYSTEM CLOSE	CLOSE THE EVAP CANISTER VENT CONTROL VALVE IN ORDER TO MAKE EVAP SYSTEM CLOSE UNDER THE FOLLOWING CONDITIONS. • IGN SW ON • ENGINE NOT RUNNING • AMBIENT TEMPERATURE IS ABOVE 0°C (32°F). • NO VACUUM AND NO HIGH PRESSURE IN EVAP SYSTEM • FUEL TANK TEMP. IS MORE THAN 0°C (32°F). • WITHIN 10 MINUTES AFTER STARTING “EVAP SYSTEM CLOSE” • WHEN TRYING TO EXECUTE “EVAP SYSTEM CLOSE” UNDER THE CONDITION EXCEPT ABOVE, CONSULT-II WILL DISCONTINUE IT AND DISPLAY APPROPRIATE INSTRUCTION. **NOTE:** **WHEN STARTING ENGINE, CONSULT-III MAY DISPLAY “BATTERY VOLTAGE IS LOW. CHARGE BATTERY”, EVEN IN USING CHARGED BATTERY.**	When detecting EVAP vapor leak point of EVAP system
VIN REGISTRATION	• IN THIS MODE, VIN IS REGISTERED IN ECM.	When registering VIN in ECM
TARGET IDLE RPM ADJ*	• IDLE CONDITION	When setting target idle speed
TARGET IGN TIM ADJ*	• IDLE CONDITION	When adjusting target ignition timing

*: This function is not necessary in the usual service procedure.

SELF-DIAG RESULTS MODE

Self Diagnostic Item

Regarding items of DTC and 1st trip DTC, refer to EC-1015, "DTC Index".)

Freeze Frame Data and 1st Trip Freeze Frame Data

Freeze frame data item*	Description
DIAG TROUBLE CODE [PXXXX]	• The engine control component part/control system has a trouble code, it is displayed as PXXXX. (Refer to EC-1015, "DTC Index".)
FUEL SYS-B1	• “Fuel injection system status” at the moment a malfunction is detected is displayed. • One mode in the following is displayed. Mode2: Open loop due to detected system malfunction Mode3: Open loop due to driving conditions (power enrichment, deceleration enleanment) Mode4: Closed loop - using oxygen sensor(s) as feedback for fuel control Mode5: Open loop - has not yet satisfied condition to go to closed loop
CAL/LD VALUE [%]	• The calculated load value at the moment a malfunction is detected is displayed.
COOLANT TEMP [°C] or [°F]	• The engine coolant temperature at the moment a malfunction is detected is displayed.
L-FUEL TRM-B1 [%]	• “Long-term fuel trim” at the moment a malfunction is detected is displayed. • The long-term fuel trim indicates much more gradual feedback compensation to the base fuel schedule than short-term fuel trim.
S-FUEL TRM-B1 [%]	• “Short-term fuel trim” at the moment a malfunction is detected is displayed. • The short-term fuel trim indicates dynamic or instantaneous feedback compensation to the base fuel schedule.
ENGINE SPEED [rpm]	• The engine speed at the moment a malfunction is detected is displayed.
VEHICL SPEED [km/h] or [mph]	• The vehicle speed at the moment a malfunction is detected is displayed.
ABSOL TH·P/S [%]	• The throttle valve opening angle at the moment a malfunction is detected is displayed.
B/FUEL SCHDL [msec]	• The base fuel schedule at the moment a malfunction is detected is displayed.

Freeze frame data item*	Description
INT/A TEMP SE [°C] or [°F]	• The intake air temperature at the moment a malfunction is detected is displayed.
FUEL SYS-B2	• These items displayed but are not applicable to this model.
L-FUEL TRM-B2 [%]	
S-FUEL TRM-B2 [%]	
INT MANI PRES [kPa]	
COMBUST CONDI-TION	

*: The items are the same as those of 1st trip freeze frame data.

DATA MONITOR MODE

Monitored Item

×: Applicable

Monitored item	Unit	Description	Remarks
ENG SPEED	rpm	• Indicates the engine speed computed from the signal of the crankshaft position sensor (POS) and camshaft position sensor (PHASE).	• Accuracy becomes poor if engine speed drops below the idle rpm. • If the signal is interrupted while the engine is running, an abnormal value may be indicated.
MAS A/F SE-B1	V	• The signal voltage of the mass air flow sensor is displayed.	• When the engine is stopped, a certain value is indicated. • When engine is running specification range is indicated in “SPEC”.
B/FUEL SCHDL	ms	• “Base fuel schedule” indicates the fuel injection pulse width programmed into ECM, prior to any learned on board correction.	• When engine is running specification range is indicated in “SPEC”.
A/F ALPHA-B1	%	• The mean value of the air-fuel ratio feedback correction factor per cycle is indicated.	• When the engine is stopped, a certain value is indicated. • When engine is running specification range is indicated in “SPEC”. • This data also includes the data for the air-fuel ratio learning control.
COOLAN TEMP/S	°C or °F	• The engine coolant temperature (determined by the signal voltage of the engine coolant temperature sensor) is displayed.	• When the engine coolant temperature sensor is open or short-circuited, ECM enters fail-safe mode. The engine coolant temperature determined by the ECM is displayed.
A/F SEN1 (B1)	V	• The A/F signal computed from the input signal of the air fuel ratio (A/F) sensor 1 is displayed.	
HO2S2 (B1)	V	• The signal voltage of the heated oxygen sensor 2 is displayed.	
HO2S2 MNTR(B1)	RICH/LEAN	• Display of heated oxygen sensor 2 signal: RICH: means the amount of oxygen after three way catalyst is relatively small. LEAN: means the amount of oxygen after three way catalyst is relatively large.	• When the engine is stopped, a certain value is indicated.
VHCL SPEED SE	km/h or mph	• The vehicle speed computed from the vehicle speed signal sent from combination meter is displayed.	
BATTERY VOLT	V	• The power supply voltage of ECM is displayed.	
ACCEL SEN 1	V	• The accelerator pedal position sensor signal voltage is displayed.	• ACCEL SEN 2 signal is converted by ECM internally. Thus, it differs from ECM terminal voltage signal.
ACCEL SEN 2			

Monitored item	Unit	Description	Remarks
TP SEN 1-B1	V	• The throttle position sensor signal voltage is displayed.	• TP SEN 2-B1 signal is converted by ECM internally. Thus, it differs from ECM terminal voltage signal.
TP SEN 2-B1			
FUEL T/TMP SE	°C or °F	• The fuel temperature (determined by the signal voltage of the fuel tank temperature sensor) is displayed.	
INT/A TEMP SE	°C or °F	• The intake air temperature (determined by the signal voltage of the intake air temperature sensor) is indicated.	
EVAP SYS PRES	V	• The signal voltage of EVAP control system pressure sensor is displayed.	
FUEL LEVEL SE	V	• The signal voltage of the fuel level sensor is displayed.	
START SIGNAL	ON/OFF	• Indicates start signal status [ON/OFF] computed by the ECM according to the signals of engine speed and battery voltage.	• After starting the engine, [OFF] is displayed regardless of the starter signal.
CLSD THL POS	ON/OFF	• Indicates idle position [ON/OFF] computed by ECM according to the accelerator pedal position sensor signal.	
AIR COND SIG	ON/OFF	• Indicates [ON/OFF] condition of the air conditioner switch as determined by the air conditioner signal.	
P/N POSI SW	ON/OFF	• Indicates [ON/OFF] condition from the park/neutral position (PNP) switch signal.	
PW/ST SIGNAL	ON/OFF	• [ON/OFF] condition of the power steering system (determined by the signal voltage of the power steering pressure sensor) is indicated.	
LOAD SIGNAL	ON/OFF	• Indicates [ON/OFF] condition from the electrical load signal. ON: Rear window defogger switch is ON and/or lighting switch is in 2nd position. OFF: Both rear window defogger switch and lighting switch are OFF.	
IGNITION SW	ON/OFF	• Indicates [ON/OFF] condition from ignition switch signal.	
HEATER FAN SW	ON/OFF	• Indicates [ON/OFF] condition from the heater fan switch signal.	
BRAKE SW	ON/OFF	• Indicates [ON/OFF] condition from the stop lamp switch signal.	
INJ PULSE-B1	msec	• Indicates the actual fuel injection pulse width compensated by ECM according to the input signals.	• When the engine is stopped, a certain computed value is indicated.
IGN TIMING	BTDC	• Indicates the ignition timing computed by ECM according to the input signals.	• When the engine is stopped, a certain value is indicated.
CAL/LD VALUE	%	• “Calculated load value” indicates the value of the current air flow divided by peak air flow.	
MASS AIRFLOW	g·m/s	• Indicates the mass air flow computed by ECM according to the signal voltage of the mass air flow sensor.	
PURG VOL C/V	%	• Indicates the EVAP canister purge volume control solenoid valve control value computed by the ECM according to the input signals. • The opening becomes larger as the value increases.	
INT/V TIM(B1)	°CA	• Indicates [°CA] of intake camshaft advance angle.	

Monitored item	Unit	Description	Remarks
INT/V SOL(B1)	%	• The control value of the intake valve timing control solenoid valve (determined by ECM according to the input signals) is indicated. • The advance angle becomes larger as the value increases.	
AIR COND RLY	ON/OFF	• The air conditioner relay control condition (determined by ECM according to the input signals) is indicated.	
FUEL PUMP RLY	ON/OFF	• Indicates the fuel pump relay control condition determined by ECM according to the input signals.	
VENT CONT/V	ON/OFF	• The control condition of the EVAP canister vent control valve (determined by ECM according to the input signals) is indicated. ON: Closed OFF: Open	
THRTL RELAY	ON/OFF	• Indicates the throttle control motor relay control condition determined by the ECM according to the input signals.	
COOLING FAN	HI/LOW/OFF	• Indicates the condition of the cooling fan (determined by ECM according to the input signals). HI: High speed operation MID: Middle speed operation LOW: Low speed operation OFF: Stop	
HO2S2 HTR (B1)	ON/OFF	• Indicates [ON/OFF] condition of heated oxygen sensor 2 heater determined by ECM according to the input signals.	
I/P PULLY SPD	rpm	• Indicates the engine speed computed from the primary sped sensor signal.	
VEHICLE SPEED	km/h or mph	• The vehicle speed computed from the vehicle speed signal sent from TCM is displayed.	
IDL A/V LEARN	YET/CMPLT	• Display the condition of Idle Air Volume Learning YET: Idle air volume learning has not been performed yet. CMPLT: Idle air volume learning has already been performed successfully.	
TRVL AFTER MIL	km or mile	• Distance traveled while MIL is activated.	
A/F S1 HTR(B1)	%	• Air fuel ratio (A/F) sensor 1 heater control value computed by ECM according to the input signals. • The current flow to the heater becomes larger as the value increases.	
AC PRESS SEN	V	• The signal voltage from the refrigerant pressure sensor is displayed.	
VHCL SPEED SE	km/h or mph	• The vehicle speed computed from the vehicle speed signal sent from combination meter is displayed.	
SET VHCL SPD	km/h or mph	• The preset vehicle speed is displayed.	
MAIN SW	ON/OFF	• Indicates [ON/OFF] condition from MAIN switch signal.	
CANCEL SW	ON/OFF	• Indicates [ON/OFF] condition from CANCEL switch signal.	
RESUME/ACC SW	ON/OFF	• Indicates [ON/OFF] condition from RESUME/ACCELERATE switch signal.	
SET SW	ON/OFF	• Indicates [ON/OFF] condition from SET/COAST switch signal.	

Monitored item	Unit	Description	Remarks
BRAKE SW1	ON/OFF	• Indicates [ON/OFF] condition from ASCD brake switch signal.	
BRAKE SW2	ON/OFF	• Indicates [ON/OFF] condition of stop lamp switch signal.	
VHCL SPD CUT	NON/CUT	• Indicates the vehicle cruise condition. NON: Vehicle speed is maintained at the ASCD set speed. CUT: Vehicle speed decreased to excessively low compared with the ASCD set speed, and ASCD operation is cut off.	
LO SPEED CUT	NON/CUT	• Indicates the vehicle cruise condition. NON: Vehicle speed is maintained at the ASCD set speed. CUT: Vehicle speed decreased to excessively low, and ASCD operation is cut off.	
AT OD MONITOR	ON/OFF	• Indicates [ON/OFF] condition of CVT O/D according to the input signal from the TCM.	• For M/T models, always “OFF” is displayed.
AT OD CANCEL	ON/OFF	• Indicates [ON/OFF] condition of CVT O/D cancel request signal.	• For M/T models, always “OFF” is displayed.
CRUISE LAMP	ON/OFF	• Indicates [ON/OFF] condition of CRUISE indicator determined by the ECM according to the input signals.	
SET LAMP	ON/OFF	• Indicates [ON/OFF] condition of SET indicator determined by the ECM according to the input signals.	
BAT CUR SEN	mV	• The signal voltage of battery current sensor is displayed.	
ALT DUTY SIG	ON/OFF	• The control condition of the power generation voltage variable control (determined by ECM according to the input signals) is indicated. ON: Power generation voltage variable control is active. OFF: Power generation voltage variable control is inactive.	
A/F ADJ-B1	—	• Indicates the correction of factor stored in ECM. The factor is calculated from the difference between the target air-fuel ratio stored in ECM and the air-fuel ratio calculated from A/F sensor 1 signal.	
ALT DUTY	%	• Indicates the duty ratio of the power generation command value. The ratio is calculated by ECM based on the battery current sensor signal.	

NOTE:

Any monitored item that does not match the vehicle being diagnosed is deleted from the display automatically.

ACTIVE TEST MODE

Test Item

TEST ITEM	CONDITION	JUDGMENT	CHECK ITEM (REMEDY)
FUEL INJECTION	• Engine: Return to the original trouble condition • Change the amount of fuel injection using CONSULT-III.	If trouble symptom disappears, see CHECK ITEM.	• Harness and connectors • Fuel injector • Air fuel ratio (A/F) sensor 1
IGNITION TIMING	• Engine: Return to the original trouble condition • Timing light: Set • Retard the ignition timing using CONSULT-III.	If trouble symptom disappears, see CHECK ITEM.	• Perform Idle Air Volume Learning.
POWER BALANCE	• Engine: After warming up, idle the engine. • A/C switch OFF • Shift lever: P or N (CVT), Neutral (M/T) • Cut off each fuel injector signal one at a time using CONSULT-III.	Engine runs rough or dies.	• Harness and connectors • Compression • Fuel injector • Power transistor • Spark plug • Ignition coil
COOLING FAN*	• Ignition switch: ON • Turn the cooling fan “LOW”, “MID”, “HI” and “OFF” CONSULT-III.	Cooling fan moves and stops.	• Harness and connectors • IPDM E/R (Cooling fan relay) • Cooling fan motor
ENG COOLANT TEMP	• Engine: Return to the original trouble condition • Change the engine coolant temperature using CONSULT-III.	If trouble symptom disappears, see CHECK ITEM.	• Harness and connectors • Engine coolant temperature sensor • Fuel injector
FUEL PUMP RELAY	• Ignition switch: ON (Engine stopped) • Turn the fuel pump relay “ON” and “OFF” using CONSULT-III and listen to operating sound.	Fuel pump relay makes the operating sound.	• Harness and connectors • Fuel pump relay
PURG VOL CONT/V	• Engine: After warming up, run engine at 1,500 rpm. • Change the EVAP canister purge volume control solenoid valve opening percent using CONSULT-III.	Engine speed changes according to the opening percent.	• Harness and connectors • Solenoid valve
FUEL/T TEMP SEN	• Change the fuel tank temperature using CONSULT-III.		
VENT CONTROL/V	• Ignition switch: ON (Engine stopped) • Turn solenoid valve “ON” and “OFF” with the CONSULT-III and listen to operating sound.	Solenoid valve makes an operating sound.	• Harness and connectors • Solenoid valve
V/T ASSIGN ANGLE	• Engine: Return to the original trouble condition • Change intake valve timing using CONSULT-III.	If trouble symptom disappears, see CHECK ITEM.	• Harness and connectors • Intake valve timing control solenoid valve
ALTERNATOR DUTY	• Engine: Idle • Change duty ratio using CONSULT-III.	Battery voltage changes.	• Harness and connectors • IPDM E/R • Alternator

*: Leaving cooling fan OFF with CONSULT-III while engine is running may cause the engine to overheat.

DTC & SRT CONFIRMATION MODE

SRT STATUS Mode
For details, refer to EC-641, "Diagnosis Description".

SRT WORK SUPPORT Mode
This mode enables a technician to drive a vehicle to set the SRT while monitoring the SRT status.

DTC WORK SUPPORT Mode

Test mode	Test item	Corresponding DTC No.	Reference page
EVAPORATIVE SYSTEM	EVP SML LEAK P0442/P1442*	P0442	EC-801
		P0455	EC-835
	EVP V/S LEAK P0456/P1456*	P0456	EC-841
A/F SEN1	A/F SEN1 (B1) P1278/P1279	P0133	EC-734
	A/F SEN1 (B1) P1276	P0130	EC-724
HO2S2	HO2S2 (B1) P1146	P0138	EC-745
	HO2S2 (B1) P1147	P0137	EC-739
	HO2S2 (B1) P139	P0139	EC-753

*: DTC P1442 and P1456 does not apply to L32 models but appears in DTC Work Support Mode screens.

Diagnosis Tool Function

INFOID:0000000004349635

DESCRIPTION

Generic Scan Tool (OBD II scan tool) complying with SAE J1978 has several functions explained below.
ISO15765-4 is used as the protocol.
The name “GST” or “Generic Scan Tool” is used in this service manual.

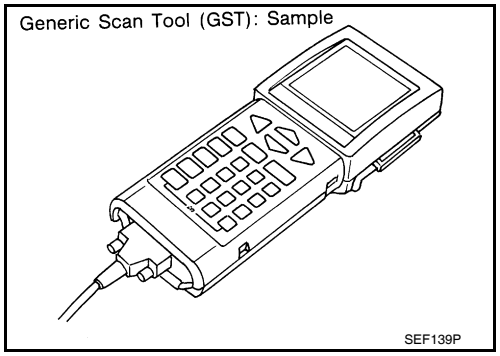

FUNCTION

Diagnostic Service		Function
Service $01	READINESS TESTS	This diagnostic service gains access to current emission-related data values, including analog inputs and outputs, digital inputs and outputs, and system status information.
Service $02	(FREEZE DATA)	This diagnostic service gains access to emission-related data value which were stored by ECM during the freeze frame. For details, refer to EC-1015, "DTC Index".
Service $03	DTCs	This diagnostic service gains access to emission-related power train trouble codes which were stored by ECM.
Service $04	CLEAR DIAG INFO	This diagnostic service can clear all emission-related diagnostic information. This includes: • Clear number of diagnostic trouble codes (Service $01) • Clear diagnostic trouble codes (Service $03) • Clear trouble code for freeze frame data (Service $01) • Clear freeze frame data (Service $02) • Reset status of system monitoring test (Service $01) • Clear on board monitoring test results (Service $06 and $07)
Service $06	(ON BOARD TESTS)	This diagnostic service accesses the results of on board diagnostic monitoring tests of specific components/systems that are not continuously monitored.
Service $07	(ON BOARD TESTS)	This diagnostic service enables the off board test drive to obtain test results for emission-related powertrain components/systems that are continuously monitored during normal driving conditions.

Diagnostic Service		Function
Service $08	—	This diagnostic service can close EVAP system in ignition switch ON position (Engine stopped). When this diagnostic service is performed, EVAP canister vent control valve can be closed. In the following conditions, this diagnostic service cannot function. • Low ambient temperature • Low battery voltage • Engine running • Ignition switch OFF • Low fuel temperature • Too much pressure is applied to EVAP system
Service $09	(CALIBRATION ID)	This diagnostic service enables the off-board test device to request specific vehicle information such as Vehicle Identification Number (VIN) and Calibration IDs.

INSPECTION PROCEDURE

1. Turn ignition switch OFF.
2. Connect “GST” to data link connector (2), which is located under LH dash panel near the hood opener handle (1).
3. Turn ignition switch ON.

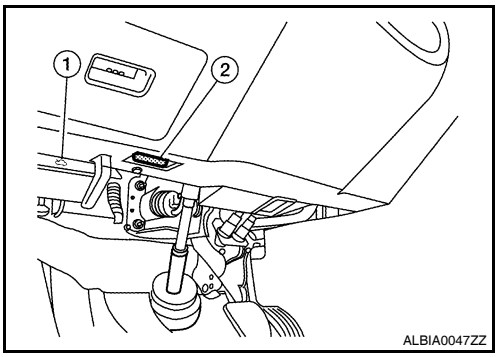

4. Enter the program according to instruction on the screen or in the operation manual.
   (*: Regarding GST screens in this section, sample screens are shown.)

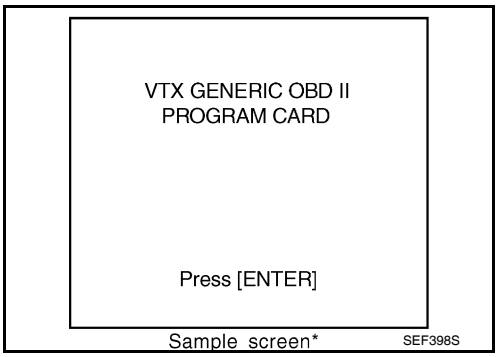

5. Perform each diagnostic mode according to each service procedure.
   For further information, see the GST Operation Manual of the tool maker.

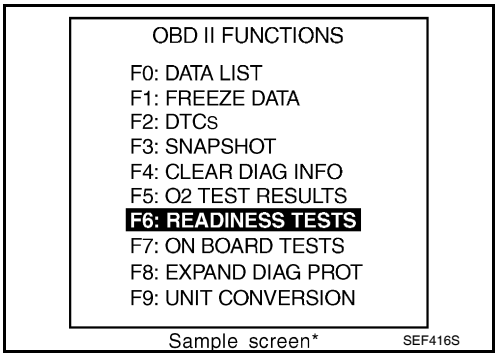

COMPONENT DIAGNOSIS

TROUBLE DIAGNOSIS - SPECIFICATION VALUE

Description

INFOID:0000000004349636

The specification (SP) value indicates the tolerance of the value that is displayed in “SPEC” of “DATA MONITOR” mode of CONSULT-III during normal operation of the Engine Control System. When the value in “SPEC” of “DATA MONITOR” mode is within the SP value, the Engine Control System is confirmed OK. When the value in “SPEC” of “DATA MONITOR” mode is NOT within the SP value, the Engine Control System may have one or more malfunctions.
The SP value is used to detect malfunctions that may affect the Engine Control System, but will not light the MIL.
The SP value will be displayed for the following three items:
- B/FUEL SCHDL (The fuel injection pulse width programmed into ECM prior to any learned on board correction)
- A/F ALPHA-B1 (The mean value of air-fuel ratio feedback correction factor per cycle)
- MAS A/F SE-B1 (The signal voltage of the mass air flow sensor)

Component Function Check

INFOID:0000000004349637

1. START

Make sure that all of the following conditions are satisfied.
- Vehicle driven distance: More than 5,000 km (3,107 miles)
- Barometric pressure: 98.3 - 104.3 kPa (1.003 - 1.064 kg/cm^2, 14.25 - 15.12 psi)
- Atmospheric temperature: 20 - 30°C (68 - 86°F)
- Engine coolant temperature: 75 - 95°C (167 - 203°F)
- Transmission: Warmed-up
  - CVT models: After the engine is warmed up to normal operating temperature, drive vehicle until “ATF TEMP SEN” (CVT fluid temperature sensor signal) indicates more than 60°C (140°F).
  - M/T models: After the engine is warmed up to normal operating temperature, drive vehicle for 5 minutes.
- Electrical load: Not applied*
- Engine speed: Idle

*: Rear window defogger switch, air conditioner switch, lighting switch are OFF. Steering wheel is straight ahead.

>> GO TO 2.

2. PERFORM “SPEC” OF “DATA MONITOR” MODE

With CONSULT-III
NOTE:
Perform “SPEC” in “DATA MONITOR” mode in maximum scale display.
1. Perform EC-560, "BASIC INSPECTION : Special Repair Requirement".
2. Select “B/FUEL SCHDL”, “A/F ALPHA-B1” and “MAS A/F SE-B1” in “SPEC” of “DATA MONITOR” mode with CONSULT-III.
3. Make sure that monitor items are within the SP value.

Is the inspection result normal?

YES >> END
NO >> Go to EC-666, "Diagnosis Procedure".

Diagnosis Procedure

INFOID:0000000004349638

OVERALL SEQUENCE

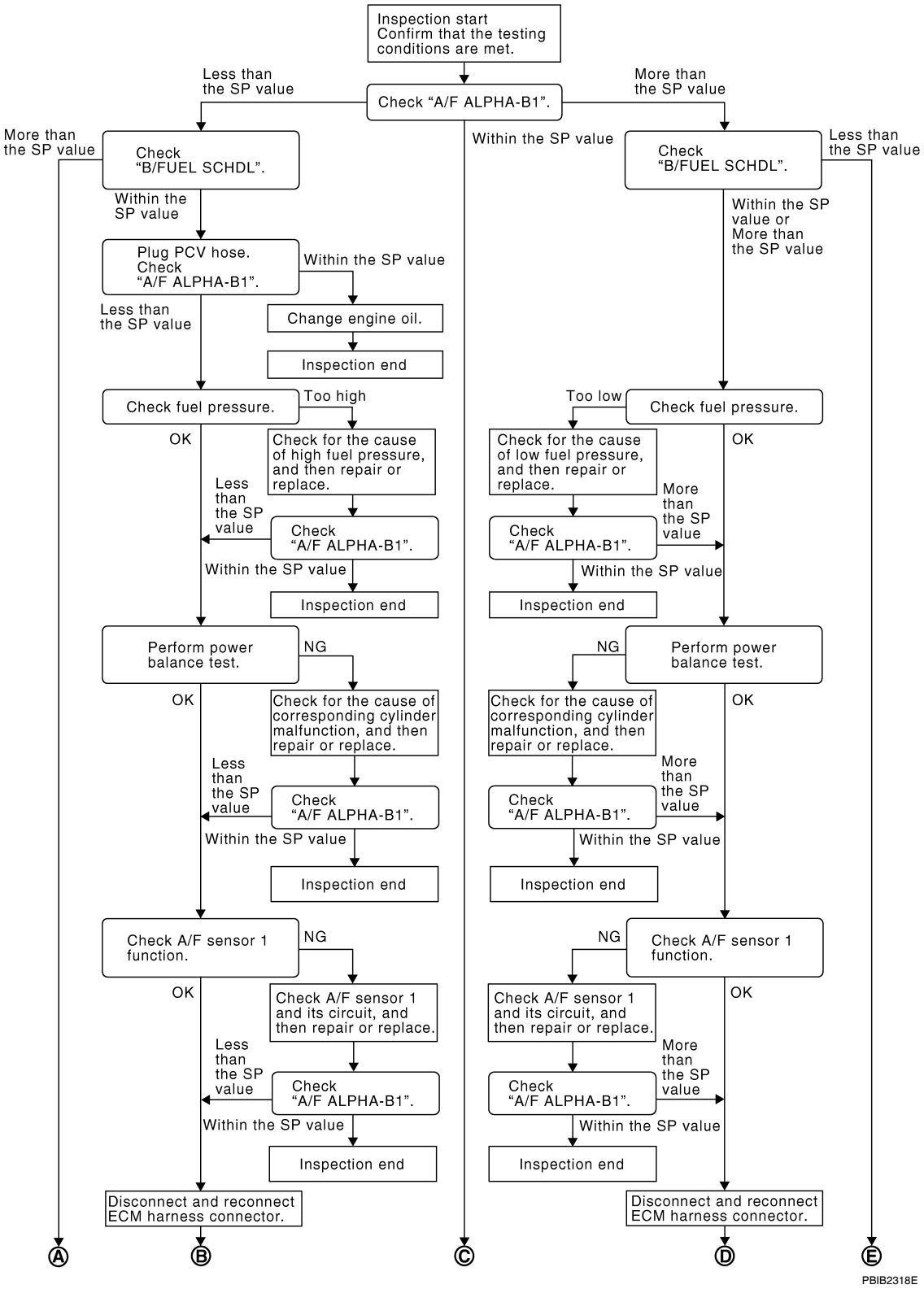

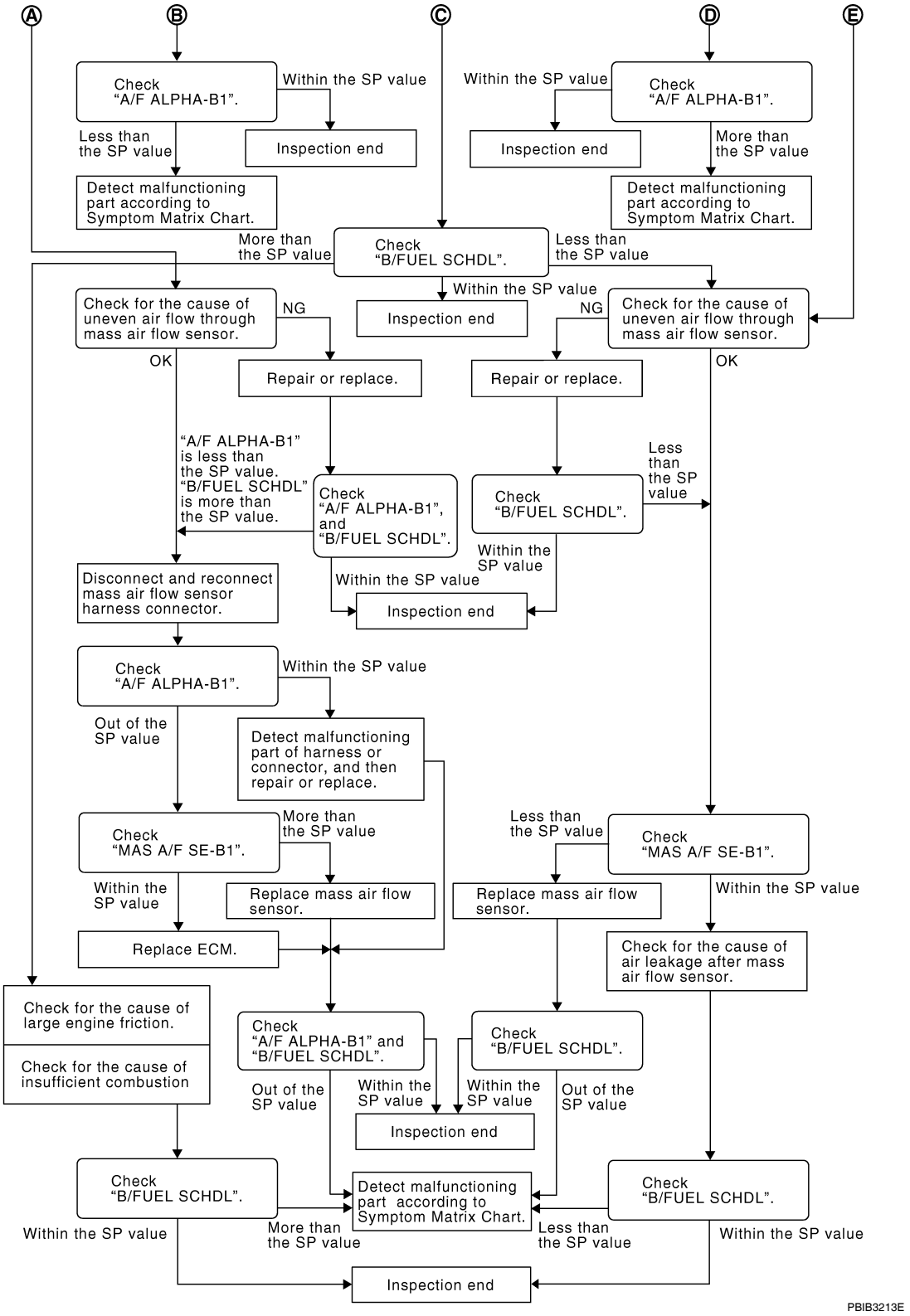

DETAILED PROCEDURE

1. CHECK "A/F ALPHA-B1"

With CONSULT-III

1. Start engine.
2. Confirm that the testing conditions are met. Refer to EC-665, "Component Function Check".
3. Select "A/F ALPHA-B1" in "SPEC" of "DATA MONITOR" mode, and make sure that the each indication is within the SP value.

NOTE:
Check “A/F ALPHA-B1” for approximately 1 minute because they may fluctuate. It is NG if the indication is out of the SP value even a little.

Is the measurement value within the SP value?

YES >> GO TO 17.
NO-1 >> Less than the SP value: GO TO 2.
NO-2 >> More than the SP value: GO TO 3.

2. CHECK “B/FUEL SCHDL”

Select “B/FUEL SCHDL” in “SPEC” of “DATA MONITOR” mode, and make sure that the indication is within the SP value.

Is the measurement value within the SP value?

YES >> GO TO 4.
NO >> More than the SP value: GO TO 19.

3. CHECK “B/FUEL SCHDL”

Select “B/FUEL SCHDL” in “SPEC” of “DATA MONITOR” mode, and make sure that the indication is within the SP value.

Is the measurement value within the SP value?

YES >> GO TO 6.
NO-1 >> More than the SP value: GO TO 6.
NO-2 >> Less than the SP value: GO TO 25.

4. CHECK “A/F ALPHA-B1”

1. Stop the engine.
2. Disconnect PCV hose, and then plug it.
3. Start engine.
4. Select “A/F ALPHA-B1” in “SPEC” of “DATA MONITOR” mode, and make sure that the indication is within the SP value.

Is the measurement value within the SP value?

YES >> GO TO 5.
NO >> GO TO 6.

5. CHANGE ENGINE OIL

1. Stop the engine.
2. Change engine oil.

NOTE:
This symptom may occur when a large amount of gasoline is mixed with engine oil because of driving conditions (such as when engine oil temperature does not rise enough since a journey distance is too short during winter). The symptom will not be detected after changing engine oil or changing driving condition.

>> **INSPECTION END**

6. CHECK FUEL PRESSURE

Check fuel pressure. (Refer to EC-1038, "Inspection".)

Is the inspection result normal?

YES >> GO TO 9.
NO-1 >> Fuel pressure is too high: Replace “fuel filter and fuel pump assembly” and then GO TO 8.
NO-2 >> Fuel pressure is too low: GO TO 7.

7. DETECT MALFUNCTIONING PART

Check fuel hoses and fuel tubes for clogging

Is the inspection result normal?

YES >> Replace “fuel filter and fuel pump assembly” and then GO TO 8.
NO >> Repair or replace and then GO TO 8.

8. CHECK “A/F ALPHA-B1”

1. Start engine.
2. Select “A/F ALPHA-B1” in “SPEC” of “DATA MONITOR” mode, and make sure that the indication is within the SP value.

Is the measurement value within the SP value?

YES >> INSPECTION END
NO >> GO TO 9.

9. PERFORM POWER BALANCE TEST

1. Perform “POWER BALANCE” in “ACTIVE TEST” mode.
2. Make sure that the each cylinder produces a momentary engine speed drop.

Is the inspection result normal?

YES >> GO TO 12.
NO >> GO TO 10.

10. DETECT MALFUNCTIONING PART

Check the following.
1. Ignition coil and its circuit (Refer to EC-963, "Component Function Check".)
2. Fuel injector and its circuit (Refer to EC-956, "Component Function Check".)
3. Intake air leakage
4. Low compression pressure (Refer to EM-23, "Compression pressure".)

Is the inspection result normal?

YES >> Replace fuel injector and then GO TO 11.
NO >> Repair or replace malfunctioning part and then GO TO 11.

11. CHECK “A/F ALPHA-B1”

1. Start engine.
2. Select “A/F ALPHA-B1” in “SPEC” of “DATA MONITOR” mode, and make sure that the indication is within the SP value.

Is the measurement value within the SP value?

YES >> INSPECTION END
NO >> GO TO 12.

12. CHECK A/F SENSOR 1 FUNCTION

Perform all DTC CONFIRMATION PROCEDURE related with A/F sensor 1.
- For DTC P0130, refer to EC-724, "DTC Logic".
- For DTC P0131, refer to EC-728, "DTC Logic".
- For DTC P0132, refer to EC-731, "DTC Logic".
- For DTC P0133, refer to EC-734, "DTC Logic".
- For DTC P2A00, refer to EC-939, "DTC Logic".

Is any DTC detected?

YES >> GO TO 15.
NO >> GO TO 13.

13. CHECK A/F SENSOR 1 CIRCUIT

Perform DIAGNOSTIC PROCEDURE according to corresponding DTC.

>> GO TO 14.

14. CHECK “A/F ALPHA-B1”

1. Start engine.
2. Select “A/F ALPHA-B1” in “SPEC” of “DATA MONITOR” mode, and make sure that the each indication is within the SP value.

Is the measurement value within the SP value?

YES >> INSPECTION END
NO >> GO TO 15.

15. DISCONNECT AND RECONNECT ECM HARNESS CONNECTOR

1. Stop the engine.

2. Disconnect ECM harness connector. Check pin terminal and connector for damage, and then reconnect it.

>> GO TO 16.

16. CHECK “A/F ALPHA-B1”

1. Start engine.
2. Select “A/F ALPHA-B1” in “SPEC” of “DATA MONITOR” mode, and make sure that the indication is within the SP value.

Is the measurement value within the SP value?

YES >> INSPECTION END
NO >> Detect malfunctioning part according to EC-1027, "Symptom Table".

17. CHECK “B/FUEL SCHDL”

Select “B/FUEL SCHDL” in “SPEC” of “DATA MONITOR” mode, and make sure that the indication is within the SP value.

Is the measurement value within the SP value?

YES >> INSPECTION END
NO-1 >> More than the SP value: GO TO 18.
NO-2 >> Less than the SP value: GO TO 25.

18. DETECT MALFUNCTIONING PART

1. Check for the cause of large engine friction. Refer to the following.
- Engine oil level is too high
- Engine oil viscosity
- Belt tension of power steering, alternator, A/C compressor, etc. is excessive
- Noise from engine
- Noise from transmission, etc.
2. Check for the cause of insufficient combustion. Refer to the following.
- Valve clearance malfunction
- Intake valve timing control function malfunction
- Camshaft sprocket installation malfunction, etc.

>> Repair or replace malfunctioning part, and then GO TO 30.

19. CHECK INTAKE SYSTEM

Check for the cause of uneven air flow through mass air flow sensor. Refer to the following.
- Crushed air ducts
- Malfunctioning seal of air cleaner element
- Uneven dirt of air cleaner element
- Improper specification of intake air system

Is the inspection result normal?

YES >> GO TO 21.
NO >> Repair or replace malfunctioning part, and then GO TO 20.

20. CHECK “A/F ALPHA-B1”, AND “B/FUEL SCHDL”

Select “A/F ALPHA-B1” and “B/FUEL SCHDL” in “SPEC” of “DATA MONITOR” mode, and make sure that the each indication is within the SP value.

Is the measurement value within the SP value?

YES >> **INSPECTION END**
NO >> “B/FUEL SCHDL” is more, “A/F ALPHA-B1” is less than the SP value: GO TO 21.

21. DISCONNECT AND RECONNECT MASS AIR FLOW SENSOR HARNESS CONNECTOR

1. Stop the engine.
2. Disconnect mass air flow sensor harness connector. Check pin terminal and connector for damage and then reconnect it again.

>> GO TO 22.

22. CHECK "A/F ALPHA-B1"

1. Start engine.
2. Select "A/F ALPHA-B1" in "SPEC" of "DATA MONITOR" mode, and make sure that the indication is within the SP value.

Is the measurement value within the SP value?

YES >> Detect malfunctioning part of mass air flow sensor circuit and repair it. Refer to EC-693, "DTC Logic". Then GO TO 29.
NO >> GO TO 23.

23. CHECK "MAS A/F SE-B1"

Select "MAS A/F SE-B1" in "SPEC" of "DATA MONITOR" mode, and make sure that the indication is within the SP value.

Is the measurement value within the SP value?

YES >> GO TO 24.
NO >> More than the SP value: Replace mass air flow sensor, and then GO TO 29.

24. REPLACE ECM

1. Replace ECM.
2. Go to EC-563, "ADDITIONAL SERVICE WHEN REPLACING CONTROL UNIT : Special Repair Requirement".

>> GO TO 29.

25. CHECK INTAKE SYSTEM

Check for the cause of uneven air flow through mass air flow sensor. Refer to the following.
- Crushed air ducts
- Malfunctioning seal of air cleaner element
- Uneven dirt of air cleaner element
- Improper specification of intake air system

Is the inspection result normal?

YES >> GO TO 27.
NO >> Repair or replace malfunctioning part, and then GO TO 26.

26. CHECK "B/FUEL SCHDL"

Select "B/FUEL SCHDL" in "SPEC" of "DATA MONITOR" mode, and make sure that the indication is within the SP value.

Is the measurement value within the SP value?

YES >> INSPECTION END
NO >> Less than the SP value: GO TO 27.

27. CHECK "MAS A/F SE-B1"

Select "MAS A/F SE-B1" in "SPEC" of "DATA MONITOR" mode, and make sure that the indication is within the SP value.

Is the measurement value within the SP value?

YES >> GO TO 28.
NO >> Less than the SP value: Replace mass air flow sensor, and then GO TO 30.

28. CHECK INTAKE SYSTEM

Check for the cause of air leak after the mass air flow sensor. Refer to the following.
- Disconnection, looseness, and cracks in air duct
- Looseness of oil filler cap
- Disconnection of oil level gauge
- Open stuck, breakage, hose disconnection, or cracks of PCV valve
- Disconnection or cracks of EVAP purge hose, open stuck of EVAP canister purge volume control solenoid valve
- Malfunctioning seal of rocker cover gasket
- Disconnection, looseness, or cracks of hoses, such as vacuum hose, connecting to intake air system parts

- Malfunctioning seal of intake air system, etc.

>> GO TO 30.

29. CHECK “A/F ALPHA-B1” AND “B/FUEL SCHDL”

Select “A/F ALPHA-B1” and “B/FUEL SCHDL” in “SPEC” of “DATA MONITOR” mode, and make sure that the indication is within the SP value.

Is the measurement value within the SP value?

YES >> INSPECTION END
NO >> Detect malfunctioning part according to EC-1027, "Symptom Table".

30. CHECK “B/FUEL SCHDL”

Select “B/FUEL SCHDL” in “SPEC” of “DATA MONITOR” mode, and then make sure that the indication is within the SP value.

Is the measurement value within the SP value?

YES >> INSPECTION END
NO >> Detect malfunctioning part according to EC-1027, "Symptom Table".

POWER SUPPLY AND GROUND CIRCUIT

Diagnosis Procedure

INFOID:0000000004349639

1. INSPECTION START

Start engine.

Is engine running?

YES >> GO TO 8.
NO >> GO TO 2.

2. CHECK ECM POWER SUPPLY CIRCUIT-I

1. Turn ignition switch OFF and then ON.
2. Check the voltage between ECM harness connector and ground.

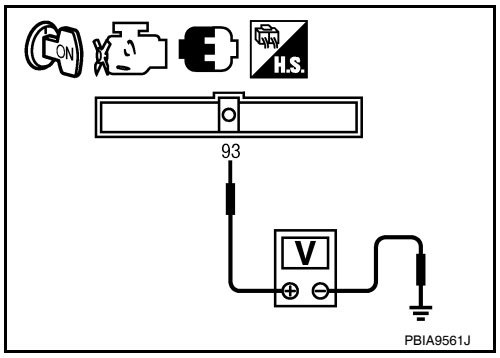

ECM		Ground	Voltage
Connector	Terminal		
E10	93	Ground	Battery voltage

Is the inspection result normal?

YES >> GO TO 4.
NO >> GO TO 3.

3. DETECT MALFUNCTIONING PART

Check the following.
- IPDM E/R harness connector E18
- 10A fuse (No. 35)
- Harness for open or short between ECM and fuse

>> Repair open circuit or short to ground or short to power in harness or connectors.

4. CHECK GROUND CONNECTION-I

1. Turn ignition switch OFF.
2. Check ground connection E9. Refer to Ground Inspection in GI-45, "Circuit Inspection".

Is the inspection result normal?

YES >> GO TO 5.
NO >> Repair or replace ground connection.

5. CHECK ECM GROUND CIRCUIT FOR OPEN AND SHORT-I

1. Disconnect ECM harness connectors.
2. Check the continuity between ECM harness connector and ground.

ECM		Ground	Continuity
Connector	Terminal		
F14	12	Ground	Existed
	16		
E10	107		
	108		
	111		
	112		

3. Also check harness for short to power.

Is the inspection result normal?

YES >> GO TO 7.

NO >> GO TO 6.

6. DETECT MALFUNCTIONING PART

Check the following.
- Harness connectors F2, E11
- Harness for open or short between ECM and ground

>> Repair open circuit or short to power in harness or connectors.

7. CHECK ECM POWER SUPPLY CIRCUIT-II

1. Reconnect ECM harness connectors.
2. Turn ignition switch ON.
3. Check the voltage between IPDM E/R harness connector and ground.

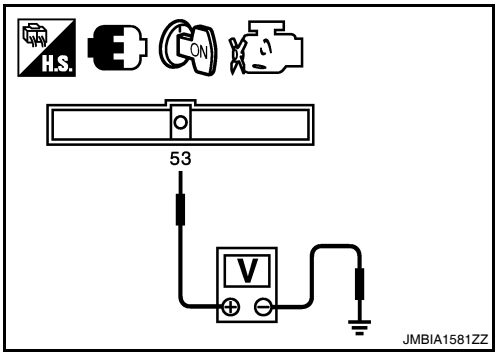

IPDM E/R		Ground	Voltage
Connector	Terminal		
F10	53	Ground	Battery voltage

Is the inspection result normal?

YES >> Go to EC-963, "Diagnosis Procedure".
NO >> GO TO 8.

8. CHECK ECM POWER SUPPLY CIRCUIT-III

1. Turn ignition switch OFF and wait at least 10 seconds.
2. Check the voltage between ECM harness connector and ground.

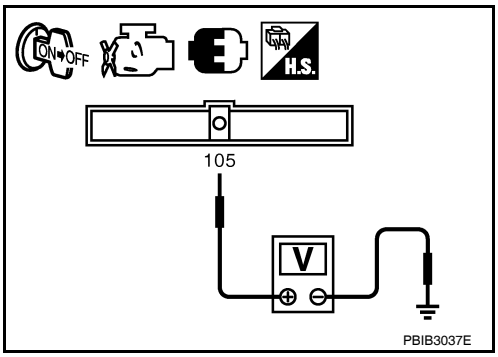

ECM		Ground	Voltage
Connector	Terminal		
E10	105	Ground	After turning ignition switch OFF, battery voltage will exist for a few seconds, then drop approximately 0V.

Is the inspection result normal?

YES >> GO TO 14.
NO-1 >> Battery voltage does not exist: GO TO 9.
NO-2 >> Battery voltage exists for more than a few seconds: GO TO 12.

9. CHECK ECM POWER SUPPLY CIRCUIT-IV

1. Turn ignition switch OFF and wait at least 10 seconds.
2. Check the voltage between ECM harness connector and ground.

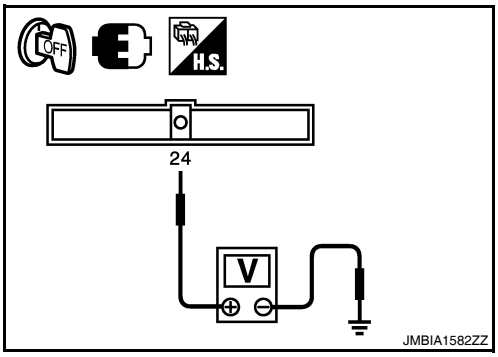

ECM		Ground	Voltage
Connector	Terminal		
F14	24	Ground	Battery voltage

Is the inspection result normal?

YES >> GO TO 10.
NO >> GO TO 12.

10. CHECK ECM POWER SUPPLY CIRCUIT-V

1. Disconnect ECM harness connector.
2. Disconnect IPDM E/R harness connector E18.
3. Check the continuity between ECM harness connector and IPDM E/R harness connector.

ECM		IPDM E/R		Continuity
Connector	Terminal	Connector	Terminal	
E10	105	E18	10	Existed

4. Also check harness for short to ground and short to power.

Is the inspection result normal?

YES >> GO TO 17.
NO >> GO TO 11.

11. DETECT MALFUNCTIONING PART

Check the following.
- Junction block connectors E44, E45
- Harness for open or short between ECM and IPDM E/R

>> Repair open circuit or short to ground or short to power in harness or connectors.

12. CHECK ECM POWER SUPPLY CIRCUIT-VI

1. Disconnect ECM harness connector.
2. Disconnect IPDM E/R harness connector F10.
3. Check the continuity between ECM harness connector and IPDM E/R harness connector.

ECM		IPDM E/R		Continuity
Connector	Terminal	Connector	Terminal	
F14	24	F10	69	Existed

4. Also check harness for short to ground and short to power.

Is the inspection result normal?

YES >> GO TO 13.
NO >> Repair open circuit or short to ground or short power in harness or connectors.

13. CHECK 15A FUSE

1. Disconnect 15A fuse (No. 42) from IPDM E/R.
2. Check 15A fuse.

Is the inspection result normal?

YES >> GO TO 17.
NO >> Replace 15A fuse.

14. CHECK GROUND CONNECTION-II

1. Turn ignition switch OFF.
2. Check ground connection E9. Refer to Ground Inspection in GI-45, "Circuit Inspection".

Is the inspection result normal?

YES >> GO TO 15.
NO >> Repair or replace ground connection.

15. CHECK ECM GROUND CIRCUIT FOR OPEN AND SHORT-II

1. Disconnect ECM harness connector.
2. Check the continuity between ECM harness connector and ground.

ECM		Ground	Continuity
Connector	Terminal		
F14	12	Ground	Existed
	16		
E10	107		
	108		
	111		
	112		

3. Also check harness for short to power.

Is the inspection result normal?

YES >> GO TO 17.
NO >> GO TO 16.

16. DETECT MALFUNCTIONING PART

Check the following.
- Harness or connectors F2, E11
- Harness for open or short between ECM and ground

>> Repair open circuit or short to power in harness or connectors.

17. CHECK INTERMITTENT INCIDENT

Refer to GI-42, "Intermittent Incident".

Is the inspection result normal?

YES >> Replace IPDM E/R.
NO >> Repair open circuit or short to power in harness or connectors.

U0101 CAN COMM CIRCUIT

Description

INFOID:0000000004349640

CAN (Controller Area Network) is a serial communication line for real time application. It is an on-vehicle multiplex communication line with high data communication speed and excellent error detection ability. Many electronic control units are equipped onto a vehicle, and each control unit shares information and links with other control units during operation (not independent). In CAN communication, control units are connected with 2 communication lines (CAN H line, CAN L line) allowing a high rate of information transmission with less wiring. Each control unit transmits/receives data but selectively reads required data only.

DTC Logic

INFOID:0000000004349641

DTC DETECTION LOGIC

DTC No.	Trouble diagnosis name	DTC detecting condition	Possible cause
U0101	Lost communication with TCM	When ECM is not transmitting or receiving CAN communication signal of OBD (emission-related diagnosis) with TCM for 2 seconds or more.	• CAN communication line between TCM and ECM (CAN communication line is open or shorted)

DTC CONFIRMATION PROCEDURE

1.PERFORM DTC CONFIRMATION PROCEDURE

1. Turn ignition switch ON and wait at least 3 seconds.
2. Check DTC.

Is DTC detected?

YES >> EC-677, "Diagnosis Procedure".
NO >> INSPECTION END

Diagnosis Procedure

INFOID:0000000004349642

Go to LAN-16, "Trouble Diagnosis Flow Chart".

U0140 CAN COMM CIRCUIT

Description

INFOID:0000000004351809

CAN (Controller Area Network) is a serial communication line for real time application. It is an on-vehicle multiplex communication line with high data communication speed and excellent error detection ability. Many electronic control units are equipped onto a vehicle, and each control unit shares information and links with other control units during operation (not independent). In CAN communication, control units are connected with 2 communication lines (CAN H line, CAN L line) allowing a high rate of information transmission with less wiring. Each control unit transmits/receives data but selectively reads required data only.

DTC Logic

INFOID:0000000004351810

DTC DETECTION LOGIC

DTC No.	Trouble diagnosis name	DTC detecting condition	Possible cause
U0140	Lost commuinication with BCM	When ECM is not transmitting or receiving CAN communication signal of OBD (emission related diagnosis) with BCM for 2 seconds or more.	• CAN communication line between BCM and ECM (CAN communication line is open or shorted)

DTC CONFIRMATION PROCEDURE

1.PERFORM DTC CONFIRMATION PROCEDURE

1. Turn ignition switch ON and wait at least 3 seconds.
2. Check DTC.

Is DTC detected?

YES >> EC-678, "Diagnosis Procedure".
NO >> INSPECTION END

Diagnosis Procedure

INFOID:0000000004351811

Go to LAN-16, "Trouble Diagnosis Flow Chart".

U1001 CAN COMM CIRCUIT

Description

INFOID:0000000004468222

CAN (Controller Area Network) is a serial communication line for real time application. It is an on-vehicle multiplex communication line with high data communication speed and excellent error detection ability. Many electronic control units are equipped onto a vehicle, and each control unit shares information and links with other control units during operation (not independent). In CAN communication, control units are connected with 2 communication lines (CAN H line, CAN L line) allowing a high rate of information transmission with less wiring. Each control unit transmits/receives data but selectively reads required data only.

DTC Logic

INFOID:0000000004468220

DTC DETECTION LOGIC

DTC No.	Trouble diagnosis name	DTC detecting condition	Possible cause
U1001	CAN communication line	When ECM is not transmitting or receiving CAN communication signal other than OBD (emission related diagnosis) for 2 seconds or more.	• Harness or connectors (CAN communication line is open or shorted)

DTC CONFIRMATION PROCEDURE

1.PERFORM DTC CONFIRMATION PROCEDURE

1. Turn ignition switch ON and wait at least 3 seconds.
2. Check 1st trip DTC.

Is 1st trip DTC detected?

YES >> EC-679, "Diagnosis Procedure".
NO >> INSPECTION END

Diagnosis Procedure

INFOID:0000000004468223

Go to LAN-16, "Trouble Diagnosis Flow Chart".

P0011 IVT CONTROL

DTC Logic

INFOID:0000000004349646

DTC DETECTION LOGIC

NOTE:
If DTC P0011 is displayed with DTC P0075, first perform the trouble diagnosis for EC-867, "DTC Logic".

DTC No.	Trouble diagnosis name	DTC detecting condition	Possible cause
P0011	Intake valve timing control performance	There is a gap between angle of target and phase-control angle degree.	• Crankshaft position sensor (POS) • Camshaft position sensor (PHASE) • Intake valve control solenoid valve • Accumulation of debris to the signal pick-up portion of the camshaft • Timing chain installation • Foreign matter caught in the oil groove for intake valve timing control

DTC CONFIRMATION PROCEDURE

1.PRECONDITIONING

If DTC Confirmation Procedure has been previously conducted, always turn ignition switch OFF and wait at least 10 seconds before conducting the next test.
TESTING CONDITION:
Before performing the following procedure, confirm that battery voltage is between 10V and 16V at idle.

>> GO TO 2.

2.PERFORM DTC CONFIRMATION PROCEDURE-I

With CONSULT-III
1. Turn ignition switch ON and select “DATA MONITOR” mode with CONSULT-III.
2. Start engine and warm it up to the normal operating temperature.
3. Maintain the following conditions for at least 6 consecutive seconds. Hold the accelerator pedal as steady as possible.

ENG SPEED	1,200 - 2,000 rpm
COOLAN TEMP/S	More than 60°C (140°F)
B/FUEL SCHDL	More than 3.5 msec (CVT) More than 4.2 msec (M/T)
Shift lever	D position (CVT) 5th position (M/T)

CAUTION:
Always drive at a safe speed.
4. Stop vehicle with engine running and let engine idle for 10 seconds.
5. Check 1st trip DTC.

With GST
Follow the procedure “With CONSULT-III” above.

Is 1st trip DTC detected?

YES >> Go to EC-681, "Diagnosis Procedure"
NO >> GO TO 3.

3.PERFORM DTC CONFIRMATION PROCEDURE-II

With CONSULT-III
1. Maintain the following conditions for at least 20 consecutive seconds.

ENG SPEED	1,700 - 3,175 rpm (A constant rotation is maintained.)
COOLAN TEMP/S	More than 70°C (221°F)
Shift lever	1st or 2nd position
Driving location uphill	Driving vehicle uphill (Increased engine load will help maintain the driving conditions required for this test.)

CAUTION:
Always drive at a safe speed.

2. Check 1st trip DTC.

With GST

Follow the procedure “With CONSULT-III” above.

Is 1st trip DTC detected?

YES >> Go to EC-681, "Diagnosis Procedure"
NO >> INSPECTION END

Diagnosis Procedure

INFOID:0000000004349647

1. CHECK OIL PRESSURE WARNING LAMP

1. Start engine.
2. Check oil pressure warning lamp and confirm it is not illuminated.

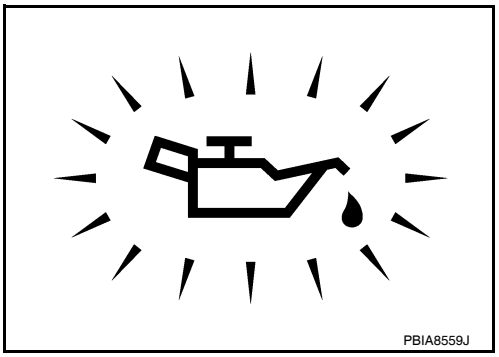

Is oil pressure warning lamp illuminated?

YES >> Go to LU-9, "Inspection".
NO >> GO TO 2.

2. CHECK INTAKE VALVE TIMING CONTROL SOLENOID VALVE

Refer to EC-682, "Component Inspection".

Is the inspection result normal?

YES >> GO TO 3.
NO >> Replace intake valve timing control solenoid valve.

3. CHECK CRANKSHAFT POSITION SENSOR (POS)

Refer to EC-786, "Component Inspection".

Is the inspection result normal?

YES >> GO TO 4.
NO >> Replace crankshaft position sensor (POS).

4. CHECK CAMSHAFT POSITION SENSOR (PHASE)

Refer to EC-789, "Component Inspection".

Is the inspection result normal?

YES >> GO TO 5.
NO >> Replace camshaft position sensor (PHASE).

5. CHECK CAMSHAFT (INTAKE)

Check the following.

- Accumulation of debris to the signal plate of camshaft (1) rear end
- Chipping signal plate of camshaft rear end

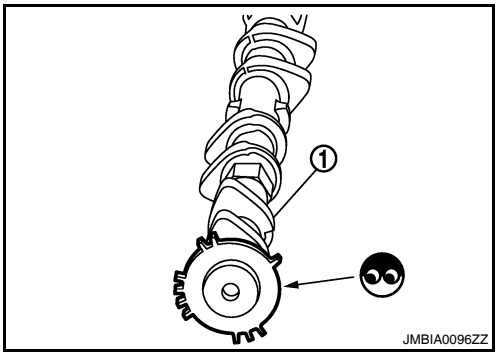

Is the inspection result normal?

YES >> GO TO 6.
NO >> Remove debris and clean the signal plate of camshaft rear end or replace camshaft.

6. CHECK TIMING CHAIN INSTALLATION

Check service records for any recent repairs that may cause timing chain misaligned.

Are there any service records that may cause timing chain misaligned?

YES >> Check timing chain installation. Refer to EM-52, "Removal and Installation".
NO >> GO TO 7.

7. CHECK LUBRICATION CIRCUIT

Refer to EM-48, "Inspection After Installation".

Is the inspection result normal?

YES >> GO TO 8.
NO >> Clean lubrication line.

8. CHECK INTERMITTENT INCIDENT

Refer to GI-42, "Intermittent Incident".

>> INSPECTION END

Component Inspection

INFOID:0000000004349648

1. CHECK INTAKE VALVE TIMING CONTROL SOLENOID VALVE-I

1. Turn ignition switch OFF.
2. Disconnect intake valve timing control solenoid valve harness connector.
3. Check resistance between intake valve timing control solenoid valve terminals as follows.

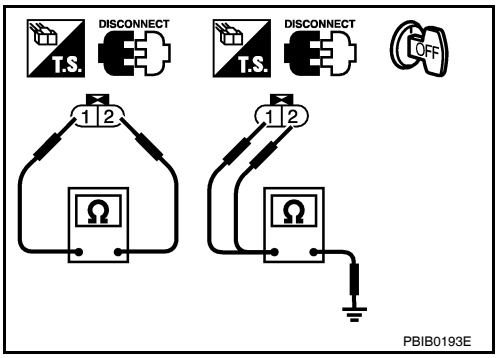

Terminals	Resistance
1 and 2	7.0 - 7.5Ω [at 20°C (68°F)]
1 or 2 and ground	∞Ω (Continuity should not exist)

Is the inspection result normal?

YES >> GO TO 2.
NO >> Replace intake valve timing control solenoid valve.

2. CHECK INTAKE VALVE TIMING CONTROL SOLENOID VALVE-II

1. Remove intake valve timing control solenoid valve.

2. Provide 12V DC between intake valve timing control solenoid valve terminals 1 and 2, and then interrupt it. Make sure that the plunger moves as shown in the figure.
   CAUTION:
   Do not apply 12V DC continuously for 5 seconds or more. Doing so may result in damage to the coil in intake valve timing control solenoid valve.
   NOTE:
   Always replace O-ring when intake valve timing control solenoid valve is removed.

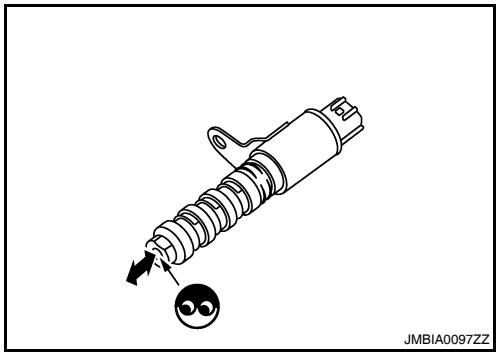

Is the inspection result normal?

YES >> INSPECTION END
NO >> Replace intake valve timing control solenoid valve.

P0031, P0032 A/F SENSOR 1 HEATER

Description

INFOID:0000000004349649

SYSTEM DESCRIPTION

Sensor	Input Signal to ECM	ECM function	Actuator
Camshaft position sensor (PHASE) Crankshaft position sensor (POS)	Engine speed	Air fuel ratio (A/F) sensor 1 heater control	Air fuel ratio (A/F) sensor 1 heater
Mass air flow sensor	Amount of intake air		

The ECM performs ON/OFF duty control of the A/F sensor 1 heater corresponding to the engine operating condition to keep the temperature of A/F sensor 1 element at the specified range.

DTC Logic

INFOID:0000000004349650

DTC DETECTION LOGIC

DTC No.	Trouble diagnosis name	DTC detecting condition	Possible cause
P0031	Air fuel ratio (A/F) sensor 1 heater control circuit low	The current amperage in the A/F sensor 1 heater circuit is out of the normal range. (An excessively low voltage signal is sent to ECM through the A/F sensor 1 heater.)	• Harness or connectors (The A/F sensor 1 heater circuit is open or shorted.) • A/F sensor 1 heater
P0032	Air fuel ratio (A/F) sensor 1 heater control circuit high	The current amperage in the A/F sensor 1 heater circuit is out of the normal range. (An excessively high voltage signal is sent to ECM through the A/F sensor 1 heater.)	• Harness or connectors (The A/F sensor 1 heater circuit is shorted.) • A/F sensor 1 heater

DTC CONFIRMATION PROCEDURE

1. PRECONDITIONING

If DTC Confirmation Procedure has been previously conducted, always turn ignition switch OFF and wait at least 10 seconds before conducting the next test.

TESTING CONDITION:

Before performing the following procedure, confirm that battery voltage is more than between 11V at idle.

>> GO TO 2.

2. PERFORM DTC CONFIRMATION PROCEDURE

1. Start engine and let it idle for at least 10 seconds.
2. Check 1st trip DTC.

Is 1st trip DTC detected?

YES >> Go to EC-684, "Diagnosis Procedure".
NO >> INSPECTION END

Diagnosis Procedure

INFOID:0000000004349651

1. CHECK GROUND CONNECTION

1. Turn ignition switch OFF.
2. Check ground connection E9. Refer to Ground Inspection in GI-45, "Circuit Inspection".

Is the inspection result normal?

YES >> GO TO 2.
NO >> Repair or replace ground connection.

2. CHECK AIR FUEL RATIO (A/F) SENSOR 1 POWER SUPPLY CIRCUIT

1. Disconnect air fuel ratio (A/F) sensor 1 harness connector.
2. Turn ignition switch ON.

3. Check the voltage between A/F sensor 1 harness connector and ground.

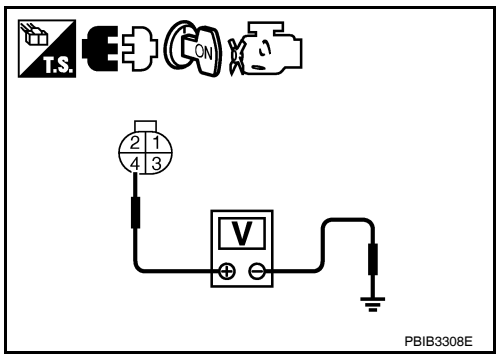

A/F sensor 1		Ground	Voltage
Connector	Terminal		
F44	4	Ground	Battery voltage

Is the inspection result normal?

YES >> GO TO 4.
NO >> GO TO 3.

3. DETECT MALFUNCTIONING PART

Check the following.
- IPDM E/R harness connector F10
- 15A fuse (No. 37)
- Harness for open or short between A/F sensor 1 and fuse

>> Repair or replace harness or connectors.

4. CHECK A/F SENSOR 1 HEATER OUTPUT SIGNAL CIRCUIT

1. Turn ignition switch OFF.
2. Disconnect ECM harness connector.
3. Check the continuity between A/F sensor 1 harness connector and ECM harness connector.

A/F sensor 1		ECM		Continuity
Connector	Terminal	Connector	Terminal	
F44	3	F14	4	Existed

4. Also check harness for short to ground and short to power.

Is the inspection result normal?

YES >> GO TO 5.
NO >> Repair open circuit or short to ground or short to power in harness or connectors.

5. CHECK A/F SENSOR 1 HEATER

Refer to EC-686, "Component Inspection".

Is the inspection result normal?

YES >> GO TO 7.
NO >> GO TO 6.

6. REPLACE AIR FUEL RATIO (A/F) SENSOR 1

Replace air fuel ratio (A/F) sensor 1.

CAUTION:
- **Discard any sensor which has been dropped from a height of more than 0.5 m (19.7 in) onto a hard surface such as a concrete floor; use a new one.**
- **Before installing new sensor, clean exhaust system threads using oxygen sensor thread cleaner tool [commercial service tool: (J-43897-18) or (J-43897-12)] and approved anti-seize lubricant (commercial service tool).**

>> INSPECTION END

7. CHECK INTERMITTENT INCIDENT

Perform GI-42, "Intermittent Incident".

>> Repair or replace.

Component Inspection

INFOID:0000000004349652

1. CHECK AIR FUEL RATIO (A/F) SENSOR 1

1. Turn ignition switch OFF.
2. Disconnect A/F sensor 1 harness connector.
3. Check resistance between A/F sensor 1 terminals as follows.

Terminals	Resistance
3 and 4	1.8 - 2.44 Ω [at 25°C (77°F)]
3 and 1, 2	∞Ω (Continuity should not exist)
4 and 1, 2	

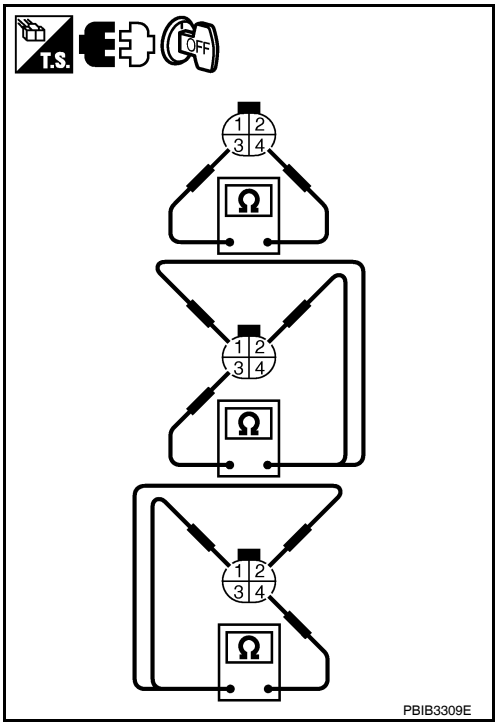

Is the inspection result normal?

YES >> INSPECTION END
NO >> GO TO 2.

2. REPLACE AIR FUEL RATIO (A/F) SENSOR 1

Replace air fuel ratio (A/F) sensor 1.

CAUTION:

- **Discard any sensor which has been dropped from a height of more than 0.5 m (19.7 in) onto a hard surface such as a concrete floor; use a new one.**
- **Before installing new sensor, clean exhaust system threads using oxygen sensor thread cleaner tool [commercial service tool: (J-43897-18) or J43897-12] and approved anti-seize lubricant (commercial service tool).**

>> INSPECTION END

P0037, P0038 HO2S2 HEATER

Description

INFOID:0000000004349653

SYSTEM DESCRIPTION

Sensor	Input signal to ECM	ECM function	Actuator
Camshaft position sensor (PHASE) Crankshaft position sensor (POS)	Engine speed	Heated oxygen sensor 2 heater control	Heated oxygen sensor 2 heater
Engine coolant temperature sensor	Engine coolant temperature		
Mass air flow sensor	Amount of intake air		

The ECM performs ON/OFF control of the heated oxygen sensor 2 heater corresponding to the engine speed, amount of intake air and engine coolant temperature.

OPERATION

Engine speed	Heated oxygen sensor 2 heater
Above 3,600 rpm	OFF
Below 3,600 rpm after the following conditions are met. • Engine: After warming up • Keeping the engine speed between 3,500 and 4,000 rpm for 1 minute and at idle for 1 minute under no load	ON

DTC Logic

INFOID:0000000004349654

DTC DETECTION LOGIC

DTC No.	Trouble diagnosis name	DTC detecting condition	Possible cause
P0037	Heated oxygen sensor 2 heater control circuit low	The current amperage in the heated oxygen sensor 2 heater circuit is out of the normal range. (An excessively low voltage signal is sent to ECM through the heated oxygen sensor 2 heater.)	• Harness or connectors (The heated oxygen sensor 2 heater circuit is open or shorted.) • Heated oxygen sensor 2 heater
P0038	Heated oxygen sensor 2 heater control circuit high	The current amperage in the heated oxygen sensor 2 heater circuit is out of the normal range. (An excessively high voltage signal is sent to ECM through the heated oxygen sensor 2 heater.)	• Harness or connectors (The heated oxygen sensor 2 heater circuit is shorted.) • Heated oxygen sensor 2 heater

DTC CONFIRMATION PROCEDURE

1. PRECONDITIONING

If DTC Confirmation Procedure has been previously conducted, always turn ignition switch OFF and wait at least 10 seconds before conducting the next test.

TESTING CONDITION:

Before performing the following procedure, confirm that battery voltage is more than 11V at idle.

>> GO TO 2.

2. PERFORM DTC CONFIRMATION PROCEDURE

With CONSULT-III

1. Turn ignition switch ON and select “DATA MONITOR” mode with CONSULT-III.
2. Start engine and warm it up to the normal operating temperature.
3. Turn ignition switch OFF and wait at least 10 seconds.
4. Start engine and keep the engine speed between 3,500 and 4,000 rpm for at least 1 minute under no load.
5. Let engine idle for 1 minute.
6. Check 1st trip DTC.

With GST

Follow the procedure “With CONSULT-III” above.

Is 1st trip DTC detected?

YES >> Go to EC-688, "Diagnosis Procedure".
NO >> INSPECTION END

Diagnosis Procedure

INFOID:0000000004349655

1. CHECK GROUND CONNECTION

1. Turn ignition switch OFF.
2. Check ground connection E9. Refer to Ground Inspection in GI-45, "Circuit Inspection".

Is the inspection result normal?

YES >> GO TO 2.
NO >> Repair or replace ground connection.

2. CHECK HO2S2 POWER SUPPLY CIRCUIT

1. Disconnect heated oxygen sensor 2 harness connector.
2. Turn ignition switch ON.
3. Check the voltage between HO2S2 harness connector and ground.

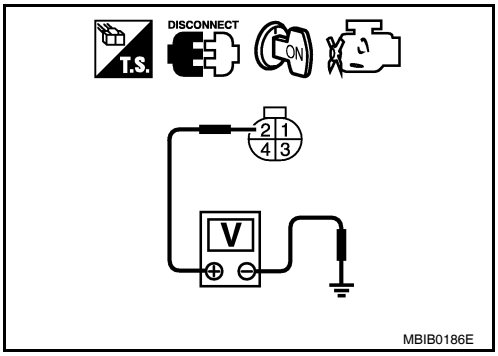

HO2S2		Ground	Voltage
Connector	Terminal		
F42	2	Ground	Battery voltage

Is the inspection result normal?

YES >> GO TO 4.
NO >> GO TO 3.

3. DETECT MALFUNCTIONING PART

Check the following.
- IPDM E/R connector F10
- 15A fuse (No. 37)
- Harness for open or short between heated oxygen sensor 2 and fuse

>> Repair open circuit or short to ground or short to power in harness or connectors.

4. CHECK HO2S2 OUTPUT SIGNAL CIRCUIT FOR OPEN AND SHORT

1. Turn ignition switch OFF.
2. Disconnect ECM harness connector.
3. Check the continuity between HO2S2 harness connector and ECM harness connector.

HO2S2		ECM		Continuity
Connector	Terminal	Connector	Terminal	
F42	3	F14	13	Existed

4. Also check harness for short to ground and short to power.

Is the inspection result normal?

YES >> GO TO 5.
NO >> Repair open circuit or short to ground or short to power in harness or connectors.

5. CHECK HEATED OXYGEN SENSOR 2 HEATER

Refer to EC-689, "Component Inspection".

Is the inspection result normal?

YES >> GO TO 7.
NO >> GO TO 6.

6. REPLACE HEATED OXYGEN SENSOR 2

Replace heated oxygen sensor 2.

CAUTION:
- **Discard any sensor which has been dropped from a height of more than 0.5 m (19.7 in) onto a hard surface such as a concrete floor; use a new one.**
- **Before installing new sensor, clean exhaust system threads using oxygen sensor thread cleaner tool [commercial service tool: (J-43897-18) or J43897-12] and approved anti-seize lubricant (commercial service tool).**

>> INSPECTION END

7. CHECK INTERMITTENT INCIDENT

Refer to GI-42, "Intermittent Incident".

>> INSPECTION END

Component Inspection

INFOID:0000000004349656

1. CHECK HEATED OXYGEN SENSOR 2 HEATER

1. Turn ignition switch OFF.
2. Disconnect heated oxygen sensor 2 harness connector.
3. Check resistance between HO2S2 terminals as follows.

Terminals	Resistance
2 and 3	3.4 - 4.4 Ω [at 25°C (77°F)]
1 and 2, 3, 4	∞Ω (Continuity should not exist)
4 and 1, 2, 3	

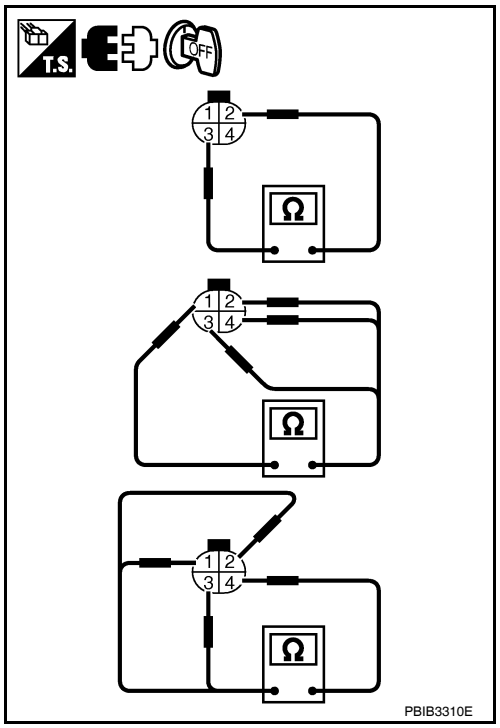

Is the inspection result normal?

YES >> INSPECTION END
NO >> GO TO 2.

2. REPLACE HEATED OXYGEN SENSOR 2

Replace heated oxygen sensor 2.

CAUTION:
- **Discard any sensor which has been dropped from a height of more than 0.5 m (19.7 in) onto a hard surface such as a concrete floor; use a new one.**
- **Before installing new sensor, clean exhaust system threads using oxygen sensor thread cleaner tool [commercial service tool: (J-43897-18) or J43897-12] and approved anti-seize lubricant (commercial service tool).**

>> INSPECTION END

P0075 IVT CONTROL SOLENOID VALVE

Description

INFOID:0000000004349657

Intake valve timing control solenoid valve is activated by ON/OFF pulse duty (ratio) signals from the ECM.
The intake valve timing control solenoid valve changes the oil amount and direction of flow through intake valve timing control unit or stops oil flow.
The longer pulse width advances valve angle.
The shorter pulse width retards valve angle.
When ON and OFF pulse widths become equal, the solenoid valve stops oil pressure flow to fix the intake valve angle at the control position.

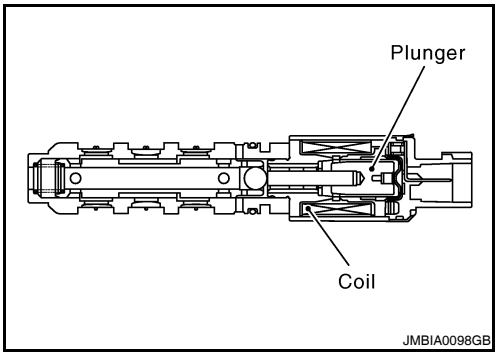

DTC Logic

INFOID:0000000004349658

DTC DETECTION LOGIC

DTC No.	Trouble diagnosis name	DTC detecting condition	Possible cause
P0075	Intake valve timing control solenoid valve circuit	An improper voltage is sent to the ECM through intake valve timing control solenoid valve.	• Harness or connectors (Intake valve timing control solenoid valve circuit is open or shorted.) • Intake valve timing control solenoid valve

DTC CONFIRMATION PROCEDURE

1.PRECONDITIONING

If DTC Confirmation Procedure has been previously conducted, always turn ignition switch OFF and wait at least 10 seconds before conducting the next test.

>> GO TO2.

2.PERFORM DTC CONFIRMATION PROCEDURE

1. Start engine and let it idle for 5 seconds.
2. Check 1st trip DTC.

Is 1st trip DTC detected?

YES >> Go to EC-690, "Diagnosis Procedure".
NO >> INSPECTION END

Diagnosis Procedure

INFOID:0000000004349659

1.CHECK INTAKE VALVE TIMING CONTROL SOLENOID VALVE POWER SUPPLY CIRCUIT

1. Turn ignition switch OFF.
2. Disconnect intake valve timing control solenoid valve harness connector.
3. Turn ignition switch ON.
4. Check the voltage between intake valve timing control solenoid valve harness connector and ground.

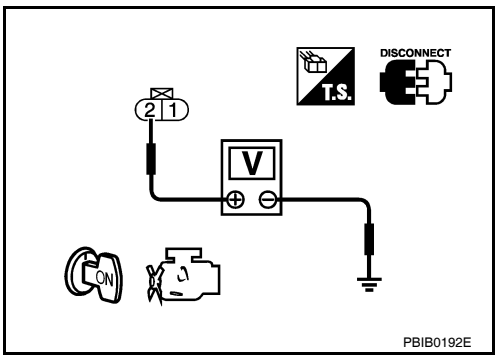

IVT control solenoid valve		Ground	Voltage
Connector	Terminal		
F59	1	Ground	Battery voltage

Is the inspection result normal?

YES >> GO TO 2.
NO >> Repair open circuit or short to ground or short to power in harness or connectors.

2. CHECK INTAKE VALVE TIMING CONTROL SOLENOID VALVE OUTPUT SIGNAL CIRCUIT FOR OPEN AND SHORT

1. Turn ignition switch OFF.
2. Disconnect ECM harness connector.
3. Check the continuity between intake valve timing control solenoid valve harness connector and ECM harness connector.

IVT control solenoid valve		ECM		Continuity
Connector	Terminal	Connector	Terminal	
F59	2	F13	78	Existed

4. Also check harness for short to ground and short to power.

Is the inspection result normal?

YES >> GO TO 3.
NO >> Repair open circuit or short to ground or short to power in harness or connectors.

3. CHECK INTAKE VALVE TIMING CONTROL SOLENOID VALVE

Refer to EC-691, "Component Inspection".

Is the inspection result normal?

YES >> GO TO 4.
NO >> Replace intake valve timing control solenoid valve.

4. CHECK INTERMITTENT INCIDENT

Refer to GI-42, "Intermittent Incident".

>> INSPECTION END

Component Inspection

INFOID:0000000004349660

1. CHECK INTAKE VALVE TIMING CONTROL SOLENOID VALVE-I

1. Turn ignition switch OFF.
2. Disconnect intake valve timing control solenoid valve harness connector.
3. Check resistance between intake valve timing control solenoid valve terminals as follows.

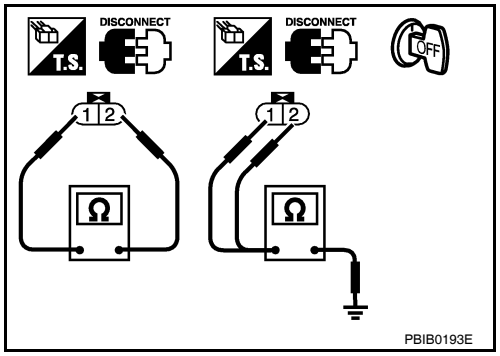

Terminals	Resistance
1 and 2	7.0 - 7.5Ω [at 20°C (68°F)]
1 or 2 and ground	∞Ω (Continuity should not exist)

Is the inspection result normal?

YES >> GO TO 2.
NO >> Replace intake valve timing control solenoid valve.

2. CHECK INTAKE VALVE TIMING CONTROL SOLENOID VALVE-II

1. Remove intake valve timing control solenoid valve.

2. Provide 12V DC between intake valve timing control solenoid valve terminals 1 and 2, and then interrupt it. Make sure that the plunger moves as shown in the figure.

   CAUTION:

   Do not apply 12V DC continuously for 5 seconds or more. Doing so may result in damage to the coil in intake valve timing control solenoid valve.

   NOTE:

   Always replace O-ring when intake valve timing control solenoid valve is removed.

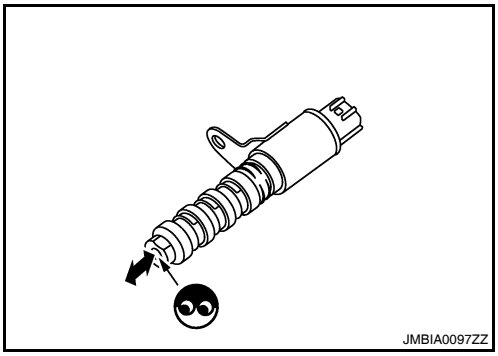

Is the inspection result normal?

YES >> INSPECTION END
NO >> Replace intake valve timing control solenoid valve.

P0101 MAF SENSOR

Description

INFOID:0000000004349661

The mass air flow sensor (1) is placed in the stream of intake air. It measures the intake flow rate by measuring a part of the entire intake flow. The mass air flow sensor controls the temperature of the hot wire to a certain amount. The heat generated by the hot wire is reduced as the intake air flows around it. The more air, the greater the heat loss.
Therefore, the electric current supplied to hot wire is changed to maintain the temperature of the hot wire as air flow increases. The ECM detects the air flow by means of this current change.

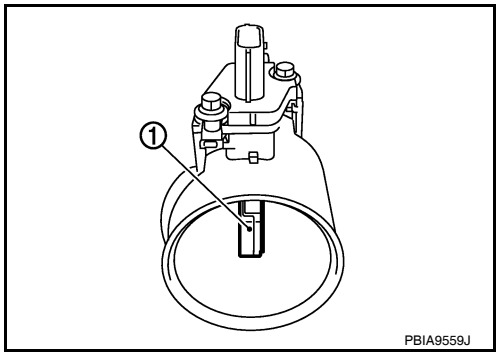

DTC Logic

INFOID:0000000004349662

DTC DETECTION LOGIC

DTC No.	Trouble diagnosis name	DTC detecting condition		Possible cause
P0101	Mass air flow sensor circuit range/performance	A)	A high voltage from the sensor is sent to ECM under light load driving condition.	• Harness or connectors (The sensor circuit is open or shorted.) • Mass air flow sensor • EVAP control system pressure sensor
		B)	A low voltage from the sensor is sent to ECM under heavy load driving condition.	• Harness or connectors (The sensor circuit is open or shorted.) • Intake air leaks • Mass air flow sensor • EVAP control system pressure sensor • Intake air temperature sensor

DTC CONFIRMATION PROCEDURE

1. PRECONDITIONING

If DTC Confirmation Procedure has been previously conducted, always turn ignition switch OFF and wait at least 10 seconds before conducting the next test.
If engine will not start or stops soon, wait at least 10 seconds with engine stopped (Ignition switch ON) instead of running engine at idle speed.

>> GO TO 2.

2. PERFORM DTC CONFIRMATION PROCEDURE FOR MALFUNCTION A

1. Start engine and warm it up to normal operating temperature.
2. Run engine for at least 10 seconds at idle speed.
3. Check 1st trip DTC.

Is 1st trip DTC detected?

YES >> Go to EC-695, "Diagnosis Procedure".
NO-1 >> With CONSULT-III: GO TO 3.
NO-2 >> Without CONSULT-III: GO TO 5.

3. CHECK MASS AIR FLOW SENSOR FUNCTION

1. Turn ignition switch ON.
2. Start engine and warm it up to normal operating temperature.
   If engine cannot be started, go to EC-695, "Diagnosis Procedure".

3. Select “DATA MONITOR” mode with CONSULT-III.
4. Check the voltage of “MAS A/F SE-B1” with “DATA MONITOR”.
5. Increases engine speed to about 4,000 rpm.
6. Monitor the linear voltage rise in response to engine speed increases.

Is the inspection result normal?

YES >> GO TO 4.
NO >> Go to EC-695, "Diagnosis Procedure".

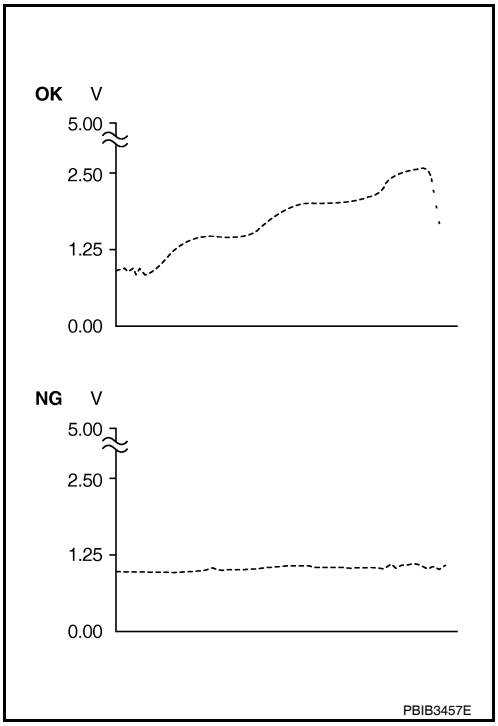

4. PERFORM DTC CONFIRMATION PROCEDURE FOR MALFUNCTION B

1. Maintain the following conditions for at least 10 consecutive seconds.

ENG SPEED	More than 1,500 rpm
THRTL SEN 1-B1	More than 3V
THRTL SEN 2-B1	More than 3V
Shift lever	Suitable position
Driving location	Driving vehicle uphill (Increased engine load) will help maintain the driving conditions required for this test.

CAUTION:
Always drive vehicle at a safe speed.

2. Check 1st trip DTC.

Is 1st trip DTC detected?

YES >> Go to EC-695, "Diagnosis Procedure".
NO >> INSPECTION END

5. PERFORM COMPONENT FUNCTION CHECK FOR MALFUNCTION B

Perform component function check. Refer to EC-694, "Component Function Check".

NOTE:
Use component function check to check the overall function of the mass air flow sensor circuit. During this check, a DTC might not be confirmed.

Is the inspection result normal?

YES >> INSPECTION END
NO >> Go to EC-695, "Diagnosis Procedure".

Component Function Check

INFOID:0000000004349663

1. PERFORM COMPONENT FUNCTION CHECK FOR MALFUNCTION B

With GST

1. Start engine and warm it up to normal operating temperature.
2. Select Service $01 with GST.

3. Check the mass air flow sensor signal with Service $01.
4. Check for linear mass air flow sensor signal value rise in response to increases to about 4,000 rpm in engine speed.

Is the inspection result normal?

YES >> INSPECTION END
NO >> Go to EC-695, "Diagnosis Procedure".

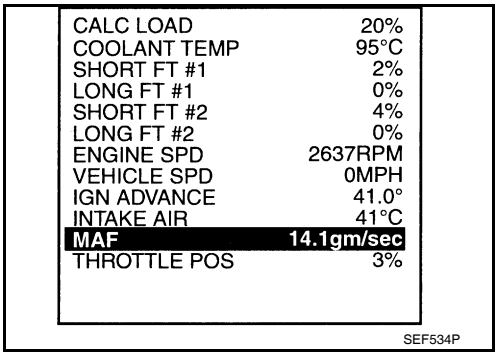

Diagnosis Procedure

INFOID:0000000004349664

1. INSPECTION START

Confirm the detected malfunction (A or B). Refer to EC-693, "DTC Logic".

Which malfunction is detected?

A >> GO TO 3.
B >> GO TO 2.

2. CHECK INTAKE SYSTEM

Check the following for connection.
- Air duct
- Vacuum hoses
- Intake air passage between air duct and intake manifold

Is the inspection result normal?

YES >> GO TO 3.
NO >> Reconnect the parts.

3. CHECK GROUND CONNECTION

1. Turn ignition switch OFF.
2. Check ground connection E9. Refer to Ground Inspection in GI-45, "Circuit Inspection".

Is the inspection result normal?

YES >> GO TO 4.
NO >> Repair or replace ground connection.

4. CHECK MAF SENSOR POWER SUPPLY CIRCUIT

1. Disconnect mass air flow (MAF) sensor harness connector.
2. Turn ignition switch ON.
3. Check the voltage between MAF sensor harness connector and ground.

MAF sensor		Ground	Voltage
Connector	Terminal		
F31	5	Ground	Battery voltage

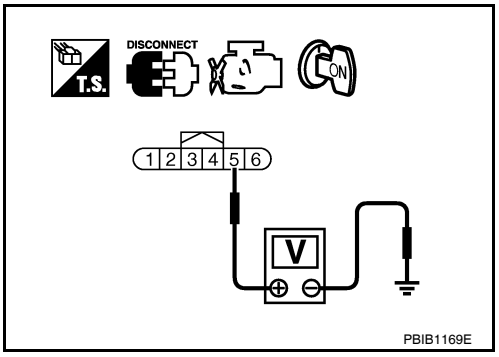

Is the inspection result normal?

YES >> GO TO 6.
NO >> GO TO 5.

5. DETECT MALFUNCTIONING PART

Check the following.
- Junction block connector E44
- Harness connector E11,F2
- 15A fuse (No.42)
- Harness for open or short between mass air flow sensor and ECM
- Harness for open or short between mass air flow sensor and IPDM E/R

>> Repair open circuit or short to ground or short to power in harness or connectors.

6. CHECK MAF SENSOR GROUND CIRCUIT FOR OPEN AND SHORT

1. Turn ignition switch OFF.
2. Disconnect ECM harness connector.
3. Check the continuity between MAF sensor harness connector and ECM harness connector.

MAF sensor		ECM		Continuity
Connector	Terminal	Connector	Terminal	
F31	4	F13	56	Existed

4. Also check harness for short to ground and short to power.

Is the inspection result normal?

YES >> GO TO 7.
NO >> Repair open circuit or short to ground or short to power in harness or connectors.

7. CHECK MAF SENSOR INPUT SIGNAL CIRCUIT FOR OPEN AND SHORT

1. Check the continuity between MAF sensor harness connector and ECM harness connector.

MAF sensor		ECM		Continuity
Connector	Terminal	Connector	Terminal	
F31	3	F13	58	Existed

2. Also check harness for short to ground and short to power.

Is the inspection result normal?

YES >> GO TO 8.
NO >> Repair open circuit or short to ground or short to power in harness or connectors.

8. CHECK INTAKE AIR TEMPERATURE SENSOR

Check intake air temperature sensor.
Refer to EC-707, "Component Inspection".

Is the inspection result normal?

YES >> GO TO 9.
NO >> Replace mass air flow sensor (with intake air temperature sensor).

9. CHECK EVAP CONTROL SYSTEM PRESSURE SENSOR

Refer to EC-824, "Component Inspection".

Is the inspection result normal?

YES >> GO TO 10.
NO >> Replace EVAP control system pressure sensor.

10. CHECK MASS AIR FLOW SENSOR

Refer to EC-696, "Component Inspection".

Is the inspection result normal?

YES >> GO TO 11.
NO >> Replace mass air flow sensor.

11. CHECK INTERMITTENT INCIDENT

Refer to GI-42, "Intermittent Incident".

>> INSPECTION END

Component Inspection

INFOID:0000000004349665

1. CHECK MASS AIR FLOW SENSOR-I

With CONSULT-III

1. Turn ignition switch OFF.
2. Reconnect all harness connectors disconnected.
3. Start engine and warm it up to normal operating temperature.
4. Connect CONSULT-III and select “DATA MONITOR” mode.
5. Select “MAS A/F SE-B1” and check indication.

Monitor item	Condition	MAS A/F SE-B1
MAS A/F SE-B1	Ignition switch ON (Engine stopped.)	Approx. 0.4V
	Idle (Engine is warmed-up to normal operating temperature.)	0.9 - 1.1V
	2,500 rpm (Engine is warmed-up to normal operating temperature.)	1.4 - 1.7V
	Idle to about 4,000 rpm	0.9 - 1.1V to Approx. 2.4V*

*: Check for linear voltage rise in response to engine being increased to about 4,000 rpm.

Without CONSULT-III

1. Turn ignition switch OFF.
2. Reconnect all harness connectors disconnected.
3. Start engine and warm it up to normal operating temperature.
4. Check the voltage between ECM harness connector and ground.

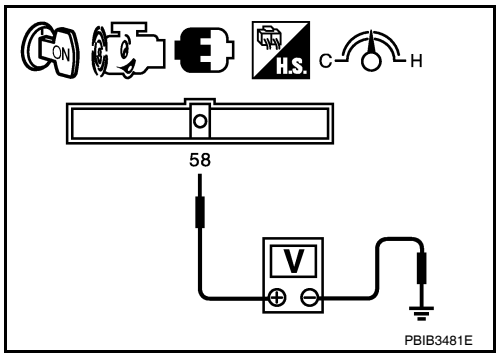

ECM		Ground	Condition	Voltage
Connec-tor	Terminal			
F13	58 (MAF sensor signal)	Ground	Ignition switch ON (Engine stopped.)	Approx. 0.4V
			Idle (Engine is warmed-up to normal operating temperature.)	0.9 - 1.1V
			2,500 rpm (Engine is warmed-up to normal operating temper-ature.)	1.4 - 1.7V
			Idle to about 4,000 rpm	0.9 - 1.1V to Approx. 2.4V*

*: Check for linear voltage rise in response to engine being increased to about 4,000 rpm.

Is the inspection result normal?

YES >> GO TO 4.
NO >> GO TO 2.

2. CHECK FOR THE CAUSE OF UNEVEN AIR FLOW THROUGH MASS AIR FLOW SENSOR

1. Turn ignition switch OFF.
2. Check for the cause of uneven air flow through mass air flow sensor. Refer to following.

- Crushed air ducts
- Malfunctioning seal of air cleaner element
- Uneven dirt of air cleaner element
- Improper specification of intake air system parts

Is the inspection result normal?

YES >> GO TO 4.
NO >> GO TO 3.

3. CHECK MASS AIR FLOW SENSOR-II

With CONSULT-III

1. Repair or replace malfunctioning part.
2. Start engine and warm it up to normal operating temperature.
3. Connect CONSULT-III and select “DATA MONITOR” mode.
4. Select “MAS A/F SE-B1” and check indication.

Monitor item	Condition	MAS A/F SE-B1
MAS A/F SE-B1	Ignition switch ON (Engine stopped.)	Approx. 0.4V
	Idle (Engine is warmed-up to normal operating temperature.)	0.9 - 1.1V
	2,500 rpm (Engine is warmed-up to normal operating temperature.)	1.4 - 1.7V
	Idle to about 4,000 rpm	0.9 - 1.1V to Approx. 2.4V*

*: Check for linear voltage rise in response to engine being increased to about 4,000 rpm.

Without CONSULT-III

1. Repair or replace malfunctioning part.
2. Start engine and warm it up to normal operating temperature.
3. Check the voltage between ECM harness connector and ground.

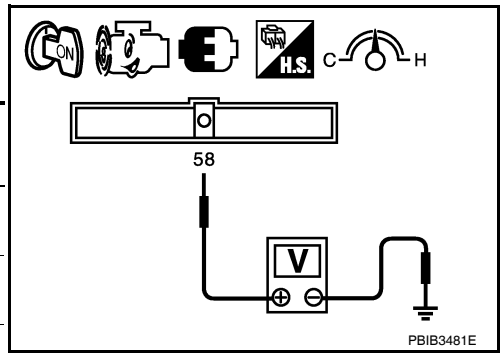

ECM		Ground	Condition	Voltage
Connector	Terminal			
F13	58 (MAF sensor signal)	Ground	Ignition switch ON (Engine stopped.)	Approx. 0.4V
			Idle (Engine is warmed-up to normal operating temperature.)	0.9 - 1.1V
			2,500 rpm (Engine is warmed-up to normal operating temperature.)	1.4 - 1.7V
			Idle to about 4,000 rpm	0.9 - 1.1V to Approx. 2.4V*

*: Check for linear voltage rise in response to engine being increased to about 4,000 rpm.

Is the inspection result normal?

YES >> INSPECTION END
NO >> GO TO 4.

4. CHECK MASS AIR FLOW SENSOR-III

With CONSULT-III

1. Turn ignition switch OFF.
2. Disconnect mass air flow sensor harness connector and reconnect it again.
3. Start engine and warm it up to normal operating temperature.
4. Connect CONSULT-III and select “DATA MONITOR” mode.
5. Select “MAS A/F SE-B1” and check indication.

Monitor item	Condition	MAS A/F SE-B1
MAS A/F SE-B1	Ignition switch ON (Engine stopped.)	Approx. 0.4V
	Idle (Engine is warmed-up to normal operating temperature.)	0.9 - 1.1V
	2,500 rpm (Engine is warmed-up to normal operating temperature.)	1.4 - 1.7V
	Idle to about 4,000 rpm	0.9 - 1.1V to Approx. 2.4V*

*: Check for linear voltage rise in response to engine being increased to about 4,000 rpm.

Without CONSULT-III

1. Turn ignition switch OFF.
2. Disconnect mass air flow sensor harness connector and reconnect it again.
3. Start engine and warm it up to normal operating temperature.

4. Check the voltage between ECM harness connector and ground.

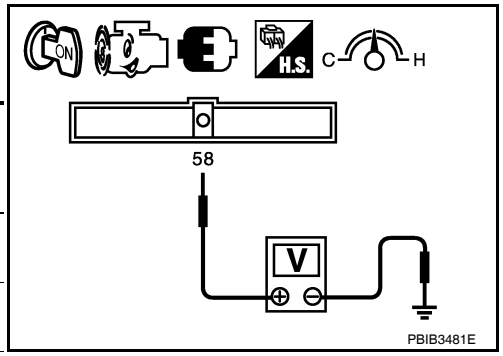

ECM		Ground	Condition	Voltage
Connector	Terminal			
F13	58 (MAF sensor signal)	Ground	Ignition switch ON (Engine stopped.)	Approx. 0.4V
			Idle (Engine is warmed-up to normal operating temperature.)	0.9 - 1.1V
			2,500 rpm (Engine is warmed-up to normal operating temperature.)	1.4 - 1.7V
			Idle to about 4,000 rpm	0.9 - 1.1V to Approx. 2.4V*

*: Check for linear voltage rise in response to engine being increased to about 4,000 rpm.

Is the inspection result normal?

YES >> INSPECTION END
NO >> Clean or replace mass air flow sensor.

P0102, P0103 MAF SENSOR

Description

INFOID:0000000004349666

The mass air flow sensor (1) is placed in the stream of intake air. It measures the intake flow rate by measuring a part of the entire intake flow. The mass air flow sensor controls the temperature of the hot wire to a certain amount. The heat generated by the hot wire is reduced as the intake air flows around it. The more air, the greater the heat loss.
Therefore, the electric current supplied to hot wire is changed to maintain the temperature of the hot wire as air flow increases. The ECM detects the air flow by means of this current change.

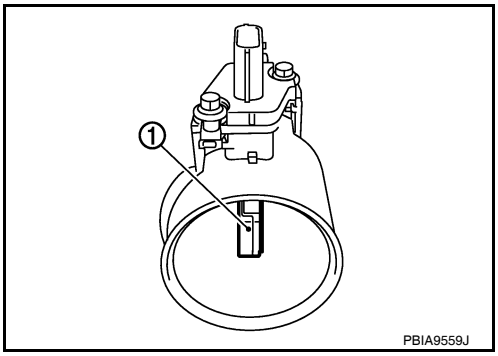

DTC Logic

INFOID:0000000004349667

DTC DETECTION LOGIC

DTC No.	Trouble diagnosis name	DTC detecting condition	Possible cause
P0102	Mass air flow sensor circuit low input	An excessively low voltage from the sensor is sent to ECM.	• Harness or connectors (The sensor circuit is open or shorted.) • Intake air leaks • Mass air flow sensor
P0103	Mass air flow sensor circuit high input	An excessively high voltage from the sensor is sent to ECM.	• Harness or connectors (The sensor circuit is open or shorted.) • Mass air flow sensor

DTC CONFIRMATION PROCEDURE

1. PRECONDITIONING

If DTC Confirmation Procedure has been previously conducted, always turn ignition switch OFF and wait at least 10 seconds before conducting the next test.

Which DTC is detected?

P0102 >> GO TO 2.
P0103 >> GO TO 3.

2. PERFORM DTC CONFIRMATION PROCEDURE FOR DTC P0102

1. Start engine and wait at least 5 seconds.
2. Check DTC.

Is DTC detected?

YES >> Go to EC-701, "Diagnosis Procedure".
NO >> INSPECTION END

3. PERFORM DTC CONFIRMATION PROCEDURE FOR DTC P0103-I

1. Turn ignition switch ON and wait at least 5 seconds.
2. Check DTC.

Is DTC detected?

YES >> Go to EC-701, "Diagnosis Procedure".
NO >> GO TO 4.

4. PERFORM DTC CONFIRMATION PROCEDURE FOR DTC P0103-II

1. Start engine and wait at least 5 seconds.
2. Check DTC.

Is DTC detected?

YES >> Go to EC-701, "Diagnosis Procedure".

NO >> INSPECTION END

Diagnosis Procedure

INFOID:0000000004349668

1. INSPECTION START

Confirm the detected DTC.

Which DTC is detected?

P0102 >> GO TO 2.
P0103 >> GO TO 3.

2. CHECK INTAKE SYSTEM

Check the following for connection.
- Air duct
- Vacuum hoses
- Intake air passage between air duct to intake manifold

Is the inspection result normal?

YES >> GO TO 3.
NO >> Reconnect the parts.

3. CHECK GROUND CONNECTION

1. Turn ignition switch OFF.
2. Check ground connection E9. Refer to Ground Inspection in GI-45, "Circuit Inspection".

Is the inspection result normal?

YES >> GO TO 4.
NO >> Repair or replace ground connection.

4. CHECK MAF SENSOR POWER SUPPLY CIRCUIT

1. Disconnect mass air flow (MAF) sensor harness connector.
2. Turn ignition switch ON.
3. Check the voltage between MAF sensor harness connector and ground.

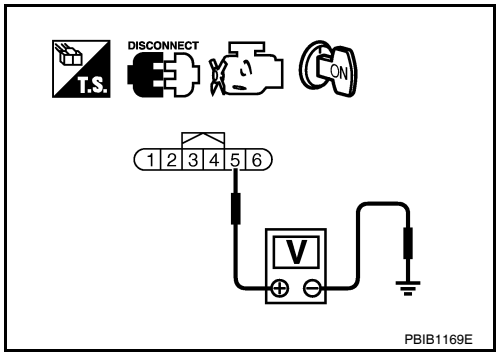

MAF sensor		Ground	Voltage
Connector	Terminal		
F31	5	Ground	Battery voltage

Is the inspection result normal?

YES >> GO TO 6.
NO >> GO TO 5.

5. DETECT MALFUNCTIONING PART

Check the following.
- Junction block connector E44
- Harness connector E11,F2
- 15A fuse (No,42)
- Harness for open or short between mass air flow sensor and ECM
- Harness for open or short between mass air flow sensor and IPDM E/R

>> Repair open circuit or short to ground or short to power in harness or connectors.

6. CHECK MAF SENSOR GROUND CIRCUIT FOR OPEN AND SHORT

1. Turn ignition switch OFF.
2. Disconnect ECM harness connector.
3. Check the continuity between MAF sensor harness connector and ECM harness connector.

MAF sensor		ECM		Continuity
Connector	Terminal	Connector	Terminal	
F31	4	F13	56	Existed

4. Also check harness for short to ground and short to power.

Is the inspection result normal?

YES >> GO TO 7.
NO >> Repair open circuit or short to ground or short to power in harness or connectors.

7. CHECK MAF SENSOR INPUT SIGNAL CIRCUIT FOR OPEN AND SHORT

1. Check the continuity between MAF sensor harness connector and ECM harness connector.

MAF sensor		ECM		Continuity
Connector	Terminal	Connector	Terminal	
F31	3	F13	58	Existed

2. Also check harness for short to ground and short to power.

Is the inspection result normal?

YES >> GO TO 8.
NO >> Repair open circuit or short to ground or short to power in harness or connectors.

8. CHECK MASS AIR FLOW SENSOR

Refer to EC-702, "Component Inspection".

Is the inspection result normal?

YES >> GO TO 9.
NO >> Replace mass air flow sensor.

9. CHECK INTERMITTENT INCIDENT

Refer to GI-42, "Intermittent Incident".

>> INSPECTION END

Component Inspection

INFOID:0000000004349669

1. CHECK MASS AIR FLOW SENSOR-I

With CONSULT-III

1. Turn ignition switch OFF.
2. Reconnect all harness connectors disconnected.
3. Start engine and warm it up to normal operating temperature.
4. Connect CONSULT-III and select “DATA MONITOR” mode.
5. Select “MAS A/F SE-B1” and check indication.

Monitor item	Condition	MAS A/F SE-B1
MAS A/F SE-B1	Ignition switch ON (Engine stopped.)	Approx. 0.4V
	Idle (Engine is warmed-up to normal operating temperature.)	0.9 - 1.1V
	2,500 rpm (Engine is warmed-up to normal operating temperature.)	1.4 - 1.7V
	Idle to about 4,000 rpm	0.9 - 1.1V to Approx. 2.4V*

*: Check for linear voltage rise in response to engine being increased to about 4,000 rpm.

Without CONSULT-III

1. Turn ignition switch OFF.
2. Reconnect all harness connectors disconnected.
3. Start engine and warm it up to normal operating temperature.

4. Check the voltage between ECM harness connector and ground.

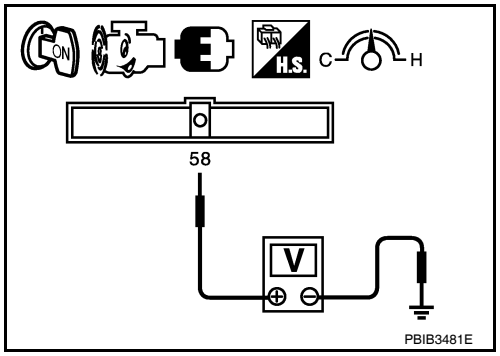

ECM		Ground	Condition	Voltage
Connec-tor	Terminal			
F13	58 (MAF sensor signal)	Ground	Ignition switch ON (Engine stopped.)	Approx. 0.4V
			Idle (Engine is warmed-up to normal operating temperature.)	0.9 - 1.1V
			2,500 rpm (Engine is warmed-up to normal operating temperature.)	1.4 - 1.7V
			Idle to about 4,000 rpm	0.9 - 1.1V to Approx. 2.4V*

*: Check for linear voltage rise in response to engine being increased to about 4,000 rpm.

Is the inspection result normal?

YES >> GO TO 4.
NO >> GO TO 2.

2. CHECK FOR THE CAUSE OF UNEVEN AIR FLOW THROUGH MASS AIR FLOW SENSOR

1. Turn ignition switch OFF.
2. Check for the cause of uneven air flow through mass air flow sensor. Refer to following.

- Crushed air ducts
- Malfunctioning seal of air cleaner element
- Uneven dirt of air cleaner element
- Improper specification of intake air system parts

Is the inspection result normal?

YES >> GO TO 4.
NO >> GO TO 3.

3. CHECK MASS AIR FLOW SENSOR-II

With CONSULT-III

1. Repair or replace malfunctioning part.
2. Start engine and warm it up to normal operating temperature.
3. Connect CONSULT-III and select “DATA MONITOR” mode.
4. Select “MAS A/F SE-B1” and check indication.

Monitor item	Condition	MAS A/F SE-B1
MAS A/F SE-B1	Ignition switch ON (Engine stopped.)	Approx. 0.4V
	Idle (Engine is warmed-up to normal operating temperature.)	0.9 - 1.1V
	2,500 rpm (Engine is warmed-up to normal operating temperature.)	1.4 - 1.7V
	Idle to about 4,000 rpm	0.9 - 1.1V to Approx. 2.4V*

*: Check for linear voltage rise in response to engine being increased to about 4,000 rpm.

Without CONSULT-III

1. Repair or replace malfunctioning part.
2. Start engine and warm it up to normal operating temperature.

3. Check the voltage between ECM harness connector and ground.

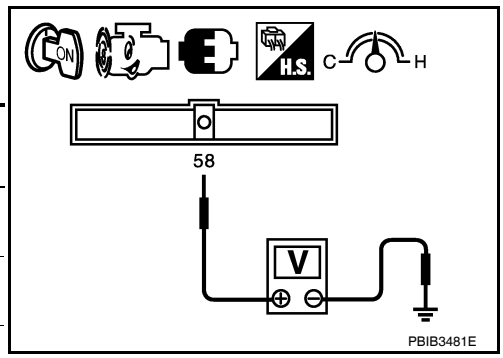

ECM		Ground	Condition	Voltage
Connector	Terminal			
F13	58 (MAF sensor signal)	Ground	Ignition switch ON (Engine stopped.)	Approx. 0.4V
			Idle (Engine is warmed-up to normal operating temperature.)	0.9 - 1.1V
			2,500 rpm (Engine is warmed-up to normal operating temperature.)	1.4 - 1.7V
			Idle to about 4,000 rpm	0.9 - 1.1V to Approx. 2.4V*

*: Check for linear voltage rise in response to engine being increased to about 4,000 rpm.

Is the inspection result normal?

YES >> INSPECTION END
NO >> GO TO 4.

4. CHECK MASS AIR FLOW SENSOR-III

With CONSULT-III

1. Turn ignition switch OFF.
2. Disconnect mass air flow sensor harness connector and reconnect it again.
3. Start engine and warm it up to normal operating temperature.
4. Connect CONSULT-III and select “DATA MONITOR” mode.
5. Select “MAS A/F SE-B1” and check indication.

Monitor item	Condition	MAS A/F SE-B1
MAS A/F SE-B1	Ignition switch ON (Engine stopped.)	Approx. 0.4V
	Idle (Engine is warmed-up to normal operating temperature.)	0.9 - 1.1V
	2,500 rpm (Engine is warmed-up to normal operating temperature.)	1.4 - 1.7V
	Idle to about 4,000 rpm	0.9 - 1.1V to Approx. 2.4V*

*: Check for linear voltage rise in response to engine being increased to about 4,000 rpm.

Without CONSULT-III

1. Turn ignition switch OFF.
2. Disconnect mass air flow sensor harness connector and reconnect it again.
3. Start engine and warm it up to normal operating temperature.
4. Check the voltage between ECM harness connector and ground.

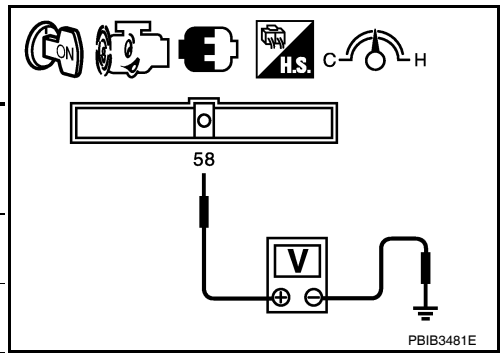

ECM		Ground	Condition	Voltage
Connector	Terminal			
F13	58 (MAF sensor signal)	Ground	Ignition switch ON (Engine stopped.)	Approx. 0.4V
			Idle (Engine is warmed-up to normal operating temperature.)	0.9 - 1.1V
			2,500 rpm (Engine is warmed-up to normal operating temperature.)	1.4 - 1.7V
			Idle to about 4,000 rpm	0.9 - 1.1V to Approx. 2.4V*

*: Check for linear voltage rise in response to engine being increased to about 4,000 rpm.

Is the inspection result normal?

YES >> INSPECTION END
NO >> Clean or replace mass air flow sensor.

P0112, P0113 IAT SENSOR

Description

INFOID:0000000004349670

The intake air temperature sensor is built-into mass air flow sensor (1). The sensor detects intake air temperature and transmits a signal to the ECM.
The temperature sensing unit uses a thermistor which is sensitive to the change in temperature. Electrical resistance of the thermistor decreases in response to the temperature rise.

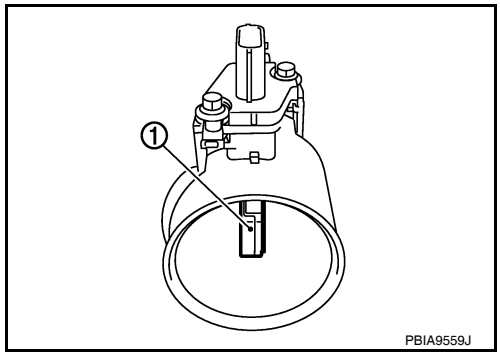

<Reference data>

Intake air temperature °C (°F)]	Voltage* V]	Resistance kΩ
25 (77)	3.3	1.800 - 2.200
80 (176)	1.2	0.283 - 0.359

*: These data are reference values and are measured between ECM terminal 50 (Intake air temperature sensor) and ground.

CAUTION:

Do not use ECM ground terminals when measuring input/output voltage. Doing so may result in damage to the ECM's transistor. Use a ground other than ECM terminals, such as the ground.

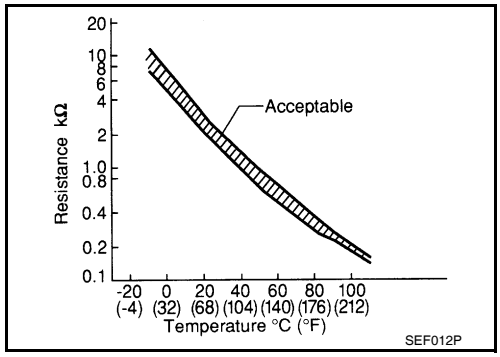

DTC Logic

INFOID:0000000004349671

DTC DETECTION LOGIC

DTC No.	Trouble diagnosis name	DTC detecting condition	Possible cause
P0112	Intake air temperature sensor circuit low input	An excessively low voltage from the sensor is sent to ECM.	• Harness or connectors (The sensor circuit is open or shorted.) • Intake air temperature sensor
P0113	Intake air temperature sensor circuit high input	An excessively high voltage from the sensor is sent to ECM.	

DTC CONFIRMATION PROCEDURE

1.PRECONDITIONING

If DTC Confirmation Procedure has been previously conducted, always turn ignition switch OFF and wait at least 10 seconds before conducting the next test.

>> GO TO 2.

2.PERFORM DTC CONFIRMATION PROCEDURE

1. Turn ignition switch ON and wait at least 5 seconds.
2. Check 1st trip DTC.

Is 1st trip DTC detected?

YES >> Go to EC-707, "Diagnosis Procedure".
NO >> INSPECTION END

Diagnosis Procedure

INFOID:0000000004349672

1. CHECK GROUND CONNECTION

1. Turn ignition switch OFF.
2. Check ground connection E9. Refer to Ground Inspection in GI-45, "Circuit Inspection".

Is the inspection result normal?

YES >> GO TO 2.
NO >> Repair or replace ground connection.

2. CHECK INTAKE AIR TEMPERATURE SENSOR POWER SUPPLY CIRCUIT

1. Disconnect mass air flow sensor (with intake air temperature sensor) harness connector.
2. Turn ignition switch ON.
3. Check the voltage between mass air flow sensor harness connector and ground.

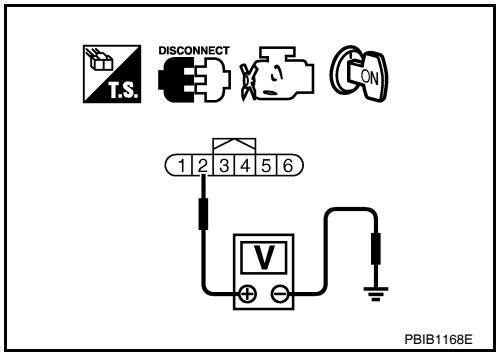

MAF sensor		Ground	Voltage
Connector	Terminal		
F31	2	Ground	Approx. 5V

Is the inspection result normal?

YES >> GO TO 3.
NO >> Repair open circuit or short to ground or short to power in harness or connectors.

3. CHECK INTAKE AIR TEMPERATURE SENSOR GROUND CIRCUIT FOR OPEN AND SHORT

1. Turn ignition switch OFF.
2. Disconnect ECM harness connector.
3. Check the continuity between mass air flow sensor harness connector and ECM harness connector.

MAF sensor		ECM		Continuity
Connector	Terminal	Connector	Terminal	
F31	1	F13	56	Existed

4. Also check harness for short to ground and short to power.

Is the inspection result normal?

YES >> GO TO 4.
NO >> Repair open circuit or short to ground or short to power in harness or connectors.

4. CHECK INTAKE AIR TEMPERATURE SENSOR

Refer to EC-707, "Component Inspection".

Is the inspection result normal?

YES >> GO TO 5.
NO >> Replace mass air flow sensor (with intake air temperature sensor).

5. CHECK INTERMITTENT INCIDENT

Refer to GI-42, "Intermittent Incident".

>> INSPECTION END

Component Inspection

INFOID:0000000004349673

1. CHECK INTAKE AIR TEMPERATURE SENSOR

1. Turn ignition switch OFF.
2. Disconnect mass air flow sensor harness connector.

3. Check resistance between mass air flow sensor terminals as follows.

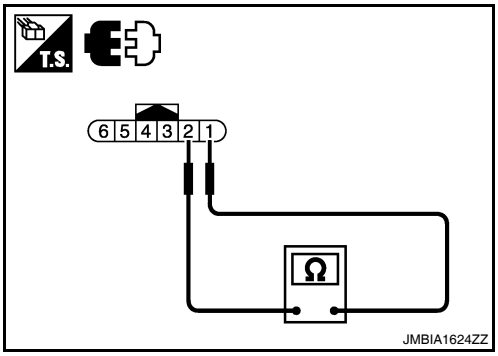

Terminals	Condition		Resistance kΩ
1 and 2	Intake air temperature °C (°F)	25 (77)	1.800 - 2.200

Is the inspection result normal?

YES >> INSPECTION END
NO >> Replace mass air flow sensor (with intake air temperature sensor).

P0116 ECT SENSOR

Description

INFOID:0000000004349674

The engine coolant temperature sensor is used to detect the engine coolant temperature. The sensor modifies a voltage signal from the ECM. The modified signal returns to the ECM as the engine coolant temperature input. The sensor uses a thermistor which is sensitive to the change in temperature. The electrical resistance of the thermistor decreases as temperature increases.

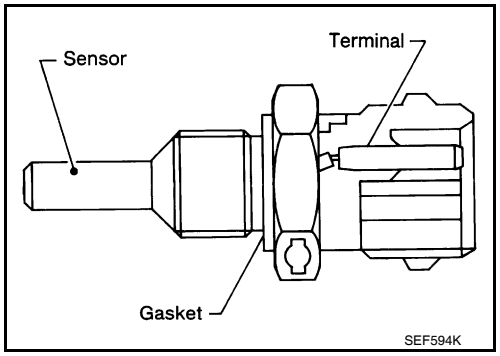

<Reference data>

Engine coolant temperature [°C (°F)]	Voltage* (V)	Resistance (kΩ)
–10 (14)	4.4	7.0 - 11.4
20 (68)	3.5	2.37 - 2.63
50 (122)	2.2	0.68 - 1.00
90 (194)	0.9	0.236 - 0.260

*: These data are reference values and are measured between ECM terminals 46 (Engine coolant temperature sensor) and ground.

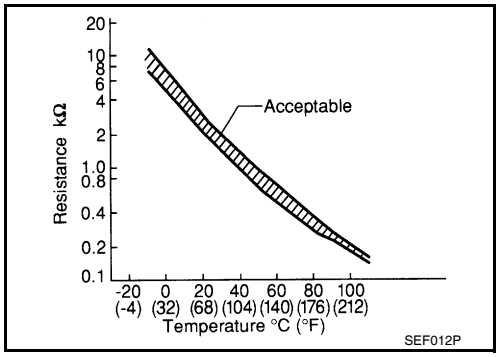

CAUTION:

Do not use ECM ground terminals when measuring input/output voltage. Doing so may result in damage to the ECM's transistor. Use a ground other than ECM terminals, such as the ground.

DTC Logic

INFOID:0000000004349675

DTC DETECTION LOGIC

NOTE:

If DTC P0116 is displayed with P0117 or P0118, first perform the trouble diagnosis for DTC P0117, P0118. Refer to EC-711, "DTC Logic".

DTC No.	Trouble diagnosis name	DTC detecting condition	Possible cause
P0116	Engine coolant temperature sensor circuit range/performance	Engine coolant temperature signal from engine coolant temperature sensor does not fluctuate, even when some time has passed after starting the engine with pre-warming up condition.	• Harness or connectors (High or low resistance in the circuit) • Engine coolant temperature sensor

DTC CONFIRMATION PROCEDURE

1.PRECONDITIONING

If DTC confirmation procedure has been previously conducted, always turn ignition switch OFF and wait at least 10 seconds before conducting the next test.

>> GO TO 2.

2.PERFORM DTC CONFIRMATION PROCEDURE

1. Start engine and warm it up to normal operating temperature.
2. Rev engine up to 2,000 rpm for more than 10 minutes.
3. Move the vehicle to a cool place, then stop engine and turn ignition switch OFF.
4. Check resistance between “fuel level sensor unit and fuel pump” terminals 4 and 5.

5. Soak the vehicle until the resistance between “fuel level sensor unit and fuel pump” terminals 4 and 5 becomes 0.5 kΩ higher than the value measured before soaking.
   CAUTION:
   Never turn ignition switch ON during the soaking time.
   NOTE:
   Soak time changes depending on ambient air temperature. It may take several hours.
6. Start engine and let it idle for 5 minutes.
7. Check 1st trip DTC.

Is 1st trip DTC detected?

YES >> EC-710, "Diagnosis Procedure".
NO >> INSPECTION END

Diagnosis Procedure

INFOID:0000000004349676

1. CHECK GROUND CONNECTION

1. Turn ignition switch OFF.
2. Check ground connection E9. Refer to GROUND INSPECTION in GI-45, "Circuit Inspection".

Is the inspection result normal?

YES >> GO TO 2.
NO >> Repair or replace ground connection.

2. CHECK ENGINE COOLANT TEMPERATURE SENSOR

Refer to EC-710, "Component Inspection".

Is the inspection result normal?

YES >> GO TO 3.
NO >> Replace engine coolant temperature sensor.

3. CHECK INTERMITTENT INCIDENT

Refer to GI-42, "Intermittent Incident".

>> INSPECTION END

Component Inspection

INFOID:0000000004349677

1. CHECK ENGINE COOLANT TEMPERATURE SENSOR

1. Turn ignition switch OFF.
2. Disconnect engine coolant temperature sensor harness connector.
3. Remove engine coolant temperature sensor.
4. Check resistance between engine coolant temperature sensor terminals as follows.

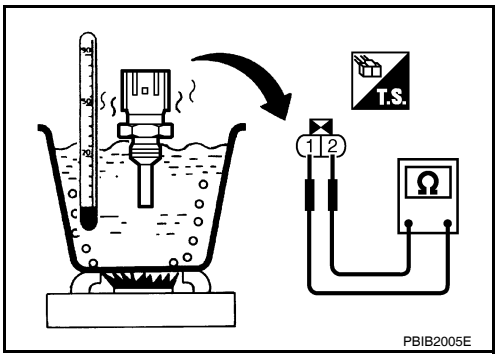

Terminals	Condition		Resistance (kΩ)
1 and 2	Temperature [°C (°F)]	20 (68)	2.37 - 2.63
		50 (122)	0.68 - 1.00
		90 (194)	0.236 - 0.260

Is the inspection result normal?

YES >> INSPECTION END
NO >> Replace engine coolant temperature sensor.

P0117, P0118 ECT SENSOR

Description

INFOID:0000000004349678

The engine coolant temperature sensor is used to detect the engine coolant temperature. The sensor modifies a voltage signal from the ECM. The modified signal returns to the ECM as the engine coolant temperature input. The sensor uses a thermistor which is sensitive to the change in temperature. The electrical resistance of the thermistor decreases as temperature increases.

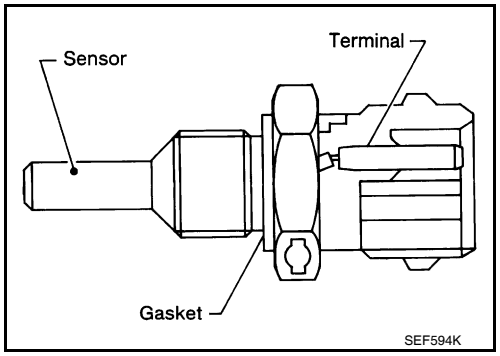

<Reference data>

Engine coolant temperature °C (°F)	Voltage* V	Resistance kΩ
–10 (14)	4.4	7.0 - 11.4
20 (68)	3.5	2.37 - 2.63
50 (122)	2.2	0.68 - 1.00
90 (194)	0.9	0.236 - 0.260

*: These data are reference values and are measured between ECM terminal 46 (Engine coolant temperature sensor) and ground.

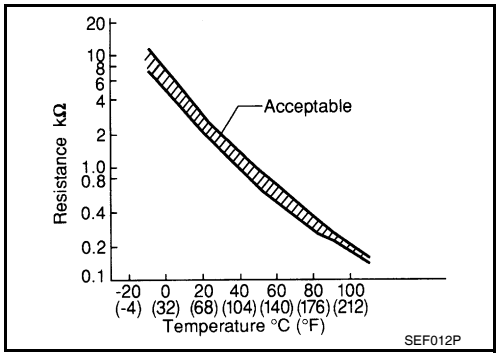

CAUTION:

Do not use ECM ground terminals when measuring input/output voltage. Doing so may result in damage to the ECM's transistor. Use a ground other than ECM terminals, such as the ground.

DTC Logic

INFOID:0000000004349679

DTC DETECTION LOGIC

DTC No.	Trouble Diagnosis Name	DTC detecting condition	Possible Cause
P0117	Engine coolant temperature sensor circuit low input	An excessively low voltage from the sensor is sent to ECM.	• Harness or connectors (The sensor circuit is open or shorted.) • Engine coolant temperature sensor
P0118	Engine coolant temperature sensor circuit high input	An excessively high voltage from the sensor is sent to ECM.	

DTC CONFIRMATION PROCEDURE

1.PRECONDITIONING

If DTC Confirmation Procedure has been previously conducted, always turn ignition switch OFF and wait at least 10 seconds before conducting the next test.

>> GO TO 2.

2.PERFORM DTC CONFIRMATION PROCEDURE

1. Turn ignition switch ON and wait at least 5 seconds.
2. Check DTC.

Is DTC detected?

YES >> Go to EC-712, "Diagnosis Procedure".
NO >> INSPECTION END

Diagnosis Procedure

INFOID:0000000004349680

1. CHECK GROUND CONNECTION

1. Turn ignition switch OFF.
2. Check ground connection E9. Refer to Ground Inspection in GI-45, "Circuit Inspection".

Is the inspection result normal?

YES >> GO TO 2.
NO >> Repair or replace ground connection.

2. CHECK ECT SENSOR POWER SUPPLY CIRCUIT

1. Disconnect engine coolant temperature (ECT) sensor harness connector.
2. Turn ignition switch ON.
3. Check the voltage between ECT sensor harness connector and ground.

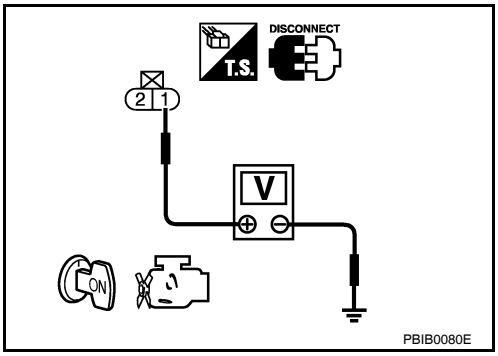

ECT sensor		Ground	Voltage
Connector	Terminal		
F11	1	Ground	Approx. 5V

Is the inspection result normal?

YES >> GO TO 3.
NO >> Repair open circuit or short to ground or short to power in harness or connectors.

3. CHECK ECT SENSOR GROUND CIRCUIT FOR OPEN AND SHORT

1. Turn ignition switch OFF.
2. Disconnect ECM harness connector.
3. Check the continuity between ECT sensor harness connector and ECM harness connector.

ECT sensor		ECM		Continuity
Connector	Terminal	Connector	Terminal	
F11	2	F13	52	Existed

4. Also check harness for short to ground and short to power.

Is the inspection result normal?

YES >> GO TO 4.
NO >> Repair open circuit or short to ground or short to power in harness or connectors.

4. CHECK ENGINE COOLANT TEMPERATURE SENSOR

Refer to EC-712, "Component Inspection".

Is the inspection result normal?

YES >> GO TO 5.
NO >> Replace engine coolant temperature sensor.

5. CHECK INTERMITTENT INCIDENT

Refer to GI-42, "Intermittent Incident".

>> INSPECTION END

Component Inspection

INFOID:0000000004349681

1. CHECK ENGINE COOLANT TEMPERATURE SENSOR

1. Turn ignition switch OFF.
2. Disconnect engine coolant temperature sensor harness connector.
3. Remove engine coolant temperature sensor.

4. Check resistance between engine coolant temperature sensor terminals by heating with hot water as shown in the figure.

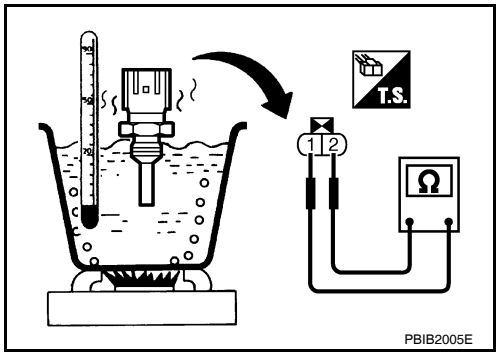

Terminals	Condition		Resistance
1 and 2	Temperature °C (°F)	20 (68)	2.37 - 2.63 kΩ
		50 (122)	0.68 - 1.00 kΩ
		90 (194)	0.236 - 0.260 kΩ

Is the inspection result normal?

YES >> INSPECTION END
NO >> Replace engine coolant temperature sensor.

P0122, P0123 TP SENSOR

Description

INFOID:0000000004349682

Electric throttle control actuator consists of throttle control motor, throttle position sensor, etc. The throttle position sensor responds to the throttle valve movement.
The throttle position sensor has two sensors. These sensors are a kind of potentiometers which transform the throttle valve position into output voltage, and emit the voltage signal to the ECM. In addition, these sensors detect the opening and closing speed of the throttle valve and feed the voltage signals to the ECM. The ECM judges the current opening angle of the throttle valve from these signals and the ECM controls the throttle control motor to make the throttle valve opening angle properly in response to driving condition.

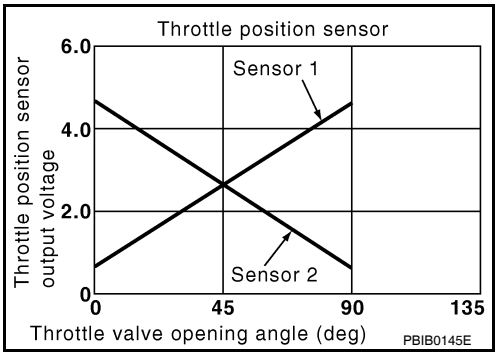

DTC Logic

INFOID:0000000004349683

DTC DETECTION LOGIC

NOTE:
If DTC P0122 or P0123 is displayed with DTC P0643, first perform the trouble diagnosis for DTC P0643. Refer to EC-867, "DTC Logic".

DTC No.	Trouble diagnosis name	DTC detecting condition	Possible cause
P0122	Throttle position sensor 2 circuit low input	An excessively low voltage from the TP sensor 2 is sent to ECM.	• Harness or connectors (TP sensor 2 circuit is open or shorted.) • Electric throttle control actuator (TP sensor 2)
P0123	Throttle position sensor 2 circuit high input	An excessively high voltage from the TP sensor 2 is sent to ECM.	

DTC CONFIRMATION PROCEDURE

1.PRECONDITIONING

If DTC Confirmation Procedure has been previously conducted, always turn ignition switch OFF and wait at least 10 seconds before conducting the next test.
TESTING CONDITION:
Before performing the following procedure, confirm that battery voltage is more than 8V at idle.

>> GO TO 2.

2.PERFORM DTC CONFIRMATION PROCEDURE

1. Start engine and let it idle for 1 second.
2. Check DTC.

Is DTC detected?

YES >> Go to EC-714, "Diagnosis Procedure".
NO >> INSPECTION END

Diagnosis Procedure

INFOID:0000000004349684

1.CHECK GROUND CONNECTION

1. Turn ignition switch OFF.
2. Check ground connection E9. Refer to Ground Inspection in GI-45, "Circuit Inspection".

Is the inspection result normal?

YES >> GO TO 2.
NO >> Repair or replace ground connection.

2.CHECK THROTTLE POSITION SENSOR 2 POWER SUPPLY CIRCUIT

1. Disconnect electric throttle control actuator harness connector.
2. Turn ignition switch ON.

3. Check the voltage between electric throttle control actuator harness connector and ground.

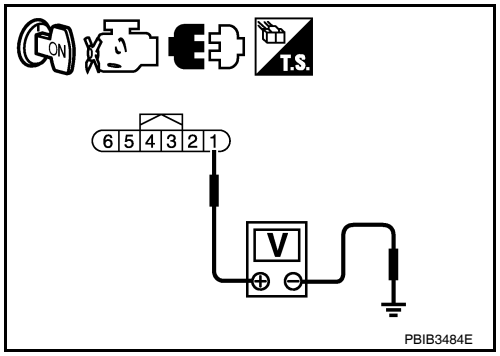

Electric throttle control actuator		Ground	Voltage
Connector	Terminal		
F57	1	Ground	Approx. 5V

Is the inspection result normal?

YES >> GO TO 3.
NO >> Repair open circuit or short to ground or short to power in harness or connectors.

3. CHECK THROTTLE POSITION SENSOR 2 GROUND CIRCUIT FOR OPEN AND SHORT

1. Turn ignition switch OFF.
2. Disconnect ECM harness connector.
3. Check the continuity between electric throttle control actuator harness connector and ECM harness connector.

Electric throttle control actuator		ECM		Continuity
Connector	Terminal	Connector	Terminal	
F57	4	F13	36	Existed

4. Also check harness for short to ground and short to power.

Is the inspection result normal?

YES >> GO TO 4.
NO >> Repair open circuit or short to ground or short to power in harness or connectors.

4. CHECK THROTTLE POSITION SENSOR 2 INPUT SIGNAL CIRCUIT FOR OPEN AND SHORT

1. Check the continuity between electric throttle control actuator harness connector and ECM harness connector.

Electric throttle control actuator		ECM		Continuity
Connector	Terminal	Connector	Terminal	
F57	3	F13	38	Existed

2. Also check harness for short to ground and short to power.

Is the inspection result normal?

YES >> GO TO 5.
NO >> Repair open circuit or short to ground or short to power in harness or connectors.

5. CHECK THROTTLE POSITION SENSOR

Refer to EC-716, "Component Inspection".

Is the inspection result normal?

YES >> GO TO 7.
NO >> GO TO 6.

6. REPLACE ELECTRIC THROTTLE CONTROL ACTUATOR

1. Replace electric throttle control actuator.
2. Go to EC-716, "Special Repair Requirement".

>> INSPECTION END

7. CHECK INTERMITTENT INCIDENT

Refer to GI-42, "Intermittent Incident".

>> INSPECTION END

Component Inspection

INFOID:0000000004349685

1. CHECK THROTTLE POSITION SENSOR

1. Turn ignition switch OFF.
2. Reconnect all harness connectors disconnected.
3. Perform EC-565, "THROTTLE VALVE CLOSED POSITION LEARNING : Special Repair Requirement".
4. Turn ignition switch ON.
5. Set shift lever to D (CVT) or 1st (M/T) position.
6. Check the voltage between ECM harness connector and ground.

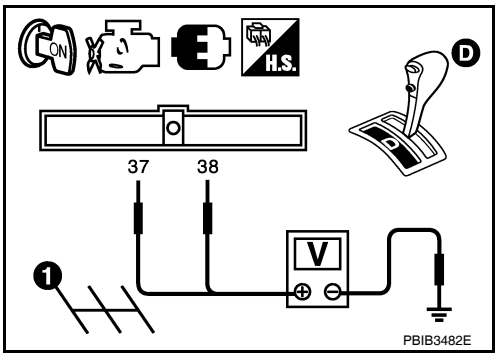

ECM		Ground	Condition		Voltage
Connector	Terminal				
F13	37 (TP sensor 1 signal)	Ground	Accelerator pedal	Fully released	More than 0.36V
				Fully de-pressed	Less than 4.75V
	38 (TP sensor 2 signal)			Fully released	Less than 4.75V
				Fully de-pressed	More than 0.36V

Is the inspection result normal?

YES >> INSPECTION END
NO >> GO TO 2.

2. REPLACE ELECTRIC THROTTLE CONTROL ACTUATOR

1. Replace electric throttle control actuator.
2. Go to EC-716, "Special Repair Requirement".

>> INSPECTION END

Special Repair Requirement

INFOID:0000000004349686

1. PERFORM THROTTLE VALVE CLOSED POSITION LEARNING

Refer to EC-565, "THROTTLE VALVE CLOSED POSITION LEARNING : Special Repair Requirement"

>> GO TO 2.

2. PERFORM IDLE AIR VOLUME LEARNING

Refer to EC-566, "IDLE AIR VOLUME LEARNING : Special Repair Requirement"

>> END

P0125 ECT SENSOR

Description

INFOID:0000000004349687

The engine coolant temperature sensor is used to detect the engine coolant temperature. The sensor modifies a voltage signal from the ECM. The modified signal returns to the ECM as the engine coolant temperature input. The sensor uses a thermistor which is sensitive to the change in temperature. The electrical resistance of the thermistor decreases as temperature increases.

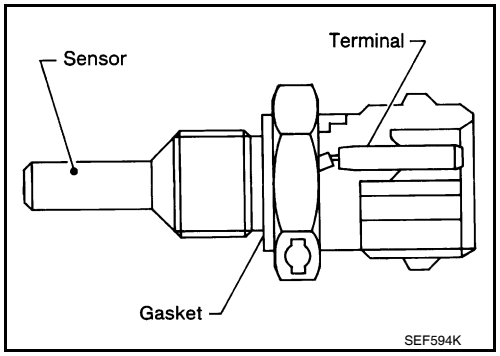

<Reference data>

Engine coolant temperature °C (°F)	Voltage* V	Resistance kΩ
–10 (14)	4.4	7.0 - 11.4
20 (68)	3.5	2.37 - 2.63
50 (122)	2.2	0.68 - 1.00
90 (194)	0.9	0.236 - 0.260

*: These data are reference values and are measured between ECM terminal 46 (Engine coolant temperature sensor) and ground.

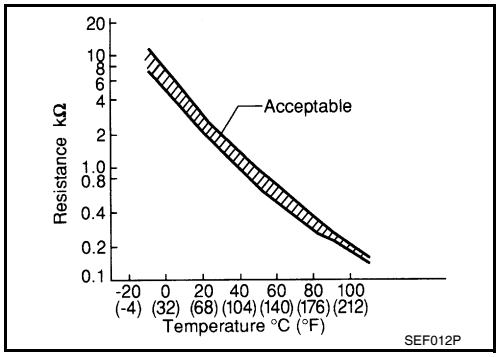

CAUTION:

Do not use ECM ground terminals when measuring input/output voltage. Doing so may result in damage to the ECM's transistor. Use a ground other than ECM terminals, such as the ground.

DTC Logic

INFOID:0000000004349688

DTC DETECTION LOGIC

NOTE:

- **If DTC P0125 is displayed with P0117 or P0118, first perform the trouble diagnosis for DTC P0117 or P0118. Refer to EC-711, "DTC Logic".**
- **If DTC P0125 is displayed with P0116, first perform the trouble diagnosis for DTC P0116. Refer to EC-709, "DTC Logic".**

DTC No.	Trouble diagnosis name	DTC detecting condition	Possible cause
P0125	Insufficient engine coolant temperature for closed loop fuel control	• Voltage sent to ECM from the sensor is not practical, even when some time has passed after starting the engine. • Engine coolant temperature is insufficient for closed loop fuel control.	• Harness or connectors (High resistance in the circuit) • Engine coolant temperature sensor • Thermostat

DTC CONFIRMATION PROCEDURE

1. PRECONDITIONING

If DTC Confirmation Procedure has been previously conducted, always turn ignition switch OFF and wait at least 10 seconds before conducting the next test.

>> GO TO 2.

2. CHECK ENGINE COOLANT TEMPERATURE SENSOR FUNCTION

With CONSULT-III

1. Turn ignition switch ON.

2. Select “DATA MONITOR” mode with CONSULT-III.
3. Check that “COOLAN TEMP/S” is above 5°C (41°F).

With GST

Follow the procedure “With CONSULT-III” above.

Is it above 5°C (41°F)?

YES >> INSPECTION END
NO >> GO TO 3.

3. PERFORM DTC CONFIRMATION PROCEDURE

With CONSULT-III

1. Start engine and run it for 65 minutes at idle speed.
2. Check 1st tip DTC.

If “COOLAN TEMP/S” increases to more than 5°C (41°F) within 65 minutes, stop engine because the test result will be OK.

CAUTION:

Be careful not to overheat engine.

With GST

Follow the procedure “With CONSULT-III” above.

Is 1st trip DTC detected?

YES >> EC-718, "Diagnosis Procedure"
NO >> INSPECTION END

Diagnosis Procedure

INFOID:0000000004349689

1. CHECK GROUND CONNECTION

1. Turn ignition switch OFF.
2. Check ground connection E9. Refer to Ground Inspection in GI-45, "Circuit Inspection".

Is the inspection result normal?

YES >> GO TO 2.
NO >> Repair or replace ground connection.

2. CHECK ENGINE COOLANT TEMPERATURE SENSOR

Refer to EC-712, "Component Inspection".

Is the inspection result normal?

YES >> GO TO 3.
NO >> Replace engine coolant temperature sensor.

3. CHECK THERMOSTAT OPERATION

When the engine is cold [lower than 70°C (158°F)] condition, grasp lower radiator hose and confirm the engine coolant does not flow.

Is the inspection result normal?

YES >> GO TO 4.
NO >> Repair or replace thermostat. Refer to CO-21, "Removal and Installation".

4. CHECK INTERMITTENT INCIDENT

Refer to GI-42, "Intermittent Incident".

>> INSPECTION END

Component Inspection

INFOID:0000000004349690

1. CHECK ENGINE COOLANT TEMPERATURE SENSOR

1. Turn ignition switch OFF.
2. Disconnect engine coolant temperature sensor harness connector.
3. Remove engine coolant temperature sensor.

4. Check resistance between engine coolant temperature sensor terminals by heating with hot water as shown in the figure.

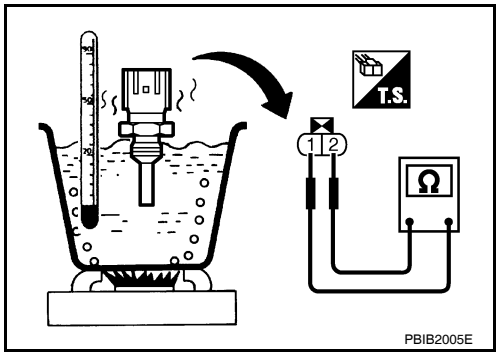

Terminals	Condition		Resistance
1 and 2	Temperature °C (°F)	20 (68)	2.37 - 2.63 kΩ
		50 (122)	0.68 - 1.00 kΩ
		90 (194)	0.236 - 0.260 kΩ

Is the inspection result normal?

YES >> INSPECTION END
NO >> Replace engine coolant temperature sensor.

P0127 IAT SENSOR

Description

INFOID:0000000004349691

The intake air temperature sensor is built-into mass air flow sensor (1). The sensor detects intake air temperature and transmits a signal to the ECM.
The temperature sensing unit uses a thermistor which is sensitive to the change in temperature. Electrical resistance of the thermistor decreases in response to the temperature rise.

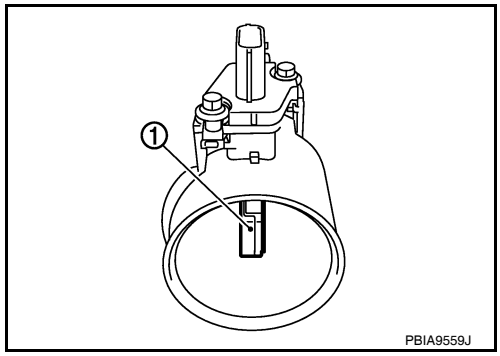

<Reference data>

Intake air temperature °C (°F)]	Voltage* V]	Resistance kΩ
25 (77)	3.3	1.800 - 2.200
80 (176)	1.2	0.283 - 0.359

*: These data are reference values and are measured between ECM terminal 50 (Intake air temperature sensor) and ground.

CAUTION:

Do not use ECM ground terminals when measuring input/output voltage. Doing so may result in damage to the ECM's transistor. Use a ground other than ECM terminals, such as the ground.

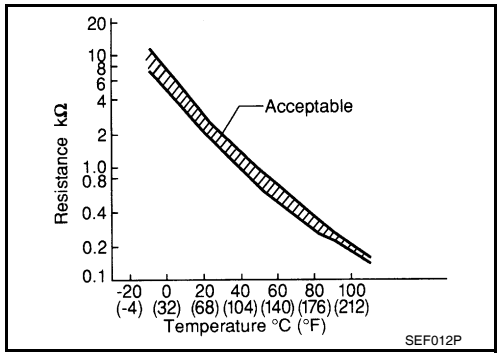

DTC Logic

INFOID:0000000004349692

DTC DETECTION LOGIC

DTC No.	Trouble diagnosis name	DTC detecting condition	Possible cause
P0127	Intake air temperature too high	Rationally incorrect voltage from the sensor is sent to ECM, compared with the voltage signal from engine coolant temperature sensor.	• Harness or connectors (The sensor circuit is open or shorted) • Intake air temperature sensor

DTC CONFIRMATION PROCEDURE

1.PRECONDITIONING

If DTC Confirmation Procedure has been previously conducted, always turn ignition switch OFF and wait at least 10 seconds before conducting the next test.

TESTING CONDITION:

This test may be conducted with the drive wheels lifted in the shop or by driving the vehicle. If a road test is expected to be easier, it is unnecessary to lift the vehicle.

>> GO TO 2.

2.PERFORM DTC CONFIRMATION PROCEDURE

With CONSULT-III

1. Wait until engine coolant temperature is less than 96°C (205°F)

- Turn ignition switch ON.
- Select “DATA MONITOR” mode with CONSULT-III.
- Check the engine coolant temperature.
- If the engine coolant temperature is not less than 96°C (205°F), turn ignition switch OFF and cool down engine.

NOTE:
Perform the following steps before engine coolant temperature is above 96°C (205°F).

2. Turn ignition switch ON.
3. Select “DATA MONITOR” mode with CONSULT-III.
4. Start engine.
5. Hold vehicle speed at more than 70 km/h (43 MPH) for 95 consecutive seconds.
   CAUTION:
   Always drive vehicle at a safe speed.
6. Check 1st trip DTC.

With GST
Follow the procedure “With CONSULT-III” above.

Is 1st trip DTC detected?

YES >> Go to EC-721, "Diagnosis Procedure".
NO >> INSPECTION END

Diagnosis Procedure

INFOID:0000000004349693

1. CHECK GROUND CONNECTION

1. Turn ignition switch OFF.
2. Check ground connection E9. Refer to Ground Inspection in GI-45, "Circuit Inspection".

Is the inspection result normal?

YES >> GO TO 2.
NO >> Repair or replace ground connection.

2. CHECK INTAKE AIR TEMPERATURE SENSOR

Refer to EC-721, "Component Inspection".

Is the inspection result normal?

YES >> GO TO 3.
NO >> Replace mass air flow sensor (with intake air temperature sensor).

3. CHECK INTERMITTENT INCIDENT

Refer to GI-42, "Intermittent Incident".

>> INSPECTION END

Component Inspection

INFOID:0000000004349694

1. CHECK INTAKE AIR TEMPERATURE SENSOR

1. Turn ignition switch OFF.
2. Disconnect mass air flow sensor harness connector.
3. Check resistance between mass air flow sensor terminals as follows.

Terminals	Condition		Resistance kΩ
1 and 2	Intake air temperature °C (°F)	25 (77)	1.800 - 2.200

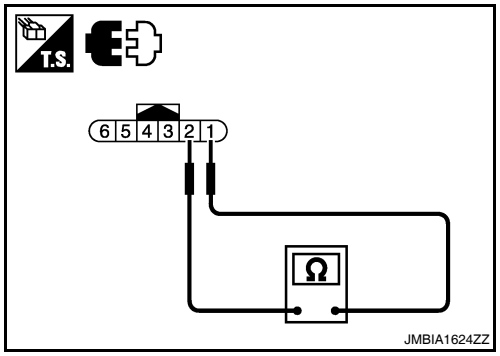

Is the inspection result normal?

YES >> INSPECTION END
NO >> Replace mass air flow sensor (with intake air temperature sensor).

P0128 THERMOSTAT FUNCTION

DTC Logic

INFOID:0000000004349695

DTC DETECTION LOGIC

NOTE:
If DTC P0128 is displayed with DTC P0300, P0301, P0302, P0303 or P0304, first perform the trouble diagnosis for DTC P0300, P0301, P0302, P0303, P0304. Refer to EC-776, "DTC Logic".
Engine coolant temperature has not risen enough to open the thermostat even though the engine has run long enough.
This is due to a leak in the seal or the thermostat stuck open.

DTC No.	Trouble diagnosis name	DTC detecting condition	Possible cause
P0128	Thermostat function	The engine coolant temperature does not reach to specified temperature even though the engine has run long enough.	• Thermostat • Leakage from sealing portion of thermostat • Engine coolant temperature sensor

DTC CONFIRMATION PROCEDURE

1. PRECONDITIONING

If DTC CONFIRMATION PROCEDURE has been previously conducted, always turn ignition switch OFF and wait at least 10 seconds before conducting the next test.
TESTING CONDITION:
- **For best results, perform at ambient temperature of –10°C (14°F) or higher.**
- **For best results, perform at engine coolant temperature of –10°C (14°F) to 52°C (126°F).**
- **Before performing the following procedure, do not fill with the fuel.**

>> GO TO 2.

2. PERFORM DTC CONFIRMATION PROCEDURE

With CONSULT-III
1. Turn A/C switch OFF.
2. Turn blower fan switch OFF.
3. Turn ignition switch ON.
4. Select “COOLAN TEMP/S” in “DATA MONITOR” mode with CONSULT-III.
5. Check the indication of “COOLAN TEMP/S”
   If it is below 52°C (126°F), go to following step.
   If it is above 52°C (126°F), cool down the engine to less than 52°C (126°F). Then go to next steps.
6. Start engine.
7. Drive vehicle for 10 consecutive minutes under the following conditions.

VHCL SPEED SE	More than 56km/h (35MPH)

CAUTION:
Always drive vehicle at a safe speed.
If “COOLAN TEMP/S” increases to more than 71°C (160°F) within 10 minutes, turn ignition switch OFF because the test result will be OK.

8. Check 1st trip DTC.

With GST
Follow the procedure “With CONSULT-III” above.

Is 1st trip DTC detected?

YES >> Go to EC-722, "Diagnosis Procedure".
NO >> INSPECTION END

Diagnosis Procedure

INFOID:0000000004349696

1. CHECK ENGINE COOLANT TEMPERATURE SENSOR

Refer to EC-723, "Component Inspection".

Is the inspection result normal?

YES >> GO TO 2.
NO >> Replace engine coolant temperature sensor.

2. CHECK THERMOSTAT

Refer to CO-21, "Removal and Installation".

Is the inspection result normal?

YES >> INSPECTION END
NO >> Replace thermostat.

Component Inspection

INFOID:0000000004349697

1. CHECK ENGINE COOLANT TEMPERATURE SENSOR

1. Turn ignition switch OFF.
2. Disconnect engine coolant temperature sensor harness connector.
3. Remove engine coolant temperature sensor.
4. Check resistance between engine coolant temperature sensor terminals by heating with hot water as shown in the figure.

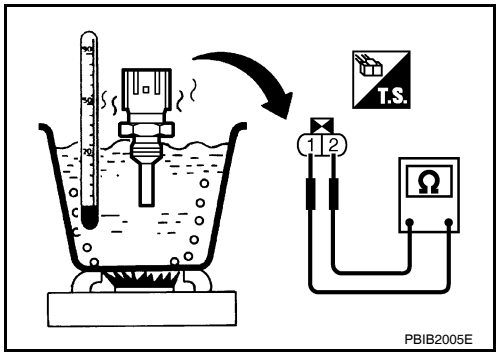

Terminals	Condition		Resistance
1 and 2	Temperature °C (°F)	20 (68)	2.37 - 2.63 kΩ
		50 (122)	0.68 - 1.00 kΩ
		90 (194)	0.236 - 0.260 kΩ

Is the inspection result normal?

YES >> INSPECTION END
NO >> Replace engine coolant temperature sensor.

P0130 A/F SENSOR 1

Description

INFOID:0000000004349698

The air fuel ratio (A/F) sensor 1 is a planar one-cell limit current sensor. The sensor element of the A/F sensor 1 is composed an electrode layer, which transports ions. It has a heater in the element.

The sensor is capable of precise measurement λ = 1, but also in the lean and rich range. Together with its control electronics, the sensor outputs a clear, continuous signal throughout a wide λ range.

The exhaust gas components diffuse through the diffusion layer at the sensor cell. An electrode layer is applied voltage, and this current relative oxygen density in lean. Also this current relative hydrocarbon density in rich.

Therefore, the A/F sensor 1 is able to indicate air fuel ratio by this electrode layer of current. In addition, a heater is integrated in the sensor to ensure the required operating temperature of about 800°C (1,472°F).

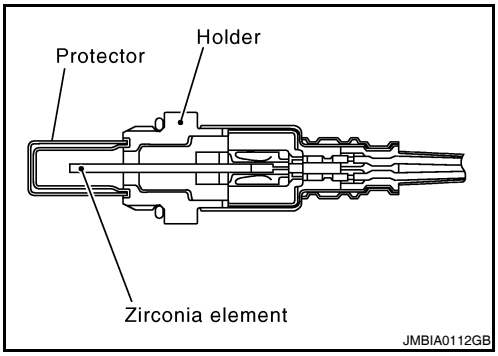

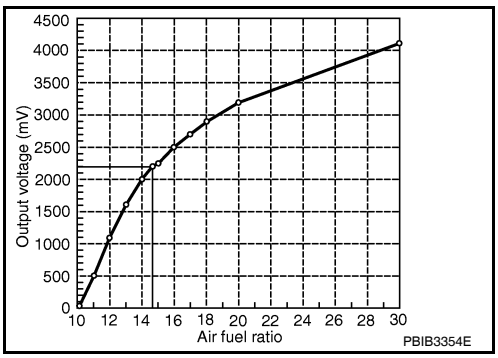

DTC Logic

INFOID:0000000004349699

DTC DETECTION LOGIC

To judge the malfunction, the diagnosis checks that the A/F signal computed by ECM from the A/F sensor 1 signal fluctuates according to fuel feedback control.

DTC No.	Trouble diagnosis name	DTC detecting condition		Possible Cause
P0130	Air fuel ratio (A/F) sensor 1 circuit	A)	The A/F signal computed by ECM from the A/F sensor 1 signal is constantly in the range other than approx. 2.2V.	• Harness or connectors (The A/F sensor 1 circuit is open or shorted.) • A/F sensor 1
		B)	The A/F signal computed by ECM from the A/F sensor 1 signal is constantly approx. 2.2V.	

DTC CONFIRMATION PROCEDURE

1. PRECONDITIONING

If DTC Confirmation Procedure has been previously conducted, always turn ignition switch OFF and wait at least 10 seconds before conducting the next test.

TESTING CONDITION:

Before performing the following procedure, confirm that battery voltage is more than 11V at idle.

>> GO TO 2.

2. PERFORM DTC CONFIRMATION PROCEDURE FOR MALFUNCTION A

With CONSULT-III

1. Start engine and warm it up to normal operating temperature.
2. Let it idle for 2 minutes.
3. Check 1st trip DTC.

Is 1st trip DTC detected?

YES >> Go to EC-726, "Diagnosis Procedure".
NO-1 >> With CONSULT-III: GO TO 3.

NO-2 >> Without CONSULT-III: GO TO 7.

3. CHECK AIR FUEL RATIO (A/F) SENSOR 1 FUNCTION

1. Select “A/F SEN1 (B1)” in “DATA MONITOR” mode with CONSULT-III.
2. Check “A/F SEN1 (B1)”indication.

Does the indication fluctuates around 2.2V?

YES >> GO TO 4.
NO >> Go to EC-726, "Diagnosis Procedure".

4. PERFORM DTC CONFIRMATION PROCEDURE FOR MALFUNCTION B-I

1. Select “A/F SEN1 (B1) P1276” of “A/F SEN1” in “DTC WORK SUPPORT” mode with CONSULT-III.
2. Touch “START”.
3. When the following conditions are met, “TESTING” will be displayed on the CONSULT-III screen.

ENG SPEED	1,000 - 3,200 rpm
VHCL SPEED SE	More than 64 km/h (40 mph)
B/FUEL SCHDL	1.0 - 11.5 msec
Shift lever	D position (CVT) 5th position (M/T)

If “TESTING” is not displayed after 20 seconds, retry from step 2.
CAUTION:
Always drive vehicle at a safe speed.

Is “TESTING” displayed on CONSULT-III screen?

YES >> GO TO 5.
NO >> Check A/F sensor 1 function again. GO TO 3.

5. PERFORM DTC CONFIRMATION PROCEDURE FOR MALFUNCTION B-II

Release accelerator pedal fully.
NOTE:
Never apply brake during releasing the accelerator pedal.

Which does “TESTING” change to?

COMPLETED>>GO TO 6.
OUT OF CONDITION>>Retry DTC CONFIRMATION PROCEDURE. GO TO 4.

6. PERFORM DTC CONFIRMATION PROCEDURE FOR MALFUNCTION B-III

Touch “SELF-DIAG RESULT”

Which is displayed on CONSULT-III screen?

YES >> INSPECTION END
NO >> Go to EC-726, "Diagnosis Procedure".

7. PERFORM COMPONENT FUNCTION CHECK FOR MALFUNCTION B

Perform Component Function Check. Refer to EC-725, "Component Function Check".
NOTE:
Use component function check to check the overall function of the A/F sensor 1 circuit. During this check, a 1st trip DTC might not be confirmed.

Is the inspection result normal?

YES >> INSPECTION END
NO >> Go to EC-726, "Diagnosis Procedure".

Component Function Check

INFOID:0000000004349700

1. PERFORM COMPONENT FUNCTION CHECK

With GST
1. Start engine and warm it up to normal operating temperature.
2. Drive the vehicle at a speed of 80 km/h (50 MPH) for a few minutes in the suitable gear position.

3. Set D (CVT) or 1st (M/T) position, then release the accelerator pedal fully until the vehicle speed decreases to 50 km/h (31 MPH).
   CAUTION:
   Always drive vehicle at a safe speed.
   NOTE:
   Never apply brake during releasing the accelerator pedal.
4. Repeat steps 2 to 3 for five times.
5. Stop the vehicle and turn ignition switch OFF.
6. Wait at least 10 seconds and restart engine.
7. Repeat steps 2 to 3 for five times.
8. Stop the vehicle and connect GST to the vehicle.
9. Check 1st trip DTC.

Is 1st trip DTC detected?

YES >> Go to EC-726, "Diagnosis Procedure".
NO >> INSPECTION END

Diagnosis Procedure

INFOID:0000000004349701

1. CHECK GROUND CONNECTION

1. Turn ignition switch OFF.
2. Check ground connection E9. Refer to Ground Inspection in GI-45, "Circuit Inspection".

Is the inspection result normal?

YES >> GO TO 2.
NO >> Repair or replace ground connection.

2. CHECK AIR FUEL RATIO (A/F) SENSOR 1 POWER SUPPLY CIRCUIT

1. Disconnect A/F sensor 1 harness connector.
2. Turn ignition switch ON.
3. Check the voltage between A/F sensor 1 harness connector and ground.

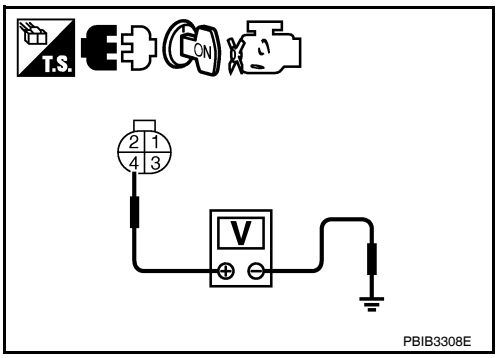

A/F sensor 1		Ground	Voltage
Connector	Terminal		
F44	4	Ground	Battery voltage

Is the inspection result normal?

YES >> GO TO 4.
NO >> GO TO 3.

3. DETECT MALFUNCTIONING PART

Check the following.
- IPDM E/R harness connector F10
- 15A fuse (No. 37)
- Harness for open or short between A/F sensor 1 and fuse

>> Repair or replace harness or connectors.

4. CHECK A/F SENSOR 1 INPUT SIGNAL CIRCUIT FOR OPEN AND SHORT

1. Turn ignition switch OFF.
2. Disconnect ECM harness connector.
3. Check the continuity between A/F sensor 1 harness connector and ECM harness connector.

A/F sensor 1		ECM		Continuity
Connector	Terminal	Connector	Terminal	
F44	1	F13	45	Existed
	2		49	

4. Check the continuity between A/F sensor 1 harness connector or ECM harness connector and ground.

A/F sensor 1		ECM		Ground	Continuity
Connector	Terminal	Connector	Terminal		
F44	1	F13	45	Ground	Not existed
	2		49		

5. Also check harness for short to power.

Is the inspection result normal?

YES >> GO TO 5.
NO >> Repair open circuit or short to ground or short to power in harness or connectors.

5. CHECK INTERMITTENT INCIDENT

Perform GI-42, "Intermittent Incident".

Is the inspection result normal?

YES >> GO TO 6.
NO >> Repair or replace.

6. REPLACE AIR FUEL RATIO (A/F) SENSOR 1

Replace air fuel ratio (A/F) sensor 1.

CAUTION:

- **Discard any sensor which has been dropped from a height of more than 0.5 m (19.7 in) onto a hard surface such as a concrete floor; use a new one.**
- **Before installing new sensor, clean exhaust system threads using oxygen sensor thread cleaner tool [commercial service tool: (J-43897-18) or J43897-12] and approved anti-seize lubricant (commercial service tool).**

>> INSPECTION END

P0131 A/F SENSOR 1

Description

INFOID:0000000004349702

The air fuel ratio (A/F) sensor 1 is a planar one-cell limit current sensor. The sensor element of the A/F sensor 1 is composed an electrode layer, which transports ions. It has a heater in the element.

The sensor is capable of precise measurement λ = 1, but also in the lean and rich range. Together with its control electronics, the sensor outputs a clear, continuous signal throughout a wide λ range.

The exhaust gas components diffuse through the diffusion layer at the sensor cell. An electrode layer is applied voltage, and this current relative oxygen density in lean. Also this current relative hydrocarbon density in rich.

Therefore, the A/F sensor 1 is able to indicate air fuel ratio by this electrode layer of current. In addition, a heater is integrated in the sensor to ensure the required operating temperature of about 800°C (1,472°F).

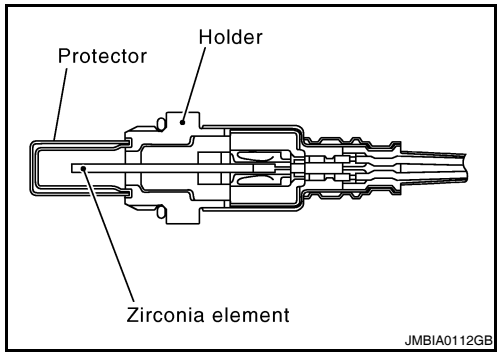

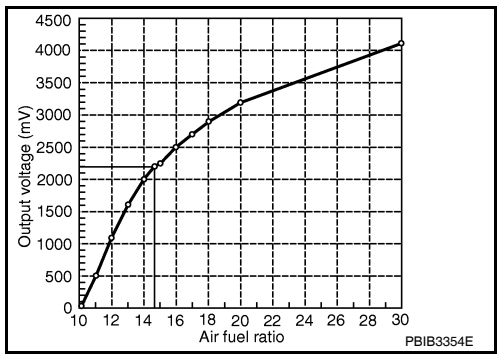

DTC Logic

INFOID:0000000004349703

DTC DETECTION LOGIC

To judge the malfunction, the diagnosis checks that the A/F signal computed by ECM from the A/F sensor 1 signal is not inordinately low.

DTC No.	Trouble diagnosis name	DTC detecting condition	Possible Cause
P0131	Air fuel ratio (A/F) sensor 1 circuit low voltage	• The A/F signal computed by ECM from the A/F sensor 1 signal is constantly approx. 0V.	• Harness or connectors (The A/F sensor 1 circuit is open or shorted.) • A/F sensor 1

DTC CONFIRMATION PROCEDURE

1. PRECONDITIONING

If DTC Confirmation Procedure has been previously conducted, always turn ignition switch OFF and wait at least 10 seconds before conducting the next test.

TESTING CONDITION:

Before performing the following procedure, confirm that battery voltage is more than 10.5V at idle.

>> GO TO 2.

2. CHECK A/F SENSOR FUNCTION

With CONSULT-III

1. Start engine and warm it up to normal operating temperature.
2. Select “A/F SEN1 (B1)” in “DATA MONITOR” mode with CONSULT-III.
3. Check “A/F SEN1 (B1)” indication.

With GST

Follow the procedure “With CONSULT-III” above.

Is the indication constantly approx. 0V?

YES >> Go to EC-729, "Diagnosis Procedure".

NO >> GO TO 3.

3. PERFORM DTC CONFIRMATION PROCEDURE

With CONSULT-III

1. Turn ignition switch OFF, wait at least 10 seconds and then restart engine.
2. Drive and accelerate vehicle to more than 40 km/h (25 MPH) within 20 seconds after restarting engine.
   CAUTION:
   Always drive vehicle at a safe speed.
3. Maintain the following conditions for about 20 consecutive seconds.

ENG SPEED	1,000 - 3,200 rpm
VHCL SPEED SE	More than 40 km/h (25 mph)
B/FUEL SCHDL	1.5 - 9.0 msec
Shift lever	Suitable position

NOTE:
- **Keep the accelerator pedal as steady as possible during the cruising.**
- **If this procedure is not completed within 1 minute after restarting engine at step 1, return to step 1.**

4. Check 1st trip DTC.

With GST

Follow the procedure “With CONSULT-III” above.

Is 1st trip DTC detected?

YES >> Go to EC-729, "Diagnosis Procedure".
NO >> INSPECTION END

Diagnosis Procedure

INFOID:0000000004349704

1. CHECK GROUND CONNECTION

1. Turn ignition switch OFF.
2. Check ground connection E9. Refer to Ground Inspection in GI-45, "Circuit Inspection".

Is the inspection result normal?

YES >> GO TO 2.
NO >> Repair or replace ground connection.

2. CHECK AIR FUEL RATIO (A/F) SENSOR 1 POWER SUPPLY CIRCUIT

1. Disconnect A/F sensor 1 harness connector.
2. Turn ignition switch ON.
3. Check the voltage between A/F sensor 1 harness connector and ground.

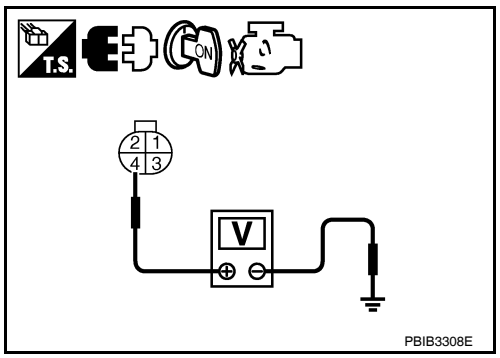

A/F sensor 1		Ground	Voltage
Connector	Terminal		
F44	4	Ground	Battery voltage

Is the inspection result normal?

YES >> GO TO 4.
NO >> GO TO 3.

3. DETECT MALFUNCTIONING PART

Check the following.
- IPDM E/R harness connector F10
- 15A fuse (No. 37)
- Harness for open or short between A/F sensor 1 and fuse

>> Repair or replace harness or connectors.

4. CHECK A/F SENSOR 1 INPUT SIGNAL CIRCUIT FOR OPEN AND SHORT

1. Turn ignition switch OFF.
2. Disconnect ECM harness connector.
3. Check the continuity between A/F sensor 1 harness connector and ECM harness connector.

A/F sensor 1		ECM		Continuity
Connector	Terminal	Connector	Terminal	
F44	1	F13	45	Existed
	2		49	

4. Check the continuity between A/F sensor 1 harness connector or ECM harness connector and ground.

A/F sensor 1		ECM		Ground	Continuity
Connector	Terminal	Connector	Terminal		
F44	1	F13	45	Ground	Not existed
	2		49		

5. Also check harness for short to power.

Is the inspection result normal?

YES >> GO TO 5.
NO >> Repair open circuit or short to ground or short to power in harness or connectors.

5. CHECK INTERMITTENT INCIDENT

Perform GI-42, "Intermittent Incident".

Is the inspection result normal?

YES >> GO TO 6.
NO >> Repair or replace.

6. REPLACE AIR FUEL RATIO (A/F) SENSOR 1

Replace air fuel ratio (A/F) sensor 1.

CAUTION:

- **Discard any sensor which has been dropped from a height of more than 0.5 m (19.7 in) onto a hard surface such as a concrete floor; use a new one.**
- **Before installing new sensor, clean exhaust system threads using oxygen sensor thread cleaner tool [commercial service tool: (J-43897-18) or J43897-12] and approved anti-seize lubricant (commercial service tool).**

>> INSPECTION END

P0132 A/F SENSOR 1

Description

INFOID:0000000004349705

The air fuel ratio (A/F) sensor 1 is a planar one-cell limit current sensor. The sensor element of the A/F sensor 1 is composed an electrode layer, which transports ions. It has a heater in the element.
The sensor is capable of precise measurement λ = 1, but also in the lean and rich range. Together with its control electronics, the sensor outputs a clear, continuous signal throughout a wide λ range.
The exhaust gas components diffuse through the diffusion layer at the sensor cell. An electrode layer is applied voltage, and this current relative oxygen density in lean. Also this current relative hydrocarbon density in rich.
Therefore, the A/F sensor 1 is able to indicate air fuel ratio by this electrode layer of current. In addition, a heater is integrated in the sensor to ensure the required operating temperature of about 800°C (1,472°F).

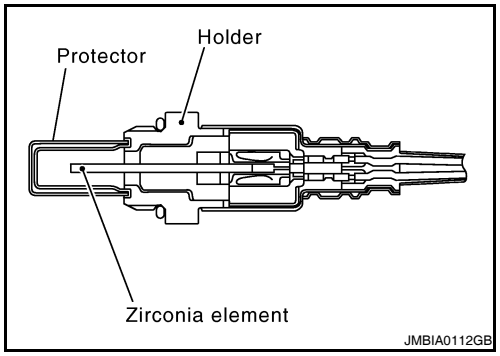

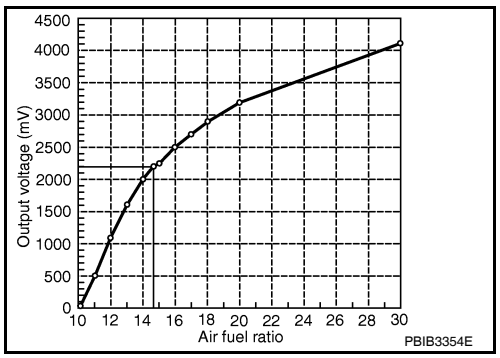

DTC Logic

INFOID:0000000004349706

DTC DETECTION LOGIC

To judge the malfunction, the diagnosis checks that the A/F signal computed by ECM from the A/F sensor 1 signal is not inordinately high.

DTC No.	Trouble diagnosis name	DTC detecting condition	Possible Cause
P0132	Air fuel ratio (A/F) sensor 1 circuit high voltage	• The A/F signal computed by ECM from the A/F sensor 1 signal is constantly approx. 5V.	• Harness or connectors (The A/F sensor 1 circuit is open or shorted.) • A/F sensor 1

DTC CONFIRMATION PROCEDURE

1. PRECONDITIONING

If DTC Confirmation Procedure has been previously conducted, always turn ignition switch OFF and wait at least 10 seconds before conducting the next test.
TESTING CONDITION:
Before performing the following procedure, confirm that battery voltage is more than 10.5V at idle.

>> GO TO 2.

2. CHECK A/F SENSOR FUNCTION

With CONSULT-III
1. Start engine and warm it up to normal operating temperature.
2. Select “A/F SEN1 (B1)” in “DATA MONITOR” mode with CONSULT-III.
3. Check “A/F SEN1 (B1)” indication.

With GST
Follow the procedure “With CONSULT-IIII” above.

Is the indication constantly approx. 5V?

YES >> Go to EC-732, "Diagnosis Procedure".

NO >> GO TO 3.

3. PERFORM DTC CONFIRMATION PROCEDURE

With CONSULT-III

1. Turn ignition switch OFF, wait at least 10 seconds and then restart engine.
2. Drive and accelerate vehicle to more than 40 km/h (25 MPH) within 20 seconds after restarting engine.
   CAUTION:
   Always drive vehicle at a safe speed.
3. Maintain the following conditions for about 20 consecutive seconds.

ENG SPEED	1,000 - 3,200 rpm
VHCL SPEED SE	More than 40 km/h (25 mph)
B/FUEL SCHDL	1.5 - 9.0 msec
Shift lever	Suitable position

NOTE:
- **Keep the accelerator pedal as steady as possible during the cruising.**
- **If this procedure is not completed within 1 minute after restarting engine at step 1, return to step 1.**

4. Check 1st trip DTC.

With GST

Follow the procedure “With CONSULT-III” above.

Is 1st trip DTC is detected?

YES >> Go to EC-732, "Diagnosis Procedure".
NO >> INSPECTION END

Diagnosis Procedure

INFOID:0000000004349707

1. CHECK GROUND CONNECTION

1. Turn ignition switch OFF.
2. Check ground connection E9. Refer to Ground Inspection in GI-45, "Circuit Inspection".

Is the inspection result normal?

YES >> GO TO 2.
NO >> Repair or replace ground connection.

2. CHECK AIR FUEL RATIO (A/F) SENSOR 1 POWER SUPPLY CIRCUIT

1. Disconnect A/F sensor 1 harness connector.
2. Turn ignition switch ON.
3. Check the voltage between A/F sensor 1 harness connector and ground.

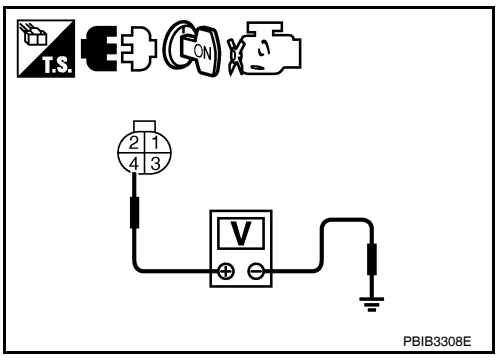

A/F sensor 1		Ground	Voltage
Connector	Terminal		
F44	4	Ground	Battery voltage

Is the inspection result normal?

YES >> GO TO 4.
NO >> GO TO 3.

3. DETECT MALFUNCTIONING PART

Check the following.
- IPDM E/R harness connector F10
- 15A fuse (No. 37)
- Harness for open or short between A/F sensor 1 and fuse

>> Repair or replace harness or connectors.

4. CHECK A/F SENSOR 1 INPUT SIGNAL CIRCUIT FOR OPEN AND SHORT

1. Turn ignition switch OFF.
2. Disconnect ECM harness connector.
3. Check the continuity between A/F sensor 1 harness connector and ECM harness connector.

A/F sensor 1		ECM		Continuity
Connector	Terminal	Connector	Terminal	
F44	1	F13	45	Existed
	2		49	

4. Check the continuity between A/F sensor 1 harness connector or ECM harness connector and ground.

A/F sensor 1		ECM		Ground	Continuity
Connector	Terminal	Connector	Terminal		
F44	1	F13	45	Ground	Not existed
	2		49		

5. Also check harness for short to power.

Is the inspection result normal?

YES >> GO TO 5.
NO >> Repair open circuit or short to ground or short to power in harness or connectors.

5. CHECK INTERMITTENT INCIDENT

Perform GI-42, "Intermittent Incident".

Is the inspection result normal?

YES >> GO TO 6.
NO >> Repair or replace.

6. REPLACE AIR FUEL RATIO (A/F) SENSOR 1

Replace air fuel ratio (A/F) sensor 1.

CAUTION:

- **Discard any sensor which has been dropped from a height of more than 0.5 m (19.7 in) onto a hard surface such as a concrete floor; use a new one.**
- **Before installing new sensor, clean exhaust system threads using oxygen sensor thread cleaner tool [commercial service tool: (J-43897-18) or J43897-12] and approved anti-seize lubricant (commercial service tool).**

>> INSPECTION END

P0133 A/F SENSOR 1

Description

INFOID:0000000004349708

The air fuel ratio (A/F) sensor 1 is a planar one-cell limit current sensor. The sensor element of the A/F sensor 1 is composed an electrode layer, which transports ions. It has a heater in the element.

The sensor is capable of precise measurement λ = 1, but also in the lean and rich range. Together with its control electronics, the sensor outputs a clear, continuous signal throughout a wide λ range.

The exhaust gas components diffuse through the diffusion layer at the sensor cell. An electrode layer is applied voltage, and this current relative oxygen density in lean. Also this current relative hydrocarbon density in rich.

Therefore, the A/F sensor 1 is able to indicate air fuel ratio by this electrode layer of current. In addition, a heater is integrated in the sensor to ensure the required operating temperature of about 800°C (1,472°F).

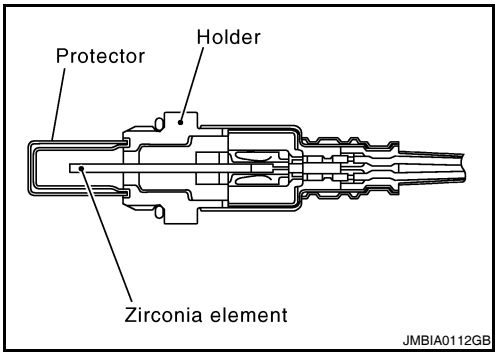

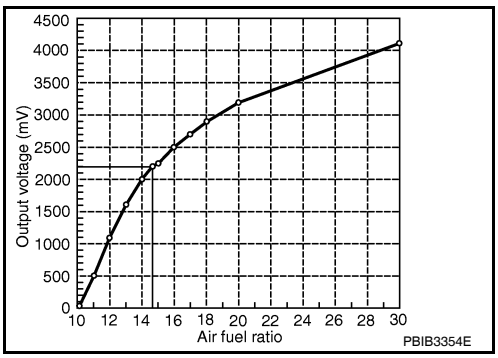

DTC Logic

INFOID:0000000004349709

DTC DETECTION LOGIC

To judge the malfunction of A/F sensor 1, this diagnosis measures response time of the A/F signal computed by ECM from the A/F sensor 1 signal. The time is compensated by engine operating (speed and load), fuel feedback control constant, and the A/F sensor 1 temperature index. Judgment is based on whether the compensated time (the A/F signal cycling time index) is inordinately long or not.

DTC No.	Trouble diagnosis name	DTC detecting condition	Possible Cause
P0133	Air fuel ratio (A/F) sensor 1 circuit slow response	• The response of the A/F signal computed by ECM from A/F sensor 1 signal takes more than the specified time.	• Harness or connectors (The A/F sensor 1 circuit is open or shorted.) • A/F sensor 1 • A/F sensor 1 heater • Fuel pressure • Fuel injector • Intake air leaks • Exhaust gas leaks • PCV • Mass air flow sensor

DTC CONFIRMATION PROCEDURE

1.PRECONDITIONING

If DTC Confirmation Procedure has been previously conducted, always turn ignition switch OFF and wait at least 10 seconds before conducting the next test.

TESTING CONDITION:

Before performing the following procedure, confirm that battery voltage is more than 11V at idle.

Do you have CONSULT-III?

YES >> GO TO 2.
NO >> GO TO 5.

2. PERFORM DTC CONFIRMATION PROCEDURE-I

With CONSULT-III

1. Start engine and warm it up to normal operating temperature.
2. Turn ignition switch OFF and wait at least 10 seconds.
3. Start engine and keep the engine speed between 3,500 and 4,000 rpm for at least 1minute under no load.
4. Let engine idle for 1 minute.
5. Select “A/F SEN1(B1) P1278/P1279” of “A/F SEN1” in “DTC WORK SUPPORT” mode with CONSULT-III.
6. Touch “START”.

Is “COMPLETED” displayed on COUSULT-III?

YES >> GO TO 3
NO >> GO TO 4.

3. PERFORM DTC CONFIRMATION PROCEDURE-II

Touch “SELF-DIAG RESULT”.

Which is displayed on CONSULT-III?

OK >> INSPECTION END
NG >> Go to EC-736, "Diagnosis Procedure".

4. PERFORM DTC CONFIRMATION PROCEDURE

1. After perform the following procedure, “TESTING” will be displayed on the CONSULT-III screen.
- Increase the engine speed up to 4,000 to 5,000 rpm and keep it for 10 seconds.
- Fully release accelerator pedal and then let engine idle for about 10 seconds.

If “TESTING” is not displayed after 10 seconds, refer to EC-665, "Component Function Check".

2. Wait for about 20 seconds at idle under the condition that “TESTING” is displayed on the CONSULT-III screen.
3. Make sure that “TESTING” changes to “COMPLETED”.
   If “TESTING” changed to “OUT OF CONDITION”, refer to EC-665, "Component Function Check".
4. Touch “SELF-DIAG RESULT”.

Which is displayed on CONSULT-III?

OK >> INSPECTION END
NG >> Go to EC-736, "Diagnosis Procedure".

5. CHECK AIR-FUEL RATIO SELF-LEARNING VALUE

With GST

1. Start engine and warm it up to normal operating temperature.
2. Select Service $01 with GST.
3. Calculate the total value of “Short term fuel trim” and “Long term fuel trim” indications.

Is the total percentage within ±15%?

YES >> GO TO 7.
NO >> GO TO 6.

6. DETECT MALFUNCTIONING PART

Check the following.

- Intake air leaks
- Exhaust gas leaks
- Incorrect fuel pressure
- Lack of fuel
- Fuel injector
- Incorrect PCV hose connection
- PCV valve
- Mass air flow sensor

>> Repair or replace malfunctioning part.

7. PERFORM DTC CONFIRMATION PROCEDURE

1. Turn ignition switch OFF and wait at least 10 seconds.
2. Start engine and keep the engine speed between 3,500 and 4,000 rpm for at least 1minute under no load.

3. Let engine idle for 1 minute.
4. Increase the engine speed up to 4,000 to 5,000 rpm and keep it for 10 seconds.
5. Fully release accelerator pedal and then let engine idle for about 1 minute.
6. Check 1st trip DTC detected?.

Is 1st trip DTC detected?

YES >> Go to EC-736, "Diagnosis Procedure".
NO >> INSPECTION END

Diagnosis Procedure

INFOID:0000000004349710

1. CHECK GROUND CONNECTION

1. Turn ignition switch OFF.
2. Check ground connection E9. Refer to Ground Inspection in GI-45, "Circuit Inspection".

Is the inspection result normal?

YES >> GO TO 2.
NO >> Repair or replace ground connection.

2. RETIGHTEN A/F SENSOR 1

Loosen and retighten the A/F sensor 1. Refer to EM-30, "Removal and Installation"

>> GO TO 3.

3. CHECK EXHAUST GAS LEAK

1. Start engine and run it at idle.
2. Listen for an exhaust gas leak before three way catalyst (manifold).

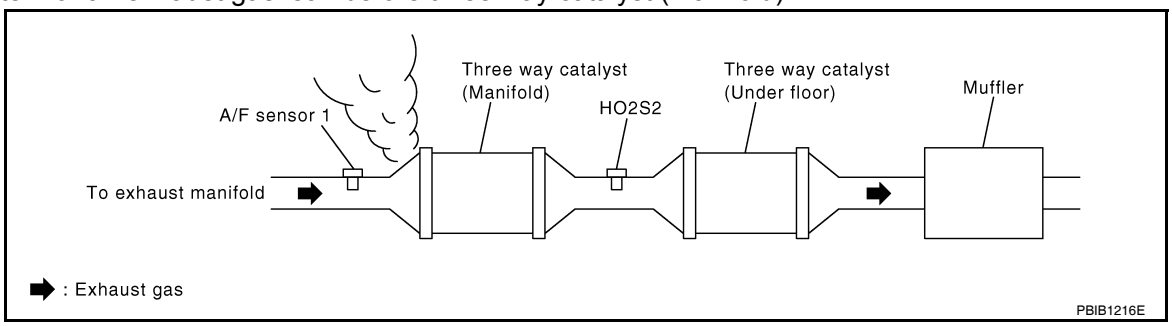

Is exhaust gas leak detected?

YES >> Repair or replace.
NO >> GO TO 4.

4. CHECK FOR INTAKE AIR LEAK

Listen for an intake air leak after the mass air flow sensor.

Is intake air leak detected?

YES >> Repair or replace.
NO >> GO TO 5.

5. CLEAR THE MIXTURE RATIO SELF-LEARNING VALUE

1. Clear the mixture ratio self-learning value. Refer to EC-568, "MIXTURE RATIO SELF-LEARNING VALUE CLEAR : Special Repair Requirement".
2. Run engine for at least 10 minutes at idle speed.

Is the 1st trip DTC P0171 or P172 detected? Is it difficult to start engine?

YES >> Perform trouble diagnosis for DTC P0171 or P0172. Refer to EC-759, "DTC Logic" or EC-763, "DTC Logic".
NO >> GO TO 6.

6. CHECK AIR FUEL RATIO (A/F) SENSOR 1 POWER SUPPLY CIRCUIT

1. Disconnect A/F sensor 1 harness connector.

2. Turn ignition switch ON.
3. Check the voltage between A/F sensor 1 harness connector and ground.

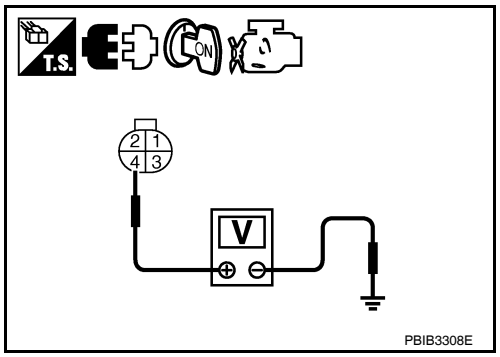

A/F sensor 1		Ground	Voltage
Connector	Terminal		
F44	4	Ground	Battery voltage

Is the inspection result normal?

YES >> GO TO 8.
NO >> GO TO 7.

7. DETECT MALFUNCTIONING PART

Check the following.
- IPDM E/R harness connector F10
- 15A fuse (No. 37)
- Harness for open or short between A/F sensor 1 and fuse

>> Repair or replace harness or connectors.

8. CHECK A/F SENSOR 1 INPUT SIGNAL CIRCUIT FOR OPEN AND SHORT

1. Turn ignition switch OFF.
2. Disconnect ECM harness connector.
3. Check the continuity between A/F sensor 1 harness connector and ECM harness connector.

A/F sensor 1		ECM		Continuity
Connector	Terminal	Connector	Terminal	
F44	1	F13	45	Existed
	2		49	

4. Check the continuity between A/F sensor 1 harness connector or ECM harness connector and ground.

A/F sensor 1		ECM		Ground	Continuity
Connector	Terminal	Connector	Terminal		
F44	1	F13	45	Ground	Not existed
	2		49		

5. Also check harness for short to power.

Is the inspection result normal?

YES >> GO TO 9.
NO >> Repair open circuit or short to ground or short to power in harness or connectors.

9. CHECK AIR FUEL RATIO (A/F) SENSOR 1 HEATER

Refer to EC-686, "Component Inspection".

Is the inspection result normal?

YES >> GO TO 10.
NO >> GO TO 13.

10. CHECK MASS AIR FLOW SENSOR

Check mass air flow sensor.
Refer to EC-696, "Component Inspection".

Is the inspection result normal?

YES >> GO TO 11.
NO >> Replace mass air flow sensor.

11. CHECK PCV VALVE

Refer to EC-974, "Component Inspection".

Is the inspection result normal?

YES >> GO TO 12.
NO >> Repair or replace PCV valve.

12. CHECK INTERMITTENT INCIDENT

Perform GI-42, "Intermittent Incident".

Is the inspection result normal?

YES >> GO TO 13.
NO >> Repair or replace.

13. REPLACE AIR FUEL RATIO (A/F) SENSOR 1

Replace air fuel ratio (A/F) sensor 1.

CAUTION:

- **Discard any sensor which has been dropped from a height of more than 0.5 m (19.7 in) onto a hard surface such as a concrete floor; use a new one.**
- **Before installing new sensor, clean exhaust system threads using oxygen sensor thread cleaner tool [commercial service tool: (J-43897-18) or J43897-12] and approved anti-seize lubricant (commercial service tool).**

>> INSPECTION END

P0137 HO2S2

Description

INFOID:0000000004349711

The heated oxygen sensor 2, after three way catalyst (manifold), monitors the oxygen level in the exhaust gas on each bank.
Even if switching characteristics of the air fuel ratio (A/F) sensor 1 are shifted, the air-fuel ratio is controlled to stoichiometric, by the signal from the heated oxygen sensor 2.
This sensor is made of ceramic zirconia. The zirconia generates voltage from approximately 1V in richer conditions to 0V in leaner conditions.
Under normal conditions the heated oxygen sensor 2 is not used for engine control operation.

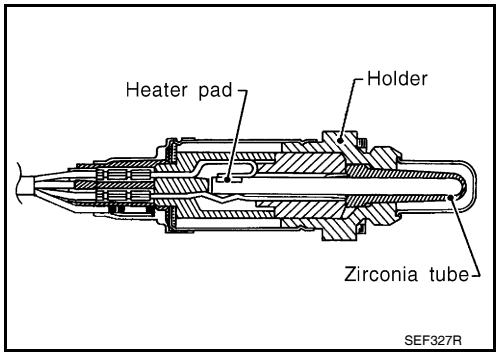

DTC Logic

INFOID:0000000004349712

DTC DETECTION LOGIC

The heated oxygen sensor 2 has a much longer switching time between rich and lean than the air fuel ratio (A/F) sensor 1. The oxygen storage capacity of the three way catalyst (manifold) causes the longer switching time. To judge the malfunctions of heated oxygen sensor 2, ECM monitors whether the maximum voltage of the sensor is sufficiently high during the various driving condition such as fuel-cut.

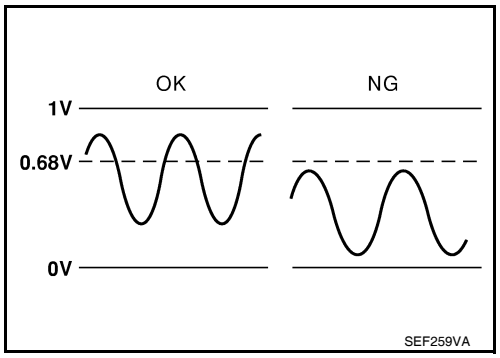

DTC No.	Trouble diagnosis name	DTC detecting condition	Possible cause
P0137	Heated oxygen sensor 2 circuit low voltage	The maximum voltage from the sensor is not reached to the specified voltage.	• Harness or connectors (The sensor circuit is open or shorted) • Heated oxygen sensor 2 • Fuel pressure • Fuel injector • Intake air leaks

DTC CONFIRMATION PROCEDURE

1. INSPECTION START

Do you have CONSULT-III?

Do you have CONSULT-III?

YES >> GO TO 2.
NO >> GO TO 5.

2. PRECONDITIONING

If DTC confirmation Procedure has been previously conducted, always turn ignition switch OFF and wait at least 10 seconds before conducting the next test.

TESTING CONDITION:
For better results, perform “DTC WORK SUPPORT” at a temperature of 0 to 30 °C (32 to 86 °F).

>> GO TO 3.

3. PERFORM DTC CONFIRMATION PROCEDURE

With CONSULT-III

1. Turn ignition switch ON and select “DATA MONITOR” mode with CONSULT-III.
2. Start engine and warm it up to the normal operating temperature.
3. Turn ignition switch OFF and wait at least 10 seconds.
4. Start engine and keep the engine speed between 3,500 and 4,000 rpm for at least 1 minute under no load.
5. Let engine idle for 1 minute.
6. Make sure that “COOLAN TEMP/S” indicates more than 70°C (158°F).
   If not, warm up engine and go to next step when “COOLAN TEMP/S” indication reaches to 70°C (158°F).
7. Open engine hood.
8. Select “HO2S2 (B1) P1147” of “HO2S2” in “DTC WORK SUPPORT” mode with CONSULT-III.
9. Follow the instruction of CONSULT-III.
   NOTE:
   It will take at most 10 minutes until “COMPLETED” is displayed.
10. Touch “SELF-DIAG RESULT”.

Which is displayed on CONSULT-III screen?

OK >> INSPECTION END
NG >> Go to EC-741, "Diagnosis Procedure".
CAN NOT BE DIAGNOSED>>GO TO 4.

4. PERFORM DTC CONFIRMATION PROCEDURE AGAIN

1. Turn ignition switch OFF and leave the vehicle in a cool place (soak the vehicle).
2. Perform DTC CONFIRMATION PROCEDURE again.

>> GO TO 3.

5. PERFORM COMPONENT FUNCTION CHECK

Perform component function check. Refer to EC-740, "Component Function Check".
NOTE:
Use component function check to check the overall function of the heated oxygen sensor 2 circuit. During this check, a 1st trip DTC might not be confirmed.

Is the inspection result normal?

YES >> INSPECTION END
NO >> Go to EC-741, "Diagnosis Procedure".

Component Function Check

INFOID:0000000004349713

1. PERFORM COMPONENT FUNCTION CHECK-I

Without CONSULT-III

1. Start engine and warm it up to the normal operating temperature.
2. Turn ignition switch OFF and wait at least 10 seconds.
3. Start engine and keep the engine speed between 3,500 and 4,000 rpm for at least 1 minute under no load.
4. Let engine idle for 1 minute.
5. Check the voltage between ECM harness connector and ground under the following condition.

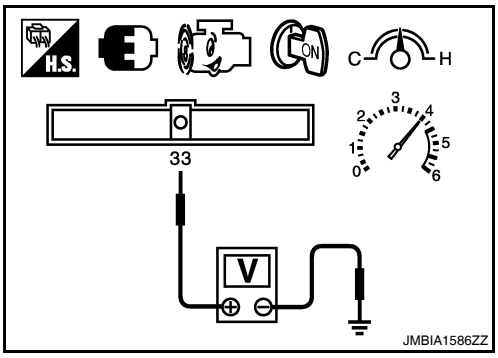

ECM		Ground	Condition	Voltage
Con-nector	Termi-nal			
F13	33 (HO2S2 signal)	Ground	Revving up to 4,000 rpm under no load at least 10 times	The voltage should be above 0.68V at least once during this procedure.

Is the inspection result normal?

YES >> INSPECTION END
NO >> GO TO 2.

2. PERFORM COMPONENT FUNCTION CHECK-II

Check the voltage between ECM harness connector and ground under the following condition.

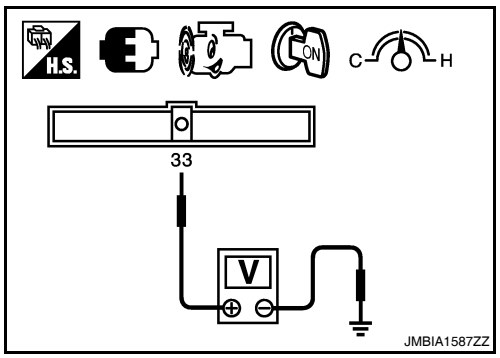

ECM		Ground	Condition	Voltage
Con-nector	Terminal			
F13	33 (HO2S2 signal)	Ground	Keeping engine speed at idle for 10 minutes	The voltage should be above 0.68V at least once during this procedure.

Is the inspection result normal?

YES >> INSPECTION END
NO >> GO TO 3.

3. PERFORM COMPONENT FUNCTION CHECK-III

Check the voltage between ECM harness connector and ground under the following condition.

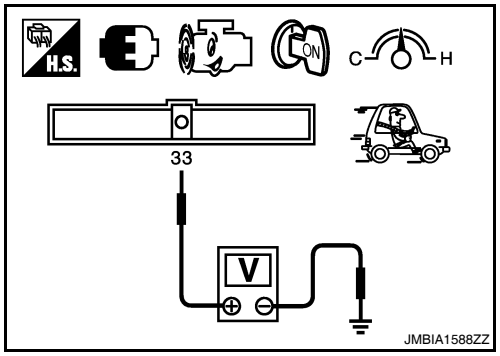

ECM		Ground	Condition	Voltage
Con-nector	Termi-nal			
F13	33 (HO2S2 signal)	Ground	Coasting from 80 km/h (50 MPH) in D position (CVT), 4th gear position (M/T)	The voltage should be above 0.68V at least once during this proce-dure.

Is the inspection result normal?

YES >> INSPECTION END
NO >> Go to EC-741, "Diagnosis Procedure".

Diagnosis Procedure

INFOID:0000000004349714

1. CHECK GROUND CONNECTION

1. Turn ignition switch OFF.
2. Check ground connection E9. Refer to Ground Inspection in GI-45, "Circuit Inspection".

Is the inspection result normal?

YES >> GO TO 2.
NO >> Repair or replace ground connection.

2. CLEAR THE MIXTURE RATIO SELF-LEARNING VALUE

1. Clear the mixture ratio self-learning value. Refer to EC-568, "MIXTURE RATIO SELF-LEARNING VALUE CLEAR : Special Repair Requirement".
2. Run engine for at least 10 minutes at idle speed.

Is the 1st trip DTC P0171 detected? Is it difficult to start engine?

YES >> Perform trouble diagnosis for DTC P0171. Refer to EC-759, "DTC Logic".
NO >> GO TO 3.

3. CHECK HO2S2 GROUND CIRCUIT FOR OPEN AND SHORT

1. Turn ignition switch OFF.
2. Disconnect heated oxygen sensor 2 harness connector.
3. Disconnect ECM harness connector.
4. Check the continuity between HO2S2 harness connector and ECM harness connector.

HO2S2		ECM		Continuity
Connector	Terminal	Connector	Terminal	
F42	1	F13	35	Existed

5. Also check harness for short to ground and short to power.

Is the inspection result normal?

YES >> GO TO 4.
NO >> Repair open circuit or short to ground or short to power in harness or connectors.

4. CHECK HO2S2 INPUT SIGNAL CIRCUIT FOR OPEN AND SHORT

1. Check the continuity between HO2S2 harness connector and ECM harness connector.

HO2S2		ECM		Continuity
Connector	Terminal	Connector	Terminal	
F42	4	F13	33	Existed

2. Check the continuity between HO2S2 harness connector or ECM harness connector and ground.

HO2S2		ECM		Ground	Continuity
Connector	Terminal	Connector	Terminal		
F42	4	F13	33	Ground	Not existed

3. Also check harness for short to power.

Is the inspection result normal?

YES >> GO TO 5.
NO >> Repair open circuit or short to ground or short to power in harness or connectors.

5. CHECK HEATED OXYGEN SENSOR 2

Refer to EC-742, "Component Inspection".

Is the inspection result normal?

YES >> GO TO 7.
NO >> GO TO 6.

6. REPLACE HEATED OXYGEN SENSOR 2

Replace heated oxygen sensor 2.

CAUTION:

- **Discard any sensor which has been dropped from a height of more than 0.5 m (19.7 in) onto a hard surface such as a concrete floor; use a new one.**
- **Before installing new sensor, clean exhaust system threads using oxygen sensor thread cleaner tool [commercial service tool: (J-43897-18) or J43897-12] and approved anti-seize lubricant (commercial service tool).**

>> INSPECTION END

7. CHECK INTERMITTENT INCIDENT

Refer to GI-42, "Intermittent Incident".

>> INSPECTION END

Component Inspection

INFOID:0000000004349715

1. INSPECTION START

Do you have CONSULT-III?

Do you have CONSULT-III?

YES >> GO TO 2.
NO >> GO TO 3.

2. CHECK HEATED OXYGEN SENSOR 2

With CONSULT-III

1. Turn ignition switch ON and select “DATA MONITOR” mode with CONSULT-III.
2. Start engine and warm it up to the normal operating temperature.
3. Turn ignition switch OFF and wait at least 10 seconds.

4. Start engine and keep the engine speed between 3,500 and 4,000 rpm for at least 1 minute under no load.
5. Let engine idle for 1 minute.
6. Select “FUEL INJECTION” in “ACTIVE TEST” mode, and select “HO2S2 (B1)” as the monitor item with CONSULT-III.
7. Check “HO2S2 (B1)” at idle speed when adjusting “FUEL INJECTION” to ±25%.

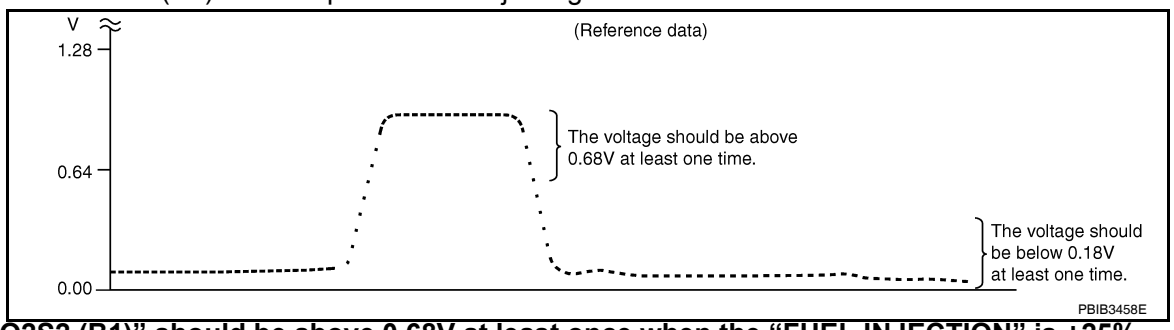

“HO2S2 (B1)” should be above 0.68V at least once when the “FUEL INJECTION” is +25%.
“HO2S2 (B1)” should be below 0.18V at least once when the “FUEL INJECTION” is –25%.

Is the inspection result normal?

YES >> INSPECTION END
NO >> GO TO 6.

3. CHECK HEATED OXYGEN SENSOR 2-I

Without CONSULT-III

1. Start engine and warm it up to the normal operating temperature.
2. Turn ignition switch OFF and wait at least 10 seconds.
3. Start engine and keep the engine speed between 3,500 and 4,000 rpm for at least 1 minute under no load.
4. Let engine idle for 1 minute.
5. Check the voltage between ECM harness connector and ground under the following condition.

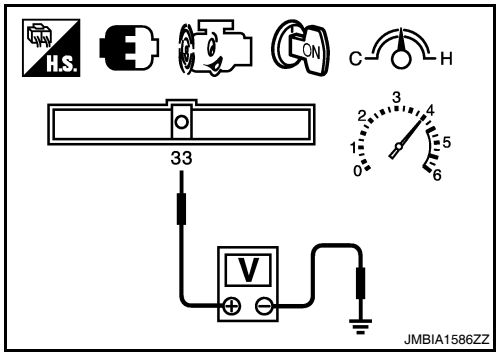

ECM		Ground	Condition	Voltage
Connector	Terminal			
F13	33 (HO2S2 signal)	Ground	Revving up to 4,000 rpm under no load at least 10 times	The voltage should be above 0.68V at least once during this procedure. The voltage should be below 0.18V at least once during this procedure.

Is the inspection result normal?

YES >> INSPECTION END
NO >> GO TO 4.

4. CHECK HEATED OXYGEN SENSOR 2-II

Check the voltage between ECM harness connector and ground under the following condition.

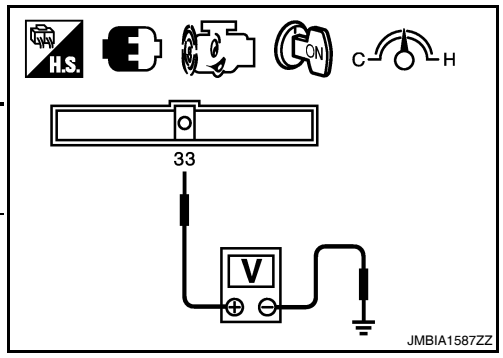

ECM		Ground	Condition	Voltage
Connector	Terminal			
F13	33 (HO2S2 signal)	Ground	Keeping engine speed at idle for 10 minutes	The voltage should be above 0.68V at least once during this procedure. The voltage should be below 0.18V at least once during this procedure.

Is the inspection result normal?

YES >> INSPECTION END

NO >> GO TO 5.

5. CHECK HEATED OXYGEN SENSOR 2-III

Check the voltage between ECM harness connector and ground under the following condition.

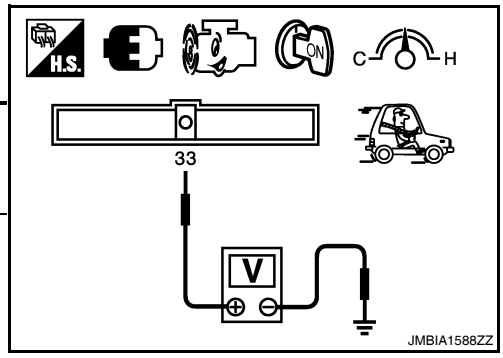

ECM		Ground	Condition	Voltage
Connector	Terminal			
F13	33 (HO2S2 signal)	Ground	Coasting from 80 km/h (50 MPH) in D position (CVT), 4th gear position (M/T)	The voltage should be above 0.68V at least once during this procedure. The voltage should be below 0.18V at least once during this procedure.

Is the inspection result normal?

YES >> INSPECTION END
NO >> GO TO 6.

6. REPLACE HEATED OXYGEN SENSOR 2

Replace heated oxygen sensor 2.

CAUTION:

- **Discard any sensor which has been dropped from a height of more than 0.5 m (19.7 in) onto a hard surface such as a concrete floor; use a new one.**
- **Before installing new sensor, clean exhaust system threads using oxygen sensor thread cleaner tool [commercial service tool: (J-43897-18) or J43897-12] and approved anti-seize lubricant (commercial service tool).**

>> INSPECTION END

P0138 HO2S2

Description

INFOID:0000000004349716

The heated oxygen sensor 2, after three way catalyst (manifold), monitors the oxygen level in the exhaust gas on each bank.
Even if switching characteristics of the air fuel ratio (A/F) sensor 1 are shifted, the air-fuel ratio is controlled to stoichiometric, by the signal from the heated oxygen sensor 2.
This sensor is made of ceramic zirconia. The zirconia generates voltage from approximately 1V in richer conditions to 0V in leaner conditions.
Under normal conditions the heated oxygen sensor 2 is not used for engine control operation.

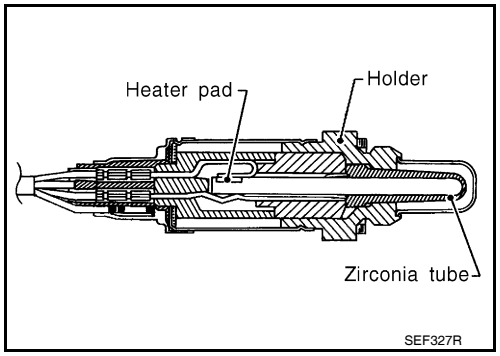

DTC Logic

INFOID:0000000004349717

DTC DETECTION LOGIC

The heated oxygen sensor 2 has a much longer switching time between rich and lean than the air fuel ratio (A/F) sensor 1. The oxygen storage capacity of the three way catalyst (manifold) causes the longer switching time.

MALFUNCTION A

To judge the malfunctions of heated oxygen sensor 2, ECM monitors whether the voltage is unusually high during the various driving condition such as fuel-cut.

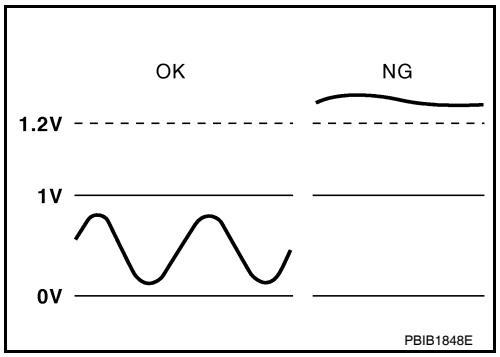

MALFUNCTION B

To judge the malfunctions of heated oxygen sensor 2, ECM monitors whether the minimum voltage of sensor is sufficiently low during the various driving condition such as fuel-cut.

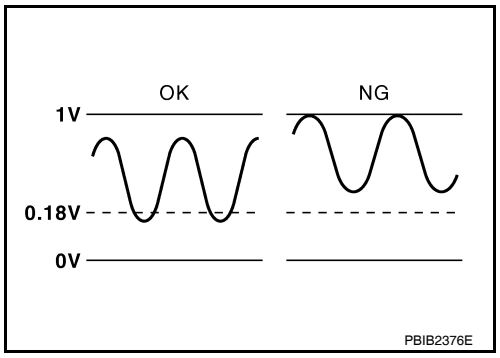

DTC No.	Trouble diagnosis name	DTC detecting condition		Possible cause
P0138	Heated oxygen sensor 2 circuit high voltage	A)	An excessively high voltage from the sensor is sent to ECM.	• Harness or connectors (The sensor circuit is open or shorted) • Heated oxygen sensor 2
		B)	The minimum voltage from the sensor is not reached to the specified voltage.	• Harness or connectors (The sensor circuit is open or shorted) • Heated oxygen sensor 2 • Fuel pressure • Fuel injector

DTC CONFIRMATION PROCEDURE

1.PRECONDITIONING

If DTC Confirmation Procedure has been previously conducted, always turn ignition switch OFF and wait at least 10 seconds before conducting the next test.

>> GO TO 2.

2.PERFORM DTC CONFIRMATION PROCEDURE FOR MALFUNCTION A

1. Start engine and warm it up to the normal operating temperature.
2. Turn ignition switch OFF and wait at least 10 seconds.
3. Start engine and keep the engine speed between 3,500 and 4,000 rpm for at least 1 minute under no load.
4. Check 1st trip DTC.

Is 1st trip DTC detected?

YES >> Go to EC-747, "Diagnosis Procedure".
NO-1 >> With CONSULT-III: GO TO 3.
NO-2 >> Without CONSULT-III: GO TO 5.

3.PERFORM DTC CONFIRMATION PROCEDURE FOR MALFUNCTION B

NOTE:
For better results, perform “DTC WORK SUPPORT” at a temperature of 0 to 30 °C (32 to 86 °F).

1. Turn ignition switch ON and select “DATA MONITOR” mode with CONSULT-III.
2. Start engine and warm it up to the normal operating temperature.
3. Turn ignition switch OFF and wait at least 10 seconds.
4. Start engine and keep the engine speed between 3,500 and 4,000 rpm for at least 1 minute under no load.
5. Let engine idle for 1 minute.
6. Make sure that “COOLAN TEMP/S” indicates more than 70°C (158°F).
   If not, warm up engine and go to next step when “COOLAN TEMP/S” indication reaches to 70°C (158°F).
7. Open engine hood.
8. Select “HO2S2 (B1) P1146” of “HO2S2” in “DTC WORK SUPPORT” mode with CONSULT-III.
9. Follow the instruction of CONSULT-III.
   NOTE:
   It will take at most 10 minutes until “COMPLETED” is displayed.
10. Touch “SELF-DIAG RESULT”.

Which is displayed on CONSULT-III

OK >> INSPECTION END
NG >> Go to EC-747, "Diagnosis Procedure".
CAN NOT BE DIAGNOSED>>GO TO 4.

4.PERFORM DTC CONFIRMATION PROCEDURE FOR MALUNCTION B AGAIN

1. Turn ignition switch OFF and leave the vehicle in a cool place (soak the vehicle).
2. Perform DTC CONFIRMATION PROCEDURE again.

>> GO TO 3.

5.PERFORM COMPONENT FUNCTION CHECK FOR MALFUNCTION B

Perform component function check. Refer to EC-747, "Diagnosis Procedure".
NOTE:
Use component function check to check the overall function of the heated oxygen sensor 2 circuit. During this check, a 1st trip DTC might not be confirmed.

Is the inspection result normal?

YES >> INSPECTION END
NO >> Go to EC-747, "Diagnosis Procedure".

Component Function Check

INFOID:0000000004349718

1.PERFORM COMPONENT FUNCTION CHECK-I

Without CONSULT-III

1. Start engine and warm it up to the normal operating temperature.

2. Turn ignition switch OFF and wait at least 10 seconds.
3. Start engine and keep the engine speed between 3,500 and 4,000 rpm for at least 1 minute under no load.
4. Let engine idle for 1 minute.
5. Check the voltage between ECM harness connector and ground under the following condition.

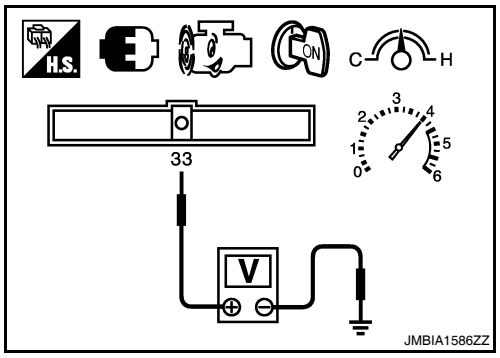

ECM		Ground	Condition	Voltage
Connector	Terminal			
F13	33 (HO2S 2 signal)	Ground	Revving up to 4,000 rpm under no load at least 10 times	The voltage should be above 0.18V at least once during this procedure.

Is the inspection result normal?

YES >> INSPECTION END
NO >> GO TO 2.

2. PERFORM COMPONENT FUNCTION CHECK-II

Check the voltage between ECM harness connector and ground under the following condition.

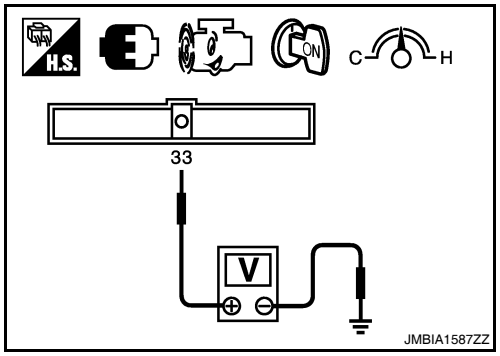

ECM		Ground	Condition	Voltage
Connector	Terminal			
F13	33 (HO2S 2 signal)	Ground	Keeping engine speed at idle for 10 minutes	The voltage should be above 0.18V at least once during this procedure.

Is the inspection result normal?

YES >> INSPECTION END
NO >> GO TO 3.

3. PERFORM COMPONENT FUNCTION CHECK-III

Check the voltage between ECM harness connector and ground under the following condition.

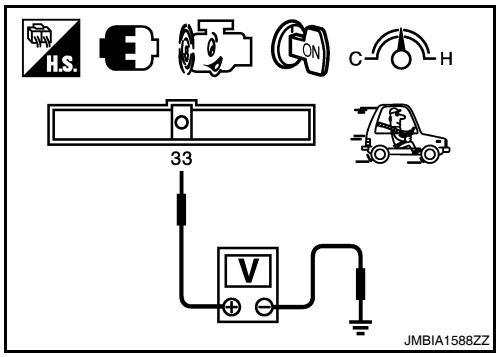

ECM		Ground	Condition	Voltage
Connector	Terminal			
F13	33 (HO2S 2 signal)	Ground	Coasting from 80 km/h (50 MPH) in D position (CVT), 4th gear position (M/T)	The voltage should be above 0.18V at least once during this procedure.

Is the inspection result normal?

YES >> INSPECTION END
NO >> Go to EC-747, "Diagnosis Procedure".

Diagnosis Procedure

INFOID:0000000004349719

1. INSPECTION START

Confirm the detected malfunction (A or B). Refer to EC-745, "DTC Logic".

Which malfunction is detected?

A >> GO TO 2.
B >> GO TO 9.

2. CHECK GROUND CONNECTION

1. Turn ignition switch OFF.
2. Check ground connection E9. Refer to Ground Inspection in GI-45, "Circuit Inspection".

Is the inspection result normal?

YES >> GO TO 3.
NO >> Repair or replace ground connection.

3. CHECK HO2S2 GROUND CIRCUIT FOR OPEN AND SHORT

1. Disconnect heated oxygen sensor 2 harness connector.
2. Disconnect ECM harness connector.
3. Check the continuity between HO2S2 harness connector and ECM harness connector.

HO2S2		ECM		Continuity
Connector	Terminal	Connector	Terminal	
F42	1	F13	35	Existed

4. Also check harness for short to ground and short to power.

Is the inspection result normal?

YES >> GO TO 4.
NO >> Repair open circuit or short to ground or short to power in harness or connectors.

4. CHECK HO2S2 INPUT SIGNAL CIRCUIT FOR OPEN AND SHORT

1. Check the continuity between HO2S2 harness connector and ECM harness connector.

HO2S2		ECM		Continuity
Connector	Terminal	Connector	Terminal	
F42	4	F13	33	Existed

2. Check the continuity between HO2S2 harness connector or ECM harness connector and ground.

HO2S2		ECM		Ground	Continuity
Connector	Terminal	Connector	Terminal		
F42	4	F13	33	Ground	Not existed

3. Also check harness for short to power.

Is the inspection result normal?

YES >> GO TO 5.
NO >> Repair open circuit or short to ground or short to power in harness or connectors.

5. CHECK HO2S2 CONNECTOR FOR WATER

Check connectors for water.

Water should not exist.

Is the inspection result normal?

YES >> GO TO 6.
NO >> Repair or replace harness or connectors.

6. CHECK HEATED OXYGEN SENSOR 2

Refer to EC-750, "Component Inspection".

Is the inspection result normal?

YES >> GO TO 8.
NO >> GO TO 7.

7. REPLACE HEATED OXYGEN SENSOR 2

Replace heated oxygen sensor 2.

CAUTION:

- **Discard any sensor which has been dropped from a height of more than 0.5 m (19.7 in) onto a hard surface such as a concrete floor; use a new one.**
- **Before installing new sensor, clean exhaust system threads using oxygen sensor thread cleaner tool [commercial service tool: (J-43897-18) or J43897-12] and approved anti-seize lubricant (commercial service tool).**

>> INSPECTION END

8. CHECK INTERMITTENT INCIDENT

Refer to GI-42, "Intermittent Incident".

>> INSPECTION END

9. CHECK GROUND CONNECTION

1. Turn ignition switch OFF.
2. Check ground connection E9. Refer to Ground Inspection in GI-45, "Circuit Inspection".

Is the inspection result normal?

YES >> GO TO 10.
NO >> Repair or replace ground connection.

10. CLEAR THE MIXTURE RATIO SELF-LEARNING VALUE

1. Clear the mixture ratio self-learning value. Refer to EC-568, "MIXTURE RATIO SELF-LEARNING VALUE CLEAR : Special Repair Requirement".
2. Run engine for at least 10 minutes at idle speed.

Is the 1st trip DTC P0172 detected? Is it difficult to start engine?

YES >> Perform trouble diagnosis for DTC P0172. Refer to EC-763, "DTC Logic".
NO >> GO TO 11.

11. CHECK HO2S2 GROUND CIRCUIT FOR OPEN AND SHORT

1. Turn ignition switch OFF.
2. Disconnect heated oxygen sensor 2 harness connector.
3. Disconnect ECM harness connector.
4. Check the continuity between HO2S2 harness connector and ECM harness connector.

HO2S2		ECM		Continuity
Connector	Terminal	Connector	Terminal	
F42	1	F13	35	Existed

5. Also check harness for short to ground and short to power.

Is the inspection result normal?

YES >> GO TO 12.
NO >> Repair open circuit or short to ground or short to power in harness or connectors.

12. CHECK HO2S2 INPUT SIGNAL CIRCUIT FOR OPEN AND SHORT

1. Check the continuity between HO2S2 harness connector and ECM harness connector.

HO2S2		ECM		Continuity
Connector	Terminal	Connector	Terminal	
F42	4	F13	33	Existed

2. Check the continuity between HO2S2 harness connector or ECM harness connector and ground.

HO2S2		ECM		Ground	Continuity
Connector	Terminal	Connector	Terminal		
F42	4	F13	33	Ground	Not existed

3. Also check harness for short to power.

Is the inspection result normal?

YES >> GO TO 13.
NO >> Repair open circuit or short to ground or short to power in harness or connectors.

13. CHECK HEATED OXYGEN SENSOR 2

Refer to EC-750, "Component Inspection".

Is the inspection result normal?

YES >> GO TO 15.
NO >> GO TO 14.

14. REPLACE HEATED OXYGEN SENSOR 2

Replace heated oxygen sensor 2.

CAUTION:

- **Discard any sensor which has been dropped from a height of more than 0.5 m (19.7 in) onto a hard surface such as a concrete floor; use a new one.**
- **Before installing new sensor, clean exhaust system threads using oxygen sensor thread cleaner tool [commercial service tool: (J-43897-18) or J43897-12] and approved anti-seize lubricant (commercial service tool).**

>> INSPECTION END

15. CHECK INTERMITTENT INCIDENT

Refer to GI-42, "Intermittent Incident".

>> INSPECTION END

Component Inspection

INFOID:0000000004349720

1. INSPECTION START

Do you have CONSULT-III?

Do you have CONSULT-III?

YES >> GO TO 2.
NO >> GO TO 3.

2. CHECK HEATED OXYGEN SENSOR 2

With CONSULT-III

1. Turn ignition switch ON and select “DATA MONITOR” mode with CONSULT-III.
2. Start engine and warm it up to the normal operating temperature.
3. Turn ignition switch OFF and wait at least 10 seconds.
4. Start engine and keep the engine speed between 3,500 and 4,000 rpm for at least 1 minute under no load.
5. Let engine idle for 1 minute.
6. Select “FUEL INJECTION” in “ACTIVE TEST” mode, and select “HO2S2 (B1)” as the monitor item with CONSULT-III.
7. Check “HO2S2 (B1)” at idle speed when adjusting “FUEL INJECTION” to ±25%.

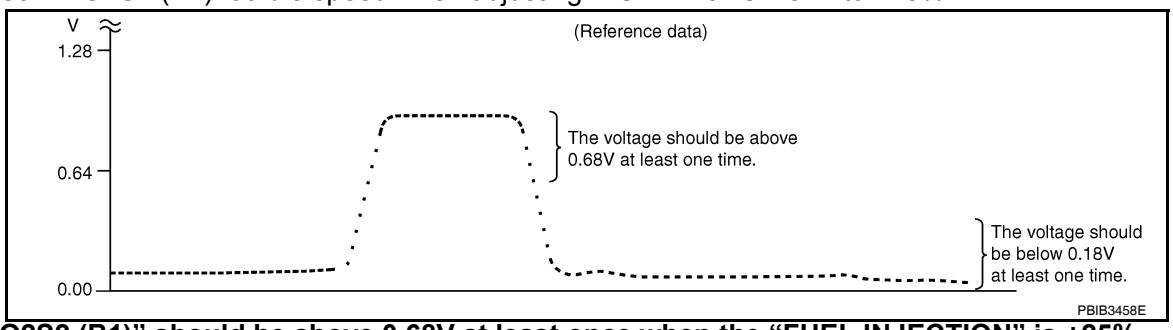

“HO2S2 (B1)” should be above 0.68V at least once when the “FUEL INJECTION” is +25%.
“HO2S2 (B1)” should be below 0.18V at least once when the “FUEL INJECTION” is –25%.

Is the inspection result normal?

YES >> INSPECTION END

NO >> GO TO 6.

3. CHECK HEATED OXYGEN SENSOR 2-I

Without CONSULT-III

1. Start engine and warm it up to the normal operating temperature.
2. Turn ignition switch OFF and wait at least 10 seconds.
3. Start engine and keep the engine speed between 3,500 and 4,000 rpm for at least 1 minute under no load.
4. Let engine idle for 1 minute.
5. Check the voltage between ECM harness connector and ground under the following condition.

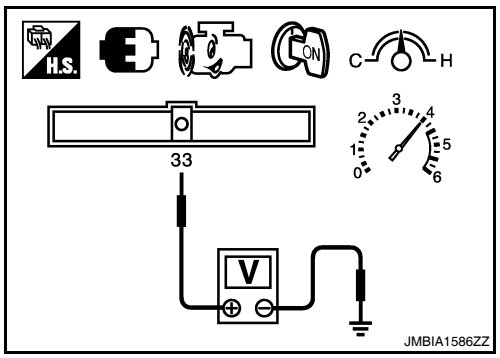

ECM		Ground	Condition	Voltage
Connector	Terminal			
F13	33 (HO2S2 signal)	Ground	Revving up to 4,000 rpm under no load at least 10 times	The voltage should be above 0.68V at least once during this procedure. The voltage should be below 0.18V at least once during this procedure.

Is the inspection result normal?

YES >> INSPECTION END
NO >> GO TO 4.

4. CHECK HEATED OXYGEN SENSOR 2-II

Check the voltage between ECM harness connector and ground under the following condition.

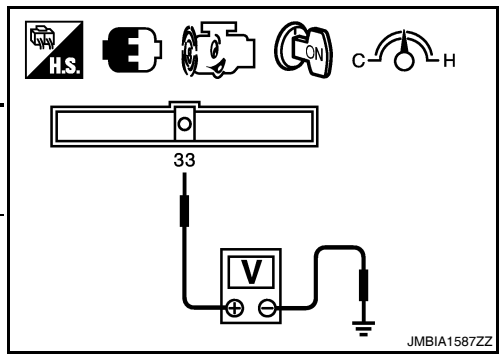

ECM		Ground	Condition	Voltage
Connector	Terminal			
F13	33 (HO2S2 signal)	Ground	Keeping engine speed at idle for 10 minutes	The voltage should be above 0.68V at least once during this procedure. The voltage should be below 0.18V at least once during this procedure.

Is the inspection result normal?

YES >> INSPECTION END
NO >> GO TO 5.

5. CHECK HEATED OXYGEN SENSOR 2-III

Check the voltage between ECM harness connector and ground under the following condition.

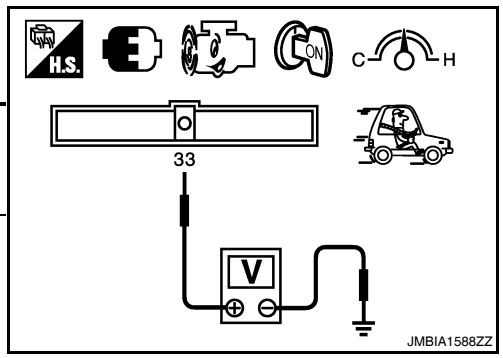

ECM		Ground	Condition	Voltage
Connector	Terminal			
F13	33 (HO2S2 signal)	Ground	Coasting from 80 km/h (50 MPH) in D position (CVT), 4th gear position (M/T)	The voltage should be above 0.68V at least once during this procedure. The voltage should be below 0.18V at least once during this procedure.

Is the inspection result normal?

YES >> INSPECTION END
NO >> GO TO 6.

6. REPLACE HEATED OXYGEN SENSOR 2

Replace heated oxygen sensor 2.

CAUTION:

- **Discard any sensor which has been dropped from a height of more than 0.5 m (19.7 in) onto a hard surface such as a concrete floor; use a new one.**
- **Before installing new sensor, clean exhaust system threads using oxygen sensor thread cleaner tool [commercial service tool: (J-43897-18) or J43897-12] and approved anti-seize lubricant (commercial service tool).**

>> INSPECTION END

P0139 HO2S2

Description

INFOID:0000000004349721

The heated oxygen sensor 2, after three way catalyst (manifold), monitors the oxygen level in the exhaust gas on each bank.
Even if switching characteristics of the air fuel ratio (A/F) sensor 1 are shifted, the air-fuel ratio is controlled to stoichiometric, by the signal from the heated oxygen sensor 2.
This sensor is made of ceramic zirconia. The zirconia generates voltage from approximately 1V in richer conditions to 0V in leaner conditions.
Under normal conditions the heated oxygen sensor 2 is not used for engine control operation.

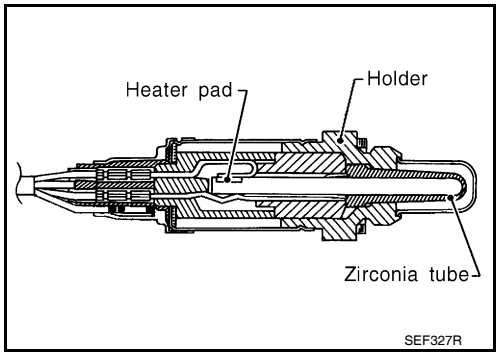

DTC Logic

INFOID:0000000004349722

DTC DETECTION LOGIC

The heated oxygen sensor 2 has a much longer switching time between rich and lean than the air fuel ratio (A/F) sensor 1. The oxygen storage capacity of the three way catalyst (mamifold) causes the longer switching time. To judge the malfunctions of heated oxygen sensor 2, ECM monitors whether the switching response of the sensor's voltage is faster than specified during the various driving condition such as fuel-cut.

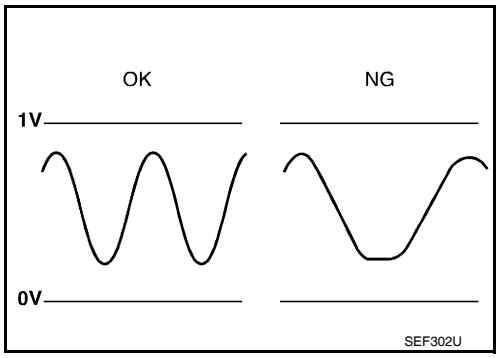

DTC No.	Trouble diagnosis name	DTC detecting condition	Possible cause
P0139	Heated oxygen sensor 2 circuit slow response	It takes more time for the sensor to respond between rich and lean than the specified time.	• Harness or connectors (The sensor circuit is open or shorted) • Heated oxygen sensor 2 • Fuel pressure • Fuel injector • Intake air leaks

DTC CONFIRMATION PROCEDURE

1. INSPECTION START

Do you have CONSULT-III?

Do you have CONSULT-III?

YES >> GO TO 2.
NO >> GO TO 5.

2. PRECONDITIONING

If DTC Confirmation Procedure has been previously conducted, always turn ignition switch OFF and wait at least 10 seconds before conducting the next test.

>> GO TO 3.

3. PERFORM DTC CONFIRMATION PROCEDURE

With CONSULT-III

1. Turn ignition switch ON and select “DATA MONITOR” mode with CONSULT-III.
2. Start engine and warm it up to the normal operating temperature.

3. Start engine and warm it up to the normal operating temperature.
4. Start engine and keep the engine speed between 3,500 and 4,000 rpm for at least 1 minute under no load.
5. Let engine idle for 1 minute.
6. Open engine hood.
7. Select “HO2S2 (B1) P0139” of “HO2S2” in “DTC WORK SUPPORT” mode with CONSULT-III.
8. Follow the instruction of CONSULT-III.
   NOTE:
   It will take at most 10 minutes until “COMPLETED” is displayed.
9. Touch “SELF-DIAG RESULT”.

Which is displayed on CONSULT-III?

OK >> INSPECTION END
NG >> GO TO 4.
CAN NOT BE DIAGNOSED>>GO TO 4.

4. PERFORM THE RESULT OF DTC CONFIRMATION PROCEDURE

1. Turn ignition switch OFF and leave the vehicle in a cool place (soak the vehicle).
2. Perform DTC CONFIRMATION PROCEDURE again.

>> GO TO 3.

5. PERFORM COMPONENT FUNCTION CHECK

Perform component function check. Refer to EC-754, "Component Function Check".
NOTE:
Use component function check to check the overall function of the heated oxygen sensor 2 circuit. During this check, a 1st trip DTC might not be confirmed.

Is the inspection result normal?

YES >> INSPECTION END
NO >> Go to EC-755, "Diagnosis Procedure".

Component Function Check

INFOID:0000000004349723

1. PERFORM COMPONENT FUNCTION CHECK-I

Without CONSULT-III

1. Start engine and warm it up to the normal operating temperature.
2. Turn ignition switch OFF and wait at least 10 seconds.
3. Start engine and keep the engine speed between 3,500 and 4,000 rpm for at least 1 minute under no load.
4. Let engine idle for 1 minute.
5. Check the voltage between ECM harness connector and ground under the following condition.

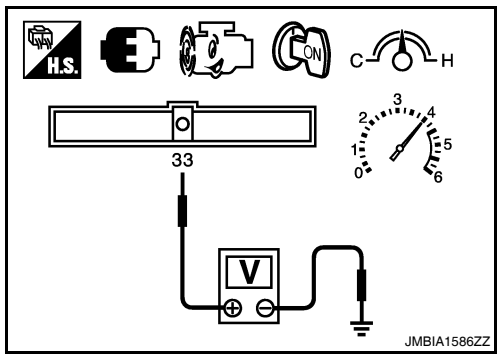

ECM		Ground	Condition	Voltage
Connector	Terminal			
F13	33 (HO2S2 signal)	Ground	Revving up to 4,000 rpm under no load at least 10 times	The voltage should be above 0.30V at least once during this procedure.

Is the inspection result normal?

YES >> INSPECTION END
NO >> GO TO 2.

2. PERFORM COMPONENT FUNCTION CHECK-II

Check the voltage between ECM harness connector and ground under the following condition.

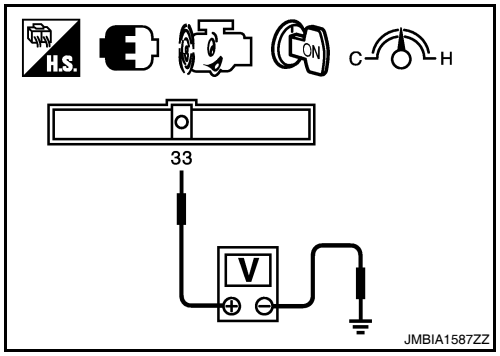

ECM		Ground	Condition	Voltage
Connector	Terminal			
F13	33 (HO2S 2 signal)	Ground	Keeping engine speed at idle for 10 minutes	The voltage should be above 0.30V at least once during this procedure.

Is the inspection result normal?

YES >> INSPECTION END
NO >> GO TO 3.

3. PERFORM COMPONENT FUNCTION CHECK-III

Check the voltage between ECM harness connector and ground under the following condition.

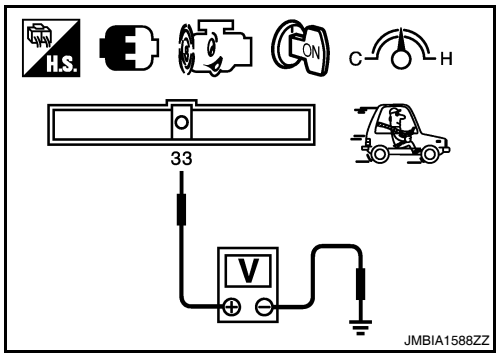

ECM		Ground	Condition	Voltage
Connector	Terminal			
F13	33 (HO2S 2 signal)	Ground	Coasting from 80 km/h (50 MPH) in D position (CVT), 4th gear position (M/T)	The voltage should be above 0.30V at least once during this procedure.

Is the inspection result normal?

YES >> INSPECTION END
NO >> Go to EC-755, "Diagnosis Procedure".

Diagnosis Procedure

INFOID:0000000004349724

1. CHECK GROUND CONNECTION

1. Turn ignition switch OFF.
2. Check ground connection E9. Refer to Ground Inspection in GI-45, "Circuit Inspection".

Is the inspection result normal?

YES >> GO TO 2.
NO >> Repair or replace ground connection.

2. CLEAR THE MIXTURE RATIO SELF-LEARNING VALUE

1. Clear the mixture ratio self-learning value. Refer to EC-568, "MIXTURE RATIO SELF-LEARNING VALUE CLEAR : Special Repair Requirement".
2. Run engine for at least 10 minutes at idle speed.

Is the 1st trip DTC P0171 or P0172 detected? Is it difficult to start engine?

YES >> Perform trouble diagnosis for DTC P0171 or P0172. Refer to EC-759, "DTC Logic" or EC-763, "DTC Logic".
NO >> GO TO 3.

3. CHECK HO2S2 GROUND CIRCUIT FOR OPEN AND SHORT

1. Turn ignition switch OFF.
2. Disconnect heated oxygen sensor 2 harness connector.
3. Disconnect ECM harness connector.
4. Check the continuity between HO2S2 harness connector and ECM harness connector.

HO2S2		ECM		Continuity
Connector	Terminal	Connector	Terminal	
F42	1	F13	35	Existed

5. Also check harness for short to ground and short to power.

Is the inspection result normal?

YES >> GO TO 4.
NO >> Repair open circuit or short to ground or short to power in harness or connectors.

4. CHECK HO2S2 INPUT SIGNAL CIRCUIT FOR OPEN AND SHORT

1. Check the continuity between HO2S2 harness connector and ECM harness connector.

HO2S2		ECM		Continuity
Connector	Terminal	Connector	Terminal	
F42	4	F13	33	Existed

2. Check the continuity between HO2S2 harness connector or ECM harness connector and ground.

HO2S2		ECM		Ground	Continuity
Connector	Terminal	Connector	Terminal		
F42	4	F13	33	Ground	Not existed

3. Also check harness for short to power.

Is the inspection result normal?

YES >> GO TO 5.
NO >> Repair open circuit or short to ground or short to power in harness or connectors.

5. CHECK HEATED OXYGEN SENSOR 2

Refer to EC-756, "Component Inspection".

Is the inspection result normal?

YES >> GO TO 7.
NO >> GO TO 6.

6. REPLACE HEATED OXYGEN SENSOR 2

Replace heated oxygen sensor 2.

CAUTION:

- **Discard any sensor which has been dropped from a height of more than 0.5 m (19.7 in) onto a hard surface such as a concrete floor; use a new one.**
- **Before installing new sensor, clean exhaust system threads using oxygen sensor thread cleaner tool [commercial service tool: (J-43897-18) or J43897-12] and approved anti-seize lubricant (commercial service tool).**

>> INSPECTION END

7. CHECK INTERMITTENT INCIDENT

Refer to GI-42, "Intermittent Incident".

>> INSPECTION END

Component Inspection

INFOID:0000000004349725

1. INSPECTION START

Do you have CONSULT-III?

Do you have CONSULT-III?

YES >> GO TO 2.

NO >> GO TO 3.

2. CHECK HEATED OXYGEN SENSOR 2

With CONSULT-III

1. Turn ignition switch ON and select “DATA MONITOR” mode with CONSULT-III.
2. Start engine and warm it up to the normal operating temperature.
3. Turn ignition switch OFF and wait at least 10 seconds.
4. Start engine and keep the engine speed between 3,500 and 4,000 rpm for at least 1 minute under no load.
5. Let engine idle for 1 minute.
6. Select “FUEL INJECTION” in “ACTIVE TEST” mode, and select “HO2S2 (B1)” as the monitor item with CONSULT-III.
7. Check “HO2S2 (B1)” at idle speed when adjusting “FUEL INJECTION” to ±25%.

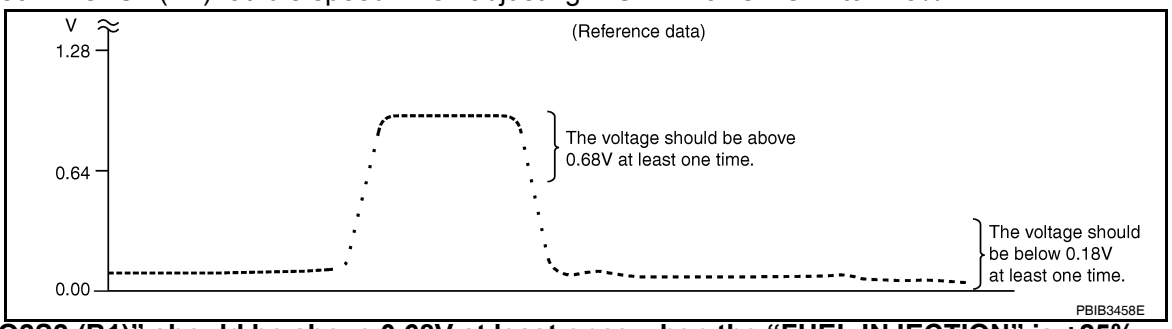

“HO2S2 (B1)” should be above 0.68V at least once when the “FUEL INJECTION” is +25%.
“HO2S2 (B1)” should be below 0.18V at least once when the “FUEL INJECTION” is −25%.

Is the inspection result normal?

YES >> INSPECTION END
NO >> GO TO 6.

3. CHECK HEATED OXYGEN SENSOR 2-I

Without CONSULT-III

1. Start engine and warm it up to the normal operating temperature.
2. Turn ignition switch OFF and wait at least 10 seconds.
3. Start engine and keep the engine speed between 3,500 and 4,000 rpm for at least 1 minute under no load.
4. Let engine idle for 1 minute.
5. Check the voltage between ECM harness connector and ground under the following condition.

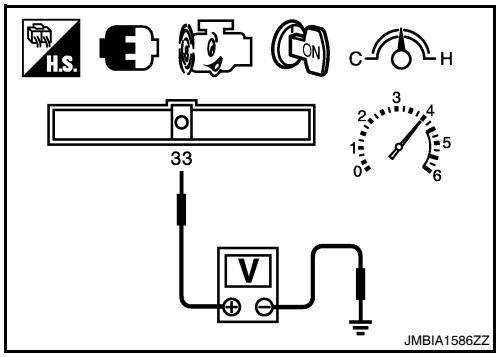

ECM		Ground	Condition	Voltage
Connector	Terminal			
F13	33 (HO2S2 signal)	Ground	Revving up to 4,000 rpm under no load at least 10 times	The voltage should be above 0.68V at least once during this procedure. The voltage should be below 0.18V at least once during this procedure.

Is the inspection result normal?

YES >> INSPECTION END
NO >> GO TO 4.

4. CHECK HEATED OXYGEN SENSOR 2-II

Check the voltage between ECM harness connector and ground under the following condition.

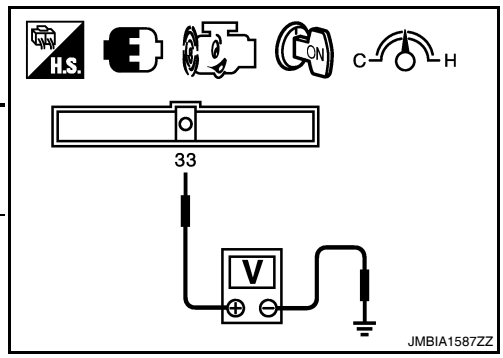

ECM		Ground	Condition	Voltage
Connector	Terminal			
F13	33 (HO2S2 signal)	Ground	Keeping engine speed at idle for 10 minutes	The voltage should be above 0.68V at least once during this procedure. The voltage should be below 0.18V at least once during this procedure.

Is the inspection result normal?

YES >> INSPECTION END
NO >> GO TO 5.

5. CHECK HEATED OXYGEN SENSOR 2-III

Check the voltage between ECM harness connector and ground under the following condition.

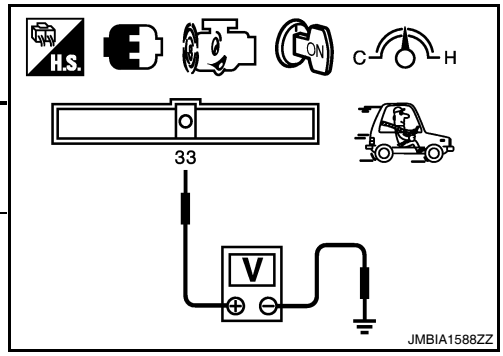

ECM		Ground	Condition	Voltage
Connector	Terminal			
F13	33 (HO2S2 signal)	Ground	Coasting from 80 km/h (50 MPH) in D position (CVT), 4th gear position (M/T)	The voltage should be above 0.68V at least once during this procedure. The voltage should be below 0.18V at least once during this procedure.

Is the inspection result normal?

YES >> INSPECTION END
NO >> GO TO 6.

6. REPLACE HEATED OXYGEN SENSOR 2

Replace heated oxygen sensor 2.

CAUTION:

- **Discard any sensor which has been dropped from a height of more than 0.5 m (19.7 in) onto a hard surface such as a concrete floor; use a new one.**
- **Before installing new sensor, clean exhaust system threads using oxygen sensor thread cleaner tool [commercial service tool: (J-43897-18) or J43897-12] and approved anti-seize lubricant (commercial service tool).**

>> INSPECTION END

P0171 FUEL INJECTION SYSTEM FUNCTION

DTC Logic

INFOID:0000000004349726

DTC DETECTION LOGIC

With the Air/Fuel Mixture Ratio Self-Learning Control, the actual mixture ratio can be brought closely to the theoretical mixture ratio based on the mixture ratio feedback signal from the A/F sensors 1. The ECM calculates the necessary compensation to correct the offset between the actual and the theoretical ratios.
In case the amount of the compensation value is extremely large (The actual mixture ratio is too lean.), the ECM judges the condition as the fuel injection system malfunction and lights up the MIL (2 trip detection logic).

Sensor	Input signal to ECM	ECM function	Actuator
A/F sensor 1	Density of oxygen in exhaust gas (Mixture ratio feedback signal)	Fuel injection control	Fuel injector

DTC No.	Trouble diagnosis name	DTC detecting condition	Possible cause
P0171	Fuel injection system too lean	• Fuel injection system does not operate properly. • The amount of mixture ratio compensation is too large. (The mixture ratio is too lean.)	• Intake air leaks • A/F sensor 1 • Fuel injector • Exhaust gas leaks • Incorrect fuel pressure • Lack of fuel • Mass air flow sensor • Incorrect PCV hose connection

DTC CONFIRMATION PROCEDURE

1.PRECONDITIONING

If DTC Confirmation Procedure has been previously conducted, always turn ignition switch OFF and wait at least 10 seconds before conducting the next test.

>> GO TO 2.

2.PERFORM DTC CONFIRMATION PROCEDURE-I

1. Clear the mixture ratio self-learning value. Refer to EC-568, "MIXTURE RATIO SELF-LEARNING VALUE CLEAR : Special Repair Requirement".
2. Start engine.

Is it difficult to start engine?

YES >> GO TO 3.
NO >> GO TO 4.

3.RESTART ENGINE

If it is difficult to start engine, the fuel injection system has a malfunction, too.
Crank engine while depressing accelerator pedal.

NOTE:
When depressing accelerator pedal three-fourths (3/4) or more, the control system does not start the engine. Do not depress accelerator pedal.

Does engine start?

YES >> Go to EC-760, "Diagnosis Procedure".
NO >> Check exhaust and intake air leak visually.

4.PERFORM DTC CONFIRMATION PROCEDURE-II

1. Start engine and let it idle for at least 5 minutes.
2. Check 1st trip DTC.

Is 1st trip DTC detected?

YES >> Go to EC-760, "Diagnosis Procedure".
NO >> GO TO 5.

5. PERFORM DTC CONFIRMATION PROCEDURE-III

1. Turn ignition switch OFF and wait at least 10 seconds.
2. Start engine.
3. Maintain the following conditions for at least 10 consecutive minutes.
   Hold the accelerator pedal as steady as possible.

VHCL SPEED SE	50 - 120 km/h (31 - 75 MPH)

CAUTION:
Always drive vehicle at a safe speed.

4. Check 1st trip DTC.

Is 1st trip DTC detected?

YES >> Go to EC-760, "Diagnosis Procedure".
NO >> INSPECTION END

Diagnosis Procedure

INFOID:0000000004349727

1. CHECK EXHAUST GAS LEAK

1. Start engine and run it at idle.
2. Listen for an exhaust gas leak before three way catalyst (manifold).

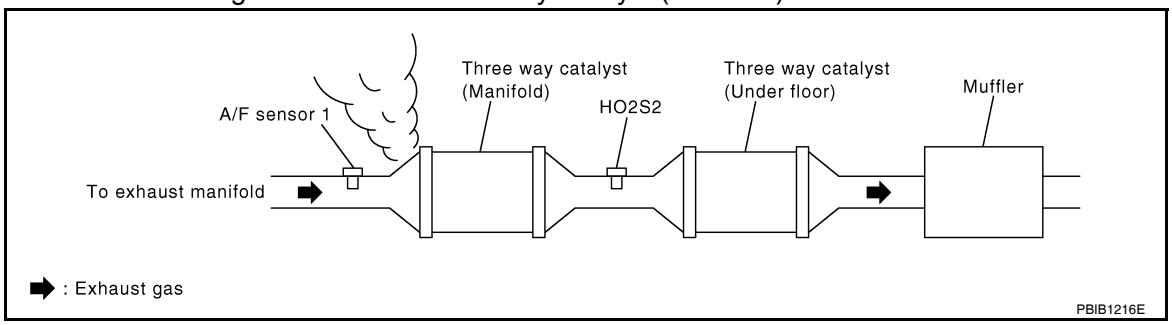

Is exhaust gas leak detected?

YES >> Repair or replace.
NO >> GO TO 2.

2. CHECK FOR INTAKE AIR LEAK

1. Listen for an intake air leak after the mass air flow sensor.
2. Check PCV hose connection.

Intake air leak detected?

YES >> Repair or replace.
NO >> GO TO 3.

3. CHECK A/F SENSOR 1 INPUT SIGNAL CIRCUIT

1. Turn ignition switch OFF.
2. Disconnect corresponding A/F sensor 1 harness connector.
3. Disconnect ECM harness connector.
4. Check the continuity between A/F sensor 1 harness connector and ECM harness connector.

A/F sensor 1		ECM		Continuity
Connector	Terminal	Connector	Terminal	
F44	1	F14	45	Existed
	2		49	

5. Check the continuity between A/F sensor 1 harness connector or ECM harness connector and ground.

A/F sensor 1		ECM		Ground	Continuity
Connector	Terminal	Connector	Terminal		
F44	1	F14	45	Ground	Not existed
	2		49		

6. Also check harness for short to power.

Is the inspection result normal?

YES >> GO TO 4.
NO >> Repair open circuit or short to ground or short to power in harness or connectors.

4. CHECK FUEL PRESSURE

1. Check fuel pressure. Refer to EC-1038, "Inspection".

Is the inspection result normal?

YES >> GO TO 6.
NO >> GO TO 5.

5. DETECT MALFUNCTIONING PART

Check fuel hoses and fuel tubes for clogging.

Is the inspection result normal?

YES >> Replace “fuel filter and fuel pump assembly”.
NO >> Repair or replace

6. CHECK MASS AIR FLOW SENSOR

With CONSULT-III

1. Install all removed parts.
2. Check “MASS AIR FLOW” in “DATA MONITOR” mode with CONSULT-III.
3. For specification, refer to EC-1043, "Mass Air Flow Sensor"".

With GST

1. Install all removed parts.
2. Check mass air flow sensor signal in Service $01 with GST.
3. For specification, refer to EC-1043, "Mass Air Flow Sensor"".

Is the measurement value within the specification?

YES >> GO TO 7.
NO >> Check connectors for rusted terminals or loose connections in the mass air flow sensor circuit or grounds. Refer to EC-693, "DTC Logic".

7. CHECK FUNCTION OF FUEL INJECTOR

With CONSULT-III

1. Start engine.
2. Perform “POWER BALANCE” in “ACTIVE TEST” mode with CONSULT-III.
3. Make sure that each circuit produces a momentary engine speed drop.

Without CONSULT-III

1. Let engine idle.
2. Listen to each fuel injector operating sound.

Clicking noise should be heard.

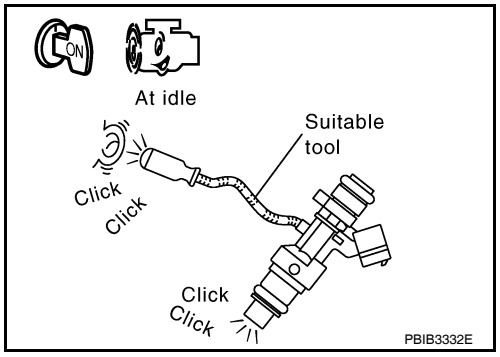

Is the inspection result normal?

YES >> GO TO 8.
NO >> Perform trouble diagnosis for FUEL INJECTOR, refer to EC-956, "Component Function Check".

8. CHECK FUEL INJECTOR

1. Turn ignition switch OFF.
2. Confirm that the engine is cooled down and there are no fire hazards near the vehicle.
3. Disconnect all fuel injector harness connectors.
4. Remove fuel tube assembly. Refer to EM-36, "Removal and Installation".
   Keep fuel hose and all fuel injectors connected to fuel tube.
5. Disconnect all ignition coil harness connectors.
6. Prepare pans or saucers under each fuel injector.
7. Crank engine for about 3 seconds.

Fuel should be sprayed evenly for each fuel injector.

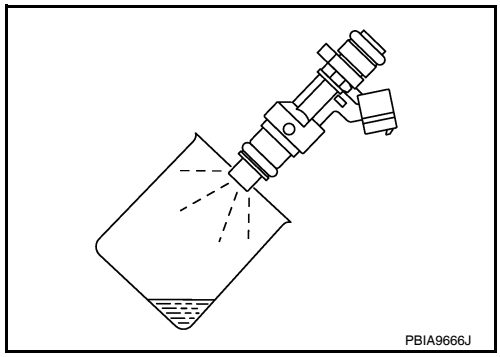

Is the inspection result normal?

YES >> GO TO 9.
NO >> Replace fuel injectors from which fuel does not spray out. Always replace O-ring with new ones.

9. CHECK INTERMITTENT INCIDENT

Refer to GI-42, "Intermittent Incident".

>> INSPECTION END

P0172 FUEL INJECTION SYSTEM FUNCTION

DTC Logic

INFOID:0000000004349728

DTC DETECTION LOGIC

With the Air/Fuel Mixture Ratio Self-Learning Control, the actual mixture ratio can be brought closely to the theoretical mixture ratio based on the mixture ratio feedback signal from the A/F sensors 1. The ECM calculates the necessary compensation to correct the offset between the actual and the theoretical ratios.
In case the amount of the compensation value is extremely large (The actual mixture ratio is too rich.), the ECM judges the condition as the fuel injection system malfunction and lights up the MIL (2 trip detection logic).

Sensor	Input signal to ECM	ECM function	Actuator
A/F sensor 1	Density of oxygen in exhaust gas (Mixture ratio feedback signal)	Fuel injection control	Fuel injector

DTC No.	Trouble diagnosis name	DTC detecting condition	Possible cause
P0172	Fuel injection system too rich	• Fuel injection system does not operate properly. • The amount of mixture ratio compensation is too large. (The mixture ratio is too rich.)	• A/F sensor 1 • Fuel injector • Exhaust gas leaks • Incorrect fuel pressure • Mass air flow sensor

DTC CONFIRMATION PROCEDURE

1.PRECONDITIONING

If DTC Confirmation Procedure has been previously conducted, always turn ignition switch OFF and wait at least 10 seconds before conducting the next test.

>> GO TO 2.

2.PERFORM DTC CONFIRMATION PROCEDURE-I

1. Clear the mixture ratio self-learning value. Refer to EC-568, "MIXTURE RATIO SELF-LEARNING VALUE CLEAR : Special Repair Requirement".
2. Start engine.

Is it difficult to start engine?

YES >> GO TO 3.
NO >> GO TO 4.

3.RESTART ENGINE

If it is difficult to start engine, the fuel injection system has a malfunction, too.
Crank engine while depressing accelerator pedal.
NOTE:
When depressing accelerator pedal three-fourths (3/4) or more, the control system does not start the engine. Do not depress accelerator pedal.

Does engine start?

YES >> Go to EC-764, "Diagnosis Procedure".
NO >> Check exhaust and intake air leak visually.

4.PERFORM DTC CONFIRMATION PROCEDURE-II

1. Start engine and let it idle for at least 5 minutes.
2. Check 1st trip DTC.

Is 1st trip DTC detected?

YES >> Go to EC-764, "Diagnosis Procedure".
NO >> GO TO 5.

5.PERFORM DTC CONFIRMATION PROCEDURE-III

1. Turn ignition switch OFF and wait at least 10 seconds.
2. Start engine.

3. Maintain the following conditions for at least 10 consecutive minutes.
   Hold the accelerator pedal as steady as possible.

VHCL SPEED SE	50 - 120 km/h (31 - 75 MPH)

CAUTION:
Always drive vehicle at a safe speed.

4. Check 1st trip DTC.

Is 1st trip DTC detected?

YES >> Go to EC-764, "Diagnosis Procedure".
NO >> INSPECTION END

Diagnosis Procedure

INFOID:0000000004349729

1. CHECK EXHAUST GAS LEAK

1. Start engine and run it at idle.
2. Listen for an exhaust gas leak before three way catalyst (manifold).

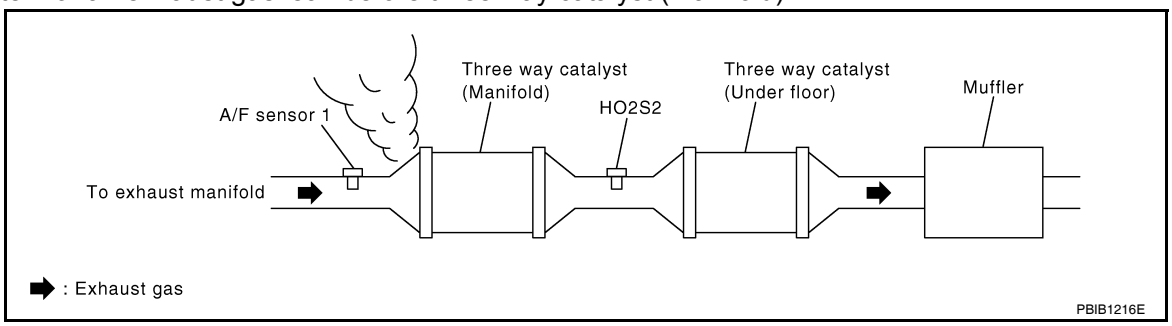

Is exhaust gas leak detected?

YES >> Repair or replace.
NO >> GO TO 2.

2. CHECK FOR INTAKE AIR LEAK

Listen for an intake air leak after the mass air flow sensor.

Is intake air leak detected?

YES >> Repair or replace.
NO >> GO TO 3.

3. CHECK A/F SENSOR 1 INPUT SIGNAL CIRCUIT

1. Turn ignition switch OFF.
2. Disconnect corresponding A/F sensor 1 harness connector.
3. Disconnect ECM harness connector.
4. Check the continuity between A/F sensor 1 harness connector and ECM harness connector.

A/F sensor 1		ECM		Continuity
Connector	Terminal	Connector	Terminal	
F44	1	F14	45	Existed
	2		49	

5. Check the continuity between A/F sensor 1 harness connector or ECM harness connector and ground.

A/F sensor 1		ECM		Ground	Continuity
Connector	Terminal	Connector	Terminal		
F44	1	F14	45	Ground	Not existed
	2		49		

6. Also check harness for short to power.

Is the inspection result normal?

YES >> GO TO 4.
NO >> Repair open circuit or short to ground or short to power in harness or connectors.

4. CHECK FUEL PRESSURE

1. Check fuel pressure. Refer to EC-1038, "Inspection".

Is the inspection result normal?

YES >> GO TO 6.
NO >> GO TO 5.

5. DETECT MALFUNCTIONING PART

Check fuel hoses and fuel tubes for clogging.

Is the inspection result normal?

YES >> Replace “fuel filter and fuel pump assembly”.
NO >> Repair or replace

6. CHECK MASS AIR FLOW SENSOR

With CONSULT-III

1. Install all removed parts.
2. Check “MASS AIR FLOW” in “DATA MONITOR” mode with CONSULT-III.
3. For specification, refer to EC-1043, "Mass Air Flow Sensor"".

With GST

1. Install all removed parts.
2. Check mass air flow sensor signal in “Service $01” with GST.
3. For specification, refer to EC-1043, "Mass Air Flow Sensor"".

Is the measurement value within the specification?

YES >> GO TO 7.
NO >> Check connectors for rusted terminals or loose connections in the mass air flow sensor circuit or grounds. Refer to EC-693, "DTC Logic".

7. CHECK FUNCTION OF FUEL INJECTOR

With CONSULT-III

1. Start engine.
2. Perform “POWER BALANCE” in “ACTIVE TEST” mode with CONSULT-III.
3. Make sure that each circuit produces a momentary engine speed drop.

Without CONSULT-III

1. Let engine idle.
2. Listen to each fuel injector operating sound.

Clicking noise should be heard.

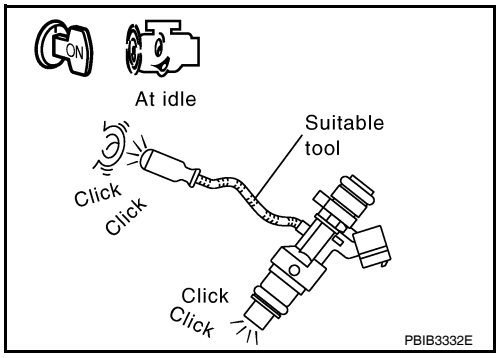

Is the inspection result normal?

YES >> GO TO 8.
NO >> Perform trouble diagnosis for FUEL INJECTOR, refer to EC-956, "Component Function Check".

8. CHECK FUEL INJECTOR

1. Remove fuel injector assembly. Refer to EM-36, "Removal and Installation".
   Keep fuel hose and all fuel injectors connected to fuel tube.
2. Confirm that the engine is cooled down and there are no fire hazards near the vehicle.
3. Disconnect all fuel injector harness connectors.
4. Disconnect all ignition coil harness connectors.
5. Prepare pans or saucers under each fuel injectors.
6. Crank engine for about 3 seconds.
   Make sure fuel does not drip from fuel injector.

Is the inspection result normal?

YES >> GO TO 9.
NO >> Replace the fuel injectors from which fuel is dripping. Always replace O-ring with new one.

9. CHECK INTERMITTENT INCIDENT

Refer to GI-42, "Intermittent Incident".

>> INSPECTION END

P0181 FTT SENSOR

Description

INFOID:0000000004349730

The fuel tank temperature sensor is used to detect the fuel temperature inside the fuel tank. The sensor modifies a voltage signal from the ECM. The modified signal returns to the ECM as the fuel temperature input. The sensor uses a thermistor which is sensitive to the change in temperature. The electrical resistance of the thermistor decreases as temperature increases.

<Reference data>

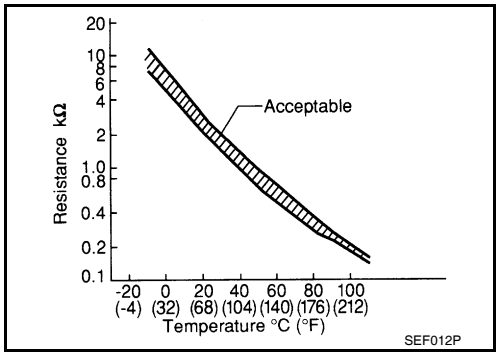

Fluid temperature °C (°F)]	Voltage* [V]	Resistance [kΩ
20 (68)	3.5	2.3 - 2.7
50 (122)	2.2	0.79 - 0.90

*: These data are reference values and are measured between ECM terminal 95 (Fuel tank temperature sensor) and ground.

CAUTION:

Do not use ECM ground terminals when measuring input/output voltage. Doing so may result in damage to the ECM's transistor. Use a ground other than ECM terminals, such as the ground.

DTC Logic

INFOID:0000000004349731

DTC DETECTION LOGIC

DTC No.	Trouble diagnosis name	DTC detecting condition	Possible cause
P0181	Fuel tank temperature sensor circuit range/performance	Rationally incorrect voltage from the sensor is sent to ECM, compared with the voltage signals from engine coolant temperature sensor and intake air temperature sensor.	• Harness or connectors (The sensor circuit is open or shorted) • Fuel tank temperature sensor

DTC CONFIRMATION PROCEDURE

1. PRECONDITIONING

If DTC Confirmation Procedure has been previously conducted, always turn ignition switch OFF and wait at least 10 seconds before conducting the next test.

>> GO TO 2.

2. PERFORM DTC CONFIRMATION PROCEDURE-I

1. Turn ignition switch and wait at least 10 seconds.
2. Check 1st trip DTC.

Is 1st trip DTC detected?

YES >> Go to EC-768, "Diagnosis Procedure".
NO >> GO TO 3.

3. CHECK ENGINE COOLANT TEMPERATURE

With CONSULT-III

1. Select “COOLAN TEMP/S” in “DATA MONITOR” mode with CONSULT-III.
2. Check “COOLAN TEMP/S” value.

With GST

Follow the procedure “With CONSULT-III” above.

“COOLAN TEMP/S” less than 60°C (140°F)?

YES >> INSPECTION END
NO >> GO TO 4.

4. PERFORM DTC CONFIRMATION PROCEDURE-II

With CONSULT-III

1. Cool engine down until “COOLAN TEMP/S” is less than 60°C (140°F).
2. Wait at least 10 seconds.
3. Check 1st trip DTC.

With GST

Follow the procedure “With CONSULT-III” above.

Is 1st trip DTC detected?

YES >> Go to EC-768, "Diagnosis Procedure".
NO >> INSPECTION END

Diagnosis Procedure

INFOID:0000000004349732

1. CHECK GROUND CONNECTION

1. Turn ignition switch OFF.
2. Check ground connection E9. Refer to Ground Inspection in GI-45, "Circuit Inspection".

Is the inspection result normal?

YES >> GO TO 2.
NO >> Repair or replace ground connection.

2. CHECK FUEL TANK TEMPERATURE SENSOR POWER SUPPLY CIRCUIT

1. Turn ignition switch OFF.
2. Disconnect “fuel level sensor unit and fuel pump” harness connector.
3. Turn ignition switch ON.
4. Check the voltage between “fuel level sensor unit and fuel pump” harness connector and ground.

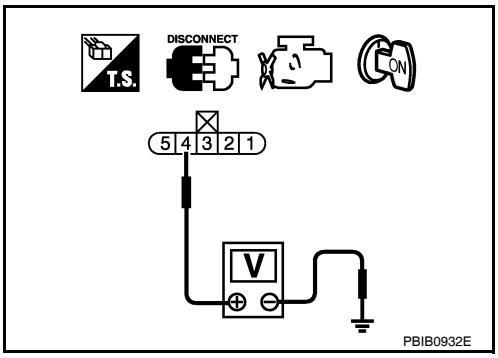

Fuel level sensor unit and fuel pump		Ground	Voltage
Connector	Terminal		
B42	4	Ground	Approx. 5V

Is the inspection result normal?

YES >> GO TO 4.
NO >> GO TO 3.

3. DETECT MALFUNCTIONING PART

Check the following.

- Harness connectors E29, B10
- Harness for open or short between ECM and “fuel level sensor unit and fuel pump”

>> Repair open circuit or short to ground or short to power in harness or connector.

4. CHECK FUEL TANK TEMPERATURE SENSOR GROUND CIRCUIT FOR OPEN AND SHORT

1. Turn ignition switch OFF.
2. Check the continuity between “fuel level sensor unit and fuel pump” harness connector and ECM harness connector.

Fuel level sensor unit and fuel pump		ECM		Continuity
Connector	Terminal	Connector	Terminal	
B42	5	E10	104	Existed

3. Also check harness for short to ground and short to power.

Is the inspection result normal?

YES >> GO TO 6.
NO >> GO TO 5.

5. DETECT MALFUNCTIONING PART

Check the following.
- Harness connectors B1, M6
- Harness connectors E30, M1
- Harness for open or short between “fuel level sensor unit and fuel pump” and ECM

>> Repair open circuit or short to ground or short to power in harness or connector.

6. CHECK FUEL TANK TEMPERATURE SENSOR

Refer to EC-769, "Component Inspection".

Is the inspection result normal?

YES >> GO TO 7.
NO >> Replace “fuel level sensor unit and fuel pump”.

7. CHECK INTERMITTENT INCIDENT

Refer to GI-42, "Intermittent Incident".

>> INSPECTION END

Component Inspection

INFOID:0000000004349733

1. CHECK FUEL TANK TEMPERATURE SENSOR

1. Turn ignition switch OFF.
2. Disconnect “fuel level sensor unit and fuel pump” harness connector.
3. Remove fuel level sensor unit.
4. Check resistance between “fuel level sensor unit and fuel pump” terminals by heating with hot water as shown in the figure.

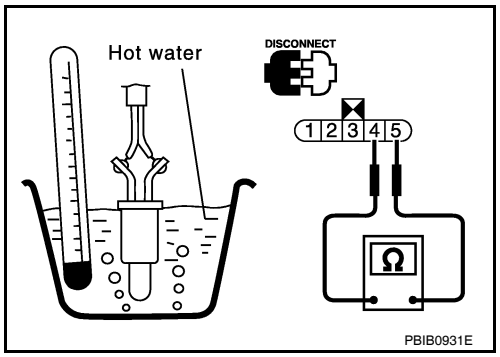

Terminals	Condition		Resistance
4 and 5	Temperature °C (°F)	20 (68)	2.3 - 2.7 kΩ
		50 (122)	0.79 - 0.90 kΩ

Is the inspection result normal?

YES >> INSPECTION END
NO >> Replace “fuel level sensor unit and fuel pump”.

P0182, P0183 FTT SENSOR

Description

INFOID:0000000004349734

The fuel tank temperature sensor is used to detect the fuel temperature inside the fuel tank. The sensor modifies a voltage signal from the ECM. The modified signal returns to the ECM as the fuel temperature input. The sensor uses a thermistor which is sensitive to the change in temperature. The electrical resistance of the thermistor decreases as temperature increases.

<Reference data>

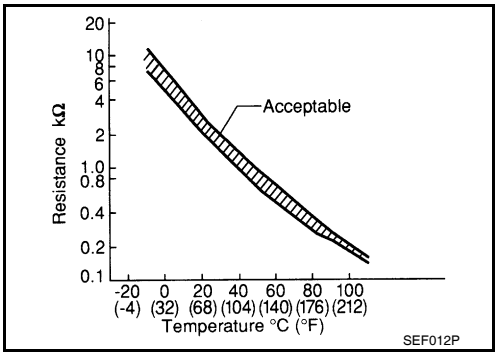

Fluid temperature °C (°F)]	Voltage* [V]	Resistance [kΩ
20 (68)	3.5	2.3 - 2.7
50 (122)	2.2	0.79 - 0.90

*: These data are reference values and are measured between ECM terminal 95 (Fuel tank temperature sensor) and ground.

CAUTION:

Do not use ECM ground terminals when measuring input/output voltage. Doing so may result in damage to the ECM's transistor. Use a ground other than ECM terminals, such as the ground.

DTC Logic

INFOID:0000000004349735

DTC DETECTION LOGIC

DTC No.	Trouble diagnosis name	DTC detecting condition	Possible cause
P0182	Fuel tank temperature sensor circuit low input	An excessively low voltage from the sensor is sent to ECM.	• Harness or connectors (The sensor circuit is open or shorted.) • Fuel tank temperature sensor
P0183	Fuel tank temperature sensor circuit high input	An excessively high voltage from the sensor is sent to ECM.	

DTC CONFIRMATION PROCEDURE

1.PRECONDITIONING

If DTC Confirmation Procedure has been previously conducted, always turn ignition switch OFF and wait at least 10 seconds before conducting the next test.

>> GO TO 2.

2.PERFORM DTC CONFIRMATION PROCEDURE

1. Turn ignition switch ON and wait at least 5 seconds.
2. Check 1st trip DTC.

Is 1st trip DTC detected?

YES >> Go to EC-770, "Diagnosis Procedure".
NO >> INSPECTION END

Diagnosis Procedure

INFOID:0000000004349736

1.CHECK GROUND CONNECTION

1. Turn ignition switch OFF.
2. Check ground connection E9. Refer to Ground Inspection in GI-45, "Circuit Inspection".

Is the inspection result normal?

YES >> GO TO 2.
NO >> Repair or replace ground connection.

2.CHECK FUEL TANK TEMPERATURE SENSOR POWER SUPPLY CIRCUIT

1. Turn ignition switch OFF.
2. Disconnect “fuel level sensor unit and fuel pump” harness connector.
3. Turn ignition switch ON.
4. Check the voltage between “fuel level sensor unit and fuel pump” harness connector and ground.

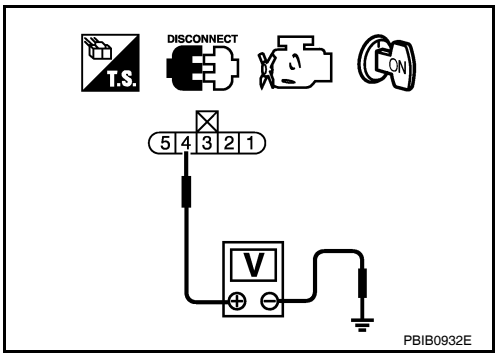

Fuel level sensor unit and fuel pump		Ground	Voltage
Connector	Terminal		
B42	4	Ground	Approx. 5V

Is the inspection result normal?

YES >> GO TO 4.
NO >> GO TO 3.

3. DETECT MALFUNCTIONING PART

Check the following.
- Harness connectors E29, B10
- Harness for open or short between ECM and “fuel level sensor unit and fuel pump”

>> Repair open circuit or short to ground or short to power in harness or connector.

4. CHECK FUEL TANK TEMPERATURE SENSOR GROUND CIRCUIT FOR OPEN AND SHORT

1. Turn ignition switch OFF.
2. Check the continuity between “fuel level sensor unit and fuel pump” harness connector and ECM harness connector.

Fuel level sensor unit and fuel pump		ECM		Continuity
Connector	Terminal	Connector	Terminal	
B42	5	E10	104	Existed

3. Also check harness for short to ground and short to power.

Is the inspection result normal?

YES >> GO TO 6.
NO >> GO TO 5.

5. DETECT MALFUNCTIONING PART

Check the following.
- Harness connectors B1, M6
- Harness connectors E30, M1
- Harness for open or short between “fuel level sensor unit and fuel pump” and ECM

>> Repair open circuit or short to ground or short to power in harness or connector.

6. CHECK FUEL TANK TEMPERATURE SENSOR

Refer to EC-772, "Component Inspection".

Is the inspection result normal?

YES >> GO TO 7.
NO >> Replace “fuel level sensor unit and fuel pump”.

7. CHECK INTERMITTENT INCIDENT

Refer to GI-42, "Intermittent Incident".

>> INSPECTION END

Component Inspection

INFOID:0000000004349737

1. CHECK FUEL TANK TEMPERATURE SENSOR

1. Turn ignition switch OFF.
2. Disconnect “fuel level sensor unit and fuel pump” harness connector.
3. Remove fuel level sensor unit.
4. Check resistance between “fuel level sensor unit and fuel pump” terminals by heating with hot water as shown in the figure.

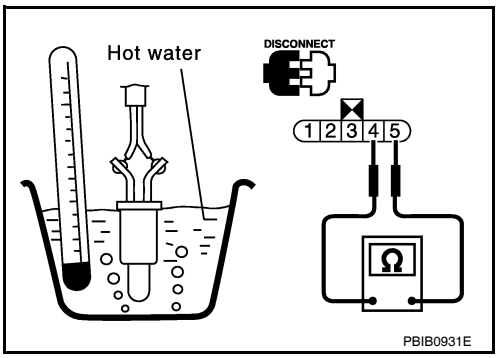

Terminals	Condition		Resistance
4 and 5	Temperature °C (°F)	20 (68)	2.3 - 2.7 kΩ
		50 (122)	0.79 - 0.90 kΩ

Is the inspection result normal?

YES >> INSPECTION END
NO >> Replace “fuel level sensor unit and fuel pump”.

P0222, P0223 TP SENSOR

Description

INFOID:0000000004349738

Electric throttle control actuator consists of throttle control motor, throttle position sensor, etc. The throttle position sensor responds to the throttle valve movement.
The throttle position sensor has two sensors. These sensors are a kind of potentiometers which transform the throttle valve position into output voltage, and emit the voltage signal to the ECM. In addition, these sensors detect the opening and closing speed of the throttle valve and feed the voltage signals to the ECM. The ECM judges the current opening angle of the throttle valve from these signals and the ECM controls the throttle control motor to make the throttle valve opening angle properly in response to driving condition.

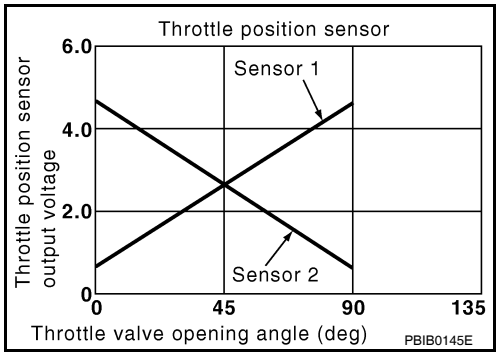

DTC Logic

INFOID:0000000004349739

DTC DETECTION LOGIC

DTC No.	Trouble diagnosis name	DTC detecting condition	Possible cause
P0222	Throttle position sensor 1 circuit low input	An excessively low voltage from the TP sensor 1 is sent to ECM.	• Harness or connectors (TP sensor 1 circuit is open or shorted.) • Electric throttle control actuator (TP sensor 1)
P0223	Throttle position sensor 1 circuit high input	An excessively high voltage from the TP sensor 1 is sent to ECM.	

DTC CONFIRMATION PROCEDURE

1. PRECONDITIONING

If DTC Confirmation Procedure has been previously conducted, always turn ignition switch OFF and wait at least 10 seconds before conducting the next test.
TESTING CONDITION:
Before performing the following procedure, confirm that battery voltage is more than 8V at idle.

>> GO TO 2.

2. PERFORM DTC CONFIRMATION PROCEDURE

1. Start engine and let it idle for 1 second.
2. Check DTC.

Is DTC detected?

YES >> Go to EC-773, "Diagnosis Procedure".
NO >> INSPECTION END

Diagnosis Procedure

INFOID:0000000004349740

1. CHECK GROUND CONNECTION

1. Turn ignition switch OFF.
2. Check ground connection E9. Refer to Ground Inspection in GI-45, "Circuit Inspection".

Is the inspection result normal?

YES >> GO TO 2.
NO >> Repair or replace ground connection.

2. CHECK THROTTLE POSITION SENSOR 1 POWER SUPPLY CIRCUIT

1. Disconnect electric throttle control actuator harness connector.
2. Turn ignition switch ON.

3. Check the voltage between electric throttle control actuator harness connector and ground.

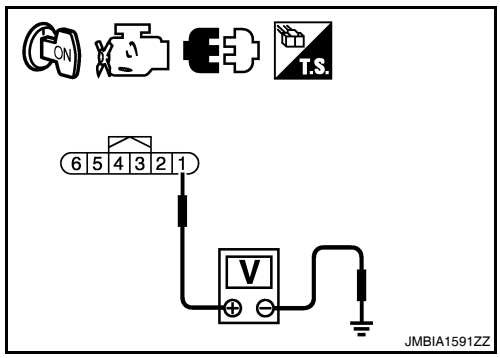

Electric throttle control actuator		Ground	Voltage
Connector	Terminal		
F57	1	Ground	Approx. 5V

Is the inspection result normal?

YES >> GO TO 3.
NO >> Repair open circuit or short to ground or short to power in harness or connectors.

3. CHECK THROTTLE POSITION SENSOR 1 GROUND CIRCUIT FOR OPEN AND SHORT

1. Turn ignition switch OFF.
2. Disconnect ECM harness connector.
3. Check the continuity between electric throttle control actuator harness connector and ECM harness connector.

Electric throttle control actuator		ECM		Continuity
Connector	Terminal	Connector	Terminal	
F57	4	F13	36	Existed

4. Also check harness for short to ground and short to power.

Is the inspection result normal?

YES >> GO TO 4.
NO >> Repair open circuit or short to ground or short to power in harness or connectors.

4. CHECK THROTTLE POSITION SENSOR 1 INPUT SIGNAL CIRCUIT FOR OPEN AND SHORT

1. Check the continuity between electric throttle control actuator harness connector and ECM harness connector.

Electric throttle control actuator		ECM		Continuity
Connector	Terminal	Connector	Terminal	
F57	2	F13	37	Existed

2. Also check harness for short to ground and short to power.

Is the inspection result normal?

YES >> GO TO 5.
NO >> Repair open circuit or short to ground or short to power in harness or connectors.

5. CHECK THROTTLE POSITION SENSOR

Refer to EC-775, "Component Inspection".

Is the inspection result normal?

YES >> GO TO 7.
NO >> GO TO 6.

6. REPLACE ELECTRIC THROTTLE CONTROL ACTUATOR

1. Replace electric throttle control actuator.
2. Go to EC-775, "Special Repair Requirement".

>> INSPECTION END

7. CHECK INTERMITTENT INCIDENT

Refer to GI-42, "Intermittent Incident".

>> INSPECTION END

Component Inspection

INFOID:0000000004349741

1. CHECK THROTTLE POSITION SENSOR

1. Turn ignition switch OFF.
2. Reconnect all harness connectors disconnected.
3. Perform EC-565, "THROTTLE VALVE CLOSED POSITION LEARNING : Special Repair Requirement".
4. Turn ignition switch ON.
5. Set shift lever to D (CVT) or 1st (M/T) position.
6. Check the voltage between ECM harness connector and ground.

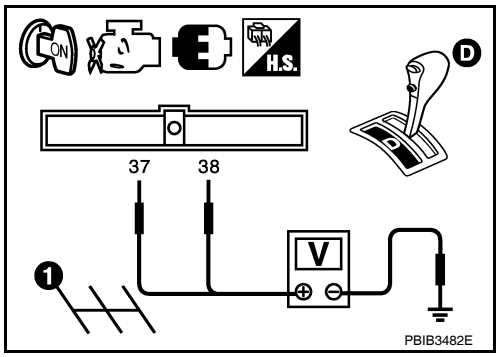

ECM		Ground	Condition		Voltage
Connector	Terminal				
F13	37 (TP sensor 1 signal)	Ground	Accelerator pedal	Fully released	More than 0.36V
				Fully depressed	Less than 4.75V
	38 (TP sensor 2 signal)			Fully released	Less than 4.75V
				Fully depressed	More than 0.36V

Is the inspection result normal?

YES >> INSPECTION END
NO >> GO TO 2.

2. REPLACE ELECTRIC THROTTLE CONTROL ACTUATOR

1. Replace electric throttle control actuator.
2. Go to EC-775, "Special Repair Requirement".

>> INSPECTION END

Special Repair Requirement

INFOID:0000000004349742

1. PERFORM THROTTLE VALVE CLOSED POSITION LEARNING

Refer to EC-565, "THROTTLE VALVE CLOSED POSITION LEARNING : Special Repair Requirement"

>> GO TO 2.

2. PERFORM IDLE AIR VOLUME LEARNING

Refer to EC-566, "IDLE AIR VOLUME LEARNING : Special Repair Requirement"

>> END

P0300, P0301, P0302, P0303, P0304 MISFIRE

DTC Logic

INFOID:0000000004349743

DTC DETECTION LOGIC

When a misfire occurs, engine speed will fluctuate. If the engine speed fluctuates enough to cause the crankshaft position (CKP) sensor (POS) signal to vary, ECM can determine that a misfire is occurring.

Sensor	Input signal to ECM	ECM function
Crankshaft position sensor (POS)	Engine speed	On board diagnosis of misfire

The misfire detection logic consists of the following two conditions.

1. One Trip Detection Logic (Three Way Catalyst Damage)
   On the 1st trip , when a misfire condition occurs that can damage the three way catalyst (TWC) due to overheating, the MIL will blink.
   When a misfire condition occurs, the ECM monitors the CKP sensor signal every 200 engine revolutions for a change.
   When the misfire condition decreases to a level that will not damage the TWC, the MIL will turn off.
   If another misfire condition occurs that can damage the TWC on a second trip, the MIL will blink.
   When the misfire condition decreases to a level that will not damage the TWC, the MIL will remain on.
   If another misfire condition occurs that can damage the TWC, the MIL will begin to blink again.
2. Two Trip Detection Logic (Exhaust quality deterioration)
   For misfire conditions that will not damage the TWC (but will affect vehicle emissions), the MIL will only light when the misfire is detected on a second trip. During this condition, the ECM monitors the CKP sensor signal every 1,000 engine revolutions.
   A misfire malfunction can be detected on any one cylinder or on multiple cylinders.

DTC No.	Trouble diagnosis name	DTC detecting condition	Possible cause
P0300	Multiple cylinder misfire detected	Multiple cylinder misfire.	• Improper spark plug • Insufficient compression • Incorrect fuel pressure • The fuel injector circuit is open or shorted • Fuel injector • Intake air leak • The ignition signal circuit is open or shorted • Lack of fuel • Signal plate • A/F sensor 1 • Incorrect PCV hose connection
P0301	No.1 cylinder misfire detected	No. 1 cylinder misfires.	
P0302	No. 2 cylinder misfire detected	No. 2 cylinder misfires.	
P0303	No. 3 cylinder misfire detected	No. 3 cylinder misfires.	
P0304	No. 4 cylinder misfire detected	No. 4 cylinder misfires.	

DTC CONFIRMATION PROCEDURE

1.PRECONDITIONING

If DTC Confirmation Procedure has been previously conducted, always turn ignition switch OFF and wait at least 10 seconds before conducting the next test.

>> GO TO 2.

2.PERFORM DTC CONFIRMATION PROCEDURE-I

1. Start engine and warm it up to normal operating temperature.
2. Turn ignition switch OFF and wait at least 10 seconds.
3. Restart engine and let it idle for about 15 minutes.
4. Check 1st trip DTC.

Is 1st trip DTC detected?

YES >> Go to EC-777, "Diagnosis Procedure".
NO >> GO TO 3.

3.PERFORM DTC CONFIRMATION PROCEDURE-II

1. Turn ignition switch OFF and wait at least 10 seconds.

2. Start engine and drive the vehicle under the similar conditions to (1st trip) Freeze Frame Data for a certain time. Refer to the table below.
Hold the accelerator pedal as steady as possible.
The similar conditions to (1st trip) Freeze Frame Data means the vehicle operation that the following conditions should be satisfied at the same time.
CAUTION:
Always drive vehicle in safe manner according to traffic conditions and obey all traffic laws when driving.

Engine speed	Engine speed in the freeze frame data ± 400 rpm
Vehicle speed	Vehicle speed in the freeze frame data ± 10 km/h (6 MPH)
Basic fuel schedule	Basic fuel schedule in freeze frame data × (1 ± 0.1)
Engine coolant temperature (T) condition	When the freeze frame data shows lower than 70 °C (158 °F), T should be lower than 70 °C (158 °F).
	When the freeze frame data shows higher than or equal to 70 °C (158 °F), T should be higher than or equal to 70 °C (158 °F).

The time to driving varies according to the engine speed in the freeze frame data.

Engine speed	Time
Around 1,000 rpm	Approximately 10 minutes
Around 2,000 rpm	Approximately 5 minutes
More than 3,000 rpm	Approximately 3.5 minutes

3. Check 1st trip DTC.

Is 1st trip DTC detected?

YES >> Go to EC-777, "Diagnosis Procedure".
NO >> INSPECTION END

Diagnosis Procedure

INFOID:0000000004349744

1. CHECK FOR INTAKE AIR LEAK AND PCV HOSE

1. Start engine and run it at idle speed.
2. Listen for the sound of the intake air leak.
3. Check PCV hose connection.

Is intake air leak detected?

YES >> Discover air leak location and repair.
NO >> GO TO 2.

2. CHECK FOR EXHAUST SYSTEM CLOGGING

Stop engine and visually check exhaust tube, three way catalyst and muffler for dents.

Is the inspection result normal?

YES-1 >> With CONSULT-III: GO TO 3.
YES-2 >> Without CONSULT-III: GO TO 4.
NO >> Repair or replace it.

3. PERFORM POWER BALANCE TEST

With CONSULT-III

1. Start engine.
2. Perform “POWER BALANCE” in “ACTIVE TEST” mode with CONSULT-III.
3. Make sure that each circuit produces a momentary engine speed drop.

Is the inspection result normal?

YES >> GO TO 9.
NO >> GO TO 4.

4. CHECK FUNCTION OF FUEL INJECTOR

1. Start engine and let engine idle.

2. Listen to each fuel injector operating sound.

Clicking noise should be heard.

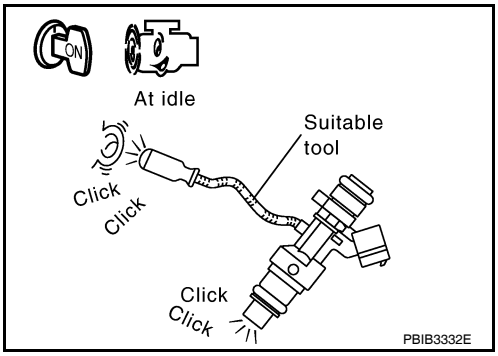

Is the inspection result normal?

YES >> GO TO 5.
NO >> Perform trouble diagnosis for FUEL INJECTOR, refer to EC-957, "Component Inspection".

5. CHECK FUNCTION OF IGNITION COIL-I

CAUTION:
Do the following procedure in the place where ventilation is good without the combustible.

1. Turn ignition switch OFF.
2. Remove fuel pump fuse in IPDM E/R to release fuel pressure.
   NOTE:
   Do not use CONSULT-III to release fuel pressure, or fuel pressure applies again during the following procedure.
3. Start engine.
4. After engine stalls, crank it two or three times to release all fuel pressure.
5. Turn ignition switch OFF.
6. Remove all ignition coil harness connectors to avoid the electrical discharge from the ignition coils.
7. Remove ignition coil and spark plug of the cylinder to be checked.
8. Crank engine for 5 seconds or more to remove combustion gas in the cylinder.
9. Connect spark plug and harness connector to ignition coil.
10. Fix ignition coil using a rope etc. with gap of 13 - 17 mm (0.52 - 0.66 in) between the edge of the spark plug and grounded metal portion as shown in the figure.
11. Crank engine for about 3 seconds, and check whether spark is generated between the spark plug and the grounded metal portion.

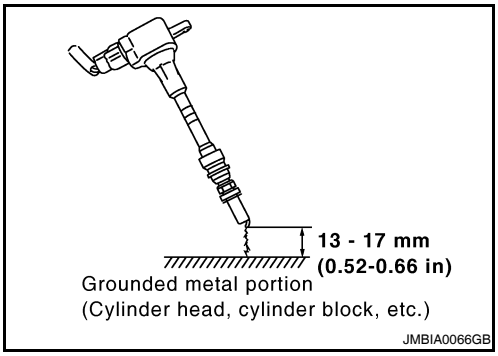

Spark should be generated.

CAUTION:
- **Do not approach to the spark plug and the ignition coil within 50 cm (19.7 in). Be careful not to get an electrical shock while checking, because the electrical discharge voltage becomes 20kV or more.**
- **It might cause to damage the ignition coil if the gap of more than 17 mm (0.66 in) is taken.**

NOTE:
When the gap is less than 13 mm (0.52 in), the spark might be generated even if the coil is malfunctioning.

Is the inspection result normal?

YES >> GO TO 9.
NO >> GO TO 6.

6. CHECK FUNCTION OF IGNITION COIL-II

1. Turn ignition switch OFF.
2. Disconnect spark plug and connect a known-good spark plug.
3. Crank engine for about 3 seconds, and recheck whether spark is generated between the spark plug and the grounded metal portion.

Spark should be generated.

Is the inspection result normal?

YES >> GO TO 7.
NO >> Check ignition coil, power transistor and their circuits. Refer to EC-963, "Component Function Check".

7. CHECK SPARK PLUG

Check the initial spark plug for fouling, etc.

Is the inspection result normal?

YES >> Replace spark plug(s) with standard type one(s). For spark plug type, refer to EM-99, "Standard and Limit".
NO >> Repair or clean spark plug. Then GO TO 8.

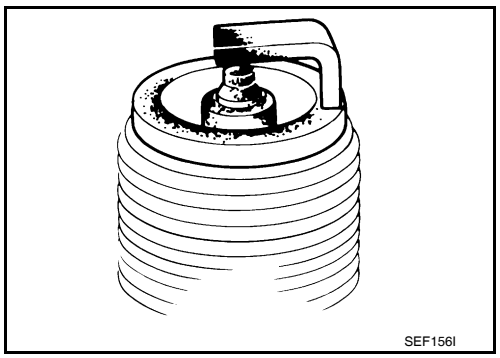

8. CHECK FUNCTION OF IGNITION COIL-III

1. Reconnect the initial spark plugs.
2. Crank engine for about 3 seconds, and recheck whether spark is generated between the spark plug and the grounded portion.

Spark should be generated.

Is the inspection result normal?

YES >> INSPECTION END
NO >> Replace spark plug(s) with standard type one(s). For spark plug type, refer to EM-99, "Standard and Limit".

9. CHECK COMPRESSION PRESSURE

Check compression pressure. Refer to EM-23, "Compression pressure".

Is the inspection result normal?

YES >> GO TO 10.
NO >> Check pistons, piston rings, valves, valve seats and cylinder head gaskets.

10. CHECK FUEL PRESSURE

1. Install all removed parts.
2. Check fuel pressure. Refer to EC-1038, "Inspection".

Is the inspection result normal?

YES >> GO TO 12.
NO >> GO TO 11.

11. DETECT MALFUNCTIONING PART

Check fuel hoses and fuel tubes for clogging.

Is the inspection result normal?

YES >> Replace “fuel filter and fuel pump assembly”.
NO >> Repair or replace.

12. CHECK IGNITION TIMING

Check the following items. Refer to EC-560, "BASIC INSPECTION : Special Repair Requirement".
For specification, refer toEC-1043, "Ignition Timing" .

Is the inspection result normal?

YES >> GO TO 13.
NO >> Follow the EC-560, "BASIC INSPECTION : Special Repair Requirement".

13. CHECK A/F SENSOR 1 INPUT SIGNAL CIRCUIT

1. Turn ignition switch OFF.
2. Disconnect corresponding A/F sensor 1 harness connector.
3. Disconnect ECM harness connector.
4. Check the continuity between A/F sensor 1 harness connector and ECM harness connector.

A/F sensor 1		ECM		Continuity
Connector	Terminal	Connector	Terminal	
F44	1	F13	45	Existed
	2		49	

5. Check the continuity between A/F sensor 1 harness connector or ECM harness connector and ground.

A/F sensor 1		ECM		Ground	Continuity
Connector	Terminal	Connector	Terminal		
F44	1	F13	45	Ground	Not existed
	2		49		

6. Also check harness for short to power.

Is the inspection result normal?

YES >> GO TO 14.
NO >> Repair open circuit or short to ground or short to power in harness or connectors.

14. CHECK A/F SENSOR 1 HEATER

Refer to EC-686, "Component Inspection".

Is the inspection result normal?

YES >> GO TO 15.
NO >> Replace A/F sensor 1.

15. CHECK MASS AIR FLOW SENSOR

With CONSULT-III
Check “MASS AIR FLOW” in “DATA MONITOR” mode with CONSULT-III.
For specification, refer to EC-1043, "Mass Air Flow Sensor".

With GST
Check mass air flow sensor signal in Service $01 with GST.
For specification, refer to EC-1043, "Mass Air Flow Sensor".

Is the measurement value within the specification?

YES >> GO TO 16.
NO >> Check connectors for rusted terminals or loose connections in the mass air flow sensor circuit or ground. Refer to EC-693, "DTC Logic".

16. CHECK SYMPTOM TABLE

Check items on the rough idle symptom in EC-1027, "Symptom Table".

Is the inspection result normal?

YES >> GO TO 17.
NO >> Repair or replace.

17. ERASE THE 1ST TRIP DTC

Some tests may cause a 1st trip DTC to be set.
Erase the 1st trip DTC from the ECM memory after performing the tests. Refer to EC-641, "Diagnosis Description".

>> GO TO 18.

18. CHECK INTERMITTENT INCIDENT

Refer to GI-42, "Intermittent Incident".

>> INSPECTION END

P0327, P0328 KS

Description

INFOID:0000000004349745

The knock sensor is attached to the cylinder block. It senses engine knocking using a piezoelectric element. A knocking vibration from the cylinder block is sensed as vibrational pressure. This pressure is converted into a voltage signal and sent to the ECM.

DTC Logic

INFOID:0000000004349746

DTC DETECTION LOGIC

DTC No.	Trouble diagnosis name	DTC detected condition	Possible cause
P0327	Knock sensor circuit low input	An excessively low voltage from the sensor is sent to ECM.	• Harness or connectors (The sensor circuit is open or shorted.) • Knock sensor
P0328	Knock sensor circuit high input	An excessively high voltage from the sensor is sent to ECM.	

DTC CONFIRMATION PROCEDURE

1.PRECONDITIONING

If DTC Confirmation Procedure has been previously conducted, always turn ignition switch OFF and wait at least 10 seconds before conducting the next test.

TESTING CONDITION:

Before performing the following procedure, confirm that battery voltage is more than 10V at idle.

>> GO TO 2.

2.PERFORM DTC CONFIRMATION PROCEDURE

1. Start engine and run it for at least 5 seconds at idle speed.
2. Check 1st trip DTC.

Is 1st trip DTC detected?

YES >> Go to EC-781, "Diagnosis Procedure".
NO >> INSPECTION END

Diagnosis Procedure

INFOID:0000000004349747

1.CHECK GROUND CONNECTION

1. Turn ignition switch OFF.
2. Check ground connection E9. Refer to Ground Inspection in GI-45, "Circuit Inspection".

Is the inspection result normal?

YES >> GO TO 2.
NO >> Repair or replace ground connection.

2.CHECK KNOCK SENSOR GROUND CIRCUIT FOR OPEN AND SHORT

1. Disconnect knock sensor harness connector and disconnect ECM harness connector.
2. Check the continuity between knock sensor harness connector and ECM harness connector.

Knock sensor		ECM		Continuity
Connector	Terminal	Connector	Terminal	
F45	2	F13	67	Existed

3. Also check harness for short to ground and short to power.

Is the inspection result normal?

YES >> GO TO 3.
NO >> Repair open circuit or short to ground or short to power in harness or connectors.

3. CHECK KNOCK SENSOR INPUT SIGNAL CIRCUIT FOR OPEN AND SHORT

1. Check the continuity between knock sensor harness connector and ECM harness connector.

Knock sensor		ECM		Continuity
Connector	Terminal	Connector	Terminal	
F45	1	F13	61	Existed

2. Also check harness for short to ground and short to power.

Is the inspection result normal?

YES >> GO TO 4.
NO >> Repair open circuit or short to ground or short to power in harness or connectors.

4. CHECK KNOCK SENSOR

Refer to EC-782, "Component Inspection".

Is the inspection result normal?

YES >> GO TO 5.
NO >> Replace knock sensor.

5. CHECK INTERMITTENT INCIDENT

Refer to GI-42, "Intermittent Incident".

>> INSPECTION END

Component Inspection

INFOID:0000000004349748

1. CHECK KNOCK SENSOR

1. Turn ignition switch OFF.
2. Disconnect knock sensor harness connector.
3. Check resistance between knock sensor terminals as follows.
   NOTE:
   It is necessary to use an ohmmeter which can measure more than 10 MΩ.

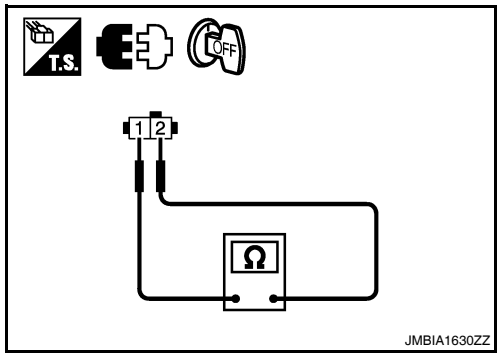

Terminals	Resistance
1 and 2	Approx. 532 - 588 kΩ [at 20°C (68°F)]

CAUTION:
Do not use any knock sensors that have been dropped or physically damaged. Use only new ones.

Is the inspection result normal?

YES >> INSPECTION END
NO >> Replace knock sensor.

P0335 CKP SENSOR (POS)

Description

INFOID:0000000004349749

The crankshaft position sensor (POS) is located on the oil pan facing the gear teeth (cogs) of the signal plate. It detects the fluctuation of the engine revolution.
The sensor consists of a permanent magnet and Hall IC.
When the engine is running, the high and low parts of the teeth cause the gap with the sensor to change.
The changing gap causes the magnetic field near the sensor to change.
Due to the changing magnetic field, the voltage from the sensor changes.
The ECM receives the voltage signal and detects the fluctuation of the engine revolution.
ECM receives the signals as shown in the figure.

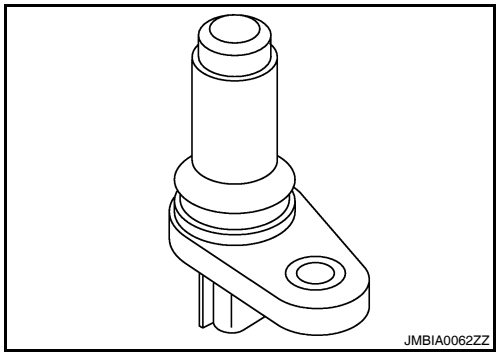

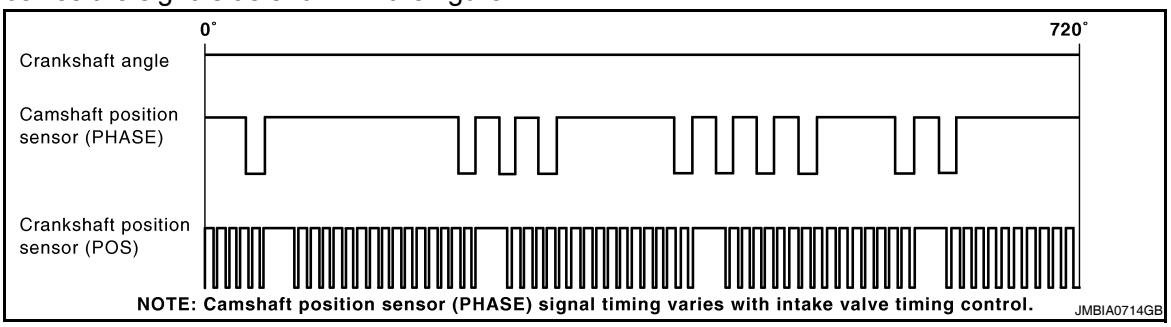

DTC Logic

INFOID:0000000004349750

DTC DETECTION LOGIC

DTC No.	Trouble diagnosis name	DTC detecting condition	Possible cause
P0335	Crankshaft position sensor (POS) circuit	• The crankshaft position sensor (POS) signal is not detected by the ECM during the first few seconds of engine cranking. • The proper pulse signal from the crankshaft position sensor (POS) is not sent to ECM while the engine is running. • The crankshaft position sensor (POS) signal is not in the normal pattern during engine running.	• Harness or connectors [Crankshaft position sensor (POS) circuit is open or shorted.] (Refrigerant pressure sensor circuit is shorted.) (Accelerator pedal position sensor circuit is shorted.) (EVAP control system pressure sensor circuit is shorted.) • Crankshaft position sensor (POS) • Refrigerant pressure sensor • Accelerator pedal position sensor • EVAP control system pressure sensor • Signal plate

DTC CONFIRMATION PROCEDURE

1. PRECONDITIONING

If DTC Confirmation Procedure has been previously conducted, always turn ignition switch OFF and wait at least 10 seconds before conducting the next test.
TESTING CONDITION:
Before performing the following procedure, confirm that battery voltage is more than 10.5V with ignition switch ON.

>> GO TO 2.

2. PERFORM DTC CONFIRMATION PROCEDURE

1. Start engine and let it idle for at least 5 seconds.
   If engine does not start, crank engine for at least 2 seconds.
2. Check 1st trip DTC.

Is 1st trip DTC detected?

YES >> Go to EC-784, "Diagnosis Procedure".
NO >> INSPECTION END

Diagnosis Procedure

INFOID:0000000004349751

1. CHECK GROUND CONNECTION

1. Turn ignition switch OFF.
2. Check ground connection E9. Refer to Ground Inspection in GI-45, "Circuit Inspection".

Is the inspection result normal?

YES >> GO TO 2.
NO >> Repair or replace ground connection.

2. CHECK CRANKSHAFT POSITION (CKP) SENSOR (POS) POWER SUPPLY CIRCUIT-I

1. Disconnect crankshaft position (CKP) sensor (POS) harness connector.
2. Turn ignition switch ON.
3. Check the voltage between CKP sensor (POS) harness connector and ground.

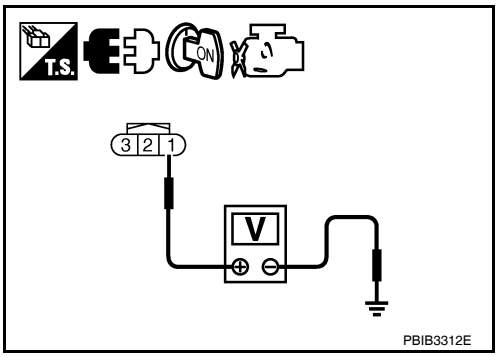

CKP sensor (POS)		Ground	Voltage
Connector	Terminal		
F30	1	Ground	Approx. 5V

Is the inspection result normal?

YES >> GO TO 8.
NO >> GO TO 3.

3. CHECK CRANKSHAFT POSITION (CKP) SENSOR (POS) POWER SUPPLY CIRCUIT-II

1. Turn ignition switch ON.
2. Disconnect ECM harness connector.
3. Check the continuity between CKP sensor (POS) harness connector and ECM harness connector.

CKP sensor (POS)		ECM		Continuity
Connector	Terminal	Connector	Terminal	
F30	1	F13	76	Existed

Is the inspection result normal?

YES >> GO TO 4.
NO >> Repair open circuit.

4. CHECK CRANKSHAFT POSITION (CKP) SENSOR (POS) POWER SUPPLY CIRCUIT-III

Check harness for short to power and short to ground, between the following terminals.

ECM		Sensor		
Connector	Terminal	Name	Connector	Terminal
F13	72	Refrigerant pressure sensor	E219	1
	76	CKP sensor (POS)	F30	1
E10	87	APP sensor	E40	6
	91	EVAP control system pressure sensor	B41	3

Is the inspection result normal?

YES >> GO TO 5.
NO >> Repair short to ground or short to power in harness or connectors.

5. CHECK COMPONENTS

Check the following.
- Refrigerant pressure sensor (Refer to EC-975, "Diagnosis Procedure".)
- EVAP control system pressure sensor (Refer to EC-824, "Component Inspection".)

Is the inspection result normal?

YES >> GO TO 6.
NO >> Replace malfunctioning components.

6. CHECK APP SENSOR

Refer to EC-926, "Component Inspection".

Is the inspection result normal?

YES >> GO TO 12.
NO >> GO TO 7.

7. REPLACE ACCELERATOR PEDAL ASSEMBLY

1. Replace accelerator pedal assembly.
2. Go to EC-926, "Special Repair Requirement".

>> INSPECTION END

8. CHECK CKP SENSOR (POS) GROUND CIRCUIT FOR OPEN AND SHORT

1. Turn ignition switch OFF.
2. Check the continuity between CKP sensor (POS) harness connector and ECM harness connector.

CKP sensor (POS)		ECM		Continuity
Connector	Terminal	Connector	Terminal	
F30	2	F13	60	Existed

3. Also check harness for short to ground and short to power.

Is the inspection result normal?

YES >> GO TO 9.
NO >> Repair open circuit or short to ground or short to power in harness or connectors.

9. CHECK CKP SENSOR (POS) INPUT SIGNAL CIRCUIT FOR OPEN AND SHORT

1. Disconnect ECM harness connector.
2. Check the continuity between CKP sensor (POS) harness connector and ECM harness connector.

CKP sensor (POS)		ECM		Continuity
Connector	Terminal	Connector	Terminal	
F30	3	F13	65	Existed

3. Also check harness for short to ground and short to power.

Is the inspection result normal?

YES >> GO TO 10.
NO >> Repair open circuit or short to ground or short to power in harness or connectors.

10. CHECK CRANKSHAFT POSITION SENSOR (POS)

Refer to EC-786, "Component Inspection".

Is the inspection result normal?

YES >> GO TO 11.
NO >> Replace crankshaft position sensor (POS).

11. CHECK GEAR TOOTH

Visually check for chipping signal plate gear tooth.

Is the inspection result normal?

YES >> GO TO 12.
NO >> Replace the signal plate.

12. CHECK INTERMITTENT INCIDENT

Refer to GI-42, "Intermittent Incident".

>> INSPECTION END

Component Inspection

INFOID:0000000004349752

1. CHECK CRANKSHAFT POSITION SENSOR (POS)-I

1. Turn ignition switch OFF.
2. Loosen the fixing bolt of the sensor.
3. Disconnect crankshaft position sensor (POS) harness connector.
4. Remove the sensor.
5. Visually check the sensor for chipping.

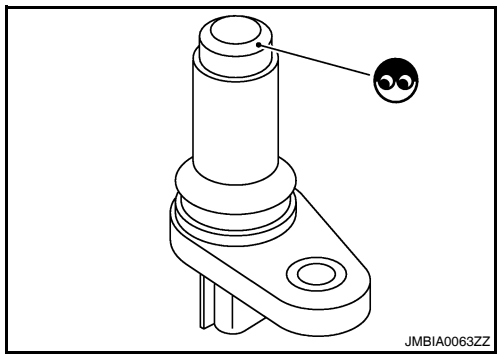

Is the inspection result normal?

YES >> GO TO 2.
NO >> Replace crankshaft position sensor (POS).

2. CHECK CRANKSHAFT POSITION SENSOR (POS)-II

Check resistance between crankshaft position sensor (POS) terminals as follows.

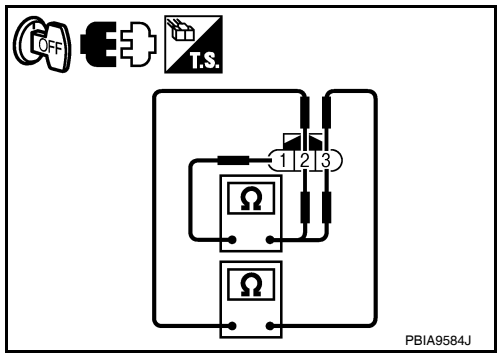

Terminals (Polarity)	Resistance Ω [at 25°C (77°F)]
1 (+) - 2 (-)	Except 0 or ∞
1 (+) - 3 (-)	
2 (+) - 3 (-)	

Is the inspection result normal?

YES >> INSPECTION END
NO >> Replace crankshaft position sensor (POS).

P0340 CMP SENSOR (PHASE)

Description

INFOID:0000000004349753

The camshaft position sensor (PHASE) senses the retraction of camshaft (INT) to identify a particular cylinder. The camshaft position sensor (PHASE) senses the piston position.
When the crankshaft position sensor (POS) system becomes inoperative, the camshaft position sensor (PHASE) provides various controls of engine parts instead, utilizing timing of cylinder identification signals.
The sensor consists of a permanent magnet and Hall IC.
When engine is running, the high and low parts of the teeth cause the gap with the sensor to change.
The changing gap causes the magnetic field near the sensor to change.
Due to the changing magnetic field, the voltage from the sensor changes.
ECM receives the signals as shown in the figure.

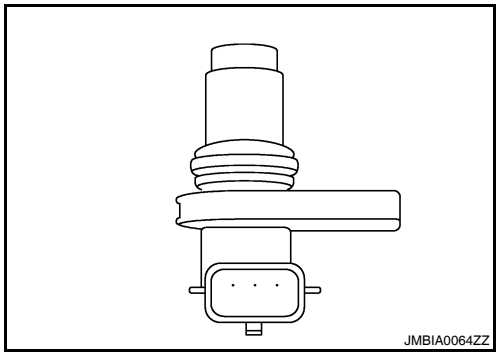

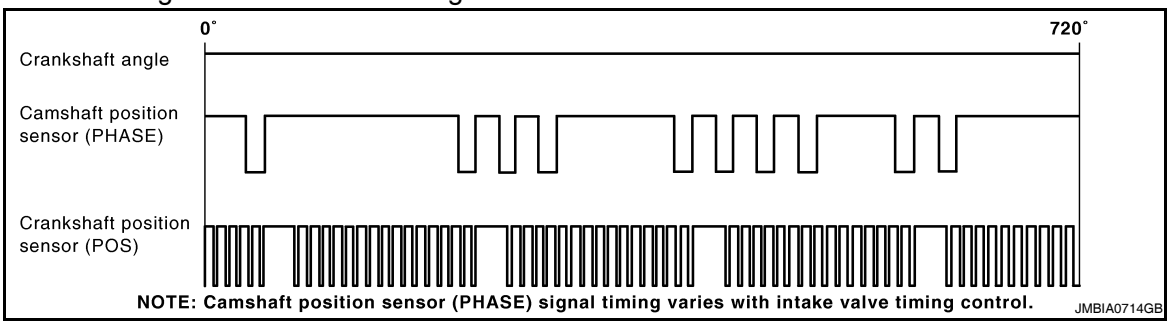

DTC Logic

INFOID:0000000004349754

DTC DETECTION LOGIC

NOTE:
If DTC P0340 is displayed with DTC P0643, first perform the trouble diagnosis for DTC P0643. Refer to EC-867, "DTC Logic".

DTC No.	Trouble diagnosis name	DTC detecting condition	Possible cause
P0340	Camshaft position sensor (PHASE) circuit	• The cylinder No. signal is not sent to ECM for the first few seconds during engine cranking. • The cylinder No. signal is not sent to ECM during engine running. • The cylinder No. signal is not in the normal pattern during engine running.	• Harness or connectors (The sensor circuit is open or shorted) • Camshaft position sensor (PHASE) • Camshaft (INT) • Starter motor (Refer to STR-6, "System Diagram".) • Starting system circuit (Refer to STR-6, "System Diagram".) • Dead (Weak) battery

DTC CONFIRMATION PROCEDURE

1. PRECONDITIONING

If DTC Confirmation Procedure has been previously conducted, always turn ignition switch OFF and wait at least 10 seconds before conducting the next test.
TESTING CONDITION:
Before performing the following procedure, confirm that battery voltage is more than 10.5V with ignition switch ON.

>> GO TO 2.

2. PERFORM DTC CONFIRMATION PROCEDURE-I

1. Start engine and let it idle for at least 5 seconds.

If engine does not start, crank engine for at least 2 seconds.
2. Check 1st trip DTC.

Is 1st trip DTC detected?

YES >> Go to EC-788, "Diagnosis Procedure".
NO >> GO TO 3.

3. PERFORM DTC CONFIRMATION PROCEDURE-I

1. Maintaining engine speed at more than 800 rpm for at least 5 seconds.
2. Check 1st trip DTC.

Is 1st trip DTC detected?

YES >> Go to EC-788, "Diagnosis Procedure".
NO >> INSPECTION END

Diagnosis Procedure

INFOID:0000000004349755

1. CHECK STARTING SYSTEM

Turn ignition switch to START position.

Does the engine turn over? Does the starter motor operate?

YES >> GO TO 2.
NO >> Check starting system.

2. CHECK GROUND CONNECTION

1. Turn ignition switch OFF.
2. Check ground connection E9. Refer to Ground Inspection in GI-45, "Circuit Inspection".

Is the inspection result normal?

YES >> GO TO 3.
NO >> Repair or replace ground connection.

3. CHECK CAMSHAFT POSITION (CMP) SENSOR (PHASE) POWER SUPPLY CIRCUIT

1. Disconnect camshaft position (CMP) sensor (PHASE) harness connector.
2. Turn ignition switch ON.
3. Check the voltage between CMP sensor (PHASE) harness connector and ground.

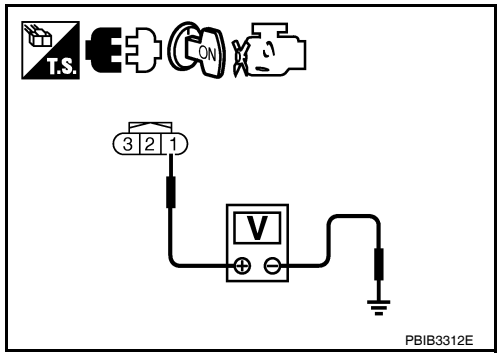

CMP sensor (PHASE)		Ground	Voltage
Connector	Terminal		
F55	1	Ground	Approx. 5V

Is the inspection result normal?

YES >> GO TO 4.
NO >> Repair open circuit or short to ground or short to power in harness or connectors.

4. CHECK CMP SENSOR (PHASE) GROUND CIRCUIT FOR OPEN AND SHORT

1. Turn ignition switch OFF.
2. Check the continuity between CMP sensor (PHASE) harness connector and ECM harness connector.

CMP sensor (PHASE)		ECM		Continuity
Connector	Terminal	Connector	Terminal	
F55	2	F13	64	Existed

3. Also check harness for short to power.

Is the inspection result normal?

YES >> GO TO 5.
NO >> Repair open circuit or short to ground or short to power in harness or connectors.

5. CHECK CMP SENSOR (PHASE) INPUT SIGNAL CIRCUIT FOR OPEN AND SHORT

1. Disconnect ECM harness connector.
2. Check the continuity between CMP sensor (PHASE) harness connector and ECM harness connector.

CMP sensor (PHASE)		ECM		Continuity
Connector	Terminal	Connector	Terminal	
F55	3	F13	69	Existed

3. Also check harness for short to ground and short to power.

Is the inspection result normal?

YES >> GO TO 6.
NO >> Repair open circuit or short to ground or short to power in harness or connectors.

6. CHECK CAMSHAFT POSITION SENSOR (PHASE)

Refer to EC-789, "Component Inspection".

Is the inspection result normal?

YES >> GO TO 7.
NO >> Replace camshaft position sensor (PHASE).

7. CHECK CAMSHAFT (INT)

Check the following.
- Accumulation of debris to the signal plate of camshaft (1) rear end
- Chipping signal plate of camshaft rear end

Is the inspection result normal?

YES >> GO TO 8.
NO >> Remove debris and clean the signal plate of camshaft rear end or replace camshaft.

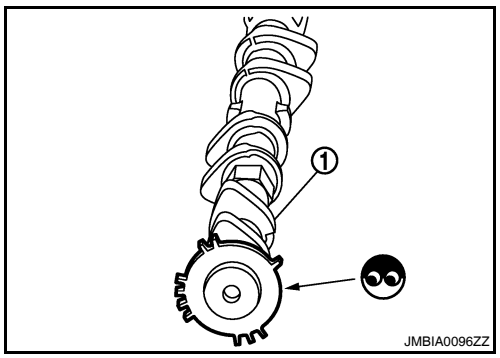

8. CHECK INTERMITTENT INCIDENT

Refer to GI-42, "Intermittent Incident".

>> INSPECTION END

Component Inspection

INFOID:0000000004349756

1. CHECK CAMSHAFT POSITION SENSOR (PHASE)-I

1. Turn ignition switch OFF.
2. Loosen the fixing bolt of the sensor.
3. Disconnect camshaft position sensor (PHASE) harness connector.
4. Remove the sensor.
5. Visually check the sensor for chipping.

Is the inspection result normal?

YES >> GO TO 2.
NO >> Replace camshaft position sensor (PHASE).

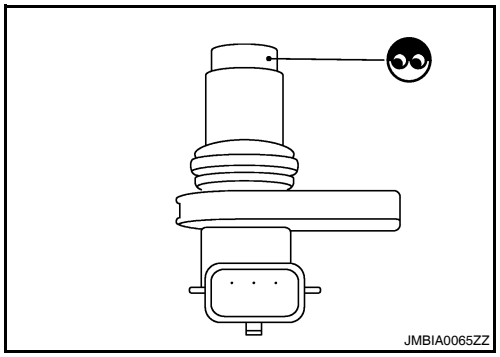

2. CHECK CAMSHAFT POSITION SENSOR (PHASE)-II

Check resistance camshaft position sensor (PHASE) terminals as follows.

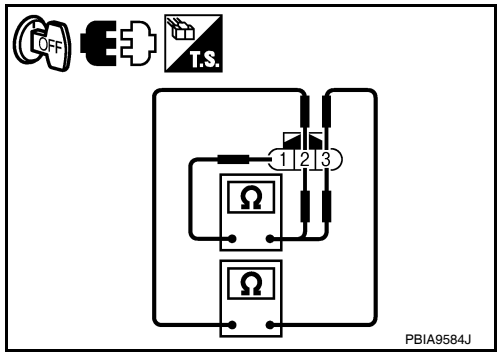

Terminals (Polarity)	Resistance
1 (+) - 2 (-)	Except 0 or ∞Ω [at 25°C (77°F)]
1 (+) - 3 (-)	
2 (+) - 3 (-)	

Is the inspection result normal?

YES >> INSPECTION END
NO >> Replace camshaft position sensor (PHASE).

P0420 THREE WAY CATALYST FUNCTION

DTC Logic

INFOID:0000000004349757

DTC DETECTION LOGIC

The ECM monitors the switching frequency ratio of air fuel ratio (A/F) sensor 1 and heated oxygen sensor 2.
A three way catalyst (manifold) with high oxygen storage capacity will indicate a low switching frequency of heated oxygen sensor 2. As oxygen storage capacity decreases, the heated oxygen sensor 2 switching frequency will increase.
When the frequency ratio of A/F sensor 1 and heated oxygen sensor 2 approaches a specified limit value, the three way catalyst (manifold) malfunction is diagnosed.

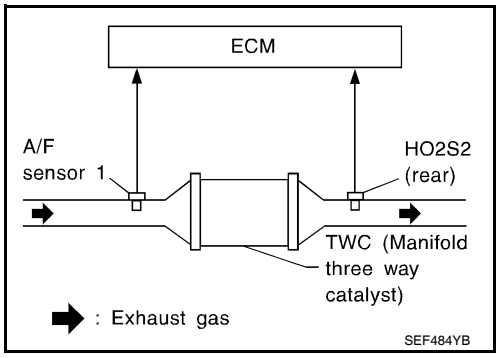

DTC No.	Trouble diagnosis name	DTC detecting condition	Possible cause
P0420	Catalyst system efficiency below threshold	• Three way catalyst (manifold) does not operate properly. • Three way catalyst (manifold) does not have enough oxygen storage capacity.	• Three way catalyst (manifold) • Exhaust tube • Intake air leaks • Fuel injector • Fuel injector leaks • Spark plug • Improper ignition timing

DTC CONFIRMATION PROCEDURE

1. INSPECTION START

Do you have CONSULT-III?

Do you have CONSULT-III?

YES >> GO TO 2.
NO >> GO TO 7.

2. PRECONDITIONING

If DTC Confirmation Procedure has been previously conducted, always turn ignition switch OFF and wait at least 10 seconds before conducting the next test.

TESTING CONDITION:
Do not hold engine speed for more than the specified minutes below.

>> GO TO 3.

3. PERFORM DTC CONFIRMATION PROCEDURE-I

With CONSULT-III

1. Turn ignition switch ON and select “DATA MONITOR” mode with CONSULT-III.
2. Start engine and warm it up to the normal operating temperature.
3. Turn ignition switch OFF and wait at least 10 seconds.
4. Start engine and keep the engine speed between 3,500 and 4,000 rpm for at least 1 minute under no load.
5. Let engine idle for 1 minute.
6. Make sure that “COOLAN TEMP/S” indicates more than 70°C (158°F).
   If not, warm up engine and go to next step when “COOLAN TEMP/S” indication reaches to 70°C (158°F).
7. Open engine hood.
8. Select “DTC & SRT CONFIRMATION” then “SRT WORK SUPPORT” mode with CONSULT-III.
9. Rev engine up to 2,000 to 3,000 rpm and hold it for 3 consecutive minutes then release the accelerator pedal completely.
10. Check the indication of “CATALYST”.

Which is displayed on CONSULT-III screen?

CMPLT >> GO TO 6.
INCMP >> GO TO 4.

4. PERFORM DTC CONFIRMATION PROCEDURE-II

1. Wait 5 seconds at idle.
2. Rev engine up to 2,000 to 3,000 rpm and maintain it until “INCMP” of “CATALYST” changes to “CMPLT” (It will take approximately 5 minutes).

Does the indication change to “CMPLT”?

YES >> GO TO 6.
NO >> GO TO 5.

5. PERFORM DTC CONFIRMATION PROCEDURE AGAIN

1. Stop engine and cool it down to less than 70°C (158°F).
2. Perform DTC CONFIRMATION PROCEDURE again.

>> GO TO 3.

6. PERFORM DTC CONFIRMATION PROCEDURE-III

Check 1st trip DTC.

Is 1st trip DTC detected?

YES >> Go to EC-793, "Diagnosis Procedure".
NO >> INSPECTION END

7. PERFORM COMPONENT FUNCTION CHECK

Perform component function check. Refer to EC-792, "Component Function Check".

NOTE:
Use component function check to check the overall function of the three way catalyst (manifold). During this check, a 1st trip DTC might not be confirmed.

Is the inspection result normal?

YES >> INSPECTION END
NO >> Go to EC-793, "Diagnosis Procedure".

Component Function Check

INFOID:0000000004349758

1. PERFORM COMPONENT FUNCTION CHECK

Without CONSULT-III

1. Start engine and warm it up to the normal operating temperature.
2. Turn ignition switch OFF and wait at least 10 seconds.
3. Start engine and keep the engine speed between 3,500 and 4,000 rpm for at least 1 minute under no load.
4. Let engine idle for 1 minute.
5. Open engine hood.
6. Check the voltage between ECM harness connector and ground under the following condition.

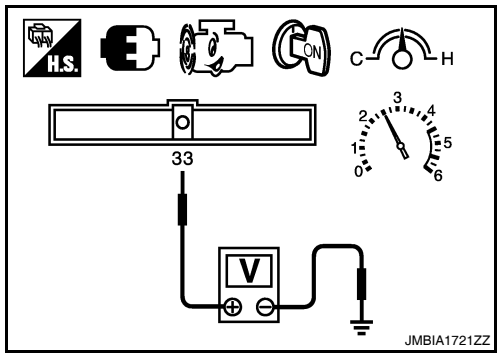

ECM		Ground	Condition	Voltage
Connector	Terminal			
F13	33 (HO2S 2 signal)	Ground	Keeping engine speed at 2,500 rpm constant under no load	The voltage fluctuation cycle takes more than 5 seconds. 1 cycle: 0.6 - 1.0 → 0 - 0.3 → 0.6 - 1.0

Is the inspection result normal?

YES >> INSPECTION END
NO >> Go to EC-793, "Diagnosis Procedure".

Diagnosis Procedure

INFOID:0000000004349759

1. CHECK EXHAUST SYSTEM

Visually check exhaust tubes and muffler for dent.

Is the inspection result normal?

YES >> GO TO 2.
NO >> Repair or replace.

2. CHECK EXHAUST GAS LEAK

1. Start engine and run it at idle.
2. Listen for an exhaust gas leak before the three way catalyst (manifold).

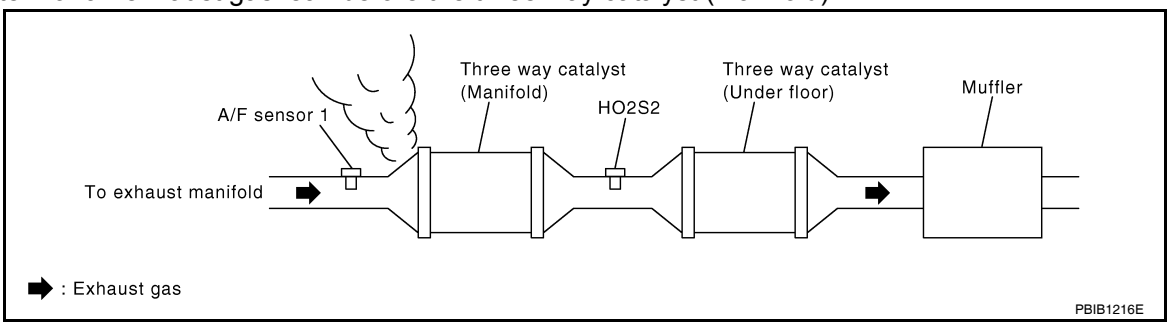

Is exhaust gas leak detected?

YES >> Repair or replace.
NO >> GO TO 3.

3. CHECK INTAKE AIR LEAK

Listen for an intake air leak after the mass air flow sensor.

Is intake air leak detected?

YES >> Repair or replace.
NO >> GO TO 4.

4. CHECK IGNITION TIMING

For procedure, refer to EC-564, "IGNITION TIMING : Special Repair Requirement".
For specification, refer to EC-1043, "Idle Speed" and EC-1043, "Ignition Timing".

Is the inspection result normal?

YES >> GO TO 5.
NO >> Follow the EC-560, "BASIC INSPECTION : Special Repair Requirement".

5. CHECK FUEL INJECTOR

1. Stop engine and then turn ignition switch ON.
2. Check the voltage between ECM harness connector and ground.

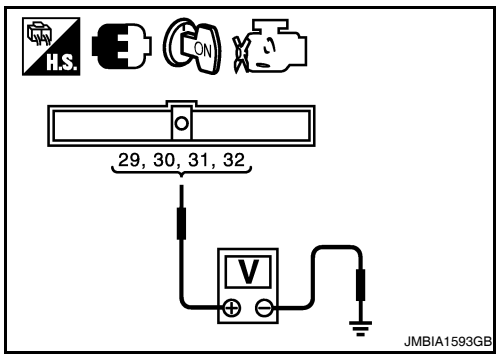

ECM		Ground	Voltage
Connector	Terminal		
F14	29	Ground	Battery voltage
	30		
	31		
	32		

Is the inspection result normal?

YES >> GO TO 6.
NO >> Perform EC-956, "Diagnosis Procedure".

6. CHECK FUNCTION OF IGNITION COIL-I

CAUTION:

Do the following procedure in the place where ventilation is good without the combustible.

1. Turn ignition switch OFF.
2. Remove fuel pump fuse in IPDM E/R to release fuel pressure.
   NOTE:
   Do not use CONSULT-III to release fuel pressure, or fuel pressure applies again during the following procedure.
3. Start engine.
4. After engine stalls, crank it two or three times to release all fuel pressure.
5. Turn ignition switch OFF.
6. Remove all ignition coil harness connectors to avoid the electrical discharge from the ignition coils.
7. Remove ignition coil and spark plug of the cylinder to be checked.
8. Crank engine for 5 seconds or more to remove combustion gas in the cylinder.
9. Connect spark plug and harness connector to ignition coil.
10. Fix ignition coil using a rope etc. with gap of 13 - 17 mm (0.52 - 0.66 in) between the edge of the spark plug and grounded metal portion as shown in the figure.
11. Crank engine for about 3 seconds, and check whether spark is generated between the spark plug and the grounded metal portion.

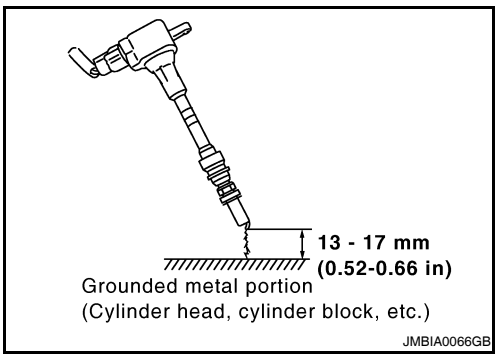

Spark should be generated.

CAUTION:
- **Do not approach to the spark plug and the ignition coil within 50 cm (19.7 in). Be careful not to get an electrical shock while checking, because the electrical discharge voltage becomes 20kV or more.**
- **It might cause to damage the ignition coil if the gap of more than 17 mm (0.66 in) is taken.**

NOTE:
When the gap is less than 13 mm (0.52 in), the spark might be generated even if the coil is malfunctioning.

Is the inspection result normal?

YES >> GO TO 10.
NO >> GO TO 7.

7. CHECK FUNCTION OF IGNITION COIL-II

1. Turn ignition switch OFF.
2. Disconnect spark plug and connect a known-good spark plug.
3. Crank engine for about 3 seconds, and recheck whether spark is generated between the spark plug and the grounded metal portion.

Spark should be generated.

Is the inspection result normal?

YES >> GO TO 8.
NO >> Check ignition coil, power transistor and their circuits. Refer to EC-963, "Diagnosis Procedure".

8. CHECK SPARK PLUG

Check the initial spark plug for fouling, etc.

Is the inspection result normal?

YES >> Replace spark plug(s) with standard type one(s). For spark plug type, refer to EM-99, "Standard and Limit".
NO >> Repair or clean spark plug. Then GO TO 9.

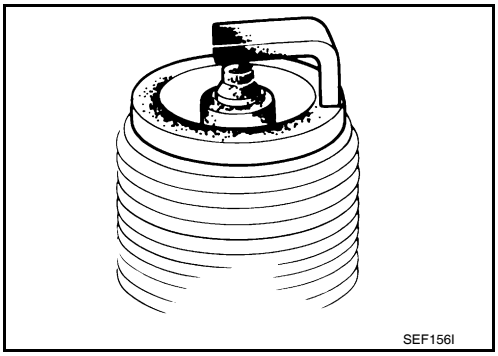

9. CHECK FUNCTION OF IGNITION COIL-III

1. Reconnect the initial spark plugs.
2. Crank engine for about three seconds, and recheck whether spark is generated between the spark plug and the grounded portion.

Spark should be generated.

Is the inspection result normal?

YES >> INSPECTION END
NO >> Replace spark plug(s) with standard type one(s). For spark plug type, refer to EM-99, "Standard and Limit".

10. CHECK FUEL INJECTOR

1. Turn ignition switch OFF.
2. Remove fuel injector assembly.
   Refer to EM-36, "Removal and Installation".
   Keep fuel hose and all fuel injectors connected to fuel tube.
3. Disconnect all ignition coil harness connectors.
4. Reconnect all fuel injector harness connectors disconnected.
5. Turn ignition switch ON.

Does fuel drip from fuel injector?

YES >> GO TO 11.
NO >> Replace the fuel injector(s) from which fuel is dripping.

11. CHECK INTERMITTENT INCIDENT

Refer to GI-42, "Intermittent Incident".

Is the inspection result normal?

YES >> Replace three way catalyst assembly.
NO >> Repair or replace harness or connector

P0441 EVAP CONTROL SYSTEM

DTC Logic

INFOID:0000000004349760

DTC DETECTION LOGIC

NOTE:

If DTC P0441 is displayed with other DTC such as P2122, P2123, P2127, P2128 or P2138, first perform trouble diagnosis for other DTC.

In this evaporative emission (EVAP) control system, purge flow occurs during non-closed throttle conditions. Purge volume is related to air intake volume. Under normal purge conditions (non-closed throttle), the EVAP canister purge volume control solenoid valve is open to admit purge flow. Purge flow exposes the EVAP control system pressure sensor to intake manifold vacuum.

Under normal conditions (non-closed throttle), sensor output voltage indicates if pressure drop and purge flow are adequate. If not, a malfunction is determined.

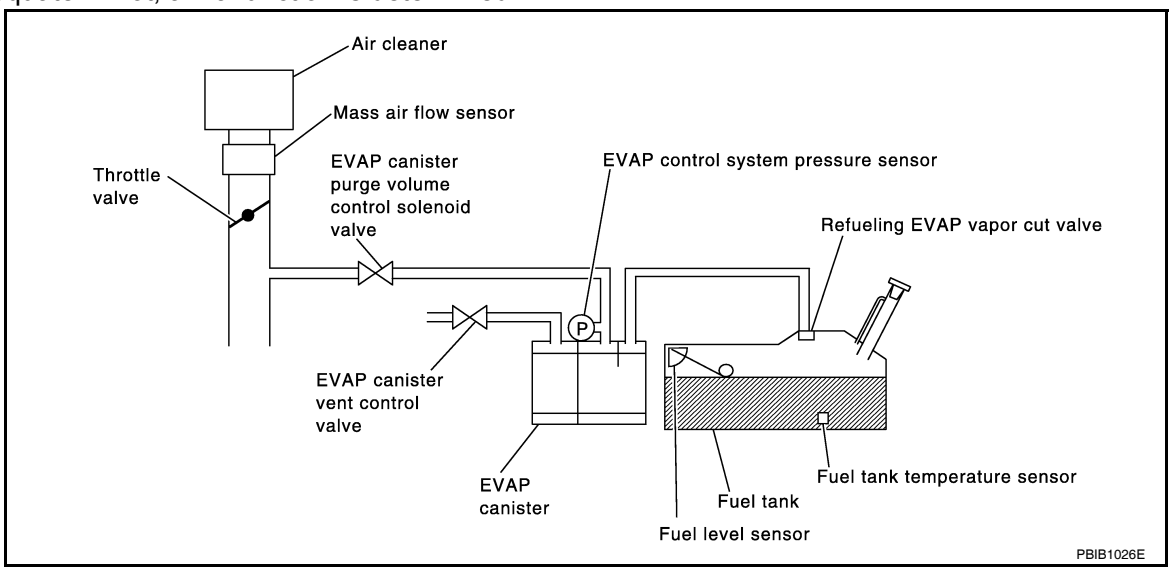

DTC No.	Trouble diagnosis name	DTC detecting condition	Possible cause
P0441	EVAP control system incorrect purge flow	EVAP control system does not operate properly, EVAP control system has a leak between intake manifold and EVAP control system pressure sensor.	• EVAP canister purge volume control solenoid valve stuck closed • EVAP control system pressure sensor and the circuit • Loose, disconnected or improper connection of rubber tube • Blocked rubber tube • Cracked EVAP canister • EVAP canister purge volume control solenoid valve circuit • Accelerator pedal position sensor • Blocked purge port • EVAP canister vent control valve

DTC CONFIRMATION PROCEDURE

1. INSPECTION START

Do you have CONSULT-III?

Do you have CONSULT-III?

YES >> GO TO 2.
NO >> GO TO 6.

2. PRECONDITIONING

If DTC Confirmation Procedure has been previously conducted, always turn ignition switch OFF and wait at least 10 seconds before conducting the next test.

TESTING CONDITION:

Always perform test at a temperature of 5°C (41°F) or more.

>> GO TO 3.

3. PERFORM DTC CONFIRMATION PROCEDURE-I

With CONSULT-III

1. Start engine and warm it up to normal operating temperature.
2. Turn ignition switch OFF and wait at least 10 seconds.
3. Start engine and let it idle for at least 70 seconds.
4. Select “PURG FLOW P0441” of “EVAPORATIVE SYSTEM” in “DTC WORK SUPPORT” mode with CONSULT-III.
5. Touch “START”.

Is COMPLETED displayed on CONSULT-III screen?

YES >> GO TO 5.
NO >> GO TO 4.

4. PERFORM DTC CONFIRMATION PROCEDURE-II

When the following conditions are met, “TESTING” will be displayed on the CONSULT-III screen. Maintain the conditions continuously until “TESTING” changes to “COMPLETED”. (It will take at least 35 seconds.)

Selector lever	Suitable position
VHCL SPEED SE	32 - 120 km/h (20 - 75 mph)
ENG SPEED	500 - 3,800 rpm
B/FUEL SCHDL	1.0 - 10.0 msec
COOLAN TEMP/S	More than 0°C (32°F)

CAUTION:
Always drive vehicle at a safe speed.
If “TESTING” is not changed for a long time, retry from step 2.

Is “COMPLETED” displayed on CONSULT-III screen?

YES >> GO TO 5.
NO >> Perform DTC CONFIRMATION PROCEDURE again. GO TO 3.

5. PERFORM DTC CONFIRMATION PROCEDURE-II

Touch “SELF-DIAG RESULT”.

Which is displayed on CONSULT-III screen?

OK >> INSPECTION END
NG >> Go to EC-798, "Diagnosis Procedure".

6. PERFORM COMPONENT FUNCTION CHECK

Perform component function check. Refer to EC-797, "Component Function Check".

NOTE:
Use component function check to check the overall monitoring function of the EVAP control system purge flow monitoring. During this check, a 1st trip DTC might not be confirmed.

Is the inspection result normal?

YES >> INSPECTION END
NO >> Go to EC-798, "Diagnosis Procedure".

Component Function Check

INFOID:0000000004349761

1. PERFORM COMPONENT FUNCTION CHECK

Without CONSULT-III

1. Lift up drive wheels.
2. Start engine and warm it up to normal operating temperature.
3. Turn ignition switch OFF, wait at least 10 seconds.
4. Start engine and wait at least 70 seconds.

5. Set voltmeter probes to ECM harness connector and ground.

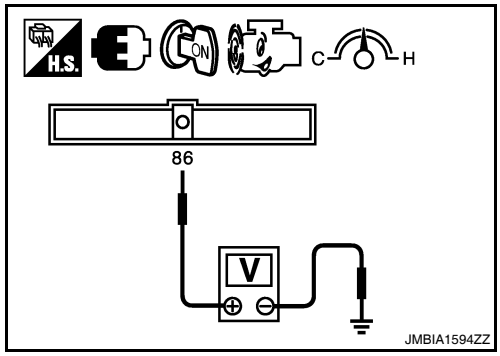

ECM		Ground
Connector	Terminal	
E10	86 (EVAP control system pressure sensor signal)	Ground

6. Check EVAP control system pressure sensor value at idle speed and note it.
7. Establish and maintain the following conditions for at least 1 minute.

Air conditioner switch	ON
Headlamp switch	ON
Rear window defogger switch	ON
Engine speed	Approx. 3,000 rpm
Shift lever	Any position other than P, N or R

8. Verify that EVAP control system pressure sensor value stays 0.1V less than the value at idle speed (measured at step 6) for at least 1 second.

Is the inspection result normal?

YES >> INSPECTION END
NO >> Go to EC-798, "Diagnosis Procedure".

Diagnosis Procedure

INFOID:0000000004349762

1. CHECK EVAP CANISTER

1. Turn ignition switch OFF.
2. Check EVAP canister for cracks.

Is the inspection result normal?

YES-1 >> With CONSULT-III: GO TO 2.
YES-2 >> Without CONSULT-III: GO TO 3.
NO >> Replace EVAP canister.

2. CHECK PURGE FLOW

With CONSULT-III

1. Disconnect vacuum hose connected to EVAP canister purge volume control solenoid valve at EVAP service port and install vacuum gauge. For the location of EVAP service port, refer to EC-622, "System Diagram".
2. Start engine and let it idle.
3. Select “PURG VOL CONT/V” in “ACTIVE TEST” mode with CONSULT-III.
4. Rev engine up to 2,000 rpm.
5. Touch “Qd” and “Qu” on CONSULT-III screen to adjust “PURG VOL CONT/V” opening and check vacuum existence.

PURG VOL CONT/V	Vacuum
100%	Existed
0%	Not existed

Is the inspection result normal?

YES >> GO TO 7.
NO >> GO TO 4.

3. CHECK PURGE FLOW

Without CONSULT-III

1. Start engine and warm it up to normal operating temperature.
2. Stop engine.

3. Disconnect vacuum hose connected to EVAP canister purge volume control solenoid valve at EVAP service port and install vacuum gauge. For the location of EVAP service port, refer to EC-622, "System Diagram".
4. Start engine and let it idle.
   Do not depress accelerator pedal even slightly.
5. Check vacuum gauge indication before 60 seconds passed after starting engine.

   Vacuum should not exist.

6. Revving engine up to 2,000rpm after 100 seconds passed after starting engine.

   Vacuum should exist.

Is the inspection result normal?

YES >> GO TO 7.
NO >> GO TO 4.

4. CHECK EVAP PURGE LINE

1. Turn ignition switch OFF.
2. Check EVAP purge line for improper connection or disconnection.
   Refer to EC-622, "System Diagram".

Is the inspection result normal?

YES >> GO TO 5.
NO >> Repair it.

5. CHECK EVAP PURGE HOSE AND PURGE PORT

1. Disconnect purge hoses connected to EVAP service port **A** and EVAP canister purge volume control solenoid valve **B**.
2. Blow air into each hose and EVAP purge port **C**.

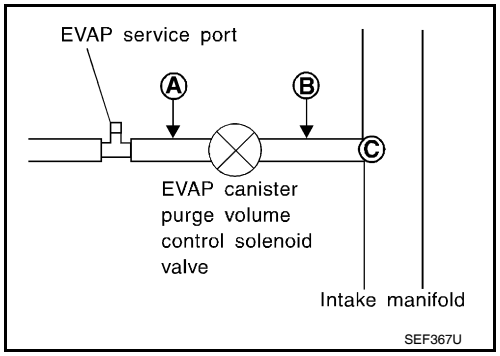

3. Check that air flows freely.

Is the inspection result normal?

YES-1 >> With CONSULT-III: GO TO 6.
YES-2 >> Without CONSULT-III: GO TO 7.
NO >> Repair or clean hoses and/or purge port.

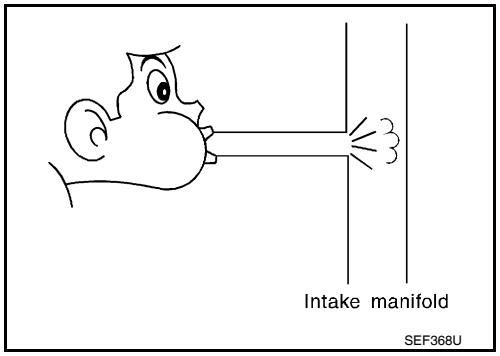

6. CHECK EVAP CANISTER PURGE VOLUME CONTROL SOLENOID VALVE

With CONSULT-III

1. Start engine.
2. Perform “PURG VOL CONT/V” in “ACTIVE TEST” mode with CONSULT-III. Check that engine speed varies according to the valve opening.

Is the inspection result normal?

YES >> GO TO 8.
NO >> GO TO 7.

7. CHECK EVAP CANISTER PURGE VOLUME CONTROL SOLENOID VALVE

Refer to EC-810, "Component Inspection".

Is the inspection result normal?

YES >> GO TO 8.
NO >> Replace EVAP canister purge volume control solenoid valve.

8. CHECK EVAP CONTROL SYSTEM PRESSURE SENSOR CONNECTOR

1. Disconnect EVAP control system pressure sensor harness connector.
2. Check connectors for water.

Water should not exist.

Is the inspection result normal?

YES >> GO TO 9.
NO >> Replace EVAP control system pressure sensor.

9. CHECK EVAP CONTROL SYSTEM PRESSURE SENSOR FUNCTION

Refer to EC-825, "DTC Logic" for DTC P0452, EC-830, "DTC Logic" for DTC P0453.

Is the inspection result normal?

YES >> GO TO 10.
NO >> Replace EVAP control system pressure sensor.

10. CHECK RUBBER TUBE FOR CLOGGING

1. Disconnect rubber tube connected to EVAP canister vent control valve.
2. Check the rubber tube for clogging.

Is the inspection result normal?

YES >> GO TO 11.
NO >> Clean the rubber tube using an air blower.

11. CHECK EVAP CANISTER VENT CONTROL VALVE

Refer to EC-816, "Component Inspection".

Is the inspection result normal?

YES >> GO TO 12.
NO >> Replace EVAP canister vent control valve.

12. CHECK EVAP PURGE LINE

Inspect EVAP purge line (pipe and rubber tube). Check for evidence of leaks.
Refer to EC-622, "System Diagram".

Is the inspection result normal?

YES >> GO TO 13.
NO >> Replace it.

13. CLEAN EVAP PURGE LINE

Clean EVAP purge line (pipe and rubber tube) using air blower.

>> GO TO 14.

14. CHECK INTERMITTENT INCIDENT

Refer to GI-42, "Intermittent Incident".

>> INSPECTION END

P0442 EVAP CONTROL SYSTEM

DTC Logic

INFOID:0000000004349763

DTC DETECTION LOGIC

NOTE:

If DTC P0442 is displayed with DTC P0456, first perform the trouble diagnosis for DTC P0456. Refer to **EC-841, "DTC Logic"**.

This diagnosis detects leaks in the EVAP purge line using engine intake manifold vacuum.

If pressure does not increase, the ECM will check for leaks in the line between the fuel tank and EVAP canister purge volume control solenoid valve, under the following “Vacuum test” conditions.

The EVAP canister vent control valve is closed to shut the EVAP purge line off. The EVAP canister purge volume control solenoid valve will then be opened to depressurize the EVAP purge line using intake manifold vacuum. After this occurs, the EVAP canister purge volume control solenoid valve will be closed.

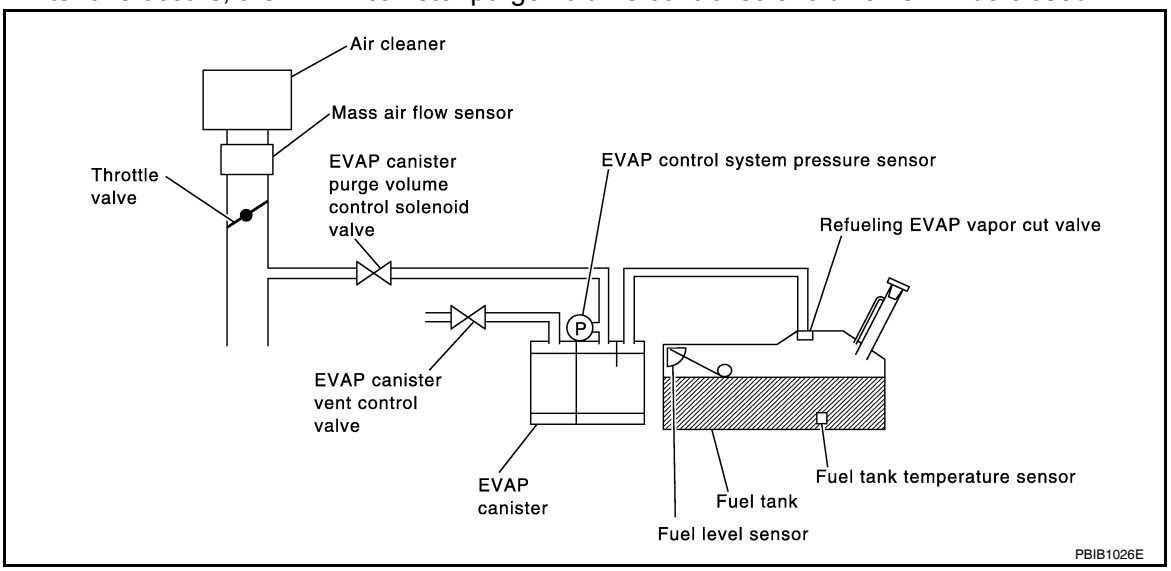

DTC No.	Trouble diagnosis name	DTC detecting condition	Possible cause
P0442	EVAP control system small leak detected (negative pressure)	EVAP control system has a leak, EVAP control system does not operate properly.	• Incorrect fuel tank vacuum relief valve • Incorrect fuel filler cap used • Fuel filler cap remains open or fails to close. • Foreign matter caught in fuel filler cap. • Leak is in line between intake manifold and EVAP canister purge volume control solenoid valve. • Foreign matter caught in EVAP canister vent control valve. • EVAP canister or fuel tank leaks • EVAP purge line (pipe and rubber tube) leaks • EVAP purge line rubber tube bent • Loose or disconnected rubber tube • EVAP canister vent control valve and the circuit • EVAP canister purge volume control solenoid valve and the circuit • Fuel tank temperature sensor • O-ring of EVAP canister vent control valve is missing or damaged • EVAP canister is saturated with water • EVAP control system pressure sensor • Fuel level sensor and the circuit • Refueling EVAP vapor cut valve • ORVR system leaks

CAUTION:

- **Use only a genuine NISSAN fuel filler cap as a replacement. If an incorrect fuel filler cap is used, the MIL may come on.**
- **If the fuel filler cap is not tightened properly, the MIL may come on.**

- **Use only a genuine NISSAN rubber tube as a replacement.**

DTC CONFIRMATION PROCEDURE

1.PRECONDITIONING

If DTC Confirmation Procedure has been previously conducted, always turn ignition switch OFF and wait at least 10 seconds before conducting the next test.

TESTING CONDITION:

- **Perform "DTC WORK SUPPORT" when the fuel level is between 1/4 and 3/4 full, and vehicle is placed on flat level surface.**
- **Always perform test at a temperature of 0 to 30°C (32 to 86°F).**

NOTE:

Make sure that EVAP hoses are connected to EVAP canister purge volume control solenoid valve properly.

Do you have CONSULT-III?

YES >> GO TO 2.
NO >> GO TO 3.

2.PERFORM DTC CONFIRMATION PROCEDURE

With CONSULT-III

1. Turn ignition switch ON.
2. Turn ignition switch OFF and wait at least 10 seconds.
3. Turn ignition switch ON and select "DATA MONITOR" mode with CONSULT-III.
4. Make sure that the following conditions are met.
   COOLAN TEMP/S: 0 - 70°C (32 - 158°F)
   INT/A TEMP SE: 0 - 30°C (32 - 86°F)
5. Select "EVAP SML LEAK P0442/P1442" of "EVAPORATIVE SYSTEM" in "DTC WORK SUPPORT" mode with CONSULT-III.
   Follow the instruction displayed.
   NOTE:
   If the engine speed cannot be maintained within the range displayed on the CONSULT-III screen, go to EC-560, "BASIC INSPECTION : Special Repair Requirement".

Which is displayed on CONSULT-III screen?

OK >> INSPECTION END
NG >> Go to EC-802, "Diagnosis Procedure".

3.PERFORM COMPONENT FUNCTION CHECK

With GST

NOTE:

Be sure to read the explanation of DRIVING PATTERN in EC-1018, "How to Set SRT Code" before driving vehicle.

1. Start engine.
2. Drive vehicle according to DRIVING PATTERN.
3. Stop vehicle.
4. Turn ignition switch OFF, wait at least 10 seconds and then turn ON.
5. Select Service $07 with GST.

Is 1st trip DTC displayed?

YES-1 >> P0441: Go to EC-798, "Diagnosis Procedure".
YES-2 >> P0442: Go to EC-802, "Diagnosis Procedure".
NO >> INSPECTION END

Diagnosis Procedure

INFOID:0000000004349764

1.CHECK FUEL FILLER CAP DESIGN

1. Turn ignition switch OFF.

2. Check for genuine NISSAN fuel filler cap design.

Is the inspection result normal?

YES >> GO TO 2.
NO >> Replace with genuine NISSAN fuel filler cap.

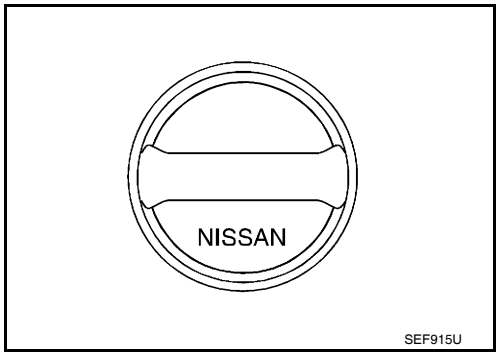

2. CHECK FUEL FILLER CAP INSTALLATION

Check that the cap is tightened properly by rotating the cap clockwise.

Is the inspection result normal?

YES >> GO TO 3.
NO >> Open fuel filler cap, then clean cap and fuel filler neck threads using air blower. Then retighten until ratcheting sound is heard.

3. CHECK FUEL FILLER CAP FUNCTION

Check for air releasing sound while opening the fuel filler cap.

Is the inspection result normal?

YES >> GO TO 5.
NO >> GO TO 4.

4. CHECK FUEL TANK VACUUM RELIEF VALVE

Refer to EC-806, "Component Inspection".

Is the inspection result normal?

YES >> GO TO 5.
NO >> Replace fuel filler cap with a genuine one.

5. CHECK FOR EVAP LEAK

Refer to EC-622, "System Diagram".

Is there any leak in EVAP line?

YES >> Repair or replace.
NO >> GO TO 6.

6. CHECK EVAP CANISTER VENT CONTROL VALVE

Check the following.

- EVAP canister vent control valve is installed properly.
  Refer to EC-1041, "Exploded View".
- EVAP canister vent control valve.
  Refer to EC-816, "Component Inspection".

Is the inspection result normal?

YES >> GO TO 7.
NO >> Repair or replace EVAP canister vent control valve and O-ring.

7. CHECK IF EVAP CANISTER SATURATED WITH WATER

1. Remove EVAP canister with EVAP canister vent control valve and EVAP control system pressure sensor attached.

2. Does water drain from the EVAP canister?

Does water drain from the EVAP canister?

YES >> GO TO 8.
NO-1 >> With CONSULT-III: GO TO 10.
NO-2 >> Without CONSULT-III: GO TO 11.

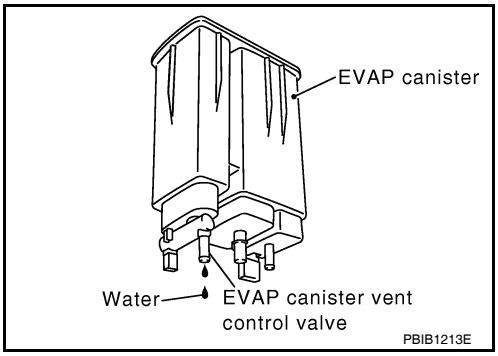

8. CHECK EVAP CANISTER

Weigh the EVAP canister with the EVAP canister vent control valve and EVAP control system pressure sensor attached.

The weight should be less than 2.1 kg (4.6 lb).

Is the inspection result normal?

YES-1 >> With CONSULT-III: GO TO 10.
YES-2 >> Without CONSULT-III: GO TO 11.
NO >> GO TO 9.

9. DETECT MALFUNCTIONING PART

Check the following.
- EVAP canister for damage
- EVAP hose between EVAP canister and vehicle frame for clogging or poor connection

>> Repair hose or replace EVAP canister.

10. CHECK EVAP CANISTER PURGE VOLUME CONTROL SOLENOID VALVE OPERATION

With CONSULT-III

1. Disconnect vacuum hose to EVAP canister purge volume control solenoid valve at EVAP service port.
2. Start engine.
3. Perform “PURG VOL CONT/V” in “ACTIVE TEST” mode.
4. Touch “Qu” on CONSULT-III screen to increase “PURG VOL CONT/V” opening to 100%.
5. Check vacuum hose for vacuum.

Vacuum should exist.

Is the inspection result normal?

YES >> GO TO 13.
NO >> GO TO 12.

11. CHECK EVAP CANISTER PURGE VOLUME CONTROL SOLENOID VALVE OPERATION

Without CONSULT-III

1. Start engine and warm it up to normal operating temperature.
2. Stop engine.
3. Disconnect vacuum hose to EVAP canister purge volume control solenoid valve at EVAP service port.
4. Start engine and let it idle for at least 80 seconds.
5. Check vacuum hose for vacuum when revving engine up to 2,000 rpm.

Vacuum should exist.

Is the inspection result normal?

YES >> GO TO 13.
NO >> GO TO 12.

12. CHECK VACUUM HOSE

Check vacuum hoses for clogging or disconnection. Refer to EC-622, "System Diagram".

Is the inspection result normal?

YES >> GO TO 13.
NO >> Repair or reconnect the hose.

13. CHECK EVAP CANISTER PURGE VOLUME CONTROL SOLENOID VALVE

Refer to EC-810, "Component Inspection".

Is the inspection result normal?

YES >> GO TO 14.
NO >> Replace EVAP canister purge volume control solenoid valve.

14. CHECK FUEL TANK TEMPERATURE SENSOR

Refer to EC-769, "Component Inspection".

Is the inspection result normal?

YES >> GO TO 15.
NO >> Replace fuel level sensor unit.

15. CHECK EVAP CONTROL SYSTEM PRESSURE SENSOR

Refer to EC-822, "DTC Logic".

Is the inspection result normal?

YES >> GO TO 16.
NO >> Replace EVAP control system pressure sensor.

16. CHECK EVAP PURGE LINE

Check EVAP purge line (pipe, rubber tube, fuel tank and EVAP canister) for cracks or improper connection. Refer to EC-622, "System Diagram".

Is the inspection result normal?

YES >> GO TO 17.
NO >> Repair or reconnect the hose.

17. CLEAN EVAP PURGE LINE

Clean EVAP purge line (pipe and rubber tube) using air blower.

>> GO TO 18.

18. CHECK EVAP/ORVR LINE

Check EVAP/ORVR line between EVAP canister and fuel tank for clogging, kink, looseness and improper connection. For location, refer to EC-969, "Description".

Is the inspection result normal?

YES >> GO TO 19.
NO >> Repair or replace hoses and tubes.

19. CHECK RECIRCULATION LINE

Check recirculation line between fuel filler tube and fuel tank for clogging, kink, cracks, looseness and improper connection.

Is the inspection result normal?

YES >> GO TO 20.
NO >> Repair or replace hose, tube or fuel filler tube.

20. CHECK REFUELING EVAP VAPOR CUT VALVE

Refer to EC-972, "Component Inspection".

Is the inspection result normal?

YES >> GO TO 21.
NO >> Replace refueling EVAP vapor cut valve with fuel tank.

21. CHECK FUEL LEVEL SENSOR

Refer to MWI-47, "Component Inspection".

Is the inspection result normal?

YES >> GO TO 22.

NO >> Replace fuel level sensor unit.

22. CHECK INTERMITTENT INCIDENT

Refer to GI-42, "Intermittent Incident".

>> INSPECTION END

Component Inspection

INFOID:0000000004349765

1. CHECK FUEL TANK VACUUM RELIEF VALVE

1. Turn ignition switch OFF.
2. Remove fuel filler cap.
3. Wipe clean valve housing.

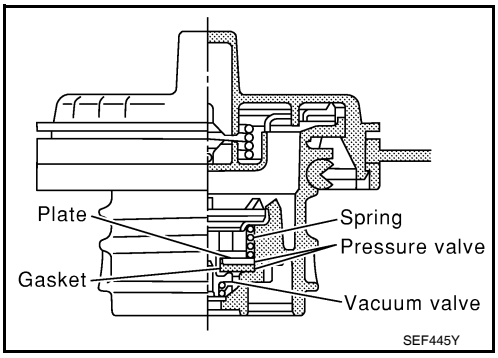

4. Install fuel filler cap adapter (commercial service tool) to fuel filler cap.
5. Check valve opening pressure and vacuum.

Pressure: **15.3 - 20.0 kPa (0.156 - 0.204 kg/cm^2, 2.22 - 2.90 psi)**

Vacuum: **−6.0 to −3.3 kPa (−0.061 to −0.034 kg/cm^2, −0.87 to −0.48 psi)**

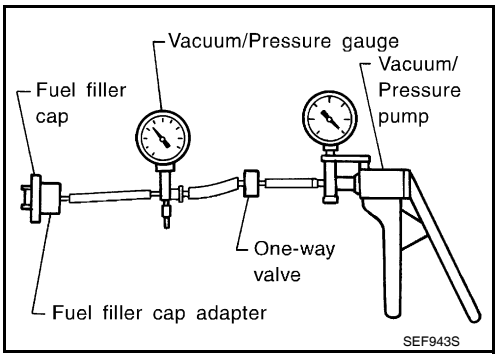

Is the inspection result normal?

YES >> INSPECTION END
NO >> GO TO 2.

2. REPLACE FUEL FILLER CAP

Replace fuel filler cap.

CAUTION:

Use only a genuine fuel filler cap as a replacement. If an incorrect fuel filler cap is used, the MIL may come on.

>> INSPECTION END

P0443 EVAP CANISTER PURGE VOLUME CONTROL SOLENOID VALVE

Description

INFOID:0000000004349766

The EVAP canister purge volume control solenoid valve uses a ON/OFF duty to control the flow rate of fuel vapor from the EVAP canister. The EVAP canister purge volume control solenoid valve is moved by ON/OFF pulses from the ECM. The longer the ON pulse, the greater the amount of fuel vapor that will flow through the valve.

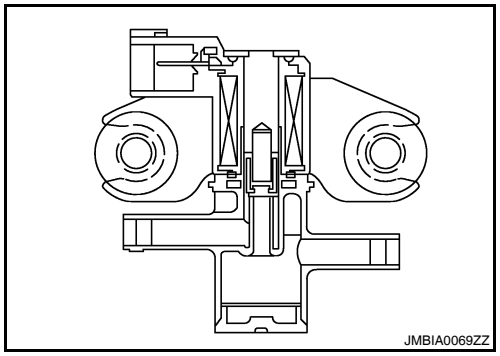

DTC Logic

INFOID:0000000004349767

DTC DETECTION LOGIC

DTC No.	Trouble diagnosis name	DTC detecting condition	Possible cause
P0443	EVAP canister purge volume control solenoid valve	The canister purge flow is detected during the specified driving conditions, even when EVAP canister purge volume control solenoid valve is completely closed.	• EVAP control system pressure sensor • EVAP canister purge volume control solenoid valve (The valve is stuck open.) • EVAP canister vent control valve • EVAP canister • Hoses (Hoses are connected incorrectly or clogged.)

DTC CONFIRMATION PROCEDURE

1. PRECONDITIONING

If DTC Confirmation Procedure has been previously conducted, always turn ignition switch OFF and wait at least 10 seconds before conducting the next test.

TESTING CONDITION:

Always perform test at a temperature of 5°C (41°F) or more.

Do you have CONSULT-III

YES >> GO TO 2.
NO >> GO TO 3.

2. PERFORM DTC CONFIRMATION PROCEDURE

With CONSULT-III

1. Start engine and warm it up to normal operating temperature.
2. Turn ignition switch OFF and wait at least 10 seconds.
3. Turn ignition switch ON.
4. Select “PURG VOL CN/V P1444” of “EVAPORATIVE SYSTEM” in “DTC WORK SUPPORT” mode with CONSULT-III.
5. Touch “START”.
6. Start engine and let it idle until “TESTING” on CONSULT-III changes to “COMPLETED”. (It will take approximately 10 seconds.)
   If “TESTING” is not displayed after 5 minutes, retry from step 2.
7. Touch “SELF-DIAG RESULT”.

Which is displayed on CONSULT-III?

OK >> INSPECTION END
NG >> Go to EC-808, "Diagnosis Procedure".

3. PERFORM DTC CONFIRMATION PROCEDURE

With GST

1. Start engine and warm it up to normal operating temperature.
2. Turn ignition switch OFF and wait at least 10 seconds.
3. Start engine and let it idle for at least 20 seconds.
4. Check 1st trip DTC.

Is 1st trip DTC displayed?

YES >> Go to EC-808, "Diagnosis Procedure".
NO >> INSPECTION END

Diagnosis Procedure

INFOID:0000000004349768

1. CHECK EVAP CANISTER PURGE VOLUME CONTROL SOLENOID VALVE POWER SUPPLY CIRCUIT

1. Turn ignition switch OFF.
2. Disconnect EVAP canister purge volume control solenoid valve harness connector.
3. Turn ignition switch ON.
4. Check the voltage between EVAP canister purge volume control solenoid valve harness connector and ground.

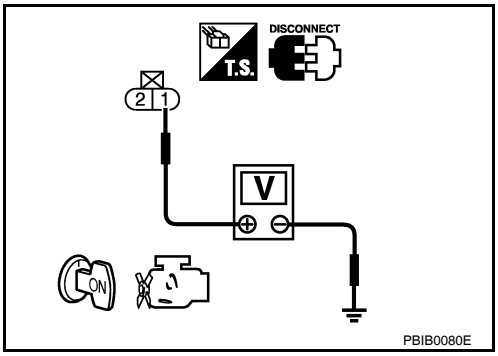

EVAP canister purge volume control solenoid valve		Ground	Voltage
Connector	Terminal		
F29	1	Ground	Battery voltage

Is the inspection result normal?

YES >> GO TO 3.
NO >> GO TO 2.

2. DETECT MALFUNCTIONING PART

Check the following.

- Junction block E44, E45
- Harness connectors E11, F2
- 15A fuse (No,42)
- Harness for open or short between EVAP canister purge volume control solenoid valve and IPDM E/R
- Harness for open or short between EVAP canister purge volume control solenoid valve and ECM

>> Repair open circuit or short to ground or short to power in harness or connectors.

3. CHECK EVAP CANISTER PURGE VOLUME CONTROL SOLENOID VALVE OUTPUT SIGNAL CIRCUIT FOR OPEN AND SHORT

1. Turn ignition switch OFF.
2. Disconnect ECM harness connector.
3. Check the continuity between EVAP canister purge volume control solenoid valve harness connector and ECM harness connector.

EVAP canister purge volume control solenoid valve		ECM		Continuity
Connector	Terminal	Connector	Terminal	
F29	2	F14	25	Existed

4. Also check harness for short to ground and short to power.

Is the inspection result normal?

YES >> GO TO 4.
NO >> Repair open circuit or short to ground or short to power in harness or connectors.

4. CHECK EVAP CONTROL SYSTEM PRESSURE SENSOR CONNECTOR

1. Disconnect EVAP control system pressure sensor harness connector.
2. Check connectors for water.

Water should not exist.

Is the inspection result normal?

YES >> GO TO 5.
NO >> Replace EVAP control system pressure sensor.

5. CHECK EVAP CONTROL SYSTEM PRESSURE SENSOR

Refer to EC-824, "Component Inspection".

Is the inspection result normal?

YES-1 >> With CONSULT-III: GO TO 6.
YES-2 >> Without CONSULT-III: GO TO 7.
NO >> Replace EVAP control system pressure sensor.

6. CHECK EVAP CANISTER PURGE VOLUME CONTROL SOLENOID VALVE

With CONSULT-III

1. Turn ignition switch OFF.
2. Reconnect harness connectors disconnected.
3. Start engine.
4. Perform “PURG VOL CONT/V” in “ACTIVE TEST” mode with CONSULT-III. Check that engine speed varies according to the valve opening.

Is the inspection result normal?

YES >> GO TO 8.
NO >> GO TO 7.

7. CHECK EVAP CANISTER PURGE VOLUME CONTROL SOLENOID VALVE

Refer to EC-810, "Component Inspection".

Is the inspection result normal?

YES >> GO TO 8.
NO >> Replace EVAP canister purge volume control solenoid valve.

8. CHECK RUBBER TUBE FOR CLOGGING

1. Disconnect rubber tube connected to EVAP canister vent control valve.
2. Check the rubber tube for clogging.

Is the inspection result normal?

YES >> GO TO 9.
NO >> Clean the rubber tube using an air blower.

9. CHECK EVAP CANISTER VENT CONTROL VALVE

Refer to EC-816, "Component Inspection".

Is the inspection result normal?

YES >> GO TO 10.
NO >> Replace EVAP canister vent control valve.

10. CHECK IF EVAP CANISTER SATURATED WITH WATER

1. Remove EVAP canister with EVAP canister vent control valve and EVAP control system pressure sensor attached.
2. Check if water will drain from EVAP canister.

Does water drain from the EVAP canister?

YES >> GO TO 11.
NO >> GO TO 13.

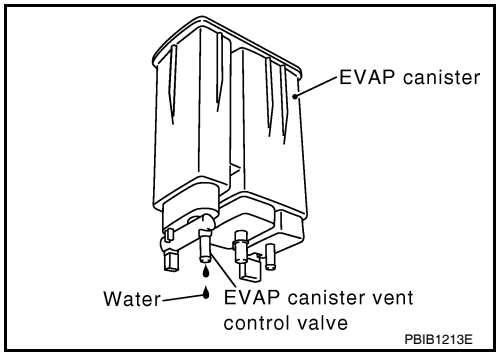

11. CHECK EVAP CANISTER

Weigh the EVAP canister with the EVAP canister vent control valve and EVAP control system pressure sensor attached.

The weight should be less than 2.1 kg (4.6 lb).

Is the inspection result normal?

YES >> GO TO 13.
NO >> GO TO 12.

12. DETECT MALFUNCTIONING PART

Check the following.
- EVAP canister for damage
- EVAP hose between EVAP canister and vehicle frame for clogging or poor connection

>> Repair hose or replace EVAP canister.

13. CHECK INTERMITTENT INCIDENT

Refer to GI-42, "Intermittent Incident".

>> INSPECTION END

Component Inspection

INFOID:0000000004349769

1. CHECK EVAP CANISTER PURGE VOLUME CONTROL SOLENOID VALVE

With CONSULT-III

1. Turn ignition switch OFF.
2. Reconnect all harness connectors disconnected.
3. Disconnect EVAP purge hoses connected to EVAP canister purge volume control solenoid valve.
4. Turn ignition switch ON.
5. Select “PURG VOL CONT/V” in “ACTIVE TEST” mode with CONSULT-III.
6. Touch “Qd” and “Qu” on CONSULT-III screen to adjust “PURG VOL CONT/V” opening and check air passage continuity of EVAP canister purge volume control solenoid valve under the following conditions.

Condition (PURG VOL CONT/V value)	Air passage continuity between (A) and (B)
100%	Existed
0%	Not existed

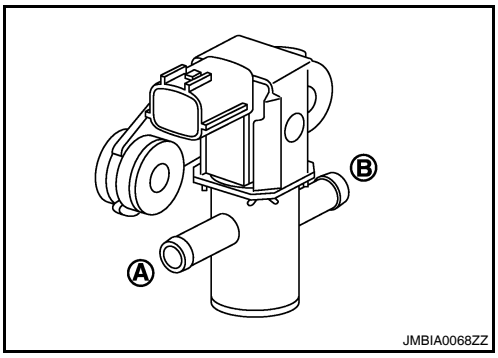

Without CONSULT-III

1. Turn ignition switch OFF.
2. Disconnect EVAP canister purge volume control solenoid valve harness connector.
3. Disconnect EVAP purge hoses connected to EVAP canister purge volume control solenoid valve.
4. Check air passage continuity of EVAP canister purge volume control solenoid valve under the following conditions.

Condition	Air passage continuity between (A) and (B)
12V direct current supply between terminals 1 and 2	Existed
No supply	Not existed

Is the inspection result normal?

YES >> INSPECTION END
NO >> Replace EVAP canister purge volume control solenoid valve

P0444, P0445 EVAP CANISTER PURGE VOLUME CONTROL SOLENOID VALVE

Description

INFOID:0000000004349770

The EVAP canister purge volume control solenoid valve uses a ON/OFF duty to control the flow rate of fuel vapor from the EVAP canister. The EVAP canister purge volume control solenoid valve is moved by ON/OFF pulses from the ECM. The longer the ON pulse, the greater the amount of fuel vapor that will flow through the valve.

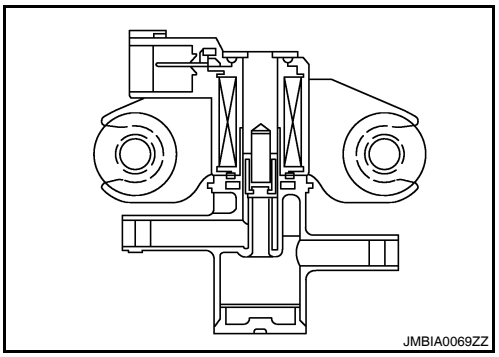

DTC Logic

INFOID:0000000004349771

DTC DETECTION LOGIC

DTC No.	Trouble diagnosis name	DTC detecting condition	Possible cause
P0444	EVAP canister purge volume control solenoid valve circuit open	An excessively low voltage signal is sent to ECM through the valve	• Harness or connectors (The solenoid valve circuit is open or shorted.) • EVAP canister purge volume control solenoid valve
P0445	EVAP canister purge volume control solenoid valve circuit shorted	An excessively high voltage signal is sent to ECM through the valve	• Harness or connectors (The solenoid valve circuit is shorted.) • EVAP canister purge volume control solenoid valve

DTC CONFIRMATION PROCEDURE

1. CONDITIONING

If DTC Confirmation Procedure has been previously conducted, always turn ignition switch OFF and wait at least 10 seconds before conducting the next test.

TESTING CONDITION:

Before performing the following procedure, confirm battery voltage is more than 11V at idle.

>> GO TO 2.

2. PERFORM DTC CONFIRMATION PROCEDURE

1. Start engine and let it idle for at least 13 seconds.
2. Check 1st trip DTC.

Is 1st trip DTC detected?

YES >> Go to EC-811, "Diagnosis Procedure".
NO >> INSPECTION END

Diagnosis Procedure

INFOID:0000000004349772

1. CHECK EVAP CANISTER PURGE VOLUME CONTROL SOLENOID VALVE POWER SUPPLY CIRCUIT

1. Turn ignition switch OFF.
2. Disconnect EVAP canister purge volume control solenoid valve harness connector.
3. Turn ignition switch ON.

4. Check the voltage between EVAP canister purge volume control solenoid valve harness connector and ground.

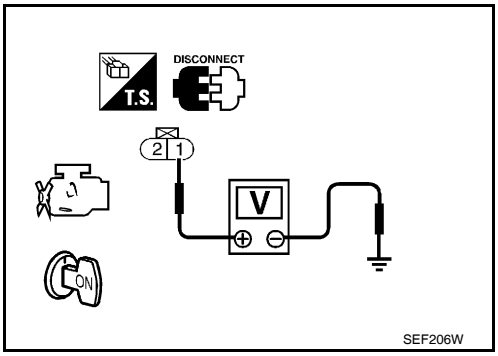

EVAP canister purge volume control solenoid valve		Ground	Voltage
Connector	Terminal		
F29	1	Ground	Battery voltage

Is the inspection result normal?

YES >> GO TO 3.
NO >> GO TO 2.

2. DETECT MALFUNCTIONING PART

Check the following.
- Junction block E44, E45
- Harness connectors E11, F2
- 15A fuse (No,42)
- Harness for open or short between EVAP canister purge volume control solenoid valve and IPDM E/R
- Harness for open or short between EVAP canister purge volume control solenoid valve and ECM

>> Repair open circuit or short to ground or short to power in harness or connectors.

3. CHECK EVAP CANISTER PURGE VOLUME CONTROL SOLENOID VALVE OUTPUT SIGNAL CIRCUIT FOR OPEN AND SHORT

1. Turn ignition switch OFF.
2. Disconnect ECM harness connector.
3. Check the continuity between EVAP canister purge volume control solenoid valve harness connector and ECM harness connector.

EVAP canister purge volume control solenoid valve		ECM		Continuity
Connector	Terminal	Connector	Terminal	
F29	2	F14	25	Existed

4. Also check harness for short to ground and short to power.

Is the inspection result normal?

YES-1 >> With CONSULT-III: GO TO 4.
YES-2 >> Without CONSULT-III: GO TO 5.
NO >> Repair open circuit or short to ground or short to power in harness or connectors.

4. CHECK EVAP CANISTER PURGE VOLUME CONTROL SOLENOID VALVE OPERATION

With CONSULT-III

1. Reconnect all harness connectors disconnected.
2. Start engine.
3. Perform “PURG VOL CONT/V” in “ACTIVE TEST” mode with CONSULT-III. Check that engine speed varies according to the valve opening.

Is the inspection result normal?

YES >> GO TO 6.
NO >> GO TO 5.

5. CHECK EVAP CANISTER PURGE VOLUME CONTROL SOLENOID VALVE

Refer to EC-813, "Component Inspection".

Is the inspection result normal?

YES >> GO TO 6.
NO >> Replace EVAP canister purge volume control solenoid valve.

6. CHECK INTERMITTENT INCIDENT

Refer to GI-42, "Intermittent Incident".

>> INSPECTION END

Component Inspection

INFOID:0000000004349773

1. CHECK EVAP CANISTER PURGE VOLUME CONTROL SOLENOID VALVE

With CONSULT-III

1. Turn ignition switch OFF.
2. Reconnect all harness connectors disconnected.
3. Disconnect EVAP purge hoses connected to EVAP canister purge volume control solenoid valve.
4. Turn ignition switch ON.
5. Select “PURG VOL CONT/V” in “ACTIVE TEST” mode with CONSULT-III.
6. Touch “Qd” and “Qu” on CONSULT-III screen to adjust “PURG VOL CONT/V” opening and check air passage continuity of EVAP canister purge volume control solenoid valve under the following conditions.

Condition (PURG VOL CONT/V value)	Air passage continuity between (A) and (B)
100%	Existed
0%	Not existed

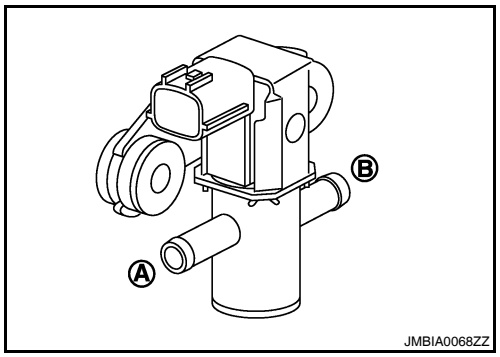

Without CONSULT-III

1. Turn ignition switch OFF.
2. Disconnect EVAP canister purge volume control solenoid valve harness connector.
3. Disconnect EVAP purge hoses connected to EVAP canister purge volume control solenoid valve.
4. Check air passage continuity of EVAP canister purge volume control solenoid valve under the following conditions.

Condition	Air passage continuity between (A) and (B)
12V direct current supply between terminals 1 and 2	Existed
No supply	Not existed

Is the inspection result normal?

YES >> INSPECTION END
NO >> Replace EVAP canister purge volume control solenoid valve

P0447 EVAP CANISTER VENT CONTROL VALVE

Description

INFOID:0000000004349774

The EVAP canister vent control valve is located on the EVAP canister and is used to seal the canister vent.
This solenoid valve responds to signals from the ECM. When the ECM sends an ON signal, the coil in the solenoid valve is energized. A plunger will then move to seal the canister vent. The ability to seal the vent is necessary for the on board diagnosis of other evaporative emission control system components.
This solenoid valve is used only for diagnosis, and usually remains opened.
When the vent is closed, under normal purge conditions, the evaporative emission control system is depressurized and allows “EVAP Control System” diagnosis.

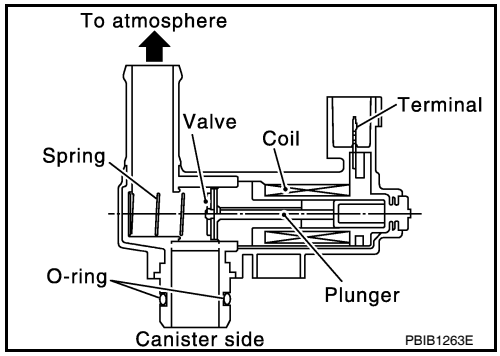

DTC Logic

INFOID:0000000004349775

DTC DETECTION LOGIC

DTC No.	Trouble diagnosis name	DTC detecting condition	Possible cause
P0447	EVAP canister vent control valve circuit open	An improper voltage signal is sent to ECM through EVAP canister vent control valve.	• Harness or connectors (The valve circuit is open or shorted.) • EVAP canister vent control valve

DTC CONFIRMATION PROCEDURE

1.PRECONDITIONING

If DTC Confirmation Procedure has been previously conducted, always turn ignition switch OFF and wait at least 10 seconds before conducting the next test.
TESTING CONDITION:
Before performing the following procedure, confirm battery voltage is more than 11V at idle.

>> GO TO 2.

2.PERFORM DTC CONFIRMATION PROCEDURE

1. Start engine and wait at least 8 seconds.
2. Check 1st trip DTC.

Is 1st trip DTC detected?

YES >> Go to EC-814, "Diagnosis Procedure".
NO >> INSPECTION END

Diagnosis Procedure

INFOID:0000000004349776

1.INSPECTION START

Do you have CONSULT-III?

Do you have CONSULT-III?

YES >> GO TO 2.
NO >> GO TO 3.

2.CHECK EVAP CANISTER VENT CONTROL VALVE CIRCUIT

With CONSULT-III

1. Turn ignition switch OFF and then turn ON.
2. Select “VENT CONTROL/V” in “ACTIVE TEST” mode with CONSULT-III.
3. Touch “ON/OFF” on CONSULT-III screen.
4. Check for operating sound of the valve.

Clicking sound should be heard.

Is the inspection result normal?

YES >> GO TO 7.
NO >> GO TO 3.

3. CHECK EVAP CANISTER VENT CONTROL VALVE POWER SUPPLY CIRCUIT

1. Turn ignition switch OFF.
2. Disconnect EVAP canister vent control valve harness connector.
3. Turn ignition switch ON.
4. Check the voltage between EVAP canister vent control valve harness connector and ground.

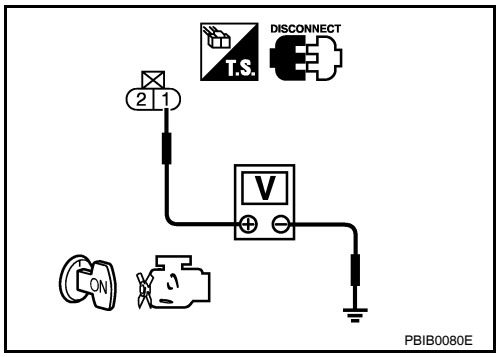

EVAP canister vent control valve		Ground	Voltage
Connector	Terminal		
B39	1	Ground	Battery voltage

Is the inspection result normal?

YES >> GO TO 5.
NO >> GO TO 4.

4. DETECT MALFUNCTIONING PART

Check the following.
- Harness connectors E11, F2
- Harness connectors E29, B10
- 15A fuse (No,42)
- Harness for open or short between EVAP canister vent control valve and IPDM E/R

>> Repair open circuit or short to ground or short to power in harness or connectors.

5. CHECK EVAP CANISTER VENT CONTROL VALVE OUTPUT SIGNAL CIRCUIT FOR OPEN AND SHORT

1. Turn ignition switch OFF.
2. Disconnect ECM harness connector.
3. Check the continuity between EVAP canister vent control valve harness connector and ECM harness connector.

EVAP canister vent control valve		ECM		Continuity
Connector	Terminal	Connector	Terminal	
B39	2	E10	109	Existed

4. Also check harness for short to ground and short to power.

Is the inspection result normal?

YES >> GO TO 7.
NO >> GO TO 6.

6. DETECT MALFUNCTIONING PART

Check the following.
- Junction block connector E44, E45
- Harness connectors E29, B10
- Harness for open or short between EVAP canister vent control valve and ECM

>> Repair open circuit or short to ground or short to power in harness or connectors.

7. CHECK RUBBER TUBE FOR CLOGGING

1. Disconnect rubber tube connected to EVAP canister vent control valve.
2. Check the rubber tube for clogging.

Is the inspection result normal?

YES >> GO TO 8.
NO >> Clean the rubber tube using an air blower.

8. CHECK EVAP CANISTER VENT CONTROL VALVE

Refer to EC-816, "Component Inspection".

Is the inspection result normal?

YES >> GO TO 9.
NO >> Replace EVAP canister vent control valve.

9. CHECK INTERMITTENT INCIDENT

Refer to GI-42, "Intermittent Incident".

>> INSPECTION END

Component Inspection

INFOID:0000000004349777

1. CHECK EVAP CANISTER VENT CONTROL VALVE-I

1. Turn ignition switch OFF.
2. Remove EVAP canister vent control valve from EVAP canister.
3. Check portion (A) of EVAP canister vent control valve for being rusted.

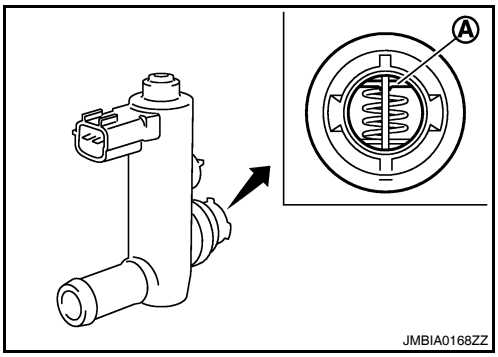

Is it rusted?

YES >> Replace EVAP canister vent control valve
NO >> GO TO 2.

2. CHECK EVAP CANISTER VENT CONTROL VALVE-II

With CONSULT-III

1. Reconnect harness connectors disconnected.
2. Turn ignition switch ON.
3. Perform “VENT CONTROL/V” in “ACTIVE TEST” mode.
4. Check air passage continuity and operation delay time.
   Make sure new O-ring is installed properly.

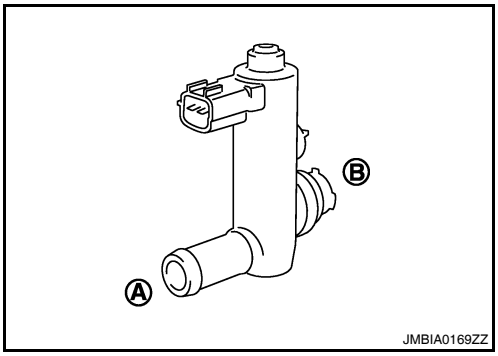

Condition VENT CONTROL/V	Air passage continuity between (A) and (B)
ON	Not existed
OFF	Existed

Operation takes less than 1 second.

Without CONSULT-III

Check air passage continuity and operation delay time under the following conditions.
Make sure new O-ring is installed properly.

Condition	Air passage continuity between (A) and (B)
12V direct current supply between terminals (1) and (2)	Not existed
OFF	Existed

Operation takes less than 1 second.

Is the inspection result normal?

YES >> INSPECTION END
NO >> Replace EVAP canister vent control valve

3. CHECK EVAP CANISTER VENT CONTROL VALVE-III

With CONSULT-III

1. Clean the air passage [portion (A) to (B)] of EVAP canister vent control valve using an air blower.
2. Perform “VENT CONTROL/V” in “ACTIVE TEST” mode.
3. Check air passage continuity and operation delay time.
   Make sure new O-ring is installed properly.

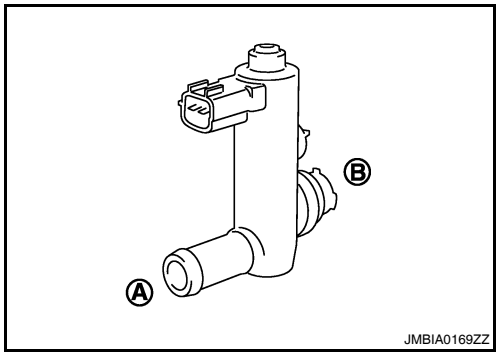

Condition VENT CONTROL/V	Air passage continuity between (A) and (B)
ON	Not existed
OFF	Existed

Operation takes less than 1 second.

Without CONSULT-III

1. Clean the air passage [portion (A) to (B)] of EVAP canister vent control valve using an air blower.
2. Check air passage continuity and operation delay time under the following conditions.
   Make sure new O-ring is installed properly.

Condition	Air passage continuity between (A) and (B)
12V direct current supply between terminals (1) and (2)	Not existed
OFF	Existed

Operation takes less than 1 second.

Is the inspection result normal?

YES >> INSPECTION END
NO >> GO TO 3.

P0448 EVAP CANISTER VENT CONTROL VALVE

Description

INFOID:0000000004349778

The EVAP canister vent control valve is located on the EVAP canister and is used to seal the canister vent.
This solenoid valve responds to signals from the ECM. When the ECM sends an ON signal, the coil in the solenoid valve is energized. A plunger will then move to seal the canister vent. The ability to seal the vent is necessary for the on board diagnosis of other evaporative emission control system components.
This solenoid valve is used only for diagnosis, and usually remains opened.
When the vent is closed, under normal purge conditions, the evaporative emission control system is depressurized and allows “EVAP Control System” diagnosis.

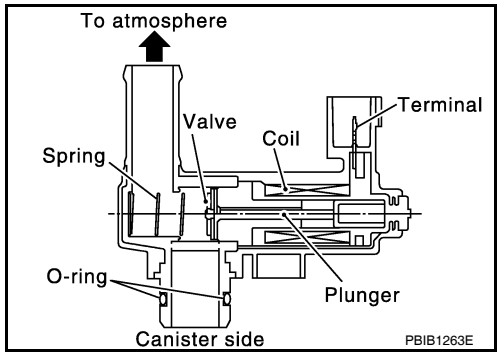

DTC Logic

INFOID:0000000004349779

DTC DETECTION LOGIC

DTC No.	Trouble diagnosis name	DTC detecting condition	Possible cause
P0448	EVAP canister vent control valve close	EVAP canister vent control valve remains closed under specified driving conditions.	• EVAP canister vent control valve • EVAP control system pressure sensor and the circuit • Blocked rubber tube to EVAP canister vent control valve • EVAP canister is saturated with water

DTC CONFIRMATION PROCEDURE

1. PRECONDITIONING

If DTC Confirmation Procedure has been previously conducted, always turn ignition switch OFF and wait at least 10 seconds before conducting the next test.

>> GO TO 2.

2. PERFORM DTC CONFIRMATION PROCEDURE

With CONSULT-III

1. Turn ignition switch ON and wait at least 5 seconds.
2. Turn ignition switch OFF and wait at least 10 seconds.
3. Turn ignition switch ON and select “DATA MONITOR” mode with CONSULT-III.
4. Start engine and let it idle for at least 1 minute.
5. Repeat next procedures three times.
- Increase the engine speed up to 3,000 to 3,500 rpm and keep it for 2 minutes and 50 seconds to 3 minutes.

Never exceed 3 minutes.

- Fully released accelerator pedal and keep engine idle for about 5 seconds.

6. Repeat next procedure 20 times.
- Quickly increase the engine speed up to 4,000 to 4,500 rpm or more and keep it for 25 to 30 seconds.

- Fully released accelerator pedal and keep engine idle for at least 35 seconds.

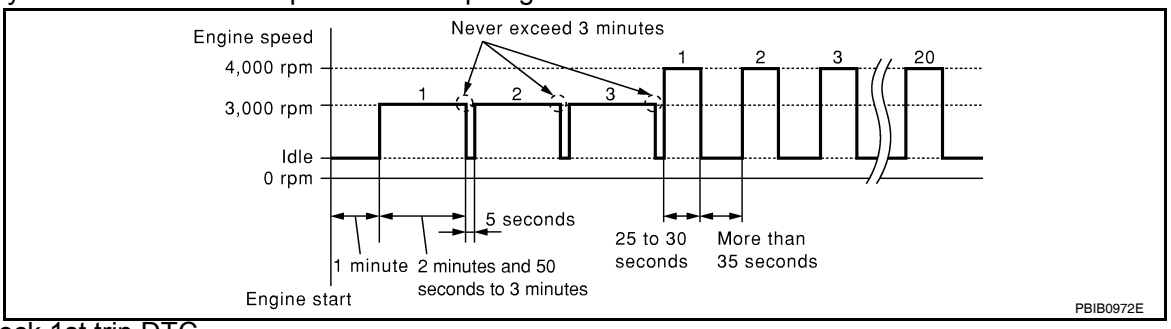

7. Check 1st trip DTC.

With GST

Follow the procedure “With CONSULT-III” above.

Is 1st trip DTC detected?

YES >> Go to EC-819, "Diagnosis Procedure".
NO >> INSPECTION END

Diagnosis Procedure

INFOID:0000000004349780

1. CHECK RUBBER TUBE

1. Turn ignition switch OFF.
2. Disconnect rubber tube connected to EVAP canister vent control valve.
3. Check the rubber tube for clogging.

Is the inspection result normal?

YES >> GO TO 2.
NO >> Clean rubber tube using an air blower.

2. CHECK EVAP CANISTER VENT CONTROL VALVE

Refer to EC-820, "Component Inspection".

Is the inspection result normal?

YES >> GO TO 3.
NO >> Replace EVAP canister vent control valve.

3. CHECK IF EVAP CANISTER SATURATED WITH WATER

1. Remove EVAP canister with EVAP canister vent control valve and EVAP control system pressure sensor attached.
2. Check if water will drain from the EVAP canister.

Does water drain from EVAP canister?

YES >> GO TO 4.
NO >> GO TO 6.

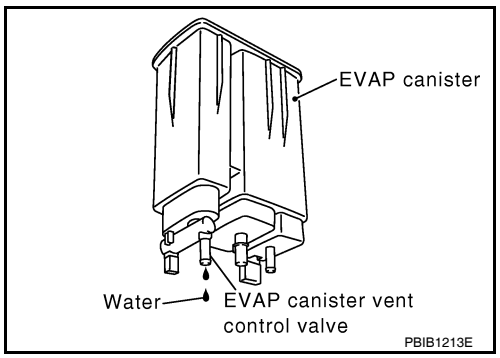

4. CHECK EVAP CANISTER

Weigh the EVAP canister with the EVAP canister vent control valve and EVAP control system pressure sensor attached.

The weight should be less than 2.1 kg (4.6 lb).

Is the inspection result normal?

YES >> GO TO 6.
NO >> GO TO 5.

5. DETECT MALFUNCTIONING PART

Check the following.
- EVAP canister for damage
- EVAP hose between EVAP canister and vehicle frame for clogging or poor connection

>> Repair hose or replace EVAP canister.

6. CHECK EVAP CONTROL SYSTEM PRESSURE SENSOR CONNECTOR

1. Disconnect EVAP control system pressure sensor harness connector.
2. Check connectors for water.

Water should not exist.

Is the inspection result normal?

YES >> GO TO 7.
NO >> Replace EVAP control system pressure sensor.

7. CHECK EVAP CONTROL SYSTEM PRESSURE SENSOR

Refer to EC-824, "Component Inspection".

Is the inspection result normal?

YES >> GO TO 8.
NO >> Replace EVAP control system pressure sensor.

8. CHECK INTERMITTENT INCIDENT

Refer to GI-42, "Intermittent Incident".

>> INSPECTION END

Component Inspection

INFOID:0000000004349781

1. CHECK EVAP CANISTER VENT CONTROL VALVE-I

1. Turn ignition switch OFF.
2. Remove EVAP canister vent control valve from EVAP canister.
3. Check portion (A) of EVAP canister vent control valve for being rusted.

Is it rusted?

YES >> Replace EVAP canister vent control valve
NO >> GO TO 2.

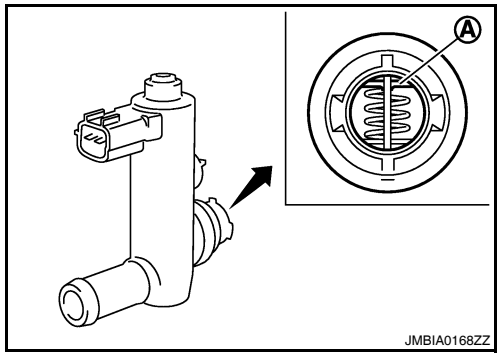

2. CHECK EVAP CANISTER VENT CONTROL VALVE-II

With CONSULT-III

1. Reconnect harness connectors disconnected.
2. Turn ignition switch ON.
3. Perform “VENT CONTROL/V” in “ACTIVE TEST” mode.

4. Check air passage continuity and operation delay time.
Make sure new O-ring is installed properly.

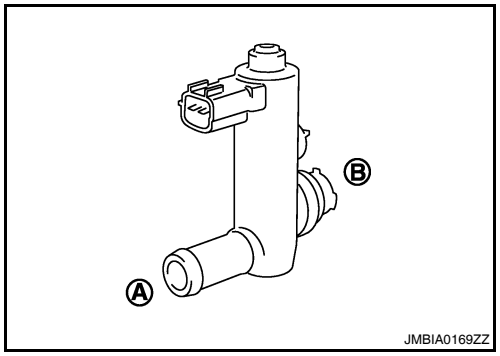

Condition VENT CONTROL/V	Air passage continuity between (A) and (B)
ON	Not existed
OFF	Existed

Operation takes less than 1 second.

Without CONSULT-III

Check air passage continuity and operation delay time under the following conditions.
Make sure new O-ring is installed properly.

Condition	Air passage continuity between (A) and (B)
12V direct current supply between terminals (1) and (2)	Not existed
OFF	Existed

Operation takes less than 1 second.

Is the inspection result normal?

YES >> INSPECTION END
NO >> Replace EVAP canister vent control valve

3. CHECK EVAP CANISTER VENT CONTROL VALVE-III

With CONSULT-III

1. Clean the air passage [portion (A) to (B)] of EVAP canister vent control valve using an air blower.
2. Perform “VENT CONTROL/V” in “ACTIVE TEST” mode.
3. Check air passage continuity and operation delay time.
Make sure new O-ring is installed properly.

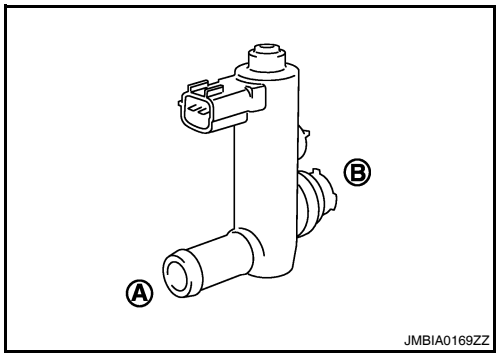

Condition VENT CONTROL/V	Air passage continuity between (A) and (B)
ON	Not existed
OFF	Existed

Operation takes less than 1 second.

Without CONSULT-III

1. Clean the air passage [portion (A) to (B)] of EVAP canister vent control valve using an air blower.
2. Check air passage continuity and operation delay time under the following conditions.
Make sure new O-ring is installed properly.

Condition	Air passage continuity between (A) and (B)
12V direct current supply between terminals (1) and (2)	Not existed
OFF	Existed

Operation takes less than 1 second.

Is the inspection result normal?

YES >> INSPECTION END
NO >> GO TO 3.

P0451 EVAP CONTROL SYSTEM PRESSURE SENSOR

Description

INFOID:0000000004349782

The EVAP control system pressure sensor detects pressure in the purge line. The sensor output voltage to the ECM increases as pressure increases.

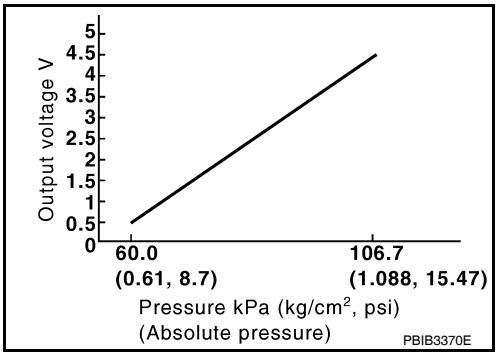

DTC Logic

INFOID:0000000004349783

DTC DETECTION LOGIC

DTC No.	Trouble diagnosis name	DTC detecting condition	Possible cause
P0451	EVAP control system pressure sensor performance	ECM detects a sloshing signal from the EVAP control system pressure sensor	• Harness or connectors (EVAP control system pressure sensor circuit is shorted.) [Crankshaft position sensor (POS) circuit is shorted.] (Accelerator pedal position sensor circuit is shorted.) (Refrigerant pressure sensor circuit is shorted.) • EVAP control system pressure sensor • Crankshaft position sensor (POS) • Accelerator pedal position sensor • Refrigerant pressure sensor

DTC CONFIRMATION PROCEDURE

1. PRECONDITIONING

If DTC Confirmation Procedure has been previously conducted, always turn ignition switch OFF and wait at least 10 seconds before conducting the next test.

>> GO TO 2.

2. PERFORM DTC CONFIRMATION PROCEDURE

1. Turn ignition switch OFF and wait at least 10 seconds.
2. Start engine and wait at least 40 seconds.
   NOTE:
   Do not depress accelerator pedal even slightly.
3. Check 1st trip DTC.

Is 1st trip DTC detected?

YES >> Go to EC-822, "Diagnosis Procedure".
NO >> INSPECTION END

Diagnosis Procedure

INFOID:0000000004349784

1. CHECK GROUND CONNECTION

1. Turn ignition switch OFF.
2. Check ground connection E9. Refer to Ground Inspection in GI-45, "Circuit Inspection".

Is the inspection result normal?

YES >> GO TO 2.
NO >> Repair or replace ground connection.

2. CHECK EVAP CONTROL SYSTEM PRESSURE SENSOR CONNECTOR FOR WATER

1. Disconnect EVAP control system pressure sensor harness connector.
2. Check sensor harness connector for water.

Water should not exist.

Is the inspection result normal?

YES >> GO TO 3.
NO >> Repair or replace harness connector.

3. CHECK EVAP CONTROL SYSTEM PRESSURE SENSOR POWER SUPPLY CIRCUIT

1. Turn ignition switch ON.
2. Check the voltage between EVAP control system pressure sensor harness connector and ground.

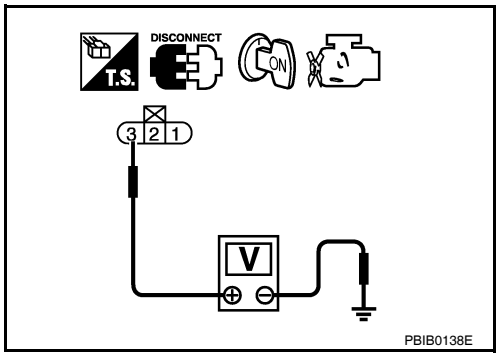

EVAP control system pressure sensor		Ground	Voltage
Connector	Terminal		
B41	3	Ground	Approx. 5V

Is the inspection result normal?

YES >> GO TO 8.
NO >> GO TO 4.

4. CHECK SENSOR POWER SUPPLY CIRCUITS

Check harness for short to power and short to ground, between the following terminals.

ECM		Sensor		
Connector	Terminal	Name	Connector	Terminal
F13	72	Refrigerant pressure sensor	E219	1
	76	CKP sensor (POS)	F30	1
E10	87	APP sensor	E40	6
	91	EVAP control system pressure sensor	B41	3

Is the inspection result normal?

YES >> GO TO 5.
NO >> Repair short to ground or short to power in harness or connectors.

5. CHECK COMPONENTS

Check the following.
- Crankshaft position sensor (POS) (Refer to EC-786, "Component Inspection".)
- Refrigerant pressure sensor (Refer to EC-975, "Diagnosis Procedure".)

Is the inspection result normal?

YES >> GO TO 6.
NO >> Replace malfunctioning component.

6. CHECK APP SENSOR

Refer to EC-926, "Component Inspection".

Is the inspection result normal?

YES >> GO TO 9.
NO >> GO TO 7.

7. REPLACE ACCELERATOR PEDAL ASSEMBLY

1. Replace accelerator pedal assembly
2. Go to EC-926, "Special Repair Requirement".

>> INSPECTION END

8. CHECK EVAP CONTROL SYSTEM PRESSURE SENSOR

Refer to EC-824, "Component Inspection".

Is the inspection result normal?

YES >> GO TO 9.
NO >> Replace EVAP control system pressure sensor.

9. CHECK INTERMITTENT INCIDENT

Refer to GI-42, "Intermittent Incident".

>> INSPECTION END

Component Inspection

INFOID:0000000004349785

1. CHECK EVAP CONTROL SYSTEM PRESSURE SENSOR

1. Turn ignition switch OFF.
2. Remove EVAP control system pressure sensor with its harness connector connected from EVAP canister. **Always replace O-ring with a new one.**
3. Install a vacuum pump to EVAP control system pressure sensor.
4. Turn ignition switch ON and check output voltage between ECM harness connector and ground under the following conditions.

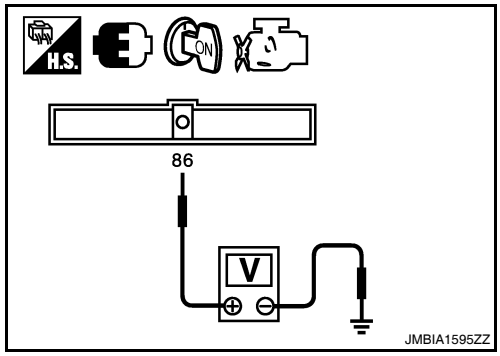

ECM		Condition [Applied vacuum kPa (kg/cm^2, psi)	Voltage
Connector	Terminal		
E10	86 (EVAP control system pressure sensor signal)	Not applied	1.8 - 4.8V
		-26.7 (-0.272, -3.87)	2.1 to 2.5V lower than above value

CAUTION:
- **Always calibrate the vacuum pump gauge when using it.**
- **Do not apply below -93.3 kPa (-0.952 kg/cm^2, -13.53 psi) or pressure over 101.3 kPa (1.033 kg/cm^2, 14.69 psi).**

Is the inspection result normal?

YES >> INSPECTION END
NO >> Replace EVAP control system pressure sensor

P0452 EVAP CONTROL SYSTEM PRESSURE SENSOR

Description

INFOID:0000000004349786

The EVAP control system pressure sensor detects pressure in the purge line. The sensor output voltage to the ECM increases as pressure increases.

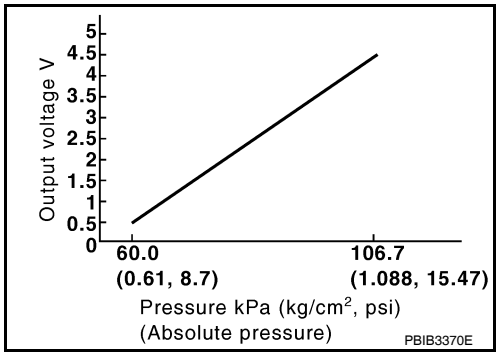

DTC Logic

INFOID:0000000004349787

DTC DETECTION LOGIC

DTC No.	Trouble diagnosis name	DTC detecting condition	Possible cause
P0452	EVAP control system pressure sensor low input	An excessively low voltage from the sensor is sent to ECM.	• Harness or connectors (EVAP control system pressure sensor circuit is open or shorted.) [Crankshaft position sensor (POS) circuit is shorted.) (Accelerator pedal position sensor circuit is shorted.) (Refrigerant pressure sensor circuit is shorted.) • EVAP control system pressure sensor • Crankshaft position sensor (POS) • Accelerator pedal position sensor • Refrigerant pressure sensor

DTC CONFIRMATION PROCEDURE

1. PRECONDITIONING

If DTC Confirmation Procedure has been previously conducted, always turn ignition switch OFF and wait at least 10 seconds before conducting the next test.

TESTING CONDITION:

Always perform test at a temperature of 5°C (41°F) or more.

>> GO TO 2.

2. PERFORM DTC CONFIRMATION PROCEDURE

With CONSULT-III

1. Start engine and warm it up to normal operating temperature.
2. Turn ignition switch OFF and wait at least 10 seconds.
3. Turn ignition switch ON.
4. Select “DATA MONITOR” mode with CONSULT-III.
5. Make sure that “FUEL T/TMP SE” is more than 0°C (32°F).
6. Start engine and wait at least 20 seconds.
7. Check 1st trip DTC.

With GST

1. Start engine and warm it up to normal operating temperature.

2. Set voltmeter probes to ECM harness connector and ground as follows.

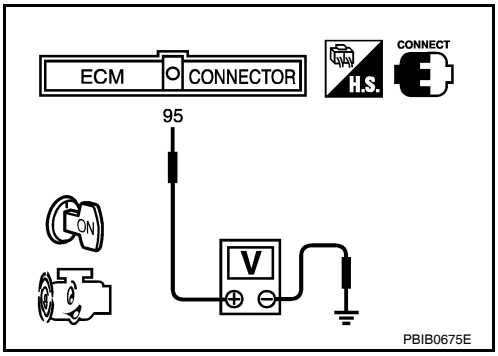

ECM		Ground
Connector	Terminal	
E10	95 (Fuel tank temperature sensor signal)	Ground

3. Make sure that the voltage is less than 4.2V.
4. Turn ignition switch OFF and wait at least 10 seconds.
5. Start engine and wait at least 20 seconds.
6. Check 1st trip DTC.

Is 1st trip DTC detected?

YES >> Go to EC-826, "Diagnosis Procedure".
NO >> INSPECTION END

Diagnosis Procedure

INFOID:0000000004349788

1. CHECK GROUND CONNECTION

1. Turn ignition switch OFF.
2. Check ground connection E9. Refer to Ground Inspection in GI-45, "Circuit Inspection".

Is the inspection result normal?

YES >> GO TO 2.
NO >> Repair or replace ground connection.

2. CHECK CONNECTOR

1. Disconnect EVAP control system pressure sensor harness connector.
2. Check sensor harness connector for water.

Water should not exist.

Is the inspection result normal?

YES >> GO TO 3.
NO >> Repair or replace harness connector.

3. CHECK EVAP CONTROL SYSTEM PRESSURE SENSOR POWER SUPPLY CIRCUIT-I

1. Turn ignition switch ON.
2. Check the voltage between EVAP control system pressure sensor harness connector and ground.

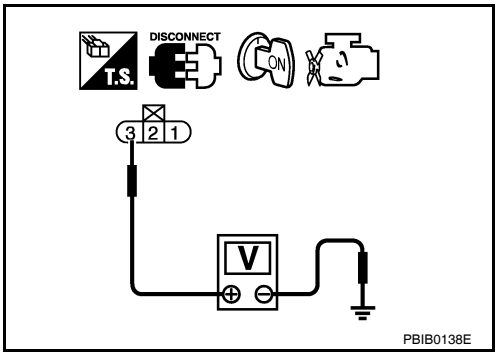

EVAP control system pressure sensor		Ground	Voltage
Connector	Terminal		
B41	3	Ground	Approx. 5V

Is the inspection result normal?

YES >> GO TO 10.
NO >> GO TO 4.

4. CHECK EVAP CONTROL SYSTEM PRESSURE SENSOR POWER SUPPLY CIRCUIT-II

1. Turn ignition switch OFF.
2. Disconnect ECM harness connector.
3. Check the continuity between EVAP control system pressure sensor harness connector and ECM harness connector.

EVAP control system pressure sensor		ECM		Continuity
Connector	Terminal	Connector	Terminal	
B41	3	E10	91	Existed

Is the inspection result normal?

YES >> GO TO 6.
NO >> GO TO 5.

5. DETECT MALFUNCTIONING PART

Check the following.
- Harness connectors B10, E29
- Harness for open or short between EVAP control system pressure sensor and ECM

>> Repair open circuit or short to ground or short to power in harness or connectors.

6. CHECK SENSOR POWER SUPPLY CIRCUITS

Check harness for short to power and short to ground, between the following terminals.

ECM		Sensor		
Connector	Terminal	Name	Connector	Terminal
F13	72	Refrigerant pressure sensor	E219	1
	76	CKP sensor (POS)	F30	1
E10	87	APP sensor	E40	6
	91	EVAP control system pressure sensor	B41	3

Is the inspection result normal?

YES >> GO TO 7.
NO >> Repair short to ground or short to power in harness or connectors.

7. CHECK COMPONENTS

Check the following.
- Crankshaft position sensor (POS) (Refer to EC-786, "Component Inspection".)
- Refrigerant pressure sensor (Refer to EC-975, "Diagnosis Procedure".)

Is the inspection result normal?

YES >> GO TO 8.
NO >> Replace malfunctioning component.

8. CHECK APP SENSOR

Refer to EC-926, "Component Inspection".

Is the inspection result normal?

YES >> GO TO 10.
NO >> GO TO 9.

9. REPLACE ACCELERATOR PEDAL ASSEMBLY

1. Replace accelerator pedal assembly
2. Go to EC-926, "Special Repair Requirement".

>> INSPECTION END

10. CHECK EVAP CONTROL SYSTEM PRESSURE SENSOR GROUND CIRCUIT FOR OPEN AND SHORT

1. Turn ignition switch OFF.
2. Disconnect ECM harness connector.
3. Check the continuity between EVAP control system pressure sensor harness connector and ECM harness connector.

EVAP control system pressure sensor		ECM		Continuity
Connector	Terminal	Connector	Terminal	
B41	1	E10	96	Existed

4. Also check harness for short to ground and short to power.

Is the inspection result normal?

YES >> GO TO 12.
NO >> GO TO 11.

11. DETECT MALFUNCTIONING PART

Check the following.
- Harness connectors B10, E29
- Harness for open or short between EVAP control system pressure sensor and ECM

>> Repair open circuit or short to ground or short to power in harness or connectors.

12. CHECK EVAP CONTROL SYSTEM PRESSURE SENSOR INPUT SIGNAL CIRCUIT FOR OPEN AND SHORT

1. Check the continuity between EVAP control system pressure sensor harness connector and ECM harness connector.

EVAP control system pressure sensor		ECM		Continuity
Connector	Terminal	Connector	Terminal	
B41	2	E10	86	Existed

2. Also check harness for short to ground and short to power.

Is the inspection result normal?

YES >> GO TO 14.
NO >> GO TO 13.

13. DETECT MALFUNCTIONING PART

Check the following.
- Harness connectors B10, E29
- Harness for open or short between EVAP control system pressure sensor and ECM

>> Repair open circuit or short to ground or short to power in harness or connectors.

14. CHECK EVAP CONTROL SYSTEM PRESSURE SENSOR

Refer to EC-828, "Component Inspection".

Is the inspection result normal?

YES >> GO TO 15.
NO >> Replace EVAP control system pressure sensor.

15. CHECK INTERMITTENT INCIDENT

Refer to GI-42, "Intermittent Incident".

>> INSPECTION END

Component Inspection

INFOID:0000000004349789

1. CHECK EVAP CONTROL SYSTEM PRESSURE SENSOR

1. Turn ignition switch OFF.
2. Remove EVAP control system pressure sensor with its harness connector connected from EVAP canister. **Always replace O-ring with a new one.**

3. Install a vacuum pump to EVAP control system pressure sensor.
4. Turn ignition switch ON and check output voltage between ECM harness connector and ground under the following conditions.

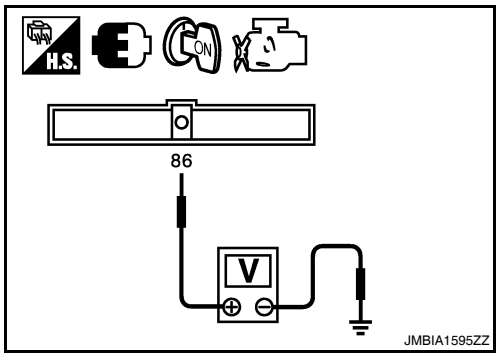

ECM		Condition [Applied vacuum kPa (kg/cm^2, psi)	Voltage
Connector	Terminal		
E10	86 (EVAP control system pressure sensor signal)	Not applied	1.8 - 4.8V
		-26.7 (-0.272, -3.87)	2.1 to 2.5V lower than above value

CAUTION:
- **Always calibrate the vacuum pump gauge when using it.**
- **Do not apply below -93.3 kPa (-0.952 kg/cm^2, -13.53 psi) or pressure over 101.3 kPa (1.033 kg/cm^2, 14.69 psi).**

Is the inspection result normal?

YES >> INSPECTION END
NO >> Replace EVAP control system pressure sensor

P0453 EVAP CONTROL SYSTEM PRESSURE SENSOR

Description

INFOID:0000000004349790

The EVAP control system pressure sensor detects pressure in the purge line. The sensor output voltage to the ECM increases as pressure increases.

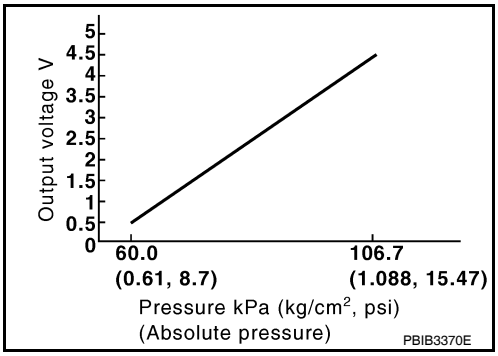

DTC Logic

INFOID:0000000004349791

DTC DETECTION LOGIC

DTC No.	Trouble diagnosis name	DTC detecting condition	Possible cause
P0453	EVAP control system pressure sensor high input	An excessively high voltage from the sensor is sent to ECM.	• Harness or connectors (EVAP control system pressure sensor circuit is open or shorted.) [Crankshaft position sensor (POS) circuit is shorted.] (Accelerator pedal circuit is shorted.) (Refrigerant pressure sensor circuit is shorted.) • EVAP control system pressure sensor • Crankshaft position sensor (POS) • Accelerator pedal position sensor • Refrigerant pressure sensor • EVAP canister vent control valve • EVAP canister • Rubber hose from EVAP canister vent control valve to vehicle frame

DTC CONFIRMATION PROCEDURE

1. PRECONDITIONING

If DTC Confirmation Procedure has been previously conducted, always turn ignition switch OFF and wait at least 10 seconds before conducting the next test.

TESTING CONDITION:

Always perform test at a temperature of 5°C (41°F) or more.

>> GO TO 2.

2. PERFORM DTC CONFIRMATION PROCEDURE

With CONSULT-III

1. Start engine and warm it up to normal operating temperature.
2. Turn ignition switch OFF and wait at least 10 seconds.
3. Turn ignition switch ON.
4. Select “DATA MONITOR” mode with CONSULT-III.
5. Make sure that “FUEL T/TMP SE” is more than 0°C (32°F).
6. Start engine and wait at least 20 seconds.
7. Check 1st trip DTC.

With GST

1. Start engine and warm it up to normal operating temperature.
2. Set voltmeter probes to ECM harness connector and ground as follows.

ECM		Ground
Connector	Terminal	
E10	95 (Fuel tank temperature sensor signal)	Ground

3. Make sure that the voltage is less than 4.2V.
4. Turn ignition switch OFF and wait at least 10 seconds.
5. Start engine and wait at least 20 seconds.
6. Check 1st trip DTC.

Is 1st trip DTC detected?

YES >> Go to EC-831, "Diagnosis Procedure".
NO >> INSPECTION END

Diagnosis Procedure

INFOID:0000000004349792

1. CHECK GROUND CONNECTION

1. Turn ignition switch OFF.
2. Check ground connection E9. Refer to Ground Inspection in GI-45, "Circuit Inspection".

Is the inspection result normal?

YES >> GO TO 2.
NO >> Repair or replace ground connection.

2. CHECK CONNECTOR

1. Disconnect EVAP control system pressure sensor harness connector.
2. Check sensor harness connector for water.

Water should not exist.

Is the inspection result normal?

YES >> GO TO 3.
NO >> Repair or replace harness connector.

3. CHECK EVAP CONTROL SYSTEM PRESSURE SENSOR POWER SUPPLY CIRCUIT

1. Turn ignition switch ON.
2. Check the voltage between EVAP control system pressure sensor harness connector and ground.

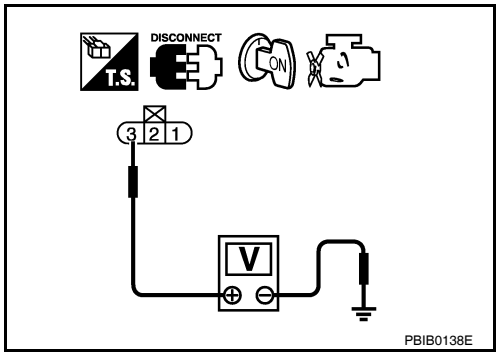

EVAP control system pressure sensor		Ground	Voltage
Connector	Terminal		
B41	3	Ground	Approx. 5V

Is the inspection result normal?

YES >> GO TO 10.
NO >> GO TO 4.

4. CHECK EVAP CONTROL SYSTEM PRESSURE SENSOR POWER SUPPLY CIRCUIT-II

1. Turn ignition switch OFF.
2. Disconnect ECM harness connector.
3. Check the continuity between EVAP control system pressure sensor harness connector and ECM harness connector.

EVAP control system pressure sensor		ECM		Continuity
Connector	Terminal	Connector	Terminal	
B41	3	E10	91	Existed

Is the inspection result normal?

YES >> GO TO 6.
NO >> GO TO 5.

5. DETECT MALFUNCTIONING PART

Check the following.
- Harness connectors B10, E29
- Harness for open or short between EVAP control system pressure sensor and ECM

>> Repair open circuit or short to ground or short to power in harness or connectors.

6. CHECK SENSOR POWER SUPPLY CIRCUITS

Check harness for short to power and short to ground, between the following terminals.

ECM		Sensor		
Connector	Terminal	Name	Connector	Terminal
F13	72	Refrigerant pressure sensor	E219	1
	76	CKP sensor (POS)	F30	1
E10	87	APP sensor	E40	6
	91	EVAP control system pressure sensor	B41	3

Is the inspection result normal?

YES >> GO TO 7.
NO >> Repair short to ground or short to power in harness or connectors.

7. CHECK COMPONENTS

Check the following.
- Crankshaft position sensor (POS) (Refer to EC-786, "Component Inspection".)
- Refrigerant pressure sensor (Refer to EC-975, "Diagnosis Procedure".)

Is the inspection result normal?

YES >> GO TO 8.
NO >> Replace malfunctioning component.

8. CHECK APP SENSOR

Refer to EC-926, "Component Inspection".

Is the inspection result normal?

YES >> GO TO 10.
NO >> GO TO 9.

9. REPLACE ACCELERATOR PEDAL ASSEMBLY

1. Replace accelerator pedal assembly
2. Go to EC-926, "Special Repair Requirement".

>> INSPECTION END

10. CHECK EVAP CONTROL SYSTEM PRESSURE SENSOR GROUND CIRCUIT FOR OPEN AND SHORT

1. Turn ignition switch OFF.
2. Disconnect ECM harness connector.
3. Check the continuity between EVAP control system pressure sensor harness connector and ECM harness connector.

EVAP control system pressure sensor		ECM		Continuity
Connector	Terminal	Connector	Terminal	
B41	1	E10	96	Existed

4. Also check harness for short to ground and short to power.

Is the inspection result normal?

YES >> GO TO 12.
NO >> GO TO 11.

11. DETECT MALFUNCTIONING PART

Check the following.
- Harness connectors B10, E29
- Harness for open or short between EVAP control system pressure sensor and ECM

>> Repair open circuit or short to ground or short to power in harness or connectors.

12. CHECK EVAP CONTROL SYSTEM PRESSURE SENSOR INPUT SIGNAL CIRCUIT FOR OPEN AND SHORT

1. Check the continuity between EVAP control system pressure sensor harness connector and ECM harness connector.

EVAP control system pressure sensor		ECM		Continuity
Connector	Terminal	Connector	Terminal	
B41	2	E10	86	Existed

2. Also check harness for short to ground and short to power.

Is the inspection result normal?

YES >> GO TO 14.
NO >> GO TO 13.

13. DETECT MALFUNCTIONING PART

Check the following.
- Harness connectors B10, E29
- Harness for open or short between EVAP control system pressure sensor and ECM

>> Repair open circuit or short to ground or short to power in harness or connectors.

14. CHECK RUBBER TUBE

1. Disconnect rubber tube connected to EVAP canister vent control valve.
2. Check the rubber tube for clogging.

Is the inspection result normal?

YES >> GO TO 15.
NO >> Clean the rubber tube using an air blower, repair or replace rubber tube.

15. CHECK EVAP CANISTER VENT CONTROL VALVE

Refer to EC-816, "Component Inspection".

Is the inspection result normal?

YES >> GO TO 16.
NO >> Replace EVAP canister vent control valve.

16. CHECK EVAP CONTROL SYSTEM PRESSURE SENSOR

Refer to EC-834, "Component Inspection".

Is the inspection result normal?

YES >> GO TO 17.
NO >> Replace EVAP control system pressure sensor.

17. CHECK IF EVAP CANISTER SATURATED WITH WATER

1. Remove EVAP canister with EVAP canister vent control valve and EVAP control system pressure sensor attached.

2. Check if water will drain from the EVAP canister.

Does water drain from EVAP canister?

YES >> GO TO 18.
NO >> GO TO 20.

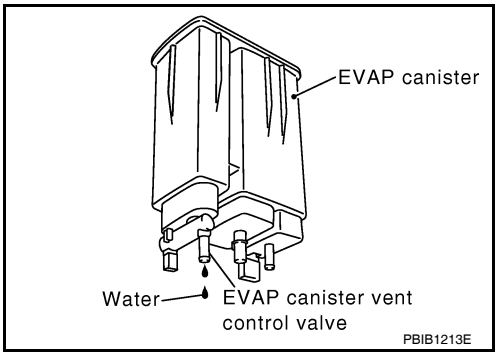

18. CHECK EVAP CANISTER

Weigh the EVAP canister with the EVAP canister vent control valve and EVAP control system pressure sensor attached.

The weight should be less than 2.1 kg (4.6 lb).

Is the inspection result normal?

YES >> GO TO 15.
NO >> GO TO 14.

19. DETECT MALFUNCTIONING PART

Check the following.

- EVAP canister for damage
- EVAP hose between EVAP canister and vehicle frame for clogging or poor connection

>> Repair hose or replace EVAP canister.

20. CHECK INTERMITTENT INCIDENT

Refer to GI-42, "Intermittent Incident".

>> INSPECTION END

Component Inspection

INFOID:0000000004349793

1. CHECK EVAP CONTROL SYSTEM PRESSURE SENSOR

1. Turn ignition switch OFF.
2. Remove EVAP control system pressure sensor with its harness connector connected from EVAP canister. **Always replace O-ring with a new one.**
3. Install a vacuum pump to EVAP control system pressure sensor.
4. Turn ignition switch ON and check output voltage between ECM harness connector and ground under the following conditions.

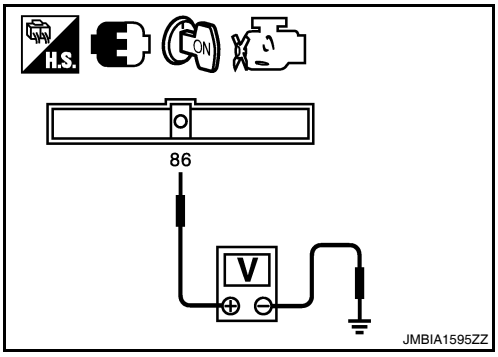

ECM		Condition [Applied vacuum kPa (kg/cm^2, psi)	Voltage
Connector	Terminal		
E10	86 (EVAP control system pressure sensor signal)	Not applied	1.8 - 4.8V
		-26.7 (-0.272, -3.87)	2.1 to 2.5V lower than above value

CAUTION:

- **Always calibrate the vacuum pump gauge when using it.**
- **Do not apply below -93.3 kPa (-0.952 kg/cm^2, -13.53 psi) or pressure over 101.3 kPa (1.033 kg/cm^2, 14.69 psi).**

Is the inspection result normal?

YES >> INSPECTION END
NO >> Replace EVAP control system pressure sensor

P0455 EVAP CONTROL SYSTEM

DTC Logic

INFOID:0000000004349794

DTC DETECTION LOGIC

This diagnosis detects a very large leak (fuel filler cap fell off etc.) in EVAP system between the fuel tank and EVAP canister purge volume control solenoid valve.

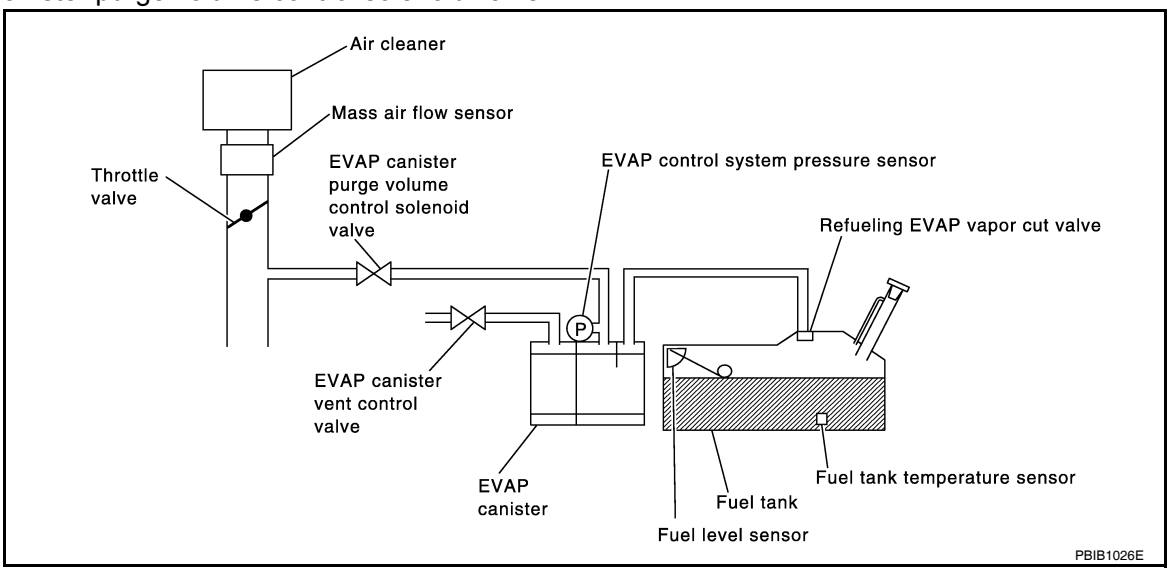

DTC No.	Trouble diagnosis name	DTC detecting condition	Possible cause
P0455	EVAP control system gross leak detected	EVAP control system has a very large leak such as fuel filler cap fell off, EVAP control system does not operate properly.	• Fuel filler cap remains open or fails to close. • Incorrect fuel tank vacuum relief valve • Incorrect fuel filler cap used • Foreign matter caught in fuel filler cap. • Leak is in line between intake manifold and EVAP canister purge volume control solenoid valve. • Foreign matter caught in EVAP canister vent control valve. • EVAP canister or fuel tank leaks • EVAP purge line (pipe and rubber tube) leaks • EVAP purge line rubber tube bent. • Loose or disconnected rubber tube • EVAP canister vent control valve and the circuit • EVAP canister purge volume control solenoid valve and the circuit • Fuel tank temperature sensor • O-ring of EVAP canister vent control valve is missing or damaged. • EVAP control system pressure sensor • Refueling EVAP vapor cut valve • ORVR system leaks

CAUTION:
- **Use only a genuine NISSAN fuel filler cap as a replacement. If an incorrect fuel filler cap is used, the MIL may come on.**
- **If the fuel filler cap is not tightened properly, the MIL may come on.**
- **Use only a genuine NISSAN rubber tube as a replacement.**

DTC CONFIRMATION PROCEDURE

1.PRECONDITIONING

CAUTION:

Never remove fuel filler cap during the DTC CONFIRMATION PROCEDURE.
If DTC Confirmation Procedure has been previously conducted, always turn ignition switch OFF and wait at least 10 seconds before conducting the next test.
NOTE:
Make sure that EVAP hoses are connected to EVAP canister purge volume control solenoid valve properly.
TESTING CONDITION:
- **Perform "DTC WORK SUPPORT" when the fuel level is between 1/4 and 3/4 full, and vehicle is placed on flat level surface.**
- **Open engine hood before conducting the following procedures.**

Do you have CONSULT-III?

YES >> GO TO 2.
NO >> GO TO 4.

2. PERFORM DTC CONFIRMATION PROCEDURE

With CONSULT-III
1. Tighten fuel filler cap securely until ratcheting sound is heard.
2. Turn ignition switch ON.
3. Turn ignition switch OFF and wait at least 10 seconds.
4. Turn ignition switch ON and select "DATA MONITOR" mode with CONSULT-III.
5. Make sure that the following conditions are met.
   COOLAN TEMP/S: 0 - 70°C (32 - 158°F)
   INT/A TEMP SE: 0 - 60°C (32 - 140°F)
6. Select "EVAP SML LEAK P0442/P1442" of "EVAPORATIVE SYSTEM" in "DTC WORK SUPPORT" mode with CONSULT-III.
   Follow the instruction displayed.
   NOTE:
   If the engine speed cannot be maintained within the range displayed on the CONSULT-III screen, go to EC-560, "BASIC INSPECTION : Special Repair Requirement".

Which is displayed on CONSULT-III screen?

OK >> INSPECTION END
NG >> GO TO 3.

3. CHECK DTC

Check DTC.

Which DTC is detected?

P0455 >> Go to EC-836, "Diagnosis Procedure".
P0442 >> Go to EC-802, "Diagnosis Procedure".

4. PERFORM DTC CONFIRMATION PROCEDURE

With GST
NOTE:
Be sure to read the explanation of DIRVING PATTERN in EC-1018, "How to Set SRT Code" before driving vehicle.
1. Start engine.
2. Drive vehicle according to DRIVING PATTERN.
3. Stop vehicle.
4. Turn ignition switch OFF, wait at least 10 seconds and then turn ON.
5. Check 1st trip DTC.

Is 1st trip DTC detected?

YES-1 >> P0455: Go to EC-836, "Diagnosis Procedure".
YES-2 >> P0442: Go to EC-802, "Diagnosis Procedure".
YES-3 >> P0441: Go to EC-798, "Diagnosis Procedure".
NO >> INSPECTION END

Diagnosis Procedure

INFOID:0000000004349795

1. CHECK FUEL FILLER CAP DESIGN

1. Turn ignition switch OFF.

2. Check for genuine NISSAN fuel filler cap design.

Is the inspection result normal?

YES >> GO TO 2.
NO >> Replace with genuine NISSAN fuel filler cap.

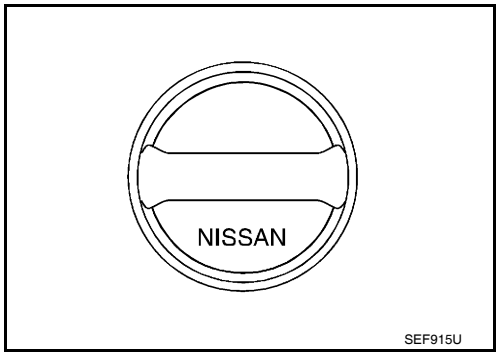

2. CHECK FUEL FILLER CAP INSTALLATION

Check that the cap is tightened properly by rotating the cap clockwise.

Is the inspection result normal?

YES >> GO TO 3.
NO >> Open fuel filler cap, then clean cap and fuel filler neck threads using air blower. Then retighten until ratcheting sound is heard.

3. CHECK FUEL FILLER CAP FUNCTION

Check for air releasing sound while opening the fuel filler cap.

Is the inspection result normal?

YES >> GO TO 5.
NO >> GO TO 4.

4. CHECK FUEL TANK VACUUM RELIEF VALVE

Refer to EC-839, "Component Inspection".

Is the inspection result normal?

YES >> GO TO 5.
NO >> Replace fuel filler cap with a genuine one.

5. CHECK EVAP PURGE LINE

Check EVAP purge line (pipe, rubber tube, fuel tank and EVAP canister) for cracks, improper connection or disconnection.
Refer to EC-622, "System Diagram".

Is the inspection result normal?

YES >> GO TO 6.
NO >> Repair or reconnect the hose.

6. CLEAN EVAP PURGE LINE

Clean EVAP purge line (pipe and rubber tube) using air blower.

>> GO TO 7.

7. CHECK EVAP CANISTER VENT CONTROL VALVE

Check the following.
- EVAP canister vent control valve is installed properly.
  Refer to EC-1041, "Exploded View".
- EVAP canister vent control valve.
  Refer to EC-816, "Component Inspection".

Is the inspection result normal?

YES >> GO TO 8.
NO >> Repair or replace EVAP canister vent control valve and O-ring.

8. CHECK FOR EVAP LEAK

Refer to EC-622, "System Diagram".

Is there any leak in EVAP line?

YES >> Repair or replace.
NO-1 >> With CONSULT-III: GO TO 9.
NO-2 >> Without CONSULT-III: GO TO 10.

9. CHECK EVAP CANISTER PURGE VOLUME CONTROL SOLENOID VALVE OPERATION

With CONSULT-III

1. Disconnect vacuum hose to EVAP canister purge volume control solenoid valve at EVAP service port.
2. Start engine.
3. Perform “PURG VOL CONT/V” in “ACTIVE TEST” mode.
4. Touch “Qu” on CONSULT-III screen to increase “PURG VOL CONT/V” opening to 100%.
5. Check vacuum hose for vacuum.

Vacuum should exist.

Is the inspection result normal?

YES >> GO TO 12.
NO >> GO TO 11.

10. CHECK EVAP CANISTER PURGE VOLUME CONTROL SOLENOID VALVE OPERATION

Without CONSULT-III

1. Start engine and warm it up to normal operating temperature.
2. Stop engine.
3. Disconnect vacuum hose to EVAP canister purge volume control solenoid valve at EVAP service port.
4. Start engine and let it idle for at least 80 seconds.
5. Check vacuum hose for vacuum when revving engine up to 2,000 rpm.

Vacuum should exist.

Is the inspection result normal?

YES >> GO TO 13.
NO >> GO TO 11.

11. CHECK VACUUM HOSE

Check vacuum hoses for clogging or disconnection. Refer to EC-622, "System Diagram".

Is the inspection result normal?

YES-1 >> With CONSULT-III: GO TO 12.
YES-2 >> Without CONSULT-III: GO TO 13.
NO >> Repair or reconnect the hose.

12. CHECK EVAP CANISTER PURGE VOLUME CONTROL SOLENOID VALVE

With CONSULT-III

1. Start engine.
2. Perform “PURG VOL CONT/V” in “ACTIVE TEST” mode with CONSULT-III. Check that engine speed varies according to the valve opening.

Does engine speed vary according to the valve opening?

YES >> GO TO 14.
NO >> GO TO 13.

13. CHECK EVAP CANISTER PURGE VOLUME CONTROL SOLENOID VALVE

Refer to EC-810, "Component Inspection".

Is the inspection result normal?

YES >> GO TO 14.
NO >> Replace EVAP canister purge volume control solenoid valve.

14. CHECK FUEL TANK TEMPERATURE SENSOR

Refer to EC-769, "Component Inspection".

Is the inspection result normal?

YES >> GO TO 15.
NO >> Replace fuel level sensor unit.

15. CHECK EVAP CONTROL SYSTEM PRESSURE SENSOR

Refer to EC-824, "Component Inspection".

Is the inspection result normal?

YES >> GO TO 16.
NO >> Replace EVAP control system pressure sensor.

16. CHECK EVAP/ORVR LINE

Check EVAP/ORVR line between EVAP canister and fuel tank for clogging, kink, looseness and improper connection. For location, refer to EC-969, "Description".

Is the inspection result normal?

YES >> GO TO 17.
NO >> Repair or replace hoses and tubes.

17. CHECK RECIRCULATION LINE

Check recirculation line between fuel filler tube and fuel tank for clogging, kink, cracks, looseness and improper connection.

Is the inspection result normal?

YES >> GO TO 18.
NO >> Repair or replace hose, tube or fuel filler tube.

18. CHECK REFUELING EVAP VAPOR CUT VALVE

Refer to EC-972, "Component Inspection".

Is the inspection result normal?

YES >> GO TO 19.
NO >> Replace refueling EVAP vapor cut valve with fuel tank.

19. CHECK INTERMITTENT INCIDENT

Refer to GI-42, "Intermittent Incident".

>> INSPECTION END

Component Inspection

INFOID:0000000004349796

1. CHECK FUEL TANK VACUUM RELIEF VALVE

1. Turn ignition switch OFF.
2. Remove fuel filler cap.
3. Wipe clean valve housing.

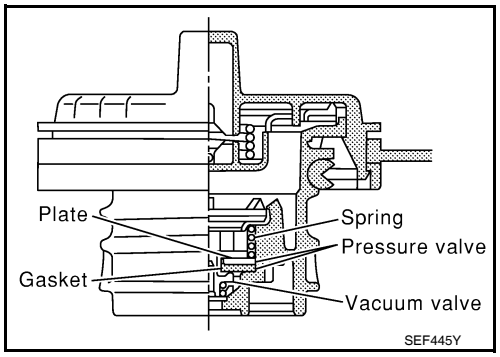

4. Install fuel filler cap adapter (commercial service tool) to fuel filler cap.

5. Check valve opening pressure and vacuum.

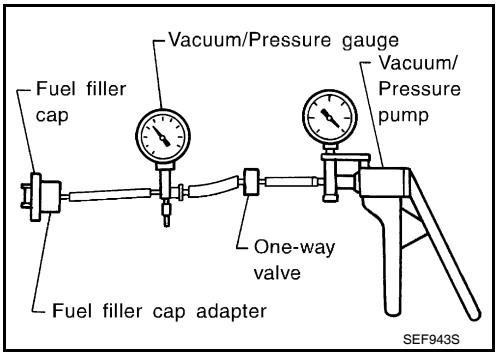

Pressure: **15.3 - 20.0 kPa (0.156 - 0.204 kg/cm^2, 2.22 - 2.90 psi)**

Vacuum: **−6.0 to −3.3 kPa (−0.061 to −0.034 kg/cm^2, −0.87 to −0.48 psi)**

Is the inspection result normal?

YES >> INSPECTION END
NO >> GO TO 2.

2. REPLACE FUEL FILLER CAP

Replace fuel filler cap.

CAUTION:

Use only a genuine fuel filler cap as a replacement. If an incorrect fuel filler cap is used, the MIL may come on.

>> INSPECTION END

P0456 EVAP CONTROL SYSTEM

DTC Logic

INFOID:0000000004349797

DTC DETECTION LOGIC

This diagnosis detects very small leaks in the EVAP line between fuel tank and EVAP canister purge volume control solenoid valve, using the intake manifold vacuum in the same way as conventional EVAP small leak diagnosis.
If ECM judges a leak which corresponds to a very small leak, the very small leak P0456 will be detected.
If ECM judges a leak equivalent to a small leak, EVAP small leak P0442 will be detected.
If ECM judges there are no leaks, the diagnosis will be OK.

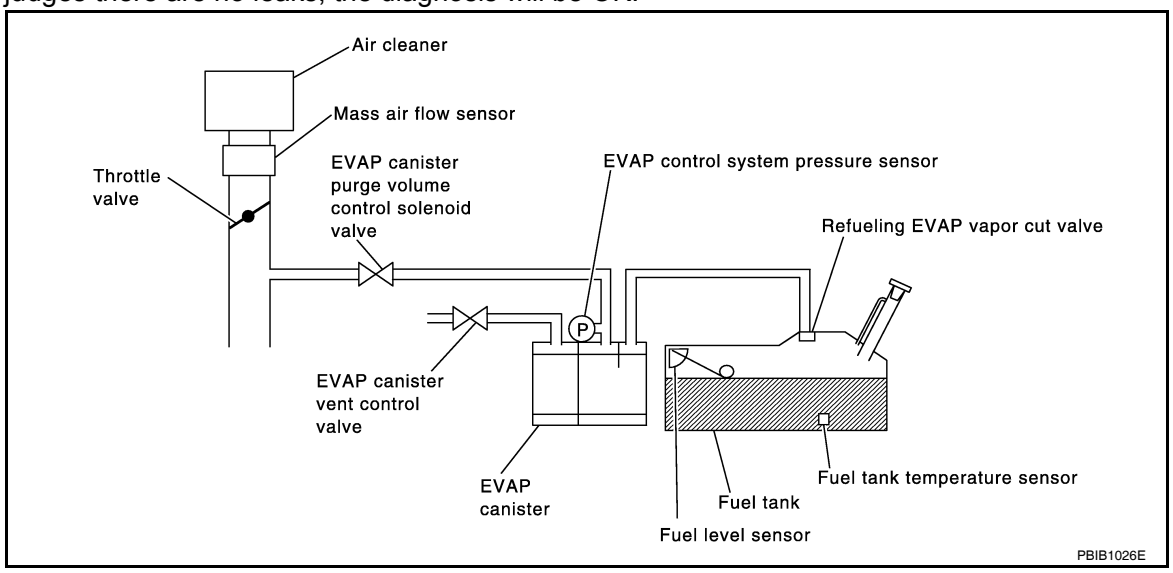

DTC No.	Trouble diagnosis name	DTC detecting condition	Possible cause
P0456	Evaporative emission control system very small leak (negative pressure check)	• EVAP system has a very small leak. • EVAP system does not operate properly.	• Incorrect fuel tank vacuum relief valve • Incorrect fuel filler cap used • Fuel filler cap remains open or fails to close. • Foreign matter caught in fuel filler cap. • Leak is in line between intake manifold and EVAP canister purge volume control solenoid valve. • Foreign matter caught in EVAP canister vent control valve. • EVAP canister or fuel tank leaks • EVAP purge line (pipe and rubber tube) leaks • EVAP purge line rubber tube bent • Loose or disconnected rubber tube • EVAP canister vent control valve and the circuit • EVAP canister purge volume control solenoid valve and the circuit • Fuel tank temperature sensor • O-ring of EVAP canister vent control valve is missing or damaged • EVAP canister is saturated with water • EVAP control system pressure sensor • Refueling EVAP vapor cut valve • ORVR system leaks • Fuel level sensor and the circuit • Foreign matter caught in EVAP canister purge volume control solenoid valve

CAUTION:
- **Use only a genuine NISSAN fuel filler cap as a replacement. If an incorrect fuel filler cap is used, the MIL may come on.**
- **If the fuel filler cap is not tightened properly, the MIL may come on.**
- **Use only a genuine NISSAN rubber tube as a replacement.**

DTC CONFIRMATION PROCEDURE

1. INSPECTION START

Do you have CONSULT-III?

Do you have CONSULT-III?

YES >> GO TO 2.
NO >> GO TO 4.

2. PRECONDITIONING

If DTC Confirmation Procedure has been previously conducted, always turn ignition switch OFF and wait at least 10 seconds before conducting the next test.

NOTE:
- **If DTC P0456 is displayed with P0442, first perform trouble diagnosis for DTC P0456.**
- **After repair, make sure that the hoses and clips are installed properly.**
- **Make sure that EVAP hoses are connected to EVAP canister purge volume control solenoid valve properly.**

TESTING CONDITION:
- **Open engine hood before conducting following procedure.**
- **If any of following conditions are met just before the DTC CONFIRMATION PROCEDURE, leave the vehicle for more than 1 hour.**
  - **Fuel filler cap is removed.**
  - **Fuel is refilled or drained.**
  - **EVAP component parts is/are removed.**
- **Before performing the following procedure, confirm that battery voltage is more than 11V at idle.**

>> GO TO 3.

3. PERFORM DTC CONFIRMATION PROCEDURE

With CONSULT-III

1. Turn ignition switch ON and select “DATA MONITOR” mode with CONSULT-III.
2. Make sure the following conditions are met.
   FUEL LEVEL SE: 0.25 - 1.4V
   COOLAN TEMP/S: 0 - 32°C (32 - 90°F)
   FUEL T/TMP SE: 0 - 35°C (32 - 95°F)
   INT A/TEMP SE: More than 0°C (32°F)
   If NG, turn ignition switch OFF and leave the vehicle in a cool place (soak the vehicle) or refilling/draining fuel until the output voltage condition of the “FUEL LEVEL SE” meets within the range above and leave the vehicle for more than 1 hour. Then start from step 1).
3. Turn ignition switch OFF and wait at least 10 seconds.
4. Turn ignition switch ON.
5. Select “EVAP V/S LEAK P0456/P1456” of “EVAPORATIVE SYSTEM” in “DTC WORK SUPPORT” mode with CONSULT-III.
   Follow the instruction displayed.
   NOTE:
   If the engine speed cannot be maintained within the range displayed on CONSULT-III screen, go to EC-560, "BASIC INSPECTION : Special Repair Requirement".

Which is displayed on CONSULT-III?

OK >> INSPECTION END
NG >> Go to EC-843, "Diagnosis Procedure".

4. PERFORM COMPONENT FUNCTION CHECK

Perform component function check. Refer to EC-843, "Component Function Check".

NOTE:
Use component function check to check the overall function of the EVAP very small leak function. During this check, a 1st trip DTC might not be confirmed.

Is the inspection result normal?

YES >> INSPECTION END
NO >> Go to EC-843, "Diagnosis Procedure".

Component Function Check

INFOID:0000000004349798

1. PERFORM COMPONENT FUNCTION CHECK

With GST

CAUTION:

- **Do not use compressed air, doing so may damage the EVAP system.**
- **Do not start engine.**
- **Do not exceeded 4.12 kPa (0.042 kg/cm^2, 0.6 psi).**

1. Attach the EVAP service port adapter securely to the EVAP service port.
2. Set the pressure pump and a hose.
3. Also set a vacuum gauge via 3-way connector and a hose.
4. Turn ignition switch ON.
5. Connect GST and select Service $08.
6. Using Service $08 control the EVAP canister vent control valve (close).
7. Apply pressure and make sure the following conditions are satisfied.

   Pressure to be applied: 2.7 kPa (0.028 kg/cm^2, 0.39 psi)
   Time to be waited after the pressure drawn in to the EVAP system and the pressure to be dropped: 60 seconds and the pressure should not be dropped more than 0.4 kPa (0.004 kg/cm^2, 0.06 psi).

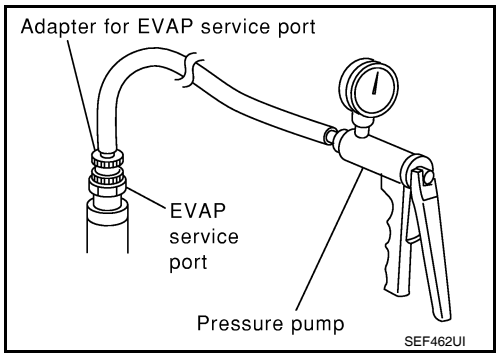

Is the inspection result normal?

YES >> GO TO 2.
NO >> Go to EC-843, "Diagnosis Procedure".

2. RELEASE PRESSURE

1. Disconnect GST.
2. Start engine and warm it up to normal operating temperature.
3. Turn ignition switch OFF and wait at least 10 seconds.
4. Restart engine and let it idle for 90 seconds.
5. Keep engine speed at 2,000 rpm for 30 seconds.
6. Turn ignition switch OFF.

   NOTE:
   For more information, refer to GST Instruction Manual.

>> INSPECTION END

Diagnosis Procedure

INFOID:0000000004349799

1. CHECK FUEL FILLER CAP DESIGN

1. Turn ignition switch OFF.
2. Check for genuine NISSAN fuel filler cap design.

Is the inspection result normal?

YES >> GO TO 2.
NO >> Replace with genuine NISSAN fuel filler cap.

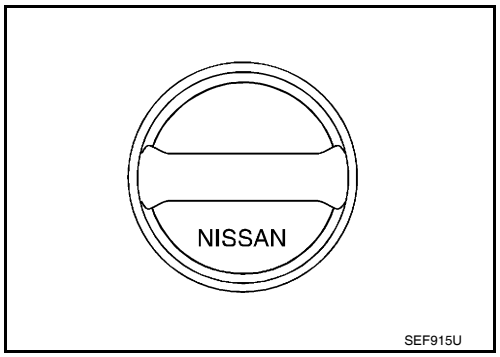

2. CHECK FUEL FILLER CAP INSTALLATION

Check that the cap is tightened properly by rotating the cap clockwise.

Is the inspection result normal?

YES >> GO TO 3.
NO >> Open fuel filler cap, then clean cap and fuel filler neck threads using air blower. Then retighten until ratcheting sound is heard.

3. CHECK FUEL FILLER CAP FUNCTION

Check for air releasing sound while opening the fuel filler cap.

Is the inspection result normal?

YES >> GO TO 5.
NO >> GO TO 4.

4. CHECK FUEL TANK VACUUM RELIEF VALVE

Refer to EC-846, "Component Inspection".

Is the inspection result normal?

YES >> GO TO 5.
NO >> Replace fuel filler cap with a genuine one.

5. CHECK FOR EVAP LEAK

Refer to EC-622, "System Diagram".

Is there any leak in EVAP line?

YES >> Repair or replace.
NO >> GO TO 6.

6. CHECK EVAP CANISTER VENT CONTROL VALVE

Check the following.
- EVAP canister vent control valve is installed properly.
  Refer to EC-1041, "Exploded View".
- EVAP canister vent control valve.
  Refer to EC-816, "Component Inspection".

Is the inspection result normal?

YES >> GO TO 7.
NO >> Repair or replace EVAP canister vent control valve and O-ring.

7. CHECK IF EVAP CANISTER SATURATED WITH WATER

1. Remove EVAP canister with EVAP canister vent control valve and EVAP control system pressure sensor attached.
2. Check if water will drain from the EVAP canister.

Does water drain from EVAP canister?

YES >> GO TO 8.
NO-1 >> With CONSULT-III: GO TO 10.
NO-2 >> Without CONSULT-III: GO TO 11.

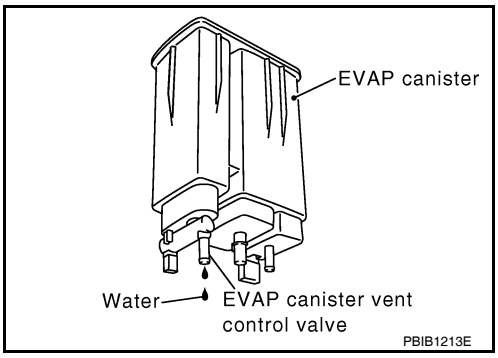

8. CHECK EVAP CANISTER

Weigh the EVAP canister with the EVAP canister vent control valve and EVAP control system pressure sensor attached.

The weight should be less than 2.1 kg (4.6 lb).

Is the inspection result normal?

YES-1 >> With CONSULT-III: GO TO 10.
YES-2 >> Without CONSULT-III: GO TO 11.
NO >> GO TO 9.

9. DETECT MALFUNCTIONING PART

Check the following.

- EVAP canister for damage
- EVAP hose between EVAP canister and vehicle frame for clogging or poor connection

>> Repair hose or replace EVAP canister.

10. CHECK EVAP CANISTER PURGE VOLUME CONTROL SOLENOID VALVE OPERATION

With CONSULT-III

1. Disconnect vacuum hose to EVAP canister purge volume control solenoid valve at EVAP service port.
2. Start engine.
3. Perform “PURG VOL CONT/V” in “ACTIVE TEST” mode.
4. Touch “Qu” on CONSULT-III screen to increase “PURG VOL CONT/V” opening to 100%.
5. Check vacuum hose for vacuum.

Vacuum should exist.

Is the inspection result normal?

YES >> GO TO 13.
NO >> GO TO 12.

11. CHECK EVAP CANISTER PURGE VOLUME CONTROL SOLENOID VALVE OPERATION

Without CONSULT-III

1. Start engine and warm it up to normal operating temperature.
2. Stop engine.
3. Disconnect vacuum hose to EVAP canister purge volume control solenoid valve at EVAP service port.
4. Start engine and let it idle for at least 80 seconds.
5. Check vacuum hose for vacuum when revving engine up to 2,000 rpm.

Vacuum should exist.

Is the inspection result normal?

YES >> GO TO 14.
NO >> GO TO 12.

12. CHECK VACUUM HOSE

Check vacuum hoses for clogging or disconnection. Refer to EC-622, "System Diagram".

Is the inspection result normal?

YES >> GO TO 13.
NO >> Repair or reconnect the hose.

13. CHECK EVAP CANISTER PURGE VOLUME CONTROL SOLENOID VALVE

Refer to EC-808, "Diagnosis Procedure".

Is the inspection result normal?

YES >> GO TO 14.
NO >> Replace EVAP canister purge volume control solenoid valve.

14. CHECK FUEL TANK TEMPERATURE SENSOR

Refer to EC-769, "Component Inspection".

Is the inspection result normal?

YES >> GO TO 15.
NO >> Replace fuel level sensor unit.

15. CHECK EVAP CONTROL SYSTEM PRESSURE SENSOR

Refer to EC-824, "Component Inspection".

Is the inspection result normal?

YES >> GO TO 16.
NO >> Replace EVAP control system pressure sensor.

16. CHECK EVAP PURGE LINE

Check EVAP purge line (pipe, rubber tube, fuel tank and EVAP canister) for cracks or improper connection.

Refer to EC-622, "System Diagram".

Is the inspection result normal?

YES >> GO TO 17.
NO >> Repair or reconnect the hose.

17. CLEAN EVAP PURGE LINE

Clean EVAP purge line (pipe and rubber tube) using air blower.

>> GO TO 18.

18. CHECK EVAP/ORVR LINE

Check EVAP/ORVR line between EVAP canister and fuel tank for clogging, kink, looseness and improper connection. For location, refer to EC-969, "Description".

Is the inspection result normal?

YES >> GO TO 19.
NO >> Repair or replace hoses and tubes.

19. CHECK RECIRCULATION LINE

Check recirculation line between fuel filler tube and fuel tank for clogging, kink, cracks, looseness and improper connection.

Is the inspection result normal?

YES >> GO TO 20.
NO >> Repair or replace hose, tube or fuel filler tube.

20. CHECK REFUELING EVAP VAPOR CUT VALVE

Refer to EC-972, "Component Inspection".

Is the inspection result normal?

YES >> GO TO 21.
NO >> Replace refueling EVAP vapor cut valve with fuel tank.

21. CHECK FUEL LEVEL SENSOR

Refer to MWI-47, "Component Inspection".

Is the inspection result normal?

YES >> GO TO 22.
NO >> Replace fuel level sensor unit.

22. CHECK INTERMITTENT INCIDENT

Refer to GI-42, "Intermittent Incident".

>> INSPECTION END

Component Inspection

INFOID:0000000004349800

1. CHECK FUEL TANK VACUUM RELIEF VALVE

1. Turn ignition switch OFF.
2. Remove fuel filler cap.
3. Wipe clean valve housing.

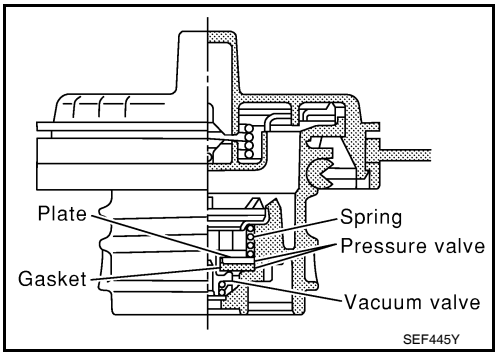

4. Install fuel filler cap adapter (commercial service tool) to fuel filler cap.
5. Check valve opening pressure and vacuum.

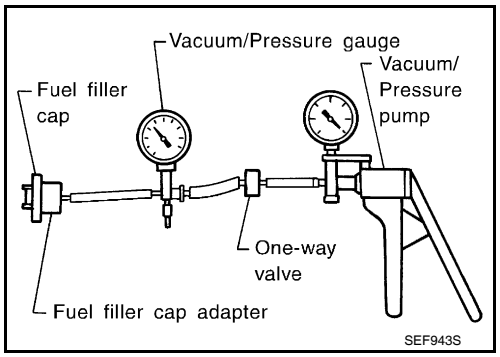

Pressure: **15.3 - 20.0 kPa (0.156 - 0.204 kg/cm^2, 2.22 - 2.90 psi)**

Vacuum: **–6.0 to –3.3 kPa (–0.061 to –0.034 kg/cm^2, –0.87 to –0.48 psi)**

Is the inspection result normal?

YES >> INSPECTION END
NO >> GO TO 2.

2. REPLACE FUEL FILLER CAP

Replace fuel filler cap.

CAUTION:

Use only a genuine fuel filler cap as a replacement. If an incorrect fuel filler cap is used, the MIL may come on.

>> INSPECTION END

P0460 FUEL LEVEL SENSOR

Description

INFOID:0000000004349801

The fuel level sensor is mounted in the fuel level sensor unit.
The sensor detects a fuel level in the fuel tank and transmits a signal to the combination meter. The combination meter sends the fuel level sensor signal to the ECM through CAN communication line.
It consists of two parts, one is mechanical float and the other is variable resistor. Fuel level sensor output voltage changes depending on the movement of the fuel mechanical float.

DTC Logic

INFOID:0000000004349802

DTC DETECTION LOGIC

NOTE:
- **If DTC P0460 is displayed with DTC UXXXX, first perform the trouble diagnosis for DTC UXXXX.**
- **If DTC P0460 is displayed with DTC P0607, first perform the trouble diagnosis for DTC P0607. Refer to EC-866, "DTC Logic".**

When the vehicle is parked, naturally the fuel level in the fuel tank is stable. It means that output signal of the fuel level sensor does not change. If ECM senses sloshing signal from the sensor, fuel level sensor malfunction is detected.

DTC No.	Trouble diagnosis name	DTC detecting condition	Possible cause
P0460	Fuel level sensor circuit noise	Even though the vehicle is parked, a signal being varied is sent from the fuel level sensor to ECM.	• Harness or connectors (The CAN communication line is open or shorted) • Harness or connectors (The sensor circuit is open or shorted) • Combination meter • Fuel level sensor

DTC CONFIRMATION PROCEDURE

1. PRECONDITIONING

If DTC Confirmation Procedure has been previously conducted, always turn ignition switch OFF and wait at least 10 seconds before conducting the next test.

>> GO TO 2.

2. PERFORM DTC CONFIRMATION PROCEDURE

1. Start engine and wait maximum of 2 consecutive minutes.
2. Check 1st trip DTC.

Is 1st trip DTC detected?

YES >> Go to EC-848, "Diagnosis Procedure".
NO >> INSPECTION END

Diagnosis Procedure

INFOID:0000000004349803

1. CHECK COMBINATION METER FUNCTION

Refer to MWI-46, "Component Function Check".

Is the inspection result normal?

YES >> GO TO 2.
NO >> Go to MWI-46, "Diagnosis Procedure"

2. CHECK INTERMITTENT INCIDENT

Refer to GI-42, "Intermittent Incident".

>> INSPECTION END

P0461 FUEL LEVEL SENSOR

Description

INFOID:0000000004349804

The fuel level sensor is mounted in the fuel level sensor unit.
The sensor detects a fuel level in the fuel tank and transmits a signal to the combination meter. The combination meter sends the fuel level sensor signal to the ECM through CAN communication line.
It consists of two parts, one is mechanical float and the other is variable resistor. Fuel level sensor output voltage changes depending on the movement of the fuel mechanical float.

DTC Logic

INFOID:0000000004349805

DTC DETECTION LOGIC

NOTE:
- **If DTC P0461 is displayed with DTC UXXXX, first perform the trouble diagnosis for DTC UXXXX.**
- **If DTC P0461 is displayed with DTC P0607, first perform the trouble diagnosis for DTC P0607. Refer to EC-866, "DTC Logic".**

Driving long distances naturally affect fuel gauge level.
This diagnosis detects the fuel gauge malfunction of the gauge not moving even after a long distance has been driven.

DTC No.	Trouble diagnosis name	DTC detecting condition	Possible cause
P0461	Fuel level sensor circuit range/performance	The output signal of the fuel level sensor does not change within the specified range even though the vehicle has been driven a long distance.	• Harness or connectors (The CAN communication line is open or shorted) • Harness or connectors (The sensor circuit is open or shorted) • Combination meter • Fuel level sensor

DTC CONFIRMATION PROCEDURE

1. PERFORM COMPONENT FUNCTION CHECK

Perform component function check. Refer to EC-849, "Component Function Check".
Use component function check to check the overall function of the fuel level sensor function. During this check, a 1st trip DTC might not be confirmed.

Is the inspection result normal?

YES >> INSPECTION END
NO >> Go to EC-850, "Diagnosis Procedure".

Component Function Check

INFOID:0000000004349806

1. PRECONDITIONING

WARNING:
When performing following procedure, be sure to observe the handling of the fuel. Refer to FL-10, "Removal and Installation".
TESTING CONDITION:
Before starting component function check, preparation of draining fuel and refilling fuel is required.

Do you have CONSULT-III?

YES >> GO TO 2.
NO >> GO TO 3.

2. PERFORM COMPONENT FUNCTION CHECK

With CONSULT-III
NOTE:
Start from step 10, if it is possible to confirm that the fuel cannot be drained by 30 ℓ (7-7/8 US gal, 6-5/8 Imp gal) in advance.

1. Prepare a fuel container and a spare hose.

2. Release fuel pressure from fuel line, refer to EC-1038, "Inspection".
3. Remove the fuel feed hose on the fuel level sensor unit.
4. Connect a spare fuel hose where the fuel feed hose was removed.
5. Turn ignition switch OFF and wait at least 10 seconds then turn ON.
6. Select “FUEL LEVEL SE” in “DATA MONITOR” mode with CONSULT-III.
7. Check “FUEL LEVEL SE” output voltage and note it.
8. Select “FUEL PUMP RELAY” in “ACTIVE TEST” mode with CONSULT-III.
9. Touch “ON” and drain fuel approximately 30 ℓ (7-7/8 US gal, 6-5/8 Imp gal) and stop it.
10. Check “FUEL LEVEL SE” output voltage and note it.
11. Fill fuel into the fuel tank for 30 ℓ (7-7/8 US gal, 6-5/8 Imp gal).
12. Check “FUEL LEVEL SE” output voltage and note it.
13. Confirm whether the voltage changes more than 0.03V during step 7 to 10 and 10 to 12.

Is the inspection result normal?

YES >> INSPECTION END
NO >> Go to EC-850, "Diagnosis Procedure".

3. PERFORM COMPONENT FUNCTION CHECK

Without CONSULT-III
NOTE:
Start from step 8, if it is possible to confirm that the fuel cannot be drained by 30 ℓ (7-7/8 US gal, 6-5/8 Imp gal) in advance.

1. Prepare a fuel container and a spare hose.
2. Release fuel pressure from fuel line. Refer to EC-1038, "Inspection".
3. Remove the fuel feed hose on the fuel level sensor unit.
4. Connect a spare fuel hose where the fuel feed hose was removed.
5. Turn ignition switch ON.
6. Drain fuel by 30 ℓ (7-7/8 US gal, 6-5/8 Imp gal) from the fuel tank using proper equipment.
7. Confirm that the fuel gauge indication varies.
8. Fill fuel into the fuel tank for 30 ℓ (7-7/8 US gal, 6-5/8 Imp gal).
9. Confirm that the fuel gauge indication varies.

Is the inspection result normal?

YES >> INSPECTION END
NO >> Go to EC-850, "Diagnosis Procedure".

Diagnosis Procedure

INFOID:0000000004349807

1. CHECK COMBINATION METER FUNCTION

Refer to MWI-46, "Component Function Check".

Is the inspection result normal?

YES >> GO TO 2.
NO >> Go to MWI-46, "Diagnosis Procedure"

2. CHECK INTERMITTENT INCIDENT

Refer to GI-42, "Intermittent Incident".

>> INSPECTION END

P0462, P0463 FUEL LEVEL SENSOR

Description

INFOID:0000000004349808

The fuel level sensor is mounted in the fuel level sensor unit.
The sensor detects a fuel level in the fuel tank and transmits a signal to the combination meter. The combination meter sends the fuel level sensor signal to the ECM through CAN communication line.
It consists of two parts, one is mechanical float and the other is variable resistor. Fuel level sensor output voltage changes depending on the movement of the fuel mechanical float.

DTC Logic

INFOID:0000000004349809

DTC DETECTION LOGIC

NOTE:
- **If DTC P0462 or P0463 is displayed with DTC UXXXX, first perform the trouble diagnosis for DTC UXXXX.**
- **If DTC P0462 or P0463 is displayed with DTC P0607, first perform the trouble diagnosis for DTC P0607. Refer to EC-866, "DTC Logic".**

This diagnosis indicates the former, to detect open or short circuit malfunction.

DTC No.	Trouble diagnosis name	DTC detecting condition	Possible cause
P0462	Fuel level sensor circuit low input	An excessively low voltage from the sensor is sent to ECM.	• Harness or connectors (The CAN communication line is open or shorted) • Harness or connectors (The sensor circuit is open or shorted) • Combination meter • Fuel level sensor
P0463	Fuel level sensor circuit high input	An excessively high voltage from the sensor is sent to ECM.	

DTC CONFIRMATION PROCEDURE

1. PRECONDITIONING

If DTC Confirmation Procedure has been previously conducted, always turn ignition switch OFF and wait at least 10 seconds before conducting the next test.
TESTING CONDITION:
Before performing the following procedure, confirm that battery voltage is between 11V and 16V at ignition switch ON.

>> GO TO 2.

2. PERFORM DTC CONFIRMATION PROCEDURE

1. Turn ignition switch ON and wait at least 5 seconds.
2. Check 1st trip DTC.

Is 1st trip DTC detected?

YES >> Go to EC-851, "Diagnosis Procedure".
NO >> INSPECTION END

Diagnosis Procedure

INFOID:0000000004349810

1. CHECK COMBINATION METER FUNCTION

Refer to MWI-46, "Component Function Check".

Is the inspection result normal?

YES >> GO TO 2.
NO >> Go to MWI-46, "Diagnosis Procedure"

2. CHECK INTERMITTENT INCIDENT

Refer to GI-42, "Intermittent Incident".

>> INSPECTION END

P0500 VSS

Description

INFOID:0000000004349811

The vehicle speed signal is sent to the combination meter from the “ABS actuator and electric unit (control unit)” by CAN communication line. The combination meter then sends a signal to the ECM by CAN communication line.

DTC Logic

INFOID:0000000004349812

DTC DETECTION LOGIC

NOTE:
- **If DTC P0500 is displayed with DTC UXXXX, first perform the trouble diagnosis for DTC UXXXX.**
- **If DTC P0500 is displayed with DTC P0607, first perform the trouble diagnosis for DTC P0607. Refer to EC-866, "DTC Logic".**

DTC No.	Trouble diagnosis name	DTC detecting condition	Possible cause
P0500	Vehicle speed sensor	The vehicle speed signal to ECM is almost 0 km/h (0 MPH) even when vehicle is being driven.	• Harness or connectors (The CAN communication line is open or shorted) • Harness or connectors (The vehicle speed signal circuit is open or shorted) • Wheel sensor • Combination meter • ABS actuator and electric unit (control unit)

DTC CONFIRMATION PROCEDURE

1. INSPECTION START

Do you have CONSULT-III?

Do you have CONSULT-III?

YES >> GO TO 2.
NO >> GO TO 5.

2. PRECONDITIONING

If DTC Confirmation Procedure has been previously conducted, always turn ignition switch OFF and wait at least 10 seconds before conducting the next test.

>> GO TO 3.

3. CHECK VEHICLE SPEED SIGNAL

NOTE:
This procedure may be conducted with the drive wheels lifted in the shop or by driving the vehicle. If a road test is expected to be easier, it is unnecessary to lift the vehicle.

With CONSULT-III

1. Start engine.
2. Read “VHCL SPEED SE” in “DATA MONITOR” mode with CONSULT-III. The vehicle speed on CONSULT-III should exceed 10 km/h (6 mph) when rotating wheels with suitable gear position.

Is the inspection result normal?

YES >> GO TO 2.
NO >> Go to EC-854, "Diagnosis Procedure".

4. PERFORM DTC CONFIRMATION PROCEDURE

1. Select “DATA MONITOR” mode with CONSULT-III.
2. Warm engine up to normal operating temperature.
3. Maintain the following conditions for at least 50 consecutive seconds.
   CAUTION:
   Always drive vehicle at a safe speed.

ENG SPEED	CVT: 1,350 - 6,000 rpm M/T: 1,650 - 6,000 rpm
COOLAN TEMP/S	More than 70°C (158°F)
B/FUEL SCHDL	CVT: 5.5 - 31.8 msec M/T: 4.8 - 31.8 msec
Shift lever	Except P or N position (CVT) Except Neutral position (M/T)
PW/ST SIGNAL	OFF

4. Check 1st trip DTC.

Is 1st trip DTC detected?

YES >> Go to EC-854, "Diagnosis Procedure".
NO >> INSPECTION END

5. PERFORM COMPONENT FUNCTION CHECK

Perform component function check. Refer to EC-854, "Component Function Check".
Use component function check to check the overall function of the vehicle speed signal circuit. During this check, a 1st trip DTC might not be confirmed.

Is the inspection result normal?

YES >> INSPECTION END
NO >> Go to EC-854, "Diagnosis Procedure".

Component Function Check

INFOID:0000000004349813

1. PERFORM COMPONENT FUNCTION CHECK

With GST

1. Lift up drive wheels.
2. Start engine.
3. Read vehicle speed signal in Service $01 with GST.
   The vehicle speed signal on GST should be able to exceed 10 km/h (6 MPH) when rotating wheels with suitable gear position.

Is the inspection result normal?

YES >> INSPECTION END
NO >> Go to EC-854, "Diagnosis Procedure".

Diagnosis Procedure

INFOID:0000000004349814

1. CHECK DTC WITH “ABS ACTUATOR AND ELECTRIC UNIT (CONTROL UNIT)”

Refer to BRC-12, "CONSULT-III Function (ABS)".

Is the inspection result normal?

YES >> GO TO 2.
NO >> Repair or replace.

2. CHECK COMBINATION METER

Refer to MWI-38, "CONSULT-III Function (METER/M&A)".

>> INSPECTION END

P0506 ISC SYSTEM

Description

INFOID:0000000004349815

The ECM controls the engine idle speed to a specified level through the fine adjustment of the air, which is let into the intake manifold, by operating the electric throttle control actuator. The operating of the throttle valve is varied to allow for optimum control of the engine idling speed. The crankshaft position sensor (POS) detects the actual engine speed and sends a signal to the ECM.
The ECM controls the electric throttle control actuator so that the engine speed coincides with the target value memorized in the ECM. The target engine speed is the lowest speed at which the engine can operate steadily. The optimum value stored in the ECM is determined by taking into consideration various engine conditions, such as during warming up, deceleration, and engine load (air conditioner, power steering and cooling fan operation, etc.).

DTC Logic

INFOID:0000000004349816

DTC DETECTION LOGIC

NOTE:
If DTC P0506 is displayed with other DTC, first perform the trouble diagnosis for the other DTC.

DTC No.	Trouble diagnosis name	DTC detecting condition	Possible cause
P0506	Idle speed control system RPM lower than expected	The idle speed is less than the target idle speed by 100 rpm or more.	• Electric throttle control actuator • Intake air leak

DTC CONFIRMATION PROCEDURE

1.PRECONDITIONING

If DTC Confirmation Procedure has been previously conducted, always turn ignition switch OFF and wait at least 10 seconds before conducting the next test.
If the target idle speed is out of the specified value, perform EC-566, "IDLE AIR VOLUME LEARNING : Special Repair Requirement", before conducting DTC Confirmation Procedure.
TESTING CONDITION:
- **Before performing the following procedure, confirm that battery voltage is more than 11V at idle.**
- **Always perform the test at a temperature above −10°C(14°F).**

>> GO TO 2.

2.PERFORM DTC CONFIRMATION PROCEDURE

1. Start engine and warm it up to normal operating temperature.
2. Turn ignition switch OFF and wait at least 10 seconds.
3. Start engine and run it for at least 1 minute at idle speed.
4. Check 1st trip DTC.

Is 1st trip DTC detected?

YES >> Go to EC-855, "Diagnosis Procedure".
NO >> INSPECTION END

Diagnosis Procedure

INFOID:0000000004349817

1.CHECK INTAKE AIR LEAK

1. Start engine and let it idle.
2. Listen for an intake air leak after the mass air flow sensor.

Is intake air leak detected?

YES >> Discover air leak location and repair.
NO >> GO TO 2.

2.REPLACE ECM

1. Stop engine.

2. Replace ECM.
3. Go to EC-563, "ADDITIONAL SERVICE WHEN REPLACING CONTROL UNIT : Special Repair Requirement".

>> INSPECTION END

P0507 ISC SYSTEM

Description

INFOID:0000000004349818

The ECM controls the engine idle speed to a specified level through the fine adjustment of the air, which is let into the intake manifold, by operating the electric throttle control actuator. The operating of the throttle valve is varied to allow for optimum control of the engine idling speed. The crankshaft position sensor (POS) detects the actual engine speed and sends a signal to the ECM.
The ECM controls the electric throttle control actuator so that the engine speed coincides with the target value memorized in the ECM. The target engine speed is the lowest speed at which the engine can operate steadily. The optimum value stored in the ECM is determined by taking into consideration various engine conditions, such as during warming up, deceleration, and engine load (air conditioner, power steering and cooling fan operation, etc.).

DTC Logic

INFOID:0000000004349819

DTC DETECTION LOGIC

NOTE:
If DTC P0507 is displayed with other DTC, first perform the trouble diagnosis for the other DTC.

DTC No.	Trouble diagnosis name	DTC detecting condition	Possible cause
P0507	Idle speed control system RPM higher than expected	The idle speed is more than the target idle speed by 200 rpm or more.	• Electric throttle control actuator • Intake air leak • PCV system

DTC CONFIRMATION PROCEDURE

1.PRECONDITIONING

If DTC Confirmation Procedure has been previously conducted, always turn ignition switch OFF and wait at least 10 seconds before conducting the next test.
If the target idle speed is out of the specified value, perform EC-566, "IDLE AIR VOLUME LEARNING : Special Repair Requirement", before conducting DTC Confirmation Procedure.
TESTING CONDITION:
- **Before performing the following procedure, confirm that battery voltage is more than 11V at idle.**
- **Always perform the test at a temperature above −10°C(14°F).**

>> GO TO 2.

2.PERFORM DTC CONFIRMATION PROCEDURE

1. Start engine and warm it up to normal operating temperature.
2. Turn ignition switch OFF and wait at least 10 seconds.
3. Start engine and run it for at least 1 minute at idle speed.
4. Check 1st trip DTC.

Is 1st trip DTC detected?

YES >> Go to EC-857, "Diagnosis Procedure".
NO >> INSPECTION END

Diagnosis Procedure

INFOID:0000000004349820

1.CHECK PCV HOSE CONNECTION

Confirm that PCV hose is connected correctly.

Is the inspection result normal?

YES >> GO TO 2.
NO >> Repair or replace.

2.CHECK INTAKE AIR LEAK

1. Start engine and let it idle.
2. Listen for an intake air leak after the mass air flow sensor.

Is intake air leak detected?

YES >> Discover air leak location and repair.
NO >> GO TO 3.

3. REPLACE ECM

1. Stop engine.
2. Replace ECM.
3. Go to EC-563, "ADDITIONAL SERVICE WHEN REPLACING CONTROL UNIT : Special Repair Requirement".

>> INSPECTION END

P0550 PSP SENSOR

Description

INFOID:0000000004349821

Power steering pressure (PSP) sensor is installed to the power steering high-pressure tube and detects a power steering load.
This sensor is a potentiometer which transforms the power steering load into output voltage, and emits the voltage signal to the ECM. The ECM controls the electric throttle control actuator and adjusts the throttle valve opening angle to increase the engine speed and adjusts the idle speed for the increased load.

DTC Logic

INFOID:0000000004349822

DTC DETECTION LOGIC

NOTE:
If DTC P0550 is displayed with DTC P0643, first perform the trouble diagnosis for DTC P0643. Refer to EC-867, "DTC Logic".

DTC No.	Trouble diagnosis name	DTC detecting condition	Possible cause
P0550	Power steering pressure sensor circuit	An excessively low or high voltage from the sensor is sent to ECM.	• Harness or connectors (The sensor circuit is open or shorted) • Power steering pressure sensor

DTC CONFIRMATION PROCEDURE

1.PRECONDITIONING

If DTC Confirmation Procedure has been previously conducted, always turn ignition switch OFF and wait at least 10 seconds before conducting the next test.

>> GO TO 2.

2.PERFORM DTC CONFIRMATION PROCEDURE

1. Start engine and let it idle for at least 5 seconds.
2. Check 1st trip DTC.

Is 1st trip DTC detected?

YES >> Go to EC-859, "Diagnosis Procedure".
NO >> INSPECTION END

Diagnosis Procedure

INFOID:0000000004349823

1.CHECK GROUND CONNECTION

1. Turn ignition switch OFF.
2. Check ground connection E9. Refer to Ground Inspection in GI-45, "Circuit Inspection".

Is the inspection result normal?

YES >> GO TO 2.
NO >> Repair or replace ground connection.

2.CHECK PSP SENSOR POWER SUPPLY CIRCUIT

1. Disconnect power steering pressure (PSP) sensor harness connector.
2. Turn ignition switch ON.

3. Check the voltage between PSP sensor harness connector and ground.

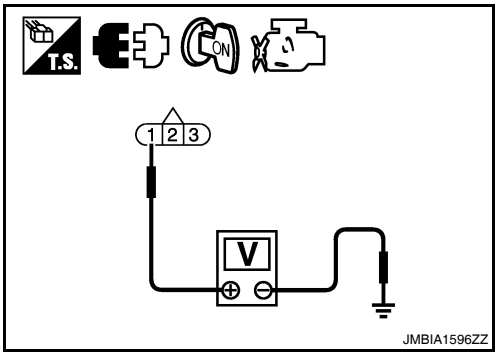

PSP sensor		Ground	Voltage
Connector	Terminal		
F40	1	Ground	Approx. 5V

Is the inspection result normal?

YES >> GO TO 3.
NO >> Repair open circuit or short to ground or short to power in harness or connectors.

3. CHECK PSP SENSOR GROUND CIRCUIT FOR OPEN AND SHORT

1. Turn ignition switch OFF.
2. Disconnect ECM harness connector.
3. Check the continuity between PSP sensor harness connector and ECM harness connector.

PSP sensor		ECM		Continuity
Connector	Terminal	Connector	Terminal	
F40	3	F13	48	Existed

4. Also check harness for short to ground and short to power.

Is the inspection result normal?

YES >> GO TO 4.
NO >> Repair open circuit or short to ground short to power in harness or connectors.

4. CHECK PSP SENSOR INPUT SIGNAL CIRCUIT FOR OPEN AND SHORT

1. Check the continuity between PSP sensor harness connector and ECM harness connector.

PSP sensor		ECM		Continuity
Connector	Terminal	Connector	Terminal	
F40	2	F13	41	Existed

2. Also check harness for short to ground and short to power.

Is the inspection result normal?

YES >> GO TO 5.
NO >> Repair open circuit or short to ground or short to power in harness or connectors.

5. CHECK PSP SENSOR

Refer to EC-860, "Component Inspection".

Is the inspection result normal?

YES >> GO TO 6.
NO >> Replace PSP sensor.

6. CHECK INTERMITTENT INCIDENT

Refer to GI-42, "Intermittent Incident".

>> INSPECTION END

Component Inspection

INFOID:0000000004349824

1. CHECK POWER STEERING PRESSURE SENSOR

1. Turn ignition switch OFF.
2. Reconnect all harness connectors disconnected.
3. Start engine and let it idle.

4. Check the voltage between ECM harness connector and ground under the following conditions.

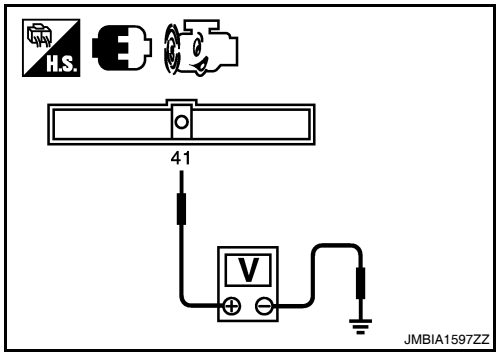

ECM		Condition		Voltage
Connector	Terminal			
F13	41 (Power steering pressure sensor signal)	Steering wheel	Being turned.	0.5 - 4.5V
			Not being turned.	0.4 - 0.8V

Is the inspection result normal?

YES >> INSPECTION END
NO >> Replace power steering pressure sensor.

P0603 ECM POWER SUPPLY

Description

INFOID:0000000004349825

Battery voltage is supplied to the ECM even when the ignition switch is turned OFF for the ECM memory function of the DTC memory, the air-fuel ratio feedback compensation value memory, the idle air volume learning value memory, etc.

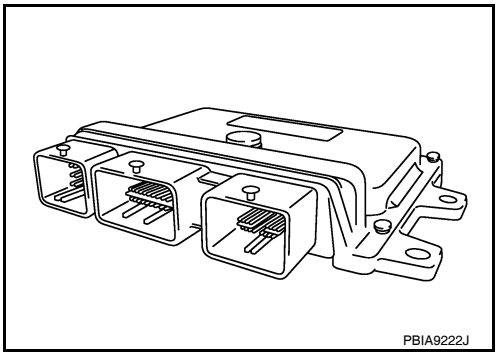

DTC Logic

INFOID:0000000004349826

DTC DETECTION LOGIC

DTC No.	Trouble diagnosis name	DTC detecting condition	Possible cause
P0603	ECM power supply circuit	ECM back-up RAM system does not function properly.	• Harness or connectors [ECM power supply (back-up) circuit is open or shorted.] • ECM

DTC CONFIRMATION PROCEDURE

1.PRECONDITIONING

If DTC Confirmation Procedure has been previously conducted, always turn ignition switch OFF and wait at least 10 seconds before conducting the next test.

>> GO TO 2.

2.PERFORM DTC CONFIRMATION PROCEDURE

1. Turn ignition switch ON and wait at least 1 second.
2. Start engine and let it idle for 1 second.
3. Turn ignition switch OFF, wait at least 10 seconds, and then turn ON.
4. Repeat steps 2 and 3 for four times.
5. Check 1st trip DTC.

Is 1st trip DTC detected?

YES >> Go to EC-862, "Diagnosis Procedure".
NO >> INSPECTION END

Diagnosis Procedure

INFOID:0000000004349827

1.CHECK ECM POWER SUPPLY

1. Turn ignition switch OFF.
2. Disconnect ECM harness connector.

3. Check the voltage between ECM harness connector and ground.

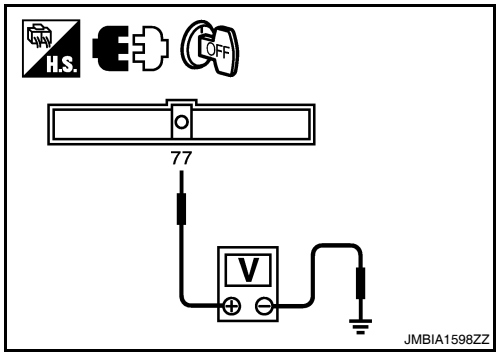

ECM		Ground	Voltage
Connector	Terminal		
F13	77	Ground	Battery voltage

Is the inspection result normal?

YES >> GO TO 3.
NO >> GO TO 2.

2. DETECT MALFUNCTIONING PART

Check the following.
- 15A fuse (No. 42)
- IPDM E/R harness connector F10
- Harness for open or short between ECM and battery

>> Repair or replace harness or connectors.

3. CHECK INTERMITTENT INCIDENT

Refer to GI-42, "Intermittent Incident".

Is the inspection result normal?

YES >> GO TO 4.
NO >> Repair or replace harness or connectors.

4. PERFORM DTC CONFIRMATION PROCEDURE

With CONSULT-III
1. Turn ignition switch ON.
2. Select “SELF-DIAG RESULTS” mode with CONSULT-III.
3. Touch “ERASE”.
4. **Perform DTC CONFIRMATION PROCEDURE.**
   See EC-862, "DTC Logic".

With GST
1. Turn ignition switch ON.
2. Select Service $04 with GST.
3. **Perform DTC CONFIRMATION PROCEDURE.**
   See EC-862, "DTC Logic".

Is the 1st trip DTC P0603 displayed again?

YES >> GO TO 5.
NO >> INSPECTION END

5. REPLACE ECM

1. Replace ECM.
2. Go to EC-563, "ADDITIONAL SERVICE WHEN REPLACING CONTROL UNIT : Special Repair Requirement".

>> INSPECTION END

P0605 ECM

Description

INFOID:0000000004349828

The ECM consists of a microcomputer and connectors for signal input and output and for power supply. The ECM controls the engine.

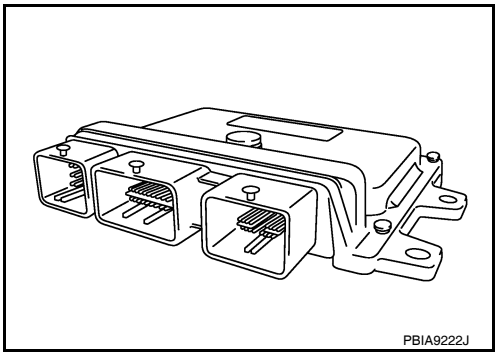

DTC Logic

INFOID:0000000004349829

DTC DETECTION LOGIC

DTC No.	Trouble diagnosis name	DTC detecting condition		Possible cause
P0605	Engine control module	A)	ECM calculation function is malfunctioning.	• ECM
		B)	ECM EEP-ROM system is malfunctioning.	
		C)	ECM self shut-off function is malfunctioning.	

DTC CONFIRMATION PROCEDURE

1.PRECONDITIONING

If DTC Confirmation Procedure has been previously conducted, always turn ignition switch OFF and wait at least 10 seconds before conducting the next test.

>> GO TO 2.

2.PERFORM DTC CONFIRMATION PROCEDURE FOR MALFUNCTION A

1. Turn ignition switch ON.
2. Check 1st trip DTC.

Is 1st trip DTC detected?

YES >> Go to EC-865, "Diagnosis Procedure".
NO >> GO TO 3.

3.PERFORM DTC CONFIRMATION PROCEDURE FOR MALFUNCTION B

1. wait at least 1 second.
2. Turn ignition switch OFF, wait at least 10 seconds, and then turn ON.
3. Check 1st trip DTC.

Is 1st trip DTC detected?

YES >> Go to EC-865, "Diagnosis Procedure".
NO >> GO TO 4.

4.PERFORM DTC CONFIRMATION PROCEDURE FOR MALFUNCTION C

1. wait at least 1 second.
2. Turn ignition switch OFF, wait at least 10 seconds, and then turn ON.
3. Repeat step 2 for 32 times.
4. Check 1st trip DTC.

Is 1st trip DTC detected?

YES >> Go to EC-865, "Diagnosis Procedure".
NO >> INSPECTION END

Diagnosis Procedure

INFOID:0000000004349830

1. INSPECTION START

With CONSULT-III

1. Turn ignition switch ON.
2. Select “SELF-DIAG RESULTS” mode with CONSULT-III.
3. Touch “ERASE”.
4. **Perform DTC CONFIRMATION PROCEDURE.**
   See EC-864, "DTC Logic".

With GST

1. Turn ignition switch ON.
2. Select Service $04 with GST.
3. **Perform DTC CONFIRMATION PROCEDURE.**
   See EC-864, "DTC Logic".

Is the 1st trip DTC P0605 displayed again?

YES >> GO TO 2.
NO >> INSPECTION END

2. REPLACE ECM

1. Replace ECM.
2. Go to EC-563, "ADDITIONAL SERVICE WHEN REPLACING CONTROL UNIT : Special Repair Requirement".

>> INSPECTION END

P0607 ECM

Description

INFOID:0000000004468253

CAN (Controller Area Network) is a serial communication line for real time application. It is an on-vehicle multiplex communication line with high data communication speed and excellent error detection ability. Many electronic control units are equipped onto a vehicle, and each control unit shares information and links with other control units during operation (not independent). In CAN communication, control units are connected with 2 communication lines (CAN H line, CAN L line) allowing a high rate of information transmission with less wiring. Each control unit transmits/receives data but selectively reads required data only.

DTC Logic

INFOID:0000000004349832

DTC DETECTION LOGIC

DTC No.	Trouble diagnosis name	DTC detecting condition	Possible cause
P0607	CAN communication bus	When detecting error during the initial diagnosis of CAN controller of ECM.	• ECM

DTC CONFIRMATION PROCEDURE

1.PERFORM DTC CONFIRMATION PROCEDURE

1. Turn ignition switch ON.
2. Check DTC.

Is DTC detected?

YES >> Go to EC-866, "Diagnosis Procedure".
NO >> INSPECTION END

Diagnosis Procedure

INFOID:0000000004349833

1.INSPECTION START

With CONSULT-III

1. Turn ignition switch ON.
2. Select “SELF-DIAG RESULTS” mode with CONSULT-III.
3. Touch “ERASE”.
4. Perform DTC CONFIRMATION PROCEDURE.
   See EC-866, "DTC Logic".
5. Check DTC.

With GST

1. Turn ignition switch ON.
2. Select “Service $04” with GST.
3. Perform DTC CONFIRMATION PROCEDURE.
   See EC-866, "DTC Logic".
4. Check DTC.

Is the DTC P0607 displayed again?

YES >> GO TO 2.
NO >> INSPECTION END

2.REPLACE ECM

1. Replace ECM.
2. Go to EC-563, "ADDITIONAL SERVICE WHEN REPLACING CONTROL UNIT : Special Repair Requirement".

>> INSPECTION END

P0643 SENSOR POWER SUPPLY

DTC Logic

INFOID:0000000004349834

DTC DETECTION LOGIC

DTC No.	Trouble diagnosis name	DTC detecting condition	Possible cause
P0643	Sensor power supply circuit short	ECM detects a voltage of power source for sensor is excessively low or high.	• Harness or connectors (APP sensor 1 circuit is shorted.) (TP sensor circuit is shorted.) (Battery current sensor circuit is shorted.) (PSP sensor circuit is shorted.) [Camshaft position sensor (PHASE) circuit is shorted.] • Accelerator pedal position sensor • Throttle position sensor • Battery current sensor • Power steering pressure sensor • Camshaft position sensor (PHASE)

DTC CONFIRMATION PROCEDURE

1.PRECONDITIONING

If DTC Confirmation Procedure has been previously conducted, always turn ignition switch OFF and wait at least 10 seconds before conducting the next test.

TESTING CONDITION:

Before performing the following procedure, confirm that battery voltage is more than 8V at idle.

>> GO TO 2.

2.PERFORM DTC CONFIRMATION PROCEDURE

1. Start engine and let it idle for 1 second.
2. Check DTC.

Is DTC detected?

YES >> Go to EC-867, "Diagnosis Procedure".
NO >> INSPECTION END

Diagnosis Procedure

INFOID:0000000004349835

1.CHECK GROUND CONNECTION

1. Turn ignition switch OFF.
2. Check ground connection E9. Refer to Ground Inspection in GI-45, "Circuit Inspection".

Is the inspection result normal?

YES >> GO TO 2.
NO >> Repair or replace ground connection.

2.CHECK ACCELERATOR PEDAL POSITION SENSOR 1 POWER SUPPLY CIRCUIT

1. Disconnect accelerator pedal position (APP) sensor harness connector.
2. Turn ignition switch ON.

3. Check the voltage between APP sensor harness connector and ground.

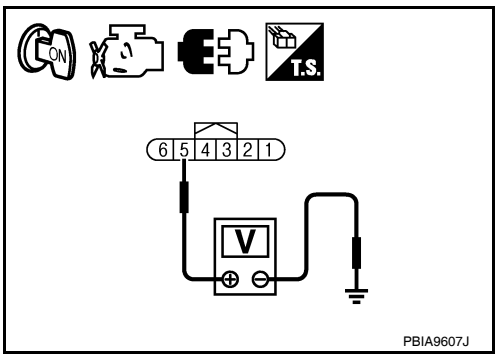

APP sensor		Ground	Voltage
Connector	Terminal		
E40	5	Ground	Approx. 5V

Is the inspection result normal?

YES >> GO TO 7.
NO >> GO TO 3.

3. CHECK SENSOR POWER SUPPLY CIRCUITS

Check harness for short to power and short to ground, between the following terminals.

ECM		Sensor		
Connector	Terminal	Name	Connector	Terminal
F13	47	Electric throttle control actuator	F57	1
	51	Battery current sensor	F5	1
	55	PSP sensor	F40	1
	59	CMP sensor (PHASE)	F55	1
E10	83	APP sensor	E40	5

Is the inspection result normal?

YES >> GO TO 4.
NO >> Repair short to ground or short to power in harness or connectors.

4. CHECK COMPONENTS

Check the following.
- Battery current sensor (Refer to EC-885, "Component Inspection".)
- Power steering pressure sensor (Refer to EC-860, "Component Inspection".)
- Camshaft position sensor (PHASE) (Refer to EC-789, "Component Inspection".)

Is the inspection result normal?

YES >> GO TO 5.
NO >> Replace malfunctioning component.

5. CHECK TP SENSOR

Refer to EC-716, "Component Inspection".

Is the inspection result normal?

YES >> GO TO 9.
NO >> GO TO 6.

6. REPLACE ELECTRIC THROTTLE CONTROL ACTUATOR

1. Replace electric throttle control actuator.
2. Go to EC-565, "ACCELERATOR PEDAL RELEASED POSITION LEARNING : Special Repair Requirement".

>> INSPECTION END

7. CHECK APP SENSOR

Refer to EC-926, "Component Inspection".

Is the inspection result normal?

YES >> GO TO 9.
NO >> GO TO 8.

8. REPLACE ACCELERATOR PEDAL ASSEMBLY

1. Replace accelerator pedal assembly.

2. Go to EC-926, "Special Repair Requirement".

>> INSPECTION END

9. CHECK INTERMITTENT INCIDENT

Refer to GI-42, "Intermittent Incident".

>> INSPECTION END

P0850 PNP SWITCH

Description

INFOID:0000000004349836

When the shift lever position is P or N (CVT), Neutral position (M/T), park/neutral position (PNP) switch is ON. ECM detects the position because the continuity of the line (the ON signal) exists.

DTC Logic

INFOID:0000000004349837

DTC DETECTION LOGIC

DTC No.	Trouble diagnosis name	DTC detecting condition	Possible cause
P0850	Park/neutral position switch	The signal of the park/neutral position (PNP) switch is not changed in the process of engine starting and driving.	• Harness or connectors [The park/neutral position (PNP) switch circuit is open or shorted.] • Park/neutral position (PNP) switch

DTC CONFIRMATION PROCEDURE

1. INSPECTION START

Do you have CONSULT-III?

Do you have CONSULT-III?

YES >> GO TO 2.
NO >> GO TO 5.

2. PRECONDITIONING

If DTC Confirmation Procedure has been previously conducted, always turn ignition switch OFF and wait at least 10 seconds before conducting the next test.

>> GO TO 3.

3. CHECK PNP SWITCH FUNCTION

With CONSULT-III

1. Turn ignition switch ON.
2. Select “P/N POSI SW” in “DATA MONITOR” mode with CONSULT-III. Then check the “P/N POSI SW” signal under the following conditions.

Position (Shift lever)	Known-good signal
N or P position (CVT) Neutral position (M/T)	ON
Except above position	OFF

Is the inspection result normal?

YES >> GO TO 4.
NO >> Go to EC-871, "Diagnosis Procedure".

4. PERFORM DTC CONFIRMATION PROCEDURE

1. Select “DATA MONITOR” mode with CONSULT-III.
2. Start engine and warm it up to normal operating temperature.
3. Maintain the following conditions for at least 50 consecutive seconds.
   CAUTION:
   Always drive vehicle at a safe speed.

ENG SPEED	CVT: 1,300 - 6,375 rpm M/T: 1,500 - 6,375 rpm
COOLAN TEMP/S	More than 70°C (158°F)

B/FUEL SCHDL	CVT: 3.0 - 31.8 msec M/T: 2.1 - 31.8 msec
VHCL SPEED SE	More than 64 km/h (40 mph)
Shift lever	Suitable position

4. Check 1st trip DTC.

Is 1st trip DTC detected?

YES >> Go to EC-871, "Diagnosis Procedure".
NO >> INSPECTION END

5. PERFORM COMPONENT FUNCTION CHECK

Perform component function check. Refer to EC-871, "Component Function Check".

NOTE:
Use component function check the overall function of the park/neutral position (PNP) switch circuit. During this check, a 1st trip DTC might not be confirmed.

Is the inspection result normal?

YES >> INSPECTION END
NO >> Go to EC-871, "Diagnosis Procedure".

Component Function Check

INFOID:0000000004349838

1. PERFORM COMPONENT FUNCTION CHECK

1. Turn ignition switch ON.
2. Check the voltage between ECM harness connector and ground.

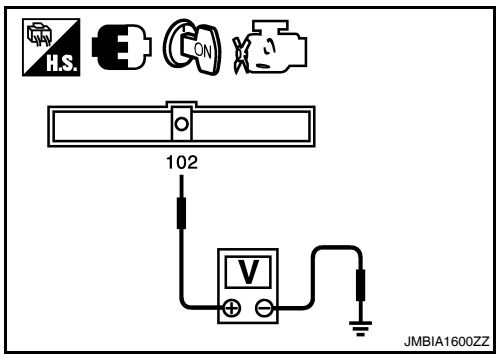

ECM		Ground	Condition		Voltage
Connector	Terminal				
E10	102 (PNP switch signal)	Ground	Shift lever	P or N (CVT) Neutral (M/T)	Approx. 0V
				Except above	Battery voltage

Is the inspection result normal?

YES >> INSPECTION END
NO >> Go to EC-871, "Diagnosis Procedure".

Diagnosis Procedure

INFOID:0000000004349839

1. CHECK PNP SWITCH POWER SUPPLY CIRCUIT

1. Turn ignition switch OFF.
2. Disconnect Park/neutral position (PNP) switch harness connector.
3. Turn ignition switch ON.
4. Check the voltage between PNP switch harness connector and ground.

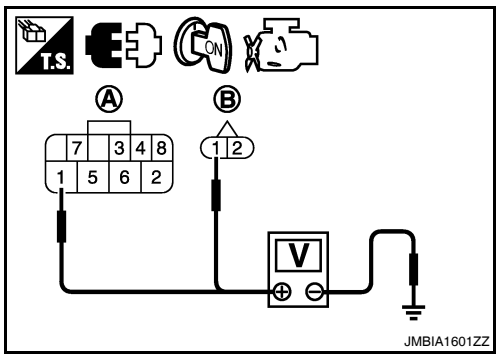

PNP switch		Ground	Voltage
Connector	Terminal		
F25 (CVT) (A) F32 (M/T) (B)	1	Ground	Battery voltage

Is the inspection result normal?

YES >> GO TO 2.
NO >> Repair open circuit or short to ground or short to power in harness or connectors.

2. CHECK PNP SWITCH INPUT SIGNAL CIRCUIT FOR OPEN AND SHORT-I

1. Turn ignition switch OFF.
2. Disconnect ECM harness connector.
3. Check the continuity between PNP switch harness connector and ECM harness connector.

PNP switch		ECM		Continuity
Connector	Terminal	Connector	Terminal	
F25 (CVT) F32 (M/T)	2	E10	102	Existed

4. Also check harness for short to ground and short to power.

Is the inspection result normal?

YES >> GO TO 4.
NO-1 >> Repair open circuit or short to ground or short to power in harness or connectors.
NO-2 >> CVT: GO TO 3.

3. CHECK PNP SWITCH INPUT SIGNAL CIRCUIT FOR OPEN AND SHORT-II

1. Check the continuity between PNP switch harness connector and ECM harness connector.

PNP switch		IPDM E/R		Continuity
Connector	Terminal	Connector	Terminal	
F25	2	F10	72	Existed

2. Check the continuity between IPDM E/R harness connector and ECM harness connector.

ECM		IPDM E/R		Continuity
Connector	Terminal	Connector	Terminal	
F10	102	E18	30	Existed

3. Also check harness for short to ground and short to power.

Is the inspection result normal?

YES >> GO TO 4.
NO >> Repair open circuit or short to ground or short to power in harness or connectors.

4. CHECK PNP SWITCH

Refer to TM-308, "Component Inspection (Park/Neutral Position Switch)" (CVT) or TM-20, "Inspection" (M/T).

Is the inspection result normal?

YES >> GO TO 5.
NO >> Replace PNP switch.

5. CHECK INTERMITTENT INCIDENT

Refer to GI-42, "Intermittent Incident".

>> INSPECTION END

P1148 CLOSED LOOP CONTROL

DTC Logic

INFOID:0000000004349840

DTC DETECTION LOGIC

NOTE:
DTC P1148 is displayed with another DTC for A/F sensor 1.
Perform the trouble diagnosis for the corresponding DTC.

DTC No.	Trouble diagnosis name	DTC detecting condition	Possible cause
P1148	Closed loop control function	The closed loop control function for bank 1 does not operate even when vehicle is driving in the specified condition.	• Harness or connectors (The A/F sensor 1 circuit is open or short-ed.) • A/F sensor 1 • A/F sensor 1 heater
		The closed loop control function for bank 2 does not operate even when vehicle is driving in the specified condition.	

P1217 ENGINE OVER TEMPERATURE

DTC Logic

INFOID:0000000004349841

DTC DETECTION LOGIC

NOTE:
- **If DTC P1217 is displayed with DTC UXXXX, first perform the trouble diagnosis for DTC UXXXX.**
- **If DTC P1217 is displayed with DTC P0607, first perform the trouble diagnosis for DTC P0607. Refer to EC-866, "DTC Logic".**

If the cooling fan or another component in the cooling system malfunctions, engine coolant temperature will rise.
When the engine coolant temperature reaches an abnormally high temperature condition, a malfunction is indicated.

DTC No.	Trouble diagnosis name	DTC detecting condition	Possible cause
P1217	Engine over temperature (Overheat)	• Cooling fan does not operate properly (Overheat). • Cooling fan system does not operate properly (Overheat). • Engine coolant was not added to the system using the proper filling method. • Engine coolant is not within the specified range.	• Harness or connectors (The cooling fan circuit is open or shorted.) • IPDM E/R (Cooling fan relay-1) • Cooling fan relays-2 and -3 • Cooling fan motor • Radiator hose • Radiator • Radiator cap • Reservoir tank • Water pump • Thermostat • Water control valve

CAUTION:
When a malfunction is indicated, be sure to replace the coolant. Refer to CO-12, "Changing Engine Coolant". Also, replace the engine oil. Refer to LU-10, "Changing Engine Oil".
1. **Fill radiator with coolant up to specified level with a filling speed of 2 liters per minute. Be sure to use coolant with the proper mixture ratio. Refer to MA-12, "Engine Oil Recommendation".**
2. **After refilling coolant, run engine to ensure that no water-flow noise is emitted.**

DTC CONFIRMATION PROCEDURE

1. PERFORM COMPONENT FUNCTION CHECK

Perform component function check. Refer to EC-874, "Component Function Check".
NOTE:
Use component function check to check the overall function of the cooling fan. During this check, a DTC might not be confirmed.

Is the inspection result normal?

YES >> INSPECTION END
NO >> Go to EC-875, "Diagnosis Procedure".

Component Function Check

INFOID:0000000004349842

1. PERFORM COMPONENT FUNCTION CHECK-I

WARNING:
Never remove the radiator cap when the engine is hot. Serious burns could be caused by high pressure fluid escaping from the radiator.
Wrap a thick cloth around cap. Carefully remove the cap by turning it a quarter turn to allow built-up pressure to escape. Then turn the cap all the way off.

Check the coolant level in the reservoir tank and radiator.
Allow engine to cool before checking coolant level.

Is the coolant level in the reservoir tank and/or radiator below the proper range?

YES >> Go to EC-875, "Diagnosis Procedure".
NO >> GO TO 2.

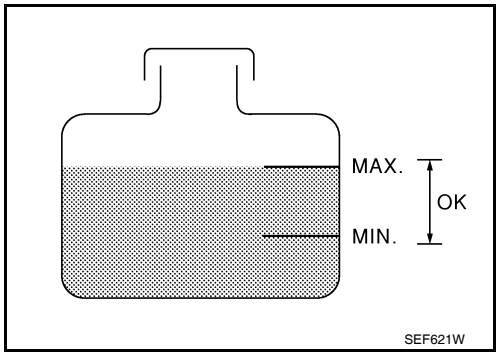

2. PERFORM COMPONENT FUNCTION CHECK-II

Confirm whether customer filled the coolant or not.

Did customer fill the coolant?

YES >> Go to EC-875, "Diagnosis Procedure".
NO >> GO TO 3.

3. PERFORM COMPONENT FUNCTION CHECK-III

With CONSULT-III
1. Turn ignition switch ON.
2. Perform “COOLING FAN” in “ACTIVE TEST” mode with CONSULT-III.
3. Make sure that cooling fan motors-1 and -2 operate at each speed (LOW/HI).

Without CONSULT-III
Perform IPDM E/R auto active test and check cooling fan motors operation, refer to PCS-14, "Diagnosis Description".

Is the inspection result normal?

YES >> INSPECTION END
NO >> Go to EC-875, "Diagnosis Procedure".

Diagnosis Procedure

INFOID:0000000004349843

1. CHECK COOLING FAN OPERATION

With CONSULT-III
1. Turn ignition switch ON.
2. Perform “COOLING FAN” in “ACTIVE TEST” mode with CONSULT-III.
3. Make sure that cooling fan motors-1 and -2 operate at each speed (LOW/HI).

Without CONSULT-III
1. Perform IPDM E/R auto active test and check cooling fan motors operation, refer to PCS-14, "Diagnosis Description".
2. Make sure that cooling fan motors-1 and -2 operate at each speed (Low/High).

Is the inspection result normal?

YES >> GO TO 2.
NO >> Go to EC-949, "Diagnosis Procedure".

2. CHECK COOLING SYSTEM FOR LEAK-I

Check cooling system for leak. Refer to CO-11, "System Inspection".

Is leakage detected?

YES >> GO TO 3.
NO >> GO TO 4.

3. CHECK COOLING SYSTEM FOR LEAK-II

Check the following for leak. Refer to CO-11, "System Inspection".
- Hose
- Radiator
- Water pump

>> Repair or replace malfunctioning part.

4. CHECK RADIATOR CAP

Check radiator cap. Refer to CO-11, "System Inspection".

Is the inspection result normal?

YES >> GO TO 5.
NO >> Replace radiator cap.

5. CHECK THERMOSTAT

Check thermostat. Refer to CO-21, "Removal and Installation".

Is the inspection result normal?

YES >> GO TO 6.
NO >> Replace thermostat.

6. CHECK WATER CONTROL VALVE

Check water control valve. Refer to CO-23, "Removal and Installation".

Is the inspection result normal?

YES >> GO TO 7.
NO >> Replace water control valve

7. CHECK ENGINE COOLANT TEMPERATURE SENSOR

Refer to EC-712, "Component Inspection".

Is the inspection result normal?

YES >> GO TO 8.
NO >> Replace engine coolant temperature sensor.

8. CHECK MAIN 13 CAUSES

If the cause cannot be isolated, check the following.

Engine	Step	Inspection item	Equipment	Standard	Reference page
OFF	1	• Blocked radiator • Blocked condenser • Blocked radiator grille • Blocked bumper	• Visual	No blocking	—
	2	• Coolant mixture	• Coolant tester	MA-12, "Engine Oil Recommendation"	
	3	• Coolant level	• Visual	Coolant up to MAX level in reservoir tank and radiator filler neck	CO-12, "Changing Engine Coolant"
	4	• Radiator cap	• Pressure tester	CO-11, "System Inspection"	
ON*2	5	• Coolant leaks	• Visual	No leaks	CO-11, "System Inspection"
ON*2	6	• Thermostat	• Touch the upper and lower radiator hoses	Both hoses should be hot	CO-21, "Removal and Installation"
ON*1	7	• Cooling fan motor	• CONSULT-III	Operating	EC-369, "Component Function Check"
OFF	8	• Combustion gas leak	• Color checker chemical tester 4 Gas analyzer	Negative	—
ON*3	9	• Coolant temperature gauge	• Visual	Gauge less than 3/4 when driving	—
		• Coolant overflow to reservoir tank	• Visual	No overflow during driving and idling	CO-11, "System Inspection"
OFF*4	10	• Coolant return from reservoir tank to radiator	• Visual	Should be initial level in reservoir tank	CO-11, "System Inspection"
OFF	11	• Water control valve	• Remove and inspect the valve	Within the specified value	CO-23, "Removal and Installation"

Engine	Step	Inspection item	Equipment	Standard	Reference page
OFF	12	• Cylinder head	• Straight gauge feeler gauge	0.1 mm (0.004 in) Maximum distortion (warping)	EM-68, "Inspection After Disassembly"
	13	• Cylinder block and pistons	• Visual	No scuffing on cylinder walls or piston	EM-83, "Inspection After Disassembly"

*1: Turn the ignition switch ON.

*2: Engine running at 3,000 rpm for 10 minutes.

*3: Drive at 90 km/h (56 MPH) for 30 minutes and then let idle for 10 minutes.

*4: After 60 minutes of cool down time.

For more information, refer to CO-9, "Troubleshooting Chart".

>> INSPECTION END

P1225 TP SENSOR

Description

INFOID:0000000004349844

Electric throttle control actuator consists of throttle control motor, throttle position sensor, etc. The throttle position sensor responds to the throttle valve movement.
The throttle position sensor has two sensors. These sensors are a kind of potentiometers which transform the throttle valve position into output voltage, and emit the voltage signal to the ECM. In addition, these sensors detect the opening and closing speed of the throttle valve and feed the voltage signals to the ECM. The ECM judges the current opening angle of the throttle valve from these signals and the ECM controls the throttle control motor to make the throttle valve opening angle properly in response to driving condition.

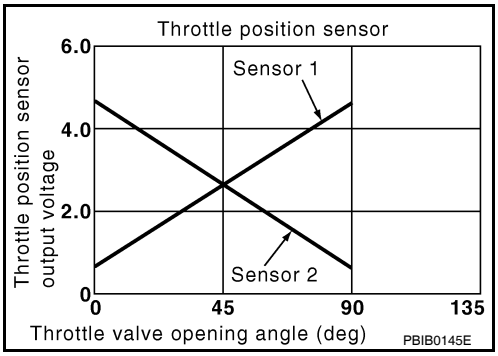

DTC Logic

INFOID:0000000004349845

DTC DETECTION LOGIC

DTC No.	Trouble diagnosis name	DTC detecting condition	Possible cause
P1225	Closed throttle position learning performance	Closed throttle position learning value is excessively low.	• Electric throttle control actuator (TP sensor 1 and 2)

DTC CONFIRMATION PROCEDURE

1.PRECONDITIONING

If DTC Confirmation Procedure has been previously conducted, always turn ignition switch OFF and wait at least 10 seconds before conducting the next test.
TESTING CONDITION:
Before performing the following procedure, confirm that battery voltage is more than 10V at idle.

>> GO TO 2.

2.PERFORM DTC CONFIRMATION PROCEDURE

1. Turn ignition switch ON.
2. Turn ignition switch OFF and wait at least 10 seconds.
3. Turn ignition switch ON.
4. Check 1st trip DTC.

Is 1st trip DTC detected?

YES >> Go to EC-878, "Diagnosis Procedure".
NO >> INSPECTION END

Diagnosis Procedure

INFOID:0000000004349846

1.CHECK ELECTRIC THROTTLE CONTROL ACTUATOR VISUALLY

1. Turn ignition switch OFF.
2. Remove the intake air duct.

3. Check if foreign matter is caught between the throttle valve (1) and the housing.

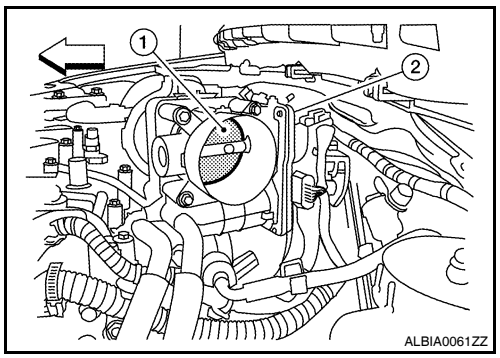

2. Electric throttle control actuator

⇦ : Vehicle front

Is the inspection result normal?

YES >> GO TO 2.
NO >> Remove the foreign matter and clean the electric throttle control actuator inside.

2. REPLACE ELECTRIC THROTTLE CONTROL ACTUATOR

1. Replace electric throttle control actuator.
2. Go to EC-923, "Special Repair Requirement".

>> INSPECTION END

Special Repair Requirement

INFOID:0000000004349847

1. PERFORM THROTTLE VALVE CLOSED POSITION LEARNING

Refer to EC-565, "THROTTLE VALVE CLOSED POSITION LEARNING : Special Repair Requirement"

>> GO TO 2.

2. PERFORM IDLE AIR VOLUME LEARNING

Refer to EC-566, "IDLE AIR VOLUME LEARNING : Special Repair Requirement"

>> END

P1226 TP SENSOR

Description

INFOID:0000000004349848

Electric throttle control actuator consists of throttle control motor, throttle position sensor, etc. The throttle position sensor responds to the throttle valve movement.
The throttle position sensor has two sensors. These sensors are a kind of potentiometers which transform the throttle valve position into output voltage, and emit the voltage signal to the ECM. In addition, these sensors detect the opening and closing speed of the throttle valve and feed the voltage signals to the ECM. The ECM judges the current opening angle of the throttle valve from these signals and the ECM controls the throttle control motor to make the throttle valve opening angle properly in response to driving condition.

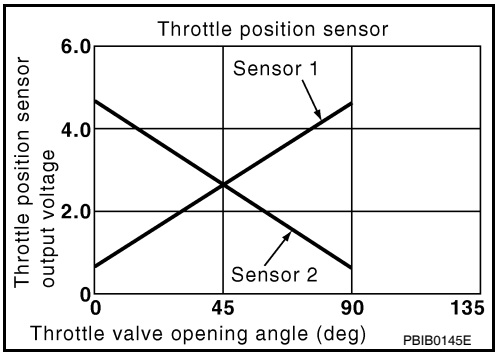

DTC Logic

INFOID:0000000004349849

DTC DETECTION LOGIC

DTC No.	Trouble diagnosis name	DTC detecting condition	Possible cause
P1226	Closed throttle position learning performance	Closed throttle position learning is not performed successfully, repeatedly.	• Electric throttle control actuator (TP sensor 1 and 2)

DTC CONFIRMATION PROCEDURE

1.PRECONDITIONING

If DTC Confirmation Procedure has been previously conducted, always turn ignition switch OFF and wait at least 10 seconds before conducting the next test.
TESTING CONDITION:
Before performing the following procedure, confirm that battery voltage is more than 10V at idle.

>> GO TO 2.

2.PERFORM DTC CONFIRMATION PROCEDURE

1. Turn ignition switch ON.
2. Turn ignition switch OFF, wait at least 10 seconds.
3. Turn ignition switch ON.
4. Repeat steps 2 and 3 for 32 times.
5. Check 1st trip DTC.

Is 1st trip DTC detected?

YES >> Go to EC-880, "Diagnosis Procedure".
NO >> INSPECTION END

Diagnosis Procedure

INFOID:0000000004349850

1.CHECK ELECTRIC THROTTLE CONTROL ACTUATOR VISUALLY

1. Turn ignition switch OFF.
2. Remove the intake air duct.

3. Check if foreign matter is caught between the throttle valve (1) and the housing.

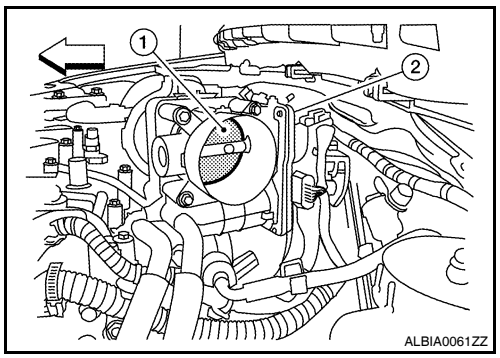

2. Electric throttle control actuator

⇦ : Vehicle front

Is the inspection result normal?

YES >> GO TO 2.
NO >> Remove the foreign matter and clean the electric throttle control actuator inside.

2. REPLACE ELECTRIC THROTTLE CONTROL ACTUATOR

1. Replace electric throttle control actuator.
2. Go to EC-923, "Special Repair Requirement".

>> INSPECTION END

Special Repair Requirement

INFOID:0000000004349851

1. PERFORM THROTTLE VALVE CLOSED POSITION LEARNING

Refer to EC-565, "THROTTLE VALVE CLOSED POSITION LEARNING : Special Repair Requirement"

>> GO TO 2.

2. PERFORM IDLE AIR VOLUME LEARNING

Refer to EC-566, "IDLE AIR VOLUME LEARNING : Special Repair Requirement"

>> END

P1421 COLD START CONTROL

Description

INFOID:0000000004349852

ECM controls ignition timing and engine idle speed when engine is started with prewarming up condition. This control promotes the activation of three way catalyst by heating the catalyst and reduces emissions.

DTC Logic

INFOID:0000000004349853

DTC DETECTION LOGIC

NOTE:
If DTC P1421 is displayed with other DTC, first perform the trouble diagnosis for other DTC.

DTC No.	Trouble diagnosis name	DTC detecting condition	Possible cause
P1421	Cold start emission reduction strategy monitoring	ECM does not control ignition timing and engine idle speed properly when engine is started with prewarming up condition.	• Lack of intake air volume • Fuel injection system • ECM

DTC CONFIRMATION PROCEDURE

1.PRECONDITIONING

If DTC Confirmation Procedure has been previously conducted, always turn ignition switch OFF and wait at least 10 seconds before conducting the next test.
TESTING CONDITION:
Before performing the following procedure, confirm that battery voltage is more than 11V at idle.

>> GO TO 2.

2.PERFORM DTC CONFIRMATION PROCEDURE

With CONSULT-III
1. Turn ignition switch OFF and wait at least 10 seconds.
2. Turn ignition switch ON.
3. Select “DATA MONITOR” mode with CONSULT-III.
4. Check that the “COOLAN TEMP/S” indication is between 4°C (39°F) and 36°C (97°F).
   If “COOLAN TEMP/S” indication is within the specified value, go to the following step.
   If “COOLAN TEMP/S” indication is out of the specified value, cool engine down or warm engine up and go to step 1.
5. Start engine and let it idle for 5 minutes.
6. Check 1st trip DTC.

With GST
Follow the procedure “With CONSULT-III” above.

Is 1st trip DTC detected?

YES >> Go to EC-882, "Diagnosis Procedure".
NO >> INSPECTION END

Diagnosis Procedure

INFOID:0000000004349854

1.PERFORM IDLE AIR VOLUME LEARNING

Perform EC-566, "IDLE AIR VOLUME LEARNING : Special Repair Requirement".

Is Idle Air Volume Learning carried out successfully?

YES >> GO TO 2.
NO >> Follow the instruction of Idle Air Volume Learning.

2.CHECK INTAKE SYSTEM

Check for the cause of intake air volume lacking. Refer to the following.
- Crushed intake air passage
- Intake air passage clogging

Is the inspection result normal?

YES >> GO TO 3.
NO >> Repair or replace malfunctioning part

3. CHECK FUEL INJECTION SYSTEM FUNCTION

Perform DTC CONFIRMATION PROCEDURE for DTC P0171. Refer to EC-759, "DTC Logic".

Is the inspection result normal?

YES >> GO TO 4.
NO >> Go to EC-760, "Diagnosis Procedure" for DTC P0171.

4. PERFORM DTC CONFIRMATION PROCEDURE

With CONSULT-III

1. Turn ignition switch ON.
2. Select “SELF DIAG RESULTS” mode with CONSULT-III.
3. Touch “ERASE”.
4. **Perform DTC CONFIRMATION PROCEDURE.**
   See EC-882, "DTC Logic".

With GST

1. Turn ignition switch ON.
2. Select Service $04 with GST.
3. **Perform DTC CONFIRMATION PROCEDURE.**
   See EC-882, "DTC Logic".

Is the 1st trip DTC P1421 displayed again?

YES >> GO TO 5.
NO >> INSPECTION END

5. REPLACE ECM

1. Replace ECM.
2. Go to EC-563, "ADDITIONAL SERVICE WHEN REPLACING CONTROL UNIT : Special Repair Requirement".

>> INSPECTION END

P1550 BATTERY CURRENT SENSOR

Description

INFOID:0000000004349855

The power generation voltage variable control enables fuel consumption to be decreased by reducing the engine load which is caused by the power generation of the generator. The battery current sensor is installed to the battery cable at the negative terminal. The sensor measures the charging/discharging current of the battery. Based on the sensor signal, ECM judges whether or not the power generation voltage variable control is performed. When performing the power generation voltage variable control, ECM calculates the target power generation voltage based on the sensor signal. And ECM sends the calculated value as the power generation command value to IPDM E/R. For the details of the power generation voltage variable control, refer to CHG-5, "System Description".

CAUTION:

Do not connect the electrical component or the ground wire directly to the battery terminal. The connection causes the malfunction of the power generation voltage variable control, and then the battery discharge may occur.

DTC Logic

INFOID:0000000004349856

DTC DETECTION LOGIC

NOTE:

If DTC P1550 is displayed with DTC P0643, first perform the trouble diagnosis for DTC P0643. Refer to EC-867, "DTC Logic".

DTC No.	Trouble diagnosis name	DTC detecting condition	Possible cause
P1550	Battery current sensor circuit range/performance	The output voltage of the battery current sensor remains within the specified range while engine is running.	• Harness or connectors (The sensor circuit is open or shorted.) • Battery current sensor

DTC CONFIRMATION PROCEDURE

1.PRECONDITIONING

If DTC Confirmation Procedure has been previously conducted, always turn ignition switch OFF and wait at least 10 seconds before conducting the next test.

TESTING CONDITION:

Before performing the following procedure, confirm that battery voltage is more than 8V at idle.

>> GO TO 2.

2.PERFORM DTC CONFIRMATION PROCEDURE

1. Start engine and wait at least 10 seconds.
2. Check 1st trip DTC.

Is 1st trip DTC detected?

YES >> Go to EC-884, "Diagnosis Procedure".
NO >> INSPECTION END

Diagnosis Procedure

INFOID:0000000004349857

1.CHECK GROUND CONNECTION

1. Turn ignition switch OFF.
2. Check ground connection E9. Refer to Ground Inspection in GI-45, "Circuit Inspection".

Is the inspection result normal?

YES >> GO TO 2.
NO >> Repair or replace ground connection.

2.CHECK BATTERY CURRENT SENSOR POWER SUPPLY CIRCUIT

1. Disconnect battery current sensor harness connector.
2. Turn ignition switch ON.

3. Check the voltage between battery current sensor harness connector and ground.

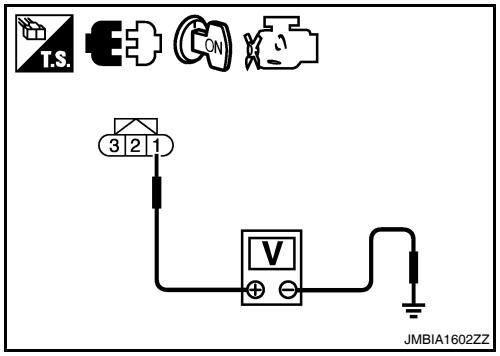

Battery current sensor		Ground	Voltage
Connector	Terminal		
F5	1	Ground	Approx. 5V

Is the inspection result normal?

YES >> GO TO 3.
NO >> Repair open circuit or sort to ground or short to power in harness or connectors.

3. CHECK BATTERY CURRENT SENSOR GROUND CIRCUIT FOR OPEN AND SHORT

1. Turn ignition switch OFF.
2. Disconnect ECM harness connector.
3. Check the continuity between battery current sensor harness connector and ECM harness connector.

Battery current sensor		ECM		Continuity
Connector	Terminal	Connector	Terminal	
F5	2	F13	44	Existed

4. Also check harness for short to ground and short to power.

Is the inspection result normal?

YES >> GO TO 4.
NO >> Repair open circuit or sort to ground or short to power in harness or connectors.

4. CHECK BATTERY CURRENT SENSOR INPUT SIGNAL CIRCUIT FOR OPEN AND SHORT

1. Check the continuity between battery current sensor harness connector and ECM harness connector.

Battery current sensor		ECM		Continuity
Connector	Terminal	Connector	Terminal	
F5	3	F13	42	Existed

2. Also check harness for short to ground and short to power.

Is the inspection result normal?

YES >> GO TO 5.
NO >> Repair open circuit or sort to ground or short to power in harness or connectors.

5. CHECK BATTERY CURRENT SENSOR

Refer to EC-885, "Component Inspection".

Is the inspection result normal?

YES >> GO TO 6.
NO >> Replace battery negative cable assembly.

6. CHECK INTERMITTENT INCIDENT

Refer to GI-42, "Intermittent Incident".

>> INSPECTION END

Component Inspection

INFOID:0000000004349858

1. CHECK BATTERY CURRENT SENSOR

1. Reconnect harness connectors disconnected.

2. Disconnect battery negative cable (1).

   ⬅: To body ground

3. Install jumper cable (A) between battery negative terminal and body ground.
4. Turn ignition switch ON.

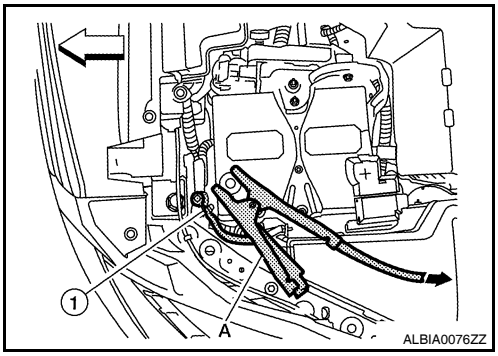

5. Check the voltage between ECM harness connector and ground.

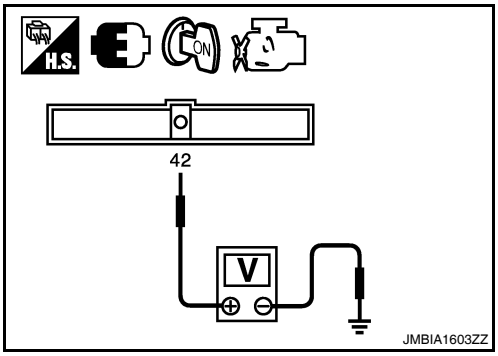

ECM		Ground	Voltage
Connector	Terminal		
F13	42 (Battery current sensor signal)	Ground	Approx. 2.5V

Is the inspection result normal?

YES >> INSPECTION END
NO >> Replace battery negative cable assembly.

P1551, P1552 BATTERY CURRENT SENSOR

Description

INFOID:0000000004349859

The power generation voltage variable control enables fuel consumption to be decreased by reducing the engine load which is caused by the power generation of the generator. The battery current sensor is installed to the battery cable at the negative terminal. The sensor measures the charging/discharging current of the battery. Based on the sensor signal, ECM judges whether or not the power generation voltage variable control is performed. When performing the power generation voltage variable control, ECM calculates the target power generation voltage based on the sensor signal. And ECM sends the calculated value as the power generation command value to IPDM E/R. For the details of the power generation voltage variable control, refer to CHG-5, "System Description".

CAUTION:

Do not connect the electrical component or the ground wire directly to the battery terminal. The connection causes the malfunction of the power generation voltage variable control, and then the battery discharge may occur.

DTC Logic

INFOID:0000000004349860

DTC DETECTION LOGIC

NOTE:

If DTC P1551 or P1552 is displayed with DTC P0643, first perform the trouble diagnosis for DTC P0643. Refer to EC-867, "DTC Logic".

DTC No.	Trouble diagnosis name	DTC detecting condition	Possible cause
P1551	Battery current sensor circuit low input	An excessively low voltage from the sensor is sent to ECM.	• Harness or connectors (The sensor circuit is open or shorted.) • Battery current sensor
P1552	Battery current sensor circuit high input	An excessively high voltage from the sensor is sent to ECM.	

DTC CONFIRMATION PROCEDURE

1. PRECONDITIONING

If DTC Confirmation Procedure has been previously conducted, always turn ignition switch OFF and wait at least 10 seconds before conducting the next test.

TESTING CONDITION:

Before performing the following procedure, confirm that battery voltage is more than 8V with ignition switch ON

>> GO TO 2.

2. PERFORM DTC CONFIRMATION PROCEDURE

1. Turn ignition switch ON wait at least 10 seconds.
2. Check 1st trip DTC.

Is 1st trip DTC detected?

YES >> Go to EC-887, "Diagnosis Procedure".
NO >> INSPECTION END

Diagnosis Procedure

INFOID:0000000004349861

1. CHECK GROUND CONNECTION

1. Turn ignition switch OFF.
2. Check ground connection E9. Refer to Ground Inspection in GI-45, "Circuit Inspection".

Is the inspection result normal?

YES >> GO TO 2.
NO >> Repair or replace ground connection.

2. CHECK BATTERY CURRENT SENSOR POWER SUPPLY CIRCUIT

1. Disconnect battery current sensor harness connector.
2. Turn ignition switch ON.
3. Check the voltage between battery current sensor harness connector and ground.

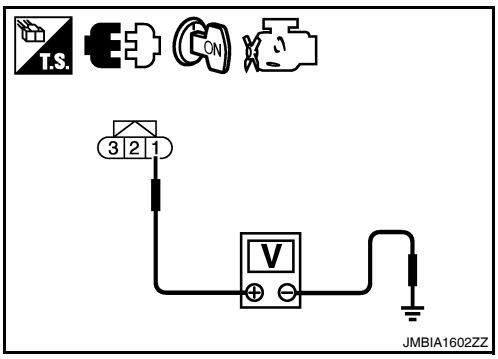

Battery current sensor		Ground	Voltage
Connector	Terminal		
F5	1	Ground	Approx. 5V

Is the inspection result normal?

YES >> GO TO 3.
NO >> Repair open circuit or sort to ground or short to power in harness or connectors.

3. CHECK BATTERY CURRENT SENSOR GROUND CIRCUIT FOR OPEN AND SHORT

1. Turn ignition switch OFF.
2. Disconnect ECM harness connector.
3. Check the continuity between battery current sensor harness connector and ECM harness connector.

Battery current sensor		ECM		Continuity
Connector	Terminal	Connector	Terminal	
F5	2	F13	44	Existed

4. Also check harness for short to ground and short to power.

Is the inspection result normal?

YES >> GO TO 4.
NO >> Repair open circuit or sort to ground or short to power in harness or connectors.

4. CHECK BATTERY CURRENT SENSOR INPUT SIGNAL CIRCUIT FOR OPEN AND SHORT

1. Check the continuity between battery current sensor harness connector and ECM harness connector.

Battery current sensor		ECM		Continuity
Connector	Terminal	Connector	Terminal	
F5	3	F13	42	Existed

2. Also check harness for short to ground and short to power.

Is the inspection result normal?

YES >> GO TO 5.
NO >> Repair open circuit or sort to ground or short to power in harness or connectors.

5. CHECK BATTERY CURRENT SENSOR

Refer to EC-888, "Component Inspection".

Is the inspection result normal?

YES >> GO TO 6.
NO >> Replace battery negative cable assembly.

6. CHECK INTERMITTENT INCIDENT

Refer to GI-42, "Intermittent Incident".

>> INSPECTION END

Component Inspection

INFOID:0000000004349862

1. CHECK BATTERY CURRENT SENSOR

1. Reconnect harness connectors disconnected.

2. Disconnect battery negative cable (1).

   ⬅: To body ground

3. Install jumper cable (A) between battery negative terminal and body ground.
4. Turn ignition switch ON.

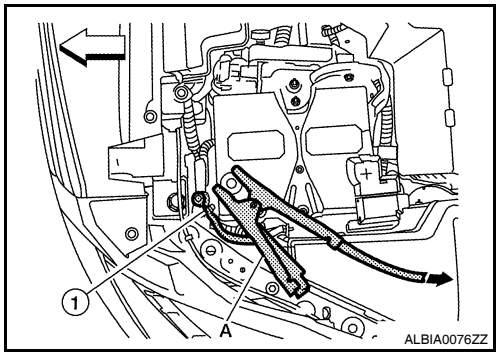

5. Check the voltage between ECM harness connector and ground.

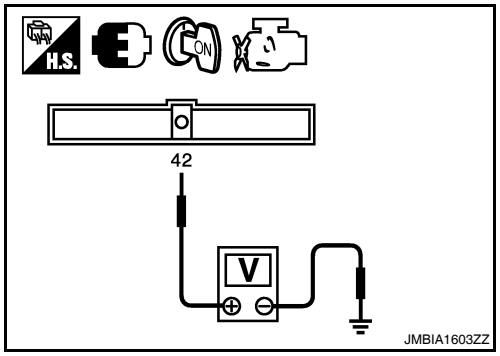

ECM		Ground	Voltage
Connector	Terminal		
F13	42 (Battery current sensor signal)	Ground	Approx. 2.5V

Is the inspection result normal?

YES >> INSPECTION END
NO >> Replace battery negative cable assembly.

P1553 BATTERY CURRENT SENSOR

Description

INFOID:0000000004349863

The power generation voltage variable control enables fuel consumption to be decreased by reducing the engine load which is caused by the power generation of the generator. The battery current sensor is installed to the battery cable at the negative terminal. The sensor measures the charging/discharging current of the battery. Based on the sensor signal, ECM judges whether or not the power generation voltage variable control is performed. When performing the power generation voltage variable control, ECM calculates the target power generation voltage based on the sensor signal. And ECM sends the calculated value as the power generation command value to IPDM E/R. For the details of the power generation voltage variable control, refer to CHG-5, "System Description".

CAUTION:

Do not connect the electrical component or the ground wire directly to the battery terminal. The connection causes the malfunction of the power generation voltage variable control, and then the battery discharge may occur.

DTC Logic

INFOID:0000000004349864

DTC DETECTION LOGIC

NOTE:

If DTC P1553 is displayed with DTC P0643, first perform the trouble diagnosis for DTC P0643. Refer to EC-867, "DTC Logic".

DTC No.	Trouble diagnosis name	DTC detecting condition	Possible cause
P1553	Battery current sensor performance	The signal voltage transmitted from the sensor to ECM is higher than the amount of the maximum power generation.	• Harness or connectors (The sensor circuit is open or shorted.) • Battery current sensor

DTC CONFIRMATION PROCEDURE

1. PRECONDITIONING

If DTC Confirmation Procedure has been previously conducted, always turn ignition switch OFF and wait at least 10 seconds before conducting the next test.

TESTING CONDITION:

Before performing the following procedure, confirm that battery voltage is more than 8V at idle.

>> GO TO 2.

2. PERFORM DTC CONFIRMATION PROCEDURE

1. Start engine and wait at least 10 seconds.
2. Check 1st trip DTC.

Is 1st trip DTC detected?

YES >> Go to EC-890, "Diagnosis Procedure".
NO >> INSPECTION END

Diagnosis Procedure

INFOID:0000000004349865

1. CHECK GROUND CONNECTION

1. Turn ignition switch OFF.
2. Check ground connection E9. Refer to Ground Inspection in GI-45, "Circuit Inspection".

Is the inspection result normal?

YES >> GO TO 2.
NO >> Repair or replace ground connection.

2. CHECK BATTERY CURRENT SENSOR POWER SUPPLY CIRCUIT

1. Disconnect battery current sensor harness connector.
2. Turn ignition switch ON.

3. Check the voltage between battery current sensor harness connector and ground.

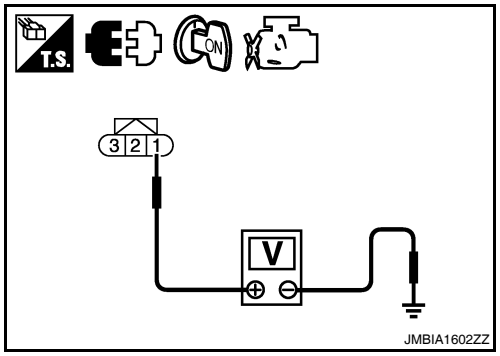

Battery current sensor		Ground	Voltage
Connector	Terminal		
F5	1	Ground	Approx. 5V

Is the inspection result normal?

YES >> GO TO 3.
NO >> Repair open circuit or sort to ground or short to power in harness or connectors.

3. CHECK BATTERY CURRENT SENSOR GROUND CIRCUIT FOR OPEN AND SHORT

1. Turn ignition switch OFF.
2. Disconnect ECM harness connector.
3. Check the continuity between battery current sensor harness connector and ECM harness connector.

Battery current sensor		ECM		Continuity
Connector	Terminal	Connector	Terminal	
F5	2	F13	44	Existed

4. Also check harness for short to ground and short to power.

Is the inspection result normal?

YES >> GO TO 4.
NO >> Repair open circuit or sort to ground or short to power in harness or connectors.

4. CHECK BATTERY CURRENT SENSOR INPUT SIGNAL CIRCUIT FOR OPEN AND SHORT

1. Check the continuity between battery current sensor harness connector and ECM harness connector.

Battery current sensor		ECM		Continuity
Connector	Terminal	Connector	Terminal	
F5	3	F13	42	Existed

2. Also check harness for short to ground and short to power.

Is the inspection result normal?

YES >> GO TO 5.
NO >> Repair open circuit or sort to ground or short to power in harness or connectors.

5. CHECK BATTERY CURRENT SENSOR

Refer to EC-891, "Component Inspection".

Is the inspection result normal?

YES >> GO TO 6.
NO >> Replace battery negative cable assembly.

6. CHECK INTERMITTENT INCIDENT

Refer to GI-42, "Intermittent Incident".

>> INSPECTION END

Component Inspection

INFOID:0000000004349866

1. CHECK BATTERY CURRENT SENSOR

1. Reconnect harness connectors disconnected.

2. Disconnect battery negative cable (1).

   ⬅: To body ground

3. Install jumper cable (A) between battery negative terminal and body ground.
4. Turn ignition switch ON.

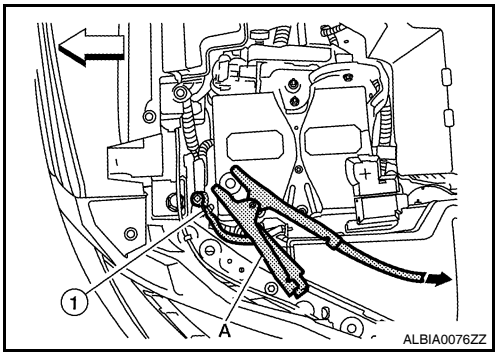

5. Check the voltage between ECM harness connector and ground.

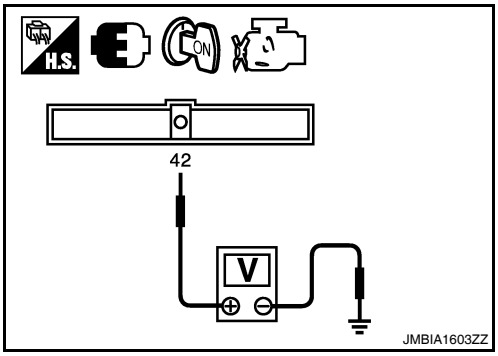

ECM		Ground	Voltage
Connector	Terminal		
F13	42 (Battery current sensor signal)	Ground	Approx. 2.5V

Is the inspection result normal?

YES >> INSPECTION END
NO >> Replace battery negative cable assembly.

P1554 BATTERY CURRENT SENSOR

Description

INFOID:0000000004349867

The power generation voltage variable control enables fuel consumption to be decreased by reducing the engine load which is caused by the power generation of the generator. The battery current sensor is installed to the battery cable at the negative terminal. The sensor measures the charging/discharging current of the battery. Based on the sensor signal, ECM judges whether or not the power generation voltage variable control is performed. When performing the power generation voltage variable control, ECM calculates the target power generation voltage based on the sensor signal. And ECM sends the calculated value as the power generation command value to IPDM E/R. For the details of the power generation voltage variable control, refer to CHG-5, "System Description".

CAUTION:

Do not connect the electrical component or the ground wire directly to the battery terminal. The connection causes the malfunction of the power generation voltage variable control, and then the battery discharge may occur.

DTC Logic

INFOID:0000000004349868

DTC DETECTION LOGIC

NOTE:

If DTC P1554 is displayed with DTC P0643, first perform the trouble diagnosis for DTC P0643. Refer to EC-867, "DTC Logic".

DTC No.	Trouble diagnosis name	DTC detecting condition	Possible cause
P1554	Battery current sensor performance	The output voltage of the battery current sensor is lower than the specified value while the battery voltage is high enough.	• Harness or connectors (The sensor circuit is open or shorted.) • Battery current sensor

DTC CONFIRMATION PROCEDURE

1. PERFORM COMPONENT FUNCTION CHECK

Perform component function check. Refer to EC-893, "Component Function Check".

NOTE:

Use component function check to check the overall function of the battery current sensor circuit. During this check, a 1st trip DTC might not be confirmed.

Is the inspection result normal?

YES >> INSPECTION END

NO >> Go to EC-894, "Diagnosis Procedure".

Component Function Check

INFOID:0000000004349869

1. PRECONDITIONING

TESTING CONDITION:

- **Before performing the following procedure, confirm that battery voltage is more than 12.8V at idle.**
- **Before performing the following procedure, confirm that all load switches and A/C switch are turned OFF.**

>> GO TO 2.

2. PERFORM COMPONENT FUNCTION CHECK

With CONSULT-III

1. Start engine and let it idle.
2. Select “BAT CUR SEN” in “DATA MONITOR” mode with CONSULT-III.
3. Check “BAT CUR SEN” indication for 10 seconds.
   “BAT CUR SEN” should be above 2,300mV at least once.

Without CONSULT-III

1. Start engine and let it idle.

2. Check the voltage between ECM harness connector and ground.

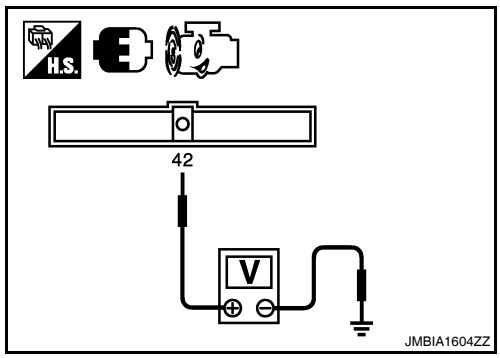

ECM		Ground	Voltage
Connector	Terminal		
F13	42 (Battery current sensor signal)	Ground	Above 2.3V at least once

Is the inspection result normal?

YES >> INSPECTION END
NO >> Go to EC-894, "Diagnosis Procedure".

Diagnosis Procedure

INFOID:0000000004349870

1. CHECK GROUND CONNECTION

1. Turn ignition switch OFF.
2. Check ground connection E9. Refer to Ground Inspection in GI-45, "Circuit Inspection".

Is the inspection result normal?

YES >> GO TO 2.
NO >> Repair or replace ground connection.

2. CHECK BATTERY CURRENT SENSOR POWER SUPPLY CIRCUIT

1. Disconnect battery current sensor harness connector.
2. Turn ignition switch ON.
3. Check the voltage between battery current sensor harness connector and ground.

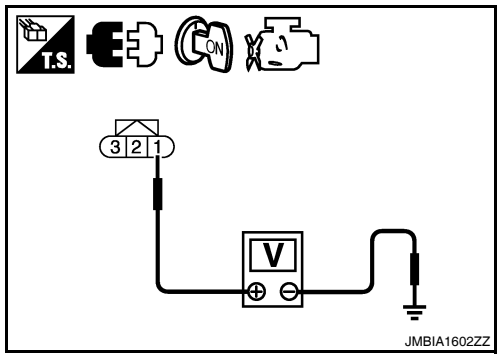

Battery current sensor		Ground	Voltage
Connector	Terminal		
F5	1	Ground	Approx. 5V

Is the inspection result normal?

YES >> GO TO 3.
NO >> Repair open circuit or sort to ground or short to power in harness or connectors.

3. CHECK BATTERY CURRENT SENSOR GROUND CIRCUIT FOR OPEN AND SHORT

1. Turn ignition switch OFF.
2. Disconnect ECM harness connector.
3. Check the continuity between battery current sensor harness connector and ECM harness connector.

Battery current sensor		ECM		Continuity
Connector	Terminal	Connector	Terminal	
F5	2	F13	44	Existed

4. Also check harness for short to ground and short to power.

Is the inspection result normal?

YES >> GO TO 4.
NO >> Repair open circuit or sort to ground or short to power in harness or connectors.

4. CHECK BATTERY CURRENT SENSOR INPUT SIGNAL CIRCUIT FOR OPEN AND SHORT

1. Check the continuity between battery current sensor harness connector and ECM harness connector.

Battery current sensor		ECM		Continuity
Connector	Terminal	Connector	Terminal	
F5	3	F13	42	Existed

2. Also check harness for short to ground and short to power.

Is the inspection result normal?

YES >> GO TO 5.
NO >> Repair open circuit or sort to ground or short to power in harness or connectors.

5. CHECK BATTERY CURRENT SENSOR

Refer to EC-895, "Component Inspection".

Is the inspection result normal?

YES >> GO TO 6.
NO >> Replace battery negative cable assembly.

6. CHECK INTERMITTENT INCIDENT

Refer to GI-42, "Intermittent Incident".

>> INSPECTION END

Component Inspection

INFOID:0000000004349871

1. CHECK BATTERY CURRENT SENSOR

1. Reconnect harness connectors disconnected.
2. Disconnect battery negative cable (1).

⬅: To body ground

3. Install jumper cable (A) between battery negative terminal and body ground.
4. Turn ignition switch ON.

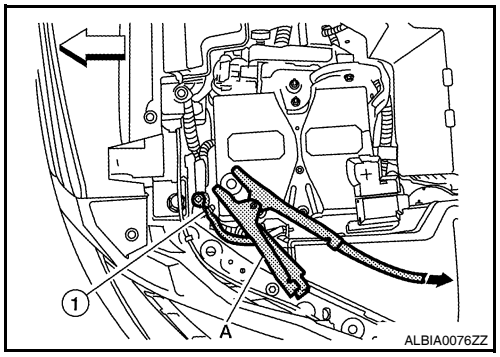

5. Check the voltage between ECM harness connector and ground.

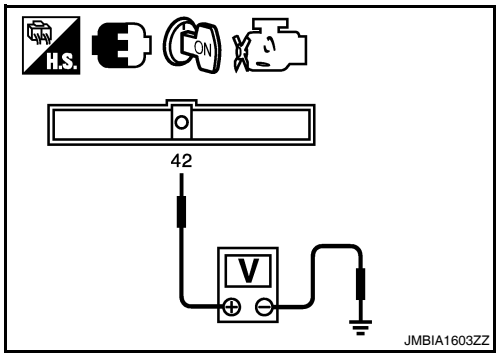

ECM		Ground	Voltage
Connector	Terminal		
F13	42 (Battery current sensor signal)	Ground	Approx. 2.5V

Is the inspection result normal?

YES >> INSPECTION END
NO >> Replace battery negative cable assembly.

P1564 ASCD STEERING SWITCH

Description

INFOID:0000000004349872

ASCD steering switch has variant values of electrical resistance for each button. ECM reads voltage variation of switch, and determines which button is operated.
Refer to EC-603, "System Description" for the ASCD function.

DTC Logic

INFOID:0000000004349873

DTC DETECTION LOGIC

NOTE:
If DTC P1564 is displayed with DTC P0605, first perform the trouble diagnosis for DTC P0605. Refer to EC-864, "DTC Logic".

DTC No.	Trouble diagnosis name	DTC detecting condition	Possible cause
P1564	ASCD steering switch	• An excessively high voltage signal from the ASCD steering switch is sent to ECM. • ECM detects that input signal from the ASCD steering switch is out of the specified range. • ECM detects that the ASCD steering switch is stuck ON.	• Harness or connectors (The switch circuit is open or shorted.) • ASCD steering switch • ECM

DTC CONFIRMATION PROCEDURE

1. PRECONDITIONING

If DTC Confirmation Procedure has been previously conducted, always turn ignition switch OFF and wait at least 10 seconds before conducting the next test.

>> GO TO 2.

2. PERFORM DTC CONFIRMATION PROCEDURE

1. Turn ignition switch ON.
2. Wait at least 10 seconds.
3. Press MAIN switch for at least 10 seconds, then release it and wait at least 10 seconds.
4. Press CANCEL switch for at least 10 seconds, then release it and wait at least 10 seconds.
5. Press RESUME/ACCELERATE switch for at least 10 seconds, then release it and wait at least 10 seconds.
6. Press SET/COAST switch for at least 10 seconds, then release it and wait at least 10 seconds.
7. Check DTC.

Is DTC detected?

YES >> Go to EC-896, "Diagnosis Procedure".
NO >> INSPECTION END

Diagnosis Procedure

INFOID:0000000004349874

1. CHECK GROUND CONNECTION

1. Turn ignition switch OFF.
2. Check ground connection E9. Refer to Ground Inspection in GI-45, "Circuit Inspection".

Is the inspection result normal?

YS >> GO TO 2.
NO >> Repair or replace ground connection.

2. CHECK ASCD STEERING SWITCH CIRCUIT

With CONSULT-III

1. Turn ignition switch ON.

2. Select “MAIN SW”, “CANCEL SW”, “RESUME/ACC SW” and “SET SW” in “DATA MONITOR” mode with CONSULT-III.
3. Check each item indication under the following conditions.

Monitor item	Condition		Indication
MAIN SW	MAIN switch	Pressed	ON
		Released	OFF
CANCEL SW	CANCEL switch	Pressed	ON
		Released	OFF
RESUME/ACC SW	RESUME/ACCELERATE switch	Pressed	ON
		Released	OFF
SET SW	SET/COAST switch	Pressed	ON
		Released	OFF

Without CONSULT-III

1. Turn ignition switch ON.
2. Check the voltage between ECM harness connector and ground.

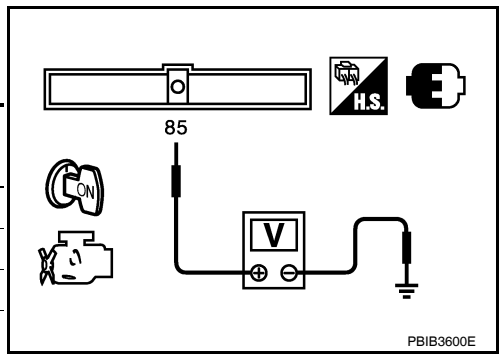

ECM		Ground	Condition	Voltage
Connector	Terminal			
E10	85 (ASCD steering switch signal)	Ground	MAIN switch: Pressed	Approx. 0V
			CANCEL switch: Pressed	Approx. 1V
			SET/COAST switch: Pressed	Approx. 2V
			RESUME/ACCELERATE switch: Pressed	Approx. 3V
			All ASCD steering switches: Released	Approx. 4V

Is the inspection result normal?

YES >> GO TO 8.
NO >> GO TO 3.

3. CHECK ASCD STEERING SWITCH GROUND CIRCUIT FOR OPEN AND SHORT

1. Turn ignition switch OFF.
2. Disconnect ECM harness connector.
3. Disconnect combination switch harness connector M88.
4. Check the continuity between combination switch and ECM harness connector.

Combination switch	ECM		Continuity
Terminal	Connector	Terminal	
16	E10	92	Existed

5. Also check harness for short to ground and short to power.

Is the inspection result normal?

YES >> GO TO 5.
NO >> GO TO 4.

4. DETECT MALFUNCTIONING PART

Check the following.
- Harness connectors M1, E30
- Combination switch (spiral cable)
- Harness for open and short between ECM and combination switch

>> Repair open circuit or short to ground or short to power in harness or connectors.

5. CHECK ASCD STEERING SWITCH INPUT SIGNAL CIRCUIT FOR OPEN AND SHORT

1. Check the continuity between ECM harness connector and combination switch.

Combination switch	ECM		Continuity
Terminal	Connector	Terminal	
13	E10	85	Existed

2. Also check harness for short to ground and short to power.

Is the inspection result normal?

YES >> GO TO 7.
NO >> GO TO 6.

6. DETECT MALFUNCTIONING PART

Check the following.
- Harness connectors M1, E30
- Combination switch (spiral cable)
- Harness for open and short between ECM and combination switch

>> Repair open circuit or short to ground or short to power in harness or connectors.

7. CHECK ASCD STEERING SWITCH

Refer to EC-898, "Component Inspection".

Is the inspection result normal?

YES >> GO TO 8.
NO >> Replace ASCD steering switch.

8. CHECK INTERMITTENT INCIDENT

Refer to GI-42, "Intermittent Incident".

>> INSPECTION END

Component Inspection

INFOID:0000000004349875

1. CHECK ASCD STEERING SWITCH

1. Disconnect combination switch (spiral cable) harness connector M303.
2. Check the continuity between combination switch harness connector terminals under following conditions.

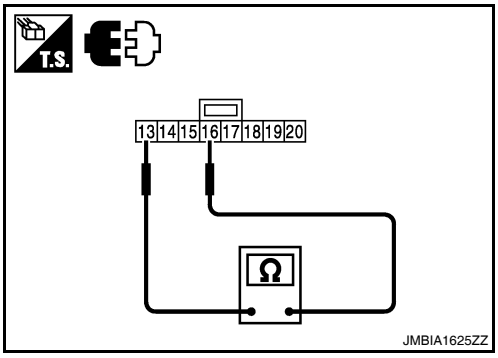

Combination meter		Condition	Resistance
Connector	Terminals		
M88	13 and 16	MAIN switch: Pressed	Approx. 0 Ω
		CANCEL switch: Pressed	Approx. 250 Ω
		SET/COAST switch: Pressed	Approx. 660 Ω
		RESUME/ACCELERATE switch: Pressed	Approx. 1,480 Ω
		All ASCD steering switches: Released	Approx. 4,000 Ω

Is the inspection result normal?

YES >> INSPECTION END
NO >> Replace ASCD steering switch

P1572 ASCD BRAKE SWITCH

Description

INFOID:0000000004349876

When the brake pedal is depressed, ASCD brake switch is turned OFF and stop lamp switch is turned ON. ECM detects the state of the brake pedal by this input of two kinds (ON/OFF signal).
Refer to EC-603, "System Description" for the ASCD function.

DTC Logic

INFOID:0000000004349877

DTC DETECTION LOGIC

NOTE:
- **If DTC P1572 is displayed with DTC P0605, first perform the trouble diagnosis for DTC P0605. Refer to EC-864, "DTC Logic".**
- **This self-diagnosis has the one trip detection logic. When malfunction A is detected, DTC is not stored in ECM memory. And in that case, 1st trip DTC and 1st trip freeze frame data are displayed. 1st trip DTC is erased when ignition switch OFF. And even when malfunction A is detected in two consecutive trips, DTC is not stored in ECM memory.**

DTC No.	Trouble diagnosis name	DTC detecting condition		Possible cause
P1572	ASCD brake switch	A)	When the vehicle speed is above 30 km/h (19 MPH), ON signals from the stop lamp switch and the ASCD brake switch are sent to the ECM at the same time.	• Harness or connectors (The stop lamp switch circuit is shorted.) • Harness or connectors (The ASCD brake switch circuit is shorted.) • Harness or connectors (The ASCD clutch switch circuit is shorted.) (M/T) • Stop lamp switch • ASCD brake switch • ASCD clutch switch (M/T) • Incorrect stop lamp switch installation • Incorrect ASCD brake switch installation • Incorrect ASCD clutch switch installation (M/T) • ECM
		B)	ASCD brake switch signal is not sent to ECM for extremely long time while the vehicle is driving.	

DTC CONFIRMATION PROCEDURE

1. PRECONDITIONING

If DTC Confirmation Procedure has been previously conducted, always turn ignition switch OFF and wait at least 10 seconds before conducting the next test.
NOTE:
Procedure for malfunction B is not described here. It takes extremely long time to complete procedure for malfunction B. By performing procedure for malfunction A, the incident that causes malfunction B can be detected.

>> GO TO 2.

2. PERFORM DTC CONFIRMATION PROCEDURE FOR MALFUNCTION A

With CONSULT-III
1. Start engine.
2. Select “DATA MONITOR” mode with CONSULT-III.
3. Press MAIN switch and make sure that CRUISE indicator is displayed in combination meter.
4. Drive the vehicle for at least 5 consecutive seconds under the following conditions.
   CAUTION:
   Always drive vehicle at a safe speed.
   NOTE:
   This procedure may be conducted with the drive wheels lifted in the shop or by driving the vehicle. If a road test is expected to be easier, it is unnecessary to lift the vehicle.

VHCL SPEED SE	More than 30 km/h (19 mph)
Shift lever	Suitable position

5. Check 1st trip DTC.

With GST

Follow the procedure “With CONSULT-III” above.

Is 1st trip DTC detected?

YES >> Go to EC-900, "Diagnosis Procedure".
NO >> GO TO 3.

3. PERFORM DTC CONFIRMATION PROCEDURE FOR MALFUNCTION B

With CONSULT-III

1. Drive the vehicle for at least 5 consecutive seconds under the following conditions.

   CAUTION:
   Always drive vehicle at a safe speed.
   NOTE:
   This procedure may be conducted with the drive wheels lifted in the shop or by driving the vehicle. If a road test is expected to be easier, it is unnecessary to lift the vehicle.

VHCL SPEED SE	More than 30 km/h (19 mph)
Selector lever	Suitable position
Driving location	Depress the brake pedal for more than five seconds so as not to come off from the above-mentioned vehicle speed.

2. Check 1st trip DTC.

With GST

Follow the procedure “With CONSULT-III” above.

Is 1st trip DTC detected?

YES >> Go to EC-900, "Diagnosis Procedure".
NO >> INSPECTION END

Diagnosis Procedure

INFOID:0000000004349878

1. CHECK OVERALL FUNCTION-I

With CONSULT-III

1. Turn ignition switch ON.
2. Select “BRAKE SW1” in “DATA MONITOR” mode with CONSULT-III.
3. Check “BRAKE SW1” indication under the following conditions.

Monitor item	Condition		Indication
BRAKE SW1	Brake pedal (CVT) Brake pedal and clutch pedal (M/T)	Slightly depressed	OFF
		Fully released	ON

Without CONSULT-III

1. Turn ignition switch ON.
2. Check the voltage between ECM harness connector and ground.

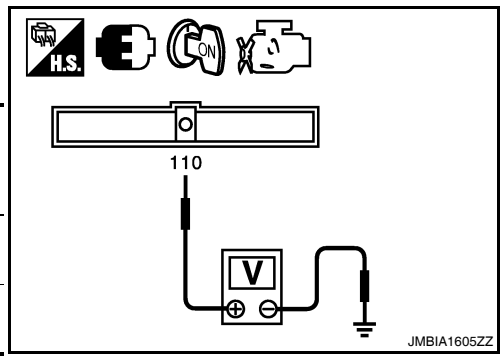

ECM		Ground	Condition		Voltage
Connector	Terminal				
E10	110 (ASCD brake switch signal)	Ground	Brake pedal (CVT) Brake pedal and clutch pedal (M/T)	Slightly depressed	Approx. 0V
				Fully released	Battery voltage

Is the inspection result normal?

YES >> GO TO 2.
NO-1 >> CVT models: GO TO 3.
NO-1 >> M/T models: GO TO 7.

2. CHECK OVERALL FUNCTION-II

With CONSULT-III

Select “BRAKE SW2” and check indication in “DATA MONITOR” mode.

Monitor item	Condition		Indication
BRAKE SW2	Brake pedal (CVT) Brake pedal and clutch pedal (M/T)	Slightly depressed	ON
		Fully released	OFF

Without CONSULT-III

Check the voltage between ECM harness connector and ground.

ECM		Ground	Condition		Voltage
Connector	Terminal				
E10	110 (ASCD brake switch signal)	Ground	Brake pedal (CVT) Brake pedal and clutch pedal (M/T)	Slightly depressed	Approx. 0V
				Fully released	Battery voltage

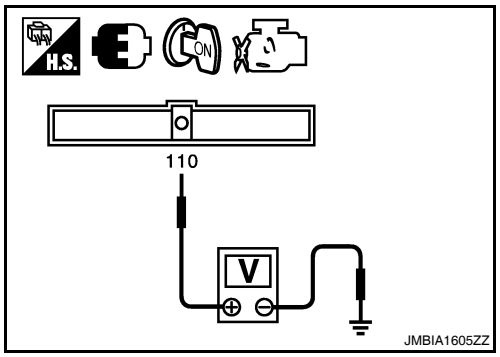

Is the inspection result normal?

YES >> GO TO 19.
NO >> GO TO 14.

3. CHECK ASCD BRAKE SWITCH POWER SUPPLY CIRCUIT

1. Turn ignition switch OFF.
2. Disconnect ASCD brake switch harness connector.
3. Turn ignition switch ON.
4. Check the voltage between ASCD brake switch harness connector and ground.

ASCD brake switch		Ground	Voltage
Connector	Terminal		
E37	1	Ground	Battery voltage

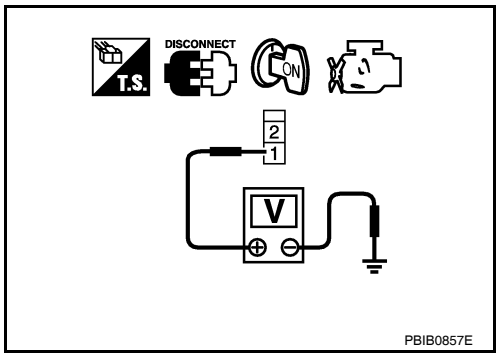

Is the inspection result normal?

YES >> GO TO 5.
NO >> GO TO 4.

4. DETECT MALFUNCTIONING PART

Check the following.
- Fuse block (J/B) connector E6
- Junction block connector E44, E46
- 10A fuse (No.3)
- Harness for open or short between ASCD brake switch and fuse

>> Repair open circuit or short to ground or short to power in harness or connectors.

5. CHECK ASCD BRAKE SWITCH INPUT SIGNAL CIRCUIT FOR OPEN AND SHORT

1. Turn ignition switch OFF.
2. Disconnect ECM ASCD harness connector.

3. Check the continuity between ASCD brake switch harness connector and ECM harness connector.

ASCD brake switch		ECM		Continuity
Connector	Terminal	Connector	Terminal	
E37	2	E10	110	Existed

4. Also check harness for short to ground and short to power.

Is the inspection result normal?

YES >> GO TO 6.
NO >> Repair open circuit or short to ground or short to power in harness or connectors.

6. CHECK ASCD BRAKE SWITCH

Refer to EC-904, "Component Inspection (ASCD Brake Switch)".

Is the inspection result normal?

YES >> GO TO 19.
NO >> Replace ASCD brake switch.

7. CHECK ASCD BRAKE SWITCH CIRCUIT

1. Turn ignition switch OFF.
2. Disconnect ASCD clutch switch harness connector.
3. Turn ignition switch ON.
4. Check the voltage between ASCD clutch switch harness connector and ground.

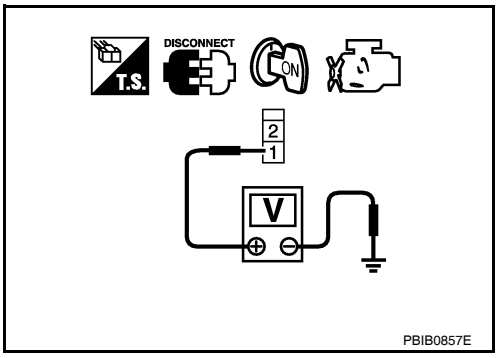

ASCD clutch switch		Ground	Condition		Voltage (V)
Connector	Terminal				
E39	1	Ground	Brake pedal	Slightly depressed	Approx. 0
				Fully released	Battery voltage

Is the inspection result normal?

YES >> GO TO 12.
NO >> GO TO 8.

8. CHECK ASCD BRAKE SWITCH POWER SUPPLY CIRCUIT

1. Turn ignition switch OFF.
2. Disconnect ASCD brake switch harness connector.
3. Turn ignition switch ON.
4. Check the voltage between ASCD brake switch harness connector and ground.

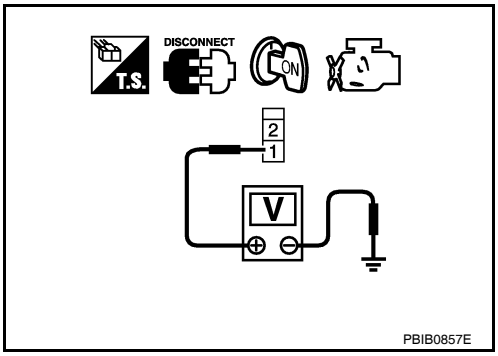

ASCD brake switch		Ground	Voltage
Connector	Terminal		
E37	1	Ground	Battery voltage

Is the inspection result normal?

YES >> GO TO 10.
NO >> GO TO 9.

9. DETECT MALFUNCTIONING PART

Check the following.
- Fuse block (J/B) connector E6
- Junction block connector E44, E46
- 10A fuse (No.3)
- Harness for open or short between ASCD brake switch and fuse

>> Repair open circuit or short to ground or short to power in harness or connectors.

10. CHECK ASCD BRAKE SWITCH INPUT SIGNAL CIRCUIT FOR OPEN AND SHORT

1. Turn ignition switch OFF.
2. Disconnect ECM harness connector.
3. Check the continuity between ASCD brake switch harness connector and ASCD clutch switch harness connector.

ASCD brake switch		ASCD clutch switch		Continuity
Connector	Terminal	Connector	Terminal	
E37	2	E39	1	Existed

4. Also check harness for short to ground and short to power.

Is the inspection result normal?

YES >> GO TO 11.
NO >> Repair open circuit or short to ground or short to power in harness or connectors.

11. CHECK ASCD BRAKE SWITCH

Refer to EC-904, "Component Inspection (ASCD Brake Switch)".

Is the inspection result normal?

YES >> GO TO 19.
NO >> Replace ASCD brake switch.

12. CHECK ASCD BRAKE SWITCH INPUT SIGNAL CIRCUIT FOR OPEN AND SHORT

1. Turn ignition switch OFF.
2. Disconnect ECM harness connector.
3. Check the continuity between ECM harness connector and ASCD clutch switch harness connector.

ECM		ASCD clutch switch		Continuity
Connector	Terminal	Connector	Terminal	
E10	110	E37	2	Existed

4. Also check harness for short to ground and short to power.

Is the inspection result normal?

YES >> GO TO 13.
NO >> Repair open circuit or short to ground or short to power in harness or connectors.

13. CHECK ASCD CLUTCH SWITCH

Refer to EC-905, "Component Inspection (ASCD Clutch Switch)".

Is the inspection result normal?

YES >> GO TO 19.
NO >> Replace ASCD clutch switch.

14. CHECK STOP LAMP SWITCH POWER SUPPLY CIRCUIT

1. Turn ignition switch OFF.
2. Disconnect stop lamp switch harness connector.
3. Check the voltage between stop lamp switch harness connector and ground.

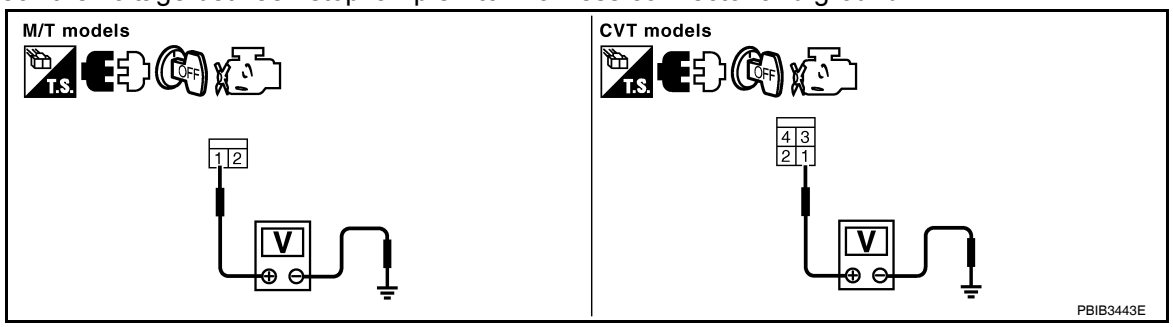

Stop lamp switch		Ground	Voltage
Connector	Terminal		
E38	1	Ground	Battery voltage

Is the inspection result normal?

YES >> GO TO 16.
NO >> GO TO 15.

15. DETECT MALFUNCTIONING PART

Check the following.
- Fuse block (J/B) connector E6
- 10A fuse (No.7)
- Harness for open or short between stop lamp switch and battery

>> Repair open circuit or short to ground or short to power in harness or connectors.

16. CHECK STOP LAMP SWITCH INPUT SIGNAL CIRCUIT FOR OPEN AND SHORT

1. Disconnect ECM harness connector.
2. Check the continuity between ECM harness connector and stop lamp switch harness connector.

ECM		ASCD clutch switch		Continuity
Connector	Terminal	Connector	Terminal	
E10	106	E38	2	Existed

3. Also check harness for short to ground and short to power.

Is the inspection result normal?

YES >> GO TO 18.
NG >> GO TO 17.

17. DETECT MALFUNCTIONING PART

Check the following.
- Fuse block (J/B) connector E6
- Harness for open or short between ECM and stop lamp switch

>> Repair open circuit or short to ground or short to power in harness or connectors.

18. CHECK STOP LAMP SWITCH

Refer to EC-906, "Component Inspection (Stop Lamp Switch)".

Is the inspection result normal?

YES >> GO TO 19.
NO >> Replace stop lamp switch.

19. CHECK INTERMITTENT INCIDENT

Refer to GI-42, "Intermittent Incident".

>> INSPECTION END

Component Inspection (ASCD Brake Switch)

INFOID:0000000004349879

1. CHECK ASCD BRAKE SWITCH-I

1. Turn ignition switch OFF.
2. Disconnect ASCD brake switch harness connector.

3. Check the continuity between ASCD brake switch terminals under the following conditions.

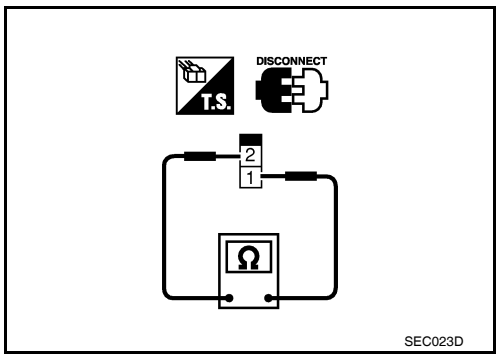

Terminals	Condition		Continuity
1 and 2	Brake pedal	Fully released	Existed
		Slightly depressed	Not existed

Is the inspection result normal?

YES >> INSPECTION END
NO >> GO TO 2.

2. CHECK ASCD BRAKE SWITCH-II

1. Adjust ASCD brake switch installation. Refer to BR-13, "Inspection and Adjustment".
2. Check the continuity between ASCD brake switch terminals under the following conditions.

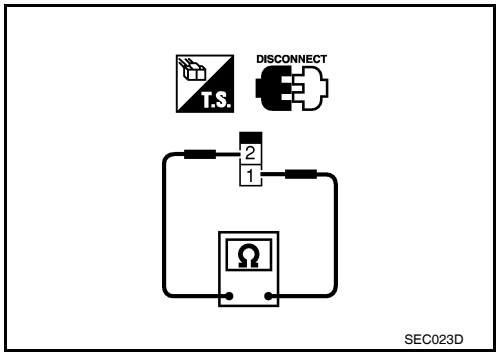

Terminals	Condition		Continuity
1 and 2	Brake pedal	Fully released	Existed
		Slightly depressed	Not existed

Is the inspection result normal?

YES >> INSPECTION END
NO >> Replace ASCD brake switch.

Component Inspection (ASCD Clutch Switch)

INFOID:0000000004349880

1. CHECK ASCD CLUTCH SWITCH-I

1. Turn ignition switch OFF.
2. Disconnect ASCD clutch switch harness connector.
3. Check the continuity between ASCD clutch switch terminals under the following conditions.

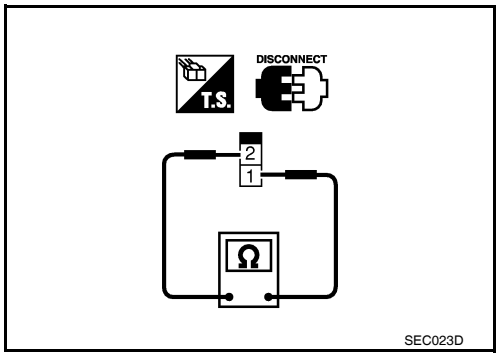

Terminals	Condition		Continuity
1 and 2	Clutch pedal	Fully released	Existed
		Slightly depressed	Not existed

Is the inspection result normal?

YES >> INSPECTION END
NO >> GO TO 2.

2. CHECK ASCD CLUTCH SWITCH-II

1. Adjust ASCD clutch switch installation. Refer to BR-13, "Inspection and Adjustment".
2. Check the continuity between ASCD clutch switch terminals under the following conditions.

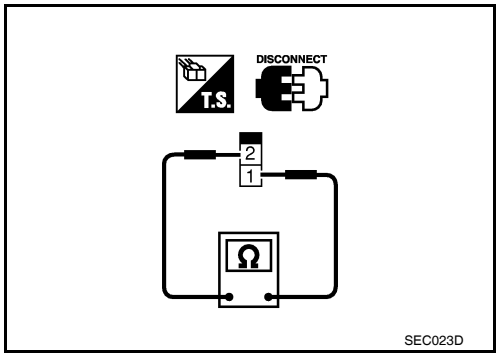

Terminals	Condition		Continuity
1 and 2	Clutch pedal	Fully released	Existed
		Slightly depressed	Not existed

Is the inspection result normal?

YES >> INSPECTION END
NO >> Replace ASCD clutch switch.

Component Inspection (Stop Lamp Switch)

INFOID:0000000004349881

1. CHECK STOP LAMP SWITCH-I

1. Turn ignition switch OFF.
2. Disconnect stop lamp switch harness connector.
3. Check the continuity between stop lamp switch terminals under the following conditions.

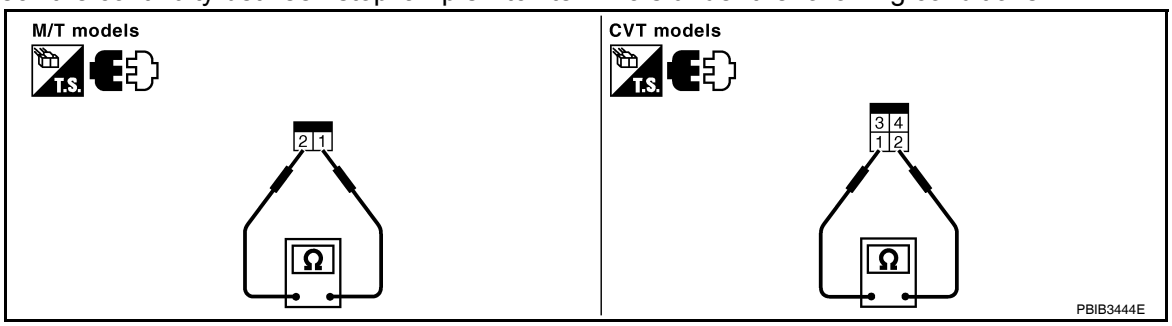

Terminals	Condition		Continuity
1 and 2	Brake pedal	Fully released	Not existed
		Slightly depressed	Existed

Is the inspection result normal?

YES >> INSPECTION END
NO >> GO TO 2.

2. CHECK STOP LAMP SWITCH-II

1. Adjust stop lamp switch installation. Refer to BR-13, "Inspection and Adjustment".
2. Check the continuity between stop lamp switch terminals under the following conditions.

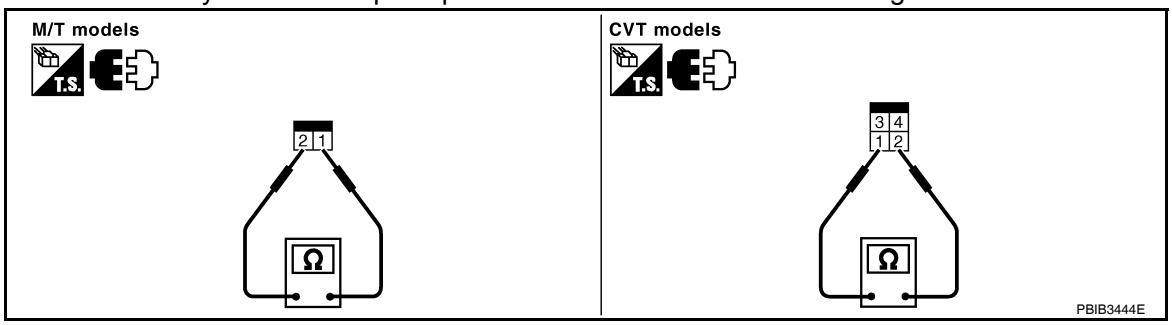

Terminals	Condition		Continuity
1 and 2	Brake pedal	Fully released	Not existed
		Slightly depressed	Existed

Is the inspection result normal?

YES >> INSPECTION END
NO >> Replace stop lamp switch.

P1574 ASCD VEHICLE SPEED SENSOR

Description

INFOID:0000000004349882

The ECM receives two vehicle speed signals via CAN communication line. One is sent from combination meter, and the other is from TCM (Transmission control module). The ECM uses these signals for ASCD control. Refer to EC-603, "System Description" for ASCD functions.

DTC Logic

INFOID:0000000004349883

DTC DETECTION LOGIC

NOTE:
- **If DTC P1574 is displayed with DTC UXXXX, first perform the trouble diagnosis for DTC UXXXX.**
- **If DTC P1574 is displayed with DTC P0500, first perform the trouble diagnosis for DTC P0500. Refer to EC-853, "DTC Logic"**
- **If DTC P1574 is displayed with DTC P0605, first perform the trouble diagnosis for DTC P0605. Refer to EC-864, "DTC Logic"**
- **If DTC P1574 is displayed with DTC P0607, first perform the trouble diagnosis for DTC P0607. Refer to EC-866, "DTC Logic".**

DTC No.	Trouble diagnosis name	DTC detecting condition	Possible cause
P1574	ASCD vehicle speed sensor	ECM detects a difference between two vehicle speed signals is out of the specified range.	• Harness or connectors (The CAN communication line is open or shorted.) (Combination meter circuit is open or shorted.) • Combination meter • ABS actuator and electric unit (control unit) • Wheel sensor • TCM (CVT models) • ECM

DTC CONFIRMATION PROCEDURE

1.PRECONDITIONING

If DTC Confirmation Procedure has been previously conducted, always turn ignition switch OFF and wait at least 10 seconds before conducting the next test.

>> GO TO 2.

2.PERFORM DTC CONFIRMATION PROCEDURE

1. Start engine.
2. Drive the vehicle at more than 40 km/h (25 MPH).
   CAUTION:
   Always drive vehicle at a safe speed.
   NOTE:
   This procedure may be conducted with the drive wheels lifted in the shop or by driving the vehicle. If a road test is expected to be easier, it is unnecessary to lift the vehicle.
3. Check DTC.

Is DTC detected?

YES >> Go to EC-907, "Diagnosis Procedure".
NO >> INSPECTION END

Diagnosis Procedure

INFOID:0000000004349884

1.CHECK DTC WITH TCM

Check DTC with TCM. Refer to TM-296, "Diagnosis Description".

Is the inspection result normal?

YES >> GO TO 2.
NO >> Perform trouble shooting relevant to DTC indicated.

2. CHECK DTC WITH “ABS ACTUATOR AND ELECTRIC UNIT (CONTROL UNIT)”

Refer to BRC-12, "CONSULT-III Function (ABS)".

Is the inspection result normal?

YES >> GO TO 3.
NO >> Repair or replace.

3. CHECK COMBINATION METER

Check combination meter function.
Refer to MWI-38, "CONSULT-III Function (METER/M&A)".

>> INSPECTION END

P1715 INPUT SPEED SENSOR (PRIMARY SPEED SENSOR)

Description

INFOID:0000000004349885

ECM receives primary speed sensor signal from TCM through CAN communication line. ECM uses this signal for engine control.

DTC Logic

INFOID:0000000004349886

DTC DETECTION LOGIC

NOTE:

- **If DTC P1715 is displayed with DTC UXXXX, first perform the trouble diagnosis for DTC U1000,XXXX.**
- **If DTC P1715 is displayed with DTC P0335, first perform the trouble diagnosis for DTC P0335. Refer to EC-783, "DTC Logic".**
- **If DTC P1715 is displayed with DTC P0340, first perform the trouble diagnosis for DTC P0340. Refer to EC-787, "DTC Logic".**
- **If DTC P1715 is displayed with DTC P0605, first perform the trouble diagnosis for DTC P0605. Refer to EC-864, "DTC Logic".**
- **If DTC P1715 is displayed with DTC P0607, first perform the trouble diagnosis for DTC P0607. Refer to EC-866, "DTC Logic".**

DTC No.	Trouble diagnosis name	DTC detecting condition	Possible cause
P1715	Input speed sensor (Primary speed sensor) (TCM output)	Primary speed sensor signal is different from the theoretical value calculated by ECM from secondary speed sensor signal and engine rpm signal.	• Harness or connectors (The CAN communication line is open or shorted) • Harness or connectors (Primary speed sensor circuit is open or shorted) • TCM

DTC CONFIRMATION PROCEDURE

1. PRECONDITIONING

If DTC Confirmation Procedure has been previously conducted, always turn ignition switch OFF and wait at least 10 seconds before conducting the next test.

>> GO TO 2.

2. PERFORM DTC CONFIRMATION PROCEDURE

1. Start engine and drive the vehicle at more than 50 km/h (31 MPH) for at least 5 seconds.
   CAUTION:
   Always drive vehicle at a safe speed.
2. Check 1st trip DTC.

Is 1st trip DTC detected?

YES >> Go to EC-909, "Diagnosis Procedure".
NO >> INSPECTION END

Diagnosis Procedure

INFOID:0000000004349887

1. CHECK DTC WITH TCM

Check DTC with TCM. Refer to TM-296, "Diagnosis Description".

Is the inspection result normal?

YES >> GO TO 2.
NO >> Perform trouble shooting relevant to DTC indicated.

2. REPLACE TCM

Replace TCM.

>> INSPECTION END

P1805 BRAKE SWITCH

Description

INFOID:0000000004349888

Brake switch signal is applied to the ECM through the stop lamp switch when the brake pedal is depressed. This signal is used mainly to decrease the engine speed when the vehicle is driving.

DTC Logic

INFOID:0000000004349889

DTC DETECTION LOGIC

DTC No.	Trouble diagnosis name	DTC detecting condition	Possible cause
P1805	Brake switch	A brake switch signal is not sent to ECM for extremely long time while the vehicle is driving.	• Harness or connectors (Stop lamp switch circuit is open or shorted.) • Stop lamp switch

DTC CONFIRMATION PROCEDURE

1. PERFORM DTC CONFIRMATION PROCEDURE

1. Turn ignition switch ON.
2. Fully depress the brake pedal for at least 5 seconds.
3. Erase the DTC with CONSULT-III.
4. Check 1st trip DTC.

Is 1st trip DTC detected?

YES >> Go to EC-911, "Diagnosis Procedure".
NO >> INSPECTION END

Diagnosis Procedure

INFOID:0000000004349890

1. CHECK STOP LAMP SWITCH CIRCUIT

1. Turn ignition switch OFF.
2. Check the stop lamp when depressing and releasing the brake pedal.

Brake pedal	Stop lamp
Fully released	Not illuminated
Slightly depressed	Illuminated

Is 1st trip DTC detected?

YES >> GO TO 4.
NO >> GO TO 2.

2. CHECK STOP LAMP SWITCH POWER SUPPLY CIRCUIT

1. Turn ignition switch OFF.
2. Disconnect stop lamp switch harness connector.
3. Check the voltage between stop lamp switch harness connector and ground.

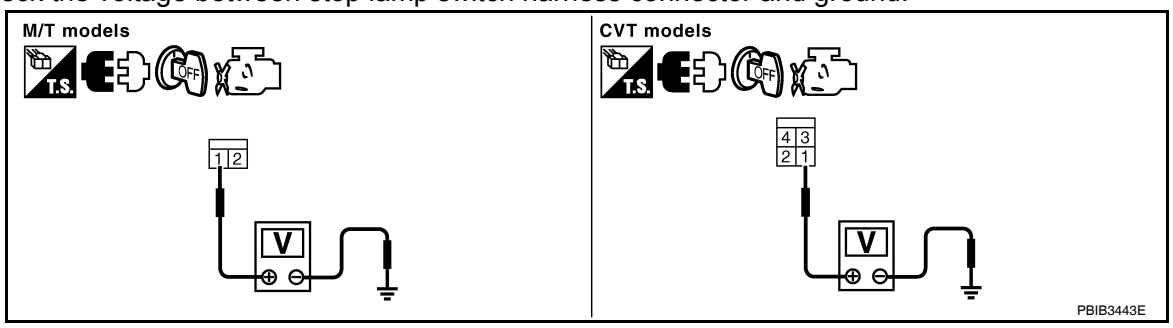

Stop lamp switch		Ground	Voltage
Connector	Terminal		
E38	1	Ground	Battery voltage

Is the inspection result normal?

YES >> GO TO 4.
NO >> GO TO 3.

3. DETECT MALFUNCTIONING PART

Check the following.
- Junction block connector E6
- 10A fuse (No. 7)
- Harness for open or short between stop lamp switch and battery

>> Repair open circuit or short to ground or short to power in harness or connectors.

4. CHECK STOP LAMP SWITCH INPUT SIGNAL CIRCUIT FOR OPEN AND SHORT

1. Disconnect ECM harness connector.
2. Check the continuity between ECM harness connector and stop lamp switch harness connector.

ECM		Stop lamp switch		Continuity
Connector	Terminal	Connector	Terminal	
E10	106	E38	2	Existed

3. Also check harness for short to ground and short to power.

Is the inspection result normal?

YES >> GO TO 6.
NO >> GO TO 5.

5. DETECT MALFUNCTIONING PART

Check the following.
- Junction block connector E44, E45
- Harness for open or short between ECM and stop lamp switch

>> Repair open circuit or short to ground or short to power in harness or connectors.

6. CHECK STOP LAMP SWITCH

Refer to EC-946, "Component Inspection (ASCD Brake Switch)".

Is the inspection result normal?

YES >> GO TO 7.
NO >> Replace stop lamp switch.

7. CHECK INTERMITTENT INCIDENT

Refer to GI-42, "Intermittent Incident".

>> INSPECTION END

Component Inspection (Stop Lamp Switch)

INFOID:0000000004349891

1. CHECK STOP LAMP SWITCH-I

1. Turn ignition switch OFF.
2. Disconnect stop lamp switch harness connector.

3. Check the continuity between stop lamp switch terminals under the following conditions.

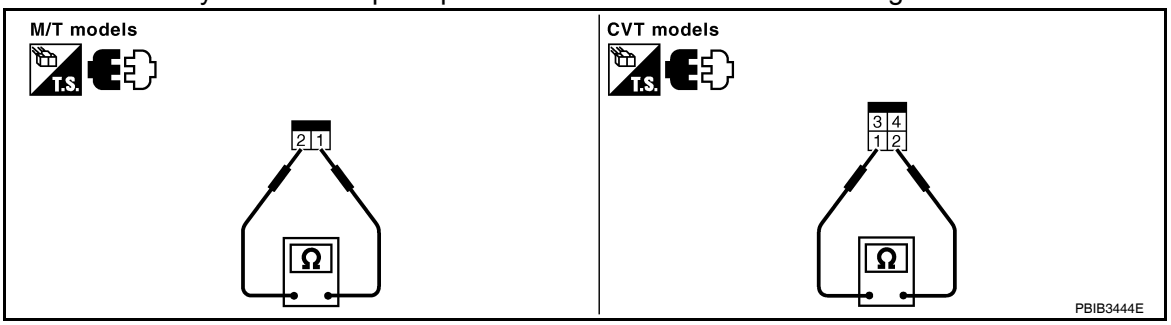

Terminals	Condition		Continuity
1 and 2	Brake pedal	Fully released	Not existed
		Slightly depressed	Existed

Is the inspection result normal?

YES >> INSPECTION END
NO >> GO TO 2.

2. CHECK STOP LAMP SWITCH-II

1. Adjust stop lamp switch installation. Refer to BR-13, "Inspection and Adjustment".
2. Check the continuity between stop lamp switch terminals under the following conditions.

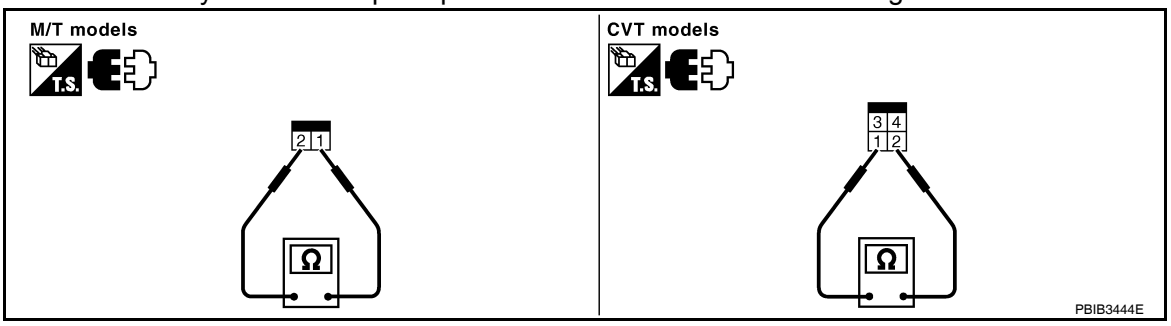

Terminals	Condition		Continuity
1 and 2	Brake pedal	Fully released	Not existed
		Slightly depressed	Existed

Is the inspection result normal?

YES >> INSPECTION END
NO >> Replace stop lamp switch.

P2100, P2103 THROTTLE CONTROL MOTOR RELAY

Description

INFOID:0000000004349892

Power supply for the throttle control motor is provided to the ECM via throttle control motor relay. The throttle control motor relay is ON/OFF controlled by the ECM. When the ignition switch is turned ON, the ECM sends an ON signal to throttle control motor relay and battery voltage is provided to the ECM. When the ignition switch is turned OFF, the ECM sends an OFF signal to throttle control motor relay and battery voltage is not provided to the ECM.

DTC Logic

INFOID:0000000004349893

DTC DETECTION LOGIC

DTC No.	Trouble diagnosis name	DTC detecting condition	Possible cause
P2100	Throttle control motor relay circuit open	ECM detects a voltage of power source for throttle control motor is excessively low.	• Harness or connectors (Throttle control motor relay circuit is open) • Throttle control motor relay
P2103	Throttle control motor relay circuit short	ECM detect the throttle control motor relay is stuck ON.	• Harness or connectors (Throttle control motor relay circuit is shorted) • Throttle control motor relay

DTC CONFIRMATION PROCEDURE

1.PRECONDITIONING

If DTC Confirmation Procedure has been previously conducted, always turn ignition switch OFF and wait at least 10 seconds before conducting the next test.

TESTING CONDITION:

Before performing the following procedure, confirm that battery voltage is more than 8V.

Witch DTC is detected?

P2100 >> GO TO 2.
P2103 >> GO TO 3.

2.PERFORM DTC CONFIRMATION PROCEDURE FOR DTC P2100

1. Turn ignition switch ON and wait at least 2 seconds.
2. Start engine and let it idle for 5 seconds.
3. Check DTC.

Is DTC detected?

YES >> Go to EC-914, "Diagnosis Procedure".
NO >> INSPECTION END

3.PERFORM DTC CONFIRMATION PROCEDURE FOR DTC P2103

1. Turn ignition switch ON and wait at least 1 second.
2. Check DTC.

Is DTC detected?

YES >> Go to EC-914, "Diagnosis Procedure".
NO >> INSPECTION END

Diagnosis Procedure

INFOID:0000000004349894

1.CHECK THROTTLE CONTROL MOTOR RELAY POWER SUPPLY CIRCUIT

1. Turn ignition switch OFF.
2. Disconnect ECM harness connector.
3. Disconnect IPDM E/R harness connector F10.
4. Check the continuity between ECM harness connector and IPDM E/R harness connector.

ECM		IPDM E/R		Continuity
Connector	Terminal	Connector	Terminal	
F14	15	F10	70	Existed

5. Also check harness for short to ground and short to power.

Is the inspection result normal?

YES >> GO TO 2.
NO >> Repair open circuit or short to ground or short to power in harness or connectors.

2. CHECK THROTTLE CONTROL MOTOR RELAY INPUT SIGNAL CIRCUIT

1. Check the continuity between ECM harness connector and IPDM E/R harness connector.

ECM		IPDM E/R		Continuity
Connector	Terminal	Connector	Terminal	
F14	2	F10	54	Existed

2. Also check harness for short to ground and short to power.

Is the inspection result normal?

YES >> GO TO 3.
NO >> Repair open circuit or short to ground or short to power in harness or connectors.

3. CHECK FUSE

1. Disconnect 15A fuse (No. 42) from IPDM E/R.
2. Check 15A fuse for blown.

Is the inspection result normal?

YES >> GO TO 4.
NO >> Replace 15A fuse.

4. CHECK INTERMITTENT INCIDENT

Refer to GI-42, "Intermittent Incident".

Is the inspection result normal?

YES >> Replace IPDM E/R.
NO >> Repair or replace harness or connectors.

P2101 ELECTRIC THROTTLE CONTROL FUNCTION

Description

INFOID:0000000004349895

Electric throttle control actuator consists of throttle control motor, throttle position sensor, etc.
The throttle control motor is operated by the ECM and it opens and closes the throttle valve.
The current opening angle of the throttle valve is detected by the throttle position sensor and it provides feedback to the ECM to control the throttle control motor to make the throttle valve opening angle properly in response to driving condition.

DTC Logic

INFOID:0000000004349896

DTC DETECTION LOGIC

NOTE:
If DTC P2101 is displayed with DTC P2100 or P2119, first perform the trouble diagnosis for DTC P2100 or P2119. Refer to EC-914, "DTC Logic" or EC-922, "DTC Logic".

DTC No.	Trouble diagnosis name	DTC detecting condition	Possible cause
P2101	Electric throttle control performance	Electric throttle control function does not operate properly.	• Harness or connectors (Throttle control motor circuit is open or shorted) • Electric throttle control actuator

DTC CONFIRMATION PROCEDURE

1.PRECONDITIONING

If DTC Confirmation Procedure has been previously conducted, always turn ignition switch OFF and wait at least 10 seconds before conducting the next test.
TESTING CONDITION:
Before performing the following procedure, confirm that battery voltage is more than 11V when engine is running.

>> GO TO 2.

2.PERFORM DTC CONFIRMATION PROCEDURE

1. Turn ignition switch ON and wait at least 2 seconds.
2. Start engine and let it idle for 5 seconds.
3. Check DTC.

Is DTC detected?

YES >> Go to EC-916, "Diagnosis Procedure".
NO >> INSPECTION END

Diagnosis Procedure

INFOID:0000000004349897

1.CHECK GROUND CONNECTION

1. Turn ignition switch OFF.
2. Check ground connection E9. Refer to Ground Inspection in GI-45, "Circuit Inspection".

Is the inspection result normal?

YES >> GO TO 2.
NO >> Repair or replace ground connection.

2.CHECK THROTTLE CONTROL MOTOR RELAY INPUT SIGNAL CIRCUIT-I

1. Check the voltage between ECM harness connector and ground.

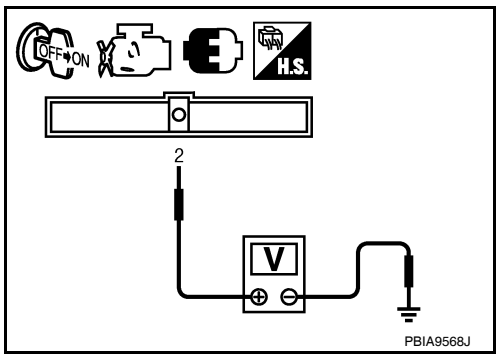

ECM		Ground	Condition	Voltage
Connector	Terminal			
F14	2	Ground	Ignition switch OFF	Approx. 0V
			Ignition switch ON	Battery voltage

Is the inspection result normal?

YES >> GO TO 7.
NO >> GO TO 3.

3. CHECK THROTTLE CONTROL MOTOR RELAY POWER SUPPLY CIRCUIT

1. Disconnect ECM harness connector.
2. Disconnect IPDM E/R harness connector F10.
3. Check the continuity between ECM harness connector and IPDM E/R harness connector.

IPDM E/R		ECM		Continuity
Connector	Terminal	Connector	Terminal	
F10	70	F14	15	Existed

4. Also check harness for short to ground and short to power.

Is the inspection result normal?

YES >> GO TO 4.
NO >> Repair open circuit or short to ground or short to power in harness or connectors.

4. CHECK THROTTLE CONTROL MOTOR RELAY INPUT SIGNAL CIRCUIT-II

1. Check the continuity between ECM harness connector and IPDM E/R harness connector.

IPDM E/R		ECM		Continuity
Connector	Terminal	Connector	Terminal	
F10	54	F14	2	Existed

2. Also check harness for short to ground and short to power.

Is the inspection result normal?

YES >> GO TO 5.
NO >> Repair open circuit or short to ground or short to power in harness or connectors.

5. CHECK FUSE

1. Disconnect 15A fuse (No. 42) from IPDM E/R.
2. Check 15A fuse for blown.

Is the inspection result normal?

YES >> GO TO 6.
NO >> Replace 15A fuse.

6. CHECK INTERMITTENT INCIDENT

Refer to GI-42, "Intermittent Incident".

Is the inspection result normal?

YES >> Replace IPDM E/R.
NO >> Repair or replace harness or connectors.

7. CHECK THROTTLE CONTROL MOTOR OUTPUT SIGNAL CIRCUIT FOR OPEN OR SHORT

1. Turn ignition switch OFF.
2. Disconnect electric throttle control actuator harness connector.
3. Disconnect ECM harness connector.
4. Check the continuity between electric throttle control actuator harness connector and ECM harness connector.

Electric throttle control actuator		ECM		Continuity
Connector	Terminal	Connector	Terminal	
F57	5	F14	5	Not existed
			6	Existed
	6		5	Existed
			6	Not existed

5. Also check harness for short to ground and short to power.

Is the inspection result normal?

YES >> GO TO 8.
NO >> Repair or replace.

8. CHECK ELECTRIC THROTTLE CONTROL ACTUATOR VISUALLY

1. Remove the intake air duct.
2. Check if foreign matter is caught between the throttle valve (1) and the housing.

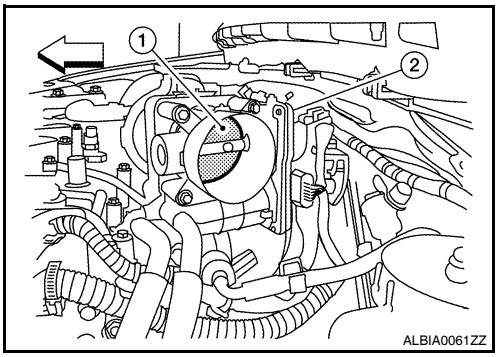

2. Electric throttle control actuator

⇦ : Vehicle front

Is the inspection result normal?

YES >> GO TO 9.
NO >> Remove the foreign matter and clean the electric throttle control actuator inside.

9. CHECK THROTTLE CONTROL MOTOR

Refer to EC-918, "Component Inspection".

Is the inspection result normal?

YES >> GO TO 10.
NO >> GO TO 11.

10. CHECK INTERMITTENT INCIDENT

Refer to GI-42, "Intermittent Incident".

Is the inspection result normal?

YES >> GO TO 11.
NO >> Repair or replace harness or connectors.

11. REPLACE ELECTRIC THROTTLE CONTROL ACTUATOR

1. Replace malfunction electric throttle control actuator.
2. Go to EC-919, "Special Repair Requirement".

>> INSPECTION END

Component Inspection

INFOID:0000000004349898

1. CHECK THROTTLE CONTROL MOTOR

1. Disconnect electric throttle control actuator harness connector.

2. Check resistance between electric throttle control actuator terminals as follows.

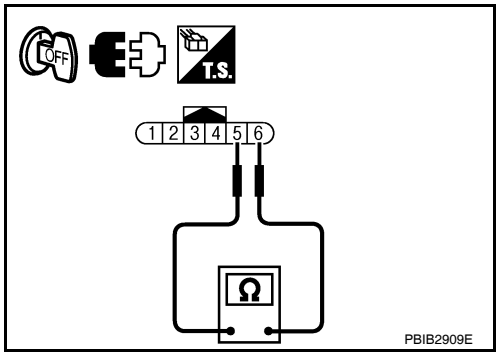

Terminals	Resistance
5 and 6	Approx. 1 - 15 Ω [at 25 °C (77°F)]

Is the inspection result normal?

YES >> INSPECTION END
NO >> GO TO 2.

2. REPLACE ELECTRIC THROTTLE CONTROL ACTUATOR

1. Replace electric throttle control actuator.
2. Go to EC-919, "Special Repair Requirement".

>> INSPECTION END

Special Repair Requirement

INFOID:0000000004349899

1. PERFORM THROTTLE VALVE CLOSED POSITION LEARNING

Refer to EC-565, "THROTTLE VALVE CLOSED POSITION LEARNING : Special Repair Requirement"

>> GO TO 2.

2. PERFORM IDLE AIR VOLUME LEARNING

Refer to EC-566, "IDLE AIR VOLUME LEARNING : Special Repair Requirement"

>> END

P2118 THROTTLE CONTROL MOTOR

Description

INFOID:0000000004349900

The throttle control motor is operated by the ECM and it opens and closes the throttle valve.
The current opening angle of the throttle valve is detected by the throttle position sensor and it provides feedback to the ECM to control the throttle control motor to make the throttle valve opening angle properly in response to driving condition.

DTC Logic

INFOID:0000000004349901

DTC DETECTION LOGIC

DTC No.	Trouble diagnosis name	DTC detecting condition	Possible cause
P2118	Throttle control motor circuit short	ECM detects short in both circuits between ECM and throttle control motor.	• Harness or connectors (Throttle control motor circuit is shorted.) • Electric throttle control actuator (Throttle control motor)

DTC CONFIRMATION PROCEDURE

1.PRECONDITIONING

If DTC Confirmation Procedure has been previously conducted, always turn ignition switch OFF and wait at least 10 seconds before conducting the next test.

>> GO TO 2.

2.PERFORM DTC CONFIRMATION PROCEDURE

1. Turn ignition switch ON and wait at least 2 seconds.
2. Start engine and let it idle for 5 seconds.
3. Check DTC.

Is DTC detected?

YES >> Go to EC-920, "Diagnosis Procedure".
NO >> INSPECTION END

Diagnosis Procedure

INFOID:0000000004349902

1.CHECK GROUND CONNECTION

1. Turn ignition switch OFF.
2. Check ground connection E9. Refer to Ground Inspection in GI-45, "Circuit Inspection".

Is the inspection result normal?

YES >> GO TO 2.
NO >> Repair or replace ground connection.

2.CHECK THROTTLE CONTROL MOTOR OUTPUT SIGNAL CIRCUIT FOR OPEN AND SHORT

1. Disconnect electric throttle control actuator harness connector.
2. Disconnect ECM harness connector.
3. Check the continuity between electric throttle control actuator harness connector and ECM harness connector.

Electric throttle control actuator		ECM		Continuity
Connector	Terminal	Connector	Terminal	
F57	5	F14	5	Not existed
			6	Existed
	6		5	Existed
			6	Not existed

4. Also check harness for short to ground and short to power.

Is the inspection result normal?

YES >> GO TO 3.
NO >> Repair or replace.

3. CHECK THROTTLE CONTROL MOTOR

Refer to EC-921, "Component Inspection".

Is the inspection result normal?

YES >> GO TO 4.
NO >> GO TO 5.

4. CHECK INTERMITTENT INCIDENT

Refer to GI-42, "Intermittent Incident".

Is the inspection result normal?

YES >> GO TO 5.
NO >> Repair or replace harness or connectors.

5. REPLACE ELECTRIC THROTTLE CONTROL ACTUATOR

1. Replace electric throttle control actuator.
2. Go to EC-921, "Special Repair Requirement".

>> INSPECTION END

Component Inspection

INFOID:0000000004349903

1. CHECK THROTTLE CONTROL MOTOR

1. Disconnect electric throttle control actuator harness connector.
2. Check resistance between electric throttle control actuator terminals as follows.

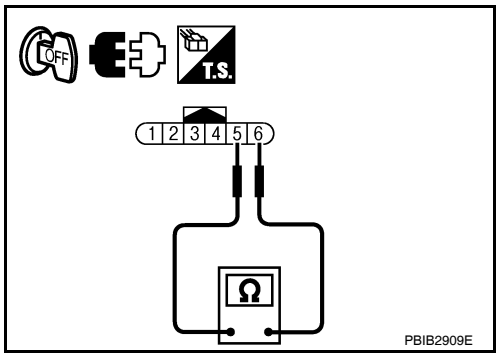

Terminals	Resistance
5 and 6	Approx. 1 - 15 Ω [at 25 °C (77°F)]

Is the inspection result normal?

YES >> INSPECTION END
NO >> GO TO 2.

2. REPLACE ELECTRIC THROTTLE CONTROL ACTUATOR

1. Replace electric throttle control actuator.
2. Go to EC-921, "Special Repair Requirement".

>> INSPECTION END

Special Repair Requirement

INFOID:0000000004349904

1. PERFORM THROTTLE VALVE CLOSED POSITION LEARNING

Refer to EC-565, "THROTTLE VALVE CLOSED POSITION LEARNING : Special Repair Requirement"

>> GO TO 2.

2. PERFORM IDLE AIR VOLUME LEARNING

Refer to EC-566, "IDLE AIR VOLUME LEARNING : Special Repair Requirement"

>> END

P2119 ELECTRIC THROTTLE CONTROL ACTUATOR

Description

INFOID:0000000004349905

Electric throttle control actuator consists of throttle control motor, throttle position sensor, etc.
The throttle control motor is operated by the ECM and it opens and closes the throttle valve.
The throttle position sensor detects the throttle valve position, and the opening and closing speed of the throttle valve and feeds the voltage signals to the ECM. The ECM judges the current opening angle of the throttle valve from these signals and the ECM controls the throttle control motor to make the throttle valve opening angle properly in response to driving condition.

DTC Logic

INFOID:0000000004349906

DTC DETECTION LOGIC

DTC No.	Trouble diagnosis name	DTC detecting condition		Possible cause
P2119	Electric throttle control actuator	A)	Electric throttle control actuator does not function properly due to the return spring malfunction.	• Electric throttle control actuator
		B)	Throttle valve opening angle in fail-safe mode is not in specified range.	
		C)	ECM detect the throttle valve is stuck open.	

DTC CONFIRMATION PROCEDURE

1.PRECONDITIONING

If DTC Confirmation Procedure has been previously conducted, always turn ignition switch OFF and wait at least 10 seconds before conducting the next test.

>> GO TO 2.

2.PERFORM DTC CONFIRMATION PROCEDURE FOR MALFUNCTION A AND B

1. Turn ignition switch ON and wait at least 1 second.
2. Set shift lever to D (CVT) or 1st (M/T) position and wait at least 3 seconds.
3. Set shift lever to P (CVT) or Neutral (M/T) position.
4. Turn ignition switch OFF and wait at least 10 seconds.
5. Turn ignition switch ON and wait at least 1 second.
6. Set shift lever to D (CVT) or 1st (M/T) position and wait at least 3 seconds.
7. Set shift lever to P (CVT) or Neutral (M/T) position.
8. Turn ignition switch OFF, wait at least 10 seconds, and then turn ON.
9. Check DTC.

Is DTC detected?

YES >> Go to EC-922, "Diagnosis Procedure".
NO >> GO TO 3.

3.PERFORM DTC CONFIRMATION PROCEDURE FOR MALFUNCTION C

1. Turn ignition switch ON and wait at least 1 second.
2. Set shift lever to D (CVT) or 1st (M/T) position and wait at least 3 seconds.
3. Set shift lever to N, P (CVT) or Neutral (M/T) position.
4. Start engine and let it idle for 3 seconds.
5. Check DTC.

Is DTC detected?

YES >> Go to EC-922, "Diagnosis Procedure".
NO >> INSPECTION END

Diagnosis Procedure

INFOID:0000000004349907

1.CHECK ELECTRIC THROTTLE CONTROL ACTUATOR VISUALLY

1. Turn ignition switch OFF.
2. Remove the intake air duct.
3. Check if foreign matter is caught between the throttle valve (1) and the housing.

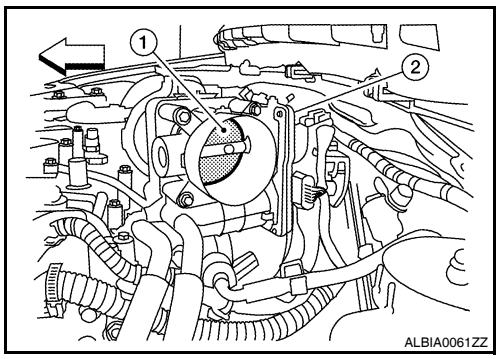

2. Electric throttle control actuator

⇦ : Vehicle front

Is the inspection result normal?

YES >> GO TO 2.
NO >> Remove the foreign matter and clean the electric throttle control actuator inside.

2. REPLACE ELECTRIC THROTTLE CONTROL ACTUATOR

1. Replace electric throttle control actuator.
2. Go to EC-923, "Special Repair Requirement".

>> INSPECTION END

Special Repair Requirement

INFOID:0000000004349908

1. PERFORM THROTTLE VALVE CLOSED POSITION LEARNING

Refer to EC-565, "THROTTLE VALVE CLOSED POSITION LEARNING : Special Repair Requirement"

>> GO TO 2.

2. PERFORM IDLE AIR VOLUME LEARNING

Refer to EC-566, "IDLE AIR VOLUME LEARNING : Special Repair Requirement"

>> END

P2122, P2123 APP SENSOR

Description

INFOID:0000000004349909

The accelerator pedal position sensor is installed on the upper end of the accelerator pedal assembly. The sensor detects the accelerator position and sends a signal to the ECM.
Accelerator pedal position sensor has two sensors. These sensors are a kind of potentiometers which transform the accelerator pedal position into output voltage, and emit the voltage signal to the ECM. In addition, these sensors detect the opening and closing speed of the accelerator pedal and feed the voltage signals to the ECM. The ECM judges the current opening angle of the accelerator pedal from these signals and controls the throttle control motor based on these signals.

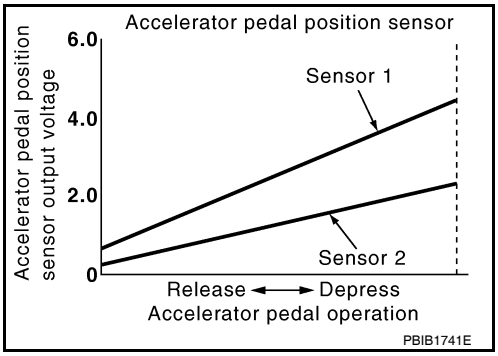

Idle position of the accelerator pedal is determined by the ECM receiving the signal from the accelerator pedal position sensor. The ECM uses this signal for the engine operation such as fuel cut.

DTC Logic

INFOID:0000000004349910

DTC DETECTION LOGIC

NOTE:
If DTC P2122 or P2123 is displayed with DTC P0643, first perform the trouble diagnosis for DTC P0643. Refer to EC-867, "DTC Logic".

DTC No.	Trouble diagnosis name	DTC detecting condition	Possible cause
P2122	Accelerator pedal position sensor 1 circuit low input	An excessively low voltage from the APP sensor 1 is sent to ECM.	• Harness or connectors (APP sensor 1 circuit is open or shorted.) • Accelerator pedal position sensor (APP sensor 1)
P2123	Accelerator pedal position sensor 1 circuit high input	An excessively high voltage from the APP sensor 1 is sent to ECM.	

DTC CONFIRMATION PROCEDURE

1. PRECONDITIONING

If DTC Confirmation Procedure has been previously conducted, always turn ignition switch OFF and wait at least 10 seconds before conducting the next test.
TESTING CONDITION:
Before performing the following procedure, confirm that battery voltage is more than 8V at idle.

>> GO TO 2.

2. PERFORM DTC CONFIRMATION PROCEDURE

1. Start engine and let it idle for 1 second.
2. Check DTC.

Is DTC detected?

YES >> Go to EC-924, "Diagnosis Procedure".
NO >> INSPECTION END

Diagnosis Procedure

INFOID:0000000004349911

1. CHECK GROUND CONNECTION

1. Turn ignition switch OFF.
2. Check ground connection E9. Refer to Ground Inspection in GI-45, "Circuit Inspection".

Is the inspection result normal?

YES >> GO TO 2.

NO >> Repair or replace ground connection.

2. CHECK APP SENSOR 1 POWER SUPPLY CIRCUIT

1. Disconnect accelerator pedal position (APP) sensor harness connector.
2. Turn ignition switch ON.
3. Check the voltage between APP sensor harness connector and ground.

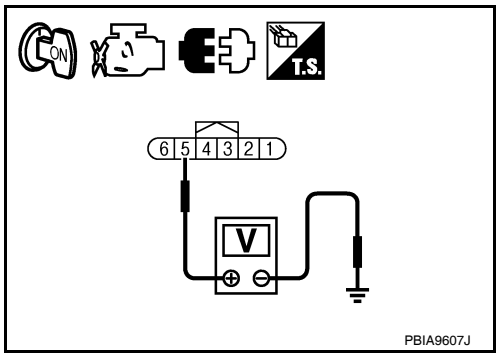

APP sensor		Ground	Voltage
Connector	Terminal		
E40	5	Ground	Approx. 5V

Is the inspection result normal?

YES >> GO TO 3.
NO >> Repair open circuit or short to ground or short to power in harness or connectors.

3. CHECK APP SENSOR 1 GROUND CIRCUIT FOR OPEN AND SHORT

1. Turn ignition switch OFF.
2. Disconnect ECM harness connector.
3. Check the continuity between APP sensor harness connector and ECM harness connector.

APP sensor		ECM		Continuity
Connector	Terminal	Connector	Terminal	
E40	4	E10	84	Existed

4. Also check harness for short to ground and short to power.

Is the inspection result normal?

YES >> GO TO 4.
NO >> Repair open circuit or short to ground or short to power in harness or connectors.

4. CHECK APP SENSOR INPUT SIGNAL CIRCUIT FOR OPEN AND SHORT

1. Check the continuity between APP sensor harness connector and ECM harness connector.

APP sensor		ECM		Continuity
Connector	Terminal	Connector	Terminal	
E40	3	E10	81	Existed

2. Also check harness for short to ground and short to power.

Is the inspection result normal?

YES >> GO TO 5.
NO >> Repair open circuit or short to ground or short to power in harness or connectors.

5. CHECK APP SENSOR

Refer to EC-926, "Component Inspection".

Is the inspection result normal?

YES >> GO TO 7.
NO >> GO TO 6.

6. REPLACE ACCELERATOR PEDAL ASSEMBLY

1. Replace accelerator pedal assembly.
2. Go to EC-926, "Special Repair Requirement".

>> INSPECTION END

7. CHECK INTERMITTENT INCIDENT

Refer to GI-42, "Intermittent Incident".

>> INSPECTION END

Component Inspection

INFOID:0000000004349912

1. CHECK ACCELERATOR PEDAL POSITION SENSOR

1. Reconnect all harness connectors disconnected.
2. Turn ignition switch ON.
3. Check the voltage between ECM harness connector and ground.

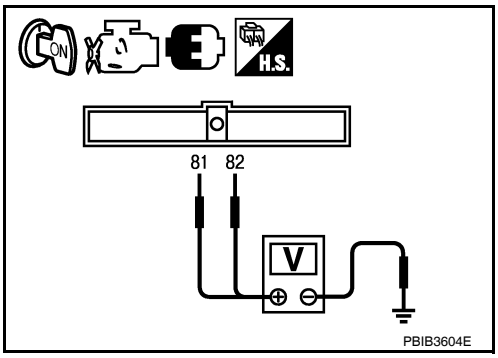

ECM		Ground	Condition		Voltage
Connector	Terminal				
E40	81 (APP sensor 1 signal)	Ground	Accelerator pedal	Fully released	0.5 - 1.0V
				Fully depressed	4.2 - 4.8V
	82 (APP sensor 2 signal)			Fully released	0.25 - 0.5V
				Fully depressed	2.0 - 2.5V

Is the inspection result normal?

YES >> INSPECTION END
NO >> GO TO 2.

2. REPLACE ACCELERATOR PEDAL ASSEMBLY

1. Replace accelerator pedal assembly.
2. Go to EC-926, "Special Repair Requirement".

>> INSPECTION END

Special Repair Requirement

INFOID:0000000004349913

1. PERFORM ACCELERATOR PEDAL RELEASED POSITION LEARNING

Refer to EC-565, "ACCELERATOR PEDAL RELEASED POSITION LEARNING : Special Repair Requirement".

>> GO TO 2.

2. PERFORM THROTTLE VALVE CLOSED POSITION LEARNING

Refer to EC-565, "THROTTLE VALVE CLOSED POSITION LEARNING : Special Repair Requirement".

>> GO TO 3.

3. PERFORM IDLE AIR VOLUME LEARNING

Refer to EC-566, "IDLE AIR VOLUME LEARNING : Special Repair Requirement".

>> END

P2127, P2128 APP SENSOR

Description

INFOID:0000000004349914

The accelerator pedal position sensor is installed on the upper end of the accelerator pedal assembly. The sensor detects the accelerator position and sends a signal to the ECM.
Accelerator pedal position sensor has two sensors. These sensors are a kind of potentiometers which transform the accelerator pedal position into output voltage, and emit the voltage signal to the ECM. In addition, these sensors detect the opening and closing speed of the accelerator pedal and feed the voltage signals to the ECM. The ECM judges the current opening angle of the accelerator pedal from these signals and controls the throttle control motor based on these signals.

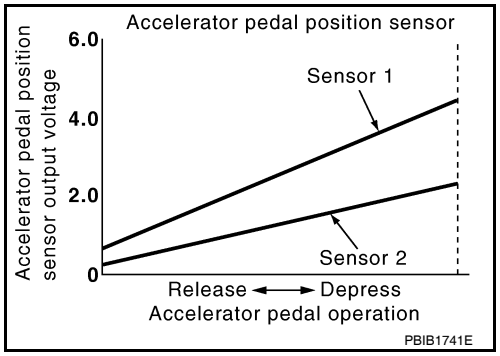

Idle position of the accelerator pedal is determined by the ECM receiving the signal from the accelerator pedal position sensor. The ECM uses this signal for the engine operation such as fuel cut.

DTC Logic

INFOID:0000000004349915

DTC DETECTION LOGIC

DTC No.	Trouble diagnosis name	DTC detecting condition	Possible cause
P2127	Accelerator pedal position sensor 2 circuit low input	An excessively low voltage from the APP sensor 2 is sent to ECM.	• Harness or connectors (APP sensor 2 circuit is open or shorted.) [Crankshaft position sensor (POS) circuit is shorted.] (Refrigerant pressure sensor circuit is shorted.) (EVAP control system pressure sensor circuit is shorted.) • Accelerator pedal position sensor (APP sensor 2) • Crankshaft position sensor (POS) • Refrigerant pressure sensor • EVAP control system pressure sensor
P2128	Accelerator pedal position sensor 2 circuit high input	An excessively high voltage from the APP sensor 2 is sent to ECM.	

DTC CONFIRMATION PROCEDURE

1. PRECONDITIONING

If DTC Confirmation Procedure has been previously conducted, always turn ignition switch OFF and wait at least 10 seconds before conducting the next test.
TESTING CONDITION:
Before performing the following procedure, confirm that battery voltage is more than 8V at idle.

>> GO TO 2.

2. PERFORM DTC CONFIRMATION PROCEDURE

1. Start engine and let it idle for 1 second.
2. Check DTC.

Is DTC detected?

YES >> Go to EC-927, "Diagnosis Procedure".
NO >> INSPECTION END

Diagnosis Procedure

INFOID:0000000004349916

1. CHECK GROUND CONNECTION

1. Turn ignition switch OFF.
2. Check ground connection E9. Refer to Ground Inspection in GI-45, "Circuit Inspection".

Is the inspection result normal?

YES >> GO TO 2.
NO >> Repair or replace ground connection.

2. CHECK APP SENSOR 2 POWER SUPPLY CIRCUIT-I

1. Disconnect accelerator pedal position (APP) sensor harness connector.
2. Turn ignition switch ON.
3. Check the voltage between APP sensor harness connector and ground.

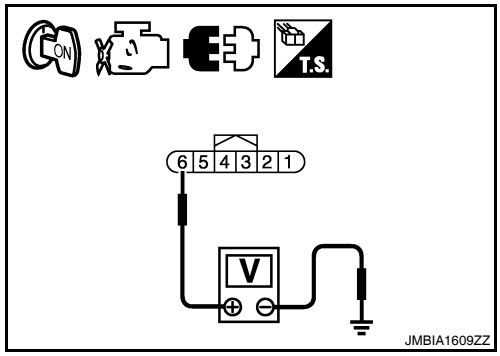

APP sensor		Ground	Voltage
Connector	Terminal		
E40	6	Ground	Approx. 5V

Is the inspection result normal?

YES >> GO TO 6.
NO >> GO TO 3.

3. CHECK APP SENSOR 2 POWER SUPPLY CIRCUIT-II

1. Turn ignition switch OFF.
2. Disconnect ECM harness connector.
3. Check the continuity between APP sensor harness connector and ECM harness connector.

APP sensor		ECM		Continuity
Connector	Terminal	Connector	Terminal	
E40	6	E10	87	Existed

Is the inspection result normal?

YES >> GO TO 4.
NO >> Repair open circuit or short to ground or short to power in harness or connectors.

4. CHECK APP SENSOR 2 POWER SUPPLY CIRCUIT-III

Check harness for short to power and short to ground, between the following terminals.

ECM		Sensor		
Connector	Terminal	Name	Connector	Terminal
F13	72	Refrigerant pressure sensor	E219	3
	76	CKP sensor (POS)	F30	1
E10	87	APP sensor	E40	6
	91	EVAP control system pressure sensor	B41	3

Is the inspection result normal?

YES >> GO TO 5.
NO >> Repair short to ground or short to power in harness or connectors.

5. CHECK COMPONENTS

Check the following.
- Crankshaft position sensor (POS) (Refer to EC-786, "Component Inspection".)
- EVAP control system pressure sensor (Refer to EC-824, "Component Inspection".)
- Refrigerant pressure sensor (Refer to EC-975, "Diagnosis Procedure".)

Is the inspection result normal?

YES >> GO TO 10.
NO >> Replace malfunctioning component.

6. CHECK APP SENSOR 2 GROUND CIRCUIT FOR OPEN AND SHORT

1. Turn ignition switch OFF.

2. Disconnect ECM harness connector.
3. Check the continuity between APP sensor harness connector and ECM harness connector.

APP sensor		ECM		Continuity
Connector	Terminal	Connector	Terminal	
E40	2	E10	100	Existed

4. Also check harness for short to ground and short to power.

Is the inspection result normal?

YES >> GO TO 7.
NO >> Repair open circuit or short to ground or short to power in harness or connectors.

7. CHECK APP SENSOR 2 INPUT SIGNAL CIRCUIT FOR OPEN AND SHORT

1. Check the continuity between APP sensor harness connector and ECM harness connector.

APP sensor		ECM		Continuity
Connector	Terminal	Connector	Terminal	
E40	1	E10	82	Existed

2. Also check harness for short to ground and short to power.

Is the inspection result normal?

YES >> GO TO 8.
NO >> Repair open circuit or short to ground or short to power in harness or connectors.

8. CHECK APP SENSOR

Refer to EC-929, "Component Inspection".

Is the inspection result normal?

YES >> GO TO 10.
NO >> GO TO 9.

9. REPLACE ACCELERATOR PEDAL ASSEMBLY

1. Replace accelerator pedal assembly.
2. Go to EC-930, "Special Repair Requirement".

>> INSPECTION END

10. CHECK INTERMITTENT INCIDENT

Refer to GI-42, "Intermittent Incident".

>> INSPECTION END

Component Inspection

INFOID:0000000004349917

1. CHECK ACCELERATOR PEDAL POSITION SENSOR

1. Reconnect all harness connectors disconnected.
2. Turn ignition switch ON.
3. Check the voltage between ECM harness connector and ground.

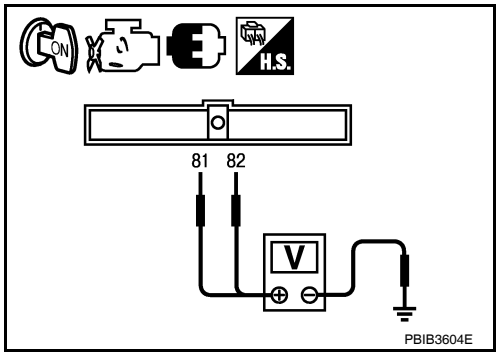

ECM		Ground	Condition		Voltage
Connector	Terminal				
E40	81 (APP sensor 1 signal)	Ground	Accelerator pedal	Fully released	0.5 - 1.0V
				Fully depressed	4.2 - 4.8V
	82 (APP sensor 2 signal)			Fully released	0.25 - 0.5V
				Fully depressed	2.0 - 2.5V

Is the inspection result normal?

YES >> INSPECTION END
NO >> GO TO 2.

2. REPLACE ACCELERATOR PEDAL ASSEMBLY

1. Replace accelerator pedal assembly.
2. Go to EC-930, "Special Repair Requirement".

>> INSPECTION END

Special Repair Requirement

INFOID:0000000004349918

1. PERFORM ACCELERATOR PEDAL RELEASED POSITION LEARNING

Refer to EC-565, "ACCELERATOR PEDAL RELEASED POSITION LEARNING : Special Repair Requirement".

>> GO TO 2.

2. PERFORM THROTTLE VALVE CLOSED POSITION LEARNING

Refer to EC-565, "THROTTLE VALVE CLOSED POSITION LEARNING : Special Repair Requirement".

>> GO TO 3.

3. PERFORM IDLE AIR VOLUME LEARNING

Refer to EC-566, "IDLE AIR VOLUME LEARNING : Special Repair Requirement".

>> END

P2135 TP SENSOR

Description

INFOID:0000000004349919

Electric throttle control actuator consists of throttle control motor, throttle position sensor, etc. The throttle position sensor responds to the throttle valve movement.
The throttle position sensor has two sensors. These sensors are a kind of potentiometers which transform the throttle valve position into output voltage, and emit the voltage signal to the ECM. In addition, these sensors detect the opening and closing speed of the throttle valve and feed the voltage signals to the ECM. The ECM judges the current opening angle of the throttle valve from these signals and the ECM controls the throttle control motor to make the throttle valve opening angle properly in response to driving condition.

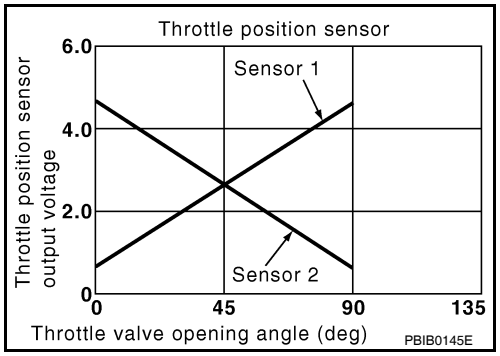

DTC Logic

INFOID:0000000004349920

DTC DETECTION LOGIC

NOTE:
If DTC P2135 is displayed with DTC P0643, first perform the trouble diagnosis for DTC P0643. Refer to EC-867, "DTC Logic".

DTC No.	Trouble diagnosis name	DTC detecting condition	Possible cause
P2135	Throttle position sensor circuit range/performance	Rationally incorrect voltage is sent to ECM compared with the signals from TP sensor 1 and TP sensor 2.	• Harness or connector (TP sensor 1 and 2 circuit is open or shorted.) • Electric throttle control actuator (TP sensor 1 and 2)

DTC CONFIRMATION PROCEDURE

1. PRECONDITIONING

If DTC Confirmation Procedure has been previously conducted, always turn ignition switch OFF and wait at least 10 seconds before conducting the next test.
TESTING CONDITION:
Before performing the following procedure, confirm that battery voltage is more than 8V at idle.

>> GO TO 2.

2. PERFORM DTC CONFIRMATION PROCEDURE

1. Start engine and let it idle for 1 second.
2. Check DTC.

Is DTC detected?

YES >> Go to EC-931, "Diagnosis Procedure".
NO >> INSPECTION END

Diagnosis Procedure

INFOID:0000000004349921

1. CHECK GROUND CONNECTION

1. Turn ignition switch OFF.
2. Check ground connection E9. Refer to Ground Inspection in GI-45, "Circuit Inspection".

Is the inspection result normal?

YES >> GO TO 2.
NO >> Repair or replace ground connection.

2. CHECK THROTTLE POSITION SENSOR POWER SUPPLY CIRCUIT-I

1. Disconnect electric throttle control actuator harness connector.

2. Turn ignition switch ON.
3. Check the voltage between electric throttle control actuator harness connector and ground.

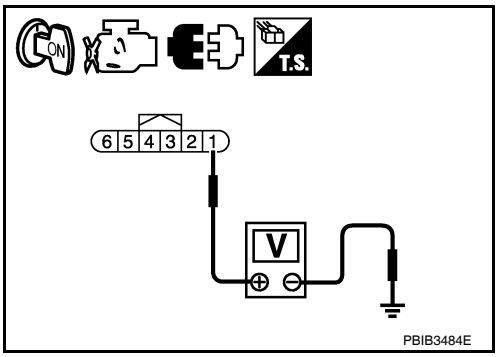

Electric throttle control actuator		Ground	Voltage
Connector	Terminal		
F57	1	Ground	Approx. 5V

Is the inspection result normal?

YES >> GO TO 4.
NO >> GO TO 3.

3. CHECK THROTTLE POSITION SENSOR POWER SUPPLY CIRCUIT-II

1. Turn ignition switch OFF.
2. Disconnect ECM harness connector.
3. Check the continuity between electric throttle control actuator harness connector and ground.

Electric throttle control actuator		ECM		Continuity
Connector	Terminal	Connector	Terminal	
F57	1	F13	47	Existed

Is the inspection result normal?

YES >> GO TO 4.
NO >> Repair open circuit.

4. CHECK THROTTLE POSITION SENSOR GROUND CIRCUIT FOR OPEN AND SHORT

1. Turn ignition switch OFF.
2. Disconnect ECM harness connector.
3. Check the continuity between electric throttle control actuator harness connector and ground.

Electric throttle control actuator		ECM		Continuity
Connector	Terminal	Connector	Terminal	
F57	4	F13	36	Existed

4. Also check harness for short to ground and short to power.

Is the inspection result normal?

YES >> GO TO 5.
NO >> Repair open circuit or short to ground or short to power in harness or connectors.

5. CHECK THROTTLE POSITION SENSOR INPUT SIGNAL CIRCUIT FOR OPEN AND SHORT

1. Check the continuity between electric throttle control actuator harness connector and ground.

Electric throttle control actuator		ECM		Continuity
Connector	Terminal	Connector	Terminal	
F57	2	F13	37	Existed
	3		38	

2. Also check harness for short to ground and short to power.

Is the inspection result normal?

YES >> GO TO 6.
NO >> Repair open circuit or short to ground or short to power in harness or connectors.

6. CHECK THROTTLE POSITION SENSOR

Refer to EC-933, "Component Inspection".

Is the inspection result normal?

YES >> GO TO 8.

NO >> GO TO 7.

7. REPLACE ELECTRIC THROTTLE CONTROL ACTUATOR

1. Replace electric throttle control actuator.
2. EC-933, "Special Repair Requirement"

>> INSPECTION END

8. CHECK INTERMITTENT INCIDENT

Refer to GI-42, "Intermittent Incident".

>> INSPECTION END

Component Inspection

INFOID:0000000004349922

1. CHECK THROTTLE POSITION SENSOR

1. Turn ignition switch OFF.
2. Reconnect all harness connectors disconnected.
3. Perform EC-933, "Special Repair Requirement".
4. Turn ignition switch ON.
5. Set shift lever to D (CVT) or 1st (M/T) position.
6. Check the voltage between ECM harness connector and ground.

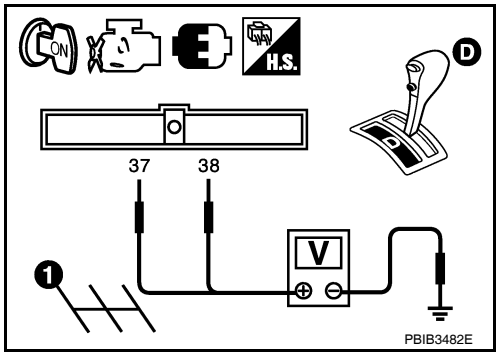

ECM		Ground	Condition		Voltage
Connector	Terminal				
F13	37 (TP sensor 1 signal)	Ground	Accelerator pedal	Fully released	More than 0.36V
				Fully depressed	Less than 4.75V
	38 (TP sensor 2 signal)			Fully released	Less than 4.75V
				Fully depressed	More than 0.36V

Is the inspection result normal?

YES >> INSPECTION END
NO >> GO TO 2.

2. REPLACE ELECTRIC THROTTLE CONTROL ACTUATOR

1. Replace electric throttle control actuator.
2. Go to EC-933, "Special Repair Requirement".

>> INSPECTION END

Special Repair Requirement

INFOID:0000000004349923

1. PERFORM THROTTLE VALVE CLOSED POSITION LEARNING

Refer to EC-565, "THROTTLE VALVE CLOSED POSITION LEARNING : Special Repair Requirement"

>> GO TO 2.

2. PERFORM IDLE AIR VOLUME LEARNING

Refer to EC-566, "IDLE AIR VOLUME LEARNING : Special Repair Requirement"

>> END

P2138 APP SENSOR

Description

INFOID:0000000004349924

The accelerator pedal position sensor is installed on the upper end of the accelerator pedal assembly. The sensor detects the accelerator position and sends a signal to the ECM.
Accelerator pedal position sensor has two sensors. These sensors are a kind of potentiometers which transform the accelerator pedal position into output voltage, and emit the voltage signal to the ECM. In addition, these sensors detect the opening and closing speed of the accelerator pedal and feed the voltage signals to the ECM. The ECM judges the current opening angle of the accelerator pedal from these signals and controls the throttle control motor based on these signals.

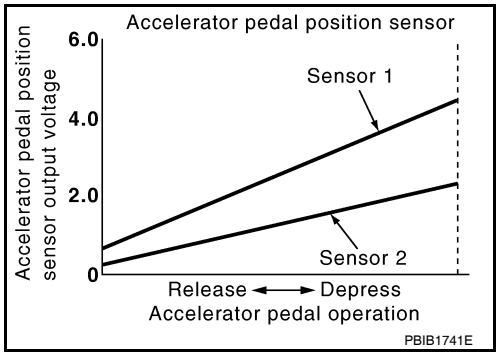

Idle position of the accelerator pedal is determined by the ECM receiving the signal from the accelerator pedal position sensor. The ECM uses this signal for the engine operation such as fuel cut.

DTC Logic

INFOID:0000000004349925

DTC DETECTION LOGIC

NOTE:
If DTC P2138 is displayed with DTC P0643, first perform the trouble diagnosis for DTC P0643. Refer to EC-867, "DTC Logic".

DTC No.	Trouble diagnosis name	DTC detecting condition	Possible cause
P2138	Accelerator pedal position sensor circuit range/performance	Rationally incorrect voltage is sent to ECM compared with the signals from APP sensor 1 and APP sensor 2.	• Harness or connector (APP sensor 1 and 2 circuit is open or shorted.) [Crankshaft position sensor (POS) circuit is shorted.) (Refrigerant pressure sensor circuit is shorted.) (EVAP control system sensor circuit is shorted.) • Accelerator pedal position sensor (APP sensor 1 and 2) • Crankshaft position sensor (POS) • Refrigerant pressure sensor • EVAP control system pressure sensor

DTC CONFIRMATION PROCEDURE

1. PRECONDITIONING

If DTC Confirmation Procedure has been previously conducted, always turn ignition switch OFF and wait at least 10 seconds before conducting the next test.
TESTING CONDITION:
Before performing the following procedure, confirm that battery voltage is more than 8V at idle.

>> GO TO 2.

2. PERFORM DTC CONFIRMATION PROCEDURE

1. Start engine and let it idle for 1 second.
2. Check DTC.

Is DTC detected?

YES >> Go to EC-936, "Diagnosis Procedure".
NO >> INSPECTION END

Diagnosis Procedure

INFOID:0000000004349926

1. CHECK GROUND CONNECTION

1. Turn ignition switch OFF.
2. Check ground connection E9. Refer to Ground Inspection in GI-45, "Circuit Inspection".

Is the inspection result normal?

YES >> GO TO 2.
NO >> Repair or replace ground connection.

2. CHECK APP SENSOR 1 POWER SUPPLY CIRCUIT

1. Disconnect accelerator pedal position (APP) sensor harness connector.
2. Turn ignition switch ON.
3. Check the voltage between APP sensor harness connector and ground.

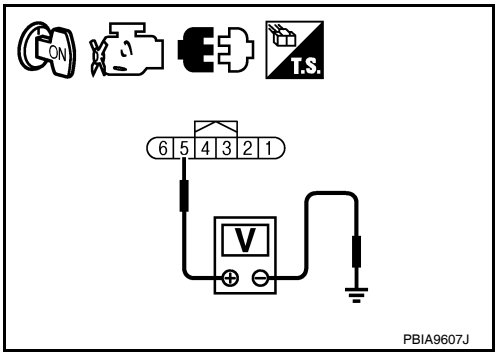

APP sensor		Ground	Voltage
Connector	Terminal		
E40	5	Ground	Approx. 5V

Is the inspection result normal?

YES >> GO TO 3.
NO >> Repair open circuit or short to ground or shot to power in harness or connectors.

3. CHECK APP SENSOR 2 POWER SUPPLY CIRCUIT-I

1. Turn ignition switch ON.
2. Check the voltage between APP sensor harness connector and ground.

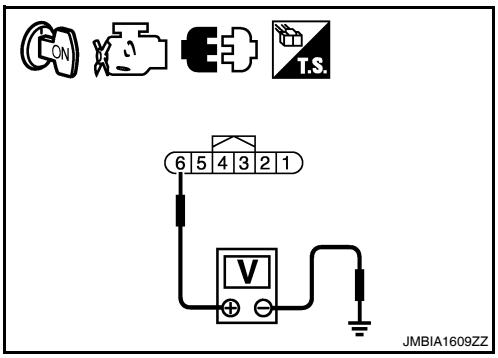

APP sensor		Ground	Voltage
Connector	Terminal		
E40	6	Ground	Approx. 5V

Is the inspection result normal?

YES >> GO TO 7.
NO >> GO TO 4.

4. CHECK APP SENSOR 2 POWER SUPPLY CIRCUIT-II

1. Turn ignition switch OFF.
2. Disconnect ECM harness connector.
3. Check the continuity between APP sensor harness connector and ECM harness connector.

APP sensor		ECM		Continuity
Connector	Terminal	Connector	Terminal	
E40	6	E10	87	Existed

Is the inspection result normal?

YES >> GO TO 5.
NO >> Repair open circuit or short to ground or shot to power in harness or connectors.

5. CHECK APP SENSOR 2 POWER SUPPLY CIRCUIT-III

Check harness for short to power and short to ground, between the following terminals.

ECM		Sensor		
Connector	Terminal	Name	Connector	Terminal
F13	72	Refrigerant pressure sensor	E219	1
	76	CKP sensor (POS)	F30	1
E10	87	APP sensor	E40	6
	91	EVAP control system pressure sensor	B41	3

Is the inspection result normal?

YES >> GO TO 6.
NO >> Repair short to ground or short to power in harness or connectors.

6. CHECK COMPONENTS

Check the following.
- Crankshaft position sensor (POS) (Refer to EC-786, "Component Inspection".)
- EVAP control system pressure sensor (Refer to EC-824, "Component Inspection".)
- Refrigerant pressure sensor (Refer to EC-975, "Diagnosis Procedure".)

Is the inspection result normal?

YES >> GO TO 11.
NO >> Replace malfunctioning component.

7. CHECK APP SENSOR GROUND CIRCUIT FOR OPEN AND SHORT

1. Turn ignition switch OFF.
2. Disconnect ECM harness connector.
3. Check the continuity between APP sensor harness connector and ECM harness connector as follows.

APP sensor		ECM		Continuity
Connector	Terminal	Connector	Terminal	
E40	2	F10	84	Existed
	4		100	

4. Also check harness for short to ground and short to power.

Is the inspection result normal?

YES >> GO TO 8.
NO >> Repair open circuit or short to ground or shot to power in harness or connectors.

8. CHECK APP SENSOR INPUT SIGNAL CIRCUIT FOR OPEN AND SHORT

1. Check the continuity between APP sensor harness connector and ECM harness connector as follows.

APP sensor		ECM		Continuity
Connector	Terminal	Connector	Terminal	
E40	1	F10	82	Existed
	3		81	

2. Also check harness for short to ground and short to power.

Is the inspection result normal?

YES >> GO TO 9.
NO >> Repair open circuit or short to ground or shot to power in harness or connectors.

9. CHECK APP SENSOR

Refer to EC-938, "Component Inspection".

Is the inspection result normal?

YES >> GO TO 11.
NO >> GO TO 10.

10. REPLACE ACCELERATOR PEDAL ASSEMBLY

1. Replace accelerator pedal assembly.
2. Go to EC-938, "Special Repair Requirement".

>> INSPECTION END

11. CHECK INTERMITTENT INCIDENT

Refer to GI-42, "Intermittent Incident".

>> INSPECTION END

Component Inspection

INFOID:0000000004349927

1. CHECK ACCELERATOR PEDAL POSITION SENSOR

1. Reconnect all harness connectors disconnected.
2. Turn ignition switch ON.
3. Check the voltage between ECM harness connector and ground.

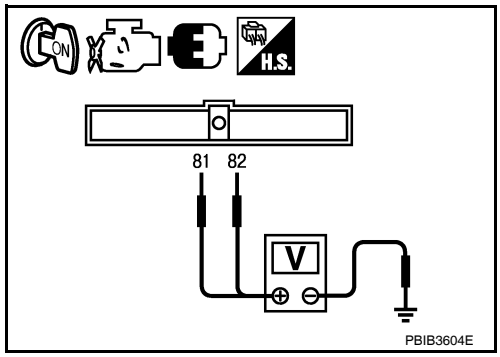

ECM		Ground	Condition		Voltage
Connector	Terminal				
E40	81 (APP sensor 1 signal)	Ground	Accelerator pedal	Fully released	0.5 - 1.0V
				Fully depressed	4.2 - 4.8V
	82 (APP sensor 2 signal)			Fully released	0.25 - 0.5V
				Fully depressed	2.0 - 2.5V

Is the inspection result normal?

YES >> INSPECTION END
NO >> GO TO 2.

2. REPLACE ACCELERATOR PEDAL ASSEMBLY

1. Replace accelerator pedal assembly.
2. Go to EC-938, "Special Repair Requirement".

>> INSPECTION END

Special Repair Requirement

INFOID:0000000004349928

1. PERFORM ACCELERATOR PEDAL RELEASED POSITION LEARNING

Refer to EC-565, "ACCELERATOR PEDAL RELEASED POSITION LEARNING : Special Repair Requirement".

>> GO TO 2.

2. PERFORM THROTTLE VALVE CLOSED POSITION LEARNING

Refer to EC-565, "THROTTLE VALVE CLOSED POSITION LEARNING : Special Repair Requirement".

>> GO TO 3.

3. PERFORM IDLE AIR VOLUME LEARNING

Refer to EC-566, "IDLE AIR VOLUME LEARNING : Special Repair Requirement".

>> END

P2A00 A/F SENSOR 1

Description

INFOID:0000000004349929

The air fuel ratio (A/F) sensor 1 is a planar one-cell limit current sensor. The sensor element of the A/F sensor 1 is composed an electrode layer, which transports ions. It has a heater in the element.
The sensor is capable of precise measurement λ = 1, but also in the lean and rich range. Together with its control electronics, the sensor outputs a clear, continuous signal throughout a wide λ range.
The exhaust gas components diffuse through the diffusion layer at the sensor cell. An electrode layer is applied voltage, and this current relative oxygen density in lean. Also this current relative hydrocarbon density in rich.
Therefore, the A/F sensor 1 is able to indicate air fuel ratio by this electrode layer of current. In addition, a heater is integrated in the sensor to ensure the required operating temperature of about 800°C (1,472°F).

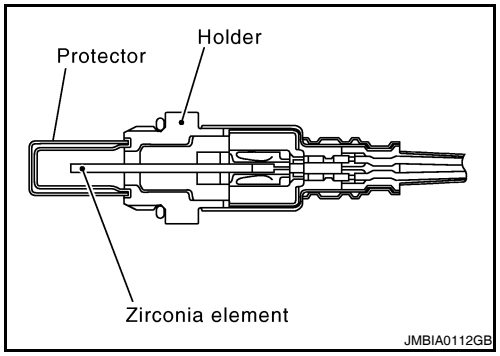

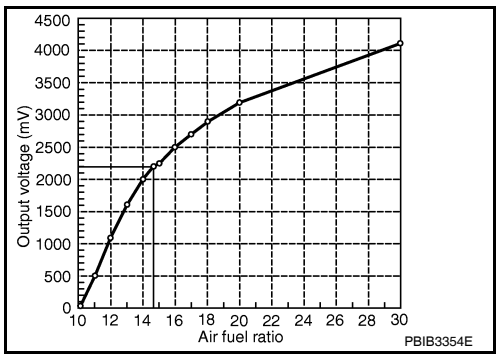

DTC Logic

INFOID:0000000004349930

DTC DETECTION LOGIC

To judge the malfunction, the A/F signal computed by ECM from the A/F sensor 1 signal is monitored not to be shifted to LEAN side or RICH side.

DTC No.	Trouble diagnosis name	DTC detecting condition	Possible Cause
P2A00	Air fuel ratio (A/F) sensor 1 circuit range/performance	• The output voltage computed by ECM from the A/F sensor 1 signal is shifted to the lean side for a specified period. • The A/F signal computed by ECM from the A/F sensor 1 signal is shifted to the rich side for a specified period.	• A/F sensor 1 • A/F sensor 1 heater • Fuel pressure • Fuel injector • Intake air leaks

DTC CONFIRMATION PROCEDURE

1.PRECONDITIONING

If DTC Confirmation Procedure has been previously conducted, always turn ignition switch OFF and wait at least 10 seconds before conducting the next test.
TESTING CONDITION:
Before performing the following procedure, confirm that battery voltage is more than 11V at idle.

>> GO TO 2.

2.PERFORM DTC CONFIRMATION PROCEDURE

1. Clear the mixture ratio self-learning value. Refer to EC-568, "MIXTURE RATIO SELF-LEARNING VALUE CLEAR : Special Repair Requirement".
2. Turn ignition switch OFF and wait at least 10 seconds.
3. Start engine and keep the engine speed between 3,500 and 4,000 rpm for 1 minute under no load.
4. Let engine idle for 1 minute.
5. Keep engine speed between 2,500 and 3,000 rpm for 20 minutes.
6. Check 1st trip DTC$.

Is 1st trip DTC detected?

YES >> Go to EC-940, "Diagnosis Procedure".
NO >> INSPECTION END

Diagnosis Procedure

INFOID:0000000004349931

1. CHECK GROUND CONNECTION

1. Turn ignition switch OFF.
2. Check ground connection E9. Refer to Ground Inspection in GI-45, "Circuit Inspection".

Is the inspection result normal?

YES >> GO TO 2.
NO >> Repair or replace ground connection.

2. RETIGHTEN A/F SENSOR 1

1. Loosen and retighten the A/F sensor 1. Refer to EM-30, "Removal and Installation".

>> GO TO 3.

3. CHECK FOR INTAKE AIR LEAK

1. Start engine and run it at idle.
2. Listen for an intake air leak after the mass air flow sensor.

Is intake air leak detected?

YES >> GO TO 4.
NO >> Repair or replace.

4. CLEAR THE MIXTURE RATIO SELF-LEARNING VALUE

1. Clear the mixture ratio self-learning value. Refer to EC-568, "MIXTURE RATIO SELF-LEARNING VALUE CLEAR : Special Repair Requirement".
2. Run engine for at least 10 minutes at idle speed.

Is the 1st trip DTC P0171 or P0172 detected? Is it difficult to start engine?

YES >> Perform trouble diagnosis for DTC P0171or P0172. Refer to EC-759, "DTC Logic" or EC-763, "DTC Logic".
NO >> GO TO 5.

5. CHECK HARNESS CONNECTOR

1. Turn ignition switch OFF.
2. Disconnect A/F sensor 1 harness connector.
3. Check harness connector for water.

Water should not exit.

Is the inspection result normal?

YES >> GO TO 6.
NO >> Repair or replace harness connector.

6. CHECK A/F SENSOR 1 POWER SUPPLY CIRCUIT

1. Turn ignition switch ON.
2. Check the voltage between A/F sensor 1 harness connector and ground.

A/F sensor 1		Ground	Voltage
Connector	Terminal		
F44	4	Ground	Battery voltage

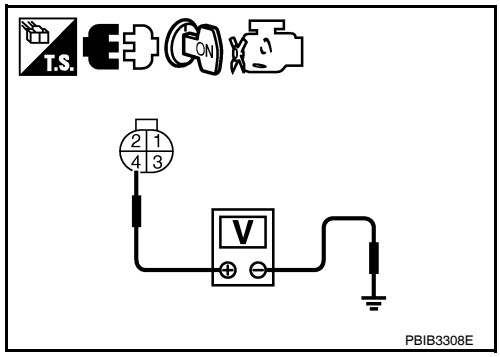

Is the inspection result normal?

YES >> GO TO 8.
NO >> GO TO 7.

7. DETECT MALFUNCTIONING PART

Check the following.
- IPDM E/R harness connector F10
- 15A fuse (No. 37)
- Harness for open or short between A/F sensor 1 and fuse

>> Repair or replace harness or connectors.

8. CHECK A/F SENSOR 1 INPUT SIGNAL CIRCUIT FOR OPEN AND SHORT

1. Turn ignition switch OFF.
2. Disconnect ECM harness connector.
3. Check the continuity between A/F sensor 1 harness connector and ECM harness connector.

A/F sensor 1		ECM		Continuity
Connector	Terminal	Connector	Terminal	
F44	1	F13	45	Existed
	2		49	

4. Check the continuity between ECM harness connector or A/F sensor 1 harness connector and ground.

A/F sensor 1		ECM		Ground	Continuity
Connector	Terminal	Connector	Terminal		
F44	1	F13	45	Ground	Not existed
	2		49		

5. Also check harness for short to power.

Is the inspection result normal?

YES >> GO TO 9.
NO >> Repair open circuit or short to ground or short to power in harness or connectors.

9. CHECK A/F SENSOR 1 HEATER

Refer to EC-686, "Component Inspection".

Is the inspection result normal?

YES >> GO TO 10.
NO >> GO TO 11.

10. CHECK INTERMITTENT INCIDENT

Perform GI-42, "Intermittent Incident".

Is the inspection result normal?

YES >> GO TO 11.
NO >> Repair or replace.

11. REPLACE AIR FUEL RATIO (A/F) SENSOR 1

Replace air fuel ratio (A/F) sensor 1.

CAUTION:
- **Discard any sensor which has been dropped from a height of more than 0.5 m (19.7 in) onto a hard surface such as a concrete floor; use a new one.**
- **Before installing new sensor, clean exhaust system threads using oxygen sensor thread cleaner tool [commercial service tool: (J-43897-18) or (J-43897-12)] and approved anti-seize lubricant (commercial service tool).**

Do you have CONSULT-III?

YES >> GO TO 12.
NO >> GO TO 13.

12. CONFIRM A/F ADJUSTMENT DATA

With CONSULT-III

1. Turn ignition switch ON.
2. Select “A/F ADJ-B1” in “DATA MONITOR” mode with CONSULT-III.
3. Make sure that “0.000” is displayed on CONSULT-III screen.

Is “0.000” displayed?

YES >> INSPECTION END
NO >> GO TO 13.

13. CLEAR THE MIXTURE RATIO SELF-LEARNING VALUE

Clear the mixture ratio self-learning value. Refer to EC-568, "MIXTURE RATIO SELF-LEARNING VALUE CLEAR : Special Repair Requirement".

Do you have CONSULT-III?

YES >> GO TO 14.
NO >> INSPECTION END

14. CONFIRM A/F ADJUSTMENT DATA

With CONSULT-III

1. Turn ignition switch ON.
2. Select “A/F ADJ-B1” in “DATA MONITOR” mode with CONSULT-III.
3. Make sure that “0.000” is displayed on CONSULT-III screen.

>> INSPECTION END

ASCD BRAKE SWITCH

Description

INFOID:0000000004349932

When the brake pedal is depressed, ASCD brake switch is turned OFF and stop lamp switch is turned ON. ECM detects the state of the brake pedal by this input of two kinds (ON/OFF signal).
Refer to EC-603, "System Description" for the ASCD function.

Component Function Check

INFOID:0000000004349933

1. CHECK FOR ASCD BRAKE SWITCH FUNCTION

With CONSULT-III

1. Turn ignition switch ON.
2. Select “BRAKE SW1” in “DATA MONITOR” mode with CONSULT-III.
3. Check “BRAKE SW1” indication under the following conditions.

Monitor item	Condition		Indication
BRAKE SW1	Brake pedal (CVT) Brake pedal and clutch pedal (M/T)	Slightly depressed	OFF
		Fully released	ON

Without CONSULT-III

1. Turn ignition switch ON.
2. Check the voltage between ECM harness connector and ground.

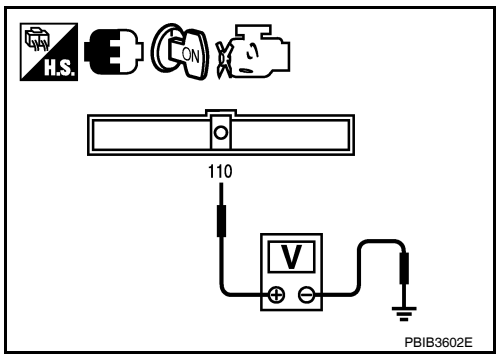

ECM		Ground	Condition		Voltage
Connector	Terminal				
E10	110 (ASCD brake switch signal)	Ground	Brake pedal (CVT) Brake pedal and clutch pedal (M/T)	Slightly depressed	Approx. 0V
				Fully released	Battery voltage

Is the inspection result normal?

YES >> INSPECTION END.
NO >> Refer to EC-943, "Diagnosis Procedure".

Diagnosis Procedure

INFOID:0000000004349934

1. CHECK OVERALL FUNCTION-I

Check which type of transmission the vehicle is equipped with.

Is the inspection result normal?

CVT >> GO TO 2.
M/T >> GO TO 6.

2. CHECK ASCD BRAKE SWITCH POWER SUPPLY CIRCUIT

1. Turn ignition switch OFF.
2. Disconnect ASCD brake switch harness connector.
3. Turn ignition switch ON.

4. Check the voltage between ASCD brake switch harness connector and ground.

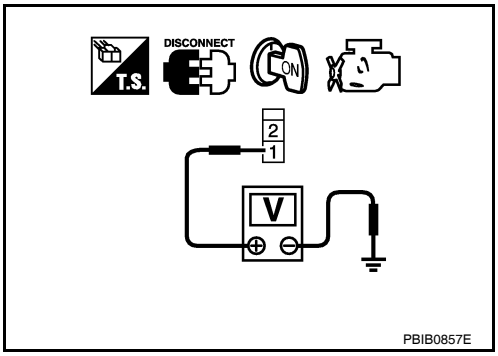

ASCD brake switch		Ground	Voltage
Connector	Terminal		
E37	1	Ground	Battery voltage

Is the inspection result normal?

YES >> GO TO 4.
NO >> GO TO 3.

3. DETECT MALFUNCTIONING PART

Check the following.
- Fuse block (J/B) connector E6
- Junction block connector E44, E46
- 10A fuse (No. 3)
- Harness for open or short between ASCD brake switch and fuse

>> Repair open circuit or short to ground or short to power in harness or connectors.

4. CHECK ASCD BRAKE SWITCH INPUT SIGNAL CIRCUIT FOR OPEN AND SHORT

1. Turn ignition switch OFF.
2. Disconnect ECM harness connector.
3. Check the continuity between ASCD brake switch harness connector and ECM harness connector.

ASCD brake switch		ECM		Continuity
Connector	Terminal	Connector	Terminal	
E37	2	E10	110	Existed

4. Also check harness for short to ground and short to power.

Is the inspection result normal?

YES >> GO TO 5.
NO >> Repair open circuit or short to ground or short to power in harness or connectors.

5. CHECK ASCD BRAKE SWITCH

Refer to EC-946, "Component Inspection (ASCD Brake Switch)".

Is the inspection result normal?

YES >> GO TO 13.
NO >> Replace ASCD brake switch.

6. CHECK ASCD BRAKE SWITCH CIRCUIT

1. Turn ignition switch OFF.
2. Disconnect ASCD clutch switch harness connector.
3. Turn ignition switch ON.
4. Check the continuity between ASCD clutch switch harness connector and ground.

ASCD clutch switch		Ground	Condition		Voltage (V)
Connector	Terminal				
E39	1	Ground	Brake pedal	Slightly depressed	Approx. 0
				Fully released	Battery voltage

5. Also check harness for short to ground and short to power.

Is the inspection result normal?

YES >> GO TO 11.
NO >> GO TO 7.

7. CHECK ASCD BRAKE SWITCH POWER SUPPLY CIRCUIT

1. Turn ignition switch OFF.
2. Disconnect ASCD brake switch harness connector.
3. Turn ignition switch ON.
4. Check the voltage between ASCD brake switch harness connector and ground.

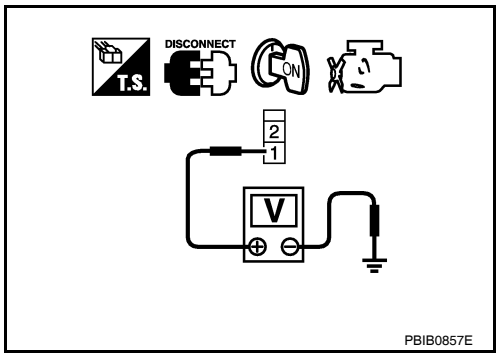

ASCD brake switch		Ground	Voltage
Connector	Terminal		
E37	1	Ground	Battery voltage

Is the inspection result normal?

YES >> GO TO 9.
NO >> GO TO 8.

8. DETECT MALFUNCTIONING PART

Check the following.
- Fuse block (J/B) connector E6
- Junction block connector E44, E46
- 10A fuse (No. 3)
- Harness for open or short between ASCD brake switch and fuse

>> Repair open circuit or short to ground or short to power in harness or connectors.

9. CHECK ASCD BRAKE SWITCH INPUT SIGNAL CIRCUIT FOR OPEN AND SHORT

1. Turn ignition switch OFF.
2. Check the continuity between ASCD brake switch harness connector and ASCD clutch switch harness connector.

ASCD brake switch		ASCD clutch switch		Continuity
Connector	Terminal	Connector	Terminal	
E37	2	E39	1	Existed

3. Also check harness for short to ground and short to power.

Is the inspection result normal?

YES >> GO TO 10.
NO >> Repair open circuit or short to ground or short to power in harness or connectors.

10. CHECK ASCD BRAKE SWITCH

Refer to EC-946, "Component Inspection (ASCD Brake Switch)".

Is the inspection result normal?

YES >> GO TO 13.
NO >> Replace ASCD brake switch.

11. CHECK ASCD BRAKE SWITCH INPUT SIGNAL CIRCUIT FOR OPEN AND SHORT

1. Turn ignition switch OFF.
2. Disconnect ECM harness connector
3. Check the continuity between ASCD clutch switch harness connector and ECM harness connector.

ASCD clutch switch		ECM		Continuity
Connector	Terminal	Connector	Terminal	
E39	2	E10	110	Existed

4. Also check harness for short to ground and short to power.

Is the inspection result normal?

YES >> GO TO 12.

NO >> Repair open circuit or short to ground or short to power in harness or connectors.

12. CHECK ASCD CLUTCH SWITCH

Refer to EC-946, "Component Inspection (ASCD Clutch Switch)".

Is the inspection result normal?

YES >> GO TO 13.
NO >> Replace ASCD clutch switch.

13. CHECK INTERMITTENT INCIDENT

Refer to GI-42, "Intermittent Incident".

>> INSPECTION END

Component Inspection (ASCD Brake Switch)

INFOID:0000000004349935

1. CHECK ASCD BRAKE SWITCH-I

1. Turn ignition switch OFF.
2. Disconnect ASCD brake switch harness connector.
3. Check the continuity between ASCD brake switch terminals under the following conditions.

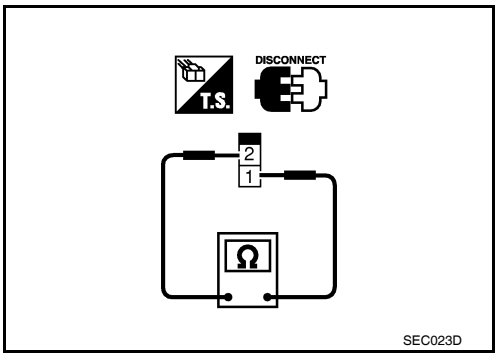

Terminals	Condition		Continuity
1 and 2	Brake pedal	Fully released	Existed
		Slightly depressed	Not existed

Is the inspection result normal?

YES >> INSPECTION END
NO >> GO TO 2.

2. CHECK ASCD BRAKE SWITCH-II

1. Adjust ASCD brake switch installation. Refer to BR-13, "Inspection and Adjustment".
2. Check the continuity between ASCD brake switch terminals under the following conditions.

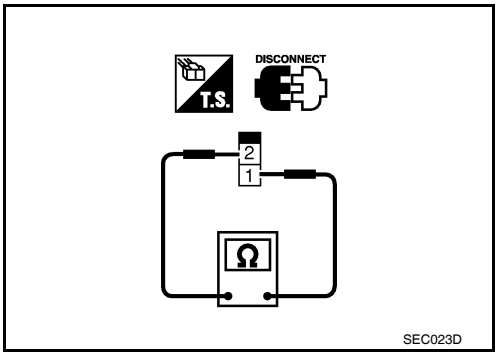

Terminals	Condition		Continuity
1 and 2	Brake pedal	Fully released	Existed
		Slightly depressed	Not existed

Is the inspection result normal?

YES >> INSPECTION END
NO >> Replace ASCD brake switch.

Component Inspection (ASCD Clutch Switch)

INFOID:0000000004349936

1. CHECK ASCD CLUTCH SWITCH-I

1. Turn ignition switch OFF.
2. Disconnect ASCD clutch switch harness connector.

3. Check the continuity between ASCD clutch switch terminals under the following conditions.

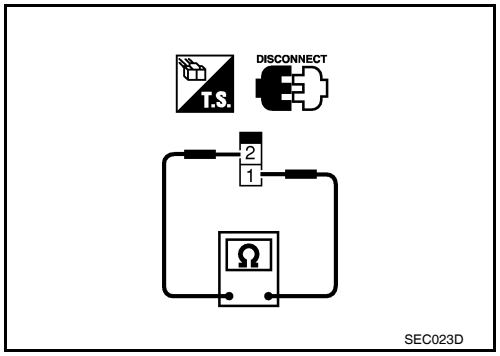

Terminals	Condition		Continuity
1 and 2	Clutch pedal	Fully released	Existed
		Slightly depressed	Not existed

Is the inspection result normal?

YES >> INSPECTION END
NO >> GO TO 2.

2. CHECK ASCD CLUTCH SWITCH-II

1. Adjust ASCD clutch switch installation. Refer to BR-13, "Inspection and Adjustment".
2. Check the continuity between ASCD clutch switch terminals under the following conditions.

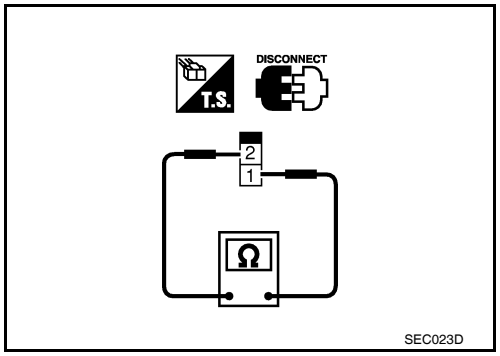

Terminals	Condition		Continuity
1 and 2	Clutch pedal	Fully released	Existed
		Slightly depressed	Not existed

Is the inspection result normal?

YES >> INSPECTION END
NO >> Replace ASCD clutch switch.

ASCD INDICATOR

Description

INFOID:0000000004349937

The ASCD operation status is indicated by two indicators, (CRUISE and SET on the information display) on the combination meter.
CRUISE indicator is displayed to indicate that ASCD system is ready for operation when MAIN switch on ASCD steering switch is turned ON.
SET indicator is displayed when the following conditions are met.
- CRUISE indicator is displayed.
- SET/COAST switch on ASCD steering switch is turned ON while vehicle speed is within the range of ASCD setting.

SET indicator is displayed during ASCD control.
Refer to EC-603, "System Description" for the ASCD function.

Component Function Check

INFOID:0000000004349938

1.ASCD INDICATOR FUNCTION

Check ASCD indicator under the following conditions.

ASCD INDICATOR	CONDITION		SPECIFICATION
CRUISE	• Ignition switch: ON	• MAIN switch: Pressed at the 1st time →at the 2nd time	ON → OFF
SET	• MAIN switch: ON • When vehicle speed: Between 40 km/h (25 MPH) and 144 km/h (89 MPH)	• ASCD: Operating	ON
		• ASCD: Not operating	OFF

Is the inspection result normal?

YES >> INSPECTION END
NO >> Go to EC-948, "Diagnosis Procedure".

Diagnosis Procedure

INFOID:0000000004349939

1.CHECK DTC

Check that DTC UXXXX is not displayed.

Is the inspection result normal?

YES >> GO TO 2.
NO >> Perform trouble diagnosis for DTC UXXXX.

2.CHECK COMBINATION METER OPERATION

Refer to MWI-38, "CONSULT-III Function (METER/M&A)".

Is the inspection result normal?

YES >> GO TO 3.
NO >> Check combination meter circuit. Refer to MWI-5, "METER SYSTEM : System Diagram".

3.CHECK INTERMITTENT INCIDENT

Refer to GI-42, "Intermittent Incident".

>> INSPECTION END

COOLING FAN

Description

INFOID:0000000004349940

The ECM controls the cooling fan corresponding to the vehicle speed, engine colant temperature, refrigerant pressure, and air conditioner ON signal. The control system has 4-step control [HIGH/MIDDLE/LOW/OFF].

COOLING FAN MOTOR

The cooling fan operates at each speed when the current flows in the cooling fan motor as follows.

Cooling fan Speed	Cooling fan motor terminals	
	(+)	(–)
Middle (MID)	1	3 and 4
	2	3 and 4
	1 and 2	3
	1 and 2	4
High (HI)	1 and 2	3 and 4

The cooling fan operates at low (LOW) speed when cooling fan motors-1 and -2 are circuited in series and middle speed condition.
Refer to EC-613, "System Diagram".

Component Function Check

INFOID:0000000004349941

1. CHECK COOLING FAN FUNCTION

With CONSULT-III

1. Turn ignition switch ON.
2. Perform “COOLING FAN” in “ACTIVE TEST” mode with CONSULT-III.
3. Touch “LOW”“MID” “Hi” on the CONSULT-III screen.
4. Check that cooling fan operates.

Without CONSULT-III

1. Perform IPDM E/R auto active test and check cooling fan motors operation, refer to PCS-14, "Diagnosis Description".
2. Check that cooling fan operates.

Is the inspection result normal?

YES >> INSPECTION END
NO >> Refer to EC-949, "Diagnosis Procedure".

Diagnosis Procedure

INFOID:0000000004349942

1. CHECK COOLING FAN RELAY POWER SUPPLY CIRCUIT

1. Turn ignition switch OFF.
2. Disconnect cooling fan relays-2, -3.
3. Turn ignition switch ON.
4. Check the voltage between cooling fan relays-2, -3 harness connectors and ground.

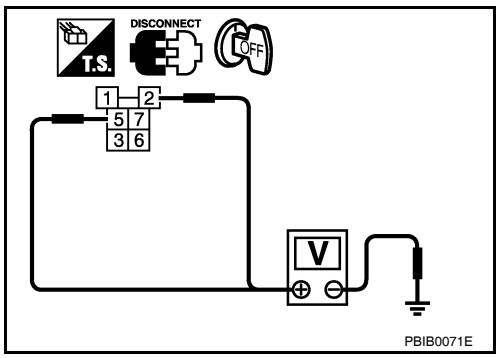

Cooling fan relay		Ground	Voltage
Connector	Terminal		
E42 (cooling fan relay-2)	2	Ground	Battery voltage
	5		
E43 (cooling fan relay-3)	2		
	5		

Is the inspection result normal?

YES >> GO TO 3.
NO >> GO TO 2.

2. DETECT MALFUNCTIONING PART

Check the following.
- 10 A fuse (No. 33)
- 40 A fusible link (letter K)
- IPDM E/R harness connector E18
- Harness for open or short between cooling fan relay-2 and battery
- Harness for open or short between cooling fan relay-3 and battery
- Harness for open or short between cooling fan relay-2 and IPDM E/R
- Harness for open or short between cooling fan relay-3 and IPDM E/R

>> Repair open circuit, short to ground or short to power in harness or connectors.

3. CHECK COOLING FAN RELAY OUTPUT SIGNAL CIRCUIT

1. Turn ignition switch OFF.
2. Disconnect IPDM E/R harness connectors.
3. Check the continuity between cooling fan relay-2, -3 harness connectors and IPDM E/R harness connector.

Cooling fan relay		IPDM E/R		Continuity
Connector	Terminal	Connector	Terminal	
E42 (cooling fan relay-2)	1	E17	42	Existed
E43 (cooling fan relay-3)	1	E18	34	

4. Also check harness for short to ground and short to power.

Is the inspection result normal?

YES >> GO TO 5.
NO >> GO TO 4.

4. DETECT MALFUNCTIONING PART

Check the following.
- Harness for open or short between cooling fan relay-2 and IPDM E/R
- Harness for open or short between cooling fan relay-3 and IPDM E/R

>> Repair open circuit, short to ground or short to power in harness or connectors.

5. CHECK COOLING FAN MOTOR POWER SUPPLY CIRCUIT

1. Disconnect cooling fan motor-1 harness connector.
2. Check the voltage between cooling fan motor-1 harness connector and ground.

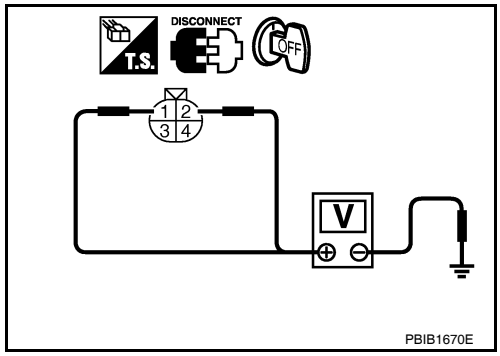

Cooling fan motor-1		Ground	Voltage
Connector	Terminal		
E220	1	Ground	Battery voltage
	2		

Is the inspection result normal?

YES >> GO TO 7.
NO >> GO TO 6.

6. DETECT MALFUNCTIONING PART

Check the following.
- 40 A fusible link (letter M)
- Harness connector E12, E203

- Harness for open or short between cooling fan motor-1 and battery

>> Repair open circuit, short to ground or short to power in harness or connectors.

7. CHECK COOLING FAN MOTOR CIRCUIT-I

1. Disconnect cooling fan motor-2 harness connector.
2. Check the continuity between cooling fan relay-2, -3 harness connectors and cooling fan motor-1, -2 harness connectors.

Cooling fan relay		Cooling fan motor		Continuity
Connector	Terminal	Connector	Terminal	
E42 (cooling fan relay-2)	3	E221 (Cooling fan motor-2)	2	Existed
	7	E220 (Cooling fan motor-1)	3	
E43 (cooling fan relay-3)	3	E221 (Cooling fan motor-2)	1	
	7	E220 (Cooling fan motor-1)	4	

3. Also check harness for short to ground and short to power.

Is the inspection result normal?

YES >> GO TO 9.
NO >> GO TO 8.

8. DETECT MALFUNCTIONING PART

Check the following.
- Harness connector E12, E203
- Harness for open or short between cooling fan motor-1 and cooling fan relay-2
- Harness for open or short between cooling fan motor-1 and cooling fan relay-3
- Harness for open or short between cooling fan motor-2 and cooling fan relay-2
- Harness for open or short between cooling fan motor-2 and cooling fan relay-3

>> Repair open circuit, short to ground or short to power in harness or connectors.

9. CHECK COOLING FAN MOTOR CIRCUIT-II

1. Check the continuity between IPDM E/R harness connector and cooling fan motor-1, -2 harness connector.

IPDM E/R		Cooling fan motor		Continuity
Connector	Terminal	Connector	Terminal	
E18	35	E220 (Cooling fan motor-1)	4	Existed
	38	E221 (Cooling fan motor-2)	1	

2. Also check harness for short to ground and short to power.

Is the inspection result normal?

YES >> GO TO 11.
NO >> GO TO 10.

10. DETECT MALFUNCTIONING PART

Check the following.
- Harness connector E12, E203
- Harness for open or short between cooling fan motor-1 and IPDM E/R
- Harness for open or short between cooling fan motor-2 and IPDM E/R

>> Repair open circuit, short to ground or short to power in harness or connectors.

11. CHECK COOLING FAN MOTOR CIRCUIT-III

1. Check the continuity between cooling fan relay-2, -3 harness connectors and ground.

Cooling fan motor		Ground	Continuity
Connector	Terminal		
E42 (cooling fan relay-2)	6	Ground	Existed
E43 (cooling fan relay-3)	6		

2. Also check harness for short to ground and short to power.

Is the inspection result normal?

YES >> GO TO 12.
NO >> Repair open circuit, short to ground or short to power in harness or connectors.

12. CHECK COOLING FAN MOTOR CIRCUIT-IV

1. Check the continuity between cooling fan motor-2 harness connector and ground.

Cooling fan motor-2		Ground	Continuity
Connector	Terminal		
E221	3	Ground	Existed
	4		

2. Also check harness for short to ground and short to power.

Is the inspection result normal?

YES >> GO TO 13.
NO >> Repair open circuit, short to ground or short to power in harness or connectors.

13. CHECK COOLING FAN RELAY-2 AND -3

Refer to EC-953, "Component Inspection (Cooling Fan Relay)".

Is the inspection result normal?

YES >> GO TO 14.
NO >> Replace malfunctioning cooling fan relay.

14. CHECK COOLING FAN MOTORS-1 AND -2

Refer to EC-952, "Component Inspection (Cooling Fan Motor)".

Is the inspection result normal?

YES >> GO TO 15.
NO >> Replace malfunctioning cooling fan motor.

15. CHECK INTERMITTENT INCIDENT

Perform GI-42, "Intermittent Incident".

Is the inspection result normal?

YES >> Replace IPDM E/R.
NO >> Repair or replace harness connectors.

Component Inspection (Cooling Fan Motor)

INFOID:0000000004349943

1. CHECK COOLING FAN MOTOR

1. Turn ignition switch OFF.
2. Disconnect cooling fan motor harness connector.

3. Supply cooling fan motor terminals with battery voltage and check operation.

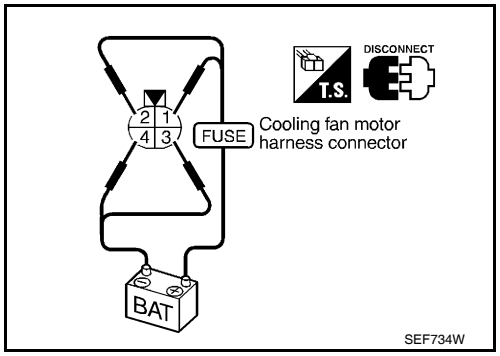

	Condition	Terminals	
		+	–
Cooling fan motor	A	1	3 and 4
		2	3 and 4
		1 and 2	3
		1 and 2	4
	B	1, 2	3, 4

Check that cooling fan speed of condition B is higher than that of A.

Is the inspection result normal?

YES >> INSPECTION END
NO >> Replace cooling fan motor.

Component Inspection (Cooling Fan Relay)

INFOID:0000000004349944

1. CHECK COOLING FAN RELAYS

1. Turn ignition switch OFF.
2. Remove cooling fan relay-2, -3.
3. Check the continuity between cooling fan relay-2, -3 terminals under the following conditions.

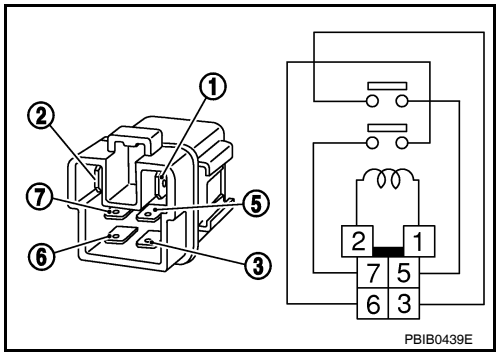

Terminals	Conditions	Continuity
3 and 5	12V direct current supply between terminals 1 and 2	Existed
	No current supply	Not existed
6 and 7	12V direct current supply between terminals 1 and 2	Existed
	No current supply	Not existed

Is the inspection result normal?

YES >> INSPECTION END
NO >> Replace cooling fan relay.

ELECTRICAL LOAD SIGNAL

Description

INFOID:0000000004349945

The electrical load signal (Headlamp switch signal, rear window defogger switch signal, etc.) is transferred through the CAN communication line.

Component Function Check

INFOID:0000000004349946

1.CHECK REAR WINDOW DEFOGGER SWITCH FUNCTION

1. Turn ignition switch ON.
2. Connect CONSULT-III and select “DATA MONITOR” mode.
3. Select “LOAD SIGNAL” and check indication under the following conditions.

Monitor item	Condition		Indication
LOAD SIGNAL	Rear window defogger switch	ON	ON
		OFF	OFF

Is the inspection result normal?

YES >> GO TO 2.
NO >> Go to EC-954, "Diagnosis Procedure".

2.CHECK LIGHTING SWITCH FUNCTION

Check “LOAD SIGNAL” indication under the following conditions.

Monitor item	Condition		Indication
LOAD SIGNAL	Lighting switch	ON at 2nd position	ON
		OFF	OFF

Is the inspection result normal?

YES >> GO TO 3.
NO >> Go to EC-954, "Diagnosis Procedure".

3.CHECK HEATER FAN CONTROL SWITCH FUNCTION

Select “HEATER FAN SW” and check indication under the following conditions.

Monitor item	Condition		Indication
HEATER FAN SW	Heater fan control switch	ON	ON
		OFF	OFF

Is the inspection result normal?

YES >> INSPECTION END
NO >> Go to EC-954, "Diagnosis Procedure".

Diagnosis Procedure

INFOID:0000000004349947

1.INSPECTION START

Confirm the malfunctioning circuit (rear window defogger, headlamp or heater fan). Refer to EC-954, "Component Function Check".

Which circuit is related to the incident?

Rear window defogger>>GO TO 2.
Headlamp>>GO TO 3.
Heater fan>>GO TO 4.

2.CHECK REAR WINDOW DEFOGGER SYSTEM

Refer to DEF-6, "System Diagram".

>> INSPECTION END

3. CHECK HEADLAMP SYSTEM

Refer to EXL-7, "System Diagram" (XENON TYPE) or EXL-9, "System Diagram" (HALOGEN TYPE).

>> INSPECTION END

4. CHECK HEATER FAN CONTROL SYSTEM

Refer to HAC-42, "Diagnosis Procedure" (automatic air conditioner) or HAC-127, "Diagnosis Procedure" (manual air conditioner).

>> INSPECTION END

FUEL INJECTOR

Description

INFOID:0000000004349948

The fuel injector is a small, precise solenoid valve. When the ECM supplies a ground to the fuel injector circuit, the coil in the fuel injector is energized. The energized coil pulls the ball valve back and allows fuel to flow through the fuel injector into the intake manifold. The amount of fuel injected depends upon the injection pulse duration. Pulse duration is the length of time the fuel injector remains open. The ECM controls the injection pulse duration based on engine fuel needs.

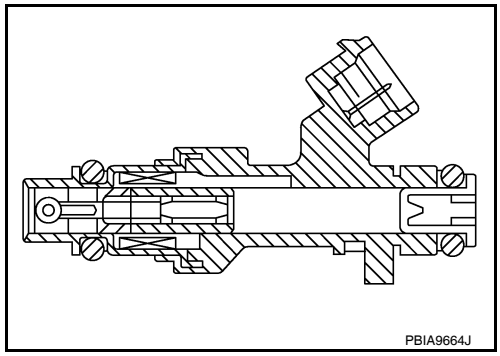

Component Function Check

INFOID:0000000004349949

1. INSPECTION START

Turn ignition switch to START.

Is any cylinder ignited?

YES >> GO TO 2.
NO >> Go to EC-956, "Diagnosis Procedure".

2. CHECK FUEL INJECTOR FUNCTION

With CONSULT-III

1. Start engine.
2. Perform “POWER BALANCE” in “ACTIVE TEST” mode with CONSULT-III.
3. Make sure that each circuit produces a momentary engine speed drop.

Without CONSULT-III

1. Let engine idle.
2. Listen to each fuel injector operating sound.

Clicking noise should be heard.

Is the inspection result normal?

YES >> INSPECTION END
NO >> Go to EC-956, "Diagnosis Procedure".

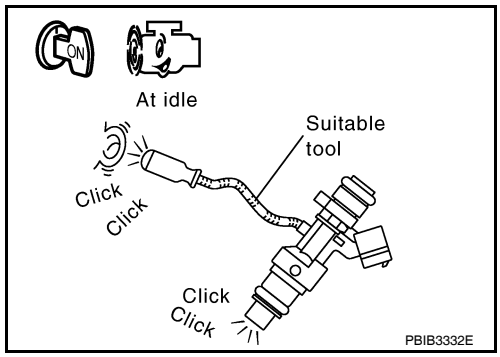

Diagnosis Procedure

INFOID:0000000004349950

1. CHECK FUEL INJECTOR POWER SUPPLY CIRCUIT

1. Turn ignition switch OFF.
2. Disconnect fuel injector harness connector.
3. Turn ignition switch ON.

4. Check the voltage between fuel injector harness connector and ground.

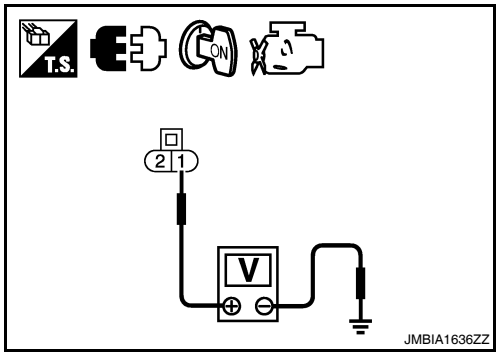

Fuel injector			Ground	Voltage
Cylinder	Connector	Terminal		
1	F17	1	Ground	Battery voltage
2	F18	1		
3	F19	1		
4	F20	1		

Is the inspection result normal?

YES >> GO TO 3.
NO >> GO TO 2.

2. DETECT MALFUNCTIONING PART

Check the following.
- IPDM E/R harness connector F10
- 10A fuse (No. 35)
- Harness for open or short between fuel injector and fuse

>> Repair open circuit or short to ground or short to power in harness or connectors.

3. CHECK FUEL INJECTOR OUTPUT SIGNAL CIRCUIT FOR OPEN AND SHORT

1. Turn ignition switch OFF.
2. Disconnect ECM harness connector.
3. Check the continuity between fuel injector harness connector and ECM harness connector.

Fuel injector			ECM		Continuity
Cylinder	Connector	Terminal	Connector	Terminal	
1	F17	2	F14	32	Existed
2	F18	2		31	
3	F19	2		30	
4	F20	2		29	

4. Also check harness for short to ground and short to power.

Is the inspection result normal?

YES >> GO TO 4.
NO >> Repair open circuit or short to ground or short to power in harness or connectors.

4. CHECK FUEL INJECTOR

Refer to EC-957, "Component Inspection".

Is the inspection result normal?

YES >> GO TO 5.
NO >> Replace malfunctioning fuel injector.

5. CHECK INTERMITTENT INCIDENT

Refer to GI-42, "Intermittent Incident".

Is the inspection result normal?

YES >> Replace IPDM E/R.
NO >> Repair open circuit or short to ground or short to power in harness or connectors.

Component Inspection

INFOID:0000000004349951

1. CHECK FUEL INJECTOR

1. Turn ignition switch OFF.

2. Disconnect fuel injector harness connector.
3. Check resistance between fuel injector terminals as follows.

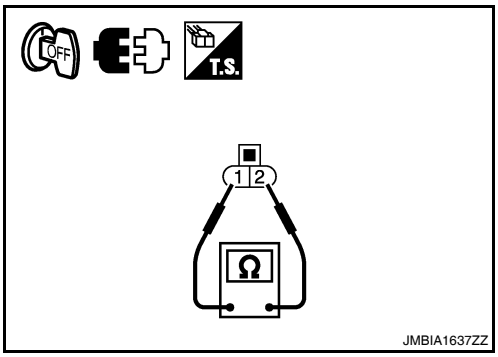

Terminals	Resistance
1 and 2	10.4 - 15.3Ω [at 10 -60°C (50 - 140°F)]

Is the inspection result normal?

YES >> INSPECTION END
NO >> Replace malfunctioning fuel injector.

FUEL PUMP

Description

INFOID:0000000004349952

Sensor	Input signal to ECM	ECM Function	Actuator
Crankshaft position sensor (POS) Camshaft position sensor (PHASE)	Engine speed*	Fuel pump control	Fuel pump relay ↓ Fuel pump
Battery	Battery voltage*		

*: ECM determines the start signal status by the signals of engine speed and battery voltage.

The ECM activates the fuel pump for several seconds after the ignition switch is turned ON to improve engine start ability. If the ECM receives a engine speed signal from the camshaft position sensor (PHASE), it knows that the engine is rotating, and causes the pump to operate. If the engine speed signal is not received when the ignition switch is ON, the engine stalls. The ECM stops pump operation and prevents battery discharging, thereby improving safety. The ECM does not directly drive the fuel pump. It controls the ON/OFF fuel pump relay, which in turn controls the fuel pump.

Condition	Fuel pump operation
Ignition switch is turned to ON.	Operates for 1 second.
Engine running and cranking	Operates.
When engine is stopped	Stops in 1.5 seconds.
Except as shown above	Stops.

Component Function Check

INFOID:0000000004349953

1. CHECK FUEL PUMP FUNCTION

1. Turn ignition switch ON.
2. Pinch fuel feed hose (2) with two fingers.

1 : Air cleaner assembly

⇦ : Vehicle front

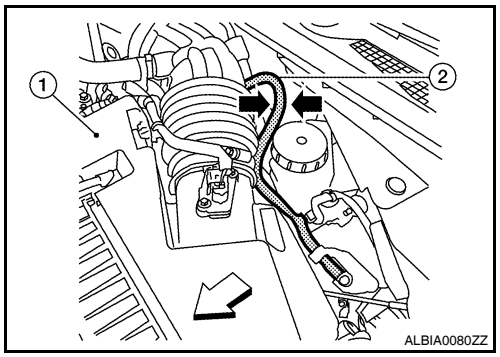

Fuel pressure pulsation should be felt on the fuel feed hose for 1 second after ignition switch is turned ON.

Is the inspection result normal?

YES >> INSPECTION END
NO >> EC-959, "Diagnosis Procedure".

Diagnosis Procedure

INFOID:0000000004349954

1. CHECK FUEL PUMP POWER SUPPLY CIRCUIT-I

1. Turn ignition switch OFF.
2. Disconnect ECM harness connector.
3. Turn ignition switch ON.

4. Check the voltage between ECM harness connector and ground.

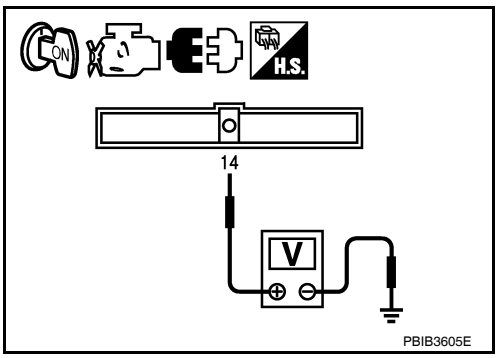

ECM		Ground	Voltage
Connector	Terminal		
F14	14	Ground	Battery voltage

Is the inspection result normal?

YES >> GO TO 4.
NO >> GO TO 2.

2. CHECK FUEL PUMP POWER SUPPLY CIRCUIT-II

1. Turn ignition switch OFF.
2. Disconnect IDPDM E/R harness connector F10.
3. Check the continuity between IPDM E/R harness connector and ECM harness connector.

ECM		IPDM E/R		Continuity
Connector	Terminal	Connector	Terminal	
F14	14	F10	77	Existed

Is the inspection result normal?

YES >> GO TO 3.
NO >> Repair open circuit or short to ground or short to power in harness or connectors.

3. CHECK CONDENSER-1 POWER SUPPLY CIRCUIT-I

1. Reconnect all harness connectors disconnected.
2. Disconnect condenser-1 harness connector.
3. Turn ignition switch ON.
4. Check the voltage between condenser-1 harness connector and ground.

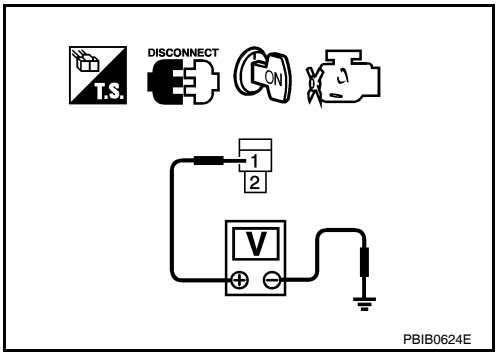

Condenser-1		Ground	Voltage
Connector	Terminal		
B17	1	Ground	Battery voltage should exist for 1 second after ignition switch is turned ON.

Is the inspection result normal?

YES >> GO TO 5.
NO >> GO TO 4.

4. CHECK 15A FUSE

1. Turn ignition switch OFF.
2. Disconnect 15A fuse (No. 32) from IPDM E/R.
3. Check 15A fuse.

Is the inspection result normal?

YES >> GO TO 6.
NO >> Replace fuse.

5. CHECK CONDENSER-1 POWER SUPPLY CIRCUIT-II

1. Disconnect IPDM E/R harness connector E18.
2. Check the continuity between IPDM E/R harness connector and condenser-1 harness connector.

IPDM E/R		Condenser-I		Continuity
Connector	Terminal	Connector	Terminal	
F18	13	B17	1	Existed

3. Also check harness for short to ground and short to power.

Is the inspection result normal?

YES >> GO TO 13.
NO >> GO TO 7.

6. DETECT MALFUNCTIONING PART

Check the following.
- Harness connectors E29, B10
- IPDM E/R connector F10
- Harness for open or short between IPDM E/R and condenser-I

>> Repair open circuit or short to power in harness or connectors.

7. CHECK CONDENSER GROUND CIRCUIT

1. Turn ignition switch OFF.
2. Disconnect dropping resistor harness connector.
3. Check the continuity between condenser-I harness connector and ground.

Condenser-I		Ground	Continuity
Connector	Terminal		
B17	2	Ground	Existed

4. Also check harness for short to ground and short to power.

Is the inspection result normal?

YES >> GO TO 8.
NO >> Repair open circuit or short to power in harness or connectors.

8. CHECK CONDENSER-1

Refer to EC-962, "Component Inspection (Condenser-1)".

Is the inspection result normal?

YES >> GO TO 9.
NO >> Replace condenser-1.

9. CHECK FUEL PUMP POWER SUPPLY CIRCUIT-III

1. Disconnect “fuel level sensor unit and fuel pump” harness connector.
2. Check the continuity between IPDM E/R harness connector and “fuel level sensor unit and fuel pump” and ground.

IPDM E/R		Fuel level sensor unit and fuel pump		Continuity
Connector	Terminal	Connector	Terminal	
E18	13	B42	1	Existed

Is the inspection result normal?

YES >> GO TO 11.
NO >> GO TO 10.

10. DETECT MALFUNCTIONING PART

Check the following.
- Harness connector E29, B10
- Harness for open or short between “fuel level sensor unit and fuel pump” and IPDM E/R
- Harness for open or short between “fuel level sensor unit and fuel pump” and ground

>> Repair open circuit or short to power in harness or connectors.

11. CHECK FUEL PUMP GROUND CIRCUIT

1. Check the continuity between “fuel level sensor unit and fuel pump” and ground.

Fuel level sensor unit and fuel pump		Ground	Continuity
Connector	Terminal		
B42	3	Ground	Existed

2. Also heck harness for short to power.

Is the inspection result normal?

YES >> GO TO 12.
NO >> Repair open circuit or short to power in harness or connectors.

12. CHECK FUEL PUMP

Refer to EC-962, "Component Inspection (Fuel Pump)".

Is the inspection result normal?

YES >> GO TO 13.
NO >> Replace fuel pump.

13. CHECK INTERMITTENT INCIDENT

Refer to GI-42, "Intermittent Incident".

Is the inspection result normal?

YES >> Replace IPDM E/R.
NO >> Repair or replace harness or connectors.

Component Inspection (Fuel Pump)

INFOID:0000000004349955

1. CHECK FUEL PUMP

1. Turn ignition switch OFF.
2. Disconnect “fuel level sensor unit and fuel pump” harness connector.
3. Check resistance between “fuel level sensor unit and fuel pump” terminals as follows.

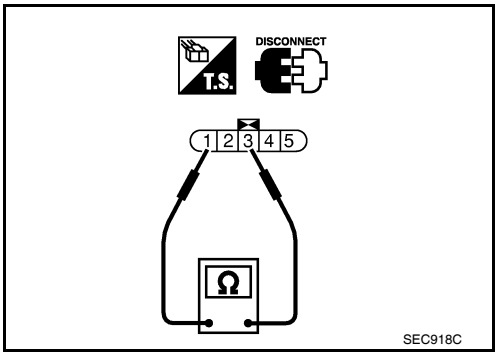

Terminals	Resistance
1 and 3	0.2 - 5.0Ω [at 25°C (77°F)]

Is the inspection result normal?

YES >> INSPECTION END
NO >> Replace “fuel level sensor unit and fuel pump”.

Component Inspection (Condenser-1)

INFOID:0000000004349956

1. CHECK CONDENSER

1. Turn ignition switch OFF.
2. Disconnect condenser-1 harness connector.
3. Check resistance between condenser-1 terminals as follows.

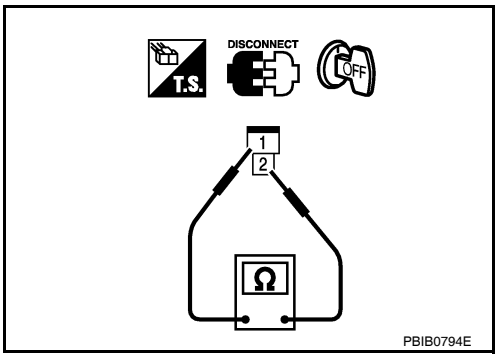

Terminal	Resistance
1 and 2	Above 1MΩ [at 25°C (77°F)]

Is the inspection result normal?

YES >> INSPECTION END
NO >> Replace condenser-1.

IGNITION SIGNAL

Description

INFOID:0000000004349957

The ignition signal from the ECM is sent to and amplified by the power transistor. The power transistor turns ON and OFF the ignition coil primary circuit. This ON/OFF operation induces the proper high voltage in the coil secondary circuit.

Component Function Check

INFOID:0000000004349958

1. INSPECTION START

Turn ignition switch OFF, and restart engine.

Does the engine start?

YES-1 >> With CONSULT-III: GO TO 2.
YES-2 >> Without CONSULT-III: GO TO 3.
NO >> Go to EC-963, "Diagnosis Procedure".

2. IGNITION SIGNAL FUNCTION

With CONSULT-III

1. Perform “POWER BALANCE” in “ACTIVE TEST” mode with CONSULT-III.
2. Make sure that each circuit produces a momentary engine speed drop.

Is the inspection result normal?

YES >> INSPECTION END
NO >> Go to EC-963, "Diagnosis Procedure".

3. IGNITION SIGNAL FUNCTION

Without CONSULT-III

1. Let engine idle.
2. Read the voltage signal between ECM harness connector and ground.

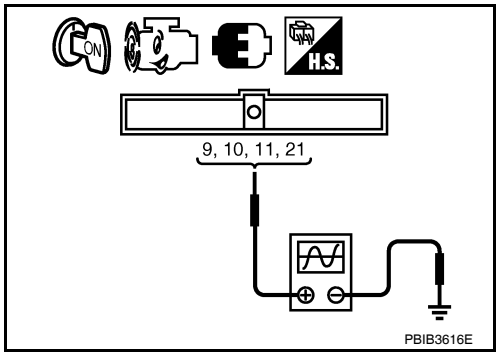

ECM		Ground	Voltage signal
Connector	Terminal		
F14	9	Ground	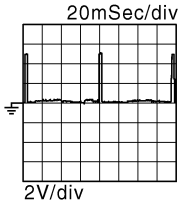
	10		
	11		
	21		

NOTE:
The pulse cycle changes depending on rpm at idle.

Is the inspection result normal?

YES >> INSPECTION END
NO >> Go to EC-963, "Diagnosis Procedure".

Diagnosis Procedure

INFOID:0000000004349959

1. CHECK IGNITION COIL POWER SUPPLY CIRCUIT-I

1. Turn ignition switch OFF, wait at least 10 seconds and then turn ON.

2. Check the voltage between ECM harness connector and ground.

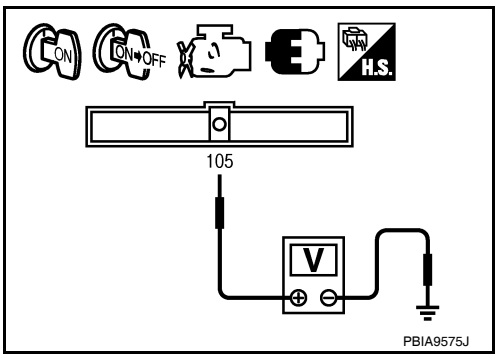

ECM		Ground	Voltage
Connector	Terminal		
E10	105	Ground	Battery voltage

Is the inspection result normal?

YES >> GO TO 2.
NO >> Go to EC-673, "Diagnosis Procedure".

2. CHECK IGNITION COIL POWER SUPPLY CIRCUIT-II

1. Turn ignition switch OFF.
2. Disconnect condenser-2 harness connector.
3. Turn ignition switch ON.
4. Check the voltage between condenser-2 harness connector and ground.

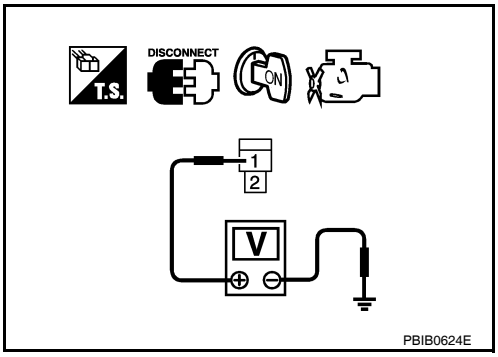

Condenser		Ground	Voltage
Connector	Terminal		
F26	1	Ground	Battery voltage

Is the inspection result normal?

YES >> GO TO 4.
NO >> GO TO 3.

3. CHECK IGNITION COIL POWER SUPPLY CIRCUIT-III

1. Turn ignition switch OFF.
2. Disconnect IPDM E/R harness connector F10.
3. Check the continuity between IPDM E/R harness connector and condenser-2 harness connector.

IPDM E/R		Condenser-2		Continuity
Connector	Terminal	Connector	Terminal	
F10	53	F24	1	Existed

4. Also check harness for short to ground and short to power.

Is the inspection result normal?

YES >> Go to EC-673, "Diagnosis Procedure".
NO >> Repair open circuit or short to ground or short to power in harness or connectors.

4. CHECK CONDENSER-2 GROUND CIRCUIT FOR OPEN AND SHORT

1. Turn ignition switch OFF.
2. Check the continuity between condenser-2 harness connector and ground.

Condenser-2		Ground	Continuity
Connector	Terminal		
F24	2	Ground	Existed

3. Also check harness for short to power.

Is the inspection result normal?

YES >> GO TO 5.
NO >> Repair open circuit or short to ground or short to power in harness or connectors.

5. CHECK CONDENSER

Refer to EC-967, "Component Inspection (Condenser-2)"

Is the inspection result normal?

YES >> GO TO 6.
NO >> Replace condenser.

6. CHECK IGNITION COIL POWER SUPPLY CIRCUIT-V

1. Reconnect all harness connectors disconnected.
2. Disconnect ignition coil harness connector.
3. Turn ignition switch ON.
4. Check the voltage between ignition coil harness connector and ground.

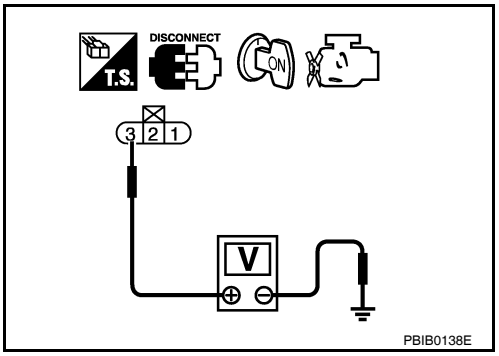

Ignition coil			Ground	Voltage
Cylinder	Connector	Terminal		
1	F34	3	Ground	Battery voltage
2	F35	3		
3	F36	3		
4	F37	3		

Is the inspection result normal?

YES >> GO TO 7.
NO >> Repair open circuit or short to ground or short to power in harness or connectors.

7. CHECK IGNITION COIL GROUND CIRCUIT FOR OPEN AND SHORT

1. Turn ignition switch OFF.
2. Check the continuity between ignition coil harness connector and ground.

Ignition coil			Ground	Continuity
Cylinder	Connector	Terminal		
1	F34	2	Ground	Existed
2	F35	2		
3	F36	2		
4	F37	2		

3. Also check harness for short to power.

Is the inspection result normal?

YES >> GO TO 8.
NO >> Repair open circuit or short to ground or short to power in harness or connectors.

8. CHECK IGNITION COIL OUTPUT SIGNAL CIRCUIT FOR OPEN AND SHORT

1. Disconnect ECM harness connector.
2. Check the continuity between ECM harness connector and ignition coil harness connector.

Ignition coil			ECM		Continuity
Cylinder	Connector	Terminal	Connector	Terminal	
1	F34	1	F14	11	Existed
2	F35	1		10	
3	F36	1		9	
4	F37	1		21	

3. Also check harness for short to ground and short to power.

Is the inspection result normal?

YES >> GO TO 9.
NO >> Repair open circuit or short to ground or short to power in harness or connectors.

9. CHECK IGNITION COIL WITH POWER TRANSISTOR

Refer to EC-966, "Component Inspection (Ignition Coil with Power Transistor)".

Is the inspection result normal?

YES >> GO TO 10.
NO >> Replace malfunctioning ignition coil with power transistor.

10. CHECK INTERMITTENT INCIDENT

Refer to GI-42, "Intermittent Incident".

>> INSPECTION END

Component Inspection (Ignition Coil with Power Transistor)

INFOID:0000000004349960

1. CHECK IGNITION COIL WITH POWER TRANSISTOR-I

1. Turn ignition switch OFF.
2. Disconnect ignition coil harness connector.
3. Check resistance between ignition coil terminals as follows.

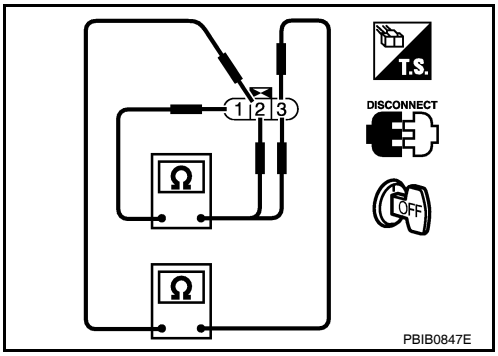

Terminals	Resistance Ω [at 25°C (77°F)]
1 and 2	Except 0 or ∞
1 and 3	Except 0
2 and 3	

Is the inspection result normal?

YES >> GO TO 2.
NO >> Replace malfunctioning ignition coil with power transistor.

2. CHECK IGNITION COIL WITH POWER TRANSISTOR-II

CAUTION:
Do the following procedure in the place where ventilation is good without the combustible.

1. Turn ignition switch OFF.
2. Reconnect all harness connectors disconnected.
3. Remove fuel pump fuse in IPDM E/R to release fuel pressure.
   NOTE:
   Do not use CONSULT-III to release fuel pressure, or fuel pressure applies again during the following procedure.
4. Start engine.
5. After engine stalls, crank it two or three times to release all fuel pressure.
6. Turn ignition switch OFF.
7. Remove all ignition coil harness connectors to avoid the electrical discharge from the ignition coils.
8. Remove ignition coil and spark plug of the cylinder to be checked.
9. Crank engine for 5 seconds or more to remove combustion gas in the cylinder.
10. Connect spark plug and harness connector to ignition coil.
11. Fix ignition coil using a rope etc. with gap of 13 - 17 mm (0.52 - 0.66 in) between the edge of the spark plug and grounded metal portion as shown in the figure.
12. Crank engine for about three seconds, and check whether spark is generated between the spark plug and the grounded metal portion.

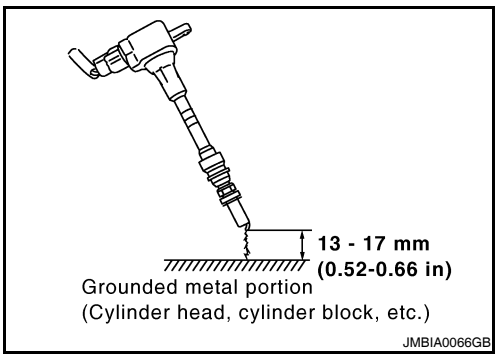

Spark should be generated.

CAUTION:
- **Do not approach to the spark plug and the ignition coil within 50 cm (19.7 in). Be careful not to get an electrical shock while checking, because the electrical discharge voltage becomes 20kV or more.**
- **It might cause to damage the ignition coil if the gap of more than 17 mm (0.66 in) is taken.**

NOTE:

When the gap is less than 13 mm (0.52 in), the spark might be generated even if the coil is malfunctioning.

Is the inspection result normal?

YES >> INSPECTION END
NO >> Replace malfunctioning ignition coil with power transistor.

Component Inspection (Condenser-2)

INFOID:0000000004349961

1. CHECK CONDENSER-2

1. Turn ignition switch OFF.
2. Disconnect condenser-2 harness connector.
3. Check resistance between condenser-2 terminals as follows.

Terminals	Resistance
1 and 2	Above 1 MΩ [at 25°C (77°F)]

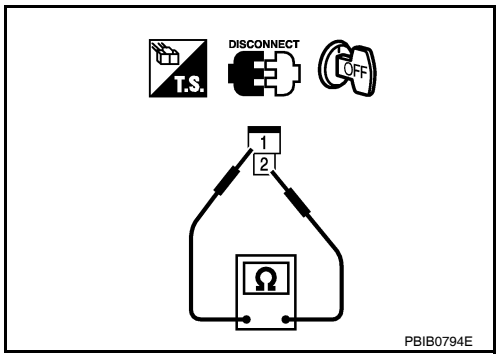

Is the inspection result normal?

YES >> INSPECTION END
NO >> Replace condenser-2.

MALFUNCTION INDICATOR LAMP

Description

INFOID:0000000004349962

The Malfunction Indicator Lamp (MIL) is located on the combination meter.
The MIL will light up when the ignition switch is turned ON without the engine running. This is a bulb check.
When the engine is started, the MIL should go off. If the MIL remains on, the on board diagnostic system has detected an engine system malfunction.
For details, refer to EC-968, "Diagnosis Procedure".

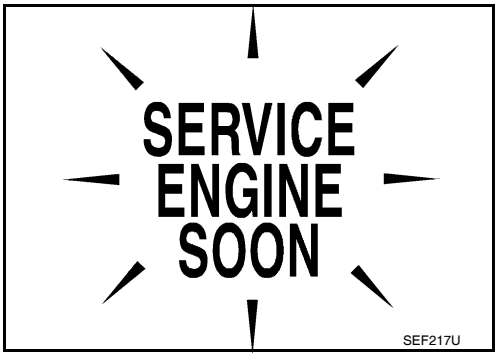

Component Function Check

INFOID:0000000004349963

1. CHECK MIL FUNCTION

1. Turn ignition switch ON.
2. Make sure that MIL lights up.

Is the inspection result normal?

YES >> INSPECTION END
NO >> Go to EC-968, "Diagnosis Procedure".

Diagnosis Procedure

INFOID:0000000004349964

1. CHECK DTC

Check that DTC UXXXX is not displayed.

Is the inspection result normal?

YES >> GO TO 2.
NO >> Perform trouble diagnosis for DTC UXXXX.

2. CHECK DTC WITH METER

Refer to MWI-38, "CONSULT-III Function (METER/M&A)".

Is the inspection result normal?

YES >> GO TO 3.
NO >> Repair or replace.

3. CHECK INTERMITTENT INCIDENT

Refer to GI-42, "Intermittent Incident".

Is the inspection result normal?

YES >> Replace combination meter.
NO >> Repair or replace.

ON BOARD REFUELING VAPOR RECOVERY (ORVR)

Description

INFOID:0000000004349965

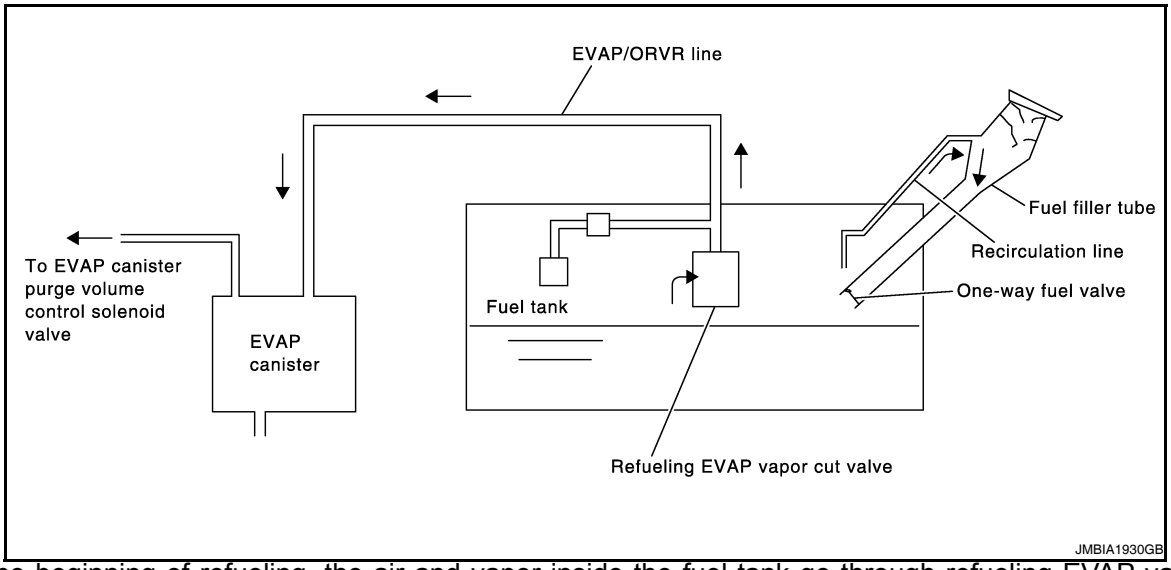

From the beginning of refueling, the air and vapor inside the fuel tank go through refueling EVAP vapor cut valve and EVAP/ORVR line to the EVAP canister. The vapor is absorbed by the EVAP canister and the air is released to the atmosphere.
When the refueling has reached the full level of the fuel tank, the refueling EVAP vapor cut valve is closed and refueling is stopped because of auto shut-off. The vapor which was absorbed by the EVAP canister is purged during driving.

WARNING:
When conducting inspections below, be sure to observe the following:
- **Put a "CAUTION: FLAMMABLE" sign in workshop.**
- **Do not smoke while servicing fuel system. Keep open flames and sparks away from work area.**
- **Be sure to furnish the workshop with a CO_2 fire extinguisher.**

CAUTION:
- **Before removing fuel line parts, carry out the following procedures:**
- **Put drained fuel in an explosion-proof container and put lid on securely.**
- **Release fuel pressure from fuel line. Refer to EC-1038, "Inspection".**
- **Disconnect battery ground cable.**
- **Always replace O-ring when the fuel gauge retainer is removed.**
- **Do not kink or twist hose and tube when they are installed.**
- **Do not tighten hose and clamps excessively to avoid damaging hoses.**
- **After installation, run engine and check for fuel leaks at connection.**
- **Do not attempt to top off the fuel tank after the fuel pump nozzle shuts off automatically. Continued refueling may cause fuel overflow, resulting in fuel spray and possibly a fire.**

Component Function Check

INFOID:0000000004349966

1. CHECK ORVR FUNCTION

Check whether the following symptoms are present.
- Fuel odor from EVAP canister is strong.
- Cannot refuel/Fuel odor from the fuel filler opening is strong while refueling.

Is any symptom present?

YES >> Go to EC-969, "Diagnosis Procedure".
NO >> INSPECTION END

Diagnosis Procedure

INFOID:0000000004349967

1. INSPECTION START

Check whether the following symptoms are present.
A: Fuel odor from EVAP canister is strong.

B: Cannot refuel/Fuel odor from the fuel filler opening is strong while refueling.

Which symptom is present?

A >> GO TO 2.
B >> GO TO 7.

2. CHECK EVAP CANISTER

1. Remove EVAP canister with EVAP canister vent control valve and EVAP control system pressure sensor attached.
2. Weigh the EVAP canister with EVAP canister vent control valve and EVAP control system pressure sensor attached.
   The weight should be less than 2.1 kg (4.6 lb).

Is the inspection result normal?

YES >> GO TO 3.
NO >> GO TO 4.

3. CHECK IF EVAP CANISTER SATURATED WITH WATER

Check if water will drain from EVAP canister.

Does water drain from the EVAP canister?

YES >> GO TO 4.
NO >> GO TO 6.

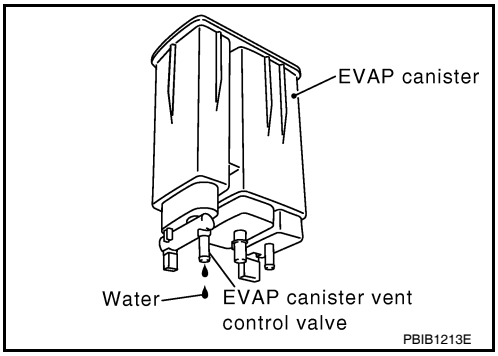

4. REPLACE EVAP CANISTER

Replace EVAP canister with a new one.

>> GO TO 5.

5. DETECT MALFUNCTIONING PART

Check the EVAP hose between EVAP canister and vehicle frame for clogging or poor connection.

>> Repair or replace EVAP hose.

6. CHECK REFUELING EVAP VAPOR CUT VALVE

Refer to EC-972, "Component Inspection".

Is the inspection result normal?

YES >> INSPECTION END
NO >> Replace refueling EVAP vapor cut valve with fuel tank.

7. CHECK EVAP CANISTER

1. Remove EVAP canister with EVAP canister vent control valve and EVAP control system pressure sensor attached.
2. Weigh the EVAP canister with EVAP canister vent control valve and EVAP control system pressure sensor attached.
   The weight should be less than 2.1 kg (4.6 lb).

Is the inspection result normal?

YES >> GO TO 8.
NO >> GO TO 9.

8. CHECK IF EVAP CANISTER SATURATED WITH WATER

Check if water will drain from EVAP canister.

Does water drain from the EVAP canister?

YES >> GO TO 9.
NO >> GO TO 11.

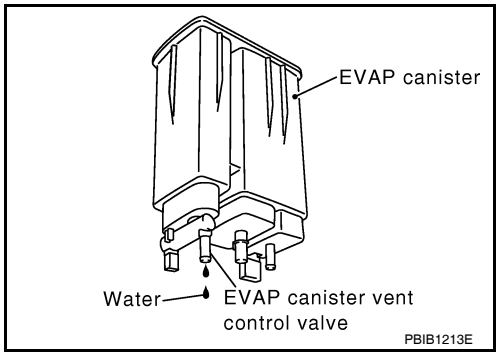

9. REPLACE EVAP CANISTER

Replace EVAP canister with a new one.

>> GO TO 10.

10. DETECT MALFUNCTIONING PART

Check the EVAP hose between EVAP canister and vehicle frame for clogging or poor connection.

>> Repair or replace EVAP hose.

11. CHECK VENT HOSES AND VENT TUBES

Check hoses and tubes between EVAP canister and refueling control valve for clogging, kink, looseness and improper connection.

Is the inspection result normal?

YES >> GO TO 12.
NO >> Repair or replace hoses and tubes.

12. CHECK RECIRCULATION LINE

Check recirculation line for clogging, dents and cracks.

Is the inspection result normal?

YES >> GO TO 13.
NO >> Replace fuel filler tube.

13. CHECK REFUELING EVAP VAPOR CUT VALVE

Refer to EC-972, "Component Inspection".

Is the inspection result normal?

YES >> GO TO 14.
NO >> Replace refueling EVAP vapor cut valve with fuel tank.

14. CHECK FUEL FILLER TUBE

Check fuel filler tube and hose connected to the fuel tank for clogging, dents and cracks.

Is the inspection result normal?

YES >> GO TO 15.
NO >> Replace fuel filler tube.

15. CHECK ONE-WAY FUEL VALVE-I

Check one-way valve for clogging.

Is the inspection result normal?

YES >> GO TO 16.
NO >> Repair or replace one-way fuel valve with fuel tank.

16. CHECK ONE-WAY FUEL VALVE-II

1. Make sure that fuel is drained from the tank.
2. Remove fuel filler tube and hose.

3. Check one-way fuel valve for operation as follows.
   When a stick is inserted, the valve should open, when removing stick it should close.
   Do not drop any material into the tank.

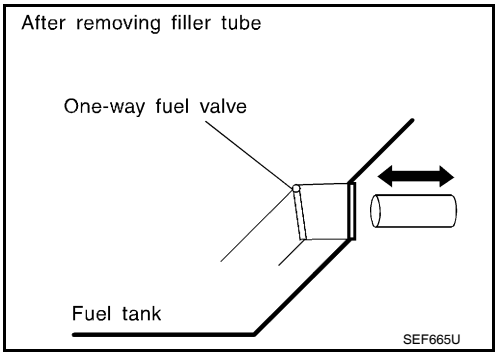

Is the inspection result normal?

YES >> INSPECTION END
NO >> Replace fuel filler tube or replace one-way fuel valve with fuel tank.

Component Inspection

INFOID:0000000004349968

1. INSPECTION START

Do you have CONSULT-III?

Do you have CONSULT-III?

YES >> GO TO 2.
NO >> GO TO 3.

2. CHECK REFUELING EVAP VAPOR CUT VALVE

With CONSULT-III

1. Remove fuel tank. Refer to FL-10, "Removal and Installation".
2. Drain fuel from the tank as follows:
- Remove fuel feed hose located on the fuel gauge retainer.
- Connect a spare fuel hose, one side to fuel gauge retainer where the hose was removed and the other side to a fuel container.
- Drain fuel using “FUEL PUMP RELAY” in “ACTIVE TEST” mode with CONSULT-III.
3. Check refueling EVAP vapor cut valve for being stuck to close as follows.
   Blow air into the refueling EVAP vapor cut valve (from the end of EVAP/ORVR line hose), and check that the air flows freely into the tank.
4. Check refueling EVAP vapor cut valve for being stuck to open as follows.
- Connect vacuum pump to hose end.
- Remove fuel gauge retainer with fuel gauge unit.

Always replace O-ring with new one.

- Put fuel tank upside down.
- Apply vacuum pressure to hose end [–13.3 kPa (–0.136 kg/cm^3, –1.93 psi)] with fuel gauge retainer remaining open and check that the pressure is applicable.

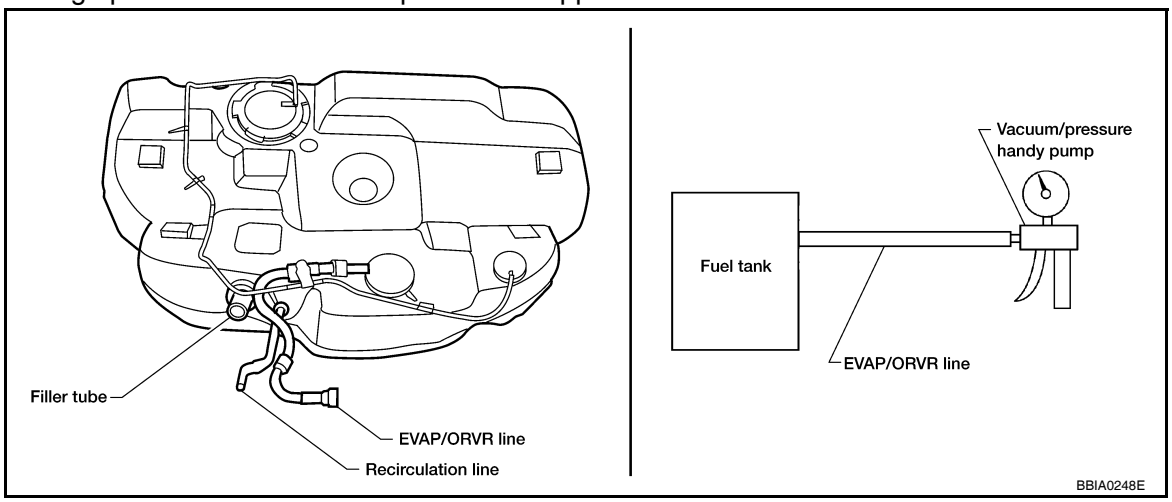

Is the inspection result normal?

YES >> INSPECTION END
NO >> Replace refueling EVAP vapor cut valve with fuel tank.

3. CHECK REFUELING EVAP VAPOR CUT VALVE

Without CONSULT-III

1. Remove fuel tank. Refer to FL-10, "Removal and Installation".
2. Drain fuel from the tank as follows:
- Remove fuel gauge retainer.
- Drain fuel from the tank using a handy pump into a fuel container.
3. Check refueling EVAP vapor cut valve for being stuck to close as follows.
   Blow air into the refueling EVAP vapor cut valve (from the end of EVAP/ORVR line hose), and check that the air flows freely into the tank.
4. Check refueling EVAP vapor cut valve for being stuck to open as follows.
- Connect vacuum pump to hose end.
- Remove fuel gauge retainer with fuel gauge unit.

Always replace O-ring with new one.

- Put fuel tank upside down.
- Apply vacuum pressure to hose end [–13.3 kPa (–0.136 kg/cm^3, –1.93 psi)] with fuel gauge retainer remaining open and check that the pressure is applicable.

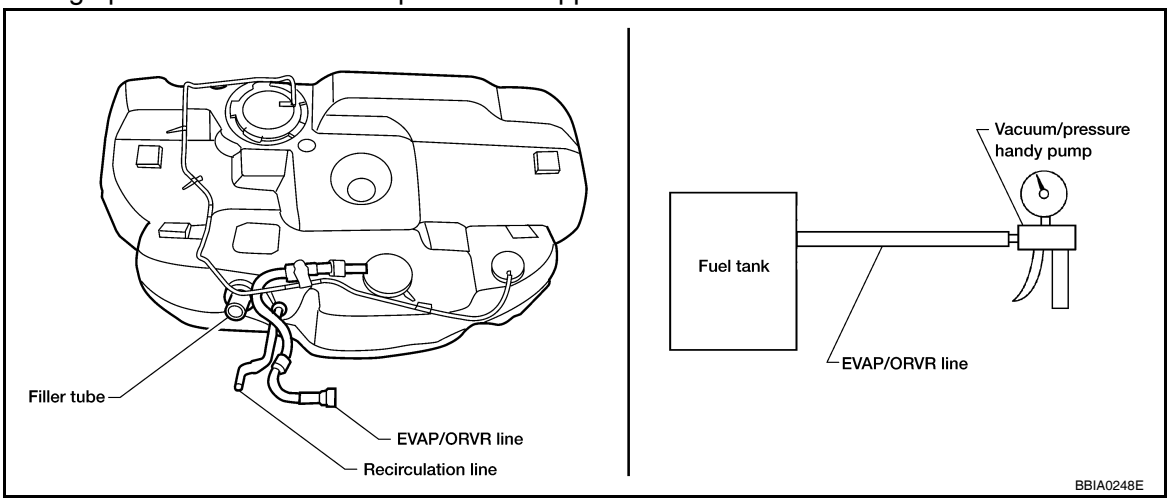

Is the inspection result normal?

YES >> INSPECTION END
NO >> Replace refueling EVAP vapor cut valve with fuel tank.

POSITIVE CRANKCASE VENTILATION

Description

INFOID:0000000004349969

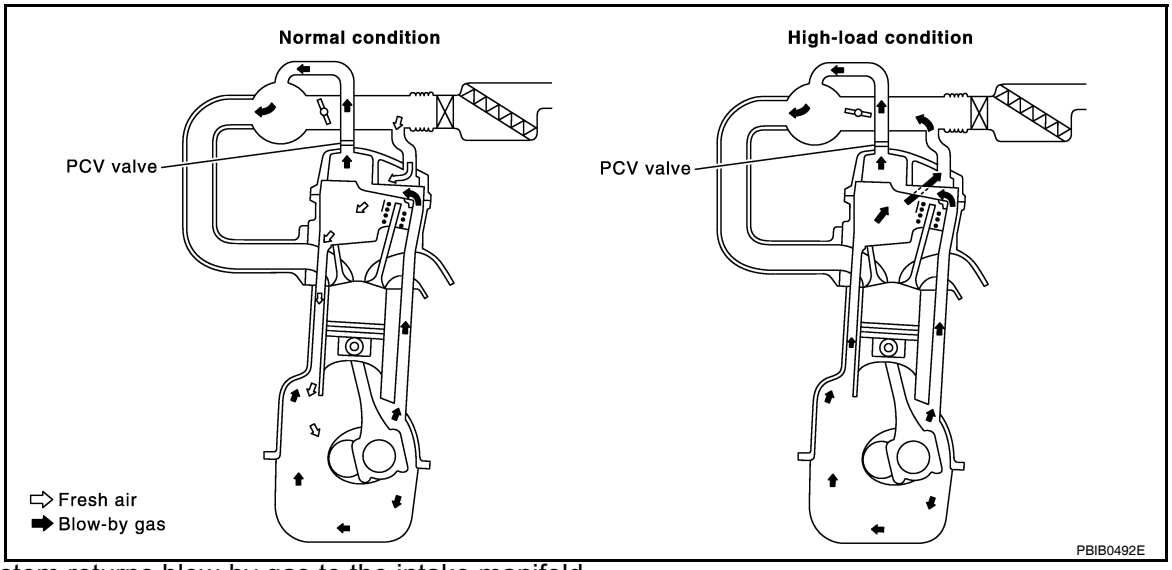

This system returns blow-by gas to the intake manifold.
The positive crankcase ventilation (PCV) valve is provided to conduct crankcase blow-by gas to the intake manifold.
During partial throttle operation of the engine, the intake manifold sucks the blow-by gas through the PCV valve.
Normally, the capacity of the valve is sufficient to handle any blow-by and a small amount of ventilating air.
The ventilating air is drawn from the air inlet tubes into the crankcase. In this process the air passes through the hose connecting air inlet tubes to rocker cover.
Under full-throttle condition, the manifold vacuum is insufficient to draw the blow-by flow through the valve. The flow goes through the hose connection in the reverse direction.
On vehicles with an excessively high blow-by, the valve does not meet the requirement. This is because some of the flow will go through the hose connection to the air inlet tubes under all conditions.

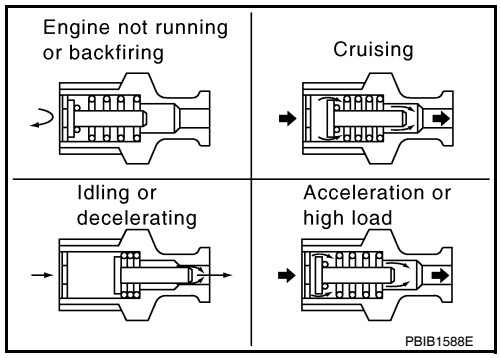

Component Inspection

INFOID:0000000004349970

1. CHECK PCV VALVE

With engine running at idle, remove PCV valve from rocker cover. A properly working valve makes a hissing noise as air passes through it. A strong vacuum should be felt immediately when a finger is placed over valve inlet.

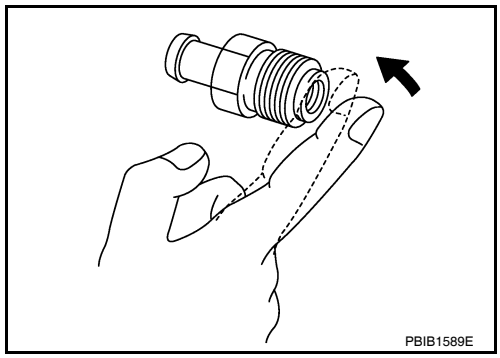

Is the inspection result normal?

YES >> INSPECTION END
NO >> Replace PCV valve.

REFRIGERANT PRESSURE SENSOR

Description

INFOID:0000000004349971

The refrigerant pressure sensor is installed at the condenser of the air conditioner system. The sensor uses an electrostatic volume pressure transducer to convert refrigerant pressure to voltage. The voltage signal is sent to ECM, and ECM controls cooling fan system.

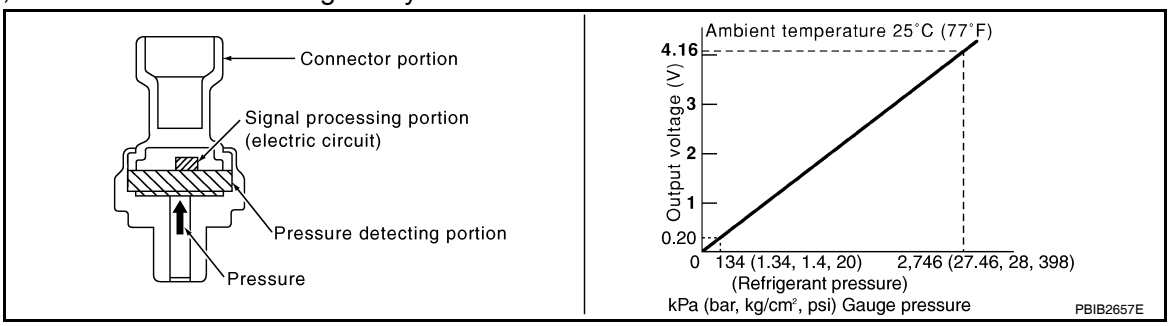

Component Function Check

INFOID:0000000004349972

1. CHECK REFRIGERANT PRESSURE SENSOR OVERALL FUNCTION

1. Start engine and warm it up to normal operating temperature.
2. Turn A/C switch and blower fan switch ON.
3. Check the voltage between ECM harness connector and ground.

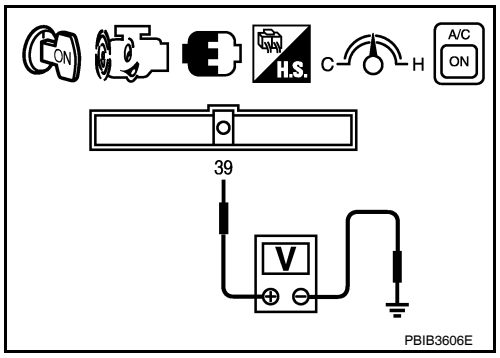

ECM		Ground	Voltage
Connector	Terminal		
F13	39 (Refrigerant pressure sensor signal)	Ground	1.0 - 4.0V

Is the inspection result normal?

YES >> INSPECTION END
NO >> Go to EC-975, "Diagnosis Procedure".

Diagnosis Procedure

INFOID:0000000004349973

1. CHECK GROUND CONNECTION

1. Turn A/C switch and blower fan switch OFF.
2. Stop engine.
3. Turn ignition switch OFF.
4. Check ground connection E9. Refer to Ground Inspection in GI-45, "Circuit Inspection".

Is the inspection result normal?

YES >> GO TO 2.
NO >> Repair or replace ground connection.

2. CHECK REFRIGERANT PRESSURE SENSOR POWER SUPPLY CIRCUIT

1. Disconnect refrigerant pressure sensor harness connector.
2. Turn ignition switch ON.

3. Check the voltage between refrigerant pressure sensor harness connector and ground.

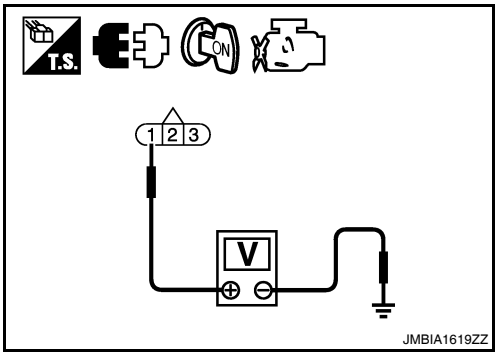

Refrigerant pressure sensor		Ground	Voltage
Connector	Terminal		
E219	1	Ground	Approx. 5V

Is the inspection result normal?

YES >> GO TO 4.
NO >> GO TO 3.

3. DETECT MALFUNCTIONING PART

Check the following.
- Harness connectors F1, E3
- Harness for open or short between ECM and refrigerant pressure sensor

>> Repair open circuit or short to ground or short to power in harness or connectors.

4. CHECK REFRIGERANT PRESSURE SENSOR GROUND CIRCUIT FOR OPEN AND SHORT

1. Turn ignition switch OFF.
2. Disconnect ECM harness connector.
3. Check the continuity between refrigerant pressure sensor harness connector and ECM harness connector.

Refrigerant pressure sensor		ECM		Continuity
Connector	Terminal	Connector	Terminal	
E219	3	F13	40	Existed

4. Also check harness for short to ground and short to power.

Is the inspection result normal?

YES >> GO TO 6.
NO >> GO TO 5.

5. DETECT MALFUNCTIONING PART

Check the following.
- Harness connectors F1, E3
- Harness for open or short between ECM and refrigerant pressure sensor

>> Repair open circuit or short to ground or short to power in harness or connectors.

6. CHECK REFRIGERANT PRESSURE SENSOR INPUT SIGNAL CIRCUIT FOR OPEN AND SHORT

1. Check the continuity between ECM harness connector and refrigerant pressure sensor harness connector.

Refrigerant pressure sensor		ECM		Continuity
Connector	Terminal	Connector	Terminal	
E219	2	F13	39	Existed

2. Also check harness for short to ground and short to power.

Is the inspection result normal?

YES >> GO TO 8.
NO >> GO TO 7.

7. DETECT MALFUNCTIONING PART

Check the following.
- Harness connectors F1, E3
- Harness for open or short between ECM and refrigerant pressure sensor

>> Repair open circuit or short to ground or short to power in harness or connectors.

8. CHECK INTERMITTENT INCIDENT

Refer to GI-42, "Intermittent Incident".

Is the inspection result normal?

YES >> Replace refrigerant pressure sensor.
NO >> Repair or replace.

ECU DIAGNOSIS

ECM

Reference Value

INFOID:0000000004349974

VALUES ON THE DIAGNOSIS TOOL

Remarks:

- Specification data are reference values.
- Specification data are output/input values which are detected or supplied by the ECM at the connector.
  * Specification data may not be directly related to their components signals/values/operations.
  I.e. Adjust ignition timing with a timing light before monitoring IGN TIMING, because the monitor may show the specification data in spite of the ignition timing not being adjusted to the specification data. this IGN TIMING monitors the data calculated by the ECM according to the signals input from the camshaft position sensor and other ignition timing related sensors.

Monitor Item	Condition		Values/Status
ENG SPEED	• Run engine and compare CONSULT-III value with the tachometer indication.		Almost the same speed as the tachometer indication.
MAS A/F SE-B1	See EC-666, "Diagnosis Procedure".		
B/FUEL SCHDL	See EC-666, "Diagnosis Procedure".		
A/F ALPHA-B1	See EC-666, "Diagnosis Procedure".		
COOLAN TEMP/S	• Engine: After warming up		More than 70°C (158°F)
A/F SEN1 (B1)	• Engine: After warming up	Maintaining engine speed at 2,000 rpm	Fluctuates around 2.2 V
HO2S2 (B1)	• Revving engine from idle up to 3,000 rpm quickly after the following conditions are met. - Engine: After warming up - After keeping engine speed between 3,500 and 4,000 rpm for 1 minute and at idle for 1 minute under no load		0 - 0.3V ←→ Approx. 0.6 - 1.0V
HO2S2 MNTR(B1)	• Revving engine from idle up to 3,000 rpm quickly after the following conditions are met. - Engine: After warming up - After keeping engine speed between 3,500 and 4,000 rpm for 1 minute and at idle for 1 minute under no load		LEAN ←→ RICH
VHCL SPEED SE	• Turn drive wheels and compare CONSULT-III value with the speedometer indication.		Almost the same speed as speedometer indication
BATTERY VOLT	• Ignition switch: ON (Engine stopped)		11 - 14V
ACCEL SEN 1	• Ignition switch: ON (Engine stopped)	Accelerator pedal: Fully released	0.5 - 1.0V
		Accelerator pedal: Fully depressed	4.2 - 4.8V
ACCEL SEN 2*1	• Ignition switch: ON (Engine stopped)	Accelerator pedal: Fully released	0.5 - 1.0V
		Accelerator pedal: Fully depressed	4.2 - 4.8V
TP SEN 1-B1	• Ignition switch: ON (Engine stopped) • Shift lever: D (CVT), 1st (M/T)	Accelerator pedal: Fully released	More than 0.36V
		Accelerator pedal: Fully depressed	Less than 4.75V
TP SEN 2-B1*1	• Ignition switch: ON (Engine stopped) • Shift lever: D (CVT), 1st (M/T)	Accelerator pedal: Fully released	More than 0.36V
		Accelerator pedal: Fully depressed	Less than 4.75V
FUEL T/TMP SE	• Ignition switch: ON		Indicates fuel tank temperature
INT/A TEMP SE	• Ignition switch: ON		Indicates intake air temperature
EVAP SYS PRES	• Ignition switch: ON		Approx. 1.8 - 4.8V
FUEL LEVEL SE	• Ignition switch: ON		Depending on fuel level of fuel tank
START SIGNAL	• Ignition switch: ON → START → ON		OFF → ON → OFF
CLSD THL POS	• Ignition switch: ON (Engine stopped)	Accelerator pedal: Fully released	ON
		Accelerator pedal: Slightly depressed	OFF

Monitor Item	Condition		Values/Status
AIR COND SIG	• Engine: After warming up, idle the engine	Air conditioner switch: OFF	OFF
		Air conditioner switch: ON (Compressor operates.)	ON
P/N POSI SW	• Ignition switch: ON	Shift lever: P or N (CVT), Neutral (M/T)	ON
		Selector lever: Except above	OFF
PW/ST SIGNAL	• Engine: After warming up, idle the engine	Steering wheel: Not being turned	OFF
		Steering wheel: Being turned	ON
LOAD SIGNAL	• Ignition switch: ON	Rear window defogger switch: ON and/or Lighting switch: 2nd position	ON
		Rear window defogger switch and lighting switch: OFF	OFF
IGNITION SW	• Ignition switch: ON → OFF → ON		ON → OFF → ON
HEATER FAN SW	• Engine: After warming up, idle the engine	Heater fan switch: ON	ON
		Heater fan switch: OFF	OFF
BRAKE SW	• Ignition switch: ON	Brake pedal: Fully released	OFF
		Brake pedal: Slightly depressed	ON
INJ PULSE-B1	• Engine: After warming up • Shift lever: P or N (CVT), Neutral (M/T) • Air conditioner switch: OFF • No load	Idle	2.0 - 3.0 msec
		2,000 rpm	1.9 - 2.9 msec
IGN TIMING	• Engine: After warming up • Shift lever: P or N (CVT), Neutral (M/T) • Air conditioner switch: OFF • No load	Idle	10° - 20° BTDC
		2,000 rpm	25° - 45° BTDC
CAL/LD VALUE	• Engine: After warming up • Shift lever: P or N (CVT), Neutral (M/T) • Air conditioner switch: OFF • No load	Idle	10% - 35%
		2,500 rpm	10% - 35%
MASS AIRFLOW	• Engine: After warming up • Shift lever: P or N (CVT), Neutral (M/T) • Air conditioner switch: OFF • No load	Idle	1.0 - 4.0 g·m/s
		2,500 rpm	4.0 - 10.0 g·m/s
PURG VOL C/V	• Engine: After warming up • Shift lever: P or N (CVT), Neutral (M/T) • Air conditioner switch: OFF • No load	Idle (Accelerator pedal: Not depressed even slightly, after engine starting.)	0%
		2,000 rpm	20% - 90%
INT/V TIM(B1)	• Engine: After warming up • Shift lever: P or N (CVT), Neutral (M/T) • Air conditioner switch: OFF • No load	Idle	–5° - 5°CA
		2,000 rpm	Approx. 0° - 20°CA
INT/V SOL(B1)	• Engine: After warming up • Shift lever: P or N (CVT), Neutral (M/T) • Air conditioner switch: OFF • No load	Idle	0%
		2,000 rpm	Approx. 0% - 60%
AIR COND RLY	• Engine: After warming up, idle the engine	Air conditioner switch: OFF	OFF
		Air conditioner switch: ON (Compressor operates)	ON

Monitor Item	Condition		Values/Status
FUEL PUMP RLY	• For 1 seconds after turning ignition switch: ON • Engine running or cranking		ON
	• Except above		OFF
VENT CONT/V	• Ignition switch: ON		OFF
THRTL RELAY	• Ignition switch: ON		ON
COOLING FAN	• Engine: After warming up, idle the engine • Air conditioner switch: OFF	Engine coolant temperature is 97°C (207°F) or less	OFF
		Engine coolant temperature between 98°C (208°F) and 99°C (210°F) or more	LOW
		Engine coolant temperature between 100°C (212°F) or more	HIGH
	• Engine: After warming up, idle the engine • Air conditioner switch: ON • Refrigerant pressure is less than 1,280 kPa (12.80 bar, 13.05 kg/cm^2, 185.6 psi)	Engine coolant temperature is 97°C (207°F) or less	ON
		Engine coolant temperature between 97°C (207°F) and 99°C (210°F) or more	MID
		Engine coolant temperature between 100°C (212°F) or more	HIGH
HO2S2 HTR (B1)	• Engine speed: Below 3,600 rpm after the following conditions are met. - Engine: After warming up - Keeping the engine speed between 3,500 and 4,000 rpm for 1 minute and at idle for 1 minute under no load		ON
	• Engine speed: Above 3,600 rpm		OFF
I/P PULLY SPD	• Vehicle speed: More than 20 km/h (12 MPH)		Almost the same speed as the tachometer indication
VEHICLE SPEED	• Turn drive wheels and compare CONSULT-III value with the speedometer indication.		Almost the same speed as the speedometer indication
IDL A/V LEARN	• Engine: running	Idle air volume learning has not been performed yet.	YET
		Idle air volume learning has already been performed successfully.	CMPLT
TRVL AFTER MIL	• Ignition switch: ON	Vehicle has traveled after MIL has turned ON.	0 - 65,535 km (0 - 40,723 miles)
A/F S1 HTR(B1)	• Engine: After warming up, idle the engine (More than 140 seconds after starting engine.)		4 - 100%
AC PRESS SEN	• Engine: Idle • Both A/C switch and blower fan switch: ON (Compressor operates)		1.0 - 4.0V
VHCL SPEED SE	• Turn drive wheels and compare CONSULT-III value with the speedometer indication.		Almost the same speed as the speedometer indication
SET VHCL SPD	• Engine: Running	ASCD: Operating	The preset vehicle speed is displayed
MAIN SW	• Ignition switch: ON	MAIN switch: Pressed	ON
		MAIN switch: Released	OFF
CANCEL SW	• Ignition switch: ON	CANCEL switch: Pressed	ON
		CANCEL switch: Released	OFF
RESUME/ACC SW	• Ignition switch: ON	RESUME/ACCELERATE switch: Pressed	ON
		RESUME/ACCELERATE switch: Released	OFF
SET SW	• Ignition switch: ON	SET/COAST switch: Pressed	ON
		SET/COAST switch: Released	OFF

Monitor Item	Condition		Values/Status
BRAKE SW1 (ASCD brake switch)	• Ignition switch: ON	• Brake pedal: Fully released (CVT) • Brake pedal and clutch pedal: Fully released (M/T)	ON
		• Brake pedal: Slightly depressed (CVT) • Brake pedal and/or clutch pedal: Slightly depressed (M/T)	OFF
BRAKE SW2 (Stop lamp switch)	• Ignition switch: ON	Brake pedal: Fully released	OFF
		Brake pedal: Slightly depressed	ON
VHCL SPD CUT	• Ignition switch: ON		NON
LO SPEED CUT	• Ignition switch: ON		NON
AT OD MONITOR	• Ignition switch: ON		OFF
AT OD CANCEL	• Ignition switch: ON		OFF
CRUISE LAMP	• Ignition switch: ON	MAIN switch: Pressed at the 1st time → at the 2nd time	ON → OFF
SET LAMP	• MAIN switch: ON • When vehicle speed: Between 40 km/h (25 MPH) and 144 km/h (89 MPH)	ASCD: Operating	ON
		ASCD: Not operating	OFF
ALT DUTY	• Engine: Idle		0 - 80%
BAT CUR SEN	• Engine speed: Idle • Battery: Fully charged*2 • Shift lever: P or N (CVT), Neutral (M/T) • Air conditioner switch: OFF • No load		Approx. 2,600 - 3,500mV
ALT DUTY SIG	• Power generation voltage variable control: Operating		ON
	• Power generation voltage variable control: Not operating		OFF
A/F ADJ-B1	• Engine: running		–0.330 - 0.330

*1: Accelerator pedal position sensor 2 signal and throttle position sensor 2 signal are converted by ECM internally. Thus, they differ from ECM terminals voltage signal.

*2: Before measuring the terminal voltage, confirm that the battery is fully charged. Refer to PG-3, "How to Handle Battery".

TERMINAL LAYOUT

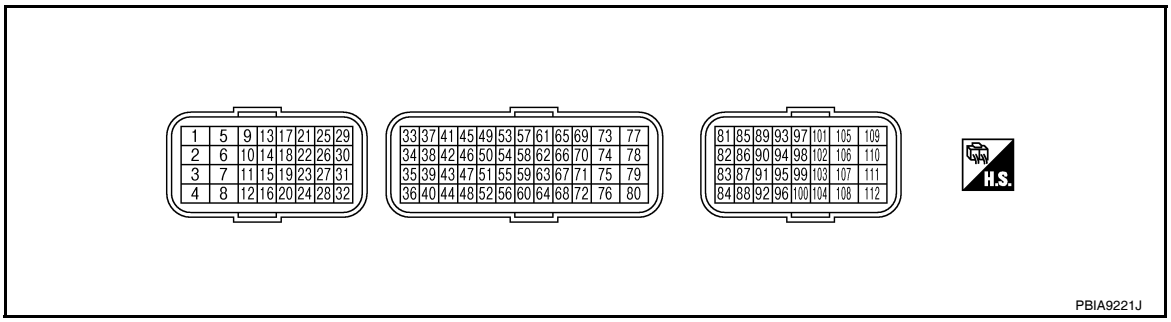

PHYSICAL VALUES

NOTE:
- ECM is located behind the passenger side instrument lower panel. For this inspection, remove passenger side instrument lower panel.
- Specification data are reference values and are measured between each terminal and ground.
- Pulse signal is measured by CONSULT-III.

CAUTION:
Do not use ECM ground terminals when measuring input/output voltage. Doing so may result in damage to the ECMs transistor. Use a ground other than ECM terminals, such as the ground.

Terminal No.		Wire color	Description		Condition	Value (Approx.)
+	–		Signal name	Input/ Output		
2	Ground	G/W	Throttle control motor relay power supply	Input	[Ignition switch: ON]	BATTERY VOLTAGE (11 - 14V)
4	Ground	BR/Y	A/F sensor 1 heater	Output	[Engine is running] • Warm-up condition • Idle speed	2.9 - 8.8V★ 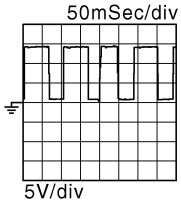 JMBIA0082GB
5	Ground	L	Throttle control motor (Open)	Output	[Ignition switch: ON] • Engine stopped • Shift lever: D (CVT), 1st (M/T) • Accelerator pedal: Fully depressed	0 - 14V★ 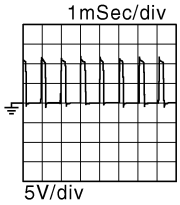 JMBIA0083GB
6	Ground	P	Throttle control motor (Close)	Output	[Ignition switch: ON] • Engine stopped • Shift lever: D (CVT), 1st (M/T) • Accelerator pedal: Fully released	0 - 14V★ 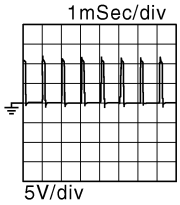 JMBIA0084GB
9 10 11 21	Ground	L/B G/R Y/R G/Y	Ignition signal No. 3 Ignition signal No. 2 Ignition signal No. 1 Ignition signal No. 4	Output	[Engine is running] • Warm-up condition • Idle speed **NOTE:** The pulse cycle changes depending on rpm at idle	0 - 0.1V★ 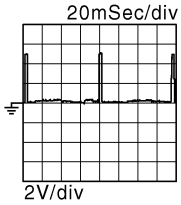 JMBIA0085GB
					[Engine is running] • Warm-up condition • Engine speed: 2,000 rpm	0 - 0.2V★ 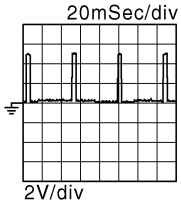 JMBIA0086GB
12 16	Ground	B	ECM ground	—	[Engine is running] • Idle speed	Body ground

Terminal No. +	Terminal No. –	Wire color	Description: Signal name	Description: Input/Output	Condition	Value (Approx.)
13	Ground	R	Heated oxygen sensor 2 heater	Output	[Engine is running] • Engine speed: Below 3,600 rpm after the following conditions are met - Engine: after warming up - Keeping the engine speed between 3,500 and 4,000 rpm for 1 minute and at idle for 1 minute under no load	10V★ 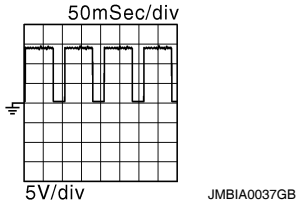
					[Ignition switch: ON] • Engine stopped [Engine is running] • Engine speed: Above 3,600 rpm	BATTERY VOLTAGE (11 - 14V)
14	Ground	B/R	Fuel pump relay	Output	[Ignition switch: ON] • For 1 second after turning ignition switch ON [Engine is running]	0 - 1.0V
					[Ignition switch ON] • More than 1 second after turning ignition switch ON	BATTERY VOLTAGE (11 - 14V)
15	Ground	O	Throttle control motor relay	Output	[Ignition switch: ON → OFF]	0 - 1.0V ↓ BATTERY VOLTAGE (11 - 14V) ↓ 0V
					[Ignition switch: ON]	0 - 1.0V
24	Ground	W/B	ECM relay (Self shut-off)	Output	[Engine is running] [Ignition switch: OFF] • A few seconds after turning ignition switch OFF	0 - 1.0V
					[Ignition switch: OFF] • More than a few seconds after turning ignition switch OFF	BATTERY VOLTAGE (11 - 14V)
25	Ground	P/L	EVAP canister purge volume control solenoid valve	Output	[Engine is running] • Idle speed • Accelerator pedal: Not depressed even slightly, after engine starting	BATTERY VOLTAGE (11 - 14V)★ 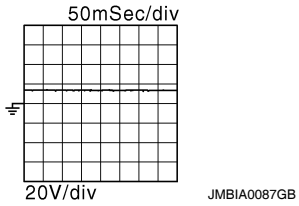
					[Engine is running] • Engine speed: About 2,000 rpm (More than 100 seconds after starting engine.)	BATTERY VOLTAGE (11 - 14V)★ 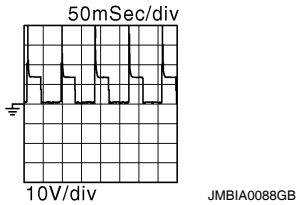

Terminal No.		Wire color	Description		Condition	Value (Approx.)
+	—		Signal name	Input/ Output		
29 30 31 32	Ground	LG/R R/Y R/W R/B	Fuel injector No. 4 Fuel injector No. 3 Fuel injector No. 2 Fuel injector No. 1	Output	[Engine is running] • Warm-up condition • Idle speed **NOTE:** The pulse cycle changes depending on rpm at idle	BATTERY VOLTAGE (11 - 14V)★ 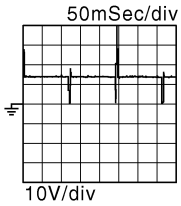 JMBIA0089GB
					[Engine is running] • Warm-up condition • Engine speed: 2,000 rpm	BATTERY VOLTAGE (11 - 14V)★ 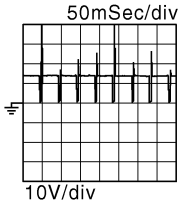 JMBIA0090GB
33	Ground	LG	Heated oxygen sensor 2	Input	[Engine is running] • Revving engine from idle to 3,000 rpm quickly after the following conditions are met - Engine: after warming up - Keeping the engine speed between 3,500 and 4,000 rpm for 1 minute and at idle for 1 minute under no load	0 - 1.0V
35	Ground	B/Y	Sensor ground (Heated oxygen sensor 2)	—	[Engine is running] • Warm-up condition • Idle speed	0V
36	Ground	B	Sensor ground (Throttle position sensor)	—	[Engine is running] • Warm-up condition • Idle speed	0V
37	Ground	W	Throttle position sensor 1	Input	[Ignition switch: ON] • Engine stopped • Shift lever: D (CVT), 1st (M/T) • Accelerator pedal: Fully released	More than 0.36V
					[Ignition switch: ON] • Engine stopped • Shift lever: D (CVT), 1st (M/T) • Accelerator pedal: Fully depressed	Less than 4.75V
38	Ground	R	Throttle position sensor 2	Input	[Ignition switch: ON] • Engine stopped • Shift lever: D (CVT), 1st (M/T) • Accelerator pedal: Fully released	Less than 4.75V
					[Ignition switch: ON] • Engine stopped • Shift lever: D (CVT), 1st (M/T) • Accelerator pedal: Fully depressed	More than 0.36V

Terminal No.		Wire color	Description		Condition	Value (Approx.)
+	–		Signal name	Input/ Output		
39	Ground	R	Refrigerant pressure sensor	Input	[Engine is running] • Warm-up condition • Both A/C switch and blower fan motor switch: ON (Compressor operates)	1.0 - 4.0V
40	Ground	G	Sensor ground (Refrigerant pressure sensor)	—	[Engine is running] • Warm-up condition • Idle speed	0V
41	Ground	O/B	Power steering pressure sensor	Output	[Engine is running] • Steering wheel: Being turned	0.5 - 4.0V
					[Engine is running] • Steering wheel: Not being turned	0.4 - 0.8V
42	Ground	G/R	Battery current sensor	Input	[Engine is running] • Battery: Fully charged* • Idle speed	2.6 - 3.5V
44	Ground	R/B	Sensor ground (Battery current sensor)	—	[Engine is running] • Warm-up condition • Idle speed	0V
45	Ground	B/W	A/F sensor 1 (bank 1)	Input	[Ignition switch: ON]	2.2V
46	Ground	Y	Engine coolant temperature sensor	Input	[Engine is running]	0 - 4.8V Output voltage varies with engine coolant temperature.
47	Ground	G	Sensor power supply (Throttle position sensor)	—	[Ignition switch: ON]	5V
48	Ground	B/P	Sensor ground (Power steering pressure sensor)	—	[Engine is running] • Warm-up condition • Idle speed	0V
49	Ground	L	A/F sensor 1	Input	[Engine is running] • Warm-up condition • Engine speed: 2,000 rpm	1.8V Output voltage varies with air fuel ratio.
50	Ground	L/Y	Intake air temperature sensor	Input	[Engine is running]	0 - 4.8V Output voltage varies with intake air temperature.
51	Ground	O/L	Sensor power supply	—	[Ignition switch: ON]	5V
52	Ground	LG	Sensor ground (Engine coolant temperature sensor)	—	[Engine is running] • Warm-up condition • Idle speed	0V
55	Ground	R/L	Sensor power supply (Power steering pressure sensor)	—	[Ignition switch: ON]	5V
56	Ground	G/B	Sensor ground (Mass air flow sensor, Intake air temperature sensor)	—	[Engine is running] • Warm-up condition • Idle speed	0V
58	Ground	O	Mass air flow sensor	Input	[Engine is running] • Warm-up condition • Idle speed	0.9 - 1.1V
					[Engine is running] • Warm-up condition • Engine speed: 2,500 rpm	1.4 - 1.7V
59	Ground	G/W	Sensor power supply [Camshaft position sensor (PHASE)]	—	[Ignition switch: ON]	5V

Terminal No.		Wire color	Description		Condition	Value (Approx.)
+	–		Signal name	Input/ Output		
60	Ground	Y/B	Sensor ground [Crankshaft position sensor (POS)]	—	[Engine is running] • Warm-up condition • Idle speed	0V
61	Ground	W	Knock sensor	Input	[Engine is running] • Idle speed	2.5V
64	Ground	B/R	Sensor ground [Camshaft position sensor (PHASE)]	—	[Engine is running] • Warm-up condition • Idle speed	0V
65	Ground	W	Crankshaft position sensor (POS)	Input	[Engine is running] • Warm-up condition • Idle speed **NOTE:** The pulse cycle changes depending on rpm at idle	3.0V★ 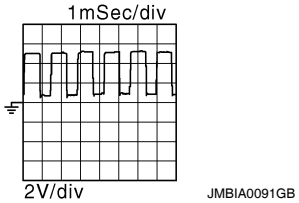
					[Engine is running] • Engine speed: 2,000 rpm	3.0V★ 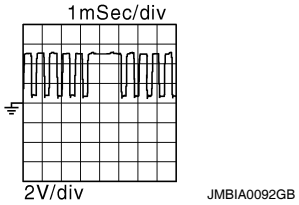
67	Ground	—	Sensor ground (Knock sensor)	—	[Engine is running] • Warm-up condition • Idle speed	0V
69	Ground	W/R	Camshaft position sensor (PHASE)	Input	[Engine is running] • Warm-up condition • Idle speed **NOTE:** The pulse cycle changes depending on rpm at idle	1.0 - 4.0★ 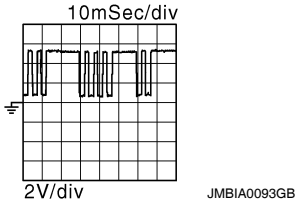
					[Engine is running] • Engine speed is 2,000 rpm	1.0 - 4.0★ 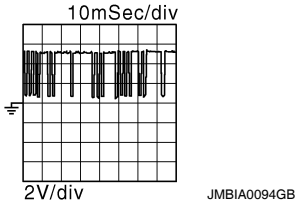
72	Ground	LG/B	Sensor power supply (Refrigerant pressure sensor)	—	[Ignition switch: ON]	5V
76	Ground	R/G	Sensor power supply [Crankshaft position sensor (POS)]	—	[Ignition switch: ON]	5V
77	Ground	W/L	Power supply for ECM (Back-up)	Input	[Ignition switch: OFF]	BATTERY VOLTAGE (11 - 14V)

Terminal No. +	Terminal No. —	Wire color	Description: Signal name	Description: Input/Output	Condition	Value (Approx.)
78	Ground	R/L	Intake valve timing control solenoid valve	Output	[Engine is running] • Warm-up condition • Idle speed	0V
					[Engine is running] • Warm-up condition • Engine speed: 2,000rpm	7 - 10V★ 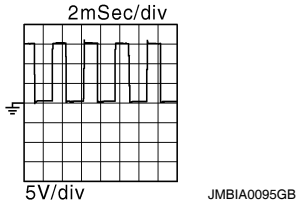
81	Ground	W	Accelerator pedal position sensor 1	Input	[Ignition switch: ON] • Engine stopped • Accelerator pedal: Fully released	0.5 - 1.0V
					[Ignition switch: ON] • Engine stopped • Accelerator pedal: Fully depressed	4.2 - 4.8V
82	Ground	O	Accelerator pedal position sensor 2	Input	[Ignition switch: ON] • Engine stopped • Accelerator pedal: Fully released	0.25 - 0.5V
					[Ignition switch: ON] • Engine stopped • Accelerator pedal: Fully depressed	2.0 - 2.5V
83	Ground	GR	Sensor power supply (Accelerator pedal position sensor 1)	—	[Ignition switch: ON]	5V
84	Ground	B	Sensor ground (Accelerator pedal position sensor 1)	—	[Engine is running] • Warm-up condition • Idle speed	0V
85	Ground	G/Y	ASCD steering switch	Input	[Ignition switch: ON] • ASCD steering switch: OFF	4V
					[Ignition switch: ON] • MAIN switch: Pressed	0V
					[Ignition switch: ON] • CANCEL switch: Pressed	1V
					[Ignition switch: ON] • RESUME/ACCELERATE switch: Pressed	3V
					[Ignition switch: ON] • SET/COAST switch: Pressed	2V
86	Ground	SB	EVAP control system pressure sensor	Input	[Ignition switch: ON]	1.8 - 4.8V
87	Ground	BR	Sensor power supply (Accelerator pedal position sensor 2)	—	[Ignition switch: ON]	5V
88	—	O	Data link connector	Input/Output	—	—

Terminal No.		Wire color	Description		Condition	Value (Approx.)
+	–		Signal name	Input/ Output		
91	Ground	V	Sensor power supply (EVAP control system pressure sensor)	—	[Ignition switch: ON]	5V
92	Ground	R	Sensor ground (ASCD steering switch)	—	[Engine is running] • Warm-up condition • Idle speed	0V
93	Ground	Y	Ignition switch	Input	[Ignition switch: OFF]	0V
					[Ignition switch: ON]	BATTERY VOLTAGE (11 - 14V)
94	—	V/W	Engine speed signal output	Output	—	—
95	Ground	Y	Fuel tank temperature sensor	Input	[Engine is running]	0 - 4.8V Output voltage varies with fuel tank temperature.
96	Ground	GR	Sensor ground (EVAP control system pressure sensor)	—	[Engine is running] • Warm-up condition • Idle speed	0V
97	—	P	CAN communication line	Input/ Output	—	—
98	—	L	CAN communication line	Input/ Output	—	—
100	Ground	G	Sensor ground (Accelerator pedal position sensor 2)	—	[Engine is running] • Warm-up condition • Idle speed	0V
102	Ground	R/B	PNP switch	Input	[Ignition switch: ON] • Shift lever: P or N (CVT), Neutral (M/T)	BATTERY VOLTAGE (11 - 14V)
					[Ignition switch: ON] • Shift lever: Except above	0V
104	Ground	P	Sensor ground (Fuel tank temperature sensor)	—	[Engine is running] • Warm-up condition • Idle speed	0V
105	Ground	V	Power supply for ECM	Input	[Ignition switch: ON]	BATTERY VOLTAGE (11 - 14V)
106	Ground	SB	Stop lamp switch	Input	[Ignition switch: OFF] • Brake pedal: Fully released	0V
					[Ignition switch: OFF] • Brake pedal: Slightly depressed	BATTERY VOLTAGE (11 - 14V)
107 108	Ground	B	ECM ground	—	[Engine is running] • Idle speed	Body ground
109	Ground	W	EVAP canister vent control valve	Output	[Ignition switch: ON]	BATTERY VOLTAGE (11 - 14V)

Terminal No.		Wire color	Description		Condition	Value (Approx.)
+	—		Signal name	Input/ Output		
110	Ground	G/B	ASCD brake switch	Input	[Ignition switch: ON] • Brake pedal: Slightly depressed (CVT) • Brake pedal and clutch pedal: Slightly depressed (M/T)	0V
					[Ignition switch: ON] • Brake pedal: Fully released (CVT) • Brake pedal and/or clutch pedal: Fully released (M/T)	BATTERY VOLTAGE (11 - 14V)
111 112	Ground	B	ECM ground	—	[Engine is running] • Idle speed	Body ground

★: Average voltage for pulse signal (Actual pulse signal can be confirmed by oscilloscope.)

**: Before measuring the terminal voltage, confirm that the battery is fully charged. Refer to PG-3, "How to Handle Battery".

Wiring Diagram — ENGINE CONTROL SYSTEM —

INFOID:0000000004349975

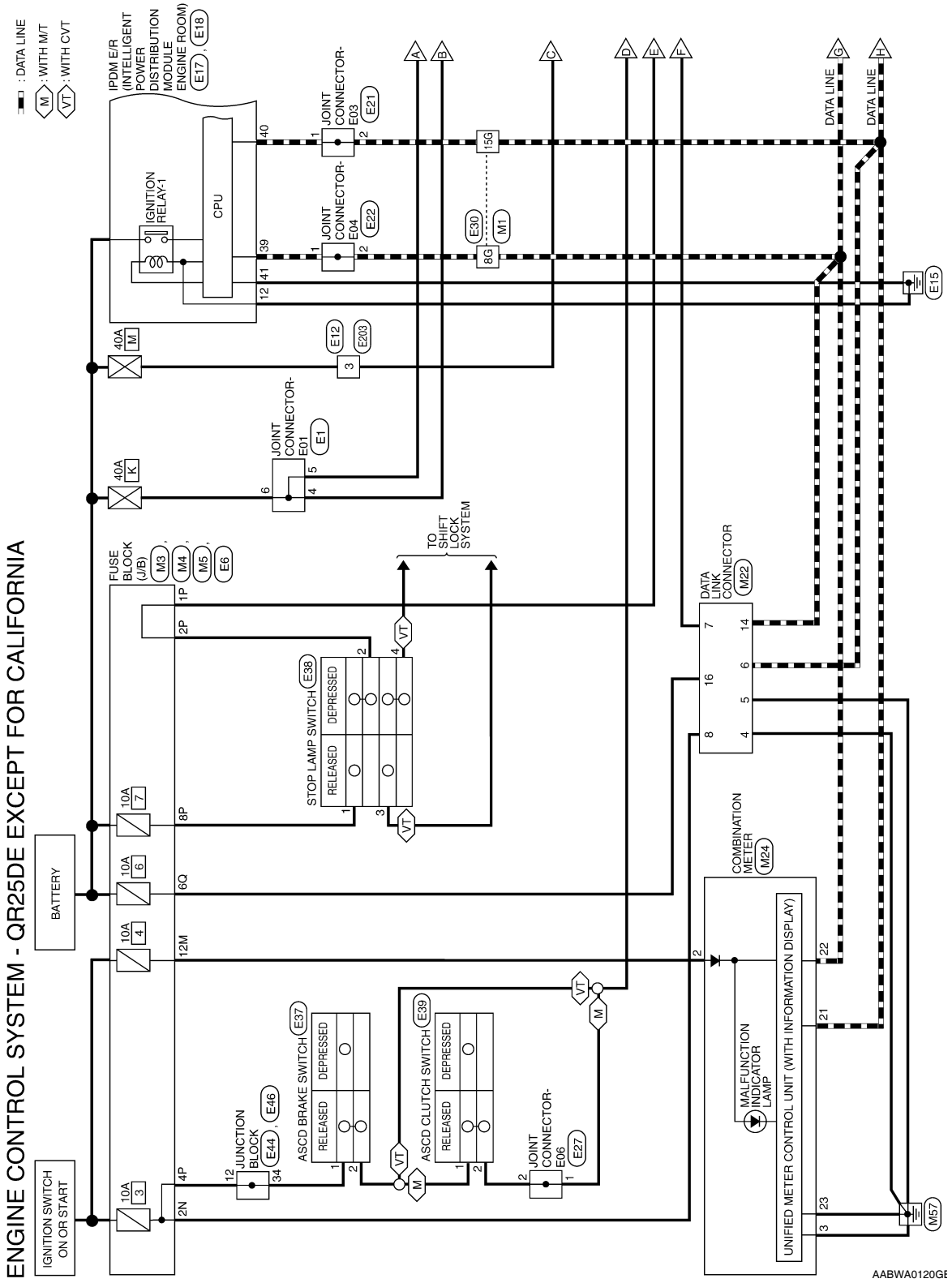

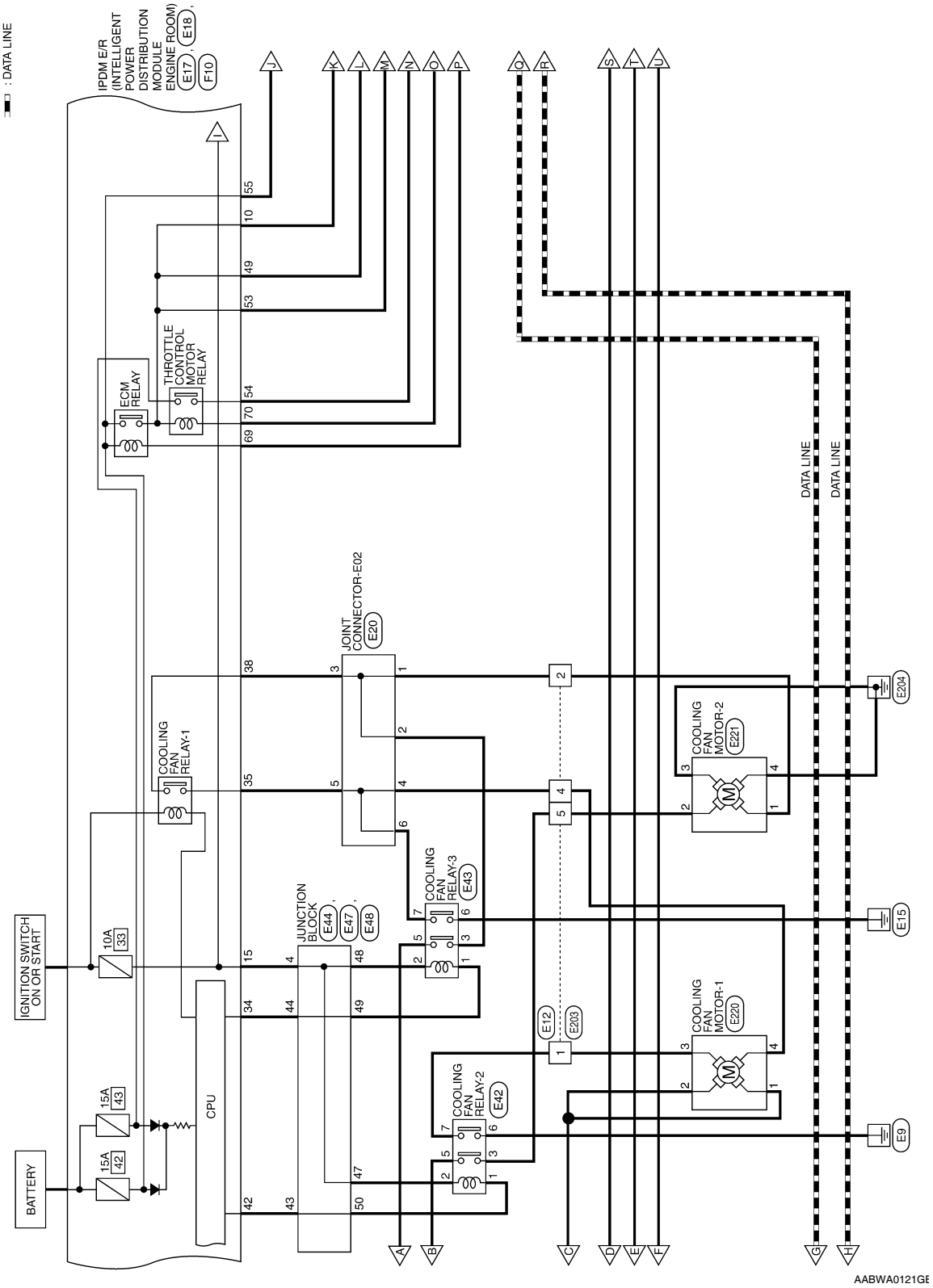
: DATA LINE
IPDM E/R (INTELLIGENT POWER DISTRIBUTION MODULE ENGINE ROOM)
E17, E18, F10
ECM RELAY
THROTTLE CONTROL MOTOR RELAY
JOINT CONNECTOR-E02
E20
COOLING FAN RELAY-1
JUNCTION BLOCK
E44, E47, E48
COOLING FAN RELAY-3
E43
COOLING FAN RELAY-2
E42
COOLING FAN MOTOR-2
E221
COOLING FAN MOTOR-1
E220
E12
E203
E204
E15
E9
DATA LINE
DATA LINE
IGNITION SWITCH ON OR START
10A
33
15A
43
15A
42
BATTERY
CPU
AABWA0121GB

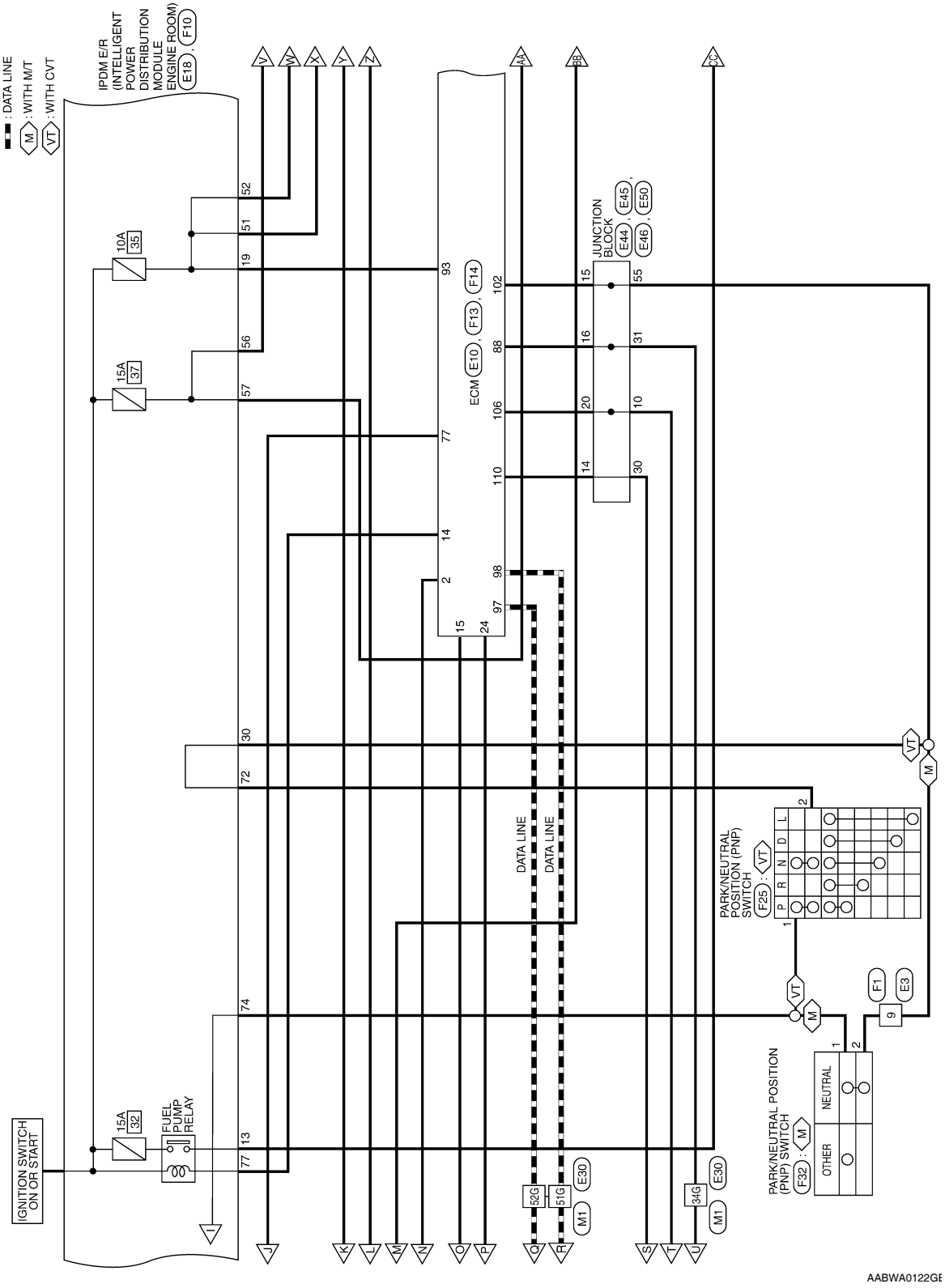
: DATA LINE
M : WITH M/T
VT : WITH CVT
IPDM E/R (INTELLIGENT POWER DISTRIBUTION MODULE ENGINE ROOM)
E18, F10
10A 35
15A 37
15A 32
FUEL PUMP RELAY
IGNITION SWITCH ON OR START
ECM E10, F13, F14
JUNCTION BLOCK
E44, E45, E46, E50
DATA LINE
DATA LINE
PARK/NEUTRAL POSITION (PNP) SWITCH
F25 : VT
PARK/NEUTRAL POSITION (PNP) SWITCH
F32 : M
NEUTRAL
OTHER
F1
E3
9
52G
51G
34G
M1
E30
AABWA0122GB

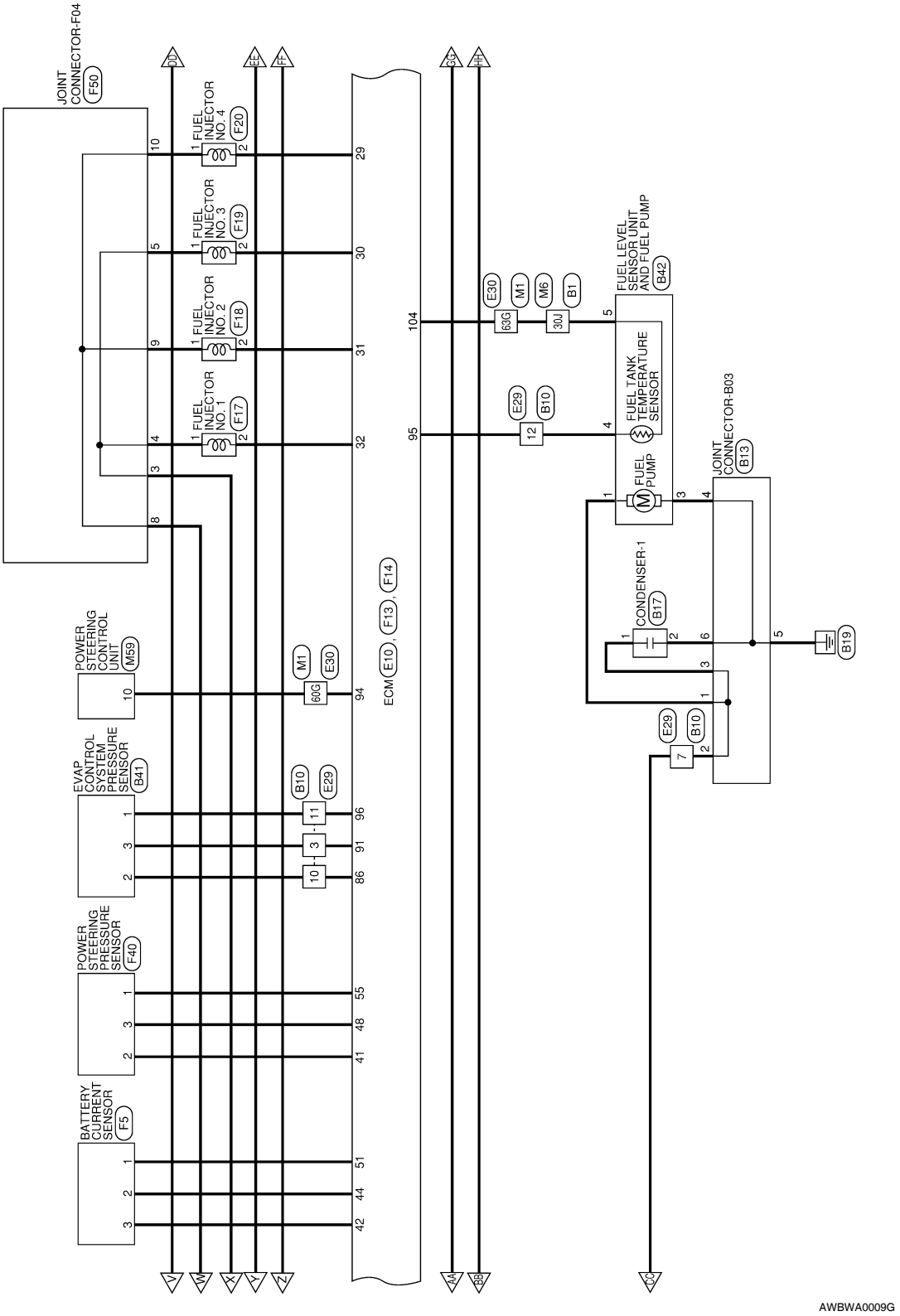
JOINT CONNECTOR-F04
F50
FUEL INJECTOR NO. 4
F20
FUEL INJECTOR NO. 3
F19
FUEL INJECTOR NO. 2
F18
FUEL INJECTOR NO. 1
F17
POWER STEERING CONTROL UNIT
M59
EVAP CONTROL SYSTEM PRESSURE SENSOR
B41
POWER STEERING PRESSURE SENSOR
F40
BATTERY CURRENT SENSOR
F5
ECM
E10, F13, F14
FUEL LEVEL SENSOR UNIT AND FUEL PUMP
B42
FUEL TANK TEMPERATURE SENSOR
FUEL PUMP
CONDENSER-1
B17
JOINT CONNECTOR-B03
B13
B19
AWBWA0009G

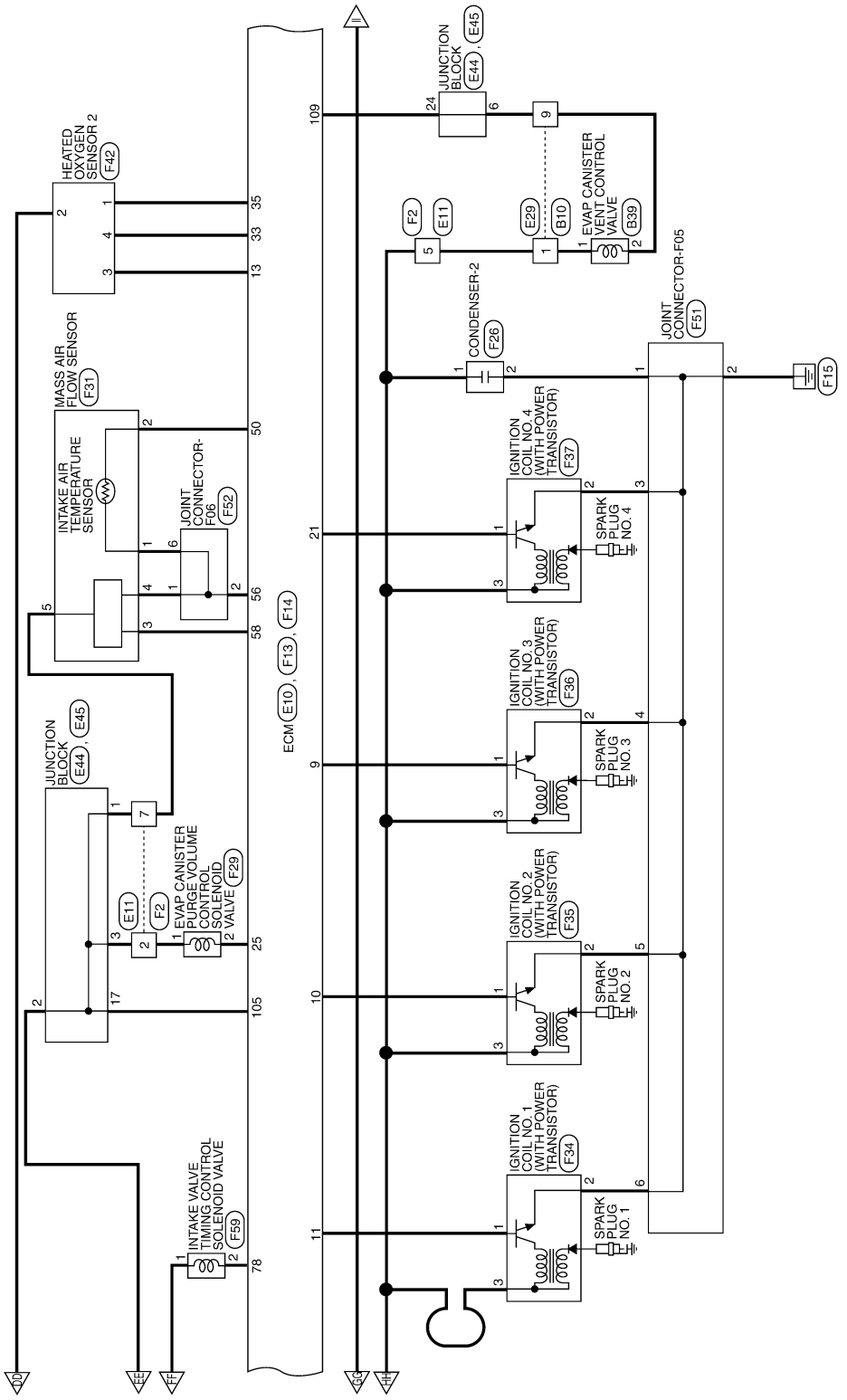
HEATED OXYGEN SENSOR 2
F42
MASS AIR FLOW SENSOR
F31
INTAKE AIR TEMPERATURE SENSOR
JOINT CONNECTOR-F06
F52
JUNCTION BLOCK
E44, E45
EVAP CANISTER PURGE VOLUME CONTROL SOLENOID VALVE
F29
INTAKE VALVE TIMING CONTROL SOLENOID VALVE
F59
ECM
E10, F13, F14
JUNCTION BLOCK
E44, E45
EVAP CANISTER VENT CONTROL VALVE
B39
CONDENSER-2
F26
JOINT CONNECTOR-F05
F51
F15
IGNITION COIL NO. 4 (WITH POWER TRANSISTOR)
F37
SPARK PLUG NO. 4
IGNITION COIL NO. 3 (WITH POWER TRANSISTOR)
F36
SPARK PLUG NO. 3
IGNITION COIL NO. 2 (WITH POWER TRANSISTOR)
F35
SPARK PLUG NO. 2
IGNITION COIL NO. 1 (WITH POWER TRANSISTOR)
F34
SPARK PLUG NO. 1
ALBWA0006GE

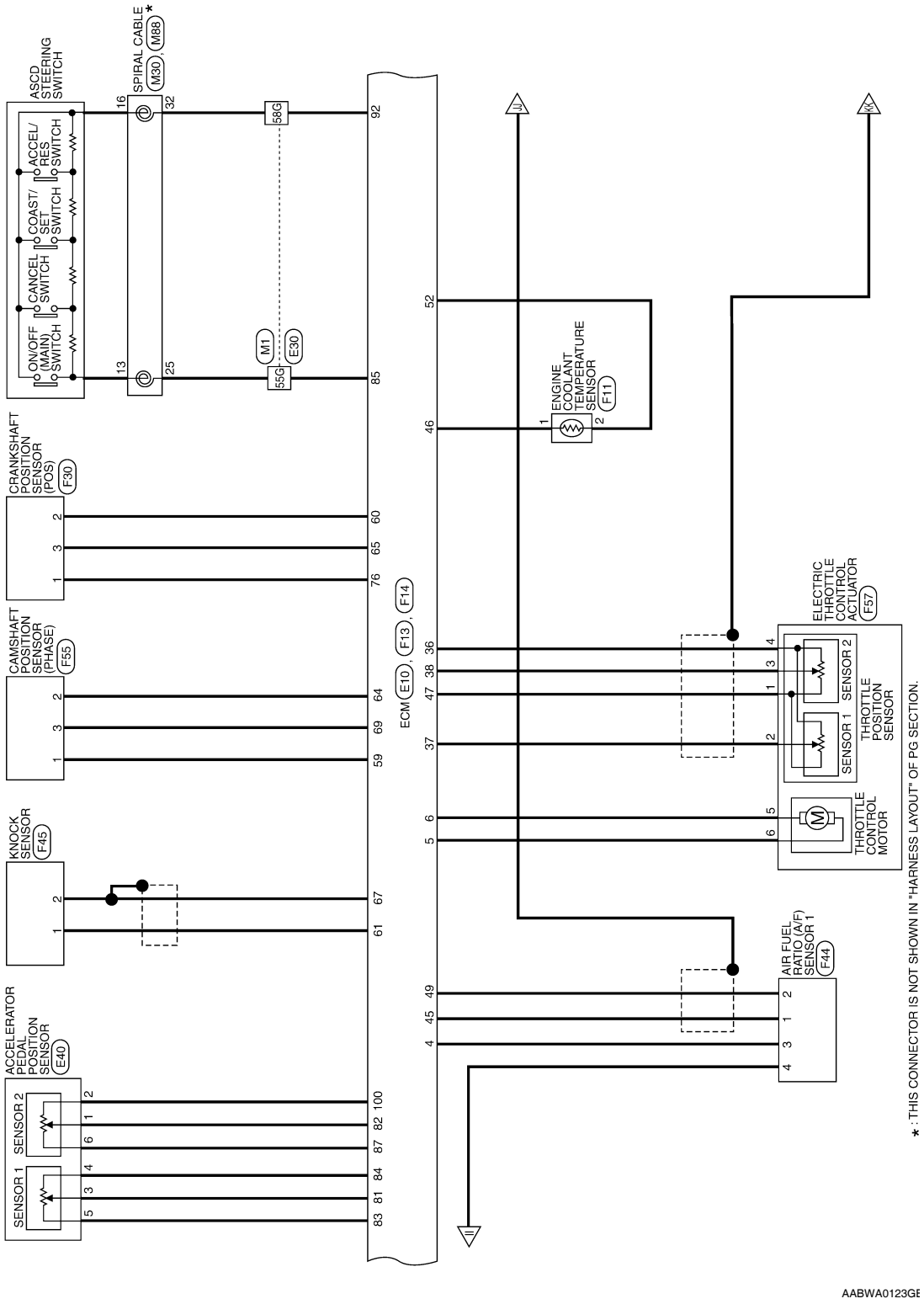
ASCD STEERING SWITCH
ON/OFF (MAIN) SWITCH
CANCEL SWITCH
COAST/ SET SWITCH
ACCEL/ RES SWITCH
SPIRAL CABLE
(M30), (M88)*
58G
55G
(M1)
(E30)
CRANKSHAFT POSITION SENSOR (POS)
(F30)
CAMSHAFT POSITION SENSOR (PHASE)
(F55)
KNOCK SENSOR
(F45)
ACCELERATOR PEDAL POSITION SENSOR
(E40)
SENSOR 1
SENSOR 2
ECM (E10), (F13), (F14)
ENGINE COOLANT TEMPERATURE SENSOR
(F11)
ELECTRIC THROTTLE CONTROL ACTUATOR
(F57)
THROTTLE POSITION SENSOR
THROTTLE CONTROL MOTOR
AIR FUEL RATIO (A/F) SENSOR 1
(F44)
* : THIS CONNECTOR IS NOT SHOWN IN "HARNESS LAYOUT" OF PG SECTION.
AABWA0123GE

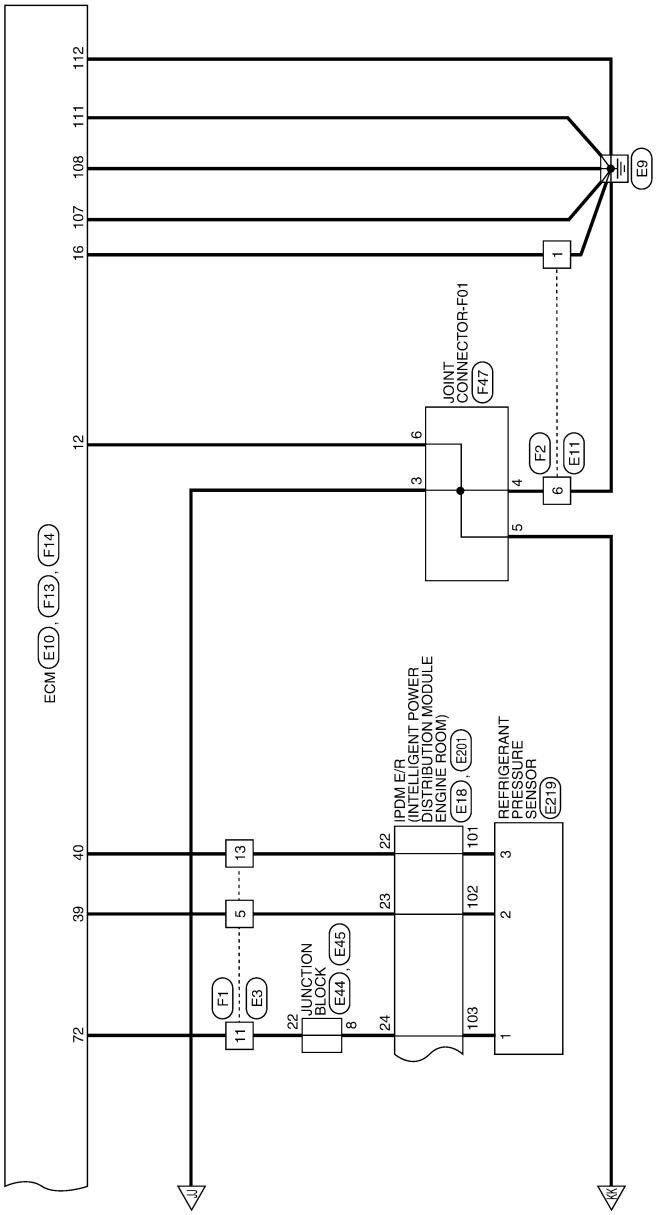

AABWA0124GB

ENGINE CONTROL SYSTEM CONNECTORS - QR25DE EXCEPT FOR CALIFORNIA

Connector No.	M1
Connector Name	WIRE TO WIRE
Connector Color	WHITE

H.S.

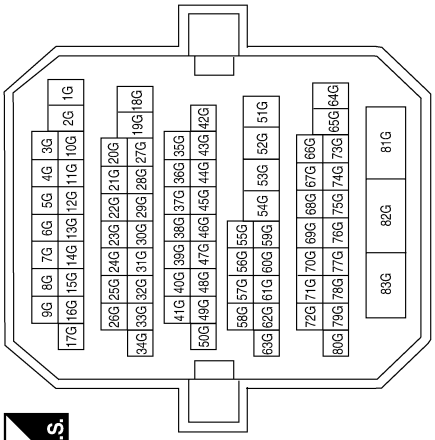

Terminal No.	Color of Wire	Signal Name
8G	P	–
15G	L	–
34G	O	–
51G	L	–
52G	P	–
55G	G/Y	–
58G	R	–
60G	V/W	–
63G	B/W	–

Connector No.	M3
Connector Name	FUSE BLOCK (J/B)
Connector Color	WHITE

H.S.

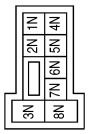

Terminal No.	Color of Wire	Signal Name
2N	G	–

Connector No.	M4
Connector Name	FUSE BLOCK (J/B)
Connector Color	WHITE

H.S.

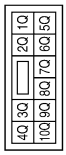

Terminal No.	Color of Wire	Signal Name
6Q	Y/R	–

Connector No.	M5
Connector Name	FUSE BLOCK (J/B)
Connector Color	WHITE

H.S.

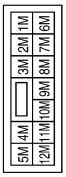

Terminal No.	Color of Wire	Signal Name
12M	P	–

AABIA0094GB

Connector No.	M24
Connector Name	COMBINATION METER
Connector Color	WHITE

H.S.

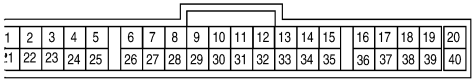

Terminal No.	Color of Wire	Signal Name
2	O	IGN
3	B	GND
21	L	CAN-H
22	P	CAN-L
23	B	GND

Connector No.	M88
Connector Name	SPIRAL CABLE
Connector Color	GRAY

H.S.

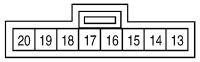

Terminal No.	Color of Wire	Signal Name
13	Y	ASCD_SW
16	B	ASCD_GND

Connector No.	F11
Connector Name	ENGINE COOLANT TEMPERATURE SENSOR
Connector Color	GRAY

Terminal No.	Color of Wire	Signal Name
1	Y	TW
2	B/G	GND

Connector No.	F13
Connector Name	ECM
Connector Color	BROWN

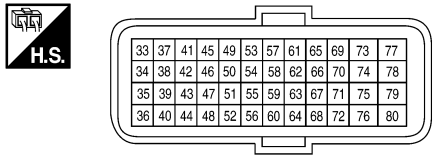

Terminal No.	Color of Wire	Signal Name
33	LG	OSR1
34	–	–
35	B/Y	GNDA-O2SR2
36	B	GNDA-TPS-B1
37	W	TPS1-B1
38	R	TPS2-B1
39	R	PDPRES
40	G	GNDA-PDRES
41	O/B	PSPRES
42	G/R	CURSEN
43	–	–
44	R/B	GNDA-CURSEN
45	B/W	AF+1
46	Y	TW
47	G	AVCC1-TPS-B1
48	B/P	GNDA-PSPRES
49	L	AF-1
50	L/Y	TA1

Terminal No.	Color of Wire	Signal Name
51	O/L	AVCC1-CURSEN
52	LG	GNDA-TW
53	–	–
54	–	–
55	R/L	AVCV1-PSPRES
56	G/B	GNDA-TA1
57	–	–
58	O	QA1+
59	G/W	AVCC1-PHASE#1
60	Y/B	GND-POS
61	W	KNK1
62	–	–
63	–	–
64	B/R	GND-PHASE#1
65	W	POS
66	–	–
67	–	GNDA-KNK 1
68	–	–
69	W/R	PHASE#1
70	–	–
71	–	–
72	LG/B	AVCC2-PDPRES
73	–	–
74	–	–
75	–	–
76	R/G	AVCC2-POS
77	W/L	BATT
78	R/L	CVTC#1
79	–	–
80	–	–

AABIA0103GB

Connector No.	F14
Connector Name	ECM
Connector Color	GRAY

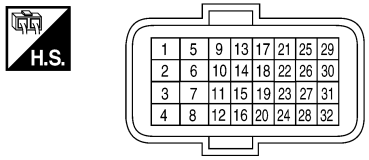

Terminal No.	Color of Wire	Signal Name
1	–	–
2	G/W	VMOT-B1
4	BR/Y	AFH1
5	L	MOTOR1-B1
6	P	MOTOR2-B1
7	–	–
8	–	–
9	L/B	IGN #3
10	G/R	IGN #2
11	Y/R	IGN #1
12	B	GND
13	R	O2HR1
14	B/R	FPR

Terminal No.	Color of Wire	Signal Name
15	O	MOTRLY-B1
16	B	GND
17	–	–
18	–	–
19	–	–
20	–	–
21	G/Y	IGN #4
22	–	–
23	–	–
24	W/B	SSOF
25	P/L	EVAP
26	–	–
27	–	–
28	–	–
29	LG/R	INJ #4
30	R/Y	INJ #3
31	R/W	INJ #2
32	R/B	INJ #1

Connector No.	F17
Connector Name	FUEL INJECTOR NO. 1
Connector Color	GRAY

Terminal No.	Color of Wire	Signal Name
1	LG	IGN
2	R/B	C/U

Connector No.	F18
Connector Name	FUEL INJECTOR NO. 2
Connector Color	GRAY

Terminal No.	Color of Wire	Signal Name
1	Y/G	IGN
2	R/W	C/U

Connector No.	F19
Connector Name	FUEL INJECTOR NO. 3
Connector Color	GRAY

Terminal No.	Color of Wire	Signal Name
1	LG	IGN
2	R/Y	C/U

Connector No.	F20
Connector Name	FUEL INJECTOR NO. 4
Connector Color	GRAY

Terminal No.	Color of Wire	Signal Name
1	Y/G	IGN
2	LG/R	C/U

AABIA0104GB

Connector No.	F25
Connector Name	PARK/NEUTRAL POSITION (PNP) SWITCH
Connector Color	BLACK

H.S.

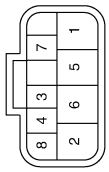

Terminal No.	Color of Wire	Signal Name
1	Y	–
2	R/B	–

Connector No.	F26
Connector Name	CONDENSER-2
Connector Color	GRAY

H.S.

Terminal No.	Color of Wire	Signal Name
1	R/G	VBR
2	B	GND

Connector No.	F29
Connector Name	EVAP CANISTER PURGE VOLUME CONTROL SOLENOID VALVE
Connector Color	GRAY

H.S.

Terminal No.	Color of Wire	Signal Name
1	R/W	VBR
2	P/L	C/U

Connector No.	F30
Connector Name	CRANKSHAFT POSITION SENSOR (POS)
Connector Color	BLACK

H.S.

Terminal No.	Color of Wire	Signal Name
1	R/G	AVCC2
2	Y/B	GND
3	W	POS

Connector No.	F31
Connector Name	MASS AIR FLOW SENSOR
Connector Color	BLACK

H.S.

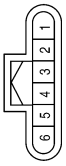

Terminal No.	Color of Wire	Signal Name
1	G/B	TA-
2	L/Y	TA+
3	O	QA+
4	G/B	GND
5	R/G	VB

Connector No.	F32
Connector Name	PARK/NEUTRAL POSITION (PNP) SWITCH
Connector Color	WHITE

H.S.

Terminal No.	Color of Wire	Signal Name
1	Y	–
2	R/B	–

AABIA0105GB

Connector No.	F34
Connector Name	IGNITION COIL NO. 1 (WITH POWER TRANSISTOR)
Connector Color	GRAY

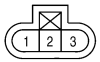

Terminal No.	Color of Wire	Signal Name
1	Y/R	SIGNAL
2	B	GND
3	R/W	VBR

Connector No.	F35
Connector Name	IGNITION COIL NO. 2 (WITH POWER TRANSISTOR)
Connector Color	GRAY

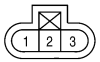

Terminal No.	Color of Wire	Signal Name
1	G/R	SIGNAL
2	B	GND
3	R/W	VBR

Connector No.	F36
Connector Name	IGNITION COIL NO. 3 (WITH POWER TRANSISTOR)
Connector Color	GRAY

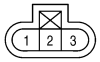

Terminal No.	Color of Wire	Signal Name
1	L/B	SIGNAL
2	B	GND
3	R/W	VBR

Connector No.	F37
Connector Name	IGNITION COIL NO. 4 (WITH POWER TRANSISTOR)
Connector Color	GRAY

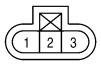

Terminal No.	Color of Wire	Signal Name
1	G/Y	SIGNAL
2	B	GND
3	R/W	VBR

Connector No.	F40
Connector Name	POWER STEERING PRESSURE SENSOR
Connector Color	BLACK

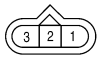

Terminal No.	Color of Wire	Signal Name
1	R/L	AVCC1
2	O/B	OUTPUT
3	B/P	GND

Connector No.	F42
Connector Name	HEATED OXYGEN SENSOR 2
Connector Color	BLACK

Terminal No.	Color of Wire	Signal Name
1	B/Y	SENSOR(-)
2	R/Y	HEATER(+)
3	R	HEATER(-)
4	LG	SENSOR(+)

AABIA0106GB

Connector No.	F44
Connector Name	AIR FUEL RATIO (A/F) SENSOR 1
Connector Color	DARK GRAY

Terminal No.	Color of Wire	Signal Name
1	B/W	AF(+)
2	L	AF(-)
3	BR/Y	HEATER(-)
4	O	HEATER(+)

Connector No.	F45
Connector Name	KNOCK SENSOR
Connector Color	GRAY

Terminal No.	Color of Wire	Signal Name
1	W	KNK
2	–	GND

Connector No.	F47
Connector Name	JOINT CONNECTOR-F01
Connector Color	BLACK

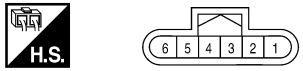

Terminal No.	Color of Wire	Signal Name
3	–	–
4	B	–
5	–	–
6	B	–

Connector No.	F50
Connector Name	JOINT CONNECTOR-F04
Connector Color	BLACK

Terminal No.	Color of Wire	Signal Name
3	LG	–
4	LG	–
5	LG	–
8	Y/G	–
9	Y/G	–
10	Y/G	–

Connector No.	F51
Connector Name	JOINT CONNECTOR-F05
Connector Color	BLACK

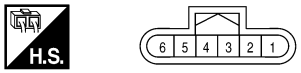

Terminal No.	Color of Wire	Signal Name
1	B	–
2	B	–
3	B	–
4	B	–
5	B	–
6	B	–

Connector No.	F52
Connector Name	JOINT CONNECTOR-F06
Connector Color	BLACK

Terminal No.	Color of Wire	Signal Name
1	G/B	–
2	G/B	–
6	G/B	–

AABIA0107GB

Connector No.	F55
Connector Name	CAMSHAFT POSITION SENSOR (PHASE)
Connector Color	BLACK

Terminal No.	Color of Wire	Signal Name
1	G/W	AVCC1
2	B/R	GND
3	W/R	PHASE

Connector No.	F57
Connector Name	ELECTRIC THROTTLE CONTROL ACTUATOR
Connector Color	BLACK

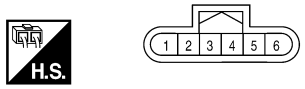

Terminal No.	Color of Wire	Signal Name
1	G	INPUT
2	W	OUTPUT1
3	R	OUTPUT2
4	B	GND
5	P	MOTOR2
6	L	MOTOR1

Connector No.	F59
Connector Name	INTAKE VALVE TIMING CONTROL SOLENOID VALVE
Connector Color	GREEN

Terminal No.	Color of Wire	Signal Name
1	B/R	VB
2	R/L	C/U

Connector No.	B1
Connector Name	WIRE TO WIRE
Connector Color	WHITE

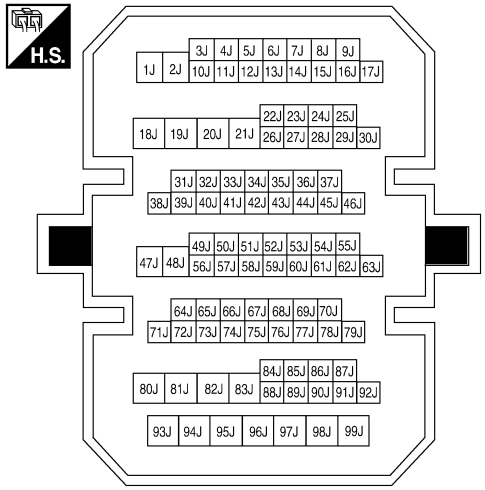

AABIA0108GB

Terminal No.	Color of Wire	Signal Name
30J	B/W	–

Connector No.	B10
Connector Name	WIRE TO WIRE
Connector Color	WHITE

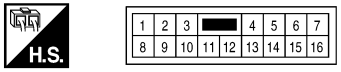

Terminal No.	Color of Wire	Signal Name
1	R	–
3	BR/L	–
7	W	–
9	LG/W	–
10	LG	–
11	V	–
12	R/Y	–

Connector No.	B13
Connector Name	JOINT CONNECTOR-B03
Connector Color	WHITE

H.S.

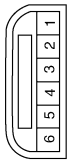

Terminal No.	Color of Wire	Signal Name
1	SB	–
2	SB	–
3	W	–
4	B/Y	–
5	B/Y	–
6	B/Y	–

Connector No.	B17
Connector Name	CONDENSER-1
Connector Color	WHITE

H.S.

Terminal No.	Color of Wire	Signal Name
1	W	(+)
2	B/Y	(-)

Connector No.	B39
Connector Name	EVAP CANISTER VENT CONTROL VALVE
Connector Color	BLACK

H.S.

Terminal No.	Color of Wire	Signal Name
1	R	BATT
2	LG/W	C/U

Connector No.	B41
Connector Name	EVAP CONTROL SYSTEM PRESSURE SENSOR
Connector Color	GRAY

H.S.

Terminal No.	Color of Wire	Signal Name
1	V	GND
2	LG	SIGNAL
3	BR/L	AVCC2

Connector No.	B42
Connector Name	FUEL LEVEL SENSOR UNIT AND FUEL PUMP
Connector Color	GRAY

H.S.

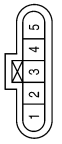

Terminal No.	Color of Wire	Signal Name
1	S/B	IGN
3	B/Y	GND
4	R/Y	TEMP SENS
5	B/W	SENSOR -

AABIA0109GB

Fail Safe

INFOID:0000000004349976

NON DTC RELATED ITEM

Engine operating condition in fail-safe mode	Detected items	Remarks	Reference page
Engine speed will not rise more than 2,500 rpm due to the fuel cut	Malfunction indicator lamp circuit	When there is an open circuit on MIL circuit, the ECM cannot warn the driver by lighting up MIL when there is malfunction on engine control system. Therefore, when electrical controlled throttle and part of ECM related diagnoses are continuously detected as NG for 5 trips, ECM warns the driver that engine control system malfunctions and MIL circuit is open by means of operating fail-safe function. The fail-safe function also operates when above diagnoses except MIL circuit are detected and demands the driver to repair the malfunction.	EC-968

DTC RELATED ITEM

DTC No.	Detected items	Engine operating condition in fail-safe mode	
P0011	Intake valve timing control	The signal is not energized to the intake valve timing control solenoid valve and the valve control does not function.	
P0102 P0103	Mass air flow sensor circuit	Engine speed will not rise more than 2,400 rpm due to the fuel cut.	
P0117 P0118	Engine coolant temperature sensor circuit	Engine coolant temperature will be determined by ECM based on the following condition. CONSULT-III displays the engine coolant temperature decided by ECM.	
		Condition	Engine coolant temperature decided (CONSULT-III display)
		Just as ignition switch is turned ON or START	40°C (104°F)
		More than approx. 4 minutes after engine starting	80°C (176°F)
		Except as shown above	40 - 80°C (104 - 176°F) (Depends on the time)
		When the fail-safe system for engine coolant temperature sensor is activated, the cooling fan operates while engine is running.	
P0122 P0123 P0222 P0223 P2132 P2133 P2135	Throttle position sensor	The ECM controls the electric throttle control actuator in regulating the throttle opening in order for the idle position to be within +10 degrees. The ECM regulates the opening speed of the throttle valve to be slower than the normal condition. So, the acceleration will be poor.	
P0500	Vehicle speed sensor	The cooling fan operates (High) while engine is running.	
P0643	Sensor power supply	ECM stops the electric throttle control actuator control, throttle valve is maintained at a fixed opening (approx. 5 degrees) by the return spring.	
P0605	ECM	(When ECM calculation function is malfunctioning:) ECM stops the electric throttle control actuator control, throttle valve is maintained at a fixed opening (approx. 5 degrees) by the return spring. ECM deactivates ASCD operation.	
P1805	Brake switch	ECM controls the electric throttle control actuator by regulating the throttle opening to a small range. Therefore, acceleration will be poor.	
		Vehicle condition	Driving condition
		When engine is idling	Normal
		When accelerating	Poor acceleration
P2100 P2103	Throttle control motor relay	ECM stops the electric throttle control actuator control, throttle valve is maintained at a fixed opening (approx. 5 degrees) by the return spring.	
P2101	Electric throttle control function	ECM stops the electric throttle control actuator control, throttle valve is maintained at a fixed opening (approx. 5 degrees) by the return spring.	

DTC No.	Detected items	Engine operating condition in fail-safe mode
P2118	Throttle control motor	ECM stops the electric throttle control actuator control, throttle valve is maintained at a fixed opening (approx. 5 degrees) by the return spring.
P2119	Electric throttle control actuator	(When electric throttle control actuator does not function properly due to the return spring malfunction:) ECM controls the electric throttle actuator by regulating the throttle opening around the idle position. The engine speed will not rise more than 2,000 rpm.
		(When throttle valve opening angle in fail-safe mode is not in specified range:) ECM controls the electric throttle control actuator by regulating the throttle opening to 20 degrees or less.
		(When ECM detects the throttle valve is stuck open:) While the vehicle is driving, it slows down gradually by fuel cut. After the vehicle stops, the engine stalls. The engine can restart in N or P (CVT), Neutral (M/T) position, and engine speed will not exceed 1,000 rpm or more.
P2122 P2123 P2127 P2128 P2138	Accelerator pedal position sensor	The ECM controls the electric throttle control actuator in regulating the throttle opening in order for the idle position to be within +10 degrees. The ECM regulates the opening speed of the throttle valve to be slower than the normal condition. So, the acceleration will be poor.

DTC Inspection Priority Chart

INFOID:0000000004349977

If some DTCs are displayed at the same time, perform inspections one by one based on the following priority chart.

Priority	Detected items (DTC)
1	• U0101 U0140 U1001 CAN communication line • P0101 P0102 P0103 Mass air flow sensor • P0112 P0113 P0127 Intake air temperature sensor • P0116 P0117 P0118 P0125 Engine coolant temperature sensor • P0122 P0123 P0222 P0223 P1225 P1226 P2135 Throttle position sensor • P0128 Thermostat function • P0181 P0182 P0183 Fuel tank temperature sensor • P0327 P0328 Knock sensor • P0335 Crankshaft position sensor (POS) • P0340 Camshaft position sensor (PHASE) • P0460 P0461 P0462 P0463 Fuel level sensor • P0500 Vehicle speed sensor • P0605 P0607 ECM • P0643 Sensor power supply • P0705 P0850 Park/neutral position (PNP) switch • P1550 P1551 P1552 P1553 P1554 Battery current sensor • P1610 - P1615 NATS • P2122 P2123 P2127 P2128 P2138 Accelerator pedal position sensor

Priority	Detected items (DTC)
2	• P0031 P0032 Air fuel ratio (A/F) sensor 1 heater • P0037 P0038 Heated oxygen sensor 2 heater • P0075 Intake valve timing control solenoid valve • P0130 P0131 P0132 P0133 P2A00 Air fuel ratio (A/F) sensor 1 • P0137 P0138 P0139 Heated oxygen sensor 2 • P0441 EVAP control system purge flow monitoring • P0443 P0444 P0445 EVAP canister purge volume control solenoid valve • P0447 P0448 EVAP canister vent control valve • P0451 P0452 P0453 EVAP control system pressure sensor • P0550 Power steering pressure sensor • P0603 ECM power supply • P0710 P0715 P0720 P0740 P0744 P0745 P0746 P0776 P0778 P0840 P0845 P1740 P1777 P1778 CVT related sensors, solenoid valves and switches • P1217 Engine over temperature (OVERHEAT) • P1805 Brake switch • P2100 P2103 Throttle control motor relay • P2101 Electric throttle control function • P2118 Throttle control motor
3	• P0011 Intake valve timing control • P0171 P0172 Fuel injection system function • P0300 - P0304 Misfire • P0420 Three way catalyst function • P0442 P0456 EVAP control system (SMALL LEAK, VERY SMALL LEAK) • P0455 EVAP control system (GROSS LEAK) • P0506 P0507 Idle speed control system • P1148 Closed loop control • P1421 Cold start control • P1564 ASCD steering switch • P1572 ASCD brake switch • P1574 ASCD vehicle speed sensor • P1715 Primary speed sensor • P2119 Electric throttle control actuator

DTC Index

INFOID:0000000004349978

×:Applicable —: Not applicable

DTC*1		Items (CONSULT-III screen terms)	SRT code	Trip	MIL	Reference page
CONSULT-III GST*2	ECM*3					
U0101	0101*4	LOST COMM (TCM)	—	1	×	EC-677
U0140	0140*4	LOST COMM (BCM)	—	1	×	EC-678
U1001	1001*4	CAN COMM CIRCUIT	—	2	—	EC-677
P0000	**0000**	**NO DTC IS DETECTED. FURTHER TESTING MAY BE REQUIRED.**	—	—	**Flashing*7**	**—**
P0011	0011	INT/V TIM CONT-B1	—	2	×	EC-680
P0031	0031	A/F SEN1 HTR (B1)	—	2	×	EC-684
P0032	0032	A/F SEN1 HTR (B1)	—	2	×	EC-684
P0037	0037	HO2S2 HTR (B1)	—	2	×	EC-687
P0038	0038	HO2S2 HTR (B1)	—	2	×	EC-687
P0075	0075	INT/V TIM V/CIR-B1	—	2	×	EC-690
P0101	0101	MAF SEN/CIRCUIT-B1	—	2	×	EC-693
P0102	0102	MAF SEN/CIRCUIT-B1	—	1	×	EC-700
P0103	0103	MAF SEN/CIRCUIT-B1	—	1	×	EC-700
P0112	0112	IAT SEN/CIRCUIT-B1	—	2	×	EC-706

DTC*1		Items (CONSULT-III screen terms)	SRT code	Trip	MIL	Reference page
CONSULT-III GST*2	ECM*3					
P0113	0113	IAT SEN/CIRCUIT-B1	—	2	×	EC-706
P0116	0116	ECT SEN/CIRC	—	2	×	EC-709
P0117	0117	ECT SEN/CIRC	—	1	×	EC-711
P0118	0118	ECT SEN/CIRC	—	1	×	EC-711
P0122	0122	TP SEN 2/CIRC-B1	—	1	×	EC-714
P0123	0123	TP SEN 2/CIRC-B1	—	1	×	EC-714
P0125	0125	ECT SENSOR	—	2	×	EC-717
P0127	0127	IAT SENSOR-B1	—	2	×	EC-720
P0128	0128	THERMSTAT FNCTN	—	2	×	EC-722
P0130	0130	A/F SENSOR1 (B1)	—	2	×	EC-724
P0131	0131	A/F SENSOR1 (B1)	—	2	×	EC-728
P0132	0132	A/F SENSOR1 (B1)	—	2	×	EC-731
P0133	0133	A/F SENSOR1 (B1)	×	2	×	EC-734
P0137	0137	HO2S2 (B1)	×	2	×	EC-739
P0138	0138	HO2S2 (B1)	×	2	×	EC-745
P0139	0139	HO2S2 (B1)	×	2	×	EC-753
P0171	0171	FUEL SYS-LEAN-B1	—	2	×	EC-759
P0172	0172	FUEL SYS-RICH-B1	—	2	×	EC-763
P0181	0181	FTT SENSOR	—	2	×	EC-767
P0182	0182	FTT SEN/CIRCUIT	—	2	×	EC-770
P0183	0183	FTT SEN/CIRCUIT	—	2	×	EC-770
P0222	0222	TP SEN 1/CIRC-B1	—	1	×	EC-773
P0223	0223	TP SEN 1/CIRC-B1	—	1	×	EC-773
P0300	0300	MULTI CYL MISFIRE	—	2	×	EC-776
P0301	0301	CYL 1 MISFIRE	—	2	×	EC-776
P0302	0302	CYL 2 MISFIRE	—	2	×	EC-776
P0303	0303	CYL 3 MISFIRE	—	2	×	EC-776
P0304	0304	CYL 4 MISFIRE	—	2	×	EC-776
P0327	0327	KNOCK SEN/CIRC-B1	—	2	—	EC-781
P0328	0328	KNOCK SEN/CIRC-B1	—	2	—	EC-781
P0335	0335	CKP SEN/CIRCUIT	—	2	×	EC-783
P0340	0340	CMP SEN/CIRC-B1	—	2	×	EC-787
P0420	0420	TW CATALYST SYS-B1	×	2	×	EC-791
P0441	0441	EVAP PURG FLOW/MON	×	2	×	EC-796
P0442	0442	EVAP SMALL LEAK	×	2	×	EC-801
P0443	0443	PURG VOLUME CONT/V	—	2	×	EC-807
P0444	0444	PURG VOLUME CONT/V	—	2	×	EC-811
P0445	0445	PURG VOLUME CONT/V	—	2	×	EC-811
P0447	0447	VENT CONTROL VALVE	—	2	×	EC-814
P0448	0448	VENT CONTROL VALVE	—	2	×	EC-818
P0451	0451	EVAP SYS PRES SEN	—	2	×	EC-822
P0452	0452	EVAP SYS PRES SEN	—	2	×	EC-825

DTC*1		Items (CONSULT-III screen terms)	SRT code	Trip	MIL	Reference page
CONSULT-III GST*2	ECM*3					
P0453	0453	EVAP SYS PRES SEN	—	2	×	EC-830
P0455	0455	EVAP GROSS LEAK	—	2	×	EC-835
P0456	0456	EVAP VERY SML LEAK	×*6	2	×	EC-841
P0460	0460	FUEL LEV SEN SLOSH	—	2	×	EC-848
P0461	0461	FUEL LEVEL SENSOR	—	2	×	EC-849
P0462	0462	FUEL LEVL SEN/CIRC	—	2	×	EC-851
P0463	0463	FUEL LEVL SEN/CIRC	—	2	×	EC-851
P0500	0500	VEH SPEED SEN/CIRC*5	—	2	×	EC-853
P0506	0506	ISC SYSTEM	—	2	×	EC-855
P0507	0507	ISC SYSTEM	—	2	×	EC-857
P0550	0550	PW ST P SEN/CIRC	—	2	—	EC-859
P0603	0603	ECM BACK UP/CIRCUIT	—	2	×	EC-862
P0605	0605	ECM	—	1 or 2	× or —	EC-864
P0607	0607*4	ECM	—	1 (CVT) 2 (M/T)	× (CVT) — (M/T)	EC-866
P0643	0643	SENSOR POWER/CIRC	—	1	×	EC-867
P0705	0705	PNP SW/CIRC	—	2	×	TM-307
P0710	0710	ATF TEMP SEN/CIRC*8	—	1	×	TM-310
P0715	0715	INPUT SPD SEN/CIRC	—	2	×	TM-313
P0720	0720	VEH SPD SEN/CIR AT*5	—	2	×	TM-318
P0740	0740	TCC SOLENOID/CIRC	—	2	×	TM-324
P0744	0744	A/T TCC S/V FNCTN	—	2	×	TM-327
P0745	0745	L/PRESS SOL/CIRC	—	2	×	TM-329
P0746	0746	PRS CNT SOL/A FCTN	—	1	×	TM-331
P0776	0776	PRS CNT SOL/B FCTN	—	2	×	TM-333
P0778	0778	PRS CNT SOL/B CIRC	—	2	×	TM-336
P0840	0840	TR PRS SENS/A CIRC	—	2	×	TM-341
P0850	0850	P-N POS SW/CIRCUIT	—	2	×	EC-870
P1148	1148	CLOSED LOOP-B1	—	1	×	EC-873
P1217	1217	ENG OVER TEMP	—	1	×	EC-874
P1225	1225	CTP LEARNING-B1	—	2	—	EC-878
P1226	1226	CTP LEARNING-B1	—	2	—	EC-880
P1421	1421	COLD START CONTROL	—	2	×	EC-882
P1550	1550	BAT CURRENT SENSOR	—	2	—	EC-884
P1551	1551	BAT CURRENT SENSOR	—	2	—	EC-887
P1552	1552	BAT CURRENT SENSOR	—	2	—	EC-887
P1553	1553	BAT CURRENT SENSOR	—	2	—	EC-890
P1554	1554	BAT CURRENT SENSOR	—	2	—	EC-893
P1564	1564	ASCD SW	—	1	—	EC-896
P1572	1572	ASCD BRAKE SW	—	1	—	EC-899
P1574	1574	ASCD VHL SPD SEN	—	1	—	EC-907

DTC*1		Items (CONSULT-III screen terms)	SRT code	Trip	MIL	Reference page
CONSULT-III GST*2	ECM*3					
P1610	1610	LOCK MODE	—	2	—	SEC-64 (Coupe) SEC-263 (Sedan)
P1611	1611	ID DISCORD, IMMU-ECM	—	2	—	SEC-68 (Coupe) SEC-267 (Sedan)
P1612	1612	CHAIN OF ECM-IMMU	—	2	—	SEC-69 (Coupe) SEC-268 (Sedan)
P1615	1615	DIFFERENCE OF KEY	—	2	—	SEC-67 (Coupe) SEC-266 (Sedan)
P1715	1715	IN PULY SPEED	—	2	—	EC-909
P1740	1740	LU-SLCT SOL/CIRC	—	2	×	TM-358
P1777	1777	STEP MOTOR CIRC	—	1	×	TM-361
P1778	1778	STEP MOTOR FNCT	—	2	×	TM-364
P1805	1805	BRAKE SW/CIRCUIT	—	2	—	EC-911
P2100	2100	ETC MOT PWR-B1	—	1	×	EC-914
P2101	2101	ETC FNCTN/CIRC-B1	—	1	×	EC-916
P2103	2103	ETC MOT PWR	—	1	×	EC-914
P2118	2118	ETC MOT-B1	—	1	×	EC-920
P2119	2119	ETC ACTR-B1	—	1	×	EC-922
P2122	2122	APP SEN 1/CIRC	—	1	×	EC-924
P2123	2123	APP SEN 1/CIRC	—	1	×	EC-924
P2127	2127	APP SEN 2/CIRC	—	1	×	EC-927
P2128	2128	APP SEN 2/CIRC	—	1	×	EC-927
P2135	2135	TP SENSOR-B1	—	1	×	EC-931
P2138	2138	APP SENSOR	—	1	×	EC-935
P2A00	2A00	A/F SENSOR1 (B1)	—	2	×	EC-939

*1: 1st trip DTC No. is the same as DTC No.
*2: This number is prescribed by SAE J2012.
*3: In Diagnostic Test Mode II (Self-diagnostic results), this number is controlled by NISSAN.
*4: The troubleshooting for this DTC needs CONSULT-III.
*5: When the fail-safe operations for both self-diagnoses occur, the MIL illuminates.
*6: SRT code will not be set if the self-diagnostic result is NG.
*7: When the ECM is in the mode of displaying SRT status, MIL may flash. For the details, refer to “How to Display SRT Status”.
*8: When erasing this DTC, always use CONSULT-III or GST.

How to Set SRT Code

INFOID:0000000004349979

To set all SRT codes, self-diagnosis for the items indicated above must be performed one or more times. Each diagnosis may require a long period of actual driving under various conditions.

WITH CONSULT-III

Perform corresponding DTC CONFIRMATION PROCEDURE one by one based on Performance Priority in the table on “SRT Item”.

WITHOUT CONSULT-III

The most efficient driving pattern in which SRT codes can be properly set is explained on the below. The driving pattern should be performed one or more times to set all SRT codes.

DRIVING PATTERN

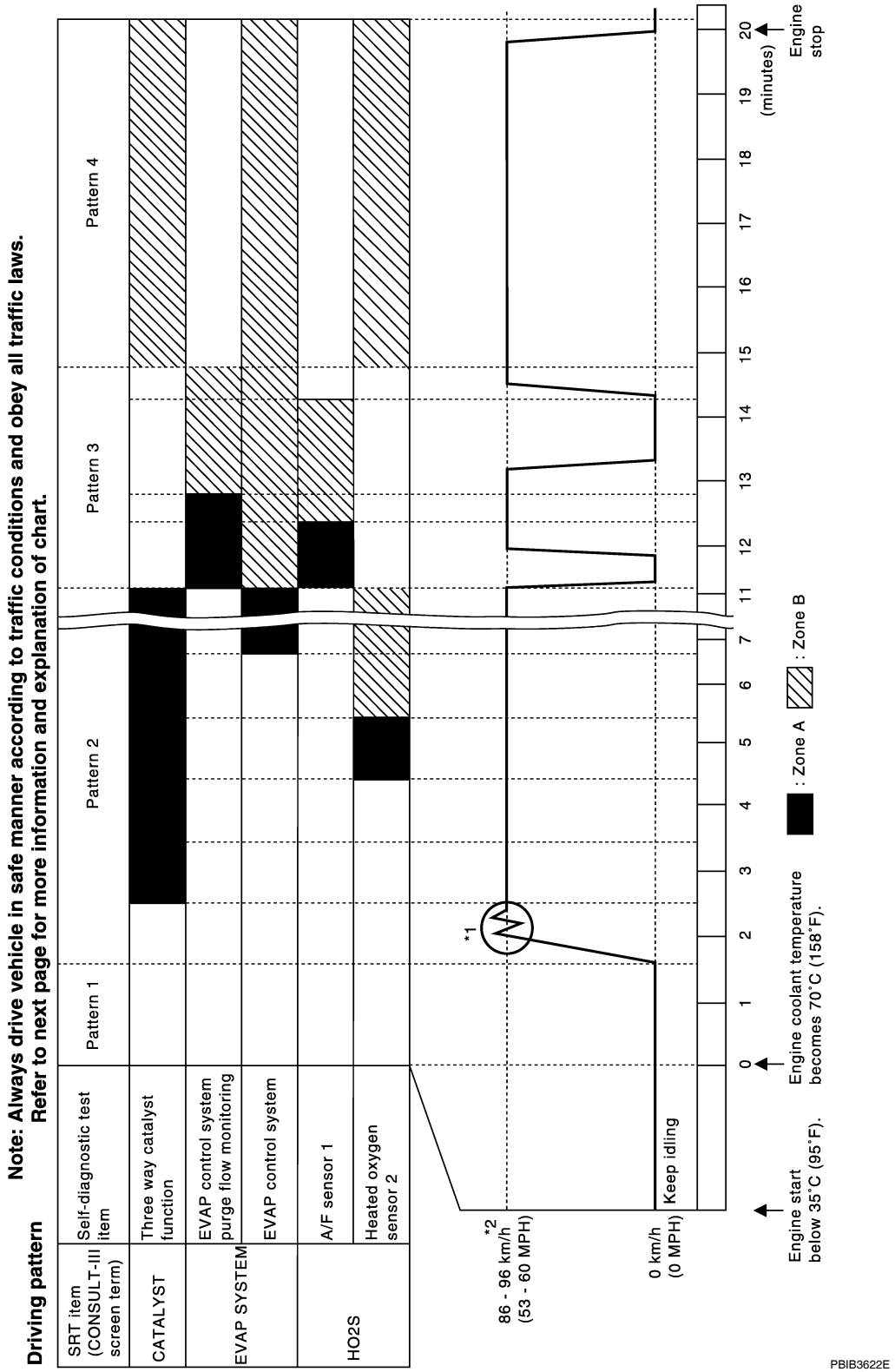

- The time required for each diagnosis varies with road surface conditions, weather, altitude, individual driving habits, etc.
  Zone A refers to the range where the time, required for the diagnosis under normal conditions*, is the shortest.

Zone B refers to the range where the diagnosis can still be performed if the diagnosis is not completed within zone A.

*: Normal conditions refer to the following:

- Sea level
- Flat road
- Ambient air temperature: 20 - 30°C (68 - 86°F)
- Diagnosis is performed as quickly as possible under normal conditions.
  Under different conditions [For example: ambient air temperature other than 20 - 30°C (68 - 86°F)], diagnosis may also be performed.

Pattern 1:

- **The engine is started at the engine coolant temperature of –10 to 35°C (14 to 95°F) (where the voltage between the ECM terminal 46 and ground is 3.0 - 4.3V).**
- **The engine must be operated at idle speed until the engine coolant temperature is greater than 70°C (158°F) (where the voltage between the ECM terminal 46 and ground is lower than 1.4V).**
- **The engine is started at the fuel tank temperature of warmer than 0°C (32°F) (where the voltage between the ECM terminal 95 and ground is less than 4.1V).**

Pattern 2:

- When steady-state driving is performed again even after it is interrupted, each diagnosis can be conducted. In this case, the time required for diagnosis may be extended.

Pattern 3:

- Operate vehicle following the driving pattern shown in the figure.
- Release the accelerator pedal during decelerating vehicle speed from 90 km/h (56 MPH) to 0 km/h (0 MPH).

Pattern 4:

- The accelerator pedal must be held very steady during steady-state driving.
- If the accelerator pedal is moved, the test must be conducted all over again.

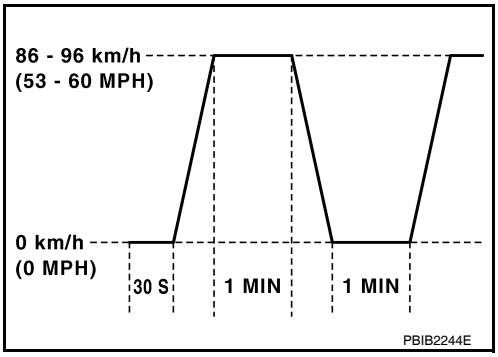

*1: Depress the accelerator pedal until vehicle speed is 90 km/h (56 MPH), then release the accelerator pedal and keep it released for more than 10 seconds. Depress the accelerator pedal until vehicle speed is 90 km/h (56 MPH) again.

*2: Checking the vehicle speed with GST is advised.

Suggested Transmission Gear Position for CVT Models

Set the selector lever in the D position.

Suggested Upshift Speeds for M/T Models

Shown below are suggested vehicle speeds for shifting into a higher gear. These suggestions relate to fuel economy and vehicle performance. Actual upshift speeds will vary according to road conditions, the weather and individual driving habits.

	For normal acceleration in low altitude areas [less than 1,219 m (4,000 ft)]:		For quick acceleration in low altitude areas and high altitude areas [over 1,219 m (4,000 ft)]:
Gear change	ACCEL shift position km/h (MPH)	CRUISE shift point km/h (MPH)	km/h (MPH)
1st to 2nd	24 (15)	13 (8)	13 (8)
2nd to 3rd	40 (25)	27 (17)	27 (17)
3rd to 4th	53 (33)	40 (25)	40 (25)
4th to 5th	71 (44)	58 (36)	58 (36)
5th to 6th	82 (51)	82 (51)	82 (51)

Test Value and Test Limit

INFOID:0000000004351812

The following is the information specified in Service $06 of SAE J1979.

The test value is a parameter used to determine whether a system/circuit diagnostic test is OK or NG while being monitored by the ECM during self-diagnosis. The test limit is a reference value which is specified as the maximum or minimum value and is compared with the test value being monitored.

These data (test value and test limit) are specified by On Board Monitor ID(OBDMID), Test ID (TID), Unit and Scaling ID and can be displayed on the GST screen.

The items of the test value and test limit will be displayed with GST screen which items are provided by the ECM. (eg., if bank 2 is not applied on this vehicle, only the items of bank 1 are displayed)

Item	OBD-MID	Self-diagnostic test item	DTC	Test value and Test limit (GST display)		Description
				TID	Unit and Scaling ID	
HO2S	01H	Air fuel ratio (A/F) sensor 1 (Bank 1)	P0131	83H	0BH	Minimum sensor output voltage for test cycle
			P0131	84H	0BH	Maximum sensor output voltage for test cycle
			P0130	85H	0BH	Minimum sensor output voltage for test cycle
			P0130	86H	0BH	Maximum sensor output voltage for test cycle
			P0133	87H	04H	Response rate: Response ratio (Lean to Rich)
			P0133	88H	04H	Response rate: Response ratio (Rich to Lean)
			P2A00	89H	84H	The amount of shift in air fuel ratio
			P2A00	8AH	84H	The amount of shift in air fuel ratio
			P0130	8BH	0BH	Difference in sensor output voltage
			P0133	8CH	83H	Response gain at the limited frequency
	02H	Heated oxygen sensor 2 (Bank 1)	P0138	07H	0CH	Minimum sensor output voltage for test cycle
			P0137	08H	0CH	Maximum sensor output voltage for test cycle
			P0138	80H	0CH	Sensor output voltage
			P0139	81H	0CH	Difference in sensor output voltage
	03H	Heated oxygen sensor 3 (Bank 1)	P0143	07H	0CH	Minimum sensor output voltage for test cycle
			P0144	08H	0CH	Maximum sensor output voltage for test cycle
			P0146	80H	0CH	Sensor output voltage
			P0145	81H	0CH	Difference in sensor output voltage

Item	OBD-MID	Self-diagnostic test item	DTC	Test value and Test limit (GST display)		Description
				TID	Unit and Scaling ID	
HO2S	05H	Air fuel ratio (A/F) sensor 1 (Bank 2)	P0151	83H	0BH	Minimum sensor output voltage for test cycle
			P0151	84H	0BH	Maximum sensor output voltage for test cycle
			P0150	85H	0BH	Minimum sensor output voltage for test cycle
			P0150	86H	0BH	Maximum sensor output voltage for test cycle
			P0153	87H	04H	Response rate: Response ratio (Lean to Rich)
			P0153	88H	04H	Response rate: Response ratio (Rich to Lean)
			P2A03	89H	84H	The amount of shift in air fuel ratio
			P2A03	8AH	84H	The amount of shift in air fuel ratio
			P0150	8BH	0BH	Difference in sensor output voltage
			P0153	8CH	83H	Response gain at the limited frequency
	06H	Heated oxygen sensor 2 (Bank 2)	P0158	07H	0CH	Minimum sensor output voltage for test cycle
			P0157	08H	0CH	Maximum sensor output voltage for test cycle
			P0158	80H	0CH	Sensor output voltage
			P0159	81H	0CH	Difference in sensor output voltage
	07H	Heated oxygen sensor 3 (Bank2)	P0163	07H	0CH	Minimum sensor output voltage for test cycle
			P0164	08H	0CH	Maximum sensor output voltage for test cycle
			P0166	80H	0CH	Sensor output voltage
			P0165	81H	0CH	Difference in sensor output voltage
CATA-LYST	21H	Three way catalyst function (Bank1)	P0420	80H	01H	O2 storage index
			P0420	82H	01H	Switching time lag engine exhaust index value
			P2423	83H	0CH	Difference in 3rd O2 sensor output voltage
			P2423	84H	84H	O2 storage index in HC trap catalyst
	22H	Three way catalyst function (Bank2)	P0430	80H	01H	O2 storage index
			P0430	82H	01H	Switching time lag engine exhaust index value
			P2424	83H	0CH	Difference in 3rd O2 sensor output voltage
			P2424	84H	84H	O2 storage index in HC trap catalyst

Item	OBD-MID	Self-diagnostic test item	DTC	Test value and Test limit (GST display)		Description
				TID	Unit and Scaling ID	
EGR SYSTEM	31H	EGR function	P0400	80H	96H	Low Flow Faults: EGR temp change rate (short term)
			P0400	81H	96H	Low Flow Faults: EGR temp change rate (long term)
			P0400	82H	96H	Low Flow Faults: Difference between max EGR temp and EGR temp under idling condition
			P0400	83H	96H	Low Flow Faults: Max EGR temp
			P1402	84H	96H	High Flow Faults: EGR temp increase rate
VVT SYSTEM	35H	VVT Monitor (Bank1)	P0011	80H	9DH	VTC intake function diagnosis (VTC alignment check diagnosis)
			P0014	81H	9DH	VTC exhaust function diagnosis (VTC alignment check diagnosis)
			P0011	82H	9DH	VTC intake function diagnosis (VTC drive failure diagnosis)
			P0014	83H	9DH	VTC exhaust function diagnosis (VTC drive failure diagnosis)
	36H	VVT Monitor (Bank2)	P0021	80H	9DH	VTC intake function diagnosis (VTC alignment check diagnosis)
			P0024	81H	9DH	VTC exhaust function diagnosis (VTC alignment check diagnosis)
			P0021	82H	9DH	VTC intake function diagnosis (VTC drive failure diagnosis)
			P0024	83H	9DH	VTC exhaust function diagnosis (VTC drive failure diagnosis)
EVAP SYSTEM	39H	EVAP control system leak (Cap Off)	P0455	80H	0CH	Difference in pressure sensor output voltage before and after pull down
	3BH	EVAP control system leak (Small leak)	P0442	80H	05H	Leak area index (for more than 0.04 inch)
	3CH	EVAP control system leak (Very small leak)	P0456	80H	05H	Leak area index (for more than 0.02 inch)
			P0456	81H	FDH	Maximum internal pressure of EVAP system during monitoring
	3DH	Purge flow system	P0441	83H	0CH	Difference in pressure sensor output voltage before and after vent control valve close
O2 SENSOR HEATER	41H	A/F sensor 1 heater (Bank 1)	Low Input:P0031 High Input:P0032	81H	0BH	Converted value of Heater electric current to voltage
	42H	Heated oxygen sensor 2 heater (Bank 1)	Low Input:P0037 High Input:P0038	80H	0CH	Converted value of Heater electric current to voltage
	43H	Heated oxygen sensor 3 heater (Bank 1)	P0043	80H	0CH	Converted value of Heater electric current to voltage
	45H	A/F sensor 1 heater (Bank 2)	Low Input:P0051 High Input:P0052	81H	0BH	Converted value of Heater electric current to voltage
	46H	Heated oxygen sensor 2 heater (Bank 2)	Low Input:P0057 High Input:P0058	80H	0CH	Converted value of Heater electric current to voltage
	47H	Heated oxygen sensor 3 heater (Bank 2)	P0063	80H	0CH	Converted value of Heater electric current to voltage

Item	OBD-MID	Self-diagnostic test item	DTC	Test value and Test limit (GST display)		Description
				TID	Unit and Scaling ID	
SECOND-ARY AIR	71H	Secondary Air system	P0411	80H	01H	Secondary Air Injection System Incorrect Flow Detected
			Bank1: P0491 Bank2: P0492	81H	01H	Secondary Air Injection System Insufficient Flow
			P2445	82H	01H	Secondary Air Injection System Pump Stuck Off
			P2448	83H	01H	Secondary Air Injection System High Airflow
			Bank1: P2440 Bank2: P2442	84H	01H	Secondary Air Injection System Switching Valve Stuck Open
			P2440	85H	01H	Secondary Air Injection System Switching Valve Stuck Open
			P2444	86H	01H	Secondary Air Injection System Pump Stuck On
FUEL SYSTEM	81H	Fuel injection system function (Bank 1)	P0171 or P0172	80H	2FH	Long term fuel trim
			P0171 or P0172	81H	24H	The number of lambda control clamped
	82H	Fuel injection system function (Bank 2)	P0174 or P0175	80H	2FH	Long term fuel trim
			P0174 or P0175	81H	24H	The number of lambda control clamped

Item	OBD-MID	Self-diagnostic test item	DTC	Test value and Test limit (GST display)		Description
				TID	Unit and Scaling ID	
MISFIRE	A1H	Multiple Cylinder Misfires	P0301	80H	24H	Misfiring counter at 1000 revolution of the first cylinder
			P0302	81H	24H	Misfiring counter at 1000 revolution of the second cylinder
			P0303	82H	24H	Misfiring counter at 1000 revolution of the third cylinder
			P0304	83H	24H	Misfiring counter at 1000 revolution of the fourth cylinder
			P0305	84H	24H	Misfiring counter at 1000 revolution of the fifth cylinder
			P0306	85H	24H	Misfiring counter at 1000 revolution of the sixth cylinder
			P0307	86H	24H	Misfiring counter at 1000 revolution of the seventh cylinder
			P0308	87H	24H	Misfiring counter at 1000 revolution of the eighth cylinder
			P0300	88H	24H	Misfiring counter at 1000 revolution of the multiple cylinders
			P0301	89H	24H	Misfiring counter at 200 revolution of the first cylinder
			P0302	8AH	24H	Misfiring counter at 200 revolution of the second cylinder
			P0303	8BH	24H	Misfiring counter at 200 revolution of the third cylinder
			P0304	8CH	24H	Misfiring counter at 200 revolution of the fourth cylinder
			P0305	8DH	24H	Misfiring counter at 200 revolution of the fifth cylinder
			P0306	8EH	24H	Misfiring counter at 200 revolution of the sixth cylinder
			P0307	8FH	24H	Misfiring counter at 200 revolution of the seventh cylinder
			P0308	90H	24H	Misfiring counter at 200 revolution of the eighth cylinder
			P0300	91H	24H	Misfiring counter at 1000 revolution of the single cylinder
			P0300	92H	24H	Misfiring counter at 200 revolution of the single cylinder
			P0300	93H	24H	Misfiring counter at 200 revolution of the multiple cylinders

Item	OBD-MID	Self-diagnostic test item	DTC	Test value and Test limit (GST display)		Description
				TID	Unit and Scaling ID	
MISFIRE	A2H	No. 1 Cylinder Misfire	P0301	0BH	24H	EWMA (Exponential Weighted Moving Average) misfire counts for last 10 driving cycles
			P0301	0CH	24H	Misfire counts for last/current driving cycles
	A3H	No. 2 Cylinder Misfire	P0302	0BH	24H	EWMA (Exponential Weighted Moving Average) misfire counts for last 10 driving cycles
			P0302	0CH	24H	Misfire counts for last/current driving cycles
	A4H	No. 3 Cylinder Misfire	P0303	0BH	24H	EWMA (Exponential Weighted Moving Average) misfire counts for last 10 driving cycles
			P0303	0CH	24H	Misfire counts for last/current driving cycles
	A5H	No. 4 Cylinder Misfire	P0304	0BH	24H	EWMA (Exponential Weighted Moving Average) misfire counts for last 10 driving cycles
			P0304	0CH	24H	Misfire counts for last/current driving cycles
	A6H	No. 5 Cylinder Misfire	P0305	0BH	24H	EWMA (Exponential Weighted Moving Average) misfire counts for last 10 driving cycles
			P0305	0CH	24H	Misfire counts for last/current driving cycles
	A7H	No. 6 Cylinder Misfire	P0306	0BH	24H	EWMA (Exponential Weighted Moving Average) misfire counts for last 10 driving cycles
			P0306	0CH	24H	Misfire counts for last/current driving cycles
	A8H	No. 7 Cylinder Misfire	P0307	0BH	24H	EWMA (Exponential Weighted Moving Average) misfire counts for last 10 driving cycles
			P0307	0CH	24H	Misfire counts for last/current driving cycles
	A9H	No. 8 Cylinder Misfire	P0308	0BH	24H	EWMA (Exponential Weighted Moving Average) misfire counts for last 10 driving cycles
			P0308	0CH	24H	Misfire counts for last/current driving cycles

SYMPTOM DIAGNOSIS

ENGINE CONTROL SYSTEM SYMPTOMS

Symptom Table

INFOID:0000000004349981

SYSTEM — BASIC ENGINE CONTROL SYSTEM

		SYMPTOM													Reference page
		HARD/NO START/RESTART (EXCP. HA)	ENGINE STALL	HESITATION/SURGING/FLAT SPOT	SPARK KNOCK/DETONATION	LACK OF POWER/POOR ACCELERATION	HIGH IDLE/LOW IDLE	ROUGH IDLE/HUNTING	IDLING VIBRATION	SLOW/NO RETURN TO IDLE	OVERHEATS/WATER TEMPERATURE HIGH	EXCESSIVE FUEL CONSUMPTION	EXCESSIVE OIL CONSUMPTION	BATTERY DEAD (UNDER CHARGE)	
Warranty symptom code		AA	AB	AC	AD	AE	AF	AG	AH	AJ	AK	AL	AM	HA	
Fuel	Fuel pump circuit	1	1	2	3	2		2	2			3		2	EC-959
	Fuel pressure regulator system	3	3	4	4	4	4	4	4	4		4			EC-1038
	Fuel injector circuit	1	1	2	3	2		2	2			2			EC-956
	Evaporative emission system	3	3	4	4	4	4	4	4	4		4			EC-622
Air	Positive crankcase ventilation system	3	3	4	4	4	4	4	4	4		4	1		EC-974
	Incorrect idle speed adjustment						1	1	1	1		1			EC-564
	Electric throttle control actuator	1	1	2	3	3	2	2	2	2		2		2	EC-916, EC-922
Ignition	Incorrect ignition timing adjustment	3	3	1	1	1		1	1			1			EC-564
	Ignition circuit	1	1	2	2	2		2	2			2			EC-963
Main power supply and ground circuit		2	2	3	3	3		3	3		2	3			EC-673
Mass air flow sensor circuit		1	1	2	2	2		2	2			2			EC-693, EC-693
Engine coolant temperature sensor circuit					3		3			3					EC-711, EC-717
Air fuel ratio (A/F) sensor 1 circuit			1	2	3	2		2	2			2			EC-724, EC-728, EC-731, EC-734, EC-939
Throttle position sensor circuit							2			2					EC-714, EC-773, EC-878, EC-880, EC-931
Accelerator pedal position sensor circuit				3	2	1									EC-924, EC-927, EC-935
Knock sensor circuit				2								3			EC-781

	SYMPTOM													Reference page
	HARD/NO START/RESTART (EXCP. HA)	ENGINE STALL	HESITATION/SURGING/FLAT SPOT	SPARK KNOCK/DETONATION	LACK OF POWER/POOR ACCELERATION	HIGH IDLE/LOW IDLE	ROUGH IDLE/HUNTING	IDLING VIBRATION	SLOW/NO RETURN TO IDLE	OVERHEATS/WATER TEMPERATURE HIGH	EXCESSIVE FUEL CONSUMPTION	EXCESSIVE OIL CONSUMPTION	BATTERY DEAD (UNDER CHARGE)	
Warranty symptom code	AA	AB	AC	AD	AE	AF	AG	AH	AJ	AK	AL	AM	HA	
Crankshaft position sensor (POS) circuit	2	2												EC-783
Camshaft position sensor (PHASE) circuit	3	2												EC-787
Vehicle speed signal circuit		2	3		3						3			EC-853
Power steering pressure sensor circuit		2					3	3						EC-859
ECM	2	2	3	3	3	3	3	3	3	3	3			EC-862, EC-864
Intake valve timing control solenoid valve circuit		3	2		1	3	2	2	3		3			EC-690
PNP switch circuit			3		3		3	3			3			EC-870
Refrigerant pressure sensor circuit		2				3			3		4			EC-975
Electrical load signal circuit							3							EC-954
Air conditioner circuit	2	2	3	3	3	3	3	3	3		3		2	HAC-83, HAC-155
ABS actuator and electric unit (control unit)			4											BRC-53

1 - 6: The numbers refer to the order of inspection.

(continued on next table)

SYSTEM — ENGINE MECHANICAL & OTHER

		SYMPTOM													Reference page
		HARD/NO START/RESTART (EXCP. HA)	ENGINE STALL	HESITATION/SURGING/FLAT SPOT	SPARK KNOCK/DETONATION	LACK OF POWER/POOR ACCELERATION	HIGH IDLE/LOW IDLE	ROUGH IDLE/HUNTING	IDLING VIBRATION	SLOW/NO RETURN TO IDLE	OVERHEATS/WATER TEMPERATURE HIGH	EXCESSIVE FUEL CONSUMPTION	EXCESSIVE OIL CONSUMPTION	BATTERY DEAD (UNDER CHARGE)	
Warranty symptom code		A A	AB	AC	AD	AE	AF	AG	AH	AJ	AK	AL	AM	HA	
Fuel	Fuel tank	5	5												FL-10
	Fuel piping			5	5	5		5	5			5			EM-36
	Vapor lock														—
	Valve deposit	5		5	5	5		5	5			5			—
	Poor fuel (Heavy weight gasoline, Low octane)														—
Air	Air duct		5	5		5		5	5			5			EM-25
	Air cleaner														
	Air leakage from air duct (Mass air flow sensor — electric throttle control actuator)	5			5		5			5					
	Electric throttle control actuator														EM-26
	Air leakage from intake manifold/Collector/Gasket														
Cranking	Battery	1	1	1		1		1	1			1		1	PG-68 (Coupe) PG-139 (Sedan)
	Generator circuit														CHG-5
	Starter circuit	3													STR-6
	Signal plate	6													EM-76
	PNP switch	4													TM-20 (M/T) TM-307 (CVT)
Engine	Cylinder head	5	5	5	5	5		5	5			5			EM-68
	Cylinder head gasket										4		3		
	Cylinder block	6	6	6	6	6		6	6			6			EM-76
	Piston												4		
	Piston ring														
	Connecting rod														
	Bearing														
	Crankshaft														

		SYMPTOM													Reference page
		HARD/NO START/RESTART (EXCP. HA)	ENGINE STALL	HESITATION/SURGING/FLAT SPOT	SPARK KNOCK/DETONATION	LACK OF POWER/POOR ACCELERATION	HIGH IDLE/LOW IDLE	ROUGH IDLE/HUNTING	IDLING VIBRATION	SLOW/NO RETURN TO IDLE	OVERHEATS/WATER TEMPERATURE HIGH	EXCESSIVE FUEL CONSUMPTION	EXCESSIVE OIL CONSUMPTION	BATTERY DEAD (UNDER CHARGE)	
Warranty symptom code		AA	AB	AC	AD	AE	AF	AG	AH	AJ	AK	AL	AM	HA	
Valve mechanism	Timing chain	5	5	5	5	5		5	5			5			EM-52
	Camshaft														EM-41
	Intake valve timing control														EM-52
	Intake valve												3		EM-68
	Exhaust valve														
Exhaust	Exhaust manifold/Tube/Muffler/Gasket	5	5	5	5	5		5	5			5			EM-30, EX-6
	Three way catalyst														
Lubrication	Oil pan/Oil strainer/Oil pump/Oil filter/Oil gallery/Oil cooler	5	5	5	5	5		5	5			5			EM-32, LU-12, LU-11, LU-7, LU-15
	Oil level (Low)/Filthy oil														LU-9
Cooling	Radiator/Hose/Radiator filler cap	5	5	5	5	5		5	5		4	5			CO-15
	Thermostat									5					CO-21
	Water pump														CO-19
	Water gallery														CO-7
	Cooling fan									5					CO-17
	Coolant level (Low)/Contaminated coolant														CO-11
NVIS (NISSAN Vehicle Immobilizer System — NATS)		1	1												SEC-22 (Coupe) SEC-221 (Sedan)

1 - 6: The numbers refer to the order of inspection.

NORMAL OPERATING CONDITION

Description

INFOID:0000000004349982

FUEL CUT CONTROL (AT NO LOAD AND HIGH ENGINE SPEED)

If the engine speed is above 1,800 rpm under no load (for example, the selector lever position is neutral and engine speed is over 1,800 rpm) fuel will be cut off after some time. The exact time when the fuel is cut off varies based on engine speed.

Fuel cut will be operated until the engine speed reaches 1,500 rpm, then fuel cut will be cancelled.

NOTE:

This function is different from deceleration control listed under Multiport Fuel Injection (MFI) System, EC-577, "System Description".

PRECAUTION

PRECAUTIONS

Precaution for Supplemental Restraint System (SRS) "AIR BAG" and "SEAT BELT PRE-TENSIONER"

INFOID:0000000004351816

The Supplemental Restraint System such as “AIR BAG” and “SEAT BELT PRE-TENSIONER”, used along with a front seat belt, helps to reduce the risk or severity of injury to the driver and front passenger for certain types of collision. This system includes seat belt switch inputs and dual stage front air bag modules. The SRS system uses the seat belt switches to determine the front air bag deployment, and may only deploy one front air bag, depending on the severity of a collision and whether the front occupants are belted or unbelted.
Information necessary to service the system safely is included in the SR and SB section of this Service Manual.

WARNING:

- **To avoid rendering the SRS inoperative, which could increase the risk of personal injury or death in the event of a collision which would result in air bag inflation, all maintenance must be performed by an authorized NISSAN/INFINITI dealer.**
- **Improper maintenance, including incorrect removal and installation of the SRS, can lead to personal injury caused by unintentional activation of the system. For removal of Spiral Cable and Air Bag Module, see the SR section.**
- **Do not use electrical test equipment on any circuit related to the SRS unless instructed to in this Service Manual. SRS wiring harnesses can be identified by yellow and/or orange harnesses or harness connectors.**

Precaution for Procedure without Cowl Top Cover

INFOID:0000000004351815

When performing the procedure after removing cowl top cover, cover the lower end of windshield with urethane, etc.

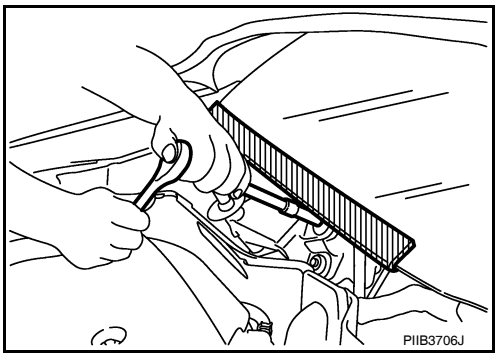

On Board Diagnostic (OBD) System of Engine and CVT

INFOID:0000000004349986

The ECM has an on board diagnostic system. It will light up the malfunction indicator lamp (MIL) to warn the driver of a malfunction causing emission deterioration.

CAUTION:

- **Be sure to turn the ignition switch OFF and disconnect the negative battery cable before any repair or inspection work. The open/short circuit of related switches, sensors, solenoid valves, etc. will cause the MIL to light up.**
- **Be sure to connect and lock the connectors securely after work. A loose (unlocked) connector will cause the MIL to light up due to the open circuit. (Be sure the connector is free from water, grease, dirt, bent terminals, etc.)**
- **Certain systems and components, especially those related to OBD, may use a new style slide-locking type harness connector. For description and how to disconnect, refer to PG-58, "Description" (coupe) or PG-129, "Description" (sedan).**
- **Be sure to route and secure the harnesses properly after work. The interference of the harness with a bracket, etc. may cause the MIL to light up due to the short circuit.**
- **Be sure to connect rubber tubes properly after work. A misconnected or disconnected rubber tube may cause the MIL to light up due to the malfunction of the EVAP system or fuel injection system, etc.**
- **Be sure to erase the unnecessary malfunction information (repairs completed) from the ECM and TCM (Transmission control module) before returning the vehicle to the customer.**

General Precautions

INFOID:0000000004349987

- **Always use a 12 volt battery as power source.**
- **Do not attempt to disconnect battery cables while engine is running.**
- **Before connecting or disconnecting the ECM harness connector, turn ignition switch OFF and disconnect negative battery cable. Failure to do so may damage the ECM because battery voltage is applied to ECM even if ignition switch is turned OFF.**
- **Before removing parts, turn ignition switch OFF and then disconnect battery ground cable.**

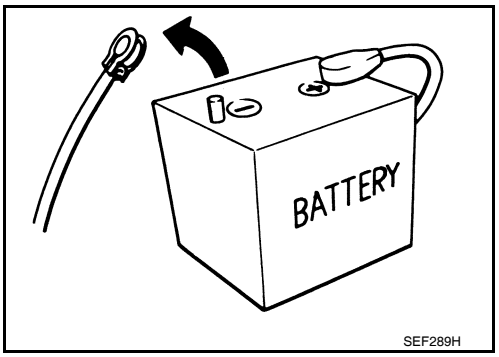

- **Do not disassemble ECM.**
- **If a battery cable is disconnected, the memory will return to the ECM value.**
  The ECM will now start to self-control at its initial value. Engine operation can vary slightly when the terminal is disconnected. However, this is not an indication of a malfunction. Do not replace parts because of a slight variation.
- **If the battery is disconnected, the following emission-related diagnostic information will be lost within 24 hours.**

- **Diagnostic trouble codes**
- **1st trip diagnostic trouble codes**
- **Freeze frame data**
- **1st trip freeze frame data**
- **System readiness test (SRT) codes**
- **Test values**

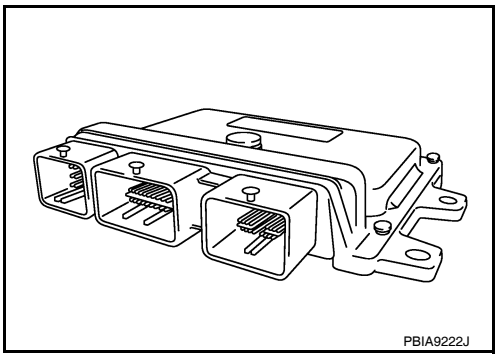

- **When connecting ECM harness connector (1), fasten (B) it securely with a lever as far as it will go as shown in the figure.**

2. ECM
A. Loosen

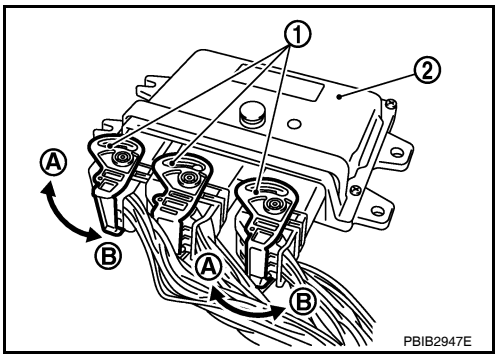

- **When connecting or disconnecting pin connectors into or from ECM, take care not to damage pin terminals (bend or break).**
  Make sure that there are not any bends or breaks on ECM pin terminal, when connecting pin connectors.
- **Securely connect ECM harness connectors.**
  A poor connection can cause an extremely high (surge) voltage to develop in coil and condenser, thus resulting in damage to ICs.
- **Keep engine control system harness at least 10 cm (4 in) away from adjacent harness, to prevent engine control system malfunctions due to receiving external noise, degraded operation of ICs, etc.**
- **Keep engine control system parts and harness dry.**

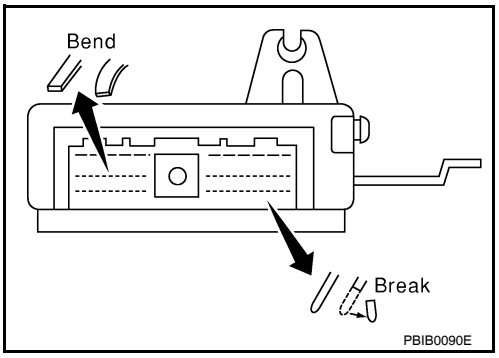

- **Before replacing ECM, perform ECM Terminals and Reference Value inspection and make sure ECM functions properly. Refer to EC-978, "Reference Value".**
- **Handle mass air flow sensor carefully to avoid damage.**
- **Do not clean mass air flow sensor with any type of detergent.**
- **Do not disassemble electric throttle control actuator.**
- **Even a slight leak in the air intake system can cause serious incidents.**
- **Do not shock or jar the camshaft position sensor (PHASE), crankshaft position sensor (POS).**

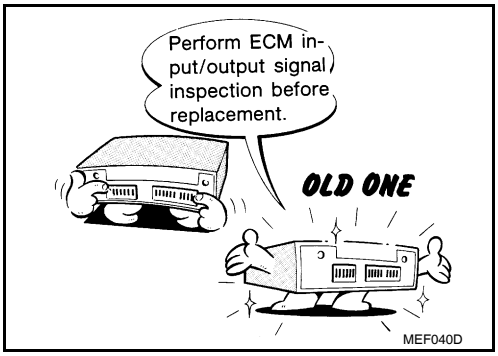

- **After performing each TROUBLE DIAGNOSIS, perform DTC CONFIRMATION PROCEDURE or Component Function Check.** The DTC should not be displayed in the DTC Confirmation Procedure if the repair is completed. The Component Function Check should be a good result if the repair is completed.

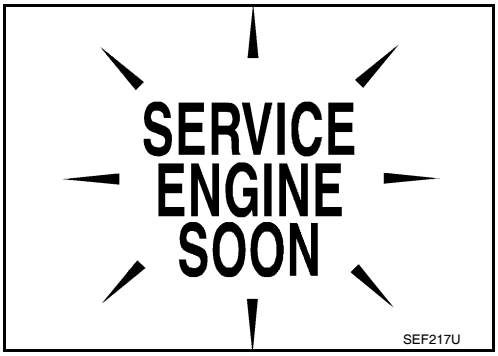

- **When measuring ECM signals with a circuit tester, never allow the two tester probes to contact.**
  Accidental contact of probes will cause a short circuit and damage the ECM power transistor.
- **Do not use ECM ground terminals when measuring input/output voltage. Doing so may result in damage to the ECM's transistor. Use a ground other than ECM terminals, such as the ground.**

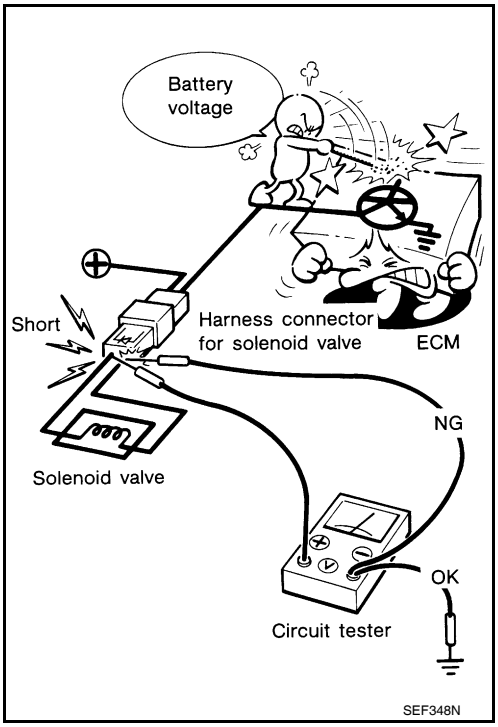

- **Do not operate fuel pump when there is no fuel in lines.**
- **Tighten fuel hose clamps to the specified torque.**

- **Do not depress accelerator pedal when starting.**
- **Immediately after starting, do not rev up engine unnecessarily.**
- **Do not rev up engine just prior to shutdown.**

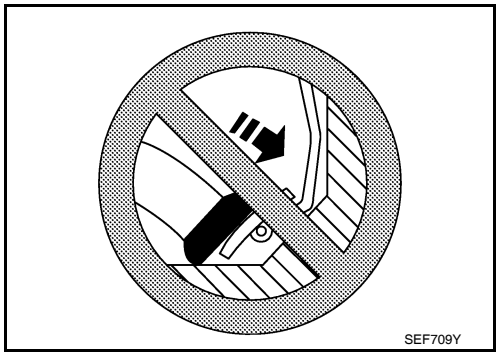

- **When installing C.B. ham radio or a mobile phone, be sure to observe the following as it may adversely affect electronic control systems depending on installation location.**
  - **Keep the antenna as far as possible from the electronic control units.**
  - **Keep the antenna feeder line more than 20 cm (8 in) away from the harness of electronic controls.**
    Do not let them run parallel for a long distance.
  - **Adjust the antenna and feeder line so that the standing-wave ratio can be kept smaller.**
  - **Be sure to ground the radio to vehicle body.**

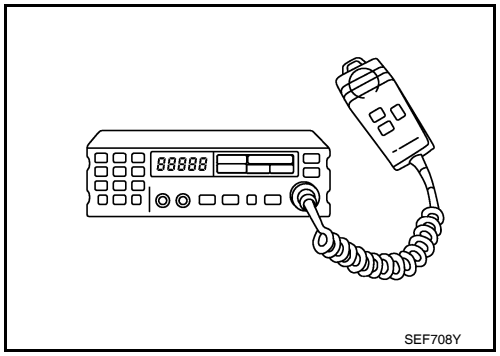

PREPARATION

PREPARATION

Special Service Tools

INFOID:0000000004349988

NOTE:
The actual shapes of Kent-Moore tools may differ from those of special service tools illustrated here.

Tool number (Kent-Moore No.) Tool name	Description
(J-44321) Fuel pressure gauge kit 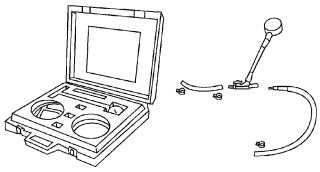 LEC642	Checking fuel pressure

Commercial Service Tools

INFOID:0000000004349989

Tool name (Kent-Moore No.)	Description
Leak detector i.e.: (J-41416) 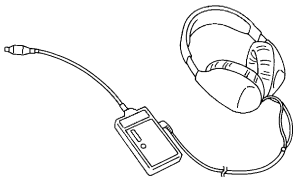 S-NT703	Locating the EVAP leak
EVAP service port adapter i.e.: (J-41413-OBD) 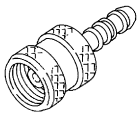 S-NT704	Applying positive pressure through EVAP service port
Fuel filler cap adapter i.e.: (MLR-8382) S-NT815	Checking fuel tank vacuum relief valve opening pressure
Socket wrench 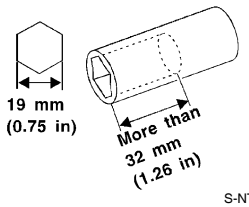 S-NT705	Removing and installing engine coolant temperature sensor

Tool name (Kent-Moore No.)		Description
Oxygen sensor thread cleaner i.e.: (J-43897-18) (J-43897-12)	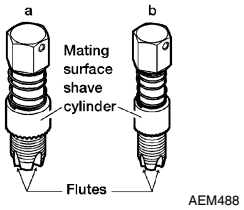	Reconditioning the exhaust system threads before installing a new oxygen sensor. Use with anti-seize lubricant shown below. **a: 18 mm diameter with pitch 1.5 mm for Zirconia Oxygen Sensor** **b: 12 mm diameter with pitch 1.25 mm for Titania Oxygen Sensor**
Anti-seize lubricant i.e.: (Permatex™ 133AR or equivalent meeting MIL specification MIL-A-907)	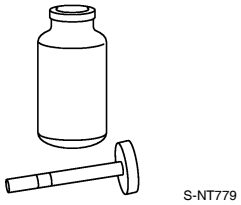	Lubricating oxygen sensor thread cleaning tool when reconditioning exhaust system threads.

ON-VEHICLE MAINTENANCE

FUEL PRESSURE

Inspection

INFOID:0000000004349990

FUEL PRESSURE RELEASE

With CONSULT-III

1. Turn ignition switch ON.
2. Perform “FUEL PRESSURE RELEASE” in “WORK SUPPORT” mode with CONSULT-III.
3. Start engine.
4. After engine stalls, crank it two or three times to release all fuel pressure.
5. Turn ignition switch OFF.

With CONSULT-III

1. Remove fuel pump fuse located in IPDM E/R.
2. Start engine.
3. After engine stalls, crank it two or three times to release all fuel pressure.
4. Turn ignition switch OFF.
5. Reinstall fuel pump fuse after servicing fuel system.

FUEL PRESSURE CHECK

CAUTION:

Before disconnecting fuel line, release fuel pressure from fuel line to eliminate danger.

NOTE:

- **Prepare pans or saucers under the disconnected fuel line because the fuel may spill out. The fuel pressure cannot be completely released because L32 models do not have fuel return system.**
- **Use Fuel Pressure Gauge Kit [SST: (J-44321)] to check fuel pressure.**

1. Release fuel pressure to zero.
2. Connect fuel tube (B) adapter to quick connector.

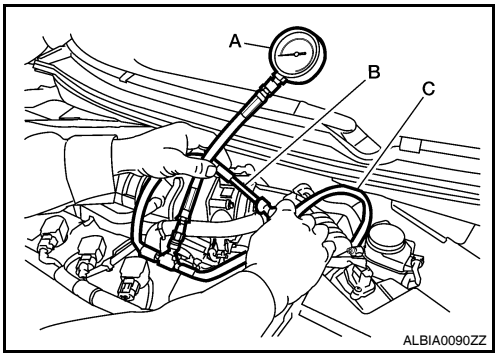

A : Fuel pressure gauge
C : Fuel feed hose

3. Turn ignition switch ON and check for fuel leakage.
4. Start engine and check for fuel leakage.
5. Read the indication of fuel pressure gauge.

At idling : Approximately 350 kPa (3.57 kg/cm^2, 51 psi)

6. If result is unsatisfactory, check fuel hoses and fuel tubes for clogging.
   If OK, Replace “fuel filter and fuel pump assembly”.
   If NG, Repair or replace.

EVAP LEAK CHECK

Inspection

INFOID:0000000004349991

CAUTION:
- **Do not use compressed air or a high pressure pump.**
- **Do not exceed 4.12 kPa (0.042 kg/cm^2, 0.6 psi) of pressure in EVAP system.**

NOTE:
- Do not start engine.
- Improper installation of EVAP service port adapter [commercial service tool: (J-41413-OBD)] to the EVAP service port may cause a leak.

WITH CONSULT-III

1. To locate the EVAP leak, install EVAP service port adapter [commercial service tool: (J-41413-OBD)] and pressure pump to EVAP service port.
2. Turn ignition switch ON.
3. Select the “EVAP SYSTEM CLOSE” of “WORK SUPPORT” mode with CONSULT-III.
4. Touch “START”. A bar graph (Pressure indicating display) will appear on the screen.
5. Apply positive pressure to the EVAP system until the pressure indicator reaches the middle of the bar graph.
6. Remove EVAP service port adapter [commercial service tool: (J-41413-OBD)] and hose with pressure pump.
7. Locate the leak using a leak detector [commercial service tool: (J-41416)]. Refer to EC-622, "System Diagram".

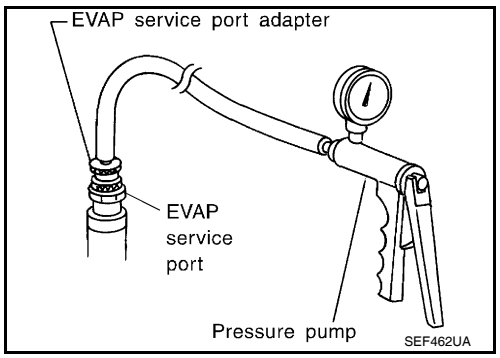

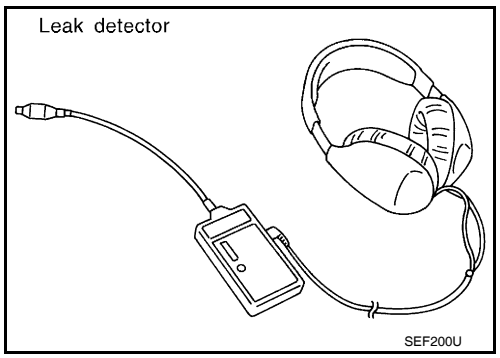

WITHOUT CONSULT-III

1. To locate the EVAP leak, install EVAP service port adapter [commercial service tool: (J-41413-OBD)] and pressure pump to EVAP service port.
2. Apply battery voltage between the terminals of EVAP canister vent control valve to make a closed EVAP system.
3. To locate the leak, deliver positive pressure to the EVAP system until pressure gauge points reach 1.38 to 2.76 kPa (0.014 to 0.028 kg/cm^2, 0.2 to 0.4 psi).
4. Remove EVAP service port adapter [commercial service tool: (J-41413-OBD)] and hose with pressure pump.

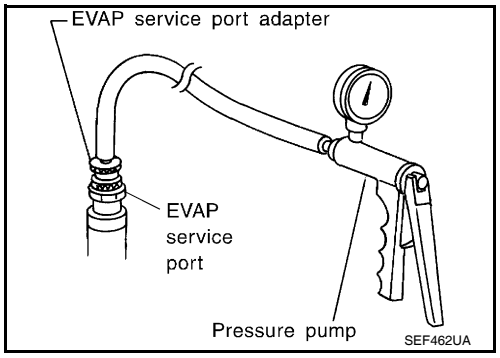

5. Locate the leak using a leak detector [commercial service tool: (J-41416)]. Refer to EC-622, "System Diagram".

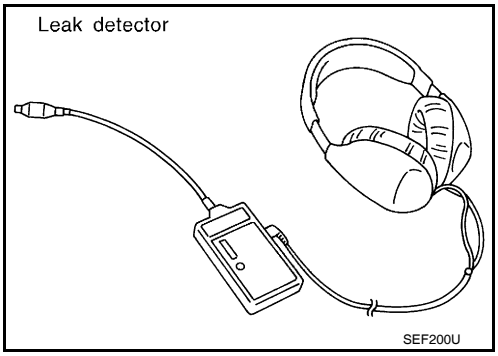

ON-VEHICLE REPAIR

EVAP CANISTER

Exploded View

INFOID:0000000004349992

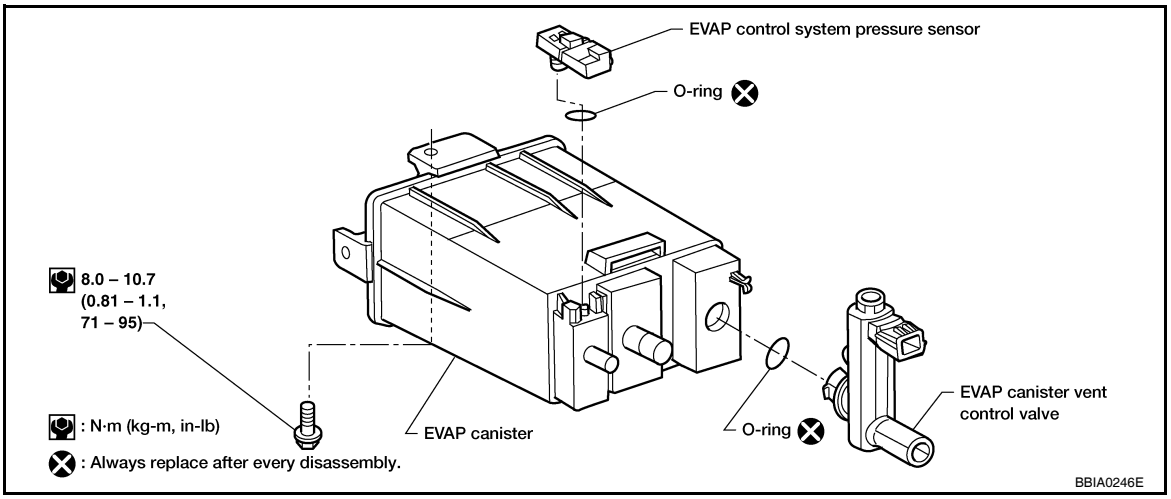

Removal and Installation

INFOID:0000000004349993

REMOVAL

1. Lift up the vehicle.
2. Remove EVAP canister fixing bolt.
3. Remove EVAP canister.

NOTE:
The EVAP canister vent control valve and EVAP canister system pressure sensor can be removed without removing the EVAP canister.

INSTALLATION

Install in the reverse order of removal.
NOTE:
Tighten EVAP canister fixing bolt to the specified torque.

DISASSEMBLY

1. Turn EVAP canister vent control valve counterclockwise.

   A : Lock
   B : Unlock

2. Remove the EVAP canister vent control valve.

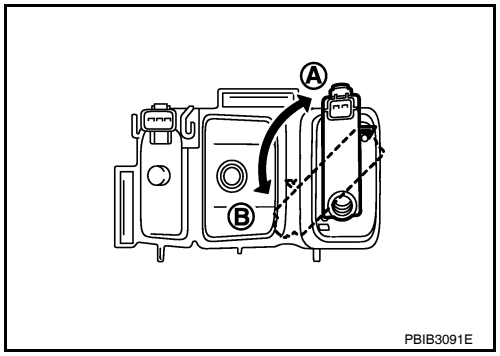

ASSEMBLY

Assemble in the reverse order of disassembly.
CAUTION:
Always replace O-ring with a new one.

Inspection

INFOID:0000000004349994

Check EVAP canister as follows:

1. Block port (B).
2. Blow air into port (A) and check that it flows freely out of port (C).
3. Release blocked port (B).
4. Apply vacuum pressure to port (B) and check that vacuum pressure exists at the ports (A) and (C).
5. Block port (A) and (B).
6. Apply pressure to port (C) and check that there is no leakage.

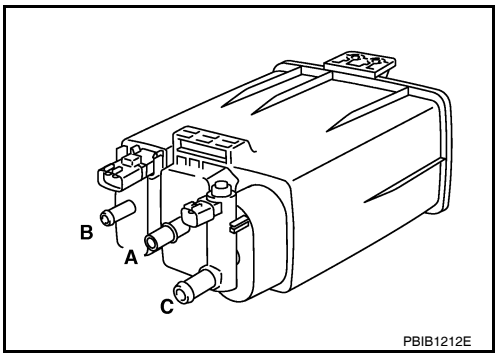

SERVICE DATA AND SPECIFICATIONS (SDS)

SERVICE DATA AND SPECIFICATIONS (SDS)

Idle Speed

INFOID:0000000004349995

Transmission	Condition	Specification
CVT	No load* (in P or N position)	650 ± 50 rpm
M/T	No load* (in Neutral position)	650 ± 50 rpm

*: Under the following conditions
- A/C switch: OFF
- Electric load: OFF (Lights, heater fan & rear window defogger)
- Steering wheel: Kept in straight-ahead position

Ignition Timing

INFOID:0000000004349996

Transmission	Condition	Specification
CVT	No load* (in P or N position)	15 ± 5° BTDC
M/T	No load* (in Neutral position)	15 ± 5° BTDC

*: Under the following conditions
- A/C switch: OFF
- Electric load: OFF (Lights, heater fan & rear window defogger)
- Steering wheel: Kept in straight-ahead position

Calculated Load Value

INFOID:0000000004349997

Condition	Specification (Using CONSULT-III or GST)
At idle	10 – 35 %
At 2,500 rpm	10 – 35 %

Mass Air Flow Sensor

INFOID:0000000004349998

Supply voltage	Battery voltage (11 – 14 V)
Output voltage at idle	0.8 – 1.2V*
Mass air flow (Using CONSULT-III or GST)	1.0 – 4.0 g·m/sec at idle* 4.0 – 10.0 g·m/sec at 2,500 rpm*

*: Engine is warmed up to normal operating temperature and running under no load.

BASIC INSPECTION

DIAGNOSIS AND REPAIR WORK FLOW

Work Flow

INFOID:0000000004361940

OVERALL SEQUENCE

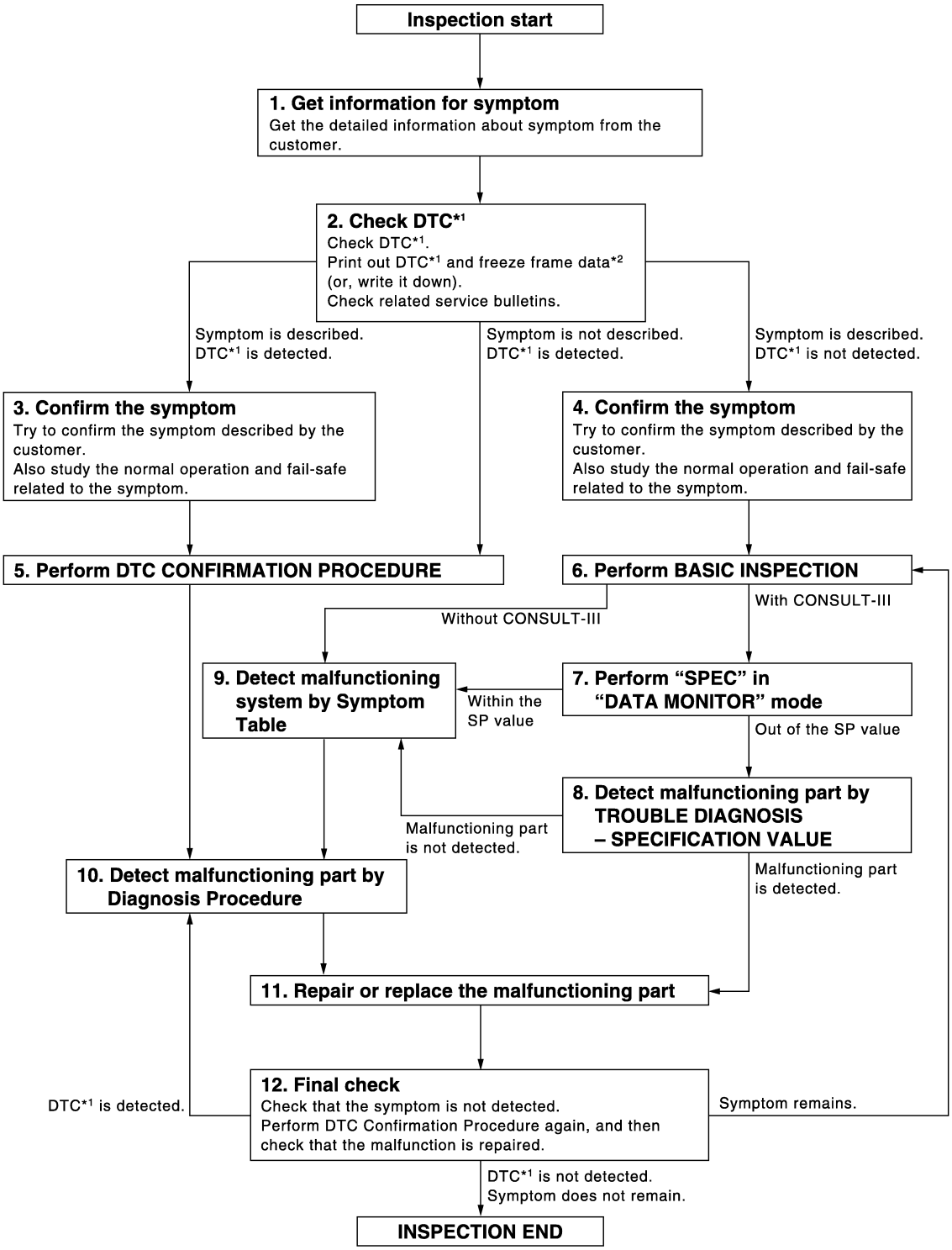

*1: Include 1st trip DTC.
*2: Include 1st trip freeze frame data.

JMBIA1416GB

DETAILED FLOW

1. GET INFORMATION FOR SYMPTOM

Get the detailed information from the customer about the symptom (the condition and the environment when the incident/malfunction occurred) using the “Diagnostic Work Sheet”. (Refer to EC-1047, "Diagnostic Work Sheet".)

>> GO TO 2.

2. CHECK DTC

1. Check DTC.
2. Perform the following procedure if DTC is displayed.
- Record DTC and freeze frame data. (Print them out with CONSULT-III or GST.)
- Erase DTC. (Refer to EC-1142, "Diagnosis Description".)
- Study the relationship between the cause detected by DTC and the symptom described by the customer. (Symptom Table is useful. Refer to EC-1567, "Symptom Table".)
3. Check related service bulletins for information.

Are any symptoms described and any DTCs detected?

Symptom is described, DTC is displayed>>GO TO 3.
Symptom is described, DTC is not displayed>>GO TO 4.
Symptom is not described, DTC is displayed>>GO TO 5.

3. CONFIRM THE SYMPTOM

Try to confirm the symptom described by the customer (except MIL ON).
Also study the normal operation and fail-safe related to the symptom. Refer to EC-1571, "Description" and EC-1551, "Fail-safe".
Diagnosis Work Sheet is useful to verify the incident.
Verify relation between the symptom and the condition when the symptom is detected.

>> GO TO 5.

4. CONFIRM THE SYMPTOM

Try to confirm the symptom described by the customer.
Also study the normal operation and fail-safe related to the symptom. Refer to EC-1571, "Description" and EC-1551, "Fail-safe".
Diagnosis Work Sheet is useful to verify the incident.
Verify relation between the symptom and the condition when the symptom is detected.

>> GO TO 6.

5. PERFORM DTC CONFIRMATION PROCEDURE

Perform DTC CONFIRMATION PROCEDURE for the displayed DTC, and then check that DTC is detected again.
If two or more DTCs are detected, refer to EC-1553, "DTC Inspection Priority Chart" and determine trouble diagnosis order.

NOTE:
- Freeze frame data is useful if the DTC is not detected.
- Perform Component Function Check if DTC CONFIRMATION PROCEDURE is not included on Service Manual. This simplified check procedure is an effective alternative though DTC cannot be detected during this check.
  If the result of Component Function Check is NG, it is the same as the detection of DTC by DTC CONFIRMATION PROCEDURE.

Is DTC detected?

YES >> GO TO 10.
NO >> Check according to GI-42, "Intermittent Incident".

6. PERFORM BASIC INSPECTION

Perform EC-1048, "BASIC INSPECTION : Special Repair Requirement".

Will CONSULT-III be used?

YES >> GO TO 7.
NO >> GO TO 9.

7. PERFORM "SPEC" OF "DATA MONITOR" MODE

With CONSULT-III
Check that "MAS A/F SE-B1", "B/FUEL SCHDL", "A/F ALPHA-B1" and "A/F ALPHA-B2" are within the SP value using "SPEC" of "DATA MONITOR" mode with CONSULT-III. Refer to EC-1167, "Component Function Check".

Are they within the SP value?

YES >> GO TO 9.
NO >> GO TO 8.

8. DETECT MALFUNCTIONING PART BY TROUBLE DIAGNOSIS - SPECIFICATION VALUE

Detect malfunctioning part according to EC-1168, "Diagnosis Procedure".

Is a malfunctioning part detected?

YES >> GO TO 11.
NO >> GO TO 9.

9. DETECT MALFUNCTIONING SYSTEM BY SYMPTOM TABLE

Detect malfunctioning system according to EC-1567, "Symptom Table" based on the confirmed symptom in step 4, and determine the trouble diagnosis order based on possible causes and symptoms.

>> GO TO 10.

10. DETECT MALFUNCTIONING PART BY DIAGNOSTIC PROCEDURE

Inspect according to Diagnostic Procedure of the system.
NOTE:
The Diagnostic Procedure in EC section described based on open circuit inspection. A short circuit inspection is also required for the circuit check in the Diagnostic Procedure. For details, refer to "Circuit Inspection" in GI-45, "Circuit Inspection".

Is a malfunctioning part detected?

YES >> GO TO 11.
NO >> Monitor input data from related sensors or check voltage of related ECM terminals using CONSULT-III. Refer to EC-1510, "Reference Value".

11. REPAIR OR REPLACE THE MALFUNCTIONING PART

1. Repair or replace the malfunctioning part.
2. Reconnect parts or connectors disconnected during Diagnostic Procedure again after repair and replacement.
3. Check DTC. If DTC is displayed, erase it, refer to EC-1142, "Diagnosis Description".

>> GO TO 12.

12. FINAL CHECK

When DTC was detected in step 2, perform DTC CONFIRMATION PROCEDURE or Overall Function Check again, and then check that the malfunction have been completely repaired.
When symptom was described from the customer, refer to confirmed symptom in step 3 or 4, and check that the symptom is not detected.

Is DTC detected and does symptom remain?

YES-1 >> DTC is detected: GO TO 10.
YES-2 >> Symptom remains: GO TO 6.
NO >> Before returning the vehicle to the customer, always erase unnecessary DTC in ECM and TCM (Transmission Control Module). (Refer to EC-1142, "Diagnosis Description".) If the completion of SRT is needed, drive vehicle under the specific DRIVING PATTERN in EC-1558, "How to Set SRT Code".

Diagnostic Work Sheet

INFOID:0000000004361941

DESCRIPTION

There are many operating conditions that lead to the malfunction of engine components. A good grasp of such conditions can make troubleshooting faster and more accurate.
In general, each customer feels differently about symptoms. It is important to fully understand the symptoms or conditions for a customer complaint.
Utilize a diagnostic worksheet like the WORKSHEET SAMPLE below in order to organize all the information for troubleshooting.
Some conditions may cause the MIL to illuminate or blink, and DTC to be detected. Examples:

- Vehicle ran out of fuel, which caused the engine to misfire.
- Fuel filler cap was left off or incorrectly screwed on, allowing fuel to evaporate into the atmosphere.

KEY POINTS

WHAT ..... Vehicle & engine model
WHEN ..... Date, Frequencies
WHERE..... Road conditions
HOW ..... Operating conditions, Weather conditions, Symptoms

SEF907L

WORKSHEET SAMPLE

Customer name MR/MS		Model & Year	VIN
Engine #		Trans.	Mileage
Incident Date		Manuf. Date	In Service Date
Fuel and fuel filler cap		☐ Vehicle ran out of fuel causing misfire ☐ Fuel filler cap was left off or incorrectly screwed on.	
Symptoms	☐ Startability	☐ Impossible to start ☐ No combustion ☐ Partial combustion ☐ Partial combustion affected by throttle position ☐ Partial combustion NOT affected by throttle position ☐ Possible but hard to start ☐ Others [ ]	
	☐ Idling	☐ No fast idle ☐ Unstable ☐ High idle ☐ Low idle ☐ Others [ ]	
	☐ Driveability	☐ Stumble ☐ Surge ☐ Knock ☐ Lack of power ☐ Intake backfire ☐ Exhaust backfire ☐ Others [ ]	
	☐ Engine stall	☐ At the time of start ☐ While idling ☐ While accelerating ☐ While decelerating ☐ Just after stopping ☐ While loading	
Incident occurrence		☐ Just after delivery ☐ Recently ☐ In the morning ☐ At night ☐ In the daytime	
Frequency		☐ All the time ☐ Under certain conditions ☐ Sometimes	
Weather conditions		☐ Not affected	
	Weather	☐ Fine ☐ Raining ☐ Snowing ☐ Others [ ]	
	Temperature	☐ Hot ☐ Warm ☐ Cool ☐ Cold ☐ Humid °F	
Engine conditions		☐ Cold ☐ During warm-up ☐ After warm-up Engine speed 0 2,000 4,000 6,000 8,000 rpm	
Road conditions		☐ In town ☐ In suburbs ☐ Highway ☐ Off road (up/down)	
Driving conditions		☐ Not affected ☐ At starting ☐ While idling ☐ At racing ☐ While accelerating ☐ While cruising ☐ While decelerating ☐ While turning (RH/LH) Vehicle speed 0 10 20 30 40 50 60 MPH	
Malfunction indicator lamp		☐ Turned on ☐ Not turned on	

MTBL0017

INSPECTION AND ADJUSTMENT
BASIC INSPECTION

BASIC INSPECTION : Special Repair Requirement

INFOID:0000000004361942

1. INSPECTION START

1. Check service records for any recent repairs that may indicate a related malfunction, or a current need for scheduled maintenance.
2. Open engine hood and check the following:
- Harness connectors for improper connections
- Wiring harness for improper connections, pinches and cut
- Vacuum hoses for splits, kinks and improper connections
- Hoses and ducts for leakage
- Air cleaner clogging
- Gasket
3. Check that electrical or mechanical loads are not applied.
- Head lamp switch is OFF.
- Air conditioner switch is OFF.
- Rear window defogger switch is OFF.
- Steering wheel is in the straight-ahead position, etc.

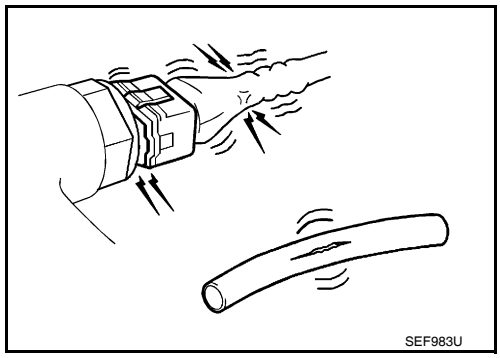

4. Start engine and warm it up until engine coolant temperature indicator points to the middle of gauge.
   Check that engine stays below 1,000 rpm.

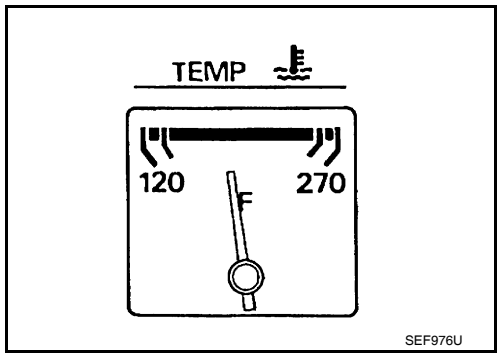

5. Run engine at approximately 2,000 rpm for approximately 2 minutes under no load.
6. Check that no DTC is displayed with CONSULT-III or GST.

Are any DTCs detected?

YES >> GO TO 2.
NO >> GO TO 3.

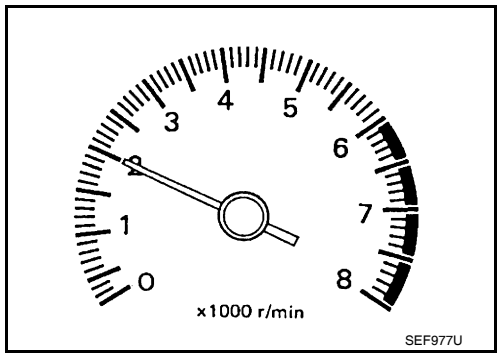

2. REPAIR OR REPLACE

Repair or replace components as necessary according to corresponding Diagnostic Procedure.

>> GO TO 3

3. CHECK IDLE SPEED

1. Run engine at approximately 2,000 rpm for approximately 2 minutes under no load.

2. Rev engine between 2,000 and 3,000 rpm two or 3 times under no load, then run engine at idle speed for approximately 1 minute.
3. Check idle speed.
   For procedure, refer to EC-1052, "IDLE SPEED : Special Repair Requirement".
   For specification, refer to EC-1585, "Idle Speed".

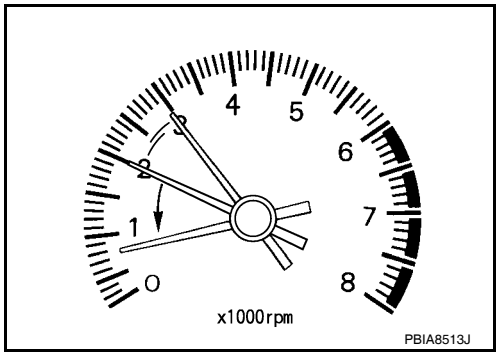

Is the inspection result normal?

YES >> GO TO 10.
NO >> GO TO 4.

4. PERFORM ACCELERATOR PEDAL RELEASED POSITION LEARNING

1. Stop engine.
2. Perform EC-1053, "ACCELERATOR PEDAL RELEASED POSITION LEARNING : Special Repair Requirement".

>> GO TO 5.

5. PERFORM THROTTLE VALVE CLOSED POSITION LEARNING

Perform EC-1053, "THROTTLE VALVE CLOSED POSITION LEARNING : Special Repair Requirement".

>> GO TO 6.

6. PERFORM IDLE AIR VOLUME LEARNING

Perform EC-1053, "IDLE AIR VOLUME LEARNING : Special Repair Requirement".

Is Idle Air Volume Learning carried out successfully?

YES >> GO TO 7.
NO >> Follow the instruction of Idle Air Volume Learning. Then GO TO 4.

7. CHECK IDLE SPEED AGAIN

1. Start engine and warm it up to normal operating temperature.
2. Check idle speed.
   For procedure, refer to EC-1052, "IDLE SPEED : Special Repair Requirement".
   For specification, refer to EC-1585, "Idle Speed".

Is the inspection result normal?

YES >> GO TO 10.
NO >> GO TO 8.

8. DETECT MALFUNCTIONING PART

Check the Following.
- Check camshaft position sensor (PHASE) and circuit. Refer to EC-1297, "Diagnosis Procedure".
- Check crankshaft position sensor (POS) and circuit. Refer to EC-1293, "Diagnosis Procedure".

Is the inspection result normal?

YES >> GO TO 9.
NO >> Repair or replace malfunctioning part.Then GO TO 4.

9. CHECK ECM FUNCTION

1. Substitute with a non-malfunctioning ECM to check ECM function. (ECM may be the cause of the incident, although this is rare.)
2. Perform initialization of NVIS (NATS) system and registration of all NVIS (NATS) ignition key IDs. Refer to SEC-15, "ECM RE-COMMUNICATING FUNCTION : Special Repair Requirement" (COUPE models) or SEC-214, "ECM RE-COMMUNICATING FUNCTION : Special Repair Requirement" (SEDAN models).

>> GO TO 4.

10. CHECK IGNITION TIMING

1. Run engine at idle.

2. Check ignition timing with a timing light.
   For procedure, refer to EC-1052, "IGNITION TIMING : Special Repair Requirement".
   For specification, refer to EC-1585, "Ignition Timing".

Is the inspection result normal?

YES >> GO TO 19.
NO >> GO TO 11.

11. PERFORM ACCELERATOR PEDAL RELEASED POSITION LEARNING

1. Stop engine.
2. Perform EC-1053, "ACCELERATOR PEDAL RELEASED POSITION LEARNING : Special Repair Requirement".

>> GO TO 12.

12. PERFORM THROTTLE VALVE CLOSED POSITION LEARNING

Perform EC-1053, "THROTTLE VALVE CLOSED POSITION LEARNING : Special Repair Requirement".

>> GO TO 13.

13. PERFORM IDLE AIR VOLUME LEARNING

Perform EC-1053, "IDLE AIR VOLUME LEARNING : Special Repair Requirement".

Is Idle Air Volume Learning carried out successfully?

YES >> GO TO 14.
NO >> Follow the instruction of Idle Air Volume Learning. Then GO TO 4.

14. CHECK IDLE SPEED AGAIN

1. Start engine and warm it up to normal operating temperature.
2. Check idle speed.
   For procedure, refer to EC-1052, "IDLE SPEED : Special Repair Requirement".
   For specification, refer to EC-1585, "Idle Speed".

Is the inspection result normal?

YES >> GO TO 15.
NO >> GO TO 17.

15. CHECK IGNITION TIMING AGAIN

1. Run engine at idle.
2. Check ignition timing with a timing light.
   For procedure, refer to EC-1052, "IGNITION TIMING : Special Repair Requirement".
   For specification, refer to EC-1585, "Ignition Timing".

Is the inspection result normal?

YES >> GO TO 19.
NO >> GO TO 16.

16. CHECK TIMING CHAIN INSTALLATION

Check timing chain installation. Refer to EM-166, "Installation".

Is the inspection result normal?

YES >> GO TO 17.
NO >> Follow the instruction of Idle Air Volume Learning. Then GO TO 4.

17. DETECT MALFUNCTIONING PART

Check the following.
- Check camshaft position sensor (PHASE) and circuit. Refer to EC-1297, "Diagnosis Procedure".
- Check crankshaft position sensor (POS) and circuit. Refer to EC-1293, "Diagnosis Procedure".

Is the inspection result normal?

YES >> GO TO 18.
NO >> Follow the instruction of Idle Air Volume Learning. Then GO TO 4.

18. CHECK ECM FUNCTION

1. Substitute with a non-malfunctioning ECM to check ECM function. (ECM may be the cause of the incident, although this is rare.)
2. Perform initialization of NVIS (NATS) system and registration of all NVIS (NATS) ignition key IDs. Refer to EC-1051, "ADDITIONAL SERVICE WHEN REPLACING CONTROL UNIT : Special Repair Requirement".

>> GO TO 4.

19. INSPECTION END

If ECM is replaced during this BASIC INSPECTION procedure, perform EC-1051, "ADDITIONAL SERVICE WHEN REPLACING CONTROL UNIT : Special Repair Requirement".

>> INSPECTION END

ADDITIONAL SERVICE WHEN REPLACING CONTROL UNIT

ADDITIONAL SERVICE WHEN REPLACING CONTROL UNIT : Description

INFOID:0000000004361943

When replacing ECM, the following procedure must be performed.

ADDITIONAL SERVICE WHEN REPLACING CONTROL UNIT : Special Repair Requirement

INFOID:0000000004361944

1. PERFORM INITIALIZATION OF NVIS (NATS) SYSTEM AND REGISTRATION OF ALL NVIS (NATS) IGNITION KEY IDS

Refer to SEC-15, "ECM RE-COMMUNICATING FUNCTION : Special Repair Requirement" (COUPE models) or SEC-214, "ECM RE-COMMUNICATING FUNCTION : Special Repair Requirement" (SEDAN models).

>> GO TO 2.

2. PERFORM VIN REGISTRATION

Refer to EC-1052, "VIN REGISTRATION : Special Repair Requirement".

>> GO TO 3.

3. PERFORM ACCELERATOR PEDAL RELEASED POSITION LEARNING

Refer to EC-1053, "ACCELERATOR PEDAL RELEASED POSITION LEARNING : Special Repair Requirement".

>> GO TO 4.

4. PERFORM THROTTLE VALVE CLOSED POSITION LEARNING

Refer to EC-1053, "THROTTLE VALVE CLOSED POSITION LEARNING : Special Repair Requirement".

>> GO TO 5.

5. PERFORM IDLE AIR VOLUME LEARNING

Refer to EC-1053, "IDLE AIR VOLUME LEARNING : Special Repair Requirement".

>> END

IDLE SPEED

IDLE SPEED : Description

INFOID:0000000004361945

This describes how to check the idle speed. For the actual procedure, follow the instructions in “BASIC INSPECTION”.

IDLE SPEED : Special Repair Requirement

INFOID:0000000004361946

1. CHECK IDLE SPEED

With CONSULT-III
Check idle speed in “DATA MONITOR” mode with CONSULT-III.
With GST
Check idle speed with Service $01 of GST.

>> INSPECTION END

IGNITION TIMING

IGNITION TIMING : Description

INFOID:0000000004361947

This describes how to check the ignition timing. For the actual procedure, follow the instructions in “BASIC INSPECTION”.

IGNITION TIMING : Special Repair Requirement

INFOID:0000000004361948

1. CHECK IGNITION TIMING

1. Attach timing light to loop wires (2) as shown.
- Intake manifold collector (1)
- Timing light pick-up lead (3)
- ⇦: Vehicle front

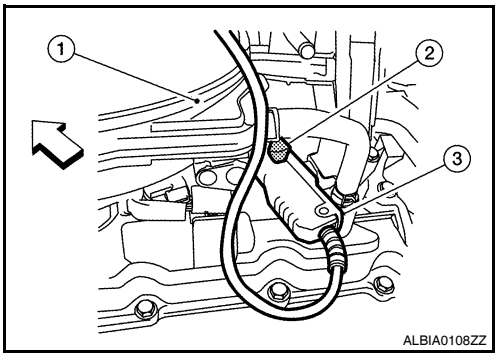

2. Check ignition timing.

>> INSPECTION END

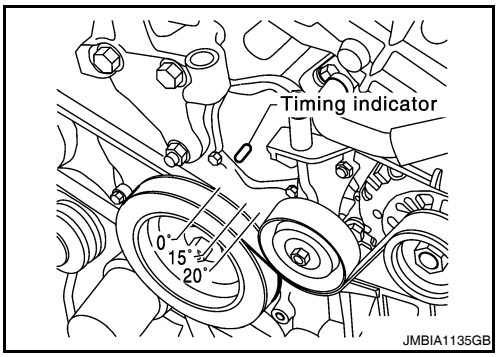

VIN REGISTRATION

VIN REGISTRATION : Description

INFOID:0000000004361949

VIN Registration is an operation to register VIN in ECM. It must be performed each time ECM is replaced.
NOTE:
Accurate VIN which is registered in ECM may be required for Inspection & Maintenance (I/M).

VIN REGISTRATION : Special Repair Requirement

INFOID:0000000004361950

1. CHECK VIN

Check the VIN of the vehicle and note it. Refer to GI-21, "Model Variation - Coupe" or GI-20, "Model Variation - Sedan".

>> GO TO 2.

2. PERFORM VIN REGISTRATION

With CONSULT-III

1. Turn ignition switch ON and engine stopped.
2. Select “VIN REGISTRATION” in “WORK SUPPORT” mode.
3. Follow the instruction of CONSULT-III display.

>> END

ACCELERATOR PEDAL RELEASED POSITION LEARNING

ACCELERATOR PEDAL RELEASED POSITION LEARNING : Description

INFOID:0000000004361951

Accelerator Pedal Released Position Learning is a function of ECM to learn the fully released position of the accelerator pedal by monitoring the accelerator pedal position sensor output signal. It must be performed each time the harness connector of the accelerator pedal position sensor or ECM is disconnected.

ACCELERATOR PEDAL RELEASED POSITION LEARNING : Special Repair Requirement

INFOID:0000000004361952

1. START

1. Check that accelerator pedal is fully released.
2. Turn ignition switch ON and wait at least 2 seconds.
3. Turn ignition switch OFF and wait at least 10 seconds.
4. Turn ignition switch ON and wait at least 2 seconds.
5. Turn ignition switch OFF and wait at least 10 seconds.

>> END

THROTTLE VALVE CLOSED POSITION LEARNING

THROTTLE VALVE CLOSED POSITION LEARNING : Description

INFOID:0000000004361953

Throttle Valve Closed Position Learning is a function of ECM to learn the fully closed position of the throttle valve by monitoring the throttle position sensor output signal. It must be performed each time the harness connector of electric throttle control actuator or ECM is disconnected.

THROTTLE VALVE CLOSED POSITION LEARNING : Special Repair Requirement

INFOID:0000000004361954

1. START

1. Check that accelerator pedal is fully released.
2. Turn ignition switch ON.
3. Turn ignition switch OFF and wait at least 10 seconds.
   Check that throttle valve moves during the above 10 seconds by confirming the operating sound.

>> END

IDLE AIR VOLUME LEARNING

IDLE AIR VOLUME LEARNING : Description

INFOID:0000000004361955

Idle Air Volume Learning is a function of ECM to learn the idle air volume that keeps engine idle speed within the specific range. It must be performed under the following conditions:

- Each time the electric throttle control actuator or ECM is replaced.
- Idle speed or ignition timing is out of the specification.

IDLE AIR VOLUME LEARNING : Special Repair Requirement

INFOID:0000000004361956

1. PRECONDITIONING

Check that all of the following conditions are satisfied.

Learning will be cancelled if any of the following conditions are missed for even a moment.
- Battery voltage: More than 12.9 V (At idle)
- Engine coolant temperature: 70 - 100°C (158 - 212°F)
- Selector lever position: P or N
- Electric load switch: OFF
  (Air conditioner, head lamp, rear window defogger)
  On vehicles equipped with daytime light systems, if the parking brake is applied before the engine is started the head lamp will not illuminate.
- Steering wheel: Neutral (Straight-ahead position)
- Vehicle speed: Stopped
- Transmission: Warmed-up
- CVT models
- With CONSULT-III: Drive vehicle until “ATF TEMP SEN” in “DATA MONITOR” mode of “CVT” system indicates less than 0.9 V.
- Without CONSULT-III: Drive vehicle for 10 minutes.
- M/T models
- Drive vehicle for 10 minutes.

Will CONSULT-III be used?

YES >> GO TO 2.
NO >> GO TO 3.

2. PERFORM IDLE AIR VOLUME LEARNING

With CONSULT-III

1. Perform EC-1053, "ACCELERATOR PEDAL RELEASED POSITION LEARNING : Special Repair Requirement".
2. Perform EC-1053, "THROTTLE VALVE CLOSED POSITION LEARNING : Special Repair Requirement".
3. Start engine and warm it up to normal operating temperature.
4. Select “IDLE AIR VOL LEARN” in “WORK SUPPORT” mode.
5. Touch “START” and wait 20 seconds.

Is “CMPLT” displayed on CONSULT-III screen?

YES >> GO TO 4.
NO >> GO TO 5.

3. PERFORM IDLE AIR VOLUME LEARNING

Without CONSULT-III

NOTE:
- **It is better to count the time accurately with a clock.**
- **It is impossible to switch the diagnostic mode when an accelerator pedal position sensor circuit has a malfunction.**

1. Perform EC-1053, "ACCELERATOR PEDAL RELEASED POSITION LEARNING : Special Repair Requirement".
2. Perform EC-1053, "THROTTLE VALVE CLOSED POSITION LEARNING : Special Repair Requirement".
3. Start engine and warm it up to normal operating temperature.
4. Turn ignition switch OFF and wait at least 10 seconds.
5. Confirm that accelerator pedal is fully released, turn ignition switch ON and wait 3 seconds.
6. Repeat the following procedure quickly 5 times within 5 seconds.
   - Fully depress the accelerator pedal.
   - Fully release the accelerator pedal.
7. Wait 7 seconds, fully depress the accelerator pedal for approx. 20 seconds until the MIL stops blinking and turns ON.
8. Fully release the accelerator pedal within 3 seconds after the MIL turns ON.
9. Start engine and let it idle.

10. Wait 20 seconds.

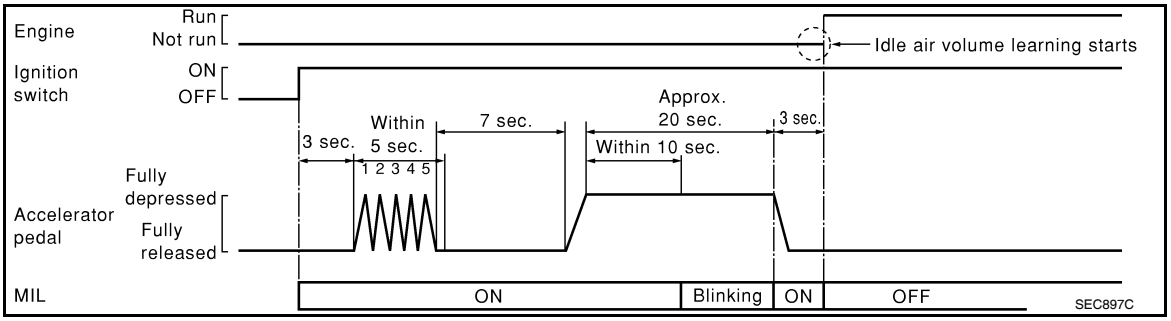

>> GO TO 4.

4. CHECK IDLE SPEED AND IGNITION TIMING

Rev up the engine two or 3 times and check that idle speed and ignition timing are within the specifications.
For procedure, refer to EC-1052, "IDLE SPEED : Special Repair Requirement" and EC-1052, "IGNITION TIMING : Special Repair Requirement".
For specifications, refer to EC-1585, "Idle Speed" and EC-1585, "Ignition Timing".

Is the inspection result normal?

YES >> INSPECTION END
NO >> GO TO 5.

5. DETECT MALFUNCTIONING PART-I

Check the following
- Check that throttle valve is fully closed.
- Check PCV valve operation.
- Check that downstream of throttle valve is free from air leakage.

Is the inspection result normal?

YES >> GO TO 6.
NO >> Repair or replace malfunctioning part.

6. DETECT MALFUNCTIONING PART-II

Engine component parts and their installation condition are questionable. Check and eliminate the cause of the incident.
It is useful to perform “TROUBLE DIAGNOSIS - SPECIFICATION VALUE”. Refer to EC-1167, "Description".
If any of the following conditions occur after the engine has started, eliminate the cause of the incident and perform Idle Air Volume Learning again:
- Engine stalls.
- Incorrect idle.

>> INSPECTION END

MIXTURE RATIO SELF-LEARNING VALUE CLEAR

MIXTURE RATIO SELF-LEARNING VALUE CLEAR : Description

INFOID:0000000004361959

This describes show to erase the mixture ratio self-learning value. For the actual procedure, follow the instructions in “Diagnosis Procedure”.

MIXTURE RATIO SELF-LEARNING VALUE CLEAR : Special Repair Requirement

INFOID:0000000004361960

1. START

With CONSULT-III
1. Start engine and warm it up to normal operating temperature.
2. Select “SELF-LEARNING CONT” in “WORK SUPPORT” mode with CONSULT-III.
3. Clear mixture ratio self-learning value by touching “CLEAR”.

With GST

1. Start engine and warm it up to normal operating temperature.
2. Turn ignition switch OFF.
3. Disconnect mass air flow sensor harness connector.
4. Restart engine and let it idle for at least 5 seconds.
5. Stop engine and reconnect mass air flow sensor harness connector.
6. Select Service $03 with GST. Check that DTC P0102 is detected.
7. Select Service $04 with GST to erase the DTC P0102.

>> END

FUNCTION DIAGNOSIS

ENGINE CONTROL SYSTEM

System Diagram

INFOID:0000000004361961

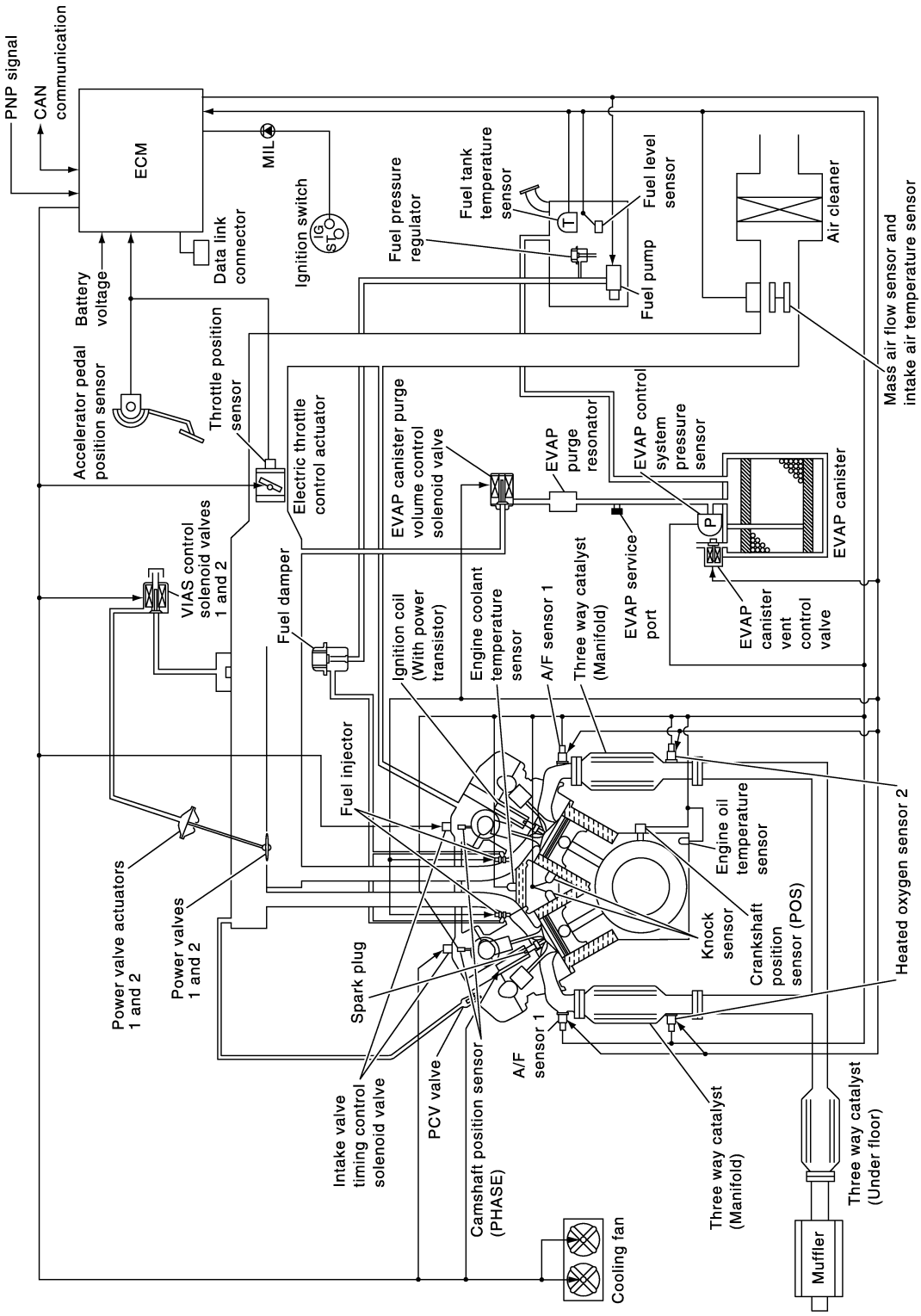

JMBIA1136GB

System Description

INFOID:0000000004361962

ECM performs various controls such as fuel injection control and ignition timing control.

Component Parts Location

INFOID:0000000004404402

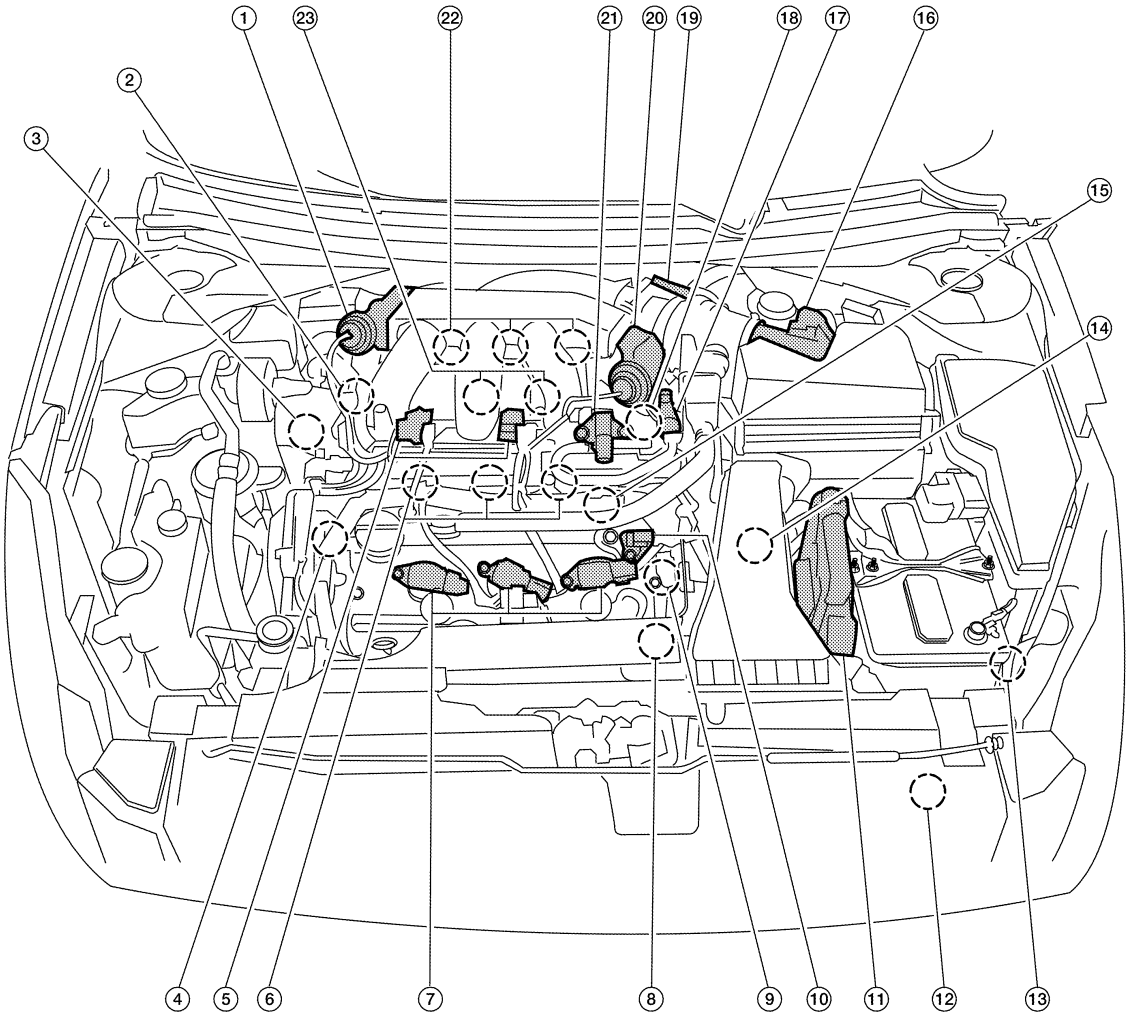

ALBIA0110ZZ

1.	Power valve actuator 1	2.	Intake valve timing control solenoid valve (bank 1)	3.	Power steering pressure sensor
4.	Intake valve timing control solenoid valve (bank 2)	5.	VIAS control solenoid valves 1 and 2	6.	Fuel injector (bank 2)
7.	Ignition coil (with power transistor) and spark plug (bank 2)	8.	Crankshaft position sensor (POS)	9.	Engine coolant temperature sensor
10.	Camshaft position sensor (PHASE) (bank 2)	11.	ECM	12.	Refrigerant pressure sensor
13.	Battery current sensor	14.	PNP switch	15.	Condenser-2
16.	Mass air flow sensor (with intake air temperature sensor)	17.	EVAP service port	18.	Camshaft position sensor (PHASE) (bank 1)

19. Electric throttle control actuator
20. Power valve actuator 2
21. EVAP canister purge volume control solenoid valve
22. Ignition coil (with power transistor) and spark plug (bank 1)
23. Knock sensor

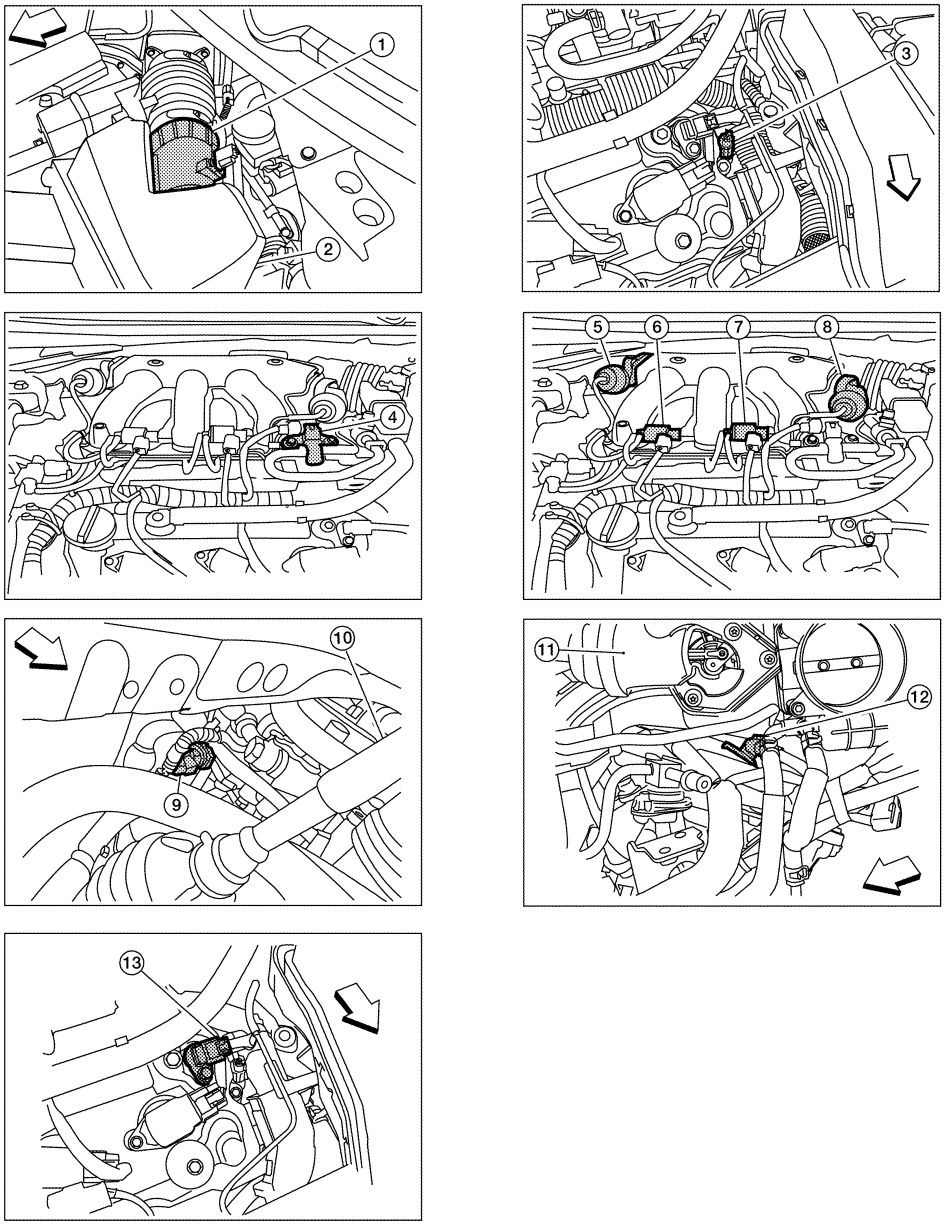

ALBIA0101ZZ

1. Mas air flow sensor (with intake air temperature sensor)
2. Air cleaner case
3. Engine coolant temperature sensor
4. EVAP canister purge volume control solenoid valve
5. Power valve actuator 1
6. VIAS control solenoid valve 1
7. VIAS control solenoid valve 2
8. Power valve actuator 2
9. Power steering pressure sensor
10. Tie rod (RH)
11. Power valve actuator 2
12. Camshaft position sensor (PHASE) (bank 1)
13. Camshaft position sensor (PHASE) (bank 2)

⇦ : Vehicle front

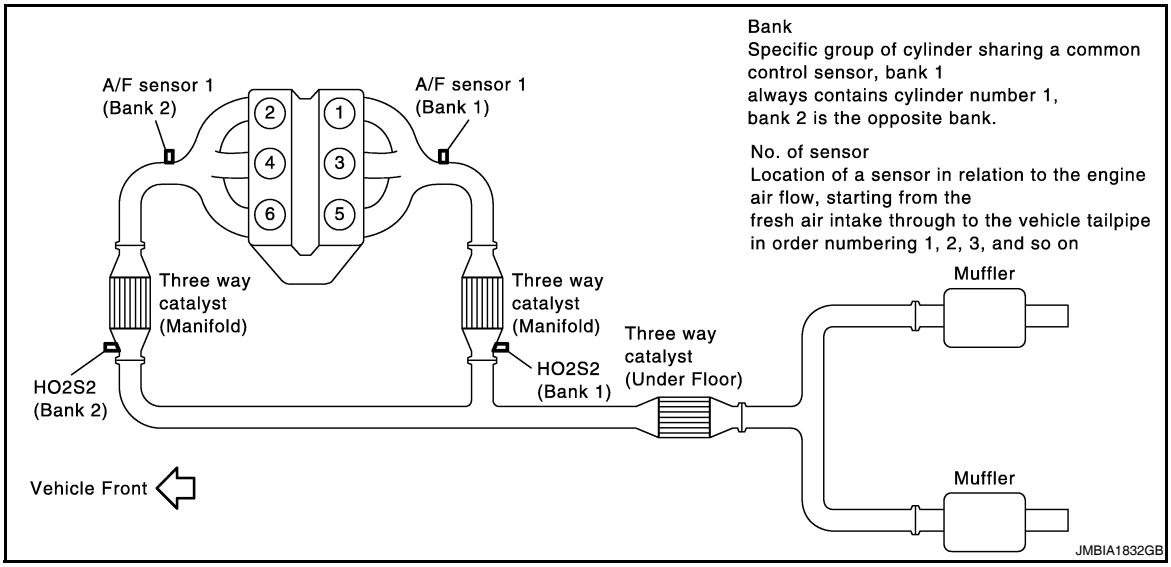
Bank
Specific group of cylinder sharing a common control sensor, bank 1 always contains cylinder number 1, bank 2 is the opposite bank.
No. of sensor
Location of a sensor in relation to the engine air flow, starting from the fresh air intake through to the vehicle tailpipe in order numbering 1, 2, 3, and so on
A/F sensor 1 (Bank 2)
A/F sensor 1 (Bank 1)
2
1
4
3
6
5
Three way catalyst (Manifold)
Three way catalyst (Manifold)
HO2S2 (Bank 2)
HO2S2 (Bank 1)
Three way catalyst (Under Floor)
Muffler
Muffler
Vehicle Front
JMBIA1832GB

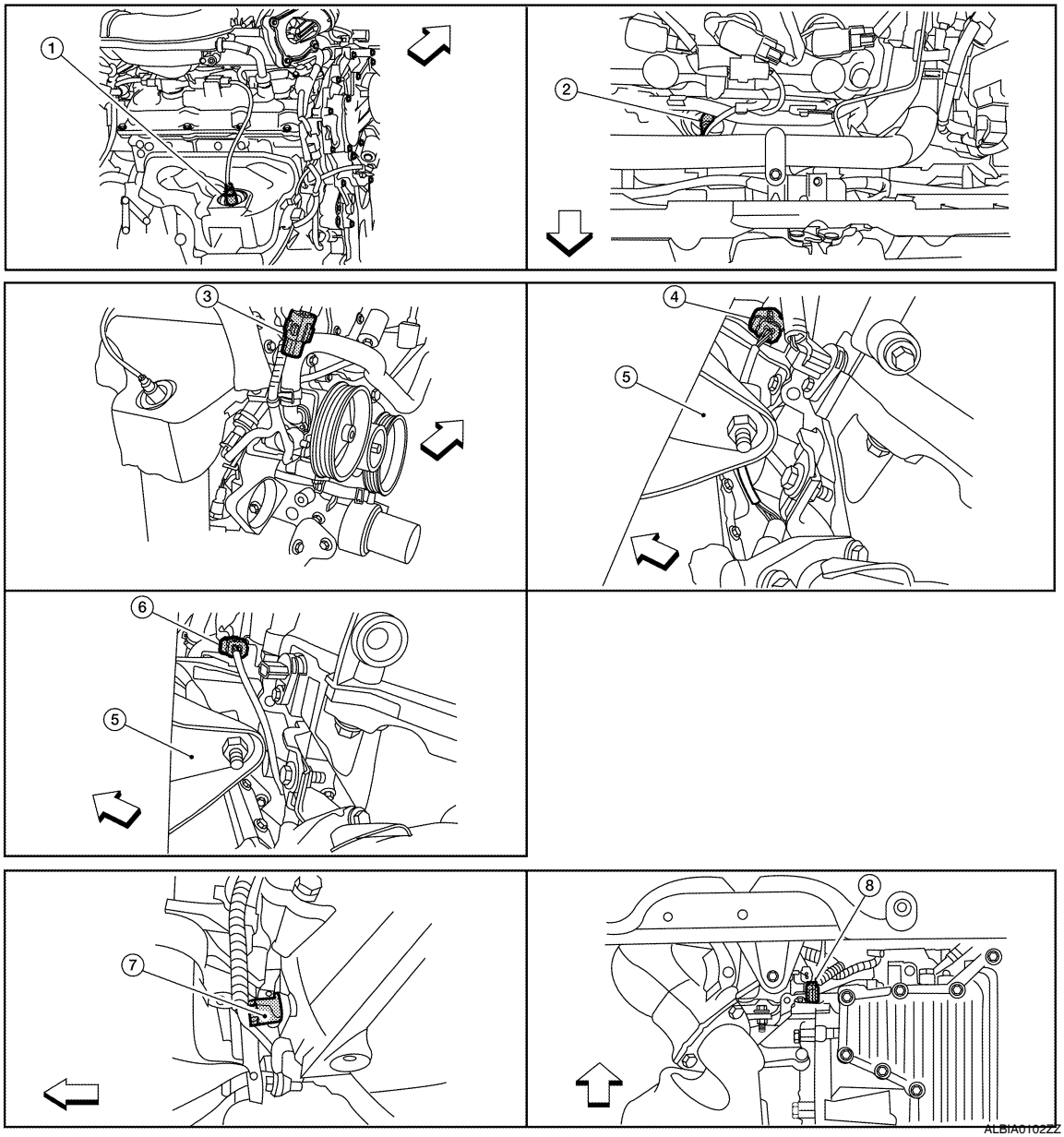
1
2
3
4
5
6
5
7
8
ALBIA0102ZZ

1. A/F sensor 1 (bank 1)
2. A/F sensor 1 (bank 2)
3. HO2S2 (bank 1) harness connector
4. HO2S2 (bank 2) harness connector (CVT models)
5. Front engine mount
6. HO2S2 (bank 2) harness connector (M/T models)
7. Crankshaft position sensor (POS) (M/T models)
8. Crankshaft position sensor (POS) (CVT models)

⇦ : Vehicle front

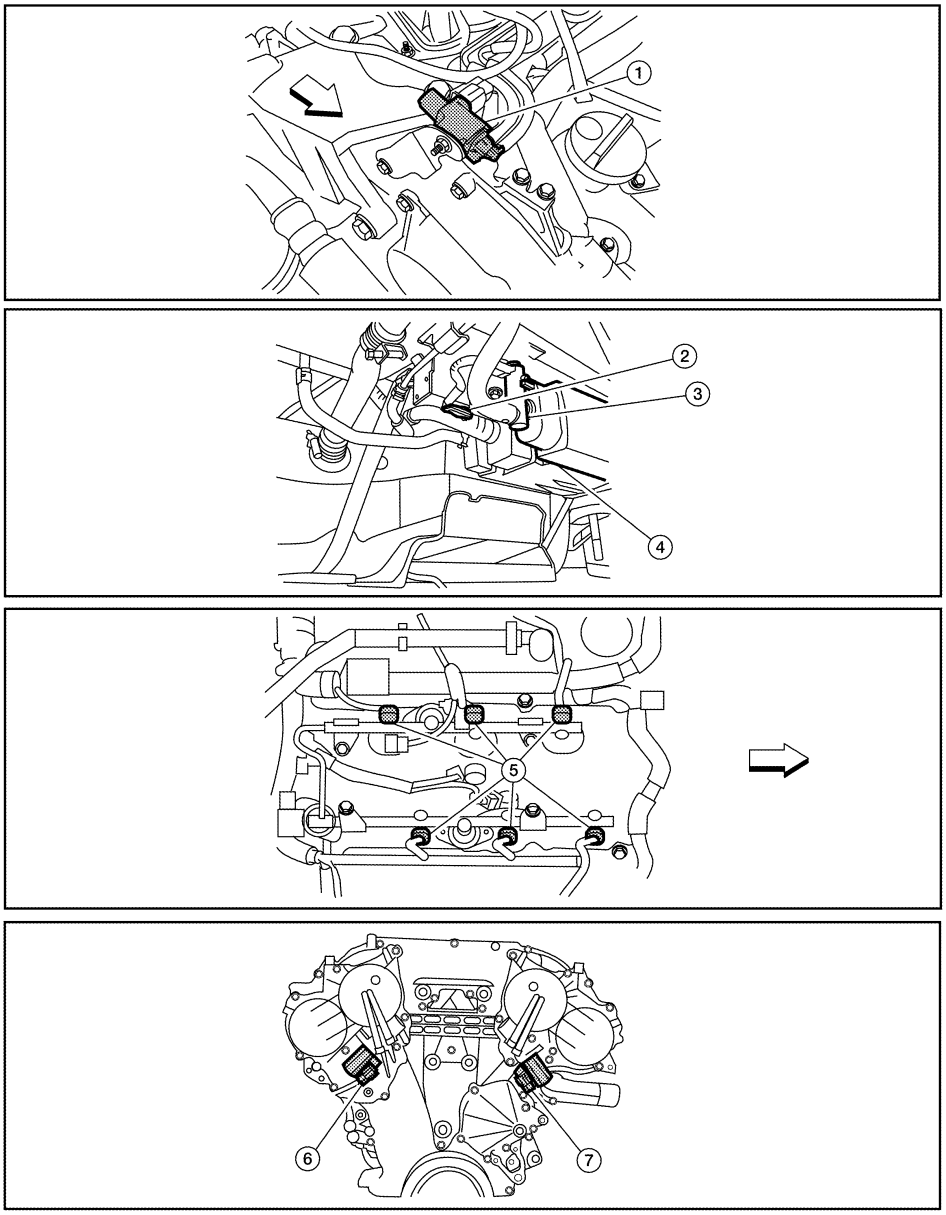

ALBIA0103ZZ

1. Electronic controlled engine mount control solenoid valve
2. EVAP control system pressure sensor
3. EVAP canister vent control valve
4. EVAP canister
5. Injector harness connector
6. Intake valve timing control solenoid valve (bank 1)
7. Intake valve timing control solenoid valve (bank 2)

⇦ : Vehicle front

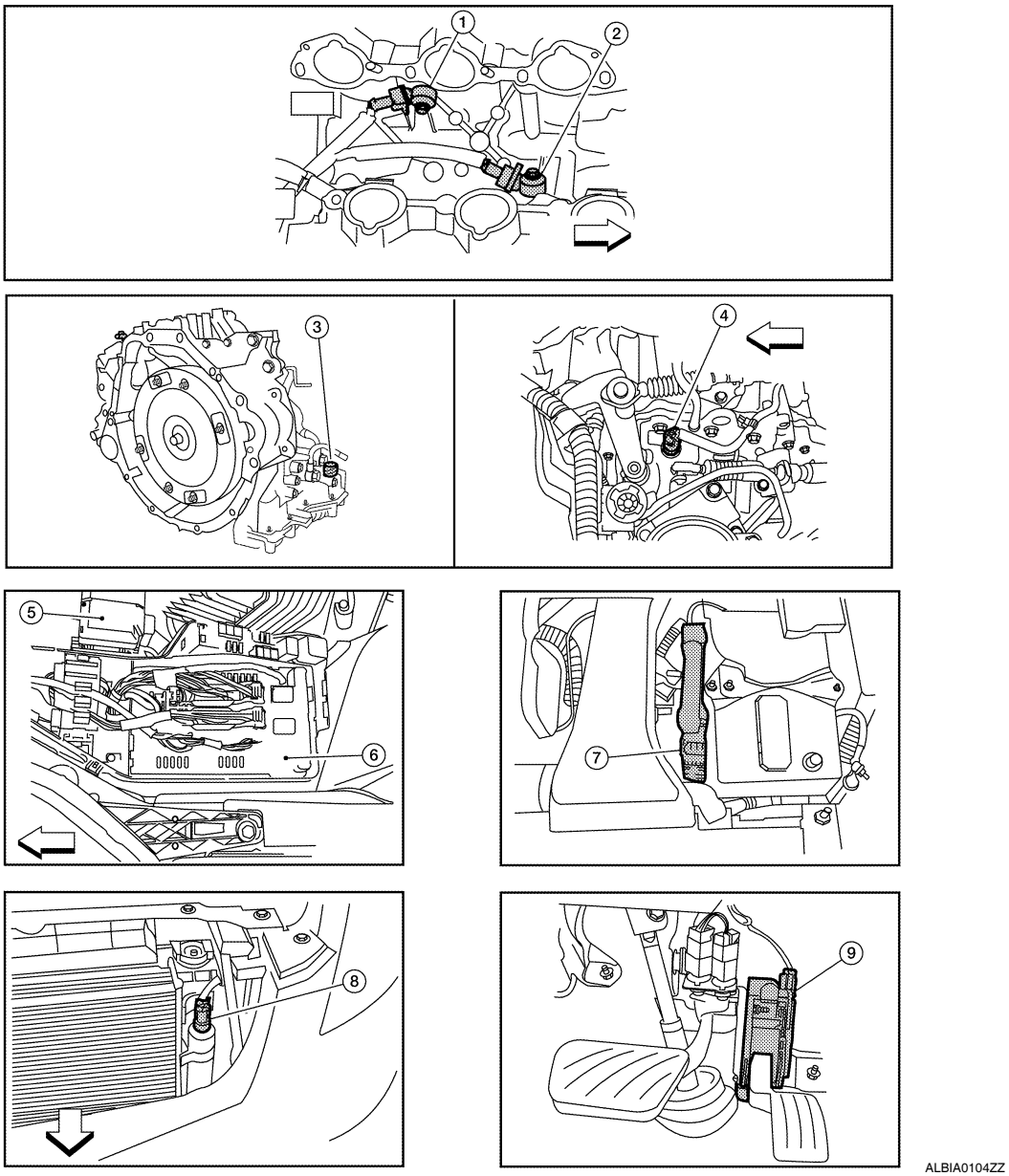

1. Knock sensor (bank 2)
2. Knock sensor (bank 1)
3. PNP switch (CVT models)
4. PNP switch (M/T models)
5. Battery
6. IPDM E/R
7. ECM
8. Refrigerant pressure sensor (shown with front grill removed)
9. Accelerator pedal

⇦ : Vehicle front

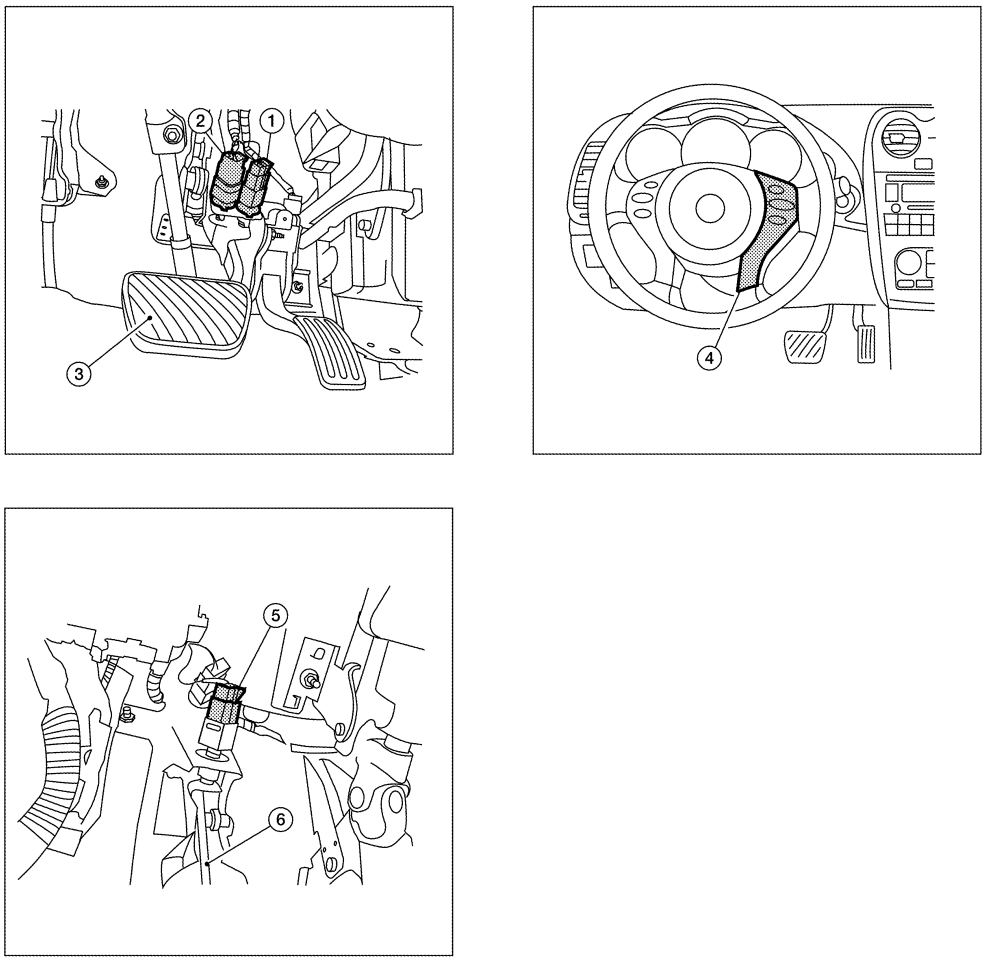

ALBIA0105ZZ

1. ASCD brake switch
2. Stop lamp switch
3. Brake pedal
4. ASCD steering switch
5. ASCD clutch switch (M/T models)
6. Clutch pedal

Component Description

INFOID:0000000004361964

Component	Reference
A/F sensor 1	EC-1225, "Description"
A/F sensor 1 heater	EC-1184, "Description"
Accelerator pedal position sensor	EC-1448, "Description"
ASCD brake switch	EC-1413, "Description"
ASCD steering switch	EC-1410, "Description"
Battery current sensor	EC-1398, "Description"
Camshaft position sensor (PHASE)	EC-1296, "Description"
Cooling fan motor	EC-1473, "Description"

Component	Reference
Crankshaft position sensor (POS)	EC-1292, "Description"
Electric throttle control actuator	EC-1446, "Description"
Electronic controlled engine mount	EC-1480, "Description"
Engine coolant temperature sensor	EC-1210, "Description"
EVAP canister purge volume control solenoid valve	EC-1316, "Description"
EVAP canister vent control valve	EC-1324, "Description"
EVAP control system pressure sensor	EC-1332, "Description"
Fuel injector	EC-1483, "Description"
Fuel level sensor	EC-1359, "Description"
Fuel pump	EC-1486, "Description"
Fuel tank temperature sensor	EC-1274, "Description"
Heated oxygen sensor 2	EC-1242, "Description"
Heated oxygen sensor 2 heater	EC-1187, "Description"
Ignition coil with power transistor	EC-1491, "Description"
Intake air temperature sensor	EC-1207, "Description"
Intake valve timing control solenoid valve	EC-1191, "Description"
Knock sensor	EC-1289, "Description"
Mass air flow sensor	EC-1194, "Description"
Park/neutral position (PNP) switch (M/T)	EC-1382, "Description"
PCV valve	EC-1502, "Description"
Power steering pressure sensor	EC-1371, "Description"
Power valves 1 and 2	EC-1506, "Description"
Refrigerant pressure sensor	EC-1503, "Description"
Stop lamp switch	EC-1434, "Description"
TCM (CVT)	EC-1382, "Description"
Throttle control motor	EC-1443, "Description"
Throttle control motor relay	EC-1437, "Description"
Throttle position sensor	EC-1215, "Description"
VIAS control solenoid valve 1	EC-1428, "Description"
VIAS control solenoid valve 2	EC-1431, "Description"

MULTIPORT FUEL INJECTION SYSTEM

System Diagram

INFOID:0000000004361965

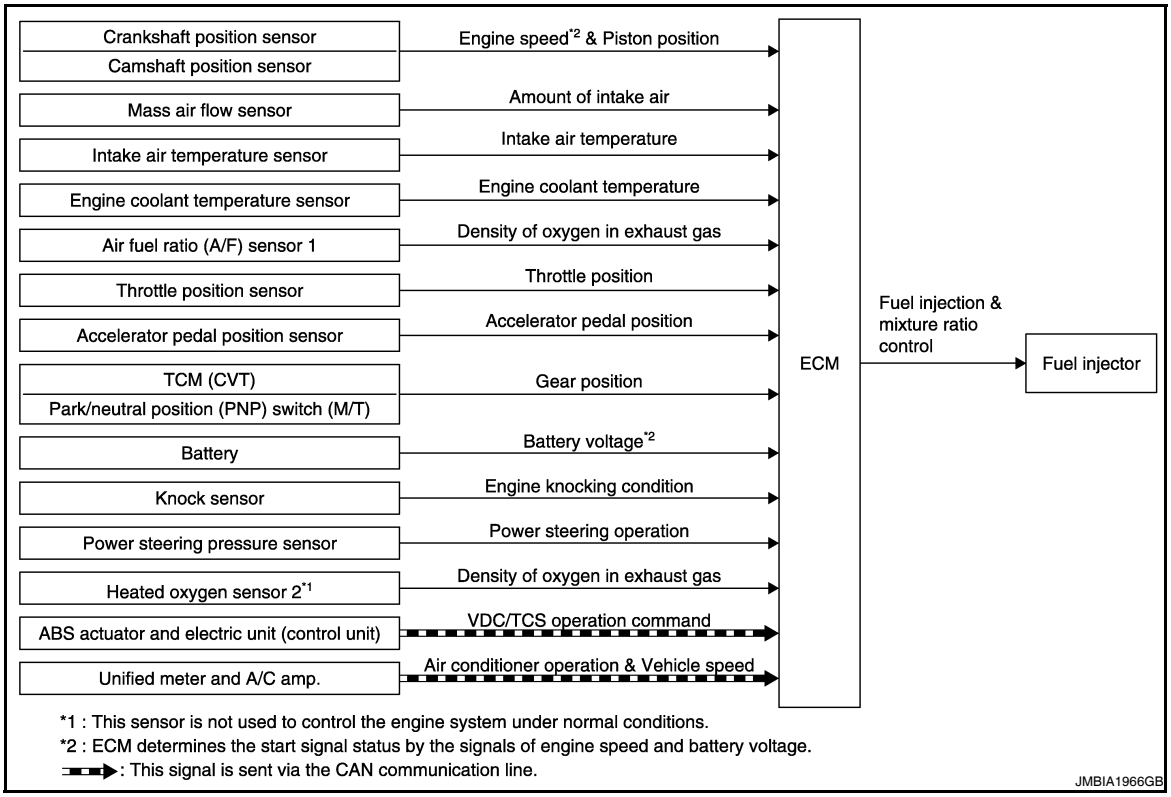

System Description

INFOID:0000000004361966

INPUT/OUTPUT SIGNAL CHART

Sensor	Input signal to ECM	ECM function	Actuator
Crankshaft position sensor (POS)	Engine speed*3 Piston position	Fuel injection & mixture ratio control	Fuel injector
Camshaft position sensor (PHASE)			
Mass air flow sensor	Amount of intake air		
Intake air temperature sensor	Intake air temperature		
Engine coolant temperature sensor	Engine coolant temperature		
Air fuel ratio (A/F) sensor 1	Density of oxygen in exhaust gas		
Throttle position sensor	Throttle position		
Accelerator pedal position sensor	Accelerator pedal position		
TCM (CVT) Park/neutral position (PNP) switch (M/T)	Gear position		
Battery	Battery voltage*3		
Knock sensor	Engine knocking condition		
Power steering pressure sensor	Power steering operation		
Heated oxygen sensor 2*1	Density of oxygen in exhaust gas		
ABS actuator and electric unit (control unit)	VDC/TCS operation command*2		
Unified meter and A/C amp.	Air conditioner operation*2		
	Vehicle speed*2		

*1: This sensor is not used to control the engine system under normal conditions.

*2: This signal is sent to the ECM via the CAN communication line.

*3: ECM determines the start signal status by the signals of engine speed and battery voltage.

SYSTEM DESCRIPTION

The amount of fuel injected from the fuel injector is determined by the ECM. The ECM controls the length of time the valve remains open (injection pulse duration). The amount of fuel injected is a program value in the ECM memory. The program value is preset by engine operating conditions. These conditions are determined by input signals (for engine speed and intake air) from the crankshaft position sensor (POS), camshaft position sensor (PHASE) and the mass air flow sensor.

VARIOUS FUEL INJECTION INCREASE/DECREASE COMPENSATION

In addition, the amount of fuel injected is compensated to improve engine performance under various operating conditions as listed below.

<Fuel increase>
- During warm-up
- When starting the engine
- During acceleration
- Hot-engine operation
- When selector lever position is changed from N to D (CVT models)
- High-load, high-speed operation

<Fuel decrease>
- During deceleration
- During high engine speed operation

MIXTURE RATIO FEEDBACK CONTROL (CLOSED LOOP CONTROL)

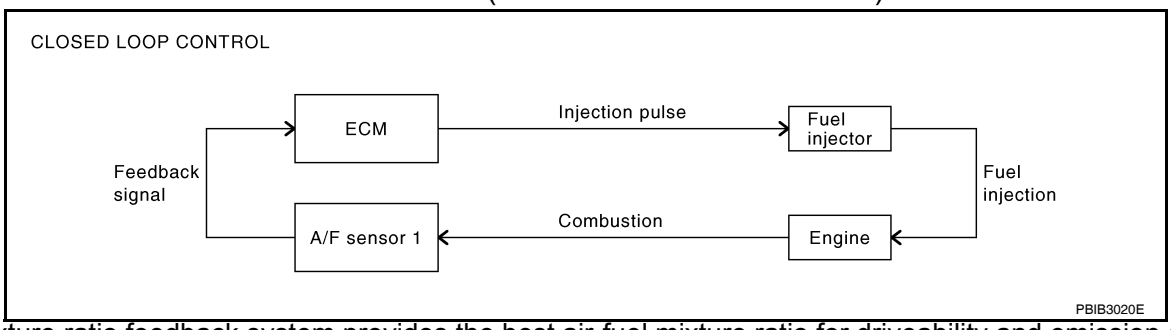

The mixture ratio feedback system provides the best air-fuel mixture ratio for driveability and emission control. The three way catalyst (manifold) can better reduce CO, HC and NOx emissions. This system uses A/F sensor 1 in the exhaust manifold to monitor whether the engine operation is rich or lean. The ECM adjusts the injection pulse width according to the sensor voltage signal. For more information about A/F sensor 1, refer to EC-1225, "Description". This maintains the mixture ratio within the range of stoichiometric (ideal air-fuel mixture).

This stage is referred to as the closed loop control condition.

Heated oxygen sensor 2 is located downstream of the three way catalyst (manifold). Even if the switching characteristics of A/F sensor 1 shift, the air-fuel ratio is controlled to stoichiometric by the signal from heated oxygen sensor 2.

- Open Loop Control
  The open loop system condition refers to when the ECM detects any of the following conditions. Feedback control stops in order to maintain stabilized fuel combustion.
- Deceleration and acceleration
- High-load, high-speed operation
- Malfunction of A/F sensor 1 or its circuit
- Insufficient activation of A/F sensor 1 at low engine coolant temperature
- High engine coolant temperature
- During warm-up
- After shifting from N to D (CVT models)
- When starting the engine

MIXTURE RATIO SELF-LEARNING CONTROL

The mixture ratio feedback control system monitors the mixture ratio signal transmitted from A/F sensor 1. This feedback signal is then sent to the ECM. The ECM controls the basic mixture ratio as close to the theoretical mixture ratio as possible. However, the basic mixture ratio is not necessarily controlled as originally

designed. Both manufacturing differences (i.e., mass air flow sensor hot wire) and characteristic changes during operation (i.e., fuel injector clogging) directly affect mixture ratio.
Accordingly, the difference between the basic and theoretical mixture ratios is monitored in this system. This is then computed in terms of “injection pulse duration” to automatically compensate for the difference between the two ratios.
“Fuel trim” refers to the feedback compensation value compared against the basic injection duration. Fuel trim includes “short-term fuel trim” and “long-term fuel trim”.
“Short-term fuel trim” is the short-term fuel compensation used to maintain the mixture ratio at its theoretical value. The signal from A/F sensor 1 indicates whether the mixture ratio is RICH or LEAN compared to the theoretical value. The signal then triggers a reduction in fuel volume if the mixture ratio is rich, and an increase in fuel volume if it is lean.
“Long-term fuel trim” is overall fuel compensation carried out over time to compensate for continual deviation of the “short-term fuel trim” from the central value. Continual deviation will occur due to individual engine differences, wear over time and changes in the usage environment.

FUEL INJECTION TIMING

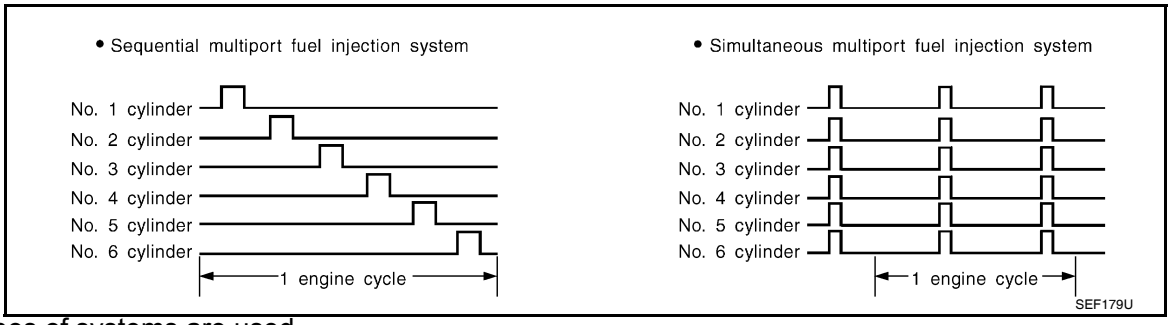

Two types of systems are used.

- Sequential Multiport Fuel Injection System
  Fuel is injected into each cylinder during each engine cycle according to the ignition order. This system is used when the engine is running.
- Simultaneous Multiport Fuel Injection System
  Fuel is injected simultaneously into all six cylinders twice each engine cycle. In other words, pulse signals of the same width are simultaneously transmitted from the ECM.
  The six injectors will then receive the signals 2 times for each engine cycle.
  This system is used when the engine is being started and/or if the fail-safe system (CPU) is operating.

FUEL SHUT-OFF

Fuel to each cylinder is cut off during deceleration, operation of the engine at excessively high speeds or operation of the vehicle at excessively high speeds.

Component Parts Location

INFOID:0000000004404403

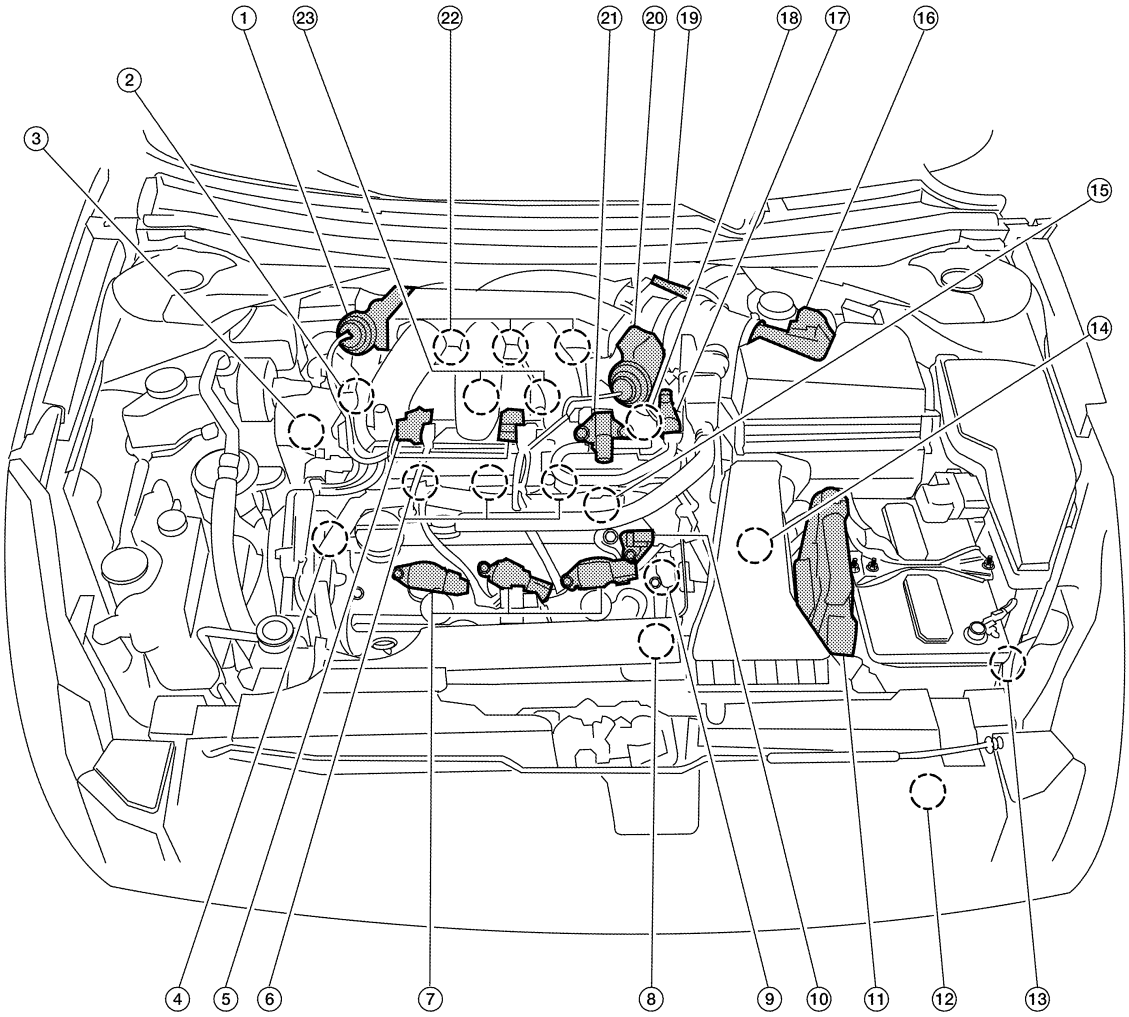

ALBIA0110ZZ

1. Power valve actuator 1	2. Intake valve timing control solenoid valve (bank 1)	3. Power steering pressure sensor
4. Intake valve timing control solenoid valve (bank 2)	5. VIAS control solenoid valves 1 and 2	6. Fuel injector (bank 2)
7. Ignition coil (with power transistor) and spark plug (bank 2)	8. Crankshaft position sensor (POS)	9. Engine coolant temperature sensor
10. Camshaft position sensor (PHASE) (bank 2)	11. ECM	12. Refrigerant pressure sensor
13. Battery current sensor	14. PNP switch	15. Condenser-2
16. Mass air flow sensor (with intake air temperature sensor)	17. EVAP service port	18. Camshaft position sensor (PHASE) (bank 1)
19. Electric throttle control actuator	20. Power valve actuator 2	21. EVAP canister purge volume control solenoid valve
22. Ignition coil (with power transistor) and spark plug (bank 1)	23. Knock sensor	

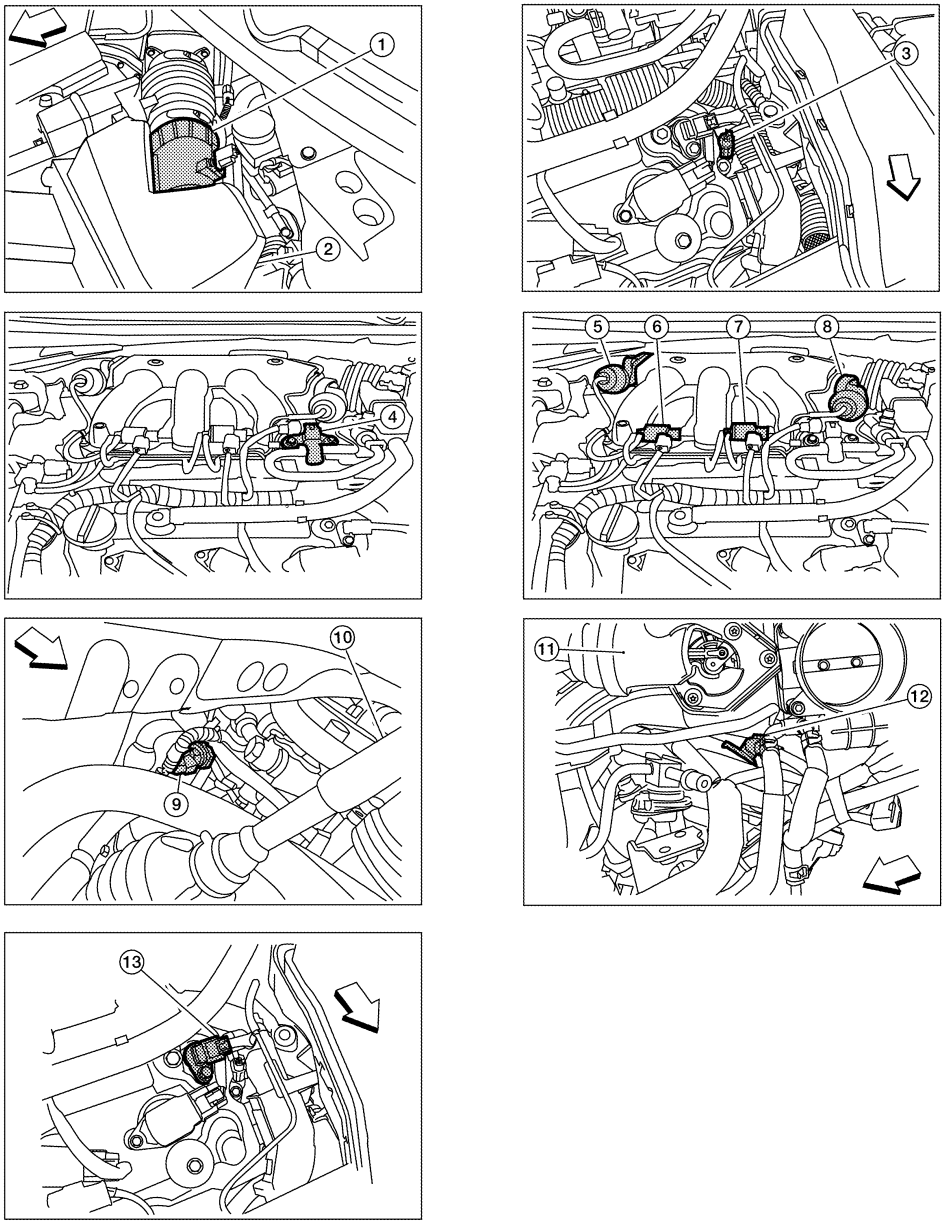

ALBIA0101ZZ

1. Mas air flow sensor (with intake air temperature sensor)
2. Air cleaner case
3. Engine coolant temperature sensor
4. EVAP canister purge volume control solenoid valve
5. Power valve actuator 1
6. VIAS control solenoid valve 1
7. VIAS control solenoid valve 2
8. Power valve actuator 2
9. Power steering pressure sensor
10. Tie rod (RH)
11. Power valve actuator 2
12. Camshaft position sensor (PHASE) (bank 1)
13. Camshaft position sensor (PHASE) (bank 2)

⇦ : Vehicle front

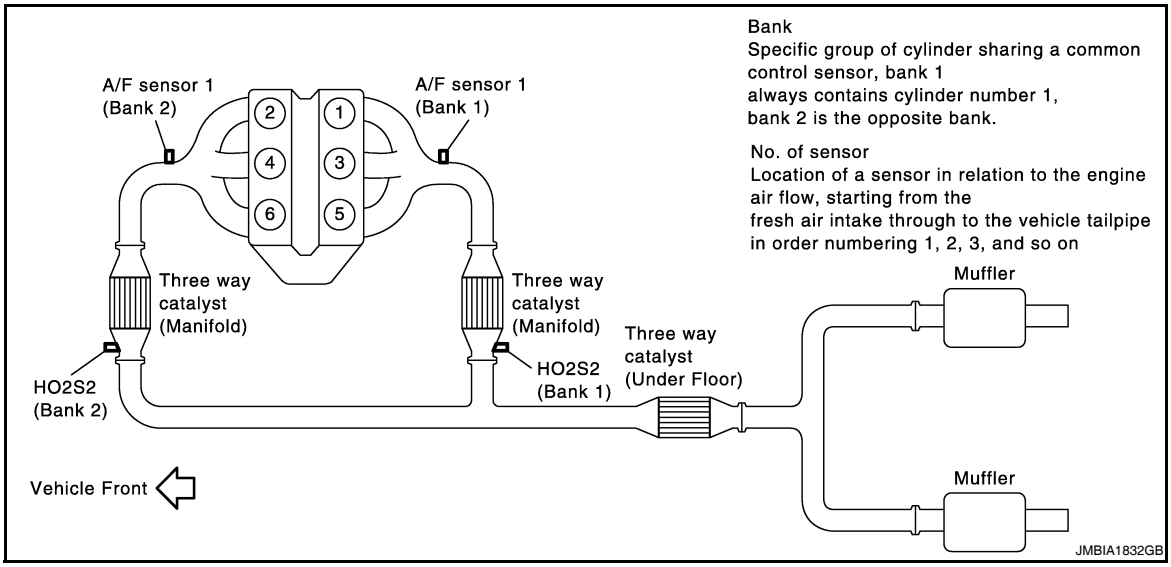
Bank
Specific group of cylinder sharing a common control sensor, bank 1 always contains cylinder number 1, bank 2 is the opposite bank.
No. of sensor
Location of a sensor in relation to the engine air flow, starting from the fresh air intake through to the vehicle tailpipe in order numbering 1, 2, 3, and so on
A/F sensor 1 (Bank 2)
A/F sensor 1 (Bank 1)
2
4
6
1
3
5
Three way catalyst (Manifold)
Three way catalyst (Manifold)
HO2S2 (Bank 2)
HO2S2 (Bank 1)
Three way catalyst (Under Floor)
Muffler
Muffler
Vehicle Front
JMBIA1832GB

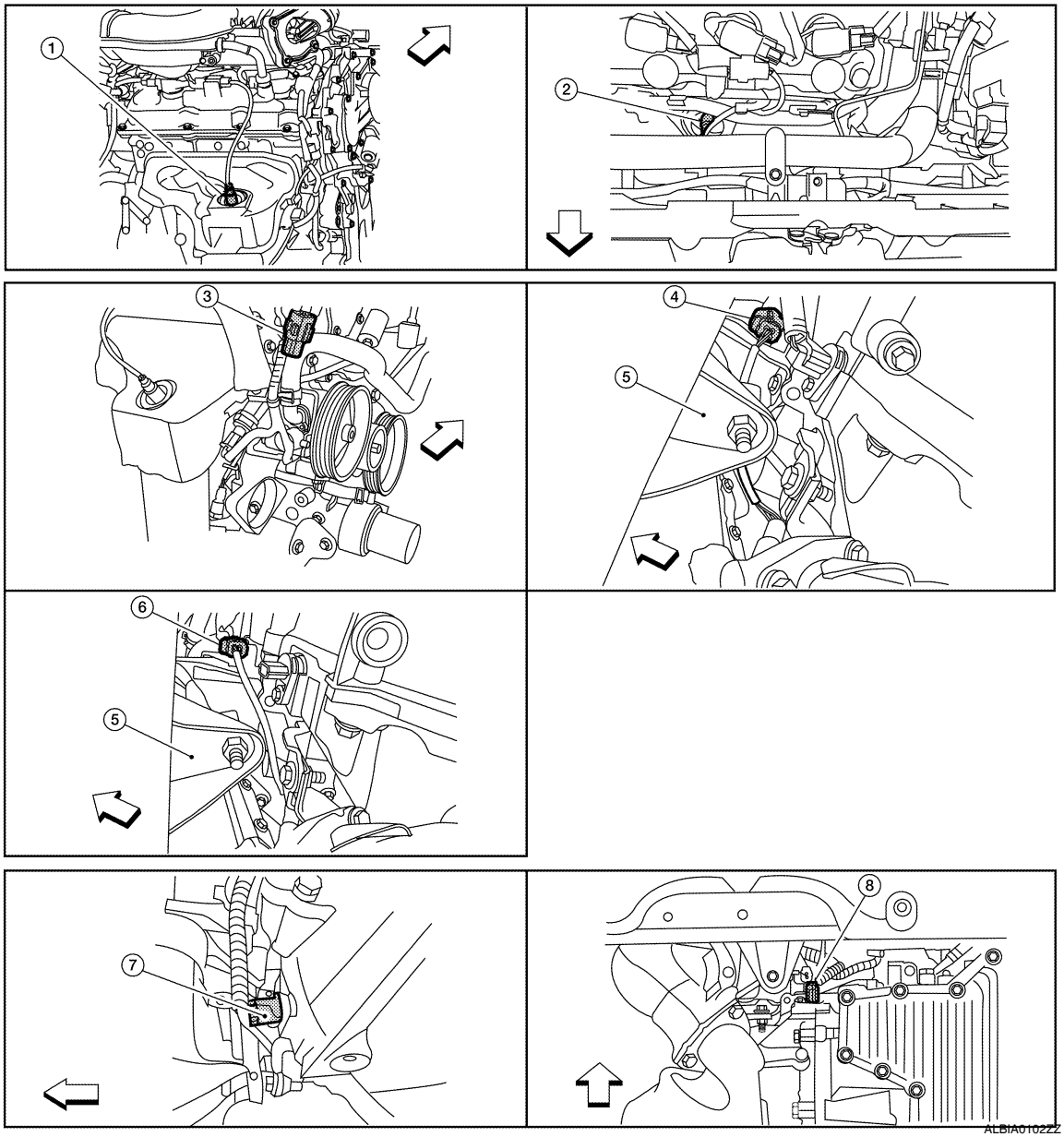
1
2
3
4
5
6
5
7
8
ALBIA0102ZZ

1. A/F sensor 1 (bank 1)
2. A/F sensor 1 (bank 2)
3. HO2S2 (bank 1) harness connector
4. HO2S2 (bank 2) harness connector (CVT models)
5. Front engine mount
6. HO2S2 (bank 2) harness connector (M/T models)
7. Crankshaft position sensor (POS) (M/T models)
8. Crankshaft position sensor (POS) (CVT models)

⇦ : Vehicle front

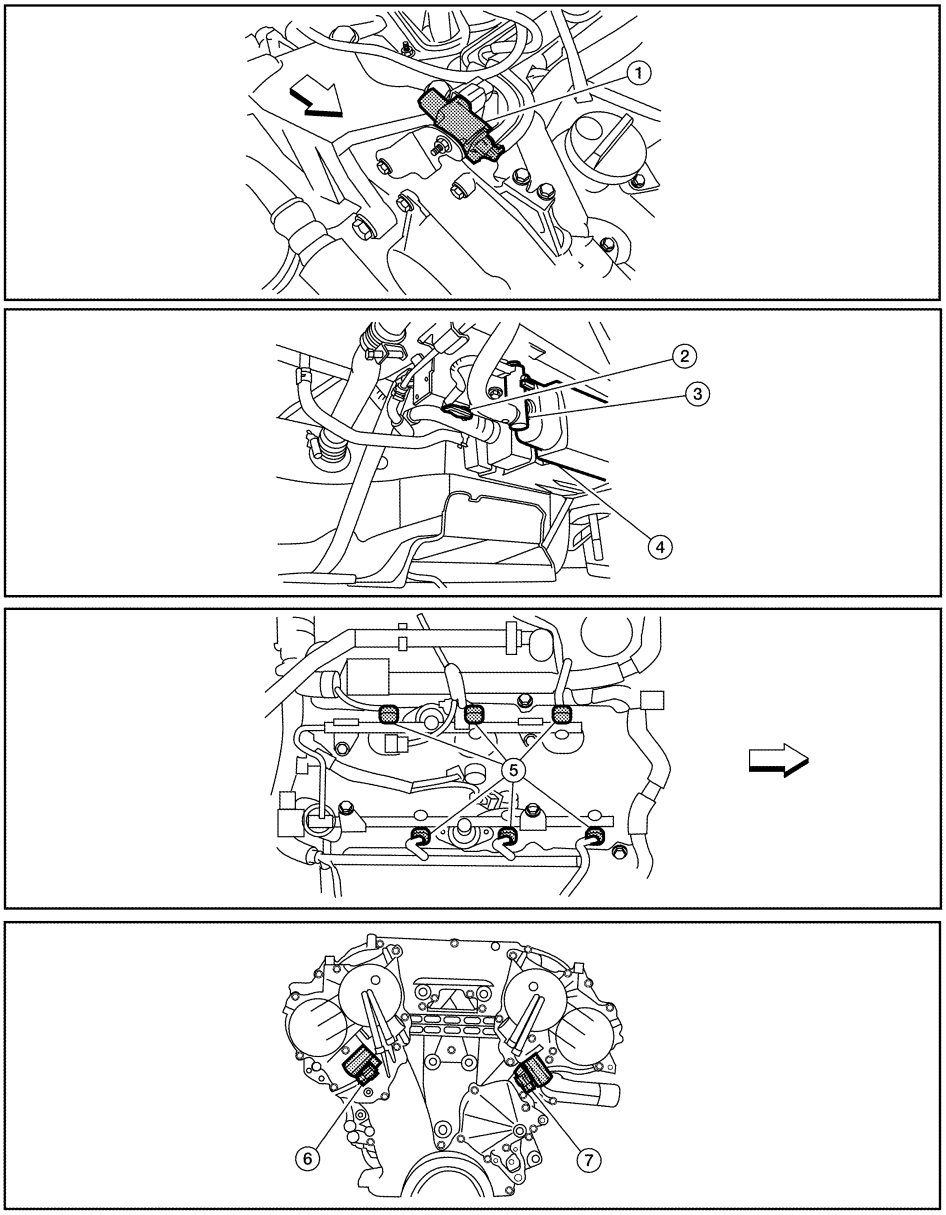

ALBIA0103ZZ

1. Electronic controlled engine mount control solenoid valve
2. EVAP control system pressure sensor
3. EVAP canister vent control valve
4. EVAP canister
5. Injector harness connector
6. Intake valve timing control solenoid valve (bank 1)
7. Intake valve timing control solenoid valve (bank 2)

⇦ : Vehicle front

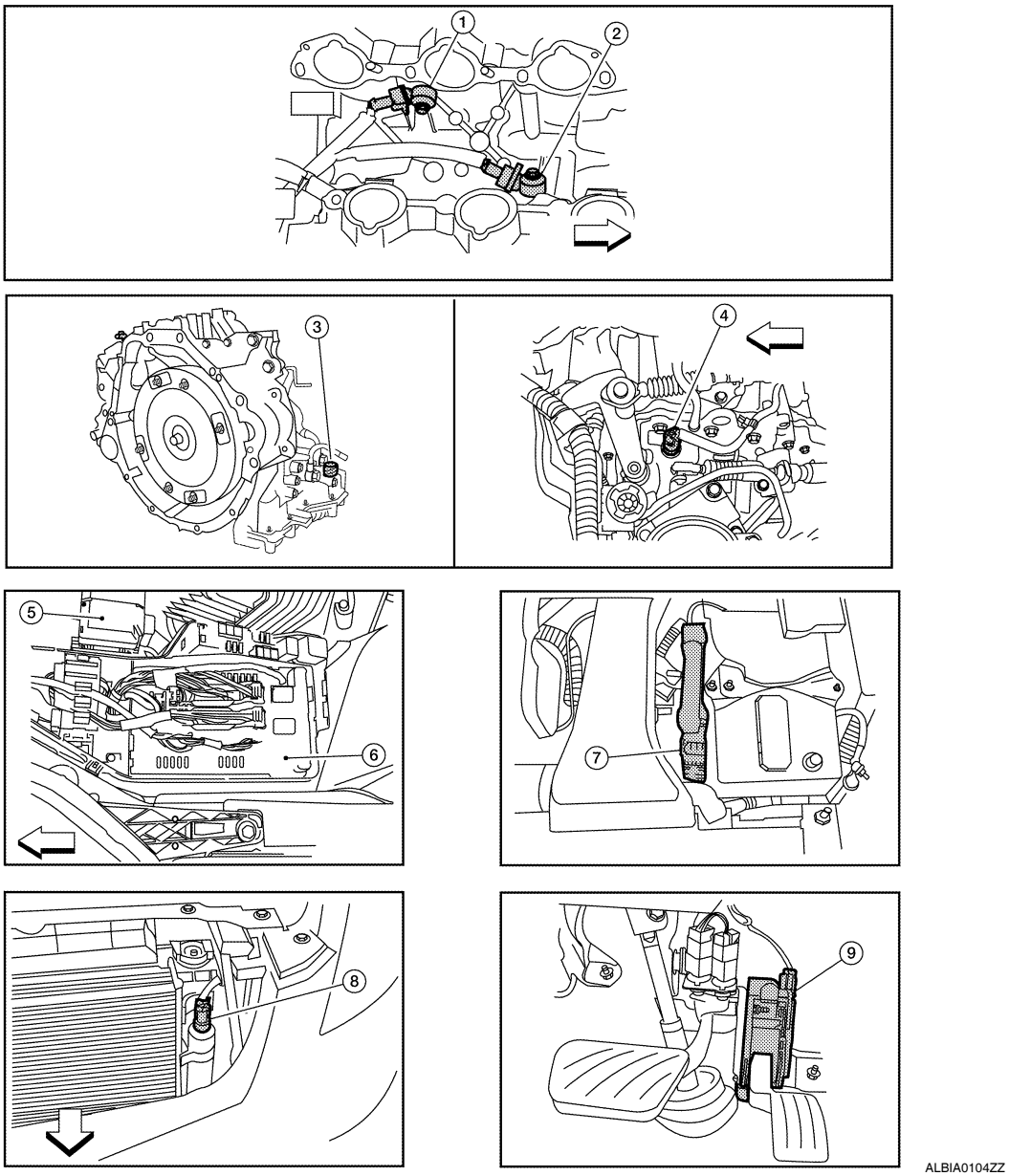

1. Knock sensor (bank 2)
2. Knock sensor (bank 1)
3. PNP switch (CVT models)
4. PNP switch (M/T models)
5. Battery
6. IPDM E/R
7. ECM
8. Refrigerant pressure sensor (shown with front grill removed)
9. Accelerator pedal

⇦ : Vehicle front

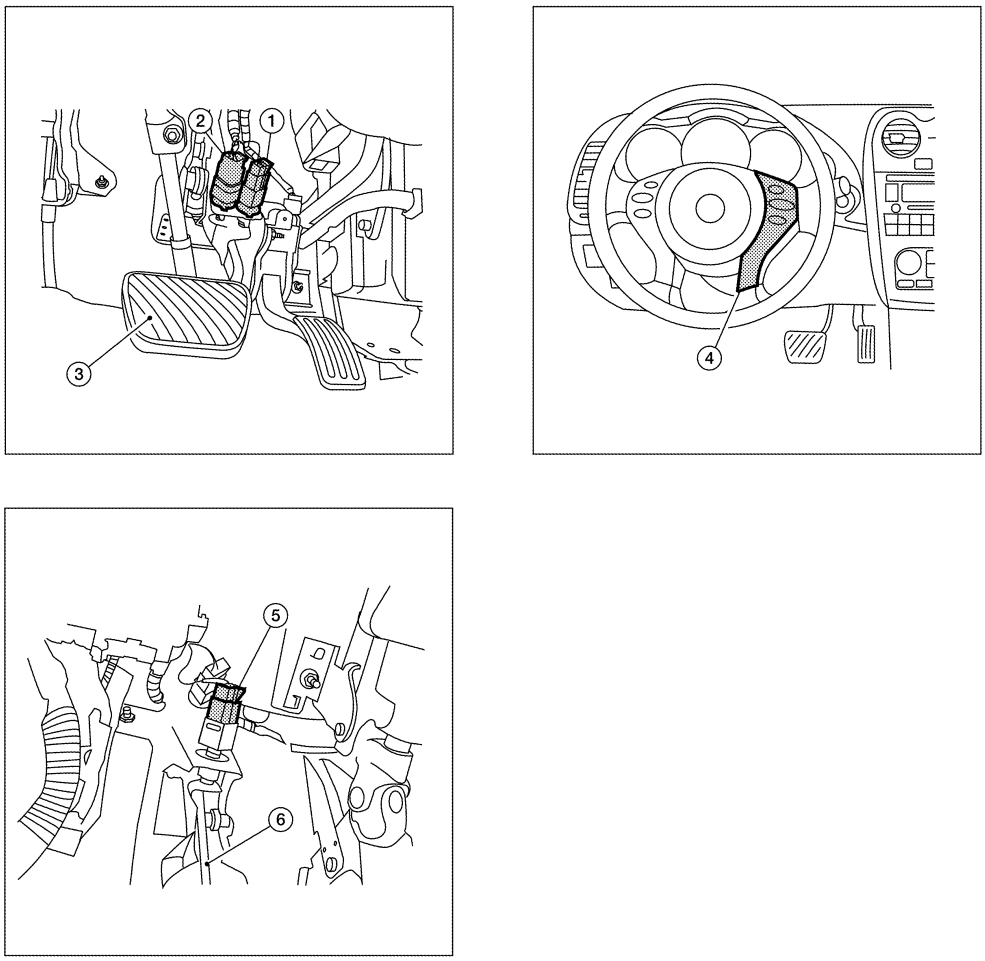

ALBIA0105ZZ

1. ASCD brake switch
2. Stop lamp switch
3. Brake pedal
4. ASCD steering switch
5. ASCD clutch switch (M/T models)
6. Clutch pedal

Component Description

INFOID:0000000004361968

Component	Reference
A/F sensor 1	EC-1225, "Description"
Accelerator pedal position sensor	EC-1448, "Description"
Camshaft position sensor (PHASE)	EC-1296, "Description"
Crankshaft position sensor (POS)	EC-1292, "Description"
Engine coolant temperature sensor	EC-1210, "Description"
Fuel injector	EC-1483, "Description"
Heated oxygen sensor 2	EC-1242, "Description"
Intake air temperature sensor	EC-1207, "Description"

Component	Reference
Knock sensor	EC-1289, "Description"
Mass air flow sensor	EC-1194, "Description"
Park/neutral position (PNP) switch (M/T)	EC-1382, "Description"
Power steering pressure sensor	EC-1371, "Description"
TCM (CVT)	EC-1382, "Description"
Throttle position sensor	EC-1215, "Description"

ELECTRIC IGNITION SYSTEM

System Diagram

INFOID:0000000004361969

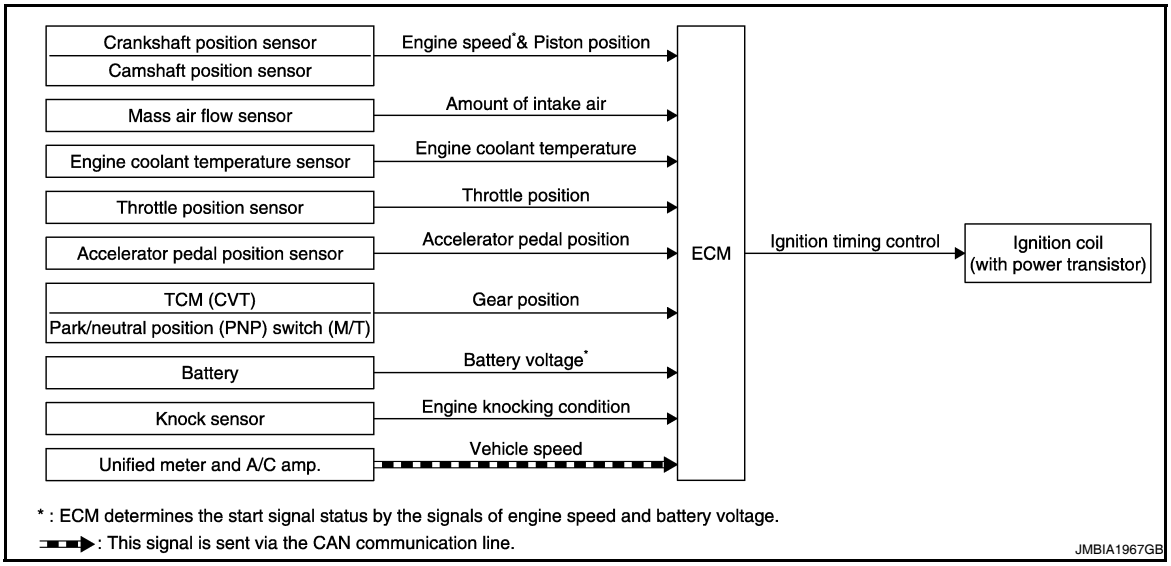

System Description

INFOID:0000000004361970

INPUT/OUTPUT SIGNAL CHART

Sensor	Input signal to ECM	ECM function	Actuator
Crankshaft position sensor (POS)	Engine speed*2 Piston position	Ignition timing control	Ignition coil (with power transistor)
Camshaft position sensor (PHASE)			
Mass air flow sensor	Amount of intake air		
Engine coolant temperature sensor	Engine coolant temperature		
Throttle position sensor	Throttle position		
Accelerator pedal position sensor	Accelerator pedal position		
TCM (CVT) Park/neutral position (PNP) switch (M/T)	Gear position		
Battery	Battery voltage*2		
Knock sensor	Engine knocking		
Unified meter and A/C amp.	Vehicle speed*1		

*1: This signal is sent to the ECM via the CAN communication line.

*2: ECM determines the start signal status by the signals of engine speed and battery voltage.

SYSTEM DESCRIPTION

Ignition order: 1 - 2 - 3 - 4 - 5 - 6

The ignition timing is controlled by the ECM to maintain the best air-fuel ratio for every running condition of the engine. The ignition timing data is stored in the ECM.

The ECM receives information such as the injection pulse width and camshaft position sensor (PHASE) signal. Computing this information, ignition signals are transmitted to the power transistor.

During the following conditions, the ignition timing is revised by the ECM according to the other data stored in the ECM.

- At starting
- During warm-up
- At idle
- At low battery voltage
- During acceleration

The knock sensor retard system is designed only for emergencies. The basic ignition timing is programmed within the anti-knocking zone, if recommended fuel is used under dry conditions. The retard system does not

operate under normal driving conditions. If engine knocking occurs, the knock sensor monitors the condition. The signal is transmitted to the ECM. The ECM retards the ignition timing to eliminate the knocking condition.

Component Parts Location

INFOID:0000000004404404

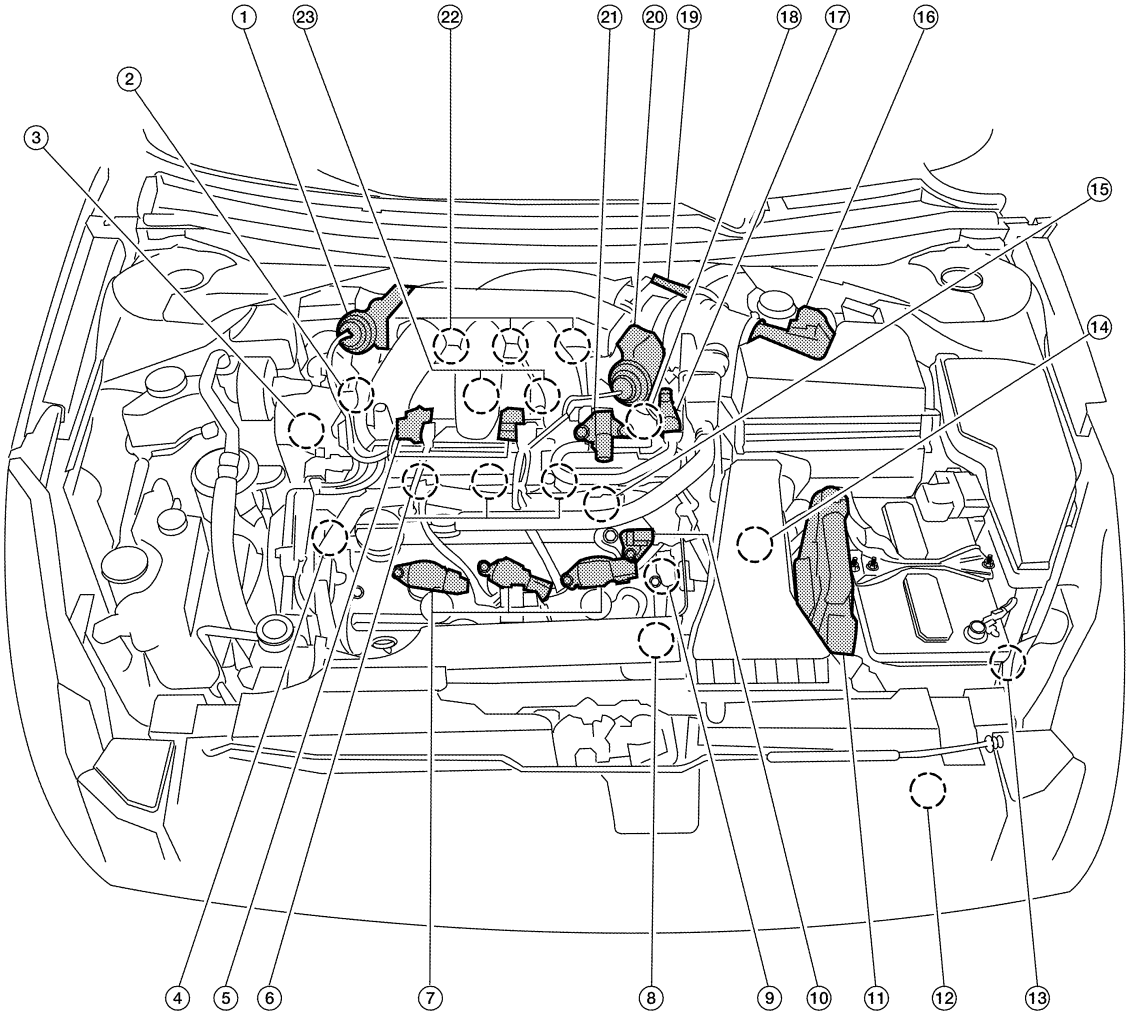

ALBIA0110ZZ

1. Power valve actuator 1	2. Intake valve timing control solenoid valve (bank 1)	3. Power steering pressure sensor
4. Intake valve timing control solenoid valve (bank 2)	5. VIAS control solenoid valves 1 and 2	6. Fuel injector (bank 2)
7. Ignition coil (with power transistor) and spark plug (bank 2)	8. Crankshaft position sensor (POS)	9. Engine coolant temperature sensor
10. Camshaft position sensor (PHASE) (bank 2)	11. ECM	12. Refrigerant pressure sensor
13. Battery current sensor	14. PNP switch	15. Condenser-2
16. Mass air flow sensor (with intake air temperature sensor)	17. EVAP service port	18. Camshaft position sensor (PHASE) (bank 1)

19. Electric throttle control actuator
20. Power valve actuator 2
21. EVAP canister purge volume control solenoid valve
22. Ignition coil (with power transistor) and spark plug (bank 1)
23. Knock sensor

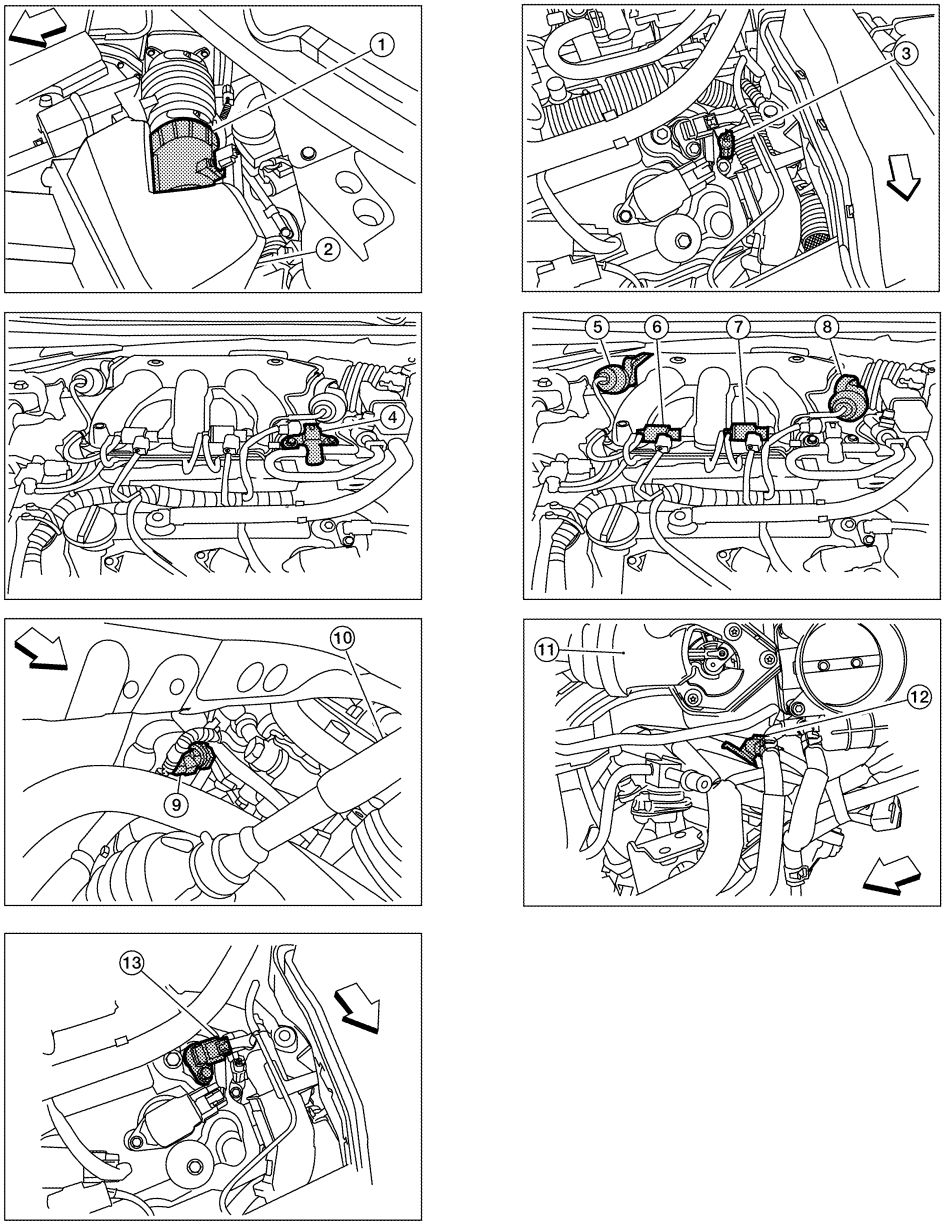

ALBIA0101ZZ

1. Mas air flow sensor (with intake air temperature sensor)
2. Air cleaner case
3. Engine coolant temperature sensor
4. EVAP canister purge volume control solenoid valve
5. Power valve actuator 1
6. VIAS control solenoid valve 1
7. VIAS control solenoid valve 2
8. Power valve actuator 2
9. Power steering pressure sensor
10. Tie rod (RH)
11. Power valve actuator 2
12. Camshaft position sensor (PHASE) (bank 1)
13. Camshaft position sensor (PHASE) (bank 2)

⇦ : Vehicle front

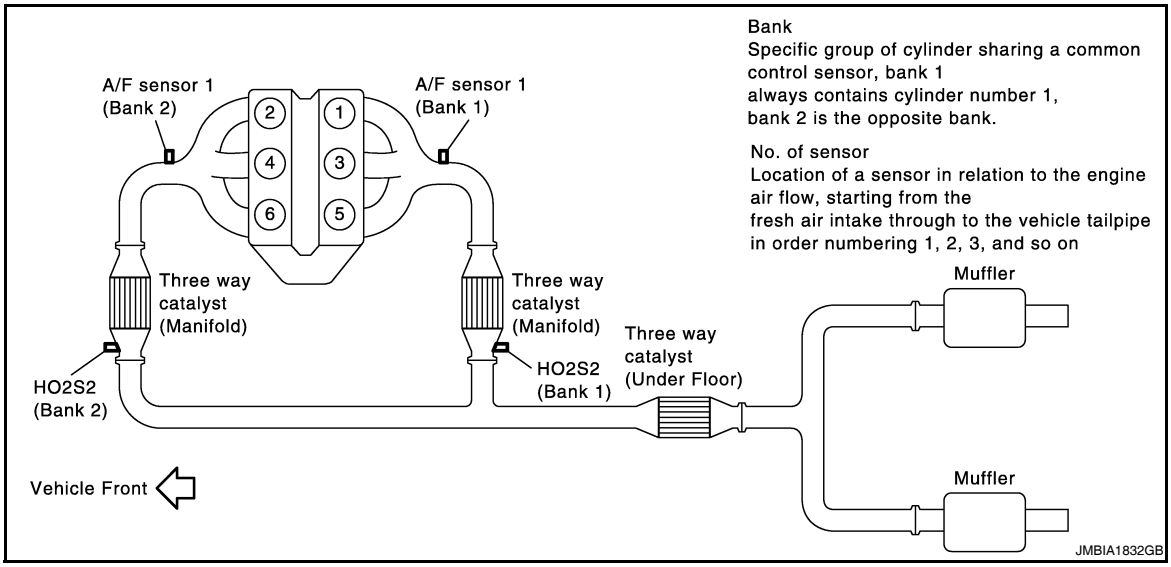
Bank
Specific group of cylinder sharing a common control sensor, bank 1 always contains cylinder number 1, bank 2 is the opposite bank.
No. of sensor
Location of a sensor in relation to the engine air flow, starting from the fresh air intake through to the vehicle tailpipe in order numbering 1, 2, 3, and so on
A/F sensor 1 (Bank 2)
A/F sensor 1 (Bank 1)
2
1
4
3
6
5
Three way catalyst (Manifold)
Three way catalyst (Manifold)
HO2S2 (Bank 2)
HO2S2 (Bank 1)
Three way catalyst (Under Floor)
Muffler
Muffler
Vehicle Front
JMBIA1832GB

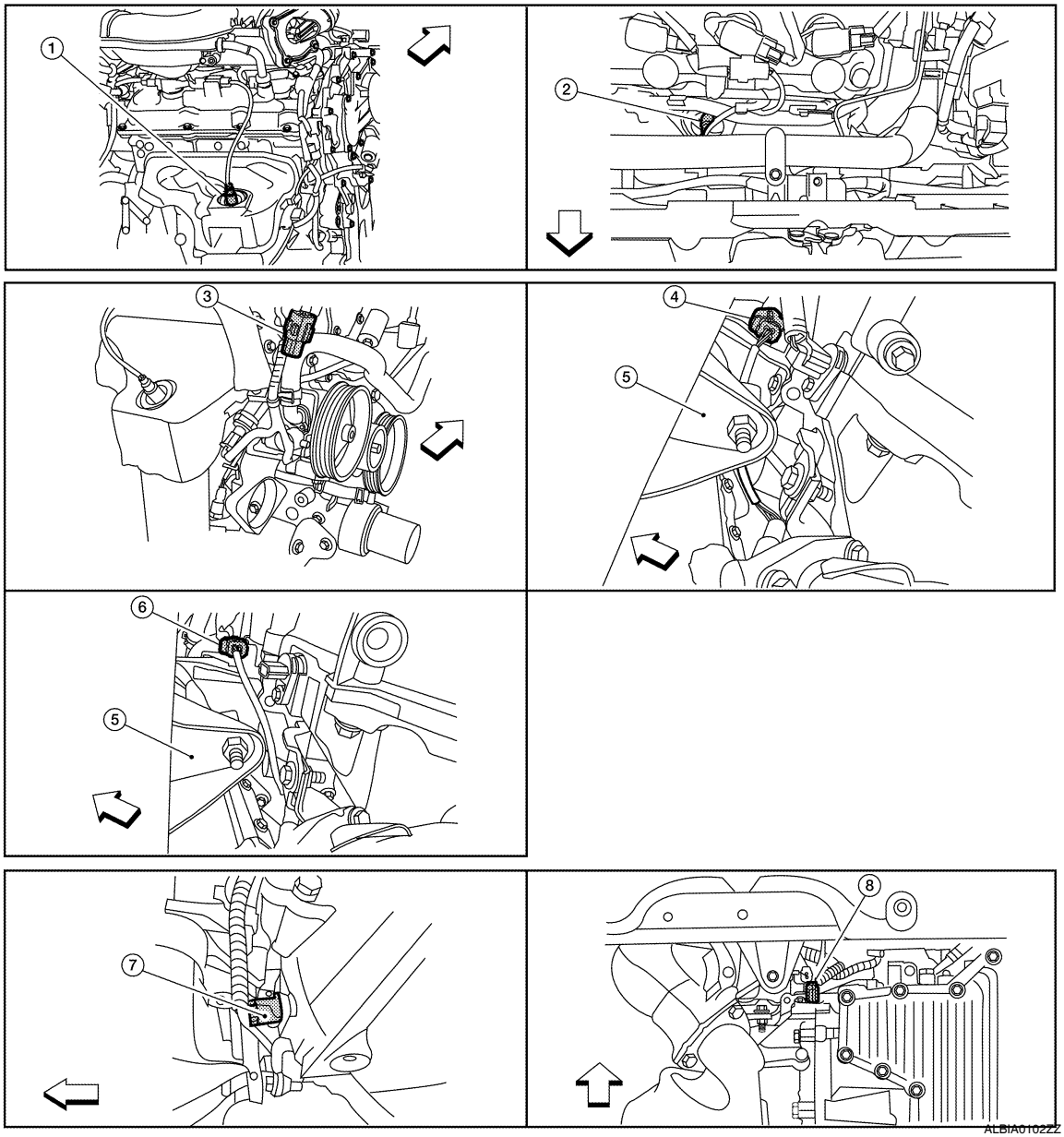
1
2
3
4
5
6
5
7
8
ALBIA0102ZZ

1. A/F sensor 1 (bank 1)
2. A/F sensor 1 (bank 2)
3. HO2S2 (bank 1) harness connector
4. HO2S2 (bank 2) harness connector (CVT models)
5. Front engine mount
6. HO2S2 (bank 2) harness connector (M/T models)
7. Crankshaft position sensor (POS) (M/T models)
8. Crankshaft position sensor (POS) (CVT models)

⇦ : Vehicle front

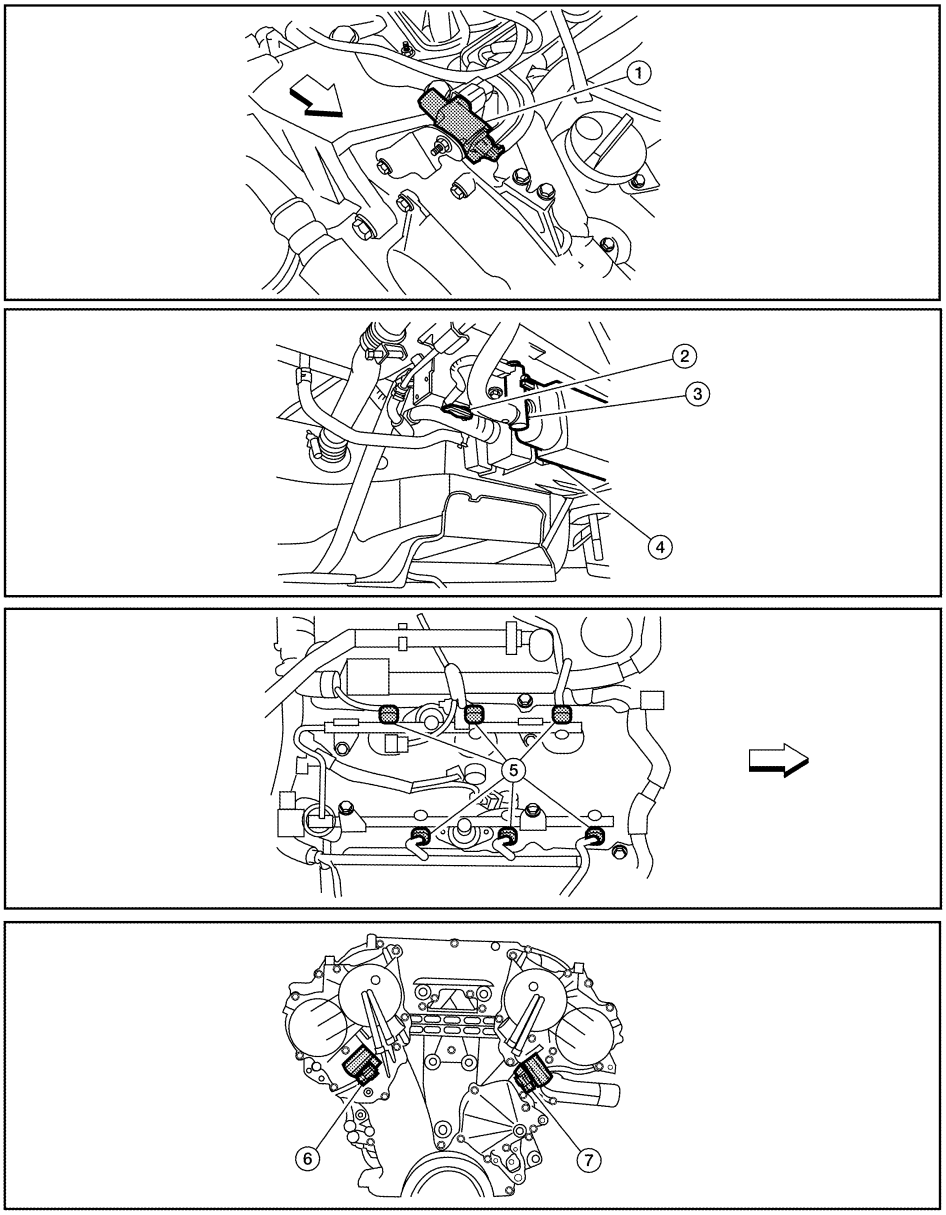

ALBIA0103ZZ

1. Electronic controlled engine mount control solenoid valve
2. EVAP control system pressure sensor
3. EVAP canister vent control valve
4. EVAP canister
5. Injector harness connector
6. Intake valve timing control solenoid valve (bank 1)
7. Intake valve timing control solenoid valve (bank 2)

⇦ : Vehicle front

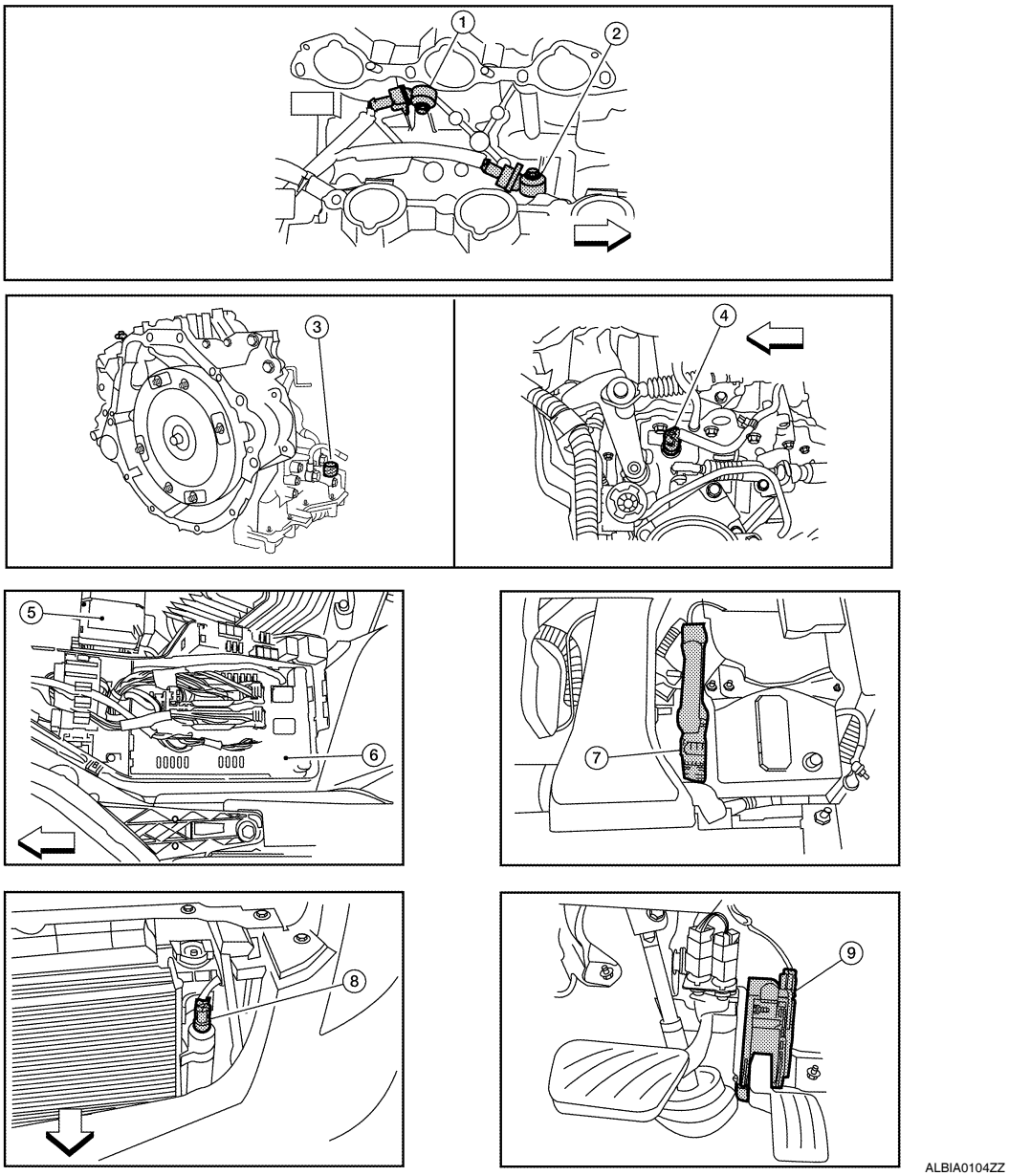

1. Knock sensor (bank 2)
2. Knock sensor (bank 1)
3. PNP switch (CVT models)
4. PNP switch (M/T models)
5. Battery
6. IPDM E/R
7. ECM
8. Refrigerant pressure sensor (shown with front grill removed)
9. Accelerator pedal

⇦ : Vehicle front

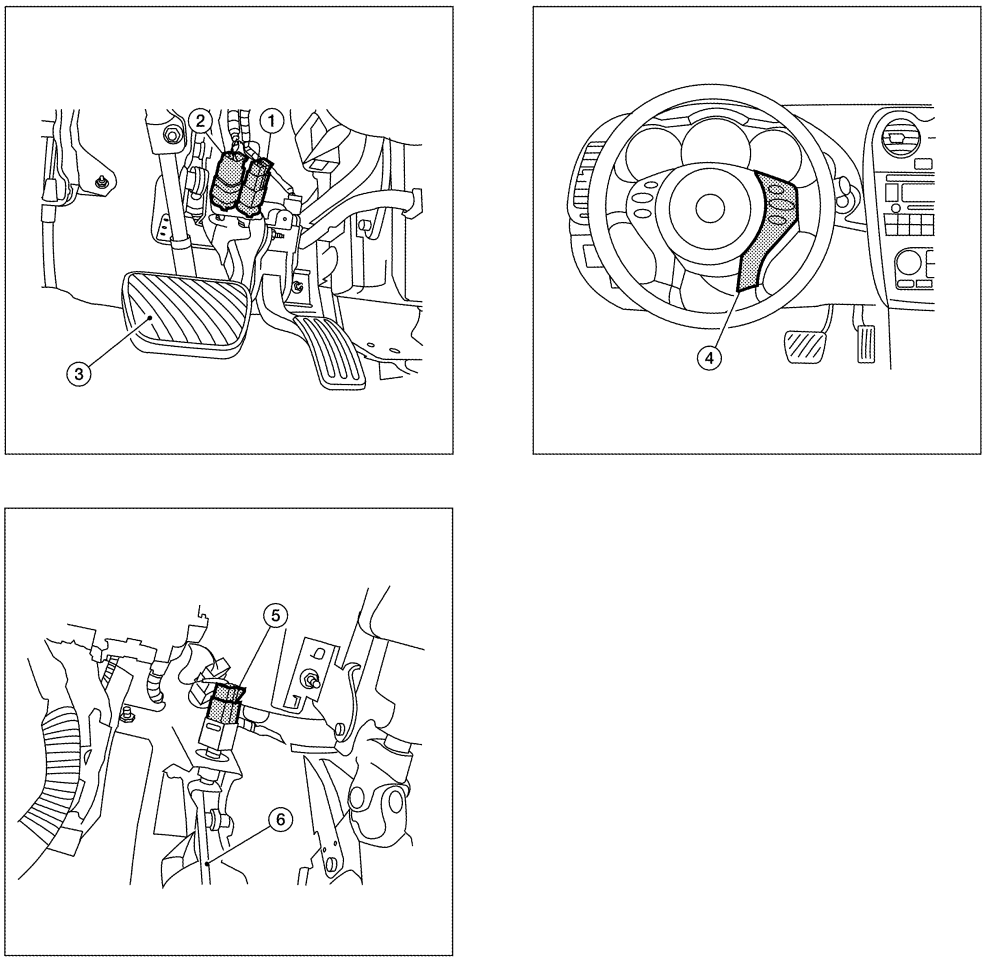

ALBIA0105ZZ

1. ASCD brake switch
2. Stop lamp switch
3. Brake pedal
4. ASCD steering switch
5. ASCD clutch switch (M/T models)
6. Clutch pedal

Component Description

INFOID:0000000004361972

Component	Reference
Accelerator pedal position sensor	EC-1448, "Description"
Camshaft position sensor (PHASE)	EC-1296, "Description"
Crankshaft position sensor (POS)	EC-1292, "Description"
Engine coolant temperature sensor	EC-1210, "Description"
Ignition signal	EC-1491, "Description"
Knock sensor	EC-1289, "Description"
Mass air flow sensor	EC-1194, "Description"
Park/neutral position (PNP) switch	EC-1382, "Description"

Component	Reference
TCM (CVT)	EC-1382, "Description"
Throttle position sensor	EC-1215, "Description"

AIR CONDITIONING CUT CONTROL

System Diagram

INFOID:0000000004361973

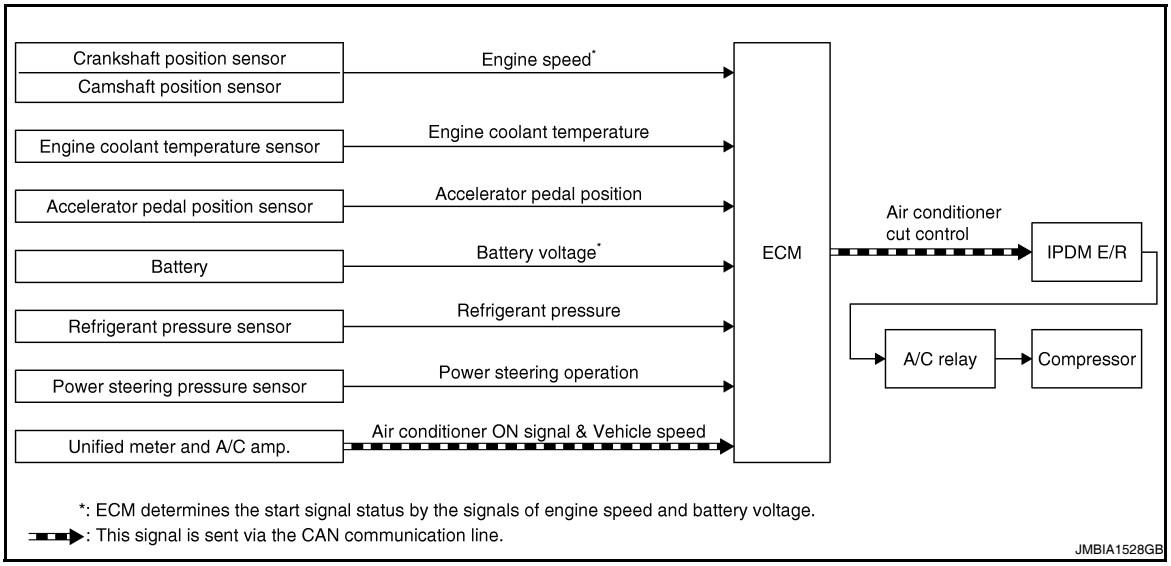

System Description

INFOID:0000000004361974

INPUT/OUTPUT SIGNAL CHART

Sensor	Input signal to ECM	ECM function	Actuator
Crankshaft position sensor (POS) Camshaft position sensor (PHASE)	Engine speed*2	Air conditioner cut control	IPDM E/R ↓ Air conditioner relay ↓ Compressor
Engine coolant temperature sensor	Engine coolant temperature		
Accelerator pedal position sensor	Accelerator pedal position		
Battery	Battery voltage*2		
Refrigerant pressure sensor	Refrigerant pressure		
Power steering pressure sensor	Power steering operation		
Unified meter and A/C amp.	Air conditioner ON signal*1		
	Vehicle speed*1		

*1: This signal is sent to the ECM via the CAN communication line.

*2: ECM determines the start signal status by the signals of engine speed and battery voltage.

SYSTEM DESCRIPTION

This system improves engine operation when the air conditioner is used.
Under the following conditions, the air conditioner is turned OFF.

- When the accelerator pedal is fully depressed.
- When cranking the engine.
- At high engine speeds.
- When the engine coolant temperature becomes excessively high.
- When operating power steering during low engine speed or low vehicle speed.
- When engine speed is excessively low.
- When refrigerant pressure is excessively low or high.

Component Parts Location

INFOID:0000000004404405

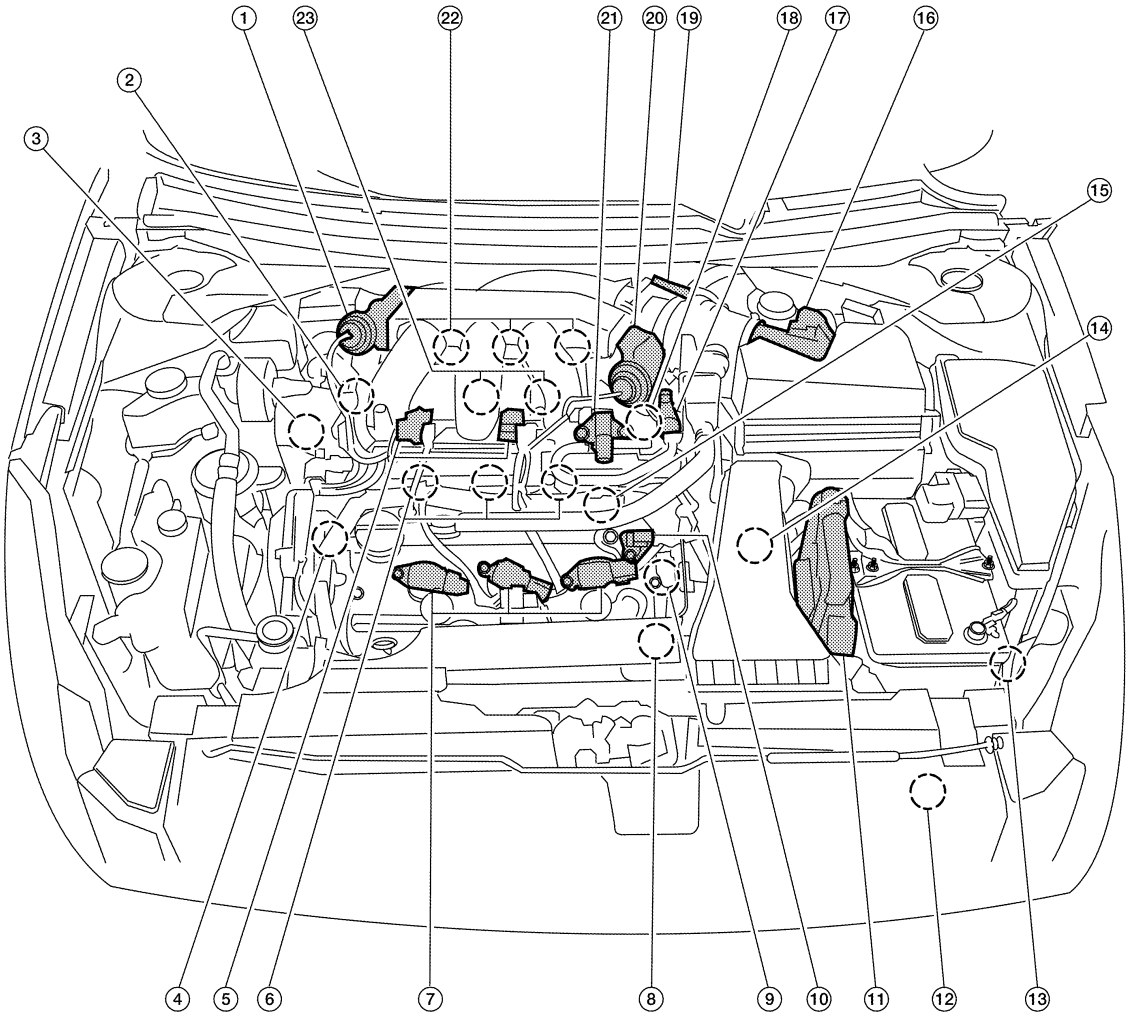

ALBIA0110ZZ

1. Power valve actuator 1	2. Intake valve timing control solenoid valve (bank 1)	3. Power steering pressure sensor
4. Intake valve timing control solenoid valve (bank 2)	5. VIAS control solenoid valves 1 and 2	6. Fuel injector (bank 2)
7. Ignition coil (with power transistor) and spark plug (bank 2)	8. Crankshaft position sensor (POS)	9. Engine coolant temperature sensor
10. Camshaft position sensor (PHASE) (bank 2)	11. ECM	12. Refrigerant pressure sensor
13. Battery current sensor	14. PNP switch	15. Condenser-2
16. Mass air flow sensor (with intake air temperature sensor)	17. EVAP service port	18. Camshaft position sensor (PHASE) (bank 1)
19. Electric throttle control actuator	20. Power valve actuator 2	21. EVAP canister purge volume control solenoid valve
22. Ignition coil (with power transistor) and spark plug (bank 1)	23. Knock sensor	

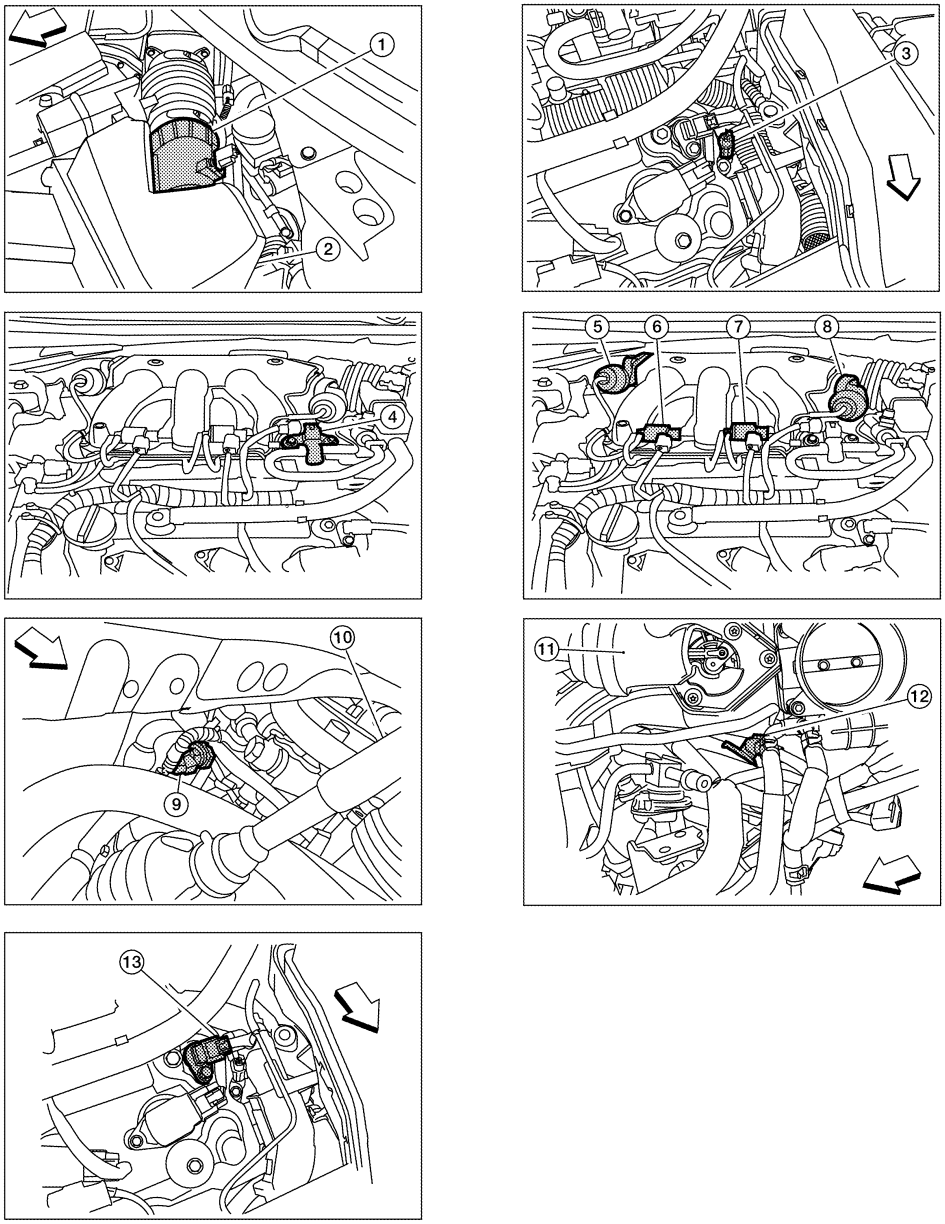

ALBIA0101ZZ

1. Mas air flow sensor (with intake air temperature sensor)
2. Air cleaner case
3. Engine coolant temperature sensor
4. EVAP canister purge volume control solenoid valve
5. Power valve actuator 1
6. VIAS control solenoid valve 1
7. VIAS control solenoid valve 2
8. Power valve actuator 2
9. Power steering pressure sensor
10. Tie rod (RH)
11. Power valve actuator 2
12. Camshaft position sensor (PHASE) (bank 1)
13. Camshaft position sensor (PHASE) (bank 2)

⇦ : Vehicle front

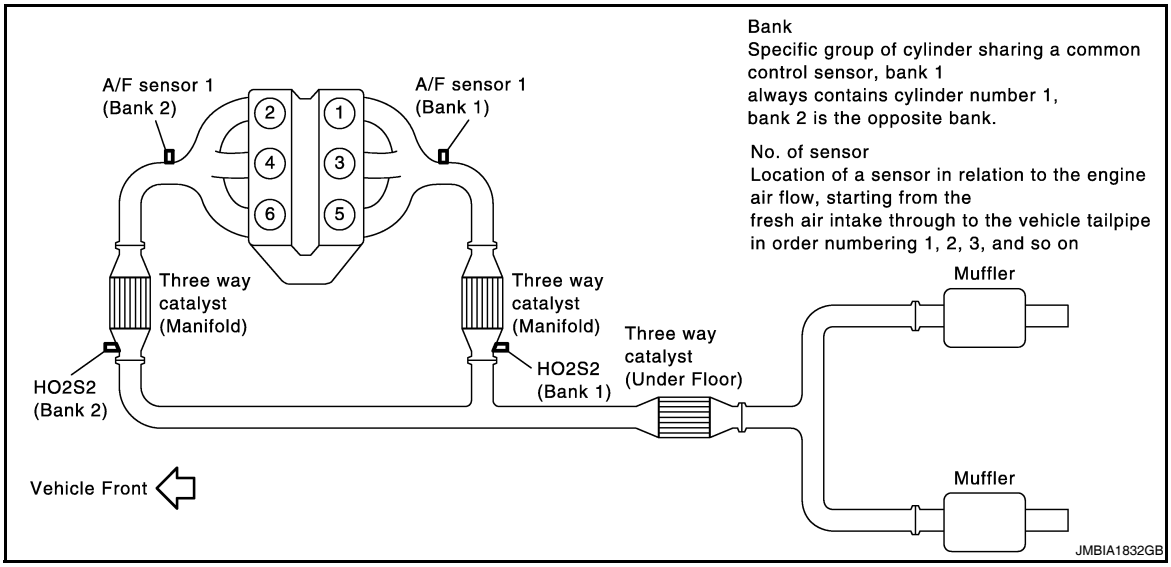
Bank
Specific group of cylinder sharing a common control sensor, bank 1 always contains cylinder number 1, bank 2 is the opposite bank.
No. of sensor
Location of a sensor in relation to the engine air flow, starting from the fresh air intake through to the vehicle tailpipe in order numbering 1, 2, 3, and so on
A/F sensor 1 (Bank 2)
A/F sensor 1 (Bank 1)
2
1
4
3
6
5
Three way catalyst (Manifold)
Three way catalyst (Manifold)
HO2S2 (Bank 2)
HO2S2 (Bank 1)
Three way catalyst (Under Floor)
Muffler
Muffler
Vehicle Front
JMBIA1832GB

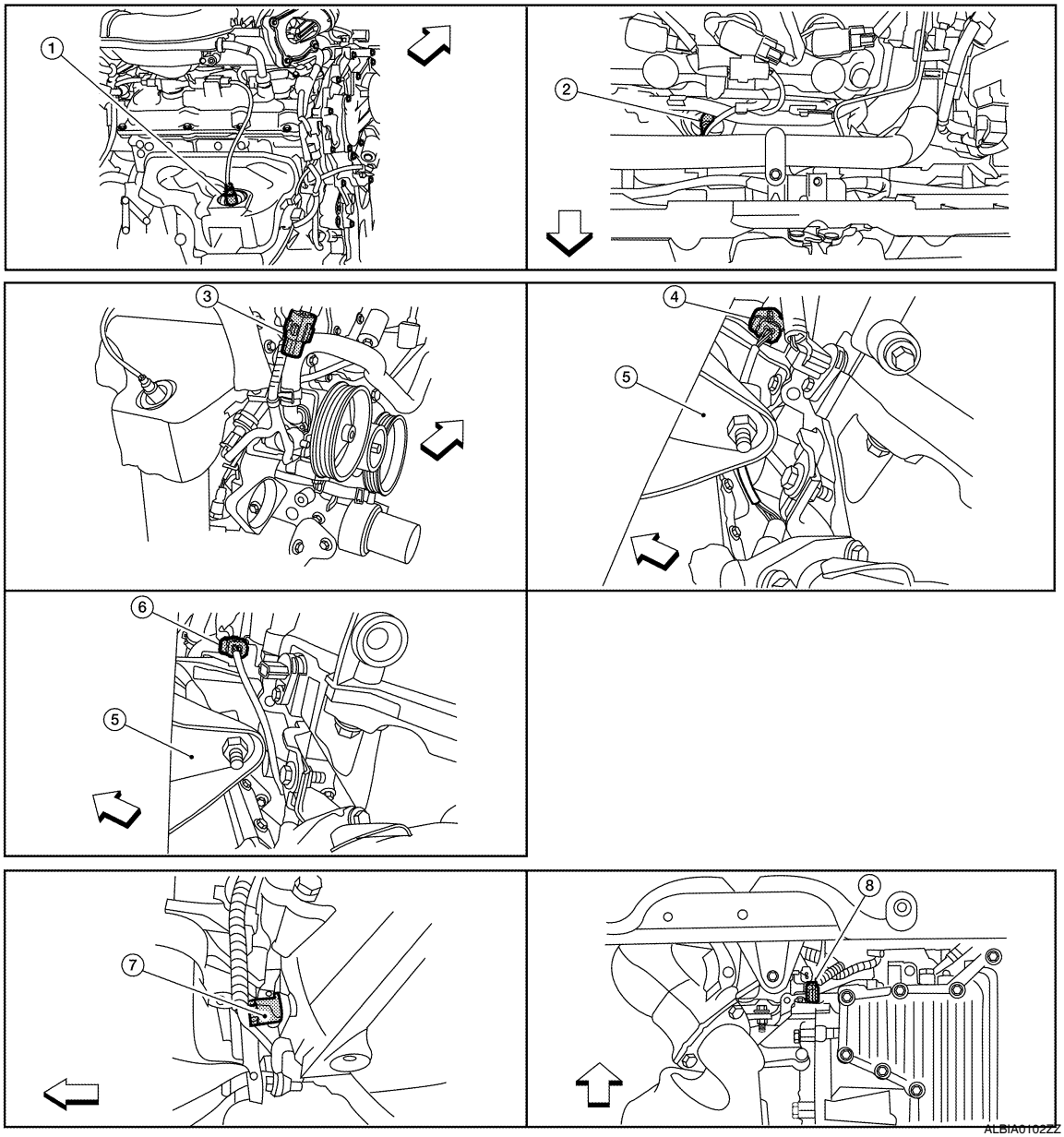
1
2
3
4
5
6
5
7
8
ALBIA0102ZZ

1. A/F sensor 1 (bank 1)
2. A/F sensor 1 (bank 2)
3. HO2S2 (bank 1) harness connector
4. HO2S2 (bank 2) harness connector (CVT models)
5. Front engine mount
6. HO2S2 (bank 2) harness connector (M/T models)
7. Crankshaft position sensor (POS) (M/T models)
8. Crankshaft position sensor (POS) (CVT models)

⇦ : Vehicle front

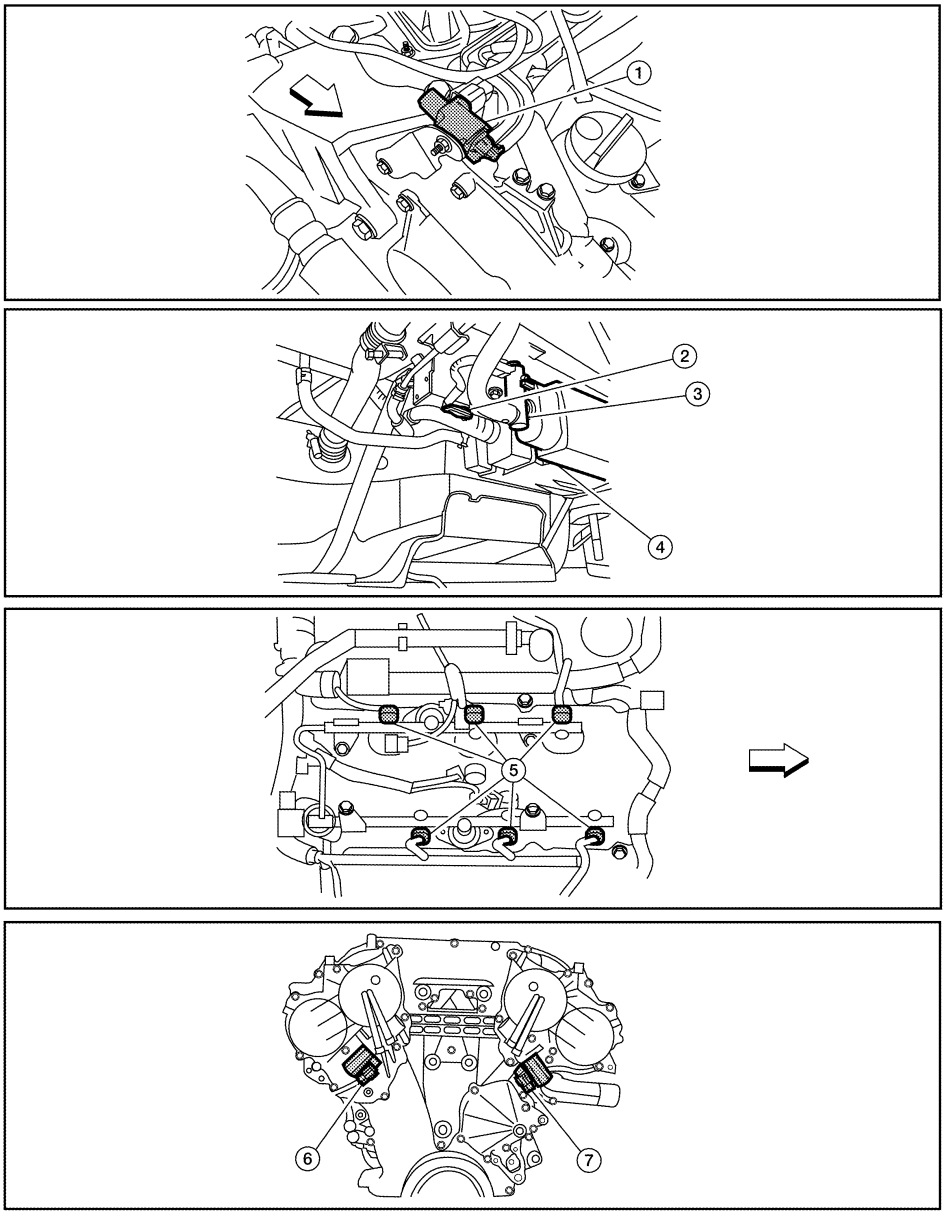

ALBIA0103ZZ

1. Electronic controlled engine mount control solenoid valve
2. EVAP control system pressure sensor
3. EVAP canister vent control valve
4. EVAP canister
5. Injector harness connector
6. Intake valve timing control solenoid valve (bank 1)
7. Intake valve timing control solenoid valve (bank 2)

⇦ : Vehicle front

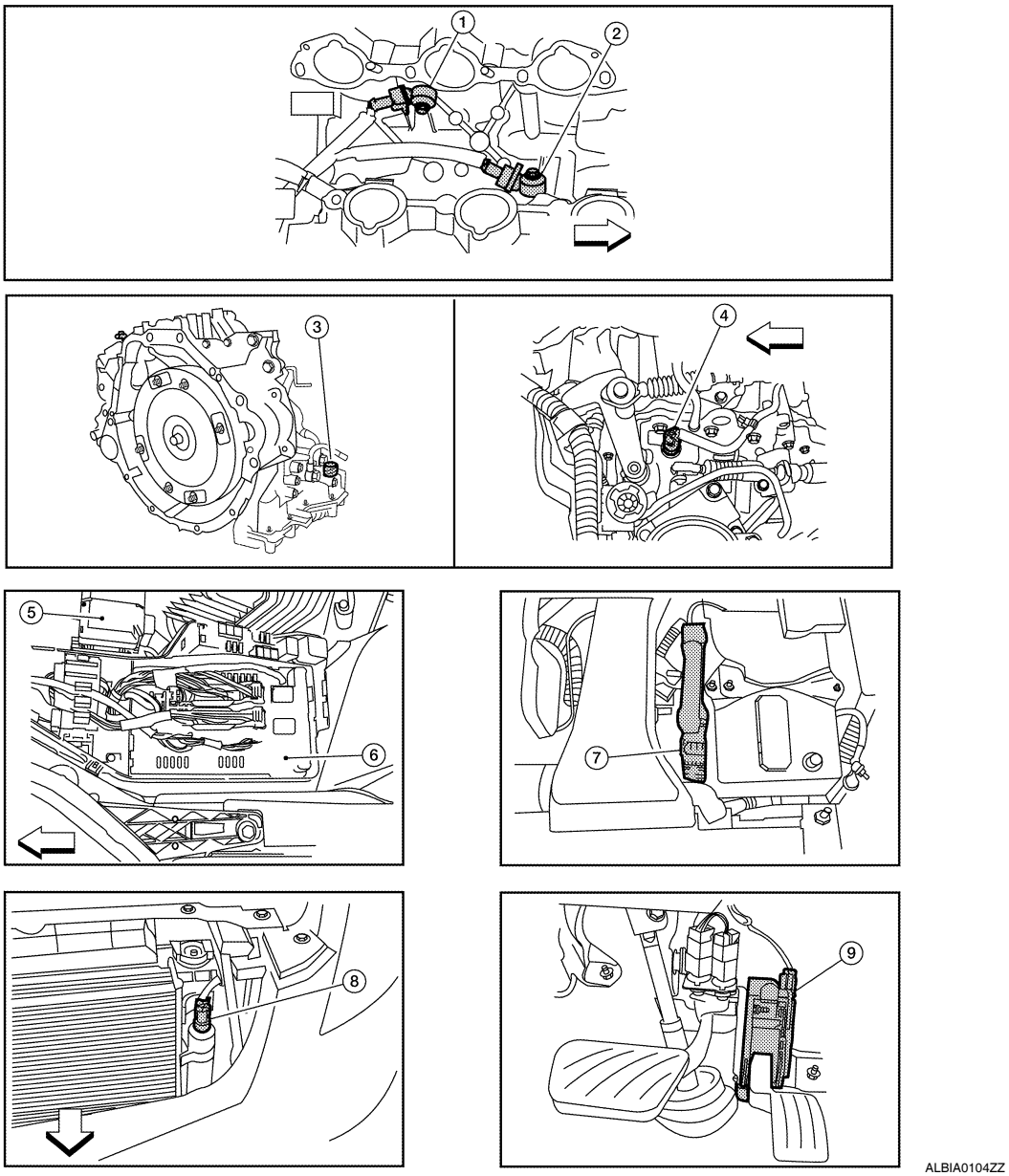

1. Knock sensor (bank 2)
2. Knock sensor (bank 1)
3. PNP switch (CVT models)
4. PNP switch (M/T models)
5. Battery
6. IPDM E/R
7. ECM
8. Refrigerant pressure sensor (shown with front grill removed)
9. Accelerator pedal

⇦ : Vehicle front

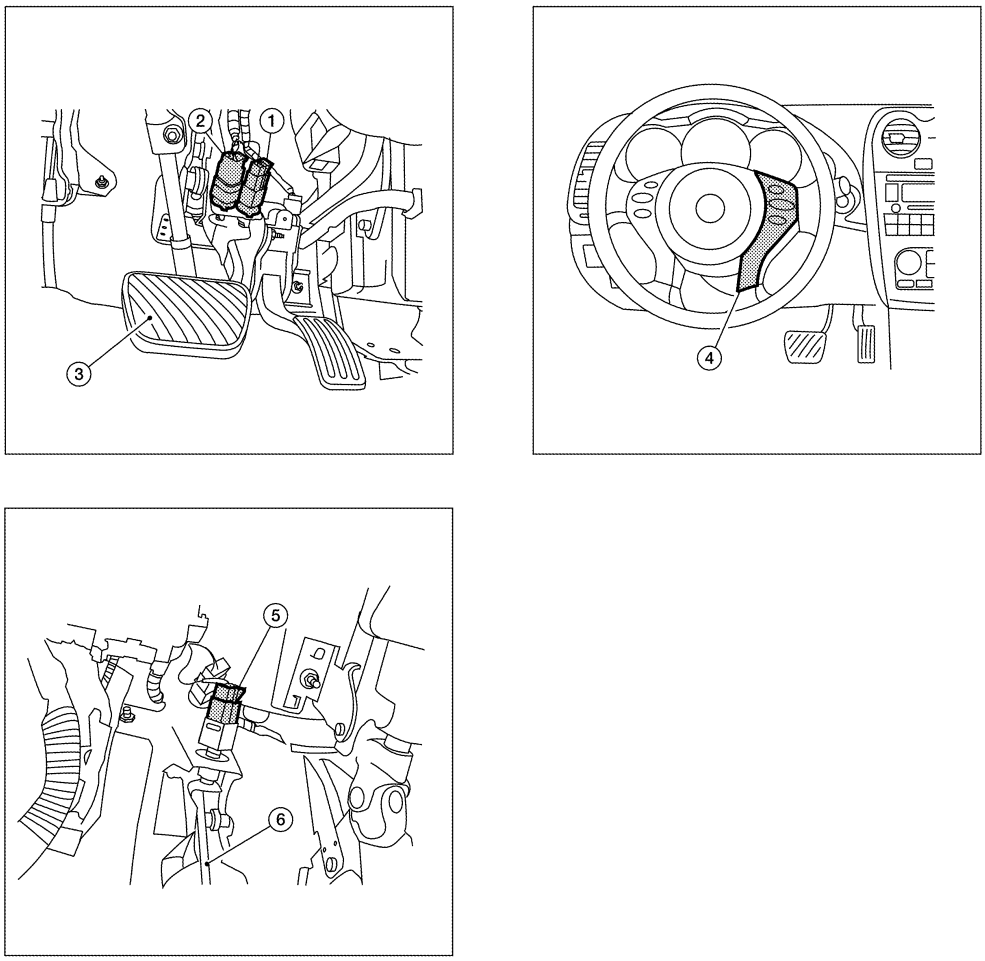

ALBIA0105ZZ

1. ASCD brake switch
2. Stop lamp switch
3. Brake pedal
4. ASCD steering switch
5. ASCD clutch switch (M/T models)
6. Clutch pedal

Component Description

INFOID:0000000004361976

Component	Reference
Accelerator pedal position sensor	EC-1448, "Description"
Camshaft position sensor (PHASE)	EC-1296, "Description"
Crankshaft position sensor (POS)	EC-1292, "Description"
Engine coolant temperature sensor	EC-1210, "Description"
Power steering pressure sensor	EC-1371, "Description"
Refrigerant pressure sensor	EC-1503, "Description"

AUTOMATIC SPEED CONTROL DEVICE (ASCD)

System Diagram

INFOID:0000000004361977

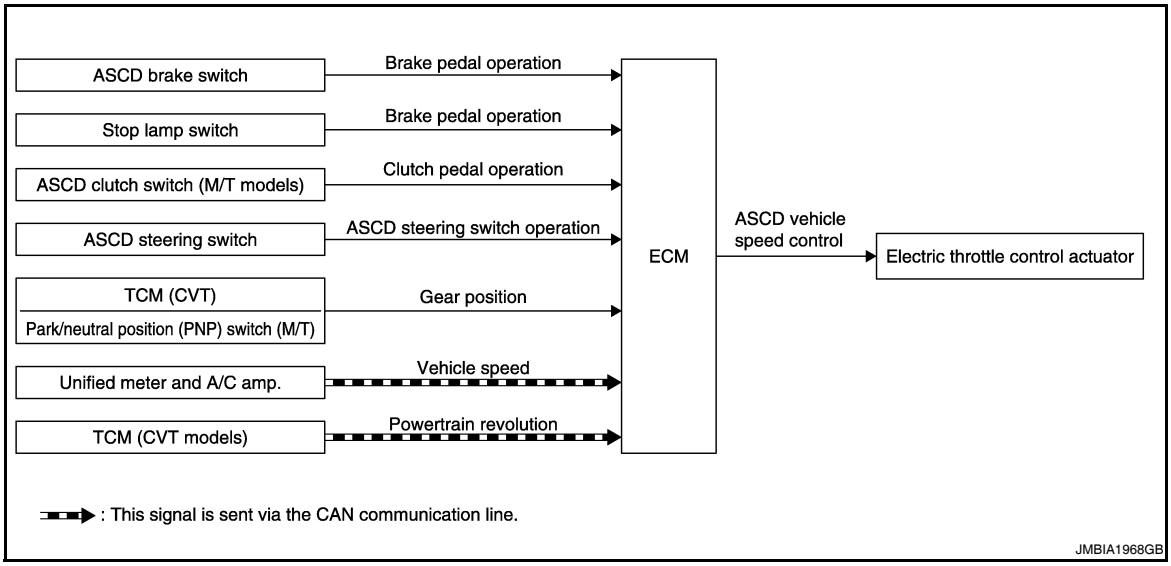

System Description

INFOID:0000000004361978

INPUT/OUTPUT SIGNAL CHART

Sensor	Input signal to ECM	ECM function	Actuator
ASCD brake switch	Brake pedal operation	ASCD vehicle speed control	Electric throttle control actuator
Stop lamp switch	Brake pedal operation		
ASCD clutch switch	Brake pedal operation		
ASCD steering switch	ASCD steering switch operation		
TCM (CVT) Park/neutral position (PNP) switch (M/T)	Gear position		
Unified meter and A/C amp.	Vehicle speed*		
TCM (CVT)	Powertrain revolution*		

*: This signal is sent to the ECM via the CAN communication line

BASIC ASCD SYSTEM

Refer to Owner's Manual for ASCD operating instructions.
Automatic Speed Control Device (ASCD) allows a driver to keep vehicle at predetermined constant speed without depressing accelerator pedal. Driver can set vehicle speed in advance between approximately 40 km/h (25 MPH) and 144 km/h (89 MPH).
ECM controls throttle angle of electric throttle control actuator to regulate engine speed.
The ASCD operation status is indicated by two indicators (CRUISE and SET on the information display) on the combination meter. If any malfunction occurs in the ASCD system, SET indicator blinks and ASCD control is deactivated.
NOTE:
Always drive vehicle in a safe manner according to traffic conditions and obey all traffic laws.

SET OPERATION

Press MAIN switch. (CRUISE is indicated on the information display.)
When vehicle speed reaches a desired speed between approximately 40 km/h (25 MPH) and 144 km/h (89 MPH), press SET/COAST switch. (Then SET is indicated on the information display in combination meter.)

ACCELERATE OPERATION

If the RESUME/ACCELERATE switch is pressed during cruise control driving, increase the vehicle speed until the switch is released or vehicle speed reaches maximum speed controlled by the system.
And then ASCD will maintain the new set speed.

CANCEL OPERATION

When any of following conditions exist, cruise operation will be canceled.

- CANCEL switch is pressed
- More than 2 switches on ASCD steering switch are pressed at the same time (Set speed will be cleared)
- Brake pedal is depressed
- Selector lever position is changed to N, P or R (CVT models)
- Vehicle speed decreased to 13 km/h (8 MPH) lower than the set speed
- TCS system is operated
- CVT control system has a malfunction. Refer to EC-1423, "Description".

When the ECM detects any of the following conditions, the ECM will cancel the cruise operation and inform the driver by blinking indicators.

- Engine coolant temperature is slightly higher than the normal operating temperature, CRUISE indicator may blink slowly.
  When the engine coolant temperature decreases to the normal operating temperature, CRUISE indicator will stop blinking and the cruise operation will be able to work by pressing SET/COAST switch or RESUME/ACCELERATE switch.
- Malfunction for some self-diagnoses regarding ASCD control: SET indicator will blink quickly.

If MAIN switch is turned to OFF while ASCD is activated, all of ASCD operations will be canceled and vehicle speed memory will be erased.

COAST OPERATION

When the SET/COAST switch is pressed during cruise control driving, decrease vehicle set speed until the switch is released. And then ASCD will maintain the new set speed.

RESUME OPERATION

When the RESUME/ACCELERATE switch is pressed after canceling operation other than pressing the MAIN switch, vehicle speed will return to last set speed. To resume vehicle set speed, vehicle condition must meet following conditions.

- Brake pedal is released
- Clutch pedal is released (M/T models)
- Selector lever position is other than P and N (CVT models)
- Vehicle speed is greater than 40 km/h (25 MPH) and less than 144 km/h (89 MPH)

Component Parts Location

INFOID:0000000004404406

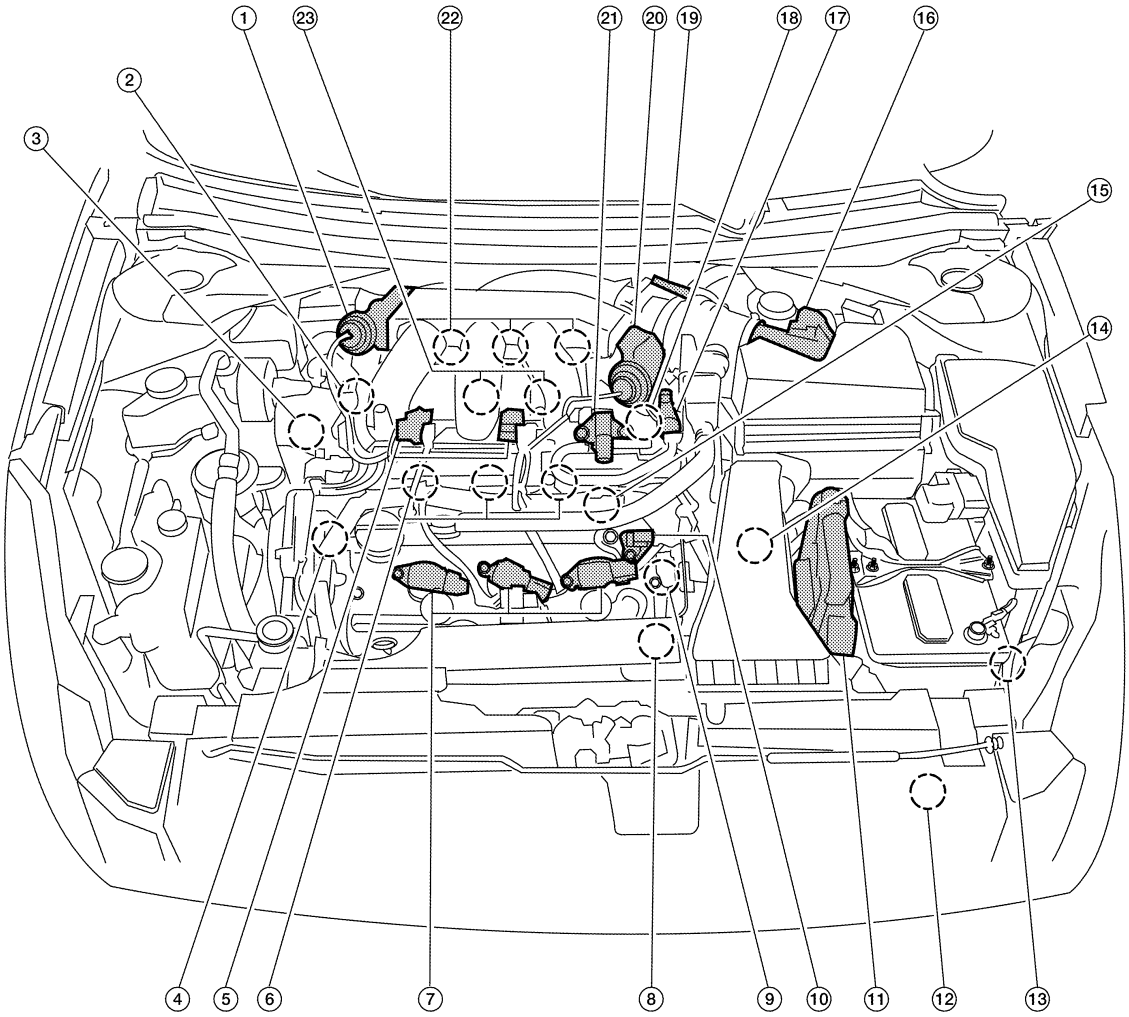

ALBIA0110ZZ

1. Power valve actuator 1	2. Intake valve timing control solenoid valve (bank 1)	3. Power steering pressure sensor
4. Intake valve timing control solenoid valve (bank 2)	5. VIAS control solenoid valves 1 and 2	6. Fuel injector (bank 2)
7. Ignition coil (with power transistor) and spark plug (bank 2)	8. Crankshaft position sensor (POS)	9. Engine coolant temperature sensor
10. Camshaft position sensor (PHASE) (bank 2)	11. ECM	12. Refrigerant pressure sensor
13. Battery current sensor	14. PNP switch	15. Condenser-2
16. Mass air flow sensor (with intake air temperature sensor)	17. EVAP service port	18. Camshaft position sensor (PHASE) (bank 1)
19. Electric throttle control actuator	20. Power valve actuator 2	21. EVAP canister purge volume control solenoid valve
22. Ignition coil (with power transistor) and spark plug (bank 1)	23. Knock sensor	

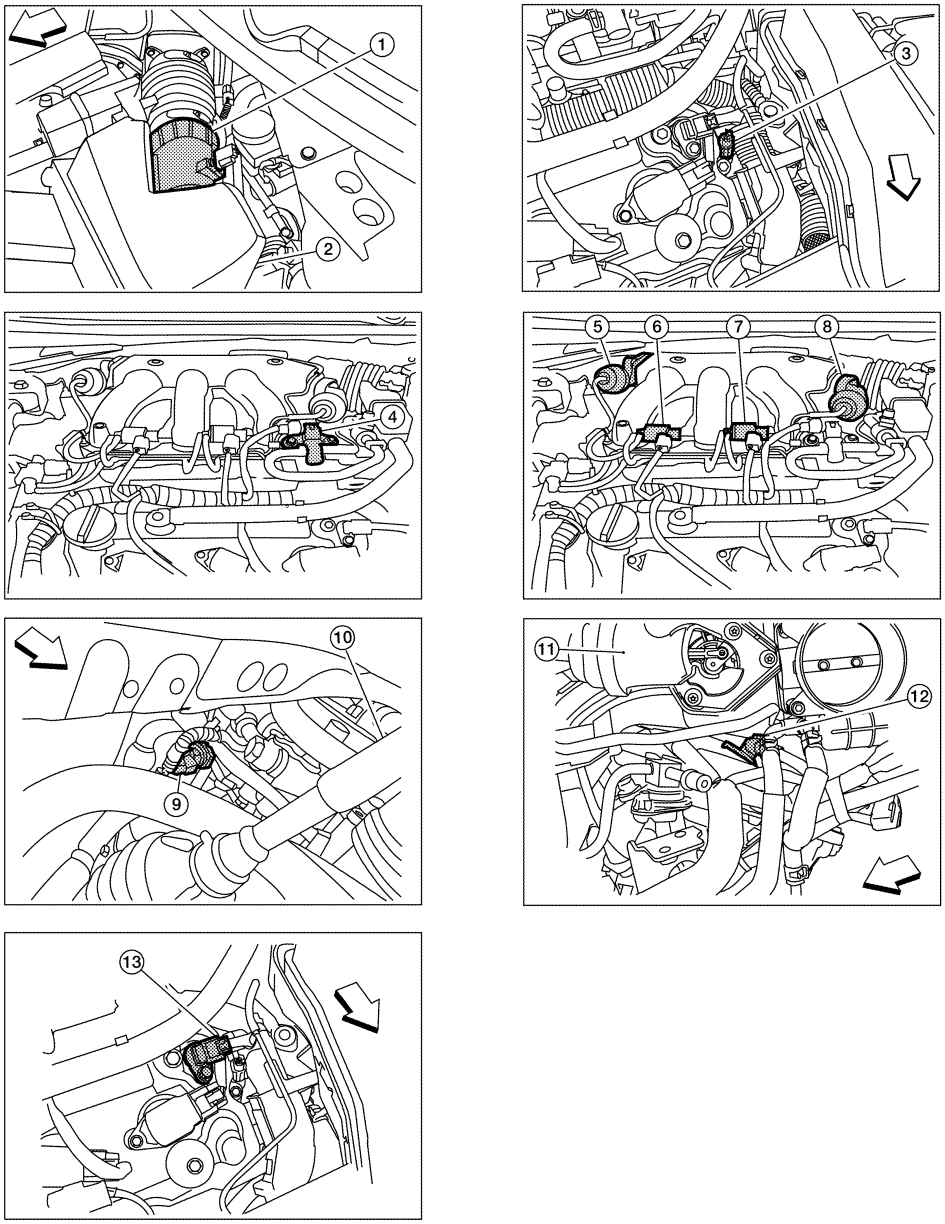

ALBIA0101ZZ

1. Mas air flow sensor (with intake air temperature sensor)
2. Air cleaner case
3. Engine coolant temperature sensor
4. EVAP canister purge volume control solenoid valve
5. Power valve actuator 1
6. VIAS control solenoid valve 1
7. VIAS control solenoid valve 2
8. Power valve actuator 2
9. Power steering pressure sensor
10. Tie rod (RH)
11. Power valve actuator 2
12. Camshaft position sensor (PHASE) (bank 1)
13. Camshaft position sensor (PHASE) (bank 2)

⇦ : Vehicle front

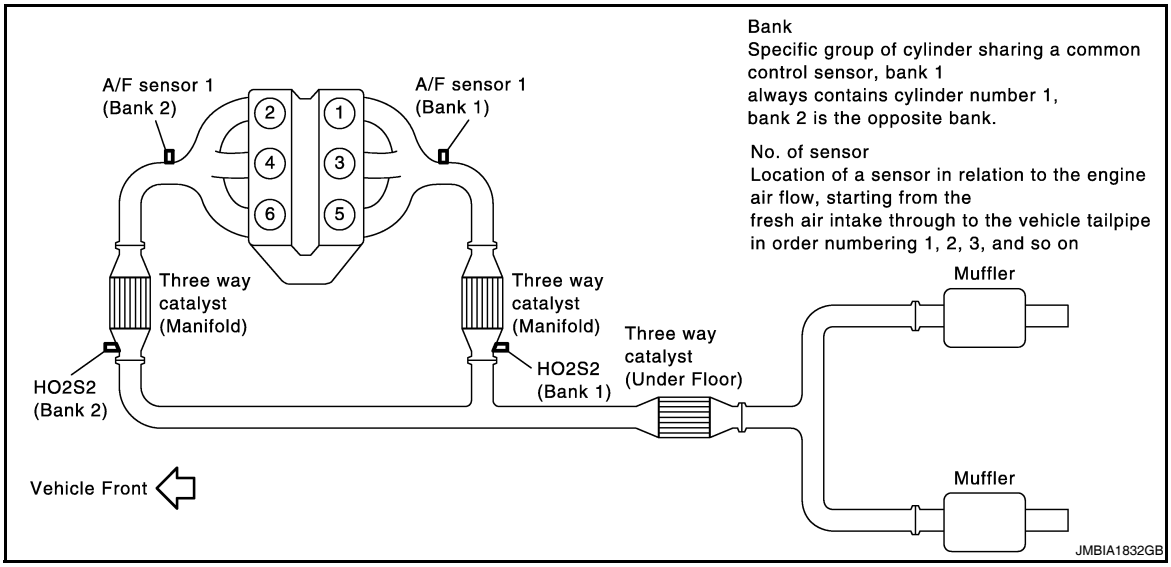
Bank
Specific group of cylinder sharing a common control sensor, bank 1 always contains cylinder number 1, bank 2 is the opposite bank.
No. of sensor
Location of a sensor in relation to the engine air flow, starting from the fresh air intake through to the vehicle tailpipe in order numbering 1, 2, 3, and so on
A/F sensor 1 (Bank 2)
A/F sensor 1 (Bank 1)
2
1
4
3
6
5
Three way catalyst (Manifold)
Three way catalyst (Manifold)
HO2S2 (Bank 2)
HO2S2 (Bank 1)
Three way catalyst (Under Floor)
Muffler
Muffler
Vehicle Front
JMBIA1832GB

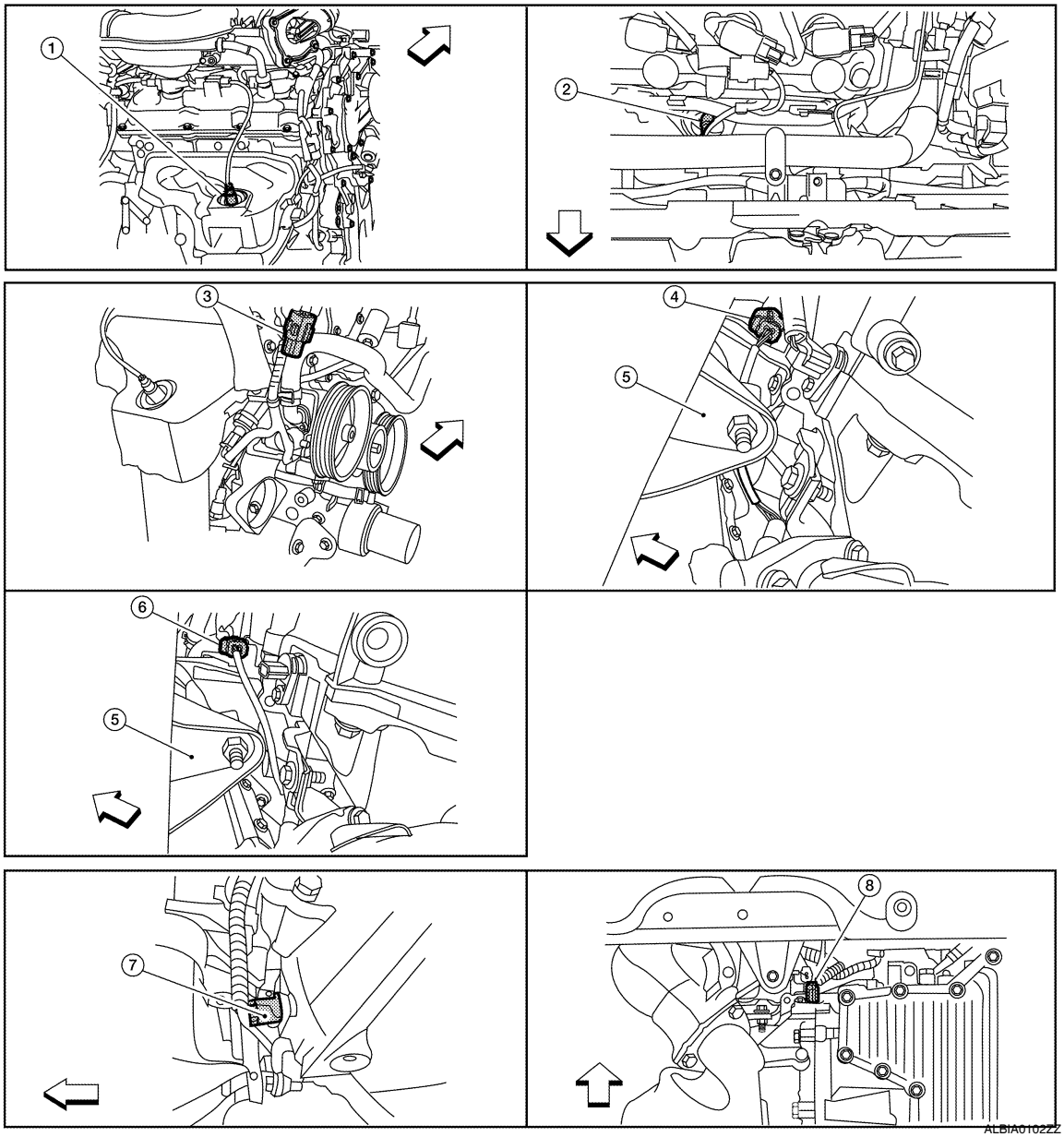
1
2
3
4
5
6
5
7
8
ALBIA0102ZZ

1. A/F sensor 1 (bank 1)
2. A/F sensor 1 (bank 2)
3. HO2S2 (bank 1) harness connector
4. HO2S2 (bank 2) harness connector (CVT models)
5. Front engine mount
6. HO2S2 (bank 2) harness connector (M/T models)
7. Crankshaft position sensor (POS) (M/T models)
8. Crankshaft position sensor (POS) (CVT models)

⇦ : Vehicle front

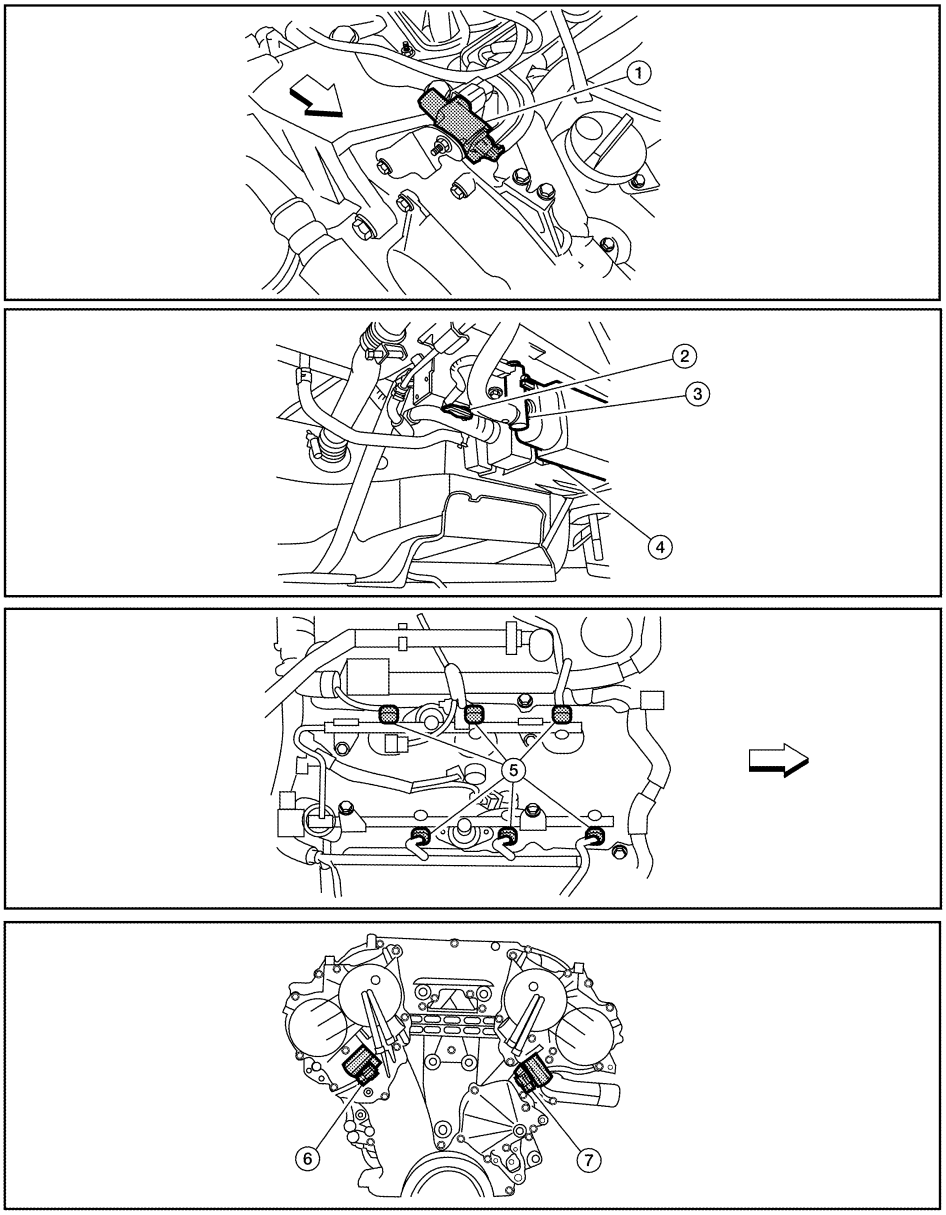

ALBIA0103ZZ

1. Electronic controlled engine mount control solenoid valve
2. EVAP control system pressure sensor
3. EVAP canister vent control valve
4. EVAP canister
5. Injector harness connector
6. Intake valve timing control solenoid valve (bank 1)
7. Intake valve timing control solenoid valve (bank 2)

⇦ : Vehicle front

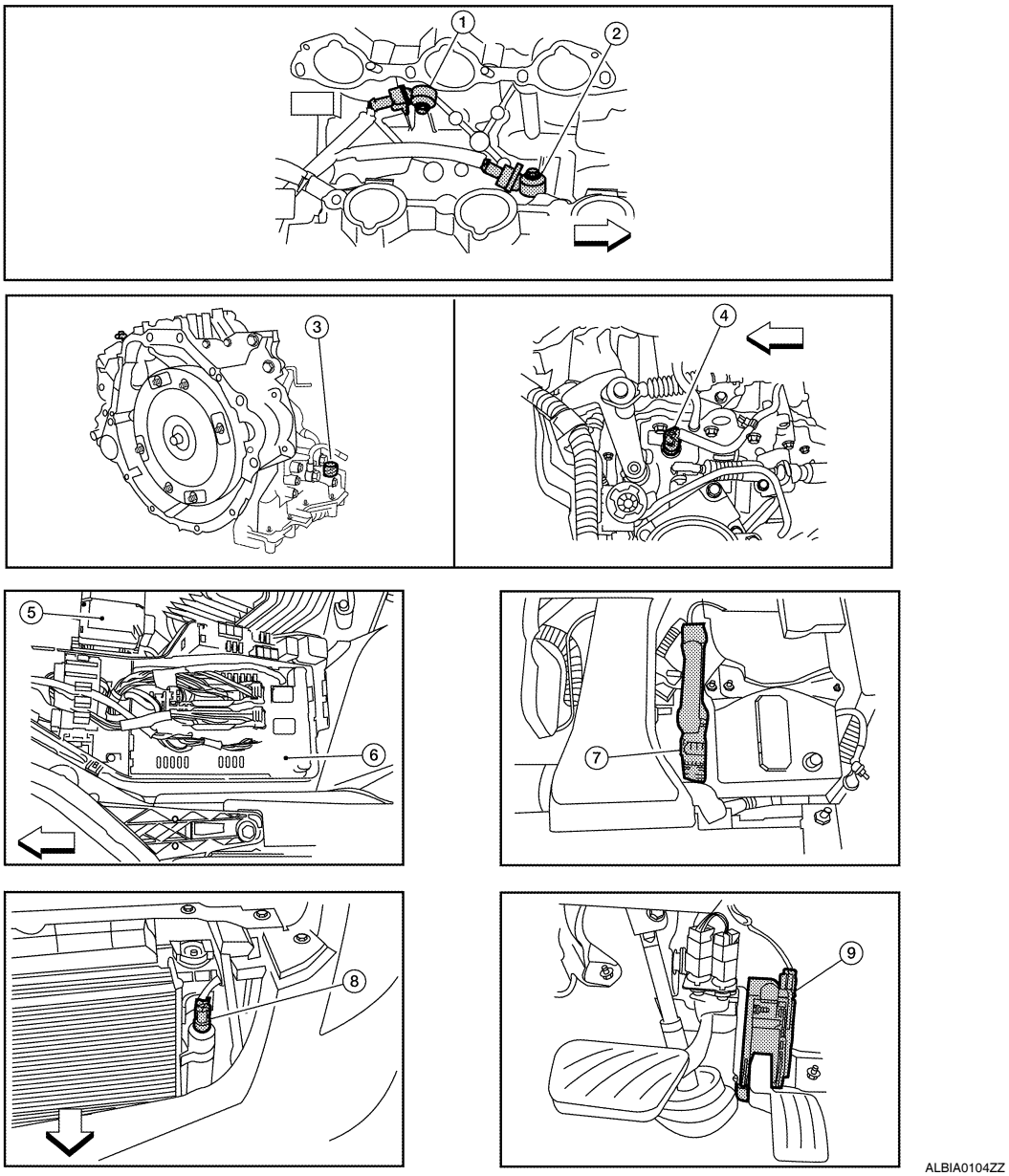

1. Knock sensor (bank 2)
2. Knock sensor (bank 1)
3. PNP switch (CVT models)
4. PNP switch (M/T models)
5. Battery
6. IPDM E/R
7. ECM
8. Refrigerant pressure sensor (shown with front grill removed)
9. Accelerator pedal

⇦ : Vehicle front

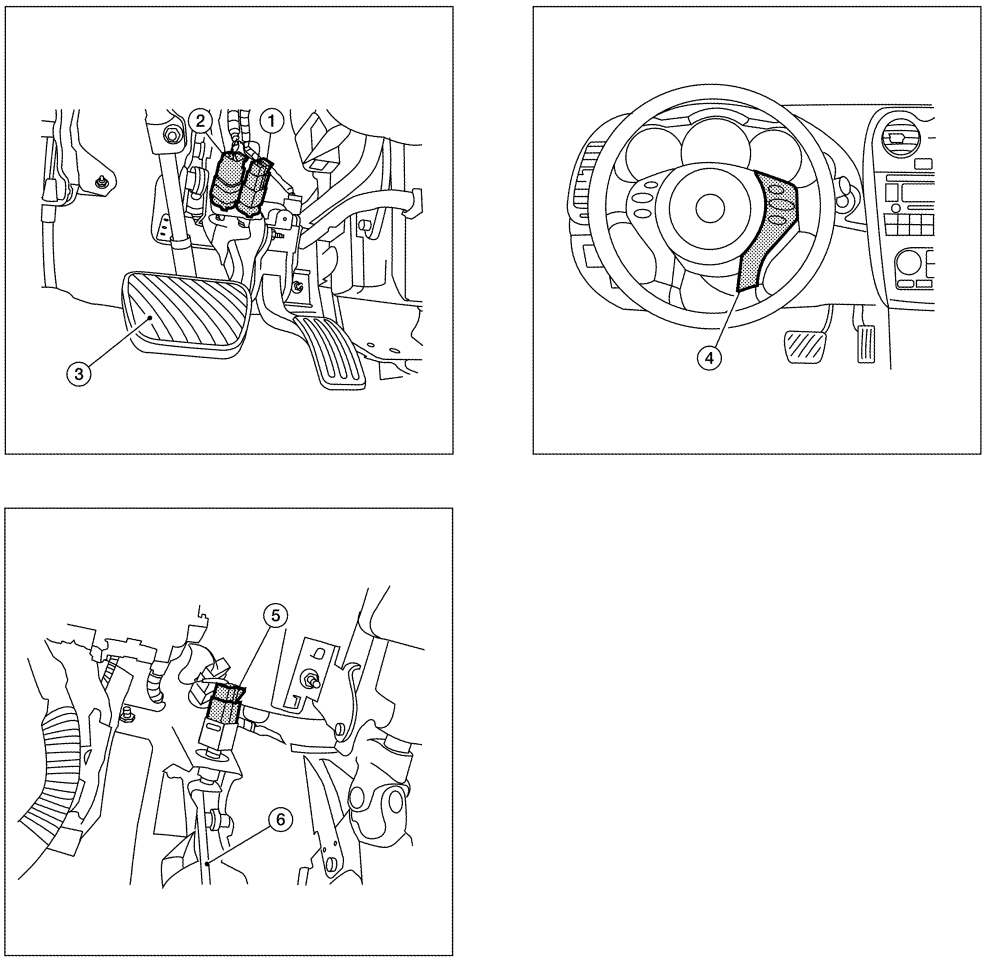

ALBIA0105ZZ

1. ASCD brake switch
2. Stop lamp switch
3. Brake pedal
4. ASCD steering switch
5. ASCD clutch switch (M/T models)
6. Clutch pedal

Component Description

INFOID:0000000004361980

Component	Reference
ASCD brake switch	EC-1413, "Description"
ASCD clutch switch	EC-1413, "Description"
ASCD indicator	EC-1472, "Description"
ASCD steering switch	EC-1410, "Description"
Electric throttle control actuator	EC-1446, "Description"
Park/neutral position (PNP) switch (M/T)	EC-1382, "Description"
Stop lamp switch	EC-1434, "Description"
TCM (CVT)	EC-1382, "Description"

CAN COMMUNICATION

System Description

INFOID:0000000004361981

CAN (Controller Area Network) is a serial communication line for real time application. It is an on-vehicle multiplex communication line with high data communication speed and excellent error detection ability. Many electronic control units are equipped onto a vehicle, and each control unit shares information and links with other control units during operation (not independent). In CAN communication, control units are connected with 2 communication lines (CAN H line, CAN L line) allowing a high rate of information transmission with less wiring. Each control unit transmits/receives data but selectively reads required data only.
Refer to LAN-25, "CAN Communication Signal Chart", about CAN communication for detail.

COOLING FAN CONTROL

System Diagram

INFOID:0000000004361982

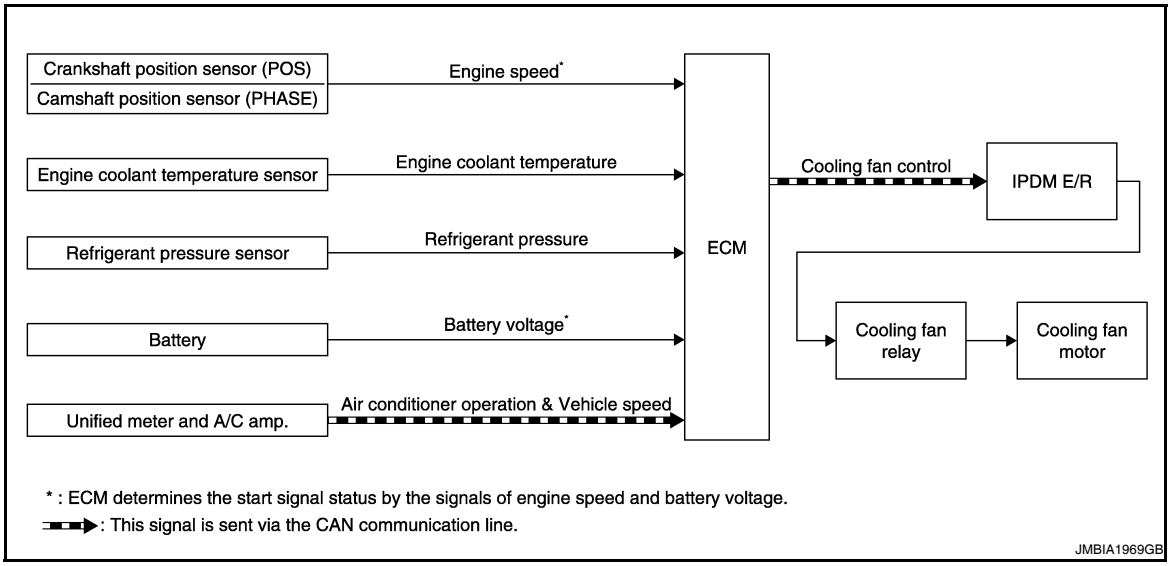

System Description

INFOID:0000000004361983

INPUT/OUTPUT SIGNAL CHART

Sensor	Input signal to ECM	ECM function	Actuator
Crankshaft position sensor (POS) Camshaft position sensor (PHASE)	Engine speed*1	Cooling fan control	IPDM E/R ↓ Cooling fan relay ↓ Cooling fan motor
Engine coolant temperature sensor	Engine coolant temperature		
Refrigerant pressure sensor	Refrigerant pressure		
Battery	Battery voltage*1		
Unified meter and A/C amp.	Air conditioner ON signal*2		
	Vehicle speed*2		

*1: The ECM determines the start signal status by the signals of engine speed and battery voltage.

*2: This signal is sent to ECM via the CAN communication line.

SYSTEM DESCRIPTION

The ECM controls the cooling fan corresponding to the vehicle speed, engine coolant temperature, refrigerant pressure, and air conditioner ON signal. The control system has 4-step control [HIGH/MIDDLE/LOW/OFF].

Cooling Fan Operation

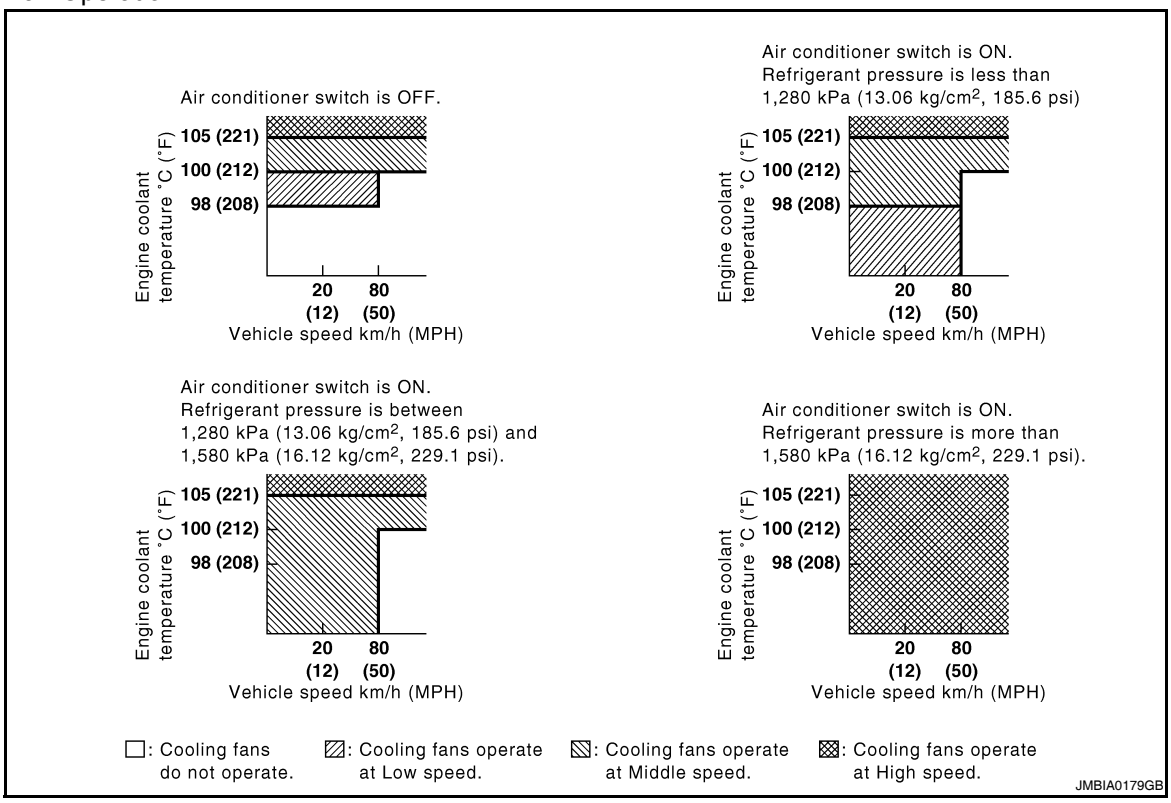

Cooling Fan Relay Operation

The ECM controls cooling fan relays in the IPDM E/R via the CAN communication line.

Cooling fan speed	Cooling fan relay		
	1	2	3
Stop (OFF)	OFF	OFF	OFF
Low (LOW)	ON	OFF	OFF
Middle (MID)	OFF	ON	OFF
High (HI)	OFF	ON	ON

Component Parts Location

INFOID:0000000004404407

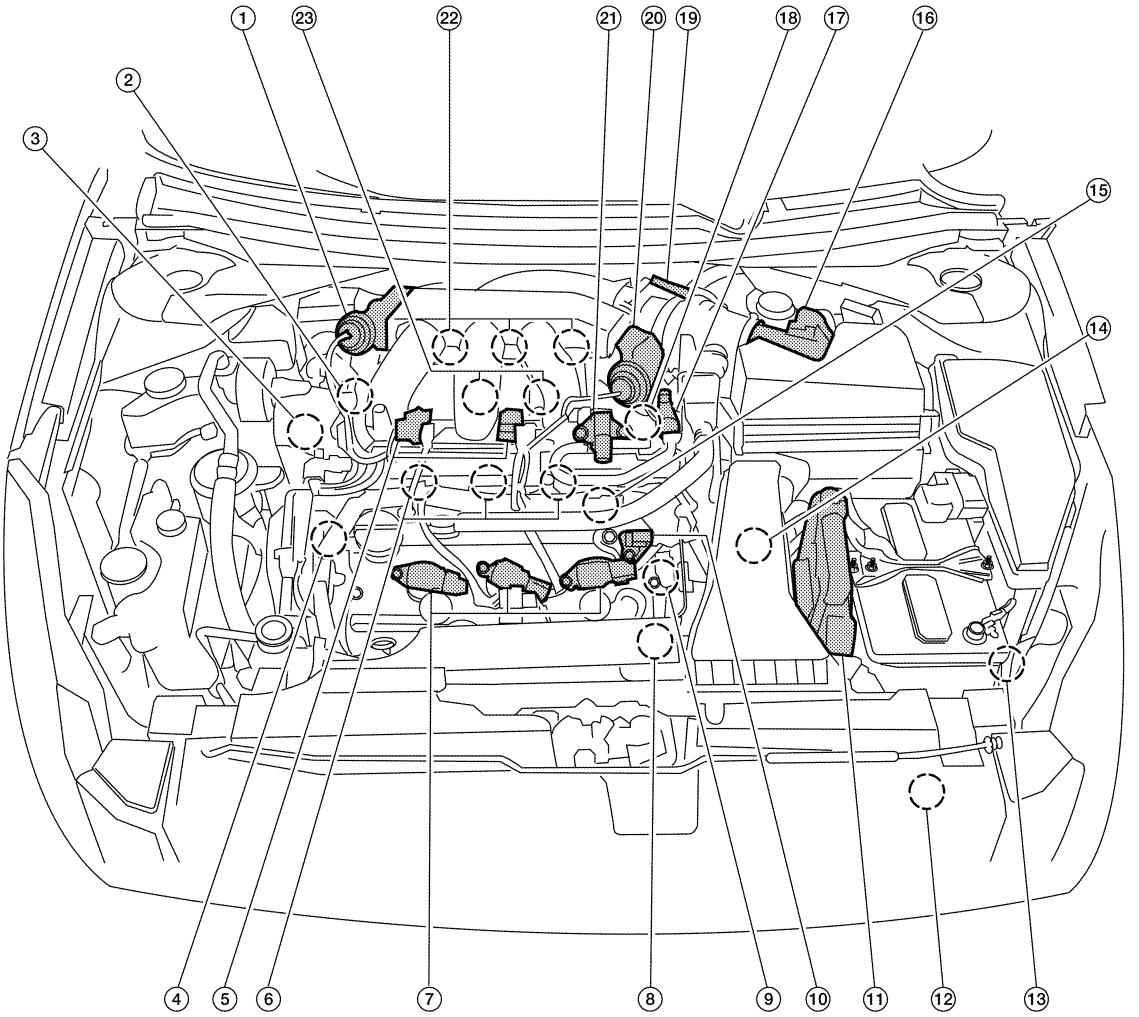

ALBIA0110ZZ

1. Power valve actuator 1	2. Intake valve timing control solenoid valve (bank 1)	3. Power steering pressure sensor
4. Intake valve timing control solenoid valve (bank 2)	5. VIAS control solenoid valves 1 and 2	6. Fuel injector (bank 2)
7. Ignition coil (with power transistor) and spark plug (bank 2)	8. Crankshaft position sensor (POS)	9. Engine coolant temperature sensor
10. Camshaft position sensor (PHASE) (bank 2)	11. ECM	12. Refrigerant pressure sensor
13. Battery current sensor	14. PNP switch	15. Condenser-2
16. Mass air flow sensor (with intake air temperature sensor)	17. EVAP service port	18. Camshaft position sensor (PHASE) (bank 1)
19. Electric throttle control actuator	20. Power valve actuator 2	21. EVAP canister purge volume control solenoid valve
22. Ignition coil (with power transistor) and spark plug (bank 1)	23. Knock sensor	

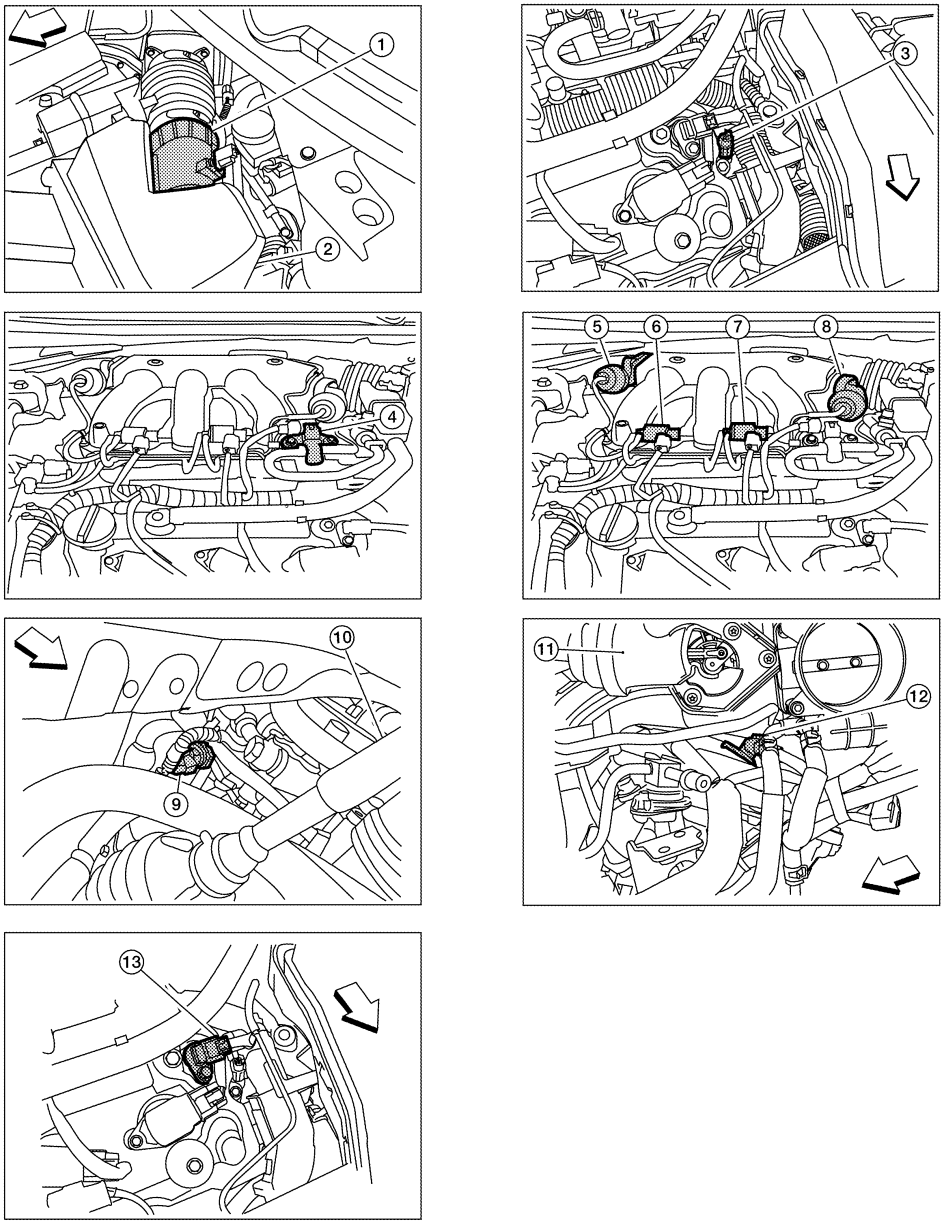

ALBIA0101ZZ

1. Mas air flow sensor (with intake air temperature sensor)
2. Air cleaner case
3. Engine coolant temperature sensor
4. EVAP canister purge volume control solenoid valve
5. Power valve actuator 1
6. VIAS control solenoid valve 1
7. VIAS control solenoid valve 2
8. Power valve actuator 2
9. Power steering pressure sensor
10. Tie rod (RH)
11. Power valve actuator 2
12. Camshaft position sensor (PHASE) (bank 1)
13. Camshaft position sensor (PHASE) (bank 2)

⇦ : Vehicle front

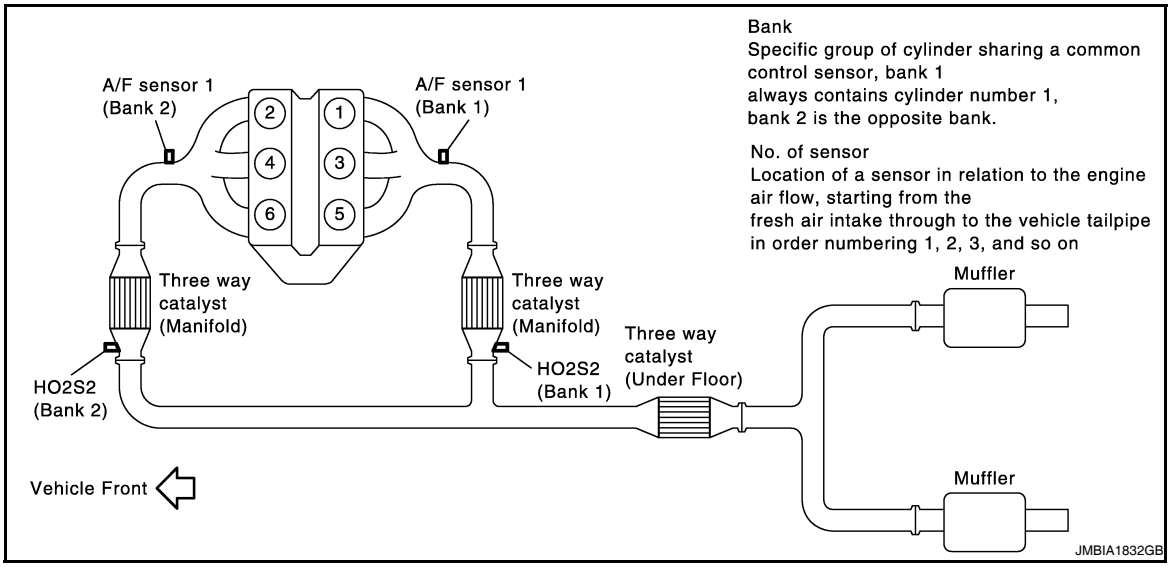
Bank
Specific group of cylinder sharing a common control sensor, bank 1 always contains cylinder number 1, bank 2 is the opposite bank.
No. of sensor
Location of a sensor in relation to the engine air flow, starting from the fresh air intake through to the vehicle tailpipe in order numbering 1, 2, 3, and so on
A/F sensor 1 (Bank 2)
A/F sensor 1 (Bank 1)
2
1
4
3
6
5
Three way catalyst (Manifold)
Three way catalyst (Manifold)
HO2S2 (Bank 2)
HO2S2 (Bank 1)
Three way catalyst (Under Floor)
Muffler
Muffler
Vehicle Front
JMBIA1832GB

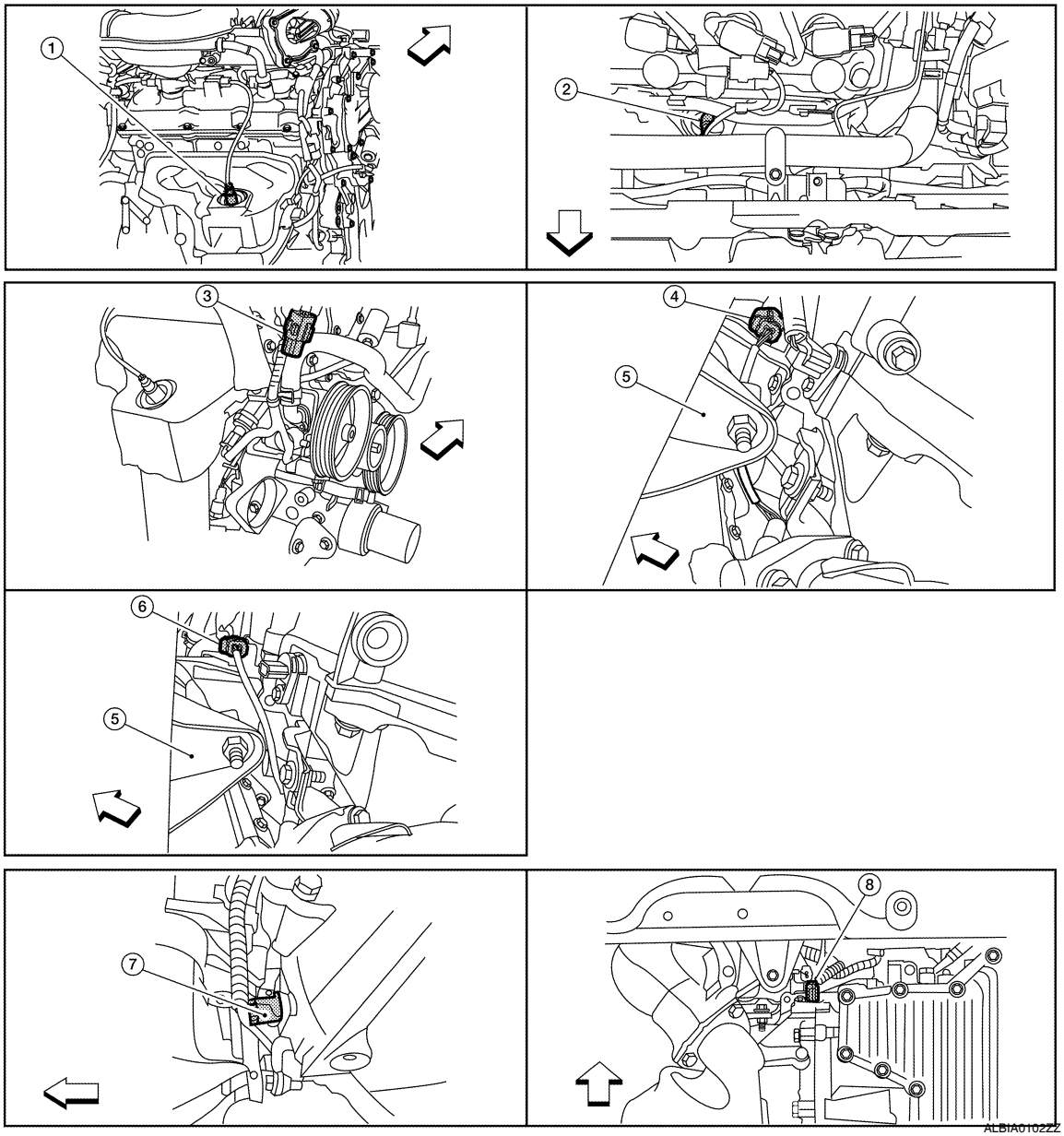
1
2
3
4
5
6
5
7
8
ALBIA0102ZZ

1. A/F sensor 1 (bank 1)
2. A/F sensor 1 (bank 2)
3. HO2S2 (bank 1) harness connector
4. HO2S2 (bank 2) harness connector (CVT models)
5. Front engine mount
6. HO2S2 (bank 2) harness connector (M/T models)
7. Crankshaft position sensor (POS) (M/T models)
8. Crankshaft position sensor (POS) (CVT models)

⇦ : Vehicle front

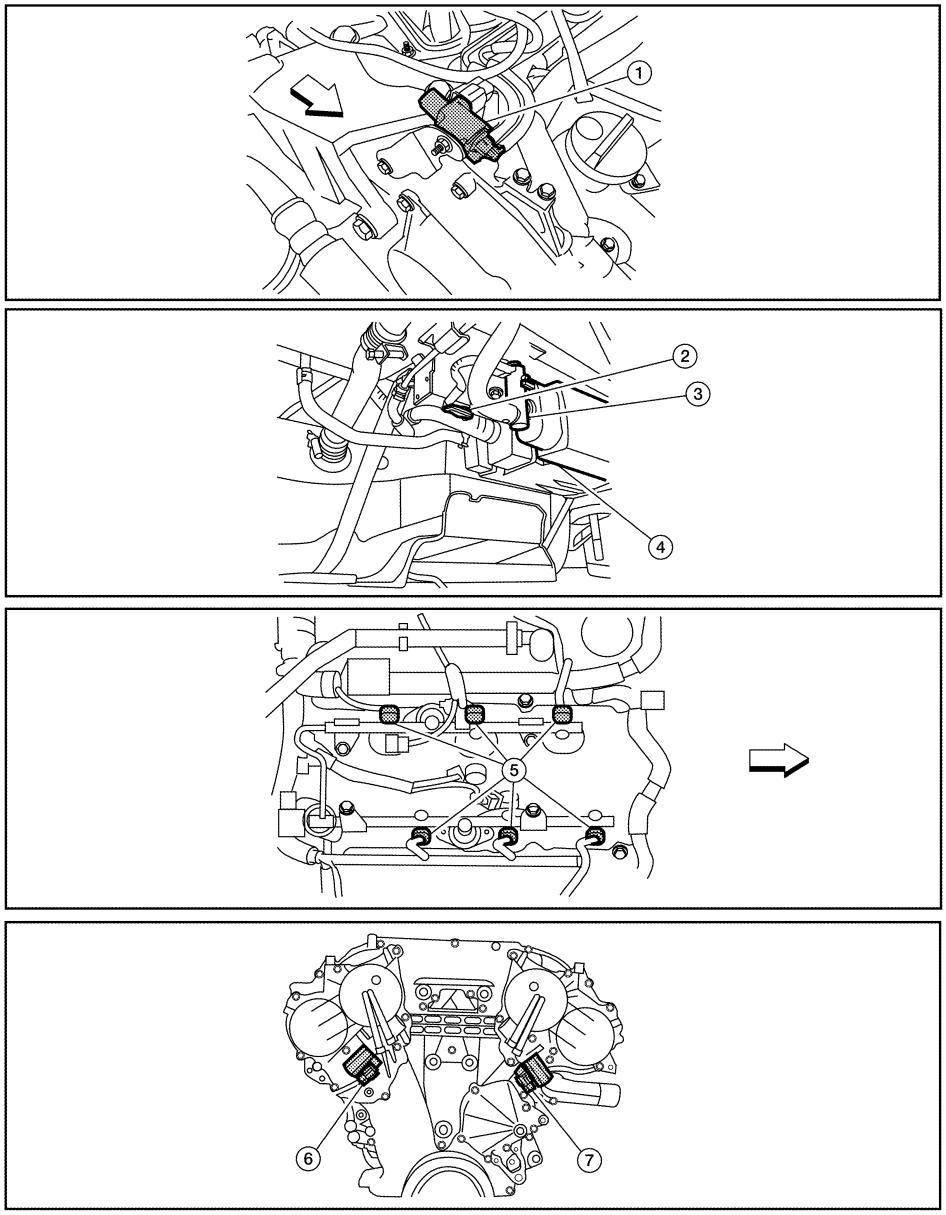

ALBIA0103ZZ

1. Electronic controlled engine mount control solenoid valve
2. EVAP control system pressure sensor
3. EVAP canister vent control valve
4. EVAP canister
5. Injector harness connector
6. Intake valve timing control solenoid valve (bank 1)
7. Intake valve timing control solenoid valve (bank 2)

⇦ : Vehicle front

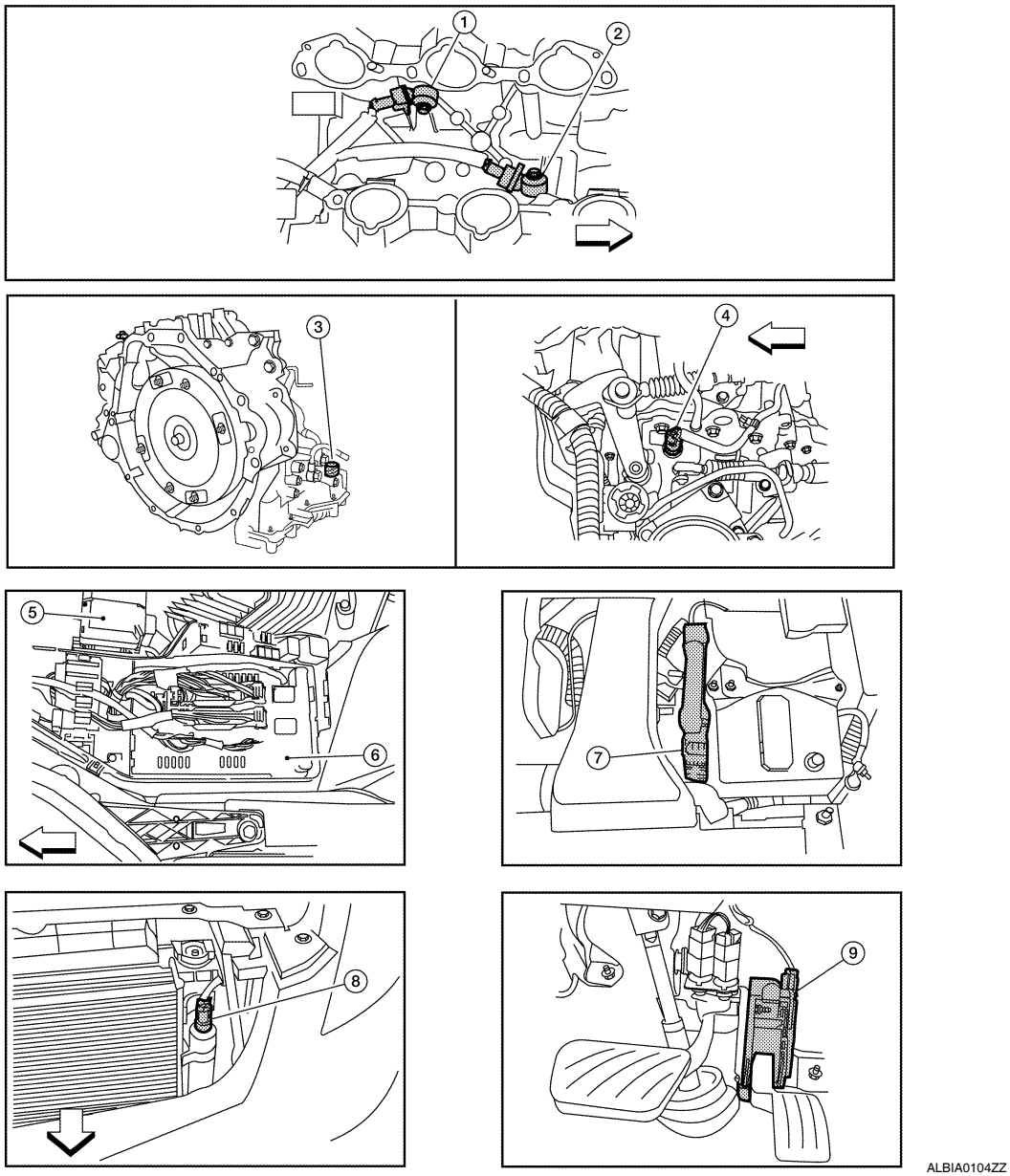

1. Knock sensor (bank 2)
2. Knock sensor (bank 1)
3. PNP switch (CVT models)
4. PNP switch (M/T models)
5. Battery
6. IPDM E/R
7. ECM
8. Refrigerant pressure sensor (shown with front grill removed)
9. Accelerator pedal

⇦ : Vehicle front

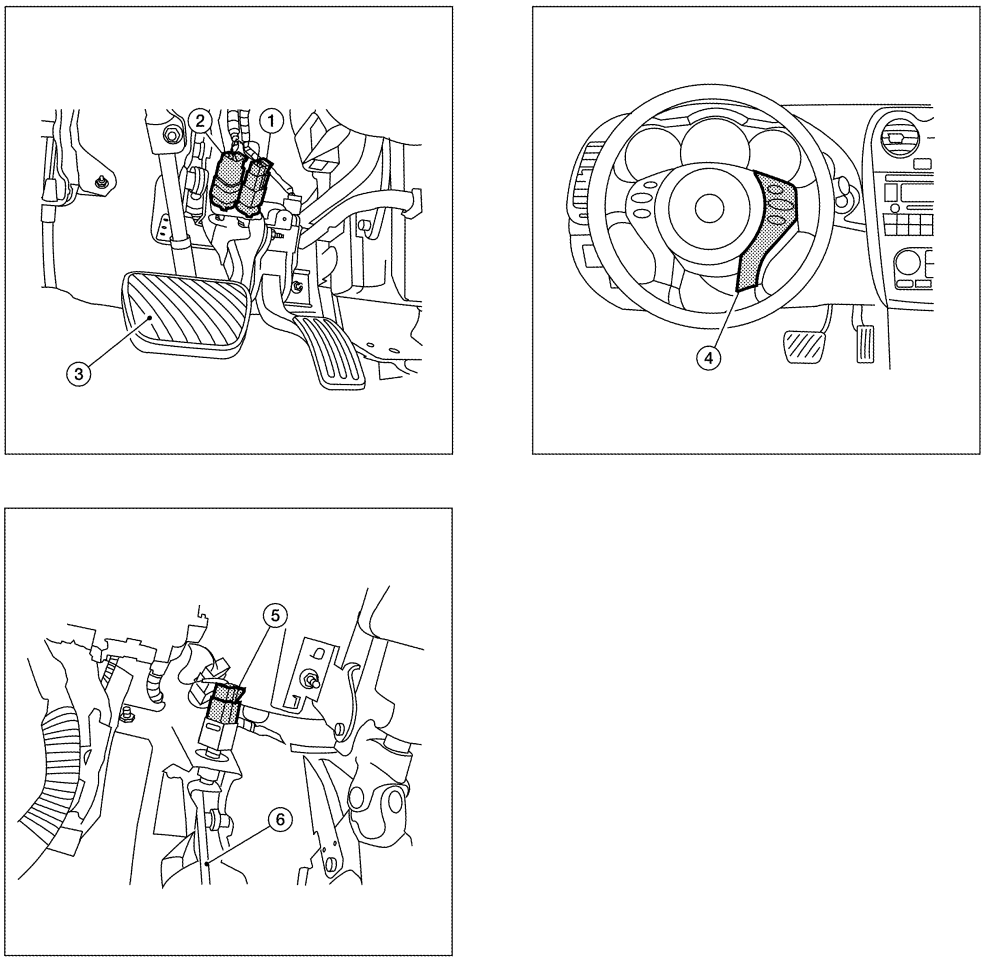

ALBIA0105ZZ

1. ASCD brake switch
2. Stop lamp switch
3. Brake pedal
4. ASCD steering switch
5. ASCD clutch switch (M/T models)
6. Clutch pedal

Component Description

INFOID:0000000004361985

Component	Reference
Camshaft position sensor (PHASE)	EC-1296, "Description"
Crankshaft position sensor (POS)	EC-1292, "Description"
Cooling fan motor	EC-1473, "Description"
Engine coolant temperature sensor	EC-1210, "Description"
Refrigerant pressure sensor	EC-1503, "Description"

ELECTRONIC CONTROLLED ENGINE MOUNT

System Diagram

INFOID:0000000004361986

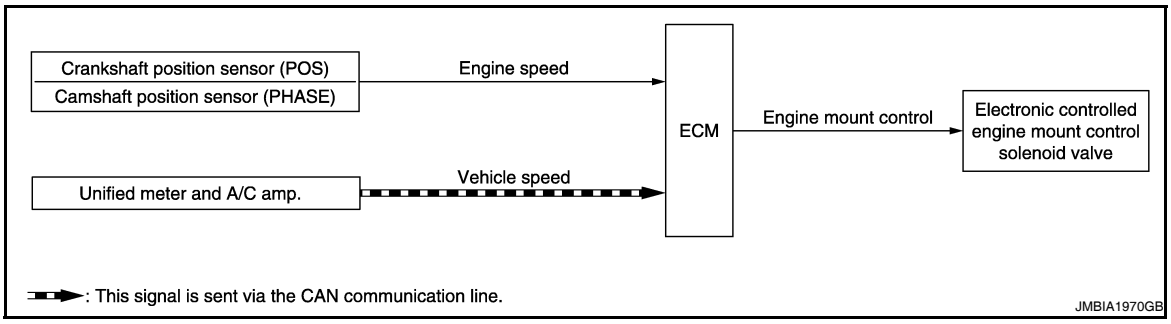

System Description

INFOID:0000000004361987

INPUT/OUTPUT SIGNAL CHART

Sensor	Input signal to ECM	ECM function	Actuator
Crankshaft position sensor (POS) Camshaft position sensor (PHASE)	Engine speed	Engine mount control	Electronic controlled engine mount control solenoid valve
Unified meter and A/C amp.	Vehicle speed*		

*: This signal is sent to the ECM via the CAN communication line.

SYSTEM DESCRIPTION

The ECM controls the engine mount operation corresponding to the engine speed. The control system has a 2-step control [Soft/Hard]

Vehicle condition	Engine mount control
Engine speed: Below 950 rpm	Soft
Engine speed: Above 950 rpm	Hard

ELECTRONIC CONTROLLED ENGINE MOUNT LINE DRAWING

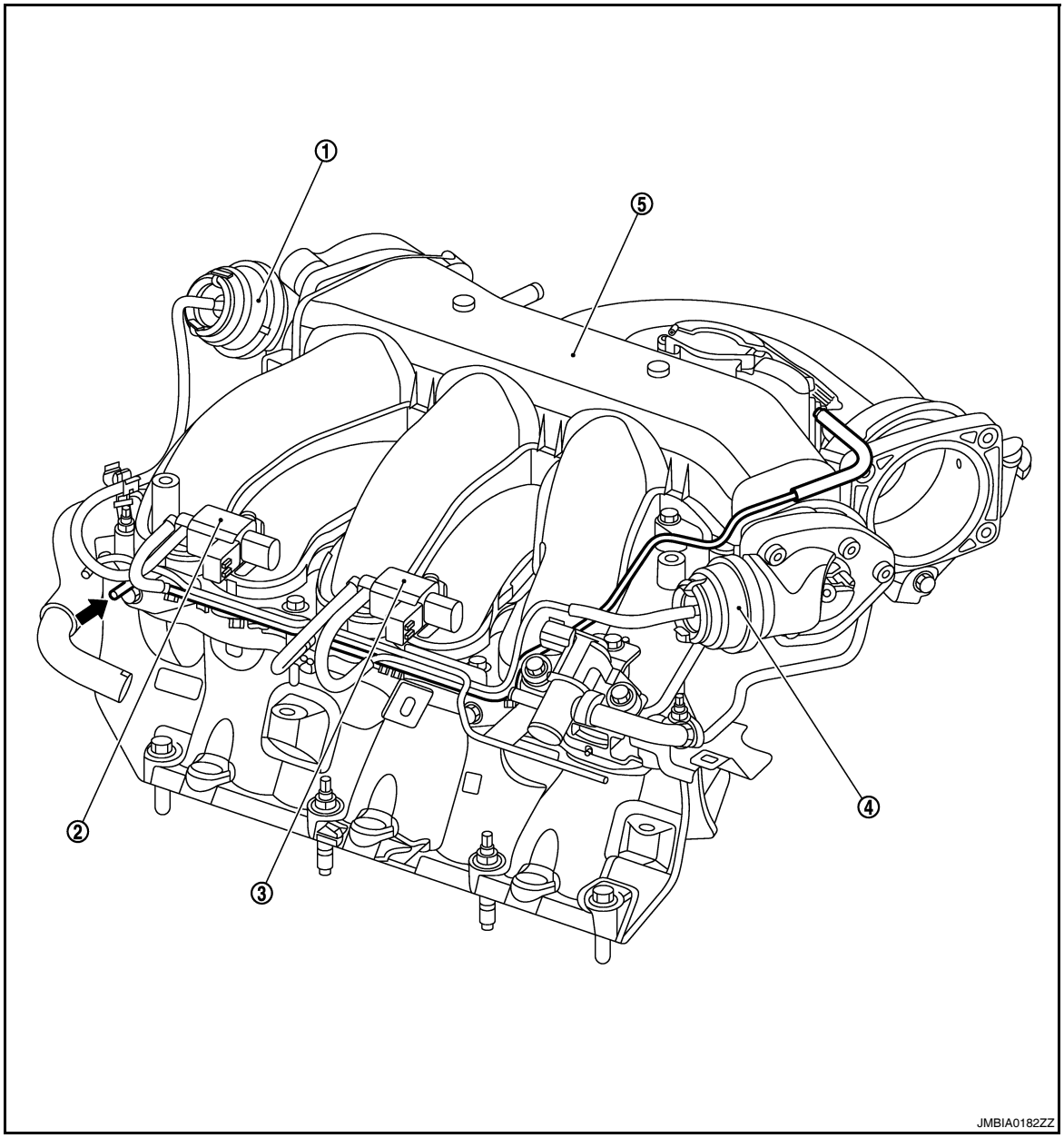

1. Power valve actuator 1
2. VIAS control solenoid valve 1
3. VIAS control solenoid valve 2
4. Power valve actuator 2
5. Intake manifold collector

⬅ : From next figure

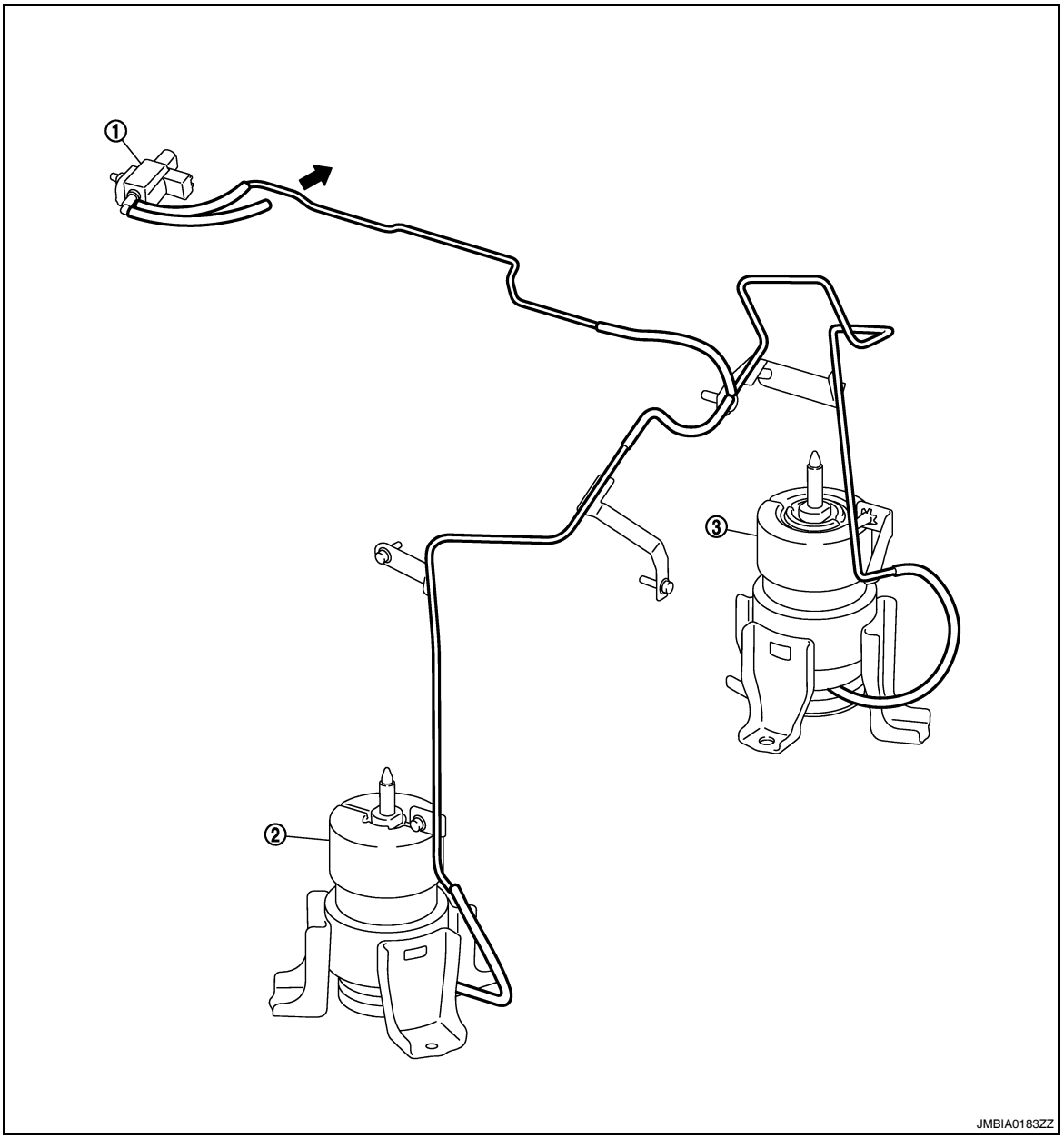

1. Electronic controlled engine mount control solenoid valve
2. Front electronic controlled engine mount
3. Rear electronic controlled engine mount

⬅ : To previous figure

NOTE:
Do not use soapy water or any type of solvent while installing vacuum hose.

Component Parts Location

INFOID:0000000004404408

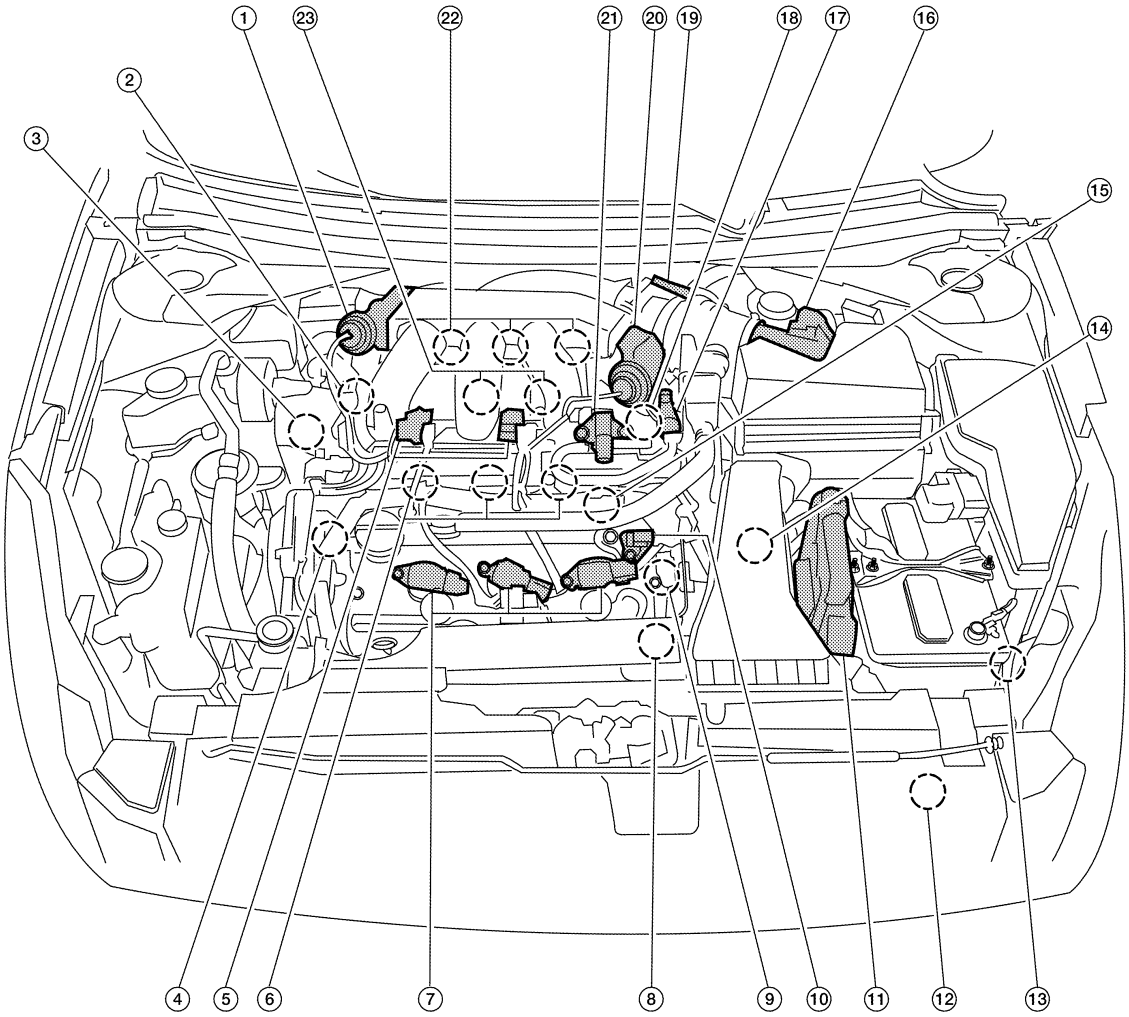

ALBIA0110ZZ

1. Power valve actuator 1	2. Intake valve timing control solenoid valve (bank 1)	3. Power steering pressure sensor
4. Intake valve timing control solenoid valve (bank 2)	5. VIAS control solenoid valves 1 and 2	6. Fuel injector (bank 2)
7. Ignition coil (with power transistor) and spark plug (bank 2)	8. Crankshaft position sensor (POS)	9. Engine coolant temperature sensor
10. Camshaft position sensor (PHASE) (bank 2)	11. ECM	12. Refrigerant pressure sensor
13. Battery current sensor	14. PNP switch	15. Condenser-2
16. Mass air flow sensor (with intake air temperature sensor)	17. EVAP service port	18. Camshaft position sensor (PHASE) (bank 1)
19. Electric throttle control actuator	20. Power valve actuator 2	21. EVAP canister purge volume control solenoid valve
22. Ignition coil (with power transistor) and spark plug (bank 1)	23. Knock sensor	

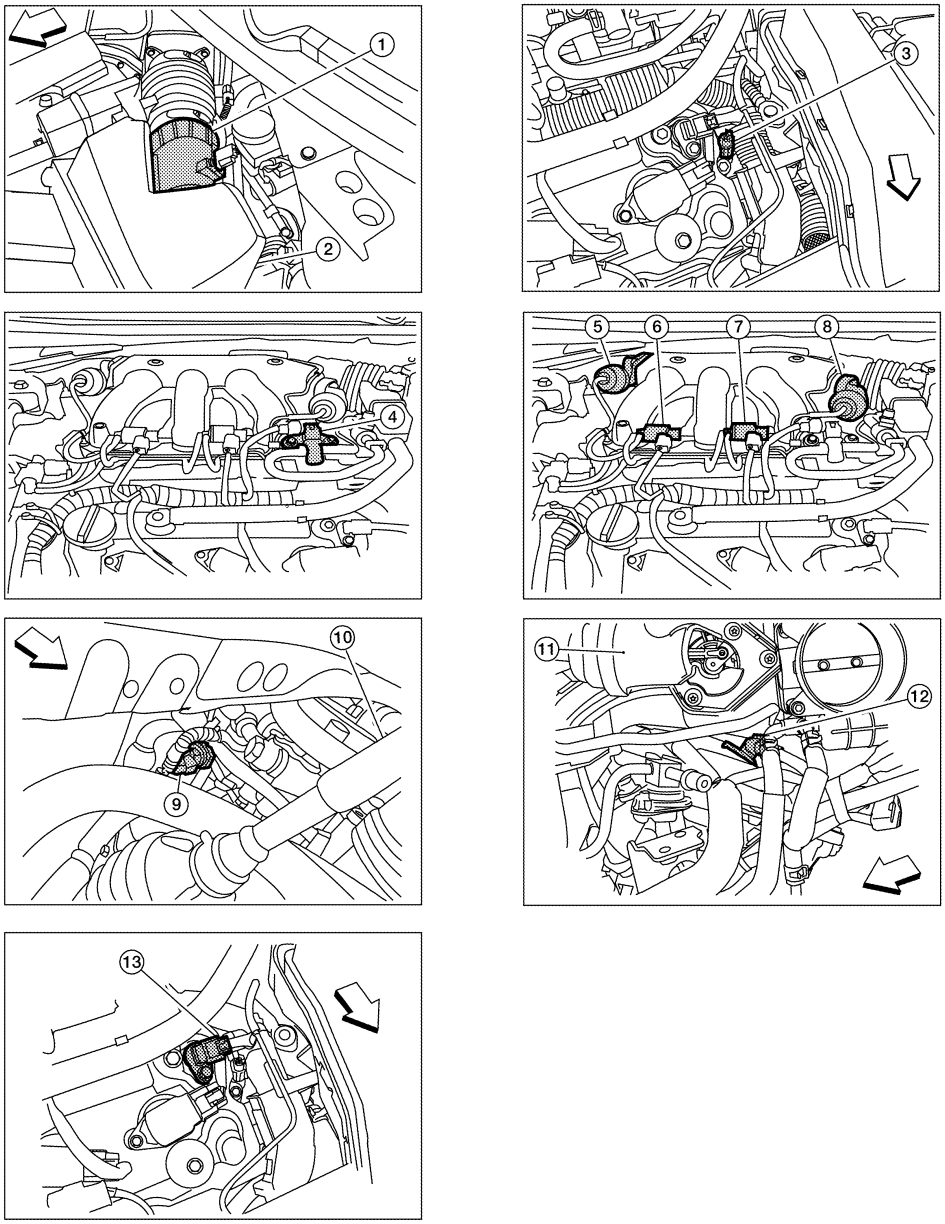

ALBIA0101ZZ

1. Mas air flow sensor (with intake air temperature sensor)
2. Air cleaner case
3. Engine coolant temperature sensor
4. EVAP canister purge volume control solenoid valve
5. Power valve actuator 1
6. VIAS control solenoid valve 1
7. VIAS control solenoid valve 2
8. Power valve actuator 2
9. Power steering pressure sensor
10. Tie rod (RH)
11. Power valve actuator 2
12. Camshaft position sensor (PHASE) (bank 1)
13. Camshaft position sensor (PHASE) (bank 2)

⇦ : Vehicle front

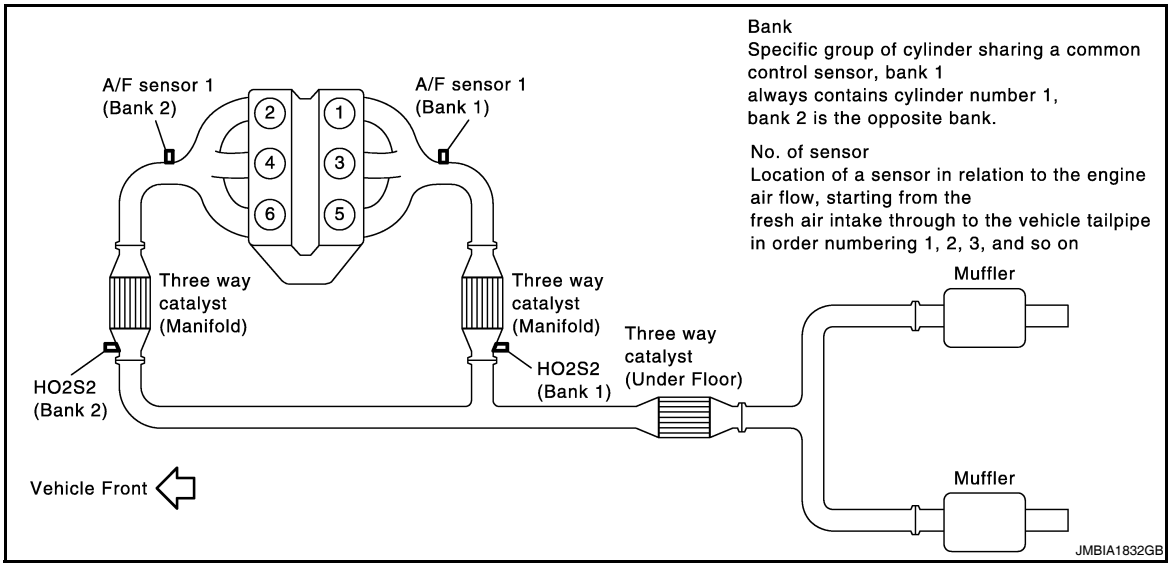
Bank
Specific group of cylinder sharing a common control sensor, bank 1 always contains cylinder number 1, bank 2 is the opposite bank.
No. of sensor
Location of a sensor in relation to the engine air flow, starting from the fresh air intake through to the vehicle tailpipe in order numbering 1, 2, 3, and so on
A/F sensor 1 (Bank 2)
A/F sensor 1 (Bank 1)
2
1
4
3
6
5
Three way catalyst (Manifold)
Three way catalyst (Manifold)
HO2S2 (Bank 2)
HO2S2 (Bank 1)
Three way catalyst (Under Floor)
Muffler
Muffler
Vehicle Front
JMBIA1832GB

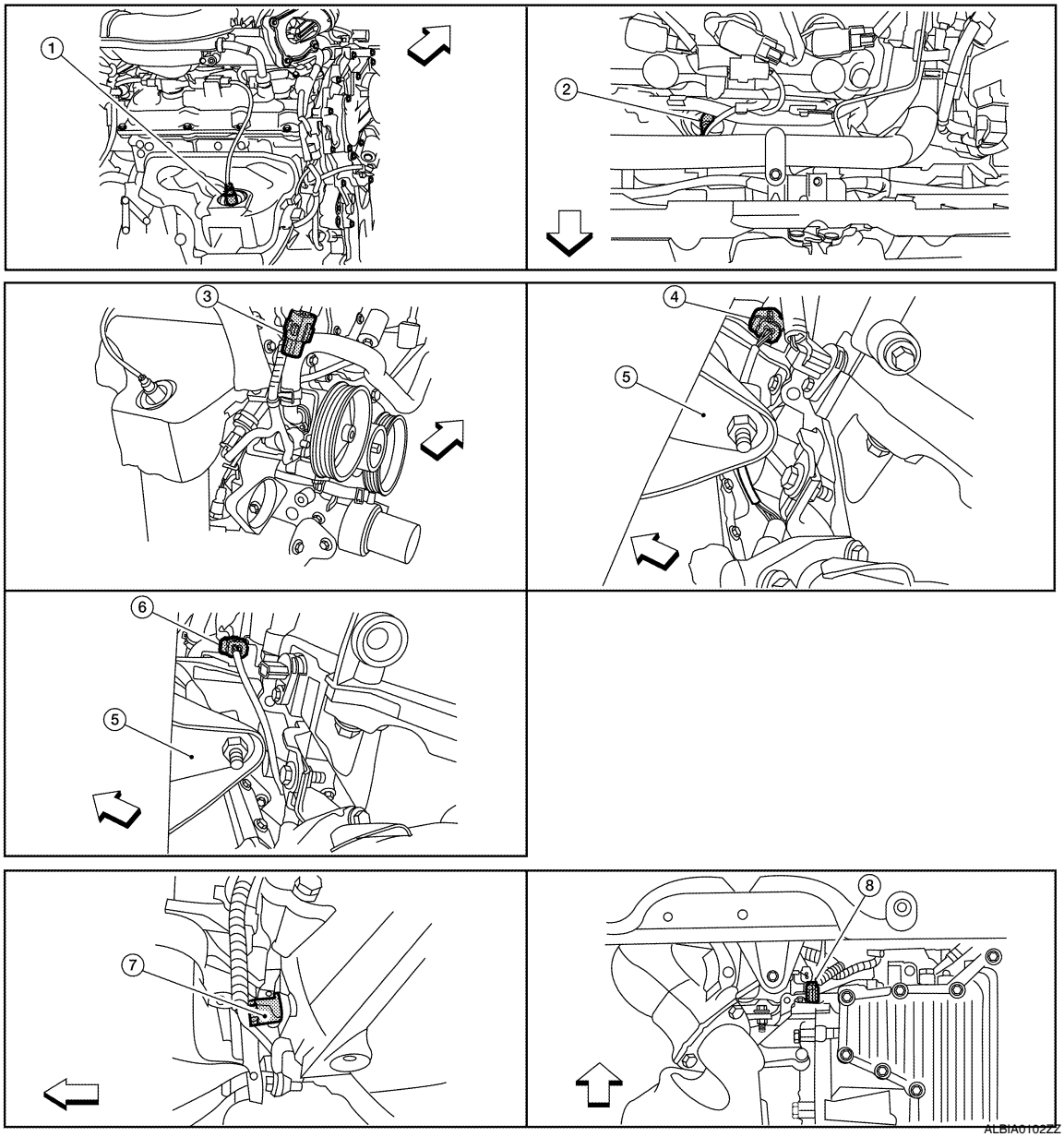
1
2
3
4
5
6
5
7
8
ALBIA0102ZZ

1. A/F sensor 1 (bank 1)
2. A/F sensor 1 (bank 2)
3. HO2S2 (bank 1) harness connector
4. HO2S2 (bank 2) harness connector (CVT models)
5. Front engine mount
6. HO2S2 (bank 2) harness connector (M/T models)
7. Crankshaft position sensor (POS) (M/T models)
8. Crankshaft position sensor (POS) (CVT models)

⇦ : Vehicle front

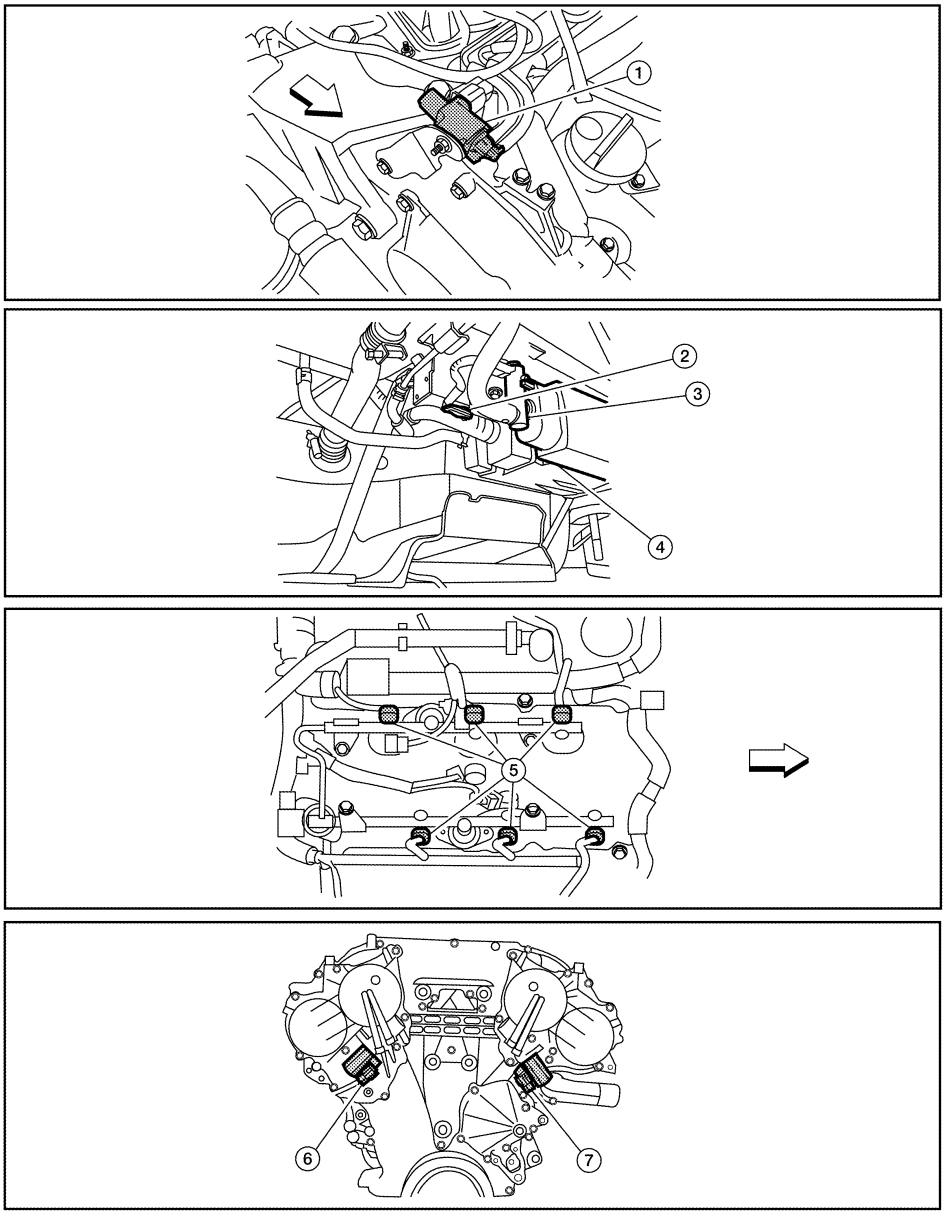

ALBIA0103ZZ

1. Electronic controlled engine mount control solenoid valve
2. EVAP control system pressure sensor
3. EVAP canister vent control valve
4. EVAP canister
5. Injector harness connector
6. Intake valve timing control solenoid valve (bank 1)
7. Intake valve timing control solenoid valve (bank 2)

⇦ : Vehicle front

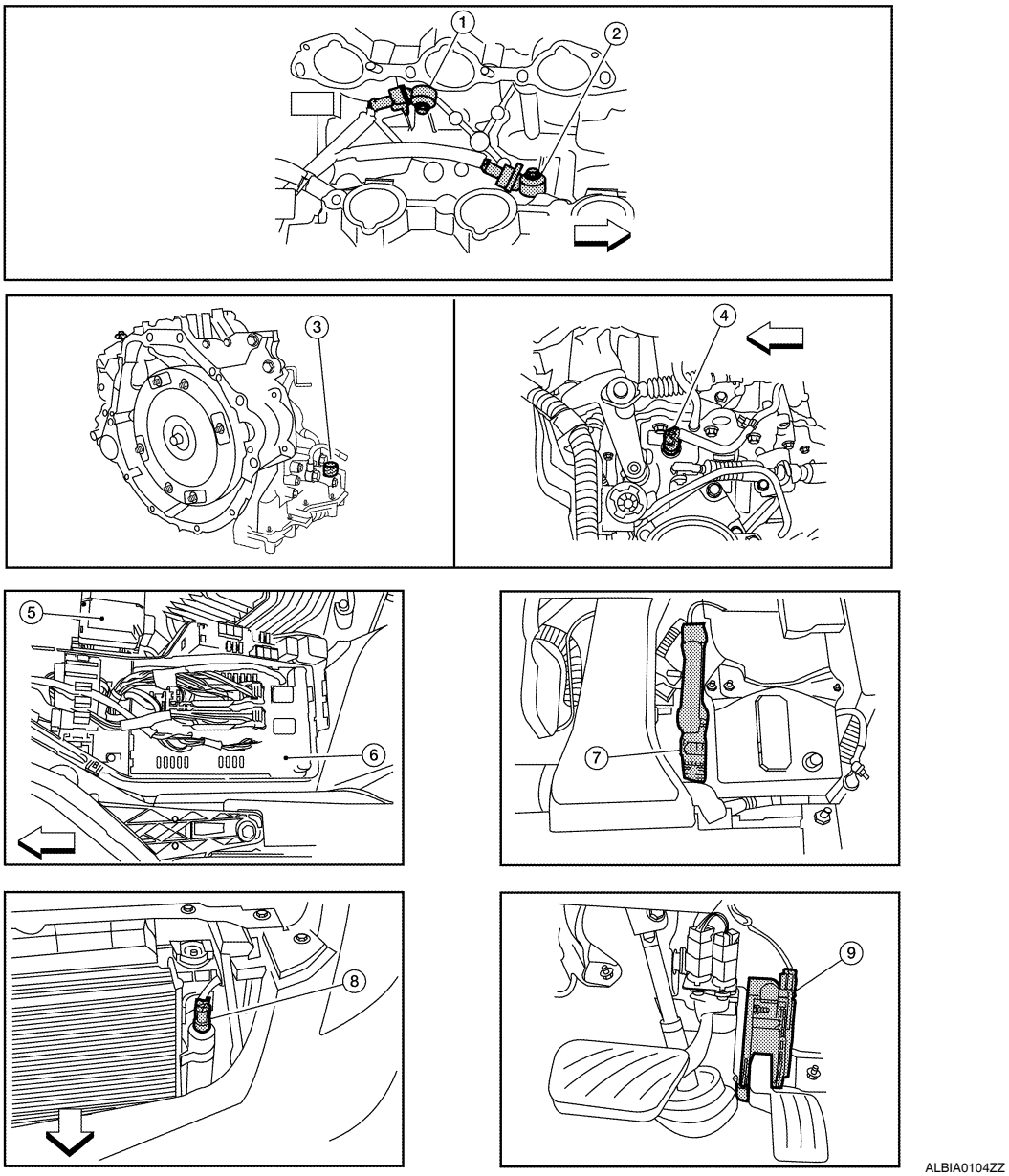

1. Knock sensor (bank 2)
2. Knock sensor (bank 1)
3. PNP switch (CVT models)
4. PNP switch (M/T models)
5. Battery
6. IPDM E/R
7. ECM
8. Refrigerant pressure sensor (shown with front grill removed)
9. Accelerator pedal

⇦ : Vehicle front

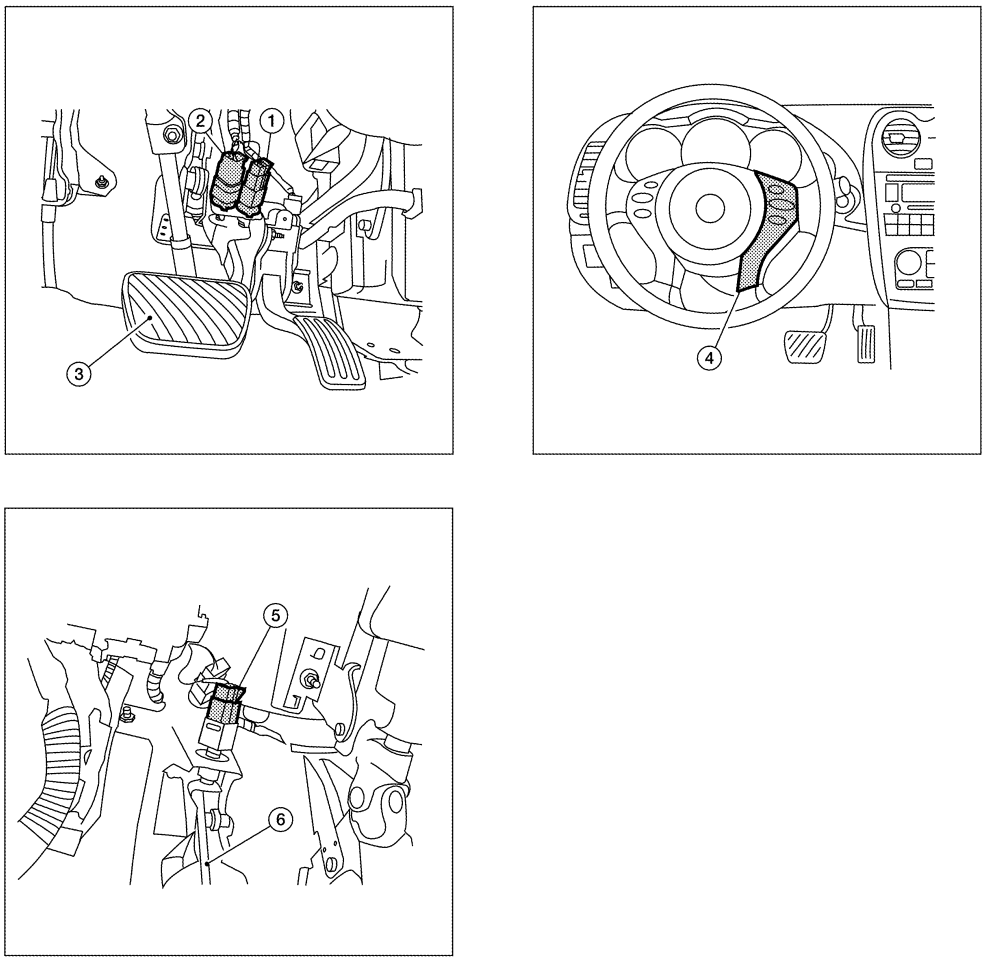

ALBIA0105ZZ

1. ASCD brake switch
2. Stop lamp switch
3. Brake pedal
4. ASCD steering switch
5. ASCD clutch switch (M/T models)
6. Clutch pedal

Component Description

INFOID:0000000004361989

Component	Reference
Camshaft position sensor (PHASE)	EC-1296, "Description"
Crankshaft position sensor (POS)	EC-1292, "Description"
Electronic controlled engine mount control solenoid valve	EC-1480, "Description"

EVAPORATIVE EMISSION SYSTEM

System Diagram

INFOID:0000000004361990

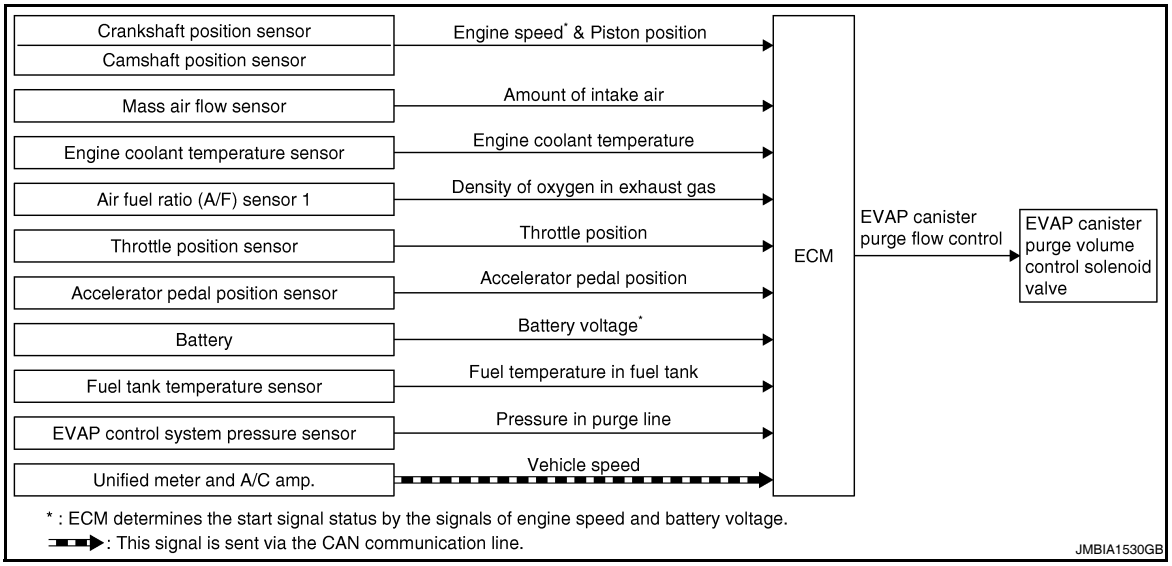

System Description

INFOID:0000000004361991

INPUT/OUTPUT SIGNAL CHART

Sensor	Input signal to ECM	ECM function	Actuator
Crankshaft position sensor (POS)	Engine speed*1 Piston position	EVAP canister purge flow control	EVAP canister purge volume control solenoid valve
Camshaft position sensor (PHASE)			
Mass air flow sensor	Amount of intake air		
Engine coolant temperature sensor	Engine coolant temperature		
Air fuel ratio (A/F) sensor 1	Density of oxygen in exhaust gas (Mixture ratio feedback signal)		
Throttle position sensor	Throttle position		
Accelerator pedal position sensor	Accelerator pedal position		
Battery	Battery voltage*1		
Fuel tank temperature sensor	Fuel temperature in fuel tank		
EVAP control system pressure sensor	Pressure in purge line		
Unified meter and A/C amp.	Vehicle speed*2		

*1: ECM determines the start signal status by the signals of engine speed and battery voltage.

*2: This signal is sent to the ECM via the CAN communication line.

SYSTEM DESCRIPTION

The evaporative emission system is used to reduce hydrocarbons emitted into the atmosphere from the fuel system. This reduction of hydrocarbons is accomplished by activated charcoals in the EVAP canister.
The fuel vapor in the sealed fuel tank is led into the EVAP canister which contains activated carbon and the vapor is stored there when the engine is not operating or when refueling to the fuel tank.
The vapor in the EVAP canister is purged by the air via the purge line to the intake manifold when the engine is operating. EVAP canister purge volume control solenoid valve is controlled by ECM. When the engine operates, the flow rate of vapor controlled by EVAP canister purge volume control solenoid valve is proportionally regulated as the air flow increases.

EVAP canister purge volume control solenoid valve also shuts off the vapor purge line during decelerating and idling.

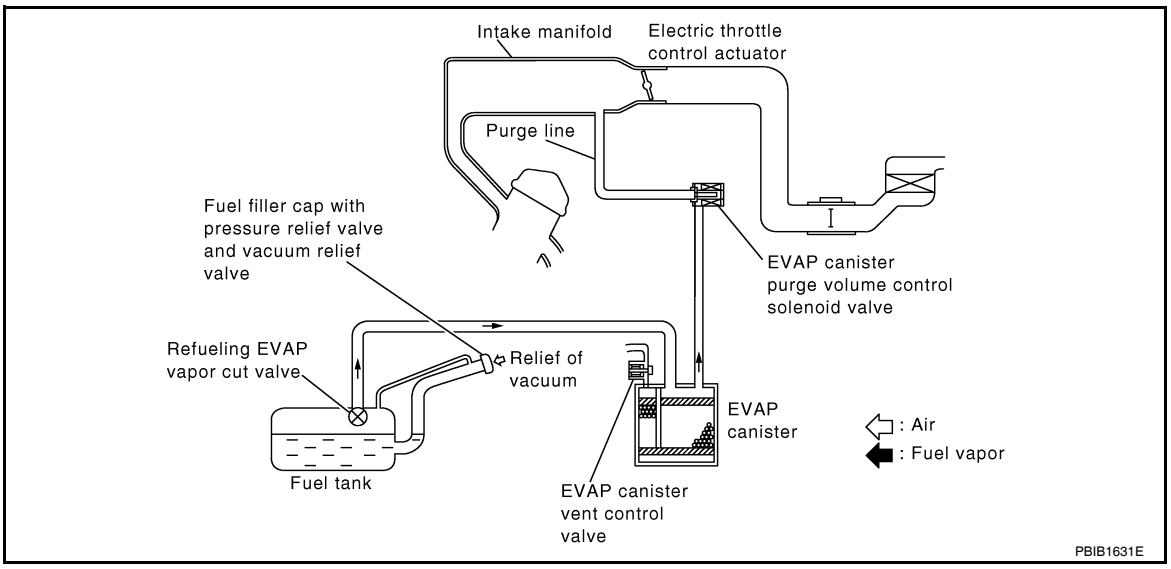

EVAPORATIVE EMISSION LINE DRAWING

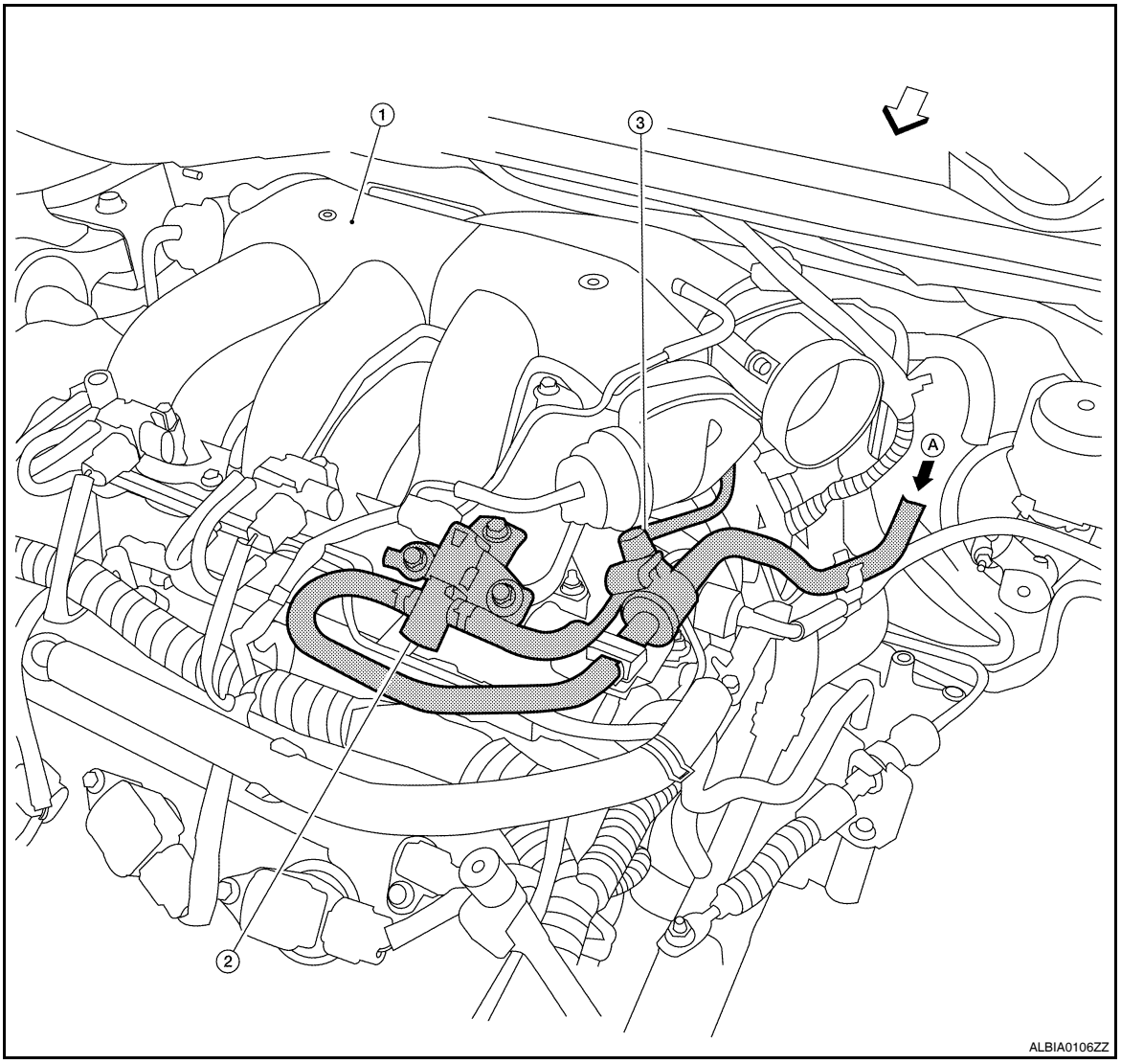

1. Intake manifold collector
2. EVAP canister purge volume control solenoid valve
3. EVAP service port

A. From EVAP canister

⇦ : Vehicle front

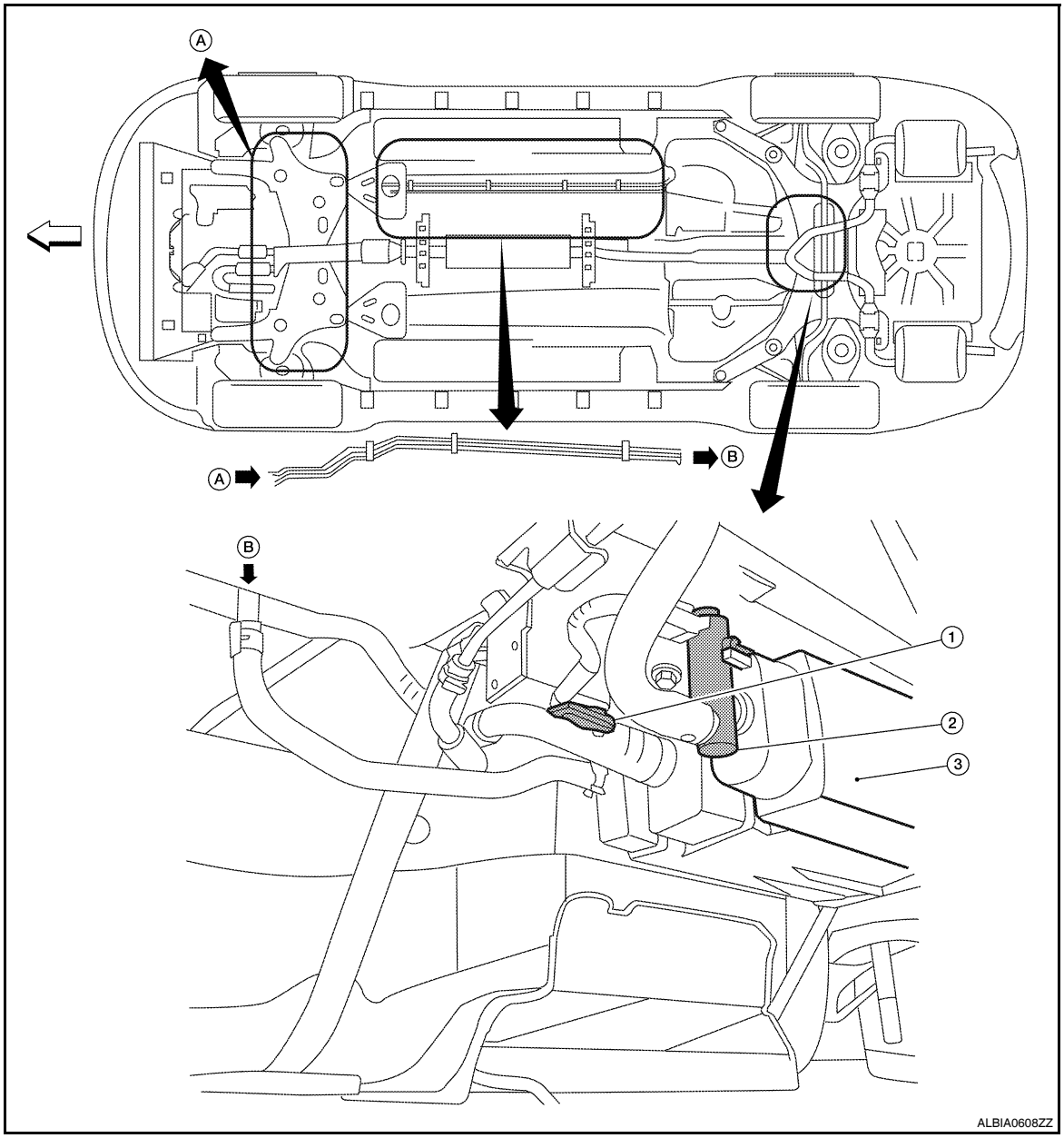

1. EVAP canister system pressure sensor
2. EVAP canister vent control valve
3. EVAP canister

A. To previous figure
B. To/From B in this figure
C. Refer to previous figure

⇦ : Vehicle front

⬅ : To previous figure

NOTE:
Do not use soapy water or any type of solvent while installing vacuum hose or purge hoses.

Component Parts Location

INFOID:0000000004404410

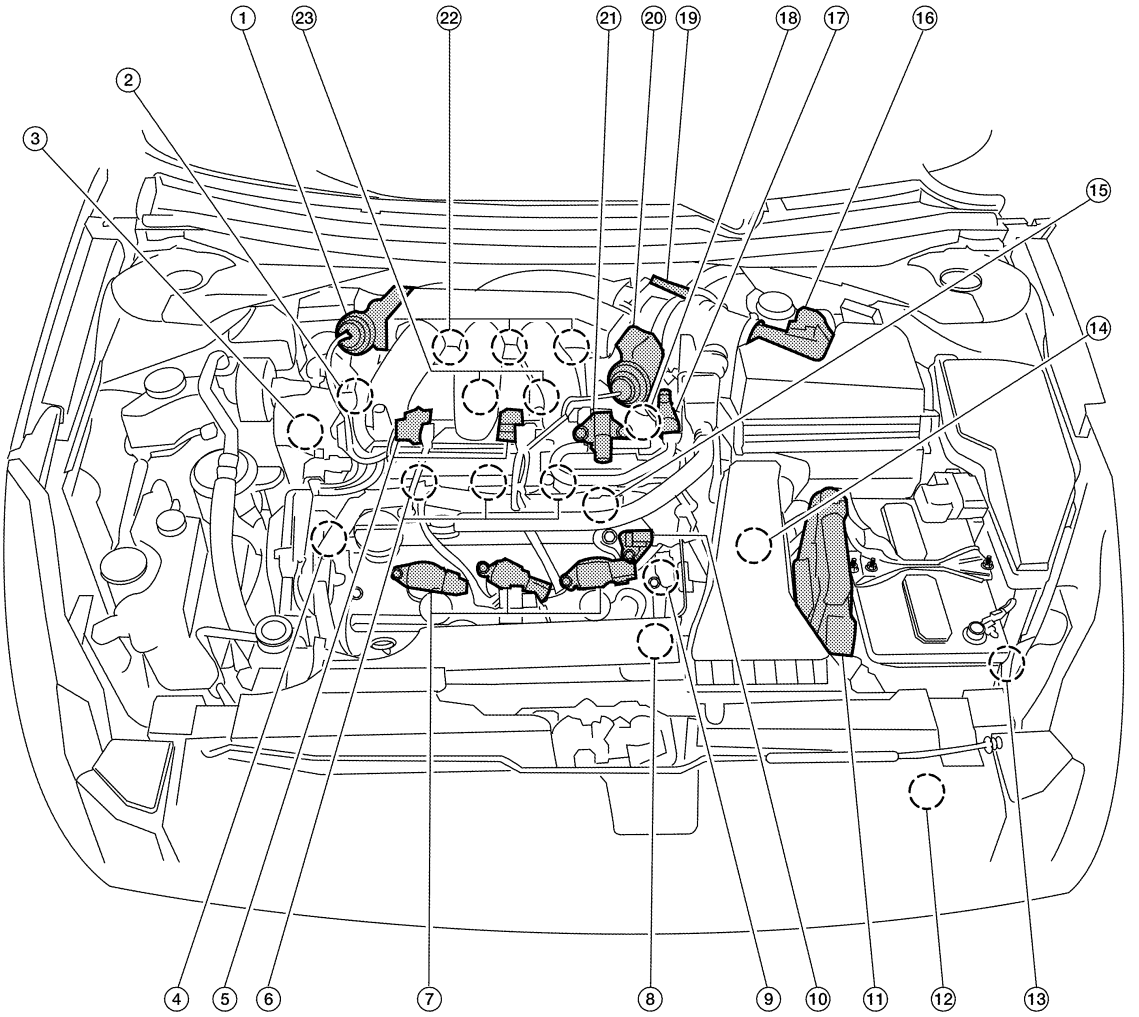

ALBIA0110ZZ

1. Power valve actuator 1	2. Intake valve timing control solenoid valve (bank 1)	3. Power steering pressure sensor
4. Intake valve timing control solenoid valve (bank 2)	5. VIAS control solenoid valves 1 and 2	6. Fuel injector (bank 2)
7. Ignition coil (with power transistor) and spark plug (bank 2)	8. Crankshaft position sensor (POS)	9. Engine coolant temperature sensor
10. Camshaft position sensor (PHASE) (bank 2)	11. ECM	12. Refrigerant pressure sensor
13. Battery current sensor	14. PNP switch	15. Condenser-2
16. Mass air flow sensor (with intake air temperature sensor)	17. EVAP service port	18. Camshaft position sensor (PHASE) (bank 1)
19. Electric throttle control actuator	20. Power valve actuator 2	21. EVAP canister purge volume control solenoid valve
22. Ignition coil (with power transistor) and spark plug (bank 1)	23. Knock sensor	

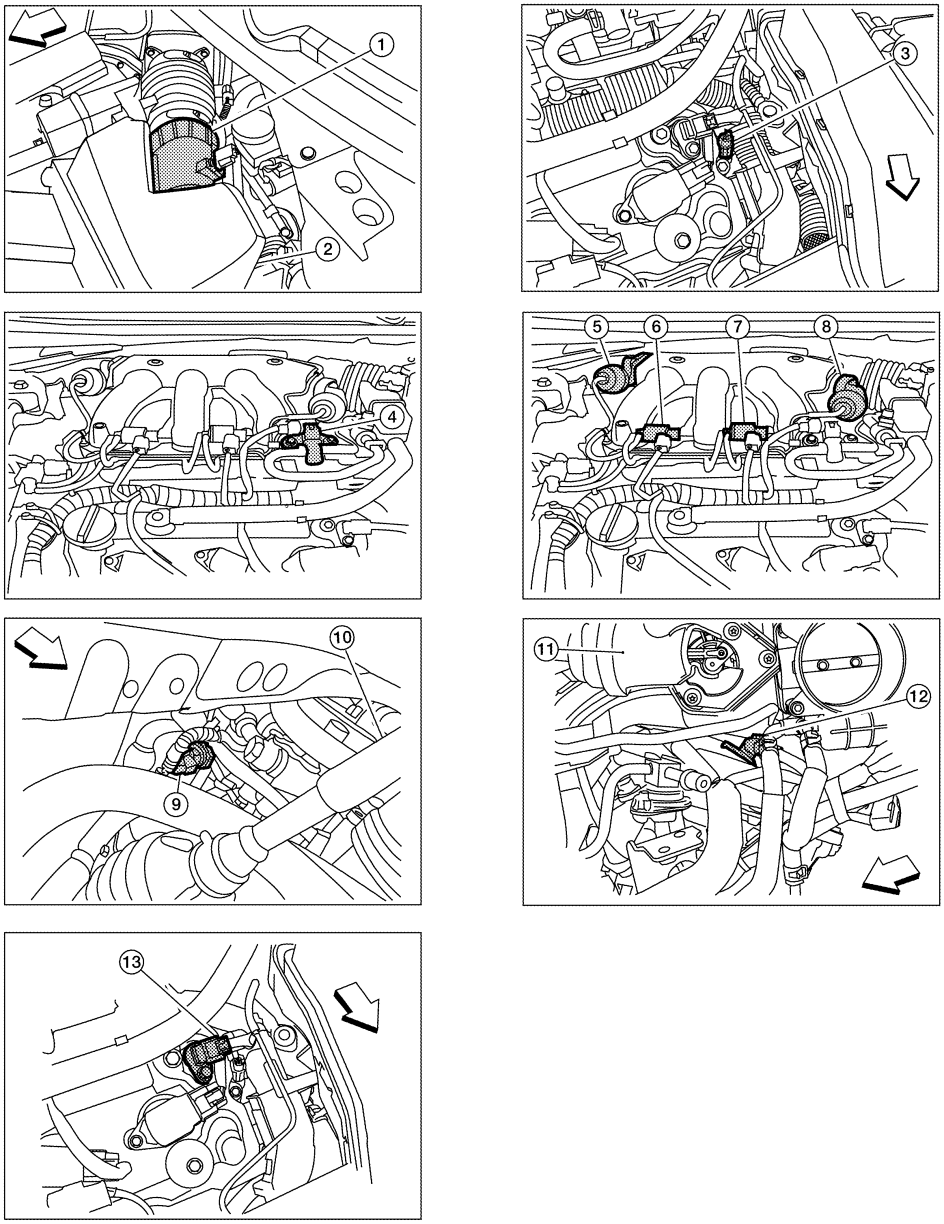

ALBIA0101ZZ

1. Mas air flow sensor (with intake air temperature sensor)
2. Air cleaner case
3. Engine coolant temperature sensor
4. EVAP canister purge volume control solenoid valve
5. Power valve actuator 1
6. VIAS control solenoid valve 1
7. VIAS control solenoid valve 2
8. Power valve actuator 2
9. Power steering pressure sensor
10. Tie rod (RH)
11. Power valve actuator 2
12. Camshaft position sensor (PHASE) (bank 1)
13. Camshaft position sensor (PHASE) (bank 2)

⇦ : Vehicle front

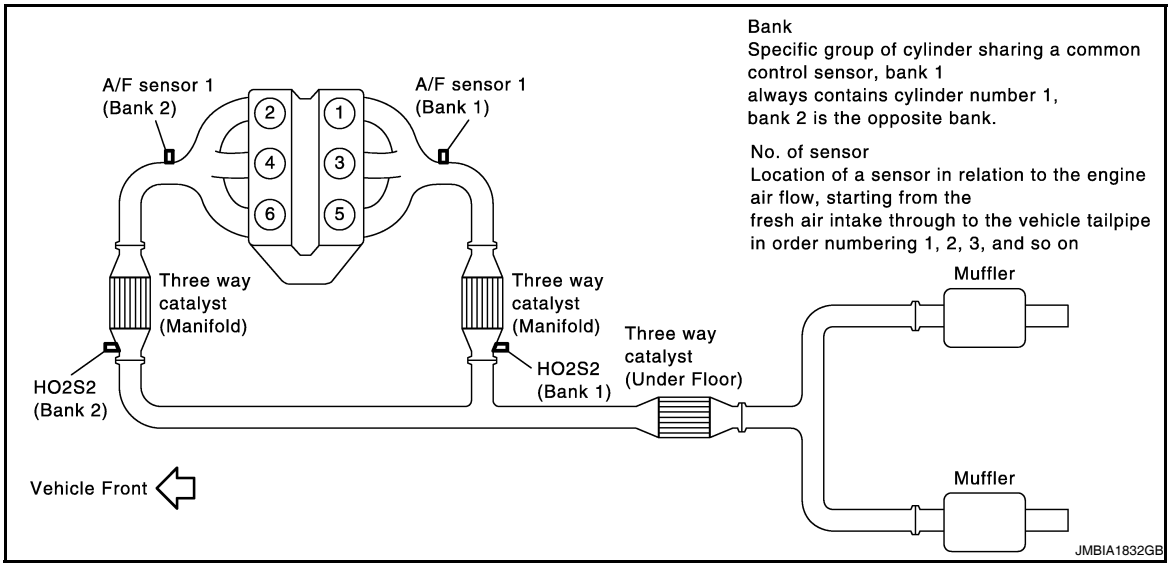
Bank
Specific group of cylinder sharing a common control sensor, bank 1 always contains cylinder number 1, bank 2 is the opposite bank.
No. of sensor
Location of a sensor in relation to the engine air flow, starting from the fresh air intake through to the vehicle tailpipe in order numbering 1, 2, 3, and so on
A/F sensor 1 (Bank 2)
A/F sensor 1 (Bank 1)
2
1
4
3
6
5
Three way catalyst (Manifold)
Three way catalyst (Manifold)
HO2S2 (Bank 2)
HO2S2 (Bank 1)
Three way catalyst (Under Floor)
Muffler
Muffler
Vehicle Front
JMBIA1832GB

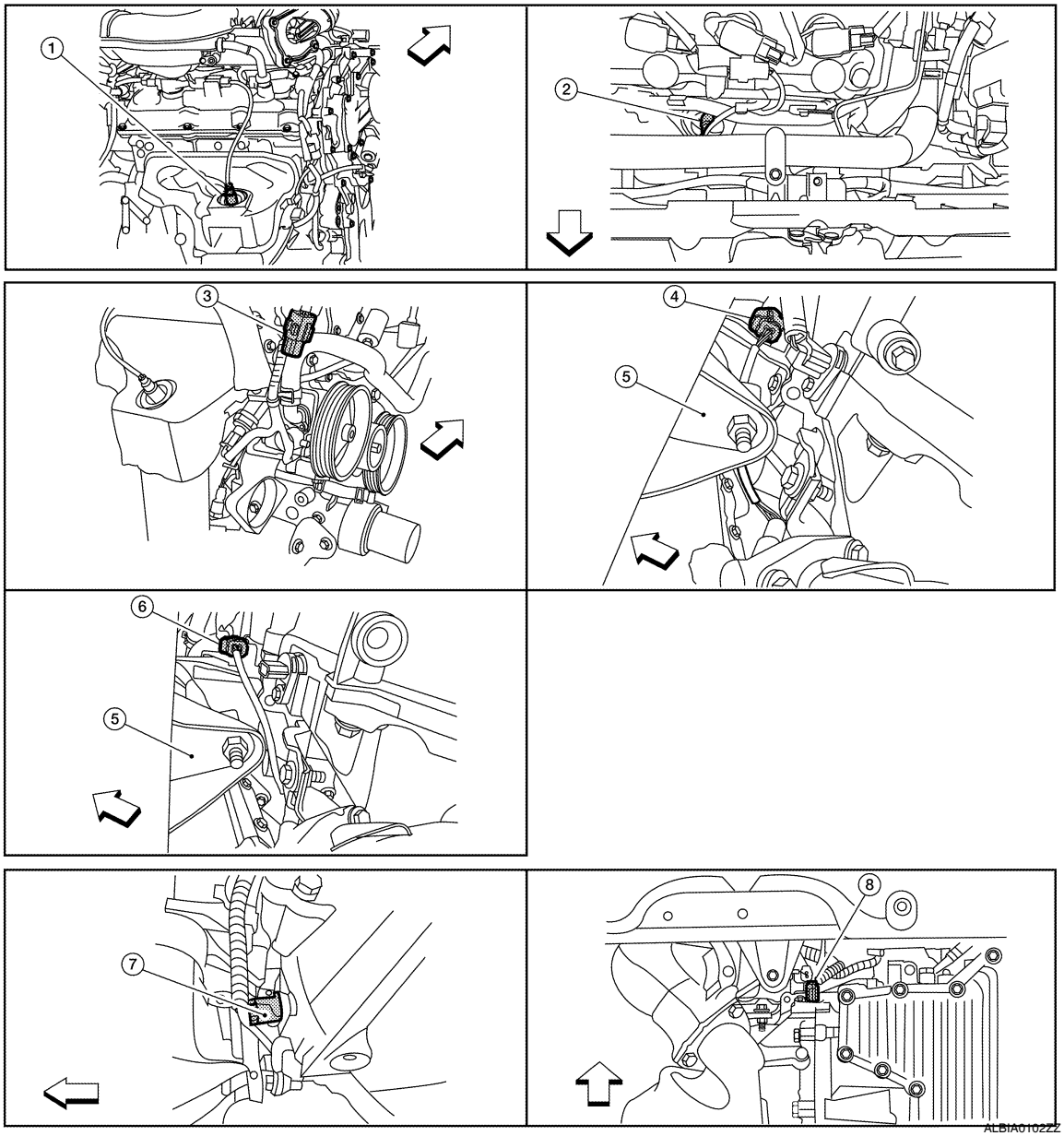
1
2
3
4
5
6
5
7
8
ALBIA0102ZZ

1. A/F sensor 1 (bank 1)
2. A/F sensor 1 (bank 2)
3. HO2S2 (bank 1) harness connector
4. HO2S2 (bank 2) harness connector (CVT models)
5. Front engine mount
6. HO2S2 (bank 2) harness connector (M/T models)
7. Crankshaft position sensor (POS) (M/T models)
8. Crankshaft position sensor (POS) (CVT models)

⇦ : Vehicle front

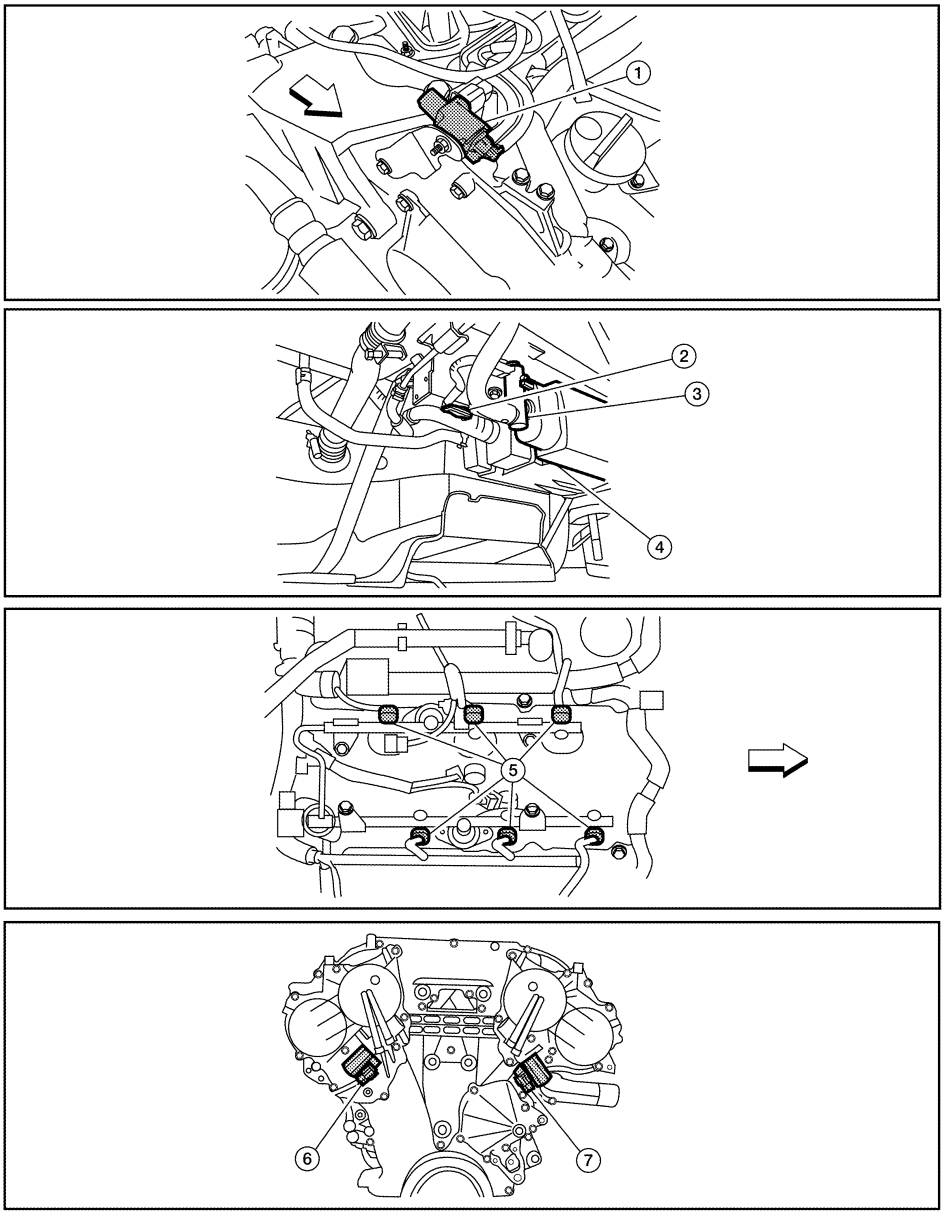

ALBIA0103ZZ

1. Electronic controlled engine mount control solenoid valve
2. EVAP control system pressure sensor
3. EVAP canister vent control valve
4. EVAP canister
5. Injector harness connector
6. Intake valve timing control solenoid valve (bank 1)
7. Intake valve timing control solenoid valve (bank 2)

⇦ : Vehicle front

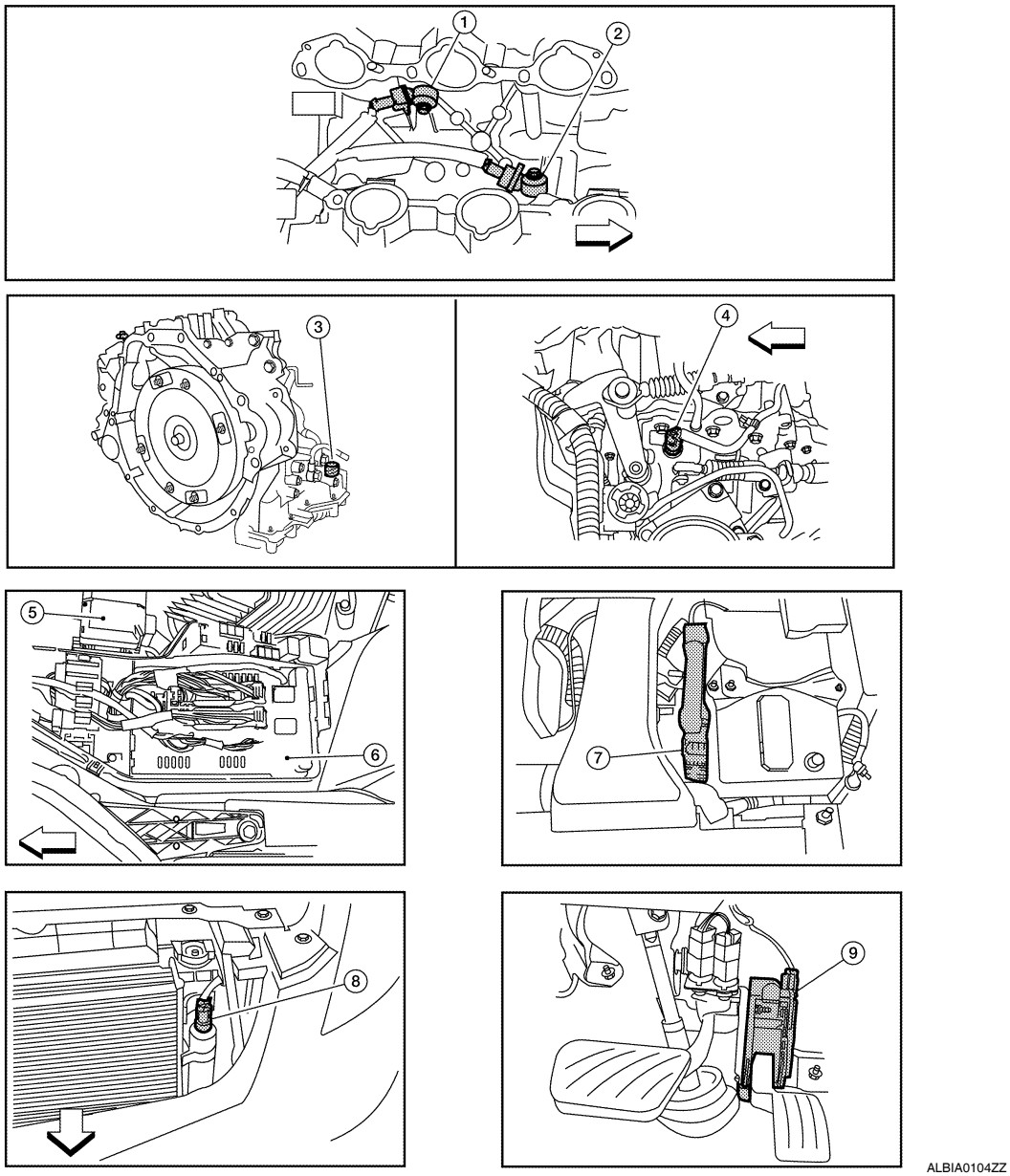

1. Knock sensor (bank 2)
2. Knock sensor (bank 1)
3. PNP switch (CVT models)
4. PNP switch (M/T models)
5. Battery
6. IPDM E/R
7. ECM
8. Refrigerant pressure sensor (shown with front grill removed)
9. Accelerator pedal

⇦ : Vehicle front

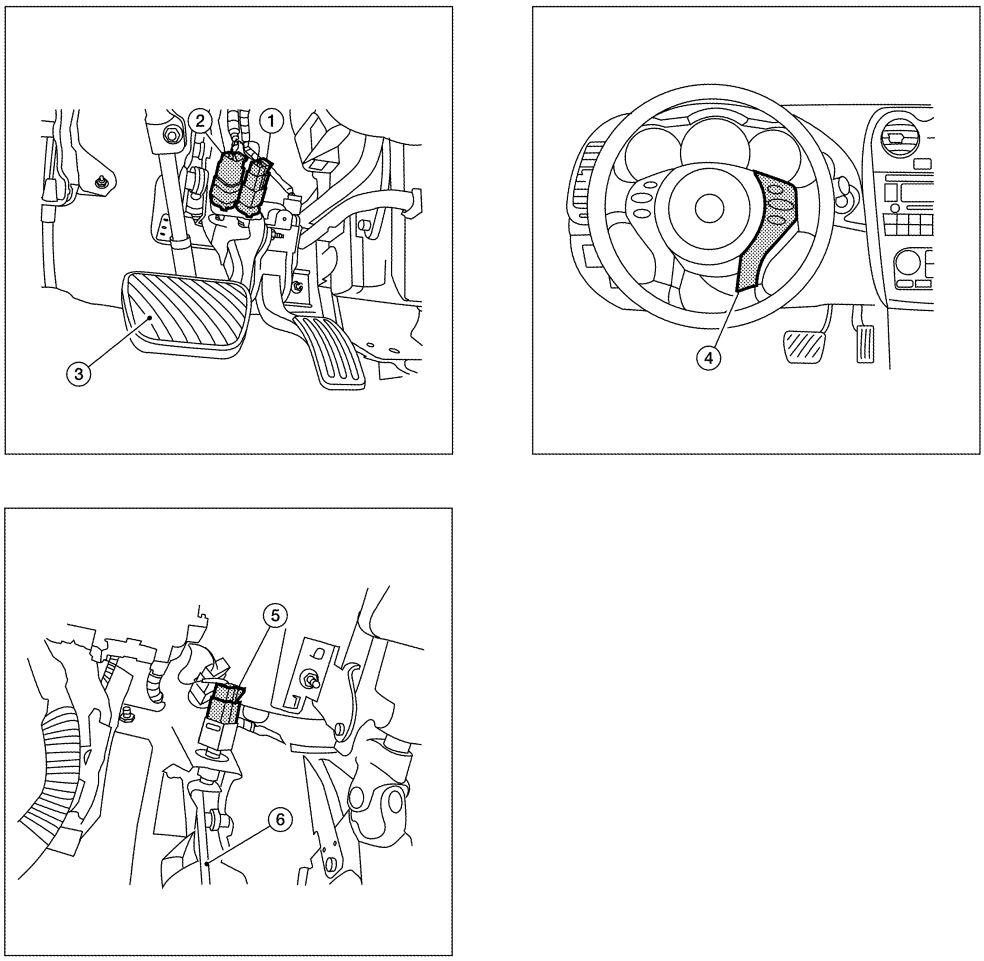

ALBIA0105ZZ

1. ASCD brake switch
2. Stop lamp switch
3. Brake pedal
4. ASCD steering switch
5. ASCD clutch switch (M/T models)
6. Clutch pedal

Component Description

INFOID:0000000004361993

Component	Reference
A/F sensor 1	EC-1225, "Description"
Accelerator pedal position sensor	EC-1448, "Description"
Camshaft position sensor (PHASE)	EC-1296, "Description"
Crankshaft position sensor (POS)	EC-1292, "Description"
Engine coolant temperature sensor	EC-1210, "Description"
EVAP canister purge volume control solenoid valve	EC-1316, "Description"
EVAP control system pressure sensor	EC-1332, "Description"
Fuel tank temperature sensor	EC-1274, "Description"

Component	Reference
Mass air flow sensor	EC-1194, "Description"
Throttle position sensor	EC-1215, "Description"

INTAKE VALVE TIMING CONTROL

System Diagram

INFOID:0000000004361998

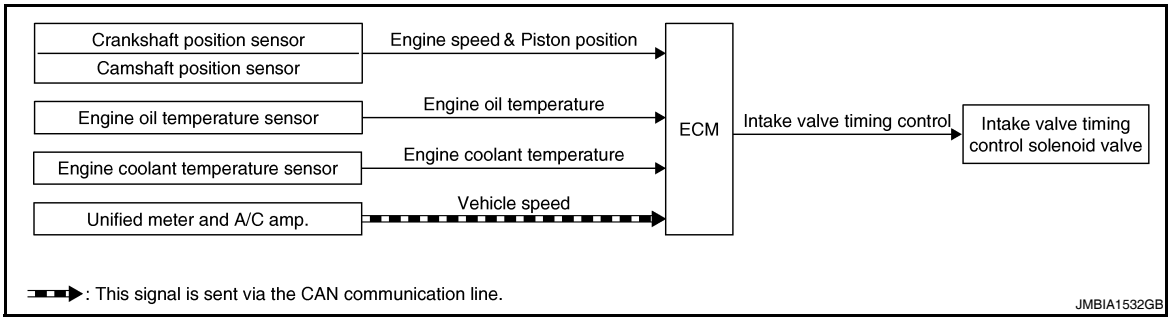

System Description

INFOID:0000000004361999

INPUT/OUTPUT SIGNAL CHART

Sensor	Input signal to ECM	ECM function	Actuator
Crankshaft position sensor (POS)	Engine speed and piston position	Intake valve timing control	Intake valve timing control solenoid valve
Camshaft position sensor (PHASE)			
Engine oil temperature sensor	Engine oil temperature		
Engine coolant temperature sensor	Engine coolant temperature		
Unified meter and A/C amp.	Vehicle speed*		

*: This signal is sent to the ECM via the CAN communication line

SYSTEM DESCRIPTION

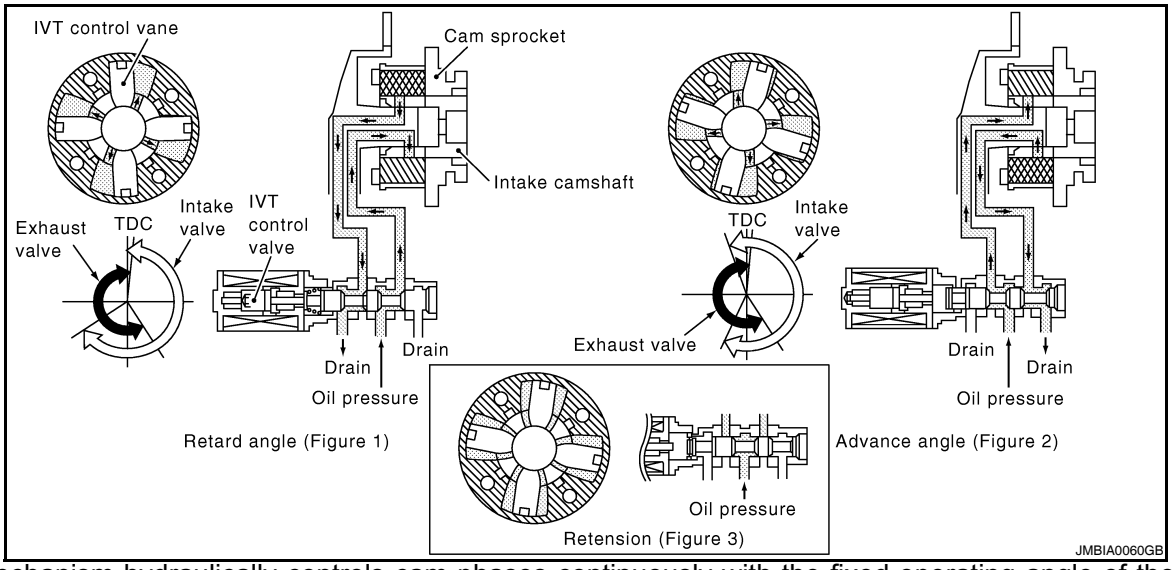

This mechanism hydraulically controls cam phases continuously with the fixed operating angle of the intake valve.

The ECM receives signals such as crankshaft position, camshaft position, engine speed, and engine coolant temperature. Then, the ECM sends ON/OFF pulse duty signals to the intake valve timing (IVT) control solenoid valve depending on driving status. This makes it possible to control the shut/open timing of the intake valve to increase engine torque in low/mid speed range and output in high-speed range.

Component Parts Location

INFOID:0000000004404411

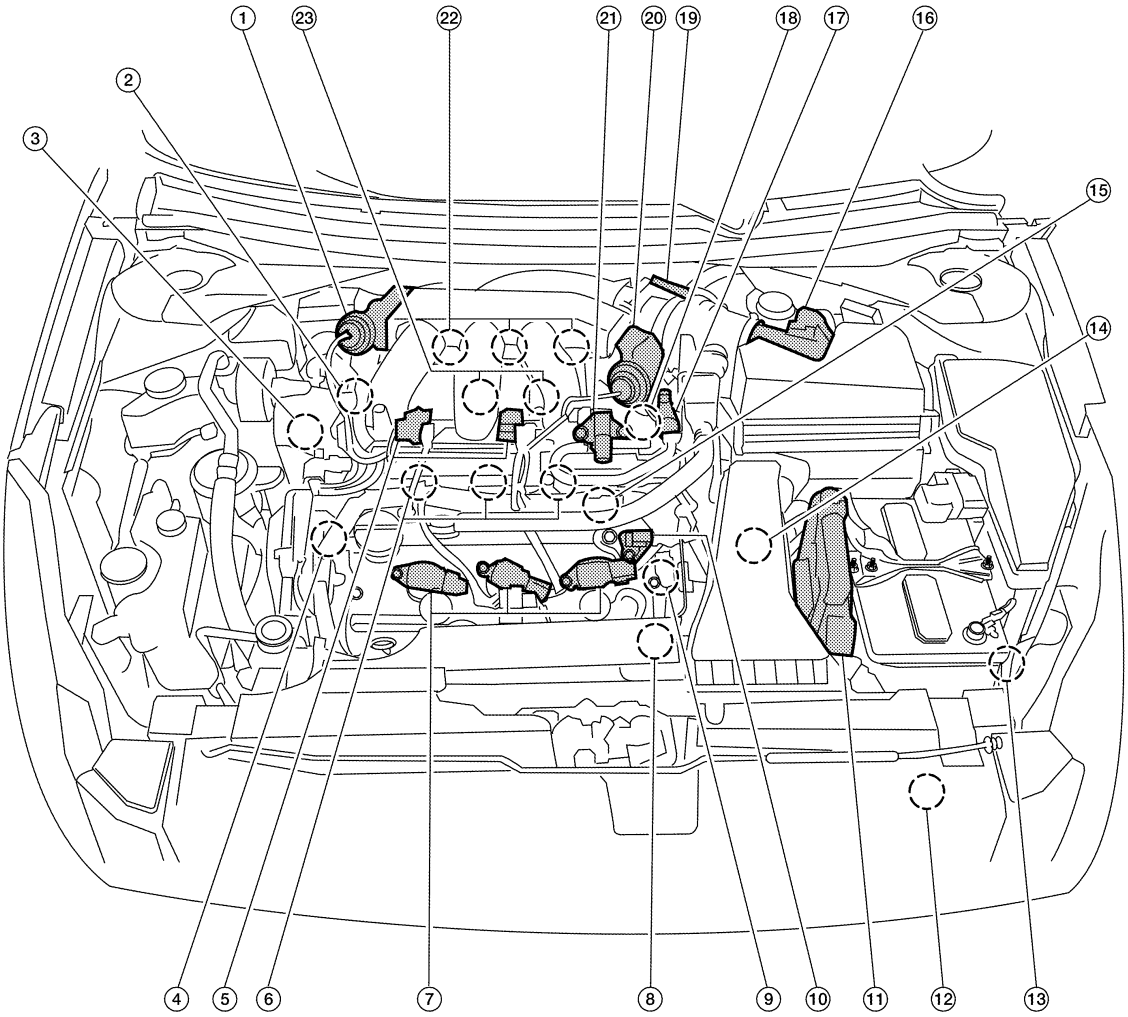

ALBIA0110ZZ

1. Power valve actuator 1	2. Intake valve timing control solenoid valve (bank 1)	3. Power steering pressure sensor
4. Intake valve timing control solenoid valve (bank 2)	5. VIAS control solenoid valves 1 and 2	6. Fuel injector (bank 2)
7. Ignition coil (with power transistor) and spark plug (bank 2)	8. Crankshaft position sensor (POS)	9. Engine coolant temperature sensor
10. Camshaft position sensor (PHASE) (bank 2)	11. ECM	12. Refrigerant pressure sensor
13. Battery current sensor	14. PNP switch	15. Condenser-2
16. Mass air flow sensor (with intake air temperature sensor)	17. EVAP service port	18. Camshaft position sensor (PHASE) (bank 1)
19. Electric throttle control actuator	20. Power valve actuator 2	21. EVAP canister purge volume control solenoid valve
22. Ignition coil (with power transistor) and spark plug (bank 1)	23. Knock sensor	

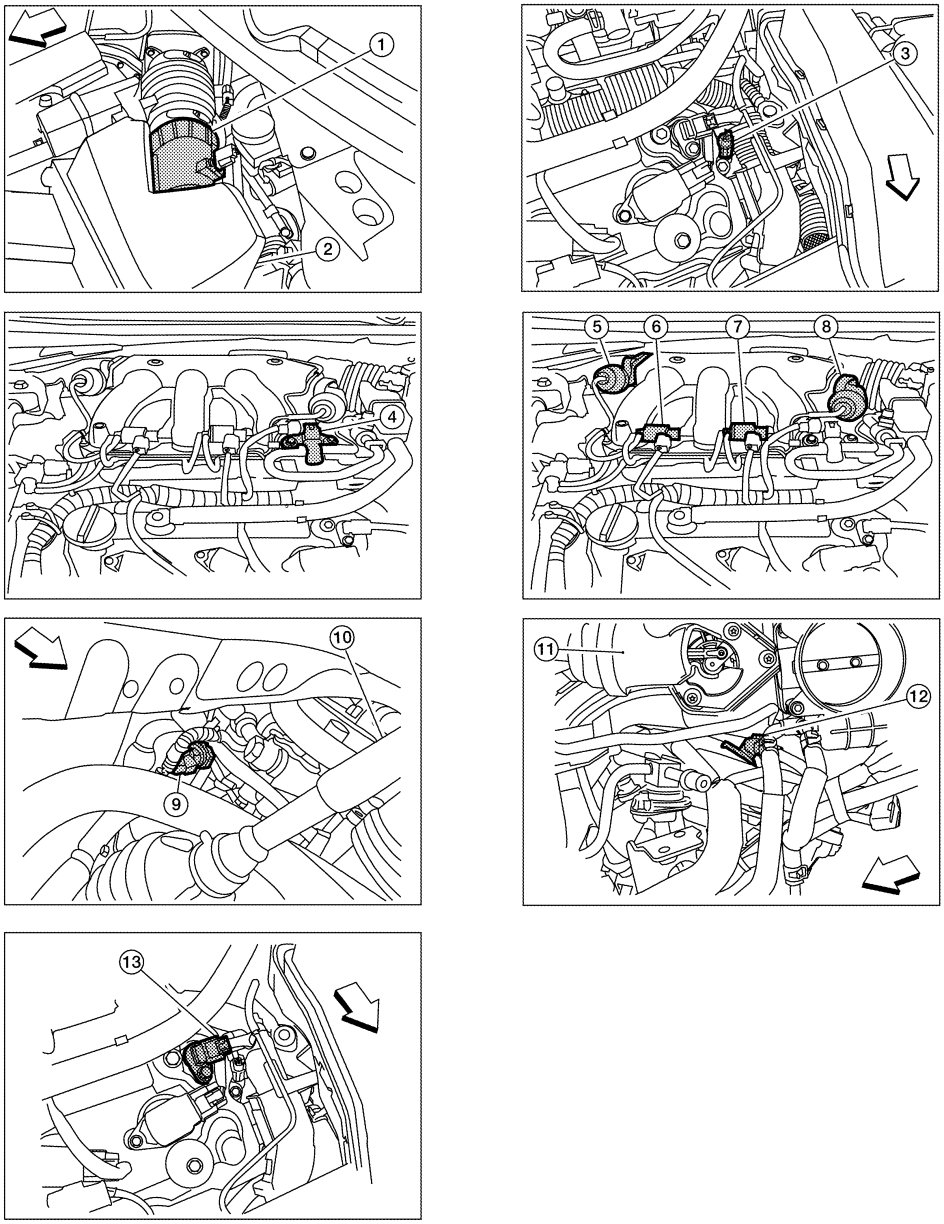

ALBIA0101ZZ

1. Mas air flow sensor (with intake air temperature sensor)
2. Air cleaner case
3. Engine coolant temperature sensor
4. EVAP canister purge volume control solenoid valve
5. Power valve actuator 1
6. VIAS control solenoid valve 1
7. VIAS control solenoid valve 2
8. Power valve actuator 2
9. Power steering pressure sensor
10. Tie rod (RH)
11. Power valve actuator 2
12. Camshaft position sensor (PHASE) (bank 1)
13. Camshaft position sensor (PHASE) (bank 2)

⇦ : Vehicle front

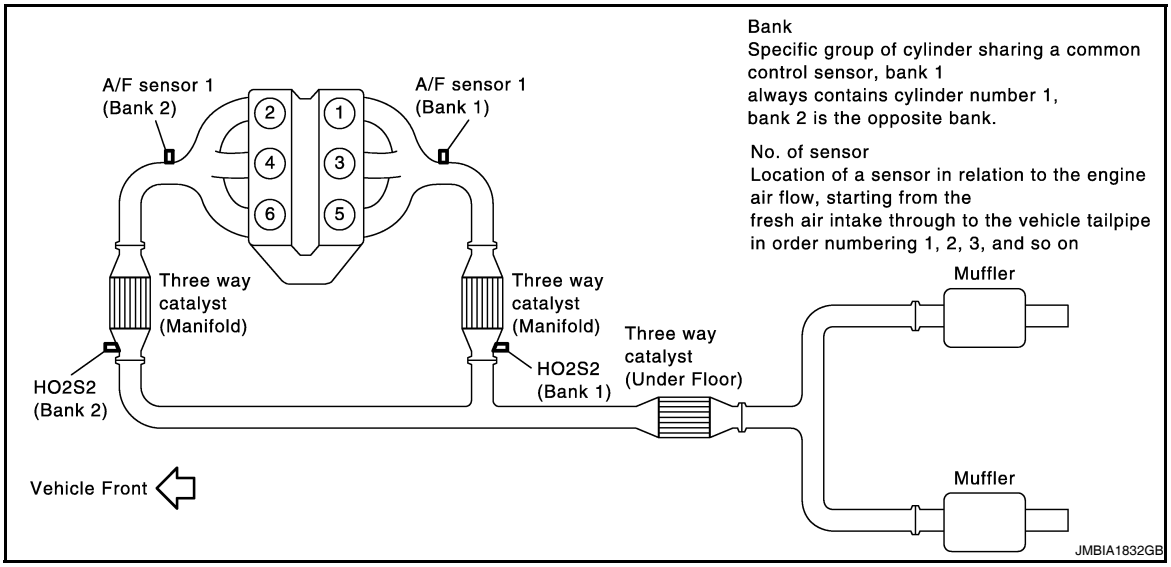
Bank
Specific group of cylinder sharing a common control sensor, bank 1 always contains cylinder number 1, bank 2 is the opposite bank.
No. of sensor
Location of a sensor in relation to the engine air flow, starting from the fresh air intake through to the vehicle tailpipe in order numbering 1, 2, 3, and so on
A/F sensor 1 (Bank 2)
A/F sensor 1 (Bank 1)
2
1
4
3
6
5
Three way catalyst (Manifold)
Three way catalyst (Manifold)
HO2S2 (Bank 2)
HO2S2 (Bank 1)
Three way catalyst (Under Floor)
Muffler
Muffler
Vehicle Front
JMBIA1832GB

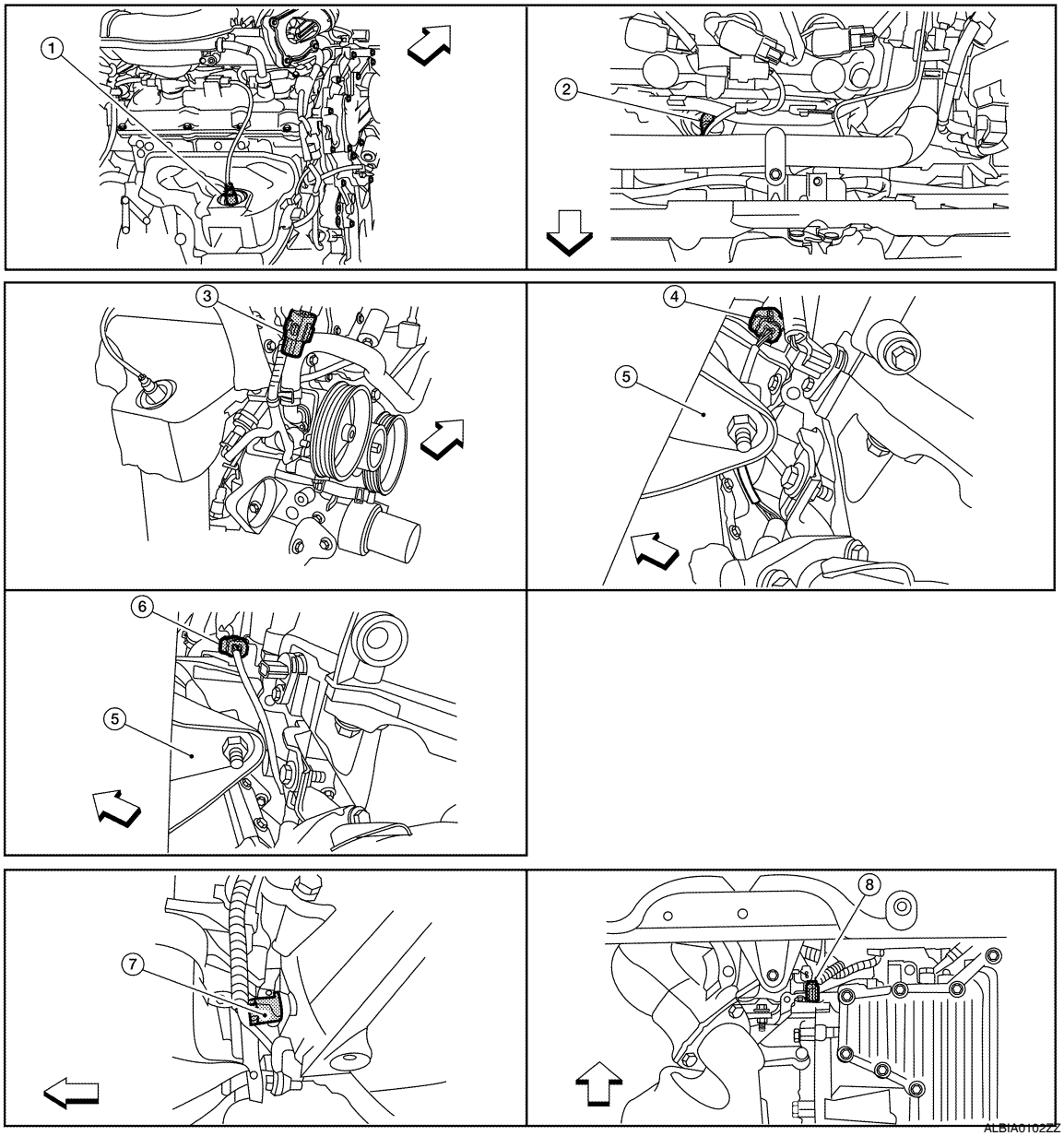
1
2
3
4
5
6
5
7
8
ALBIA0102ZZ

1. A/F sensor 1 (bank 1)
2. A/F sensor 1 (bank 2)
3. HO2S2 (bank 1) harness connector
4. HO2S2 (bank 2) harness connector (CVT models)
5. Front engine mount
6. HO2S2 (bank 2) harness connector (M/T models)
7. Crankshaft position sensor (POS) (M/T models)
8. Crankshaft position sensor (POS) (CVT models)

⇦ : Vehicle front

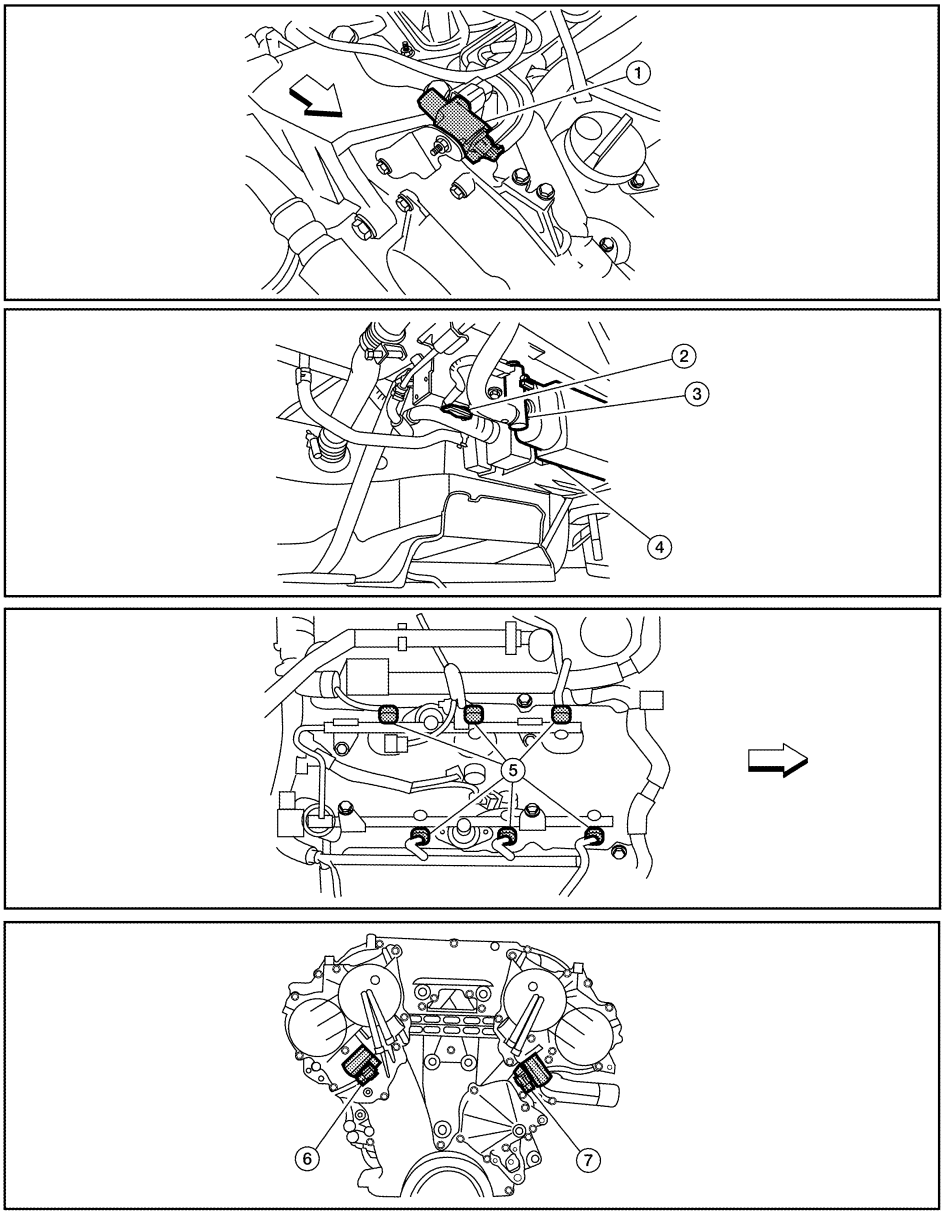

ALBIA0103ZZ

1. Electronic controlled engine mount control solenoid valve
2. EVAP control system pressure sensor
3. EVAP canister vent control valve
4. EVAP canister
5. Injector harness connector
6. Intake valve timing control solenoid valve (bank 1)
7. Intake valve timing control solenoid valve (bank 2)

⇦ : Vehicle front

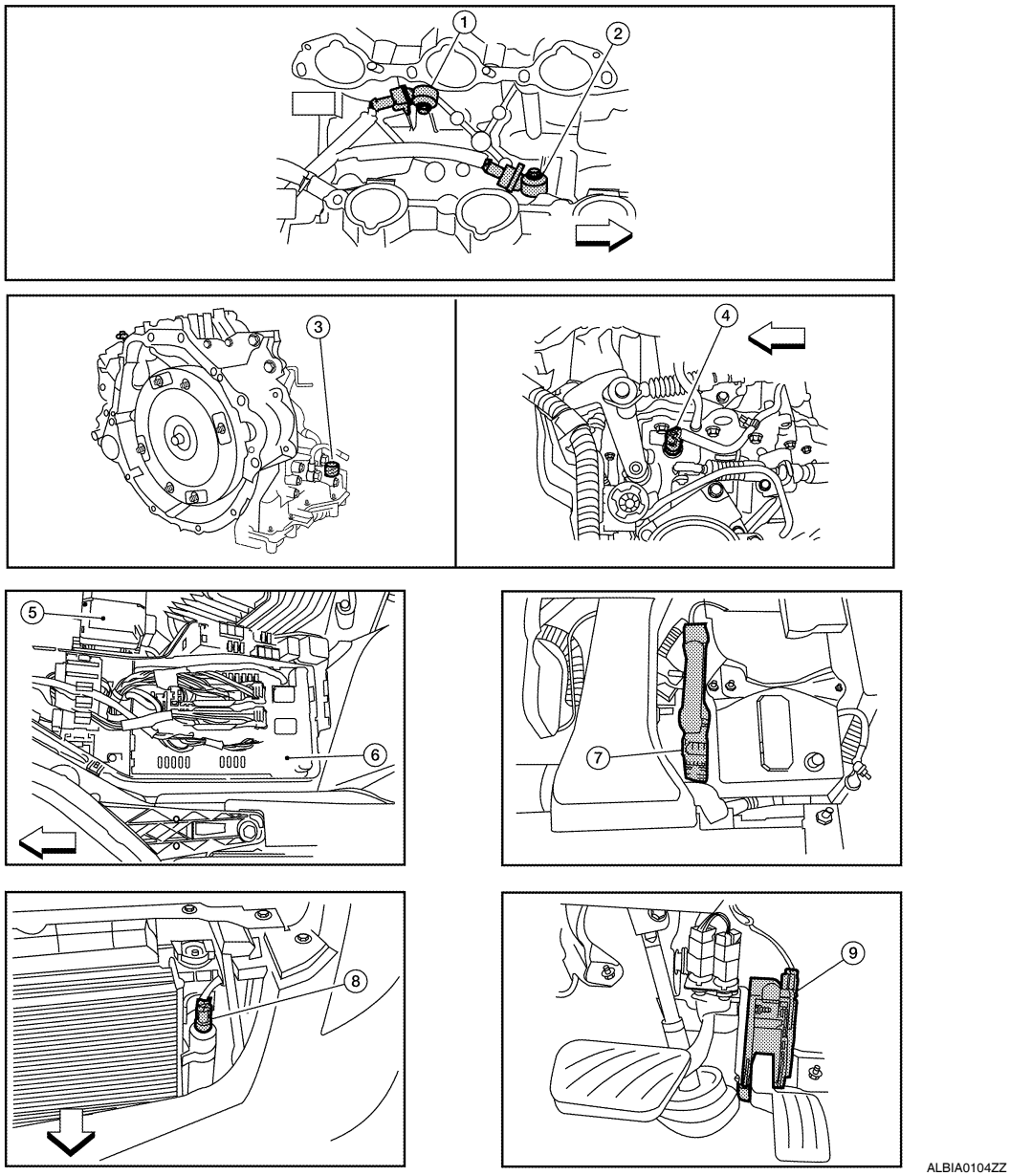

1. Knock sensor (bank 2)
2. Knock sensor (bank 1)
3. PNP switch (CVT models)
4. PNP switch (M/T models)
5. Battery
6. IPDM E/R
7. ECM
8. Refrigerant pressure sensor (shown with front grill removed)
9. Accelerator pedal

⇦ : Vehicle front

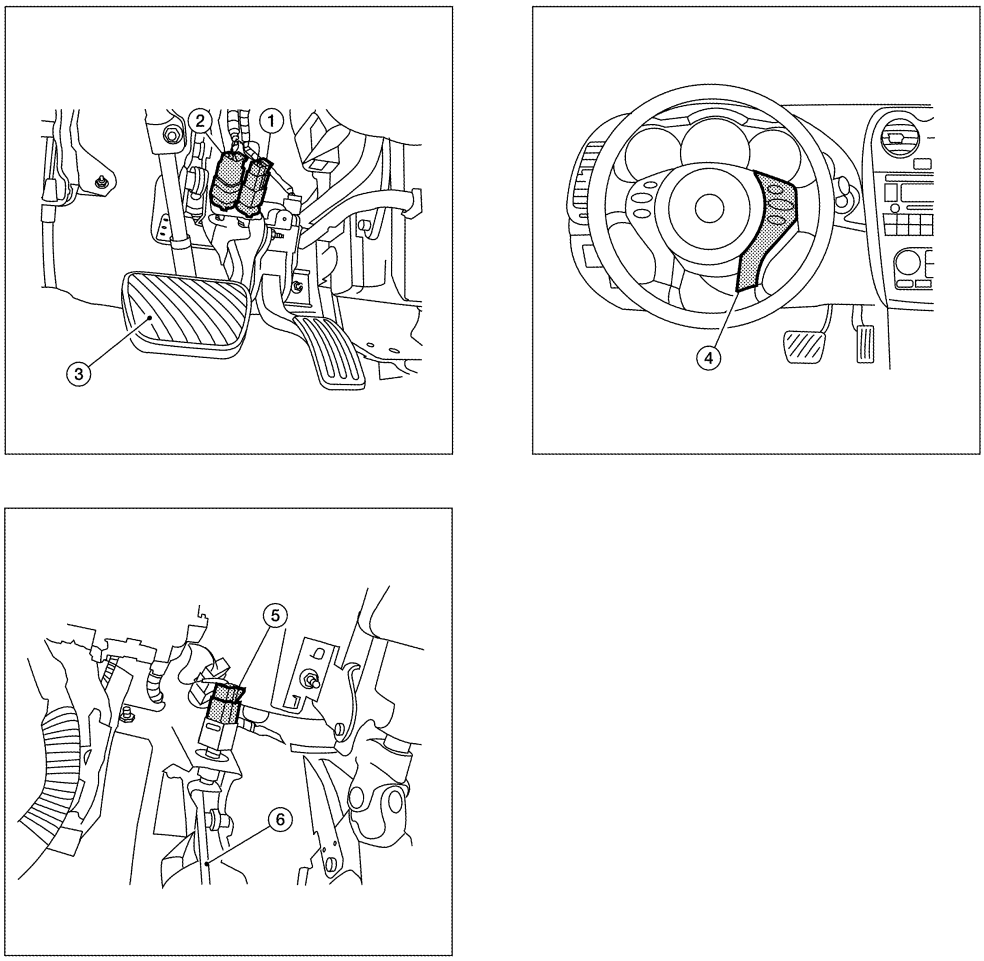

ALBIA0105ZZ

1. ASCD brake switch
2. Stop lamp switch
3. Brake pedal
4. ASCD steering switch
5. ASCD clutch switch (M/T models)
6. Clutch pedal

Component Description

INFOID:0000000004362001

Component	Reference
Camshaft position sensor (PHASE)	EC-1296, "Description"
Crankshaft position sensor (POS)	EC-1292, "Description"
Engine coolant temperature sensor	EC-1210, "Description"
Intake valve timing control solenoid valve	EC-1191, "Description"

VARIABLE INDUCTION AIR SYSTEM

System Diagram

INFOID:0000000004362002

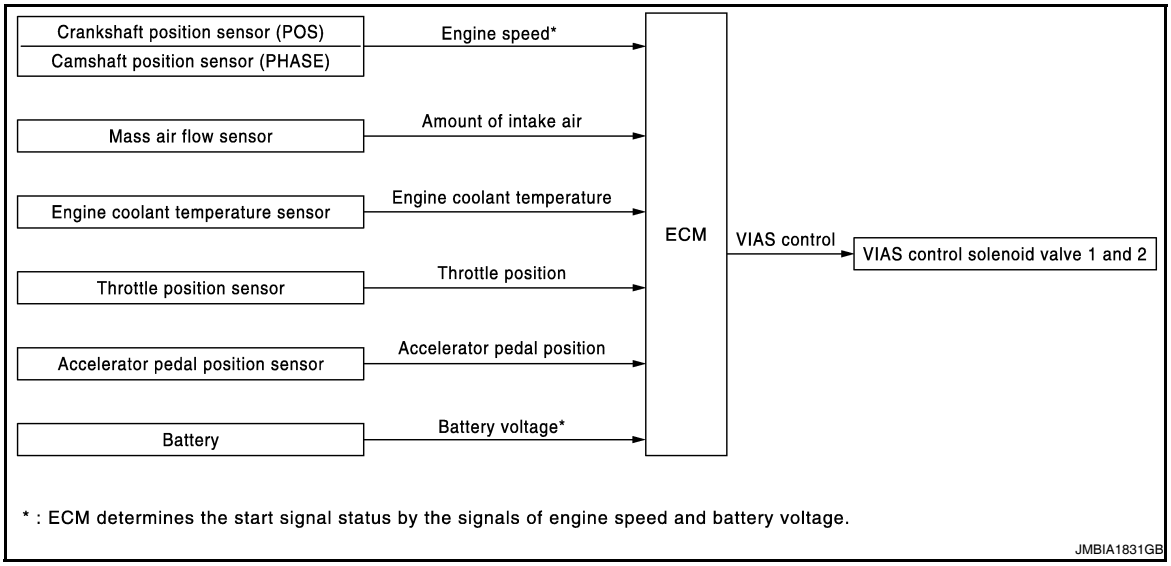

System Description

INFOID:0000000004362003

INPUT/OUTPUT SIGNAL CHART

Sensor	Input signal to ECM	ECM function	Actuator
Crankshaft position sensor (POS) Camshaft position sensor (PHASE)	Engine speed*	VIAS control	VIAS control solenoid valve 1 VIAS control solenoid valve 2
Mass air flow sensor	Amount of intake air		
Engine coolant temperature sensor	Engine coolant temperature		
Throttle position sensor	Throttle position		
Accelerator pedal position sensor	Accelerator pedal position		
Battery	Battery voltage*		

*: ECM determines the start signal status by the signals of engine speed and battery voltage.

SYSTEM DESCRIPTION

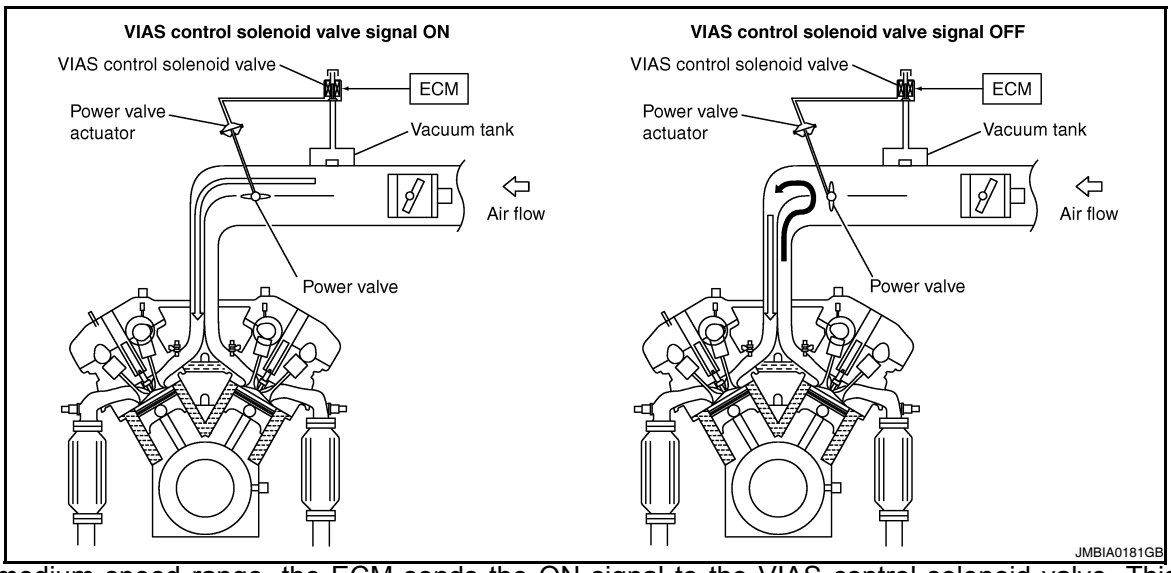

In the medium speed range, the ECM sends the ON signal to the VIAS control solenoid valve. This signal introduces the intake manifold vacuum into the power valve actuator and therefore closes the power valve.

Under this condition, the pressure waves of the exhaust stroke do not disturb the pressure waves of the intake stroke of each opposite bank. Therefore, charging efficiency is increased together with the effect of the long intake passage.
However, in the high speed range, the ECM sends the OFF signal to the VIAS control solenoid valve and the power valves is opened. Under this condition, the pressure waves of intake stroke are resonant with those of each opposite bank exhaust stroke. Therefore, charging efficiency is also increased.
In addition, both valves 1 and 2 are opened or closed in other ranges mentioned above. Thus maximum charging efficiency is obtained for the various driving conditions.

VACUUM HOSE DRAWING

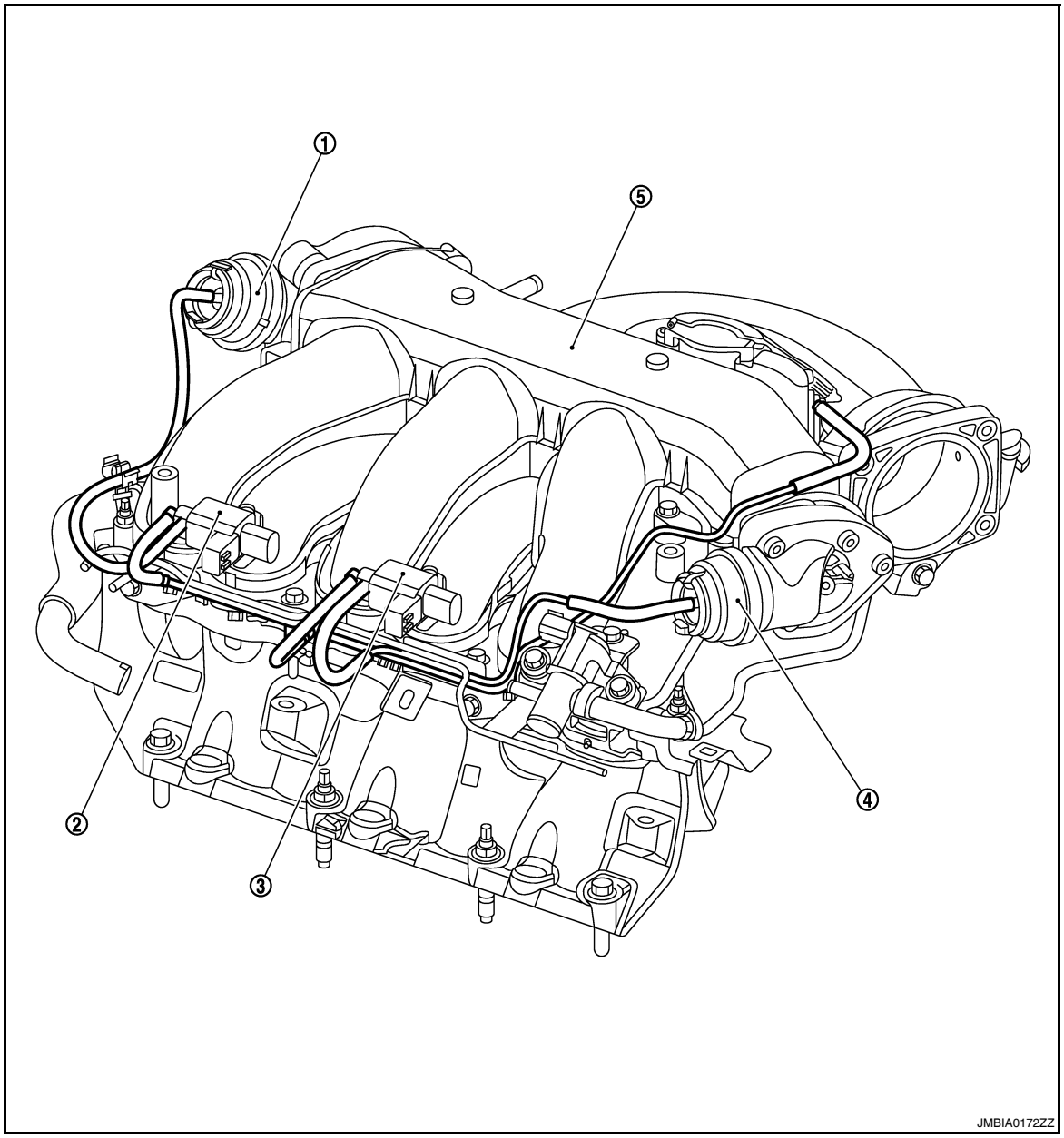

1. Power valve actuator 1
2. VIAS control solenoid valve 1
3. VIAS control solenoid valve 2
4. Power valve actuator 2
5. Intake manifold collector

Component Parts Location

INFOID:0000000004404412

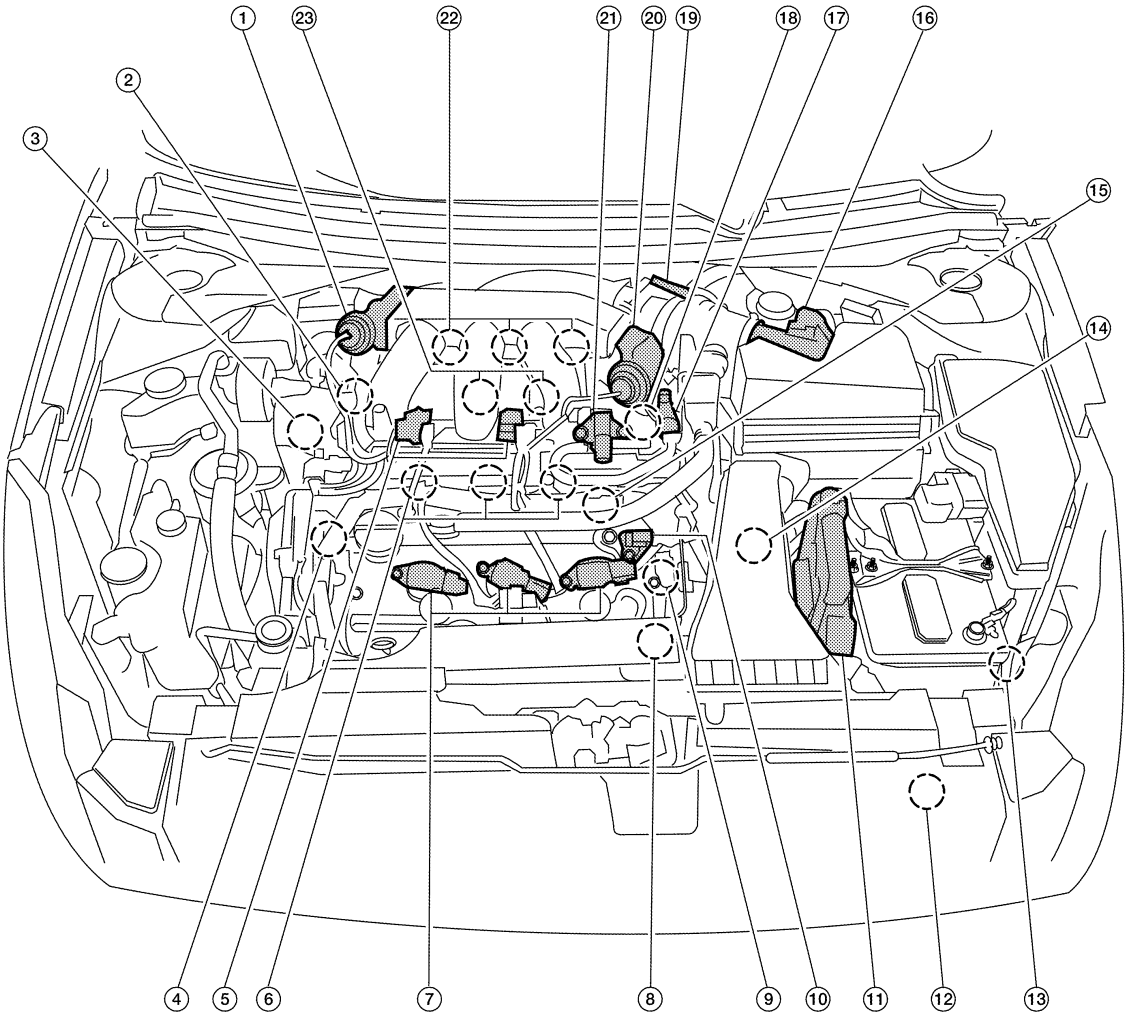

ALBIA0110ZZ

1. Power valve actuator 1	2. Intake valve timing control solenoid valve (bank 1)	3. Power steering pressure sensor
4. Intake valve timing control solenoid valve (bank 2)	5. VIAS control solenoid valves 1 and 2	6. Fuel injector (bank 2)
7. Ignition coil (with power transistor) and spark plug (bank 2)	8. Crankshaft position sensor (POS)	9. Engine coolant temperature sensor
10. Camshaft position sensor (PHASE) (bank 2)	11. ECM	12. Refrigerant pressure sensor
13. Battery current sensor	14. PNP switch	15. Condenser-2
16. Mass air flow sensor (with intake air temperature sensor)	17. EVAP service port	18. Camshaft position sensor (PHASE) (bank 1)
19. Electric throttle control actuator	20. Power valve actuator 2	21. EVAP canister purge volume control solenoid valve
22. Ignition coil (with power transistor) and spark plug (bank 1)	23. Knock sensor	

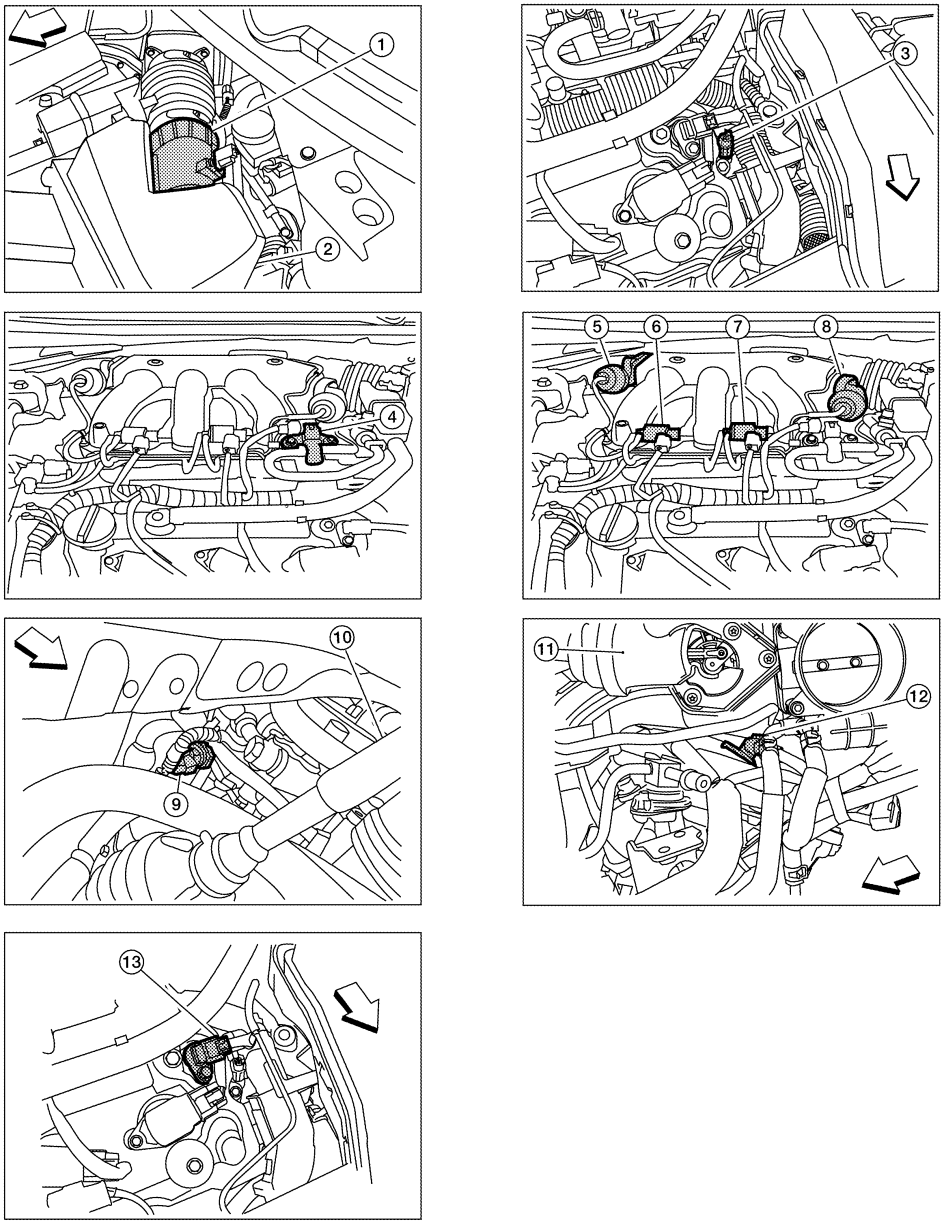

ALBIA0101ZZ

1. Mas air flow sensor (with intake air temperature sensor)
2. Air cleaner case
3. Engine coolant temperature sensor
4. EVAP canister purge volume control solenoid valve
5. Power valve actuator 1
6. VIAS control solenoid valve 1
7. VIAS control solenoid valve 2
8. Power valve actuator 2
9. Power steering pressure sensor
10. Tie rod (RH)
11. Power valve actuator 2
12. Camshaft position sensor (PHASE) (bank 1)
13. Camshaft position sensor (PHASE) (bank 2)

⇦ : Vehicle front

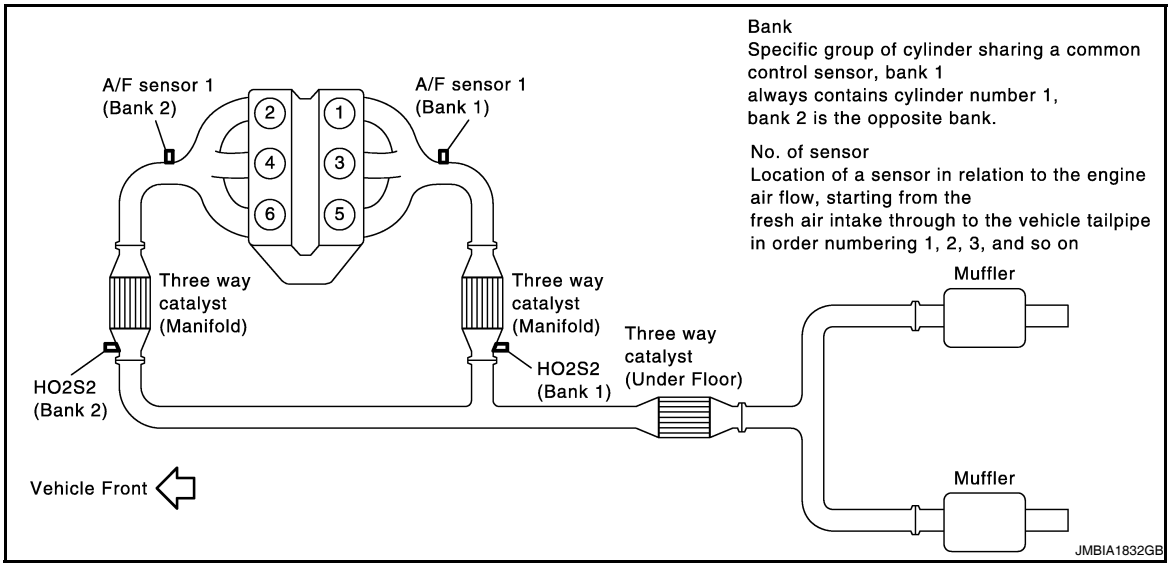
Bank
Specific group of cylinder sharing a common control sensor, bank 1 always contains cylinder number 1, bank 2 is the opposite bank.
No. of sensor
Location of a sensor in relation to the engine air flow, starting from the fresh air intake through to the vehicle tailpipe in order numbering 1, 2, 3, and so on
A/F sensor 1 (Bank 2)
A/F sensor 1 (Bank 1)
2
1
4
3
6
5
Three way catalyst (Manifold)
Three way catalyst (Manifold)
HO2S2 (Bank 2)
HO2S2 (Bank 1)
Three way catalyst (Under Floor)
Muffler
Muffler
Vehicle Front
JMBIA1832GB

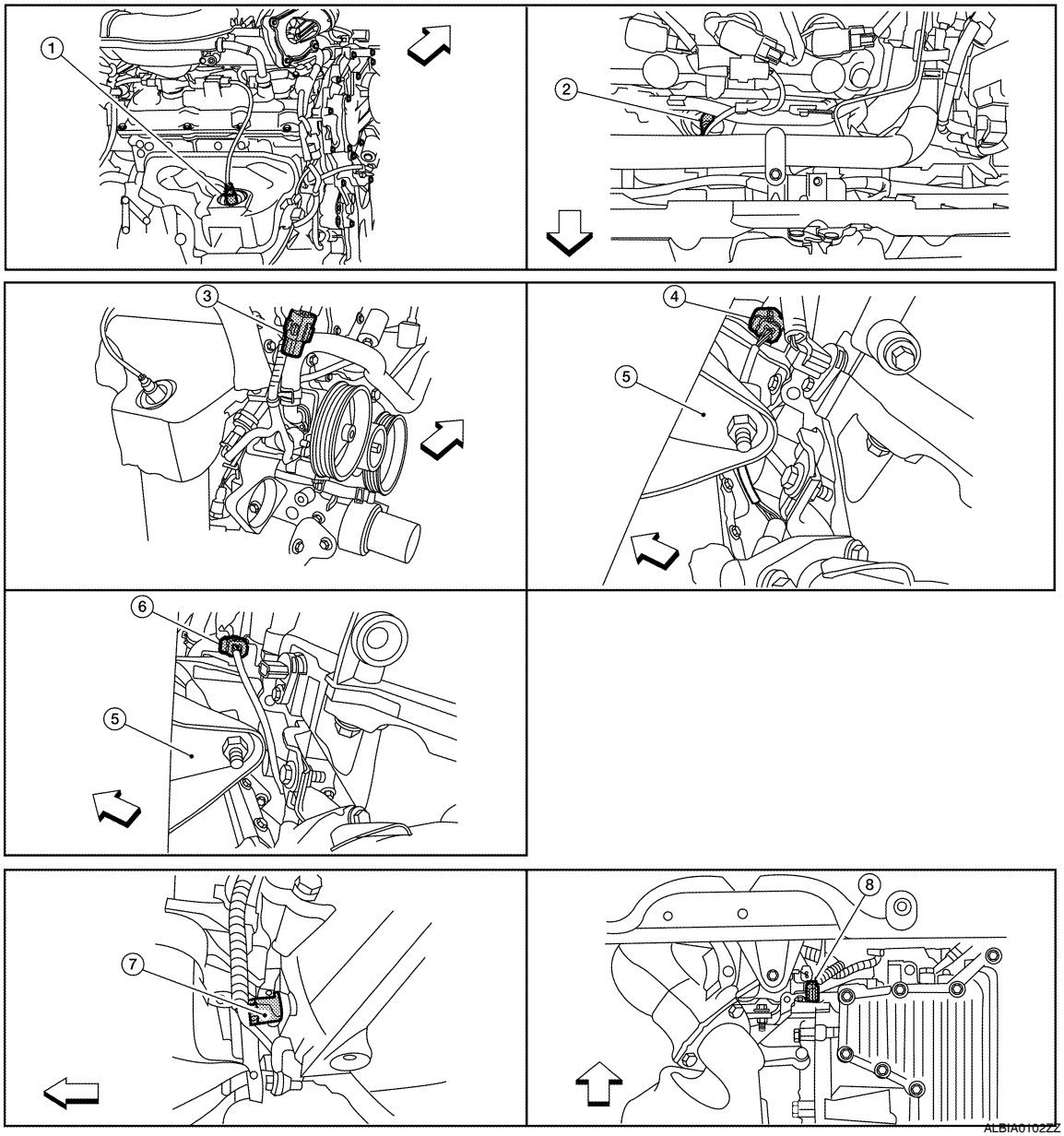
1
2
3
4
5
6
5
7
8
ALBIA0102ZZ

1. A/F sensor 1 (bank 1)
2. A/F sensor 1 (bank 2)
3. HO2S2 (bank 1) harness connector
4. HO2S2 (bank 2) harness connector (CVT models)
5. Front engine mount
6. HO2S2 (bank 2) harness connector (M/T models)
7. Crankshaft position sensor (POS) (M/T models)
8. Crankshaft position sensor (POS) (CVT models)

⇦ : Vehicle front

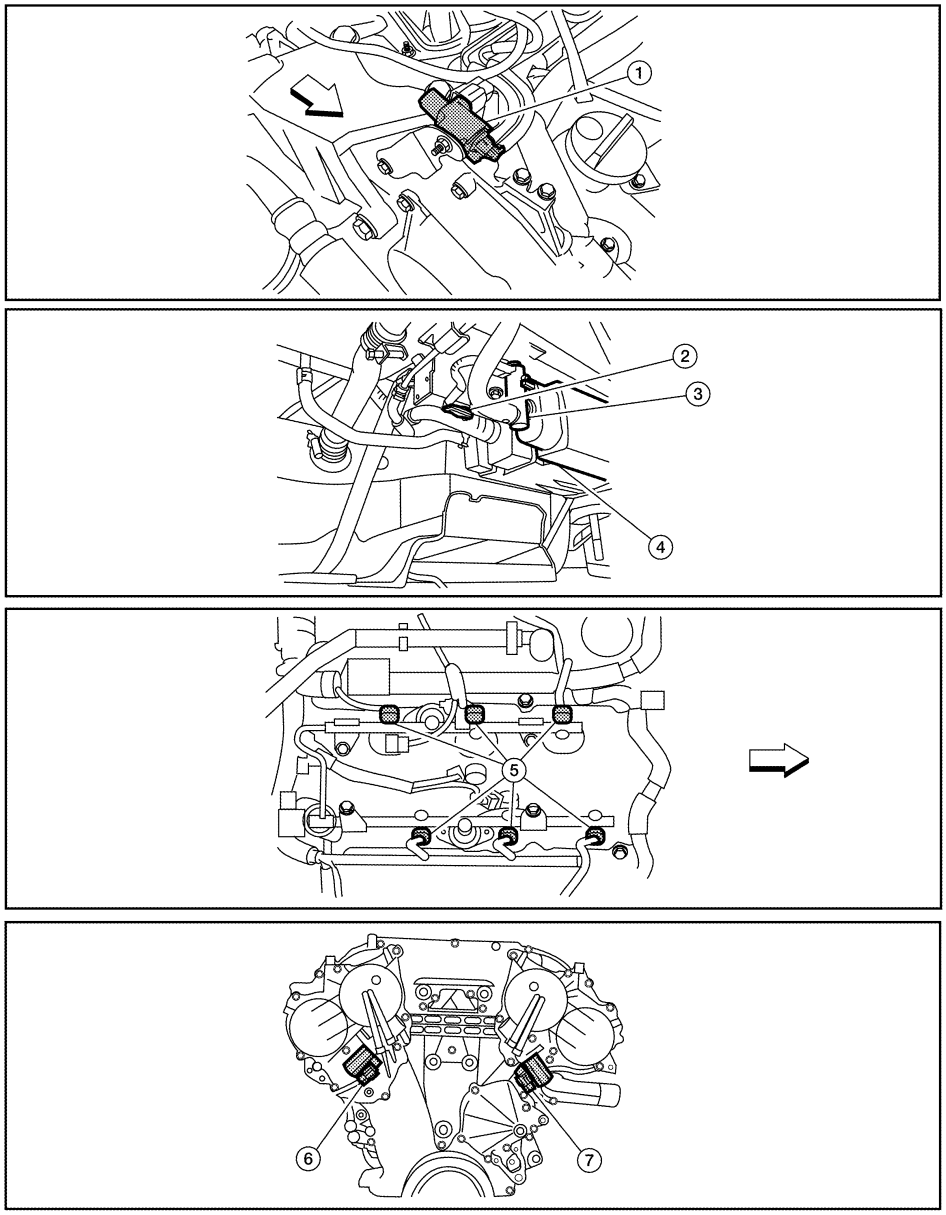

ALBIA0103ZZ

1. Electronic controlled engine mount control solenoid valve
2. EVAP control system pressure sensor
3. EVAP canister vent control valve
4. EVAP canister
5. Injector harness connector
6. Intake valve timing control solenoid valve (bank 1)
7. Intake valve timing control solenoid valve (bank 2)

⇦ : Vehicle front

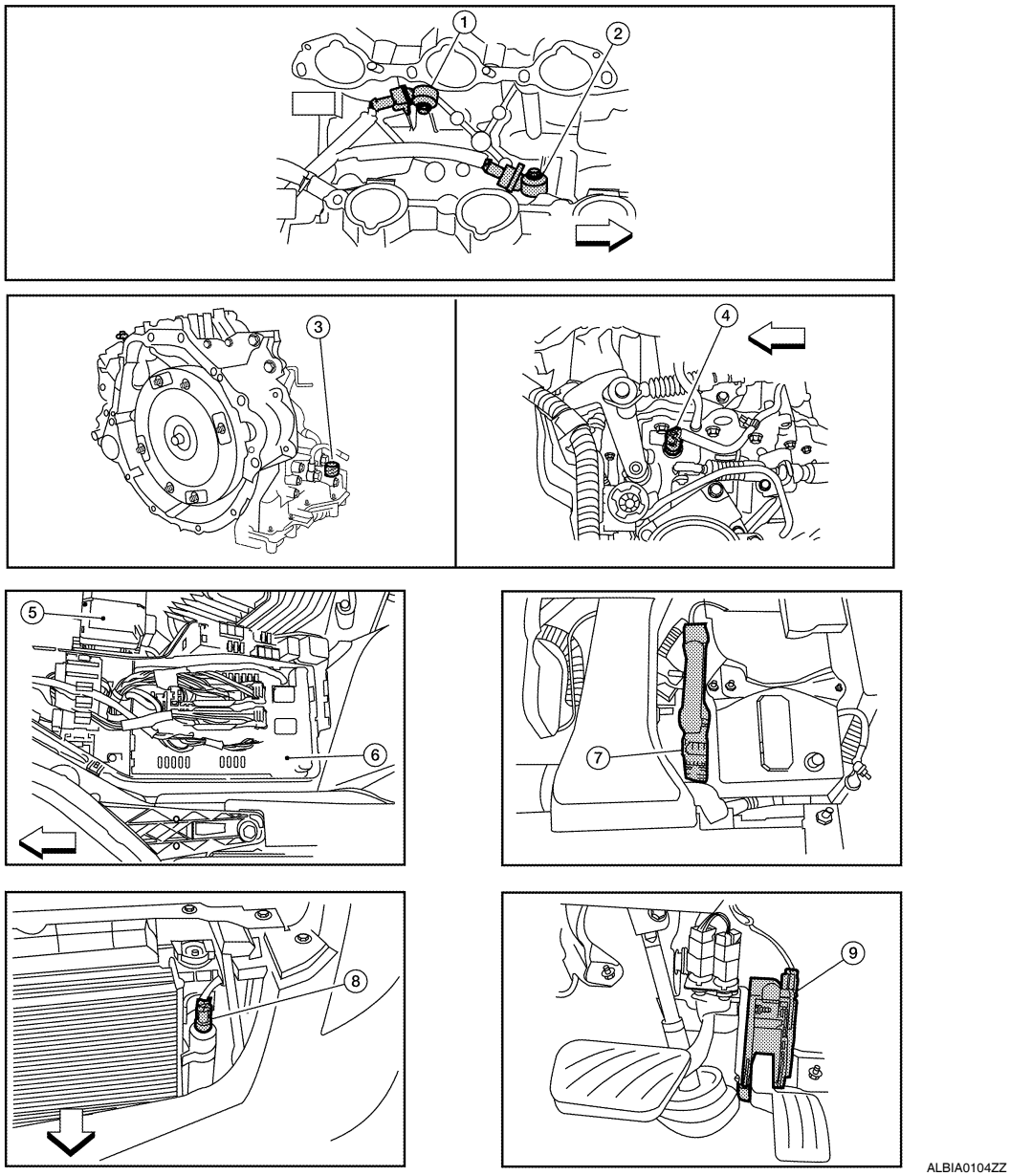

1. Knock sensor (bank 2)
2. Knock sensor (bank 1)
3. PNP switch (CVT models)
4. PNP switch (M/T models)
5. Battery
6. IPDM E/R
7. ECM
8. Refrigerant pressure sensor (shown with front grill removed)
9. Accelerator pedal

⇦ : Vehicle front

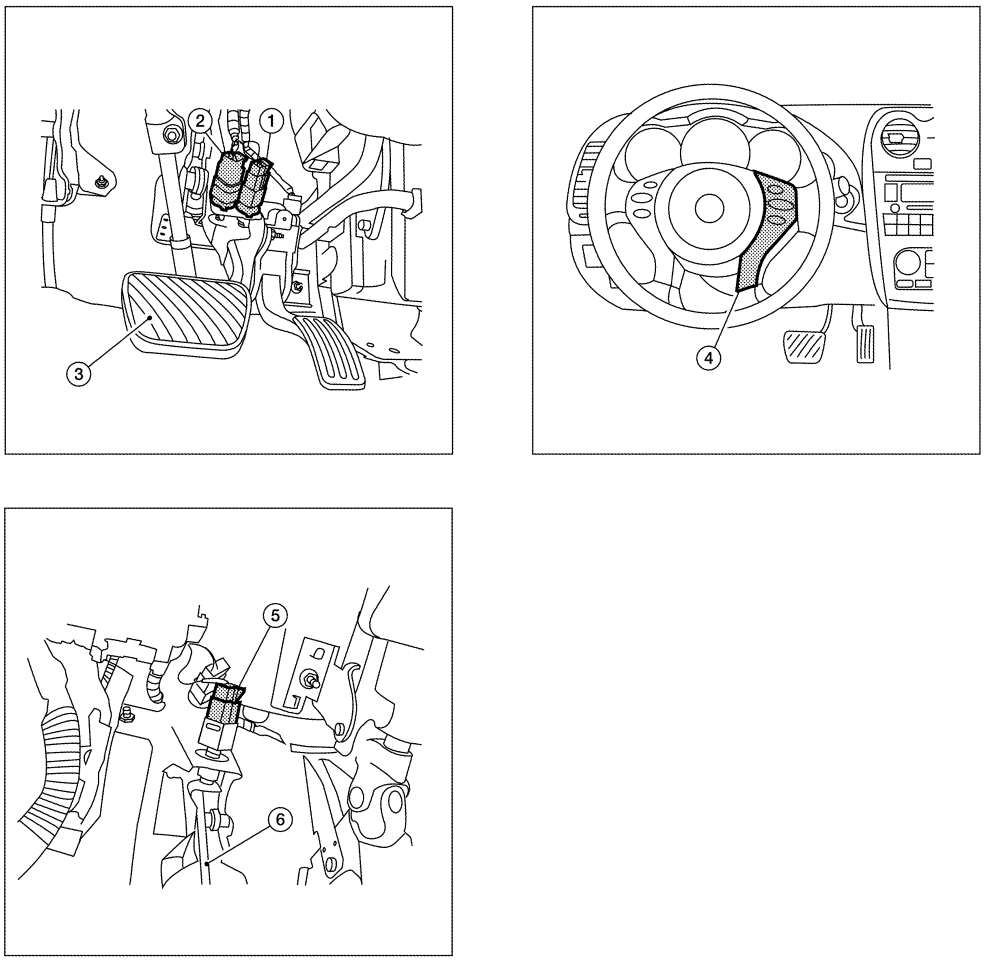

ALBIA0105ZZ

1. ASCD brake switch
2. Stop lamp switch
3. Brake pedal
4. ASCD steering switch
5. ASCD clutch switch (M/T models)
6. Clutch pedal

Component Description

INFOID:0000000004362005

Component	Reference
Accelerator pedal position sensor	EC-1448, "Description"
Camshaft position sensor (PHASE)	EC-1296, "Description"
Crankshaft position sensor (POS)	EC-1292, "Description"
Engine coolant temperature sensor	EC-1210, "Description"
Mass air flow sensor	EC-1194, "Description"
Power valve 1 and 2	EC-1506, "Description"
Throttle position sensor	EC-1215, "Description"

Component	Reference
VIAS control solenoid valve 1	EC-1428, "Description"
VIAS control solenoid valve 2	EC-1431, "Description"

ON BOARD DIAGNOSTIC (OBD) SYSTEM

Diagnosis Description

INFOID:0000000004362006

INTRODUCTION

The ECM has an on board diagnostic system, which detects malfunctions related to engine sensors or actuators. The ECM also records various emission-related diagnostic information including:

Emission-related diagnostic information	Diagnostic service
Diagnostic Trouble Code (DTC)	Service $03 of SAE J1979
Freeze Frame data	Service $02 of SAE J1979
System Readiness Test (SRT) code	Service $01 of SAE J1979
1st Trip Diagnostic Trouble Code (1st Trip DTC)	Service $07 of SAE J1979
1st Trip Freeze Frame data	—
Test values and Test limits	Service $06 of SAE J1979
Calibration ID	Service $09 of SAE J1979

The above information can be checked using procedures listed in the table below.

×: Applicable —: Not applicable

	DTC	1st trip DTC	Freeze Frame data	1st trip Freeze Frame data	SRT code	SRT status	Test value
CONSULT-III	×	×	×	×	×	×	—
GST	×	×	×	—	×	×	×
ECM	×	×*	—	—	—	×	—

*: When DTC and 1st trip DTC simultaneously appear on the display, they cannot be clearly distinguished from each other.

The malfunction indicator lamp (MIL) on the instrument panel illuminates when the same malfunction is detected in two consecutive trips (Two trip detection logic), or when the ECM enters fail-safe mode. (Refer to EC-1551, "Fail-safe".)

TWO TRIP DETECTION LOGIC

When a malfunction is detected for the first time, 1st trip DTC and 1st trip Freeze Frame data are stored in the ECM memory. The MIL will not illuminate at this stage. <1st trip>

If the same malfunction is detected again during the next drive, the DTC and Freeze Frame data are stored in the ECM memory, and the MIL illuminates. The MIL illuminates at the same time when the DTC is stored. <2nd trip> The “trip” in the “Two Trip Detection Logic” means a driving mode in which self-diagnosis is performed during vehicle operation. Specific on board diagnostic items will cause the ECM to illuminate or blink the MIL, and store DTC and Freeze Frame data, even in the 1st trip, as shown below.

×: Applicable —: Not applicable

Items	MIL				DTC		1st trip DTC	
	1st trip		2nd trip		1st trip displaying	2nd trip displaying	1st trip displaying	2nd trip displaying
	Blinking	Illuminate	Blinking	Illuminate				
Misfire (Possible three way catalyst damage) — DTC: P0300 - P0306 is being detected	×	—	—	—	—	—	×	—
Misfire (Possible three way catalyst damage) — DTC: P0300 - P0306 is being detected	—	—	×	—	—	×	—	—
One trip detection diagnoses (Refer to EC-1555, "DTC Index".)	—	×	—	—	×	—	—	—
Except above	—	—	—	×	—	×	×	—

DTC AND FREEZE FRAME DATA

DTC and 1st Trip DTC

The 1st trip DTC (whose number is the same as the DTC number) is displayed for the latest self-diagnostic result obtained. If the ECM memory was cleared previously, and the 1st trip DTC did not recur, the 1st trip DTC will not be displayed.
If a malfunction is detected during the 1st trip, the 1st trip DTC is saved in the ECM memory. The MIL will not illuminate (two trip detection logic). If the same malfunction is not detected in the 2nd trip (meeting the required driving pattern), the 1st trip DTC is cleared from the ECM memory. If the same malfunction is detected in the 2nd trip, both the 1st trip DTC and DTC are stored in the ECM memory and the MIL illuminates. In other words, the DTC is stored in the ECM memory and the MIL illuminates when the same malfunction occurs in two consecutive trips. If a 1st trip DTC is saved and a non-diagnostic operation is performed between the 1st and 2nd trips, only the 1st trip DTC will continue to be stored. For malfunctions that blink or illuminate the MIL during the 1st trip, the DTC and 1st trip DTC are stored in the ECM memory.
Procedures for clearing the DTC and the 1st trip DTC from the ECM memory are described in “How to Erase DTC and 1st Trip DTC”.
For malfunctions in which 1st trip DTCs are displayed, refer to EC-1555, "DTC Index". These items are required by legal regulations to continuously monitor the system/component. In addition, the items monitored non-continuously are also displayed on CONSULT-III.
1st trip DTC is specified in Service $07 of SAE J1979. 1st trip DTC detection occurs without illuminating the MIL and therefore does not warn the driver of a malfunction. However, 1st trip DTC detection will not prevent the vehicle from being tested, for example during Inspection/Maintenance (I/M) tests.
When a 1st trip DTC is detected, check, print out or write down and erase (1st trip) DTC and Freeze Frame data as specified in Work Flow procedure Step 2, refer to EC-1044, "Work Flow". Then perform DTC Confirmation Procedure or Component Function Check to try to duplicate the malfunction. If the malfunction is duplicated, the item requires repair.

Freeze Frame Data and 1st Trip Freeze Frame Data

The ECM records the driving conditions such as fuel system status, calculated load value, engine coolant temperature, short term fuel trim, long term fuel trim, engine speed, vehicle speed, absolute throttle position, base fuel schedule and intake air temperature at the moment a malfunction is detected.
Data which are stored in the ECM memory, along with the 1st trip DTC, are called 1st trip freeze frame data. The data, stored together with the DTC data, are called freeze frame data and displayed on CONSULT-III or GST. The 1st trip freeze frame data can only be displayed on the CONSULT-III screen, not on the GST.
Only one set of freeze frame data (either 1st trip freeze frame data or freeze frame data) can be stored in the ECM. 1st trip freeze frame data is stored in the ECM memory along with the 1st trip DTC. There is no priority for 1st trip freeze frame data and it is updated each time a different 1st trip DTC is detected. However, once freeze frame data (2nd trip detection/MIL on) is stored in the ECM memory, 1st trip freeze frame data is no longer stored. Remember, only one set of freeze frame data can be stored in the ECM. The ECM has the following priorities to update the data.

Priority	Items	
1	Freeze frame data	Misfire — DTC: P0300 - P0306 Fuel Injection System Function — DTC: P0171, P0172, P0174, P0175
2		Except the above items (Includes CVT related items)
3	1st trip freeze frame data	

For example, the EGR malfunction (Priority: 2) was detected and the freeze frame data was saved in the 2nd trip. After that when the misfire (Priority: 1) is detected in another trip, the freeze frame data will be updated from the EGR malfunction to the misfire. The 1st trip freeze frame data is updated each time a different malfunction is detected. There is no priority for 1st trip freeze frame data. However, once freeze frame data is stored in the ECM memory, 1st trip freeze data is no longer stored (because only one freeze frame data or 1st trip freeze frame data can be stored in the ECM). If freeze frame data is stored in the ECM memory and freeze frame data with the same priority occurs later, the first (original) freeze frame data remains unchanged in the ECM memory.
Both 1st trip freeze frame data and freeze frame data (along with the DTCs) are cleared when the ECM memory is erased. Procedures for clearing the ECM memory are described in “How to Erase DTC and 1st Trip DTC”.

How to Read DTC and 1st Trip DTC

With CONSULT-III

CONSULT-III displays the DTC in “SELF DIAGNOSTIC RESULT” mode. Examples: P0340, P0850, P1148, etc.
These DTCs are prescribed by SAE J2012.

(CONSULT-III also displays the malfunctioning component or system.)
Time data indicates how many times the vehicle was driven after the last detection of a DTC.
If the DTC is being detected currently, the time data will be [0].
If a 1st trip DTC is stored in the ECM, the time data will be [1t].

With GST

GST (Generic Scan Tool) displays the DTC in Diagnostic Service $03. Examples: P0340, P0850, P1148, etc.
These DTCs are prescribed by SAE J2012.
1st trip DTC is displayed in Diagnostic Service $07.

No Tools

The number of blinks of the MIL in the Diagnostic Test Mode II (Self-Diagnostic Results) indicates the DTC. Example: 0340, 0850, 1148, etc.
These DTCs are controlled by NISSAN.

- **1st trip DTC No. is the same as DTC No.**
- **Output of a DTC indicates a malfunction. However, GST and the Diagnostic Test Mode II do not indicate whether the malfunction is still occurring or has occurred in the past and has returned to normal. CONSULT-III can identify malfunction status as shown below. Therefore, using CONSULT-III (if available) is recommended.**

How to Erase DTC and 1st Trip DTC

With CONSULT-III

NOTE:

- If the ignition switch stays ON after repair work, be sure to turn ignition switch OFF once. Wait at least 10 seconds and then turn it ON (engine stopped) again.
- If the DTC is not for CVT related items (see EC-1555), skip step 1.

1. Erase DTC in TCM. Refer to TM-117, "Diagnosis Description".
2. Select “ENGINE” with CONSULT-III.
3. Select “SELF-DIAG RESULTS”.
4. Touch “ERASE”. (DTC in ECM will be erased.)

WITH GST

NOTE:

- If the ignition switch stays ON after repair work, be sure to turn ignition switch OFF once. Wait at least 10 seconds and then turn it ON (engine stopped) again.

1. Select Service $04 with GST (Generic Scan Tool).

No Tools

NOTE:

- If the ignition switch stays ON after repair work, be sure to turn ignition switch OFF once. Wait at least 10 seconds and then turn it ON (engine stopped) again.

1. Erase DTC in ECM. Refer to How to Erase Diagnostic Test Mode II (Self-diagnostic Results).

- **If the battery is disconnected, the emission-related diagnostic information will be cleared within 24 hours.**
- **The following data are cleared when the ECM memory is erased.**

- Diagnostic trouble codes
- 1st trip diagnostic trouble codes
- Freeze frame data
- 1st trip freeze frame data
- System readiness test (SRT) codes
- Test values

Actual work procedures are explained using a DTC as an example. Be careful so that not only the DTC, but all of the data listed above, are cleared from the ECM memory during work procedures.

SYSTEM READINESS TEST (SRT) CODE

System Readiness Test (SRT) code is specified in Service $01 of SAE J1979.
As part of an enhanced emissions test for Inspection & Maintenance (I/M), certain states require the status of SRT be used to indicate whether the ECM has completed self-diagnosis of major emission systems and components. Completion must be verified in order for the emissions inspection to proceed.
If a vehicle is rejected for a State emissions inspection due to one or more SRT items indicating “INCMP”, use the information in this Service Manual to set the SRT to “CMPLT”.
In most cases the ECM will automatically complete its self-diagnosis cycle during normal usage, and the SRT status will indicate “CMPLT” for each application system. Once set as “CMPLT”, the SRT status remains “CMPLT” until the self-diagnosis memory is erased.

Occasionally, certain portions of the self-diagnostic test may not be completed as a result of the customer's normal driving pattern; the SRT will indicate “INCMP” for these items.

NOTE:

The SRT will also indicate “INCMP” if the self-diagnosis memory is erased for any reason or if the ECM memory power supply is interrupted for several hours.

If, during the state emissions inspection, the SRT indicates “CMPLT” for all test items, the inspector will continue with the emissions test. However, if the SRT indicates “INCMP” for one or more of the SRT items the vehicle is returned to the customer untested.

NOTE:

If MIL is ON during the state emissions inspection, the vehicle is also returned to the customer untested even though the SRT indicates “CMPLT” for all test items. Therefore, it is important to check SRT (“CMPLT”) and DTC (No DTCs) before the inspection.

SRT Item

The table below shows required self-diagnostic items to set the SRT to “CMPLT”.

SRT item (CONSULT-III indication)	Performance Priority*	Required self-diagnostic items to set the SRT to “CMPLT”	Corresponding DTC No.
CATALYST	2	Three way catalyst function	P0420, P0430
EVAP SYSTEM	2	EVAP control system purge flow monitoring	P0441
	1	EVAP control system	P0442
	2	EVAP control system	P0456
HO2S	2	Air fuel ratio (A/F) sensor 1	P0133, P0153
		Heated oxygen sensor 2	P0137, P0157
		Heated oxygen sensor 2	P0138, P0158
		Heated oxygen sensor 2	P0139, P0159

*: If completion of several SRTs is required, perform driving patterns (DTC confirmation procedure), one by one based on the priority for models with CONSULT-III.

SRT Set Timing

SRT is set as “CMPLT” after self-diagnosis has been performed one or more times. Completion of SRT is done regardless of whether the result is OK or NG. The set timing is different between OK and NG results and is shown in the table below.

Self-diagnosis result		Example				
		Diagnosis	Ignition cycle ← ON → OFF	← ON → OFF	← ON → OFF	← ON →
All OK	Case 1	P0400	OK (1)	— (1)	OK (2)	— (2)
		P0402	OK (1)	— (1)	— (1)	OK (2)
		P1402	OK (1)	OK (2)	— (2)	— (2)
		SRT of EGR	“CMPLT”	“CMPLT”	“CMPLT”	“CMPLT”
	Case 2	P0400	OK (1)	— (1)	— (1)	— (1)
		P0402	— (0)	— (0)	OK (1)	— (1)
		P1402	OK (1)	OK (2)	— (2)	— (2)
		SRT of EGR	“INCMP”	“INCMP”	“CMPLT”	“CMPLT”
NG exists	Case 3	P0400	OK	OK	—	—
		P0402	—	—	—	—
		P1402	NG	—	NG	NG (Consecutive NG)
		(1st trip) DTC	1st trip DTC	—	1st trip DTC	DTC (= MIL ON)
		SRT of EGR	“INCMP”	“INCMP”	“INCMP”	“CMPLT”

OK: Self-diagnosis is carried out and the result is OK.

NG: Self-diagnosis is carried out and the result is NG.

—: Self-diagnosis is not carried out.

When all SRT related self-diagnoses show OK results in a single cycle (Ignition OFF-ON-OFF), the SRT will indicate “CMPLT”. → Case 1 above

When all SRT related self-diagnoses show OK results via the several different cycles, the SRT will indicate “CMPLT” at the time the respective self-diagnoses have at least one OK result. → Case 2 above

If one or more SRT related self-diagnoses show NG results in 2 consecutive cycles, the SRT will also indicate “CMPLT”. → Case 3 above

The table above shows that the minimum number of cycles for setting SRT as “INCMP” is the number one (1) for each self-diagnosis (Case 1 & 2) or the number two (2) for one of self-diagnoses (Case 3). However, in preparation for the state emissions inspection, it is unnecessary for each self-diagnosis to be executed twice (Case 3) for the following reasons:

- The SRT will indicate “CMPLT” at the time the respective self-diagnoses have one (1) OK result.
- The emissions inspection requires “CMPLT” of the SRT only with OK self-diagnosis results.
- During SRT driving pattern, the 1st trip DTC (NG) is detected prior to “CMPLT” of SRT and the self-diagnosis memory must be erased from the ECM after repair.
- If the 1st trip DTC is erased, all the SRT will indicate “INCMP”.

  NOTE:

  SRT can be set as “CMPLT” together with the DTC(s). Therefore, DTC check must always be carried out prior to the state emission inspection even though the SRT indicates “CMPLT”.

SRT Service Procedure

If a vehicle has failed the state emissions inspection due to one or more SRT items indicating “INCMP”, review the flowchart diagnostic sequence on the next page.

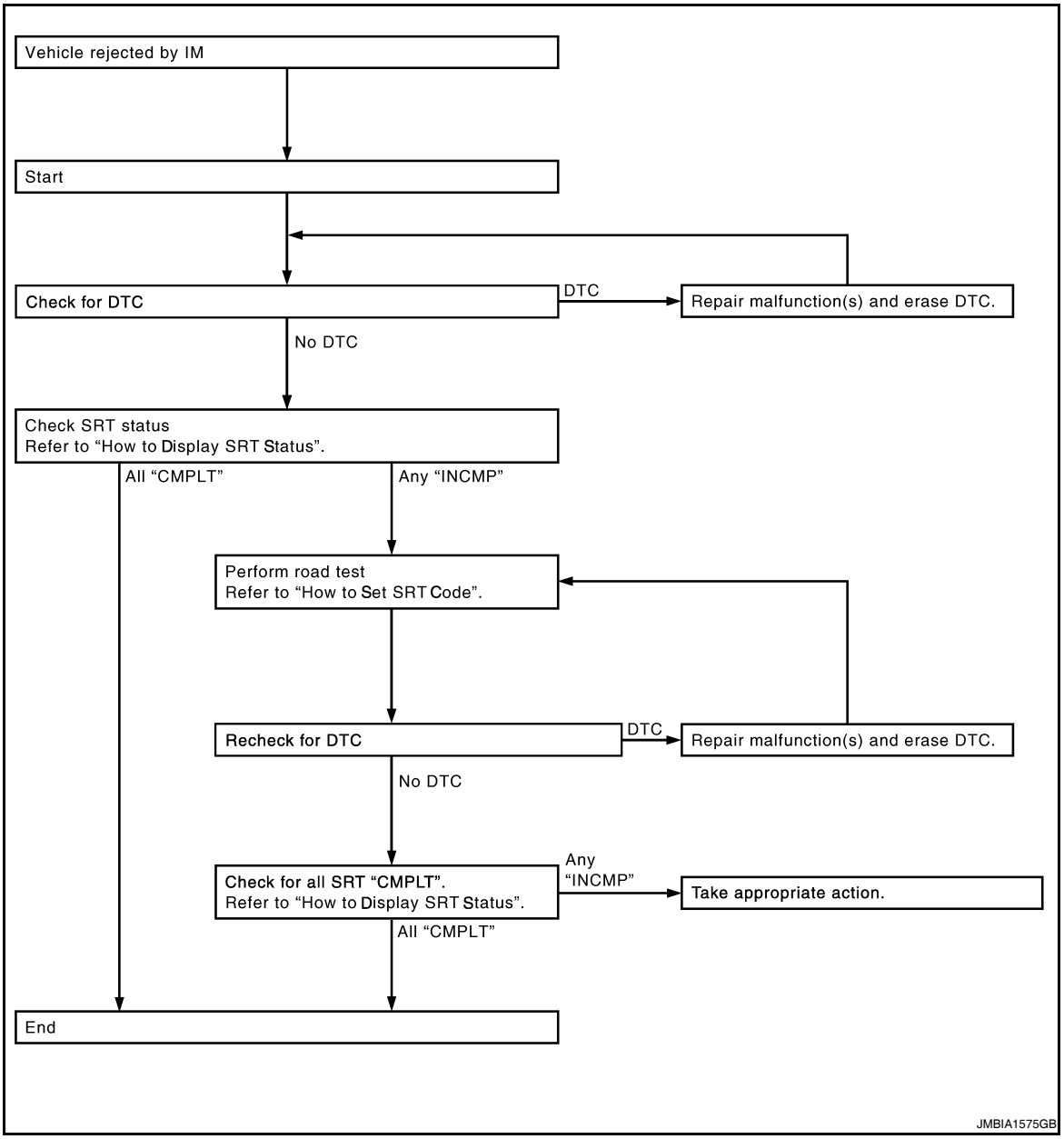

How to Display SRT Status

WITH CONSULT-III

Selecting “SRT STATUS” in “DTC CONFIRMATION” mode with CONSULT-III.

For items whose SRT codes are set, “CMPLT” is displayed on the CONSULT-III screen; for items whose SRT codes are not set, “INCMP” is displayed.

NOTE:

Though displayed on the CONSULT-III screen, “HO2S HTR” is not SRT item.

WITH GST

Selecting Service $01 with GST (Generic Scan Tool)

NO TOOLS

A SRT code itself cannot be displayed, however SRT status can.

1. Turn ignition switch ON and wait 20 seconds.
2. SRT status is indicated as shown below.
   - When all SRT codes are set, MIL illuminates continuously.

- When any SRT codes are not set, MIL will flash periodically for 10 seconds.

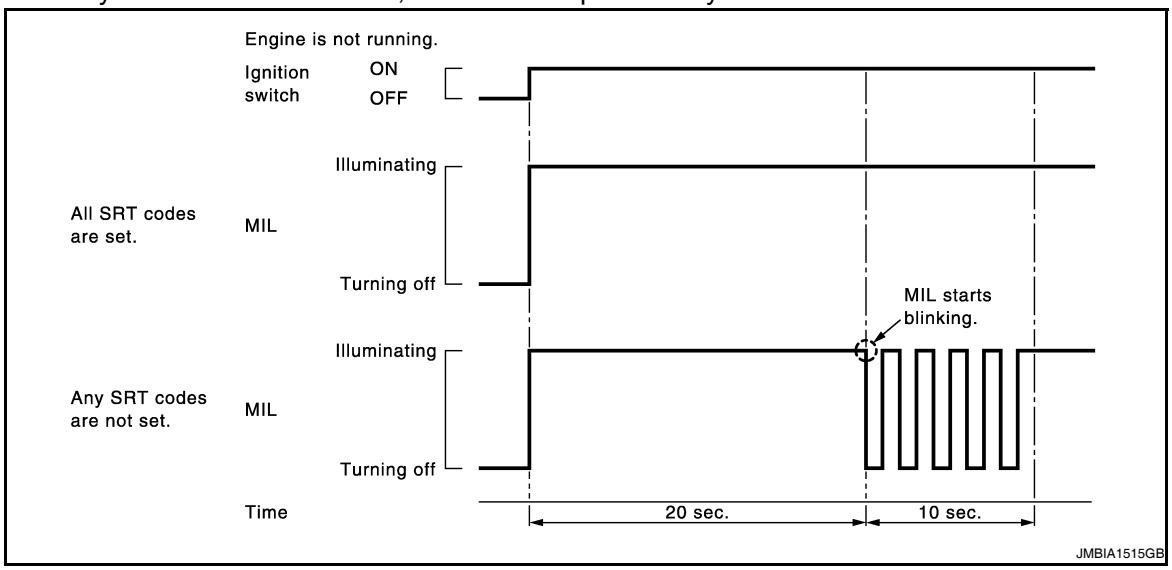

MALFUNCTION INDICATOR LAMP (MIL)

Description

The MIL is located on the instrument panel.

1. The MIL will illuminate when the ignition switch is turned ON without the engine running. This is a bulb check.
   If the MIL does not illuminate, check MIL circuit. Refer to EC-1496, "Component Function Check".
2. When the engine is started, the MIL should turn off.
   If the MIL remains on, the on board diagnostic system has detected an engine system malfunction.

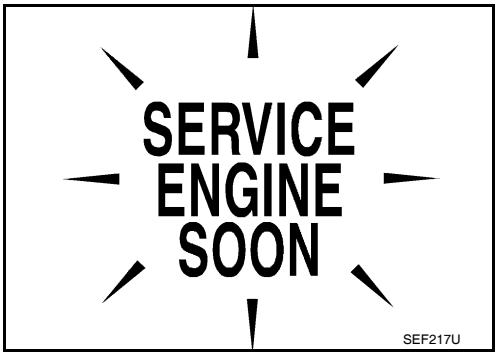

On Board Diagnostic System Function

The on board diagnostic system has the following three functions.

Diagnostic Test Mode	KEY and ENG. Status	Function	Explanation of Function
Mode I	Ignition switch in ON position Engine stopped	BULB CHECK	This function checks the MIL bulb for damage (blown, open circuit, etc.). If the MIL does not illuminate, check MIL circuit.
	Engine running	MALFUNCTION WARNING	When a malfunction is detected twice in two consecutive driving cycles (two trip detection logic), the MIL will illuminate to inform the driver that a malfunction has been detected. The following malfunctions will illuminate or blink the MIL in the 1st trip. • Misfire (Possible three way catalyst damage) • One trip detection diagnoses
Mode II	Ignition switch in ON position Engine stopped	SELF-DIAGNOSTIC RESULTS	This function allows DTCs and 1st trip DTCs to be read.

Diagnostic Test Mode I — Bulb Check

In this mode, the MIL on the instrument panel should stay ON. If it remains OFF, check MIL circuit. Refer to EC-1496, "Component Function Check".

Diagnostic Test Mode I — Malfunction Warning

MIL	Condition
ON	When the malfunction is detected.
OFF	No malfunction.

This DTC number is clarified in Diagnostic Test Mode II (SELF-DIAGNOSTIC RESULTS)

Diagnostic Test Mode II — Self-diagnostic Results

In this mode, the DTC and 1st trip DTC are indicated by the number of blinks of the MIL as shown below.
The DTC and 1st trip DTC are displayed at the same time. If the MIL does not illuminate in diagnostic test mode I (Malfunction warning), all displayed items are 1st trip DTCs. If only one code is displayed when the MIL illuminates in diagnostic test mode II (SELF-DIAGNOSTIC RESULTS), it is a DTC; if two or more codes are displayed, they may be either DTCs or 1st trip DTCs. DTC No. is same as that of 1st trip DTC. These uniden-

tified codes can be identified by using the CONSULT-III or GST. A DTC will be used as an example for how to read a code.

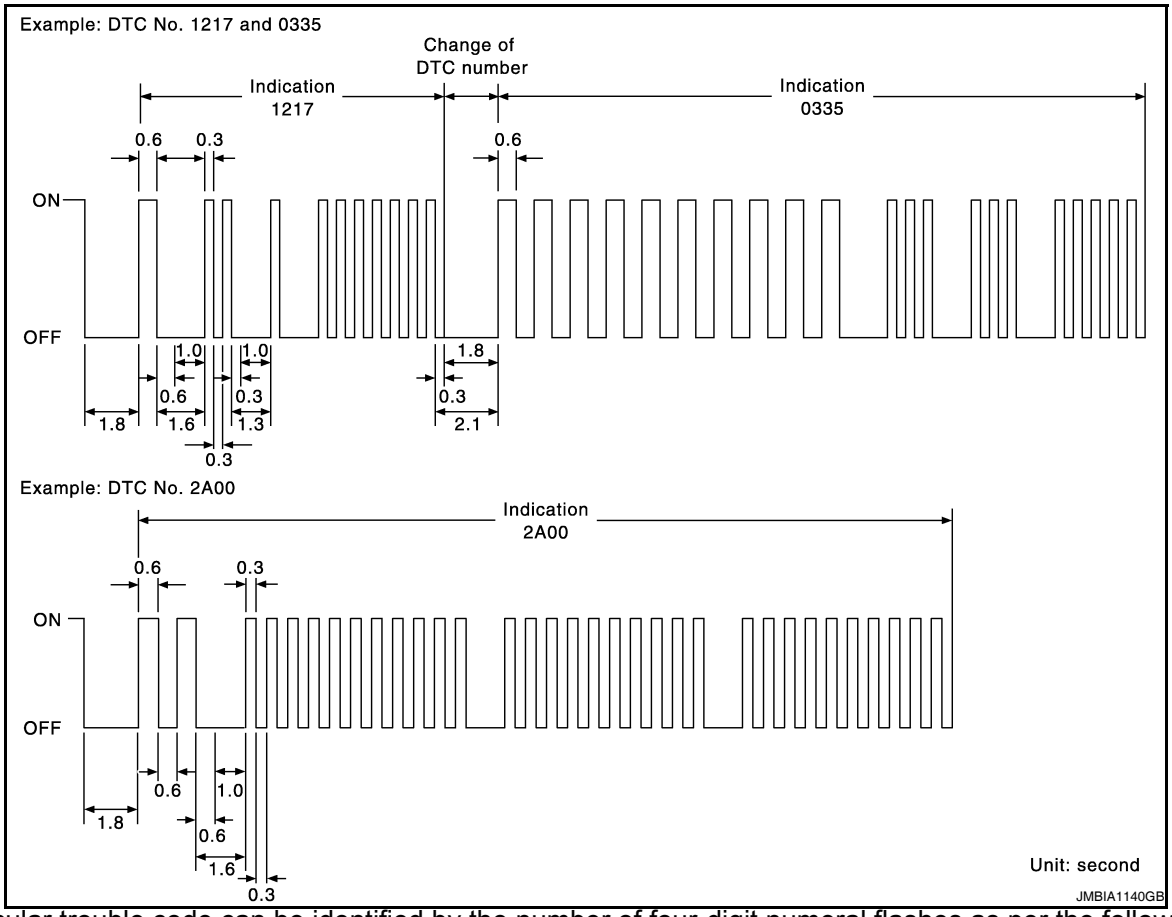

A particular trouble code can be identified by the number of four-digit numeral flashes as per the following.

Number	0	1	2	3	4	5	6	7	8	9	A	B	C	D	E	F
Flashes	10	1	2	3	4	5	6	7	8	9	11	12	13	14	15	16

The length of time the 1,000th-digit numeral flashes on and off is 1.2 seconds consisting of an ON (0.6-seconds) - OFF (0.6-seconds) cycle.
The 100th-digit numeral and lower digit numerals consist of a 0.3-seconds ON and 0.3-seconds OFF cycle.
A change from one digit numeral to another occurs at an interval of 1.0-second OFF. In other words, the later numeral appears on the display 1.3 seconds after the former numeral has disappeared.
A change from one trouble code to another occurs at an interval of 1.8-seconds OFF.
In this way, all the detected malfunctions are classified by their DTC numbers. The DTC 0000 refers to no malfunction. (See EC-1555, "DTC Index")

How to Switch Diagnostic Test Mode

NOTE:
- **It is better to count the time accurately with a clock.**
- **It is impossible to switch the diagnostic mode when an accelerator pedal position sensor circuit has a malfunction.**
- **ECM always returns to Diagnostic Test Mode I after the ignition switch is turned OFF.**

HOW TO SET DIAGNOSTIC TEST MODE II (SELF-DIAGNOSTIC RESULTS)

1. Confirm that accelerator pedal is fully released, turn ignition switch ON and wait 3 seconds.
2. Repeat the following procedure quickly five times within 5 seconds.
- Fully depress the accelerator pedal.
- Fully release the accelerator pedal.
3. Wait 7 seconds, fully depress the accelerator pedal and keep it depressed for approx. 10 seconds until the MIL starts blinking.
4. Fully release the accelerator pedal.
   ECM has entered to Diagnostic Test Mode II (Self-diagnostic results).
   NOTE:

Wait until the same DTC (or 1st trip DTC) appears to completely confirm all DTCs.

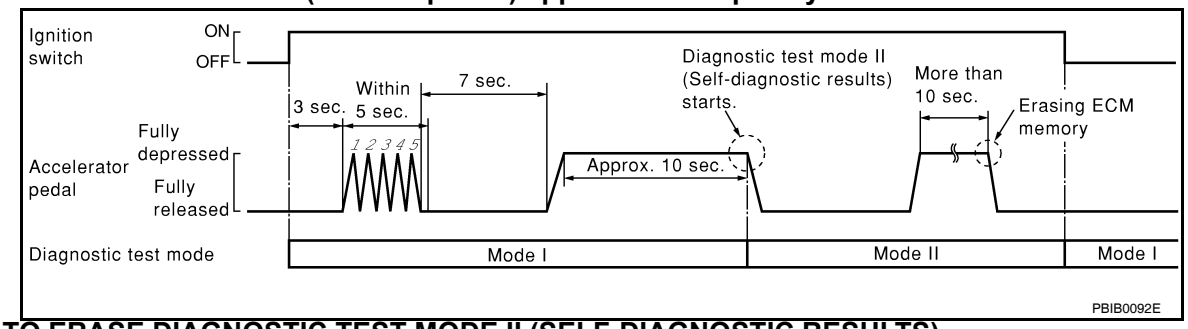

HOW TO ERASE DIAGNOSTIC TEST MODE II (SELF-DIAGNOSTIC RESULTS)

1. Set ECM in Diagnostic Test Mode II (Self-diagnostic results). Refer to “How to Set Diagnostic Test Mode II (Self-diagnostic Results)”.
2. Fully depress the accelerator pedal and keep it depressed for more than 10 seconds.
   The emission-related diagnostic information has been erased from the backup memory in the ECM.
3. Fully release the accelerator pedal, and confirm the DTC 0000 is displayed.

- **If the battery is disconnected, the DTC will be lost from the backup memory within 24 hours.**
- **Do not erase the stored memory before starting trouble diagnoses.**

OBD System Operation Chart

Relationship Between MIL, 1st Trip DTC, DTC, and Detectable Items

- When a malfunction is detected for the first time, the 1st trip DTC and the 1st trip freeze frame data are stored in the ECM memory.
- When the same malfunction is detected in two consecutive trips, the DTC and the freeze frame data are stored in the ECM memory, and the MIL will come on.
- The MIL will turn off after the vehicle is driven 3 times (driving pattern B) with no malfunction. A drive is counted only when the recorded driving pattern is met (as stored in the ECM). If another malfunction occurs while counting, the counter will reset.
- The DTC and the freeze frame data will be stored until the vehicle is driven 40 times (driving pattern A) without the same malfunction recurring (except for Misfire and Fuel Injection System). For Misfire and Fuel Injection System, the DTC and freeze frame data will be stored until the vehicle is driven 80 times (driving pattern C) without the same malfunction recurring. The “TIME” in “SELF-DIAGNOSTIC RESULTS” mode of CONSULT-III will count the number of times the vehicle is driven.
- The 1st trip DTC is not displayed when the self-diagnosis results in OK for the 2nd trip.

Summary Chart

Items	Fuel Injection System	Misfire	Other
MIL (turns off)	3 (pattern B)	3 (pattern B)	3 (pattern B)
DTC, Freeze Frame Data (no display)	80 (pattern C)	80 (pattern C)	40 (pattern A)
1st Trip DTC (clear)	1 (pattern C), *1	1 (pattern C), *1	1 (pattern B)
1st Trip Freeze Frame Data (clear)	*1, *2	*1, *2	1 (pattern B)

For details about patterns B and C under “Fuel Injection System” and “Misfire”, see “EXPLANATION FOR DRIVING PATTERNS FOR “MISFIRE <EXHAUST QUALITY DETERIORATION>”, “FUEL INJECTION SYSTEM”.

For details about patterns A and B under Other, see “EXPLANATION FOR DRIVING PATTERNS FOR “MISFIRE <EXHAUST QUALITY DETERIORATION>”, “FUEL INJECTION SYSTEM”.

*1: Clear timing is at the moment OK is detected.

*2: Clear timing is when the same malfunction is detected in the 2nd trip.

Relationship Between MIL, DTC, 1st Trip DTC and Driving Patterns for “Misfire <Exhaust Quality Deterioration>”, “Fuel Injection System”

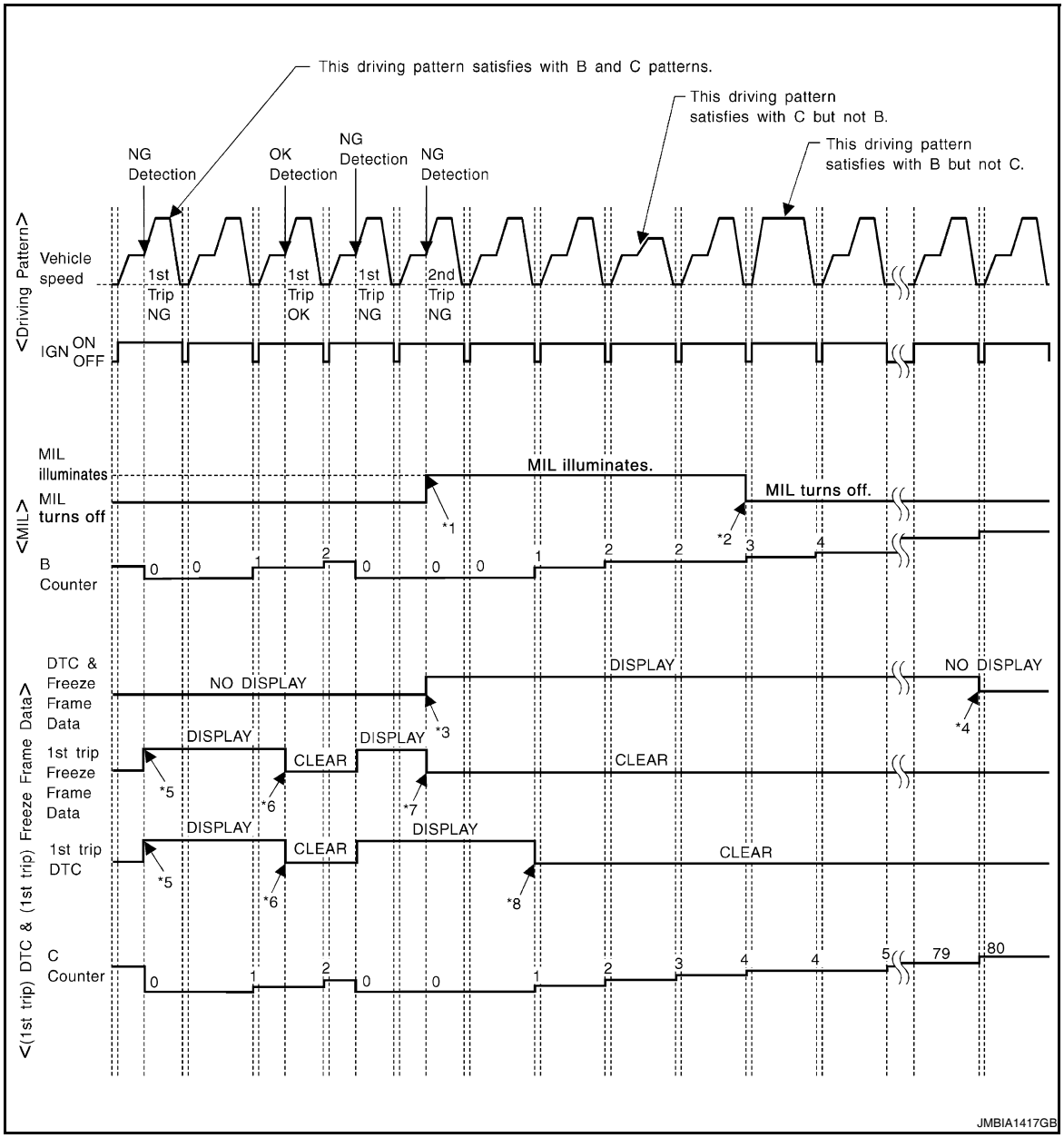

*1: When the same malfunction is detected in two consecutive trips, MIL will illuminate.

*2: MIL will turn off after vehicle is driven 3 times (pattern B) without any malfunctions.

*3: When the same malfunction is detected in two consecutive trips, the DTC and the freeze frame data will be stored in ECM.

*4: The DTC and the freeze frame data will not be displayed any longer after vehicle is driven 80 times (pattern C) without the same malfunction. (The DTC and the freeze frame data still remain in ECM.)

*5: When a malfunction is detected for the first time, the 1st trip DTC and the 1st trip freeze frame data will be stored in ECM.

*6: The 1st trip DTC and the 1st trip freeze frame data will be cleared at the moment OK is detected.

*7: When the same malfunction is detected in the 2nd trip, the 1st trip freeze frame data will be cleared.

*8: 1st trip DTC will be cleared when vehicle is driven once (pattern C) without the same malfunction after DTC is stored in ECM.

Explanation for Driving Patterns for “Misfire <Exhaust Quality Deterioration>”, “Fuel Injection System”
<Driving Pattern B>
Driving pattern B means the vehicle operation as per the following:
All components and systems should be monitored at least once by the OBD system.

- The B counter will be cleared when the malfunction is detected once regardless of the driving pattern.
- The B counter will be counted up when driving pattern B is satisfied without any malfunction.
- The MIL will turn off when the B counter reaches 3. (*2 in “OBD SYSTEM OPERATION CHART”)

<Driving Pattern C>
Driving pattern C means operating vehicle as per the following:
The following conditions should be satisfied at the same time:
Engine speed: (Engine speed in the freeze frame data) ± 375 rpm
Calculated load value: (Calculated load value in the freeze frame data) x (1 ± 0.1) [%]
Engine coolant temperature (T) condition:

- When the freeze frame data shows lower than 70°C (158°F), T should be lower than 70°C (158°F).
- When the freeze frame data shows higher than or equal to 70°C (158°F), T should be higher than or equal to 70°C (158°F).

Example:
If the stored freeze frame data is as per the following:
Engine speed: 850 rpm, Calculated load value: 30%, Engine coolant temperature: 80°C (176°F)
To be satisfied with driving pattern C, the vehicle should run under the following conditions:
Engine speed: 475 - 1,225 rpm, Calculated load value: 27 - 33%, Engine coolant temperature: more than 70°C (158°F)

- The C counter will be cleared when the malfunction is detected regardless of vehicle conditions above.
- The C counter will be counted up when vehicle conditions above are satisfied without the same malfunction.
- The DTC will not be displayed after C counter reaches 80.
- The 1st trip DTC will be cleared when C counter is counted once without the same malfunction after DTC is stored in ECM.

Relationship Between MIL, DTC, 1st Trip DTC and Driving Patterns Except For “Misfire <Exhaust Quality Deterioration>”, “Fuel Injection System”

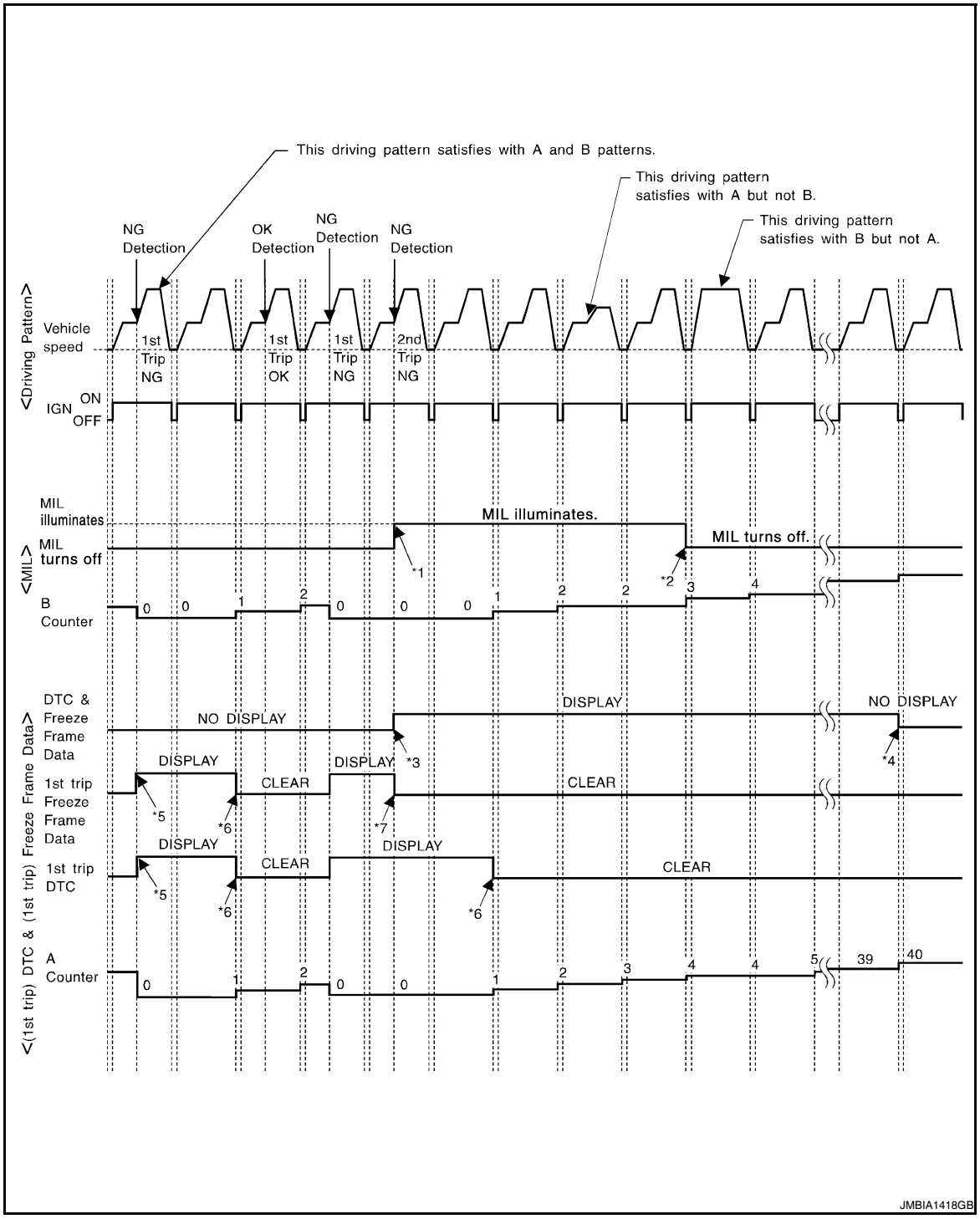

*1: When the same malfunction is detected in two consecutive trips, MIL will illuminate.

*2: MIL will turn off after vehicle is driven 3 times (pattern B) without any malfunctions.

*3: When the same malfunction is detected in two consecutive trips, the DTC and the freeze frame data will be stored in ECM.

*4: The DTC and the freeze frame data will not be displayed any longer after vehicle is driven 40 times (pattern A) without the same malfunction. (The DTC and the freeze frame data still remain in ECM.)

*5: When a malfunction is detected for the first time, the 1st trip DTC and the 1st trip freeze frame data will be stored in ECM.

*6: 1st trip DTC will be cleared after vehicle is driven once (pattern B) without the same malfunction.

*7: When the same malfunction is detected in the 2nd trip, the 1st trip freeze frame data will be cleared.

Explanation for Driving Patterns Except for “Misfire <Exhaust Quality Deterioration>”, “Fuel Injection System”
<Driving Pattern A>

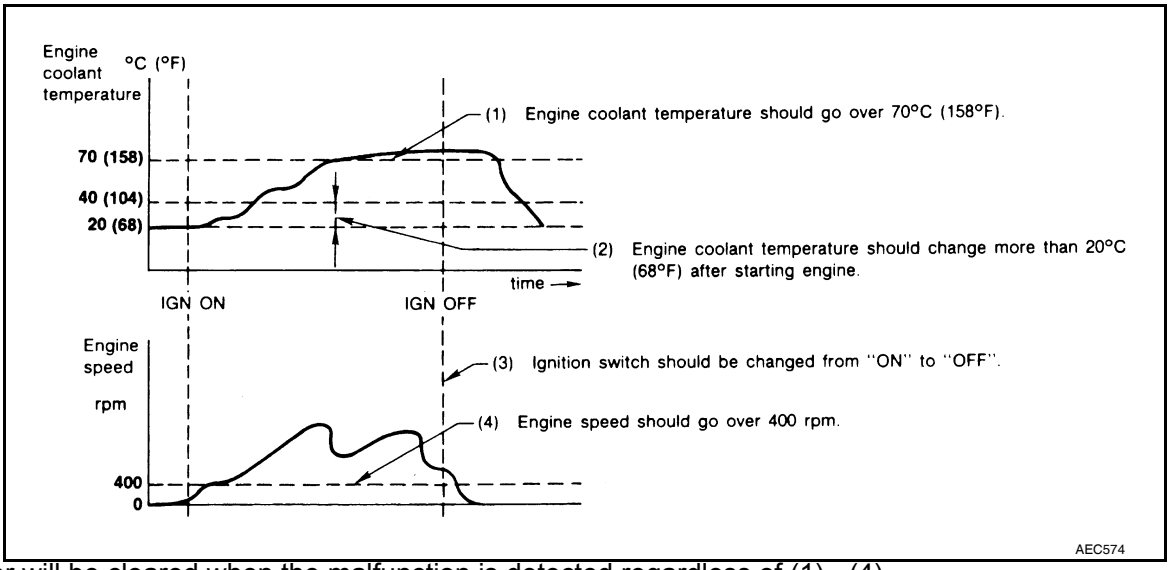

- The A counter will be cleared when the malfunction is detected regardless of (1) - (4).
- The A counter will be counted up when (1) - (4) are satisfied without the same malfunction.
- The DTC will not be displayed after the A counter reaches 40.

<Driving Pattern B>
Driving pattern B means operating vehicle as per the following:
All components and systems should be monitored at least once by the OBD system.

- The B counter will be cleared when the malfunction is detected once regardless of the driving pattern.
- The B counter will be counted up when driving pattern B is satisfied without any malfunctions.
- The MIL will turn off when the B counter reaches 3 (*2 in OBD SYSTEM OPERATION CHART).

CONSULT-III Function

INFOID:0000000004362007

FUNCTION

Diagnostic test mode	Function
Work Support	This mode enables a technician to adjust some devices faster and more accurately by following the indications on the CONSULT-III unit.
Self Diagnostic Result	Self-diagnostic results such as 1st trip DTC, DTCs and 1st trip freeze frame data or freeze frame data can be read and erased quickly.*
Data Monitor	Input/Output data in the ECM can be read.
Active Test	Diagnostic Test Mode in which CONSULT-III drives some actuators apart from the ECM and also shifts some parameters in a specified range.
DTC & SRT Confirmation	The status of system monitoring tests and the self-diagnosis status/results can be confirmed.
Function Test	This mode is used to inform customers when the vehicle requires periodic maintenance.
ECU Part Number	ECM part number can be read.

*: The following emission-related diagnostic information is cleared when the ECM memory is erased.

- Diagnostic trouble codes
- 1st trip diagnostic trouble codes
- Freeze frame data

- 1st trip freeze frame data
- System readiness test (SRT) codes
- Test values

ENGINE CONTROL COMPONENT PARTS/CONTROL SYSTEMS APPLICATION

Item			DIAGNOSTIC TEST MODE						
			WORK SUPPORT	SELF-DIAGNOSTIC RESULTS		DATA MONI-TOR	ACTIVE TEST	DTC & SRT CONFIRMATION	
				DTC*1	FREEZE FRAME DATA*2			SRT STA-TUS	DTC WORK SUP-PORT
ENGINE CONTROL COMPONENT PARTS	INPUT	Crankshaft position sensor (POS)		×	×	×			
		Camshaft position sensor (PHASE)		×	×	×			
		Mass air flow sensor		×		×			
		Engine coolant temperature sensor		×	×	×	×		
		Engine oil temperature sensor				×			
		Air fuel ratio (A/F) sensor 1		×		×		×	×
		Heated oxygen sensor 2		×		×		×	×
		Vehicle speed signal		×	×	×			
		Accelerator pedal position sensor		×		×			
		Throttle position sensor		×	×	×			
		Fuel tank temperature sensor		×		×	×		
		EVAP control system pressure sensor		×		×			
		Intake air temperature sensor		×	×	×			
		Knock sensor		×					
		Refrigerant pressure sensor				×			
		Closed throttle position switch (accel-erator pedal position sensor signal)				×			
		Air conditioner switch				×			
		Park/neutral position (PNP) signal		×		×			
		Stop lamp switch		×		×			
		Power steering pressure sensor		×		×			
		Battery voltage				×			
		Load signal				×			
		Primary speed sensor		×		×			
		Fuel level sensor		×		×			
		Battery current sensor		×		×			
		ASCD steering switch		×		×			
		ASCD brake switch		×		×			

Item			DIAGNOSTIC TEST MODE						
			WORK SUPPORT	SELF-DIAGNOSTIC RESULTS		DATA MONI-TOR	ACTIVE TEST	DTC & SRT CONFIRMATION	
				DTC*1	FREEZE FRAME DATA*2			SRT STA-TUS	DTC WORK SUP-PORT
ENGINE CONTROL COMPONENT PARTS	OUTPUT	Fuel injector				×	×		
		Power transistor (Ignition timing)				×	×		
		Throttle control motor relay		×		×			
		Throttle control motor		×					
		EVAP canister purge volume control solenoid valve		×		×	×		×
		Air conditioner relay				×			
		Fuel pump relay	×			×	×		
		Cooling fan relay		×		×	×		
		Air fuel ratio (A/F) sensor 1 heater		×		×		×*3	
		Heated oxygen sensor 2 heater		×		×		×*3	
		EVAP canister vent control valve	×	×		×	×		
		Intake valve timing control solenoid valve		×		×	×		
		VIAS control solenoid valve 1		×		×	×		
		VIAS control solenoid valve 2		×		×	×		
		Electronic controlled engine mount				×	×		
		Alternator				×	×		
		Calculated load value			×	×			

X: Applicable

*1: This item includes 1st trip DTCs.

*2: This mode includes 1st trip freeze frame data or freeze frame data. The items appear on CONSULT-III screen in freeze frame data mode only if a 1st trip DTC or DTC is detected. For details, refer to EC-1142, "Diagnosis Description".

*3: Always “CMPLT” is displayed.

WORK SUPPORT MODE

Work Item

WORK ITEM	CONDITION	USAGE
FUEL PRESSURE RELEASE	• FUEL PUMP WILL STOP BY TOUCHING “START” DURING IDLING. CRANK A FEW TIMES AFTER ENGINE STALLS.	When releasing fuel pressure from fuel line
IDLE AIR VOL LEARN	• THE IDLE AIR VOLUME THAT KEEPS THE ENGINE WITHIN THE SPECIFIED RANGE IS MEMORIZED IN ECM.	When learning the idle air volume
SELF-LEARNING CONT	• THE COEFFICIENT OF SELF-LEARNING CONTROL MIXTURE RATIO RETURNS TO THE ORIGINAL COEFFICIENT.	When clearing mixture ratio self-learning value

WORK ITEM	CONDITION	USAGE
EVAP SYSTEM CLOSE	CLOSE THE EVAP CANISTER VENT CONTROL VALVE IN ORDER TO MAKE EVAP SYSTEM CLOSE UNDER THE FOLLOWING CONDITIONS. • IGN SW ON • ENGINE NOT RUNNING • AMBIENT TEMPERATURE IS ABOVE 0°C (32°F). • NO VACUUM AND NO HIGH PRESSURE IN EVAP SYSTEM • FUEL TANK TEMP. IS MORE THAN 0°C (32°F). • WITHIN 10 MINUTES AFTER STARTING “EVAP SYSTEM CLOSE” • WHEN TRYING TO EXECUTE “EVAP SYSTEM CLOSE” UNDER THE CONDITION EXCEPT ABOVE, CONSULT-III WILL DISCONTINUE IT AND DISPLAY APPROPRIATE INSTRUCTION. **NOTE:** **WHEN STARTING ENGINE, CONSULT-III MAY DISPLAY “BATTERY VOLTAGE IS LOW. CHARGE BATTERY”, EVEN WHEN IN USING A CHARGED BATTERY.**	When detecting EVAP vapor leakage in the EVAP system
VIN REGISTRATION	• IN THIS MODE, VIN IS REGISTERED IN ECM.	When registering VIN in ECM
TARGET IDLE RPM ADJ*	• IDLE CONDITION	When setting target idle speed
TARGET IGN TIM ADJ*	• IDLE CONDITION	When adjusting target ignition timing

*: This function is not necessary in the usual service procedure.

SELF-DIAG RESULTS MODE

Self Diagnostic Item

Regarding items of DTC and 1st trip DTC, refer to EC-1555, "DTC Index".

Freeze Frame Data and 1st Trip Freeze Frame Data

Freeze frame data item*	Description
DIAG TROUBLE CODE [PXXXX]	• The engine control component part/control system has a trouble code that is displayed as PXXXX. (Refer to EC-1555, "DTC Index".)
FUEL SYS-B1	• “Fuel injection system status” at the moment a malfunction is detected is displayed. • One of the following mode is displayed. Mode2: Open loop due to detected system malfunction Mode3: Open loop due to driving conditions (power enrichment, deceleration enleanment) Mode4: Closed loop - using oxygen sensor(s) as feedback for fuel control Mode5: Open loop - has not yet satisfied condition to go to closed loop
FUEL SYS-B2	
CAL/LD VALUE [%]	• The calculated load value at the moment a malfunction is detected is displayed.
COOLANT TEMP [°C] or [°F]	• The engine coolant temperature at the moment a malfunction is detected is displayed.
L-FUEL TRM-B1 [%]	• “Long-term fuel trim” at the moment a malfunction is detected is displayed. • The long-term fuel trim indicates much more gradual feedback compensation to the base fuel schedule than short-term fuel trim.
L-FUEL TRM-B2 [%]	
S-FUEL TRM-B1 [%]	• “Short-term fuel trim” at the moment a malfunction is detected is displayed. • The short-term fuel trim indicates dynamic or instantaneous feedback compensation to the base fuel schedule.
S-FUEL TRM-B2 [%]	
ENGINE SPEED [rpm]	• The engine speed at the moment a malfunction is detected is displayed.
VEHICL SPEED [km/h] or [mph]	• The vehicle speed at the moment a malfunction is detected is displayed.
ABSOL TH·P/S [%]	• The throttle valve opening angle at the moment a malfunction is detected is displayed.
B/FUEL SCHDL [msec]	• The base fuel schedule at the moment a malfunction is detected is displayed.
INT/A TEMP SE [°C] or [°F]	• The intake air temperature at the moment a malfunction is detected is displayed.

Freeze frame data item*	Description
INT MANI PRES [kPa]	• These items are displayed but are not applicable to this model.
COMBUST CONDITION	

*: The items are the same as those of 1st trip freeze frame data.

DATA MONITOR MODE

Monitored Item

×: Applicable

Monitored item	Unit	Description	Remarks
ENG SPEED	rpm	• Indicates the engine speed computed from the signal of the crankshaft position sensor (POS) and camshaft position sensor (PHASE).	• Accuracy becomes poor if engine speed drops below the idle rpm. • If the signal is interrupted while the engine is running, an abnormal value may be indicated.
MAS A/F SE-B1	V	• The signal voltage of the mass air flow sensor is displayed.	• When the engine is stopped, a certain value is indicated. • When engine is running, specification range is indicated in “SPEC”.
B/FUEL SCHDL	msec	• “Base fuel schedule” indicates the fuel injection pulse width programmed into ECM, prior to any learned on board correction.	• When engine is running, specification range is indicated in “SPEC”.
A/F ALPHA-B1 A/F ALPHA-B2	%	• The mean value of the air-fuel ratio feedback correction factor per cycle is indicated.	• When the engine is stopped, a certain value is indicated. • This data also includes the data for the air-fuel ratio learning control. • When engine is running, specification range is indicated in “SPEC”.
COOLAN TEMP/S	°C or °F	• The engine coolant temperature (determined by the signal voltage of the engine coolant temperature sensor) is displayed.	• When the engine coolant temperature sensor is open or short-circuited, ECM enters fail-safe mode. The engine coolant temperature determined by the ECM is displayed.
A/F SEN1 (B1) A/F SEN1 (B2)	V	• The A/F signal computed from the input signal of the air fuel ratio (A/F) sensor 1 is displayed.	
HO2S2 (B1) HO2S2 (B2)	V	• The signal voltage of the heated oxygen sensor 2 is displayed.	
HO2S2 MNTR(B1) HO2S2 MNTR(B2)	RICH/LEAN	• Display of heated oxygen sensor 2 signal: RICH: means the amount of oxygen after three way catalyst is relatively small. LEAN: means the amount of oxygen after three way catalyst is relatively large.	• When the engine is stopped, a certain value is indicated.
VHCL SPEED SE	km/h or mph	• The vehicle speed computed from the vehicle speed signal sent from combination meter is displayed.	
BATTERY VOLT	V	• The power supply voltage of ECM is displayed.	
ACCEL SEN 1 ACCEL SEN 2	V	• The accelerator pedal position sensor signal voltage is displayed.	• ACCEL SEN 2 signal is converted by ECM internally. Thus, it differs from ECM terminal voltage signal.
TP SEN 1-B1 TP SEN 2-B1	V	• The throttle position sensor signal voltage is displayed.	• TP SEN 2-B1 signal is converted by ECM internally. Thus, it differs from ECM terminal voltage signal.
FUEL T/TMP SE	°C or °F	• The fuel temperature (determined by the signal voltage of the fuel tank temperature sensor) is displayed.	

Monitored item	Unit	Description	Remarks
INT/A TEMP SE	°C or °F	• The intake air temperature (determined by the signal voltage of the intake air temperature sensor) is indicated.	
EVAP SYS PRES	V	• The signal voltage of EVAP control system pressure sensor is displayed.	
FUEL LEVEL SE	V	• The signal voltage of the fuel level sensor is displayed.	
START SIGNAL	ON/OFF	• Indicates start signal status [ON/OFF] computed by the ECM according to the signals of engine speed and battery voltage.	• After starting the engine, [OFF] is displayed regardless of the starter signal.
CLSD THL POS	ON/OFF	• Indicates idle position [ON/OFF] computed by ECM according to the accelerator pedal position sensor signal.	
AIR COND SIG	ON/OFF	• Indicates [ON/OFF] condition of the air conditioner switch as determined by the air conditioner signal.	
P/N POSI SW	ON/OFF	• Indicates [ON/OFF] condition from the park/neutral position (PNP) signal.	
PW/ST SIGNAL	ON/OFF	• [ON/OFF] condition of the power steering system (determined by the signal voltage of the power steering pressure sensor) is indicated.	
LOAD SIGNAL	ON/OFF	• Indicates [ON/OFF] condition from the electrical load signal. ON: Rear window defogger switch is ON and/or lighting switch is in 2nd position. OFF: Both rear window defogger switch and lighting switch are OFF.	
IGNITION SW	ON/OFF	• Indicates [ON/OFF] condition from ignition switch signal.	
HEATER FAN SW	ON/OFF	• Indicates [ON/OFF] condition from the heater fan switch signal.	
BRAKE SW	ON/OFF	• Indicates [ON/OFF] condition from the stop lamp switch signal.	
INJ PULSE-B1 INJ PULSE-B2	msec	• Indicates the actual fuel injection pulse width compensated by ECM according to the input signals.	• When the engine is stopped, a certain computed value is indicated.
IGN TIMING	BTDC	• Indicates the ignition timing computed by ECM according to the input signals.	• When the engine is stopped, a certain value is indicated.
CAL/LD VALUE	%	• “Calculated load value” indicates the value of the current air flow divided by peak air flow.	
MASS AIRFLOW	gm/s	• Indicates the mass air flow computed by ECM according to the signal voltage of the mass air flow sensor.	
PURG VOL C/V	%	• Indicates the EVAP canister purge volume control solenoid valve control value computed by the ECM according to the input signals. • The opening becomes larger as the value increases.	
INT/V TIM (B1) INT/V TIM (B2)	°CA	• Indicates [°CA] of intake camshaft advance angle.	
INT/V SOL-B1 INT/V SOL-B2	%	• The control value of the intake valve timing control solenoid valve (determined by ECM according to the input signals) is indicated. • The advance angle becomes larger as the value increases.	

Monitored item	Unit	Description	Remarks
VIAS S/V-1	ON/OFF	• The control condition of the VIAS control solenoid valve 1 (determined by ECM according to the input signals) is indicated. ON: VIAS control solenoid valve 1 is operating. OFF: VIAS control solenoid valve 1 is not operating.	
VIAS S/V-2	ON/OFF	• The control condition of the VIAS control solenoid valve 2 (determined by ECM according to the input signals) is indicated. ON: VIAS control solenoid valve 2 is operating. OFF: VIAS control solenoid valve 2 is not operating.	
AIR COND RLY	ON/OFF	• The air conditioner relay control condition (determined by ECM according to the input signals) is indicated.	
ENGINE MOUNT	IDLE/RUN	• The control condition of the electronic controlled engine mount (determined by ECM according to the input signals) is indicated. IDLE: Engine speed is below 950 rpm RUN: Engine speed is above 950 rpm	
FUEL PUMP RLY	ON/OFF	• Indicates the fuel pump relay control condition determined by ECM according to the input signals.	
VENT CONT/V	ON/OFF	• The control condition of the EVAP canister vent control valve (determined by ECM according to the input signals) is indicated. ON: Closed OFF: Open	
THRTL RELAY	ON/OFF	• Indicates the throttle control motor relay control condition determined by the ECM according to the input signals.	
COOLING FAN	HI/MID/LOW/OFF	• The control condition of the cooling fan (determined by ECM according to the input signals) is indicated. HI: High speed operation MID: Middle speed operation LOW: Low speed operation OFF: Stop	
HO2S2 HTR (B1) HO2S2 HTR (B2)	ON/OFF	• Indicates [ON/OFF] condition of heated oxygen sensor 2 heater determined by ECM according to the input signals.	
I/P PULLY SPD	rpm	• Indicates the engine speed computed from the turbine revolution sensor signal.	
VEHICLE SPEED	km/h or mph	• The vehicle speed computed from the vehicle speed signal sent from TCM is displayed.	
IDL A/V LEARN	YET/CMPLT	• Displays the condition of idle air volume learning YET: Idle Air Volume Learning has not been performed yet. CMPLT: Idle Air Volume Learning has already been performed successfully.	
ENG OIL TEMP	°C or °F	• The engine oil temperature (determined by the signal voltage of the engine oil temperature sensor) is displayed.	
TRVL AFTER MIL	km or mile	• Distance traveled while MIL is activated.	
A/F S1 HTR(B1) A/F S1 HTR(B2)	%	• Air fuel ratio (A/F) sensor 1 heater control value computed by ECM according to the input signals. • The current flow to the heater becomes larger as the value increases.	

Monitored item	Unit	Description	Remarks
AC PRESS SEN	V	• The signal voltage from the refrigerant pressure sensor is displayed.	
VHCL SPEED SE	km/h or mph	• The vehicle speed computed from the vehicle speed signal sent from combination meter is displayed.	
SET VHCL SPD	km/h or mph	• The preset vehicle speed is displayed.	
MAIN SW	ON/OFF	• Indicates [ON/OFF] condition from MAIN switch signal.	
CANCEL SW	ON/OFF	• Indicates [ON/OFF] condition from CANCEL switch signal.	
RESUME/ACC SW	ON/OFF	• Indicates [ON/OFF] condition from RESUME/ACCELERATE switch signal.	
SET SW	ON/OFF	• Indicates [ON/OFF] condition from SET/COAST switch signal.	
BRAKE SW1	ON/OFF	• Indicates [ON/OFF] condition from ASCD brake switch signal or ASCD clutch switch.	
BRAKE SW2	ON/OFF	• Indicates [ON/OFF] condition of stop lamp switch signal.	
VHCL SPD CUT	NON/CUT	• Indicates the vehicle cruise condition. NON: Vehicle speed is maintained at the ASCD set speed. CUT: Vehicle speed decreased to excessively low compared with the ASCD set speed, and ASCD operation is cut off.	
LO SPEED CUT	NON/CUT	• Indicates the vehicle cruise condition. NON: Vehicle speed is maintained at the ASCD set speed. CUT: Vehicle speed decreased to excessively low, and ASCD operation is cut off.	
AT OD MONITOR	ON/OFF	• Indicates [ON/OFF] condition of CVT O/D according to the input signal from the TCM.	
AT OD CANCEL	ON/OFF	• Indicates [ON/OFF] condition of CVT O/D cancel request signal.	
CRUISE LAMP	ON/OFF	• Indicates [ON/OFF] condition of CRUISE lamp determined by the ECM according to the input signals.	
SET LAMP	ON/OFF	• Indicates [ON/OFF] condition of SET lamp determined by the ECM according to the input signals.	
ALT DUTY SIG	ON/OFF	• The control condition of the power generation voltage variable control (determined by ECM according to the input signals) is indicated. ON: Power generation voltage variable control is active. OFF: Power generation voltage variable control is inactive.	
A/F ADJ-B1	—	• Indicates the correction of a factor stored in ECM. The factor is calculated from the difference between the target air-fuel ratio stored in ECM and the air-fuel ratio calculated from A/F sensor 1 signal.	
A/F ADJ-B2			
BAT CUR SEN	mV	• The signal voltage of battery current sensor is displayed.	
ALT DUTY	%	• Indicates the duty ratio of the power generation command value. The ratio is calculated by ECM based on the battery current sensor signal.	

NOTE:

Any monitored item that does not match the vehicle being diagnosed is deleted from the display automatically.

ACTIVE TEST MODE

Test Item

TEST ITEM	CONDITION	JUDGMENT	CHECK ITEM (REMEDY)
FUEL INJECTION	• Engine: Return to the original trouble condition • Change the amount of fuel injection using CONSULT-III.	If trouble symptom disappears, see CHECK ITEM.	• Harness and connectors • Fuel injector • Air fuel ratio (A/F) sensor 1
IGNITION TIMING	• Engine: Return to the original trouble condition • Timing light: Set • Retard the ignition timing using CONSULT-III.	If trouble symptom disappears, see CHECK ITEM.	• Perform Idle Air Volume Learning.
POWER BALANCE	• Engine: After warming up, idle the engine. • A/C switch OFF • Selector lever position: P or N (CVT), neutral (M/T) • Cut off each injector signal one at a time using CONSULT-III.	Engine runs rough or stops.	• Harness and connectors • Compression • Fuel injector • Power transistor • Spark plug • Ignition coil
COOLING FAN*	• Ignition switch: ON • Turn the cooling fan “HI”, “MID”, “LOW” and “OFF” using CONSULT-III.	Cooling fan moves and stops.	• Harness and connectors • Cooling fan motor • IPDM E/R
ENG COOLANT TEMP	• Engine: Return to the original trouble condition • Change the engine coolant temperature using CONSULT-III.	If trouble symptom disappears, see CHECK ITEM.	• Harness and connectors • Engine coolant temperature sensor • Fuel injector
FUEL PUMP RELAY	• Ignition switch: ON (Engine stopped) • Turn the fuel pump relay “ON” and “OFF” using CONSULT-III and listen to operating sound.	Fuel pump relay makes the operating sound.	• Harness and connectors • Fuel pump relay
VIAS S/V-1	• Ignition switch: ON • Turn solenoid valve “ON” and “OFF” using CONSULT-III and listen to operating sound.	Solenoid valve makes the operating sound.	• Harness and connectors • Solenoid valve
VIAS S/V-2	• Ignition switch: ON • Turn solenoid valve “ON” and “OFF” using CONSULT-III and listen to operating sound.	Solenoid valve makes the operating sound.	• Harness and connectors • Solenoid valve
ENGINE MOUNTING	• Ignition switch: ON • Turn electronic controlled engine mount “IDLE” and “TRVL” with CONSULT-III.	Electronic controlled engine mount makes the operating sound.	• Harness and connectors • Electronic controlled engine mount
PURG VOL CONT/V	• Engine: After warming up, run engine at 1,500 rpm. • Change the EVAP canister purge volume control solenoid valve opening percent using CONSULT-III.	Engine speed changes according to the opening percent.	• Harness and connectors • Solenoid valve
FUEL/T TEMP SEN	• Change the fuel tank temperature using CONSULT-III.		
VENT CONTROL/V	• Ignition switch: ON (Engine stopped) • Turn solenoid valve “ON” and “OFF” with the CONSULT-III and listen to operating sound.	Solenoid valve makes an operating sound.	• Harness and connectors • Solenoid valve

TEST ITEM	CONDITION	JUDGMENT	CHECK ITEM (REMEDY)
INT V/T ASSIGN ANGLE	• Engine: Return to the original non-standard condition • Change intake valve timing using CONSULT-III.	If malfunctioning symptom disappears, see CHECK ITEM.	• Harness and connectors • Intake valve timing control solenoid valve
ALTERNATOR DUTY	• Engine: Idle • Change duty ratio using CONSULT-III.	Battery voltage changes.	• Harness and connectors • IPDM E/R • Alternator

*: Leaving cooling fan OFF with CONSULT-III while engine is running may cause the engine to overheat.

DTC & SRT CONFIRMATION MODE

SRT STATUS Mode
For details, refer to EC-1142, "Diagnosis Description".

SRT WORK SUPPORT Mode
This mode enables a technician to drive a vehicle to set the SRT while monitoring the SRT status.

DTC WORK SUPPORT Mode

Test mode	Test item	Corresponding DTC No.	Reference page
EVAPORATIVE SYSTEM	EVP SML LEAKAGE P0442/P1442*	P0442	EC-1310
		P0455	EC-1346
	EVP V/S LEAKAGE P0456/P1456*	P0456	EC-1352
	PURG VOL CN/V P1444	P0443	EC-1316
	PURG FLOW P0441	P0441	EC-1305
A/F SEN1	A/F SEN1(B1) P1278/P1279	P0133	EC-1237
	A/F SEN1(B1) P1276	P0130	EC-1225
	A/F SEN1(B2) P1288/P1289	P0153	EC-1237
	A/F SEN1(B2) P1286	P0150	EC-1225
HO2S2	HO2S2(B1) P1146	P0138	EC-1249
	HO2S2(B1) P1147	P0137	EC-1242
	HO2S2(B1) P0139	P0139	EC-1259
	HO2S2(B2) P1166	P0158	EC-1249
	HO2S2(B2) P1167	P0157	EC-1242
	HO2S2(B2) P0159	P0159	EC-1259

*: DTC P1442 and P1456 does not apply to this model but appears in DTC Work Support Mode screens.

Diagnosis Tool Function

INFOID:0000000004362008

DESCRIPTION

Generic Scan Tool (OBD II scan tool) complying with SAE J1978 has several functions explained below.
ISO15765-4 is used as the protocol.
The name “GST” or “Generic Scan Tool” is used in this service manual.

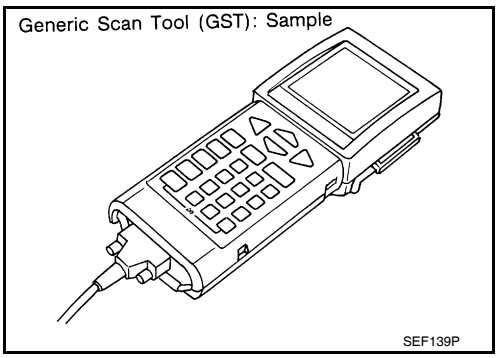

FUNCTION

Diagnostic Service		Function
Service $01	READINESS TESTS	This diagnostic service gains access to current emission-related data values, including analog inputs and outputs, digital inputs and outputs, and system status information.
Service $02	(FREEZE DATA)	This diagnostic service gains access to emission-related data value that were stored by ECM during the freeze frame. For details, refer to EC-1555, "DTC Index".
Service $03	DTCs	This diagnostic service gains access to emission-related power train trouble codes which were stored by ECM.
Service $04	CLEAR DIAG INFO	This diagnostic service can clear all emission-related diagnostic information. This includes: • Clear number of diagnostic trouble codes (Service $01) • Clear diagnostic trouble codes (Service $03) • Clear trouble code for freeze frame data (Service $01) • Clear freeze frame data (Service $02) • Reset status of system monitoring test (Service $01) • Clear on board monitoring test results (Service $06 and $07)
Service $06	(ON BOARD TESTS)	This diagnostic service accesses the results of on board diagnostic monitoring tests of specific components/systems that are not continuously monitored.
Service $07	(ON BOARD TESTS)	This diagnostic service enables the off board test drive to obtain test results for emission-related powertrain components/systems that are continuously monitored during normal driving conditions.
Service $08	—	This diagnostic service can close EVAP system in ignition switch ON position (Engine stopped). When this diagnostic service is performed, EVAP canister vent control valve can be closed. In the following conditions, this diagnostic service cannot function. • Low ambient temperature • Low battery voltage • Engine running • Ignition switch OFF • Low fuel temperature • Too much pressure is applied to EVAP system
Service $09	(CALIBRATION ID)	This diagnostic service enables the off-board test device to request specific vehicle information such as Vehicle Identification Number (VIN) and Calibration IDs.

INSPECTION PROCEDURE

1. Turn ignition switch OFF.
2. Connect “GST” to data link connector (2), which is located under LH dash panel near the hood lock release handle (1).
3. Turn ignition switch ON.

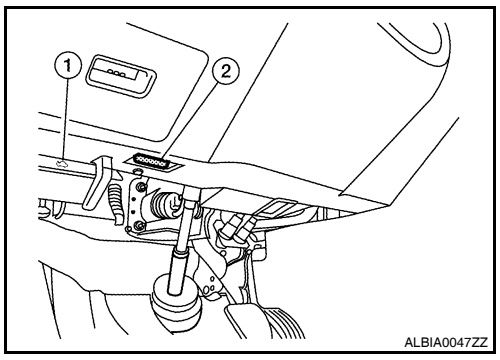

4. Enter the program according to instruction on the screen or in the operation manual.
(*: Regarding GST screens in this section, sample screens are shown.)

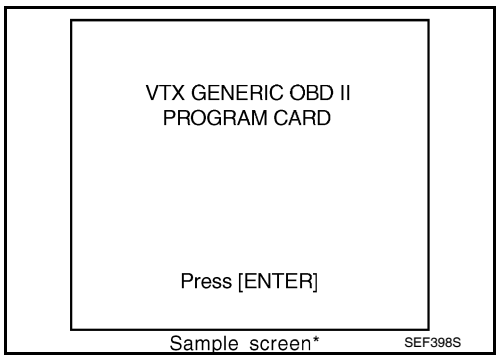

5. Perform each diagnostic mode according to each service procedure.
For further information, see the GST Operation Manual of the tool maker.

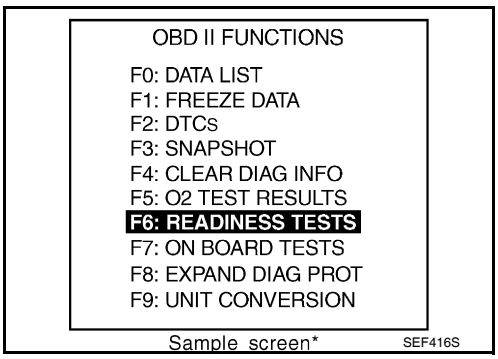

COMPONENT DIAGNOSIS

TROUBLE DIAGNOSIS - SPECIFICATION VALUE

Description

INFOID:0000000004362009

The specification (SP) value indicates the tolerance of the value that is displayed in “SPEC” of “DATA MONITOR” mode of CONSULT-III during normal operation of the Engine Control System. When the value in “SPEC” in “DATA MONITOR” mode is within the SP value, the Engine Control System is confirmed OK. When the value in “SPEC” in “DATA MONITOR” mode is NOT within the SP value, the Engine Control System may have one or more malfunctions.
The SP value is used to detect malfunctions that may affect the Engine Control System, but will not illuminate the MIL.
The SP value will be displayed for the following three items:
- B/FUEL SCHDL (The fuel injection pulse width programmed into ECM prior to any learned on board correction)
- A/F ALPHA-B1/B2 (The mean value of air-fuel ratio feedback correction factor per cycle)
- MAS A/F SE-B1 (The signal voltage of the mass air flow sensor)

Component Function Check

INFOID:0000000004362010

1. START

Check that all of the following conditions are satisfied.
- Vehicle driven distance: More than 5,000 km (3,107 miles)
- Barometric pressure: 98.3 - 104.3 kPa (1.003 - 1.064 kg/cm^2, 14.25 - 15.12 psi)
- Atmospheric temperature: 20 - 30°C (68 - 86°F)
- Engine coolant temperature: 75 - 95°C (167 - 203°F)
- Transmission: Warmed-up
  - CVT models: After the engine is warmed up to normal operating temperature, drive vehicle until “ATF TEMP SEN” in “DATA MONITOR” mode of “CVT” system indicates less than 0.9 V.
  - M/T models: After the engine is warmed up to normal operating temperature, drive vehicle for 5 minutes.
- Electrical load: Not applied
  - Rear window defogger switch, air conditioner switch lighting switch are OFF. Steering wheel is straight ahead.
- Engine speed: Idle

>> GO TO 2.

2. PERFORM “SPEC” OF “DATA MONITOR” MODE

With CONSULT-III
NOTE:
Perform “SPEC” in “DATA MONITOR” mode in maximum scale display.
1. Perform “EC-1048, "BASIC INSPECTION : Special Repair Requirement"”.
2. Select “B/FUEL SCHDL”, “A/F ALPHA-B1”, “A/F ALPHA-B2” and “MAS A/F SE-B1” in “SPEC” of “DATA MONITOR” mode with CONSULT-III.
3. Check that monitor items are within the SP value.

Is the measurement value within the SP value?

YES >> INSPECTION END
NO >> Go to EC-1168, "Diagnosis Procedure".

Diagnosis Procedure

INFOID:0000000004362011

OVERALL SEQUENCE

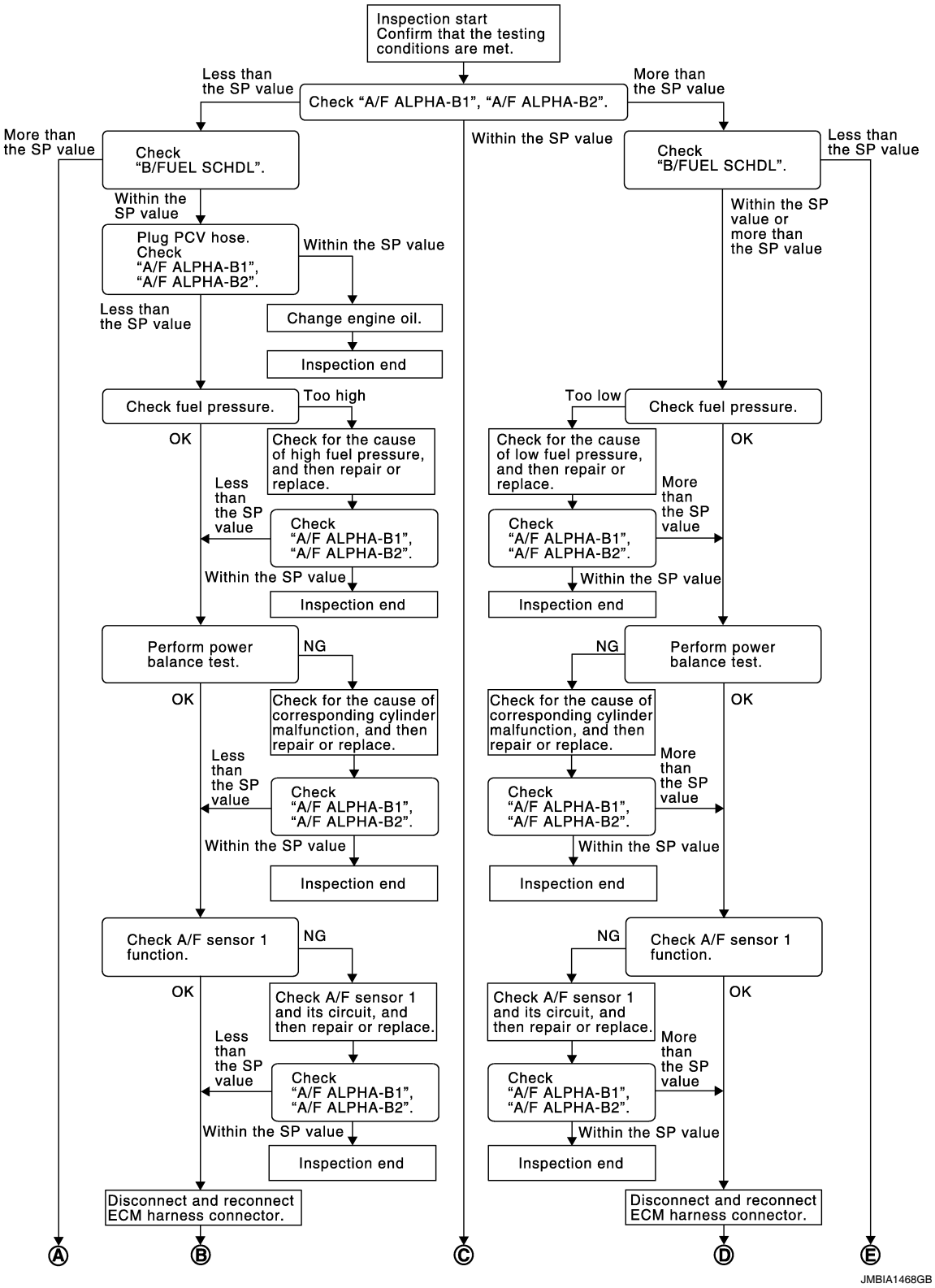

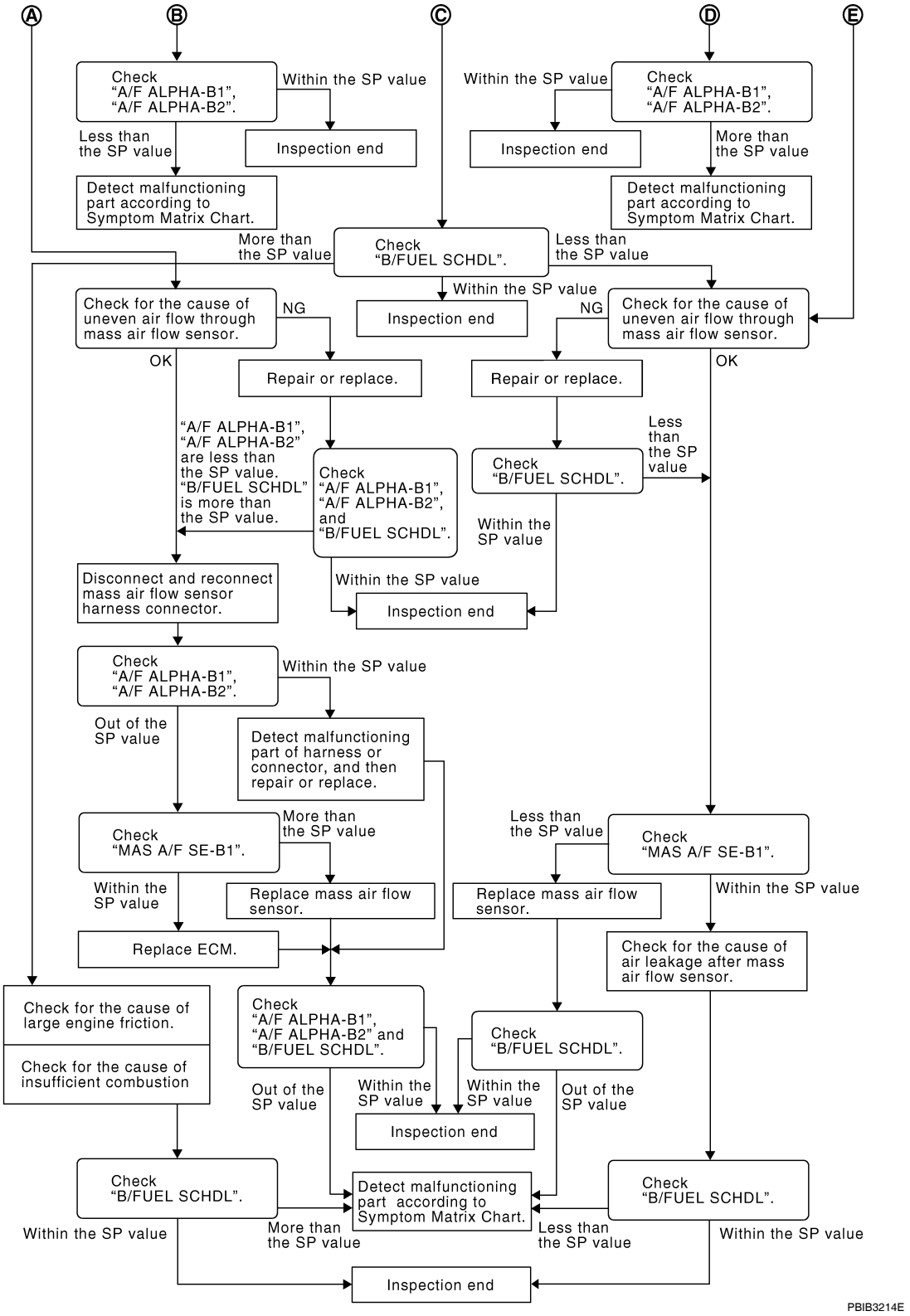

DETAILED PROCEDURE

1. CHECK "A/F ALPHA-B1", "A/F ALPHA-B2"

With CONSULT-III

1. Start engine.
2. Confirm that the testing conditions are met. Refer to EC-1167, "Component Function Check".
3. Select "A/F ALPHA-B1", "A/F ALPHA-B2" in "SPEC" of "DATA MONITOR" mode, and check that each indication is within the SP value.

NOTE:
Check “A/F ALPHA-B1”, “A/F ALPHA-B2” for approximately 1 minute because they may fluctuate. It is NG if the indication is out of the SP value even a little.

Is the measurement value within the SP value?

YES >> GO TO 17.
NO-1 >> Less than the SP value: GO TO 2.
NO-2 >> More than the SP value: GO TO 3.

2. CHECK “B/FUEL SCHDL”

Select “B/FUEL SCHDL” in “SPEC” of “DATA MONITOR” mode, and check that the indication is within the SP value.

Is the measurement value within the SP value?

YES >> GO TO 4.
NO >> More than the SP value: GO TO 19.

3. CHECK “B/FUEL SCHDL”

Select “B/FUEL SCHDL” in “SPEC” of “DATA MONITOR” mode, and check that the indication is within the SP value.

Is the measurement value within the SP value?

YES >> GO TO 6.
NO-1 >> More than the SP value: GO TO 6.
NO-2 >> Less than the SP value: GO TO 25.

4. CHECK “A/F ALPHA-B1”, “A/F ALPHA-B2”

1. Stop the engine.
2. Disconnect PCV hose, and then plug it.
3. Start engine.
4. Select “A/F ALPHA-B1”, “A/F ALPHA-B2” in “SPEC” of “DATA MONITOR” mode, and check that each indication is within the SP value.

Is the measurement value within the SP value?

YES >> GO TO 5.
NO >> GO TO 6.

5. CHANGE ENGINE OIL

1. Stop the engine.
2. Change engine oil.

NOTE:
This symptom may occur when a large amount of gasoline is mixed with engine oil because of driving conditions (such as when engine oil temperature does not rise enough since a journey distance is too short during winter). The symptom will not be detected after changing engine oil or changing driving conditions.

>> INSPECTION END

6. CHECK FUEL PRESSURE

Check fuel pressure. (Refer to EC-1579, "Inspection".)

Is the inspection result normal?

YES >> GO TO 9.
NO-1 >> Fuel pressure is too high: Replace “fuel filter and fuel pump assembly” and then. GO TO 8.
NO-2 >> Fuel pressure is too low: GO TO 7.

7. DETECT MALFUNCTIONING PART

Check fuel hoses and fuel tubes for clogging.

Is the inspection result normal?

YES >> Replace “fuel filter and fuel pump assembly” and then GO TO 8.
NO >> Repair or replace malfunctioning part and then GO TO 8.

8. CHECK “A/F ALPHA-B1”, “A/F ALPHA-B2”

1. Start engine.
2. Select “A/F ALPHA-B1”, “A/F ALPHA-B2” in “SPEC” of “DATA MONITOR” mode, and check that each indication is within the SP value.

Is the measurement value within the SP value?

YES >> INSPECTION END
NO >> GO TO 9.

9. PERFORM POWER BALANCE TEST

1. Perform “POWER BALANCE” in “ACTIVE TEST” mode.
2. Check that each cylinder produces a momentary engine speed drop.

Is the inspection result normal?

YES >> GO TO 12.
NO >> GO TO 10.

10. DETECT MALFUNCTIONING PART

Check the following below.
- Ignition coil and its circuit (Refer to EC-1491, "Component Function Check".)
- Fuel injector and its circuit (Refer to EC-1483, "Component Function Check".)
- Intake air leakage
- Low compression pressure (Refer to EM-128, "On-Vehicle Service".)

Is the inspection result normal?

YES >> Replace fuel injector and then GO TO 11.
NO >> Repair or replace malfunctioning part and then GO TO 11.

11. CHECK “A/F ALPHA-B1”, “A/F ALPHA-B2”

1. Start engine.
2. Select “A/F ALPHA-B1”, “A/F ALPHA-B2” in “SPEC” of “DATA MONITOR” mode, and check that each indication is within the SP value.

Is the measurement value within the SP value?

YES >> INSPECTION END
NO >> GO TO 12.

12. CHECK A/F SENSOR 1 FUNCTION

Perform all DTC CONFIRMATION PROCEDURE related with A/F sensor 1.
- For DTC P0130, P0150, refer to EC-1225, "DTC Logic".
- For DTC P0131, P0151, refer to EC-1229, "DTC Logic".
- For DTC P0132, P0152, refer to EC-1233, "DTC Logic".
- For DTC P0133, P0153, refer to EC-1237, "DTC Logic".
- For DTC P2A00, P2A03, refer to EC-1463, "DTC Logic".

Are any DTCs detected?

YES >> GO TO 15.
NO >> GO TO 13.

13. CHECK A/F SENSOR 1 CIRCUIT

Perform Diagnostic Procedure according to corresponding DTC.

>> GO TO 14.

14. CHECK “A/F ALPHA-B1”, “A/F ALPHA-B2”

1. Start engine.
2. Select “A/F ALPHA-B1”, “A/F ALPHA-B2” in “SPEC” of “DATA MONITOR” mode, and check that each indication is within the SP value.

Is the measurement value within the SP value?

YES >> INSPECTION END
NO >> GO TO 15.

15. DISCONNECT AND RECONNECT ECM HARNESS CONNECTOR

1. Stop the engine.

2. Disconnect ECM harness connector. Check pin terminal and connector for damage, and then reconnect it.

>> GO TO 16.

16. CHECK “A/F ALPHA-B1”, “A/F ALPHA-B2”

1. Start engine.
2. Select “A/F ALPHA-B1”, “A/F ALPHA-B2” in “SPEC” of “DATA MONITOR” mode, and check that each indication is within the SP value.

Is the measurement value within the SP value?

YES >> INSPECTION END
NO >> Detect malfunctioning part according to EC-1567, "Symptom Table".

17. CHECK “B/FUEL SCHDL”

Select “B/FUEL SCHDL” in “SPEC” of “DATA MONITOR” mode, and check that the indication is within the SP value.

Is the measurement value within the SP value?

YES >> INSPECTION END
NO-1 >> More than the SP value: GO TO 18.
NO-2 >> Less than the SP value: GO TO 25.

18. DETECT MALFUNCTIONING PART

1. Check for the cause of large engine friction. Refer to the following.
- Engine oil level is too high
- Engine oil viscosity
- Belt tension of power steering, alternator, A/C compressor, etc. is excessive
- Noise from engine
- Noise from transmission, etc.
2. Check for the cause of insufficient combustion. Refer to the following.
- Valve clearance malfunction
- Intake valve timing control function malfunction
- Camshaft sprocket installation malfunction, etc.

>> Repair or replace malfunctioning part, and then GO TO 30.

19. CHECK INTAKE SYSTEM

Check for the cause of uneven air flow via the mass air flow sensor. Refer to the following.
- Crushed air ducts
- Malfunctioning seal of air cleaner element
- Uneven dirt of air cleaner element
- Improper specification of intake air system

Is the inspection result normal?

YES >> GO TO 21.
NO >> Repair or replace malfunctioning part, and then GO TO 20.

20. CHECK “A/F ALPHA-B1”, “A/F ALPHA-B2”, AND “B/FUEL SCHDL”

Select “A/F ALPHA-B1”, “A/F ALPHA-B2”, and “B/FUEL SCHDL” in “SPEC” of “DATA MONITOR” mode, and check that each indication is within the SP value.

Is the measurement value within the SP value?

YES >> INSPECTION END
NO >> “B/FUEL SCHDL” is more, “A/F ALPHA-B1”, “A/F ALPHA-B2” are less than the SP value: GO TO 21.

21. DISCONNECT AND RECONNECT MASS AIR FLOW SENSOR HARNESS CONNECTOR

1. Stop the engine.
2. Disconnect mass air flow sensor harness connector. Check pin terminal and connector for damage and then reconnect it again.

>> GO TO 22.

22. CHECK “A/F ALPHA-B1”, “A/F ALPHA-B2”

1. Start engine.
2. Select “A/F ALPHA-B1”, “A/F ALPHA-B2” in “SPEC” of “DATA MONITOR” mode, and check that each indication is within the SP value.

Is the measurement value within the SP value?

YES >> Detect malfunctioning part of mass air flow sensor circuit and repair it. Refer to EC-1202, "Diagnosis Procedure". Then GO TO 29.
NO >> GO TO 23.

23. CHECK “MAS A/F SE-B1”

Select “MAS A/F SE-B1” in “SPEC” of “DATA MONITOR” mode, and check that the indication is within the SP value.

Is the measurement value within the SP value?

YES >> GO TO 24.
NO >> More than the SP value: Replace mass air flow sensor, and then GO TO 29.

24. REPLACE ECM

1. Replace ECM.
2. Refer to EC-1051, "ADDITIONAL SERVICE WHEN REPLACING CONTROL UNIT : Special Repair Requirement".

>> GO TO 29.

25. CHECK INTAKE SYSTEM

Check for the cause of uneven air flow via the mass air flow sensor. Refer to the following.
- Crushed air ducts
- Malfunctioning seal in air cleaner element
- Uneven dirt in air cleaner element
- Improper specification in intake air system

Is the inspection result normal?

YES >> GO TO 27.
NO >> Repair or replace malfunctioning part, and then GO TO 26.

26. CHECK “B/FUEL SCHDL”

Select “B/FUEL SCHDL” in “SPEC” of “DATA MONITOR” mode, and check that the indication is within the SP value.

Is the measurement value within the SP value?

YES >> INSPECTION END
NO >> Less than the SP value: GO TO 27.

27. CHECK “MAS A/F SE-B1”

Select “MAS A/F SE-B1” in “SPEC” of “DATA MONITOR” mode, and check that the indication is within the SP value.

Is the measurement value within the SP value?

YES >> GO TO 28.
NO >> Less than the SP value: Replace mass air flow sensor, and then GO TO 30.

28. CHECK INTAKE SYSTEM

Check for the cause of air leakage after the mass air flow sensor. Refer to the following.
- Disconnection, looseness, and cracks in air duct
- Looseness of oil filler cap
- Disconnection of oil level gauge
- Open stuck, breakage, hose disconnection, or cracks in PCV valve
- Disconnection or cracks in EVAP purge hose, stuck open EVAP canister purge volume control solenoid valve
- Malfunctioning seal in rocker cover gasket
- Disconnection, looseness, or cracks in hoses, such as a vacuum hose, connecting to intake air system parts

- Malfunctioning seal in intake air system, etc.

>> GO TO 30.

29. CHECK “A/F ALPHA-B1”, “A/F ALPHA-B2”, AND “B/FUEL SCHDL”

Select “A/F ALPHA-B1”, “A/F ALPHA-B2”, and “B/FUEL SCHDL” in “SPEC” of “DATA MONITOR” mode, and check that each indication is within the SP value.

Is the measurement value within the SP value?

YES >> INSPECTION END
NO >> Detect malfunctioning part according to EC-1567, "Symptom Table".

30. CHECK “B/FUEL SCHDL”

Select “B/FUEL SCHDL” in “SPEC” of “DATA MONITOR” mode, and then check that the indication is within the SP value.

Is the measurement value within the SP value?

YES >> INSPECTION END
NO >> Detect malfunctioning part according to EC-1567, "Symptom Table".

POWER SUPPLY AND GROUND CIRCUIT

Diagnosis Procedure

INFOID:0000000004362012

1. CHECK GROUND CONNECTION

1. Turn ignition switch OFF.
2. Check ground connection E9. Refer to Ground Inspection in GI-45, "Circuit Inspection".

Is the inspection result normal?

YES >> GO TO 2.
NO >> Repair or replace ground connection.

2. CHECK ECM GROUND CIRCUIT FOR OPEN AND SHORT

1. Disconnect ECM harness connector.
2. Check the continuity between ECM harness connector and ground.

ECM		Ground	Continuity
Connector	Terminal		
F14	12	Ground	Existed
	16		
E10	107		
	108		
	111		
	112		

3. Also check harness for short to power.

is the inspection result normal?

YES >> GO TO 4.
NO >> GO TO 3.

3. DETECT MALFUNCTIONING PART

Check the following.
- Harness connectors E11, F2
- Harness for open or short between ECM and ground

>> Repair open circuit or short to power in harness or connectors.

4. CHECK ECM POWER SUPPLY CIRCUIT-I

1. Reconnect ECM harness connector.
2. Turn ignition switch OFF and then ON.
3. Check the voltage between ECM harness connectors.

ECM			Voltage
Connector	+	–	
	Terminal	Terminal	
E10	93	112	Battery voltage

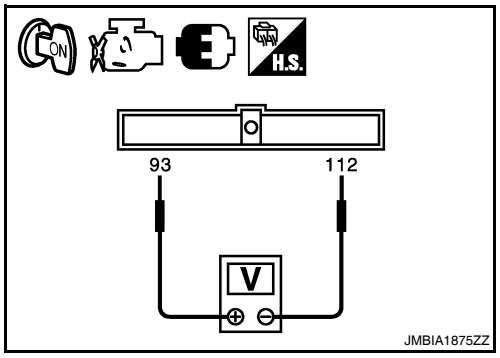

Is the inspection result normal?

YES >> GO TO 6.
NO >> GO TO 5.

5. DETECT MALFUNCTIONING PART

Check the following.
- IPDM E/R connector E18
- 10 A fuse (No. 35)
- Harness for open or short between ECM and IPDM E/R

>> Repair open circuit, short to ground or short to power in harness or connectors.

6. CHECK ECM POWER SUPPLY CIRCUIT-II

1. Turn ignition switch OFF and wait at least 10 seconds.
2. Check the voltage between ECM harness connectors.

ECM			Voltage
Connector	+	–	
	Terminal	Terminal	
E10	105	112	After turning ignition switch OFF, battery voltage will exist for a few seconds, then drop to approximately 0 V.

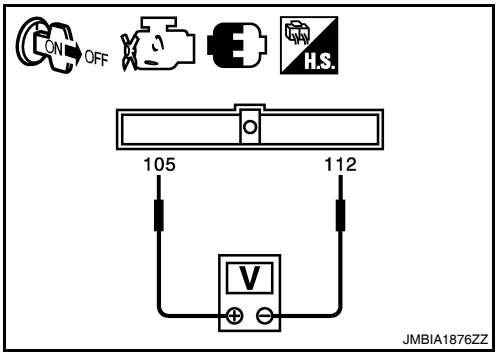

Is the inspection result normal?

YES >> GO TO 7.
NO >> GO TO 9.

7. CHECK ECM POWER SUPPLY CIRCUIT-III

1. Turn ignition switch ON.
2. Check the voltage between IPDM E/R harness connector and ground.

IPDM E/R		Ground	Voltage
Connector	Terminal		
F10	49	Ground	Battery voltage
	53		

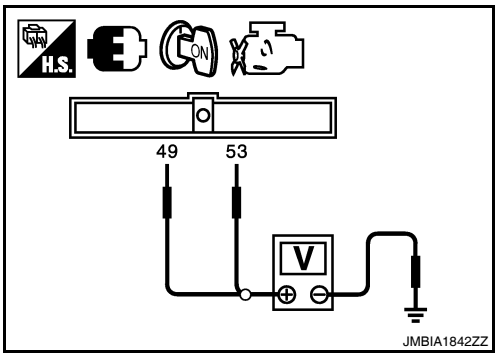

Is the inspection result normal?

YES >> GO TO 8.
NO >> Replace IPDM E/R.

8. CHECK INTERMITTENT INCIDENT

Refer to GI-42, "Intermittent Incident".

>> INSPECTION END

9. CHECK ECM POWER SUPPLY CIRCUIT-IV

1. Turn ignition switch OFF and wait at least 10 seconds.
2. Check the voltage between ECM harness connectors.

ECM				Voltage
+		–		
Connector	Terminal	Connector	Terminal	
F14	24	E10	112	Battery voltage

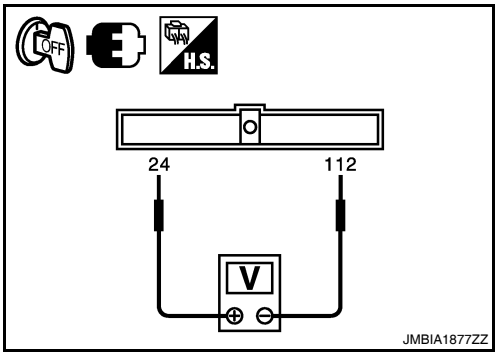

Is the inspection result normal?

YES >> GO TO 12.
NO >> GO TO 10.

10. CHECK ECM POWER SUPPLY CIRCUIT-V

1. Disconnect ECM harness connector.
2. Disconnect IPDM E/R harness connector.
3. Check the continuity between ECM harness connector and IPDM E/R harness connector.

ECM		IPDM E/R		Continuity
Connector	Terminal	Connector	Terminal	
F14	24	F10	69	Existed

4. Also check harness for short to ground and short to power.

Is the inspection result normal?

YES >> GO TO 11.
NO >> Repair open circuit, short to ground or short to power in harness or connectors.

11. CHECK 15 A FUSE

1. Disconnect 15 A fuse (No. 42) from IPDM E/R.
2. Check 15 A fuse.

Is the inspection result normal?

YES >> GO TO 13.
NO >> Replace 15 A fuse.

12. CHECK ECM POWER SUPPLY CIRCUIT-VI

1. Disconnect ECM harness connector.
2. Disconnect IPDM E/R harness connector.
3. Check the continuity between ECM harness connector and IPDM E/R harness connector.

ECM		IPDM E/R		Continuity
Connector	Terminal	Connector	Terminal	
E10	105	E18	10	Existed

4. Also check harness for short to ground and short to power.

Is the inspection result normal?

YES >> GO TO 13.
NO >> Repair open circuit, short to ground or short to power in harness or connectors.

13. CHECK INTERMITTENT INCIDENT

Refer to GI-42, "Intermittent Incident".

Is the inspection result normal?

YES >> Replace IPDM E/R.
NO >> Repair or replace harness or connectors.

U0101 CAN COMM CIRCUIT

Description

INFOID:0000000004362013

CAN (Controller Area Network) is a serial communication line for real time application. It is an on-vehicle multiplex communication line with high data communication speed and excellent error detection ability. Many electronic control units are equipped onto a vehicle, and each control unit shares information and links with other control units during operation (not independent). In CAN communication, control units are connected with 2 communication lines (CAN H line, CAN L line) allowing a high rate of information transmission with less wiring. Each control unit transmits/receives data but selectively reads required data only.

DTC Logic

INFOID:0000000004362014

DTC DETECTION LOGIC

DTC No.	Trouble diagnosis name	DTC detecting condition	Possible cause
U0101	Lost communication with TCM	When ECM is not transmitting or receiving CAN communication signal of OBD (emission-related diagnosis) with TCM for 2 seconds or more.	• CAN communication line between TCM and ECM • CAN communication line open or shorted

DTC CONFIRMATION PROCEDURE

1. PERFORM DTC CONFIRMATION PROCEDURE

1. Turn ignition switch ON and wait at least 3 seconds.
2. Check DTC.

Is DTC detected?

YES >> EC-1178, "Diagnosis Procedure".
NO >> INSPECTION END

Diagnosis Procedure

INFOID:0000000004362015

Go to LAN-16, "Trouble Diagnosis Flow Chart".

U1001 CAN COMM CIRCUIT

Description

INFOID:0000000004362019

CAN (Controller Area Network) is a serial communication line for real time application. It is an on-vehicle multiplex communication line with high data communication speed and excellent error detection ability. Many electronic control units are equipped onto a vehicle, and each control unit shares information and links with other control units during operation (not independent). In CAN communication, control units are connected with 2 communication lines (CAN H line, CAN L line) allowing a high rate of information transmission with less wiring. Each control unit transmits/receives data but selectively reads required data only.

DTC Logic

INFOID:0000000004362020

DTC DETECTION LOGIC

DTC No.	Trouble diagnosis name	DTC detecting condition	Possible cause
U1001	CAN communication line	When ECM is not transmitting or receiving CAN communication signal other than OBD (emission-related diagnosis) for 2 seconds or more.	• Harness or connectors (CAN communication line is open or shorted)

DTC CONFIRMATION PROCEDURE

1.PERFORM DTC CONFIRMATION PROCEDURE

1. Turn ignition switch ON and wait at least 3 seconds.
2. Check DTC.

Is DTC detected?

YES >> EC-1179, "Diagnosis Procedure".
NO >> INSPECTION END

Diagnosis Procedure

INFOID:0000000004362021

Go to LAN-16, "Trouble Diagnosis Flow Chart".

P0011, P0021 IVT CONTROL

DTC Logic

INFOID:0000000004362022

DTC DETECTION LOGIC

NOTE:
If DTC P0011 or P0021 is displayed with DTC P0075 or P0081, first perform the trouble diagnosis for DTC P0075, P0081. Refer to EC-1191, "DTC Logic".

DTC No.	Trouble diagnosis name	DTC detecting condition	Possible cause
P0011	Intake valve timing control performance (bank 1)	There is a gap between angle of target and phase-control angle degree.	• Crankshaft position sensor (POS) • Camshaft position sensor (PHASE) • Intake valve timing control solenoid valve • Accumulation of debris to the signal pick-up portion of the camshaft • Timing chain installation • Foreign matter caught in the oil groove for intake valve timing control
P0021	Intake valve timing control performance (bank 2)		

DTC CONFIRMATION PROCEDURE

1.PRECONDITIONING

If DTC Confirmation Procedure has been previously conducted, always perform the following before conducting the next test.
1. Turn ignition switch OFF and wait at least 10 seconds.
2. Turn ignition switch ON.
3. Turn ignition switch OFF and wait at least 10 seconds.

TESTING CONDITION:
Before performing the following procedure, confirm that battery voltage is between 10 V and 16 V at idle.

>> GO TO 2.

2.PERFORM DTC CONFIRMATION PROCEDURE-I

With CONSULT-III
1. Turn ignition switch ON and select “DATA MONITOR” mode with CONSULT-III.
2. Start engine and warm it up to the normal operating temperature.
3. Maintain the following conditions for at least 6 consecutive seconds. Hold the accelerator pedal as steady as possible.

VHCL SPEED SE	100 - 120 km/h (63 - 75 mph)
ENG SPEED	1,200 - 2,000 rpm
COOLAN TEMP/S	More than 60°C (140°F)
B/FUEL SCHDL	More than 7.3 msec
Selector lever	D position (CVT) 5th position (M/T)

CAUTION:
Always drive at a safe speed.

4. Stop vehicle with engine running and let engine idle for 10 seconds.
5. Check 1st trip DTC.

With GST
Follow the procedure “With CONSULT-III” above.

Is 1st trip DTC detected?

YES >> Go to EC-1181, "Diagnosis Procedure"
NO >> GO TO 3.

3. PERFORM DTC CONFIRMATION PROCEDURE-II

With CONSULT-III

1. Maintain the following conditions for at least 20 consecutive seconds.

ENG SPEED	1,200 - 3,175 rpm (A constant rotation is maintained.)
COOLAN TEMP/S	More than 70°C (158°F)
Selector lever	1st or 2nd position
Driving location uphill	Driving vehicle uphill (Increased engine load will help maintain the driving conditions required for this test.)

CAUTION:
Always drive at a safe speed.

2. Check 1st trip DTC.

With GST

Follow the procedure “With CONSULT-III” above.

Is 1st trip DTC detected?

YES >> Go to EC-1181, "Diagnosis Procedure"
NO >> INSPECTION END

Diagnosis Procedure

INFOID:0000000004362023

1. CHECK OIL PRESSURE WARNING LAMP

1. Start engine.
2. Check oil pressure warning lamp and confirm it is not illuminated.

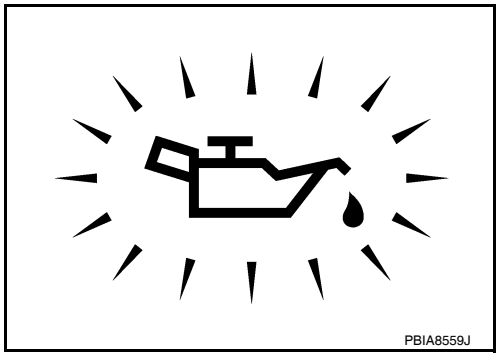

Is oil pressure warming lamp illuminated?

YES >> Go to LU-23, "Inspection".
NO >> GO TO 2.

2. CHECK INTAKE VALVE TIMING CONTROL SOLENOID VALVE

Refer to EC-1182, "Component Inspection".

Is the inspection result normal?

YES >> GO TO 3.
NO >> Replace malfunctioning intake valve timing control solenoid valve.

3. CHECK CRANKSHAFT POSITION SENSOR (POS)

Refer to EC-1295, "Component Inspection".

Is the inspection result normal?

YES >> GO TO 4.
NO >> Replace crankshaft position sensor (POS).

4. CHECK CAMSHAFT POSITION SENSOR (PHASE)

Refer to EC-1298, "Component Inspection".

Is the inspection result normal?

YES >> GO TO 5.
NO >> Replace malfunctioning camshaft position sensor (PHASE).

5. CHECK CAMSHAFT (INTAKE)

Check the following.

- Accumulation of debris on the signal plate of camshaft rear end
- Chipping signal plate of camshaft rear end

Is the inspection result normal?

YES >> GO TO 6.
NO >> Remove debris and clean the signal plate of camshaft rear end or replace camshaft.

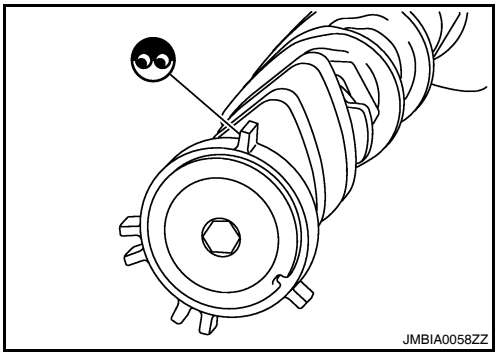

6. CHECK TIMING CHAIN INSTALLATION

Check service records for any recent repairs that may cause timing chain misalignment.

Are there any service records that may cause timing chain misalignment?

YES >> Check timing chain installation. Refer to EM-162, "Component".
NO >> GO TO 7.

7. CHECK LUBRICATION CIRCUIT

Refer to EM-124, "Valve Clearance".

Is the inspection result normal?

YES >> GO TO 8.
NO >> Clean lubrication line.

8. CHECK INTERMITTENT INCIDENT

Refer to GI-42, "Intermittent Incident".

>> INSPECTION END

Component Inspection

INFOID:0000000004362024

1. CHECK INTAKE VALVE TIMING CONTROL SOLENOID VALVE-I

1. Disconnect intake valve timing control solenoid valve harness connector.
2. Check resistance between intake valve timing control solenoid valve terminals as per the following.

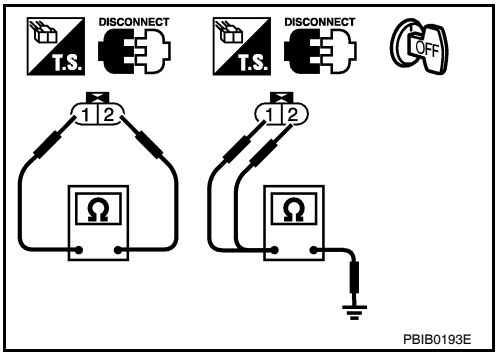

Terminals	Resistance
1 and 2	7.0 - 7.5 Ω [at 20°C (68°F)]
1 or 2 and ground	∞ Ω (Continuity should not exist)

Is the inspection result normal?

YES >> GO TO 2.
NO >> Replace malfunctioning intake valve timing control solenoid valve.

2. CHECK INTAKE VALVE TIMING CONTROL SOLENOID VALVE-II

1. Remove intake valve timing control solenoid valve.

2. Provide 12 V DC between intake valve timing control solenoid valve terminals 1 and 2, and then interrupt it. Check that the plunger moves as shown in the figure.
   CAUTION:
   Never apply 12 V DC continuously for 5 seconds or more. Doing so may result in damage to the coil in intake valve timing control solenoid valve.
   NOTE:
   Always replace O-ring when intake valve timing control solenoid valve is removed.

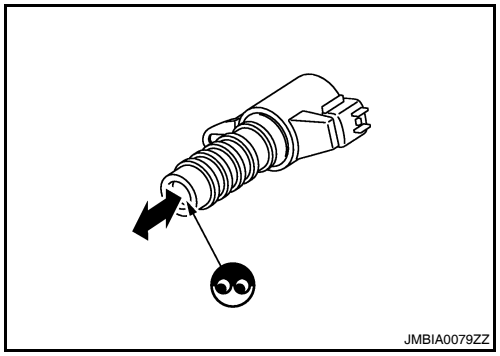

Is the inspection result normal?

YES >> INSPECTION END
NO >> Replace malfunctioning intake valve timing control solenoid valve.

P0031, P0032, P0051, P0052 A/F SENSOR 1 HEATER

Description

INFOID:0000000004362028

SYSTEM DESCRIPTION

Sensor	Input signal to ECM	ECM function	Actuator
Camshaft position sensor (PHASE) Crankshaft position sensor (POS)	Engine speed	Air fuel ratio (A/F) sensor 1 heater control	Air fuel ratio (A/F) sensor 1 heater
Mass air flow sensor	Amount of intake air		

The ECM performs ON/OFF duty control of the A/F sensor 1 heater corresponding to the engine operating condition to keep the temperature of A/F sensor 1 element within the specified range.

DTC Logic

INFOID:0000000004362029

DTC DETECTION LOGIC

DTC No.	Trouble diagnosis name	DTC detecting condition	Possible cause
P0031	Air fuel ratio (A/F) sensor 1 heater (bank 1) control circuit low	The current amperage in the A/F sensor 1 heater circuit is out of the normal range. (An excessively low voltage signal is sent to ECM via the A/F sensor 1 heater.)	• Harness or connectors (The A/F sensor 1 heater circuit is open or shorted.) • A/F sensor 1 heater
P0032	Air fuel ratio (A/F) sensor 1 heater (bank 1) control circuit high	The current amperage in the A/F sensor 1 heater circuit is out of the normal range. (An excessively high voltage signal is sent to ECM via the A/F sensor 1 heater.)	• Harness or connectors (The A/F sensor 1 heater circuit is shorted.) • A/F sensor 1 heater
P0051	Air fuel ratio (A/F) sensor 1 heater (bank 2) control circuit low	The current amperage in the A/F sensor 1 heater circuit is out of the normal range. (An excessively low voltage signal is sent to ECM via the A/F sensor 1 heater.)	• Harness or connectors (The A/F sensor 1 heater circuit is open or shorted.) • A/F sensor 1 heater
P0052	Air fuel ratio (A/F) sensor 1 heater (bank 2) control circuit high	The current amperage in the A/F sensor 1 heater circuit is out of the normal range. (An excessively high voltage signal is sent to ECM via the A/F sensor 1 heater.)	• Harness or connectors (The A/F sensor 1 heater circuit is shorted.) • A/F sensor 1 heater

DTC CONFIRMATION PROCEDURE

1. PRECONDITIONING

If DTC Confirmation Procedure has been previously conducted, always perform the following before conducting the next test.

1. Turn ignition switch OFF and wait at least 10 seconds.
2. Turn ignition switch ON.
3. Turn ignition switch OFF and wait at least 10 seconds.

TESTING CONDITION:

Before performing the following procedure, confirm that battery voltage is more than 11 V at idle.

>> GO TO 2.

2. PERFORM DTC CONFIRMATION PROCEDURE

1. Start engine and let it idle for at least 10 seconds.
2. Check 1st trip DTC.

Is 1st trip DTC detected?

YES >> Go to EC-1184, "Diagnosis Procedure".
NG >> INSPECTION END

Diagnosis Procedure

INFOID:0000000004362030

1. CHECK GROUND CONNECTION

1. Turn ignition switch OFF.
2. Check ground connection E9. Refer to Ground Inspection in GI-45, "Circuit Inspection".

Is the inspection result normal?

YES >> GO TO 2.
NO >> Repair or replace ground connection.

2. CHECK AIR FUEL RATIO (A/F) SENSOR 1 POWER SUPPLY CIRCUIT

1. Disconnect air fuel ratio (A/F) sensor 1 harness connector.
2. Turn ignition switch ON.
3. Check the voltage between A/F sensor 1 harness connector and ground.

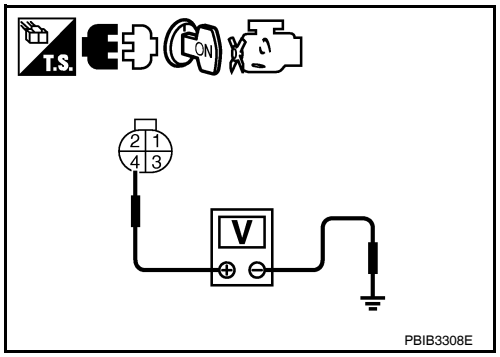

DTC	A/F sensor 1			Ground	Voltage
	Bank	Connector	Terminal		
P0031, P0032	1	F12	4	Ground	Battery voltage
P0051, P0052	2	F61	4		

Is the inspection result normal?

YES >> GO TO 4.
NO >> GO TO 3.

3. DETECT MALFUNCTIONING PART

Check the following.
- IPDM E/R harness connector F10
- 15 A fuse (No. 37)
- Harness for open or short between A/F sensor 1 and fuse

>> Repair or replace harness or connectors.

4. CHECK A/F SENSOR 1 HEATER OUTPUT SIGNAL CIRCUIT

1. Turn ignition switch OFF.
2. Disconnect ECM harness connector.
3. Check harness continuity between A/F sensor 1 harness connector and ECM harness connector.

DTC	A/F sensor 1			ECM		Continuity
	Bank	Connector	Terminal	Connector	Terminal	
P0031, P0032	1	F12	3	F14	4	Existed
P0051, P0052	2	F61	3		8	

4. Also check harness for short to ground and short to power.

Is the inspection result normal?

YES >> GO TO 5.
NO >> Repair open circuit, short to ground or short to power in harness or connectors.

5. CHECK A/F SENSOR 1 HEATER

Refer to EC-1186, "Component Inspection".

Is the inspection result normal?

YES >> GO TO 7.
NO >> GO TO 6.

6. REPLACE AIR FUEL RATIO (A/F) SENSOR 1

Replace malfunctioning air fuel ratio (A/F) sensor 1.

CAUTION:
- **Discard any A/F sensor which has been dropped from a height of more than 0.5 m (19.7 in) onto a hard surface such as a concrete floor; use a new one.**

- **Before installing new A/F sensor, clean exhaust system threads using Oxygen Sensor Thread Cleaner [commercial service tool (J-43897-18 or J-43897-12)] and approved anti-seize lubricant (commercial service tool).**

>> INSPECTION END

7. CHECK INTERMITTENT INCIDENT

Perform GI-42, "Intermittent Incident".

>> INSPECTION END

Component Inspection

INFOID:0000000004362031

1. CHECK AIR FUEL RATIO (A/F) SENSOR 1

Check resistance between A/F sensor terminals as per the following.

Terminal No.	Resistance
3 and 4	1.8 - 2.44 Ω [at 25°C (77°F)]
3 and 1, 2	∞ Ω (Continuity should not exist)
4 and 1, 2	

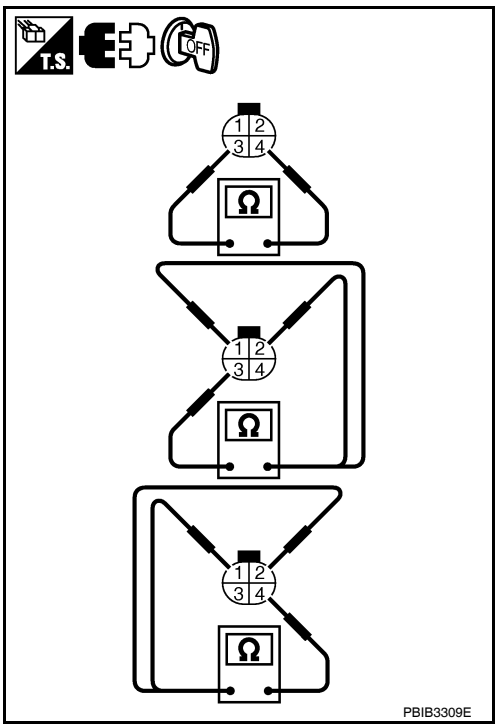

Is the inspection result normal?

YES >> INSPECTION END
NO >> GO TO 2.

2. REPLACE AIR FUEL RATIO (A/F) SENSOR 1

Replace malfunctioning air fuel ratio (A/F) sensor 1.

CAUTION:

- **Discard any (A/F) sensor which has been dropped from a height of more than 0.5 m (19.7 in) onto a hard surface such as a concrete floor; use a new one.**
- **Before installing new (A/F) sensor, clean exhaust system threads using Heated Oxygen Sensor Thread Cleaner [commercial service tool (J-43897-18 or J-43897-12)] and approved anti-seize lubricant (commercial service tool).**

>> INSPECTION END

P0037, P0038, P0057, P0058 HO2S2 HEATER

Description

INFOID:0000000004362032

SYSTEM DESCRIPTION

Sensor	Input signal to ECM	ECM function	Actuator
Camshaft position sensor (PHASE) Crankshaft position sensor (POS)	Engine speed	Heated oxygen sensor 2 heater control	Heated oxygen sensor 2 heater
Engine coolant temperature sensor	Engine coolant temperature		
Mass air flow sensor	Amount of intake air		

The ECM performs ON/OFF control of the heated oxygen sensor 2 heater corresponding to the engine speed, amount of intake air and engine coolant temperature.

OPERATION

Engine speed	Heated oxygen sensor 2 heater
Above 3,600 rpm	OFF
Below 3,600 rpm after the following conditions are met. • Engine: After warming up • Keeping the engine speed between 3,500 and 4,000 rpm for 1 minute and at idle for 1 minute under no load	ON

DTC Logic

INFOID:0000000004362033

DTC DETECTION LOGIC

DTC No.	Trouble diagnosis name	DTC detecting condition	Possible cause
P0037	Heated oxygen sensor 2 heater (bank 1) control circuit low	The current amperage in the heated oxygen sensor 2 heater circuit is out of the normal range. (An excessively low voltage signal is sent to ECM via the heated oxygen sensor 2 heater.)	• Harness or connectors (The heated oxygen sensor 2 heater circuit is open or shorted.) • Heated oxygen sensor 2 heater
P0038	Heated oxygen sensor 2 heater (bank 1) control circuit high	The current amperage in the heated oxygen sensor 2 heater circuit is out of the normal range. (An excessively high voltage signal is sent to ECM via the heated oxygen sensor 2 heater.)	• Harness or connectors (The heated oxygen sensor 2 heater circuit is shorted.) • Heated oxygen sensor 2 heater
P0057	Heated oxygen sensor 2 heater (bank 2) control circuit low	The current amperage in the heated oxygen sensor 2 heater circuit is out of the normal range. (An excessively low voltage signal is sent to ECM via the heated oxygen sensor 2 heater.)	• Harness or connectors (The heated oxygen sensor 2 heater circuit is open or shorted.) • Heated oxygen sensor 2 heater
P0058	Heated oxygen sensor 2 heater (bank 2) control circuit high	The current amperage in the heated oxygen sensor 2 heater circuit is out of the normal range. (An excessively high voltage signal is sent to ECM via the heated oxygen sensor 2 heater.)	• Harness or connectors (The heated oxygen sensor 2 heater circuit is shorted.) • Heated oxygen sensor 2 heater

DTC CONFIRMATION PROCEDURE

1.PRECONDITIONING

If DTC Confirmation Procedure has been previously conducted, always perform the following before conducting the next test.

1. Turn ignition switch OFF and wait at least 10 seconds.
2. Turn ignition switch ON.
3. Turn ignition switch OFF and wait at least 10 seconds.

TESTING CONDITION:

Before performing the following procedure, confirm that battery voltage is between 11 V at idle.

>> GO TO 2.

2. PERFORM DTC CONFIRMATION PROCEDURE

1. Start engine and warm it up to the normal operating temperature.
2. Turn ignition switch OFF and wait at least 10 seconds.
3. Turn ignition switch ON.
4. Turn ignition switch OFF and wait at least 10 seconds.
5. Start engine and keep the engine speed between 3,500 and 4,000 rpm for at least 1 minute under no load.
6. Let engine idle for 1 minute.
7. Check 1st trip DTC.

Is 1st tip DTC detected?

YES >> Go to EC-1188, "Diagnosis Procedure".
NO >> INSPECTION END

Diagnosis Procedure

INFOID:0000000004362034

1. CHECK GROUND CONNECTION

1. Turn ignition switch OFF.
2. Check ground connection E9. Refer to Ground Inspection in GI-45, "Circuit Inspection".

Is the inspection result normal?

YES >> GO TO 2.
NO >> Repair or replace ground connection.

2. CHECK HO2S2 POWER SUPPLY CIRCUIT

1. Disconnect heated oxygen sensor 2 (HO2S2) harness connector.
2. Turn ignition switch ON.
3. Check the voltage between HO2S2 harness connector and ground.

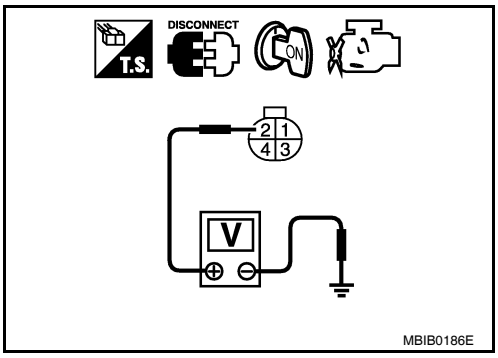

DTC	HO2S2			Ground	Voltage
	Bank	Connector	Terminal		
P0037, P0038	1	F62	2	Ground	Battery voltage
P0057, P0058	2	F56	2		

Is the inspection result normal?

YES >> GO TO 4.
NO >> GO TO 3.

3. DETECT MALFUNCTIONING PART

Check the following.
- IPDM E/R connector F10
- 15 A fuse (No. 37)
- Harness for open or short between heated oxygen sensor 2 and IPDM E/R

>> Repair open circuit, short to ground or short to power in harness or connectors.

4. CHECK HO2S2 OUTPUT SIGNAL CIRCUIT FOR OPEN AND SHORT

1. Turn ignition switch OFF.
2. Disconnect ECM harness connector.
3. Check the continuity between HO2S2 harness connector and ECM harness connector.

DTC	HO2S2			ECM		Continuity
	Bank	Connector	Terminal	Connector	Terminal	
P0037, P0038	1	F62	3	F14	13	Existed
P0057, P0058	2	F56	3		17	

4. Also check harness for short to ground and short to power.

Is the inspection result normal?

YES >> GO TO 5.
NO >> Repair open circuit, short to ground or short to power in harness or connectors.

5. CHECK HEATED OXYGEN SENSOR 2 HEATER

Refer to EC-1189, "Component Inspection".

Is the inspection result normal?

YES >> GO TO 7.
NO >> GO TO 6.

6. REPLACE HEATED OXYGEN SENSOR 2

Replace malfunctioning heated oxygen sensor 2.

CAUTION:

- **Discard any heated oxygen sensor which has been dropped from a height of more than 0.5 m (19.7 in) onto a hard surface such as a concrete floor; use a new one.**
- **Before installing new oxygen sensor, clean exhaust system threads using Oxygen Sensor Thread Cleaner [commercial service tool (J-43897-18 or J-43897-12)] and approved anti-seize lubricant (commercial service tool).**

>> INSPECTION END

7. CHECK INTERMITTENT INCIDENT

Refer to GI-42, "Intermittent Incident".

>> INSPECTION END

Component Inspection

INFOID:0000000004362035

1. CHECK HEATED OXYGEN SENSOR 2 HEATER

Check resistance between HO2S2 terminals as per the following.

Terminal No.	Resistance
2 and 3	3.4 - 4.4 Ω [at 25°C (77°F)]
1 and 2, 3, 4	∞ Ω (Continuity should not exist)
4 and 1, 2, 3	

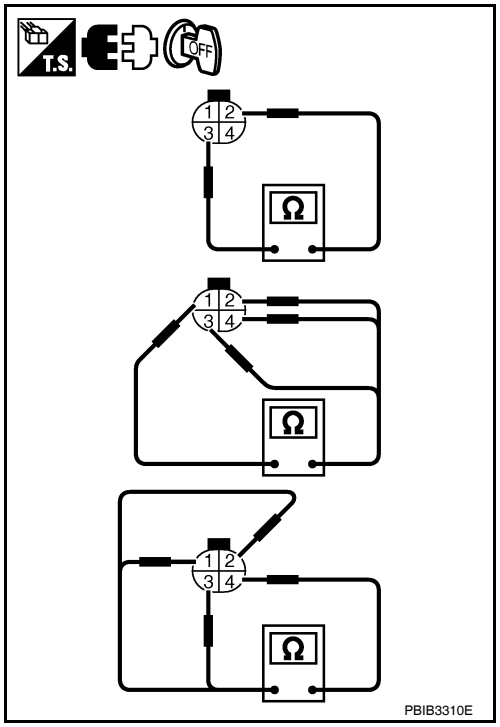

Is the inspection result normal?

YES >> INSPECTION END
NO >> GO TO 2.

2. REPLACE HEATED OXYGEN SENSOR 2

Replace malfunctioning heated oxygen sensor 2.

CAUTION:

- **Discard any heated oxygen sensor which has been dropped from a height of more than 0.5 m (19.7 in) onto a hard surface such as a concrete floor; use a new one.**

- **Before installing new oxygen sensor, clean exhaust system threads using Oxygen Sensor Thread Cleaner [commercial service tool (J-43897-18 or J-43897-12)] and approved anti-seize lubricant (commercial service tool).**

>> INSPECTION END

P0075, P0081 IVT CONTROL SOLENOID VALVE

Description

INFOID:0000000004362036

Intake valve timing control solenoid valve is activated by ON/OFF pulse duty (ratio) signals from the ECM.
The intake valve timing control solenoid valve changes the oil amount and direction of flow via the intake valve timing control unit or stops oil flow.
The longer pulse width advances valve timing.
The shorter pulse width retards valve timing.
When ON and OFF pulse widths become equal, the solenoid valve stops oil pressure flow to fix the intake valve angle at the control position.

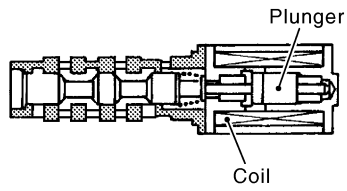

PBIB1842E

DTC Logic

INFOID:0000000004362037

DTC DETECTION LOGIC

DTC No.	Trouble diagnosis name	DTC detecting condition	Possible cause
P0075	Intake valve timing control solenoid valve (bank 1) circuit	An improper voltage is sent to the ECM via the intake valve timing control solenoid valve.	• Harness or connectors (Intake valve timing control solenoid valve circuit is open or shorted.) • Intake valve timing control solenoid valve
P0081	Intake valve timing control solenoid valve (bank 2) circuit		

DTC CONFIRMATION PROCEDURE

1.PRECONDITIONING

If DTC Confirmation Procedure has been previously conducted, always perform the following before conducting the next test.
1. Turn ignition switch OFF and wait at least 10 seconds.
2. Turn ignition switch ON.
3. Turn ignition switch OFF and wait at least 10 seconds.

>> GO TO 2.

2.PERFORM DTC CONFIRMATION PROCEDURE

1. Start engine and let it idle for 5 seconds.
2. Check 1st trip DTC.

Is 1st trip DTC detected?

YES >> Go to EC-1191, "Diagnosis Procedure".
NO >> INSPECTION END

Diagnosis Procedure

INFOID:0000000004362038

1.CHECK INTAKE VALVE TIMING CONTROL SOLENOID VALVE POWER SUPPLY CIRCUIT

1. Turn ignition switch OFF.
2. Disconnect intake valve timing (IVT) control solenoid valve harness connector.
3. Turn ignition switch ON.

4. Check the voltage between intake valve timing control solenoid valve harness connector and ground with CONSULT-III or tester.

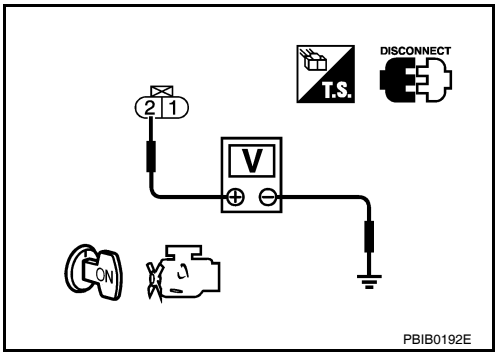

DTC	IVT control solenoid valve			Ground	Voltage
	Bank	Connector	Terminal		
P0075	1	F67	2	Ground	Battery voltage
P0081	2	F66	2		

Is the inspection result normal?

YES >> GO TO 2.
NO >> Repair open circuit, short to ground or short to power in harness or connectors.

2. CHECK INTAKE VALVE TIMING CONTROL SOLENOID VALVE OUTPUT SIGNAL CIRCUIT FOR OPEN AND SHORT

1. Turn ignition switch OFF.
2. Disconnect ECM harness connector.
3. Check the continuity between intake valve timing control solenoid valve harness connector and ECM harness connector.

DTC	IVT control solenoid valve			ECM		Continuity
	Bank	Connector	Terminal	Connector	Terminal	
P0075	1	F67	1	F13	78	Existed
P0081	2	F66	1		75	

4. Also check harness for short to ground and short to power.

Is the inspection result normal?

YES >> GO TO 3.
NO >> Repair open circuit, short to ground or short to power in harness or connectors.

3. CHECK INTAKE VALVE TIMING CONTROL SOLENOID VALVE

Refer to EC-1192, "Component Inspection".

Is the inspection result normal?

YES >> GO TO 4.
NO >> Replace malfunctioning intake valve timing control solenoid valve.

4. CHECK INTERMITTENT INCIDENT

Refer to GI-42, "Intermittent Incident".

>> INSPECTION END

Component Inspection

INFOID:0000000004362039

1. CHECK INTAKE VALVE TIMING CONTROL SOLENOID VALVE-I

1. Disconnect intake valve timing control solenoid valve harness connector.
2. Check resistance between intake valve timing control solenoid valve terminals as per the following.

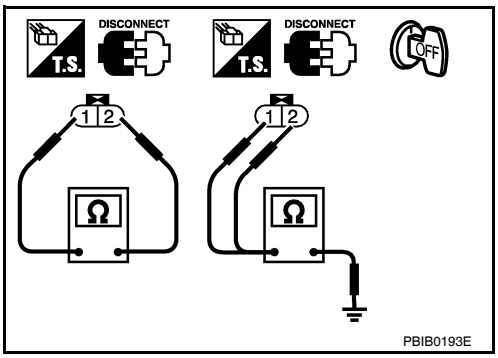

Terminals	Resistance
1 and 2	7.0 - 7.5 Ω [at 20°C (68°F)]
1 or 2 and ground	∞ Ω (Continuity should not exist)

Is the inspection result normal?

YES >> GO TO 2.

NO >> Replace malfunctioning intake valve timing control solenoid valve.

2. CHECK INTAKE VALVE TIMING CONTROL SOLENOID VALVE-II

1. Remove intake valve timing control solenoid valve.
2. Provide 12 V DC between intake valve timing control solenoid valve terminals 1 and 2, and then interrupt it. Check that the plunger moves as shown in the figure.

   CAUTION:
   Never apply 12 V DC continuously for 5 seconds or more. Doing so may result in damage to the coil in intake valve timing control solenoid valve.
   NOTE:
   Always replace O-ring when intake valve timing control solenoid valve is removed.

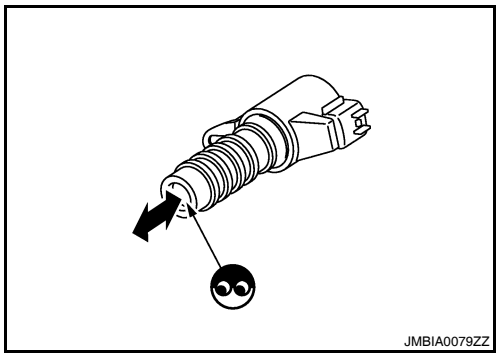

Is the inspection result normal?

YES >> INSPECTION END
NO >> Replace malfunctioning intake valve timing control solenoid valve.

P0101 MAF SENSOR

Description

INFOID:0000000004362044

The mass air flow sensor (1) is placed in the stream of intake air. It measures the intake flow rate by measuring a part of the entire intake flow. The mass air flow sensor controls the temperature of the hot wire to a certain amount. The heat generated by the hot wire is reduced as the intake air flows around it. The greater air flow, the greater the heat loss.
Therefore, the electric current supplied to hot wire is changed to maintain the temperature of the hot wire as air flow increases. The ECM detects the air flow by means of this current change.

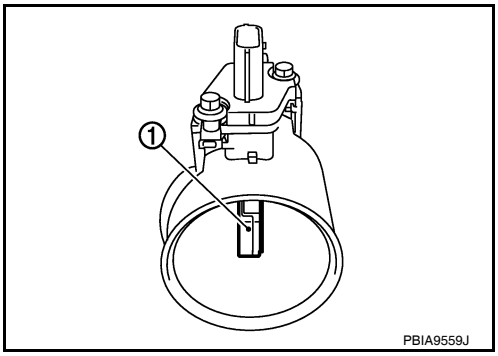

DTC Logic

INFOID:0000000004362045

DTC DETECTION LOGIC

DTC No.	Trouble diagnosis name	DTC detecting condition		Possible cause
P0101	Mass air flow sensor circuit range/performance	A)	A high voltage from the sensor is sent to ECM under light load driving condition.	• Harness or connectors (The sensor circuit is open or shorted.) • Mass air flow sensor • EVAP control system pressure sensor
		B)	A low voltage from the sensor is sent to ECM under heavy load driving condition.	• Harness or connectors (The sensor circuit is open or shorted.) • Intake air leakage • Mass air flow sensor • EVAP control system pressure sensor • Intake air temperature sensor

DTC CONFIRMATION PROCEDURE

1. PRECONDITIONING

If DTC Confirmation Procedure has been previously conducted, always perform the following before conducting the next test.
1. Turn ignition switch OFF and wait at least 10 seconds.
2. Turn ignition switch ON.
3. Turn ignition switch OFF and wait at least 10 seconds.

>> GO TO 2.

2. PERFORM DTC CONFIRMATION PROCEDURE FOR MALFUNCTION A

1. Start engine and warm it up to normal operating temperature.
2. Run engine for at least 10 seconds at idle speed.
3. Check 1st trip DTC.

Is 1st trip DTC detected?

YES >> Go to EC-1196, "Diagnosis Procedure".
NO-1 >> With CONSULT-III: GO TO 3.
NO-2 >> Without CONSULT-III: GO TO 5.

3. CHECK MASS AIR FLOW SENSOR FUNCTION

1. Turn ignition switch ON.
2. Start engine and warm it up to normal operating temperature.
   If engine cannot be started, go to EC-1196, "Diagnosis Procedure".

3. Select “MAS A/F SE-B1” in “DATA MONITOR” mode with CONSULT-III.
4. Check the voltage of “MAS A/F SE-B1”.
5. Increases engine speed to approximately 4,000 rpm.
6. Monitor the linear voltage rise in response to engine speed increases.

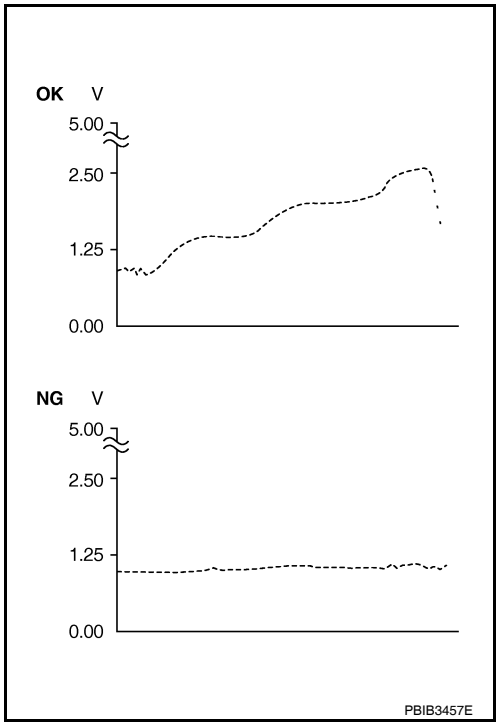

Is the inspection result normal?

YES >> GO TO 4.
NO >> Go to EC-1196, "Diagnosis Procedure".

4. PERFORM DTC CONFIRMATION PROCEDURE FOR MALFUNCTION B

1. Maintain the following conditions for at least 10 consecutive seconds.

ENG SPEED	More than 1,600 rpm
TP SEN 1-B1	More than 1.5 V
TP SEN 2-B1	More than 1.5 V
Selector lever	Suitable position
Driving location	Driving vehicle uphill (Increased engine load) will help maintain the driving conditions required for this test.

CAUTION:
Always drive vehicle at a safe speed.

2. Check 1st trip DTC.

Is 1st trip DTC detected?

YES >> Go to EC-1196, "Diagnosis Procedure".
NO >> INSPECTION END

5. PERFORM COMPONENT FUNCTION CHECK FOR MALFUNCTION B

Perform component function check. Refer to EC-1195, "Component Function Check".

NOTE:
Use component function check to check the overall function of the mass air flow sensor circuit. During this check, a 1st trip DTC might not be confirmed.

Is the inspection result normal?

YES >> INSPECTION END
NO >> Go to EC-1196, "Diagnosis Procedure".

Component Function Check

INFOID:0000000004362046

1. PERFORM COMPONENT FUNCTION CHECK FOR MALFUNCTION B

With GST

1. Start engine and warm it up to normal operating temperature.
2. Select Service $01 with GST.

3. Check the mass air flow sensor signal with Service $01.
4. Check for linear mass air flow sensor signal value rise in response to increases to approximately 4,000 rpm in engine speed.

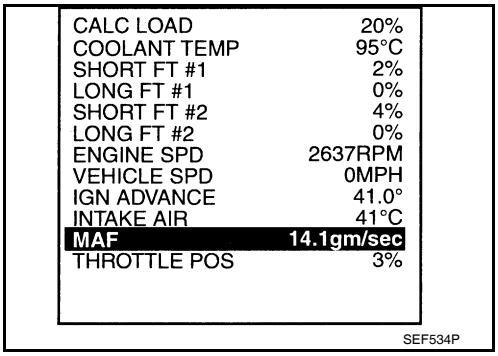

Is the inspection result normal?

YES >> INSPECTION END
NO >> Go to EC-1196, "Diagnosis Procedure".

Diagnosis Procedure

INFOID:0000000004362047

1. INSPECTION START

Confirm the detected malfunction (A or B). Refer to EC-1194, "DTC Logic".

Which malfunction is detected?

A >> GO TO 3.
B >> GO TO 2.

2. CHECK INTAKE SYSTEM

Check the following for connection.
- Air duct
- Vacuum hoses
- Intake air passage between air duct and intake manifold

Is the inspection result normal?

YES >> GO TO 3.
NO >> Reconnect the parts.

3. CHECK GROUND CONNECTION

1. Turn ignition switch OFF.
2. Check ground connection E9. Refer to Ground Inspection in GI-45, "Circuit Inspection".

Is the inspection result normal?

YES >> GO TO 4.
NO >> Repair or replace ground connection.

4. CHECK MAF SENSOR POWER SUPPLY CIRCUIT

1. Disconnect mass air flow (MAF) sensor harness connector.
2. Turn ignition switch ON.
3. Check the voltage between MAF sensor harness connector and ground.

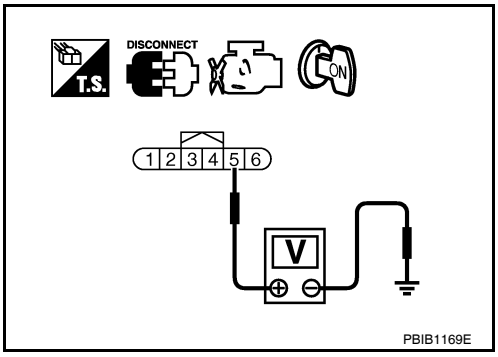

MAF sensor		Ground	Voltage
Connector	Terminal		
F31	5	Ground	Battery voltage

Is the inspection result normal?

YES >> GO TO 6.
NO >> GO TO 5.

5. DETECT MALFUNCTIONING PART

Check the following.
- Harness connectors E11, F2
- Harness for open or short between mass air flow sensor and ECM
- Harness for open or short between mass air flow sensor and IPDM E/R

>> Repair open circuit, short to ground or short to power in harness or connectors.

6. CHECK MAF SENSOR GROUND CIRCUIT FOR OPEN AND SHORT

1. Turn ignition switch OFF.
2. Disconnect ECM harness connector.
3. Check the continuity between MAF sensor harness connector and ECM harness connector.

MAF sensor		ECM		Continuity
Connector	Terminal	Connector	Terminal	
F31	4	F13	56	Existed

4. Also check harness for short to ground and short to power.

Is the inspection result normal?

YES >> GO TO 7.
NO >> Repair open circuit, short to ground or short to power in harness or connectors.

7. CHECK MAF SENSOR INPUT SIGNAL CIRCUIT FOR OPEN AND SHORT

1. Check the continuity between MAF sensor harness connector and ECM harness connector.

MAF sensor		ECM		Continuity
Connector	Terminal	Connector	Terminal	
F31	3	F13	58	Existed

2. Also check harness for short to ground and short to power.

Is the inspection result normal?

YES >> GO TO 8.
NO >> Repair open circuit, short to ground or short to power in harness or connectors.

8. CHECK INTAKE AIR TEMPERATURE SENSOR

Refer to EC-1208, "Component Inspection".

Is the inspection result normal?

YES >> GO TO 9.
NO >> Replace mass air flow sensor (with intake air temperature sensor).

9. CHECK EVAP CONTROL SYSTEM PRESSURE SENSOR

Refer to EC-1334, "Component Inspection".

Is the inspection result normal?

YES >> GO TO 10.
NO >> Replace EVAP control system pressure sensor.

10. CHECK MASS AIR FLOW SENSOR

Refer to EC-1197, "Component Inspection".

Is the inspection result normal?

YES >> GO TO 11.
NO >> Replace mass air flow sensor.

11. CHECK INTERMITTENT INCIDENT

Refer to GI-42, "Intermittent Incident".

>> INSPECTION END

Component Inspection

INFOID:0000000004362048

1. CHECK MASS AIR FLOW SENSOR-I

With CONSULT-III

1. Reconnect all harness connectors disconnected.
2. Start engine and warm it up to normal operating temperature.

3. Connect CONSULT-III and select “DATA MONITOR” mode.
4. Select “MAS A/F SE-B1” and check indication under the following conditions.

Monitor item	Condition	MAS A/F SE-B1 (V)
MAS A/F SE-B1	Ignition switch ON (Engine stopped.)	Approx. 0.4
	Idle (Engine is warmed-up to normal operating temperature.)	0.9 - 1.2
	2,500 rpm (Engine is warmed-up to normal operating temperature.)	1.6 - 1.9
	Idle to approximately 4,000 rpm	0.9 - 1.2 to Approx. 2.4*

*: Check for linear voltage rise in response to engine being increased to approximately 4,000 rpm.

Without CONSULT-III

1. Reconnect all harness connectors disconnected.
2. Start engine and warm it up to normal operating temperature.
3. Check the voltage between ECM harness connector terminals under the following conditions.

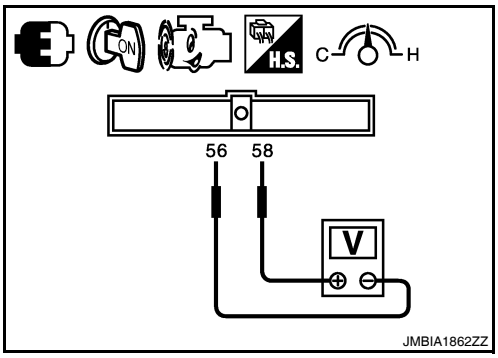

ECM			Condition	Voltage (V)
Con-nector	+	–		
	Terminal	Terminal		
F13	58 (MAF sensor signal)	56 (Sensor ground)	Ignition switch ON (Engine stopped.)	Approx. 0.4
			Idle (Engine is warmed-up to normal operating temperature.)	0.9 - 1.2
			2,500 rpm (Engine is warmed-up to normal operating temperature.)	1.6 - 1.9
			Idle to approximately 4,000 rpm	0.9 - 1.2 to Approx. 2.4*

*: Check for linear voltage rise in response to engine being increased to approximately 4,000 rpm.

Is the inspection result normal?

YES >> INSPECTION END
NO >> GO TO 2.

2. CHECK FOR THE CAUSE OF UNEVEN AIR FLOW VIA THE MASS AIR FLOW SENSOR

Check for the cause of uneven air flow via the mass air flow sensor. Refer to the following.

- Crushed air ducts
- Malfunctioning seal of air cleaner element
- Uneven dirt of air cleaner element
- Improper specification of intake air system parts

Is the inspection result normal?

YES >> GO TO 4.
NO >> GO TO 3.

3. CHECK MASS AIR FLOW SENSOR-II

With CONSULT-III

1. Repair or replace malfunctioning part.
2. Start engine and warm it up to normal operating temperature.
3. Connect CONSULT-III and select “DATA MONITOR” mode.
4. Select “MAS A/F SE-B1” and check indication under the following conditions.

Monitor item	Condition	MAS A/F SE-B1 (V)
MAS A/F SE-B1	Ignition switch ON (Engine stopped.)	Approx. 0.4
	Idle (Engine is warmed-up to normal operating temperature.)	0.9 - 1.2
	2,500 rpm (Engine is warmed-up to normal operating temperature.)	1.6 - 1.9
	Idle to approximately 4,000 rpm	0.9 - 1.2 to Approx. 2.4*

*: Check for linear voltage rise in response to engine being increased to approximately 4,000 rpm.

Without CONSULT-III

1. Repair or replace malfunctioning part.
2. Start engine and warm it up to normal operating temperature.
3. Check the voltage between ECM harness connector terminals under the following conditions.

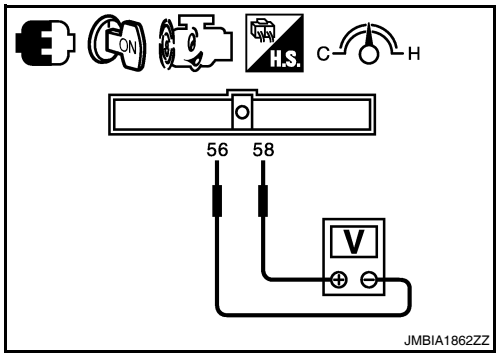

ECM			Condition	Voltage (V)
Con-nector	+ Terminal	– Terminal		
F13	58 (MAF sensor signal)	56 (Sensor ground)	Ignition switch ON (Engine stopped.)	Approx. 0.4
			Idle (Engine is warmed-up to normal operating temperature.)	0.9 - 1.2
			2,500 rpm (Engine is warmed-up to normal operating temperature.)	1.6 - 1.9
			Idle to approximately 4,000 rpm	0.9 - 1.2 to Approx. 2.4*

*: Check for linear voltage rise in response to engine being increased to approximately 4,000 rpm.

Is the inspection result normal?

YES >> INSPECTION END
NO >> GO TO 4.

4. CHECK MASS AIR FLOW SENSOR-III

With CONSULT-III

1. Turn ignition switch OFF.
2. Disconnect mass air flow sensor harness connector and reconnect it again.
3. Start engine and warm it up to normal operating temperature.
4. Connect CONSULT-III and select “DATA MONITOR” mode.
5. Select “MAS A/F SE-B1” and check indication under the following conditions.

Monitor item	Condition	MAS A/F SE-B1 (V)
MAS A/F SE-B1	Ignition switch ON (Engine stopped.)	Approx. 0.4
	Idle (Engine is warmed-up to normal operating temperature.)	0.9 - 1.2
	2,500 rpm (Engine is warmed-up to normal operating temperature.)	1.6 - 1.9
	Idle to approximately 4,000 rpm	0.9 - 1.2 to Approx. 2.4*

*: Check for linear voltage rise in response to engine being increased to approximately 4,000 rpm.

Without CONSULT-III

1. Turn ignition switch OFF.
2. Disconnect mass air flow sensor harness connector and reconnect it again.
3. Start engine and warm it up to normal operating temperature.
4. Check the voltage between ECM harness connector terminals under the following conditions.

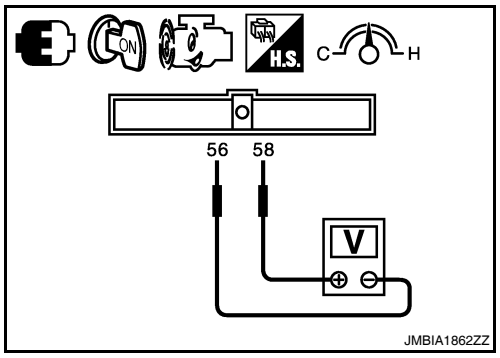

ECM			Condition	Voltage (V)
Con-nector	+	–		
	Terminal	Terminal		
F13	58 (MAF sensor signal)	56 (Sensor ground)	Ignition switch ON (Engine stopped.)	Approx. 0.4
			Idle (Engine is warmed-up to normal operating temperature.)	0.9 - 1.2
			2,500 rpm (Engine is warmed-up to normal operating temperature.)	1.6 - 1.9
			Idle to approximately 4,000 rpm	0.9 - 1.2 to Approx. 2.4*

*: Check for linear voltage rise in response to engine being increased to approximately 4,000 rpm.

Is the inspection result normal?

YES >> INSPECTION END
NO >> Clean or replace mass air flow sensor.

P0102, P0103 MAF SENSOR

Description

INFOID:0000000004362049

The mass air flow sensor (1) is placed in the stream of intake air. It measures the intake flow rate by measuring a part of the entire intake flow. The mass air flow sensor controls the temperature of the hot wire to a certain amount. The heat generated by the hot wire is reduced as the intake air flows around it. The greater air flow, the greater the heat loss.
Therefore, the electric current supplied to hot wire is changed to maintain the temperature of the hot wire as air flow increases. The ECM detects the air flow by means of this current change.

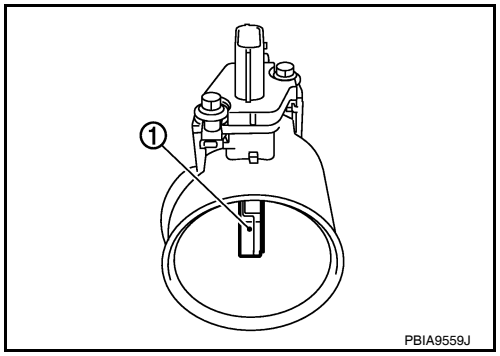

DTC Logic

INFOID:0000000004362050

DTC DETECTION LOGIC

DTC No.	Trouble diagnosis name	DTC detecting condition	Possible cause
P0102	Mass air flow sensor circuit low input	An excessively low voltage from the sensor is sent to ECM.	• Harness or connectors (The sensor circuit is open or shorted.) • Intake air leakage • Mass air flow sensor
P0103	Mass air flow sensor circuit high input	An excessively high voltage from the sensor is sent to ECM.	• Harness or connectors (The sensor circuit is open or shorted.) • Mass air flow sensor

DTC CONFIRMATION PROCEDURE

1. PRECONDITIONING

If DTC Confirmation Procedure has been previously conducted, always perform the following before conducting the next test.
1. Turn ignition switch OFF and wait at least 10 seconds.
2. Turn ignition switch ON.
3. Turn ignition switch OFF and wait at least 10 seconds.

Which DTC is detected?

P0102 >> GO TO 2.
P0103 >> GO TO 3.

2. PERFORM DTC CONFIRMATION PROCEDURE FOR DTC P0102

1. Start engine and wait at least 5 seconds.
2. Check DTC.

Is DTC detected?

YES >> Go to EC-1202, "Diagnosis Procedure".
NO >> INSPECTION END

3. PERFORM DTC CONFIRMATION PROCEDURE FOR DTC P0103-I

1. Turn ignition switch ON and wait at least 5 seconds.
2. Check DTC.

Is DTC detected?

YES >> Go to EC-1202, "Diagnosis Procedure".
NO >> GO TO 4.

4. PERFORM DTC CONFIRMATION PROCEDURE FOR DTC P0103-II

1. Start engine and wait at least 5 seconds.
2. Check DTC.

Is DTC detected?

YES >> Go to EC-1202, "Diagnosis Procedure".
NO >> INSPECTION END

Diagnosis Procedure

INFOID:0000000004362051

1. INSPECTION START

Confirm the detected DTC.

Which DTC is detected?

P0102 >> GO TO 2.
P0103 >> GO TO 3.

2. CHECK INTAKE SYSTEM

Check the following for connection.
- Air duct
- Vacuum hoses
- Intake air passage between air duct to intake manifold

Is the inspection result normal?

YES >> GO TO 3.
NO >> Reconnect the parts.

3. CHECK GROUND CONNECTION

1. Turn ignition switch OFF.
2. Check ground connection E9. Refer to Ground Inspection in GI-45, "Circuit Inspection".

Is the inspection result normal?

YES >> GO TO 4.
NO >> Repair or replace ground connection.

4. CHECK MAF SENSOR POWER SUPPLY CIRCUIT

1. Disconnect mass air flow (MAF) sensor harness connector.
2. Turn ignition switch ON.
3. Check the voltage between MAF sensor harness connector and ground.

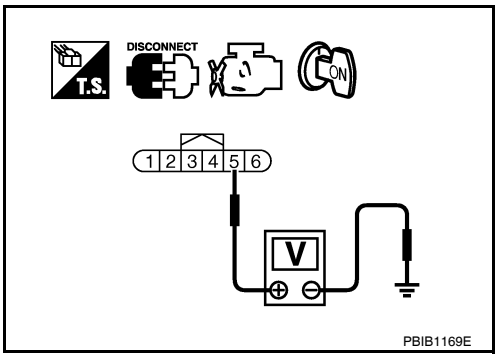

MAF sensor		Ground	Voltage
Connector	Terminal		
F31	5	Ground	Battery voltage

Is the inspection result normal?

YES >> GO TO 6.
NO >> GO TO 5.

5. DETECT MALFUNCTIONING PART

Check the following.
- Harness connectors E11, F2
- Harness for open or short between mass air flow sensor and ECM
- Harness for open or short between mass air flow sensor and IPDM E/R

>> Repair open circuit, short to ground or short to power in harness or connectors.

6. CHECK MAF SENSOR GROUND CIRCUIT FOR OPEN AND SHORT

1. Turn ignition switch OFF.
2. Disconnect ECM harness connector.
3. Check the continuity between MAF sensor harness connector and ECM harness connector.

MAF sensor		ECM		Continuity
Connector	Terminal	Connector	Terminal	
F31	4	F13	56	Existed

4. Also check harness for short to ground and short to power.

Is the inspection result normal?

YES >> GO TO 7.
NO >> Repair open circuit, short to ground or short to power in harness or connectors.

7. CHECK MAF SENSOR INPUT SIGNAL CIRCUIT FOR OPEN AND SHORT

1. Check the continuity between MAF sensor harness connector and ECM harness connector.

MAF sensor		ECM		Continuity
Connector	Terminal	Connector	Terminal	
F31	3	F13	58	Existed

2. Also check harness for short to ground and short to power.

Is the inspection result normal?

YES >> GO TO 8.
NO >> Repair open circuit, short to ground or short to power in harness or connectors.

8. CHECK MASS AIR FLOW SENSOR

Refer to EC-1203, "Component Inspection".

Is the inspection result normal?

YES >> GO TO 9.
NO >> Replace mass air flow sensor.

9. CHECK INTERMITTENT INCIDENT

Refer to GI-42, "Intermittent Incident".

>> INSPECTION END

Component Inspection

INFOID:0000000004362052

1. CHECK MASS AIR FLOW SENSOR-I

With CONSULT-III

1. Reconnect all harness connectors disconnected.
2. Start engine and warm it up to normal operating temperature.
3. Connect CONSULT-III and select “DATA MONITOR” mode.
4. Select “MAS A/F SE-B1” and check indication under the following conditions.

Monitor item	Condition	MAS A/F SE-B1 (V)
MAS A/F SE-B1	Ignition switch ON (Engine stopped.)	Approx. 0.4
	Idle (Engine is warmed-up to normal operating temperature.)	0.9 - 1.2
	2,500 rpm (Engine is warmed-up to normal operating temperature.)	1.6 - 1.9
	Idle to approximately 4,000 rpm	0.9 - 1.2 to Approx. 2.4*

*: Check for linear voltage rise in response to engine being increased to approximately 4,000 rpm.

Without CONSULT-III

1. Reconnect all harness connectors disconnected.
2. Start engine and warm it up to normal operating temperature.

3. Check the voltage between ECM harness connector terminals under the following conditions.

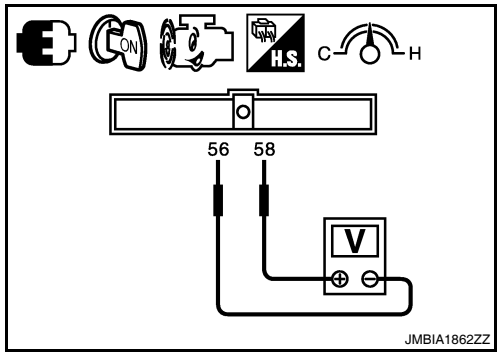

ECM			Condition	Voltage (V)
Con-nector	+	–		
	Terminal	Terminal		
F13	58 (MAF sensor signal)	56 (Sensor ground)	Ignition switch ON (Engine stopped.)	Approx. 0.4
			Idle (Engine is warmed-up to normal operating temperature.)	0.9 - 1.2
			2,500 rpm (Engine is warmed-up to normal operating temperature.)	1.6 - 1.9
			Idle to approximately 4,000 rpm	0.9 - 1.2 to Approx. 2.4*

*: Check for linear voltage rise in response to engine being increased to approximately 4,000 rpm.

Is the inspection result normal?

YES >> INSPECTION END
NO >> GO TO 2.

2. CHECK FOR THE CAUSE OF UNEVEN AIR FLOW VIA THE MASS AIR FLOW SENSOR

Check for the cause of uneven air flow via the mass air flow sensor. Refer to the following.
- Crushed air ducts
- Malfunctioning seal of air cleaner element
- Uneven dirt of air cleaner element
- Improper specification of intake air system parts

Is the inspection result normal?

YES >> GO TO 4.
NO >> GO TO 3.

3. CHECK MASS AIR FLOW SENSOR-II

With CONSULT-III

1. Repair or replace malfunctioning part.
2. Start engine and warm it up to normal operating temperature.
3. Connect CONSULT-III and select “DATA MONITOR” mode.
4. Select “MAS A/F SE-B1” and check indication under the following conditions.

Monitor item	Condition	MAS A/F SE-B1 (V)
MAS A/F SE-B1	Ignition switch ON (Engine stopped.)	Approx. 0.4
	Idle (Engine is warmed-up to normal operating temperature.)	0.9 - 1.2
	2,500 rpm (Engine is warmed-up to normal operating temperature.)	1.6 - 1.9
	Idle to approximately 4,000 rpm	0.9 - 1.2 to Approx. 2.4*

*: Check for linear voltage rise in response to engine being increased to approximately 4,000 rpm.

Without CONSULT-III

1. Repair or replace malfunctioning part.
2. Start engine and warm it up to normal operating temperature.

3. Check the voltage between ECM harness connector terminals under the following conditions.

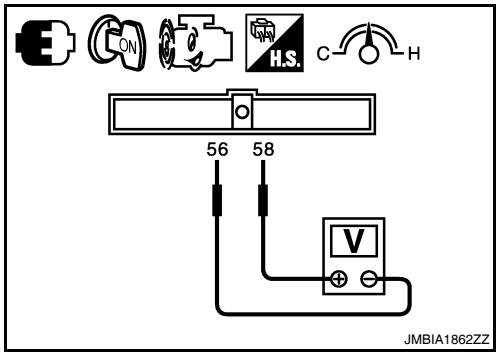

ECM			Condition	Voltage (V)
Con-nector	+ Terminal	– Terminal		
F13	58 (MAF sensor signal)	56 (Sensor ground)	Ignition switch ON (Engine stopped.)	Approx. 0.4
			Idle (Engine is warmed-up to normal operating temperature.)	0.9 - 1.2
			2,500 rpm (Engine is warmed-up to normal operating temperature.)	1.6 - 1.9
			Idle to approximately 4,000 rpm	0.9 - 1.2 to Approx. 2.4*

*: Check for linear voltage rise in response to engine being increased to approximately 4,000 rpm.

Is the inspection result normal?

YES >> INSPECTION END
NO >> GO TO 4.

4. CHECK MASS AIR FLOW SENSOR-III

With CONSULT-III

1. Turn ignition switch OFF.
2. Disconnect mass air flow sensor harness connector and reconnect it again.
3. Start engine and warm it up to normal operating temperature.
4. Connect CONSULT-III and select “DATA MONITOR” mode.
5. Select “MAS A/F SE-B1” and check indication under the following conditions.

Monitor item	Condition	MAS A/F SE-B1 (V)
MAS A/F SE-B1	Ignition switch ON (Engine stopped.)	Approx. 0.4
	Idle (Engine is warmed-up to normal operating temperature.)	0.9 - 1.2
	2,500 rpm (Engine is warmed-up to normal operating temperature.)	1.6 - 1.9
	Idle to approximately 4,000 rpm	0.9 - 1.2 to Approx. 2.4*

*: Check for linear voltage rise in response to engine being increased to approximately 4,000 rpm.

Without CONSULT-III

1. Turn ignition switch OFF.
2. Disconnect mass air flow sensor harness connector and reconnect it again.
3. Start engine and warm it up to normal operating temperature.
4. Check the voltage between ECM harness connector terminals under the following conditions.

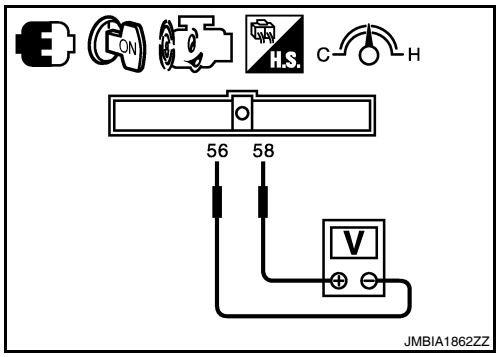

ECM			Condition	Voltage (V)
Con-nector	+ Terminal	– Terminal		
F13	58 (MAF sensor signal)	56 (Sensor ground)	Ignition switch ON (Engine stopped.)	Approx. 0.4
			Idle (Engine is warmed-up to normal operating temperature.)	0.9 - 1.2
			2,500 rpm (Engine is warmed-up to normal operating temperature.)	1.6 - 1.9
			Idle to approximately 4,000 rpm	0.9 - 1.2 to Approx. 2.4*

*: Check for linear voltage rise in response to engine being increased to approximately 4,000 rpm.

Is the inspection result normal?

YES >> INSPECTION END
NO >> Clean or replace mass air flow sensor.

P0112, P0113 IAT SENSOR

Description

INFOID:0000000004362053

The intake air temperature sensor is built-into the mass air flow sensor (1). The sensor detects intake air temperature and transmits a signal to the ECM.
The temperature sensing unit uses a thermistor which is sensitive to the change in temperature. Electrical resistance of the thermistor decreases in response to the rise in temperature.

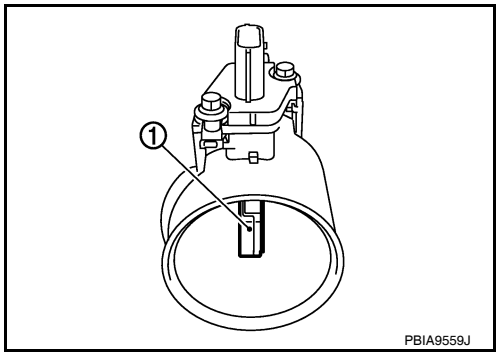

<Reference data>

Intake air temperature [°C (°F)]	Voltage* (V)	Resistance (kΩ)
25 (77)	3.3	1.800 - 2.200
80 (176)	1.2	0.283 - 0.359

*: These data are reference values and are measured between ECM terminals 50 (Intake air temperature sensor) and 56 (Sensor ground).

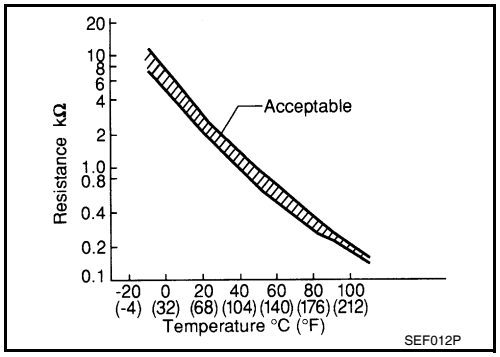

DTC Logic

INFOID:0000000004362054

DTC DETECTION LOGIC

DTC No.	Trouble diagnosis name	DTC detecting condition	Possible cause
P0112	Intake air temperature sensor circuit low input	An excessively low voltage from the sensor is sent to ECM.	• Harness or connectors (The sensor circuit is open or shorted.) • Intake air temperature sensor
P0113	Intake air temperature sensor circuit high input	An excessively high voltage from the sensor is sent to ECM.	

DTC CONFIRMATION PROCEDURE

1.PRECONDITIONING

If DTC Confirmation Procedure has been previously conducted, always perform the following before conducting the next test.
1. Turn ignition switch OFF and wait at least 10 seconds.
2. Turn ignition switch ON.
3. Turn ignition switch OFF and wait at least 10 seconds.

>> GO TO 2.

2.PERFORM DTC CONFIRMATION PROCEDURE

1. Turn ignition switch ON and wait at least 5 seconds.
2. Check 1st trip DTC.

Is 1st trip DTC detected?

YES >> Go to EC-1208, "Diagnosis Procedure".
NO >> INSPECTION END

Diagnosis Procedure

INFOID:0000000004362055

1. CHECK GROUND CONNECTION

1. Turn ignition switch OFF.
2. Check ground connection E9. Refer to Ground Inspection in GI-45, "Circuit Inspection".

Is the inspection result normal?

YES >> GO TO 2.
NO >> Repair or replace ground connection.

2. CHECK INTAKE AIR TEMPERATURE SENSOR POWER SUPPLY CIRCUIT

1. Disconnect mass air flow sensor (with intake air temperature sensor) harness connector.
2. Turn ignition switch ON.
3. Check the voltage between mass air flow sensor harness connector and ground.

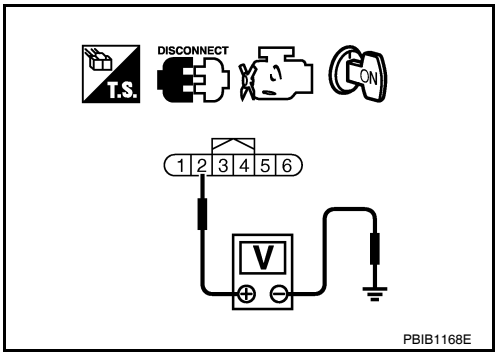

MAF sensor		Ground	Voltage
Connector	Terminal		
F31	2	Ground	Approx. 5 V

Is the inspection result normal?

YES >> GO TO 3.
NO >> Repair open circuit, short to ground or short to power in harness or connectors.

3. CHECK INTAKE AIR TEMPERATURE SENSOR GROUND CIRCUIT FOR OPEN AND SHORT

1. Turn ignition switch OFF.
2. Disconnect ECM harness connector.
3. Check harness continuity between mass air flow sensor harness connector and ECM harness connector.

MAF sensor		ECM		Continuity
Connector	Terminal	Connector	Terminal	
F31	1	F13	56	Existed

4. Also check harness for short to ground and short to power.

Is the inspection result normal?

YES >> GO TO 4.
NO >> Repair open circuit, short to ground or short to power in harness or connectors.

4. CHECK INTAKE AIR TEMPERATURE SENSOR

Refer to EC-1208, "Component Inspection".

Is the inspection result normal?

YES >> GO TO 5.
NO >> Replace mass air flow sensor (with intake air temperature sensor).

5. CHECK INTERMITTENT INCIDENT

Refer to GI-42, "Intermittent Incident".

>> INSPECTION END

Component Inspection

INFOID:0000000004362056

1. CHECK INTAKE AIR TEMPERATURE SENSOR

1. Turn ignition switch OFF.
2. Disconnect mass air flow sensor harness connector.

3. Check resistance between mass air flow sensor terminals as per the following.

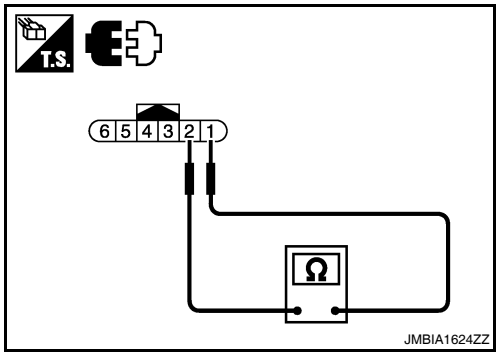

Terminal	Condition		Resistance (kΩ)
1 and 2	Temperature [°C (°F)]	25 (77)	1.800 - 2.200

Is the inspection result normal?

YES >> INSPECTION END

NO >> Replace mass air flow sensor (with intake air temperature sensor).

P0116 ECT SENSOR

Description

INFOID:0000000004362057

The engine coolant temperature sensor is used to detect the engine coolant temperature. The sensor modifies a voltage signal from the ECM. The modified signal returns to the ECM as the engine coolant temperature input. The sensor uses a thermistor which is sensitive to the change in temperature. The electrical resistance of the thermistor decreases as temperature increases.

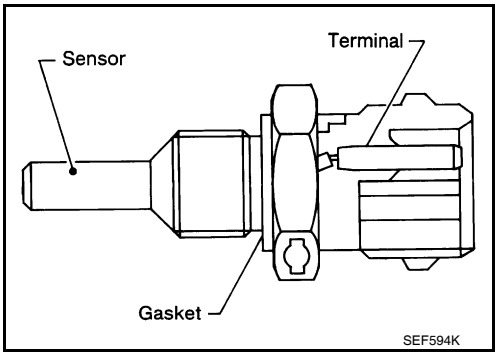

<Reference data>

Engine coolant temperature [°C (°F)]	Voltage* (V)	Resistance (kΩ)
–10 (14)	4.4	7.0 - 11.4
20 (68)	3.5	2.1 - 2.9
50 (122)	2.2	0.68 - 1.00
90 (194)	0.9	0.236 - 0.260

*: These data are reference values and are measured between ECM terminals 46 (Engine coolant temperature sensor) and 52 (Sensor ground).

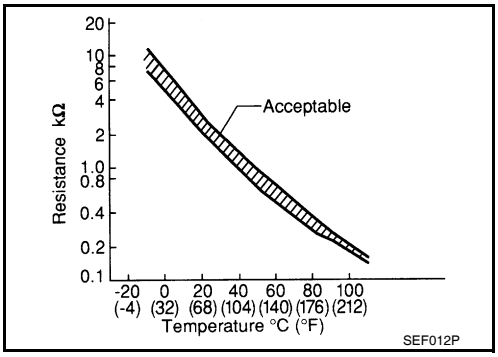

DTC Logic

INFOID:0000000004362058

DTC DETECTION LOGIC

NOTE:
If DTC P0116 is displayed with P0117 or P0118, first perform the trouble diagnosis for DTC P0117, P0118. Refer to EC-1212, "DTC Logic".

DTC No.	Trouble diagnosis name	DTC detecting condition	Possible cause
P0116	Engine coolant temperature sensor circuit range/performance	Engine coolant temperature signal from engine coolant temperature sensor does not fluctuate, even when some time has passed after starting the engine with pre-warming up condition.	• Harness or connectors (High or low resistance in the circuit.) • Engine coolant temperature sensor

DTC CONFIRMATION PROCEDURE

1. PRECONDITIONING

If DTC Confirmation Procedure has been previously conducted, always perform the following before conducting the next test.
1. Turn ignition switch OFF and wait at least 10 seconds.
2. Turn ignition switch ON.
3. Turn ignition switch OFF and wait at least 10 seconds.

TEST CONDITION:
Before performing the following procedure, do not add fuel.

>> GO TO 2.

2. PERFORM DTC CONFIRMATION PROCEDURE

1. Start engine and warm it up to normal operating temperature.
2. Rev engine up to 2,000 rpm for more than 10 minutes.
3. Move the vehicle to a cool place, then stop engine and turn ignition switch OFF.

4. Check resistance between “fuel level sensor unit and fuel pump” terminals 4 and 5.
5. Soak the vehicle until the resistance between “fuel level sensor unit and fuel pump” terminals 4 and 5 becomes 0.5 kΩ higher than the value measured before soaking.
   CAUTION:
   Never turn ignition switch ON during soaking.
   NOTE:
   Soak time changes depending on ambient air temperature. It may take several hours.
6. Start engine and let it idle for 5 minutes.
7. Check 1st trip DTC.

Is 1st trip DTC detected?

YES >> EC-1211, "Diagnosis Procedure"
NO >> INSPECTION END

Diagnosis Procedure

INFOID:0000000004362059

1. CHECK GROUND CONNECTION

1. Turn ignition switch OFF.
2. Check ground connection E9. Refer to Ground Inspection in GI-45, "Circuit Inspection".

Is the inspection result normal?

YES >> GO TO 2.
NO >> Repair or replace ground connection.

2. CHECK ENGINE COOLANT TEMPERATURE SENSOR

Refer to EC-1211, "Component Inspection".

Is the inspection result normal?

YES >> GO TO 3.
NO >> Replace engine coolant temperature sensor.

3. CHECK INTERMITTENT INCIDENT

Refer to GI-42, "Intermittent Incident".

>> INSPECTION END

Component Inspection

INFOID:0000000004362060

1. CHECK ENGINE COOLANT TEMPERATURE SENSOR

1. Turn ignition switch OFF.
2. Disconnect engine coolant temperature sensor harness connector.
3. Remove engine coolant temperature sensor.
4. Check resistance between engine coolant temperature sensor terminals as per the following.

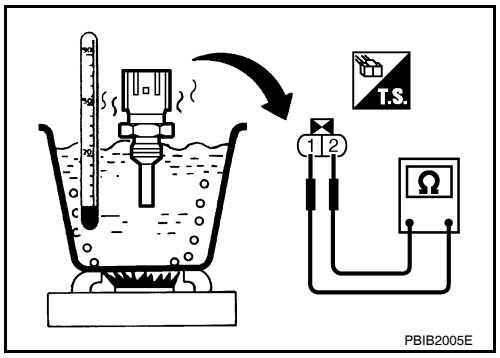

Terminals	Condition		Resistance (kΩ)
1 and 2	Temperature [°C (°F)]	20 (68)	2.1 - 2.9
		50 (122)	0.68 - 1.00
		90 (194)	0.236 - 0.260

Is the inspection result normal?

YES >> INSPECTION END
NO >> Replace engine coolant temperature sensor.

P0117, P0118 ECT SENSOR

Description

INFOID:0000000004362061

The engine coolant temperature sensor is used to detect the engine coolant temperature. The sensor modifies a voltage signal from the ECM. The modified signal returns to the ECM as the engine coolant temperature input. The sensor uses a thermistor which is sensitive to the change in temperature. The electrical resistance of the thermistor decreases as temperature increases.

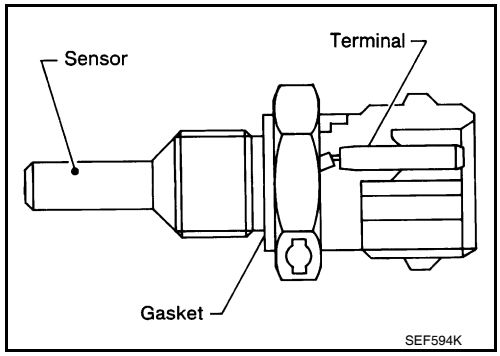

<Reference data>

Engine coolant temperature [°C (°F)]	Voltage* (V)	Resistance (kΩ)
–10 (14)	4.4	7.0 - 11.4
20 (68)	3.5	2.1 - 2.9
50 (122)	2.2	0.68 - 1.00
90 (194)	0.9	0.236 - 0.260

*: These data are reference values and are measured between ECM terminals 46 (Engine coolant temperature sensor) and 52 (Sensor ground).

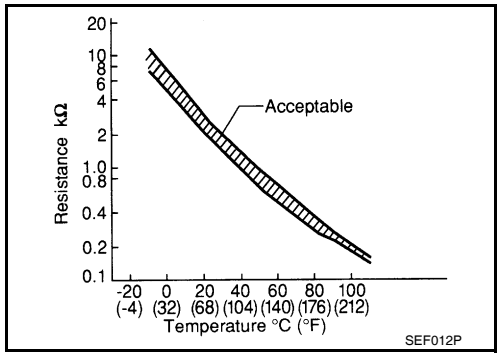

DTC Logic

INFOID:0000000004362062

DTC DETECTION LOGIC

DTC No.	Trouble Diagnosis Name	DTC detecting condition	Possible Cause
P0117	Engine coolant temperature sensor circuit low input	An excessively low voltage from the sensor is sent to ECM.	• Harness or connectors (The sensor circuit is open or shorted.) • Engine coolant temperature sensor
P0118	Engine coolant temperature sensor circuit high input	An excessively high voltage from the sensor is sent to ECM.	

DTC CONFIRMATION PROCEDURE

1.PRECONDITIONING

If DTC Confirmation Procedure has been previously conducted, always perform the following before conducting the next test.

1. Turn ignition switch OFF and wait at least 10 seconds.
2. Turn ignition switch ON.
3. Turn ignition switch OFF and wait at least 10 seconds.

>> GO TO 2.

2.PERFORM DTC CONFIRMATION PROCEDURE

1. Turn ignition switch ON and wait at least 5 seconds.
2. Check DTC.

Is DTC detected?

YES >> Go to EC-1213, "Diagnosis Procedure".
NO >> INSPECTION END

Diagnosis Procedure

INFOID:0000000004362063

1. CHECK GROUND CONNECTION

1. Turn ignition switch OFF.
2. Check ground connection E9. Refer to Ground Inspection in GI-45, "Circuit Inspection".

Is the inspection result normal?

YES >> GO TO 2.
NO >> Repair or replace ground connection.

2. CHECK ECT SENSOR POWER SUPPLY CIRCUIT

1. Disconnect engine coolant temperature (ECT) sensor harness connector.
2. Turn ignition switch ON.
3. Check the voltage between ECT sensor harness connector and ground.

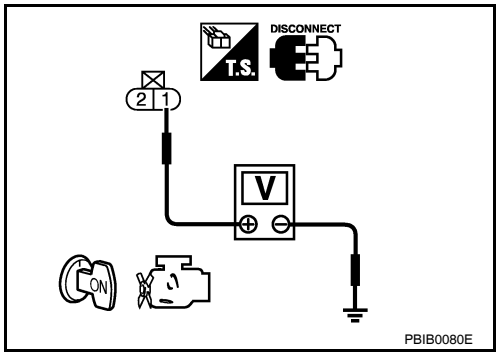

ECT sensor		Ground	Voltage
Connector	Terminal		
F11	1	Ground	Approx. 5 V

Is the inspection result normal?

YES >> GO TO 3.
NO >> Repair open circuit, short to ground or short to power in harness or connectors.

3. CHECK ECT SENSOR GROUND CIRCUIT FOR OPEN AND SHORT

1. Turn ignition switch OFF.
2. Disconnect ECM harness connector.
3. Check the continuity between ECT sensor harness connector and ECM harness connector.

ECT sensor		ECM		Continuity
Connector	Terminal	Connector	Terminal	
F11	2	F13	52	Existed

4. Also check harness for short to ground and short to power.

Is the inspection result normal?

YES >> GO TO 4.
NO >> Repair open circuit, short to ground or short to power in harness or connectors.

4. CHECK ENGINE COOLANT TEMPERATURE SENSOR

Refer to EC-1213, "Component Inspection".

Is the inspection result normal?

YES >> GO TO 5.
NO >> Replace engine coolant temperature sensor.

5. CHECK INTERMITTENT INCIDENT

Refer to GI-42, "Intermittent Incident".

>> INSPECTION END

Component Inspection

INFOID:0000000004362064

1. CHECK ENGINE COOLANT TEMPERATURE SENSOR

1. Turn ignition switch OFF.
2. Disconnect engine coolant temperature sensor harness connector.
3. Remove engine coolant temperature sensor.

4. Check resistance between engine coolant temperature sensor terminals as per the following.

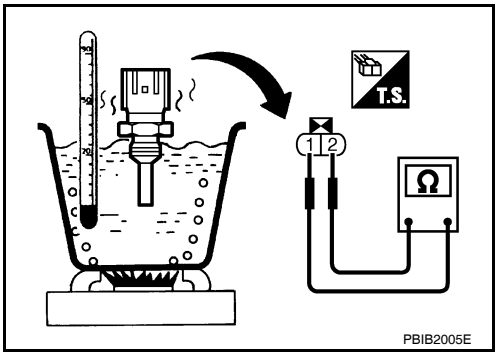

Terminals	Condition		Resistance (kΩ)
1 and 2	Temperature [°C (°F)]	20 (68)	2.1 - 2.9
		50 (122)	0.68 - 1.00
		90 (194)	0.236 - 0.260

Is the inspection result normal?

YES >> INSPECTION END
NO >> Replace engine coolant temperature sensor.

P0122, P0123 TP SENSOR

Description

INFOID:0000000004362065

Electric throttle control actuator consists of throttle control motor, throttle position sensor, etc. The throttle position sensor responds to the throttle valve movement.
The throttle position sensor has two sensors. These sensors are a kind of potentiometer which transform the throttle valve position into output voltage, and emit the voltage signals to the ECM. The ECM judges the current opening angle of the throttle valve from these signals and controls the throttle valve opening angle in response to driving conditions via the throttle control motor.

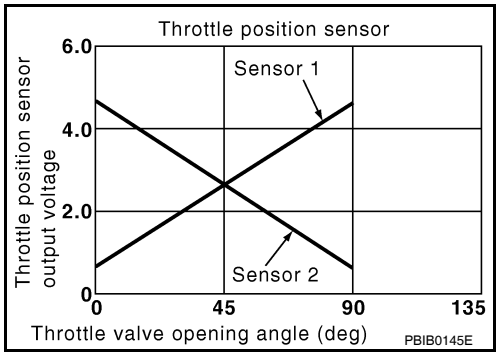

DTC Logic

INFOID:0000000004362066

DTC DETECTION LOGIC

NOTE:
If DTC P0122 or P0123 is displayed with DTC P0643, first perform the trouble diagnosis for DTC P0643. Refer to EC-1379, "DTC Logic".

DTC No.	Trouble diagnosis name	DTC detecting condition	Possible cause
P0122	Throttle position sensor 2 circuit low input	An excessively low voltage from the TP sensor 2 is sent to ECM.	• Harness or connectors (TP sensor 2 circuit is open or shorted.) • Electric throttle control actuator (TP sensor 2)
P0123	Throttle position sensor 2 circuit high input	An excessively high voltage from the TP sensor 2 is sent to ECM.	

DTC CONFIRMATION PROCEDURE

1. PRECONDITIONING

If DTC Confirmation Procedure has been previously conducted, always perform the following before conducting the next test.
1. Turn ignition switch OFF and wait at least 10 seconds.
2. Turn ignition switch ON.
3. Turn ignition switch OFF and wait at least 10 seconds.

TESTING CONDITION:
Before performing the following procedure, confirm that battery voltage is more than 8 V at idle.

>> GO TO 2.

2. PERFORM DTC CONFIRMATION PROCEDURE

1. Start engine and let it idle for 1 second.
2. Check DTC.

Is DTC detected?

YES >> Go to EC-1215, "Diagnosis Procedure".
NO >> INSPECTION END

Diagnosis Procedure

INFOID:0000000004362067

1. CHECK GROUND CONNECTION

1. Turn ignition switch OFF.
2. Check ground connection E9. Refer to Ground Inspection in GI-45, "Circuit Inspection".

Is the inspection result normal?

YES >> GO TO 2.
NO >> Repair or replace ground connection.

2. CHECK THROTTLE POSITION SENSOR 2 POWER SUPPLY CIRCUIT

1. Disconnect electric throttle control actuator harness connector.
2. Turn ignition switch ON.
3. Check the voltage between electric throttle control actuator harness connector and ground.

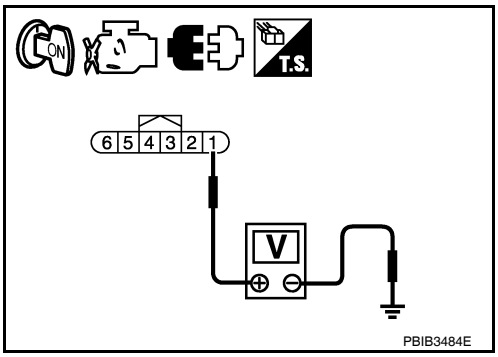

Electric throttle control actuator		Ground	Voltage
Connector	Terminal		
F57	1	Ground	Approx. 5 V

Is the inspection result normal?

YES >> GO TO 3.
NO >> Repair open circuit, short to ground or short to power in harness or connectors.

3. CHECK THROTTLE POSITION SENSOR 2 GROUND CIRCUIT FOR OPEN AND SHORT

1. Turn ignition switch OFF.
2. Disconnect ECM harness connector.
3. Check the continuity between electric throttle control actuator harness connector and ECM harness connector.

Electric throttle control actuator		ECM		Continuity
Connector	Terminal	Connector	Terminal	
F57	4	F13	36	Existed

4. Also check harness for short to ground and short to power.

Is the inspection result normal?

YES >> GO TO 4.
NO >> Repair open circuit, short to ground or short to power in harness or connectors.

4. CHECK THROTTLE POSITION SENSOR 2 INPUT SIGNAL CIRCUIT FOR OPEN AND SHORT

1. Check the continuity between electric throttle control actuator harness connector and ECM harness connector.

Electric throttle control actuator		ECM		Continuity
Connector	Terminal	Connector	Terminal	
F57	3	F13	38	Existed

2. Also check harness for short to ground and short to power.

Is the inspection result normal?

YES >> GO TO 5.
NO >> Repair open circuit, short to ground or short to power in harness or connectors.

5. CHECK THROTTLE POSITION SENSOR

Refer to EC-1217, "Component Inspection".

Is the inspection result normal?

YES >> GO TO 7.
NO >> GO TO 6.

6. REPLACE ELECTRIC THROTTLE CONTROL ACTUATOR

1. Replace electric throttle control actuator.
2. Refer to EC-1217, "Special Repair Requirement".

>> INSPECTION END

7. CHECK INTERMITTENT INCIDENT

Refer to GI-42, "Intermittent Incident".

>> INSPECTION END

Component Inspection

INFOID:0000000004362068

1. CHECK THROTTLE POSITION SENSOR

1. Turn ignition switch OFF.
2. Reconnect all harness connectors disconnected.
3. Perform EC-1053, "THROTTLE VALVE CLOSED POSITION LEARNING : Special Repair Requirement".
4. Turn ignition switch ON.
5. Set selector lever position to D (CVT) or 1st position (M/T).
6. Check the voltage between ECM harness connector terminals under the following conditions.

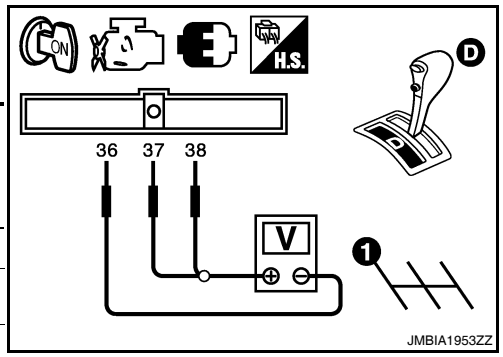

ECM			Condition		Voltage
Con-nector	+ Terminal	– Terminal			
F13	37 (TP sensor 1 signal)	36 (Sensor ground)	Accelera-tor pedal	Fully released	More than 0.36 V
				Fully depressed	Less than 4.75 V
	38 (TP sensor 2 signal)			Fully released	Less than 4.75 V
				Fully depressed	More than 0.36 V

Is the inspection result normal?

YES >> INSPECTION END
NO >> GO TO 2.

2. REPLACE ELECTRIC THROTTLE CONTROL ACTUATOR

1. Replace electric throttle control actuator.
2. Go to EC-1217, "Special Repair Requirement".

>> INSPECTION END

Special Repair Requirement

INFOID:0000000004362069

1. PERFORM THROTTLE VALVE CLOSED POSITION LEARNING

Refer to EC-1053, "THROTTLE VALVE CLOSED POSITION LEARNING : Special Repair Requirement"

>> GO TO 2.

2. PERFORM IDLE AIR VOLUME LEARNING

Refer to EC-1053, "IDLE AIR VOLUME LEARNING : Special Repair Requirement"

>> END

P0125 ECT SENSOR

Description

INFOID:0000000004362070

The engine coolant temperature sensor is used to detect the engine coolant temperature. The sensor modifies a voltage signal from the ECM. The modified signal returns to the ECM as the engine coolant temperature input. The sensor uses a thermistor which is sensitive to the change in temperature. The electrical resistance of the thermistor decreases as temperature increases.

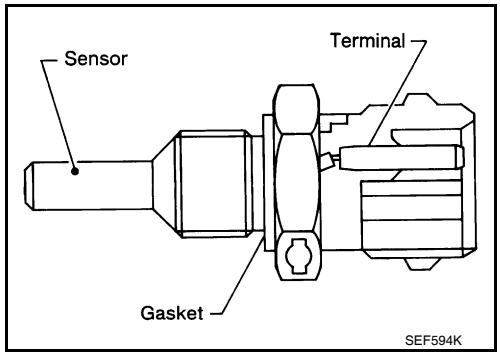

<Reference data>

Engine coolant temperature [°C (°F)]	Voltage* (V)	Resistance (kΩ)
–10 (14)	4.4	7.0 - 11.4
20 (68)	3.5	2.1 - 2.9
50 (122)	2.2	0.68 - 1.00
90 (194)	0.9	0.236 - 0.260

*: These data are reference values and are measured between ECM terminals 46 (Engine coolant temperature sensor) and 52 (Sensor ground).

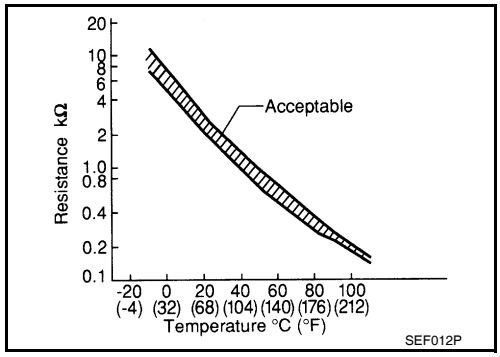

DTC Logic

INFOID:0000000004362071

DTC DETECTION LOGIC

NOTE:

- **If DTC P0125 is displayed with P0116, first perform the trouble diagnosis for DTC P0116. Refer to EC-1210, "DTC Logic".**
- **If DTC P0125 is displayed with P0117 or P0118, first perform the trouble diagnosis for DTC P0117, P0118. Refer to EC-1212, "DTC Logic".**

DTC No.	Trouble diagnosis name	DTC detecting condition	Possible cause
P0125	Insufficient engine coolant temperature for closed loop fuel control	• Voltage sent to ECM from the sensor is not practical, even when some time has passed after starting the engine. • Engine coolant temperature is insufficient for closed loop fuel control.	• Harness or connectors (High resistance in the circuit.) • Engine coolant temperature sensor • Thermostat

DTC CONFIRMATION PROCEDURE

1. PRECONDITIONING

If DTC Confirmation Procedure has been previously conducted, always perform the following before conducting the next test.

1. Turn ignition switch OFF and wait at least 10 seconds.
2. Turn ignition switch ON.
3. Turn ignition switch OFF and wait at least 10 seconds.

>> GO TO 2.

2. CHECK ENGINE COOLANT TEMPERATURE SENSOR FUNCTION

With CONSULT-III

1. Turn ignition switch ON.

2. Select “DATA MONITOR” mode with CONSULT-III.
3. Check that “COOLAN TEMP/S” is above 10°C (50°F).

With GST

Follow the procedure “With CONSULT-III” above.

Is the temperature above 10°C (50°F)?

YES >> INSPECTION END
NO >> GO TO 3.

3. PERFORM DTC CONFIRMATION PROCEDURE

With CONSULT-III

1. Start engine and run it for 65 minutes at idle speed.
   If “COOLAN TEMP/S” increases to more than 10°C (50°F) within 65 minutes, stop engine because the test result will be OK.
   CAUTION:
   Never overheat engine.
2. Check 1st trip DTC.

With GST

Follow the procedure “With CONSULT-III” above.

Is 1st trip DTC detected?

YES >> EC-1219, "Diagnosis Procedure"
NO >> INSPECTION END

Diagnosis Procedure

INFOID:0000000004362072

1. CHECK GROUND CONNECTION

1. Turn ignition switch OFF.
2. Check ground connection E9. Refer to Ground Inspection in GI-45, "Circuit Inspection".

Is the inspection result normal?

YES >> GO TO 2.
NO >> Repair or replace ground connection.

2. CHECK ENGINE COOLANT TEMPERATURE SENSOR

Refer to EC-1219, "Component Inspection".

Is the inspection result normal?

YES >> GO TO 3.
NO >> Replace engine coolant temperature sensor.

3. CHECK THERMOSTAT OPERATION

When the engine is cold [lower than 70°C (158°F)] condition, grasp lower radiator hose and confirm that the engine coolant does not flow.

Is the inspection result normal?

YES >> GO TO 4.
NO >> Repair or replace thermostat. Refer to CO-46, "Removal and Installation".

4. CHECK INTERMITTENT INCIDENT

Refer to GI-42, "Intermittent Incident".

>> INSPECTION END

Component Inspection

INFOID:0000000004362073

1. CHECK ENGINE COOLANT TEMPERATURE SENSOR

1. Turn ignition switch OFF.
2. Disconnect engine coolant temperature sensor harness connector.
3. Remove engine coolant temperature sensor.

4. Check resistance between engine coolant temperature sensor terminals as per the following.

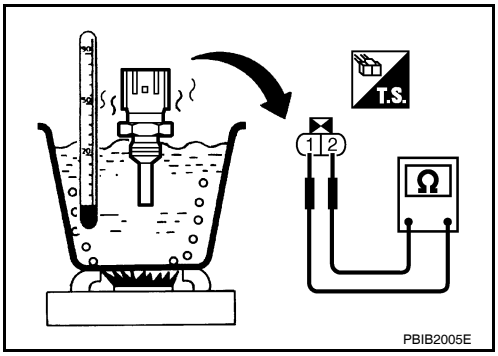

Terminals	Condition		Resistance (kΩ)
1 and 2	Temperature [°C (°F)]	20 (68)	2.1 - 2.9
		50 (122)	0.68 - 1.00
		90 (194)	0.236 - 0.260

Is the inspection result normal?

YES >> INSPECTION END
NO >> Replace engine coolant temperature sensor.

P0127 IAT SENSOR

Description

INFOID:0000000004362074

The intake air temperature sensor is built-into the mass air flow sensor (1). The sensor detects intake air temperature and transmits a signal to the ECM.
The temperature sensing unit uses a thermistor which is sensitive to the change in temperature. Electrical resistance of the thermistor decreases in response to the rise in temperature.

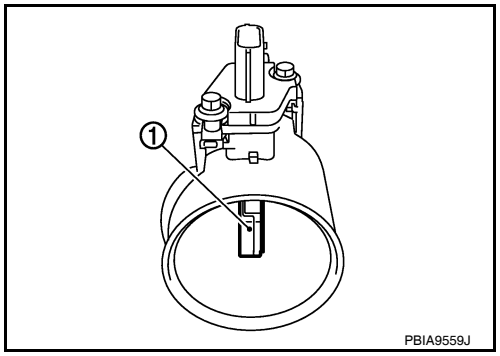

<Reference data>

Intake air temperature [°C (°F)]	Voltage* (V)	Resistance (kΩ)
25 (77)	3.3	1.800 - 2.200
80 (176)	1.2	0.283 - 0.359

*: These data are reference values and are measured between ECM terminals 50 (Intake air temperature sensor) and 56 (Sensor ground).

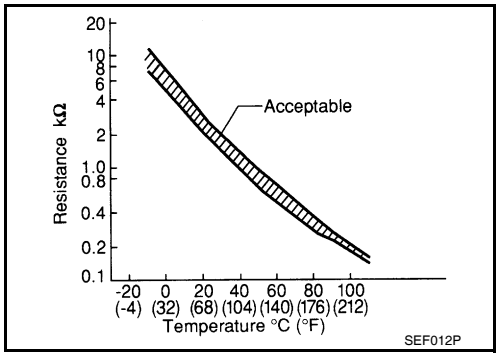

DTC Logic

INFOID:0000000004362075

DTC DETECTION LOGIC

DTC No.	Trouble diagnosis name	DTC detecting condition	Possible cause
P0127	Intake air temperature too high	Rationally incorrect voltage from the sensor is sent to ECM, compared with the voltage signal from engine coolant temperature sensor.	• Harness or connectors (The sensor circuit is open or shorted.) • Intake air temperature sensor

DTC CONFIRMATION PROCEDURE

1.PRECONDITIONING

If DTC Confirmation Procedure has been previously conducted, always perform the following before conducting the next test.
1. Turn ignition switch OFF and wait at least 10 seconds.
2. Turn ignition switch ON.
3. Turn ignition switch OFF and wait at least 10 seconds.

TESTING CONDITION:
This test may be conducted with the drive wheels lifted in the shop or by driving the vehicle. If a road test is expected to be easier, it is unnecessary to lift the vehicle.

>> GO TO 2.

2.PERFORM DTC CONFIRMATION PROCEDURE

With CONSULT-III
1. Wait until engine coolant temperature is less than 90°C (194°F)
- Turn ignition switch ON.
- Select “DATA MONITOR” mode with CONSULT-III.
- Check the engine coolant temperature.

- If the engine coolant temperature is not less than 90°C (194°F), turn ignition switch OFF and cool down engine.

NOTE:
Perform the following steps before engine coolant temperature is approximately 90°C (194°F).

2. Turn ignition switch ON.
3. Select “DATA MONITOR” mode with CONSULT-III.
4. Start engine.
5. Hold vehicle speed at more than 70 km/h (43 MPH) for 100 consecutive seconds.
   CAUTION:
   Always drive vehicle at a safe speed.
6. Check 1st trip DTC.

With GST
Follow the procedure “With CONSULT-III” above.

Is 1st trip DTC detected?

YES >> Go to EC-1222, "Diagnosis Procedure".
NO >> INSPECTION END

Diagnosis Procedure

INFOID:0000000004362076

1. CHECK GROUND CONNECTION

1. Turn ignition switch OFF.
2. Check ground connection E9. Refer to Ground Inspection in GI-45, "Circuit Inspection".

Is the inspection result normal?

YES >> GO TO 2.
NO >> Repair or replace ground connection.

2. CHECK INTAKE AIR TEMPERATURE SENSOR

Refer to EC-1222, "Component Inspection".

Is the inspection result normal?

YES >> GO TO 3.
NO >> Replace mass air flow sensor (with intake air temperature sensor).

3. CHECK INTERMITTENT INCIDENT

Refer to GI-42, "Intermittent Incident".

>> INSPECTION END

Component Inspection

INFOID:0000000004362077

1. CHECK INTAKE AIR TEMPERATURE SENSOR

1. Turn ignition switch OFF.
2. Disconnect mass air flow sensor harness connector.
3. Check resistance between mass air flow sensor terminals as per the following.

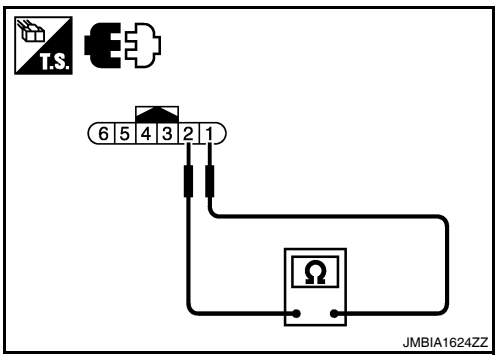

Terminal	Condition		Resistance (kΩ)
1 and 2	Temperature [°C (°F)]	25 (77)	1.800 - 2.200

Is the inspection result normal?

YES >> INSPECTION END
NO >> Replace mass air flow sensor (with intake air temperature sensor).

P0128 THERMOSTAT FUNCTION

DTC Logic

INFOID:0000000004362078

DTC DETECTION LOGIC

NOTE:
If DTC P0128 is displayed with DTC P0300, P0301, P0302, P0303, P0304, P0305 or P0306, first perform the trouble diagnosis for DTC P0300, P0301, P0302, P0303, P0304, P0305, P0306. Refer to EC-1283, "DTC Logic".
Engine coolant temperature has not risen enough to open the thermostat even though the engine has run long enough.
This is due to a leakage in the seal or the thermostat being stuck open.

DTC No.	Trouble diagnosis name	DTC detecting condition	Possible cause
P0128	Thermostat function	The engine coolant temperature does not reach to specified temperature even though the engine has run long enough.	• Thermostat • Leakage from sealing portion of thermostat • Engine coolant temperature sensor

DTC CONFIRMATION PROCEDURE

1.PRECONDITIONING

If DTC Confirmation Procedure has been previously conducted, always perform the following before conducting the next test.
1. Turn ignition switch OFF and wait at least 10 seconds.
2. Turn ignition switch ON.
3. Turn ignition switch OFF and wait at least 10 seconds.

TESTING CONDITION:
- **For best results, perform at ambient temperature of –10°C (14°F) or higher.**
- **For best results, perform at engine coolant temperature of –10°C (14°F) to 56°C (133°F).**
- **Before performing the following procedure, do not add fuel.**

>> GO TO 2.

2.PERFORM DTC CONFIRMATION PROCEDURE

With CONSULT-III
1. Turn A/C switch OFF.
2. Turn blower fan switch OFF.
3. Turn ignition switch ON.
4. Select “COOLAN TEMP/S” in “DATA MONITOR” mode with CONSULT-III.
5. Check the indication of “COOLAN TEMP/S”
   If it is below 56°C (133°F), go to next step.
   If it is above 56°C (133°F), cool down the engine to less than 56°C (133°F). Then go to next steps.
6. Start engine.
7. Drive vehicle for 10 consecutive minutes under the following conditions.

VHCL SPEED SE	More than 56 km/h (35 MPH)

CAUTION:
Always drive vehicle at a safe speed.
NOTE:
If “COOLAN TEMP/S” increases to more than 75°C (167°F) within 10 minutes, turn ignition switch OFF because the test result will be OK.

8. Check 1st trip DTC.

With GST
Follow the procedure “With CONSULT-III” above.

Is 1st trip DTC detected?

YES >> Go to EC-1224, "Diagnosis Procedure".
NO >> INSPECTION END

Diagnosis Procedure

INFOID:0000000004362079

1. CHECK ENGINE COOLANT TEMPERATURE SENSOR

Refer to EC-1224, "Component Inspection".

Is the inspection result normal?

YES >> GO TO 2.
NO >> Replace engine coolant temperature sensor.

2. CHECK THERMOSTAT

Check thermostat. Refer to CO-46, "Removal and Installation".

Is the inspection result normal?

YES >> INSPECTION END
NO >> Replace thermostat.

Component Inspection

INFOID:0000000004362080

1. CHECK ENGINE COOLANT TEMPERATURE SENSOR

1. Turn ignition switch OFF.
2. Disconnect engine coolant temperature sensor harness connector.
3. Remove engine coolant temperature sensor.
4. Check resistance between engine coolant temperature sensor terminals as per the following.

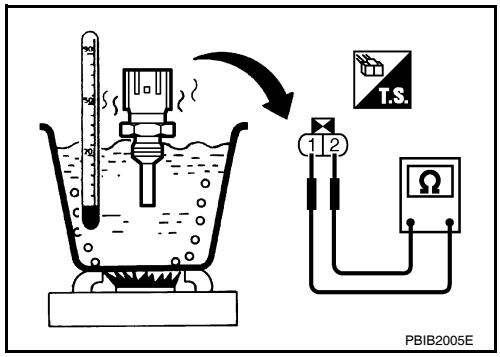

Terminals	Condition		Resistance (kΩ)
1 and 2	Temperature [°C (°F)]	20 (68)	2.1 - 2.9
		50 (122)	0.68 - 1.00
		90 (194)	0.236 - 0.260

Is the inspection result normal?

YES >> INSPECTION END
NO >> Replace engine coolant temperature sensor.

P0130, P0150 A/F SENSOR 1

Description

INFOID:0000000004362081

The air fuel ratio (A/F) sensor 1 is a planar one-cell limit current sensor. The sensor element of the A/F sensor 1 is composed an electrode layer, which transports ions. It has a heater in the element.

The sensor is capable of precise measurement λ = 1, but also in the lean and rich range. Together with its control electronics, the sensor outputs a clear, continuous signal throughout a wide λ range.

The exhaust gas components diffuse via the diffusion layer at the sensor cell. An electrode layer is applied voltage, and this current relative oxygen density in lean. Also this current relative hydrocarbon density in rich.

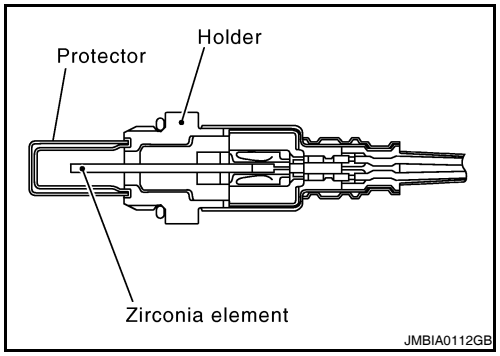

Therefore, the A/F sensor 1 is able to indicate air fuel ratio by this electrode layer of current. In addition, a heater is integrated in the sensor to ensure the required operating temperature of approximately 800°C (1,472°F).

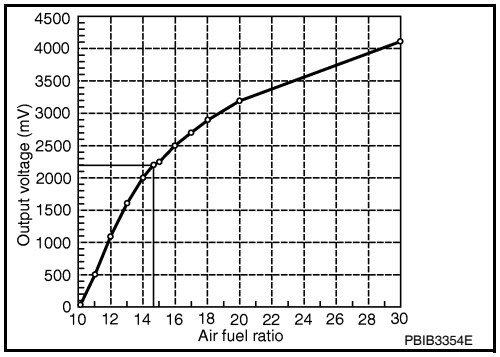

DTC Logic

INFOID:0000000004362082

DTC DETECTION LOGIC

To judge malfunctions, the diagnosis checks that the A/F signal computed by ECM from the A/F sensor 1 signal fluctuates according to fuel feedback control.

DTC No.	Trouble diagnosis name	DTC detecting condition		Possible cause
P0130	Air fuel ratio (A/F) sensor 1 (bank 1) circuit	A)	The A/F signal computed by ECM from the A/F sensor 1 signal is constantly in a range other than approx. 2.2 V.	• Harness or connectors (The sensor circuit is open or shorted.) • A/F sensor 1
		B)	The A/F signal computed by ECM from the A/F sensor 1 signal is constantly approx. 2.2 V.	
P0150	Air fuel ratio (A/F) sensor 1 (bank 2) circuit	A)	The A/F signal computed by ECM from the A/F sensor 1 signal is constantly in a range other than approx. 2.2 V.	
		B)	The A/F signal computed by ECM from the A/F sensor 1 signal is constantly approx. 2.2 V.	

DTC CONFIRMATION PROCEDURE

1.PRECONDITIONING

If DTC Confirmation Procedure has been previously conducted, always perform the following before conducting the next test.

1. Turn ignition switch OFF and wait at least 10 seconds.
2. Turn ignition switch ON.
3. Turn ignition switch OFF and wait at least 10 seconds.

TESTING CONDITION:

Before performing the following procedure, confirm that battery voltage is more than 11 V at idle.

>> GO TO 2.

2. PERFORM DTC CONFIRMATION PROCEDURE FOR MALFUNCTION A

1. Start engine and warm it up to normal operating temperature.
2. Let engine idle for 2 minutes.
3. Check 1st trip DTC.

Is 1st trip DTC detected?

YES >> Go to EC-1227, "Diagnosis Procedure".
NO-1 >> With CONSULT-III: GO TO 3.
NO-2 >> With GST: GO TO 7.

3. CHECK AIR FUEL RATIO (A/F) SENSOR 1 FUNCTION

1. Start engine and warm it up to normal operating temperature.
2. Select “A/F SEN1 (B1)” or “A/F SEN1 (B2)” in “DATA MONITOR” mode with CONSULT-III.
3. Check “A/F SEN1 (B1)” or “A/F SEN1 (B2)” indication.

Does the indication fluctuate around 2.2 V?

YES >> GO TO 4.
NO >> Go to EC-1227, "Diagnosis Procedure".

4. PERFORM DTC CONFIRMATION PROCEDURE FOR MALFUNCTION B-I

1. Select “A/F SEN1 (B1) P1276” (for DTC P0130) or “A/F SEN1 (B2) P1286” (for DTC P0150) of “A/F SEN1” in “DTC WORK SUPPORT” mode with CONSULT-III.
2. Touch “START”.
3. When the following conditions are met, “TESTING” will be displayed on the CONSULT-III screen.

ENG SPEED	1,000 - 3,200 rpm
VHCL SPEED SE	More than 64 km/h (40 mph)
B/FUEL SCHDL	1.0 - 8.0 msec
Selector lever	D position (CVT) 5th position (M/T)

If “TESTING” is not displayed after 20 seconds, retry from step 2.
CAUTION:
Always drive vehicle at a safe speed.

Is “TESTING” displayed on CONSULT-III screen?

YES >> GO TO 5.
NO >> Check A/F sensor 1 function again. GO TO 3.

5. PERFORM DTC CONFIRMATION PROCEDURE FOR MALFUNCTION B-II

Release accelerator pedal fully.
NOTE:
Never apply brake when releasing the accelerator pedal.

Which does “TESTING” change to?

COMPLETED>>GO TO 6.
OUT OF CONDITION>>Retry DTC CONFIRMATION PROCEDURE. GO TO 4.

6. PERFORM DTC CONFIRMATION PROCEDURE FOR MALFUNCTION B-III

Touch “SELF-DIAG RESULT”.

Which is displayed on CONSULT-III screen?

OK >> INSPECTION END
NG >> Go to EC-1227, "Diagnosis Procedure".

7. PERFORM COMPONENT FUNCTION CHECK FOR MALFUNCTION B

Perform component function check. Refer to EC-1227, "Component Function Check".
NOTE:
Use component function check to check the overall function of the A/F sensor 1 circuit. During this check, a 1st trip DTC might not be confirmed.

Is the inspection result normal?

YES >> INSPECTION END
NO >> Go to EC-1227, "Diagnosis Procedure".

Component Function Check

INFOID:0000000004362083

1. PERFORM COMPONENT FUNCTION CHECK

With GST

1. Start engine and warm it up to normal operating temperature.
2. Drive the vehicle at a speed of 80 km/h (50 MPH) for a few minutes in the suitable gear position.
3. Shift the selector lever to the D position (CVT) or 5th position (M/T), then release the accelerator pedal fully until the vehicle speed decreases to 50 km/h (31 MPH).
   CAUTION:
   Always drive vehicle at a safe speed.
   NOTE:
   Never apply brake when releasing the accelerator pedal.
4. Repeat steps 2 and 3 for 5 times.
5. Stop the vehicle and turn ignition switch OFF.
6. Wait at least 10 seconds and restart engine.
7. Repeat steps 2 and 3 for 5 times.
8. Stop the vehicle.
9. Check 1st trip DTC.

Is 1st trip DTC detected?

YES >> Go to EC-1227, "Diagnosis Procedure".
NO >> INSPECTION END

Diagnosis Procedure

INFOID:0000000004362084

1. CHECK GROUND CONNECTION

1. Turn ignition switch OFF.
2. Check ground connection E9. Refer to Ground Inspection in GI-45, "Circuit Inspection".

Is the inspection result normal?

YES >> GO TO 2.
NO >> Repair or replace ground connection.

2. CHECK AIR FUEL RATIO (A/F) SENSOR 1 POWER SUPPLY CIRCUIT

1. Disconnect A/F sensor 1 harness connector.
2. Turn ignition switch ON.
3. Check the voltage between A/F sensor 1 harness connector and ground.

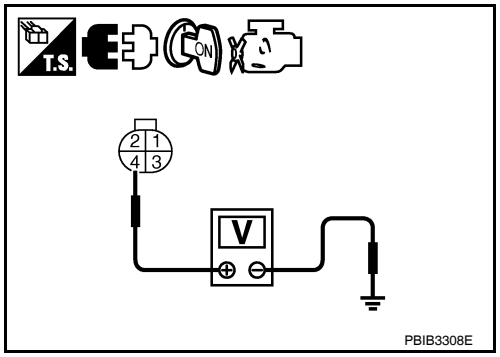

DTC	A/F sensor 1			Ground	Voltage
	Bank	Connector	Terminal		
P0130	1	F12	4	Ground	Battery voltage
P0150	2	F61	4		

Is the inspection result normal?

YES >> GO TO 4.
NO >> GO TO 3.

3. DETECT MALFUNCTIONING PART

Check the following.
- IPDM E/R harness connector F10
- 15 A fuse (No. 37)
- Harness for open or short between A/F sensor 1 and IPDM E/R

>> Repair or replace harness or connectors.

4. CHECK A/F SENSOR 1 INPUT SIGNAL CIRCUIT FOR OPEN AND SHORT

1. Turn ignition switch OFF.
2. Disconnect ECM harness connector.
3. Check the continuity between A/F sensor 1 harness connector and ECM harness connector.

DTC	A/F sensor 1			ECM		Continuity
	Bank	Connector	Terminal	Connector	Terminal	
P0130	1	F12	1	F13	45	Existed
			2		49	
P0150	2	F61	1		53	
			2		57	

4. Check the continuity between A/F sensor 1 harness connector and ground, or ECM harness connector and ground.

DTC	A/F sensor 1			Ground	Continuity
	Bank	Connector	Terminal		
P0130	1	F12	1	Ground	Not existed
			2		
P0150	2	F61	1		
			2		

DTC	ECM		Ground	Continuity
	Connector	Terminal		
P0130	F13	45	Ground	Not existed
		49		
P0150		53		
		57		

5. Also check harness for short to power.

Is the inspection result normal?

YES >> GO TO 5.
NO >> Repair open circuit, short to ground or short to power in harness or connectors.

5. CHECK INTERMITTENT INCIDENT

Perform GI-42, "Intermittent Incident".

Is the inspection result normal?

YES >> GO TO 6.
NO >> Repair or replace malfunctioning part.

6. REPLACE AIR FUEL RATIO (A/F) SENSOR 1

Replace malfunctioning air fuel ratio (A/F) sensor 1.

CAUTION:

- **Discard any A/F sensor which has been dropped from a height of more than 0.5 m (19.7 in) onto a hard surface such as a concrete floor; use a new one.**
- **Before installing new A/F sensor, clean exhaust system threads using Oxygen Sensor Thread Cleaner [commercial service tool (J-43897-18 or J-43897-12)] and approved anti-seize lubricant (commercial service tool).**

>> INSPECTION END

P0131, P0151 A/F SENSOR 1

Description

INFOID:0000000004362085

The air fuel ratio (A/F) sensor 1 is a planar one-cell limit current sensor. The sensor element of the A/F sensor 1 is composed an electrode layer, which transports ions. It has a heater in the element.

The sensor is capable of precise measurement λ = 1, but also in the lean and rich range. Together with its control electronics, the sensor outputs a clear, continuous signal throughout a wide λ range.

The exhaust gas components diffuse via the diffusion layer at the sensor cell. An electrode layer is applied voltage, and this current relative oxygen density in lean. Also this current relative hydrocarbon density in rich.

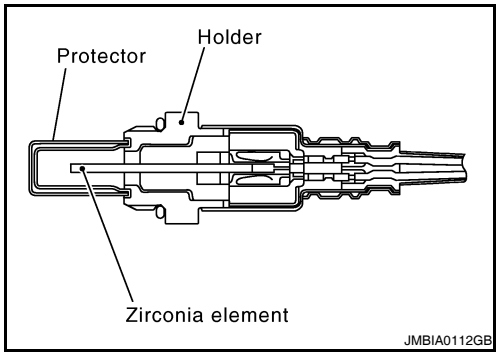

Therefore, the A/F sensor 1 is able to indicate air fuel ratio by this electrode layer of current. In addition, a heater is integrated in the sensor to ensure the required operating temperature of approximately 800°C (1,472°F).

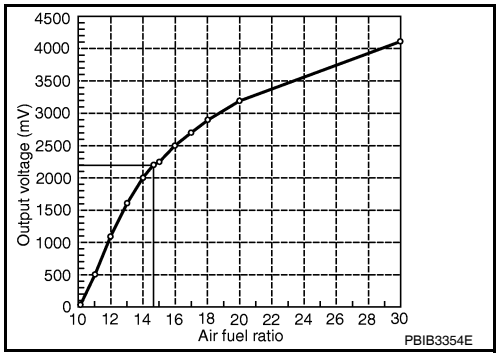

DTC Logic

INFOID:0000000004362086

DTC DETECTION LOGIC

To judge the malfunction, the diagnosis checks that the A/F signal computed by ECM from the A/F sensor 1 signal is not inordinately low.

DTC No.	Trouble diagnosis name	DTC detecting condition	Possible cause
P0131	Air fuel ratio (A/F) sensor 1 (bank 1) circuit low voltage	• The A/F signal computed by ECM from the A/F sensor 1 signal is constantly approx. 0 V.	• Harness or connectors (The sensor circuit is open or shorted.) • A/F sensor 1
P0151	Air fuel ratio (A/F) sensor 1 (bank 2) circuit low voltage		

DTC CONFIRMATION PROCEDURE

1. PRECONDITIONING

If DTC Confirmation Procedure has been previously conducted, always perform the following before conducting the next test.

1. Turn ignition switch OFF and wait at least 10 seconds.
2. Turn ignition switch ON.
3. Turn ignition switch OFF and wait at least 10 seconds.

TESTING CONDITION:

Before performing the following procedure, confirm that battery voltage is more than 10.5 V at idle.

>> GO TO 2.

2. CHECK A/F SENSOR 1 FUNCTION

With CONSULT-III

1. Start engine and warm it up to normal operating temperature.
2. Select “A/F SEN1 (B1)” or “A/F SEN1 (B2)” in “DATA MONITOR” mode with CONSULT-III.
3. Check “A/F SEN1 (B1)” or “A/F SEN1 (B2)” indication.

With GST

Follow the procedure “With CONSULT-III” above.

Is the indication constantly approx. 0 V?

YES >> Go to EC-1230, "Diagnosis Procedure".
NO >> GO TO 3.

3. PERFORM DTC CONFIRMATION PROCEDURE

With CONSULT-III

1. Turn ignition switch OFF, wait at least 10 seconds.
2. Turn ignition switch ON.
3. Turn ignition switch OFF, wait at least 10 seconds and then restart engine.
4. Drive and accelerate vehicle to more than 40 km/h (25 MPH) within 20 seconds after restarting engine.
   CAUTION:
   Always drive vehicle at a safe speed.
5. Maintain the following conditions for approximately 20 consecutive seconds.

ENG SPEED	1,000 - 3,200 rpm
VHCL SPEED SE	More than 40 km/h (25 mph)
B/FUEL SCHDL	1.5 - 9.0 msec
Selector lever	Suitable position

NOTE:
- **Keep the accelerator pedal as steady as possible during cruising.**
- **If this procedure is not completed within 1 minute after restarting engine at step 1, return to step 1.**

6. Check 1st trip DTC.

With GST

Follow the procedure “With CONSULT-III” above.

Is 1st trip DTC detected?

YES >> Go to EC-1230, "Diagnosis Procedure".
NO >> INSPECTION END

Diagnosis Procedure

INFOID:0000000004362087

1. CHECK GROUND CONNECTION

1. Turn ignition switch OFF.
2. Check ground connection E9. Refer to Ground Inspection in GI-45, "Circuit Inspection".

Is the inspection result normal?

YES >> GO TO 2.
NO >> Repair or replace ground connection.

2. CHECK AIR FUEL RATIO (A/F) SENSOR 1 POWER SUPPLY CIRCUIT

1. Disconnect A/F sensor 1 harness connector.
2. Turn ignition switch ON.
3. Check the voltage between A/F sensor 1 harness connector and ground.

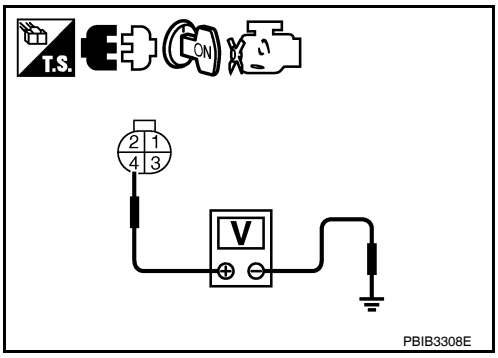

DTC	A/F sensor 1			Ground	Voltage
	Bank	Connector	Terminal		
P0131	1	F12	4	Ground	Battery voltage
P0151	2	F61	4		

Is the inspection result normal?

YES >> GO TO 4.
NO >> GO TO 3.

3. DETECT MALFUNCTIONING PART

Check the following.
- IPDM E/R harness connector F10
- 15 A fuse (No. 37)
- Harness for open or short between A/F sensor 1 and IPDM E/R

>> Repair or replace harness or connectors.

4. CHECK A/F SENSOR 1 INPUT SIGNAL CIRCUIT FOR OPEN AND SHORT

1. Turn ignition switch OFF.
2. Disconnect ECM harness connector.
3. Check the continuity between A/F sensor 1 harness connector and ECM harness connector.

DTC	A/F sensor 1			ECM		Continuity
	Bank	Connector	Terminal	Connector	Terminal	
P0131	1	F12	1	F13	45	Existed
			2		49	
P0151	2	F61	1		53	
			2		57	

4. Check the continuity between A/F sensor 1 harness connector and ground, or ECM harness connector and ground.

DTC	A/F sensor 1			Ground	Continuity
	Bank	Connector	Terminal		
P0131	1	F12	1	Ground	Not existed
			2		
P0151	2	F61	1		
			2		

DTC	ECM		Ground	Continuity
	Connector	Terminal		
P0131	F13	45	Ground	Not existed
		49		
P0151		53		
		57		

5. Also check harness for short to power.

Is the inspection result normal?

YES >> GO TO 5.
NO >> Repair open circuit, short to ground or short to power in harness or connectors.

5. CHECK INTERMITTENT INCIDENT

Perform GI-42, "Intermittent Incident".

Is the inspection result normal?

YES >> GO TO 6.
NO >> Repair or replace malfunctioning part.

6. REPLACE AIR FUEL RATIO (A/F) SENSOR 1

Replace malfunctioning air fuel ratio (A/F) sensor 1.

CAUTION:
- **Discard any A/F sensor which has been dropped from a height of more than 0.5 m (19.7 in) onto a hard surface such as a concrete floor; use a new one.**

- **Before installing new A/F sensor, clean exhaust system threads using Oxygen Sensor Thread Cleaner [commercial service tool (J-43897-18 or J-43897-12)] and approved anti-seize lubricant (commercial service tool).**

>> INSPECTION END

P0132, P0152 A/F SENSOR 1

Description

INFOID:0000000004362088

The air fuel ratio (A/F) sensor 1 is a planar one-cell limit current sensor. The sensor element of the A/F sensor 1 is composed an electrode layer, which transports ions. It has a heater in the element.

The sensor is capable of precise measurement λ = 1, but also in the lean and rich range. Together with its control electronics, the sensor outputs a clear, continuous signal throughout a wide λ range.

The exhaust gas components diffuse via the diffusion layer at the sensor cell. An electrode layer is applied voltage, and this current relative oxygen density in lean. Also this current relative hydrocarbon density in rich.

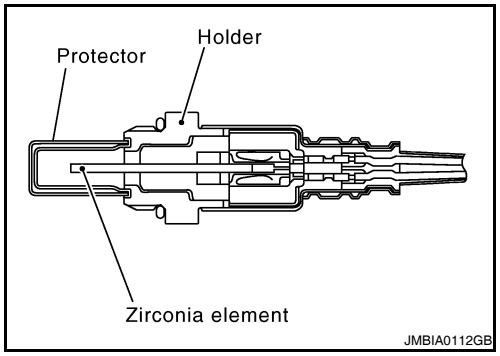

Therefore, the A/F sensor 1 is able to indicate air fuel ratio by this electrode layer of current. In addition, a heater is integrated in the sensor to ensure the required operating temperature of approximately 800°C (1,472°F).

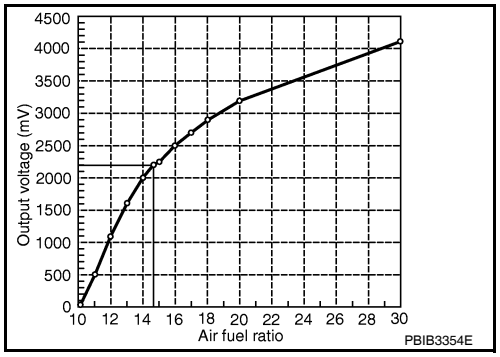

DTC Logic

INFOID:0000000004362089

DTC DETECTION LOGIC

To judge the malfunction, the diagnosis checks that the A/F signal computed by ECM from the A/F sensor 1 signal is not inordinately high.

DTC No.	Trouble diagnosis name	DTC detecting condition	Possible cause
P0132	Air fuel ratio (A/F) sensor 1 (bank 1) circuit high voltage	• The A/F signal computed by ECM from the A/F sensor 1 signal is constantly approx. 5 V.	• Harness or connectors (The sensor circuit is open or shorted.) • A/F sensor 1
P0152	Air fuel ratio (A/F) sensor 1 (bank 2) circuit high voltage		

DTC CONFIRMATION PROCEDURE

1. PRECONDITIONING

If DTC Confirmation Procedure has been previously conducted, always preform the following before conducting the next test.

1. Turn ignition switch OFF and wait at least 10 seconds.
2. Turn ignition switch ON.
3. Turn ignition switch OFF and wait at least 10 seconds.

TESTING CONDITION:

Before performing the following procedure, confirm that battery voltage is more than 10.5 V at idle.

>> GO TO 2.

2. CHECK A/F SENSOR 1 FUNCTION

With CONSULT-III

1. Start engine and warm it up to normal operating temperature.
2. Select “A/F SEN1 (B1)” or “A/F SEN1 (B2)” in “DATA MONITOR” mode with CONSULT-III.
3. Check “A/F SEN1 (B1)” or “A/F SEN1 (B2)” indication.

With GST

Follow the procedure “With CONSULT-III” above.

Is the indication constantly approx. 5 V?

YES >> Go to EC-1234, "Diagnosis Procedure".
NO >> GO TO 3.

3. PERFORM DTC CONFIRMATION PROCEDURE

With CONSULT-III

1. Turn ignition switch OFF and wait at least 10 seconds.
2. Turn ignition switch ON.
3. Turn ignition switch OFF, wait at least 10 seconds and then restart engine.
4. Drive and accelerate vehicle to more than 40 km/h (25 MPH) within 20 seconds after restarting engine.
   CAUTION:
   Always drive vehicle at a safe speed.
5. Maintain the following conditions for approximately 20 consecutive seconds.

ENG SPEED	1,000 - 3,200 rpm
VHCL SPEED SE	More than 40 km/h (25 mph)
B/FUEL SCHDL	1.5 - 9.0 msec
Selector lever	Suitable position

NOTE:
- **Keep the accelerator pedal as steady as possible during cruising.**
- **If this procedure is not completed within 1 minute after restarting engine at step 1, return to step 1.**

6. Check 1st trip DTC.

With GST

Follow the procedure “With CONSULT-III” above.

Is 1st trip DTC detected?

YES >> Go to EC-1234, "Diagnosis Procedure".
NO >> INSPECTION END

Diagnosis Procedure

INFOID:0000000004362090

1. CHECK GROUND CONNECTION

1. Turn ignition switch OFF.
2. Check ground connection E9. Refer to Ground Inspection in GI-45, "Circuit Inspection".

Is the inspection result normal?

YES >> GO TO 2.
NO >> Repair or replace ground connection.

2. CHECK AIR FUEL RATIO (A/F) SENSOR 1 POWER SUPPLY CIRCUIT

1. Disconnect A/F sensor 1 harness connector.
2. Turn ignition switch ON.
3. Check the voltage between A/F sensor 1 harness connector and ground.

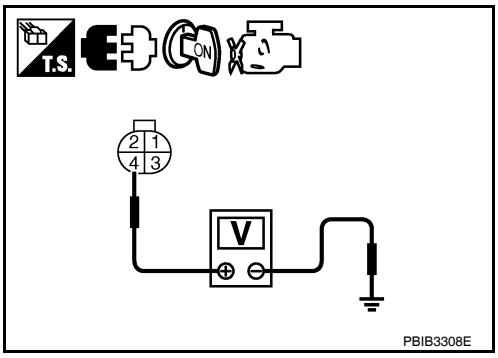

DTC	A/F sensor 1			Ground	Voltage
	Bank	Connector	Terminal		
P0132	1	F12	4	Ground	Battery voltage
P0152	2	F61	4		

Is the inspection result normal?

YES >> GO TO 4.
NO >> GO TO 3.

3. DETECT MALFUNCTIONING PART

Check the following.
- IPDM E/R harness connector F10
- 15 A fuse (No. 37)
- Harness for open or short between A/F sensor 1 and IPDM E/R

>> Repair or replace harness or connectors.

4. CHECK A/F SENSOR 1 INPUT SIGNAL CIRCUIT FOR OPEN AND SHORT

1. Turn ignition switch OFF.
2. Disconnect ECM harness connector.
3. Check the continuity between A/F sensor 1 harness connector and ECM harness connector.

DTC	A/F sensor 1			ECM		Continuity
	Bank	Connector	Terminal	Connector	Terminal	
P0132	1	F12	1	F13	45	Existed
			2		49	
P0152	2	F61	1		53	
			2		57	

4. Check the continuity between A/F sensor 1 harness connector and ground, or ECM harness connector and ground.

DTC	A/F sensor 1			Ground	Continuity
	Bank	Connector	Terminal		
P0132	1	F12	1	Ground	Not existed
			2		
P0152	2	F61	1		
			2		

DTC	ECM		Ground	Continuity
	Connector	Terminal		
P0132	F13	45	Ground	Not existed
		49		
P0152		53		
		57		

5. Also check harness for short to power.

Is the inspection result normal?

YES >> GO TO 5.
NO >> Repair open circuit, short to ground or short to power in harness or connectors.

5. CHECK INTERMITTENT INCIDENT

Perform GI-42, "Intermittent Incident".

Is the inspection result normal?

YES >> GO TO 6.
NO >> Repair or replace malfunctioning part.

6. REPLACE AIR FUEL RATIO (A/F) SENSOR 1

Replace malfunctioning air fuel ratio (A/F) sensor 1.

CAUTION:
- **Discard any A/F sensor which has been dropped from a height of more than 0.5 m (19.7 in) onto a hard surface such as a concrete floor; use a new one.**

- **Before installing new A/F sensor, clean exhaust system threads using Oxygen Sensor Thread Cleaner [commercial service tool (J-43897-18 or J-43897-12)] and approved anti-seize lubricant (commercial service tool).**

>> INSPECTION END

P0133, P0153 A/F SENSOR 1

Description

INFOID:0000000004362091

The air fuel ratio (A/F) sensor 1 is a planar one-cell limit current sensor. The sensor element of the A/F sensor 1 is composed an electrode layer, which transports ions. It has a heater in the element.

The sensor is capable of precise measurement λ = 1, but also in the lean and rich range. Together with its control electronics, the sensor outputs a clear, continuous signal throughout a wide λ range.

The exhaust gas components diffuse via the diffusion layer at the sensor cell. An electrode layer is applied voltage, and this current relative oxygen density in lean. Also this current relative hydrocarbon density in rich.

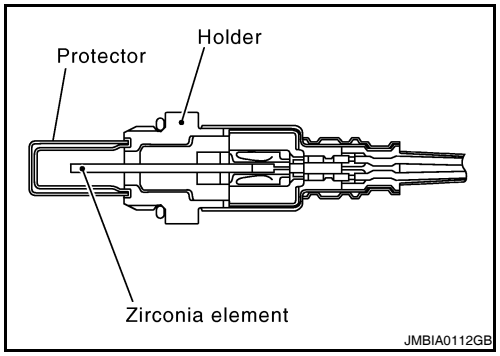

Therefore, the A/F sensor 1 is able to indicate air fuel ratio by this electrode layer of current. In addition, a heater is integrated in the sensor to ensure the required operating temperature of approximately 800°C (1,472°F).

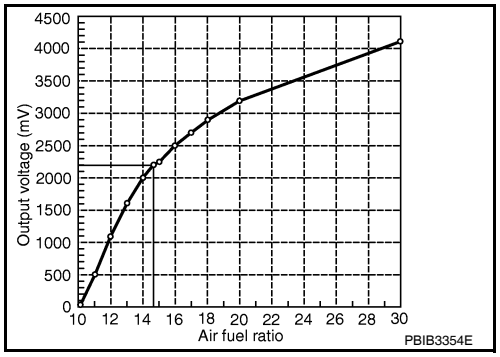

DTC Logic

INFOID:0000000004362092

DTC DETECTION LOGIC

To judge the malfunction of A/F sensor 1, this diagnosis measures response time of the A/F signal computed by ECM from the A/F sensor 1 signal. The time is compensated by engine operating (speed and load), fuel feedback control constant, and the A/F sensor 1 temperature index. Judgment is based on whether the compensated time (the A/F signal cycling time index) is inordinately long or not.

DTC No.	Trouble diagnosis name	DTC detecting condition	Possible cause
P0133	Air fuel ratio (A/F) sensor 1 (bank 1) circuit slow response	• The response of the A/F signal computed by ECM from A/F sensor 1 signal takes more than the specified time.	• Harness or connectors (The sensor circuit is open or shorted.) • A/F sensor 1 • A/F sensor 1 heater • Fuel pressure • Fuel injector • Intake air leakage • Exhaust gas leakage • PCV • Mass air flow sensor
P0153	Air fuel ratio (A/F) sensor 1 (bank 2) circuit slow response		

DTC CONFIRMATION PROCEDURE

1.PRECONDITIONING

If DTC Confirmation Procedure has been previously conducted, always perform the following before conducting the next test.

1. Turn ignition switch OFF and wait at least 10 seconds.
2. Turn ignition switch ON.
3. Turn ignition switch OFF and wait at least 10 seconds.

TESTING CONDITION:

Before performing the following procedure, confirm that battery voltage is more than 11 V at idle.

Will CONSULT-III be used?

YES >> GO TO 2.

NO >> GO TO 5.

2. PERFORM DTC CONFIRMATION PROCEDURE-I

With CONSULT-III

1. Start engine and warm it up to normal operating temperature.
2. Turn ignition switch OFF and wait at least 10 seconds.
3. Turn ignition switch ON.
4. Turn ignition switch OFF and wait at least 10 seconds.
5. Start engine and keep the engine speed between 3,500 and 4,000 rpm for at least 1 minute under no load.
6. Let engine idle for 1 minute.
7. Select “A/F SEN1(B1) P1278/P1279” (for DTC P0133) or “A/F SEN1(B2) P1288/P1289” (for DTC P0153) of “A/F SEN1” in “DTC WORK SUPPORT” mode with CONSULT-III.
8. Touch “START”.

Is COMPLETED displayed?

YES >> GO TO 3.
NO >> GO TO 4.

3. PERFORM DTC CONFIRMATION PROCEDURE-II

Check that “OK” is displayed after touching “SELF-DIAG RESULT”.

Is OK displayed?

YES >> INSPECTION END
NO >> Go to EC-1239, "Diagnosis Procedure".

4. PERFORM DTC CONFIRMATION PROCEDURE-III

1. After perform the following procedure, “TESTING” will be displayed on the CONSULT-III screen.
- Increase the engine speed up to between 4,000 and 5,000 rpm and maintain that speed for 10 seconds.
- Fully release accelerator pedal and then let engine idle for approximately 10 seconds.

If “TESTING” is not displayed after 10 seconds, go to EC-1167, "Component Function Check".

2. Wait for approximately 20 seconds at idle under the condition that “TESTING” is displayed on the CONSULT-III screen.
3. Check that “TESTING” changes to “COMPLETED”.
   If “TESTING” changed to “OUT OF CONDITION”, go to EC-1167, "Component Function Check".
4. Check that “OK” is displayed after touching “SELF-DIAG RESULT”.

Is OK displayed?

YES >> INSPECTION END
NO >> Go to EC-1239, "Diagnosis Procedure".

5. CHECK MIXTURE RATIO SELF-LEARNING VALUE

With GST

1. Start engine and warm it up to normal operating temperature.
2. Select Service $01 with GST.
3. Calculate the total value of “Short term fuel trim” and “Long term fuel trim” indications.

Is the total percentage within ±15%?

YES >> GO TO 7.
NO >> GO TO 6.

6. DETECT MALFUNCTIONING PART

Check the following.

- Intake air leakage
- Exhaust gas leakage
- Incorrect fuel pressure
- Lack of fuel
- Fuel injector
- Incorrect PCV hose connection
- PCV valve
- Mass air flow sensor

>> Repair or replace malfunctioning part.

7. PERFORM DTC CONFIRMATION PROCEDURE-IV

1. Turn ignition switch OFF and wait at least 10 seconds.
2. Turn ignition switch ON.
3. Turn ignition switch OFF and wait at least 10 seconds.
4. Start engine and keep the engine speed between 3,500 and 4,000 rpm for at least 1 minute under no load.
5. Let engine idle for 1 minute.
6. Increase the engine speed up to between 4,000 and 5,000 rpm and maintain that speed for 10 seconds.
7. Fully release accelerator pedal and then let engine idle for approximately 1 minute.
8. Check 1st trip DTC.

Is 1st trip DTC detected?

YES >> Go to EC-1239, "Diagnosis Procedure".
NO >> INSPECTION END

Diagnosis Procedure

INFOID:0000000004362093

1. CHECK GROUND CONNECTION

1. Turn ignition switch OFF.
2. Check ground connection E9. Refer to Ground Inspection in GI-45, "Circuit Inspection".

Is the inspection result normal?

YES >> GO TO 2.
NO >> Repair or replace ground connection.

2. RETIGHTEN A/F SENSOR 1

Loosen and retighten the A/F sensor 1. Refer to EM-136, "Removal and Installation".

>> GO TO 3.

3. CHECK EXHAUST GAS LEAKAGE

1. Start engine and run it at idle.
2. Listen for an exhaust gas leakage before three way catalyst (manifold).

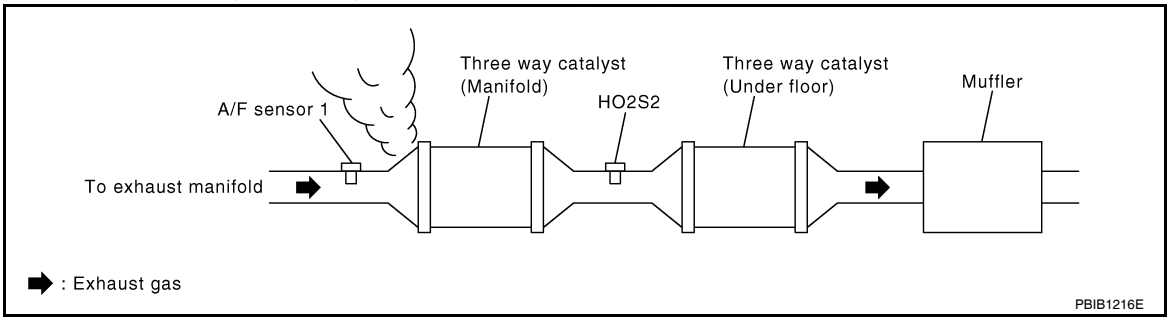

Is exhaust gas leakage detected?

YES >> Repair or replace malfunctioning part.
NO >> GO TO 4.

4. CHECK FOR INTAKE AIR LEAKAGE

Listen for an intake air leakage after the mass air flow sensor.

Is intake air leakage detected?

YES >> Repair or replace malfunctioning part.
NO >> GO TO 5.

5. CLEAR MIXTURE RATIO SELF-LEARNING VALUE

1. Clear the mixture ratio self-learning value. Refer to EC-1055, "MIXTURE RATIO SELF-LEARNING VALUE CLEAR : Special Repair Requirement".
2. Run engine for at least 10 minutes at idle speed.
3. Check 1st trip DTC.

Is the 1st trip DTC P0171, P0172, P0174 or P0175 detected? Is it difficult to start engine?

YES >> Perform trouble diagnosis for DTC P0171, P0174 or P0172, P0175. Refer to EC-1266, "DTC Logic" or EC-1270, "DTC Logic".
NO >> GO TO 6.

6. CHECK AIR FUEL RATIO (A/F) SENSOR 1 POWER SUPPLY CIRCUIT

1. Turn ignition switch OFF.
2. Disconnect A/F sensor 1 harness connector.
3. Turn ignition switch ON.
4. Check the voltage between A/F sensor 1 harness connector and ground.

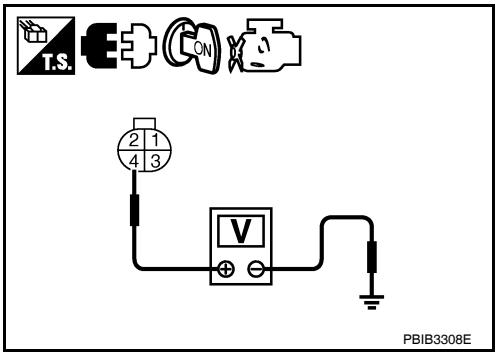

DTC	A/F sensor 1			Ground	Voltage
	Bank	Connector	Terminal		
P0133	1	F12	4	Ground	Battery voltage
P0153	2	F61	4		

Is the inspection result normal?

YES >> GO TO 8.
NO >> GO TO 7.

7. DETECT MALFUNCTIONING PART

Check the following.
- IPDM E/R harness connector F10
- 15 A fuse (No. 37)
- Harness for open or short between A/F sensor 1 and IPDM E/R

>> Repair or replace harness or connectors.

8. CHECK A/F SENSOR 1 INPUT SIGNAL CIRCUIT FOR OPEN AND SHORT

1. Turn ignition switch OFF.
2. Disconnect ECM harness connector.
3. Check the continuity between A/F sensor 1 harness connector and ECM harness connector.

DTC	A/F sensor 1			ECM		Continuity
	Bank	Connector	Terminal	Connector	Terminal	
P0133	1	F12	1	F13	45	Existed
			2		49	
P0153	2	F61	1		53	
			2		57	

4. Check the continuity between A/F sensor 1 harness connector and ground, or ECM harness connector ground.

DTC	A/F sensor 1			Ground	Continuity
	Bank	Connector	Terminal		
P0133	1	F12	1	Ground	Not existed
			2		
P0153	2	F61	1		
			2		

DTC	ECM		Ground	Continuity
	Connector	Terminal		
P0133	F13	45	Ground	Not existed
		49		
P0153		53		
		57		

5. Also check harness for short to power.

Is the inspection result normal?

YES >> GO TO 9.
NO >> Repair open circuit, short to ground or short to power in harness or connectors.

9. CHECK AIR FUEL RATIO (A/F) SENSOR 1 HEATER

Refer to EC-1186, "Component Inspection".

Is the inspection result normal?

YES >> GO TO 10.
NO >> GO TO 13.

10. CHECK MASS AIR FLOW SENSOR

Refer to EC-1197, "Component Inspection".

Is the inspection result normal?

YES >> GO TO 11.
NO >> Replace mass air flow sensor.

11. CHECK PCV VALVE

Refer to EC-1502, "Component Inspection".

Is the inspection result normal?

YES >> GO TO 12.
NO >> Repair or replace PCV valve.

12. CHECK INTERMITTENT INCIDENT

Perform GI-42, "Intermittent Incident".

Is the inspection result normal?

YES >> GO TO 13.
NO >> Repair or replace malfunctioning part.

13. REPLACE AIR FUEL RATIO (A/F) SENSOR 1

Replace malfunctioning air fuel ratio (A/F) sensor 1.

CAUTION:

- **Discard any A/F sensor which has been dropped from a height of more than 0.5 m (19.7 in) onto a hard surface such as a concrete floor; use a new one.**
- **Before installing new A/F sensor, clean exhaust system threads using Oxygen Sensor Thread Cleaner [commercial service tool (J-43897-18 or J-43897-12)] and approved anti-seize lubricant (commercial service tool).**

>> INSPECTION END

P0137, P0157 HO2S2

Description

INFOID:0000000004362094

The heated oxygen sensor 2, after three way catalyst (manifold), monitors the oxygen level in the exhaust gas on each bank.
Even if switching characteristics of the air fuel ratio (A/F) sensor 1 are shifted, the air-fuel ratio is controlled to stoichiometric, by the signal from the heated oxygen sensor 2.
This sensor is made of ceramic zirconia. The zirconia generates voltage from approximately 1 V in richer conditions to 0 V in leaner conditions.
Under normal conditions the heated oxygen sensor 2 is not used for engine control operation.

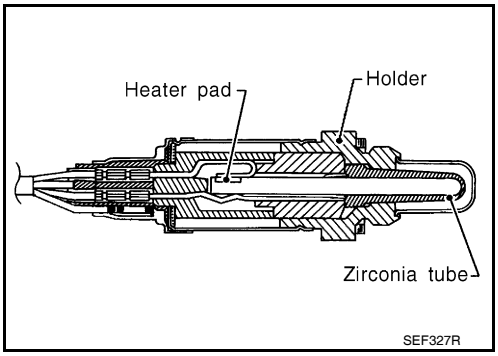

DTC Logic

INFOID:0000000004362095

DTC DETECTION LOGIC

The heated oxygen sensor 2 has a much longer switching time between rich and lean than the air fuel ratio (A/F) sensor 1. The oxygen storage capacity of the three way catalyst (manifold) causes the longer switching time. To judge the malfunctions of heated oxygen sensor 2, ECM monitors whether the maximum voltage of the sensor is sufficiently high during various driving conditions such as fuel cut.

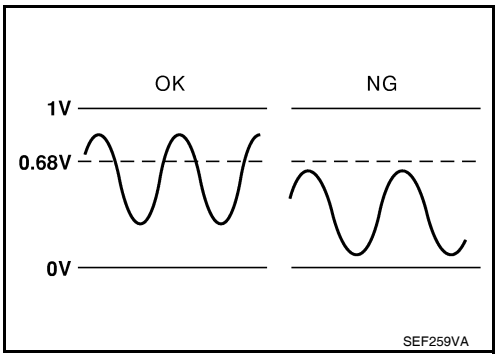

DTC No.	Trouble diagnosis name	DTC detecting condition	Possible cause
P0137	Heated oxygen sensor 2 (bank 1) circuit low voltage	The maximum voltage from the sensor does not reach the specified voltage.	• Harness or connectors (The sensor circuit is open or shorted.) • Heated oxygen sensor 2 • Fuel pressure • Fuel injector • Intake air leakage
P0157	Heated oxygen sensor 2 (bank 2) circuit low voltage		

DTC CONFIRMATION PROCEDURE

1. INSPECTION START

Will CONSULT-III be used?

Will CONSULT-III be used?

YES >> GO TO 2.
NO >> GO TO 5.

2. PRECONDITIONING

If DTC confirmation Procedure has been previously conducted, always perform the following before conducting the next test.

1. Turn ignition switch OFF and wait at least 10 seconds.
2. Turn ignition switch ON.
3. Turn ignition switch OFF and wait at least 10 seconds.

TESTING CONDITION:
For better results, perform “DTC WORK SUPPORT” at a temperature of 0 to 30°C (32 to 86°F).

>> GO TO 3.

3. PERFORM DTC CONFIRMATION PROCEDURE

With CONSULT-III

1. Turn ignition switch ON and select “DATA MONITOR” mode with CONSULT-III.
2. Start engine and warm it up to the normal operating temperature.
3. Turn ignition switch OFF and wait at least 10 seconds.
4. Turn ignition switch ON.
5. Turn ignition switch OFF and wait at least 10 seconds.
6. Start engine and keep the engine speed between 3,500 and 4,000 rpm for at least 1 minute under no load.
7. Let engine idle for 1 minute.
8. Check that “COOLAN TEMP/S” indicates more than 70°C (158°F).
   If not, warm up engine and go to next step when “COOLAN TEMP/S” indication reaches 70°C (158°F).
9. Open engine hood.
10. Select “HO2S2 (B1) P1147” (for DTC P0137) or “HO2S2 (B2) P1167” (for DTC P0157) of “HO2S2” in “DTC WORK SUPPORT” mode with CONSULT-III display.
11. Follow the instruction of CONSULT-III.
    NOTE:
    It will take at most 10 minutes until “COMPLETED” is displayed.
12. Touch “SELF-DIAG RESULTS”.

Which is displayed on CONSULT-III screen?

OK >> INSPECTION END
NG >> Go to EC-1245, "Diagnosis Procedure".
CANNOT BE DIAGNOSED>>GO TO 4.

4. PERFORM DTC CONFIRMATION PROCEDURE AGAIN

1. Turn ignition switch OFF and leave the vehicle in a cool place (soak the vehicle).
2. Perform DTC confirmation procedure again.

>> GO TO 3.

5. PERFORM COMPONENT FUNCTION CHECK

Perform component function check. Refer to EC-1243, "Component Function Check".
NOTE:
Use component function check to check the overall function of the heated oxygen sensor 2 circuit. During this check, a 1st trip DTC might not be confirmed.

Is the inspection result normal?

YES >> INSPECTION END
NO >> Go to EC-1245, "Diagnosis Procedure".

Component Function Check

INFOID:0000000004362096

1. PERFORM COMPONENT FUNCTION CHECK-I

Without CONSULT-III

1. Start engine and warm it up to the normal operating temperature.
2. Turn ignition switch OFF and wait at least 10 seconds.
3. Turn ignition switch ON.
4. Turn ignition switch OFF and wait at least 10 seconds.
5. Start engine and keep the engine speed between 3,500 and 4,000 rpm for at least 1 minute under no load.
6. Let engine idle for 1 minute.

7. Check the voltage between ECM harness connector terminals under the following conditions.

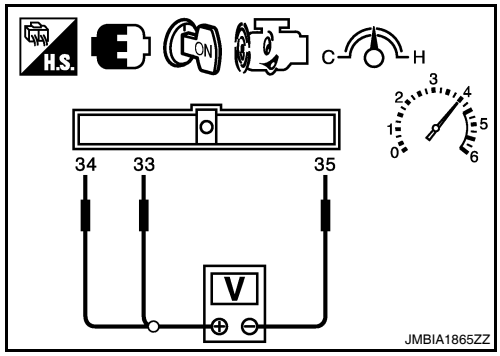

DTC	ECM			Condition	Voltage
	Connec-tor	+	–		
		Terminal	Terminal		
P0137	F13	33 [HO2S2 (bank 1) signal]	35 (Sensor ground)	Revving up to 4,000 rpm under no load at least 10 times	The voltage should be above 0.68 V at least once during this procedure.
P0157		34 [HO2S2 (bank 2) signal]			

Is the inspection result normal?

YES >> INSPECTION END
NO >> GO TO 2.

2. PERFORM COMPONENT FUNCTION CHECK-II

Check the voltage between ECM harness connector terminals under the following conditions.

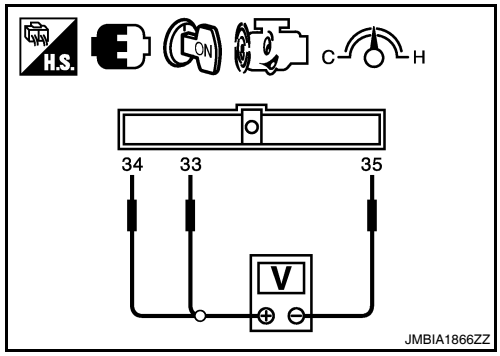

DTC	ECM			Condition	Voltage
	Connec-tor	+	–		
		Terminal	Terminal		
P0137	F13	33 [HO2S2 (bank 1) signal]	35 (Sensor ground)	Keeping engine at idle for 10 min-utes	The voltage should be above 0.68 V at least once during this procedure.
P0157		34 [HO2S2 (bank 2) signal]			

Is the inspection result normal?

YES >> INSPECTION END
NO >> GO TO 3.

3. PERFORM COMPONENT FUNCTION CHECK-III

Check the voltage between ECM harness connector terminals under the following conditions.

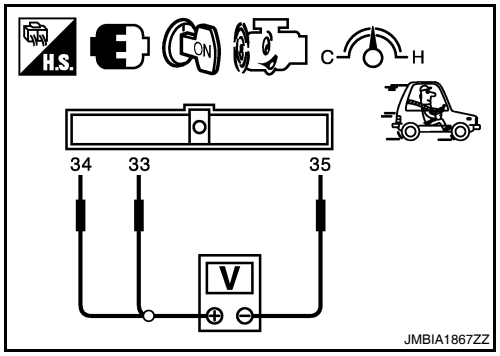

DTC	ECM			Condition	Voltage
	Connec-tor	+	–		
		Terminal	Terminal		
P0137	F13	33 [HO2S2 (bank 1) signal]	35 (Sensor ground)	Coasting from 80 km/h (50 MPH) while selector lever is in the D (CVT) or 4th position (M/T)	The voltage should be above 0.68 V at least once during this procedure.
P0157		34 [HO2S2 (bank 2) signal]			

Is the inspection result normal?

YES >> INSPECTION END
NO >> Go to EC-1245, "Diagnosis Procedure".

Diagnosis Procedure

INFOID:0000000004362097

1. CHECK GROUND CONNECTION

1. Turn ignition switch OFF.
2. Check ground connection E9. Refer to Ground Inspection in GI-45, "Circuit Inspection".

Is the inspection result normal?

YES >> GO TO 2.
NO >> Repair or replace ground connection.

2. CLEAR MIXTURE RATIO SELF-LEARNING VALUE

1. Clear the mixture ratio self-learning value. Refer to EC-1055, "MIXTURE RATIO SELF-LEARNING VALUE CLEAR : Special Repair Requirement".
2. Run engine for at least 10 minutes at idle speed.

Is the 1st trip DTC P0171 or P0174 detected? Is it difficult to start engine?

YES >> Perform trouble diagnosis for DTC P0171 or P0174. Refer to EC-1266, "DTC Logic".
NO >> GO TO 3.

3. CHECK HO2S2 GROUND CIRCUIT FOR OPEN AND SHORT

1. Turn ignition switch OFF.
2. Disconnect heated oxygen sensor 2 harness connector.
3. Disconnect ECM harness connector.
4. Check the continuity between heated oxygen sensor 2 (HO2S2) harness connector and ECM harness connector.

DTC	HO2S2			ECM		Continuity
	Bank	Connector	Terminal	Connector	Terminal	
P0137	1	F62	1	F13	35	Existed
P0157	2	F56	1			

5. Also check harness for short to ground and short to power.

Is the inspection result normal?

YES >> GO TO 4.
NO >> Repair open circuit, short to ground or short to power in harness or connectors.

4. CHECK HO2S2 INPUT SIGNAL CIRCUIT FOR OPEN AND SHORT

1. Check the continuity between HO2S2 harness connector and ECM harness connector.

DTC	HO2S2			ECM		Continuity
	Bank	Connector	Terminal	Connector	Terminal	
P0137	1	F62	4	F13	33	Existed
P0157	2	F56	4		34	

2. Check the continuity between HO2S2 harness connector and ground, or ECM harness connector and ground.

DTC	HO2S2			Ground	Continuity
	Bank	Connector	Terminal		
P0137	1	F62	4	Ground	Not existed
P0157	2	F56	4		

DTC	ECM		Ground	Continuity
	Connector	Terminal		
P0137	F13	33	Ground	Not existed
P0157		34		

3. Also check harness for short to power.

Is the inspection result normal?

YES >> GO TO 5.
NO >> Repair open circuit, short to ground or short to power in harness or connectors.

5. CHECK HEATED OXYGEN SENSOR 2

Refer to EC-1246, "Component Inspection".

Is the inspection result normal?

YES >> GO TO 7.
NO >> GO TO 6.

6. REPLACE HEATED OXYGEN SENSOR 2

Replace malfunctioning heated oxygen sensor 2.

CAUTION:

- **Discard any heated oxygen sensor which has been dropped from a height of more than 0.5 m (19.7 in) onto a hard surface such as a concrete floor; use a new one.**
- **Before installing new oxygen sensor, clean exhaust system threads using Oxygen Sensor Thread Cleaner [commercial service tool (J-43897-18 or J-43897-12)] and approved anti-seize lubricant (commercial service tool).**

>> INSPECTION END

7. CHECK INTERMITTENT INCIDENT

Refer to GI-42, "Intermittent Incident".

>> INSPECTION END

Component Inspection

INFOID:0000000004362098

1. INSPECTION START

Will CONSULT-III be used?

Will CONSULT-III be used?

YES >> GO TO 2.
NO >> GO TO 3.

2. CHECK HEATED OXYGEN SENSOR 2

With CONSULT-III

1. Turn ignition switch ON and select “DATA MONITOR” mode with CONSULT-III.
2. Start engine and warm it up to the normal operating temperature.
3. Turn ignition switch OFF and wait at least 10 seconds.
4. Start engine and keep the engine speed between 3,500 and 4,000 rpm for at least 1 minute under no load.
5. Let engine idle for 1 minute.
6. Select “FUEL INJECTION” in “ACTIVE TEST” mode, and select “HO2S2 (B1)/(B2)” as the monitor item with CONSULT-III.
7. Check “HO2S2 (B1)/(B2)” at idle speed when adjusting “FUEL INJECTION” to ± 25%.

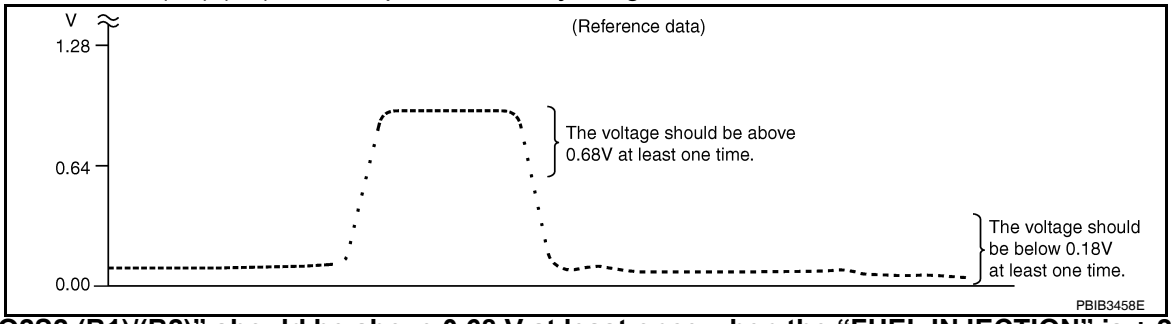

“HO2S2 (B1)/(B2)” should be above 0.68 V at least once when the “FUEL INJECTION” is + 25%.
“HO2S2 (B1)/(B2)” should be below 0.18 V at least once when the “FUEL INJECTION” is – 25%.

Is the inspection result normal?

YES >> INSPECTION END
NO >> GO TO 6.

3. CHECK HEATED OXYGEN SENSOR 2-I

Without CONSULT-III

1. Start engine and warm it up to the normal operating temperature.
2. Turn ignition switch OFF and wait at least 10 seconds.
3. Start engine and keep the engine speed between 3,500 and 4,000 rpm for at least 1 minute under no load.
4. Let engine idle for 1 minute.
5. Check the voltage between ECM harness connector terminals under the following conditions.

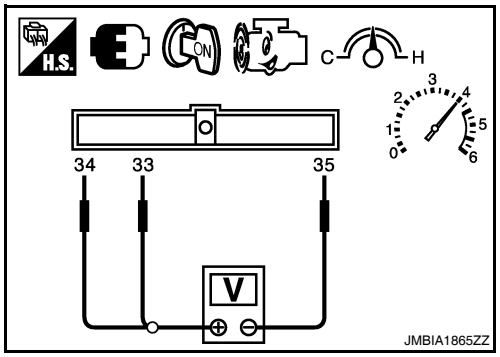

ECM			Condition	Voltage
Connector	+ Terminal	– Terminal		
F13	33 [HO2S2 (bank 1) signal]	35 (Sensor ground)	Revving up to 4,000 rpm under no load at least 10 times	The voltage should be above 0.68 V at least once during this procedure. The voltage should be below 0.18 V at least once during this procedure.
	34 [HO2S2 (bank 2) signal]			

Is the inspection result normal?

YES >> INSPECTION END
NO >> GO TO 4.

4. CHECK HEATED OXYGEN SENSOR 2-II

Check the voltage between ECM harness connector terminals under the following conditions.

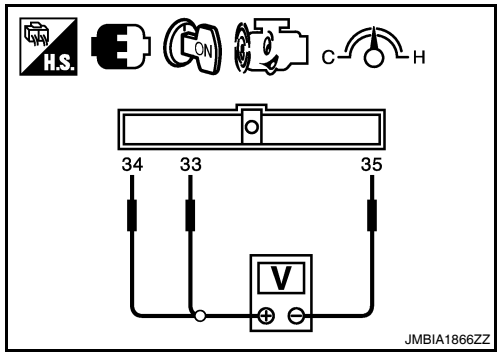

ECM			Condition	Voltage
Connector	+ Terminal	– Terminal		
F13	33 [HO2S2 (bank 1) signal]	35 (Sensor ground)	Keeping engine at idle for 10 minutes	The voltage should be above 0.68 V at least once during this procedure. The voltage should be below 0.18 V at least once during this procedure.
	34 [HO2S2 (bank 2) signal]			

Is the inspection result normal?

YES >> INSPECTION END
NO >> GO TO 5.

5. CHECK HEATED OXYGEN SENSOR 2-III

Check the voltage between ECM harness connector terminals under the following conditions.

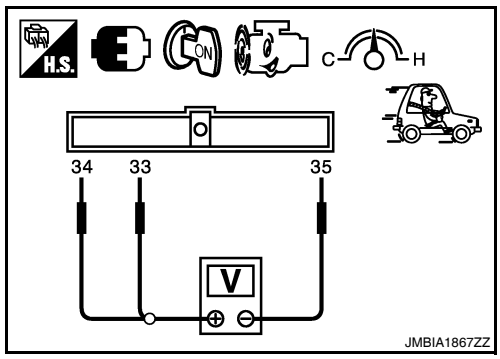

ECM			Condition	Voltage
Connector	+ Terminal	– Terminal		
F13	33 [HO2S2 (bank 1) signal]	35 (Sensor ground)	Coasting from 80 km/h (50 MPH) while selector lever is in the D (CVT) or 4th position (M/T)	The voltage should be above 0.68 V at least once during this procedure. The voltage should be below 0.18 V at least once during this procedure.
	34 [HO2S2 (bank 2) signal]			

Is the inspection result normal?

YES >> INSPECTION END
NO >> GO TO 6.

6. REPLACE HEATED OXYGEN SENSOR 2

Replace malfunctioning heated oxygen sensor 2.

CAUTION:

- **Discard any heated oxygen sensor which has been dropped from a height of more than 0.5 m (19.7 in) onto a hard surface such as a concrete floor; use a new one.**
- **Before installing new oxygen sensor, clean exhaust system threads using Oxygen Sensor Thread Cleaner [commercial service tool (J-43897-18 or J-43897-12)] and approved anti-seize lubricant (commercial service tool).**

>> INSPECTION END

P0138, P0158 HO2S2

Description

INFOID:0000000004362099

The heated oxygen sensor 2, after three way catalyst (manifold), monitors the oxygen level in the exhaust gas on each bank.
Even if switching characteristics of the air fuel ratio (A/F) sensor 1 are shifted, the air-fuel ratio is controlled to stoichiometric, by the signal from the heated oxygen sensor 2.
This sensor is made of ceramic zirconia. The zirconia generates voltage from approximately 1 V in richer conditions to 0 V in leaner conditions.
Under normal conditions the heated oxygen sensor 2 is not used for engine control operation.

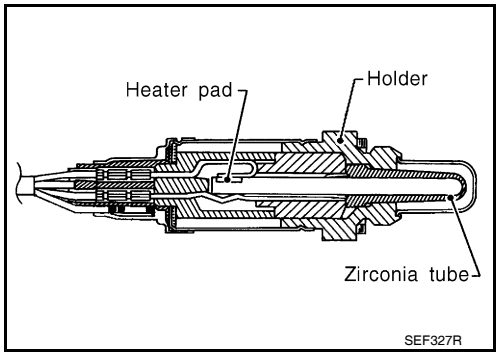

DTC Logic

INFOID:0000000004362100

DTC DETECTION LOGIC

The heated oxygen sensor 2 has a much longer switching time between rich and lean than the air fuel ratio (A/F) sensor 1. The oxygen storage capacity of the three way catalyst (manifold) causes the longer switching time.

MALFUNCTION A

To judge the malfunctions of heated oxygen sensor 2, ECM monitors whether the voltage is unusually high during various driving conditions such as fuel cut.

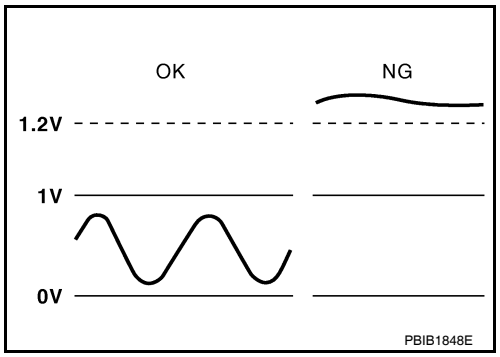

MALFUNCTION B

To judge the malfunctions of heated oxygen sensor 2, ECM monitors whether the minimum voltage of sensor is sufficiently low during various driving conditions such as fuel cut.

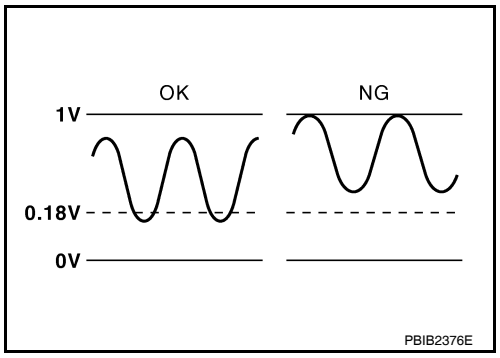

DTC No.	Trouble diagnosis name	DTC detecting condition		Possible cause
P0138	Heated oxygen sensor 2 (bank 1) circuit high voltage	A)	An excessively high voltage from the sensor is sent to ECM.	• Harness or connectors (The sensor circuit is open or shorted.) • Heated oxygen sensor 2
		B)	The minimum voltage from the sensor is not reached to the specified voltage.	• Harness or connectors (The sensor circuit is open or shorted.) • Heated oxygen sensor 2 • Fuel pressure • Fuel injector

DTC No.	Trouble diagnosis name	DTC detecting condition		Possible cause
P0158	Heated oxygen sensor 2 (bank 2) circuit high voltage	A)	An excessively high voltage from the sensor is sent to ECM.	• Harness or connectors (The sensor circuit is open or shorted.) • Heated oxygen sensor 2
		B)	The minimum voltage from the sensor is not reached to the specified voltage.	• Harness or connectors (The sensor circuit is open or shorted.) • Heated oxygen sensor 2 • Fuel pressure • Fuel injector

DTC CONFIRMATION PROCEDURE

1.PRECONDITIONING

If DTC Confirmation Procedure has been previously conducted, always perform the following before conducting the next test.
1. Turn ignition switch OFF and wait at least 10 seconds.
2. Turn ignition switch ON.
3. Turn ignition switch OFF and wait at least 10 seconds.

>> GO TO 2.

2.PERFORM DTC CONFIRMATION PROCEDURE FOR MALFUNCTION A

1. Start engine and warm it up to the normal operating temperature.
2. Turn ignition switch OFF and wait at least 10 seconds.
3. Turn ignition switch ON.
4. Turn ignition switch OFF and wait at least 10 seconds.
5. Start engine and keep the engine speed between 3,500 and 4,000 rpm for at least 1 minute under no load.
6. Let engine idle for 2 minutes.
7. Check 1st trip DTC.

Is 1st trip DTC detected?

YES >> Go to EC-1253, "Diagnosis Procedure".
NO-1 >> With CONSULT-III: GO TO 3.
NO-2 >> Without CONSULT-III: GO TO 5.

3.PERFORM DTC CONFIRMATION PROCEDURE FOR MALFUNCTION B

NOTE:
For better results, perform “DTC WORK SUPPORT” at a temperature of 0 to 30 °C (32 to 86 °F).
1. Select “DATA MONITOR” mode with CONSULT-III.
2. Start engine and warm it up to the normal operating temperature.
3. Turn ignition switch OFF and wait at least 10 seconds.
4. Turn ignition switch ON.
5. Turn ignition switch OFF and wait at least 10 seconds.
6. Start engine and keep the engine speed between 3,500 and 4,000 rpm for at least 1 minute under no load.
7. Let engine idle for 1 minute.
8. Check that “COOLAN TEMP/S” indicates more than 70°C (158°F).
   If not, warm up engine and go to next step when “COOLAN TEMP/S” indication reaches 70°C (158°F).
9. Open engine hood.
10. Select “HO2S2 (B1) P1146” (for DTC P0138) or “HO2S2 (B2) P1166” (for DTC P0158) of “HO2S2” in “DTC WORK SUPPORT” mode with CONSULT-III.
11. Follow the instruction of CONSULT-III display.
    NOTE:
    It will take at most 10 minutes until “COMPLETED” is displayed.
12. Touch “SELF-DIAG RESULTS”.

Which is displayed on CONSULT-III screen?

OK >> INSPECTION END
NG >> Go to EC-1253, "Diagnosis Procedure".
CON NOT BE DIAGNOSED>>GO TO 4.

4.PERFORM DTC CONFIRMATION PROCEDURE FOR MALFUNCTION B AGAIN

1. Turn ignition switch OFF and leave the vehicle in a cool place (soak the vehicle).

2. Perform DTC confirmation procedure again.

>> GO TO 3.

5. PERFORM COMPONENT FUNCTION CHECK FOR MALFUNCTION B

Perform component function check. Refer to EC-1251, "Component Function Check".

NOTE:

Use component function check to check the overall function of the heated oxygen sensor 2 circuit. During this check, a 1st trip DTC might not be confirmed.

Is the inspection result normal?

YES >> INSPECTION END
NO >> Go to EC-1253, "Diagnosis Procedure".

Component Function Check

INFOID:0000000004362101

1. PERFORM COMPONENT FUNCTION CHECK-I

Without CONSULT-III

1. Start engine and warm it up to the normal operating temperature.
2. Turn ignition switch OFF and wait at least 10 seconds.
3. Turn ignition switch ON.
4. Turn ignition switch OFF and wait at least 10 seconds.
5. Start engine and keep the engine speed between 3,500 and 4,000 rpm for at least 1 minute under no load.
6. Let engine idle for 1 minute.
7. Check the voltage between ECM harness connector terminals under the following conditions.

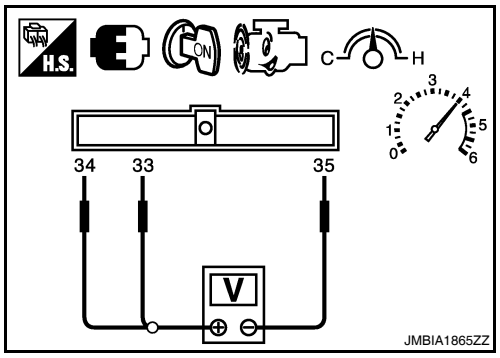

DTC	ECM			Condition	Voltage
	Connec-tor	+	–		
		Terminal	Terminal		
P0138	F13	33 [HO2S2 (bank 1) signal]	35 (Sensor ground)	Revving up to 4,000 rpm under no load at least 10 times	The voltage should be below 0.18 V at least once during this procedure.
P0158		34 [HO2S2 (bank 2) signal]			

Is the inspection result normal?

YES >> INSPECTION END
NO >> GO TO 2.

2. PERFORM COMPONENT FUNCTION CHECK-II

Check the voltage between ECM harness connector terminals under the following conditions.

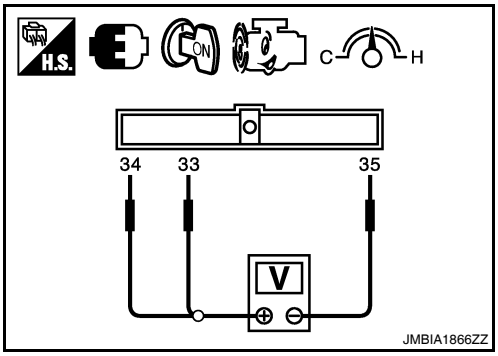

DTC	ECM			Condition	Voltage
	Connec-tor	+	–		
		Terminal	Terminal		
P0138	F13	33 [HO2S2 (bank 1) signal]	35 (Sensor ground)	Keeping engine speed at idle for 10 minutes	The voltage should be below 0.18 V at least once during this procedure.
P0158		34 [HO2S2 (bank 2) signal]			

Is the inspection result normal?

YES >> INSPECTION END
NO >> GO TO 3.

3. PERFORM COMPONENT FUNCTION CHECK-III

Check the voltage between ECM harness connector terminals under the following conditions.

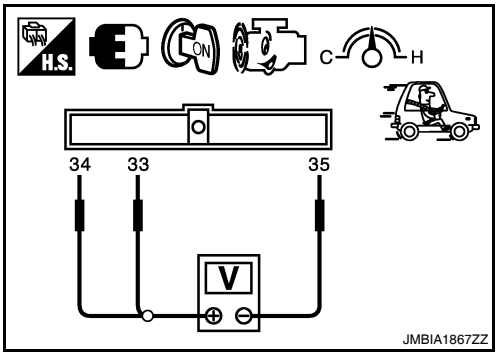

DTC	ECM			Condition	Voltage
	Connec-tor	+	–		
		Terminal	Terminal		
P0138	F13	33 [HO2S2 (bank 1) signal]	35 (Sensor ground)	Coasting from 80 km/h (50 MPH) in D position	The voltage should be below 0.18 V at least once during this procedure.
P0158		34 [HO2S2 (bank 2) signal]			

Is the inspection result normal?

YES >> INSPECTION END
NO >> Go to EC-1253, "Diagnosis Procedure".

Diagnosis Procedure

INFOID:0000000004362102

1. INSPECTION START

Confirm the detected malfunction (A or B). Refer to EC-1249, "DTC Logic".

Which malfunction is detected?

A >> GO TO 2.
B >> GO TO 9.

2. CHECK GROUND CONNECTION

1. Turn ignition switch OFF.
2. Check ground connection E9. Refer to Ground Inspection in GI-45, "Circuit Inspection".

Is the inspection result normal?

YES >> GO TO 3.
NO >> Repair or replace ground connection.

3. CHECK HO2S2 CONNECTOR FOR WATER

1. Disconnect heated oxygen sensor 2 (HO2S2) harness connector.
2. Check that water is not inside conductors.

Is the inspection result normal?

YES >> GO TO 4.
NO >> Repair or replace harness or connectors.

4. CHECK HO2S2 GROUND CIRCUIT FOR OPEN AND SHORT

1. Disconnect ECM harness connector.
2. Check the continuity between HO2S2 harness connector and ECM harness connector.

DTC	HO2S2			ECM		Continuity
	Bank	Connector	Terminal	Connector	Terminal	
P0138	1	F62	1	F13	35	Existed
P0158	2	F56	1			

3. Also check harness for short to ground and short to power.

Is the inspection result normal?

YES >> GO TO 5.
NO >> Repair open circuit, short to ground or short to power in harness or connectors.

5. CHECK HO2S2 INPUT SIGNAL CIRCUIT FOR OPEN AND SHORT

1. Check the continuity between HO2S2 harness connector and ECM harness connector.

DTC	HO2S2			ECM		Continuity
	Bank	Connector	Terminal	Connector	Terminal	
P0138	1	F62	4	F13	33	Existed
P0158	2	F56	4		34	

2. Check the continuity between HO2S2 harness connector and ground, or ECM harness connector and ground.

DTC	HO2S2			Ground	Continuity
	Bank	Connector	Terminal		
P0138	1	F62	4	Ground	Not existed
P0158	2	F56	4		

DTC	ECM		Ground	Continuity
	Connector	Terminal		
P0138	F13	33	Ground	Not existed
P0158		34		

3. Also check harness for short to power.

Is the inspection result normal?

YES >> GO TO 6.
NO >> Repair open circuit, short to ground or short to power in harness or connectors.

6.CHECK HEATED OXYGEN SENSOR 2

Refer to EC-1256, "Component Inspection".

Is the inspection result normal?

YES >> GO TO 8.
NO >> GO TO 7.

7.REPLACE HEATED OXYGEN SENSOR 2

Replace malfunctioning heated oxygen sensor 2.

CAUTION:

- **Discard any heated oxygen sensor which has been dropped from a height of more than 0.5 m (19.7 in) onto a hard surface such as a concrete floor; use a new one.**
- **Before installing new oxygen sensor, clean exhaust system threads using Oxygen Sensor Thread Cleaner [commercial service tool (J-43897-18 or J-43897-12)] and approved anti-seize lubricant (commercial service tool).**

>> INSPECTION END

8.CHECK INTERMITTENT INCIDENT

Refer to GI-42, "Intermittent Incident".

>> INSPECTION END

9.CHECK GROUND CONNECTION

1. Turn ignition switch OFF.
2. Check ground connection E9. Refer to Ground Inspection in GI-45, "Circuit Inspection".

Is the inspection result normal?

YES >> GO TO 10.
NO >> Repair or replace ground connection.

10.CLEAR MIXTURE RATIO SELF-LEARNING VALUE

1. Clear the mixture ratio self-learning value. Refer to EC-1055, "MIXTURE RATIO SELF-LEARNING VALUE CLEAR : Special Repair Requirement".
2. Run engine for at least 10 minutes at idle speed.

Is the 1st trip DTC P0172 or P0175 detected? Is it difficult to start engine?

YES >> Perform trouble diagnosis for DTC P0172, P0175. Refer to EC-1270, "DTC Logic".
NO >> GO TO 11.

11.CHECK HO2S2 GROUND CIRCUIT FOR OPEN AND SHORT

1. Turn ignition switch OFF.
2. Disconnect heated oxygen sensor 2 harness connector.
3. Disconnect ECM harness connector.
4. Check the continuity between HO2S2 harness connector and ECM harness connector.

DTC	HO2S2			ECM		Continuity
	Bank	Connector	Terminal	Connector	Terminal	
P0138	1	F62	1	F8	13	Existed
P0158	2	F56	1			

5. Also check harness for short to ground and short to power.

Is the inspection result normal?

YES >> GO TO 12.
NO >> Repair open circuit, short to ground or short to power in harness or connectors.

12. CHECK HO2S2 INPUT SIGNAL CIRCUIT FOR OPEN AND SHORT

1. Check the continuity between HO2S2 harness connector and ECM harness connector.

DTC	HO2S2			ECM		Continuity
	Bank	Connector	Terminal	Connector	Terminal	
P0138	1	F62	4	F13	33	Existed
P0158	2	F56	4		34	

2. Check the continuity between HO2S2 harness connector and ground, or ECM harness connector and ground.

DTC	HO2S2			Ground	Continuity
	Bank	Connector	Terminal		
P0138	1	F62	4	Ground	Not existed
P0158	2	F56	4		

DTC	ECM		Ground	Continuity
	Connector	Terminal		
P0138	F13	33	Ground	Not existed
P0158		34		

3. Also check harness for short to power.

Is the inspection result normal?

YES >> GO TO 13.
NO >> Repair open circuit, short to ground or short to power in harness or connectors.

13. CHECK HEATED OXYGEN SENSOR 2

Refer to EC-1256, "Component Inspection".

Is the inspection result normal?

YES >> GO TO 15.
NO >> GO TO 14.

14. REPLACE HEATED OXYGEN SENSOR 2

Replace malfunctioning heated oxygen sensor 2.

CAUTION:

- **Discard any heated oxygen sensor which has been dropped from a height of more than 0.5 m (19.7 in) onto a hard surface such as a concrete floor; use a new one.**
- **Before installing new oxygen sensor, clean exhaust system threads using Oxygen Sensor Thread Cleaner [commercial service tool (J-43897-18 or J-43897-12)] and approved anti-seize lubricant (commercial service tool).**

>> INSPECTION END

15. CHECK INTERMITTENT INCIDENT

Refer to GI-42, "Intermittent Incident".

>> INSPECTION END

Component Inspection

INFOID:0000000004362103

1. INSPECTION START

Will CONSULT-III be used?

Will CONSULT-III be used?

YES >> GO TO 2.
NO >> GO TO 3.

2. CHECK HEATED OXYGEN SENSOR 2

With CONSULT-III

1. Turn ignition switch ON and select “DATA MONITOR” mode with CONSULT-III.
2. Start engine and warm it up to the normal operating temperature.
3. Turn ignition switch OFF and wait at least 10 seconds.
4. Start engine and keep the engine speed between 3,500 and 4,000 rpm for at least 1 minute under no load.
5. Let engine idle for 1 minute.
6. Select “FUEL INJECTION” in “ACTIVE TEST” mode, and select “HO2S2 (B1)/(B2)” as the monitor item with CONSULT-III.
7. Check “HO2S2 (B1)/(B2)” at idle speed when adjusting “FUEL INJECTION” to ± 25%.

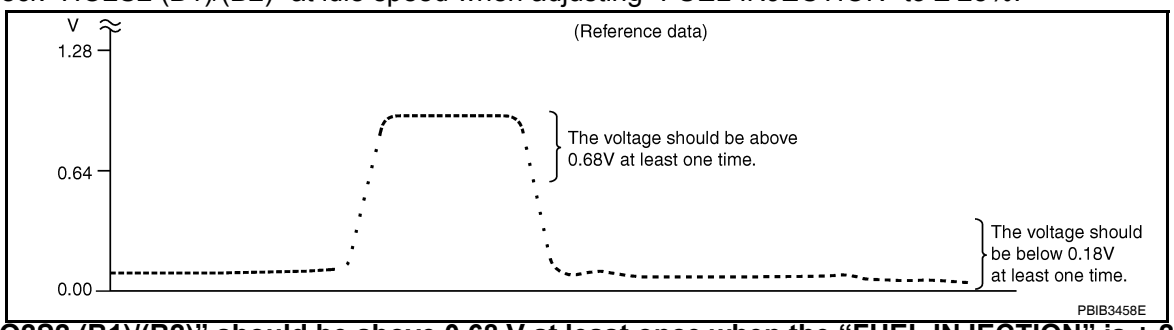

“HO2S2 (B1)/(B2)” should be above 0.68 V at least once when the “FUEL INJECTION” is + 25%.
“HO2S2 (B1)/(B2)” should be below 0.18 V at least once when the “FUEL INJECTION” is – 25%.

Is the inspection result normal?

YES >> INSPECTION END
NO >> GO TO 6.

3. CHECK HEATED OXYGEN SENSOR 2-I

Without CONSULT-III

1. Start engine and warm it up to the normal operating temperature.
2. Turn ignition switch OFF and wait at least 10 seconds.
3. Start engine and keep the engine speed between 3,500 and 4,000 rpm for at least 1 minute under no load.
4. Let engine idle for 1 minute.
5. Check the voltage between ECM harness connector terminals under the following conditions.

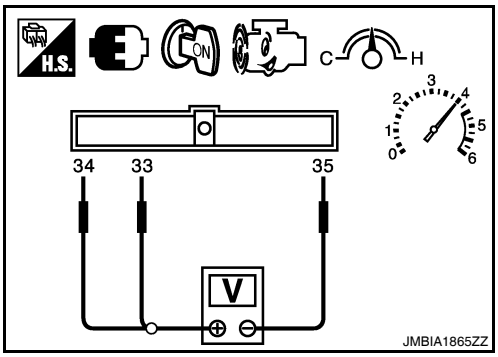

ECM			Condition	Voltage
Connector	+ Terminal	– Terminal		
F13	33 [HO2S2 (bank 1) signal]	35 (Sensor ground)	Revving up to 4,000 rpm under no load at least 10 times	The voltage should be above 0.68 V at least once during this procedure. The voltage should be below 0.18 V at least once during this procedure.
	34 [HO2S2 (bank 2) signal]			

Is the inspection result normal?

YES >> INSPECTION END
NO >> GO TO 4.

4. CHECK HEATED OXYGEN SENSOR 2-II

Check the voltage between ECM harness connector terminals under the following conditions.

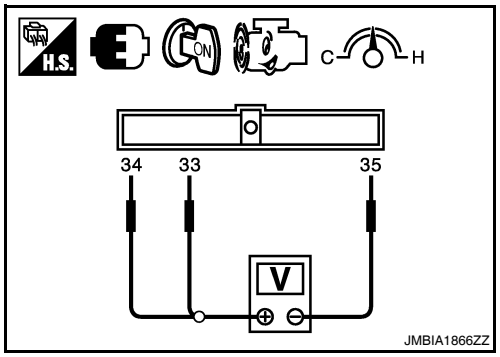

ECM			Condition	Voltage
Connector	+ Terminal	– Terminal		
F13	33 [HO2S2 (bank 1) signal]	35 (Sensor ground)	Keeping engine at idle for 10 minutes	The voltage should be above 0.68 V at least once during this procedure. The voltage should be below 0.18 V at least once during this procedure.
	34 [HO2S2 (bank 2) signal]			

Is the inspection result normal?

YES >> INSPECTION END
NO >> GO TO 5.

5. CHECK HEATED OXYGEN SENSOR 2-III

Check the voltage between ECM harness connector terminals under the following conditions.

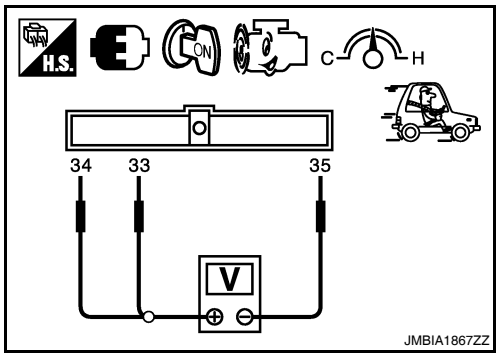

ECM			Condition	Voltage
Connector	+ Terminal	– Terminal		
F13	33 [HO2S2 (bank 1) signal]	35 (Sensor ground)	Coasting from 80 km/h (50 MPH) while selector lever is in the D (CVT) or 4th position (M/T)	The voltage should be above 0.68 V at least once during this procedure. The voltage should be below 0.18 V at least once during this procedure.
	34 [HO2S2 (bank 2) signal]			

Is the inspection result normal?

YES >> INSPECTION END
NO >> GO TO 6.

6. REPLACE HEATED OXYGEN SENSOR 2

Replace malfunctioning heated oxygen sensor 2.

CAUTION:

- **Discard any heated oxygen sensor which has been dropped from a height of more than 0.5 m (19.7 in) onto a hard surface such as a concrete floor; use a new one.**
- **Before installing new oxygen sensor, clean exhaust system threads using Oxygen Sensor Thread Cleaner [commercial service tool (J-43897-18 or J-43897-12)] and approved anti-seize lubricant (commercial service tool).**

>> INSPECTION END

P0139, P0159 HO2S2

Description

INFOID:0000000004362104

The heated oxygen sensor 2, after three way catalyst (manifold), monitors the oxygen level in the exhaust gas on each bank.
Even if switching characteristics of the air fuel ratio (A/F) sensor 1 are shifted, the air-fuel ratio is controlled to stoichiometric, by the signal from the heated oxygen sensor 2.
This sensor is made of ceramic zirconia. The zirconia generates voltage from approximately 1 V in richer conditions to 0 V in leaner conditions.
Under normal conditions the heated oxygen sensor 2 is not used for engine control operation.

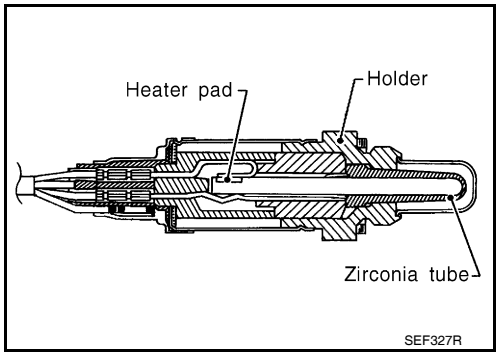

DTC Logic

INFOID:0000000004362105

DTC DETECTION LOGIC

The heated oxygen sensor 2 has a much longer switching time between rich and lean than the air fuel ratio (A/F) sensor 1. The oxygen storage capacity of the three way catalyst (manifold) causes the longer switching time. To judge the malfunctions of heated oxygen sensor 2, ECM monitors whether the switching response of the sensor's voltage is faster than specified during various driving conditions such as fuel-cut.

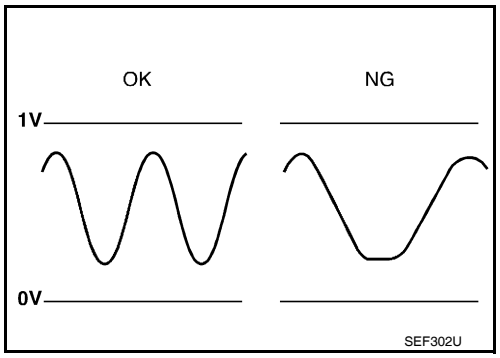

DTC No.	Trouble diagnosis name	DTC detecting condition	Possible cause
P0139	Heated oxygen sensor 2 (bank 1) circuit slow response	It takes more time for the sensor to respond between rich and lean than the specified time.	• Harness or connectors (The sensor circuit is open or shorted.) • Heated oxygen sensor 2 • Fuel pressure • Fuel injector • Intake air leakage
P0159	Heated oxygen sensor 2 (bank 2) circuit slow response		

DTC CONFIRMATION PROCEDURE

1. INSPECTION START

Will CONSULT-III be used?

Will CONSULT-III be used?

YES >> GO TO 2.
NO >> GO TO 5.

2. PRECONDITIONING

If DTC Confirmation Procedure has been previously conducted, always perform the following before conducting the next test.

1. Turn ignition switch OFF and wait at least 10 seconds.
2. Turn ignition switch ON.
3. Turn ignition switch OFF and wait at least 10 seconds.

TESTING CONDITION:
For better results, perform “DTC WORK SUPPORT” at a temperature of 0 to 30 °C (32 to 86 °F).

>> GO TO 3.

3. PERFORM DTC CONFIRMATION PROCEDURE

With CONSULT-III

1. Turn ignition switch ON and select “DATA MONITOR” mode with CONSULT-III.
2. Start engine and warm it up to the normal operating temperature.
3. Turn ignition switch OFF and wait at least 10 seconds.
4. Turn ignition switch ON.
5. Turn ignition switch OFF and wait at least 10 seconds.
6. Start engine and keep the engine speed between 3,500 and 4,000 rpm for at least 1 minute under no load.
7. Let engine idle for 1 minute.
8. Open engine hood.
9. Select “HO2S2 (B1) P0139” or “HO2S2 (B2) P0159” of “HO2S2” in “DTC WORK SUPPORT” mode with CONSULT-III.
10. Follow the instruction of CONSULT-III display.
    NOTE:
    It will take at most 10 minutes until “COMPLETED” is displayed.
11. Touch “SELF-DIAG RESULTS”.

Which is displayed on CONSULT-III screen?

OK >> INSPECTION END
NG >> Go to EC-1262, "Diagnosis Procedure".
CANNOT BE DIAGNOSED>>GO TO 4.

4. PERFORM DTC CONFIRMATION PROCEDURE AGAIN

1. Turn ignition switch OFF and leave the vehicle in a cool place (soak the vehicle).
2. Perform DTC confirmation procedure again.

>> GO TO 3.

5. PERFORM COMPONENT FUNCTION CHECK

Perform component function check. Refer to EC-1260, "Component Function Check".
NOTE:
Use component function check to check the overall function of the heated oxygen sensor 2 circuit. During this check, a 1st trip DTC might not be confirmed.

Is the inspection result normal?

YES >> INSPECTION END
NO >> Go to EC-1262, "Diagnosis Procedure".

Component Function Check

INFOID:0000000004362106

1. PERFORM COMPONENT FUNCTION CHECK-I

Without CONSULT-III

1. Start engine and warm it up to the normal operating temperature.
2. Turn ignition switch OFF and wait at least 10 seconds.
3. Turn ignition switch ON.
4. Turn ignition switch OFF and wait at least 10 seconds.
5. Start engine and keep the engine speed between 3,500 and 4,000 rpm for at least 1 minute under no load.
6. Let engine idle for 1 minute.
7. Check the voltage between ECM harness connector terminals under the following conditions.

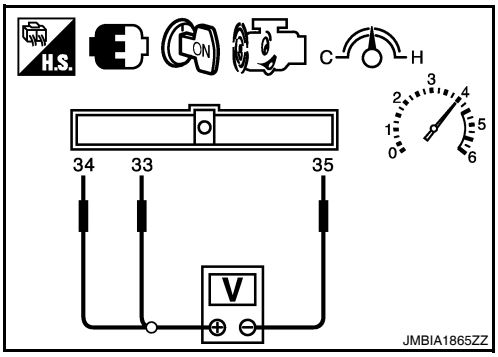

DTC	ECM			Condition	Voltage
	Connec-tor	+	–		
		Terminal	Terminal		
P0139	F13	33 [HO2S2 (bank 1) signal]	35 (Sensor ground)	Revving up to 4,000 rpm under no load at least 10 times	A change of voltage should be more than 0.24 V for 1 second during this procedure.
P0159		34 [HO2S2 (bank 2) signal]			

Is the inspection result normal?

YES >> INSPECTION END
NO >> GO TO 2.

2. PERFORM COMPONENT FUNCTION CHECK-II

Check the voltage between ECM harness connector terminals under the following conditions.

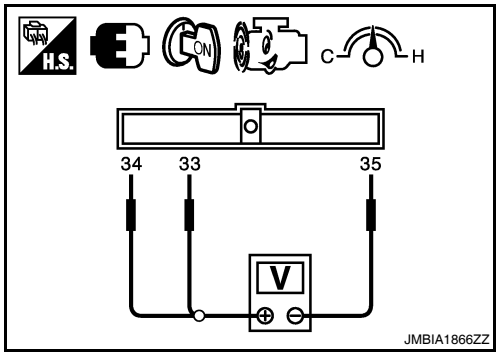

DTC	ECM			Condition	Voltage
	Connec-tor	+	–		
		Terminal	Terminal		
P0139	F13	33 [HO2S2 (bank 1) signal]	35 (Sensor ground)	Keeping engine at idle for 10 minutes	A change of voltage should be more than 0.24 V for 1 second during this procedure.
P0159		34 [HO2S2 (bank 2) signal]			

Is the inspection result normal?

YES >> INSPECTION END
NO >> GO TO 3.

3. PERFORM COMPONENT FUNCTION CHECK-III

Check the voltage between ECM harness connector terminals under the following conditions.

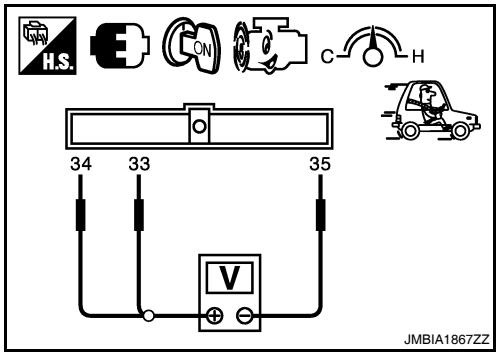

DTC	ECM			Condition	Voltage
	Connec-tor	+	–		
		Terminal	Terminal		
P0139	F13	33 [HO2S2 (bank 1) signal]	35 (Sensor ground)	Coasting from 80 km/h (50 MPH) in D position	A change of voltage should be more than 0.24 V for 1 second during this procedure.
P0159		34 [HO2S2 (bank 2) signal]			

Is the inspection result normal?

YES >> INSPECTION END
NO >> Go to EC-1262, "Diagnosis Procedure".

Diagnosis Procedure

INFOID:0000000004362107

1. CHECK GROUND CONNECTION

1. Turn ignition switch OFF.
2. Check ground connection E9. Refer to Ground Inspection in GI-45, "Circuit Inspection".

Is the inspection result normal?

YES >> GO TO 2.
NO >> Repair or replace ground connection.

2. CLEAR MIXTURE RATIO SELF-LEARNING VALUE

1. Clear the mixture ratio self-learning value. Refer to EC-1055, "MIXTURE RATIO SELF-LEARNING VALUE CLEAR : Special Repair Requirement".
2. Run engine for at least 10 minutes at idle speed.

Is the 1st trip DTC P0171, P0172, P0174 or P0175 detected? Is it difficult to start engine?

YES >> Perform trouble diagnosis for DTC P0171, P0174 or P0172, P0175. Refer to EC-1266, "DTC Logic" or EC-1270, "DTC Logic".
NO >> GO TO 3.

3. CHECK HO2S2 GROUND CIRCUIT FOR OPEN AND SHORT

1. Turn ignition switch OFF.
2. Disconnect heated oxygen sensor 2 harness connector.
3. Disconnect ECM harness connector.
4. Check the continuity between heated oxygen sensor 2 (HO2S2) harness connector and ECM harness connector.

DTC	HO2S2			ECM		Continuity
	Bank	Connector	Terminal	Connector	Terminal	
P0139	1	F62	1	F13	35	Existed
P0159	2	F56	1			

5. Also check harness for short to ground and short to power.

Is the inspection result normal?

YES >> GO TO 4.
NO >> Repair open circuit, short to ground or short to power in harness or connectors.

4. CHECK HO2S2 INPUT SIGNAL CIRCUIT FOR OPEN AND SHORT

1. Check the continuity between HO2S2 harness connector and ECM harness connector.

DTC	HO2S2			ECM		Continuity
	Bank	Connector	Terminal	Connector	Terminal	
P0139	1	F62	4	F13	33	Existed
P0159	2	F56	4		34	

2. Check the continuity between HO2S2 harness connector and ground, or ECM harness connector and ground.

DTC	HO2S2			Ground	Continuity
	Bank	Connector	Terminal		
P0139	1	F62	4	Ground	Not existed
P0159	2	F56	4		

DTC	ECM		Ground	Continuity
	Connector	Terminal		
P0139	F13	33	Ground	Not existed
P0159		34		

3. Also check harness for short to power.

Is the inspection result normal?

YES >> GO TO 5.
NO >> Repair open circuit, short to ground or short to power in harness or connectors.

5. CHECK HEATED OXYGEN SENSOR 2

Refer to EC-1263, "Component Inspection".

Is the inspection result normal?

YES >> GO TO 7.
NO >> GO TO 6.

6. REPLACE HEATED OXYGEN SENSOR 2

Replace malfunctioning heated oxygen sensor 2.

CAUTION:

- **Discard any heated oxygen sensor which has been dropped from a height of more than 0.5 m (19.7 in) onto a hard surface such as a concrete floor; use a new one.**
- **Before installing new oxygen sensor, clean exhaust system threads using Oxygen Sensor Thread Cleaner [commercial service tool (J-43897-18 or J-43897-12)] and approved anti-seize lubricant (commercial service tool).**

>> INSPECTION END

7. CHECK INTERMITTENT INCIDENT

Refer to GI-42, "Intermittent Incident".

>> INSPECTION END

Component Inspection

INFOID:0000000004362108

1. INSPECTION START

Will CONSULT-III be used?

Will CONSULT-III be used?

YES >> GO TO 2.
NO >> GO TO 3.

2. CHECK HEATED OXYGEN SENSOR 2

With CONSULT-III

1. Turn ignition switch ON and select “DATA MONITOR” mode with CONSULT-III.
2. Start engine and warm it up to the normal operating temperature.
3. Turn ignition switch OFF and wait at least 10 seconds.
4. Start engine and keep the engine speed between 3,500 and 4,000 rpm for at least 1 minute under no load.
5. Let engine idle for 1 minute.
6. Select “FUEL INJECTION” in “ACTIVE TEST” mode, and select “HO2S2 (B1)/(B2)” as the monitor item with CONSULT-III.
7. Check “HO2S2 (B1)/(B2)” at idle speed when adjusting “FUEL INJECTION” to ± 25%.

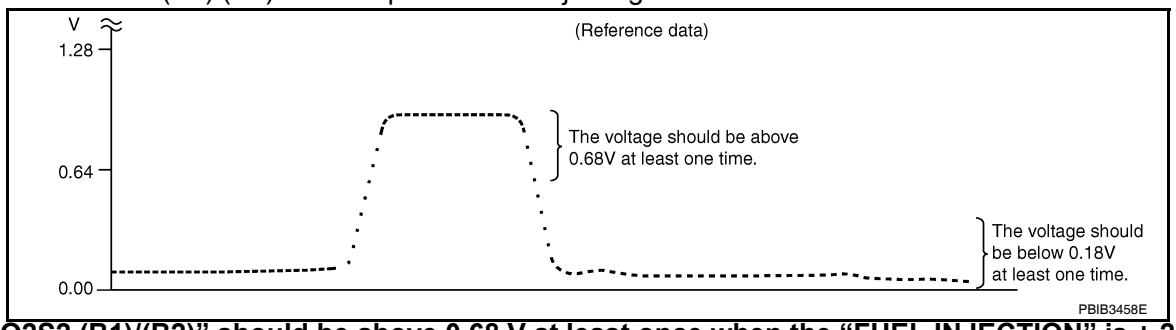

“HO2S2 (B1)/(B2)” should be above 0.68 V at least once when the “FUEL INJECTION” is + 25%.
“HO2S2 (B1)/(B2)” should be below 0.18 V at least once when the “FUEL INJECTION” is – 25%.

Is the inspection result normal?

YES >> INSPECTION END
NO >> GO TO 6.

3. CHECK HEATED OXYGEN SENSOR 2-I

Without CONSULT-III

1. Start engine and warm it up to the normal operating temperature.
2. Turn ignition switch OFF and wait at least 10 seconds.
3. Start engine and keep the engine speed between 3,500 and 4,000 rpm for at least 1 minute under no load.
4. Let engine idle for 1 minute.
5. Check the voltage between ECM harness connector terminals under the following conditions.

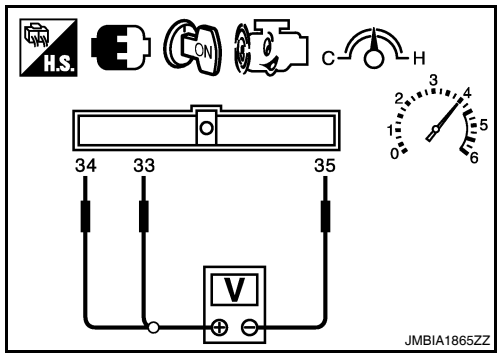

ECM			Condition	Voltage
Con-nector	+	–		
	Terminal	Terminal		
F13	33 [HO2S2 (bank 1) signal]	35 (Sensor ground)	Revving up to 4,000 rpm under no load at least 10 times	The voltage should be above 0.68 V at least once during this procedure. The voltage should be below 0.18 V at least once during this procedure.
	34 [HO2S2 (bank 2) signal]			

Is the inspection result normal?

YES >> INSPECTION END
NO >> GO TO 4.

4. CHECK HEATED OXYGEN SENSOR 2-II

Check the voltage between ECM harness connector terminals under the following conditions.

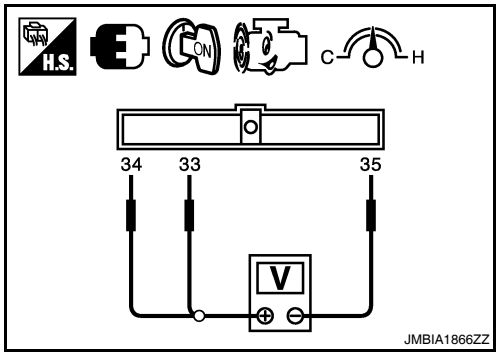

ECM			Condition	Voltage
Connector	+ Terminal	– Terminal		
F13	33 [HO2S2 (bank 1) signal]	35 (Sensor ground)	Keeping engine at idle for 10 minutes	The voltage should be above 0.68 V at least once during this procedure. The voltage should be below 0.18 V at least once during this procedure.
	34 [HO2S2 (bank 2) signal]			

Is the inspection result normal?

YES >> INSPECTION END
NO >> GO TO 5.

5. CHECK HEATED OXYGEN SENSOR 2-III

Check the voltage between ECM harness connector terminals under the following conditions.

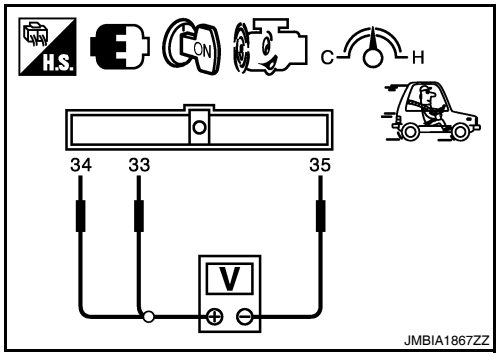

ECM			Condition	Voltage
Connector	+ Terminal	– Terminal		
F13	33 [HO2S2 (bank 1) signal]	35 (Sensor ground)	Coasting from 80 km/h (50 MPH) while selector lever is in the D (CVT) or 4th position (M/T)	The voltage should be above 0.68 V at least once during this procedure. The voltage should be below 0.18 V at least once during this procedure.
	34 [HO2S2 (bank 2) signal]			

Is the inspection result normal?

YES >> INSPECTION END
NO >> GO TO 6.

6. REPLACE HEATED OXYGEN SENSOR 2

Replace malfunctioning heated oxygen sensor 2.

CAUTION:

- **Discard any heated oxygen sensor which has been dropped from a height of more than 0.5 m (19.7 in) onto a hard surface such as a concrete floor; use a new one.**
- **Before installing new oxygen sensor, clean exhaust system threads using Oxygen Sensor Thread Cleaner [commercial service tool (J-43897-18 or J-43897-12)] and approved anti-seize lubricant (commercial service tool).**

>> INSPECTION END

P0171, P0174 FUEL INJECTION SYSTEM FUNCTION

DTC Logic

INFOID:0000000004362109

DTC DETECTION LOGIC

With the Air/Fuel Mixture Ratio Self-Learning Control, the actual mixture ratio can be brought closely to the theoretical mixture ratio based on the mixture ratio feedback signal from A/F sensor 1. The ECM calculates the necessary compensation to correct the offset between the actual and the theoretical ratios.
In case the amount of the compensation value is extremely large (the actual mixture ratio is too lean), the ECM judges the condition as the fuel injection system malfunction and illuminates the MIL (2 trip detection logic).

Sensor	Input signal to ECM	ECM function	Actuator
A/F sensor 1	Density of oxygen in exhaust gas (Mixture ratio feedback signal)	Fuel injection control	Fuel injector

DTC No.	Trouble diagnosis name	DTC detecting condition	Possible cause
P0171	Fuel injection system too lean (bank 1)	• Fuel injection system does not operate properly. • The amount of mixture ratio compensation is too large. (The mixture ratio is too lean.)	• Intake air leakage • A/F sensor 1 • Fuel injector • Exhaust gas leakage • Incorrect fuel pressure • Lack of fuel • Mass air flow sensor • Incorrect PCV hose connection
P0174	Fuel injection system too lean (bank 2)		

DTC CONFIRMATION PROCEDURE

1.PRECONDITIONING

If DTC Confirmation Procedure has been previously conducted, always perform the following before conducting the next test.
1. Turn ignition switch OFF and wait at least 10 seconds.
2. Turn ignition switch ON.
3. Turn ignition switch OFF and wait at least 10 seconds.

>> GO TO 2.

2.PERFORM DTC CONFIRMATION PROCEDURE-I

1. Clear the mixture ratio self-learning value. Refer to EC-1055, "MIXTURE RATIO SELF-LEARNING VALUE CLEAR : Special Repair Requirement".
2. Start engine.

Is it difficult to start engine?

YES >> GO TO 3.
NO >> GO TO 4.

3.RESTART ENGINE

If it is difficult to start engine, the fuel injection system has a malfunction, too.
Crank engine while depressing accelerator pedal.
NOTE:
- **When depressing accelerator pedal three-fourths (3/4) or more, the control system does not start the engine. Do not depress accelerator pedal too much.**

Does engine start?

YES >> Go to EC-1267, "Diagnosis Procedure".
NO >> Check exhaust and intake air leakage visually.

4.PERFORM DTC CONFIRMATION PROCEDURE-II

1. Keep engine idle for at least 5 minutes.
2. Check 1st trip DTC.

Is 1st trip DTC detected?

YES >> Go to EC-1267, "Diagnosis Procedure".
NO >> GO TO 5.

5. PERFORM DTC CONFIRMATION PROCEDURE-III

1. Turn ignition switch OFF and wait at least 10 seconds.
2. Start engine.
3. Maintain the following conditions for at least 10 consecutive minutes.
   Hold the accelerator pedal as steady as possible.

VHCL SPEED SE	50 - 120 km/h (31 - 75 mph)

CAUTION:
Always drive vehicle at a safe speed.

4. Check 1st trip DTC.

Is 1st trip DTC detected?

YES >> Go to EC-1267, "Diagnosis Procedure".
NO >> INSPECTION END

Diagnosis Procedure

INFOID:0000000004362110

1. CHECK EXHAUST GAS LEAKAGE

1. Start engine and run it at idle.
2. Listen for an exhaust gas leakage before three way catalyst (manifold).

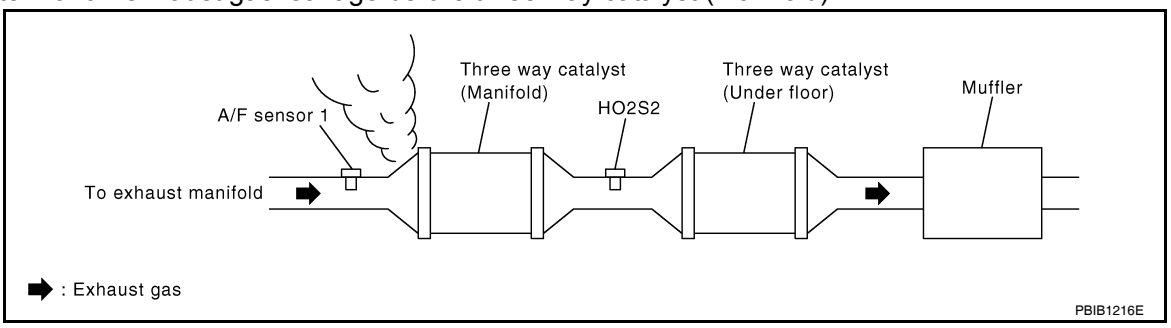

Is exhaust gas leakage detected?

YES >> Repair or replace malfunctioning part.
NO >> GO TO 2.

2. CHECK FOR INTAKE AIR LEAKAGE

1. Listen for an intake air leakage after the mass air flow sensor.
2. Check PCV hose connection.

Is intake air leakage detected?

YES >> Repair or replace malfunctioning part.
NO >> GO TO 3.

3. CHECK A/F SENSOR 1 INPUT SIGNAL CIRCUIT

1. Turn ignition switch OFF.
2. Disconnect corresponding A/F sensor 1 harness connector.
3. Disconnect ECM harness connector.
4. Check the continuity between A/F sensor 1 harness connector and ECM harness connector.

DTC	A/F sensor 1			ECM		Continuity
	Bank	Connector	Terminal	Connector	Terminal	
P0171	1	F12	1	F13	45	Existed
			2		49	
P0174	2	F61	1		53	
			2		57	

5. Check the continuity between A/F sensor 1 harness connector and ground, or ECM harness connector and ground.

DTC	A/F sensor 1			Ground	Continuity
	Bank	Connector	Terminal		
P0171	1	F12	1	Ground	Not existed
			2		
P0174	2	F61	1		
			2		

DTC	ECM		Ground	Continuity
	Connector	Terminal		
P0171	F13	45	Ground	Not existed
		49		
P0174		53		
		57		

6. Also check harness for short to power.

Is the inspection result normal?

YES >> GO TO 4.
NO >> Repair open circuit, short to ground or short to power in harness or connectors.

4. CHECK FUEL PRESSURE

1. Release fuel pressure to zero. Refer to EC-1579, "Inspection".
2. Install fuel pressure gauge kit [SST (J-44321)] and check fuel pressure. Refer to EC-1579, "Inspection".

At idling: Approximately 350 kPa (3.57 kg/cm^2, 51 psi)

Is the inspection result normal?

YES >> GO TO 6.
NO >> GO TO 5.

5. DETECT MALFUNCTIONING PART

Check fuel hoses and fuel tubes for clogging.

Is the inspection result normal?

YES >> Replace “fuel filter and fuel pump assembly”.
NO >> Repair or replace malfunctioning part.

6. CHECK MASS AIR FLOW SENSOR

With CONSULT-III

1. Install all removed parts.
2. Check “MASS AIR FLOW” in “DATA MONITOR” mode with CONSULT-III.
   For specification, refer to EC-1585, "Mass Air Flow Sensor".

With GST

1. Install all removed parts.
2. Check mass air flow sensor signal in Service $01 with GST.
   For specification, refer to EC-1585, "Mass Air Flow Sensor".

Is the measurement value within the specification?

YES >> GO TO 7.
NO >> Check connectors for rusted terminals or loose connections in the mass air flow sensor circuit or ground. Refer to EC-1202, "Diagnosis Procedure".

7. CHECK FUNCTION OF FUEL INJECTOR

With CONSULT-III

1. Start engine.

2. Perform “POWER BALANCE” in “ACTIVE TEST” mode with CONSULT-III.
3. Check that each circuit produces a momentary engine speed drop.

With GST

1. Let engine idle.
2. Listen to each fuel injector operating sound.

Is the inspection result normal?

YES >> GO TO 8.
NO >> Perform trouble diagnosis for FUEL INJECTOR, refer to EC-1483, "Diagnosis Procedure".

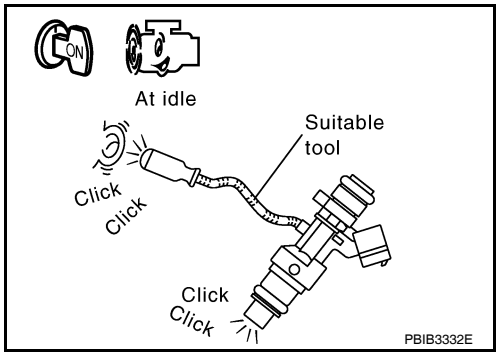

8. CHECK FUEL INJECTOR

1. Turn ignition switch OFF.
2. Confirm that the engine is cooled down and there are no fire hazards near the vehicle.
3. Disconnect all fuel injector harness connectors.
4. Remove fuel tube assembly. Refer to EM-146, "Removal and Installation".
   Keep fuel hose and all fuel injectors connected to fuel tube.
5. For DTC P0171, reconnect fuel injector harness connectors on bank 1.
   For DTC P0174, reconnect fuel injector harness connectors on bank 2.
6. Disconnect all ignition coil harness connectors.
7. Prepare pans or saucers under each fuel injector.
8. Crank engine for approximately 3 seconds.
   For DTC P0171, check that fuel sprays out from fuel injectors on bank 1.
   For DTC P0174, check that fuel sprays out from fuel injectors on bank 2.

Fuel should be sprayed evenly for each fuel injector.

Is the inspection result normal?

YES >> GO TO 9.
NO >> Replace fuel injectors from which fuel does not spray out. Always replace O-ring with new ones.

9. CHECK INTERMITTENT INCIDENT

Refer to GI-42, "Intermittent Incident".

>> INSPECTION END

P0172, P0175 FUEL INJECTION SYSTEM FUNCTION

DTC Logic

INFOID:0000000004362111

DTC DETECTION LOGIC

With the Air/Fuel Mixture Ratio Self-Learning Control, the actual mixture ratio can be brought closely to the theoretical mixture ratio based on the mixture ratio feedback signal from A/F sensor 1. The ECM calculates the necessary compensation to correct the offset between the actual and the theoretical ratios.
In case the amount of the compensation value is extremely large (the actual mixture ratio is too rich), the ECM judges the condition as the fuel injection system malfunction and illuminates the MIL (2 trip detection logic).

Sensor	Input signal to ECM	ECM function	Actuator
A/F sensor 1	Density of oxygen in exhaust gas (Mixture ratio feedback signal)	Fuel injection control	Fuel injector

DTC No.	Trouble diagnosis name	DTC detecting condition	Possible cause
P0172	Fuel injection system too rich (bank 1)	• Fuel injection system does not operate properly. • The amount of mixture ratio compensation is too large. (The mixture ratio is too rich.)	• A/F sensor 1 • Fuel injector • Exhaust gas leakage • Incorrect fuel pressure • Mass air flow sensor
P0175	Fuel injection system too rich (bank 2)		

DTC CONFIRMATION PROCEDURE

1.PRECONDITIONING

If DTC Confirmation Procedure has been previously conducted, always perform the following before conducting the next test.
1. Turn ignition switch OFF and wait at least 10 seconds.
2. Turn ignition switch ON.
3. Turn ignition switch OFF and wait at least 10 seconds.

>> GO TO 2.

2.PERFORM DTC CONFIRMATION PROCEDURE-I

1. Clear the mixture ratio self-learning value. Refer to EC-1055, "MIXTURE RATIO SELF-LEARNING VALUE CLEAR : Special Repair Requirement".
2. Start engine.

Is it difficult to start engine?

YES >> GO TO 3.
NO >> GO TO 4.

3.RESTART ENGINE

If it is difficult to start engine, the fuel injection system has a malfunction, too.
Crank engine while depressing accelerator pedal.
NOTE:
- **When depressing accelerator pedal three-fourths (3/4) or more, the control system does not start the engine. Do not depress accelerator pedal too much.**

Does engine start?

YES >> Go to EC-1271, "Diagnosis Procedure".
NO >> Remove spark plugs and check for fouling, etc.

4.PERFORM DTC CONFIRMATION PROCEDURE-II

1. Keep engine idle for at least 5 minutes.
2. Check 1st trip DTC.

Is 1st trip DTC detected?

YES >> Go to EC-1271, "Diagnosis Procedure".
NO >> GO TO 5.

5. PERFORM DTC CONFIRMATION PROCEDURE-III

1. Turn ignition switch OFF and wait at least 10 seconds.
2. Start engine.
3. Maintain the following conditions for at least 10 consecutive minutes.
   Hold the accelerator pedal as steady as possible.

VHCL SPEED SE	50 - 120 km/h (31 - 75 mph)

CAUTION:
Always drive vehicle at a safe speed.

4. Check 1st trip DTC.

Is 1st trip DTC detected?

YES >> Go to EC-1271, "Diagnosis Procedure".
NO >> INSPECTION END

Diagnosis Procedure

INFOID:0000000004362112

1. CHECK EXHAUST GAS LEAKAGE

1. Start engine and run it at idle.
2. Listen for an exhaust gas leakage before three way catalyst (manifold).

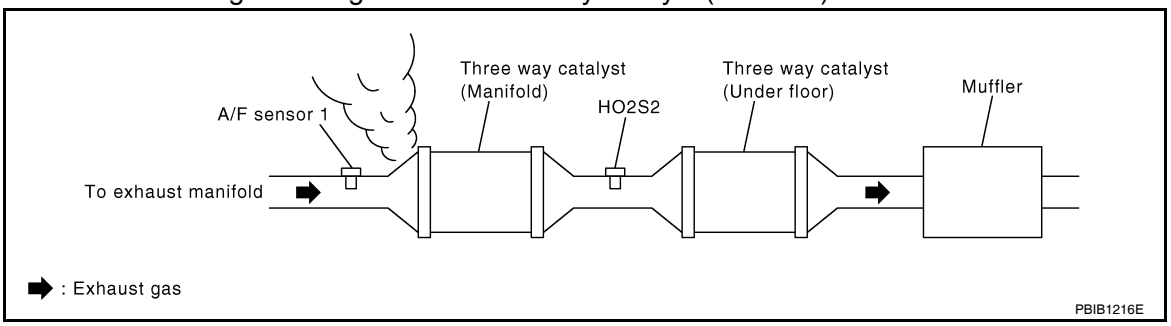

Is exhaust gas leakage detected?

YES >> Repair or replace malfunctioning part.
NO >> GO TO 2.

2. CHECK FOR INTAKE AIR LEAKAGE

Listen for an intake air leakage after the mass air flow sensor.

Is intake air leakage detected?

YES >> Repair or replace malfunctioning part.
NO >> GO TO 3.

3. CHECK A/F SENSOR 1 INPUT SIGNAL CIRCUIT

1. Turn ignition switch OFF.
2. Disconnect corresponding A/F sensor 1 harness connector.
3. Disconnect ECM harness connector.
4. Check the continuity between A/F sensor 1 harness connector and ECM harness connector.

DTC	A/F sensor 1			ECM		Continuity
	Bank	Connector	Terminal	Connector	Terminal	
P0172	1	F12	1	F13	45	Existed
			2		49	
P0175	2	F61	1		53	
			2		57	

5. Check the continuity between A/F sensor 1 harness connector and ground, or ECM harness connector and ground.

DTC	A/F sensor 1			Ground	Continuity
	Bank	Connector	Terminal		
P0172	1	F12	1	Ground	Not existed
			2		
P0175	2	F61	1		
			2		

DTC	ECM		Ground	Continuity
	Connector	Terminal		
P0172	F13	45	Ground	Not existed
		49		
P0175		53		
		57		

6. Also check harness for short to power.

Is the inspection result normal?

YES >> GO TO 4.
NO >> Repair open circuit, short to ground or short to power in harness or connectors.

4. CHECK FUEL PRESSURE

1. Release fuel pressure to zero. Refer to EC-1579, "Inspection".
2. Install fuel pressure gauge kit [SST (J-44321)] and check fuel pressure. Refer to EC-1579, "Inspection".

At idling: Approximately 350 kPa (3.57 kg/cm^2, 51 psi)

Is the inspection result normal?

YES >> GO TO 5.
NO >> Replace “fuel filter and fuel pump assembly”.

5. CHECK MASS AIR FLOW SENSOR

With CONSULT-III

1. Install all removed parts.
2. Check “MASS AIR FLOW” in “DATA MONITOR” mode with CONSULT-III.
   For specification, refer to EC-1585, "Mass Air Flow Sensor".

With GST

1. Install all removed parts.
2. Check mass air flow sensor signal in “Service $01” with GST.
   For specification, refer to EC-1585, "Mass Air Flow Sensor".

Is the measurement value within the specification?

YES >> GO TO 6.
NO >> Check connectors for rusted terminals or loose connections in the mass air flow sensor circuit or ground. Refer to EC-1202, "Diagnosis Procedure".

6. CHECK FUNCTION OF FUEL INJECTOR

With CONSULT-III

1. Start engine.
2. Perform “POWER BALANCE” in “ACTIVE TEST” mode with CONSULT-III.
3. Check that each circuit produces a momentary engine speed drop.

With GST

1. Let engine idle.

2. Listen to each fuel injector operating sound.

Is the inspection result normal?

YES >> GO TO 7.
NO >> Perform trouble diagnosis for FUEL INJECTOR, refer to EC-1483, "Diagnosis Procedure".

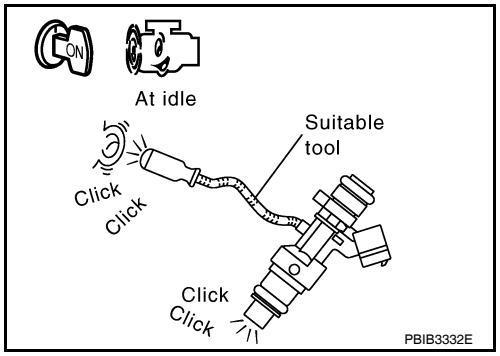

7. CHECK FUEL INJECTOR

1. Remove fuel injector assembly. Refer to EM-146, "Removal and Installation".
   Keep fuel hose and all fuel injectors connected to fuel tube.
2. Confirm that the engine is cooled down and there are no fire hazards near the vehicle.
3. Disconnect all fuel injector harness connectors.
4. Disconnect all ignition coil harness connectors.
5. Prepare pans or saucers under each fuel injector.
6. Crank engine for approximately 3 seconds.
   Check that fuel does not drip from fuel injector.

Is the inspection result normal?

YES >> GO TO 8.
NO >> Replace the fuel injectors from which fuel is dripping. Always replace O-ring with new one.

8. CHECK INTERMITTENT INCIDENT

Refer to GI-42, "Intermittent Incident".

>> INSPECTION END

P0181 FTT SENSOR

Description

INFOID:0000000004362113

The fuel tank temperature sensor is used to detect the fuel temperature inside the fuel tank. The sensor modifies a voltage signal from the ECM. The modified signal returns to the ECM as the fuel temperature input. The sensor uses a thermistor which is sensitive to the change in temperature. The electrical resistance of the thermistor decreases as temperature increases.

<Reference data>

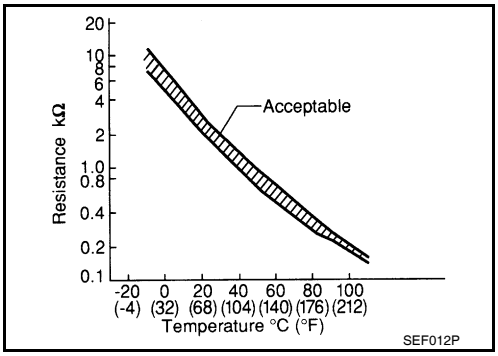

Fluid temperature [°C (°F)]	Voltage* (V)	Resistance (kΩ)
20 (68)	3.5	2.3 - 2.7
50 (122)	2.2	0.79 - 0.90

*: These data are reference values and are measured between ECM terminals 95 (Fuel tank temperature sensor) and 104 (Sensor ground).

DTC Logic

INFOID:0000000004362114

DTC DETECTION LOGIC

DTC No.	Trouble diagnosis name	DTC detecting condition	Possible cause
P0181	Fuel tank temperature sensor circuit range/performance	Rationally incorrect voltage from the sensor is sent to ECM, compared with the voltage signals from engine coolant temperature sensor and intake air temperature sensor.	• Harness or connectors (The sensor circuit is open or shorted) • Fuel tank temperature sensor

DTC CONFIRMATION PROCEDURE

1. PRECONDITIONING

If DTC Confirmation Procedure has been previously conducted, always perform the following before conducting the next test.

1. Turn ignition switch OFF and wait at least 10 seconds.
2. Turn ignition switch ON.
3. Turn ignition switch OFF and wait at least 10 seconds.

>> GO TO 2.

2. PERFORM DTC CONFIRMATION PROCEDURE-I

1. Turn ignition switch ON and wait at least 10 seconds.
2. Check 1st trip DTC.

Is 1st trip DTC detected?

YES >> Go to EC-1275, "Diagnosis Procedure".
NO >> GO TO 3.

3. CHECK ENGINE COOLANT TEMPERATURE

With CONSULT-III

1. Select “COOLAN TEMP/S” in “DATA MONITOR” with CONSULT-III.
2. Check “COOLAN TEMP/S” value.

With GST

Follow the procedure “With CONSULT-III” above.

Is “COOLAN TEMP/S” less than 60°C (140°F)?

YES >> INSPECTION END
NO >> GO TO 4.

4. PERFORM DTC CONFIRMATION PROCEDURE-II

With CONSULT-III

1. Cool engine down until “COOLAN TEMP/S” is less than 60°C (140°F).
2. Wait at least 10 seconds.
3. Check 1st trip DTC.

With GST

Follow the procedure “With CONSULT-III” above.

Is 1st trip DTC detected?

YES >> Go to EC-1275, "Diagnosis Procedure".
NO >> INSPECTION END

Diagnosis Procedure

INFOID:0000000004362115

1. CHECK GROUND CONNECTION

1. Turn ignition switch OFF.
2. Check ground connection E9. Refer to Ground Inspection in GI-45, "Circuit Inspection".

Is the inspection result normal?

YES >> GO TO 2.
NO >> Repair or replace ground connection.

2. CHECK FUEL TANK TEMPERATURE SENSOR POWER SUPPLY CIRCUIT

1. Turn ignition switch OFF.
2. Disconnect “fuel level sensor unit and fuel pump” harness connector.
3. Turn ignition switch ON.
4. Check the voltage between “fuel level sensor unit and fuel pump” harness connector and ground.

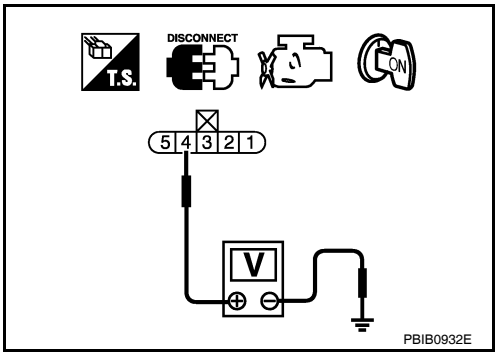

Fuel level sensor unit and fuel pump		Ground	Voltage
Connector	Terminal		
B42	4	Ground	Approx. 5 V

Is the inspection result normal?

YES >> GO TO 4.
NO >> GO TO 3.

3. DETECT MALFUNCTIONING PART

Check the following.

- Harness connectors B10, E29
- Harness for open or short between ECM and “fuel level sensor unit and fuel pump”

>> Repair open circuit, short to ground or short to power in harness or connector.

4. CHECK FUEL TANK TEMPERATURE SENSOR GROUND CIRCUIT FOR OPEN AND SHORT

1. Turn ignition switch OFF.
2. Disconnect ECM harness connector.
3. Check the continuity between “fuel level sensor unit and fuel pump” harness connector and ECM harness connector.

Fuel level sensor unit and fuel pump		ECM		Continuity
Connector	Terminal	Connector	Terminal	
B42	5	E10	104	Existed

4. Also check harness for short to ground and short to power.

Is the inspection result normal?

YES >> GO TO 6.

NO >> GO TO 5.

5. DETECT MALFUNCTIONING PART

Check the following.
- Harness connectors B1, M6
- Harness connectors E30, M1
- Harness for open or short between “fuel level sensor unit and fuel pump” and ECM

>> Repair open circuit, short to ground or short to power in harness or connector.

6. CHECK FUEL TANK TEMPERATURE SENSOR

Refer to EC-1276, "Component Inspection".

Is the inspection result normal?

YES >> GO TO 7.
NO >> Replace “fuel level sensor unit and fuel pump”.

7. CHECK INTERMITTENT INCIDENT

Refer to GI-42, "Intermittent Incident".

>> INSPECTION END

Component Inspection

INFOID:0000000004362116

1. CHECK FUEL TANK TEMPERATURE SENSOR

1. Turn ignition switch OFF.
2. Remove fuel level sensor unit.
3. Check resistance between “fuel level sensor unit and fuel pump” terminals by heating with hot water as shown in the figure.

Terminals	Condition		Resistance
4 and 5	Temperature [°C (°F)]	20 (68)	2.3 - 2.7 kΩ
		50 (122)	0.79 - 0.90 kΩ

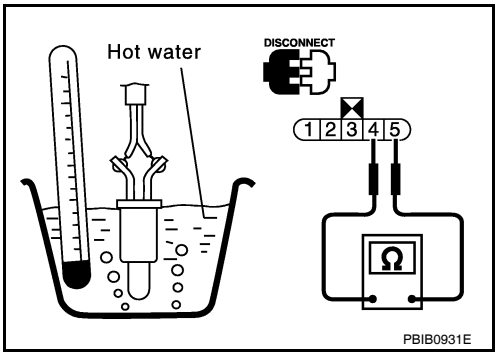

Is the inspection result normal?

YES >> INSPECTION END
NO >> Replace “fuel level sensor unit and fuel pump”.

P0182, P0183 FTT SENSOR

Description

INFOID:0000000004362117

The fuel tank temperature sensor is used to detect the fuel temperature inside the fuel tank. The sensor modifies a voltage signal from the ECM. The modified signal returns to the ECM as the fuel temperature input. The sensor uses a thermistor which is sensitive to the change in temperature. The electrical resistance of the thermistor decreases as temperature increases.

<Reference data>

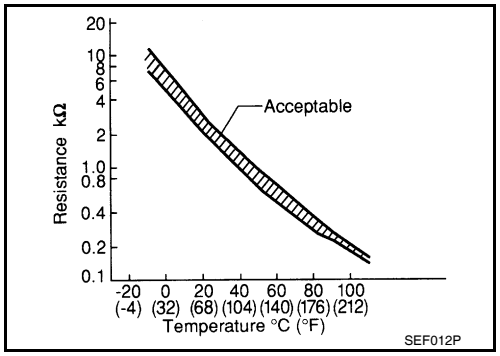

Fluid temperature [°C (°F)]	Voltage* (V)	Resistance (kΩ)
20 (68)	3.5	2.3 - 2.7
50 (122)	2.2	0.79 - 0.90

*: These data are reference values and are measured between ECM terminals 95 (Fuel tank temperature sensor) and 104 (Sensor ground).

DTC Logic

INFOID:0000000004362118

DTC DETECTION LOGIC

DTC No.	Trouble diagnosis name	DTC detecting condition	Possible cause
P0182	Fuel tank temperature sensor circuit low input	An excessively low voltage from the sensor is sent to ECM.	• Harness or connectors (The sensor circuit is open or shorted.) • Fuel tank temperature sensor
P0183	Fuel tank temperature sensor circuit high input	An excessively high voltage from the sensor is sent to ECM.	

DTC CONFIRMATION PROCEDURE

1. PRECONDITIONING

If DTC Confirmation Procedure has been previously conducted, always perform the following before conducting the next test.

1. Turn ignition switch OFF and wait at least 10 seconds.
2. Turn ignition switch ON.
3. Turn ignition switch OFF and wait at least 10 seconds.

>> GO TO 2.

2. PERFORM DTC CONFIRMATION PROCEDURE

1. Turn ignition switch ON and wait at least 5 seconds.
2. Check 1st trip DTC.

Is 1st trip DTC detected?

YES >> Go to EC-1277, "Diagnosis Procedure".
NO >> INSPECTION END

Diagnosis Procedure

INFOID:0000000004362119

1. CHECK GROUND CONNECTION

1. Turn ignition switch OFF.
2. Check ground connection E9. Refer to Ground Inspection in GI-45, "Circuit Inspection".

Is the inspection result normal?

YES >> GO TO 2.
NO >> Repair or replace ground connection.

2. CHECK FUEL TANK TEMPERATURE SENSOR POWER SUPPLY CIRCUIT

1. Turn ignition switch OFF.
2. Disconnect “fuel level sensor unit and fuel pump” harness connector.
3. Turn ignition switch ON.
4. Check the voltage between “fuel level sensor unit and fuel pump” harness connector and ground.

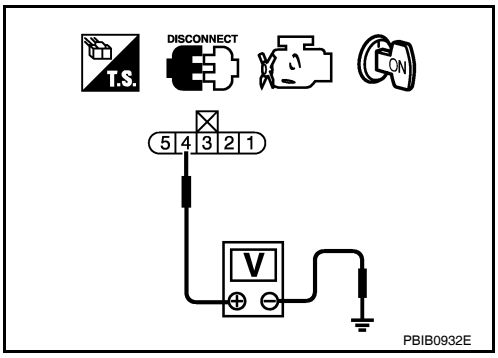

Fuel level sensor unit and fuel pump		Ground	Voltage
Connector	Terminal		
B42	4	Ground	Approx. 5 V

Is the inspection result normal?

YES >> GO TO 4.
NO >> GO TO 3.

3. DETECT MALFUNCTIONING PART

Check the following.
- Harness connectors B10, E29
- Harness for open or short between ECM and “fuel level sensor unit and fuel pump”

>> Repair open circuit, short to ground or short to power in harness or connector.

4. CHECK FUEL TANK TEMPERATURE SENSOR GROUND CIRCUIT FOR OPEN AND SHORT

1. Turn ignition switch OFF.
2. Disconnect ECM harness connector.
3. Check the continuity between “fuel level sensor unit and fuel pump” harness connector and ECM harness connector.

Fuel level sensor unit and fuel pump		ECM		Continuity
Connector	Terminal	Connector	Terminal	
B42	5	E10	104	Existed

4. Also check harness for short to ground and short to power.

Is the inspection result normal?

YES >> GO TO 6.
NO >> GO TO 5.

5. DETECT MALFUNCTIONING PART

Check the following.
- Harness connectors B1, M6
- Harness connectors E30, M1
- Harness for open or short between “fuel level sensor unit and fuel pump” and ECM

>> Repair open circuit, short to ground or short to power in harness or connector.

6. CHECK FUEL TANK TEMPERATURE SENSOR

Refer to EC-1279, "Component Inspection".

Is the inspection result normal?

YES >> GO TO 7.
NO >> Replace “fuel level sensor unit and fuel pump”.

7. CHECK INTERMITTENT INCIDENT

Refer to GI-42, "Intermittent Incident".

>> INSPECTION END

Component Inspection

INFOID:0000000004362120

1. CHECK FUEL TANK TEMPERATURE SENSOR

1. Turn ignition switch OFF.
2. Remove fuel level sensor unit.
3. Check resistance between “fuel level sensor unit and fuel pump” terminals by heating with hot water as shown in the figure.

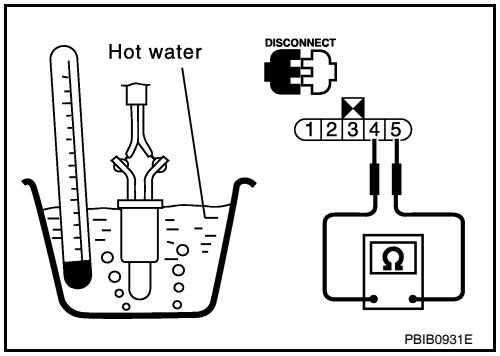

Terminals	Condition		Resistance
4 and 5	Temperature [°C (°F)]	20 (68)	2.3 - 2.7 kΩ
		50 (122)	0.79 - 0.90 kΩ

Is the inspection result normal?

YES >> INSPECTION END
NO >> Replace “fuel level sensor unit and fuel pump”.

P0222, P0223 TP SENSOR

Description

INFOID:0000000004362129

Electric throttle control actuator consists of throttle control motor, throttle position sensor, etc. The throttle position sensor responds to the throttle valve movement.
The throttle position sensor has two sensors. These sensors are a kind of potentiometer which transform the throttle valve position into output voltage, and emit the voltage signals to the ECM. The ECM judges the current opening angle of the throttle valve from these signals and controls the throttle valve opening angle in response to driving conditions via the throttle control motor.

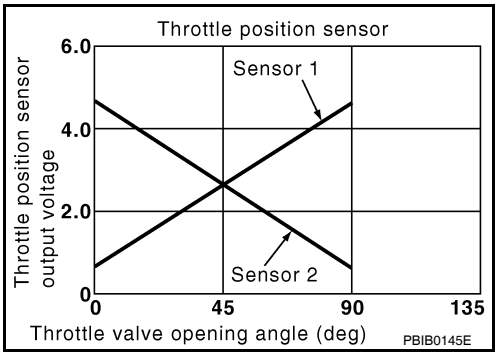

DTC Logic

INFOID:0000000004362130

DTC DETECTION LOGIC

NOTE:
If DTC P0222 or P0223 is displayed with DTC P0643, first perform the trouble diagnosis for DTC P0643. Refer to EC-1379, "DTC Logic".

DTC No.	Trouble diagnosis name	DTC detecting condition	Possible cause
P0222	Throttle position sensor 1 circuit low input	An excessively low voltage from the TP sensor 1 is sent to ECM.	• Harness or connectors (The sensor circuit is open or shorted.) • Electric throttle control actuator (Throttle position sensor 1)
P0223	Throttle position sensor 1 circuit high input	An excessively high voltage from the TP sensor 1 is sent to ECM.	

DTC CONFIRMATION PROCEDURE

1.PRECONDITIONING

If DTC Confirmation Procedure has been previously conducted, always perform the following before conducting the next test.
1. Turn ignition switch OFF and wait at least 10 seconds.
2. Turn ignition switch ON.
3. Turn ignition switch OFF and wait at least 10 seconds.

TESTING CONDITION:
Before performing the following procedure, confirm that battery voltage is more than 8 V at idle.

>> GO TO 2.

2.PERFORM DTC CONFIRMATION PROCEDURE

1. Start engine and let it idle for 1 second.
2. Check DTC.

Is DTC detected?

YES >> Go to EC-1280, "Diagnosis Procedure".
NO >> INSPECTION END

Diagnosis Procedure

INFOID:0000000004362131

1.CHECK GROUND CONNECTION

1. Turn ignition switch OFF.
2. Check ground connection E9. Refer to Ground Inspection in GI-45, "Circuit Inspection".

Is the inspection result normal?

YES >> GO TO 2.
NO >> Repair or replace ground connection.

2. CHECK THROTTLE POSITION SENSOR 1 POWER SUPPLY CIRCUIT-I

1. Disconnect electric throttle control actuator harness connector.
2. Turn ignition switch ON.
3. Check the voltage between electric throttle control actuator harness connector and ground.

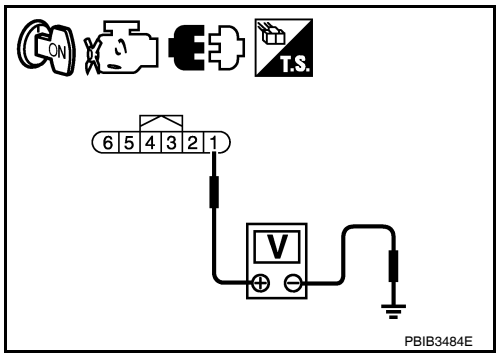

Electric throttle control actuator		Ground	Voltage
Connector	Terminal		
F57	1	Ground	Approx. 5 V

Is the inspection result normal?

YES >> GO TO 3.
NO >> Repair open circuit, short to ground or short to power in harness or connectors.

3. CHECK THROTTLE POSITION SENSOR 1 GROUND CIRCUIT FOR OPEN AND SHORT

1. Turn ignition switch OFF.
2. Disconnect ECM harness connector.
3. Check the continuity between electric throttle control actuator and ECM harness connector.

Electric throttle control actuator		ECM		Continuity
Connector	Terminal	Connector	Terminal	
F57	4	F13	36	Existed

4. Also check harness for short to ground and short to power.

Is the inspection result normal?

YES >> GO TO 4.
NO >> Repair open circuit, short to ground or short to power in harness or connectors.

4. CHECK THROTTLE POSITION SENSOR 1 INPUT SIGNAL CIRCUIT FOR OPEN AND SHORT

1. Check the continuity between electric throttle control actuator and ECM harness connector.

Electric throttle control actuator		ECM		Continuity
Connector	Terminal	Connector	Terminal	
F57	2	F13	37	Existed

2. Also check harness for short to ground and short to power.

Is the inspection result normal?

YES >> GO TO 5.
NO >> Repair open circuit, short to ground or short to power in harness or connectors.

5. CHECK THROTTLE POSITION SENSOR

Refer to EC-1282, "Component Inspection".

Is the inspection result normal?

YES >> GO TO 7.
NO >> GO TO 6.

6. REPLACE ELECTRIC THROTTLE CONTROL ACTUATOR

1. Replace electric throttle control actuator.
2. Refer to EC-1282, "Special Repair Requirement".

>> INSPECTION END

7. CHECK INTERMITTENT INCIDENT

Refer to GI-42, "Intermittent Incident".

>> INSPECTION END

Component Inspection

INFOID:0000000004362132

1. CHECK THROTTLE POSITION SENSOR

1. Turn ignition switch OFF.
2. Reconnect all harness connectors disconnected.
3. Perform EC-1053, "THROTTLE VALVE CLOSED POSITION LEARNING : Special Repair Requirement".
4. Turn ignition switch ON.
5. Set selector lever position to D (CVT) or 1st position (M/T).
6. Check the voltage between ECM harness connector terminals under the following conditions.

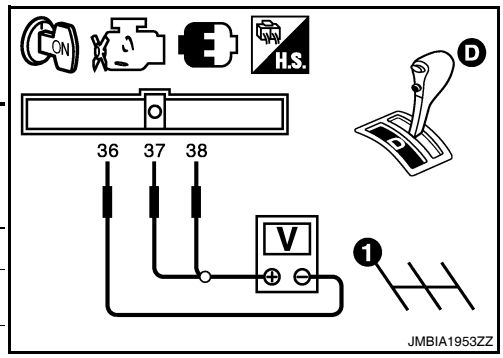

ECM			Condition		Voltage
Connector	+ Terminal	– Terminal			
F13	37 (TP sensor 1 signal)	36 (Sensor ground)	Accelerator pedal	Fully released	More than 0.36 V
				Fully depressed	Less than 4.75 V
	38 (TP sensor 2 signal)			Fully released	Less than 4.75 V
				Fully depressed	More than 0.36 V

Is the inspection result normal?

YES >> INSPECTION END
NO >> GO TO 2.

2. REPLACE ELECTRIC THROTTLE CONTROL ACTUATOR

1. Replace electric throttle control actuator.
2. Go to EC-1217, "Special Repair Requirement".

>> INSPECTION END

Special Repair Requirement

INFOID:0000000004362133

1. PERFORM THROTTLE VALVE CLOSED POSITION LEARNING

Refer to EC-1053, "THROTTLE VALVE CLOSED POSITION LEARNING : Special Repair Requirement"

>> GO TO 2.

2. PERFORM IDLE AIR VOLUME LEARNING

Refer to EC-1053, "IDLE AIR VOLUME LEARNING : Special Repair Requirement"

>> END

P0300, P0301, P0302, P0303, P0304, P0305, P0306 MISFIRE

DTC Logic

INFOID:0000000004362134

DTC DETECTION LOGIC

When a misfire occurs, engine speed will fluctuate. If the engine speed fluctuates enough to cause the crankshaft position (CKP) sensor (POS) signal to vary, ECM can determine that a misfire is occurring.

Sensor	Input signal to ECM	ECM function
Crankshaft position sensor (POS)	Engine speed	On board diagnosis of misfire

The misfire detection logic consists of the following two conditions.

1. One Trip Detection Logic (Three Way Catalyst Damage)
   On the 1st trip, when a misfire condition occurs that can damage the three way catalyst (TWC) due to overheating, the MIL will blink.
   When a misfire condition occurs, the ECM monitors the CKP sensor signal every 200 engine revolutions for a change.
   When the misfire condition decreases to a level that will not damage the TWC, the MIL will turn off.
   If another misfire condition occurs that can damage the TWC on a second trip, the MIL will blink.
   When the misfire condition decreases to a level that will not damage the TWC, the MIL will remain on.
   If another misfire condition occurs that can damage the TWC, the MIL will begin to blink again.
2. Two Trip Detection Logic (Exhaust quality deterioration)
   For misfire conditions that will not damage the TWC (but will affect vehicle emissions), the MIL will only illuminate when the misfire is detected on a second trip. During this condition, the ECM monitors the CKP sensor signal every 1,000 engine revolutions.
   A misfire malfunction can be detected in any one cylinder or in multiple cylinders.

DTC No.	Trouble diagnosis name	DTC detecting condition	Possible cause
P0300	Multiple cylinder misfires detected	Multiple cylinders misfire.	• Improper spark plug • Insufficient compression • Incorrect fuel pressure • The fuel injector circuit is open or shorted • Fuel injector • Intake air leakage • The ignition signal circuit is open or shorted • Lack of fuel • Signal plate • A/F sensor 1 • Incorrect PCV hose connection
P0301	No. 1 cylinder misfire detected	No. 1 cylinder misfires.	
P0302	No. 2 cylinder misfire detected	No. 2 cylinder misfires.	
P0303	No. 3 cylinder misfire detected	No. 3 cylinder misfires.	
P0304	No. 4 cylinder misfire detected	No. 4 cylinder misfires.	
P0305	No. 5 cylinder misfire detected	No. 5 cylinder misfires.	
P0306	No. 6 cylinder misfire detected	No. 6 cylinder misfires.	

DTC CONFIRMATION PROCEDURE

1.PRECONDITIONING

If DTC Confirmation Procedure has been previously conducted, always perform the following procedure before conducting the next test.

1. Turn ignition switch OFF and wait at least 10 seconds.
2. Turn ignition switch ON.
3. Turn ignition switch OFF and wait at least 10 seconds.

>> GO TO 2.

2.PERFORM DTC CONFIRMATION PROCEDURE-I

1. Start engine and warm it up to normal operating temperature.
2. Turn ignition switch OFF and wait at least 10 seconds.
3. Turn ignition switch ON.
4. Turn ignition switch OFF and wait at least 10 seconds.
5. Restart engine and let it idle for approximately 15 minutes.
6. Check 1st trip DTC.

Is 1st trip DTC detected?

YES >> Go to EC-1284, "Diagnosis Procedure".
NO >> GO TO 3.

3. PERFORM DTC CONFIRMATION PROCEDURE-II

1. Turn ignition switch OFF and wait at least 10 seconds.
2. Turn ignition switch ON.
3. Turn ignition switch OFF and wait at least 10 seconds.
4. Start engine and drive the vehicle under similar conditions to (1st trip) Freeze Frame Data for a certain time. Refer to the table below.
   Hold the accelerator pedal as steady as possible.
   Similar conditions to (1st trip) Freeze Frame Data mean that the following conditions should be satisfied at the same time.
   CAUTION:
   Always drive vehicle in safe manner according to traffic conditions and obey all traffic laws when driving.

Engine speed	Engine speed in the freeze frame data ± 400 rpm
Vehicle speed	Vehicle speed in the freeze frame data ± 10 km/h (6 MPH)
Basic fuel schedule	Basic fuel schedule in freeze frame data × (1 ± 0.1)
Engine coolant temperature (T) condition	When the freeze frame data shows lower than 70°C (158°F), T should be lower than 70°C (158°F).
	When the freeze frame data shows higher than or equal to 70°C (158°F), T should be higher than or equal to 70°C (158°F).

Driving time varies according to the engine speed in the freeze frame data.

Engine speed	Time
Around 1,000 rpm	Approximately 10 minutes
Around 2,000 rpm	Approximately 5 minutes
More than 3,000 rpm	Approximately 3.5 minutes

5. Check 1st trip DTC.

Is 1st trip DTC detected?

YES >> Go to EC-1284, "Diagnosis Procedure".
NO >> INSPECTION END

Diagnosis Procedure

INFOID:0000000004362135

1. CHECK FOR INTAKE AIR LEAKAGE AND PCV HOSE

1. Start engine and run it at idle speed.
2. Listen for the sound of the intake air leakage.
3. Check PCV hose connection.

Is intake air leakage detected?

YES >> Discover air leakage location and repair.
NO >> GO TO 2.

2. CHECK FOR EXHAUST SYSTEM CLOGGING

Stop engine and visually check exhaust tube, three way catalyst and muffler for dents.

Is the inspection result normal?

YES-1 >> With CONSULT-III: GO TO 3.
YES-2 >> Without CONSULT-III: GO TO 4.
NO >> Repair or replace malfunctioning part.

3. PERFORM POWER BALANCE TEST

With CONSULT-III

1. Start engine.
2. Perform “POWER BALANCE” in “ACTIVE TEST” mode with CONSULT-III.

3. Check that each circuit produces a momentary engine speed drop.

Is the inspection result normal?

YES >> GO TO 9.
NO >> GO TO 4.

4. CHECK FUNCTION OF FUEL INJECTOR

1. Start engine and let it idle.
2. Listen to each fuel injector operation.

Clicking sound should be heard.

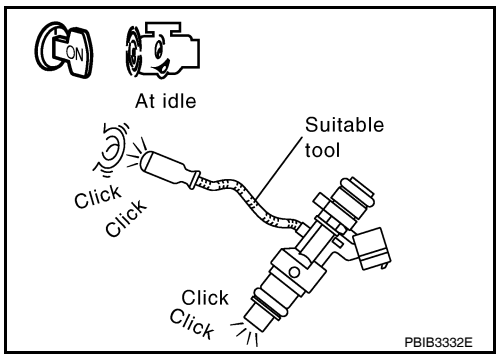

Is the inspection result normal?

YES >> GO TO 5.
NO >> Perform trouble diagnosis for FUEL INJECTOR, refer to EC-1483, "Diagnosis Procedure".

5. CHECK FUNCTION OF IGNITION COIL-I

CAUTION:
Perform the following procedure in a place with no combustible objects and good ventilation.

1. Turn ignition switch OFF.
2. Remove fuel pump fuse in IPDM E/R to release fuel pressure.
   NOTE:
   Do not use CONSULT-III to release fuel pressure, or fuel pressure applies again during the following procedure.
3. Start engine.
4. After engine stalls, crank it 2 or 3 times to release all fuel pressure.
5. Turn ignition switch OFF.
6. Remove all ignition coil harness connectors to avoid the electrical discharge from the ignition coils.
7. Remove ignition coil and spark plug of the cylinder to be checked.
8. Crank engine for 5 seconds or more to remove combustion gas in the cylinder.
9. Connect spark plug and harness connector to ignition coil.
10. Fix ignition coil using a rope etc. with gap of 13 - 17 mm (0.52 - 0.66 in) between the edge of the spark plug and grounded metal portion as shown in the figure.
11. Crank engine for approximately 3 seconds, and check whether spark is generated between the spark plug and the grounded metal portion.

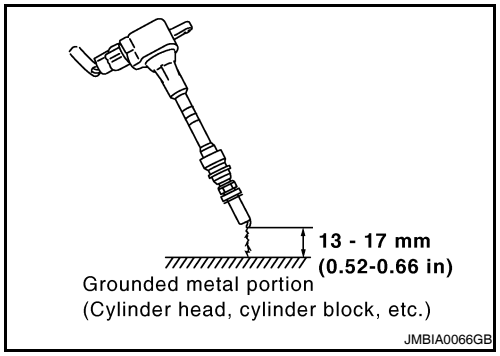

Spark should be generated.

CAUTION:
- **Never place the spark plug and the ignition coil within 50 cm (19.7 in) each other. Be careful not to get an electrical shock while checking, because the electrical discharge voltage becomes 20 kV or more.**
- **It might damage the ignition coil if the gap of more than 17 mm (0.66 in) is made.**

NOTE:
When the gap is less than 13 mm (0.52 in), a spark might be generated even if the coil is malfunctioning.

Is the inspection result normal?

YES >> GO TO 9.
NO >> GO TO 6.

6. CHECK FUNCTION OF IGNITION COIL-II

1. Turn ignition switch OFF.
2. Disconnect spark plug and connect a non-malfunctioning spark plug.

3. Crank engine for approximately 3 seconds, and recheck whether spark is generated between the spark plug and the grounded metal portion.

Spark should be generated.

Is the inspection result normal?

YES >> GO TO 7.
NO >> Check ignition coil, power transistor and their circuits. Refer to EC-1491, "Diagnosis Procedure".

7. CHECK SPARK PLUG

Check the initial spark plug for fouling, etc.

Is the inspection result normal?

YES >> Replace spark plug(s) with standard type one(s). For spark plug type, refer to EM-119, "Removal and Installation".
NO >> Repair or clean spark plug. Then GO TO 8.

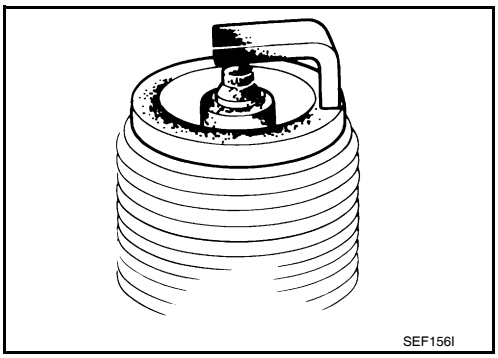

8. CHECK FUNCTION OF IGNITION COIL-III

1. Reconnect the initial spark plugs.
2. Crank engine for approximately 3 seconds, and recheck whether spark is generated between the spark plug and the grounded portion.

Spark should be generated.

Is the inspection result normal?

YES >> INSPECTION END
NO >> Replace spark plug(s) with standard type one(s). For spark plug type, refer to EM-119, "Removal and Installation".

9. CHECK COMPRESSION PRESSURE

Check compression pressure. Refer to EM-128, "On-Vehicle Service".

Is the inspection result normal?

YES >> GO TO 10.
NO >> Check pistons, piston rings, valves, valve seats and cylinder head gaskets.

10. CHECK FUEL PRESSURE

1. Install all removed parts.
2. Release fuel pressure to zero. Refer to EC-1579, "Inspection".
3. Install fuel pressure gauge kit [SST (J-44321)] and check fuel pressure. Refer to EC-1579, "Inspection".

At idle: Approximately 350 kPa (3.57 kg/cm^2, 51 psi)

Is the inspection result normal?

YES >> GO TO 12.
NO >> GO TO 11.

11. DETECT MALFUNCTIONING PART

Check fuel hoses and fuel tubes for clogging.

Is the inspection result normal?

YES >> Replace “fuel filter and fuel pump assembly”.
NO >> Repair or replace malfunctioning part.

12. CHECK IGNITION TIMING

Check idle speed and ignition timing.
For procedure, refer to EC-1048, "BASIC INSPECTION : Special Repair Requirement".

For specification, refer to EC-1585, "Idle Speed" and EC-1585, "Ignition Timing".

Is the inspection result normal?

YES >> GO TO 13.
NO >> Follow the EC-1048, "BASIC INSPECTION : Special Repair Requirement".

13. CHECK A/F SENSOR 1 INPUT SIGNAL CIRCUIT

1. Turn ignition switch OFF.
2. Disconnect corresponding A/F sensor 1 harness connector.
3. Disconnect ECM harness connector.
4. Check the continuity between A/F sensor 1 harness connector and ECM harness connector.

A/F sensor 1			ECM		Continuity
Bank	Connector	Terminal	Connector	Terminal	
1	F12	1	F13	45	Existed
		2		49	
2	F61	1		53	
		2		57	

5. Check the continuity between A/F sensor 1 harness connector and ground, or ECM harness connector and ground.

A/F sensor 1			Ground	Continuity
Bank	Connector	Terminal		
1	F12	1	Ground	Not existed
		2		
2	F61	1		
		2		

ECM		Ground	Continuity
Connector	Terminal		
F13	45	Ground	Not existed
	49		
	53		
	57		

6. Also check harness for short to power.

Is the inspection result normal?

YES >> GO TO 14.
NO >> Repair open circuit, short to ground or short to power in harness or connectors.

14. CHECK A/F SENSOR 1 HEATER

Refer to EC-1186, "Component Inspection".

Is the inspection result normal?

YES >> GO TO 15.
NO >> Replace malfunctioning A/F sensor 1.

15. CHECK MASS AIR FLOW SENSOR

With CONSULT-III

1. Check “MASS AIR FLOW” in “DATA MONITOR” mode with CONSULT-III.
2. For specification, refer to EC-1585, "Mass Air Flow Sensor".

With GST

1. Check mass air flow sensor signal in Service $01 with GST.
2. For specification, refer to EC-1585, "Mass Air Flow Sensor".

Is the measurement value within the specification?

YES >> GO TO 16.
NO >> Check connectors for rusted terminals or loose connections in the mass air flow sensor circuit or ground. Refer to EC-1202, "Diagnosis Procedure".

16. CHECK SYMPTOM TABLE

Check items on the rough idle symptom in EC-1567, "Symptom Table".

Is the inspection result normal?

YES >> GO TO 17.
NO >> Repair or replace malfunctioning part.

17. ERASE THE 1ST TRIP DTC

Some tests may cause a 1st trip DTC to be set.
Erase the 1st trip DTC from the ECM memory after performing the tests. Refer to EC-1142, "Diagnosis Description".

>> GO TO 18.

18. CHECK INTERMITTENT INCIDENT

Refer to GI-42, "Intermittent Incident".

>> INSPECTION END

P0327, P0328, P0332, P0333 KS

Description

INFOID:0000000004362136

The knock sensor is attached to the cylinder block. It senses engine knocking using a piezoelectric element. A knocking vibration from the cylinder block is sensed as vibrational pressure. This pressure is converted into a voltage signal and sent to the ECM.

DTC Logic

INFOID:0000000004362137

DTC DETECTION LOGIC

DTC No.	Trouble diagnosis name	DTC detected condition	Possible cause
P0327	Knock sensor (bank 1) circuit low input	An excessively low voltage from the sensor is sent to ECM.	• Harness or connectors (The sensor circuit is open or shorted.) • Knock sensor
P0328	Knock sensor (bank 1) circuit high input	An excessively high voltage from the sensor is sent to ECM.	
P0332	Knock sensor (bank 2) circuit low input	An excessively low voltage from the sensor is sent to ECM.	
P0333	Knock sensor (bank 2) circuit high input	An excessively high voltage from the sensor is sent to ECM.	

DTC CONFIRMATION PROCEDURE

1.PRECONDITIONING

If DTC Confirmation Procedure has been previously conducted, always perform the following before conducting the next test.

1. Turn ignition switch OFF and wait at least 10 seconds.
2. Turn ignition switch ON.
3. Turn ignition switch OFF and wait at least 10 seconds.

TESTING CONDITION:
Before performing the following procedure, confirm that battery voltage is more than 10 V at idle.

>> GO TO 2.

2.PERFORM DTC CONFIRMATION PROCEDURE

1. Start engine and run it for at least 5 seconds at idle speed.
2. Check 1st trip DTC.

Is 1st trip DTC detected?

YES >> Go to EC-1289, "Diagnosis Procedure".
NO >> INSPECTION END

Diagnosis Procedure

INFOID:0000000004362138

1.CHECK GROUND CONNECTION

1. Turn ignition switch OFF.
2. Check ground connection E9. Refer to Ground Inspection in GI-45, "Circuit Inspection".

Is the inspection result normal?

YES >> GO TO 2.
NO >> Repair or replace ground connection.

2.CHECK KNOCK SENSOR GROUND CIRCUIT FOR OPEN AND SHORT

1. Disconnect knock sensor harness connector and ECM harness connector.
2. Check the continuity between knock sensor harness connector and ECM harness connector.

DTC	Knock sensor			ECM		Continuity
	Bank	Connector	Terminal	Connector	Terminal	
P0327, P0328	1	F202	2	F13	67	Existed
P0332, P0333	2	F203	2			

3. Also check harness for short to ground and short to power.

Is the inspection result normal?

YES >> GO TO 4.
NO >> GO TO 3.

3. DETECT MALFUNCTIONING PART

Check the following.
- Harness connectors F69, F201
- Harness for open or short between knock sensor and ECM

>> Repair open circuit, short to ground or short to power in harness or connectors.

4. CHECK KNOCK SENSOR INPUT SIGNAL CIRCUIT FOR OPEN AND SHORT

1. Check the continuity between knock sensor harness connector and ECM harness connector.

DTC	Knock sensor			ECM		Continuity
	Bank	Connector	Terminal	Connector	Terminal	
P0327, P0328	1	F202	1	F13	61	Existed
P0332, P0333	2	F203	1		62	

2. Also check harness for short to ground and short to power.

Is the inspection result normal?

YES >> GO TO 6.
NO >> GO TO 5.

5. DETECT MALFUNCTIONING PART

Check the following.
- Harness connectors F69, F201
- Harness for open or short between knock sensor and ECM

>> Repair open circuit, short to ground or short to power in harness or connectors.

6. CHECK KNOCK SENSOR

Refer to EC-1290, "Component Inspection".

Is the inspection result normal?

YES >> GO TO 7.
NO >> Replace malfunctioning knock sensor.

7. CHECK INTERMITTENT INCIDENT

Refer to GI-42, "Intermittent Incident".

>> INSPECTION END

Component Inspection

INFOID:0000000004362139

1. CHECK KNOCK SENSOR

1. Turn ignition switch OFF.
2. Disconnect knock sensor harness connector.

3. Check resistance between knock sensor terminal as per the following.
NOTE:
It is necessary to use an ohmmeter which can measure more than 10 MΩ.

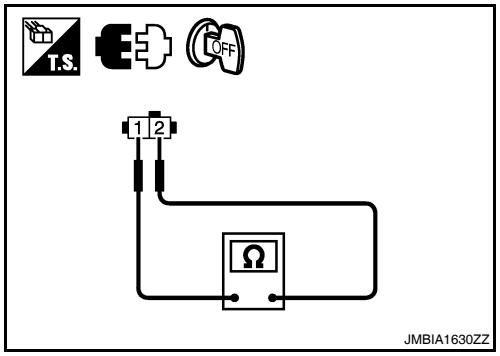

Terminals	Resistance
1 and 2	Approx. 532 - 588 kΩ [at 20°C (68°F)]

CAUTION:
Never use any knock sensors that have been dropped or physically damaged. Use only new ones.

Is the inspection result normal?

YES >> INSPECTION END
NO >> Replace malfunctioning knock sensor.

P0335 CKP SENSOR (POS)

Description

INFOID:0000000004362140

The crankshaft position sensor (POS) is located on the oil pan facing the gear teeth (cogs) of the signal plate. It detects the fluctuation of the engine revolution.
The sensor consists of a permanent magnet and Hall IC.
When the engine is running, the high and low parts of the teeth cause the gap with the sensor to change.
The changing gap causes the magnetic field near the sensor to change.
Due to the changing magnetic field, the voltage from the sensor changes.
The ECM receives the voltage signal and detects the fluctuation of the engine revolution.

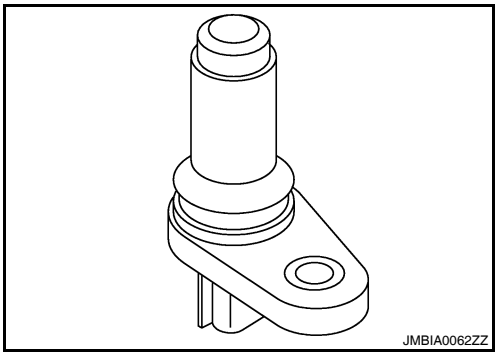

ECM receives the signals as shown in the figure.

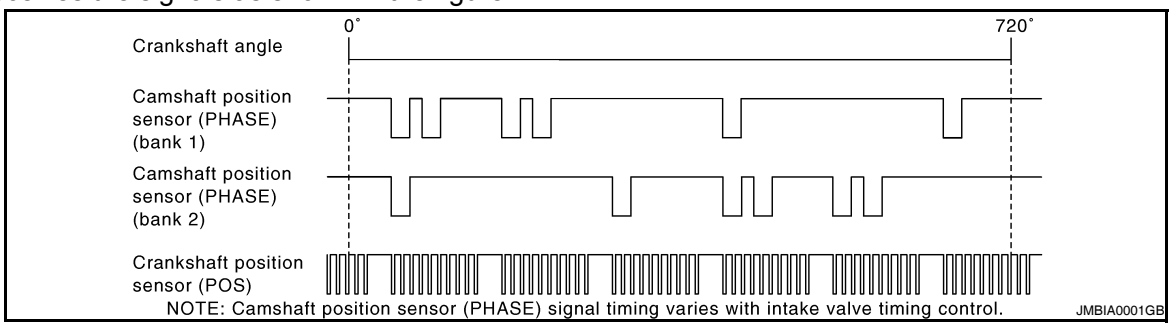

DTC Logic

INFOID:0000000004362141

DTC DETECTION LOGIC

DTC No.	Trouble diagnosis name	DTC detecting condition	Possible cause
P0335	Crankshaft position sensor (POS) circuit	• The crankshaft position sensor (POS) signal is not detected by the ECM during the first few seconds of engine cranking. • The proper pulse signal from the crankshaft position sensor (POS) is not sent to ECM while the engine is running. • The crankshaft position sensor (POS) signal is not in the normal pattern during engine running.	• Harness or connectors [Crankshaft position (CKP) sensor (POS) circuit is open or shorted.] [Accelerator pedal position (APP) sensor 2 circuit is shorted.] (EVAP control system pressure sensor circuit is shorted.) (Refrigerant pressure sensor circuit is shorted.) • CKP sensor (POS) • APP sensor • EVAP control system pressure sensor • Refrigerant pressure sensor • Signal plate

DTC CONFIRMATION PROCEDURE

1.PRECONDITIONING

If DTC Confirmation Procedure has been previously conducted, always perform the following before conducting the next test.
1. Turn ignition switch OFF and wait at least 10 seconds.
2. Turn ignition switch ON.
3. Turn ignition switch OFF and wait at least 10 seconds.

TESTING CONDITION:
Before performing the following procedure, confirm that battery voltage is more than 10.5 V with ignition switch ON.

>> GO TO 2.

2. PERFORM DTC CONFIRMATION PROCEDURE

1. Start engine and let it idle for at least 5 seconds.
   If engine does not start, crank engine for at least 2 seconds.
2. Check 1st trip DTC.

Is 1st trip DTC detected?

YES >> Go to EC-1293, "Diagnosis Procedure".
NO >> INSPECTION END

Diagnosis Procedure

INFOID:0000000004362142

1. CHECK GROUND CONNECTION

1. Turn ignition switch OFF.
2. Check ground connection E9. Refer to Ground Inspection in GI-45, "Circuit Inspection".

Is the inspection result normal?

YES >> GO TO 2.
NO >> Repair or replace ground connection.

2. CHECK CRANKSHAFT POSITION (CKP) SENSOR (POS) POWER SUPPLY CIRCUIT-I

1. Disconnect crankshaft position (CKP) sensor (POS) harness connector.
2. Turn ignition switch ON.
3. Check the voltage between CKP sensor (POS) harness connector and ground.

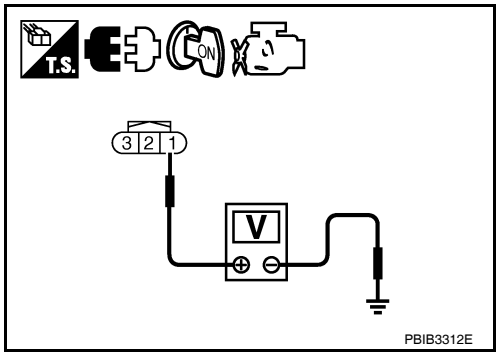

CKP sensor (POS)		Ground	Voltage (V)
Connector	Terminal		
F30	1	Ground	Approx. 5

Is the inspection result normal?

YES >> GO TO 8.
NO >> GO TO 3.

3. CHECK CRANKSHAFT POSITION (CKP) SENSOR (POS) POWER SUPPLY CIRCUIT-II

1. Turn ignition switch ON.
2. Disconnect ECM harness connector.
3. Check the continuity between CKP sensor (POS) harness connector and ECM harness connector.

CKP sensor (POS)		ECM		Continuity
Connector	Terminal	Connector	Terminal	
F30	1	F13	76	Existed

Is the inspection result normal?

YES >> GO TO 4.
NO >> Repair open circuit.

4. CHECK SENSOR POWER SUPPLY CIRCUIT

Check harness for short to power and short to ground, between the following terminals.

ECM		Sensor		
Connector	Terminal	Name	Connector	Terminal
F13	72	Refrigerant pressure sensor	E219	1
	76	CKP sensor (POS)	F30	1
E10	87	APP sensor	E40	6
	91	EVAP control system pressure sensor	B41	3

Is the inspection result normal?

YES >> GO TO 5.
NO >> Repair short to ground or short to power in harness or connectors.

5. CHECK COMPONENTS

Check the following.
- EVAP control system pressure sensor (Refer to EC-1334, "Component Inspection".)
- Refrigerant pressure sensor (Refer to EC-1503, "Diagnosis Procedure".)

Is the inspection result normal?

YES >> GO TO 6.
NO >> Replace malfunctioning components.

6. CHECK APP SENSOR

Refer to EC-1450, "Component Inspection".

Is the inspection result normal?

YES >> GO TO 12.
NO >> GO TO 7.

7. REPLACE ACCELERATOR PEDAL ASSEMBLY

1. Replace accelerator pedal assembly.
2. Refer to EC-1450, "Special Repair Requirement".

>> INSPECTION END

8. CHECK CKP SENSOR (POS) GROUND CIRCUIT FOR OPEN AND SHORT

1. Turn ignition switch OFF.
2. Disconnect ECM harness connector.
3. Check the continuity between CKP sensor (POS) harness connector and ECM harness connector.

CKP sensor (POS)		ECM		Continuity
Connector	Terminal	Connector	Terminal	
F30	2	F13	60	Existed

4. Also check harness for short to ground and short to power.

Is the inspection result normal?

YES >> GO TO 9.
NO >> Repair open circuit, short to ground or short to power in harness or connectors.

9. CHECK CKP SENSOR (POS) INPUT SIGNAL CIRCUIT FOR OPEN AND SHORT

1. Check the continuity between CKP sensor (POS) harness connector and ECM harness connector.

CKP sensor (POS)		ECM		Continuity
Connector	Terminal	Connector	Terminal	
F30	3	F13	65	Existed

2. Also check harness for short to ground and short to power.

Is the inspection result normal?

YES >> GO TO 10.
NO >> Repair open circuit, short to ground or short to power in harness or connectors.

10. CHECK CRANKSHAFT POSITION SENSOR (POS)

Refer to EC-1295, "Component Inspection".

Is the inspection result normal?

YES >> GO TO 11.
NO >> Replace crankshaft position sensor (POS).

11. CHECK GEAR TOOTH

Visually check for chipping signal plate gear tooth.

Is the inspection result normal?

YES >> GO TO 12.
NO >> Replace the signal plate.

12. CHECK INTERMITTENT INCIDENT

Refer to GI-42, "Intermittent Incident".

>> INSPECTION END

Component Inspection

INFOID:0000000004362143

1. CHECK CRANKSHAFT POSITION SENSOR (POS)-I

1. Loosen the fixing bolt of the sensor.
2. Disconnect crankshaft position sensor (POS) harness connector.
3. Remove the sensor.
4. Visually check the sensor for chipping.

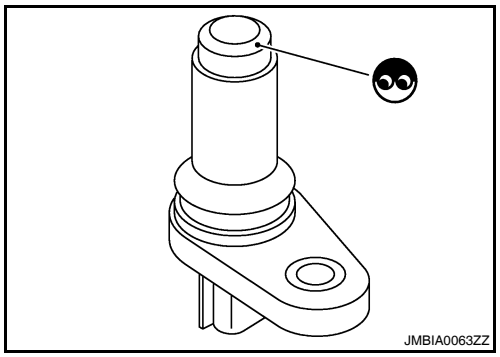

Is the inspection result normal?

YES >> GO TO 2.
NO >> Replace crankshaft position sensor (POS)

2. CHECK CRANKSHAFT POSITION SENSOR (POS)-II

Check resistance crankshaft position sensor (POS) terminals as per the following.

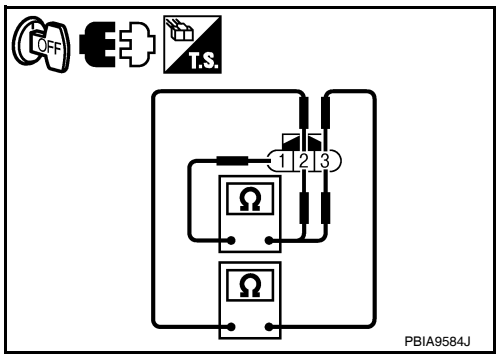

Terminal No. (Polarity)	Resistance
1 (+) - 2 (-)	Except 0 or ∞ Ω [at 25°C (77°F)]
1 (+) - 3 (-)	
2 (+) - 3 (-)	

Is the inspection result normal?

YES >> INSPECTION END
NO >> Replace crankshaft position sensor (POS)

P0340, P0345 CMP SENSOR (PHASE)

Description

INFOID:0000000004362144

The camshaft position sensor (PHASE) senses the protrusion of camshaft (INT) to identify a particular cylinder. The camshaft position sensor (PHASE) senses the piston position.
When the crankshaft position sensor (POS) system becomes inoperative, the camshaft position sensor (PHASE) provides various controls of engine parts instead, utilizing timing of cylinder identification signals.
The sensor consists of a permanent magnet and Hall IC.
When engine is running, the high and low parts of the teeth cause the gap with the sensor to change.
The changing gap causes the magnetic field near the sensor to change.
Due to the changing magnetic field, the voltage from the sensor changes.
ECM receives the signals as shown in the figure.

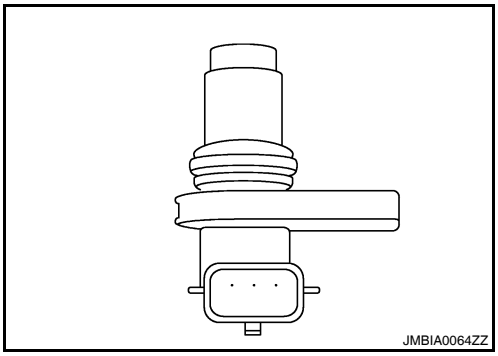

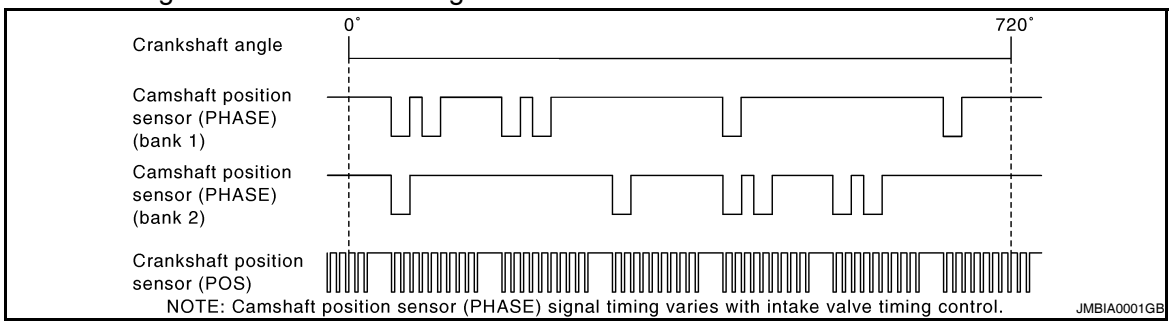

DTC Logic

INFOID:0000000004362145

DTC DETECTION LOGIC

NOTE:
If DTC P0340 or P0345 is displayed with DTC P0643, first perform the trouble diagnosis for DTC P0643. Refer to EC-1379, "DTC Logic".

DTC No.	Trouble diagnosis name	DTC detecting condition	Possible cause
P0340	Camshaft position sensor (PHASE) (bank 1) circuit	• The cylinder No. signal is not sent to ECM for the first few seconds during engine cranking. • The cylinder No. signal is not sent to ECM during engine running. • The cylinder No. signal is not in the normal pattern during engine running.	• Harness or connectors (The sensor circuit is open or shorted.) • Camshaft position sensor (PHASE) • Camshaft (INT) • Starter motor (Refer to STR-32.) • Starting system circuit (Refer to STR-32.) • Dead (Weak) battery
P0345	Camshaft position sensor (PHASE) (bank 2) circuit		

DTC CONFIRMATION PROCEDURE

1.PRECONDITIONING

If DTC Confirmation Procedure has been previously conducted, always perform the following before conducting the next test.
1. Turn ignition switch OFF and wait at least 10 seconds.
2. Turn ignition switch ON.
3. Turn ignition switch OFF and wait at least 10 seconds.

TESTING CONDITION:
Before performing the following procedure, confirm that battery voltage is more than 10.5 V with ignition switch ON.

>> GO TO 2.

2.PERFORM DTC CONFIRMATION PROCEDURE-I

1. Start engine and let it idle for at least 5 seconds.
   If engine does not start, crank engine for at least 2 seconds.
2. Check 1st trip DTC.

Is 1st trip DTC detected?

YES >> Go to EC-1297, "Diagnosis Procedure".
NO >> GO TO 3.

3. PERFORM DTC CONFIRMATION PROCEDURE-I

1. Maintaining engine speed at more than 800 rpm for at least 5 seconds.
2. Check 1st trip DTC.

Is 1st trip DTC detected?

YES >> Go to EC-1297, "Diagnosis Procedure".
NO >> INSPECTION END

Diagnosis Procedure

INFOID:0000000004362146

1. CHECK STARTING SYSTEM

Turn ignition switch to START position.

Does the engine turn over? Does the starter motor operate?

YES >> GO TO 2.
NO >> Check starting system. (Refer to STR-29, "Work Flow".)

2. CHECK GROUND CONNECTION

1. Turn ignition switch OFF.
2. Check ground connection E9. Refer to Ground Inspection in GI-45, "Circuit Inspection".

Is the inspection result normal?

YES >> GO TO 3.
NO >> Repair or replace ground connection.

3. CHECK CAMSHAFT POSITION (CMP) SENSOR (PHASE) POWER SUPPLY CIRCUIT

1. Disconnect camshaft position (CMP) sensor (PHASE) harness connector.
2. Turn ignition switch ON.
3. Check the voltage between CMP sensor (PHASE) harness connector and ground.

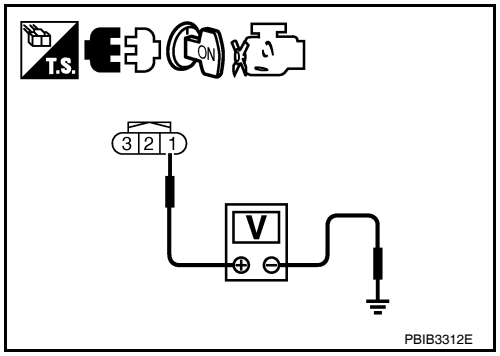

DTC	CMP sensor (PHASE)			Ground	Voltage (V)
	Bank	Connector	Terminal		
P0340	1	F55	1	Ground	Approx. 5
P0345	2	F60	1		

Is the inspection result normal?

YES >> GO TO 4.
NO >> Repair open circuit or short to ground or short to power in harness or connectors.

4. CHECK CMP SENSOR (PHASE) GROUND CIRCUIT FOR OPEN AND SHORT

1. Turn ignition switch OFF.
2. Disconnect ECM harness connector.
3. Check the continuity between CMP sensor (PHASE) harness connector and ECM harness connector.

DTC	CMP sensor (PHASE)			ECM		Continuity
	Bank	Connector	Terminal	Connector	Terminal	
P0340	1	F55	2	F13	64	Existed
P0345	2	F60	2		68	

4. Also check harness for short to ground and short to power.

Is the inspection result normal?

YES >> GO TO 5.
NO >> Repair open circuit, short to ground or short to power in harness or connectors.

5. CHECK CMP SENSOR (PHASE) INPUT SIGNAL CIRCUIT FOR OPEN AND SHORT

1. Check the continuity between CMP sensor (PHASE) harness connector and ECM harness connector.

DTC	CMP sensor (PHASE)			ECM		Continuity
	Bank	Connector	Terminal	Connector	Terminal	
P0340	1	F55	3	F13	70	Existed
P0345	2	F60	3		69	

2. Also check harness for short to ground and short to power.

Is the inspection result normal?

YES >> GO TO 6.
NO >> Repair open circuit, short to ground or short to power in harness or connectors.

6. CHECK CAMSHAFT POSITION SENSOR (PHASE)

Refer to EC-1298, "Component Inspection".

Is the inspection result normal?

YES >> GO TO 7.
NO >> Replace malfunctioning camshaft position sensor (PHASE).

7. CHECK CAMSHAFT (INT)

Check the following.
- Accumulation of debris to the signal plate of camshaft rear end
- Chipping signal plate of camshaft rear end

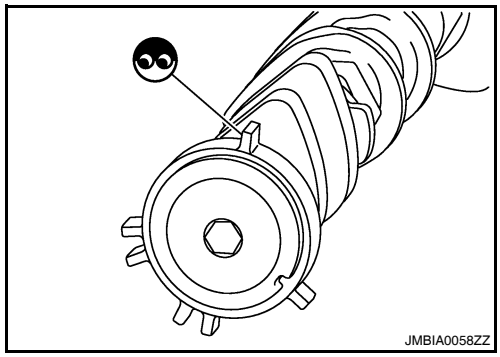

Is the inspection result normal?

YES >> GO TO 8.
NO >> Remove debris and clean the signal plate of camshaft rear end or replace camshaft.

8. CHECK INTERMITTENT INCIDENT

Refer to GI-42, "Intermittent Incident".

>> INSPECTION END

Component Inspection

INFOID:0000000004362147

1. CHECK CAMSHAFT POSITION SENSOR (PHASE)-I

1. Turn ignition switch OFF.
2. Loosen the fixing bolt of the sensor.
3. Disconnect camshaft position sensor (PHASE) harness connector.
4. Remove the sensor.

5. Visually check the sensor for chipping.

Is the inspection result normal?

YES >> GO TO 2.
NO >> Replace malfunctioning camshaft position sensor (PHASE).

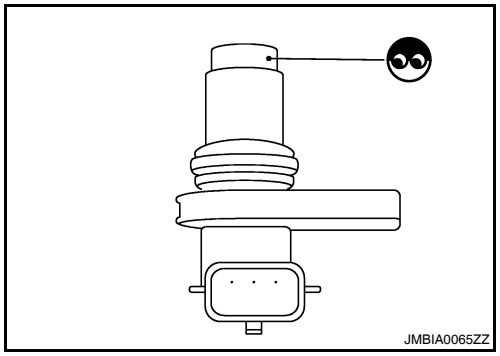

2. CHECK CAMSHAFT POSITION SENSOR (PHASE)-II

Check resistance camshaft position sensor (PHASE) terminals as per the following.

Terminal No. (Polarity)	Resistance
1 (+) - 2 (-)	Except 0 or ∞ Ω [at 25°C (77°F)]
1 (+) - 3 (-)	
2 (+) - 3 (-)	

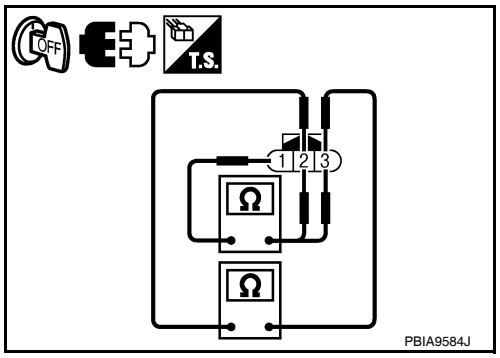

Is the inspection result normal?

YES >> INSPECTION END
NO >> Replace malfunctioning camshaft position sensor (PHASE).

P0420, P0430 THREE WAY CATALYST FUNCTION

DTC Logic

INFOID:0000000004362148

DTC DETECTION LOGIC

The ECM monitors the switching frequency ratio of air fuel ratio (A/F) sensor 1 and heated oxygen sensor 2.
A three way catalyst (manifold) with high oxygen storage capacity will indicate a low switching frequency of heated oxygen sensor 2. As oxygen storage capacity decreases, the heated oxygen sensor 2 switching frequency will increase.
When the frequency ratio of A/F sensor 1 and heated oxygen sensor 2 approaches a specified limit value, the three way catalyst (manifold) malfunction is diagnosed.

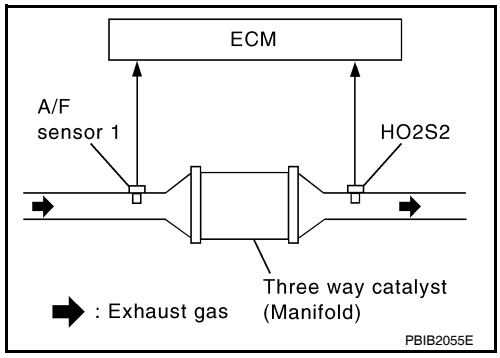

DTC No.	Trouble diagnosis name	DTC detecting condition	Possible cause
P0420	Catalyst system efficiency below threshold (bank 1)	• Three way catalyst (manifold) does not operate properly. • Three way catalyst (manifold) does not have enough oxygen storage capacity.	• Three way catalyst (manifold) • Exhaust tube • Intake air leakage • Fuel injector • Fuel injector leakage • Spark plug • Improper ignition timing
P0430	Catalyst system efficiency below threshold (bank 2)		

DTC CONFIRMATION PROCEDURE

1. INSPECTION START

Will CONSULT-III be used?

Will CONSULT-III be used?

YES >> GO TO 2.
NO >> GO TO 7.

2. PRECONDITIONING

If DTC Confirmation Procedure has been previously conducted, always perform the following before conducting the next test.

1. Turn ignition switch OFF and wait at least 10 seconds.
2. Turn ignition switch ON.
3. Turn ignition switch OFF and wait at least 10 seconds.

TESTING CONDITION:
Do not maintain engine speed for more than the specified minutes below.

>> GO TO 3.

3. PERFORM DTC CONFIRMATION PROCEDURE-I

With CONSULT-III

1. Turn ignition switch ON and select “DATA MONITOR” mode with CONSULT-III.
2. Start engine and warm it up to the normal operating temperature.
3. Turn ignition switch OFF and wait at least 10 seconds.
4. Turn ignition switch ON.
5. Turn ignition switch OFF and wait at least 10 seconds.
6. Start engine and keep the engine speed between 3,500 and 4,000 rpm for at least 1 minute under no load.
7. Let engine idle for 1 minute.
8. Check that “COOLAN TEMP/S” indicates more than 70°C (158°F).
   If not, warm up engine and go to next step when “COOLAN TEMP/S” indication reaches 70°C (158°F).
9. Open engine hood.
10. Select “DTC & SRT CONFIRMATION” then “SRT WORK SUPPORT” mode with CONSULT-III.

11. Rev engine between 2,000 and 3,000 rpm and hold it for 3 consecutive minutes then release the accelerator pedal completely.
12. Check the indication of “CATALYST”.

Which is displayed on CONSULT-III screen?

CMPLT >> GO TO 6.
INCMP >> GO TO 4.

4. PERFORM DTC CONFIRMATION PROCEDURE-II

1. Wait 5 seconds at idle.
2. Rev engine between 2,000 and 3,000 rpm and maintain it until “INCMP” of “CATALYST” changes to “CMPLT” (It will take approximately 5 minutes).

Does the indication change to “CMPLT”?

YES >> GO TO 6.
NO >> GO TO 5.

5. PERFORM DTC CONFIRMATION PROCEDURE AGAIN

1. Stop engine and cool it down to less than 70°C (158°F).
2. Perform DTC CONFIRMATION PROCEDURE again.

>> GO TO 3.

6. PERFORM DTC CONFIRMATION PROCEDURE-III

Check 1st trip DTC.

Is 1st trip DTC detected?

YES >> Go to EC-1302, "Diagnosis Procedure".
NO >> INSPECTION END

7. PERFORM COMPONENT FUNCTION CHECK

Perform component function check. Refer to EC-1301, "Component Function Check".

NOTE:
Use component function check to check the overall function of the three way catalyst (manifold). During this check, a 1st trip DTC might not be confirmed.

Is the inspection result normal?

YES >> INSPECTION END
NO >> Go to EC-1302, "Diagnosis Procedure".

Component Function Check

INFOID:0000000004362149

1. PERFORM COMPONENT FUNCTION CHECK

Without CONSULT-III

1. Start engine and warm it up to the normal operating temperature.
2. Turn ignition switch OFF and wait at least 10 seconds.
3. Turn ignition switch ON.
4. Turn ignition switch OFF and wait at least 10 seconds.
5. Start engine and keep the engine speed between 3,500 and 4,000 rpm for at least 1 minute under no load.
6. Let engine idle for 1 minute.
7. Open engine hood.
8. Check the voltage between ECM harness connector terminals under the following conditions.

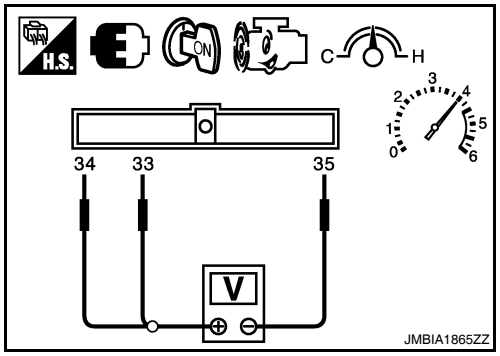

DTC	ECM			Condition	Voltage (V)
	Connec-tor	+	–		
		Terminal	Terminal		
P0420	F13	33 [HO2S2 (bank 1) signal]	35 (Sensor ground)	Keeping engine speed at 2,500 rpm constant under no load	The voltage fluctuation cycle takes more than 5 seconds. • 1 cycle: 0.6 - 1.0 → 0 - 0.3 → 0.6 - 1.0
P0430		34 [HO2S2 (bank 2) signal]			

Is the inspection result normal?

YES >> INSPECTION END
NO >> Go to EC-1302, "Diagnosis Procedure".

Diagnosis Procedure

INFOID:0000000004362150

1. CHECK EXHAUST SYSTEM

Visually check exhaust tubes and muffler for dents.

Is the inspection result normal?

YES >> GO TO 2.
NO >> Repair or replace malfunctioning part.

2. CHECK EXHAUST GAS LEAKAGE

1. Start engine and run it at idle.
2. Listen for an exhaust gas leakage before the three way catalyst (manifold).

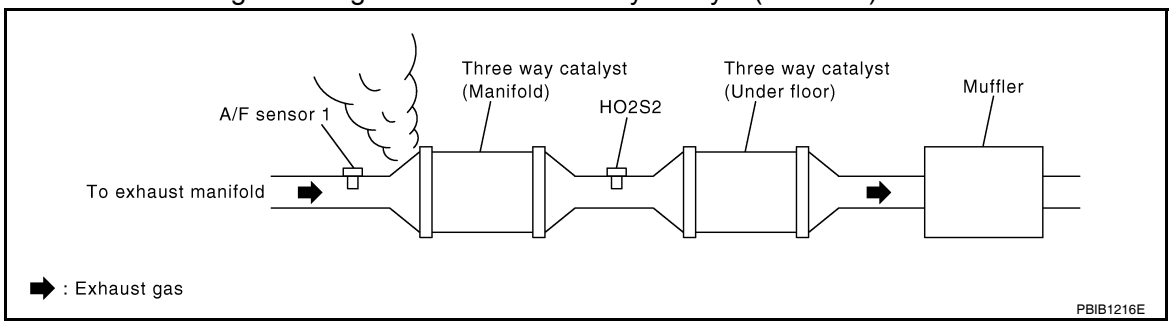

Is exhaust gas leakage detected?

YES >> Repair or replace malfunctioning part.
NO >> GO TO 3.

3. CHECK INTAKE AIR LEAKAGE

Listen for an intake air leakage after the mass air flow sensor.

Is intake air leakage detected?

YES >> Repair or replace malfunctioning part.
NO >> GO TO 4.

4. CHECK IGNITION TIMING

Check idle speed and ignition timing.
For procedure, refer to EC-1048, "BASIC INSPECTION : Special Repair Requirement".
For specification, refer to EC-1585, "Idle Speed" and EC-1585, "Ignition Timing".

Is the inspection result normal?

YES >> GO TO 5.
NO >> Follow the EC-1048, "BASIC INSPECTION : Special Repair Requirement".

5. CHECK FUEL INJECTORS

1. Stop engine and then turn ignition switch ON.

2. Check the voltage between ECM harness connectors.

ECM				Voltage
+		–		
Connector	Terminal	Connector	Terminal	
F14	1	E10	112	Battery voltage
	3			
	29			
	30			
	31			
	32			

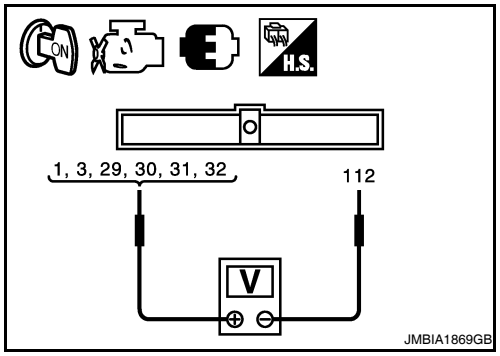

Is the inspection result normal?

YES >> GO TO 6.
NO >> Perform EC-1483, "Diagnosis Procedure".

6. CHECK FUNCTION OF IGNITION COIL-I

CAUTION:
Perform the following procedure in a place with no combustible objects and good ventilation.

1. Turn ignition switch OFF.
2. Remove fuel pump fuse in IPDM E/R to release fuel pressure.
   NOTE:
   Do not use CONSULT-III to release fuel pressure, or fuel pressure applies again during the following procedure.
3. Start engine.
4. After engine stalls, crank it 2 or 3 times to release all fuel pressure.
5. Turn ignition switch OFF.
6. Remove all ignition coil harness connectors to avoid the electrical discharge from the ignition coils.
7. Remove ignition coil and spark plug of the cylinder to be checked.
8. Crank engine for 5 seconds or more to remove combustion gas in the cylinder.
9. Connect spark plug and harness connector to ignition coil.
10. Fix ignition coil using a rope etc. with gap of 13 - 17 mm (0.52 - 0.66 in) between the edge of the spark plug and grounded metal portion as shown in the figure.
11. Crank engine for approximately 3 seconds, and check whether spark is generated between the spark plug and the grounded metal portion.

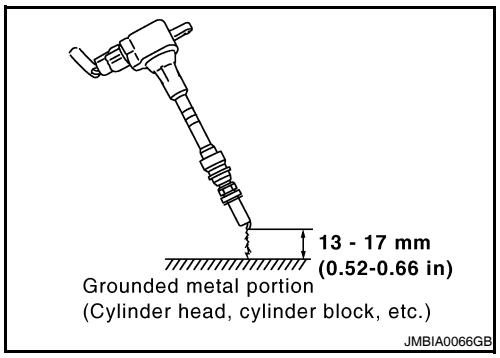

Spark should be generated.

CAUTION:
- **Never place the spark plug and the ignition coil within 50 cm (19.7 in) each other. Be careful not to get an electrical shock while checking, because the electrical discharge voltage becomes 20 kV or more.**
- **It might damage the ignition coil if the gap of more than 17 mm (0.66 in) is made.**

NOTE:
When the gap is less than 13 mm (0.52 in), a spark might be generated even if the coil is malfunctioning.

Is the inspection result normal?

YES >> GO TO 10.
NO >> GO TO 7.

7. CHECK FUNCTION OF IGNITION COIL-II

1. Turn ignition switch OFF.
2. Disconnect spark plug and connect a non-malfunctioning spark plug.
3. Crank engine for approximately 3 seconds, and recheck whether spark is generated between the spark plug and the grounded metal portion.

Spark should be generated.

Is the inspection result normal?

YES >> GO TO 8.
NO >> Check ignition coil, power transistor and their circuit. Refer to EC-1491, "Diagnosis Procedure".

8. CHECK SPARK PLUG

Check the initial spark plug for fouling, etc.

Is the inspection result normal?

YES >> Replace spark plug(s) with standard type one(s). For spark plug type, refer to EM-119, "Removal and Installation".
NO >> Repair or clean spark plug. Then GO TO 9.

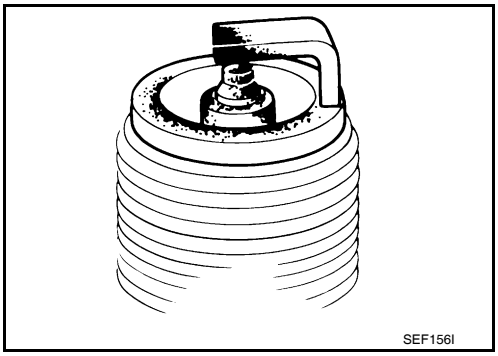

9. CHECK FUNCTION OF IGNITION COIL-III

1. Reconnect the initial spark plugs.
2. Crank engine for approximately 3 seconds, and recheck whether spark is generated between the spark plug and the grounded portion.

Spark should be generated.

Is the inspection result normal?

YES >> INSPECTION END
NO >> Replace spark plug(s) with standard type one(s). For spark plug type, refer to EM-119, "Removal and Installation".

10. CHECK FUEL INJECTOR

1. Turn ignition switch OFF.
2. Remove fuel injector assembly.
   Refer to EM-146, "Removal and Installation".
   Keep fuel hose and all fuel injectors connected to fuel tube.
3. Disconnect all ignition coil harness connectors.
4. Reconnect all fuel injector harness connectors disconnected.
5. Turn ignition switch ON.
6. Check that fuel does not drip from fuel injector.

Does fuel drip from fuel injector?

YES >> Replace the fuel injector(s) from which fuel is dripping.
NO >> GO TO 11.

11. CHECK INTERMITTENT INCIDENT

Refer to GI-42, "Intermittent Incident".

Is the inspection result normal?

YES >> Replace three way catalyst assembly.
NO >> Repair or Replace harness or connector.

P0441 EVAP CONTROL SYSTEM

DTC Logic

INFOID:0000000004362151

DTC DETECTION LOGIC

NOTE:
If DTC P0441 is displayed with other DTC such as P2122, P2123, P2127, P2128 or P2138, first perform trouble diagnosis for other DTC.

In this evaporative emission (EVAP) control system, purge flow occurs during non-closed throttle conditions. Purge volume is related to air intake volume. Under normal purge conditions (non-closed throttle), the EVAP canister purge volume control solenoid valve is open to admit purge flow. Purge flow exposes the EVAP control system pressure sensor to intake manifold vacuum.

Under normal conditions (non-closed throttle), sensor output voltage indicates if pressure drop and purge flow are adequate. If not, a malfunction is determined.

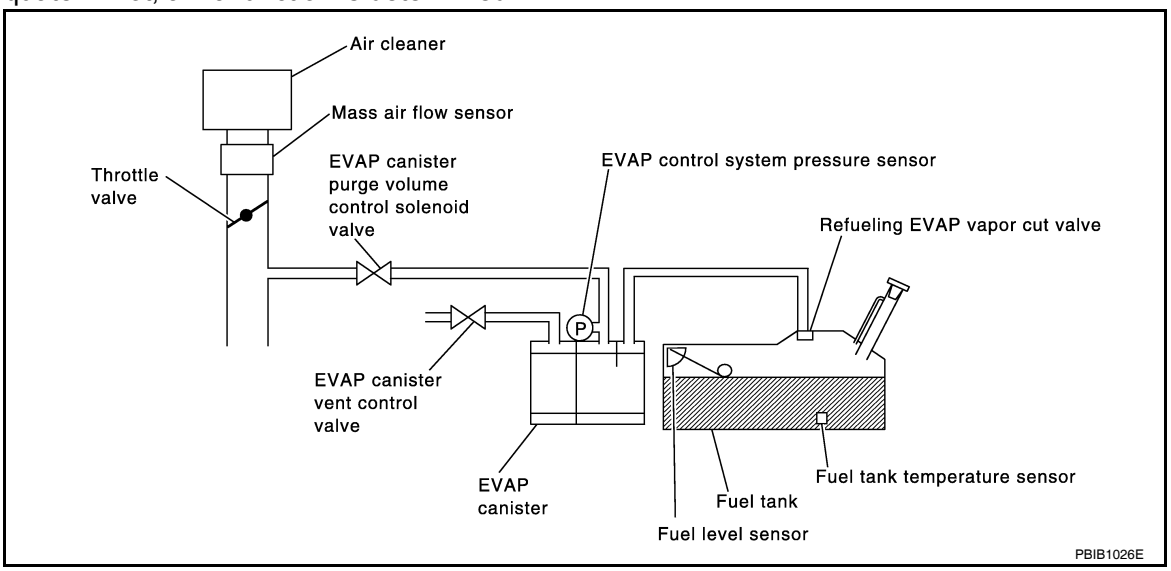

DTC No.	Trouble diagnosis name	DTC detecting condition	Possible cause
P0441	EVAP control system incorrect purge flow	EVAP control system does not operate properly, EVAP control system has a leakage between intake manifold and EVAP control system pressure sensor.	• EVAP canister purge volume control solenoid valve stuck closed • EVAP control system pressure sensor and the circuit • Loose, disconnected or improper connection of rubber tube • Blocked rubber tube • Cracked EVAP canister • EVAP canister purge volume control solenoid valve circuit • Accelerator pedal position sensor • Blocked purge port • EVAP canister vent control valve

DTC CONFIRMATION PROCEDURE

1. INSPECTION START

Will CONSULT-III be used?

Will CONSULT-III be used?

YES >> GO TO 2.
NO >> GO TO 6.

2. PRECONDITIONING

If DTC Confirmation Procedure has been previously conducted, always perform the following before conducting the next test.

1. Turn ignition switch OFF and wait at least 10 seconds.

2. Turn ignition switch ON.
3. Turn ignition switch OFF and wait at least 10 seconds.

TESTING CONDITION:
Always perform test at a temperature of 5°C (41°F) or more.

>> GO TO 3.

3. PERFORM DTC CONFIRMATION PROCEDURE-I

With CONSULT-III

1. Start engine and warm it up to normal operating temperature.
2. Turn ignition switch OFF and wait at least 10 seconds.
3. Turn ignition switch ON.
4. Turn ignition switch OFF and wait at least 10 seconds.
5. Start engine and let it idle for at least 70 seconds.
6. Select “PURG FLOW P0441” of “EVAPORATIVE SYSTEM” in “DTC WORK SUPPORT” mode with CONSULT-III.
7. Touch “START”.

Is “COMPLETED” displayed on CONSULT-III screen?

YES >> GO TO 5.
NO >> GO TO 4.

4. PERFORM DTC CONFIRMATION PROCEDURE-II

When the following conditions are met, “TESTING” will be displayed on the CONSULT-III screen. Maintain the conditions continuously until “TESTING” changes to “COMPLETED”. (It will take at least 35 seconds.)

Selector lever	Suitable position
VHCL SPEED SE	32 - 120 km/h (20 - 75 mph)
ENG SPEED	500 - 3,000 rpm
B/FUEL SCHDL	1.3 - 9.0 msec
COOLAN TEMP/S	More than 0°C (32°F)

CAUTION:
Always drive vehicle at a safe speed.
If “TESTING” does not change for a long time, retry from step 2.

Is “COMPLETED” displayed on CONSULT-III screen?

YES >> GO TO 5.
NO >> Perform DTC CONFIRMATION PROCEDURE again. GO TO 3.

5. PERFORM DTC CONFIRMATION PROCEDURE-III

Touch “SELF-DIAG RESULTS”.

Which is displayed on CONSULT-III screen?

OK >> INSPECTION END
NG >> Go to EC-1307, "Diagnosis Procedure".

6. PERFORM COMPONENT FUNCTION CHECK

Perform component function check. Refer to EC-1306, "Component Function Check".

NOTE:
Use component function check to check the overall monitoring function of the EVAP control system purge flow monitoring. During this check, a 1st trip DTC might not be confirmed.

Is the inspection result normal?

YES >> INSPECTION END
NO >> Go to EC-1307, "Diagnosis Procedure".

Component Function Check

INFOID:0000000004362152

1. PERFORM COMPONENT FUNCTION CHECK

Without CONSULT-III

1. Lift up drive wheels.
2. Start engine (ESP switch OFF) and warm it up to normal operating temperature.
3. Turn ignition switch OFF, wait at least 10 seconds.
4. Turn ignition switch ON.
5. Turn ignition switch OFF, wait at least 10 seconds.
6. Start engine and wait at least 70 seconds.
7. Set voltmeter probes to ECM harness connector terminals under the following conditions.

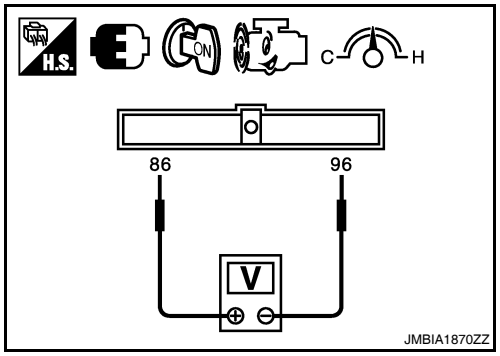

ECM		
Connector	+	–
	Terminal	Terminal
E10	86 (EVAP control system pressure sensor signal)	96 (Sensor ground)

8. Check EVAP control system pressure sensor value at idle speed and note it.
9. Establish and maintain the following conditions for at least 1 minute.

Air conditioner switch	ON
Head lamp switch	ON
Rear window defogger switch	ON
Engine speed	Approx. 3,000 rpm
Gear position	Any position other than P, N or R

10. Verify that EVAP control system pressure sensor value stays 0.1 V less than the value at idle speed (measured at step 6) for at least 1 second.

Is the inspection result normal?

YES >> INSPECTION END
NO >> Go to EC-1307, "Diagnosis Procedure".

Diagnosis Procedure

INFOID:0000000004362153

1. CHECK EVAP CANISTER

1. Turn ignition switch OFF.
2. Check EVAP canister for cracks.

Is the inspection result normal?

YES-1 >> With CONSULT-III: GO TO 2.
YES-2 >> Without CONSULT-III: GO TO 3.
NO >> Replace EVAP canister.

2. CHECK PURGE FLOW

With CONSULT-III

1. Disconnect vacuum hose connected to EVAP canister purge volume control solenoid valve at EVAP service port and install vacuum gauge. For the location of EVAP service port, refer to EC-1116, "System Diagram".
2. Start engine and let it idle.
3. Select “PURG VOL CONT/V” in “ACTIVE TEST” mode with CONSULT-III.
4. Touch “Qd” and “Qu” on CONSULT-III screen to adjust “PURG VOL CONT/V” opening and check vacuum existence.

PURG VOL CONT/V	Vacuum
100%	Existed
0%	Not existed

Is the inspection result normal?

YES >> GO TO 7.
NO >> GO TO 4.

3. CHECK PURGE FLOW

Without CONSULT-III

1. Start engine and warm it up to normal operating temperature.
2. Stop engine.
3. Disconnect vacuum hose connected to EVAP canister purge volume control solenoid valve at EVAP service port and install vacuum gauge. For the location of EVAP service port, refer to EC-1116, "System Diagram".
4. Start engine and let it idle.
   Do not depress accelerator pedal even slightly.
5. Check vacuum gauge indication before 60 seconds pass after starting engine.

   Vacuum should not exist.

6. Rev engine up to 2,000 rpm after 100 seconds pass after starting engine.

   Vacuum should exist.

Is the inspection result normal?

YES >> GO TO 7.
NO >> GO TO 4.

4. CHECK EVAP PURGE LINE

1. Turn ignition switch OFF.
2. Check EVAP purge line for improper connection or disconnection.
   Refer to EC-1116, "System Diagram".

Is the inspection result normal?

YES >> GO TO 5.
NO >> Repair EVAP purge line.

5. CHECK EVAP PURGE HOSE AND PURGE PORT

1. Disconnect purge hoses connected to EVAP service port **A** and EVAP canister purge volume control solenoid valve **B**.
2. Blow air into each hose and EVAP purge port **C**.

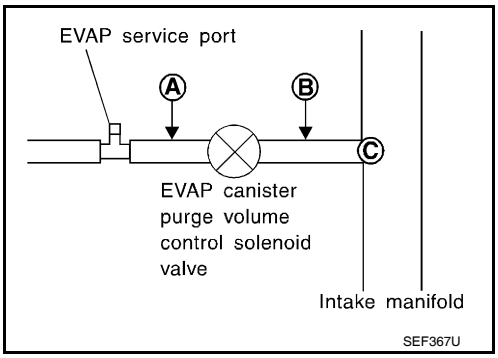

3. Check that air flows freely.

Is the inspection result normal?

YES-1 >> With CONSULT-III: GO TO 6.
YES-2 >> Without CONSULT-III: GO TO 7.
NO >> Repair or clean hoses and/or purge port.

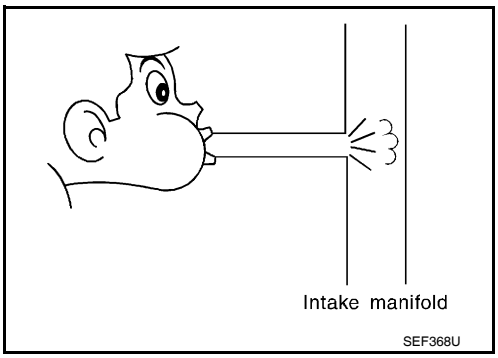

6. CHECK EVAP CANISTER PURGE VOLUME CONTROL SOLENOID VALVE

With CONSULT-III

1. Start engine.

2. Perform “PURG VOL CONT/V” in “ACTIVE TEST” mode with CONSULT-III. Check that engine speed varies according to the valve opening.

Does engine speed vary according to the valve opening?

YES >> GO TO 8.
NO >> GO TO 7.

7. CHECK EVAP CANISTER PURGE VOLUME CONTROL SOLENOID VALVE

Refer to EC-1319, "Component Inspection".

Is the inspection result normal?

YES >> GO TO 8.
NO >> Replace EVAP canister purge volume control solenoid valve.

8. CHECK EVAP CONTROL SYSTEM PRESSURE SENSOR CONNECTOR

1. Disconnect EVAP control system pressure sensor harness connector.
2. Check that water is not inside connectors.

Is the inspection result normal?

YES >> GO TO 9.
NO >> Replace EVAP control system pressure sensor.

9. CHECK EVAP CONTROL SYSTEM PRESSURE SENSOR FUNCTION

Refer to EC-1335, "DTC Logic" for DTC P0452, EC-1340, "DTC Logic" for DTC P0453.

Is the inspection result normal?

YES >> GO TO 10.
NO >> Replace EVAP control system pressure sensor.

10. CHECK RUBBER TUBE FOR CLOGGING

1. Disconnect rubber tube connected to EVAP canister vent control valve.
2. Check the rubber tube for clogging.

Is the inspection result normal?

YES >> GO TO 11.
NO >> Clean the rubber tube using an air blower.

11. CHECK EVAP CANISTER VENT CONTROL VALVE

Refer to EC-1326, "Component Inspection".

Is the inspection result normal?

YES >> GO TO 12.
NO >> Replace EVAP canister vent control valve.

12. CHECK EVAP PURGE LINE

Inspect EVAP purge line (pipe and rubber tube). Check for evidence of leakage.
Refer to EC-1116, "System Diagram".

Is the inspection result normal?

YES >> GO TO 13.
NO >> Repair EVAP purge line.

13. CLEAN EVAP PURGE LINE

Clean EVAP purge line (pipe and rubber tube) using air blower.

>> GO TO 14.

14. CHECK INTERMITTENT INCIDENT

Refer to GI-42, "Intermittent Incident".

>> INSPECTION END

P0442 EVAP CONTROL SYSTEM

DTC Logic

INFOID:0000000004362154

DTC DETECTION LOGIC

This diagnosis detects leakage in the EVAP purge line using engine intake manifold vacuum.
If pressure does not increase, the ECM will check for leakage in the line between the fuel tank and EVAP canister purge volume control solenoid valve, under the following “Vacuum test” conditions.
The EVAP canister vent control valve is closed to shut the EVAP purge line off. The EVAP canister purge volume control solenoid valve will then be opened to depressurize the EVAP purge line using intake manifold vacuum. After this occurs, the EVAP canister purge volume control solenoid valve will be closed.

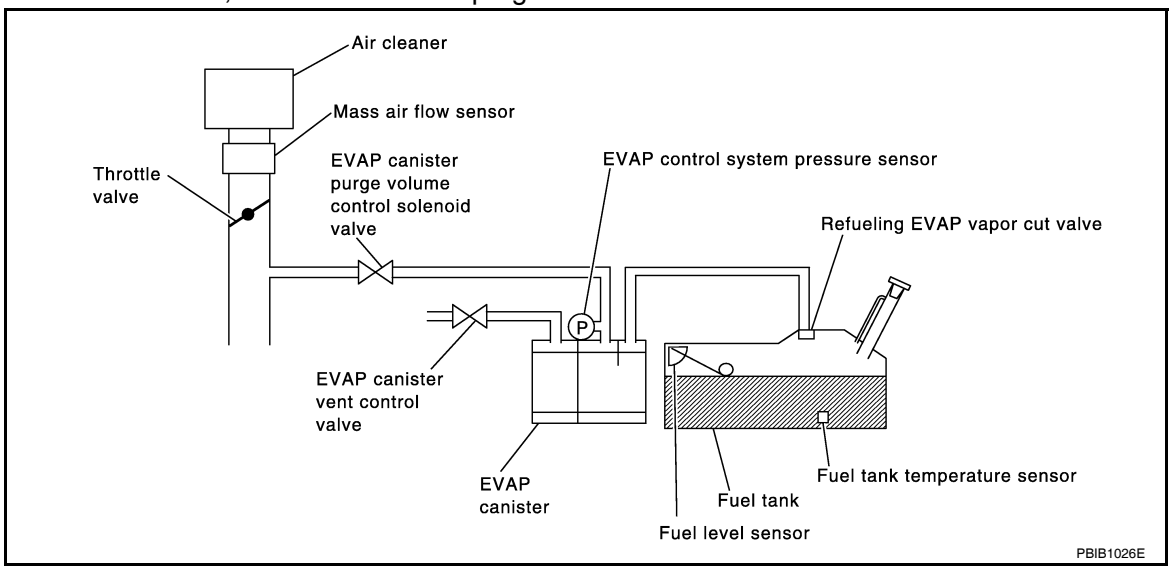

DTC No.	Trouble diagnosis name	DTC detecting condition	Possible cause
P0442	EVAP control system small leakage detected (negative pressure)	EVAP control system has a leakage, EVAP control system does not operate properly.	• Incorrect fuel tank vacuum relief valve • Incorrect fuel filler cap used • Fuel filler cap remains open or fails to close. • Foreign matter caught in fuel filler cap. • Leakage is in line between intake manifold and EVAP canister purge volume control solenoid valve. • Foreign matter caught in EVAP canister vent control valve. • EVAP canister or fuel tank leakage • EVAP purge line (pipe and rubber tube) leakage • EVAP purge line rubber tube bent • Loose or disconnected rubber tube • EVAP canister vent control valve and the circuit • EVAP canister purge volume control solenoid valve and the circuit • Fuel tank temperature sensor • O-ring of EVAP canister vent control valve is missing or damaged • EVAP canister is saturated with water • EVAP control system pressure sensor • Fuel level sensor and the circuit • Refueling EVAP vapor cut valve • ORVR system leakage

CAUTION:
- **Use only a genuine NISSAN fuel filler cap as a replacement. If an incorrect fuel filler cap is used, the MIL may illuminate.**
- **If the fuel filler cap is not tightened properly, the MIL may illuminate.**
- **Use only a genuine NISSAN rubber tube as a replacement.**

DTC CONFIRMATION PROCEDURE

1. PRECONDITIONING

If DTC Confirmation Procedure has been previously conducted, always perform the following before conducting the next test.
1. Turn ignition switch OFF and wait at least 10 seconds.
2. Turn ignition switch ON.
3. Turn ignition switch OFF and wait at least 10 seconds.

TESTING CONDITION:
- **Perform "DTC WORK SUPPORT" when the fuel level is between 1/4 and 3/4 full, and vehicle is placed on flat level surface.**
- **Always perform test at a temperature of 0 to 30°C (32 to 86°F).**

NOTE:
Check that EVAP hoses are connected to EVAP canister purge volume control solenoid valve properly.

Will CONSULT-III be used?

YES >> GO TO 2.
NO >> GO TO 3.

2. PERFORM DTC CONFIRMATION PROCEDURE

With CONSULT-III
1. Turn ignition switch ON.
2. Turn ignition switch OFF and wait at least 10 seconds.
3. Turn ignition switch ON and select "DATA MONITOR" mode with CONSULT-III.
4. Check that the following conditions are met.
   COOLAN TEMP/S: 0 - 70°C (32 - 158°F)
   INT/A TEMP SE: 0 - 30°C (32 - 86°F)
5. Select "EVP SML LEAKAGE P0442/P1442" of "EVAPORATIVE SYSTEM" in "DTC WORK SUPPORT" mode with CONSULT-III.
   Follow the instructions displayed.
   NOTE:
   If the engine speed cannot be maintained within the range displayed on the CONSULT-III screen, go to EC-1048, "BASIC INSPECTION : Special Repair Requirement".

Which is displayed on CONSULT-III screen?

OK >> INSPECTION END
NG >> Go to EC-1311, "Diagnosis Procedure".

3. PERFORM COMPONENT FUNCTION CHECK

With GST
NOTE:
Be sure to read the explanation of DRIVING PATTERN in EC-1558, "How to Set SRT Code" before driving vehicle.
1. Start engine.
2. Drive vehicle according to DRIVING PATTERN.
3. Stop vehicle.
4. Turn ignition switch OFF and wait at least 10 seconds.
5. Turn ignition switch ON.
6. Turn ignition switch OFF and wait at least 10 seconds.
7. Turn ignition switch ON.
8. Check 1st trip DTC.

Is 1st trip DTC displayed?

YES-1 >> P0441: Go to EC-1307, "Diagnosis Procedure".
YES-2 >> P0442: Go to EC-1311, "Diagnosis Procedure".
NO >> INSPECTION END

Diagnosis Procedure

INFOID:0000000004362155

1. CHECK FUEL FILLER CAP DESIGN

1. Turn ignition switch OFF.

2. Check for genuine NISSAN fuel filler cap design.

Is the inspection result normal?

YES >> GO TO 2.
NO >> Replace with genuine NISSAN fuel filler cap.

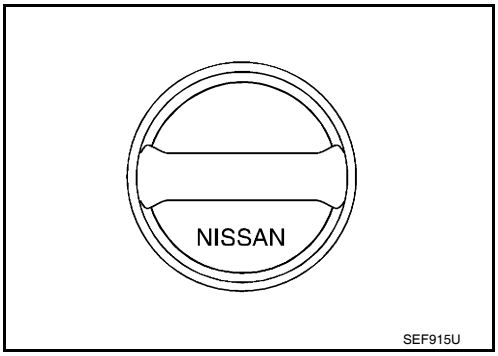

2. CHECK FUEL FILLER CAP INSTALLATION

Check that the cap is tightened properly by rotating the cap clockwise.

Is the inspection result normal?

YES >> GO TO 3.
NO >> Open fuel filler cap, then clean cap and fuel filler neck threads using air blower. Retighten until ratcheting sound is heard.

3. CHECK FUEL FILLER CAP FUNCTION

Check for air releasing sound while opening the fuel filler cap.

Is the inspection result normal?

YES >> GO TO 5.
NO >> GO TO 4.

4. CHECK FUEL TANK VACUUM RELIEF VALVE

Refer to EC-1315, "Component Inspection".

Is the inspection result normal?

YES >> GO TO 5.
NO >> Replace fuel filler cap with a genuine one.

5. CHECK FOR EVAP LEAKAGE

Refer to EC-1581, "Inspection".

Is there any leakage in EVAP line?

YES >> Repair or replace malfunctioning part.
NO >> GO TO 6.

6. CHECK EVAP CANISTER VENT CONTROL VALVE

Check the following.

- EVAP canister vent control valve is installed properly.
  Refer to EC-1583, "Removal and Installation".
- EVAP canister vent control valve.
  Refer to EC-1326, "Component Inspection".

Is the inspection result normal?

YES >> GO TO 7.
NO >> Repair or replace EVAP canister vent control valve and O-ring.

7. CHECK IF EVAP CANISTER IS SATURATED WITH WATER

Remove EVAP canister with EVAP canister vent control valve and EVAP control system pressure sensor attached.

Does water drain from the EVAP canister?

YES >> GO TO 8.
NO-1 >> With CONSULT-III: GO TO 10.
NO-2 >> Without CONSULT-III: GO TO 11.

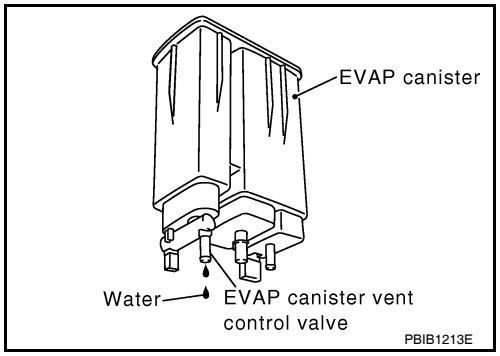

8. CHECK EVAP CANISTER

Weigh the EVAP canister with the EVAP canister vent control valve and EVAP control system pressure sensor attached.

The weight should be less than 2.1 kg (4.6 lb).

Is the inspection result normal?

YES-1 >> With CONSULT-III: GO TO 10.
YES-2 >> Without CONSULT-III: GO TO 11.
NO >> GO TO 9.

9. DETECT MALFUNCTIONING PART

Check the following.
- EVAP canister for damage
- EVAP hose between EVAP canister and vehicle frame for clogging or poor connection

>> Repair hose or replace EVAP canister.

10. CHECK EVAP CANISTER PURGE VOLUME CONTROL SOLENOID VALVE OPERATION

With CONSULT-III

1. Disconnect vacuum hose from EVAP canister purge volume control solenoid valve at EVAP service port.
2. Start engine.
3. Perform “PURG VOL CONT/V” in “ACTIVE TEST” mode.
4. Touch “Qu” on CONSULT-III screen to increase “PURG VOL CONT/V” opening to 100%.
5. Check vacuum hose for vacuum.

Vacuum should exist.

Is the inspection result normal?

YES >> GO TO 13.
NO >> GO TO 12.

11. CHECK EVAP CANISTER PURGE VOLUME CONTROL SOLENOID VALVE OPERATION

Without CONSULT-III

1. Start engine and warm it up to normal operating temperature.
2. Stop engine.
3. Disconnect vacuum hose from EVAP canister purge volume control solenoid valve at EVAP service port.
4. Start engine and let it idle for at least 80 seconds.
5. Check vacuum hose for vacuum when revving engine up to 2,000 rpm.

Vacuum should exist.

Is the inspection result normal?

YES >> GO TO 13.
NO >> GO TO 12.

12. CHECK VACUUM HOSE

Check vacuum hoses for clogging or disconnection. Refer to EC-1116, "System Diagram".

Is the inspection result normal?

YES >> GO TO 13.
NO >> Repair or reconnect the hose.

13. CHECK EVAP CANISTER PURGE VOLUME CONTROL SOLENOID VALVE

Refer to EC-1319, "Component Inspection".

Is the inspection result normal?

YES >> GO TO 14.
NO >> Replace EVAP canister purge volume control solenoid valve.

14. CHECK FUEL TANK TEMPERATURE SENSOR

Refer to EC-1276, "Component Inspection".

Is the inspection result normal?

YES >> GO TO 15.
NO >> Replace fuel level sensor unit and fuel pump.

15. CHECK EVAP CONTROL SYSTEM PRESSURE SENSOR

Refer to EC-1334, "Component Inspection".

Is the inspection result normal?

YES >> GO TO 16.
NO >> Replace EVAP control system pressure sensor.

16. CHECK EVAP PURGE LINE

Check EVAP purge line (pipe, rubber tube, fuel tank and EVAP canister) for cracks or improper connection. Refer to EC-1116, "System Diagram".

Is the inspection result normal?

YES >> GO TO 17.
NO >> Repair or reconnect the hose.

17. CLEAN EVAP PURGE LINE

Clean EVAP purge line (pipe and rubber tube) using air blower.

>> GO TO 18.

18. CHECK EVAP/ORVR LINE

Check EVAP/ORVR line between EVAP canister and fuel tank for clogging, kinks, looseness and improper connection. For location, refer to EC-1497, "Description".

Is the inspection result normal?

YES >> GO TO 19.
NO >> Repair or replace hoses and tubes.

19. CHECK RECIRCULATION LINE

Check recirculation line between fuel filler tube and fuel tank for clogging, kinks, cracks, looseness and improper connection.

Is the inspection result normal?

YES >> GO TO 20.
NO >> Repair or replace hose, tube or fuel filler tube.

20. CHECK REFUELING EVAP VAPOR CUT VALVE

Refer to EC-1500, "Component Inspection".

Is the inspection result normal?

YES >> GO TO 21.
NO >> Replace refueling EVAP vapor cut valve with fuel tank.

21. CHECK FUEL LEVEL SENSOR

Refer to MWI-47, "Component Inspection".

Is the inspection result normal?

YES >> GO TO 22.

NO >> Replace fuel level sensor unit and fuel pump.

22. CHECK INTERMITTENT INCIDENT

Refer to GI-42, "Intermittent Incident".

>> INSPECTION END

Component Inspection

INFOID:0000000004362156

1. CHECK FUEL FILLER CAP

1. Turn ignition switch OFF.
2. Remove fuel filler cap.
3. Wipe clean valve housing.

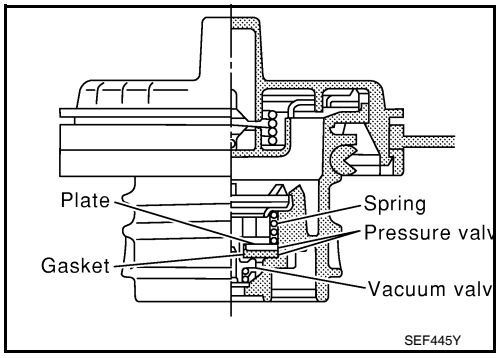

4. Install fuel filler cap adapter (commercial service tool) to fuel filler cap.
5. Check valve opening pressure and vacuum.

Pressure: **15.3 - 20.0 kPa (0.156 - 0.204 kg/cm^2, 2.22 - 2.90 psi)**

Vacuum: **–6.0 to –3.3 kPa (–0.061 to –0.034 kg/cm^2, –0.87 to –0.48 psi)**

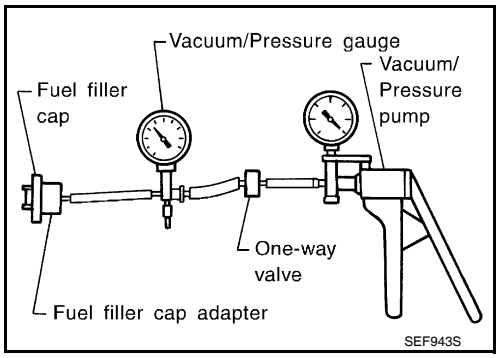

Is the inspection result normal?

YES >> INSPECTION END
NO >> GO TO 2.

2. REPLACE FUEL FILLER CAP

Replace fuel filler cap.

CAUTION:

Use only a genuine fuel filler cap as a replacement. If an incorrect fuel filler cap is used, the MIL may illuminate.

>> INSPECTION END

P0443 EVAP CANISTER PURGE VOLUME CONTROL SOLENOID VALVE

Description

INFOID:0000000004362157

The EVAP canister purge volume control solenoid valve is used to control the flow rate of fuel vapor from the EVAP canister. The EVAP canister purge volume control solenoid valve is moved by ON/OFF pulses from the ECM. The longer the ON pulse, the greater the amount of fuel vapor that will flow via the valve.

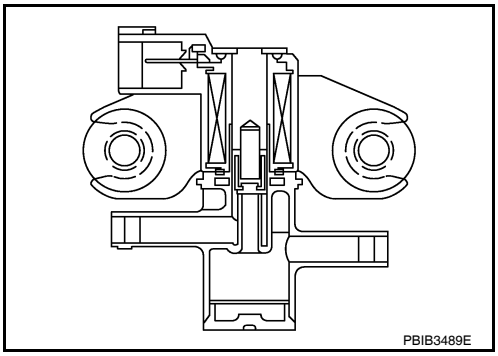

DTC Logic

INFOID:0000000004362158

DTC DETECTION LOGIC

DTC No.	Trouble diagnosis name	DTC detecting condition	Possible cause
P0443	EVAP canister purge volume control solenoid valve	The canister purge flow is detected during the specified driving conditions, even when EVAP canister purge volume control solenoid valve is completely closed.	• EVAP control system pressure sensor • EVAP canister purge volume control solenoid valve (The valve is stuck open.) • EVAP canister vent control valve • EVAP canister • Hoses (Hoses are connected incorrectly or clogged.)

DTC CONFIRMATION PROCEDURE

1. PRECONDITIONING

If DTC Confirmation Procedure has been previously conducted, always perform the following before conducting the next test.

1. Turn ignition switch OFF and wait at least 10 seconds.
2. Turn ignition switch ON.
3. Turn ignition switch OFF and wait at least 10 seconds.

TESTING CONDITION:

Always perform test at a temperature of 5°C (41°F) or more.

Will CONSULT-III be used?

YES >> GO TO 2.
NO >> GO TO 3.

2. PERFORM DTC CONFIRMATION PROCEDURE

With CONSULT-III

1. Start engine and warm it up to normal operating temperature.
2. Turn ignition switch OFF and wait at least 10 seconds.
3. Turn ignition switch ON.
4. Turn ignition switch OFF and wait at least 10 seconds.
5. Turn ignition switch ON.
6. Select “PURG VOL CN/V P1444” of “EVAPORATIVE SYSTEM” in “DTC WORK SUPPORT” mode with CONSULT-III.
7. Touch “START”.
8. Start engine and let it idle until “TESTING” on CONSULT-III changes to “COMPLETED”. (It will take approximately 10 seconds.)
   If “TESTING” is not displayed after 5 minutes, retry from step 2.
9. Touch “SELF-DIAG RESULTS”.

Which is displayed on CONSULT-III screen?

OK >> INSPECTION END
NG >> Go to EC-1317, "Diagnosis Procedure".

3. PERFORM DTC CONFIRMATION PROCEDURE

With GST

1. Start engine and warm it up to normal operating temperature.
2. Turn ignition switch OFF and wait at least 10 seconds.
3. Turn ignition switch ON.
4. Turn ignition switch OFF and wait at least 10 seconds.
5. Start engine and let it idle for at least 20 seconds.
6. Check 1st trip DTC.

Is 1st trip DTC displayed?

YES >> Go to EC-1317, "Diagnosis Procedure".
NO >> INSPECTION END

Diagnosis Procedure

INFOID:0000000004362159

1. CHECK EVAP CANISTER PURGE VOLUME CONTROL SOLENOID VALVE POWER SUPPLY CIRCUIT

1. Turn ignition switch OFF.
2. Disconnect EVAP canister purge volume control solenoid valve harness connector.
3. Turn ignition switch ON.
4. Check the voltage between EVAP canister purge volume control solenoid valve harness connector and ground.

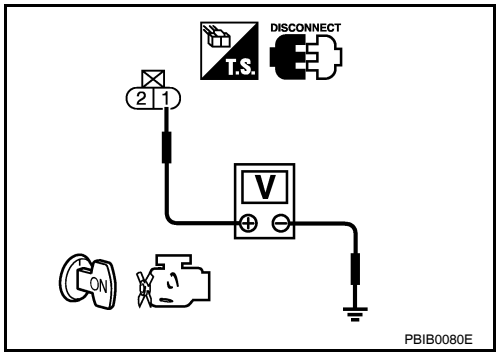

EVAP canister purge volume control solenoid valve		Ground	Voltage
Connector	Terminal		
F29	1	Ground	Battery voltage

Is the inspection result normal?

YES >> GO TO 3.
NO >> GO TO 2.

2. DETECT MALFUNCTIONING PART

Check the following.

- Harness connectors E11, F2
- Harness for open or short between EVAP canister purge volume control solenoid valve and IPDM E/R
- Harness for open or short between EVAP canister purge volume control solenoid valve and ECM

>> Repair open circuit, short to ground or short to power in harness or connectors.

3. CHECK EVAP CANISTER PURGE VOLUME CONTROL SOLENOID VALVE OUTPUT SIGNAL CIRCUIT FOR OPEN AND SHORT

1. Turn ignition switch OFF.
2. Disconnect ECM harness connector.
3. Check the continuity between EVAP canister purge volume control solenoid valve harness connector and ECM harness connector.

EVAP canister purge volume control solenoid valve		ECM		Continuity
Connector	Terminal	Connector	Terminal	
F29	2	F14	25	Existed

4. Also check harness for short to ground and short to power.

Is the inspection result normal?

YES >> GO TO 4.
NO >> Repair open circuit, short to ground or short to power in harness or connectors.

4. CHECK EVAP CONTROL SYSTEM PRESSURE SENSOR CONNECTOR

1. Disconnect EVAP control system pressure sensor harness connector.
2. Check that water is not inside connectors.

Is the inspection result normal?

YES >> GO TO 5.
NO >> Replace EVAP control system pressure sensor.

5. CHECK EVAP CONTROL SYSTEM PRESSURE SENSOR

Refer to EC-1334, "Component Inspection".

Is the inspection result normal?

YES-1 >> With CONSULT-III: GO TO 6.
YES-2 >> Without CONSULT-III: GO TO 7.
NO >> Replace EVAP control system pressure sensor.

6. CHECK EVAP CANISTER PURGE VOLUME CONTROL SOLENOID VALVE

With CONSULT-III

1. Turn ignition switch OFF.
2. Reconnect harness connectors disconnected.
3. Start engine.
4. Perform “PURG VOL C/V” in “ACTIVE TEST” mode with CONSULT-III. Check that engine speed varies according to the valve opening.

Does engine speed vary according to the valve opening?

YES >> GO TO 8.
NO >> GO TO 7.

7. CHECK EVAP CANISTER PURGE VOLUME CONTROL SOLENOID VALVE

Refer to EC-1319, "Component Inspection".

Is the inspection result normal?

YES >> GO TO 8.
NO >> Replace EVAP canister purge volume control solenoid valve.

8. CHECK RUBBER TUBE FOR CLOGGING

1. Disconnect rubber tube connected to EVAP canister vent control valve.
2. Check the rubber tube for clogging.

Is the inspection result normal?

YES >> GO TO 9.
NO >> Clean the rubber tube using an air blower.

9. CHECK EVAP CANISTER VENT CONTROL VALVE

Refer to EC-1326, "Component Inspection".

Is the inspection result normal?

YES >> GO TO 10.
NO >> Replace EVAP canister vent control valve.

10. CHECK IF EVAP CANISTER IS SATURATED WITH WATER

Remove EVAP canister with EVAP canister vent control valve and EVAP control system pressure sensor attached.

Does water drain from the EVAP canister?

YES >> GO TO 11.
NO >> GO TO 13.

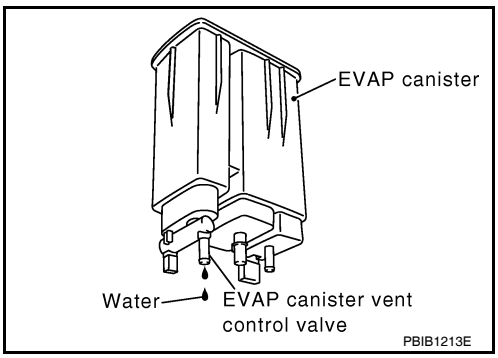

11. CHECK EVAP CANISTER

Weigh the EVAP canister with the EVAP canister vent control valve and EVAP control system pressure sensor attached.

The weight should be less than 2.1 kg (4.6 lb).

Is the inspection result normal?

YES >> GO TO 13.
NO >> GO TO 12.

12. DETECT MALFUNCTIONING PART

Check the following.
- EVAP canister for damage
- EVAP hose between EVAP canister and vehicle frame for clogging or poor connection

>> Repair hose or replace EVAP canister.

13. CHECK INTERMITTENT INCIDENT

Refer to GI-42, "Intermittent Incident".

>> INSPECTION END

Component Inspection

INFOID:0000000004362160

1. CHECK EVAP CANISTER PURGE VOLUME CONTROL SOLENOID VALVE

With CONSULT-III

1. Turn ignition switch OFF.
2. Reconnect all harness connectors disconnected.
3. Disconnect EVAP purge hoses connected to EVAP canister purge volume control solenoid valve.
4. Turn ignition switch ON.
5. Select “PURG VOL C/V” in “ACTIVE TEST” mode with CONSULT-III.
6. Touch “Qd” and “Qu” on CONSULT-III screen to adjust “PURG VOL C/V” opening and check air passage continuity of EVAP canister purge volume control solenoid valve under the following conditions.

Condition (PURG VOL C/V value)	Air passage continuity between (A) and (B)
100%	Existed
0%	Not existed

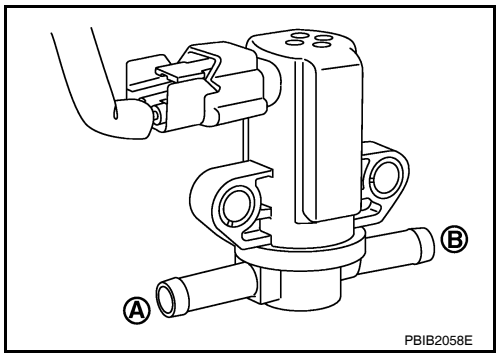

Without CONSULT-III

1. Turn ignition switch OFF.
2. Disconnect EVAP canister purge volume control solenoid valve harness connector.
3. Disconnect EVAP purge hoses connected to EVAP canister purge volume control solenoid valve.
4. Check air passage continuity of EVAP canister purge volume control solenoid valve under the following conditions.

Condition	Air passage continuity between (A) and (B)
12 V direct current supply between terminals 1 and 2	Existed
No supply	Not existed

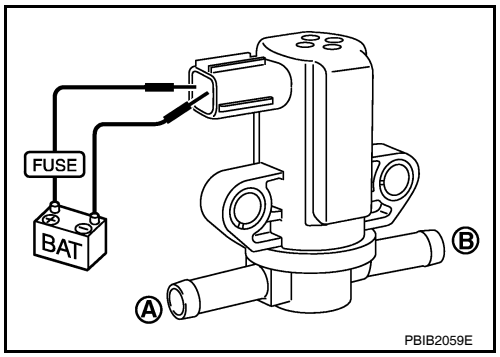

Is the inspection result normal?

YES >> INSPECTION END

NO >> Replace EVAP canister purge volume control solenoid valve

P0444, P0445 EVAP CANISTER PURGE VOLUME CONTROL SOLENOID VALVE

Description

INFOID:0000000004362161

The EVAP canister purge volume control solenoid valve is used to control the flow rate of fuel vapor from the EVAP canister. The EVAP canister purge volume control solenoid valve is moved by ON/OFF pulses from the ECM. The longer the ON pulse, the greater the amount of fuel vapor that will flow via the valve.

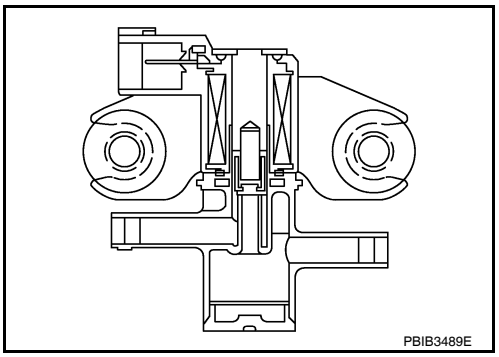

DTC Logic

INFOID:0000000004362162

DTC DETECTION LOGIC

DTC No.	Trouble diagnosis name	DTC detecting condition	Possible cause
P0444	EVAP canister purge volume control solenoid valve circuit open	An excessively low voltage signal is sent to ECM via the valve	• Harness or connectors (The solenoid valve circuit is open or shorted.) • EVAP canister purge volume control solenoid valve
P0445	EVAP canister purge volume control solenoid valve circuit shorted	An excessively high voltage signal is sent to ECM via the valve	• Harness or connectors (The solenoid valve circuit is shorted.) • EVAP canister purge volume control solenoid valve

DTC CONFIRMATION PROCEDURE

1. CONDITIONING

If DTC Confirmation Procedure has been previously conducted, always perform the following before conducting the next test.
1. Turn ignition switch OFF and wait at least 10 seconds.
2. Turn ignition switch ON.
3. Turn ignition switch OFF and wait at least 10 seconds.

TESTING CONDITION:
Before performing the following procedure, confirm battery voltage is more than 11 V at idle.

>> GO TO 2.

2. PERFORM DTC CONFIRMATION PROCEDURE

1. Start engine and let it idle for at least 13 seconds.
2. Check 1st trip DTC.

Is 1st trip DTC detected?

YES >> Go to EC-1321, "Diagnosis Procedure".
NO >> INSPECTION END

Diagnosis Procedure

INFOID:0000000004362163

1. CHECK EVAP CANISTER PURGE VOLUME CONTROL SOLENOID VALVE POWER SUPPLY CIRCUIT

1. Turn ignition switch OFF.
2. Disconnect EVAP canister purge volume control solenoid valve harness connector.
3. Turn ignition switch ON.

4. Check the voltage between EVAP canister purge volume control solenoid valve harness connector and ground.

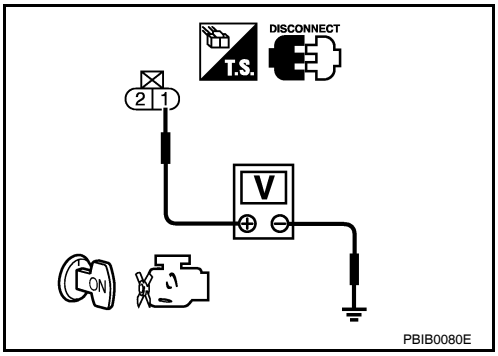

EVAP canister purge volume control solenoid valve		Ground	Voltage
Connector	Terminal		
F29	1	Ground	Battery voltage

Is the inspection result normal?

YES >> GO TO 3.
NO >> GO TO 2.

2. DETECT MALFUNCTIONING PART

Check the following.
- Harness connectors E11, F2
- Harness for open or short between EVAP canister purge volume control solenoid valve and IPDM E/R
- Harness for open or short between EVAP canister purge volume control solenoid valve and ECM

>> Repair open circuit, short to ground or short to power in harness or connectors.

3. CHECK EVAP CANISTER PURGE VOLUME CONTROL SOLENOID VALVE OUTPUT SIGNAL CIRCUIT FOR OPEN AND SHORT

1. Turn ignition switch OFF.
2. Disconnect ECM harness connector.
3. Check the continuity between EVAP canister purge volume control solenoid valve harness connector and ECM harness connector.

EVAP canister purge volume control solenoid valve		ECM		Continuity
Connector	Terminal	Connector	Terminal	
F29	2	F14	25	Existed

4. Also check harness for short to ground and short to power.

Is the inspection result normal?

YES-1 >> With CONSULT-III: GO TO 4.
YES-2 >> Without CONSULT-III: GO TO 5.
NO >> Repair open circuit, short to ground or short to power in harness or connectors.

4. CHECK EVAP CANISTER PURGE VOLUME CONTROL SOLENOID VALVE OPERATION

With CONSULT-III

1. Reconnect all harness connectors disconnected.
2. Start engine.
3. Perform “PURG VOL C/V” in “ACTIVE TEST” mode with CONSULT-III. Check that engine speed varies according to the valve opening.

Does engine speed vary according to the valve opening?

YES >> GO TO 6.
NO >> GO TO 5.

5. CHECK EVAP CANISTER PURGE VOLUME CONTROL SOLENOID VALVE

Refer to EC-1323, "Component Inspection".

Is the inspection result normal?

YES >> GO TO 6.
NO >> Replace EVAP canister purge volume control solenoid valve.

6. CHECK INTERMITTENT INCIDENT

Refer to GI-42, "Intermittent Incident".

>> INSPECTION END

Component Inspection

INFOID:0000000004362164

1. CHECK EVAP CANISTER PURGE VOLUME CONTROL SOLENOID VALVE

With CONSULT-III

1. Turn ignition switch OFF.
2. Reconnect all harness connectors disconnected.
3. Disconnect EVAP purge hoses connected to EVAP canister purge volume control solenoid valve.
4. Turn ignition switch ON.
5. Select “PURG VOL C/V” in “ACTIVE TEST” mode with CONSULT-III.
6. Touch “Qd” and “Qu” on CONSULT-III screen to adjust “PURG VOL C/V” opening and check air passage continuity of EVAP canister purge volume control solenoid valve under the following conditions.

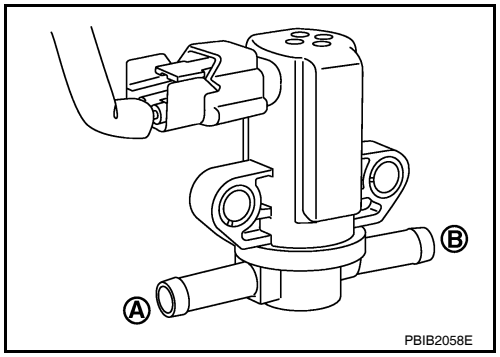

Condition (PURG VOL C/V value)	Air passage continuity between (A) and (B)
100%	Existed
0%	Not existed

Without CONSULT-III

1. Turn ignition switch OFF.
2. Disconnect EVAP canister purge volume control solenoid valve harness connector.
3. Disconnect EVAP purge hoses connected to EVAP canister purge volume control solenoid valve.
4. Check air passage continuity of EVAP canister purge volume control solenoid valve under the following conditions.

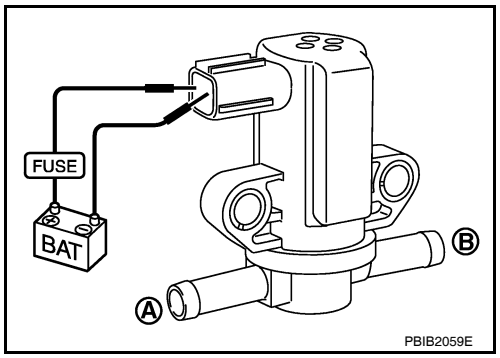

Condition	Air passage continuity between (A) and (B)
12 V direct current supply between terminals 1 and 2	Existed
No supply	Not existed

Is the inspection result normal?

YES >> INSPECTION END
NO >> Replace EVAP canister purge volume control solenoid valve

P0447 EVAP CANISTER VENT CONTROL VALVE

Description

INFOID:0000000004362165

The EVAP canister vent control valve is located on the EVAP canister and is used to seal the canister vent.
This solenoid valve responds to signals from the ECM. When the ECM sends an ON signal, the coil in the solenoid valve is energized. A plunger will then move to seal the canister vent. The ability to seal the vent is necessary for the on board diagnosis of other evaporative emission control system components.
This solenoid valve is used only for diagnosis, and usually remains opened.
When the vent is closed, under normal purge conditions, the evaporative emission control system is depressurized and allows “EVAP Control System” diagnosis.

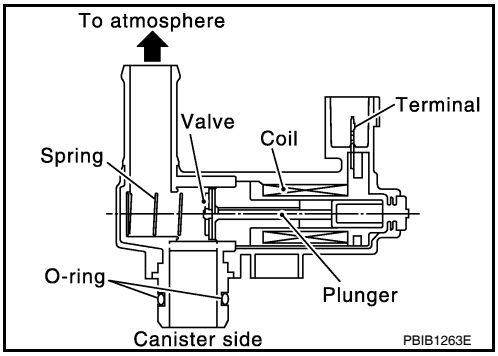

DTC Logic

INFOID:0000000004362166

DTC DETECTION LOGIC

DTC No.	Trouble diagnosis name	DTC detecting condition	Possible cause
P0447	EVAP canister vent control valve circuit open	An improper voltage signal is sent to ECM via the EVAP canister vent control valve.	• Harness or connectors (The valve circuit is open or shorted.) • EVAP canister vent control valve • Hoses (Hoses are connected incorrectly or clogged.)

DTC CONFIRMATION PROCEDURE

1.PRECONDITIONING

If DTC Confirmation Procedure has been previously conducted, always perform the following before conducting the next test.
1. Turn ignition switch OFF and wait at least 10 seconds.
2. Turn ignition switch ON.
3. Turn ignition switch OFF and wait at least 10 seconds.

TESTING CONDITION:
Before performing the following procedure, confirm battery voltage is more than 11 V at idle.

>> GO TO 2.

2.PERFORM DTC CONFIRMATION PROCEDURE

1. Start engine and wait at least 8 seconds.
2. Check 1st trip DTC.

Is 1st trip DTC detected?

YES >> Go to EC-1324, "Diagnosis Procedure".
NO >> INSPECTION END

Diagnosis Procedure

INFOID:0000000004362167

1.INSPECTION START

Will CONSULT-III be used?

Will CONSULT-III be used?

YES >> GO TO 2.
NO >> GO TO 3.

2.CHECK EVAP CANISTER VENT CONTROL VALVE CIRCUIT

With CONSULT-III

1. Turn ignition switch OFF and then ON.
2. Select “VENT CONTROL/V” in “ACTIVE TEST” mode with CONSULT-III.
3. Touch “ON/OFF” on CONSULT-III screen.
4. Check for operating sound of the valve.

Clicking sound should be heard.

Is the inspection result normal?

YES >> GO TO 7.
NO >> GO TO 3.

3. CHECK EVAP CANISTER VENT CONTROL VALVE POWER SUPPLY CIRCUIT

1. Turn ignition switch OFF.
2. Disconnect EVAP canister vent control valve harness connector.
3. Turn ignition switch ON.
4. Check the voltage between EVAP canister vent control valve harness connector and ground.

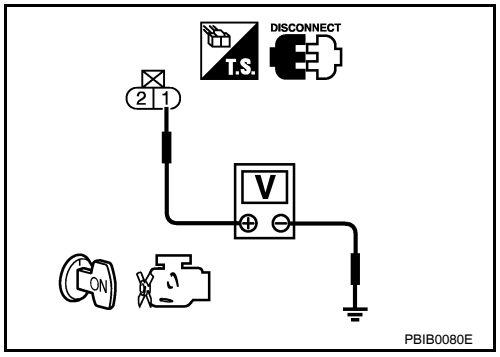

EVAP canister vent control valve		Ground	Voltage
Connector	Terminal		
B39	1	Ground	Battery voltage

Is the inspection result normal?

YES >> GO TO 5.
NO >> GO TO 4.

4. DETECT MALFUNCTIONING PART

Check the following.
- Harness connectors B10, E29
- Harness connectors E11, F2
- Harness for open or short between EVAP canister vent control valve and IPDM E/R

>> Repair open circuit, short to ground or short to power in harness or connectors.

5. CHECK EVAP CANISTER VENT CONTROL VALVE OUTPUT SIGNAL CIRCUIT FOR OPEN AND SHORT

1. Turn ignition switch OFF.
2. Disconnect ECM harness connector.
3. Check the continuity between ECM harness connector and EVAP canister vent control valve harness connector.
   Refer to Wiring Diagram.

EVAP canister vent control valve		ECM		Continuity
Connector	Terminal	Connector	Terminal	
B39	2	E10	109	Existed

4. Also check harness for short to ground and short to power.

Is the inspection result normal?

YES >> GO TO 7.
NO >> GO TO 6.

6. DETECT MALFUNCTIONING PART

Check the following.
- Harness connectors B10, E29
- Harness for open or short between EVAP canister vent control valve and ECM

>> Repair open circuit, short to ground or short to power in harness or connectors.

7. CHECK RUBBER TUBE FOR CLOGGING

1. Disconnect rubber tube connected to EVAP canister vent control valve.
2. Check the rubber tube for clogging.

Is the inspection result normal?

YES >> GO TO 8.
NO >> Clean the rubber tube using an air blower.

8. CHECK EVAP CANISTER VENT CONTROL VALVE

Refer to EC-1326, "Component Inspection".

Is the inspection result normal?

YES >> GO TO 9.
NO >> Replace EVAP canister vent control valve.

9. CHECK INTERMITTENT INCIDENT

Refer to GI-42, "Intermittent Incident".

>> INSPECTION END

Component Inspection

INFOID:0000000004362168

1. CHECK EVAP CANISTER VENT CONTROL VALVE-I

1. Remove EVAP canister vent control valve from EVAP canister.
2. Check portion (A) of EVAP canister vent control valve for rust.

Is it rusted?

YES >> Replace EVAP canister vent control valve.
NO >> GO TO 2.

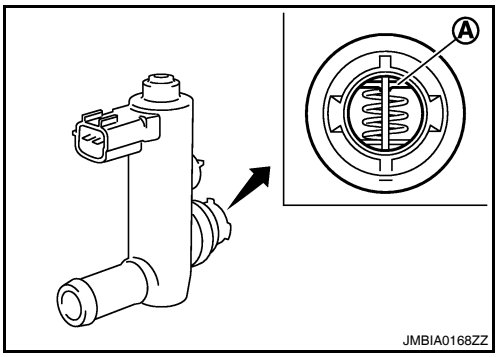

2. CHECK EVAP CANISTER VENT CONTROL VALVE-II

With CONSULT-III

1. Reconnect harness connectors disconnected.
2. Turn ignition switch ON.
3. Perform “VENT CONTROL/V” in “ACTIVE TEST” mode.
4. Check air passage continuity and operation delay time.
   Check that new O-ring is installed properly.

Condition VENT CONTROL/V	Air passage continuity between (A) and (B)
ON	Not existed
OFF	Existed

Operation takes less than 1 second.

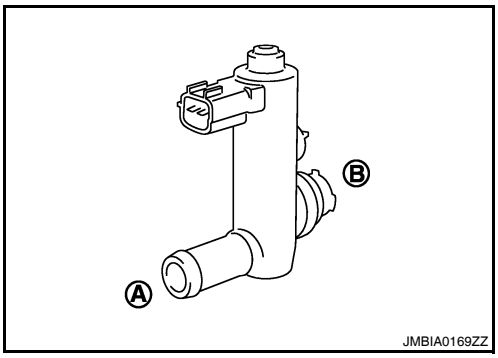

Without CONSULT-III

1. Disconnect EVAP canister vent control valve harness connector.
2. Check air passage continuity and operation delay time under the following conditions.

Check that new O-ring is installed properly.

Condition	Air passage continuity between (A) and (B)
12 V direct current supply between terminals 1 and 2	Not existed
OFF	Existed

Operation takes less than 1 second.

Is the inspection result normal?

YES >> INSPECTION END
NO >> GO TO 3.

3. CHECK EVAP CANISTER VENT CONTROL VALVE-III

With CONSULT-III

1. Clean the air passage [portion (A) to (B)] of EVAP canister vent control valve using an air blower.
2. Perform “VENT CONTROL/V” in “ACTIVE TEST” mode.
3. Check air passage continuity and operation delay time.
   Check that new O-ring is installed properly.

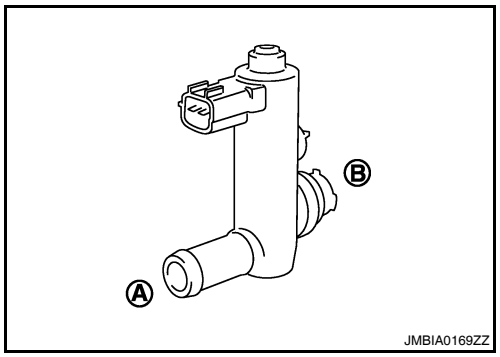

Condition VENT CONTROL/V	Air passage continuity between (A) and (B)
ON	No
OFF	Yes

Operation takes less than 1 second.

Without CONSULT-III

1. Clean the air passage [portion (A) to (B)] of EVAP canister vent control valve using an air blower.
2. Check air passage continuity and operation delay time under the following conditions.
   Check that new O-ring is installed properly.

Condition	Air passage continuity between (A) and (B)
12 V direct current supply between terminals (1) and (2)	No
OFF	Yes

Operation takes less than 1 second.

Is the inspection result normal?

YES >> INSPECTION END
NO >> Replace EVAP canister vent control valve

P0448 EVAP CANISTER VENT CONTROL VALVE

Description

INFOID:0000000004362169

The EVAP canister vent control valve is located on the EVAP canister and is used to seal the canister vent.
This solenoid valve responds to signals from the ECM. When the ECM sends an ON signal, the coil in the solenoid valve is energized. A plunger will then move to seal the canister vent. The ability to seal the vent is necessary for the on board diagnosis of other evaporative emission control system components.
This solenoid valve is used only for diagnosis, and usually remains opened.
When the vent is closed, under normal purge conditions, the evaporative emission control system is depressurized and allows “EVAP Control System” diagnosis.

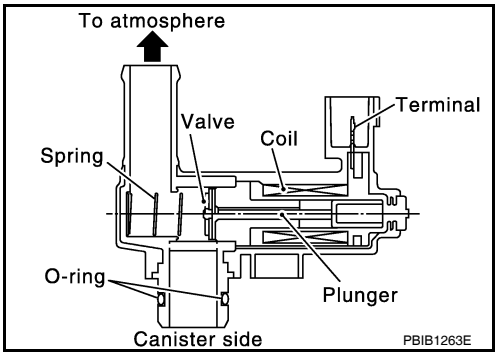

DTC Logic

INFOID:0000000004362170

DTC DETECTION LOGIC

DTC No.	Trouble diagnosis name	DTC detecting condition	Possible cause
P0448	EVAP canister vent control valve close	EVAP canister vent control valve remains closed under specified driving conditions.	• EVAP canister vent control valve • EVAP control system pressure sensor and the circuit • Blocked rubber tube to EVAP canister vent control valve • EVAP canister is saturated with water

DTC CONFIRMATION PROCEDURE

1. PRECONDITIONING

If DTC Confirmation Procedure has been previously conducted, always perform the following before conducting the next test.
1. Turn ignition switch OFF and wait at least 10 seconds.
2. Turn ignition switch ON.
3. Turn ignition switch OFF and wait at least 10 seconds.

>> GO TO 2.

2. PERFORM DTC CONFIRMATION PROCEDURE

With CONSULT-III
1. Turn ignition switch ON and wait at least 5 seconds.
2. Turn ignition switch OFF and wait at least 10 seconds.
3. Turn ignition switch ON and select “DATA MONITOR” mode with CONSULT-III.
4. Start engine and let it idle for at least 1 minute.
5. Repeat next procedures 3 times.
- Increase the engine speed up to between 3,000 and 3,500 rpm and maintain that speed it for 2 minutes and 50 seconds to 3 minutes.

Never exceed 3 minutes.
- Fully released accelerator pedal and keep engine idle for approximately 5 seconds.
6. Repeat next procedure 20 times.
- Quickly increase the engine speed up to between 4,000 and 4,500 rpm and maintain that speed it for 25 to 30 seconds.

- Fully released accelerator pedal and keep engine idle for at least 35 seconds.

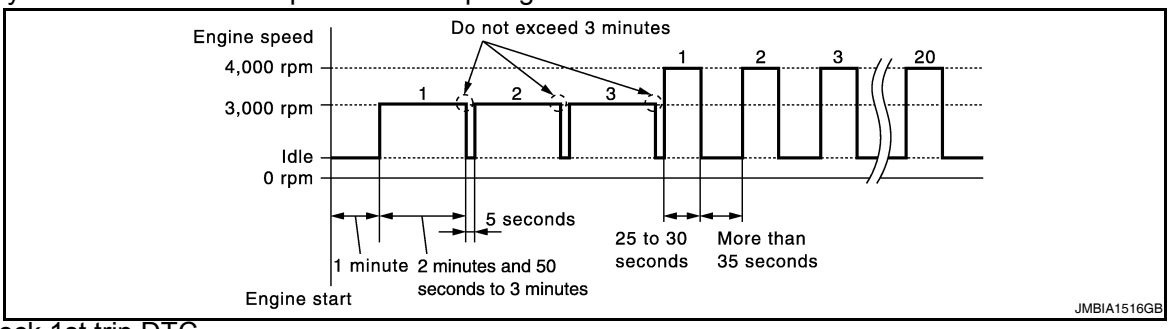

7. Check 1st trip DTC.

Is 1st trip DTC detected?

YES >> Go to EC-1329, "Diagnosis Procedure".
NO >> INSPECTION END

Diagnosis Procedure

INFOID:0000000004362171

1. CHECK RUBBER TUBE

1. Turn ignition switch OFF.
2. Disconnect rubber tube connected to EVAP canister vent control valve.
3. Check the rubber tube for clogging.

Is the inspection result normal?

YES >> GO TO 2.
NO >> Clean rubber tube using an air blower.

2. CHECK EVAP CANISTER VENT CONTROL VALVE

Refer to EC-1330, "Component Inspection".

Is the inspection result normal?

YES >> GO TO 3.
NO >> Replace EVAP canister vent control valve.

3. CHECK IF EVAP CANISTER IS SATURATED WITH WATER

1. Remove EVAP canister with EVAP canister vent control valve and EVAP control system pressure sensor attached.
2. Check if water will drain from the EVAP canister.

Does water drain from the EVAP canister?

YES >> GO TO 4.
NO >> GO TO 6.

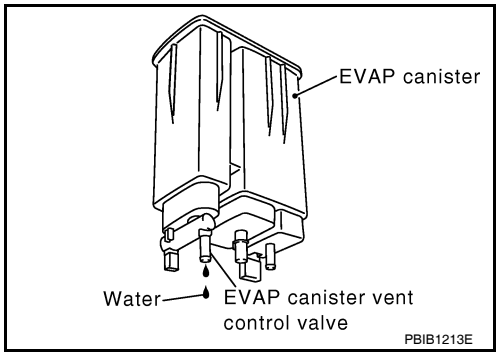

4. CHECK EVAP CANISTER

Weigh the EVAP canister with the EVAP canister vent control valve and EVAP control system pressure sensor attached.

The weight should be less than 2.1 kg (4.6 lb).

Is the inspection result normal?

YES >> GO TO 6.
NO >> GO TO 5.

5. DETECT MALFUNCTIONING PART

Check the following.

- EVAP canister for damage

- EVAP hose between EVAP canister and vehicle frame for clogging or poor connection

>> Repair hose or replace EVAP canister.

6. CHECK EVAP CONTROL SYSTEM PRESSURE SENSOR CONNECTOR

1. Disconnect EVAP control system pressure sensor harness connector.
2. Check that water is not inside connectors.

Is the inspection result normal?

YES >> GO TO 7.
NO >> Replace EVAP control system pressure sensor.

7. CHECK EVAP CONTROL SYSTEM PRESSURE SENSOR

Refer to EC-1334, "Component Inspection".

Is the inspection result normal?

YES >> GO TO 8.
NO >> Replace EVAP control system pressure sensor.

8. CHECK INTERMITTENT INCIDENT

Refer to GI-42, "Intermittent Incident".

>> INSPECTION END

Component Inspection

INFOID:0000000004362172

1. CHECK EVAP CANISTER VENT CONTROL VALVE-I

1. Remove EVAP canister vent control valve from EVAP canister.
2. Check portion (A) of EVAP canister vent control valve for rust.

Is it rusted?

YES >> Replace EVAP canister vent control valve.
NO >> GO TO 2.

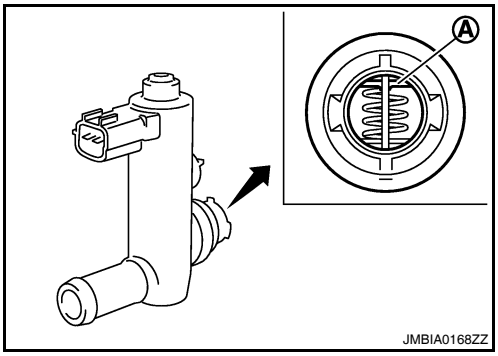

2. CHECK EVAP CANISTER VENT CONTROL VALVE-II

With CONSULT-III

1. Reconnect harness connectors disconnected.
2. Turn ignition switch ON.
3. Perform “VENT CONTROL/V” in “ACTIVE TEST” mode.
4. Check air passage continuity and operation delay time.
   Check that new O-ring is installed properly.

Condition VENT CONTROL/V	Air passage continuity between (A) and (B)
ON	Not existed
OFF	Existed

Operation takes less than 1 second.

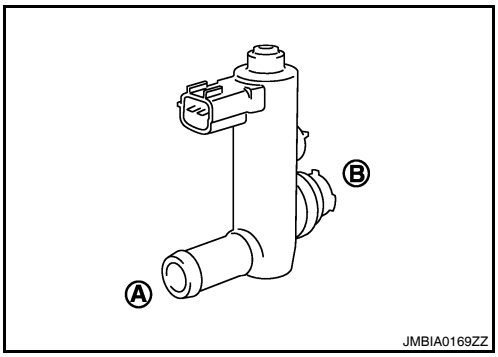

Without CONSULT-III

1. Disconnect EVAP canister vent control valve harness connector.
2. Check air passage continuity and operation delay time under the following conditions.

Check that new O-ring is installed properly.

Condition	Air passage continuity between (A) and (B)
12 V direct current supply between terminals 1 and 2	Not existed
OFF	Existed

Operation takes less than 1 second.

Is the inspection result normal?

YES >> INSPECTION END
NO >> GO TO 3.

3. CHECK EVAP CANISTER VENT CONTROL VALVE-III

With CONSULT-III

1. Clean the air passage [portion (A) to (B)] of EVAP canister vent control valve using an air blower.
2. Perform “VENT CONTROL/V” in “ACTIVE TEST” mode.
3. Check air passage continuity and operation delay time.
   Check that new O-ring is installed properly.

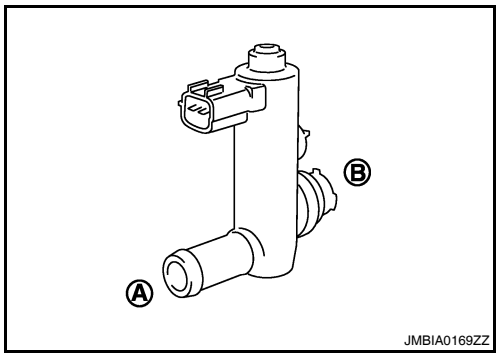

Condition VENT CONTROL/V	Air passage continuity between (A) and (B)
ON	No
OFF	Yes

Operation takes less than 1 second.

Without CONSULT-III

1. Clean the air passage [portion (A) to (B)] of EVAP canister vent control valve using an air blower.
2. Check air passage continuity and operation delay time under the following conditions.
   Check that new O-ring is installed properly.

Condition	Air passage continuity between (A) and (B)
12 V direct current supply between terminals (1) and (2)	No
OFF	Yes

Operation takes less than 1 second.

Is the inspection result normal?

YES >> INSPECTION END
NO >> Replace EVAP canister vent control valve

P0451 EVAP CONTROL SYSTEM PRESSURE SENSOR

Description

INFOID:0000000004362173

The EVAP control system pressure sensor detects pressure in the purge line. The sensor output voltage to the ECM increases as pressure increases.

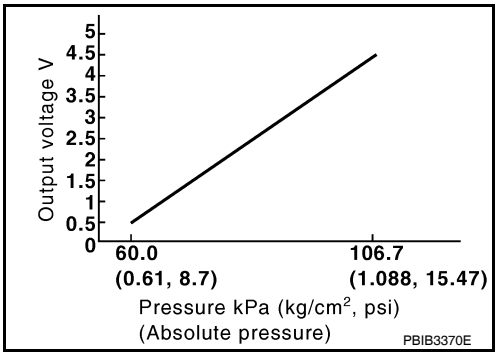

DTC Logic

INFOID:0000000004362174

DTC DETECTION LOGIC

DTC No.	Trouble diagnosis name	DTC detecting condition	Possible cause
P0451	EVAP control system pressure sensor performance	ECM detects a sloshing signal from the EVAP control system pressure sensor	• Harness or connectors (EVAP control system pressure sensor circuit is shorted.) [Crankshaft position (CKP) sensor (POS) circuit is shorted.] [Accelerator pedal position (APP) sensor 2 circuit is shorted.] (Refrigerant pressure sensor circuit is shorted.) • EVAP control system pressure sensor • CKP sensor (POS) • APP sensor • Refrigerant pressure sensor

DTC CONFIRMATION PROCEDURE

1.PRECONDITIONING

If DTC Confirmation Procedure has been previously conducted, always perform the following before conducting the next test.

1. Turn ignition switch OFF and wait at least 10 seconds.
2. Turn ignition switch ON.
3. Turn ignition switch OFF and wait at least 10 seconds.

>> GO TO 2.

2.PERFORM DTC CONFIRMATION PROCEDURE

1. Start engine and wait at least 40 seconds.
   NOTE:
   Do not depress accelerator pedal even slightly.
2. Check 1st trip DTC.

Is 1st trip DTC detected?

YES >> Go to EC-1332, "Diagnosis Procedure".
NO >> INSPECTION END

Diagnosis Procedure

INFOID:0000000004362175

1.CHECK GROUND CONNECTION

1. Turn ignition switch OFF.

2. Check ground connection E9. Refer to Ground Inspection in GI-45, "Circuit Inspection".

Is the inspection result normal?

YES >> GO TO 2.
NO >> Repair or replace ground connection.

2. CHECK EVAP CONTROL SYSTEM PRESSURE SENSOR CONNECTOR FOR WATER

1. Disconnect EVAP control system pressure sensor harness connector.
2. Check that water is not inside connectors.

Is the inspection result normal?

YES >> GO TO 3.
NO >> Repair or replace harness connector.

3. CHECK EVAP CONTROL SYSTEM PRESSURE SENSOR POWER SUPPLY CIRCUIT

1. Turn ignition switch ON.
2. Check the voltage between EVAP control system pressure sensor harness connector and ground.

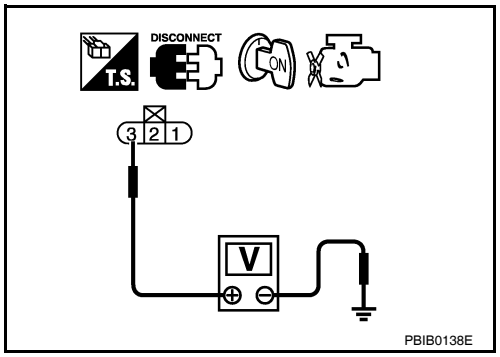

EVAP control system pressure sensor		Ground	Voltage (V)
Connector	Terminal		
B41	3	Ground	Approx. 5

Is the inspection result normal?

YES >> GO TO 8.
NO >> GO TO 4.

4. CHECK SENSOR POWER SUPPLY CIRCUIT

Check harness for short to power and short to ground, between the following terminals.

ECM		Sensor		
Connector	Terminal	Name	Connector	Terminal
F13	72	Refrigerant pressure sensor	E219	1
	76	CKP sensor (POS)	F30	1
E10	87	APP sensor	E40	6
	91	EVAP control system pressure sensor	B41	3

Is the inspection result normal?

YES >> GO TO 5.
NO >> Repair short to ground or short to power in harness or connectors.

5. CHECK COMPONENTS

Check the following.
- Crankshaft position sensor (POS) (Refer to EC-1295, "Component Inspection".)
- Refrigerant pressure sensor (Refer to EC-1503, "Diagnosis Procedure".)

Is the inspection result normal?

YES >> GO TO 6.
NO >> Replace malfunctioning components.

6. CHECK APP SENSOR

Refer to EC-1450, "Component Inspection".

Is the inspection result normal?

YES >> GO TO 9.
NO >> GO TO 7.

7. REPLACE ACCELERATOR PEDAL ASSEMBLY

1. Replace accelerator pedal assembly.
2. Go to EC-1450, "Special Repair Requirement".

>> INSPECTION END

8. CHECK EVAP CONTROL SYSTEM PRESSURE SENSOR

Refer to EC-1334, "Component Inspection".

Is the inspection result normal?

YES >> GO TO 9.
NO >> Replace EVAP control system pressure sensor.

9. CHECK INTERMITTENT INCIDENT

Refer to GI-42, "Intermittent Incident".

>> INSPECTION END

Component Inspection

INFOID:0000000004362176

1. CHECK EVAP CONTROL SYSTEM PRESSURE SENSOR

1. Turn ignition switch OFF.
2. Remove EVAP control system pressure sensor with its harness connector.
   Always replace O-ring with a new one.
3. Install a vacuum pump to EVAP control system pressure sensor.
4. Turn ignition switch ON and check output voltage between ECM terminals under the following conditions.

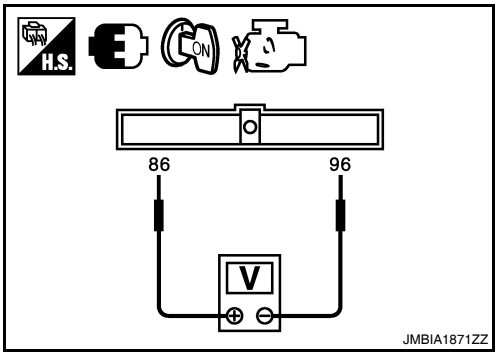

ECM			Applied vacuum kPa (kg/cm^2, psi)	Voltage
Connector	+	–		
	Terminal	Terminal		
E10	86 (EVAP control system pressure sensor signal)	96 (Sensor ground)	Not applied	1.8 - 4.8 V
			-26.7 (-0.272, -3.87)	2.1 to 2.5 V lower than above value

CAUTION:
- **Always calibrate the vacuum pump gauge when using it.**
- **Never apply below -93.3 kPa (-0.952 kg/cm^2, -13.53 psi) or pressure over 101.3 kPa (1.033 kg/cm^2, 14.69 psi).**

Is the inspection result normal?

YES >> INSPECTION END
NO >> Replace EVAP control system pressure sensor

P0452 EVAP CONTROL SYSTEM PRESSURE SENSOR

Description

INFOID:0000000004362177

The EVAP control system pressure sensor detects pressure in the purge line. The sensor output voltage to the ECM increases as pressure increases.

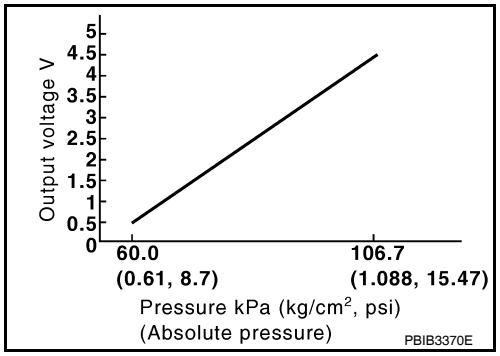

DTC Logic

INFOID:0000000004362178

DTC DETECTION LOGIC

DTC No.	Trouble diagnosis name	DTC detecting condition	Possible cause
P0452	EVAP control system pressure sensor low input	An excessively low voltage from the sensor is sent to ECM.	• Harness or connectors (EVAP control system pressure sensor circuit is open or shorted.) [Crankshaft position (CKP) sensor (POS) circuit is shorted.] [Accelerator pedal position (APP) sensor 2 circuit is shorted.] (Refrigerant pressure sensor circuit is shorted.) • EVAP control system pressure sensor • CKP sensor (POS) • APP sensor • Refrigerant pressure sensor

DTC CONFIRMATION PROCEDURE

1. PRECONDITIONING

If DTC Confirmation Procedure has been previously conducted, always perform the following before conducting the next test.

1. Turn ignition switch OFF and wait at least 10 seconds.
2. Turn ignition switch ON.
3. Turn ignition switch OFF and wait at least 10 seconds.

TESTING CONDITION:
Always perform test at a temperature of 5°C (41°F) or more.

>> GO TO 2.

2. PERFORM DTC CONFIRMATION PROCEDURE

With CONSULT-III

1. Start engine and warm it up to normal operating temperature.
2. Turn ignition switch OFF and wait at least 10 seconds.
3. Turn ignition switch ON.
4. Turn ignition switch OFF and wait at least 10 seconds.
5. Turn ignition switch ON.
6. Select “DATA MONITOR” mode with CONSULT-III.
7. Check that “FUEL T/TMP SE” is more than 0°C (32°F).
8. Start engine and wait at least 20 seconds.
9. Check 1st trip DTC.

With GST

1. Start engine and warm it up to normal operating temperature.
2. Set voltmeter probes to ECM harness connector terminals under the following conditions.

ECM		
Connector	+	–
	Terminal	Terminal
E10	95 (Fuel tank temperature sensor signal)	104 (Sensor ground)

3. Check that the voltage is less than 4.2 V.
4. Turn ignition switch OFF and wait at least 10 seconds.
5. Turn ignition switch ON.
6. Turn ignition switch OFF and wait at least 10 seconds.
7. Start engine and wait at least 20 seconds.
8. Check 1st trip DTC.

Is 1st trip DTC detected?

YES >> Go to EC-1336, "Diagnosis Procedure".
NO >> INSPECTION END

Diagnosis Procedure

INFOID:0000000004362179

1. CHECK GROUND CONNECTION

1. Turn ignition switch OFF.
2. Check ground connection E9. Refer to Ground Inspection in GI-45, "Circuit Inspection".

Is the inspection result normal?

YES >> GO TO 2.
NO >> Repair or replace ground connection.

2. CHECK CONNECTOR

1. Disconnect EVAP control system pressure sensor harness connector.
2. Check that water is not inside connectors.

Is the inspection result normal?

YES >> GO TO 3.
NO >> Repair or replace harness connector.

3. CHECK EVAP CONTROL SYSTEM PRESSURE SENSOR POWER SUPPLY CIRCUIT-I

1. Turn ignition switch ON.
2. Check the voltage between EVAP control system pressure sensor harness connector and ground.

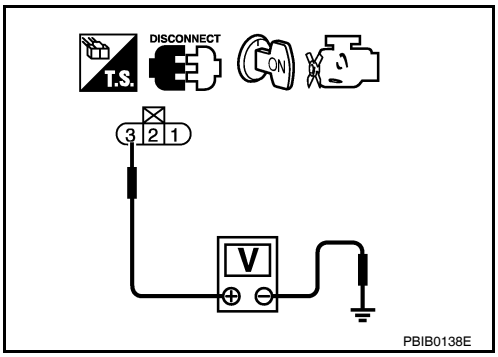

EVAP control system pressure sensor		Ground	Voltage (V)
Connector	Terminal		
B41	3	Ground	Approx. 5

Is the inspection result normal?

YES >> GO TO 10.
NO >> GO TO 4.

4. CHECK EVAP CONTROL SYSTEM PRESSURE SENSOR POWER SUPPLY CIRCUIT-II

1. Turn ignition switch OFF.
2. Disconnect ECM harness connector.
3. Check the continuity between EVAP control system pressure sensor harness connector and ECM harness connector.

EVAP control system pressure sensor		ECM		Continuity
Connector	Terminal	Connector	Terminal	
B41	3	E10	91	Existed

Is the inspection result normal?

YES >> GO TO 6.
NO >> GO TO 5.

5. DETECT MALFUNCTIONING PART

Check the following.
- Harness connectors B10, E29
- Harness for open or short between EVAP control system pressure sensor and ECM

>> Repair open circuit.

6. CHECK SENSOR POWER SUPPLY CIRCUIT

Check harness for short to power and short to ground, between the following terminals.

ECM		Sensor		
Connector	Terminal	Name	Connector	Terminal
F13	72	Refrigerant pressure sensor	E219	1
	76	CKP sensor (POS)	F30	1
E10	87	APP sensor	E40	6
	91	EVAP control system pressure sensor	B41	3

Is the inspection result normal?

YES >> GO TO 7.
NO >> Repair short to ground or short to power in harness or connectors.

7. CHECK COMPONENTS

Check the following.
- Crankshaft position sensor (POS) (Refer to EC-1295, "Component Inspection".)
- Refrigerant pressure sensor (Refer to EC-1503, "Diagnosis Procedure".)

Is the inspection result normal?

YES >> GO TO 8.
NO >> Replace malfunctioning components.

8. CHECK APP SENSOR

Refer to EC-1450, "Component Inspection".

Is the inspection result normal?

YES >> GO TO 15.
NO >> GO TO 9.

9. REPLACE ACCELERATOR PEDAL ASSEMBLY

1. Replace accelerator pedal assembly.
2. Refer to EC-1450, "Special Repair Requirement".

>> INSPECTION END

10. CHECK EVAP CONTROL SYSTEM PRESSURE SENSOR GROUND CIRCUIT FOR OPEN AND SHORT

1. Turn ignition switch OFF.
2. Disconnect ECM harness connector.
3. Check the continuity between EVAP control system pressure sensor harness connector and ECM harness connector.

EVAP control system pressure sensor		ECM		Continuity
Connector	Terminal	Connector	Terminal	
B41	1	E10	96	Existed

4. Also check harness for short to ground and short to power.

Is the inspection result normal?

YES >> GO TO 12.
NO >> GO TO 11.

11. DETECT MALFUNCTIONING PART

Check the following.
- Harness connectors B10, E29
- Harness for open or short between EVAP control system pressure sensor and ECM

>> Repair open circuit, short to ground or short to power in harness or connectors.

12. CHECK EVAP CONTROL SYSTEM PRESSURE SENSOR INPUT SIGNAL CIRCUIT FOR OPEN AND SHORT

1. Check the continuity between EVAP control system pressure sensor harness connector and ECM harness connector.

EVAP control system pressure sensor		ECM		Continuity
Connector	Terminal	Connector	Terminal	
B41	2	E10	86	Existed

2. Also check harness for short to ground and short to power.

Is the inspection result normal?

YES >> GO TO 14.
NO >> GO TO 13.

13. DETECT MALFUNCTIONING PART

Check the following.
- Harness connectors B10, E29
- Harness for open or short between EVAP control system pressure sensor and ECM

>> Repair open circuit, short to ground or short to power in harness or connectors.

14. CHECK EVAP CONTROL SYSTEM PRESSURE SENSOR

Refer to EC-1338, "Component Inspection".

Is the inspection result normal?

YES >> GO TO 15.
NO >> Replace EVAP control system pressure sensor.

15. CHECK INTERMITTENT INCIDENT

Refer to GI-42, "Intermittent Incident".

>> INSPECTION END

Component Inspection

INFOID:0000000004362180

1. CHECK EVAP CONTROL SYSTEM PRESSURE SENSOR

1. Turn ignition switch OFF.
2. Remove EVAP control system pressure sensor with its harness connector.
   Always replace O-ring with a new one.
3. Install a vacuum pump to EVAP control system pressure sensor.

4. Turn ignition switch ON and check output voltage between ECM terminals under the following conditions.

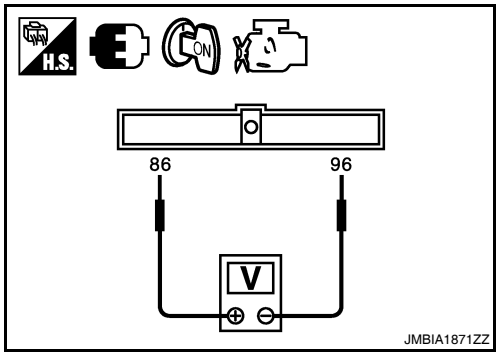

ECM			Applied vacuum kPa (kg/cm^2, psi)	Voltage
Connector	+	–		
	Terminal	Terminal		
E10	86 (EVAP control system pressure sensor signal)	96 (Sensor ground)	Not applied	1.8 - 4.8 V
			-26.7 (-0.272, -3.87)	2.1 to 2.5 V lower than above value

CAUTION:
- **Always calibrate the vacuum pump gauge when using it.**
- **Never apply below -93.3 kPa (-0.952 kg/cm^2, -13.53 psi) or pressure over 101.3 kPa (1.033 kg/cm^2, 14.69 psi).**

Is the inspection result normal?

YES >> INSPECTION END
NO >> Replace EVAP control system pressure sensor

P0453 EVAP CONTROL SYSTEM PRESSURE SENSOR

Description

INFOID:0000000004362181

The EVAP control system pressure sensor detects pressure in the purge line. The sensor output voltage to the ECM increases as pressure increases.

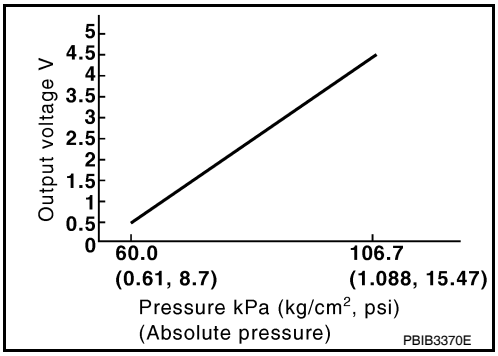

DTC Logic

INFOID:0000000004362182

DTC DETECTION LOGIC

DTC No.	Trouble diagnosis name	DTC detecting condition	Possible cause
P0453	EVAP control system pressure sensor high input	An excessively high voltage from the sensor is sent to ECM.	• Harness or connectors (EVAP control system pressure sensor circuit is open or shorted.) [Crankshaft position (CKP) sensor (POS) circuit is shorted.] [Accelerator pedal position (APP) sensor 2 circuit is shorted.] (Refrigerant pressure sensor circuit is shorted.) • EVAP control system pressure sensor • CKP sensor (POS) • APP sensor • Refrigerant pressure sensor • EVAP canister vent control valve • EVAP canister • Rubber hose from EVAP canister vent control valve to vehicle frame

DTC CONFIRMATION PROCEDURE

1. PRECONDITIONING

If DTC Confirmation Procedure has been previously conducted, always perform the following before conducting the next test.

1. Turn ignition switch OFF and wait at least 10 seconds.
2. Turn ignition switch ON.
3. Turn ignition switch OFF and wait at least 10 seconds.

TESTING CONDITION:
Always perform test at a temperature of 5°C (41°F) or more.

>> GO TO 2.

2. PERFORM DTC CONFIRMATION PROCEDURE

With CONSULT-III

1. Start engine and warm it up to normal operating temperature.
2. Turn ignition switch OFF and wait at least 10 seconds.
3. Turn ignition switch ON.
4. Turn ignition switch OFF and wait at least 10 seconds.
5. Turn ignition switch ON.
6. Select “DATA MONITOR” mode with CONSULT-III.

7. Check that “FUEL T/TMP SE” is more than 0°C (32°F).
8. Start engine and wait at least 20 seconds.
9. Check 1st trip DTC.

With GST

1. Start engine and warm it up to normal operating temperature.
2. Set voltmeter probes to ECM harness connector terminals.

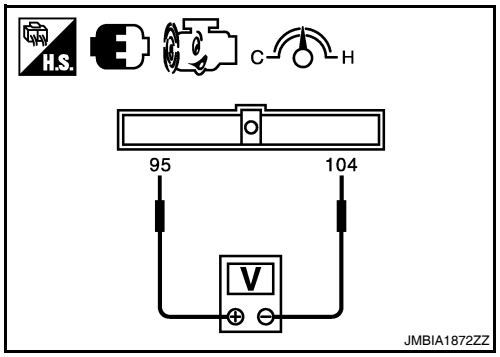

ECM		
Connector	+	–
	Terminal	Terminal
E10	95 (Fuel tank temperature sensor signal)	104 (Sensor ground)

3. Check that the voltage is less than 4.2 V.
4. Turn ignition switch OFF and wait at least 10 seconds.
5. Turn ignition switch ON.
6. Turn ignition switch OFF and wait at least 10 seconds.
7. Start engine and wait at least 20 seconds.
8. Check 1st trip DTC.

Is 1st trip DTC detected?

YES >> Go to EC-1341, "Diagnosis Procedure".
NO >> INSPECTION END

Diagnosis Procedure

INFOID:0000000004362183

1. CHECK GROUND CONNECTION

1. Turn ignition switch OFF.
2. Check ground connection E9. Refer to Ground Inspection in GI-45, "Circuit Inspection".

Is the inspection result normal?

YES >> GO TO 2.
NO >> Repair or replace ground connection.

2. CHECK CONNECTOR

1. Disconnect EVAP control system pressure sensor harness connector.
2. Check that water is not inside connectors.

Is the inspection result normal?

YES >> GO TO 3.
NO >> Repair or replace harness connector.

3. CHECK EVAP CONTROL SYSTEM PRESSURE SENSOR POWER SUPPLY CIRCUIT

1. Turn ignition switch ON.
2. Check the voltage between EVAP control system pressure sensor harness connector and ground.

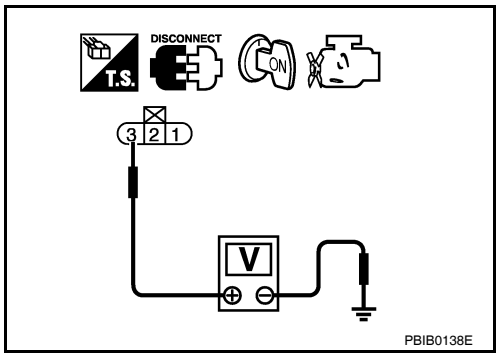

EVAP control system pressure sensor		Ground	Voltage (V)
Connector	Terminal		
B41	3	Ground	Approx. 5

Is the inspection result normal?

YES >> GO TO 10.
NO >> GO TO 4.

4. CHECK EVAP CONTROL SYSTEM PRESSURE SENSOR POWER SUPPLY CIRCUIT-II

1. Turn ignition switch OFF.
2. Disconnect ECM harness connector.
3. Check the continuity between EVAP control system pressure sensor harness connector and ECM harness connector.

EVAP control system pressure sensor		ECM		Continuity
Connector	Terminal	Connector	Terminal	
B41	3	E10	91	Existed

Is the inspection result normal?

YES >> GO TO 6.
NO >> GO TO 5.

5. DETECT MALFUNCTIONING PART

Check the following.
- Harness connectors B10, E29
- Harness for open or short between EVAP control system pressure sensor and ECM

>> Repair open circuit.

6. CHECK SENSOR POWER SUPPLY CIRCUIT

Check harness for short to power and short to ground, between the following terminals.

ECM		Sensor		
Connector	Terminal	Name	Connector	Terminal
F13	72	Refrigerant pressure sensor	E219	1
	76	CKP sensor (POS)	F30	1
E10	87	APP sensor	E40	6
	91	EVAP control system pressure sensor	B41	3

Is the inspection result normal?

YES >> GO TO 7.
NO >> Repair short to ground or short to power in harness or connectors.

7. CHECK COMPONENTS

Check the following.
- Crankshaft position sensor (POS) (Refer to EC-1295, "Component Inspection".)
- Refrigerant pressure sensor (Refer to EC-1503, "Diagnosis Procedure".)

Is the inspection result normal?

YES >> GO TO 8.
NO >> Replace malfunctioning components.

8. CHECK APP SENSOR

Refer to EC-1450, "Component Inspection".

Is the inspection result normal?

YES >> GO TO 15.
NO >> GO TO 9.

9. REPLACE ACCELERATOR PEDAL ASSEMBLY

1. Replace accelerator pedal assembly.
2. Refer to EC-1450, "Special Repair Requirement".

>> INSPECTION END

10. CHECK EVAP CONTROL SYSTEM PRESSURE SENSOR GROUND CIRCUIT FOR OPEN AND SHORT

1. Turn ignition switch OFF.
2. Disconnect ECM harness connector.
3. Check the continuity between EVAP control system pressure sensor harness connector and ECM harness connector.

EVAP control system pressure sensor		ECM		Continuity
Connector	Terminal	Connector	Terminal	
B41	1	E10	96	Existed

4. Also check harness for short to ground and short to power.

Is the inspection result normal?

YES >> GO TO 12.
NO >> GO TO 11.

11. DETECT MALFUNCTIONING PART

Check the following.
- Harness connectors B10, E29
- Harness for open or short between EVAP control system pressure sensor and ECM

>> Repair open circuit, short to ground or short to power in harness or connectors.

12. CHECK EVAP CONTROL SYSTEM PRESSURE SENSOR INPUT SIGNAL CIRCUIT FOR OPEN AND SHORT

1. Check the continuity between EVAP control system pressure sensor harness connector and ECM harness connector.

EVAP control system pressure sensor		ECM		Continuity
Connector	Terminal	Connector	Terminal	
B41	2	E10	86	Existed

2. Also check harness for short to ground and short to power.

Is the inspection result normal?

YES >> GO TO 14.
NO >> GO TO 13.

13. DETECT MALFUNCTIONING PART

Check the following.
- Harness connectors B10, E29
- Harness for open or short between EVAP control system pressure sensor and ECM

>> Repair open circuit, short to ground or short to power in harness or connectors.

14. CHECK RUBBER TUBE

1. Disconnect rubber tube connected to EVAP canister vent control valve.
2. Check the rubber tube for clogging.

Is the inspection result normal?

YES >> GO TO 15.
NO >> Clean the rubber tube using an air blower, repair or replace rubber tube.

15. CHECK EVAP CANISTER VENT CONTROL VALVE

Refer to EC-1326, "Component Inspection".

Is the inspection result normal?

YES >> GO TO 16.
NO >> Replace EVAP canister vent control valve.

16. CHECK EVAP CONTROL SYSTEM PRESSURE SENSOR

Refer to EC-1344, "Component Inspection".

Is the inspection result normal?

YES >> GO TO 17.
NO >> Replace EVAP control system pressure sensor.

17. CHECK IF EVAP CANISTER IS SATURATED WITH WATER

1. Remove EVAP canister with EVAP canister vent control valve and EVAP control system pressure sensor attached.
2. Check if water will drain from the EVAP canister.

Does water drain from the EVAP canister?

YES >> GO TO 18.
NO >> GO TO 20.

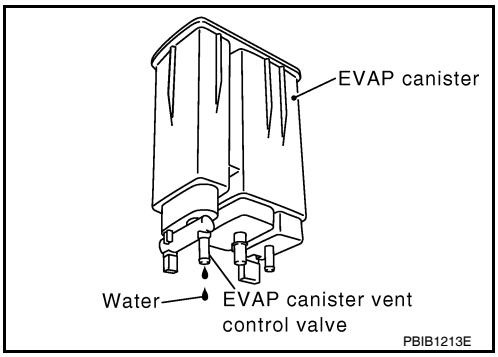

18. CHECK EVAP CANISTER

Weigh the EVAP canister with the EVAP canister vent control valve and EVAP control system pressure sensor attached.

The weight should be less than 2.1 kg (4.6 lb).

Is the inspection result normal?

YES >> GO TO 20.
NO >> GO TO 19.

19. DETECT MALFUNCTIONING PART

Check the following.
- EVAP canister for damage
- EVAP hose between EVAP canister and vehicle frame for clogging or poor connection

>> Repair hose or replace EVAP canister.

20. CHECK INTERMITTENT INCIDENT

Refer to GI-42, "Intermittent Incident".

>> INSPECTION END

Component Inspection

INFOID:0000000004362184

1. CHECK EVAP CONTROL SYSTEM PRESSURE SENSOR

1. Turn ignition switch OFF.
2. Remove EVAP control system pressure sensor with its harness connector.
   Always replace O-ring with a new one.
3. Install a vacuum pump to EVAP control system pressure sensor.
4. Turn ignition switch ON and check output voltage between ECM terminals under the following conditions.

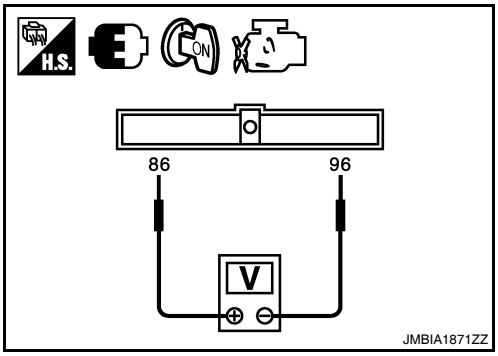

ECM			Applied vacuum kPa (kg/cm^2, psi)	Voltage
Connector	+	–		
	Terminal	Terminal		
E10	86 (EVAP control system pressure sensor signal)	96 (Sensor ground)	Not applied	1.8 - 4.8 V
			-26.7 (-0.272, -3.87)	2.1 to 2.5 V lower than above value

CAUTION:
- **Always calibrate the vacuum pump gauge when using it.**
- **Never apply below -93.3 kPa (-0.952 kg/cm^2, -13.53 psi) or pressure over 101.3 kPa (1.033 kg/cm^2, 14.69 psi).**

Is the inspection result normal?

YES >> INSPECTION END
NO >> Replace EVAP control system pressure sensor

P0455 EVAP CONTROL SYSTEM

DTC Logic

INFOID:0000000004362185

DTC DETECTION LOGIC

This diagnosis detects a very large leakage (fuel filler cap fell off etc.) in EVAP system between the fuel tank and EVAP canister purge volume control solenoid valve.

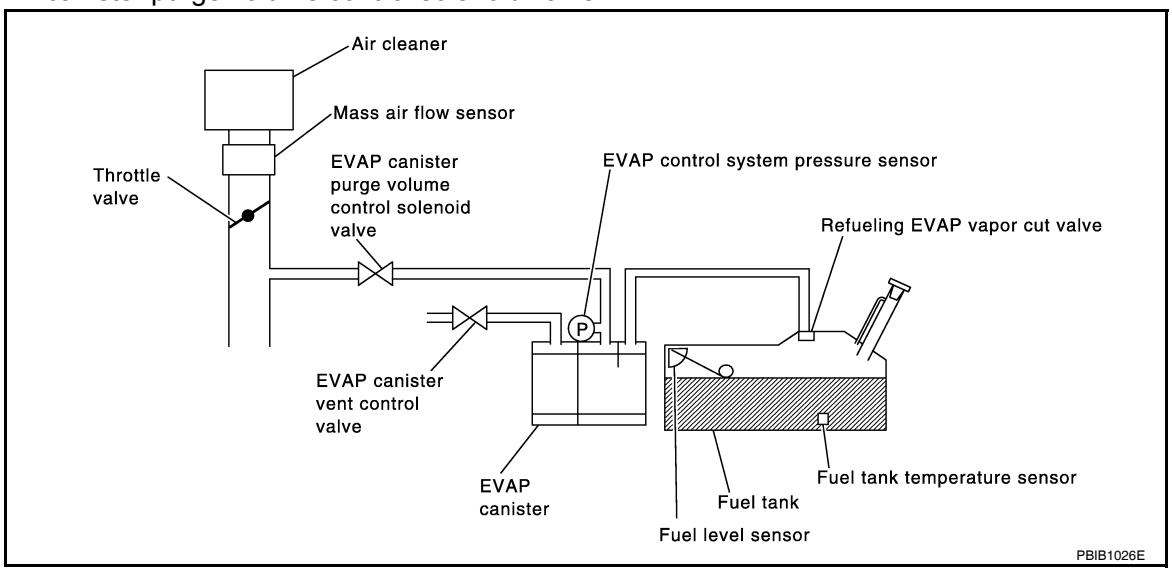

DTC No.	Trouble diagnosis name	DTC detecting condition	Possible cause
P0455	EVAP control system gross leakage detected	EVAP control system has a very large leakage such as fuel filler cap fell off, EVAP control system does not operate properly.	• Fuel filler cap remains open or fails to close. • Incorrect fuel tank vacuum relief valve • Incorrect fuel filler cap used • Foreign matter caught in fuel filler cap. • Leakage is in line between intake manifold and EVAP canister purge volume control solenoid valve. • Foreign matter caught in EVAP canister vent control valve. • EVAP canister or fuel tank leakage • EVAP purge line (pipe and rubber tube) leakage • EVAP purge line rubber tube bent. • Loose or disconnected rubber tube • EVAP canister vent control valve and the circuit • EVAP canister purge volume control solenoid valve and the circuit • Fuel tank temperature sensor • O-ring of EVAP canister vent control valve is missing or damaged. • EVAP control system pressure sensor • Refueling EVAP vapor cut valve • ORVR system leakage

CAUTION:
- **Use only a genuine NISSAN fuel filler cap as a replacement. If an incorrect fuel filler cap is used, the MIL may illuminate.**
- **If the fuel filler cap is not tightened properly, the MIL may illuminate.**
- **Use only a genuine NISSAN rubber tube as a replacement.**

DTC CONFIRMATION PROCEDURE

1.PRECONDITIONING

CAUTION:

Never remove fuel filler cap during the DTC Confirmation Procedure.
If DTC Confirmation Procedure has been previously conducted, always perform the following before conducting the next test.
1. Turn ignition switch OFF and wait at least 10 seconds.
2. Turn ignition switch ON.
3. Turn ignition switch OFF and wait at least 10 seconds.

Check that EVAP hoses are connected to EVAP canister purge volume control solenoid valve properly.
TESTING CONDITION:
- **Perform "DTC WORK SUPPORT" when the fuel level is between 1/4 and 3/4 full, and vehicle is placed on flat level surface.**
- **Open engine hood before conducting the following procedures.**

Will CONSULT-III be used?

YES >> GO TO 2.
NO >> GO TO 4.

2. PERFORM DTC CONFIRMATION PROCEDURE

With CONSULT-III
1. Tighten fuel filler cap securely until ratcheting sound is heard.
2. Turn ignition switch ON.
3. Turn ignition switch OFF and wait at least 10 seconds.
4. Turn ignition switch ON and select "DATA MONITOR" mode with CONSULT-III.
5. Check that the following conditions are met.
   COOLAN TEMP/S: 0 - 70°C (32 - 158°F)
   INT/A TEMP SE: 0 - 60°C (32 - 140°F)
6. Select "EVP SML LEAKAGE P0442/P1442" of "EVAPORATIVE SYSTEM" in "DTC WORK SUPPORT" mode with CONSULT-III.
   Follow the instructions displayed.
   NOTE:
   If the engine speed cannot be maintained within the range displayed on the CONSULT-III screen, go to EC-1048, "BASIC INSPECTION : Special Repair Requirement".

Which is displayed on CONSULT-III screen?

OK >> INSPECTION END
NG >> GO TO 3.

3. CHECK DTC

Check DTC.

Which DTC is detected?

P0455 >> Go to EC-1348, "Diagnosis Procedure".
P0442 >> Go to EC-1311, "Diagnosis Procedure".

4. PERFORM DTC CONFIRMATION PROCEDURE

With GST
NOTE:
Be sure to read the explanation of DRIVING PATTERN in EC-1558, "How to Set SRT Code" before driving vehicle.
1. Start engine.
2. Drive vehicle according to DRIVING PATTERN.
3. Stop vehicle.
4. Turn ignition switch OFF and wait at least 10 seconds.
5. Turn ignition switch ON.
6. Turn ignition switch OFF and wait at least 10 seconds.
7. Turn ignition switch ON.
8. Check 1st trip DTC.

Is 1st trip DTC detected?

YES-1 >> P0455: Go to EC-1348, "Diagnosis Procedure".
YES-2 >> P0442: Go to EC-1311, "Diagnosis Procedure".
YES-3 >> P0441: Go to EC-1307, "Diagnosis Procedure".
NO >> INSPECTION END

Diagnosis Procedure

INFOID:0000000004362186

1. CHECK FUEL FILLER CAP DESIGN

1. Turn ignition switch OFF.
2. Check for genuine NISSAN fuel filler cap design.

Is the inspection result normal?

YES >> GO TO 2.
NO >> Replace with genuine NISSAN fuel filler cap.

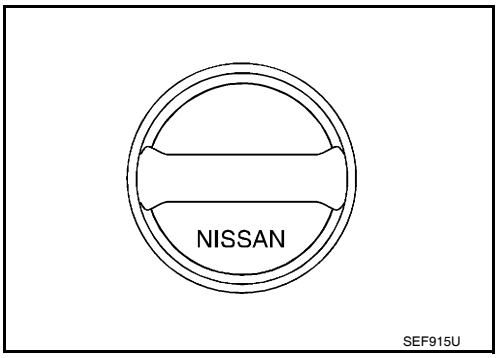

2. CHECK FUEL FILLER CAP INSTALLATION

Check that the cap is tightened properly by rotating the cap clockwise.

Is the inspection result normal?

YES >> GO TO 3.
NO >> Open fuel filler cap, then clean cap and fuel filler neck threads using air blower. Retighten until ratcheting sound is heard.

3. CHECK FUEL FILLER CAP FUNCTION

Check for air releasing sound while opening the fuel filler cap.

Is the inspection result normal?

YES >> GO TO 5.
NO >> GO TO 4.

4. CHECK FUEL TANK VACUUM RELIEF VALVE

Refer to EC-1350, "Component Inspection".

Is the inspection result normal?

YES >> GO TO 5.
NO >> Replace fuel filler cap with a genuine one.

5. CHECK EVAP PURGE LINE

Check EVAP purge line (pipe, rubber tube, fuel tank and EVAP canister) for cracks, improper connection or disconnection.
Refer to EC-1116, "System Diagram".

Is the inspection result normal?

YES >> GO TO 6.
NO >> Repair or reconnect the hose.

6. CLEAN EVAP PURGE LINE

Clean EVAP purge line (pipe and rubber tube) using air blower.

>> GO TO 7.

7. CHECK EVAP CANISTER VENT CONTROL VALVE

Check the following.
- EVAP canister vent control valve is installed properly.
  Refer to EC-1583, "Removal and Installation".
- EVAP canister vent control valve.
  Refer to EC-1326, "Component Inspection".

Is the inspection result normal?

YES >> GO TO 8.
NO >> Repair or replace EVAP canister vent control valve and O-ring.

8. CHECK FOR EVAP LEAKAGE

Refer to EC-1581, "Inspection".

Is there any leakage in EVAP line?

YES >> Repair or replace.
NO-1 >> With CONSULT-III: GO TO 9.
NO-2 >> Without CONSULT-III: GO TO 10.

9. CHECK EVAP CANISTER PURGE VOLUME CONTROL SOLENOID VALVE OPERATION

With CONSULT-III

1. Disconnect vacuum hose from EVAP canister purge volume control solenoid valve at EVAP service port.
2. Start engine.
3. Perform “PURG VOL C/V” in “ACTIVE TEST” mode.
4. Touch “Qu” on CONSULT-III screen to increase “PURG VOL C/V” opening to 100%.
5. Check vacuum hose for vacuum.

Vacuum should exist.

Is the inspection result normal?

YES >> GO TO 12.
NO >> GO TO 11.

10. CHECK EVAP CANISTER PURGE VOLUME CONTROL SOLENOID VALVE OPERATION

Without CONSULT-III

1. Start engine and warm it up to normal operating temperature.
2. Stop engine.
3. Disconnect vacuum hose from EVAP canister purge volume control solenoid valve at EVAP service port.
4. Start engine and let it idle for at least 80 seconds.
5. Check vacuum hose for vacuum when revving engine up to 2,000 rpm.

Vacuum should exist.

Is the inspection result normal?

YES >> GO TO 13.
NO >> GO TO 11.

11. CHECK VACUUM HOSE

Check vacuum hoses for clogging or disconnection. Refer to EC-1116, "System Diagram".

Is the inspection result normal?

YES-1 >> With CONSULT-III: GO TO 12.
YES-2 >> Without CONSULT-III: GO TO 13.
NO >> Repair or reconnect the hose.

12. CHECK EVAP CANISTER PURGE VOLUME CONTROL SOLENOID VALVE

With CONSULT-III

1. Start engine.
2. Perform “PURG VOL C/V” in “ACTIVE TEST” mode with CONSULT-III. Check that engine speed varies according to the valve opening.

Does engine speed vary according to the valve opening?

YES >> GO TO 14.
NO >> GO TO 13.

13. CHECK EVAP CANISTER PURGE VOLUME CONTROL SOLENOID VALVE

Refer to EC-1319, "Component Inspection".

Is the inspection result normal?

YES >> GO TO 14.
NO >> Replace EVAP canister purge volume control solenoid valve.

14. CHECK FUEL TANK TEMPERATURE SENSOR

Refer to EC-1276, "Component Inspection".

Is the inspection result normal?

YES >> GO TO 15.
NO >> Replace fuel level sensor unit.

15. CHECK EVAP CONTROL SYSTEM PRESSURE SENSOR

Refer to EC-1334, "Component Inspection".

Is the inspection result normal?

YES >> GO TO 16.
NO >> Replace EVAP control system pressure sensor.

16. CHECK EVAP/ORVR LINE

Check EVAP/ORVR line between EVAP canister and fuel tank for clogging, kinks, looseness and improper connection. For location, refer to EC-1497, "Description".

Is the inspection result normal?

YES >> GO TO 17.
NO >> Repair or replace hoses and tubes.

17. CHECK RECIRCULATION LINE

Check recirculation line between fuel filler tube and fuel tank for clogging, kinks, cracks, looseness and improper connection.

Is the inspection result normal?

YES >> GO TO 18.
NO >> Repair or replace hose, tube or fuel filler tube.

18. CHECK REFUELING EVAP VAPOR CUT VALVE

Refer to EC-1500, "Component Inspection".

Is the inspection result normal?

YES >> GO TO 19.
NO >> Replace refueling EVAP vapor cut valve with fuel tank.

19. CHECK INTERMITTENT INCIDENT

Refer to GI-42, "Intermittent Incident".

>> INSPECTION END

Component Inspection

INFOID:0000000004362187

1. CHECK FUEL FILLER CAP

1. Turn ignition switch OFF.
2. Remove fuel filler cap.
3. Wipe clean valve housing.

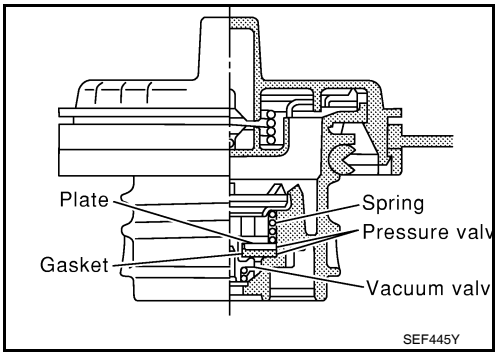

4. Install fuel filler cap adapter (commercial service tool) to fuel filler cap.

5. Check valve opening pressure and vacuum.

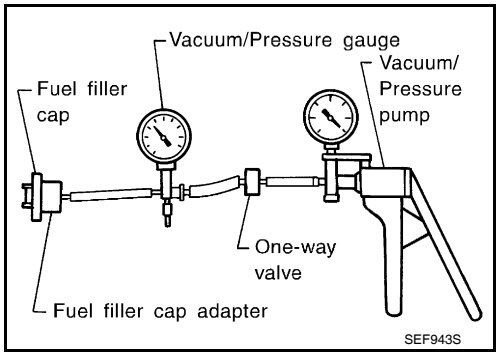

Pressure: **15.3 - 20.0 kPa (0.156 - 0.204 kg/cm^2, 2.22 - 2.90 psi)**

Vacuum: **–6.0 to –3.3 kPa (–0.061 to –0.034 kg/cm^2, –0.87 to –0.48 psi)**

Is the inspection result normal?

YES >> INSPECTION END
NO >> GO TO 2.

2. REPLACE FUEL FILLER CAP

Replace fuel filler cap.

CAUTION:
Use only a genuine fuel filler cap as a replacement. If an incorrect fuel filler cap is used, the MIL may illuminate.

>> INSPECTION END

P0456 EVAP CONTROL SYSTEM

DTC Logic

INFOID:0000000004362188

DTC DETECTION LOGIC

NOTE:

If DTC P0456 is displayed with DTC P0442, first perform the trouble diagnosis for DTC P0456.

This diagnosis detects very small leakage in the EVAP line between fuel tank and EVAP canister purge volume control solenoid valve, using the negative pressure.

If ECM judges a leakage which corresponds to a very small leakage, the very small leakage P0456 will be detected.

If ECM judges a leakage equivalent to a small leakage, EVAP small leakage P0442 will be detected.

If ECM judges that there are no leakage, the diagnosis will be OK.

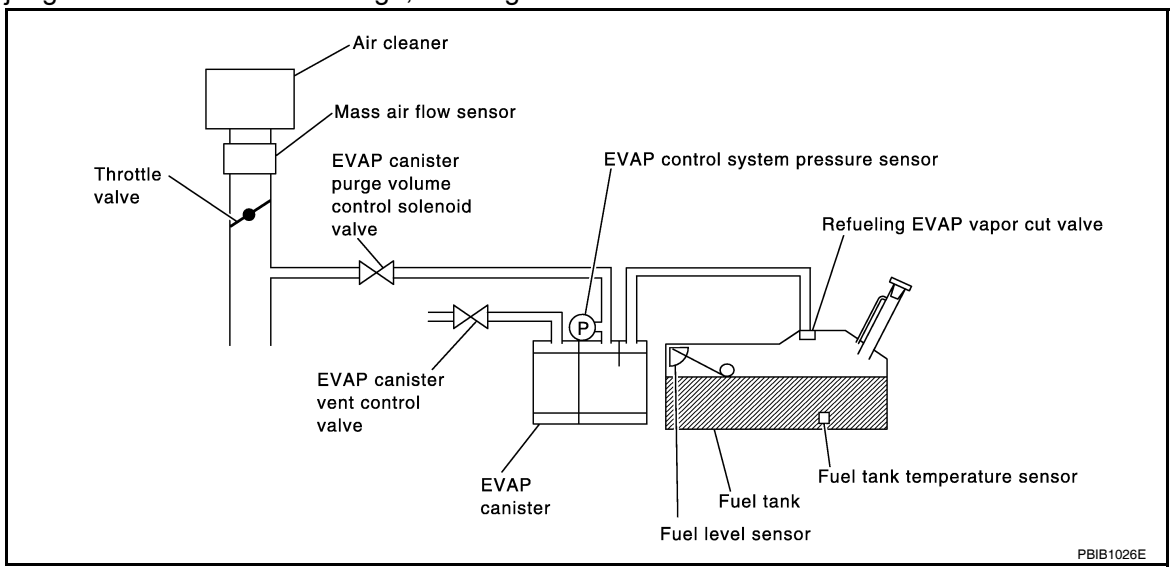

DTC No.	Trouble diagnosis name	DTC detecting condition	Possible cause
P0456	Evaporative emission control system very small leakage (negative pressure check)	• EVAP system has a very small leakage. • EVAP system does not operate properly.	• Incorrect fuel tank vacuum relief valve • Incorrect fuel filler cap used • Fuel filler cap remains open or fails to close. • Foreign matter caught in fuel filler cap. • Leakage is in line between intake manifold and EVAP canister purge volume control solenoid valve. • Foreign matter caught in EVAP canister vent control valve. • EVAP canister or fuel tank leakage • EVAP purge line (pipe and rubber tube) leakage • EVAP purge line rubber tube bent • Loose or disconnected rubber tube • EVAP canister vent control valve and the circuit • EVAP canister purge volume control solenoid valve and the circuit • Fuel tank temperature sensor • O-ring of EVAP canister vent control valve is missing or damaged • EVAP canister is saturated with water • EVAP control system pressure sensor • Refueling EVAP vapor cut valve • ORVR system leakage • Fuel level sensor and the circuit • Foreign matter caught in EVAP canister purge volume control solenoid valve

CAUTION:

- **Use only a genuine NISSAN fuel filler cap as a replacement. If an incorrect fuel filler cap is used, the MIL may illuminate.**
- **If the fuel filler cap is not tightened properly, the MIL may illuminate.**
- **Use only a genuine NISSAN rubber tube as a replacement.**

DTC CONFIRMATION PROCEDURE

1. PRECONDITIONING

If DTC Confirmation Procedure has been previously conducted, always perform the following before conducting the next test.

1. Turn ignition switch OFF and wait at least 10 seconds.
2. Turn ignition switch ON.
3. Turn ignition switch OFF and wait at least 10 seconds.

Will CONSULT-III be used?

YES >> GO TO 2.
NO >> GO TO 4.

2. PRECONDITIONING

If DTC CONFIRMATION PROCEDURE has been previously conducted, always turn ignition switch OFF and wait at least 10 seconds before conducting the next test.

NOTE:
- **After repair, make sure that the hoses and clips are installed properly.**
- **Check that EVAP hoses are connected to EVAP canister purge volume control solenoid valve properly.**

TESTING CONDITION:
- **Open engine hood before conducting the following procedure.**
- **If any of following conditions are met just before the DTC CONFIRMATION PROCEDURE, leave the vehicle for more than 1 hour.**
  - **Fuel filler cap is removed.**
  - **Fuel is refilled or drained.**
  - **EVAP component part/parts is/are removed.**
- **Before performing the following procedure, confirm that battery voltage is more than 11 V at idle.**

>> GO TO 3.

3. PERFORM DTC CONFIRMATION PROCEDURE

With CONSULT-III

1. Turn ignition switch ON and select “DATA MONITOR” mode with CONSULT-III.
2. Make sure the following conditions are met.
   FUEL LEVEL SE: 0.25 - 1.4 V
   COOLAN TEMP/S: 0 - 32°C (32 - 90°F)
   FUEL T/TMP SE: 0 - 35°C (32 - 95°F)
   INT A/TEMP SE: More than 0°C (32°F)
   If NG, turn ignition switch OFF and leave the vehicle in a cool place (soak the vehicle), or refill/drain fuel until the output voltage of the “FUEL LEVEL SE” meets within the range above and leave the vehicle for more than 1 hour. Then start from step 1.
3. Turn ignition switch OFF and wait at least 10 seconds.
4. Turn ignition switch ON.
5. Select “EVP V/S LEAKAGE P0456/P1456” of “EVAPORATIVE SYSTEM” in “DTC WORK SUPPORT” mode with CONSULT-III.
   Follow the instructions displayed.
   NOTE:
   If the engine speed cannot be maintained within the range displayed on CONSULT-III screen, go to EC-1048, "BASIC INSPECTION : Special Repair Requirement".

Which is displayed on CONSULT-III?

OK >> INSPECTION END
NG >> Go to EC-1354, "Diagnosis Procedure".

4. PERFORM COMPONENT FUNCTION CHECK

Perform Component Function Check. Refer to EC-1354, "Component Function Check".

NOTE:
Use Component Function Check to check the overall function of the EVAP very small leakage function. During this check, a 1st trip DTC might not be confirmed.

Is the inspection result normal?

YES >> INSPECTION END
NO >> Go to EC-1354, "Diagnosis Procedure".

Component Function Check

INFOID:0000000004362189

1. PERFORM COMPONENT FUNCTION CHECK

With GST

CAUTION:
- **Never use compressed air, doing so may damage the EVAP system.**
- **Never start engine.**
- **Never exceeded 4.12 kPa (0.042 kg/cm^2, 0.6 psi).**

1. Attach the EVAP service port adapter (commercial service tool) securely to the EVAP service port.
2. Set the pressure pump and a hose.
3. Also set a vacuum gauge via the 3-way connector and a hose.
4. Turn ignition switch ON.
5. Connect GST and select Service $08.
6. Using Service $08 control the EVAP canister vent control valve (close).
7. Apply pressure and make sure the following conditions are satisfied.

   Pressure to be applied: 2.7 kPa (0.028 kg/cm^2, 0.39 psi)
   Time to be waited after the pressure drawn in to the EVAP system and the pressure to be dropped: 60 seconds and the pressure should not be dropped more than 0.4 kPa (0.004 kg/cm^2, 0.06 psi).

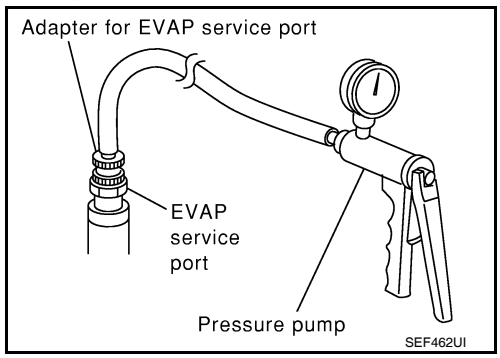

Is the inspection result normal?

YES >> GO TO 2.
NO >> Go to EC-1354, "Diagnosis Procedure".

2. RELEASE PRESSURE

1. Disconnect GST.
2. Start engine and warm it up to normal operating temperature.
3. Turn ignition switch OFF and wait at least 10 seconds.
4. Restart engine and let it idle for 90 seconds.
5. Keep engine speed at 2,000 rpm for 30 seconds.
6. Turn ignition switch OFF.

   NOTE:
   For more information, refer to GST Instruction Manual.

>> INSPECTION END

Diagnosis Procedure

INFOID:0000000004362190

1. CHECK FUEL FILLER CAP DESIGN

1. Turn ignition switch OFF.

2. Check for genuine NISSAN fuel filler cap design.

Is the inspection result normal?

YES >> GO TO 2.
NO >> Replace with genuine NISSAN fuel filler cap.

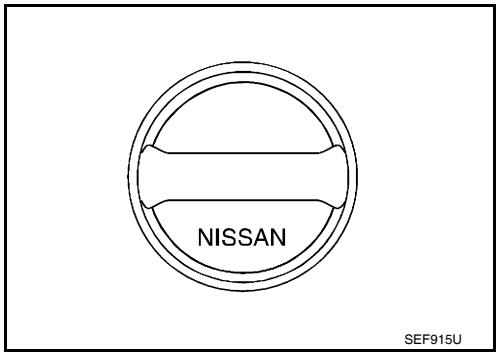

2. CHECK FUEL FILLER CAP INSTALLATION

Check that the cap is tightened properly by rotating the cap clockwise.

Is the inspection result normal?

YES >> GO TO 3.
NO >> Open fuel filler cap, then clean cap and fuel filler neck threads using air blower. Retighten until ratcheting sound is heard.

3. CHECK FUEL FILLER CAP FUNCTION

Check for air releasing sound while opening the fuel filler cap.

Is the inspection result normal?

YES >> GO TO 5.
NO >> GO TO 4.

4. CHECK FUEL TANK VACUUM RELIEF VALVE

Refer to EC-1358, "Component Inspection".

Is the inspection result normal?

YES >> GO TO 5.
NO >> Replace fuel filler cap with a genuine one.

5. CHECK FOR EVAP LEAKAGE

Refer to EC-1581, "Inspection".

Is there any leakage in EVAP line?

YES >> Repair or replace malfunctioning part.
NO >> GO TO 6.

6. CHECK EVAP CANISTER VENT CONTROL VALVE

Check the following.

- EVAP canister vent control valve is installed properly.
  Refer to EC-1583, "Removal and Installation".
- EVAP canister vent control valve.
  Refer to EC-1326, "Component Inspection".

Is the inspection result normal?

YES >> GO TO 7.
NO >> Repair or replace EVAP canister vent control valve and O-ring.

7. CHECK IF EVAP CANISTER IS SATURATED WITH WATER

Remove EVAP canister with EVAP canister vent control valve and EVAP control system pressure sensor attached.

Does water drain from the EVAP canister?

YES >> GO TO 8.
NO-1 >> With CONSULT-III: GO TO 10.
NO-2 >> Without CONSULT-III: GO TO 11.

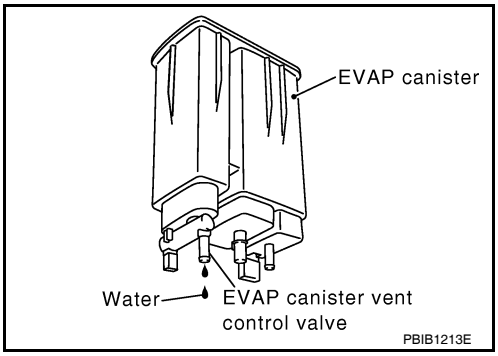

8. CHECK EVAP CANISTER

Weigh the EVAP canister with the EVAP canister vent control valve and EVAP control system pressure sensor attached.

The weight should be less than 2.1 kg (4.6 lb).

Is the inspection result normal?

YES-1 >> With CONSULT-III: GO TO 10.
YES-2 >> Without CONSULT-III: GO TO 11.
NO >> GO TO 9.

9. DETECT MALFUNCTIONING PART

Check the following.
- EVAP canister for damage
- EVAP hose between EVAP canister and vehicle frame for clogging or poor connection

>> Repair hose or replace EVAP canister.

10. CHECK EVAP CANISTER PURGE VOLUME CONTROL SOLENOID VALVE OPERATION

With CONSULT-III

1. Disconnect vacuum hose connected to EVAP service port and EVAP canister purge volume control solenoid valve from EVAP service port.
2. Start engine.
3. Perform “PURG VOL C/V” in “ACTIVE TEST” mode.
4. Touch “Qu” on CONSULT-III screen to increase “PURG VOL C/V” opening to 100%.
5. Check vacuum hose for vacuum.

Vacuum should exist.

Is the inspection result normal?

YES >> GO TO 13.
NO >> GO TO 12.

11. CHECK EVAP CANISTER PURGE VOLUME CONTROL SOLENOID VALVE OPERATION

Without CONSULT-III

1. Start engine and warm it up to normal operating temperature.
2. Stop engine.
3. Disconnect vacuum hose connected to EVAP service port and EVAP canister purge volume control solenoid valve from EVAP service port.
4. Start engine and let it idle for at least 80 seconds.
5. Check vacuum hose for vacuum when revving engine up to 2,000 rpm.

Vacuum should exist.

Is the inspection result normal?

YES >> GO TO 14.
NO >> GO TO 12.

12. CHECK VACUUM HOSE

Check vacuum hoses for clogging or disconnection. Refer to EC-1116, "System Diagram".

Is the inspection result normal?

YES >> GO TO 13.
NO >> Repair or reconnect the hose.

13. CHECK EVAP CANISTER PURGE VOLUME CONTROL SOLENOID VALVE

Refer to EC-1319, "Component Inspection".

Is the inspection result normal?

YES >> GO TO 14.
NO >> Replace EVAP canister purge volume control solenoid valve.

14. CHECK FUEL TANK TEMPERATURE SENSOR

Refer to EC-1276, "Component Inspection".

Is the inspection result normal?

YES >> GO TO 15.
NO >> Replace fuel level sensor unit.

15. CHECK EVAP CONTROL SYSTEM PRESSURE SENSOR

Refer to EC-1334, "Component Inspection".

Is the inspection result normal?

YES >> GO TO 16.
NO >> Replace EVAP control system pressure sensor.

16. CHECK EVAP PURGE LINE

Check EVAP purge line (pipe, rubber tube, fuel tank and EVAP canister) for cracks or improper connection. Refer to EC-1116, "System Diagram".

Is the inspection result normal?

YES >> GO TO 17.
NO >> Repair or reconnect the hose.

17. CLEAN EVAP PURGE LINE

Clean EVAP purge line (pipe and rubber tube) using air blower.

>> GO TO 18.

18. CHECK EVAP/ORVR LINE

Check EVAP/ORVR line between EVAP canister and fuel tank for clogging, kinks, looseness and improper connection. For location, refer to EC-1497, "Description".

Is the inspection result normal?

YES >> GO TO 19.
NO >> Repair or replace hoses and tubes.

19. CHECK RECIRCULATION LINE

Check recirculation line between fuel filler tube and fuel tank for clogging, kinks, cracks, looseness and improper connection.

Is the inspection result normal?

YES >> GO TO 20.
NO >> Repair or replace hose, tube or fuel filler tube.

20. CHECK REFUELING EVAP VAPOR CUT VALVE

Refer to EC-1500, "Component Inspection".

Is the inspection result normal?

YES >> GO TO 21.
NO >> Replace refueling EVAP vapor cut valve with fuel tank.

21. CHECK FUEL LEVEL SENSOR

Refer to MWI-47, "Component Inspection".

Is the inspection result normal?

YES >> GO TO 22.
NO >> Replace fuel level sensor unit.

22. CHECK INTERMITTENT INCIDENT

Refer to GI-42, "Intermittent Incident".

>> INSPECTION END

Component Inspection

INFOID:0000000004362191

1. CHECK FUEL FILLER CAP

1. Turn ignition switch OFF.
2. Remove fuel filler cap.
3. Wipe clean valve housing.

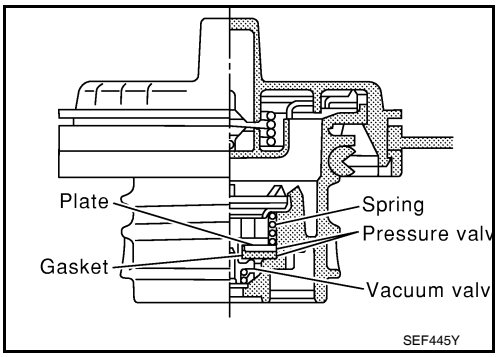

4. Install fuel filler cap adapter (commercial service tool) to fuel filler cap.
5. Check valve opening pressure and vacuum.

Pressure: **15.3 - 20.0 kPa (0.156 - 0.204 kg/cm^2, 2.22 - 2.90 psi)**

Vacuum: **−6.0 to −3.3 kPa (−0.061 to −0.034 kg/cm^2, −0.87 to −0.48 psi)**

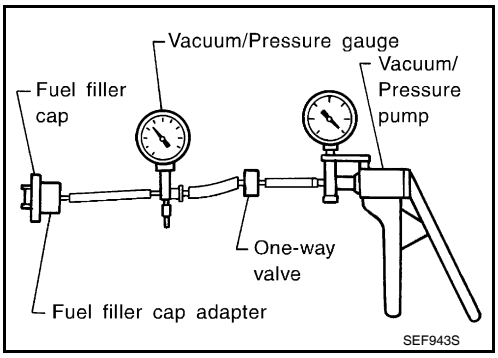

Is the inspection result normal?

YES >> INSPECTION END
NO >> GO TO 2.

2. REPLACE FUEL FILLER CAP

Replace fuel filler cap.

CAUTION:

Use only a genuine fuel filler cap as a replacement. If an incorrect fuel filler cap is used, the MIL may illuminate.

>> INSPECTION END

P0460 FUEL LEVEL SENSOR

Description

INFOID:0000000004362192

The fuel level sensor is mounted in the fuel level sensor unit.
The sensor detects a fuel level in the fuel tank and transmits a signal to the combination meter. The combination meter sends the fuel level sensor signal to the ECM via the CAN communication line.
It consists of two parts, one is mechanical float and the other is variable resistor. Fuel level sensor output voltage changes depending on the movement of the fuel mechanical float.

DTC Logic

INFOID:0000000004362193

DTC DETECTION LOGIC

NOTE:
- **If DTC P0460 is displayed with DTC UXXXX, first perform the trouble diagnosis for DTC UXXXX. Refer to EC-1179, "DTC Logic".**
- **If DTC P0460 is displayed with DTC P0607, first perform the trouble diagnosis for DTC P0607. Refer to EC-1378, "DTC Logic".**

When the vehicle is parked, the fuel level in the fuel tank is naturally stable. It means that output signal of the fuel level sensor does not change. If ECM senses sloshing signal from the sensor, fuel level sensor malfunction is detected.

DTC No.	Trouble diagnosis name	DTC detecting condition	Possible cause
P0460	Fuel level sensor circuit noise	Even though the vehicle is parked, a signal being varied is sent from the fuel level sensor to ECM.	• Harness or connectors (The CAN communication line is open or shorted.) • Harness or connectors (The sensor circuit is open or shorted.) • Combination meter • Fuel level sensor

DTC CONFIRMATION PROCEDURE

1. PRECONDITIONING

If DTC Confirmation Procedure has been previously conducted, always perform the following before conducting the next test.
1. Turn ignition switch OFF and wait at least 10 seconds.
2. Turn ignition switch ON.
3. Turn ignition switch OFF and wait at least 10 seconds.

>> GO TO 2.

2. PERFORM DTC CONFIRMATION PROCEDURE

1. Start engine and wait maximum of 2 consecutive minutes.
2. Check 1st trip DTC.

Is 1st trip DTC detected?

YES >> Go to EC-1359, "Diagnosis Procedure".
NO >> INSPECTION END

Diagnosis Procedure

INFOID:0000000004362194

1. CHECK COMBINATION METER FUNCTION

Refer to MWI-38, "CONSULT-III Function (METER/M&A)".

Is the inspection result normal?

YES >> GO TO 2.
NO >> Go to MWI-46, "Diagnosis Procedure".

2. CHECK INTERMITTENT INCIDENT

Refer to GI-42, "Intermittent Incident".

>> INSPECTION END

P0461 FUEL LEVEL SENSOR

Description

INFOID:0000000004362195

The fuel level sensor is mounted in the fuel level sensor unit.
The sensor detects a fuel level in the fuel tank and transmits a signal to the combination meter. The combination meter sends the fuel level sensor signal to the ECM via the CAN communication line.
It consists of two parts, one is mechanical float and the other is variable resistor. Fuel level sensor output voltage changes depending on the movement of the fuel mechanical float.

DTC Logic

INFOID:0000000004362196

DTC DETECTION LOGIC

NOTE:
- **If DTC P0461 is displayed with DTC UXXXX, first perform the trouble diagnosis for DTC UXXXX. Refer to EC-1179, "DTC Logic".**
- **If DTC P0461 is displayed with DTC P0607, first perform the trouble diagnosis for DTC P0607. Refer to EC-1378, "DTC Logic".**

Driving long distances naturally affect fuel gauge level.
This diagnosis detects the fuel gauge malfunction of the gauge not moving even after a long distance has been driven.

DTC No.	Trouble diagnosis name	DTC detecting condition	Possible cause
P0461	Fuel level sensor circuit range/performance	The output signal of the fuel level sensor does not change within the specified range even though the vehicle has been driven a long distance.	• Harness or connectors (The CAN communication line is open or shorted.) • Harness or connectors (The sensor circuit is open or shorted.) • Combination meter • Fuel level sensor

DTC CONFIRMATION PROCEDURE

1. PERFORM COMPONENT FUNCTION CHECK

Perform component function check. Refer to EC-1361, "Component Function Check".
Use component function check to check the overall function of the fuel level sensor. During this check, a 1st trip DTC might not be confirmed.

Is the inspection result normal?

YES >> INSPECTION END
NO >> Go to EC-1362, "Diagnosis Procedure".

Component Function Check

INFOID:0000000004362197

1. PRECONDITIONING

WARNING:
When performing the following procedure, always observe the handling of the fuel. Refer to FL-10, "Removal and Installation".
TESTING CONDITION:
Before starting component function check, preparation of draining fuel and refilling fuel is required.

Will CONSULT-III be used?

YES >> GO TO 2.
NO >> GO TO 3.

2. PERFORM COMPONENT FUNCTION CHECK

With CONSULT-III
NOTE:
Start from step 10, if it is possible to confirm that the fuel cannot be drained by 30 ℓ (7-7/8 US gal, 6-5/8 Imp gal) in advance.

1. Prepare a fuel container and a spare hose.
2. Release fuel pressure from fuel line, refer to EC-1581, "Inspection".
3. Remove the fuel feed hose on the fuel level sensor unit.
4. Connect a spare fuel hose where the fuel feed hose was removed.
5. Turn ignition switch OFF and wait at least 10 seconds then turn ON.
6. Select “FUEL LEVEL SE” in “DATA MONITOR” mode with CONSULT-III.
7. Check “FUEL LEVEL SE” output voltage and note it.
8. Select “FUEL PUMP RELAY” in “ACTIVE TEST” mode with CONSULT-III.
9. Touch “ON” and drain fuel approximately 30 ℓ (7-7/8 US gal, 6-5/8 Imp gal) and stop it.
10. Check “FUEL LEVEL SE” output voltage and note it.
11. Fill fuel into the fuel tank for 30 ℓ (7-7/8 US gal, 6-5/8 Imp gal).
12. Check “FUEL LEVEL SE” output voltage and note it.
13. Confirm whether the voltage changes more than 0.03 V during step 7 to 10 and 10 to 12.

Is the inspection result normal?

YES >> INSPECTION END
NO >> Go to EC-1362, "Diagnosis Procedure".

3.PERFORM COMPONENT FUNCTION CHECK

Without CONSULT-III
NOTE:
Start from step 8, if it is possible to confirm that the fuel cannot be drained by 30 ℓ (7-7/8 US gal, 6-5/8 Imp gal) in advance.

1. Prepare a fuel container and a spare hose.
2. Release fuel pressure from fuel line. Refer to EC-1581, "Inspection".
3. Remove the fuel feed hose on the fuel level sensor unit.
4. Connect a spare fuel hose where the fuel feed hose was removed.
5. Turn ignition switch ON.
6. Drain fuel by 30 ℓ (7-7/8 US gal, 6-5/8 Imp gal) from the fuel tank using proper equipment.
7. Confirm that the fuel gauge indication varies.
8. Fill fuel into the fuel tank for 30 ℓ (7-7/8 US gal, 6-5/8 Imp gal).
9. Confirm that the fuel gauge indication varies.

Is the inspection result normal?

YES >> INSPECTION END
NO >> Go to EC-1362, "Diagnosis Procedure".

Diagnosis Procedure

INFOID:0000000004362198

1.CHECK COMBINATION METER FUNCTION

Refer to MWI-38, "CONSULT-III Function (METER/M&A)".

Is the inspection result normal?

YES >> GO TO 2.
NO >> Go to MWI-46, "Diagnosis Procedure".

2.CHECK INTERMITTENT INCIDENT

Refer to GI-42, "Intermittent Incident".

>> INSPECTION END

P0462, P0463 FUEL LEVEL SENSOR

Description

INFOID:0000000004362199

The fuel level sensor is mounted in the fuel level sensor unit.
The sensor detects a fuel level in the fuel tank and transmits a signal to the combination meter. The combination meter sends the fuel level sensor signal to the ECM via the CAN communication line.
It consists of two parts, one is mechanical float and the other is variable resistor. Fuel level sensor output voltage changes depending on the movement of the fuel mechanical float.

DTC Logic

INFOID:0000000004362200

DTC DETECTION LOGIC

NOTE:
- **If DTC P0462 or P0463 is displayed with DTC UXXXX, first perform the trouble diagnosis for DTC UXXXX.Refer to EC-1179, "DTC Logic".**
- **If DTC P0462 or P0463 is displayed with DTC P0607, first perform the trouble diagnosis for DTC P0607.Refer to EC-1378, "DTC Logic".**

This diagnosis indicates the former, to detect open or short circuit malfunction.

DTC No.	Trouble diagnosis name	DTC detecting condition	Possible cause
P0462	Fuel level sensor circuit low input	An excessively low voltage from the sensor is sent to ECM.	• Harness or connectors (The CAN communication line is open or shorted.) • Harness or connectors (The sensor circuit is open or shorted.) • Combination meter • Fuel level sensor
P0463	Fuel level sensor circuit high input	An excessively high voltage from the sensor is sent to ECM.	

DTC CONFIRMATION PROCEDURE

1.PRECONDITIONING

If DTC Confirmation Procedure has been previously conducted, always perform the following before conducting the next test.
1. Turn ignition switch OFF and wait at least 10 seconds.
2. Turn ignition switch ON.
3. Turn ignition switch OFF and wait at least 10 seconds.

TESTING CONDITION:
Before performing the following procedure, confirm that battery voltage is more than 11 V at ignition switch ON.

>> GO TO 2.

2.PERFORM DTC CONFIRMATION PROCEDURE

1. Turn ignition switch ON and wait at least 5 seconds.
2. Check 1st trip DTC.

Is 1st trip DTC detected?

YES >> Go to EC-1363, "Diagnosis Procedure".
NO >> INSPECTION END

Diagnosis Procedure

INFOID:0000000004362201

1.CHECK COMBINATION METER FUNCTION

Refer to MWI-38, "CONSULT-III Function (METER/M&A)".

Is the inspection result normal?

YES >> GO TO 2.
NO >> Go to MWI-46, "Diagnosis Procedure".

2.CHECK INTERMITTENT INCIDENT

Refer to GI-42, "Intermittent Incident".

>> INSPECTION END

P0500 VSS

Description

INFOID:0000000004362202

The vehicle speed signal is sent to the combination meter from the “ABS actuator and electric unit (control unit)” via the CAN communication line. The combination meter then sends a signal to the ECM via the CAN communication line.

DTC Logic

INFOID:0000000004362203

DTC DETECTION LOGIC

NOTE:
- **If DTC P0500 is displayed with DTC UXXXX, first perform the trouble diagnosis for DTC UXXXX. Refer to EC-1179, "DTC Logic".**
- **If DTC P0500 is displayed with DTC P0607, first perform the trouble diagnosis for DTC P0607. Refer to EC-1378, "DTC Logic".**

DTC No.	Trouble diagnosis name	DTC detecting condition	Possible cause
P0500	Vehicle speed sensor	The vehicle speed signal sent to ECM is almost 0 km/h (0 MPH) even when vehicle is being driven.	• Harness or connectors (The CAN communication line is open or shorted.) • Harness or connectors (The vehicle speed signal circuit is open or shorted.) • Wheel sensor • Combination meter • ABS actuator and electric unit (control unit)

DTC CONFIRMATION PROCEDURE

1. INSPECTION START

Will CONSULT-III be used?

Will CONSULT-III be used?

YES >> GO TO 2.
NO >> GO TO 5.

2. PRECONDITIONING

If DTC Confirmation Procedure has been previously conducted, always perform the following before conducting the next test.

1. Turn ignition switch OFF and wait at least 10 seconds.
2. Turn ignition switch ON.
3. Turn ignition switch OFF and wait at least 10 seconds.

>> GO TO 3.

3. CHECK VEHICLE SPEED SIGNAL

NOTE:
This procedure may be conducted with the drive wheels lifted in the shop or by driving the vehicle. If a road test is expected to be easier, it is unnecessary to lift the vehicle.

With CONSULT-III

1. Start engine (ESP switch OFF).
2. Read “VHCL SPEED SE” in “DATA MONITOR” mode with CONSULT-III. The vehicle speed on CONSULT-III should exceed 10 km/h (6 MPH) when rotating wheels with suitable gear position.

Is the inspection result normal?

YES >> GO TO 4.
NO >> Go to EC-1366, "Diagnosis Procedure".

4. PERFORM DTC CONFIRMATION PROCEDURE

1. Select “DATA MONITOR” mode with CONSULT-III.
2. Warm engine up to normal operating temperature.
3. Maintain the following conditions for at least 50 consecutive seconds.

CAUTION:
Always drive vehicle at a safe speed.

ENG SPEED	1,600 - 6,000 rpm
COOLAN TEMP/S	More than 70°C (158°F)
B/FUEL SCHDL	5.5 - 31.8 msec
Selector lever	Except P or N position (CVT) Except Neutral position (M/T)
PW/ST SIGNAL	OFF

4. Check 1st trip DTC.

Is 1st trip DTC detected?

YES >> Go to EC-1366, "Diagnosis Procedure".
NO >> INSPECTION END

5. PERFORM COMPONENT FUNCTION CHECK

Perform Component Function Check. Refer to EC-1366, "Component Function Check".
Use component function check to check the overall function of the vehicle speed signal circuit. During this check, a 1st trip DTC might not be confirmed.

Is the inspection result normal?

YES >> INSPECTION END
NO >> Go to EC-1366, "Diagnosis Procedure".

Component Function Check

INFOID:0000000004362204

1. PERFORM COMPONENT FUNCTION CHECK

With GST

1. Lift up drive wheels.
2. Start engine.
3. Read vehicle speed signal in Service $01 with GST.
   The vehicle speed signal on GST should be able to exceed 10 km/h (6 MPH) when rotating wheels with suitable gear position.

Is the inspection result normal?

YES >> INSPECTION END
NO >> Go to EC-1366, "Diagnosis Procedure".

Diagnosis Procedure

INFOID:0000000004362205

1. CHECK DTC WITH “ABS ACTUATOR AND ELECTRIC UNIT (CONTROL UNIT)”

Refer to BRC-12, "CONSULT-III Function (ABS)".

Is the inspection result normal?

YES >> GO TO 2.
NO >> Repair or replace malfunctioning part.

2. CHECK COMBINATION METER FUNCTION

Refer to MWI-38, "CONSULT-III Function (METER/M&A)".

>> INSPECTION END

P0506 ISC SYSTEM

Description

INFOID:0000000004362206

The ECM controls the engine idle speed to a specified level via the fine adjustment of the air, which is let into the intake manifold, by operating the electric throttle control actuator. The operating of the throttle valve is varied to allow for optimum control of the engine idling speed. The crankshaft position sensor (POS) detects the actual engine speed and sends a signal to the ECM.
The ECM controls the electric throttle control actuator so that the engine speed coincides with the target value memorized in the ECM. The target engine speed is the lowest speed at which the engine can operate steadily. The optimum value stored in the ECM is determined by taking into consideration various engine conditions, such as during warming up, deceleration and engine load (air conditioner, power steering and cooling fan operation, etc.).

DTC Logic

INFOID:0000000004362207

DTC DETECTION LOGIC

NOTE:
If DTC P0506 is displayed with other DTC, first perform the trouble diagnosis for the other DTC.

DTC No.	Trouble diagnosis name	DTC detecting condition	Possible cause
P0506	Idle speed control system RPM lower than expected	The idle speed is less than the target idle speed by 100 rpm or more.	• Electric throttle control actuator • Intake air leakage

DTC CONFIRMATION PROCEDURE

1.PRECONDITIONING

If DTC Confirmation Procedure has been previously conducted, always perform the following before conducting the next test.
1. Turn ignition switch OFF and wait at least 10 seconds.
2. Turn ignition switch ON.
3. Turn ignition switch OFF and wait at least 10 seconds.

If the target idle speed is out of the specified value, perform EC-1053, "IDLE AIR VOLUME LEARNING : Special Repair Requirement", before conducting DTC CONFIRMATION PROCEDURE.
TESTING CONDITION:
- **Before performing the following procedure, confirm that battery voltage is more than 11 V at idle.**
- **Always perform the test at a temperature above –10°C(14°F).**

>> GO TO 2.

2.PERFORM DTC CONFIRMATION PROCEDURE

1. Start engine and warm it up to normal operating temperature.
2. Turn ignition switch OFF and wait at least 10 seconds.
3. Turn ignition switch ON.
4. Turn ignition switch OFF and wait at least 10 seconds.
5. Restart engine and run it for at least 1 minute at idle speed.
6. Check 1st trip DTC.

Is 1st trip DTC detected?

YES >> Go to EC-1367, "Diagnosis Procedure".
NO >> INSPECTION END

Diagnosis Procedure

INFOID:0000000004362208

1.CHECK INTAKE AIR LEAKAGE

1. Start engine and let it idle.
2. Listen for an intake air leakage after the mass air flow sensor.

Is intake air leakage detected?

YES >> Discover air leakage location and repair.
NO >> GO TO 2.

2. REPLACE ECM

1. Stop engine.
2. Replace ECM.
3. Go to EC-1051, "ADDITIONAL SERVICE WHEN REPLACING CONTROL UNIT : Special Repair Requirement".

>> INSPECTION END

P0507 ISC SYSTEM

Description

INFOID:0000000004362209

The ECM controls the engine idle speed to a specified level via the fine adjustment of the air, which is let into the intake manifold, by operating the electric throttle control actuator. The operating of the throttle valve is varied to allow for optimum control of the engine idling speed. The crankshaft position sensor (POS) detects the actual engine speed and sends a signal to the ECM.
The ECM controls the electric throttle control actuator so that the engine speed coincides with the target value memorized in the ECM. The target engine speed is the lowest speed at which the engine can operate steadily. The optimum value stored in the ECM is determined by taking into consideration various engine conditions, such as during warming up, deceleration and engine load (air conditioner, power steering and cooling fan operation, etc.).

DTC Logic

INFOID:0000000004362210

DTC DETECTION LOGIC

NOTE:
If DTC P0507 is displayed with other DTC, first perform the trouble diagnosis for the other DTC.

DTC No.	Trouble diagnosis name	DTC detecting condition	Possible cause
P0507	Idle speed control system RPM higher than expected	The idle speed is more than the target idle speed by 200 rpm or more.	• Electric throttle control actuator • Intake air leakage • PCV system

DTC CONFIRMATION PROCEDURE

1.PRECONDITIONING

If DTC Confirmation Procedure has been previously conducted, always perform the following before conducting the next test.
1. Turn ignition switch OFF and wait at least 10 seconds.
2. Turn ignition switch ON.
3. Turn ignition switch OFF and wait at least 10 seconds.

If the target idle speed is out of the specified value, perform EC-1053, "IDLE AIR VOLUME LEARNING : Special Repair Requirement", before conducting DTC Confirmation Procedure.
TESTING CONDITION:
- **Before performing the following procedure, confirm that battery voltage is more than 11 V at idle.**
- **Always perform the test at a temperature approximately –10°C(14°F).**

>> GO TO 2.

2.PERFORM DTC CONFIRMATION PROCEDURE

1. Start engine and warm it up to normal operating temperature.
2. Turn ignition switch OFF and wait at least 10 seconds.
3. Turn ignition switch ON.
4. Turn ignition switch OFF and wait at least 10 seconds.
5. Restart engine and run it for at least 1 minute at idle speed.
6. Check 1st trip DTC.

Is 1st trip DTC detected?

YES >> Go to EC-1369, "Diagnosis Procedure".
NO >> INSPECTION END

Diagnosis Procedure

INFOID:0000000004362211

1.CHECK PCV HOSE CONNECTION

Confirm that PCV hose is connected correctly.

Is the inspection result normal?

YES >> GO TO 2.

NO >> Repair or replace malfunctioning part.

2. CHECK INTAKE AIR LEAKAGE

1. Start engine and let it idle.
2. Listen for an intake air leakage after the mass air flow sensor.

Is intake air leakage detected?

YES >> Discover air leakage location and repair.
NO >> GO TO 3.

3. REPLACE ECM

1. Stop engine.
2. Replace ECM.
3. Go to EC-1051, "ADDITIONAL SERVICE WHEN REPLACING CONTROL UNIT : Special Repair Requirement".

>> INSPECTION END

P0550 PSP SENSOR

Description

INFOID:0000000004362212

Power steering pressure (PSP) sensor is installed to the power steering high-pressure tube and detects a power steering load.
This sensor is a potentiometer which transforms the power steering load into output voltage, and emits the voltage signal to the ECM. The ECM controls the electric throttle control actuator and adjusts the throttle valve opening angle to increase the engine speed and adjusts the idle speed for the increased load.

DTC Logic

INFOID:0000000004362213

DTC DETECTION LOGIC

NOTE:
If DTC P0550 is displayed with DTC P0643, first perform the trouble diagnosis for DTC P0643. Refer to EC-1379, "DTC Logic".

DTC No.	Trouble diagnosis name	DTC detecting condition	Possible cause
P0550	Power steering pressure sensor circuit	An excessively low or high voltage from the sensor is sent to ECM.	• Harness or connectors (The sensor circuit is open or shorted.) • Power steering pressure sensor

DTC CONFIRMATION PROCEDURE

1.PRECONDITIONING

If DTC Confirmation Procedure has been previously conducted, always perform the following before conducting the next test.
1. Turn ignition switch OFF and wait at least 10 seconds.
2. Turn ignition switch ON.
3. Turn ignition switch OFF and wait at least 10 seconds.

>> GO TO 2.

2.PERFORM DTC CONFIRMATION PROCEDURE

1. Start engine and let it idle for at least 5 seconds.
2. Check 1st trip DTC.

Is 1st trip DTC detected?

YES >> Go to EC-1371, "Diagnosis Procedure".
NO >> INSPECTION END

Diagnosis Procedure

INFOID:0000000004362214

1.CHECK GROUND CONNECTION

1. Turn ignition switch OFF.
2. Check ground connection E9. Refer to Ground Inspection in GI-45, "Circuit Inspection".

Is the inspection result normal?

YES >> GO TO 2.
NO >> Repair or replace ground connection.

2.CHECK PSP SENSOR POWER SUPPLY CIRCUIT

1. Disconnect power steering pressure (PSP) sensor harness connector.
2. Turn ignition switch ON.

3. Check the voltage between PSP sensor harness connector and ground.

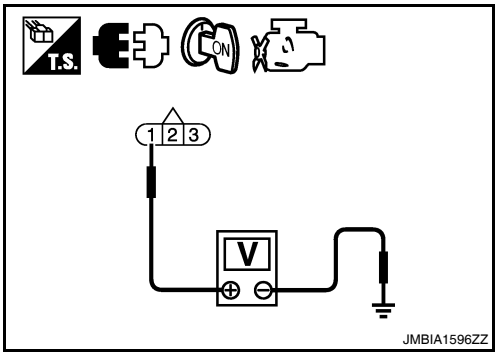

PSP sensor		Ground	Voltage
Connector	Terminal		
F40	1	Ground	Approx. 5 V

Is the inspection result normal?

YES >> GO TO 3.
NO >> Repair open circuit, short to ground or short to power in harness or connectors.

3. CHECK PSP SENSOR GROUND CIRCUIT FOR OPEN AND SHORT

1. Turn ignition switch OFF.
2. Disconnect ECM harness connector.
3. Check the continuity between PSP sensor harness connector and ECM harness connector.

PSP sensor		ECM		Continuity
Connector	Terminal	Connector	Terminal	
F40	3	F13	48	Existed

4. Also check harness for short to ground and short to power.

Is the inspection result normal?

YES >> GO TO 4.
NO >> Repair open circuit, short to ground short to power in harness or connectors.

4. CHECK PSP SENSOR INPUT SIGNAL CIRCUIT FOR OPEN AND SHORT

1. Check the continuity between PSP sensor harness connector and ECM harness connector.

PSP sensor		ECM		Continuity
Connector	Terminal	Connector	Terminal	
F40	2	F13	41	Existed

2. Also check harness for short to ground and short to power.

Is the inspection result normal?

YES >> GO TO 5.
NO >> Repair open circuit, short to ground or short to power in harness or connectors.

5. CHECK PSP SENSOR

Refer to EC-1372, "Component Inspection".

Is the inspection result normal?

YES >> GO TO 6.
NO >> Replace PSP sensor.

6. CHECK INTERMITTENT INCIDENT

Refer to GI-42, "Intermittent Incident".

>> INSPECTION END

Component Inspection

INFOID:0000000004362215

1. CHECK POWER STEERING PRESSURE SENSOR

1. Reconnect all harness connectors disconnected.
2. Start engine and let it idle.

3. Check the voltage between ECM terminals under the following conditions.

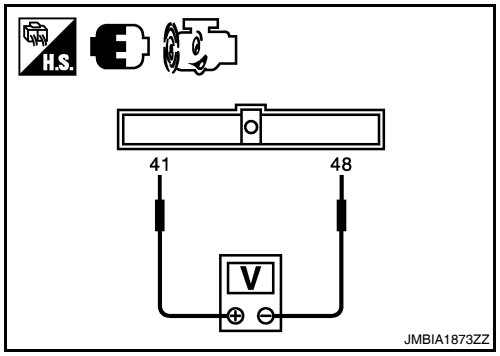

ECM			Condition	Voltage
Connector	+	–		
	Terminal	Terminal		
F13	41 (Power steering pressure sensor signal)	48 (Sensor ground)	Steering wheel: Being turned.	0.5 - 4.5 V
			Steering wheel: Not being turned.	0.4 - 0.8 V

Is the inspection result normal?

YES >> INSPECTION END
NO >> Replace power steering pressure sensor.

P0603 ECM POWER SUPPLY

Description

INFOID:0000000004362216

Battery voltage is supplied to the ECM even when the ignition switch is turned OFF for the ECM memory function of the DTC memory, the air-fuel ratio feedback compensation value memory, the idle air volume learning value memory, etc.

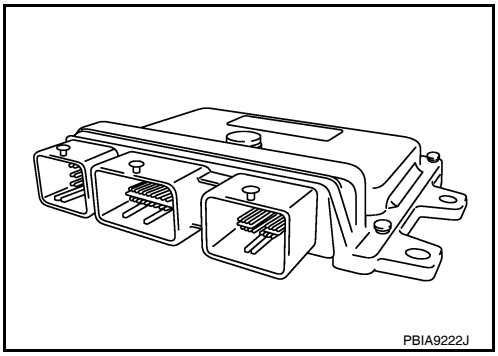

DTC Logic

INFOID:0000000004362217

DTC DETECTION LOGIC

DTC No.	Trouble diagnosis name	DTC detecting condition	Possible cause
P0603	ECM power supply circuit	ECM back up RAM system does not function properly.	• Harness or connectors [ECM power supply (back up) circuit is open or shorted.] • ECM

DTC CONFIRMATION PROCEDURE

1.PRECONDITIONING

If DTC Confirmation Procedure has been previously conducted, always perform the following before conducting the next test.

1. Turn ignition switch OFF and wait at least 10 seconds.
2. Turn ignition switch ON.
3. Turn ignition switch OFF and wait at least 10 seconds.

>> GO TO 2.

2.PERFORM DTC CONFIRMATION PROCEDURE

1. Turn ignition switch ON and wait at least 1 second.
2. Start engine and let it idle for 1 second.
3. Turn ignition switch OFF, wait at least 10 seconds, and then turn it ON.
4. Repeat steps 2 and 3 for 4 times.
5. Check 1st trip DTC.

Is 1st trip DTC detected?

YES >> Go to EC-1374, "Diagnosis Procedure".
NO >> INSPECTION END

Diagnosis Procedure

INFOID:0000000004362218

1.CHECK ECM POWER SUPPLY

1. Turn ignition switch OFF.
2. Disconnect ECM harness connector.

3. Check the voltage between ECM harness connector and ground.

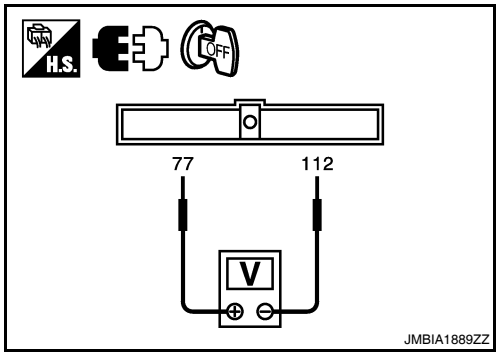

ECM				Voltage
+		–		
Connector	Terminal	Connector	Terminal	
F13	77	E10	112	Battery voltage

Is the inspection result normal?

YES >> GO TO 3.
NO >> GO TO 2.

2. DETECT MALFUNCTIONING PART

Check the following.
- 15 A fuse (No. 42)
- IPDM E/R harness connector F10
- Harness for open or short between ECM and battery

>> Repair or replace harness or connectors.

3. CHECK INTERMITTENT INCIDENT

Refer to GI-42, "Intermittent Incident".

Is the inspection result normal?

YES >> GO TO 4.
NO >> Repair or replace harness or connectors.

4. PERFORM DTC CONFIRMATION PROCEDURE

1. Turn ignition switch ON.
2. Erase DTC.
3. Perform DTC CONFIRMATION PROCEDURE.
   See EC-1374, "DTC Logic".

Is the 1st trip DTC P0603 displayed again?

YES >> GO TO 5.
NO >> INSPECTION END

5. REPLACE ECM

1. Replace ECM.
2. Go to EC-1051, "ADDITIONAL SERVICE WHEN REPLACING CONTROL UNIT : Special Repair Requirement".

>> INSPECTION END

P0605 ECM

Description

INFOID:0000000004362219

The ECM consists of a microcomputer and connectors for signal input and output and for power supply. The ECM controls the engine.

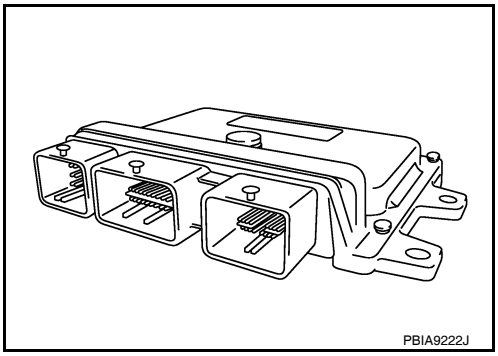

DTC Logic

INFOID:0000000004362220

DTC DETECTION LOGIC

DTC No.	Trouble diagnosis name	DTC detecting condition		Possible cause
P0605	Engine control module	A)	ECM calculation function is malfunctioning.	• ECM
		B)	ECM EEP-ROM system is malfunctioning.	
		C)	ECM self shut-off function is malfunctioning.	

DTC CONFIRMATION PROCEDURE

1.PRECONDITIONING

If DTC Confirmation Procedure has been previously conducted, always perform the following before conducting the next test.

1. Turn ignition switch OFF and wait at least 10 seconds.
2. Turn ignition switch ON.
3. Turn ignition switch OFF and wait at least 10 seconds.

>> GO TO 2.

2.PERFORM DTC CONFIRMATION PROCEDURE FOR MALFUNCTION A

1. Turn ignition switch ON.
2. Check 1st trip DTC.

Is 1st trip DTC detected?

YES >> Go to EC-1377, "Diagnosis Procedure".
NO >> GO TO 3.

3.PERFORM DTC CONFIRMATION PROCEDURE FOR MALFUNCTION B

1. Turn ignition switch ON and wait at least 1 second.
2. Turn ignition switch OFF, wait at least 10 seconds, and then turn it ON.
3. Check 1st trip DTC.

Is 1st trip DTC detected?

YES >> Go to EC-1377, "Diagnosis Procedure".
NO >> GO TO 4.

4.PERFORM DTC CONFIRMATION PROCEDURE FOR MALFUNCTION C

1. Turn ignition switch ON and wait at least 1 second.
2. Turn ignition switch OFF, wait at least 10 seconds, and then turn it ON.
3. Repeat step 2 for 32 times.
4. Check 1st trip DTC.

Is 1st trip DTC detected?

YES >> Go to EC-1377, "Diagnosis Procedure".
NO >> INSPECTION END

Diagnosis Procedure

INFOID:0000000004362221

1. INSPECTION START

1. Turn ignition switch ON.
2. Erase DTC.
3. Perform DTC CONFIRMATION PROCEDURE.
   See EC-1376, "DTC Logic".

Is the 1st trip DTC P0605 displayed again?

YES >> GO TO 2.
NO >> INSPECTION END

2. REPLACE ECM

1. Replace ECM.
2. Go to EC-1051, "ADDITIONAL SERVICE WHEN REPLACING CONTROL UNIT : Special Repair Requirement".

>> INSPECTION END

P0607 ECM

Description

INFOID:0000000004362222

CAN (Controller Area Network) is a serial communication line for real time application. It is an on-vehicle multiplex communication line with high data communication speed and excellent error detection ability. Many electronic control units are equipped onto a vehicle, and each control unit shares information and links with other control units during operation (not independent). In CAN communication, control units are connected with 2 communication lines (CAN H line, CAN L line) allowing a high rate of information transmission with less wiring. Each control unit transmits/receives data but selectively reads required data only.

DTC Logic

INFOID:0000000004362223

DTC DETECTION LOGIC

DTC No.	Trouble diagnosis name	DTC detecting condition	Possible cause
P0607	CAN communication bus	When detecting error during the initial diagnosis of CAN controller of ECM.	• ECM

DTC CONFIRMATION PROCEDURE

1.PERFORM DTC CONFIRMATION PROCEDURE

1. Turn ignition switch ON.
2. Check DTC.

Is DTC detected?

YES >> Go to EC-1378, "Diagnosis Procedure".
NO >> INSPECTION END

Diagnosis Procedure

INFOID:0000000004362224

1.INSPECTION START

1. Turn ignition switch ON.
2. Erase DTC.
3. Perform DTC CONFIRMATION PROCEDURE.
   See EC-1378, "DTC Logic".
4. Check DTC.

Is the DTC P0607 displayed again?

Yes >> GO TO 2.
No >> INSPECTION END

2.REPLACE ECM

1. Replace ECM.
2. Go to EC-1051, "ADDITIONAL SERVICE WHEN REPLACING CONTROL UNIT : Special Repair Requirement".

>> INSPECTION END

P0643 SENSOR POWER SUPPLY

DTC Logic

INFOID:0000000004362225

DTC DETECTION LOGIC

DTC No.	Trouble diagnosis name	DTC detecting condition	Possible cause
P0643	Sensor power supply circuit short	ECM detects that the voltage of power source for sensor is excessively low or high.	• Harness or connectors [Accelerator pedal position (APP) sensor 1 circuit is shorted.] [Throttle position (TP) sensor circuit is shorted.] [Camshaft position (CMP) sensor (PHASE) circuit is shorted.) [Power steering pressure (PSP) sensor circuit is shorted.] (Battery current sensor circuit is shorted.) • APP sensor • TP sensor • CMP sensor (PHASE) • PSP sensor • Battery current sensor

DTC CONFIRMATION PROCEDURE

1.PRECONDITIONING

If DTC Confirmation Procedure has been previously conducted, always perform the following before conducting the next test.

1. Turn ignition switch OFF and wait at least 10 seconds.
2. Turn ignition switch ON.
3. Turn ignition switch OFF and wait at least 10 seconds.

TESTING CONDITION:
Before performing the following procedure, confirm that battery voltage is more than 8 V at idle.

>> GO TO 2.

2.PERFORM DTC CONFIRMATION PROCEDURE

1. Start engine and let it idle for 1 second.
2. Check DTC.

Is DTC detected?

YES >> Go to EC-1379, "Diagnosis Procedure".
NO >> INSPECTION END

Diagnosis Procedure

INFOID:0000000004362226

1.CHECK GROUND CONNECTION

1. Turn ignition switch OFF.
2. Check ground connection E9. Refer to Ground Inspection in GI-45, "Circuit Inspection".

Is the inspection result normal?

YES >> GO TO 2.
NO >> Repair or replace ground connection.

2.CHECK ACCELERATOR PEDAL POSITION SENSOR 1 POWER SUPPLY CIRCUIT

1. Disconnect accelerator pedal position (APP) sensor harness connector.
2. Turn ignition switch ON.

3. Check the voltage between APP sensor harness connector and ground.

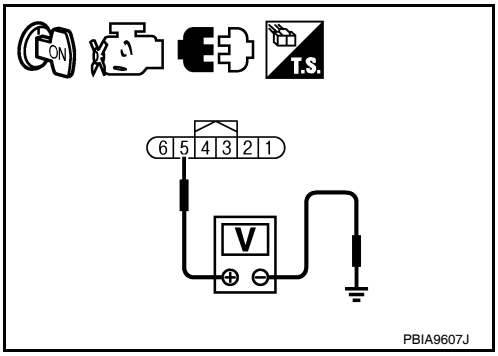

APP sensor		Ground	Voltage (V)
Connector	Terminal		
E40	5	Ground	Approx. 5

Is the inspection result normal?

YES >> GO TO 7.
NO >> GO TO 3.

3. CHECK SENSOR POWER SUPPLY CIRCUIT

Check harness for short to power and short to ground, between the following terminals.

ECM		Sensor		
Connector	Terminal	Name	Connector	Terminal
F13	47	TP sensor	F57	1
	51	Battery current sensor	F5	1
	55	PSP sensor	F40	3
	59	CMP sensor (PHASE) (bank 1)	F55	1
	63	CMP sensor (PHASE) (bank 2)	F60	1
E10	83	APP sensor	E40	5

Is the inspection result normal?

YES >> GO TO 4.
NO >> Repair short to ground or short to power in harness or connectors.

4. CHECK COMPONENTS

Check the following.
- Camshaft position sensor (PHASE) (Refer to EC-1298, "Component Inspection".)
- Battery current sensor (Refer to EC-1399, "Component Inspection".)
- Power steering pressure sensor (Refer to EC-1372, "Component Inspection".)

Is the inspection result normal?

YES >> GO TO 5.
NO >> Replace malfunctioning component.

5. CHECK TP SENSOR

Refer to EC-1217, "Component Inspection".

Is the inspection result normal?

YES >> GO TO 9.
NO >> GO TO 6.

6. REPLACE ELECTRIC THROTTLE CONTROL ACTUATOR

1. Replace electric throttle control actuator.
2. Go to EC-1217, "Special Repair Requirement".

>> INSPECTION END

7. CHECK APP SENSOR

Refer to EC-1450, "Component Inspection".

Is the inspection result normal?

YES >> GO TO 9.
NO >> GO TO 8.

8. REPLACE ACCELERATOR PEDAL ASSEMBLY

1. Replace accelerator pedal assembly.
2. Go to EC-1450, "Special Repair Requirement".

>> INSPECTION END

9. CHECK INTERMITTENT INCIDENT

Refer to GI-42, "Intermittent Incident".

>> INSPECTION END

P0850 PNP SWITCH

Description

INFOID:0000000004362227

When the selector lever position is P or N, park/neutral position (PNP) signal from the TCM is sent to ECM (CVT models).
When the selector lever position is Neutral position, park/neutral position (PNP) switch is ON. ECM detects the position because the continuity of the line (the ON signal) exists (M/T models).

DTC Logic

INFOID:0000000004362228

DTC DETECTION LOGIC

DTC No.	Trouble diagnosis name	DTC detecting condition	Possible cause
P0850	Park/neutral position switch	The signal of the park/neutral position (PNP) signal does not change during driving after the engine is started.	• Harness or connectors (The sensor circuit is open or shorted.) • Park/neutral position (PNP) switch (M/T models) • TCM (CVT models)

DTC CONFIRMATION PROCEDURE

1. INSPECTION START

Will CONSULT-III be used?

Will CONSULT-III be used?

YES >> GO TO 2.
NO >> GO TO 5.

2. PRECONDITIONING

If DTC Confirmation Procedure has been previously conducted, always perform the following before conducting the next test.

1. Turn ignition switch OFF and wait at least 10 seconds.
2. Turn ignition switch ON.
3. Turn ignition switch OFF and wait at least 10 seconds.

>> GO TO 3.

3. CHECK PNP SIGNAL

With CONSULT-III

1. Turn ignition switch ON.
2. Select “P/N POSI SW” in “DATA MONITOR” mode with CONSULT-III. Then check the “P/N POSI SW” signal under the following conditions.

Position (Selector lever)	Known-good signal
N or P position (CVT) Neutral position (M/T)	ON
Except above position	OFF

Is the inspection result normal?

YES >> GO TO 4.
NO >> Go to EC-1383, "Diagnosis Procedure".

4. PERFORM DTC CONFIRMATION PROCEDURE

1. Select “DATA MONITOR” mode with CONSULT-III.
2. Start engine and warm it up to normal operating temperature.
3. Maintain the following conditions for at least 50 consecutive seconds.
   CAUTION:
   Always drive vehicle at a safe speed.

ENG SPEED	1,100 - 6,375 rpm
COOLAN TEMP/S	More than 70°C (158°F)
B/FUEL SCHDL	4.0 - 31.8 msec
VHCL SPEED SE	More than 64 km/h (40 mph)
Selector lever	Suitable position

4. Check 1st trip DTC.

Is 1st trip DTC detected?

YES >> Go to EC-1383, "Diagnosis Procedure".
NO >> INSPECTION END

5. PERFORM COMPONENT FUNCTION CHECK

Perform component function check. Refer to EC-1383, "Component Function Check".

NOTE:
Use component function check to check the overall function of the park/neutral position (PNP) signal circuit. During this check, a 1st trip DTC might not be confirmed.

Is the inspection result normal?

YES >> INSPECTION END
NO >> Go to EC-1383, "Diagnosis Procedure".

Component Function Check

INFOID:0000000004362229

1. PERFORM COMPONENT FUNCTION CHECK

1. Turn ignition switch ON.
2. Check the voltage between ECM harness connectors.

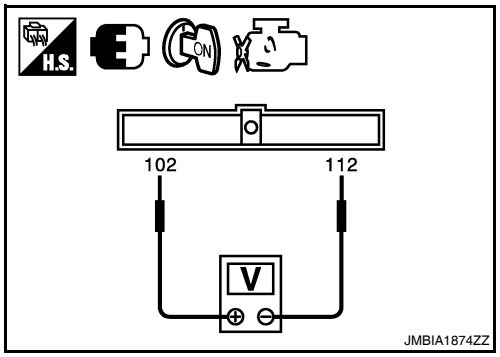

ECM			Condition		Voltage
Connector	+	–			
	Terminal	Terminal			
E10	102	112	Selector lever position	P or N (CVT) Neutral (M/T)	Battery voltage
				Except above	Approx. 0 V

Is the inspection result normal?

YES >> INSPECTION END
NO >> Go to EC-1383, "Diagnosis Procedure".

Diagnosis Procedure

INFOID:0000000004362230

1. INSPECTION START

Check the transmission type of the vehicle.

Which type of transmission is the vehicle equipped?

CVT >> GO TO 2.
M/T >> GO TO 5.

2. CHECK DTC WITH TCM

Refer to EC-1555, "DTC Index".

Is the inspection result normal?

YES >> GO TO 3.
NO >> Repair or replace malfunctioning part.

3. CHECK PNP SIGNAL CIRCUIT FOR OPEN AND SHORT-I

1. Turn ignition switch OFF.
2. Disconnect TCM harness connector.
3. Disconnect IPDM E/R harness connector.

4. Check the continuity between TCM harness connector and IPDM E/R harness connector.

TCM		IPDM E/R		Continuity
Connector	Terminal	Connector	Terminal	
F15	20	F10	72	Existed

5. Also check harness for short to ground and short to power.

Is the inspection result normal?

YES >> GO TO 4.
NO >> Repair open circuit, short to ground or short to power in harness or connectors.

4. CHECK PNP SIGNAL CIRCUIT FOR OPEN AND SHORT-II

1. Disconnect IPDM E/R harness connectors.
2. Disconnect ECM harness connector.
3. Check the continuity between ECM harness connector and IPDM E/R harness connector.

ECM		IPDM E/R		Continuity
Connector	Terminal	Connector	Terminal	
E10	102	E18	30	Existed

4. Also check harness for short to ground and short to power.

Is the inspection result normal?

YES >> GO TO 10.
NO >> Repair open circuit, short to ground or short to power in harness or connectors.

5. CHECK PNP SWITCH POWER SUPPLY CIRCUIT

1. Turn ignition switch OFF.
2. Disconnect park/neutral position (PNP) switch harness connector.
3. Turn ignition switch ON.
4. Check the voltage between PNP switch harness connector and ground.

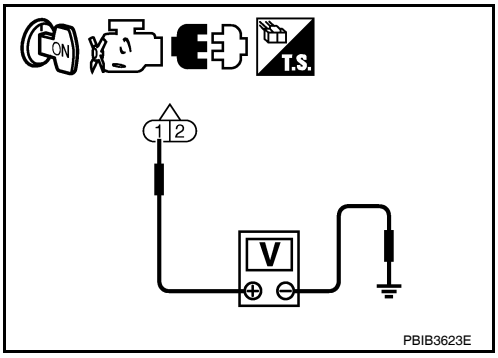

PNP switch		Ground	Voltage (V)
Connector	Terminal		
F32	1	Ground	Battery voltage

Is the inspection result normal?

YES >> GO TO 7.
NO >> GO TO 6.

6. DETECT MALFUNCTIONING PART

Check the following.
- 10 A fuse (No. 33)
- IPDM E/R harness connector F10
- Harness for open or short between PNP switch and IPDM E/R

>> Repair open circuit, short to ground or short to power in harness or connectors.

7. CHECK PNP SIGNAL CIRCUIT FOR OPEN AND SHORT

1. Turn ignition switch OFF.
2. Disconnect ECM harness connector.
3. Check the continuity between PNP switch harness connector and ECM harness connector.

PNP switch		ECM		Continuity
Connector	Terminal	Connector	Terminal	
F32	2	E10	102	Existed

4. Also check harness for short to ground and short to power.

Is the inspection result normal?

YES >> GO TO 9.
NO >> GO TO 8.

8. DETECT MALFUNCTIONING PART

Check the following.
- Harness connectors E3, F1
- Harness for open or short between PNP switch and ECM

>> Repair or replace harness or connectors.

9. CHECK PNP SWITCH

Refer to TM-20, "Inspection".

Is the inspection result normal?

YES >> GO TO 10
NO >> Replace PNP switch.

10. CHECK INTERMITTENT INCIDENT

Refer to GI-42, "Intermittent Incident".

Is the inspection result normal?

YES >> Replace IPDM E/R.
NO >> Repair or replace malfunctioning part.

P1148, P1168 CLOSED LOOP CONTROL

DTC Logic

INFOID:0000000004362235

DTC DETECTION LOGIC

NOTE:
DTC P1148 or P1168 is displayed with another DTC for A/F sensor 1.
Perform the trouble diagnosis for the corresponding DTC.

DTC No.	Trouble diagnosis name	DTC detecting condition	Possible cause
P1148	Closed loop control function (bank 1)	The closed loop control function for bank 1 does not operate even when vehicle is being driven in the specified condition.	• Harness or connectors (The sensor circuit is open or shorted.) • A/F sensor 1 • A/F sensor 1 heater
P1168	Closed loop control function (bank 2)	The closed loop control function for bank 2 does not operate even when vehicle is being driven in the specified condition.	

P1212 TCS COMMUNICATION LINE

Description

INFOID:0000000004362239

This CAN communication line is used to control the smooth engine operation during the TCS operation. Pulse signals are exchanged between ECM and “ABS actuator and electric unit (control unit)”.
Be sure to erase the malfunction information such as DTC not only for “ABS actuator and electric unit (control unit)” but also for ECM after TCS related repair.

DTC Logic

INFOID:0000000004362240

DTC DETECTION LOGIC

NOTE:
- **If DTC P1212 is displayed with DTC UXXXX, first perform the trouble diagnosis for DTC UXXXX. Refer to EC-1179, "DTC Logic".**
- **If DTC P1212 is displayed with DTC P0607, first perform the trouble diagnosis for DTC P0607. Refer to EC-1378, "DTC Logic".**

Freeze frame data is not stored in the ECM for this self-diagnosis.

DTC No.	Trouble diagnosis name	DTC detecting condition	Possible cause
P1212	TCS communication line	ECM cannot receive the information from “ABS actuator and electric unit (control unit)” continuously.	• Harness or connectors (The CAN communication line is open or shorted.) • ABS actuator and electric unit (control unit) • Dead (Weak) battery

DTC CONFIRMATION PROCEDURE

1. PRECONDITIONING

If DTC Confirmation Procedure has been previously conducted, always perform the following before conducting the next test
1. Turn ignition switch OFF and wait at least 10 seconds.
2. Turn ignition switch ON.
3. Turn ignition switch OFF and wait at least 10 seconds.

TESTING CONDITION:
Before performing the following procedure, confirm that battery voltage is more than 10.5 V at idle.

>> GO TO 2.

2. PERFORM DTC CONFIRMATION PROCEDURE

1. Start engine and let it idle for at least 10 seconds.
2. Check 1st trip DTC.

Is 1st trip DTC detected?

YES >> Go to EC-1387, "Diagnosis Procedure".
NO >> INSPECTION END

Diagnosis Procedure

INFOID:0000000004362241

Go to BRC-6, "Work Flow".

P1217 ENGINE OVER TEMPERATURE

DTC Logic

INFOID:0000000004362242

DTC DETECTION LOGIC

NOTE:
- **If DTC P1217 is displayed with DTC UXXXX, first perform the trouble diagnosis for DTC UXXXX. Refer to EC-1179, "DTC Logic".**
- **If DTC P1217 is displayed with DTC P0607, first perform the trouble diagnosis for DTC P0607. Refer to EC-1378, "DTC Logic".**

If the cooling fan or another component in the cooling system malfunctions, engine coolant temperature will rise.
When the engine coolant temperature reaches an abnormally high temperature condition, a malfunction is indicated.

DTC No.	Trouble diagnosis name	DTC detecting condition	Possible cause
P1217	Engine over temperature (Overheat)	• Cooling fan does not operate properly (Overheat). • Cooling fan system does not operate properly (Overheat). • Engine coolant was not added to the system using the proper filling method. • Engine coolant is not within the specified range.	• Harness or connectors (The cooling fan circuit is open or shorted.) • IPDM E/R (Cooling fan relays) • Cooling fan motor • Radiator hose • Radiator • Radiator cap • Water pump • Thermostat

CAUTION:
When a malfunction is indicated, always replace the coolant. Refer to CO-34, "System Inspection". Also, replace the engine oil. Refer to LU-23, "Inspection".
1. **Fill radiator with coolant up to specified level with a filling speed of 2 liters per minute. Always use coolant with the proper mixture ratio. Refer to MA-12, "Fluids and Lubricants".**
2. **After refilling coolant, run engine to ensure that no water-flow noise is emitted.**

DTC CONFIRMATION PROCEDURE

1.PERFORM COMPONENT FUNCTION CHECK

Perform component function check. Refer to EC-1388, "Component Function Check".
NOTE:
Use component function check to check the overall function of the cooling fan. During this check, a DTC might not be confirmed.

Is the inspection result normal?

YES >> INSPECTION END
NO >> Go to EC-1389, "Diagnosis Procedure".

Component Function Check

INFOID:0000000004362243

1.PERFORM COMPONENT FUNCTION CHECK-I

WARNING:
Never remove the radiator cap when the engine is hot. Serious burns could be caused by high pressure fluid escaping from the radiator.
Wrap a thick cloth around cap. Carefully remove the cap by turning it a quarter turn to allow built-up pressure to escape. Then turn the cap all the way off.

Check the coolant level in the reservoir tank and radiator.
Allow engine to cool before checking coolant level.

Is the coolant level in the reservoir tank and/or radiator below the proper range?

YES >> Go to EC-1389, "Diagnosis Procedure".
NO >> GO TO 2.

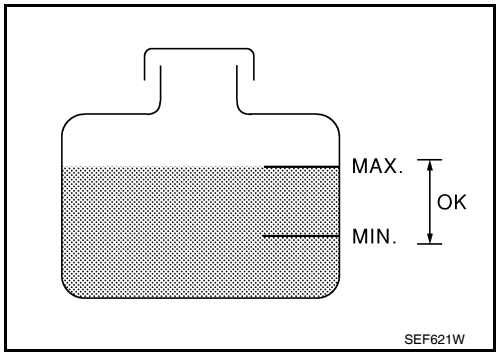

2. PERFORM COMPONENT FUNCTION CHECK-II

Confirm whether customer filled the coolant or not.

Did customer fill the coolant?

YES >> Go to EC-1389, "Diagnosis Procedure".
NO >> GO TO 3.

3. PERFORM COMPONENT FUNCTION CHECK-III

With CONSULT-III
1. Turn ignition switch ON.
2. Perform “COOLING FAN” in “ACTIVE TEST” mode with CONSULT-III.
3. Check that cooling fan motors-1 and -2 operate at each speed (LOW/MID/HI).

Without CONSULT-III
Perform IPDM E/R auto active test and check cooling fan motors operation, refer to PCS-14, "Diagnosis Description".

Is the inspection result normal?

YES >> INSPECTION END
NO >> Go to EC-1389, "Diagnosis Procedure".

Diagnosis Procedure

INFOID:0000000004362244

1. CHECK COOLING FAN OPERATION

With CONSULT-III
1. Turn ignition switch ON.
2. Perform “COOLING FAN” in “ACTIVE TEST” mode with CONSULT-III.
3. Check that cooling fans-1 and -2 operate at each speed (LOW/MID/HI).

Without CONSULT-III
1. Perform IPDM E/R auto active test and check cooling fan motors operation, refer to PCS-14, "Diagnosis Description".
2. Check that cooling fans-1 and -2 operate at each speed (Low/Middle/High).

Is the inspection result normal?

YES >> GO TO 2.
NO >> Go to EC-1473, "Diagnosis Procedure".

2. CHECK COOLING SYSTEM FOR LEAKAGE-I

Check cooling system for leakage. Refer to CO-34, "System Inspection".

Is leakage detected?

YES >> GO TO 3.
NO >> GO TO 4.

3. CHECK COOLING SYSTEM FOR LEAKAGE-II

Check the following for leakage.
- Hose
- Radiator
- Water pump

>> Repair or replace malfunctioning part.

4. CHECK RADIATOR CAP

Check radiator cap. Refer to CO-34, "System Inspection".

Is the inspection result normal?

YES >> GO TO 5.
NO >> Replace radiator cap.

5. CHECK THERMOSTAT

Check thermostat. Refer to CO-46, "Removal and Installation".

Is the inspection result normal?

YES >> GO TO 6.
NO >> Replace thermostat

6. CHECK ENGINE COOLANT TEMPERATURE SENSOR

Refer to EC-1211, "Component Inspection".

Is the inspection result normal?

YES >> GO TO 7.
NO >> Replace engine coolant temperature sensor.

7. CHECK MAIN 12 CAUSES

If the cause cannot be isolated, check the following.

Engine	Step	Inspection item	Equipment	Standard	Reference page
OFF	1	• Blocked radiator • Blocked condenser • Blocked radiator grille • Blocked bumper	• Visual	No blocking	—
	2	• Coolant mixture	• Coolant tester	MA-12, "Engine Oil Recommendation"	
	3	• Coolant level	• Visual	Coolant up to MAX level in reservoir tank and radiator filler neck	CO-34, "System Inspection"
	4	• Radiator cap	• Pressure tester	CO-34, "System Inspection"	
ON*2	5	• Coolant leakage	• Visual	No leakage	CO-34, "System Inspection"
ON*2	6	• Thermostat	• Touch the upper and lower radiator hoses	Both hoses should be hot	CO-46, "Removal and Installation"
ON*1	7	• Cooling fan	• CONSULT-III	Operating	EC-1473, "Component Function Check"
OFF	8	• Combustion gas leakage	• Color checker chemical tester 4 Gas analyzer	Negative	—
ON*3	9	• Coolant temperature gauge	• Visual	Gauge less than 3/4 when driving	—
		• Coolant overflow to reservoir tank	• Visual	No overflow during driving and idling	CO-34, "System Inspection"
OFF*4	10	• Coolant return from reservoir tank to radiator	• Visual	Should be initial level in reservoir tank	CO-34, "System Inspection"
OFF	11	• Cylinder head	• Straight gauge feeler gauge	0.1 mm (0.004 in) Maximum distortion (warping)	EM-197, "Inspection After Disassembly"
	12	• Cylinder block and pistons	• Visual	No scuffing on cylinder walls or piston	EM-216, "Inspection"

*1: Turn the ignition switch ON.

*2: Engine running at 3,000 rpm for 10 minutes.

*3: Drive at 90 km/h (56 MPH) for 30 minutes and then let idle for 10 minutes.

*4: After 60 minutes of cool down time.

For more information, refer to CO-32, "Troubleshooting Chart".

>> INSPECTION END

P1225 TP SENSOR

Description

INFOID:0000000004362245

Electric throttle control actuator consists of throttle control motor, throttle position sensor, etc. The throttle position sensor responds to the throttle valve movement.
The throttle position sensor has two sensors. These sensors are a kind of potentiometer which transform the throttle valve position into output voltage, and emit the voltage signals to the ECM. The ECM judges the current opening angle of the throttle valve from these signals and controls the throttle valve opening angle in response to driving conditions via the throttle control motor.

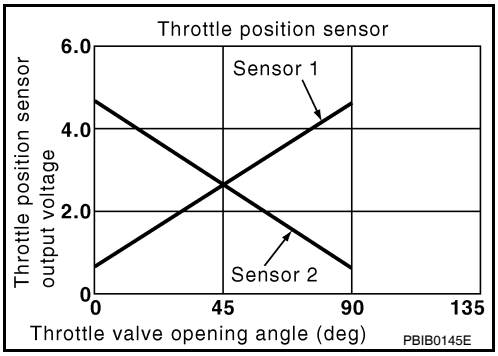

DTC Logic

INFOID:0000000004362246

DTC DETECTION LOGIC

DTC No.	Trouble diagnosis name	DTC detecting condition	Possible cause
P1225	Closed throttle position learning performance	Closed throttle position learning value is excessively low.	• Electric throttle control actuator (TP sensor 1 and 2)

DTC CONFIRMATION PROCEDURE

1.PRECONDITIONING

If DTC Confirmation Procedure has been previously conducted, always perform the following before conducting the next test.
1. Turn ignition switch OFF and wait at least 10 seconds.
2. Turn ignition switch ON.
3. Turn ignition switch OFF and wait at least 10 seconds.

TESTING CONDITION:
Before performing the following procedure, confirm that battery voltage is more than 10 V at idle.

>> GO TO 2.

2.PERFORM DTC CONFIRMATION PROCEDURE

1. Turn ignition switch ON.
2. Turn ignition switch OFF and wait at least 10 seconds.
3. Turn ignition switch ON.
4. Check 1st trip DTC.

Is 1st trip DTC detected?

YES >> Go to EC-1392, "Diagnosis Procedure".
NO >> INSPECTION END

Diagnosis Procedure

INFOID:0000000004362247

1.CHECK ELECTRIC THROTTLE CONTROL ACTUATOR VISUALLY

1. Turn ignition switch OFF.
2. Remove the intake air duct.

3. Check if foreign matter is caught between the throttle valve (1) and the housing.
- Electric throttle control actuator (2)
- ⇦: Vehicle front

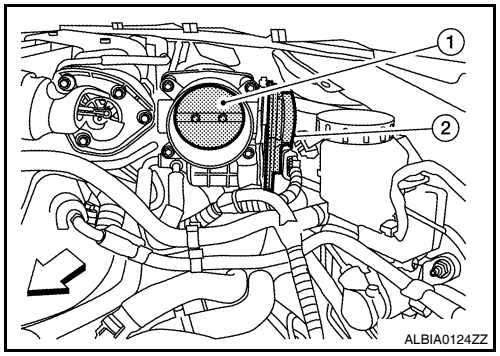

Is the inspection result normal?

YES >> GO TO 2.
NO >> Remove the foreign matter and clean the electric throttle control actuator inside.

2. REPLACE ELECTRIC THROTTLE CONTROL ACTUATOR

1. Replace electric throttle control actuator.
2. Go to EC-1393, "Special Repair Requirement".

>> INSPECTION END

Special Repair Requirement

INFOID:0000000004362248

1. PERFORM THROTTLE VALVE CLOSED POSITION LEARNING

Refer to EC-1053, "THROTTLE VALVE CLOSED POSITION LEARNING : Special Repair Requirement"

>> GO TO 2.

2. PERFORM IDLE AIR VOLUME LEARNING

Refer to EC-1053, "IDLE AIR VOLUME LEARNING : Special Repair Requirement"

>> END

P1226 TP SENSOR

Description

INFOID:0000000004362249

Electric throttle control actuator consists of throttle control motor, throttle position sensor, etc. The throttle position sensor responds to the throttle valve movement.
The throttle position sensor has two sensors. These sensors are a kind of potentiometer which transform the throttle valve position into output voltage, and emit the voltage signals to the ECM. The ECM judges the current opening angle of the throttle valve from these signals and controls the throttle valve opening angle in response to driving conditions via the throttle control motor.

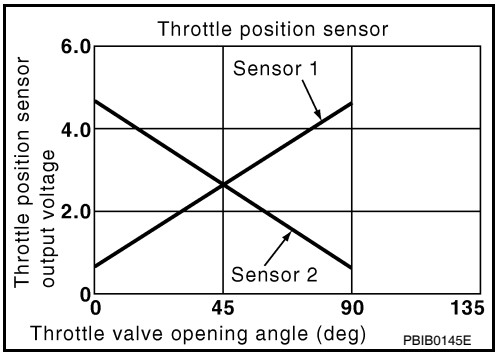

DTC Logic

INFOID:0000000004362250

DTC DETECTION LOGIC

DTC No.	Trouble diagnosis name	DTC detecting condition	Possible cause
P1226	Closed throttle position learning performance	Closed throttle position learning is not performed successfully, repeatedly.	• Electric throttle control actuator (TP sensor 1 and 2)

DTC CONFIRMATION PROCEDURE

1.PRECONDITIONING

If DTC Confirmation Procedure has been previously conducted, always perform the following before conducting the next test.
1. Turn ignition switch OFF and wait at least 10 seconds.
2. Turn ignition switch ON.
3. Turn ignition switch OFF and wait at least 10 seconds.

TESTING CONDITION:
Before performing the following procedure, confirm that battery voltage is more than 10 V at idle.

>> GO TO 2.

2.PERFORM DTC CONFIRMATION PROCEDURE

1. Turn ignition switch ON.
2. Turn ignition switch OFF and wait at least 10 seconds.
3. Turn ignition switch ON.
4. Repeat steps 2 and 3 for 32 times.
5. Check 1st trip DTC.

Is 1st trip DTC detected?

YES >> Go to EC-1394, "Diagnosis Procedure".
NO >> INSPECTION END

Diagnosis Procedure

INFOID:0000000004362251

1.CHECK ELECTRIC THROTTLE CONTROL ACTUATOR VISUALLY

1. Turn ignition switch OFF.
2. Remove the intake air duct.

3. Check if foreign matter is caught between the throttle valve (1) and the housing.
- Electric throttle control actuator (2)
- ⇦: Vehicle front

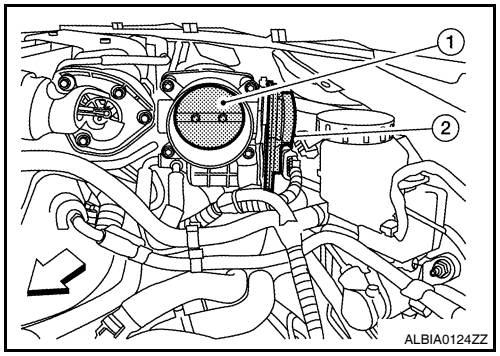

Is the inspection result normal?

YES >> GO TO 2.
NO >> Remove the foreign matter and clean the electric throttle control actuator inside.

2. REPLACE ELECTRIC THROTTLE CONTROL ACTUATOR

1. Replace electric throttle control actuator.
2. Go to EC-1393, "Special Repair Requirement".

>> INSPECTION END

Special Repair Requirement

INFOID:0000000004362252

1. PERFORM THROTTLE VALVE CLOSED POSITION LEARNING

Refer to EC-1053, "THROTTLE VALVE CLOSED POSITION LEARNING : Special Repair Requirement"

>> GO TO 2.

2. PERFORM IDLE AIR VOLUME LEARNING

Refer to EC-1053, "IDLE AIR VOLUME LEARNING : Special Repair Requirement"

>> END

P1421 COLD START CONTROL

Description

INFOID:0000000004362253

ECM controls ignition timing and engine idle speed when engine is started with pre-warming up condition. This control promotes the activation of three way catalyst by heating the catalyst and reduces emissions.

DTC Logic

INFOID:0000000004362254

DTC DETECTION LOGIC

NOTE:
- **If DTC P1421 is displayed with other DTC, first perform the trouble diagnosis for other DTC.**

DTC No.	Trouble diagnosis name	DTC detecting condition	Possible cause
P1421	Cold start emission reduction strategy monitoring	ECM does not control ignition timing and engine idle speed properly when engine is started with pre-warming up condition.	• Lack of intake air volume • Fuel injection system • ECM

DTC CONFIRMATION PROCEDURE

1.PRECONDITIONING

If DTC Confirmation Procedure has been previously conducted, always perform the following before conducting the next test.
1. Turn ignition switch OFF and wait at least 10 seconds.
2. Turn ignition switch ON.
3. Turn ignition switch OFF and wait at least 10 seconds.

TESTING CONDITION:
Before performing the following procedure, confirm that battery voltage is more than 11 V at idle.

>> GO TO 2.

2.PERFORM DTC CONFIRMATION PROCEDURE

With CONSULT-III
1. Turn ignition switch ON.
2. Select “DATA MONITOR” mode with CONSULT-III.
3. Check that the “COOLAN TEMP/S” indication is between 4°C (39°F) and 36°C (97°F).
   If “COOLAN TEMP/S” indication is within the specified value, go to the following steps.
   If “COOLAN TEMP/S” indication is out of the specified value, cool engine down or warm engine up and go to step 1.
4. Start engine and let it idle for 5 minutes.
5. Check 1st trip DTC.

With GST
Follow the procedure “With CONSULT-III” above.

Is 1st trip DTC detected?

YES >> Go to EC-1396, "Diagnosis Procedure".
NO >> INSPECTION END

Diagnosis Procedure

INFOID:0000000004362255

1.PERFORM IDLE AIR VOLUME LEARNING

Perform EC-1053, "IDLE AIR VOLUME LEARNING : Special Repair Requirement".

Is Idle Air Volume Learning carried out successfully?

YES >> GO TO 2.
NO >> Follow the instruction of Idle Air Volume Learning.

2.CHECK INTAKE SYSTEM

Check for the cause of intake air volume lacking. Refer to the following.

- Crushed intake air passage
- Intake air passage clogging

Is the inspection result normal?

YES >> GO TO 3.
NO >> Repair or replace malfunctioning part

3. CHECK FUEL INJECTION SYSTEM FUNCTION

Perform EC-1266, "DTC Logic" for DTC P0171, P0174.

Is the inspection result normal?

YES >> GO TO 4.
NO >> Go to EC-1267, "Diagnosis Procedure" for DTC P0171, P0174.

4. PERFORM DTC CONFIRMATION PROCEDURE

1. Turn ignition switch ON.
2. Erase DTC.
3. Perform DTC CONFIRMATION PROCEDURE.
   See EC-1396, "DTC Logic".

Is the 1st trip DTC P1421 displayed again?

YES >> GO TO 5.
NO >> INSPECTION END

5. REPLACE ECM

1. Replace ECM.
2. Go to EC-1051, "ADDITIONAL SERVICE WHEN REPLACING CONTROL UNIT : Special Repair Requirement".

>> INSPECTION END

P1550 BATTERY CURRENT SENSOR

Description

INFOID:0000000004362256

The power generation voltage variable control enables fuel consumption to be decreased by reducing the engine load which is caused by the power generation of the generator. The battery current sensor is installed to the battery cable at the negative terminal. The sensor measures the charging/discharging current of the battery. Based on the sensor signal, ECM judges whether or not the power generation voltage variable control is performed. When performing the power generation voltage variable control, ECM calculates the target power generation voltage based on the sensor signal. And ECM sends the calculated value as the power generation command value to IPDM E/R. For the details of the power generation voltage variable control, refer to CHG-6, "System Description".

CAUTION:

Never connect the electrical component or the ground wire directly to the battery terminal. The connection causes the malfunction of the power generation voltage variable control, and then the battery discharge may occur.

DTC Logic

INFOID:0000000004362257

DTC DETECTION LOGIC

NOTE:

If DTC P1550 is displayed with DTC P0643, first perform the trouble diagnosis for DTC P0643. Refer to EC-1379, "DTC Logic".

DTC No.	Trouble diagnosis name	DTC detecting condition	Possible cause
P1550	Battery current sensor circuit range/performance	The output voltage of the battery current sensor remains within the specified range while engine is running.	• Harness or connectors (The sensor circuit is open or shorted.) • Battery current sensor

DTC CONFIRMATION PROCEDURE

1. PRECONDITIONING

If DTC Confirmation Procedure has been previously conducted, always perform the following before conducting the next test.

1. Turn ignition switch OFF and wait at least 10 seconds.
2. Turn ignition switch ON.
3. Turn ignition switch OFF and wait at least 10 seconds.

TESTING CONDITION:

Before performing the following procedure, confirm that battery voltage is more than 8 V at idle.

>> GO TO 2.

2. PERFORM DTC CONFIRMATION PROCEDURE

1. Start engine and wait at least 10 seconds.
2. Check 1st trip DTC.

Is 1st trip DTC detected?

YES >> Go to EC-1398, "Diagnosis Procedure".
NO >> INSPECTION END

Diagnosis Procedure

INFOID:0000000004362258

1. CHECK GROUND CONNECTION

1. Turn ignition switch OFF.
2. Check ground connection E9. Refer to Ground Inspection in GI-45, "Circuit Inspection".

Is the inspection result normal?

YES >> GO TO 2.
NO >> Repair or replace ground connection.

2. CHECK BATTERY CURRENT SENSOR POWER SUPPLY CIRCUIT

1. Disconnect battery current sensor harness connector.
2. Turn ignition switch ON.
3. Check the voltage between battery current sensor harness connector and ground.

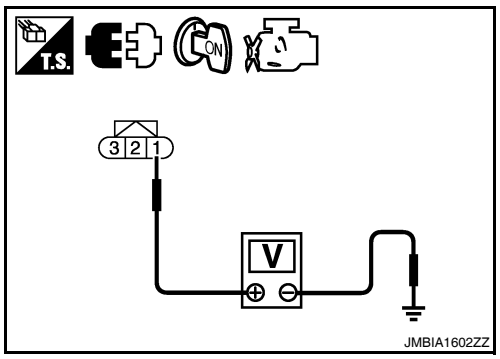

Battery current sensor		Ground	Voltage (V)
Connector	Terminal		
F5	1	Ground	Approx. 5

Is the inspection result normal?

YES >> GO TO 3.
NO >> Repair open circuit, short to ground or short to power in harness or connectors.

3. CHECK BATTERY CURRENT SENSOR GROUND CIRCUIT FOR OPEN AND SHORT

1. Turn ignition switch OFF.
2. Disconnect ECM harness connector.
3. Check the continuity between battery current sensor harness connector and ECM harness connector.

Battery current sensor		ECM		Continuity
Connector	Terminal	Connector	Terminal	
F5	2	F13	44	Existed

4. Also check harness for short to ground and short to power.

Is the inspection result normal?

YES >> GO TO 4.
NO >> Repair open circuit, short to ground or short to power in harness or connectors.

4. CHECK BATTERY CURRENT SENSOR INPUT SIGNAL CIRCUIT FOR OPEN AND SHORT

1. Check the continuity between battery current sensor harness connector and ECM harness connector.

Battery current sensor		ECM		Continuity
Connector	Terminal	Connector	Terminal	
F5	3	F13	42	Existed

2. Also check harness for short to ground and short to power.

Is the inspection result normal?

YES >> GO TO 5.
NO >> Repair open circuit, short to ground or short to power in harness or connectors.

5. CHECK BATTERY CURRENT SENSOR

Refer to EC-1399, "Component Inspection".

Is the inspection result normal?

YES >> GO TO 6.
NO >> Replace battery negative cable assembly.

6. CHECK INTERMITTENT INCIDENT

Refer to GI-42, "Intermittent Incident".

>> INSPECTION END

Component Inspection

INFOID:0000000004362259

1. CHECK BATTERY CURRENT SENSOR

1. Turn ignition switch OFF.
2. Reconnect harness connectors disconnected.

3. Disconnect battery negative cable (1).
- ⇦: Vehicle front
- ⬅: To body ground
4. Install jumper cable (A) between battery negative terminal and body ground.
5. Turn ignition switch ON.

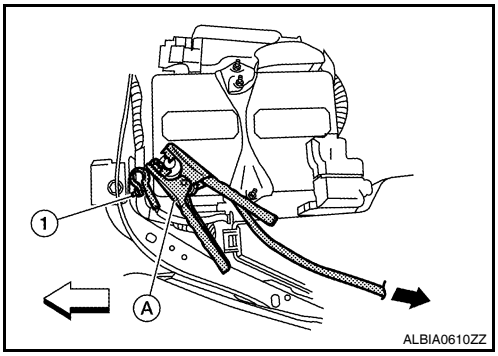

6. Check the voltage between ECM harness connector terminals under the following conditions.

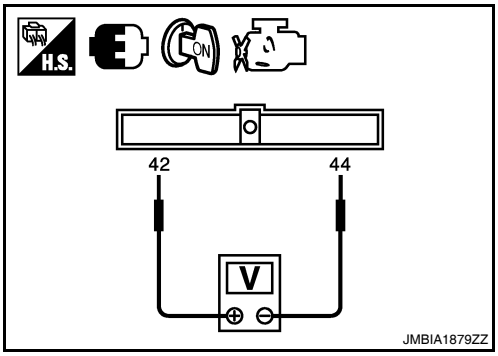

ECM			Voltage (V)
Connector	+	–	
	Terminal	Terminal	
F13	42 (Battery current sensor signal)	44 (Sensor ground)	Approx. 2.5

Before measuring the terminal voltage, confirm that the battery is fully charged. Refer to PG-3, "How to Handle Battery".

Is the inspection result normal?

YES >> INSPECTION END
NO >> Replace battery negative cable assembly.

P1551, P1552 BATTERY CURRENT SENSOR

Description

INFOID:0000000004362260

The power generation voltage variable control enables fuel consumption to be decreased by reducing the engine load which is caused by the power generation of the generator. The battery current sensor is installed to the battery cable at the negative terminal. The sensor measures the charging/discharging current of the battery. Based on the sensor signal, ECM judges whether or not the power generation voltage variable control is performed. When performing the power generation voltage variable control, ECM calculates the target power generation voltage based on the sensor signal. And ECM sends the calculated value as the power generation command value to IPDM E/R. For the details of the power generation voltage variable control, refer to CHG-6, "System Description".

CAUTION:

Never connect the electrical component or the ground wire directly to the battery terminal. The connection causes the malfunction of the power generation voltage variable control, and then the battery discharge may occur.

DTC Logic

INFOID:0000000004362261

DTC DETECTION LOGIC

NOTE:

If DTC P1551 or P1552 is displayed with DTC P0643, first perform the trouble diagnosis for DTC P0643. Refer to EC-1379, "DTC Logic".

DTC No.	Trouble diagnosis name	DTC detecting condition	Possible cause
P1551	Battery current sensor circuit low input	An excessively low voltage from the sensor is sent to ECM.	• Harness or connectors (The sensor circuit is open or shorted.) • Battery current sensor
P1552	Battery current sensor circuit high input	An excessively high voltage from the sensor is sent to ECM.	

DTC CONFIRMATION PROCEDURE

1. PRECONDITIONING

If DTC Confirmation Procedure has been previously conducted, always perform the following before conducting the next test.

1. Turn ignition switch OFF and wait at least 10 seconds.
2. Turn ignition switch ON.
3. Turn ignition switch OFF and wait at least 10 seconds.

TESTING CONDITION:

Before performing the following procedure, confirm that battery voltage is more than 8 V with ignition switch ON

>> GO TO 2.

2. PERFORM DTC CONFIRMATION PROCEDURE

1. Turn ignition switch ON and wait at least 10 seconds.
2. Check 1st trip DTC.

Is 1st trip DTC detected?

YES >> Go to EC-1401, "Diagnosis Procedure".
NO >> INSPECTION END

Diagnosis Procedure

INFOID:0000000004362262

1. CHECK GROUND CONNECTION

1. Turn ignition switch OFF.
2. Check ground connection E9. Refer to Ground Inspection in GI-45, "Circuit Inspection".

Is the inspection result normal?

YES >> GO TO 2.

NO >> Repair or replace ground connection.

2. CHECK BATTERY CURRENT SENSOR POWER SUPPLY CIRCUIT

1. Disconnect battery current sensor harness connector.
2. Turn ignition switch ON.
3. Check the voltage between battery current sensor harness connector and ground.

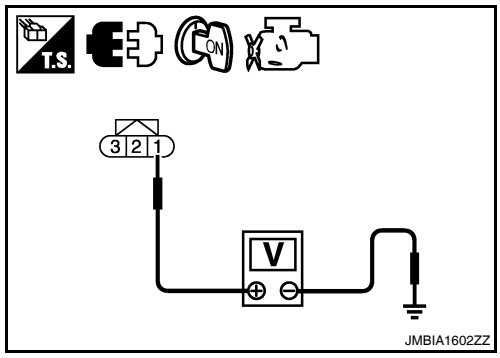

Battery current sensor		Ground	Voltage (V)
Connector	Terminal		
F5	1	Ground	Approx. 5

Is the inspection result normal?

YES >> GO TO 3.
NO >> Repair open circuit, short to ground or short to power in harness or connectors.

3. CHECK BATTERY CURRENT SENSOR GROUND CIRCUIT FOR OPEN AND SHORT

1. Turn ignition switch OFF.
2. Disconnect ECM harness connector.
3. Check the continuity between battery current sensor harness connector and ECM harness connector.

Battery current sensor		ECM		Continuity
Connector	Terminal	Connector	Terminal	
F5	2	F13	44	Existed

4. Also check harness for short to ground and short to power.

Is the inspection result normal?

YES >> GO TO 4.
NO >> Repair open circuit, short to ground or short to power in harness or connectors.

4. CHECK BATTERY CURRENT SENSOR INPUT SIGNAL CIRCUIT FOR OPEN AND SHORT

1. Check the continuity between battery current sensor harness connector and ECM harness connector.

Battery current sensor		ECM		Continuity
Connector	Terminal	Connector	Terminal	
F5	3	F13	42	Existed

2. Also check harness for short to ground and short to power.

Is the inspection result normal?

YES >> GO TO 5.
NO >> Repair open circuit, short to ground or short to power in harness or connectors.

5. CHECK BATTERY CURRENT SENSOR

Refer to EC-1399, "Component Inspection".

Is the inspection result normal?

YES >> GO TO 6.
NO >> Replace battery negative cable assembly.

6. CHECK INTERMITTENT INCIDENT

Refer to GI-42, "Intermittent Incident".

>> INSPECTION END

Component Inspection

INFOID:0000000004362263

1. CHECK BATTERY CURRENT SENSOR

1. Turn ignition switch OFF.
2. Reconnect harness connectors disconnected.
3. Disconnect battery negative cable (1).
- ⇦: Vehicle front
- ⬅: To body ground
4. Install jumper cable (A) between battery negative terminal and body ground.
5. Turn ignition switch ON.

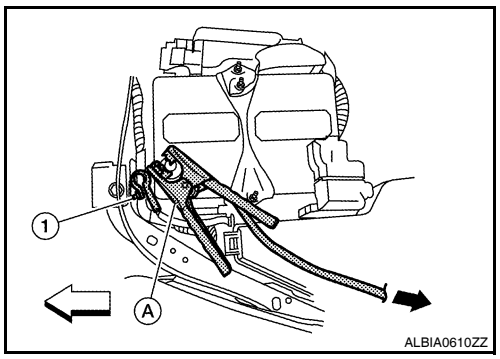

6. Check the voltage between ECM harness connector terminals under the following conditions.

ECM			Voltage (V)
Connector	+	–	
	Terminal	Terminal	
F13	42 (Battery current sensor signal)	44 (Sensor ground)	Approx. 2.5

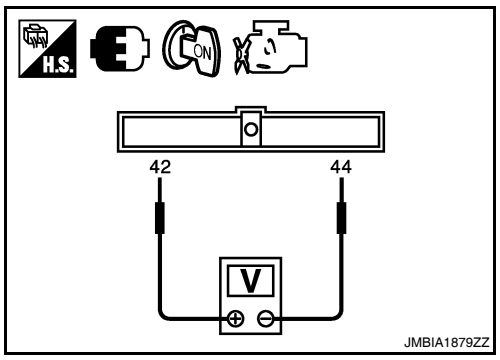

Before measuring the terminal voltage, confirm that the battery is fully charged. Refer to PG-3, "How to Handle Battery".

Is the inspection result normal?

YES >> INSPECTION END
NO >> Replace battery negative cable assembly.

P1553 BATTERY CURRENT SENSOR

Description

INFOID:0000000004362264

The power generation voltage variable control enables fuel consumption to be decreased by reducing the engine load which is caused by the power generation of the generator. The battery current sensor is installed to the battery cable at the negative terminal. The sensor measures the charging/discharging current of the battery. Based on the sensor signal, ECM judges whether or not the power generation voltage variable control is performed. When performing the power generation voltage variable control, ECM calculates the target power generation voltage based on the sensor signal. And ECM sends the calculated value as the power generation command value to IPDM E/R. For the details of the power generation voltage variable control, refer to CHG-6, "System Description".

CAUTION:

Never connect the electrical component or the ground wire directly to the battery terminal. The connection causes the malfunction of the power generation voltage variable control, and then the battery discharge may occur.

DTC Logic

INFOID:0000000004362265

DTC DETECTION LOGIC

NOTE:

If DTC P1553 is displayed with DTC P0643, first perform the trouble diagnosis for DTC P0643. Refer to EC-1379, "DTC Logic".

DTC No.	Trouble diagnosis name	DTC detecting condition	Possible cause
P1553	Battery current sensor performance	The signal voltage transmitted from the sensor to ECM is higher than the amount of the maximum power generation.	• Harness or connectors (The sensor circuit is open or shorted.) • Battery current sensor

DTC CONFIRMATION PROCEDURE

1.PRECONDITIONING

If DTC Confirmation Procedure has been previously conducted, always perform the following before conducting the next test.

1. Turn ignition switch OFF and wait at least 10 seconds.
2. Turn ignition switch ON.
3. Turn ignition switch OFF and wait at least 10 seconds.

TESTING CONDITION:

Before performing the following procedure, confirm that battery voltage is more than 8 V at idle.

>> GO TO 2.

2.PERFORM DTC CONFIRMATION PROCEDURE

1. Start engine and wait at least 10 seconds.
2. Check 1st trip DTC.

Is 1st trip DTC detected?

YES >> Go to EC-1404, "Diagnosis Procedure".
NO >> INSPECTION END

Diagnosis Procedure

INFOID:0000000004362266

1.CHECK GROUND CONNECTION

1. Turn ignition switch OFF.
2. Check ground connection E9. Refer to Ground Inspection in GI-45, "Circuit Inspection".

Is the inspection result normal?

YES >> GO TO 2.
NO >> Repair or replace ground connection.

2.CHECK BATTERY CURRENT SENSOR POWER SUPPLY CIRCUIT

1. Disconnect battery current sensor harness connector.
2. Turn ignition switch ON.
3. Check the voltage between battery current sensor harness connector and ground.

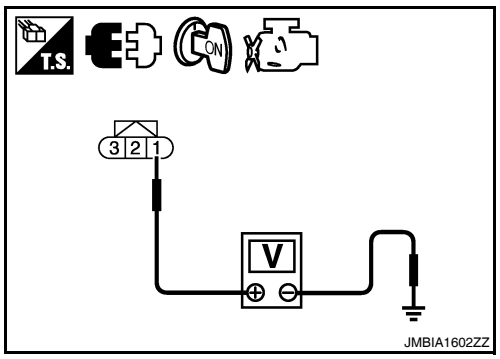

Battery current sensor		Ground	Voltage (V)
Connector	Terminal		
F5	1	Ground	Approx. 5

Is the inspection result normal?

YES >> GO TO 3.
NO >> Repair open circuit, short to ground or short to power in harness or connectors.

3. CHECK BATTERY CURRENT SENSOR GROUND CIRCUIT FOR OPEN AND SHORT

1. Turn ignition switch OFF.
2. Disconnect ECM harness connector.
3. Check the continuity between battery current sensor harness connector and ECM harness connector.

Battery current sensor		ECM		Continuity
Connector	Terminal	Connector	Terminal	
F5	2	F13	44	Existed

4. Also check harness for short to ground and short to power.

Is the inspection result normal?

YES >> GO TO 4.
NO >> Repair open circuit, short to ground or short to power in harness or connectors.

4. CHECK BATTERY CURRENT SENSOR INPUT SIGNAL CIRCUIT FOR OPEN AND SHORT

1. Check the continuity between battery current sensor harness connector and ECM harness connector.

Battery current sensor		ECM		Continuity
Connector	Terminal	Connector	Terminal	
F5	3	F13	42	Existed

2. Also check harness for short to ground and short to power.

Is the inspection result normal?

YES >> GO TO 5.
NO >> Repair open circuit, short to ground or short to power in harness or connectors.

5. CHECK BATTERY CURRENT SENSOR

Refer to EC-1399, "Component Inspection".

Is the inspection result normal?

YES >> GO TO 6.
NO >> Replace battery negative cable assembly.

6. CHECK INTERMITTENT INCIDENT

Refer to GI-42, "Intermittent Incident".

>> INSPECTION END

Component Inspection

INFOID:0000000004362267

1. CHECK BATTERY CURRENT SENSOR

1. Turn ignition switch OFF.
2. Reconnect harness connectors disconnected.

3. Disconnect battery negative cable (1).
- ⇦: Vehicle front
- ⬅: To body ground
4. Install jumper cable (A) between battery negative terminal and body ground.
5. Turn ignition switch ON.

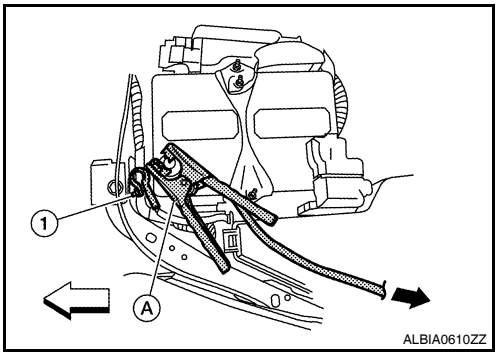

6. Check the voltage between ECM harness connector terminals under the following conditions.

ECM			Voltage (V)
Connector	+	–	
	Terminal	Terminal	
F13	42 (Battery current sensor signal)	44 (Sensor ground)	Approx. 2.5

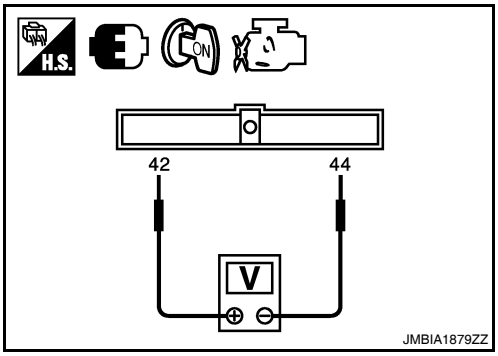

Before measuring the terminal voltage, confirm that the battery is fully charged. Refer to PG-3, "How to Handle Battery".

Is the inspection result normal?

YES >> INSPECTION END
NO >> Replace battery negative cable assembly.

P1554 BATTERY CURRENT SENSOR

Description

INFOID:0000000004362268

The power generation voltage variable control enables fuel consumption to be decreased by reducing the engine load which is caused by the power generation of the generator. The battery current sensor is installed to the battery cable at the negative terminal. The sensor measures the charging/discharging current of the battery. Based on the sensor signal, ECM judges whether or not the power generation voltage variable control is performed. When performing the power generation voltage variable control, ECM calculates the target power generation voltage based on the sensor signal. And ECM sends the calculated value as the power generation command value to IPDM E/R. For the details of the power generation voltage variable control, refer to CHG-6, "System Description".

CAUTION:

Never connect the electrical component or the ground wire directly to the battery terminal. The connection causes the malfunction of the power generation voltage variable control, and then the battery discharge may occur.

DTC Logic

INFOID:0000000004362269

DTC DETECTION LOGIC

NOTE:

If DTC P1554 is displayed with DTC P0643, first perform the trouble diagnosis for DTC P0643. Refer to EC-1379, "DTC Logic".

DTC No.	Trouble diagnosis name	DTC detecting condition	Possible cause
P1554	Battery current sensor performance	The output voltage of the battery current sensor is lower than the specified value while the battery voltage is high enough.	• Harness or connectors (The sensor circuit is open or shorted.) • Battery current sensor

DTC CONFIRMATION PROCEDURE

1. PERFORM COMPONENT FUNCTION CHECK

Perform component function check. Refer to EC-1407, "Component Function Check".

NOTE:

Use component function check to check the overall function of the battery current sensor circuit. During this check, a 1st trip DTC might not be confirmed.

Is the inspection result normal?

YES >> INSPECTION END

NO >> Go to EC-1408, "Diagnosis Procedure".

Component Function Check

INFOID:0000000004362270

1. PRECONDITIONING

TESTING CONDITION:

- **Before performing the following procedure, confirm that battery voltage is more than 12.8 V at idle.**
- **Before performing the following procedure, confirm that all load switches and A/C switch are turned OFF.**

>> GO TO 2.

2. PERFORM COMPONENT FUNCTION CHECK

With CONSULT-III

1. Start engine and let it idle.
2. Select “BAT CUR SEN” in “DATA MONITOR” mode with CONSULT-III.
3. Check “BAT CUR SEN” indication for 10 seconds.
   “BAT CUR SEN” should be above 2,300 mV at least once.

Without CONSULT-III

1. Start engine and let it idle.

2. Check voltage between ECM harness connector terminals under the following conditions.

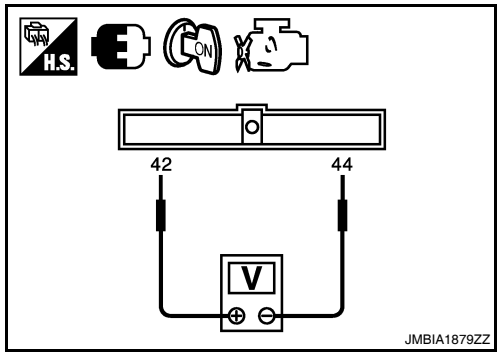

ECM			Voltage (V)
Connector	Terminal	Terminal	
	+	–	
F13	42 (Battery current sensor signal)	44 (Sensor ground)	Above 2.3 at least once

Is the inspection result normal?

YES >> INSPECTION END
NO >> Go to EC-1408, "Diagnosis Procedure"

Diagnosis Procedure

INFOID:0000000004362271

1. CHECK GROUND CONNECTION

1. Turn ignition switch OFF.
2. Check ground connection E9. Refer to Ground Inspection in GI-45, "Circuit Inspection".

Is the inspection result normal?

YES >> GO TO 2.
NO >> Repair or replace ground connection.

2. CHECK BATTERY CURRENT SENSOR POWER SUPPLY CIRCUIT

1. Disconnect battery current sensor harness connector.
2. Turn ignition switch ON.
3. Check the voltage between battery current sensor harness connector and ground.

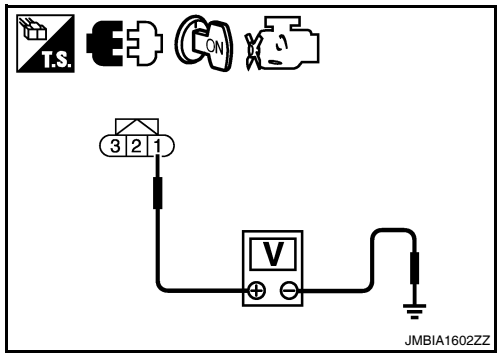

Battery current sensor		Ground	Voltage (V)
Connector	Terminal		
F5	1	Ground	Approx. 5

Is the inspection result normal?

YES >> GO TO 3.
NO >> Repair open circuit, short to ground or short to power in harness or connectors.

3. CHECK BATTERY CURRENT SENSOR GROUND CIRCUIT FOR OPEN AND SHORT

1. Turn ignition switch OFF.
2. Disconnect ECM harness connector.
3. Check the continuity between battery current sensor harness connector and ECM harness connector.

Battery current sensor		ECM		Continuity
Connector	Terminal	Connector	Terminal	
F5	2	F13	44	Existed

4. Also check harness for short to ground and short to power.

Is the inspection result normal?

YES >> GO TO 4.
NO >> Repair open circuit, short to ground or short to power in harness or connectors.

4. CHECK BATTERY CURRENT SENSOR INPUT SIGNAL CIRCUIT FOR OPEN AND SHORT

1. Check the continuity between battery current sensor harness connector and ECM harness connector.

Battery current sensor		ECM		Continuity
Connector	Terminal	Connector	Terminal	
F5	3	F13	42	Existed

2. Also check harness for short to ground and short to power.

Is the inspection result normal?

YES >> GO TO 5.
NO >> Repair open circuit, short to ground or short to power in harness or connectors.

5. CHECK BATTERY CURRENT SENSOR

Refer to EC-1405, "Component Inspection".

Is the inspection result normal?

YES >> GO TO 6.
NO >> Replace battery negative cable assembly.

6. CHECK INTERMITTENT INCIDENT

Refer to GI-42, "Intermittent Incident".

>> INSPECTION END

Component Inspection

INFOID:0000000004362272

1. CHECK BATTERY CURRENT SENSOR

1. Turn ignition switch OFF.
2. Reconnect harness connectors disconnected.
3. Disconnect battery negative cable (1).
- ⇦: Vehicle front
- ⬅: To body ground
4. Install jumper cable (A) between battery negative terminal and body ground.
5. Turn ignition switch ON.

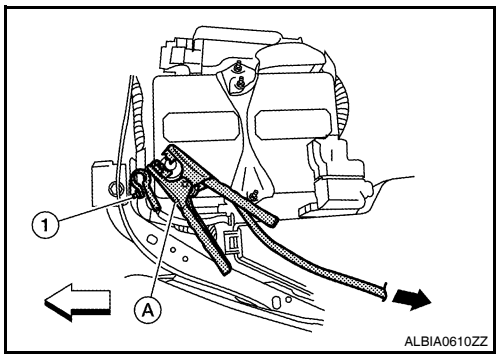

6. Check the voltage between ECM harness connector terminals under the following conditions.

ECM			Voltage (V)
Connector	+	–	
	Terminal	Terminal	
F13	42 (Battery current sensor signal)	44 (Sensor ground)	Approx. 2.5

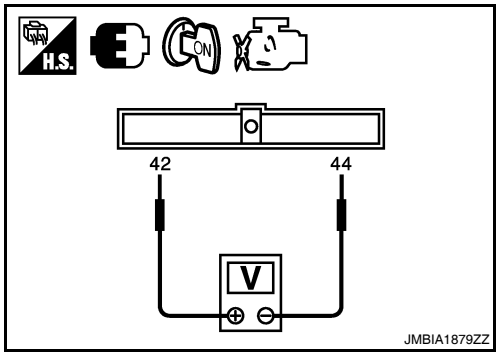

Before measuring the terminal voltage, confirm that the battery is fully charged. Refer to PG-3, "How to Handle Battery".

Is the inspection result normal?

YES >> INSPECTION END
NO >> Replace battery negative cable assembly.

P1564 ASCD STEERING SWITCH

Description

INFOID:0000000004362273

ASCD steering switch has variant values of electrical resistance for each button. ECM reads voltage variation of switch, and determines which button is operated.
Refer to EC-1090, "System Diagram" for the ASCD function.

DTC Logic

INFOID:0000000004362274

DTC DETECTION LOGIC

NOTE:
If DTC P1564 is displayed with DTC P0605, first perform the trouble diagnosis for DTC P0605. Refer to EC-1376, "DTC Logic".

DTC No.	Trouble diagnosis name	DTC detecting condition	Possible cause
P1564	ASCD steering switch	• An excessively high voltage signal from the ASCD steering switch is sent to ECM. • ECM detects that input signal from the ASCD steering switch is out of the specified range. • ECM detects that the ASCD steering switch is stuck ON.	• Harness or connectors (The switch circuit is open or shorted.) • ASCD steering switch • ECM

DTC CONFIRMATION PROCEDURE

1. PRECONDITIONING

If DTC Confirmation Procedure has been previously conducted, always perform the following before conducting the next test.
1. Turn ignition switch OFF and wait at least 10 seconds.
2. Turn ignition switch ON.
3. Turn ignition switch OFF and wait at least 10 seconds.

>> GO TO 2.

2. PERFORM DTC CONFIRMATION PROCEDURE

1. Turn ignition switch ON and wait at least 10 seconds.
2. Press MAIN switch for at least 10 seconds, then release it and wait at least 10 seconds.
3. Press CANCEL switch for at least 10 seconds, then release it and wait at least 10 seconds.
4. Press RESUME/ACCELERATE switch for at least 10 seconds, then release it and wait at least 10 seconds.
5. Press SET/COAST switch for at least 10 seconds, then release it and wait at least 10 seconds.
6. Check DTC.

Is DTC detected?

YES >> Go to EC-1410, "Diagnosis Procedure".
NO >> INSPECTION END

Diagnosis Procedure

INFOID:0000000004362275

1. CHECK GROUND CONNECTION

1. Turn ignition switch OFF.
2. Check ground connection E9. Refer to Ground Inspection in GI-45, "Circuit Inspection".

Is the inspection result normal?

YES >> GO TO 2.
NO >> Repair or replace ground connection.

2. CHECK ASCD STEERING SWITCH CIRCUIT

With CONSULT-III

1. Turn ignition switch ON.
2. Select “MAIN SW”, “CANCEL SW”, “RESUME/ACC SW” and “SET SW” in “DATA MONITOR” mode with CONSULT-III.
3. Check each item indication under the following conditions.

Monitor item	Condition		Indication
MAIN SW	MAIN switch	Pressed	ON
		Released	OFF
CANCEL SW	CANCEL switch	Pressed	ON
		Released	OFF
RESUME/ACC SW	RESUME/ACCEL-ERATE switch	Pressed	ON
		Released	OFF
SET SW	SET/COAST switch	Pressed	ON
		Released	OFF

Without CONSULT-III

1. Turn ignition switch ON.
2. Check the voltage between ECM harness connector terminals under the following conditions.

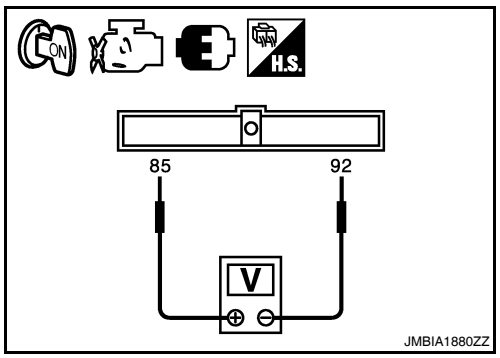

ECM			Condition	Voltage (V)
Connector	+	–		
	Terminal	Terminal		
E10	85 (ASCD steering switch signal)	92 (ASCD steering switch ground)	MAIN switch: Pressed	Approx. 0
			CANCEL switch: Pressed	Approx. 1
			SET/COAST switch: Pressed	Approx. 2
			RESUME/ACCELERATE switch: Pressed	Approx. 3
			All ASCD steering switches: Released	Approx. 4

Is the inspection result normal?

YES >> GO TO 8.
NO >> GO TO 3.

3. CHECK ASCD STEERING SWITCH GROUND CIRCUIT FOR OPEN AND SHORT

1. Turn ignition switch OFF.
2. Disconnect ECM harness connector.
3. Disconnect combination switch harness connector.
4. Check the continuity between combination switch and ECM harness connector.

Combination switch	ECM		Continuity
Terminal	Connector	Terminal	
16	E10	92	Existed

5. Also check harness for short to ground and short to power.

Is the inspection result normal?

YES >> GO TO 5.
NO >> GO TO 4.

4. DETECT MALFUNCTIONING PART

Check the following.
- Harness connectors E30, M1
- Combination switch (spiral cable)

- Harness for open and short between ECM and combination switch

>> Repair open circuit, short to ground or short to power in harness or connectors.

5. CHECK ASCD STEERING SWITCH INPUT SIGNAL CIRCUIT FOR OPEN AND SHORT

1. Check the continuity between combination switch and ECM harness connector.

Combination switch	ECM		Continuity
Terminal	Connector	Terminal	
13	E10	85	Existed

2. Also check harness for short to ground and short to power.

Is the inspection result normal?

YES >> GO TO 7.
NO >> GO TO 6.

6. DETECT MALFUNCTIONING PART

Check the following.
- Harness connectors E30, M1
- Combination switch (spiral cable)
- Harness for open and short between ECM and combination switch

>> Repair open circuit, short to ground or short to power in harness or connectors.

7. CHECK ASCD STEERING SWITCH

Refer to EC-1412, "Component Inspection".

Is the inspection result normal?

YES >> GO TO 8.
NO >> Replace ASCD steering switch.

8. CHECK INTERMITTENT INCIDENT

Refer to GI-42, "Intermittent Incident".

>> INSPECTION END

Component Inspection

INFOID:0000000004362276

1. CHECK ASCD STEERING SWITCH

1. Turn ignition switch OFF.
2. Disconnect combination switch (spiral cable) harness connector.
3. Check resistance between combination switch harness connector terminals as per the following.

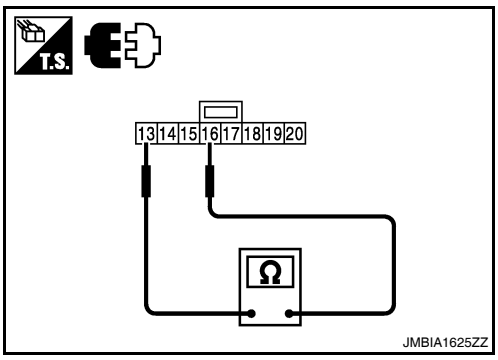

Combination switch		Condition	Resistance (Ω)
Connector	Terminals		
M88	13 and 16	MAIN switch: Pressed	Approx. 0
		CANCEL switch: Pressed	Approx. 250
		SET/COAST switch: Pressed	Approx. 660
		RESUME/ACCELERATE switch: Pressed	Approx. 1,480
		All ASCD steering switches: Released	Approx. 4,000

Is the inspection result normal?

YES >> INSPECTION END
NO >> Replace ASCD steering switch

P1572 ASCD BRAKE SWITCH

Description

INFOID:0000000004362277

When the brake pedal is depressed, ASCD brake switch is turned OFF and stop lamp switch is turned ON. ECM detects the state of the brake pedal by those two types of input (ON/OFF signal).
Refer to EC-1090, "System Diagram" for the ASCD function.

DTC Logic

INFOID:0000000004362278

DTC DETECTION LOGIC

NOTE:
- **If DTC P1572 is displayed with DTC P0605, first perform the trouble diagnosis for DTC P0605. Refer to EC-1376, "DTC Logic".**
- **This self-diagnosis has the one trip detection logic. When malfunction A is detected, DTC is not stored in ECM memory. And in that case, 1st trip DTC and 1st trip freeze frame data are displayed. 1st trip DTC is erased when ignition switch is turned OFF. And even when malfunction A is detected in two consecutive trips, DTC is not stored in ECM memory.**

DTC No.	Trouble diagnosis name	DTC detecting condition		Possible cause
P1572	ASCD brake switch	A)	When the vehicle speed is above 30 km/h (19 MPH), ON signals from the stop lamp switch and the ASCD brake switch are sent to the ECM at the same time.	• Harness or connectors (The stop lamp switch circuit is shorted.) • Harness or connectors (The ASCD brake switch circuit is shorted.) • Stop lamp switch • ASCD brake switch • Incorrect stop lamp switch installation • Incorrect ASCD brake switch installation • ECM
		B)	ASCD brake switch signal is not sent to ECM for extremely long time while the vehicle is being driven.	

DTC CONFIRMATION PROCEDURE

1.PRECONDITIONING

If DTC Confirmation Procedure has been previously conducted, always perform the following before conducting the next test.
1. Turn ignition switch OFF and wait at least 10 seconds.
2. Turn ignition switch ON.
3. Turn ignition switch OFF and wait at least 10 seconds.

NOTE:
The procedure for malfunction B is not described. It takes an extremely long time to complete the procedure for malfunction B. By performing the procedure for malfunction A, the condition that causes malfunction B can be detected.

>> GO TO 2.

2.PERFORM DTC CONFIRMATION PROCEDURE

With CONSULT-III
1. Start engine (ESP switch OFF).
2. Select “DATA MONITOR” mode with CONSULT-III.
3. Press MAIN switch and check that CRUISE lamp illuminate.
4. Drive the vehicle for at least 5 consecutive seconds under the following conditions.

   CAUTION:
   Always drive vehicle at a safe speed.
   NOTE:
   This procedure may be conducted with the drive wheels lifted in the shop or by driving the vehicle. If a road test is expected to be easier, it is unnecessary to lift the vehicle.

VHCL SPEED SE	More than 30 km/h (19 mph)
Selector lever	Suitable position

5. Check 1st trip DTC.

With GST

Follow the procedure “With CONSULT-III” above.

Is 1st trip DTC detected?

YES >> Go to EC-1414, "Diagnosis Procedure".
NO >> GO TO 3.

3. PERFORM DTC CONFIRMATION PROCEDURE

With CONSULT-III

1. Drive the vehicle for at least 5 consecutive seconds under the following conditions.

   CAUTION:
   Always drive vehicle at a safe speed.
   NOTE:
   This procedure may be conducted with the drive wheels lifted in the shop or by driving the vehicle. If a road test is expected to be easier, it is unnecessary to lift the vehicle.

VHCL SPEED SE	More than 30 km/h (19 mph)
Selector lever	Suitable position
Driving location	Depress the brake pedal for more than five seconds so as not to come off from the above-mentioned vehicle speed.

2. Check 1st trip DTC.

With GST

Follow the procedure “With CONSULT-III” above.

Is 1st trip DTC detected?

YES >> Go to EC-1414, "Diagnosis Procedure".
NO >> INSPECTION END

Diagnosis Procedure

INFOID:0000000004362279

1. CHECK OVERALL FUNCTION-I

With CONSULT-III

1. Turn ignition switch ON.
2. Select “BRAKE SW1” in “DATA MONITOR” mode with CONSULT-III.
3. Check “BRAKE SW1” indication under the following conditions.

Monitor item	Condition		Indication
BRAKE SW1	Brake pedal (CVT) Brake pedal and clutch pedal (M/T)	Slightly depressed	OFF
		Fully released	ON

Without CONSULT-III

1. Turn ignition switch ON.
2. Check the voltage between ECM harness connectors.

ECM			Condition		Voltage
Con-nector	+	–			
	Terminal	Terminal			
E10	110 (ASCD brake switch signal)	112	Brake pedal (CVT) Brake pedal and clutch pedal (M/T)	Slightly depressed	Approx. 0 V
				Fully re-leased	Battery voltage

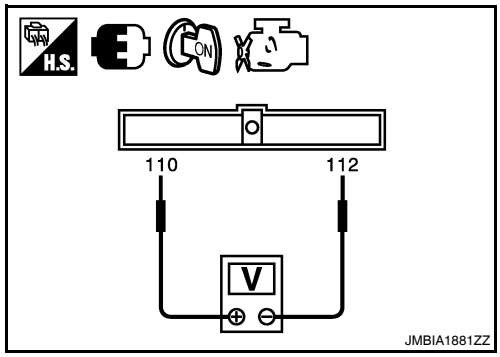

Is the inspection result normal?

YES >> GO TO 2.

NO-1 >> CVT models: GO TO 3.
NO-2 >> M/T models: GO TO 7.

2. CHECK OVERALL FUNCTION-II

With CONSULT-III

Check “BRAKE SW2” indication in “DATA MONITOR” mode.

Monitor item	Condition		Indication
BRAKE SW2	Brake pedal	Slightly depressed	ON
		Fully released	OFF

Without CONSULT-III

Check the voltage between ECM harness connectors.

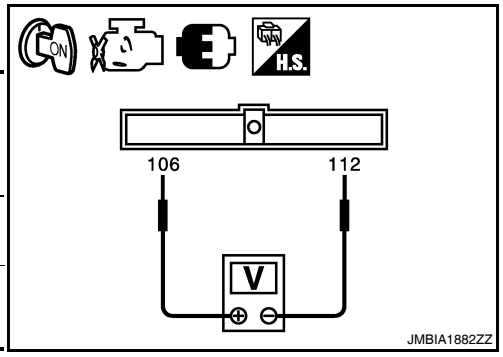

ECM			Condition		Voltage
Connector	+ Terminal	– Terminal			
E10	106 (Stop lamp switch signal)	112	Brake pedal	Slightly depressed	Battery voltage
				Fully released	Approx. 0 V

Is the inspection result normal?

YES >> GO TO 19.
NO >> GO TO 15.

3. CHECK ASCD BRAKE SWITCH POWER SUPPLY CIRCUIT

1. Turn ignition switch OFF.
2. Disconnect ASCD brake switch harness connector.
3. Turn ignition switch ON.
4. Check the voltage between ASCD brake switch harness connector and ground.

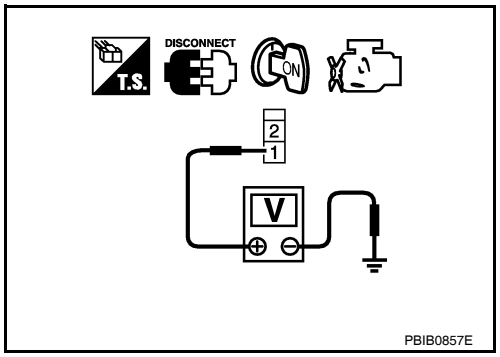

ASCD brake switch		Ground	Voltage
Connector	Terminal		
E37	1	Ground	Battery voltage

Is the inspection result normal?

YES >> GO TO 5.
NO >> GO TO 4.

4. DETECT MALFUNCTIONING PART

Check the following.
- Fuse block (J/B) connector E6
- 10 A fuse (No. 3)
- Harness for open or short between ASCD brake switch and fuse

>> Repair open circuit, short to ground or short to power in harness or connectors.

5. CHECK ASCD BRAKE SWITCH INPUT SIGNAL CIRCUIT FOR OPEN AND SHORT

1. Turn ignition switch OFF.
2. Disconnect ECM harness connector.
3. Check the continuity between ASCD brake switch harness connector and ECM harness connector.

ASCD brake switch		ECM		Continuity
Connector	Terminal	Connector	Terminal	
E37	2	E10	110	Existed

4. Also check harness for short to ground and short to power.

Is the inspection result normal?

YES >> GO TO 6.
NO >> Repair open circuit, short to ground or short to power in harness or connectors.

6. CHECK ASCD BRAKE SWITCH

Refer to EC-1418, "Component Inspection (ASCD Brake Switch)".

Is the inspection result normal?

YES >> GO TO 19.
NO >> Replace ASCD brake switch.

7. CHECK ASCD BRAKE SWITCH CIRCUIT

1. Turn ignition switch OFF.
2. Disconnect ASCD clutch switch harness connector.
3. Turn ignition switch ON.
4. Check the voltage between ASCD clutch switch harness connector and ground.

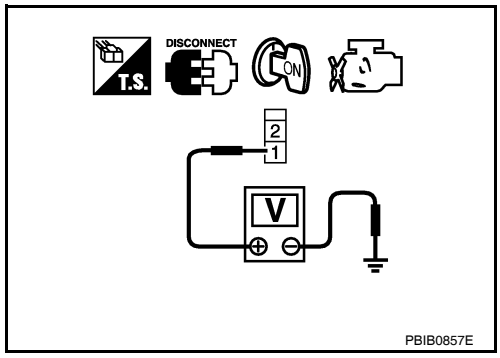

ASCD clutch switch		Ground	Condition		Voltage
Connector	Terminal				
E39	1	Ground	Brake pedal	Slightly depressed	Approx. 0 V
				Fully released	Battery voltage

Is the inspection result normal?

YES >> GO TO 12.
NO >> GO TO 8.

8. CHECK ASCD BRAKE SWITCH POWER SUPPLY CIRCUIT

1. Turn ignition switch OFF.
2. Disconnect ASCD brake switch harness connector.
3. Turn ignition switch ON.
4. Check the voltage between ASCD brake switch harness connector and ground.

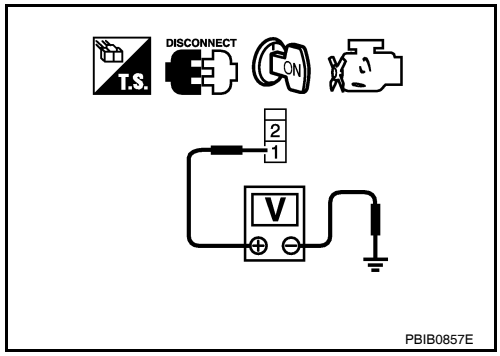

ASCD brake switch		Ground	Voltage
Connector	Terminal		
E37	1	Ground	Battery voltage

Is the inspection result normal?

YES >> GO TO 10.
NO >> GO TO 9.

9. DETECT MALFUNCTIONING PART

Check the following.
- Fuse block (J/B) connector E6
- 10 A fuse (No. 3)
- Harness for open or short between ASCD brake switch and fuse

>> Repair open circuit, short to ground or short to power in harness or connectors.

10. CHECK ASCD BRAKE SWITCH INPUT SIGNAL CIRCUIT FOR OPEN AND SHORT

1. Turn ignition switch OFF.
2. Check the continuity between ASCD brake switch harness connector and ASCD clutch switch harness connector.

ASCD brake switch		ASCD clutch switch		Continuity
Connector	Terminal	Connector	Terminal	
E37	2	E39	1	Existed

Is the inspection result normal?

YES >> GO TO 11.
NO >> Repair open circuit, short to ground or short to power in harness or connectors.

11. CHECK ASCD BRAKE SWITCH

Refer to EC-1418, "Component Inspection (ASCD Brake Switch)".

Is the inspection result normal?

YES >> GO TO 19.
NO >> Replace ASCD brake switch.

12. CHECK ASCD BRAKE SWITCH INPUT SIGNAL CIRCUIT FOR OPEN AND SHORT

1. Turn ignition switch OFF.
2. Disconnect ECM harness connector.
3. Check the continuity between ASCD clutch switch harness connector and ECM harness connector.

ASCD clutch switch		ECM		Continuity
Connector	Terminal	Connector	Terminal	
E39	2	E10	110	Existed

4. Also check harness for short to ground and short to power.

Is the inspection result normal?

YES >> GO TO 14.
NO >> GO TO 13.

13. DETECT MALFUNCTIONING PART

Check the following.
- Junction block connectors E45, E46
- Joint connector-E06 E27
- Harness for open or short between ASCD clutch switch and ECM

>> Repair open circuit, short to ground or short to power in harness or connectors.

14. CHECK ASCD CLUTCH SWITCH

Refer to EC-1419, "Component Inspection (ASCD Clutch Switch)".

Is the inspection result normal?

YES >> GO TO 19.
NO >> Replace ASCD clutch switch.

15. CHECK STOP LAMP SWITCH POWER SUPPLY CIRCUIT

1. Turn ignition switch OFF.
2. Disconnect stop lamp switch harness connector.

3. Check the voltage between stop lamp switch harness connector and ground.

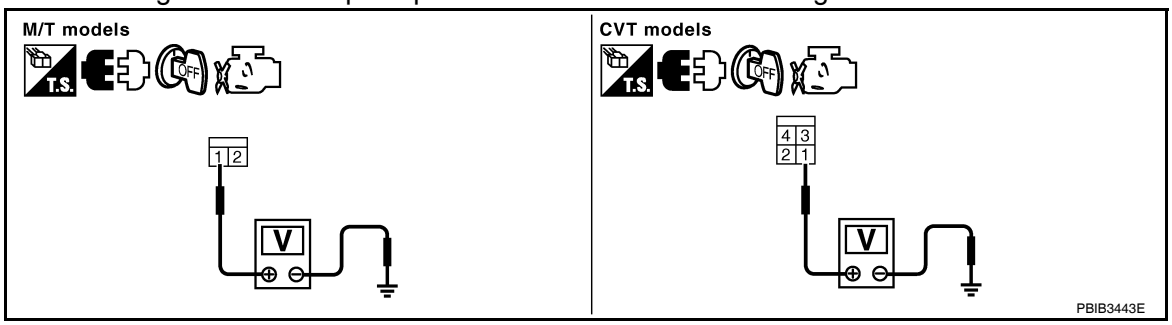

Stop lamp switch		Ground	Voltage
Connector	Terminal		
E38	1	Ground	Battery voltage

Is the inspection result normal?

YES >> GO TO 17.
NO >> GO TO 16.

16. DETECT MALFUNCTIONING PART

Check the following.
- Fuse block (J/B) connector E6
- 10 A fuse (No. 7)
- Harness for open or short between stop lamp switch and battery

>> Repair open circuit, short to ground or short to power in harness or connectors.

17. CHECK STOP LAMP SWITCH INPUT SIGNAL CIRCUIT FOR OPEN AND SHORT

1. Disconnect ECM harness connector.
2. Check the continuity between stop lamp switch harness connector and ECM harness connector.

Stop lamp switch		ECM		Continuity
Connector	Terminal	Connector	Terminal	
E38	2	E10	106	Existed

3. Also check harness for short to ground and short to power.

Is the inspection result normal?

YES >> GO TO 18.
NO >> Repair open circuit, short to ground or short to power in harness or connectors.

18. CHECK STOP LAMP SWITCH

Refer to EC-1420, "Component Inspection (Stop Lamp Switch)"

Is the inspection result normal?

YES >> GO TO 19.
NO >> Replace stop lamp switch.

19. CHECK INTERMITTENT INCIDENT

Refer to GI-42, "Intermittent Incident".

>> INSPECTION END

Component Inspection (ASCD Brake Switch)

INFOID:0000000004362280

1. CHECK ASCD BRAKE SWITCH-I

1. Turn ignition switch OFF.
2. Disconnect ASCD brake switch harness connector.

3. Check the continuity between ASCD brake switch terminals under the following conditions.

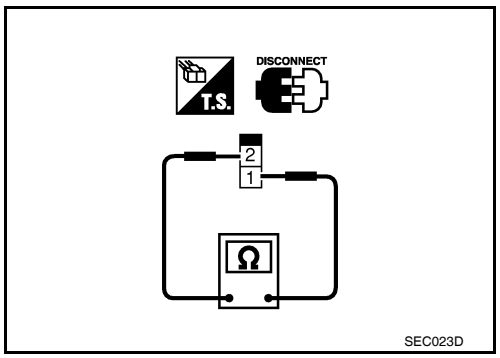

Terminals	Condition		Continuity
1 and 2	Brake pedal	Fully released	Existed
		Slightly depressed	Not existed

Is the inspection result normal?

YES >> INSPECTION END
NO >> GO TO 2.

2. CHECK ASCD BRAKE SWITCH-II

1. Adjust ASCD brake switch installation. Refer to BR-13, "Inspection and Adjustment".
2. Check the continuity between ASCD brake switch terminals under the following conditions.

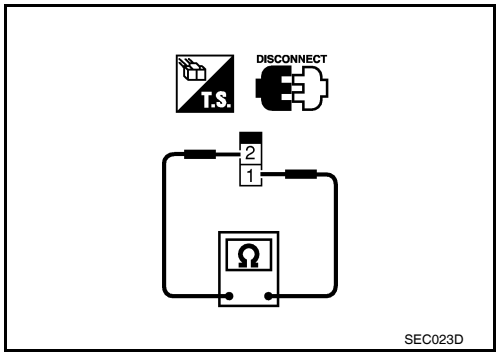

Terminals	Condition		Continuity
1 and 2	Brake pedal	Fully released	Existed
		Slightly depressed	Not existed

Is the inspection result normal?

YES >> INSPECTION END
NO >> Replace ASCD brake switch.

Component Inspection (ASCD Clutch Switch)

INFOID:0000000004455896

1. CHECK ASCD CLUTCH SWITCH-I

1. Turn ignition switch OFF.
2. Disconnect ASCD clutch switch harness connector.
3. Check harness continuity between ASCD clutch switch terminals under the following conditions.

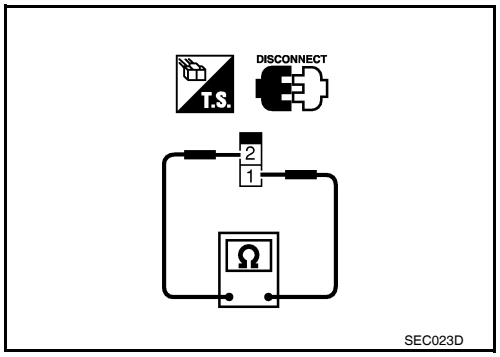

Terminals	Condition		Continuity
1 and 2	Clutch pedal	Fully released	Existed
		Slightly depressed	Not existed

Is the inspection result normal?

YES >> INSPECTION END
NO >> GO TO 2.

2. CHECK ASCD CLUTCH SWITCH-II

1. Adjust ASCD clutch switch installation. Refer to BR-13, "Inspection and Adjustment".
2. Check harness continuity between ASCD clutch switch terminals under the following conditions.

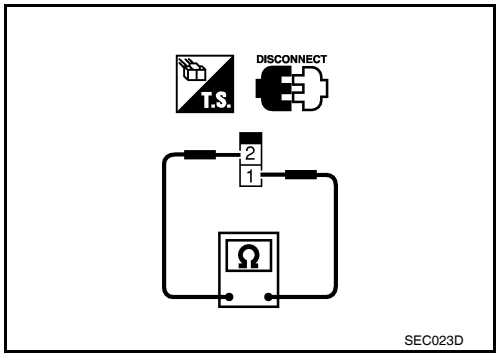

Terminals	Condition		Continuity
1 and 2	Clutch pedal	Fully released	Existed
		Slightly depressed	Not existed

Is the inspection result normal?

YES >> INSPECTION END
NO >> Replace ASCD clutch switch.

Component Inspection (Stop Lamp Switch)

INFOID:0000000004362281

1. CHECK STOP LAMP SWITCH-I

1. Turn ignition switch OFF.
2. Disconnect stop lamp switch harness connector.
3. Check harness continuity between stop lamp switch terminals under the following conditions.

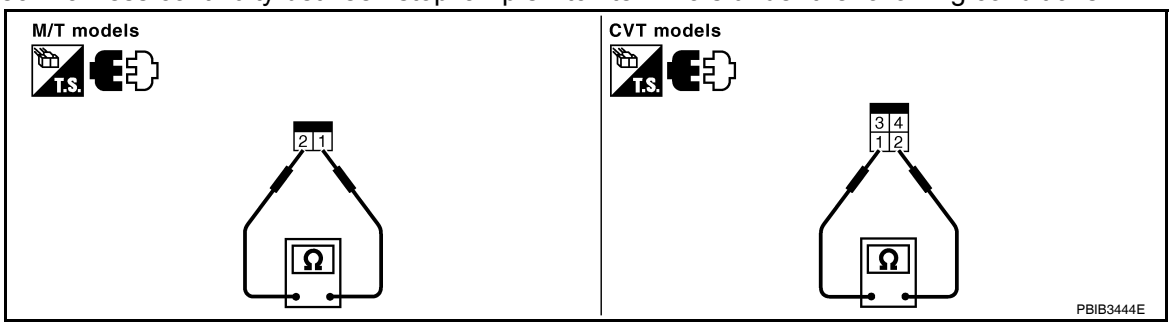

Terminals	Condition		Continuity
1 and 2	Brake pedal	Fully released	Not existed
		Slightly depressed	Existed

Is the inspection result normal?

YES >> INSPECTION END
NO >> GO TO 2.

2. CHECK STOP LAMP SWITCH-II

1. Adjust stop lamp switch installation. Refer to BR-13, "Inspection and Adjustment".
2. Check harness continuity between stop lamp switch terminals under the following conditions.

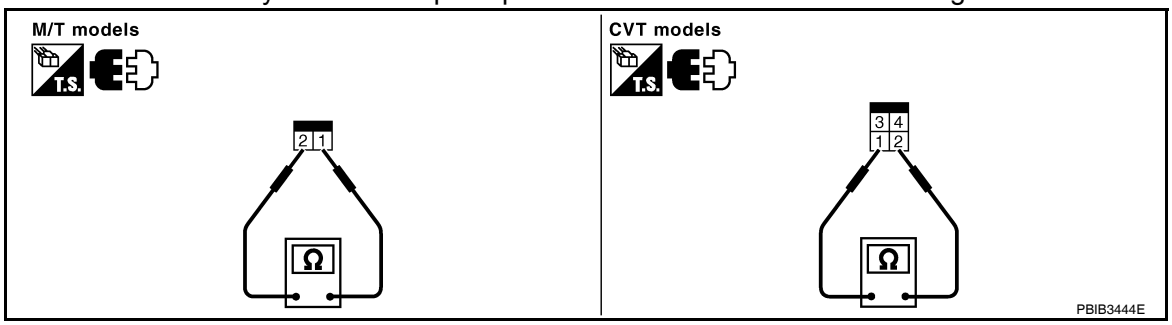

Terminals	Condition		Continuity
1 and 2	Brake pedal	Fully released	Not existed
		Slightly depressed	Existed

Is the inspection result normal?

YES >> INSPECTION END
NO >> Replace stop lamp switch.

P1574 ASCD VEHICLE SPEED SENSOR

Description

INFOID:0000000004362282

The ECM receives two vehicle speed signals via the CAN communication line. One is sent from combination meter, and the other is from TCM (Transmission control module). The ECM uses these signals for ASCD control. Refer to EC-1090, "System Diagram" for ASCD functions.

DTC Logic

INFOID:0000000004362283

DTC DETECTION LOGIC

NOTE:

- **If DTC P1574 is displayed with DTC UXXXX, first perform the trouble diagnosis for DTC UXXXX. Refer to EC-1179, "DTC Logic".**
- **If DTC P1574 is displayed with DTC P0500, first perform the trouble diagnosis for DTC P0500. Refer to EC-1365, "DTC Logic".**
- **If DTC P1574 is displayed with DTC P0605, first perform the trouble diagnosis for DTC P0605. Refer to EC-1376, "DTC Logic".**
- **If DTC P1574 is displayed with DTC P0607, first perform the trouble diagnosis for DTC P0607. Refer to EC-1378, "DTC Logic".**

DTC No.	Trouble diagnosis name	DTC detecting condition	Possible cause
P1574	ASCD vehicle speed sensor	The difference between the two vehicle speed signals is out of the specified range.	• Harness or connectors (The CAN communication line is open or shorted.) • Combination meter • ABS actuator and electric unit (control unit) • Wheel sensor • TCM • ECM

DTC CONFIRMATION PROCEDURE

1.PRECONDITIONING

If DTC Confirmation Procedure has been previously conducted, always perform the following before conducting the next test.

1. Turn ignition switch OFF and wait at least 10 seconds.
2. Turn ignition switch ON.
3. Turn ignition switch OFF and wait at least 10 seconds.

>> GO TO 2.

2.PERFORM DTC CONFIRMATION PROCEDURE

1. Start engine (ESP switch OFF).
2. Drive the vehicle at more than 40 km/h (25 MPH).
   CAUTION:
   Always drive vehicle at a safe speed.
   NOTE:
   This procedure may be conducted with the drive wheels lifted in the shop or by driving the vehicle. If a road test is expected to be easier, it is unnecessary to lift the vehicle.
3. Check DTC.

Is DTC detected?

YES >> Go to EC-1421, "Diagnosis Procedure".
NO >> INSPECTION END

Diagnosis Procedure

INFOID:0000000004362284

1.CHECK DTC WITH TCM

Check DTC with TCM. Refer to TM-117, "Diagnosis Description".

Is the inspection result normal?

YES >> GO TO 2.
NO >> Perform trouble shooting relevant to DTC indicated.

2. CHECK DTC WITH “ABS ACTUATOR AND ELECTRIC UNIT (CONTROL UNIT)”

Refer to BRC-223, "DTC No. Index".

Is the inspection result normal?

YES >> GO TO 3.
NO >> Repair or replace malfunctioning part.

3. CHECK COMBINATION METER FUNCTION

Refer to MWI-95, "DTC Index".

>> INSPECTION END

P1700 CVT CONTROL SYSTEM

Description

INFOID:0000000004362285

This DTC is displayed with other DTC regarding TCM. Perform the trouble diagnosis for corresponding DTC. Refer to EC-1555, "DTC Index". When this DTC is detected, the ASCD control is canceled.

P1715 INPUT SPEED SENSOR (PRIMARY SPEED SENSOR)

Description

INFOID:0000000004362286

ECM receives primary speed sensor signal from TCM via the CAN communication line. ECM uses this signal for engine control.

DTC Logic

INFOID:0000000004362287

DTC DETECTION LOGIC

NOTE:

- **If DTC P1715 is displayed with DTC UXXXX first perform the trouble diagnosis for DTC UXXXX. Refer to EC-1179, "DTC Logic".**
- **If DTC P1715 is displayed with DTC P0335, first perform the trouble diagnosis for DTC P0335. Refer to EC-1292, "DTC Logic".**
- **If DTC P1715 is displayed with DTC P0340, P0345, first perform the trouble diagnosis for DTC P0340, P0345. Refer to EC-1296, "DTC Logic".**
- **If DTC P1715 is displayed with DTC P0605, first perform the trouble diagnosis for DTC P0605. Refer to EC-1376, "DTC Logic".**
- **If DTC P1715 is displayed with DTC P0607, first perform the trouble diagnosis for DTC P0607. Refer to EC-1378, "DTC Logic".**

DTC No.	Trouble diagnosis name	DTC detecting condition	Possible cause
P1715	Input speed sensor (Primary speed sensor) (TCM output)	Primary speed sensor signal is different from the theoretical value calculated by ECM from secondary sensor signal and engine rpm signal.	• Harness or connectors (The CAN communication line is open or shorted.) • Harness or connectors (Primary speed sensor circuit is open or shorted.) • TCM

DTC CONFIRMATION PROCEDURE

1. PRECONDITIONING

If DTC Confirmation Procedure has been previously conducted, always perform the following before conducting the next test.

1. Turn ignition switch OFF and wait at least 10 seconds.
2. Turn ignition switch ON.
3. Turn ignition switch OFF and wait at least 10 seconds.

>> GO TO 2.

2. PERFORM DTC CONFIRMATION PROCEDURE

1. Start engine.
2. Drive vehicle at a speed of more than 50 km/h (31 MPH) for at least 5 seconds.
3. Check 1st trip DTC.

Is 1st trip DTC detected?

YES >> Go to EC-1424, "Diagnosis Procedure".
NO >> INSPECTION END

Diagnosis Procedure

INFOID:0000000004362288

1. CHECK DTC WITH TCM

Check DTC with TCM. Refer to TM-221, "DTC Index".

Is the inspection result normal?

YES >> GO TO 2.
NO >> Perform trouble shooting relevant to DTC indicated.

2. REPLACE TCM

Replace TCM. Refer to TM-254, "Removal and Installation".

>> INSPECTION END

P1720 VSS

Description

INFOID:0000000004362289

ECM receives two vehicle speed signals via the CAN communication line. One is sent from “ABS actuator and electric unit (control unit)” via the combination meter, and the other is from TCM (Transmission control module). ECM uses these signals for engine control.

DTC Logic

INFOID:0000000004362290

DTC DETECTION LOGIC

NOTE:

- **If DTC P1720 is displayed with DTC UXXXX first perform the trouble diagnosis for DTC UXXXX. Refer to EC-1179, "DTC Logic".**
- **If DTC P1720 is displayed with DTC P0607, first perform the trouble diagnosis for DTC P0607. Refer to EC-1378, "DTC Logic".**

DTC No.	Trouble diagnosis name	DTC detecting condition	Possible cause
P1720	Vehicle speed sensor (TCM output)	The difference between two vehicle speed signals is out of the specified range.	• Harness or connectors (Secondary speed sensor circuit is open or shorted.) • Harness or connectors (Wheel sensor circuit is open or shorted.) • TCM • Secondary speed sensor • ABS actuator and electric unit (control unit) • Wheel sensor • Combination meter

DTC CONFIRMATION PROCEDURE

1.PRECONDITIONING

If DTC Confirmation Procedure has been previously conducted, always perform the following before conducting the next test.

1. Turn ignition switch OFF and wait at least 10 seconds.
2. Turn ignition switch ON.
3. Turn ignition switch OFF and wait at least 10 seconds.

>> GO TO 2.

2.PERFORM DTC CONFIRMATION PROCEDURE

1. Start engine.
2. Drive vehicle at a speed of 20 km/h (12 MPH) or more for at least 5 seconds without depressing the brake pedal.
3. Check 1st trip DTC.

Is 1st trip DTC detected?

YES >> Go to EC-1426, "Diagnosis Procedure".
NO >> INSPECTION END

Diagnosis Procedure

INFOID:0000000004362291

1.CHECK DTC WITH TCM

Check DTC with TCM. Refer to TM-221, "DTC Index".

Is the inspection result normal?

YES >> GO TO 2.
NO >> Perform trouble shooting relevant to DTC indicated.

2.CHECK DTC WITH “ABS ACTUATOR AND ELECTRIC UNIT (CONTROL UNIT)”

Refer to BRC-223, "DTC No. Index".

Is the inspection result normal?

YES >> GO TO 3.
NO >> perform trouble shooting relevant to DTC indicated.

3. CHECK COMBINATION METER FUNCTION

Refer to MWI-95, "DTC Index".

>> INSPECTION END

P1800 VIAS CONTROL SOLENOID VALVE 1

Description

INFOID:0000000004362292

The VIAS control solenoid valve 1 cuts the intake manifold vacuum signal for power valve 1 control. It responds to ON/OFF signals from the ECM. When the solenoid is OFF, the vacuum signal from the intake manifold is cut. When the ECM sends an ON signal the coil pulls the plunger downward and sends the vacuum signal to the power valve actuator 1.

DTC Logic

INFOID:0000000004362293

DTC DETECTION LOGIC

DTC No.	Trouble diagnosis name	DTC detecting condition	Possible cause
P1800	VIAS control solenoid valve 1 circuit	An excessively low or high voltage signal is sent to ECM via the VIAS control solenoid valve 1.	• Harness or connectors (The solenoid valve 1 circuit is open or shorted.) • VIAS control solenoid valve 1

DTC CONFIRMATION PROCEDURE

1.CONDITIONING

If DTC Confirmation Procedure has been previously conducted, always perform the following before conducting the next test.

1. Turn ignition switch OFF and wait at least 10 seconds.
2. Turn ignition switch ON.
3. Turn ignition switch OFF and wait at least 10 seconds.

TESTING CONDITION:
Before performing the following procedure, confirm battery voltage is more than 11 V at idle.

>> GO TO 2.

2.PERFORM DTC CONFIRMATION PROCEDURE

1. Start engine and let it idle for at least 5 seconds.
2. Check 1st trip DTC.

Is 1st trip DTC detected?

YES >> Go to EC-1428, "Diagnosis Procedure".
NO >> INSPECTION END

Diagnosis Procedure

INFOID:0000000004362294

1.CHECK VIAS CONTROL SOLENOID VALVE 1 POWER SUPPLY CIRCUIT

1. Turn ignition switch OFF.
2. Disconnect VIAS control solenoid valve 1 harness connector.
3. Turn ignition switch ON.
4. Check the voltage between VIAS control solenoid valve 1 harness connector and ground.

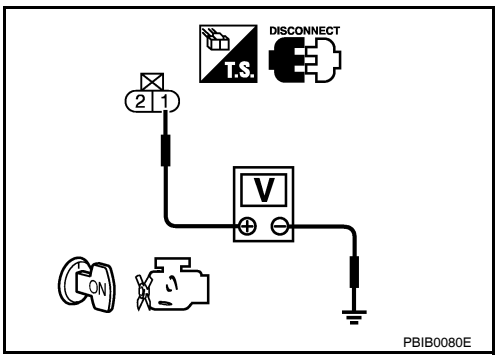

VIAS control solenoid valve 1		Ground	Voltage
Connector	Terminal		
F63	1	Ground	Battery voltage

Is the inspection result normal?

YES >> GO TO 2.
NO >> Repair open circuit, short to ground or short to power in harness or connectors.

2.CHECK VIAS CONTROL SOLENOID VALVE 1 OUTPUT SIGNAL CIRCUIT FOR OPEN AND SHORT

1. Turn ignition switch OFF.

2. Disconnect ECM harness connector.
3. Check the continuity between VIAS control solenoid valve 1 harness connector and ECM harness connector.

VIAS control solenoid valve 1		ECM		Continuity
Connector	Terminal	Connector	Terminal	
F63	2	F14	27	Existed

4. Also check harness for short to ground and short to power.

Is the inspection result normal?

YES >> GO TO 3.
NO >> Repair open circuit, short to ground or short to power in harness or connectors.

3. CHECK VIAS CONTROL SOLENOID VALVE 1

Refer to EC-1429, "Component Inspection".

Is the inspection result normal?

YES >> GO TO 4.
NO >> Replace VIAS control solenoid valve 1.

4. CHECK INTERMITTENT INCIDENT

Refer to GI-42, "Intermittent Incident".

>> INSPECTION END

Component Inspection

INFOID:0000000004362295

1. CHECK VIAS CONTROL SOLENOID VALVE 1

With CONSULT-III

1. Turn ignition switch OFF.
2. Reconnect all harness connectors disconnected.
3. Disconnect vacuum hoses connected to VIAS control solenoid valve 1.
4. Turn ignition switch ON.
5. Select “VIAS S/V-1” in “ACTIVE TEST” mode with CONSULT-III.
6. Check air passage continuity and operation delay time under the following conditions.

Condition (VIAS S/V-1)	Air passage continuity between (A) and (B)	Air passage continuity between (A) and (C)
ON	Existed	Not existed
OFF	Not existed	Existed

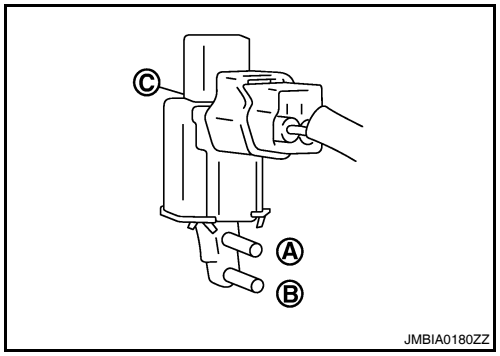

Without CONSULT-III

1. Turn ignition switch OFF.
2. Disconnect VIAS control solenoid valve 1 harness connector.
3. Disconnect vacuum hoses connected to VIAS volume control solenoid valve 1.

4. Check air passage continuity and operation delay time under the following conditions.

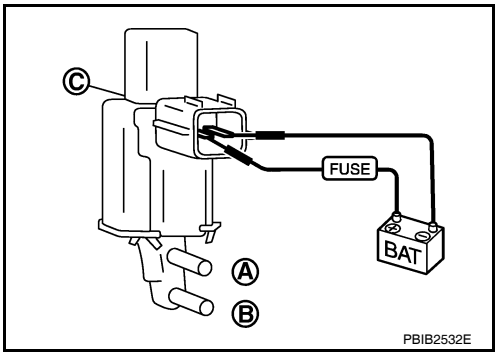

Condition	Air passage continuity between (A) and (B)	Air passage continuity between (A) and (C)
12 V direct current supply between terminals 1 and 2	Existed	Not existed
No supply	Not existed	Existed

Is the inspection result normal?

YES >> INSPECTION END
NO >> Replace VIAS control solenoid valve 1

P1801 VIAS CONTROL SOLENOID VALVE 2

Description

INFOID:0000000004362296

The VIAS control solenoid valve 2 cuts the intake manifold vacuum signal for power valve 2 control. It responds to ON/OFF signals from the ECM. When the solenoid is OFF, the vacuum signal from the intake manifold is cut. When the ECM sends an ON signal the coil pulls the plunger downward and sends the vacuum signal to the power valve actuator 2.

DTC Logic

INFOID:0000000004362297

DTC DETECTION LOGIC

DTC No.	Trouble diagnosis name	DTC detecting condition	Possible cause
P1801	VIAS control solenoid valve 2 circuit	An excessively low or high voltage signal is sent to ECM via the VIAS control solenoid valve 2.	• Harness or connectors (The solenoid valve 2 circuit is open or shorted.) • VIAS control solenoid valve 2

DTC CONFIRMATION PROCEDURE

1. CONDITIONING

If DTC Confirmation Procedure has been previously conducted, always perform the following before conducting the next test.

1. Turn ignition switch OFF and wait at least 10 seconds.
2. Turn ignition switch ON.
3. Turn ignition switch OFF and wait at least 10 seconds.

TESTING CONDITION:
Before performing the following procedure, confirm battery voltage is more than 11 V at idle.

>> GO TO 2.

2. PERFORM DTC CONFIRMATION PROCEDURE

1. Start engine and let it idle for at least 5 seconds.
2. Check 1st trip DTC.

Is 1st trip DTC detected?

YES >> Go to EC-1431, "Diagnosis Procedure".
NO >> INSPECTION END

Diagnosis Procedure

INFOID:0000000004362298

1. CHECK VIAS CONTROL SOLENOID VALVE 2 POWER SUPPLY CIRCUIT

1. Turn ignition switch OFF.
2. Disconnect VIAS control solenoid valve 2 harness connector.
3. Turn ignition switch ON.
4. Check the voltage between VIAS control solenoid valve 2 harness connector and ground.

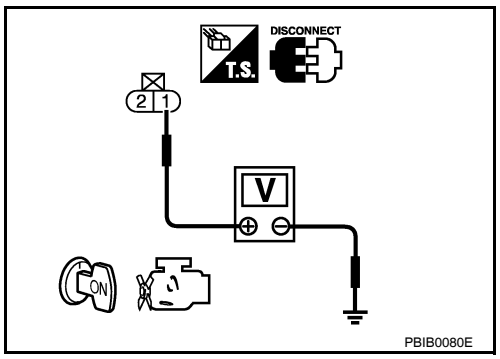

VIAS control solenoid valve 2		Ground	Voltage
Connector	Terminal		
F65	1	Ground	Battery voltage

Is the inspection result normal?

YES >> GO TO 2.
NO >> Repair open circuit, short to ground or short to power in harness or connectors.

2. CHECK VIAS CONTROL SOLENOID VALVE 2 OUTPUT SIGNAL CIRCUIT FOR OPEN AND SHORT

1. Turn ignition switch OFF.

2. Disconnect ECM harness connector.
3. Check the continuity between VIAS control solenoid valve 2 harness connector and ECM harness connector.

VIAS control solenoid valve 2		ECM		Continuity
Connector	Terminal	Connector	Terminal	
F65	2	F14	26	Existed

4. Also check harness for short to ground and short to power.

Is the inspection result normal?

YES >> GO TO 3.
NO >> Repair open circuit, short to ground or short to power in harness or connectors.

3. CHECK VIAS CONTROL SOLENOID VALVE 2

Refer to EC-1432, "Component Inspection".

Is the inspection result normal?

YES >> GO TO 4.
NO >> Replace VIAS control solenoid valve 2.

4. CHECK INTERMITTENT INCIDENT

Refer to GI-42, "Intermittent Incident".

>> INSPECTION END

Component Inspection

INFOID:0000000004362299

1. CHECK VIAS CONTROL SOLENOID VALVE 2

With CONSULT-III

1. Turn ignition switch OFF.
2. Reconnect all harness connectors disconnected.
3. Disconnect vacuum hoses connected to VIAS control solenoid valve 2.
4. Turn ignition switch ON.
5. Select “VIAS S/V-2” in “ACTIVE TEST” mode with CONSULT-III.
6. Check air passage continuity and operation delay time under the following conditions.

Condition (VIAS S/V-2)	Air passage continuity between (A) and (B)	Air passage continuity between (A) and (C)
ON	Existed	Not existed
OFF	Not existed	Existed

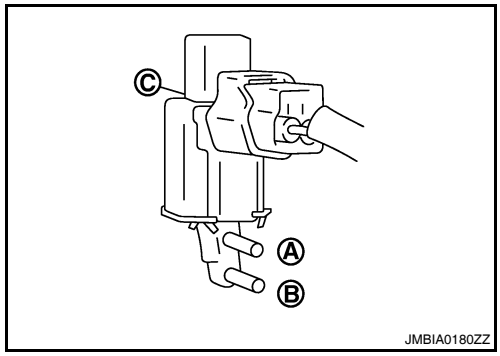

Without CONSULT-III

1. Turn ignition switch OFF.
2. Disconnect VIAS control solenoid valve 2 harness connector.
3. Disconnect vacuum hoses connected to VIAS volume control solenoid valve 2.

4. Check air passage continuity and operation delay time under the following conditions.

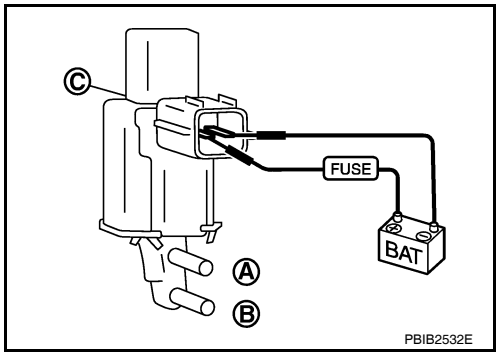

Condition	Air passage continuity between (A) and (B)	Air passage continuity between (A) and (C)
12 V direct current supply between terminals 1 and 2	Existed	Not existed
No supply	Not existed	Existed

Is the inspection result normal?

YES >> INSPECTION END
NO >> Replace VIAS control solenoid valve 2

P1805 BRAKE SWITCH

Description

INFOID:0000000004362300

Brake switch signal is applied to the ECM via the stop lamp switch when the brake pedal is depressed. This signal is used mainly to decrease the engine speed when the vehicle is being driven.

DTC Logic

INFOID:0000000004362301

DTC DETECTION LOGIC

DTC No.	Trouble diagnosis name	DTC detecting condition	Possible cause
P1805	Brake switch	A brake switch signal is not sent to ECM for extremely long time while the vehicle is being driven.	• Harness or connectors (Stop lamp switch circuit is open or shorted.) • Stop lamp switch

DTC CONFIRMATION PROCEDURE

1.PERFORM DTC CONFIRMATION PROCEDURE

1. Turn ignition switch ON.
2. Fully depress the brake pedal for at least 5 seconds.
3. Erase the DTC.
4. Check 1st trip DTC.

Is 1st trip DTC detected?

YES >> Go to EC-1434, "Diagnosis Procedure".
NO >> INSPECTION END

Diagnosis Procedure

INFOID:0000000004362302

1.CHECK STOP LAMP SWITCH CIRCUIT

1. Turn ignition switch OFF.
2. Check the stop lamp when depressing and releasing the brake pedal.

Brake pedal	Stop lamp
Fully released	Not illuminated
Slightly depressed	Illuminated

Is the inspection result normal?

YES >> GO TO 4.
NO >> GO TO 2.

2.CHECK STOP LAMP SWITCH POWER SUPPLY CIRCUIT

1. Disconnect stop lamp switch harness connector.
2. Check the voltage between stop lamp switch harness connector and ground.

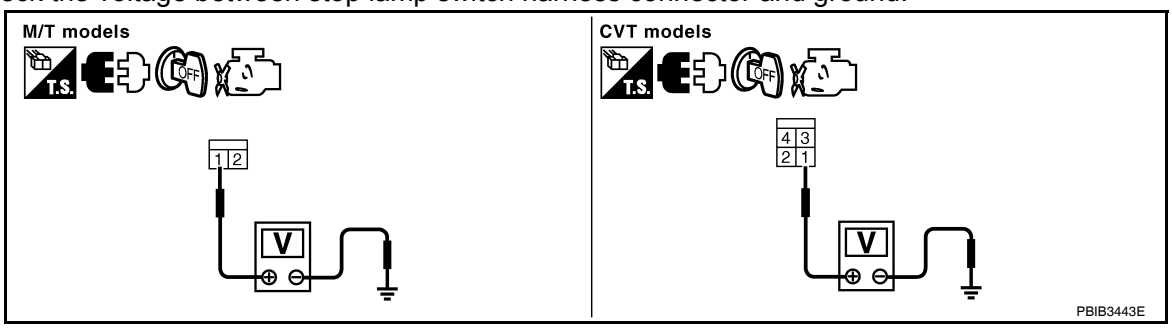

Stop lamp switch		Ground	Voltage
Connector	Terminal		
E38	1	Ground	Battery voltage

Is the inspection result normal?

YES >> GO TO 4.
NO >> GO TO 3.

3. DETECT MALFUNCTIONING PART

Check the following.
- Fuse block (J/B) connector E6
- 10 A fuse (No. 7)
- Harness for open or short between battery and stop lamp switch

>> Repair open circuit, short to ground or short to power in harness or connectors.

4. CHECK STOP LAMP SWITCH INPUT SIGNAL CIRCUIT FOR OPEN AND SHORT

1. Disconnect stop lamp switch harness connector.
2. Disconnect ECM harness connector.
3. Check the continuity between stop lamp switch harness connector and ECM harness connector.

Stop lamp switch		ECM		Continuity
Connector	Terminal	Connector	Terminal	
E38	2	E10	106	Existed

4. Also check harness for short to ground and short to power.

Is the inspection result normal?

YES >> GO TO 6.
NO >> GO TO 5.

5. DETECT MALFUNCTIONING PART

Check the following.
- Fuse block (J/B) connector E6
- Harness for open or short between ECM and stop lamp switch

>> Repair open circuit, short to ground or short to power in harness or connectors.

6. CHECK STOP LAMP SWITCH

Refer to EC-1435, "Component Inspection (Stop Lamp Switch)".

Is the inspection result normal?

YES >> GO TO 7.
NO >> Replace stop lamp switch.

7. CHECK INTERMITTENT INCIDENT

Refer to GI-42, "Intermittent Incident".

>> INSPECTION END

Component Inspection (Stop Lamp Switch)

INFOID:0000000004362303

1. CHECK STOP LAMP SWITCH-I

1. Turn ignition switch OFF.
2. Disconnect stop lamp switch harness connector.

3. Check harness continuity between stop lamp switch terminals under the following conditions.

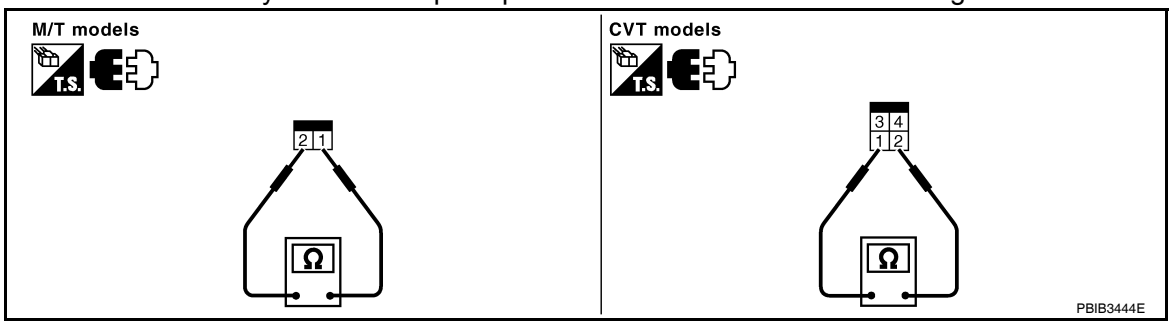

Terminals	Condition		Continuity
1 and 2	Brake pedal	Fully released	Not existed
		Slightly depressed	Existed

Is the inspection result normal?

YES >> INSPECTION END
NO >> GO TO 2.

2. CHECK STOP LAMP SWITCH-II

1. Adjust stop lamp switch installation. Refer to BR-13, "Inspection and Adjustment".
2. Check harness continuity between stop lamp switch terminals under the following conditions.

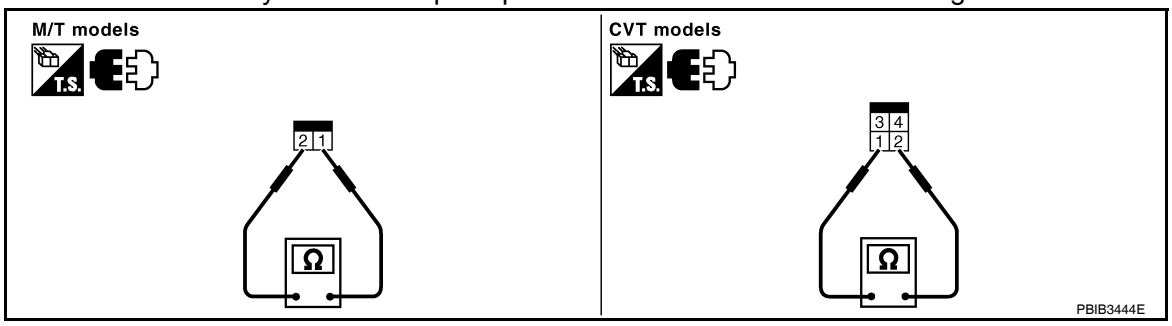

Terminals	Condition		Continuity
1 and 2	Brake pedal	Fully released	Not existed
		Slightly depressed	Existed

Is the inspection result normal?

YES >> INSPECTION END
NO >> Replace stop lamp switch.

P2100, P2103 THROTTLE CONTROL MOTOR RELAY

Description

INFOID:0000000004362304

Power supply for the throttle control motor is provided to the ECM via the throttle control motor relay. The throttle control motor relay is controlled ON/OFF by the ECM. When the ignition switch is turned ON, the ECM sends an ON signal to throttle control motor relay and battery voltage is provided to the ECM. When the ignition switch is turned OFF, the ECM sends an OFF signal to throttle control motor relay and battery voltage is not provided to the ECM.

DTC Logic

INFOID:0000000004362305

DTC DETECTION LOGIC

DTC No.	Trouble diagnosis name	DTC detecting condition	Possible cause
P2100	Throttle control motor relay circuit open	ECM detects that the voltage of power source for throttle control motor is excessively low.	• Harness or connectors (Throttle control motor relay circuit is open.) • Throttle control motor relay
P2103	Throttle control motor relay circuit short	ECM detects that the throttle control motor relay is stuck ON.	• Harness or connectors (Throttle control motor relay circuit is shorted.) • Throttle control motor relay

DTC CONFIRMATION PROCEDURE

1.PRECONDITIONING

If DTC Confirmation Procedure has been previously conducted, always perform the following before conducting the next test.

1. Turn ignition switch OFF and wait at least 10 seconds.
2. Turn ignition switch ON.
3. Turn ignition switch OFF and wait at least 10 seconds.

TESTING CONDITION:

Before performing the following procedure, confirm that battery voltage is more than 8 V.

Witch DTC is detected?

P2100 >> GO TO 2.
P2103 >> GO TO 3.

2.PERFORM DTC CONFIRMATION PROCEDURE FOR DTC P2100

1. Turn ignition switch ON and wait at least 2 seconds.
2. Start engine and let it idle for 5 seconds.
3. Check DTC.

Is DTC detected?

YES >> Go to EC-1437, "Diagnosis Procedure".
NO >> INSPECTION END

3.PERFORM DTC CONFIRMATION PROCEDURE FOR DTC P2103

1. Turn ignition switch ON and wait at least 1 second.
2. Check DTC.

Is DTC detected?

YES >> Go to EC-1437, "Diagnosis Procedure".
NO >> INSPECTION END

Diagnosis Procedure

INFOID:0000000004362306

1.CHECK THROTTLE CONTROL MOTOR RELAY POWER SUPPLY CIRCUIT

1. Turn ignition switch OFF.
2. Disconnect ECM harness connector.

3. Disconnect IPDM E/R harness connector.
4. Check the continuity between IPDM E/R harness connector and ECM harness connector.

IPDM E/R		ECM		Continuity
Connector	Terminal	Connector	Terminal	
F10	70	F14	15	Existed

5. Also check harness for short to ground and short to power.

Is the inspection result normal?

YES >> GO TO 2.
NO >> Repair open circuit, short to ground or short to power in harness or connectors.

2. CHECK THROTTLE CONTROL MOTOR RELAY INPUT SIGNAL CIRCUIT-II

1. Check the continuity between IPDM E/R harness connector and ECM harness connector.

IPDM E/R		ECM		Continuity
Connector	Terminal	Connector	Terminal	
F10	54	F14	2	Existed

2. Also check harness for short to ground and short to power.

Is the inspection result normal?

YES >> GO TO 3.
NO >> Repair open circuit, short to ground or short to power in harness or connectors.

3. CHECK FUSE

1. Disconnect 15 A fuse (No. 43) from IPDM E/R.
2. Check if 15 A fuse is blown.

Is the inspection result normal?

YES >> GO TO 4.
NO >> Replace 15 A fuse.

4. CHECK INTERMITTENT INCIDENT

Refer to GI-42, "Intermittent Incident".

Is the inspection result normal?

YES >> Replace IPDM E/R.
NO >> Repair or replace harness or connectors.

P2101 ELECTRIC THROTTLE CONTROL FUNCTION

Description

INFOID:0000000004362307

Electric throttle control actuator consists of throttle control motor, throttle position sensor, etc.
The throttle control motor is operated by the ECM and it opens and closes the throttle valve.
The current opening angle of the throttle valve is detected by the throttle position sensor. The throttle position sensor provides feedback to the ECM, when opens/closes the throttle valve in response to driving conditions via the throttle control motor.

DTC Logic

INFOID:0000000004362308

DTC DETECTION LOGIC

NOTE:
If DTC P2101 is displayed with DTC P2100, first perform the trouble diagnosis for DTC P2100. Refer to EC-1437, "DTC Logic".
If DTC P2101 is displayed with DTC 2119, first perform the trouble diagnosis for DTC P2119. Refer to EC-1446, "DTC Logic".

DTC No.	Trouble diagnosis name	DTC detecting condition	Possible cause
P2101	Electric throttle control performance	Electric throttle control function does not operate properly.	• Harness or connectors (Throttle control motor circuit is open or shorted.) • Electric throttle control actuator

DTC CONFIRMATION PROCEDURE

1. PRECONDITIONING

If DTC Confirmation Procedure has been previously conducted, always perform the following before conducting the next test.
1. Turn ignition switch OFF and wait at least 10 seconds.
2. Turn ignition switch ON.
3. Turn ignition switch OFF and wait at least 10 seconds.

TESTING CONDITION:
Before performing the following procedure, confirm that battery voltage is more than 11 V when engine is running.

>> GO TO 2.

2. PERFORM DTC CONFIRMATION PROCEDURE

1. Turn ignition switch ON and wait at least 2 seconds.
2. Start engine and let it idle for 5 seconds.
3. Check DTC.

Is DTC detected?

YES >> Go to EC-1439, "Diagnosis Procedure".
NO >> INSPECTION END

Diagnosis Procedure

INFOID:0000000004362309

1. CHECK GROUND CONNECTION

1. Turn ignition switch OFF.
2. Check ground connection E9. Refer to Ground Inspection in GI-45, "Circuit Inspection".

Is the inspection result normal?

YES >> GO TO 2.
NO >> Repair or replace ground connection.

2. CHECK THROTTLE CONTROL MOTOR RELAY INPUT SIGNAL CIRCUIT-I

1. Check the voltage between ECM harness connectors.

ECM				Condition	Voltage
+		–			
Connector	Terminal	Connector	Terminal		
F14	2	E10	112	Ignition switch OFF	Approx. 0 V
				Ignition switch ON	Battery voltage

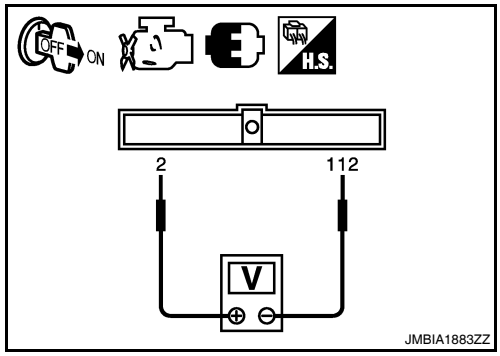

Is the inspection result normal?

YES >> GO TO 7.
NO >> GO TO 3.

3. CHECK THROTTLE CONTROL MOTOR RELAY POWER SUPPLY CIRCUIT-II

1. Turn ignition switch OFF.
2. Disconnect ECM harness connector.
3. Disconnect IPDM E/R harness connector.
4. Check the continuity between IPDM E/R harness connector and ECM harness connector.

IPDM E/R		ECM		Continuity
Connector	Terminal	Connector	Terminal	
F10	70	F14	15	Existed

5. Also check harness for short to ground and short to power.

Is the inspection result normal?

YES >> GO TO 4.
NO >> Repair open circuit, short to ground or short to power in harness or connectors.

4. CHECK THROTTLE CONTROL MOTOR RELAY INPUT SIGNAL CIRCUIT-II

1. Check the continuity between IPDM E/R harness connector and ECM harness connector.

IPDM E/R		ECM		Continuity
Connector	Terminal	Connector	Terminal	
F10	54	F14	2	Existed

2. Also check harness for short to ground and short to power.

Is the inspection result normal?

YES >> GO TO 5.
NO >> Repair open circuit, short to ground or short to power in harness or connectors.

5. CHECK FUSE

1. Disconnect 15 A fuse (No. 43) from IPDM E/R.
2. Check if 15 A fuse is blown.

Is the inspection result normal?

YES >> GO TO 6.
NO >> Replace 15 A fuse.

6. CHECK INTERMITTENT INCIDENT

Refer to GI-42, "Intermittent Incident".

Is the inspection result normal?

YES >> Replace IPDM E/R.
NO >> Repair or replace harness or connectors.

7. CHECK THROTTLE CONTROL MOTOR OUTPUT SIGNAL CIRCUIT FOR OPEN OR SHORT

1. Turn ignition switch OFF.
2. Disconnect electric throttle control actuator harness connector.

3. Disconnect ECM harness connector.
4. Check the continuity between electric throttle control actuator harness connector and ECM harness connector.

Electric throttle control actuator		ECM		Continuity
Connector	Terminal	Connector	Terminal	
F57	5	F14	5	Not existed
			6	Existed
	6		5	Existed
			6	Not existed

5. Also check harness for short to ground and short to power.

Is the inspection result normal?

YES >> GO TO 8.
NO >> Repair or replace malfunctioning part.

8. CHECK ELECTRIC THROTTLE CONTROL ACTUATOR VISUALLY

1. Remove the intake air duct.
2. Check if foreign matter is caught between the throttle valve (1) and the housing.

- Electric throttle control actuator (2)
- ⇦: Vehicle front

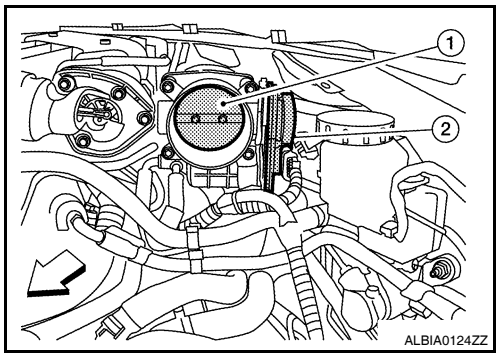

Is the inspection result normal?

YES >> GO TO 9.
NO >> Remove the foreign matter and clean the electric throttle control actuator inside.

9. CHECK THROTTLE CONTROL MOTOR

Refer to EC-1441, "Component Inspection".

Is the inspection result normal?

YES >> GO TO 10.
NO >> GO TO 11.

10. CHECK INTERMITTENT INCIDENT

Refer to GI-42, "Intermittent Incident".

Is the inspection result normal?

YES >> GO TO 11.
NO >> Repair or replace harness or connectors.

11. REPLACE ELECTRIC THROTTLE CONTROL ACTUATOR

1. Replace electric throttle control actuator.
2. Refer to EC-1442, "Special Repair Requirement".

>> INSPECTION END

Component Inspection

INFOID:0000000004362310

1. CHECK THROTTLE CONTROL MOTOR

1. Turn ignition switch OFF.
2. Disconnect electric throttle control actuator harness connector.

3. Check resistance between electric throttle control actuator terminals as per the following.

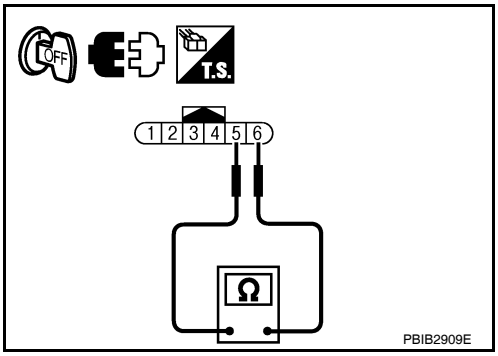

Terminals	Resistance
5 and 6	Approx. 1 - 15 Ω [at 25°C (77°F)]

Is the inspection result normal?

YES >> INSPECTION END
NO >> GO TO 2.

2. REPLACE ELECTRIC THROTTLE CONTROL ACTUATOR

1. Replace electric throttle control actuator.
2. Go to EC-1442, "Special Repair Requirement".

>> INSPECTION END

Special Repair Requirement

INFOID:0000000004362311

1. PERFORM THROTTLE VALVE CLOSED POSITION LEARNING

Refer to EC-1053, "THROTTLE VALVE CLOSED POSITION LEARNING : Special Repair Requirement"

>> GO TO 2.

2. PERFORM IDLE AIR VOLUME LEARNING

Refer to EC-1053, "IDLE AIR VOLUME LEARNING : Special Repair Requirement"

>> END

P2118 THROTTLE CONTROL MOTOR

Description

INFOID:0000000004362312

The throttle control motor is operated by the ECM and it opens and closes the throttle valve.
The current opening angle of the throttle valve is detected by the throttle position sensor. The throttle position sensor it provides feedback to the ECM, when opens/closes the throttle valve in response to driving conditions via the throttle control motor.

DTC Logic

INFOID:0000000004362313

DTC DETECTION LOGIC

DTC No.	Trouble diagnosis name	DTC detecting condition	Possible cause
P2118	Throttle control motor circuit short	ECM detects short in both circuits between ECM and throttle control motor.	• Harness or connectors (Throttle control motor circuit is shorted.) • Electric throttle control actuator (Throttle control motor)

DTC CONFIRMATION PROCEDURE

1.PRECONDITIONING

If DTC Confirmation Procedure has been previously conducted, always perform the following before conducting the next test.
1. Turn ignition switch OFF and wait at least 10 seconds.
2. Turn ignition switch ON.
3. Turn ignition switch OFF and wait at least 10 seconds.

>> GO TO 2.

2.PERFORM DTC CONFIRMATION PROCEDURE

1. Turn ignition switch ON and wait at least 2 seconds.
2. Start engine and let it idle for 5 seconds.
3. Check DTC.

Is DTC detected?

YES >> Go to EC-1443, "Diagnosis Procedure".
NO >> INSPECTION END

Diagnosis Procedure

INFOID:0000000004362314

1.CHECK GROUND CONNECTION

1. Turn ignition switch OFF.
2. Check ground connection E9. Refer to Ground Inspection in GI-45, "Circuit Inspection".

Is the inspection result normal?

YES >> GO TO 2.
NO >> Repair or replace ground connection.

2.CHECK THROTTLE CONTROL MOTOR OUTPUT SIGNAL CIRCUIT FOR OPEN AND SHORT

1. Disconnect electric throttle control actuator harness connector.
2. Disconnect ECM harness connector.
3. Check the continuity between electric throttle control actuator harness connector and ECM harness connector.

Electric throttle control actuator		ECM		Continuity
Connector	Terminal	Connector	Terminal	
F57	5	F14	5	Not existed
			6	Existed
	6		5	Existed
			6	Not existed

4. Also check harness for short to ground and short to power.

Is the inspection result normal?

YES >> GO TO 3.
NO >> Repair or replace malfunctioning part.

3.CHECK THROTTLE CONTROL MOTOR

Refer to EC-1444, "Component Inspection".

Is the inspection result normal?

YES >> GO TO 4.
NO >> GO TO 5.

4.CHECK INTERMITTENT INCIDENT

Refer to GI-42, "Intermittent Incident".

Is the inspection result normal?

YES >> GO TO 5.
NO >> Repair or replace harness or connectors.

5.REPLACE ELECTRIC THROTTLE CONTROL ACTUATOR

1. Replace electric throttle control actuator.
2. Go to EC-1445, "Special Repair Requirement".

>> INSPECTION END

Component Inspection

INFOID:0000000004362315

1.CHECK THROTTLE CONTROL MOTOR

1. Turn ignition switch OFF.
2. Disconnect electric throttle control actuator harness connector.
3. Check resistance between electric throttle control actuator terminals as per the following.

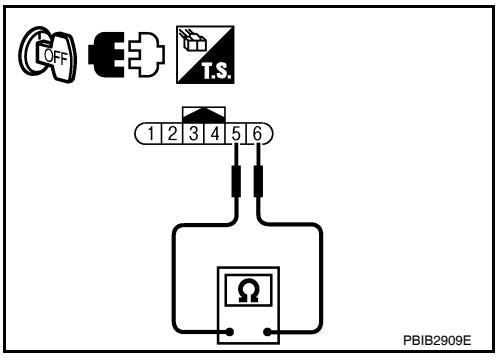

Terminals	Resistance
5 and 6	Approx. 1 - 15 Ω [at 25°C (77°F)]

Is the inspection result normal?

YES >> INSPECTION END
NO >> GO TO 2.

2.REPLACE ELECTRIC THROTTLE CONTROL ACTUATOR

1. Replace electric throttle control actuator.
2. Go to EC-1442, "Special Repair Requirement".

>> INSPECTION END

Special Repair Requirement

INFOID:0000000004362316

1. PERFORM THROTTLE VALVE CLOSED POSITION LEARNING

Refer to EC-1053, "THROTTLE VALVE CLOSED POSITION LEARNING : Special Repair Requirement"

>> GO TO 2.

2. PERFORM IDLE AIR VOLUME LEARNING

Refer to EC-1053, "IDLE AIR VOLUME LEARNING : Special Repair Requirement"

>> END

P2119 ELECTRIC THROTTLE CONTROL ACTUATOR

Description

INFOID:0000000004362317

Electric throttle control actuator consists of throttle control motor, throttle position sensor, etc.
The throttle control motor is operated by the ECM and it opens and closes the throttle valve.
The throttle position sensor detects the throttle valve position, and the opening and closing speed of the throttle valve and sends the voltage signals to the ECM. The ECM judges the current opening angle of the throttle valve from these signals and opens/closes the throttle valve in response to driving conditions via the throttle control motor.

DTC Logic

INFOID:0000000004362318

DTC DETECTION LOGIC

DTC No.	Trouble diagnosis name	DTC detecting condition		Possible cause
P2119	Electric throttle control actuator	A)	Electric throttle control actuator does not function properly due to the return spring malfunction.	• Electric throttle control actuator
		B)	Throttle valve opening angle in fail-safe mode is not in specified range.	
		C)	ECM detects that the throttle valve is stuck open.	

DTC CONFIRMATION PROCEDURE

1. PRECONDITIONING

If DTC Confirmation Procedure has been previously conducted, always perform the following before conducting the next test.
1. Turn ignition switch OFF and wait at least 10 seconds.
2. Turn ignition switch ON.
3. Turn ignition switch OFF and wait at least 10 seconds.

>> GO TO 2.

2. PERFORM DTC CONFIRMATION PROCEDURE FOR MALFUNCTION A AND B

1. Turn ignition switch ON and wait at least 1 second.
2. Shift selector lever position to D (CVT) or 1st position (M/T) and wait at least 3 seconds.
3. Shift selector lever position to P (CVT) or neutral position (M/T).
4. Turn ignition switch OFF and wait at least 10 seconds.
5. Turn ignition switch ON and wait at least 1 second.
6. Shift selector lever position to D (CVT) or 1st position (M/T) and wait at least 3 seconds.
7. Shift selector lever position to P (CVT) or neutral position (M/T).
8. Turn ignition switch OFF, wait at least 10 seconds, and then turn ON.
9. Check DTC.

Is DTC detected?

YES >> Go to EC-1447, "Diagnosis Procedure".
NO >> GO TO 3.

3. PERFORM DTC CONFIRMATION PROCEDURE FOR MALFUNCTION C

1. Turn ignition switch ON and wait at least 1 second.
2. Shift selector lever position to D (CVT) or 1st position (M/T) and wait at least 3 seconds.
3. Shift selector lever position to N, P (CVT) neutral position (M/T).
4. Start engine and let it idle for 3 seconds.
5. Check DTC.

Is DTC detected?

YES >> Go to EC-1447, "Diagnosis Procedure".
NO >> INSPECTION END

Diagnosis Procedure

INFOID:0000000004362319

1. CHECK ELECTRIC THROTTLE CONTROL ACTUATOR VISUALLY

1. Turn ignition switch OFF.
2. Remove the intake air duct.
3. Check if foreign matter is caught between the throttle valve (1) and the housing.

- Electric throttle control actuator (2)
- ⇦: Vehicle front

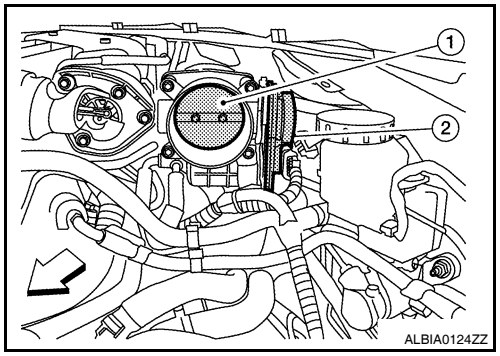

Is the inspection result normal?

YES >> GO TO 2.
NO >> Remove the foreign matter and clean the electric throttle control actuator inside.

2. REPLACE ELECTRIC THROTTLE CONTROL ACTUATOR

1. Replace electric throttle control actuator.
2. Go to EC-1393, "Special Repair Requirement".

>> INSPECTION END

Special Repair Requirement

INFOID:0000000004362320

1. PERFORM THROTTLE VALVE CLOSED POSITION LEARNING

Refer to EC-1053, "THROTTLE VALVE CLOSED POSITION LEARNING : Special Repair Requirement"

>> GO TO 2.

2. PERFORM IDLE AIR VOLUME LEARNING

Refer to EC-1053, "IDLE AIR VOLUME LEARNING : Special Repair Requirement"

>> END

P2122, P2123 APP SENSOR

Description

INFOID:0000000004362321

The accelerator pedal position sensor is installed on the upper end of the accelerator pedal assembly. The sensor detects the accelerator position and sends a signal to the ECM.
Accelerator pedal position sensor has two sensors. These sensors are a kind of potentiometer which transform the accelerator pedal position into output voltage, and emit the voltage signal to the ECM. The ECM judges the current opening angle of the accelerator pedal from these signals and controls the throttle control motor based on these signals.
Idle position of the accelerator pedal is determined by the ECM receiving the signal from the accelerator pedal position sensor. The ECM uses this signal for engine operations such as fuel cut.

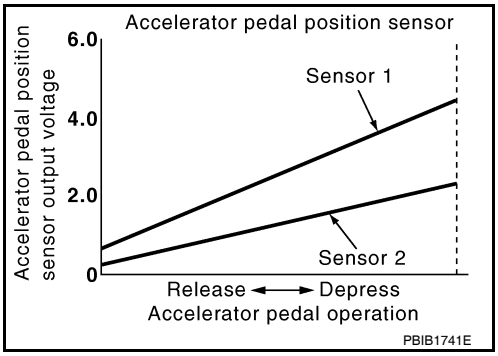

DTC Logic

INFOID:0000000004362322

DTC DETECTION LOGIC

NOTE:
If DTC P2122 or P2123 is displayed with DTC P0643, first perform the trouble diagnosis for DTC P0643. Refer to EC-1379, "DTC Logic".

DTC No.	Trouble diagnosis name	DTC detecting condition	Possible cause
P2122	Accelerator pedal position sensor 1 circuit low input	An excessively low voltage from the APP sensor 1 is sent to ECM.	• Harness or connectors [Accelerator pedal position (APP) sensor 1 circuit is open or shorted.] • APP sensor 1
P2123	Accelerator pedal position sensor 1 circuit high input	An excessively high voltage from the APP sensor 1 is sent to ECM.	

DTC CONFIRMATION PROCEDURE

1. PRECONDITIONING

If DTC Confirmation Procedure has been previously conducted, always perform the following before conducting the next test.
1. Turn ignition switch OFF and wait at least 10 seconds.
2. Turn ignition switch ON.
3. Turn ignition switch OFF and wait at least 10 seconds.

TESTING CONDITION:
Before performing the following procedure, confirm that battery voltage is more than 8 V at idle.

>> GO TO 2.

2. PERFORM DTC CONFIRMATION PROCEDURE

1. Start engine and let it idle for 1 second.
2. Check DTC.

Is DTC detected?

YES >> Go to EC-1448, "Diagnosis Procedure".
NO >> INSPECTION END

Diagnosis Procedure

INFOID:0000000004362323

1. CHECK GROUND CONNECTION

1. Turn ignition switch OFF.
2. Check ground connection E9. Refer to Ground Inspection in GI-45, "Circuit Inspection".

Is the inspection result normal?

YES >> GO TO 2.
NO >> Repair or replace ground connection.

2. CHECK APP SENSOR 1 POWER SUPPLY CIRCUIT

1. Disconnect accelerator pedal position (APP) sensor harness connector.
2. Turn ignition switch ON.
3. Check the voltage between APP sensor harness connector and ground.

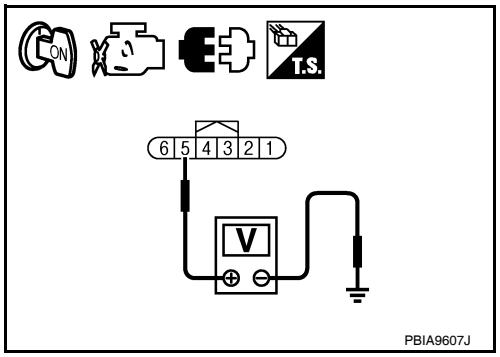

APP sensor		Ground	Voltage (V)
Connector	Terminal		
E40	5	Ground	Approx. 5

Is the inspection result normal?

YES >> GO TO 3.
NO >> Repair open circuit, short to ground or short to power in harness or connectors.

3. CHECK APP SENSOR 1 GROUND CIRCUIT FOR OPEN AND SHORT

1. Turn ignition switch OFF.
2. Disconnect ECM harness connector.
3. Check the continuity between APP sensor harness connector and ECM harness connector.

APP sensor		ECM		Continuity
Connector	Terminal	Connector	Terminal	
E40	4	E10	84	Existed

4. Also check harness for short to ground and short to power.

Is the inspection result normal?

YES >> GO TO 4.
NO >> Repair open circuit, short to ground or short to power in harness or connectors.

4. CHECK APP SENSOR INPUT SIGNAL CIRCUIT FOR OPEN AND SHORT

1. Check the continuity between APP sensor harness connector and ECM harness connector.

APP sensor		ECM		Continuity
Connector	Terminal	Connector	Terminal	
E40	3	E10	81	Existed

2. Also check harness for short to ground and short to power.

Is the inspection result normal?

YES >> GO TO 5.
NO >> Repair open circuit, short to ground or short to power in harness or connectors.

5. CHECK APP SENSOR

Refer to EC-1450, "Component Inspection".

Is the inspection result normal?

YES >> GO TO 7.
NO >> GO TO 6.

6. REPLACE ACCELERATOR PEDAL ASSEMBLY

1. Replace accelerator pedal assembly.
2. Refer to EC-1450, "Special Repair Requirement".

>> INSPECTION END

7. CHECK INTERMITTENT INCIDENT

Refer to GI-42, "Intermittent Incident".

>> INSPECTION END

Component Inspection

INFOID:0000000004362324

1. CHECK ACCELERATOR PEDAL POSITION SENSOR

1. Reconnect all harness connectors disconnected.
2. Turn ignition switch ON.
3. Check the voltage between ECM harness connector terminals under the following conditions.

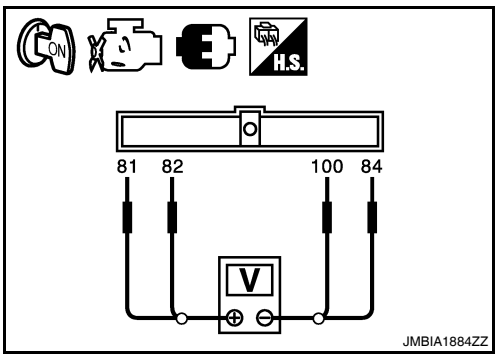

ECM			Condition		Voltage (V)
Connector	+	–			
	Terminal	Terminal			
E10	81 (APP sensor 1 signal)	84 (Sensor ground)	Accelerator pedal	Fully released	0.65 - 0.87
				Fully de-pressed	More than 4.3
	82 (APP sensor 2 signal)	100 (Sensor ground)		Fully released	0.28 - 0.48
				Fully de-pressed	More than 2.0

Is the inspection result normal?

YES >> INSPECTION END
NO >> GO TO 2.

2. REPLACE ACCELERATOR PEDAL ASSEMBLY

1. Replace accelerator pedal assembly.
2. Go to EC-1450, "Special Repair Requirement".

>> INSPECTION END

Special Repair Requirement

INFOID:0000000004362325

1. PERFORM ACCELERATOR PEDAL RELEASED POSITION LEARNING

Refer to EC-1053, "ACCELERATOR PEDAL RELEASED POSITION LEARNING : Special Repair Requirement".

>> GO TO 2.

2. PERFORM THROTTLE VALVE CLOSED POSITION LEARNING

Refer to EC-1053, "THROTTLE VALVE CLOSED POSITION LEARNING : Special Repair Requirement".

>> GO TO 3.

3. PERFORM IDLE AIR VOLUME LEARNING

Refer to EC-1053, "IDLE AIR VOLUME LEARNING : Special Repair Requirement".

>> END

P2127, P2128 APP SENSOR

Description

INFOID:0000000004362326

The accelerator pedal position sensor is installed on the upper end of the accelerator pedal assembly. The sensor detects the accelerator position and sends a signal to the ECM.
Accelerator pedal position sensor has two sensors. These sensors are a kind of potentiometer which transform the accelerator pedal position into output voltage, and emit the voltage signal to the ECM. The ECM judges the current opening angle of the accelerator pedal from these signals and controls the throttle control motor based on these signals.
Idle position of the accelerator pedal is determined by the ECM receiving the signal from the accelerator pedal position sensor. The ECM uses this signal for engine operations such as fuel cut.

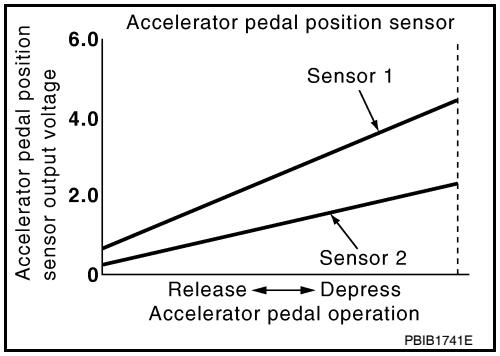

DTC Logic

INFOID:0000000004362327

DTC DETECTION LOGIC

DTC No.	Trouble diagnosis name	DTC detecting condition	Possible cause
P2127	Accelerator pedal position sensor 2 circuit low input	An excessively low voltage from the APP sensor 2 is sent to ECM.	• Harness or connectors [Accelerator pedal position (APP) sensor 2 circuit is open or shorted.] [Crankshaft position (CKP) sensor (POS) circuit is shorted.] (EVAP control system pressure sensor circuit is shorted.) (Refrigerant pressure sensor circuit is shorted.) • APP sensor 2 • CKP sensor (POS) • EVAP control system pressure sensor • Refrigerant pressure sensor
P2128	Accelerator pedal position sensor 2 circuit high input	An excessively high voltage from the APP sensor 2 is sent to ECM.	

DTC CONFIRMATION PROCEDURE

1.PRECONDITIONING

If DTC Confirmation Procedure has been previously conducted, always perform the following before conducting the next test.
1. Turn ignition switch OFF and wait at least 10 seconds.
2. Turn ignition switch ON.
3. Turn ignition switch OFF and wait at least 10 seconds.

TESTING CONDITION:
Before performing the following procedure, confirm that battery voltage is more than 8 V at idle.

>> GO TO 2.

2.PERFORM DTC CONFIRMATION PROCEDURE

1. Start engine and let it idle for 1 second.
2. Check DTC.

Is DTC detected?

YES >> Go to EC-1451, "Diagnosis Procedure".
NO >> INSPECTION END

Diagnosis Procedure

INFOID:0000000004362328

1.CHECK GROUND CONNECTION

1. Turn ignition switch OFF.

2. Check ground connection E9. Refer to Ground Inspection in GI-45, "Circuit Inspection".

Is the inspection result normal?

YES >> GO TO 2.
NO >> Repair or replace ground connection.

2. CHECK APP SENSOR 2 POWER SUPPLY CIRCUIT-I

1. Disconnect accelerator pedal position (APP) sensor harness connector.
2. Turn ignition switch ON.
3. Check the voltage between APP sensor harness connector and ground.

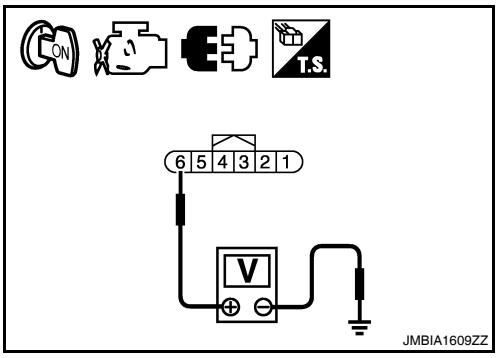

APP sensor		Ground	Voltage (V)
Connector	Terminal		
E40	6	Ground	Approx. 5

Is the inspection result normal?

YES >> GO TO 6.
NO >> GO TO 3.

3. CHECK APP SENSOR 2 POWER SUPPLY CIRCUIT-II

1. Turn ignition switch OFF.
2. Disconnect ECM harness connector.
3. Check the continuity between APP sensor harness connector and ECM harness connector.

APP sensor		ECM		Continuity
Connector	Terminal	Connector	Terminal	
E40	6	E10	87	Existed

Is the inspection result normal?

YES >> GO TO 4.
NO >> Repair open circuit.

4. CHECK SENSOR POWER SUPPLY CIRCUIT

Check harness for short to power and short to ground, between the following terminals.

ECM		Sensor		
Connector	Terminal	Name	Connector	Terminal
F13	72	Refrigerant pressure sensor	E219	1
	76	CKP sensor (POS)	F30	1
E10	87	APP sensor	E40	6
	91	EVAP control system pressure sensor	B41	3

Is the inspection result normal?

YES >> GO TO 5.
NO >> Repair short to ground or short to power in harness or connectors.

5. CHECK COMPONENTS

Check the following.
- Crankshaft position sensor (POS) (Refer to EC-1295, "Component Inspection".)
- EVAP control system pressure sensor (Refer to EC-1334, "Component Inspection".)
- Refrigerant pressure sensor (Refer to EC-1503, "Diagnosis Procedure".)

Is the inspection result normal?

YES >> GO TO 10.
NO >> Replace malfunctioning components.

6. CHECK APP SENSOR 2 GROUND CIRCUIT FOR OPEN AND SHORT

1. Turn ignition switch OFF.
2. Disconnect ECM harness connector.
3. Check the continuity between APP sensor harness connector and ECM harness connector.

APP sensor		ECM		Continuity
Connector	Terminal	Connector	Terminal	
E40	2	E10	100	Existed

4. Also check harness for short to ground and short to power.

Is the inspection result normal?

YES >> GO TO 7.
NO >> Repair open circuit, short to ground or short to power in harness or connectors.

7. CHECK APP SENSOR 2 INPUT SIGNAL CIRCUIT FOR OPEN AND SHORT

1. Check the continuity between APP sensor harness connector and ECM harness connector.

APP sensor		ECM		Continuity
Connector	Terminal	Connector	Terminal	
E40	1	E10	82	Existed

2. Also check harness for short to ground and short to power.

Is the inspection result normal?

YES >> GO TO 8.
NO >> Repair open circuit, short to ground or short to power in harness or connectors.

8. CHECK APP SENSOR

Refer to EC-1453, "Component Inspection".

Is the inspection result normal?

YES >> GO TO 10.
NO >> GO TO 9.

9. REPLACE ACCELERATOR PEDAL ASSEMBLY

1. Replace accelerator pedal assembly.
2. Refer to EC-1454, "Special Repair Requirement"

>> INSPECTION END

10. CHECK INTERMITTENT INCIDENT

Refer to GI-42, "Intermittent Incident".

>> INSPECTION END

Component Inspection

INFOID:0000000004362329

1. CHECK ACCELERATOR PEDAL POSITION SENSOR

1. Reconnect all harness connectors disconnected.
2. Turn ignition switch ON.

3. Check the voltage between ECM harness connector terminals under the following conditions.

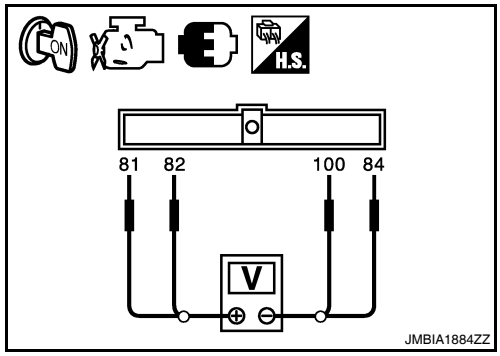

ECM			Condition		Voltage (V)
Connector	+	–			
	Terminal	Terminal			
E10	81 (APP sensor 1 signal)	84 (Sensor ground)	Accelerator pedal	Fully released	0.65 - 0.87
				Fully de-pressed	More than 4.3
	82 (APP sensor 2 signal)	100 (Sensor ground)		Fully released	0.28 - 0.48
				Fully de-pressed	More than 2.0

Is the inspection result normal?

YES >> INSPECTION END
NO >> GO TO 2.

2. REPLACE ACCELERATOR PEDAL ASSEMBLY

1. Replace accelerator pedal assembly.
2. Go to EC-1454, "Special Repair Requirement".

>> INSPECTION END

Special Repair Requirement

INFOID:0000000004362330

1. PERFORM ACCELERATOR PEDAL RELEASED POSITION LEARNING

Refer to EC-1053, "ACCELERATOR PEDAL RELEASED POSITION LEARNING : Special Repair Requirement".

>> GO TO 2.

2. PERFORM THROTTLE VALVE CLOSED POSITION LEARNING

Refer to EC-1053, "THROTTLE VALVE CLOSED POSITION LEARNING : Special Repair Requirement".

>> GO TO 3.

3. PERFORM IDLE AIR VOLUME LEARNING

Refer to EC-1053, "IDLE AIR VOLUME LEARNING : Special Repair Requirement".

>> END

P2135 TP SENSOR

Description

INFOID:0000000004362331

Electric throttle control actuator consists of throttle control motor, throttle position sensor, etc. The throttle position sensor responds to the throttle valve movement.
The throttle position sensor has two sensors. These sensors are a kind of potentiometers which transform the throttle valve position into output voltage, and emit the voltage signals to the ECM. In addition, these sensors detect the opening and closing speed of the throttle valve and feed the voltage signals to the ECM. The ECM judges the current opening angle of the throttle valve from these signals and the ECM controls the throttle control motor to make the throttle valve opening angle properly in response to driving condition.

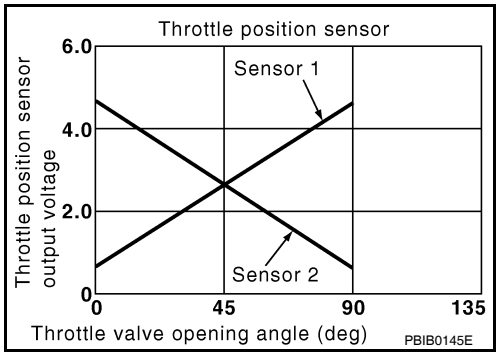

DTC Logic

INFOID:0000000004362332

DTC DETECTION LOGIC

NOTE:
If DTC P2135 is displayed with DTC P0643, first perform the trouble diagnosis for DTC P0643. Refer to EC-1379, "DTC Logic".

DTC No.	Trouble diagnosis name	DTC detecting condition	Possible cause
P2135	Throttle position sensor circuit range/performance	Rationally incorrect voltage is sent to ECM compared with the signals from Throttle position sensor 1 and Throttle position sensor 2.	• Harness or connector [Throttle position (TP) sensor 1 or 2 circuit is open or shorted.] • Electric throttle control actuator (TP sensor 1 or 2)

DTC CONFIRMATION PROCEDURE

1. PRECONDITIONING

If DTC Confirmation Procedure has been previously conducted, always perform the following before conducting the next test.
1. Turn ignition switch OFF and wait at least 10 seconds.
2. Turn ignition switch ON.
3. Turn ignition switch OFF and wait at least 10 seconds.

TESTING CONDITION:
Before performing the following procedure, confirm that battery voltage is more than 8 V at idle.

>> GO TO 2.

2. PERFORM DTC CONFIRMATION PROCEDURE

1. Start engine and let it idle for 1 second.
2. Check DTC.

Is DTC detected?

YES >> Go to EC-1455, "Diagnosis Procedure".
NO >> INSPECTION END

Diagnosis Procedure

INFOID:0000000004362333

1. CHECK GROUND CONNECTION

1. Turn ignition switch OFF.
2. Check ground connection E9. Refer to Ground Inspection in GI-45, "Circuit Inspection".

Is the inspection result normal?

YES >> GO TO 2.
NO >> Repair or replace ground connection.

2. CHECK THROTTLE POSITION SENSOR POWER SUPPLY CIRCUIT-I

1. Disconnect electric throttle control actuator harness connector.
2. Turn ignition switch ON.
3. Check the voltage between electric throttle control actuator harness connector and ground.

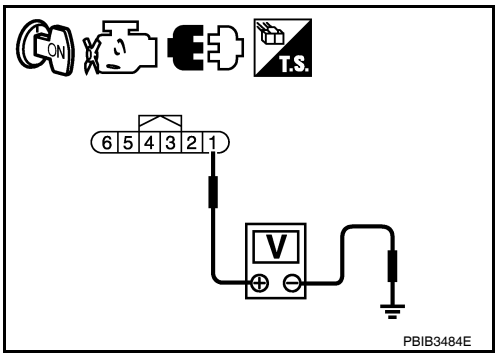

Electric throttle control actuator		Ground	Voltage (V)
Connector	Terminal		
F57	1	Ground	Approx. 5

Is the inspection result normal?

YES >> GO TO 3.
NO >> Repair open circuit, short to ground or short to power in harness or connectors.

3. CHECK THROTTLE POSITION SENSOR GROUND CIRCUIT FOR OPEN AND SHORT

1. Turn ignition switch OFF.
2. Disconnect ECM harness connector.
3. Check the continuity between electric throttle control actuator harness connector and ECM harness connector.

Electric throttle control actuator		ECM		Continuity
Connector	Terminal	Connector	Terminal	
F57	4	F13	36	Existed

4. Also check harness for short to ground and short to power.

Is the inspection result normal?

YES >> GO TO 4.
NO >> Repair open circuit, short to ground or short to power in harness or connectors.

4. CHECK THROTTLE POSITION SENSOR INPUT SIGNAL CIRCUIT FOR OPEN AND SHORT

1. Check the continuity between electric throttle control actuator harness connector and ECM harness connector.

Electric throttle control actuator		ECM		Continuity
Connector	Terminal	Connector	Terminal	
F57	2	F13	37	Existed
	3		38	

2. Also check harness for short to ground and short to power.

Is the inspection result normal?

YES >> GO TO 5.
NO >> Repair open circuit, short to ground or short to power in harness or connectors.

5. CHECK THROTTLE POSITION SENSOR

Refer to EC-1457, "Component Inspection".

Is the inspection result normal?

YES >> GO TO 7.
NO >> GO TO 6.

6. REPLACE ELECTRIC THROTTLE CONTROL ACTUATOR

1. Replace electric throttle control actuator.
2. Refer to EC-1457, "Special Repair Requirement"

>> INSPECTION END

7. CHECK INTERMITTENT INCIDENT

Refer to GI-42, "Intermittent Incident".

>> INSPECTION END

Component Inspection

INFOID:0000000004362334

1. CHECK THROTTLE POSITION SENSOR

1. Turn ignition switch OFF.
2. Reconnect all harness connectors disconnected.
3. Perform EC-1457, "Special Repair Requirement".
4. Turn ignition switch ON.
5. Set selector lever to D position (CVT) or 1st position (M/T).
6. Check the voltage between ECM harness connector terminals under the following conditions.

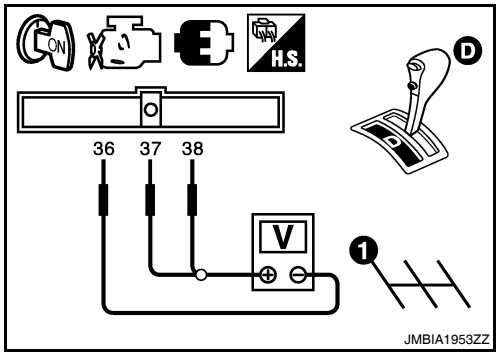

ECM			Condition		Voltage
Connector	+	–			
	Terminal	Terminal			
F13	37 (TP sensor 1 signal)	36 (Sensor ground)	Accelerator pedal	Fully released	More than 0.36 V
				Fully depressed	Less than 4.75 V
	38 (TP sensor 2 signal)			Fully released	Less than 4.75 V
				Fully depressed	More than 0.36 V

Is the inspection result normal?

YES >> INSPECTION END
NO >> GO TO 2.

2. REPLACE ELECTRIC THROTTLE CONTROL ACTUATOR

1. Replace electric throttle control actuator.
2. Go to EC-1457, "Special Repair Requirement".

>> INSPECTION END

Special Repair Requirement

INFOID:0000000004362335

1. PERFORM THROTTLE VALVE CLOSED POSITION LEARNING

Refer to EC-1053, "THROTTLE VALVE CLOSED POSITION LEARNING : Special Repair Requirement"

>> GO TO 2.

2. PERFORM IDLE AIR VOLUME LEARNING

Refer to EC-1053, "IDLE AIR VOLUME LEARNING : Special Repair Requirement"

>> END

P2138 APP SENSOR

Description

INFOID:0000000004362336

The accelerator pedal position sensor is installed on the upper end of the accelerator pedal assembly. The sensor detects the accelerator position and sends a signal to the ECM.
Accelerator pedal position sensor has two sensors. These sensors are a kind of potentiometer which transform the accelerator pedal position into output voltage, and emit the voltage signal to the ECM. The ECM judges the current opening angle of the accelerator pedal from these signals and controls the throttle control motor based on these signals.
Idle position of the accelerator pedal is determined by the ECM receiving the signal from the accelerator pedal position sensor. The ECM uses this signal for engine operations such as fuel cut.

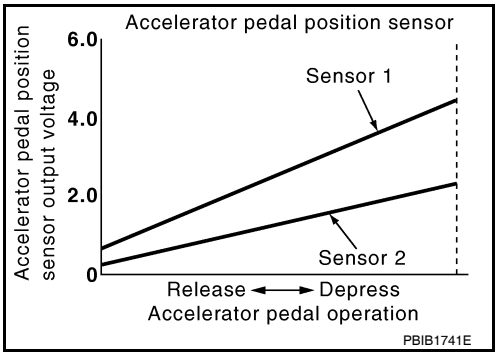

DTC Logic

INFOID:0000000004362337

DTC DETECTION LOGIC

NOTE:
If DTC P2138 is displayed with DTC P0643, first perform the trouble diagnosis for DTC P0643. Refer to EC-1379, "DTC Logic".

DTC No.	Trouble diagnosis name	DTC detecting condition	Possible cause
P2138	Accelerator pedal position sensor circuit range/performance	Rationally incorrect voltage is sent to ECM compared with the signals from APP sensor 1 and APP sensor 2.	• Harness or connector [Accelerator pedal position (APP) sensor 1 or 2 circuit is open or shorted.] [Crankshaft position (CKP) sensor (POS) circuit is shorted.] (Refrigerant pressure sensor circuit is shorted.) (EVAP control system pressure sensor circuit is shorted.) • APP sensor 1 or 2 • CKP sensor (POS) • EVAP control system pressure sensor • Refrigerant pressure sensor

DTC CONFIRMATION PROCEDURE

1. PRECONDITIONING

If DTC Confirmation Procedure has been previously conducted, always perform the following before conducting the next test.
1. Turn ignition switch OFF and wait at least 10 seconds.
2. Turn ignition switch ON.
3. Turn ignition switch OFF and wait at least 10 seconds.

TESTING CONDITION:
Before performing the following procedure, confirm that battery voltage is more than 8 V at idle.

>> GO TO 2.

2. PERFORM DTC CONFIRMATION PROCEDURE

1. Start engine and let it idle for 1 second.
2. Check DTC.

Is DTC detected?

YES >> Go to EC-1459, "Diagnosis Procedure".
NO >> INSPECTION END

Diagnosis Procedure

INFOID:0000000004362338

1. CHECK GROUND CONNECTION

1. Turn ignition switch OFF.
2. Check ground connection E9. Refer to Ground Inspection in GI-45, "Circuit Inspection".

Is the inspection result normal?

YES >> GO TO 2.
NO >> Repair or replace ground connection.

2. CHECK APP SENSOR 1 POWER SUPPLY CIRCUIT

1. Disconnect accelerator pedal position (APP) sensor harness connector.
2. Turn ignition switch ON.
3. Check the voltage between APP sensor harness connector and ground.

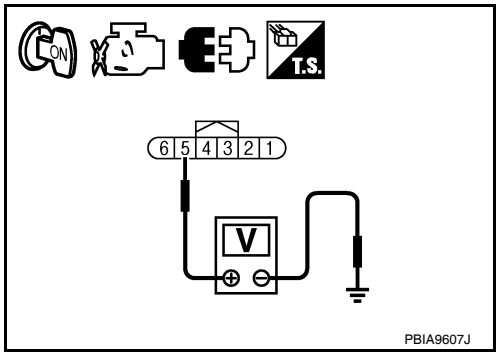

APP sensor		Ground	Voltage (V)
Connector	Terminal		
E40	5	Ground	Approx. 5

Is the inspection result normal?

YES >> GO TO 3.
NO >> Repair open circuit, short to ground or short to power in harness or connectors.

3. CHECK APP SENSOR 2 POWER SUPPLY CIRCUIT-I

1. Turn ignition switch ON.
2. Check the voltage between APP sensor harness connector and ground.

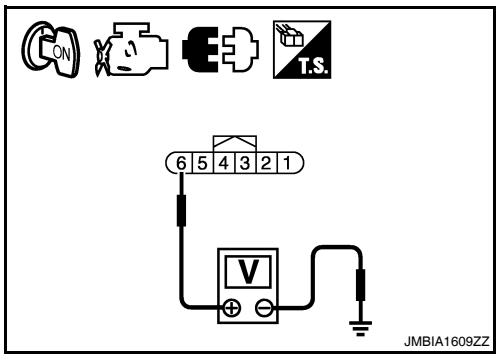

APP sensor		Ground	Voltage (V)
Connector	Terminal		
E40	6	Ground	Approx. 5

Is the inspection result normal?

YES >> GO TO 7.
NO >> GO TO 4.

4. CHECK APP SENSOR 2 POWER SUPPLY CIRCUIT-II

1. Turn ignition switch OFF.
2. Disconnect ECM harness connector.
3. Check the continuity between APP sensor harness connector and ECM harness connector.

APP sensor		ECM		Continuity
Connector	Terminal	Connector	Terminal	
E40	6	E10	87	Existed

Is the inspection result normal?

YES >> GO TO 5.
NO >> Repair open circuit.

5. CHECK SENSOR POWER SUPPLY CIRCUIT

Check harness for short to power and short to ground, between the following terminals.

ECM		Sensor		
Connector	Terminal	Name	Connector	Terminal
F13	72	Refrigerant pressure sensor	E219	1
	76	CKP sensor (POS)	F30	1
E10	87	APP sensor	E40	6
	91	EVAP control system pressure sensor	B41	3

Is the inspection result normal?

YES >> GO TO 6.
NO >> Repair short to ground or short to power in harness or connectors.

6. CHECK COMPONENTS

Check the following.
- Crankshaft position sensor (POS) (Refer to EC-1295, "Component Inspection".)
- EVAP control system pressure sensor (Refer to EC-1334, "Component Inspection".)
- Refrigerant pressure sensor (Refer to EC-1503, "Diagnosis Procedure".)

Is the inspection result normal?

YES >> GO TO 11.
NO >> Replace malfunctioning components.

7. CHECK APP SENSOR GROUND CIRCUIT FOR OPEN AND SHORT

1. Turn ignition switch OFF.
2. Disconnect ECM harness connector.
3. Check the continuity between APP sensor harness connector and ECM harness connector.

APP sensor		ECM		Continuity
Connector	Terminal	Connector	Terminal	
E40	4	E10	84	Existed
	2		100	

4. Also check harness for short to ground and short to power.

Is the inspection result normal?

YES >> GO TO 8.
NO >> Repair open circuit, short to ground or short to power in harness or connectors.

8. CHECK APP SENSOR INPUT SIGNAL CIRCUIT FOR OPEN AND SHORT

1. Check the continuity between APP sensor harness connector and ECM harness connector.

APP sensor		ECM		Continuity
Connector	Terminal	Connector	Terminal	
E40	3	E10	81	Existed
	1		82	

2. Also check harness for short to ground and short to power.

Is the inspection result normal?

YES >> GO TO 9.
NO >> Repair open circuit, short to ground or short to power in harness or connectors.

9. CHECK APP SENSOR

Refer to EC-1461, "Component Inspection".

Is the inspection result normal?

YES >> GO TO 11.
NO >> GO TO 10.

10. REPLACE ACCELERATOR PEDAL ASSEMBLY

1. Replace accelerator pedal assembly.
2. Refer to EC-1461, "Special Repair Requirement".

>> INSPECTION END

11. CHECK INTERMITTENT INCIDENT

Refer to GI-42, "Intermittent Incident".

>> INSPECTION END

Component Inspection

INFOID:0000000004362339

1. CHECK ACCELERATOR PEDAL POSITION SENSOR

1. Reconnect all harness connectors disconnected.
2. Turn ignition switch ON.
3. Check the voltage between ECM harness connector terminals under the following conditions.

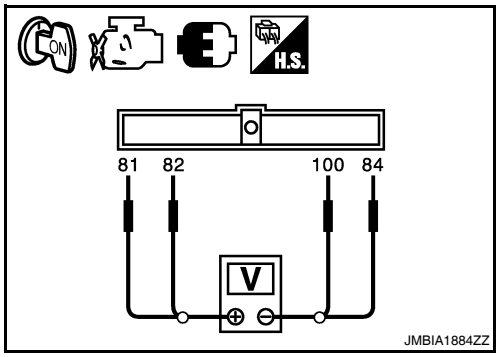

ECM			Condition		Voltage (V)
Connector	+	–			
	Terminal	Terminal			
E10	81 (APP sensor 1 signal)	84 (Sensor ground)	Accelerator pedal	Fully released	0.65 - 0.87
				Fully de-pressed	More than 4.3
	82 (APP sensor 2 signal)	100 (Sensor ground)		Fully released	0.28 - 0.48
				Fully de-pressed	More than 2.0

Is the inspection result normal?

YES >> INSPECTION END
NO >> GO TO 2.

2. REPLACE ACCELERATOR PEDAL ASSEMBLY

1. Replace accelerator pedal assembly.
2. Go to EC-1461, "Special Repair Requirement".

>> INSPECTION END

Special Repair Requirement

INFOID:0000000004362340

1. PERFORM ACCELERATOR PEDAL RELEASED POSITION LEARNING

Refer to EC-1053, "ACCELERATOR PEDAL RELEASED POSITION LEARNING : Special Repair Requirement".

>> GO TO 2.

2. PERFORM THROTTLE VALVE CLOSED POSITION LEARNING

Refer to EC-1053, "THROTTLE VALVE CLOSED POSITION LEARNING : Special Repair Requirement".

>> GO TO 3.

3. PERFORM IDLE AIR VOLUME LEARNING

Refer to EC-1053, "IDLE AIR VOLUME LEARNING : Special Repair Requirement".

>> END

P2A00, P2A03 A/F SENSOR 1

Description

INFOID:0000000004362341

The air fuel ratio (A/F) sensor 1 is a planar one-cell limit current sensor. The sensor element of the A/F sensor 1 is composed an electrode layer, which transports ions. It has a heater in the element.

The sensor is capable of precise measurement λ = 1, but also in the lean and rich range. Together with its control electronics, the sensor outputs a clear, continuous signal throughout a wide λ range.

The exhaust gas components diffuse via the diffusion layer at the sensor cell. An electrode layer is applied voltage, and this current relative oxygen density in lean. Also this current relative hydrocarbon density in rich.

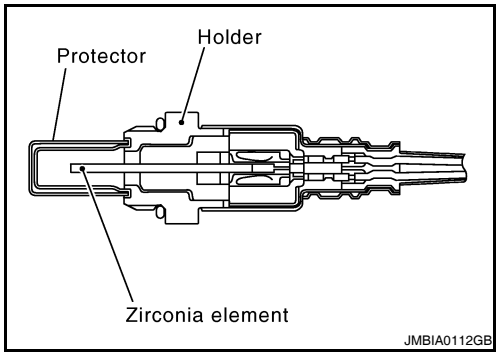

Therefore, the A/F sensor 1 is able to indicate air fuel ratio by this electrode layer of current. In addition, a heater is integrated in the sensor to ensure the required operating temperature of approximately 800°C (1,472°F).

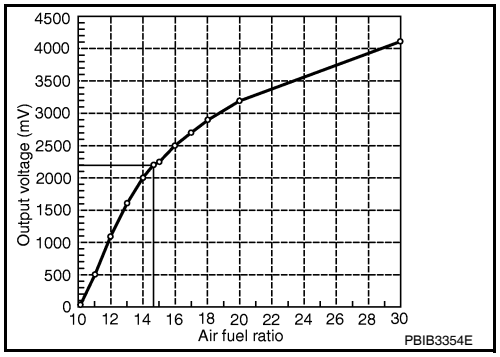

DTC Logic

INFOID:0000000004362342

DTC DETECTION LOGIC

To judge the malfunction, the A/F signal computed by ECM from the A/F sensor 1 signal is monitored so it will not shift to LEAN side or RICH side.

DTC No.	Trouble diagnosis name	DTC detecting condition	Possible Cause
P2A00	Air fuel ratio (A/F) sensor 1 (bank 1) circuit range/performance	• The output voltage computed by ECM from the A/F sensor 1 signal shifts to the lean side for a specified period. • The A/F signal computed by ECM from the A/F sensor 1 signal shifts to the rich side for a specified period.	• A/F sensor 1 • A/F sensor 1 heater • Fuel pressure • Fuel injector • Intake air leakage
P2A03	Air fuel ratio (A/F) sensor 1 (bank 2) circuit range/performance		

DTC CONFIRMATION PROCEDURE

1. PRECONDITIONING

If DTC Confirmation Procedure has been previously conducted, always perform the following before conducting the next test.

1. Turn ignition switch OFF and wait at least 10 seconds.
2. Turn ignition switch ON.
3. Turn ignition switch OFF and wait at least 10 seconds.

TESTING CONDITION:

Before performing the following procedure, confirm that battery voltage is more than 11 V at idle.

>> GO TO 2.

2. PERFORM DTC CONFIRMATION PROCEDURE

1. Clear the mixture ratio self-learning value. Refer to EC-1055, "MIXTURE RATIO SELF-LEARNING VALUE CLEAR : Special Repair Requirement".
2. Turn ignition switch OFF and wait at least 10 seconds.

3. Turn ignition switch ON.
4. Turn ignition switch OFF and wait at least 10 seconds.
5. Start engine and keep the engine speed between 3,500 and 4,000 rpm for 1 minute under no load.
6. Let engine idle for 1 minute.
7. Keep engine speed between 2,500 and 3,000 rpm for 20 minutes.
8. Check 1st trip DTC.

Is 1st trip DTC detected?

YES >> Go to EC-1464, "Diagnosis Procedure".
NO >> INSPECTION END

Diagnosis Procedure

INFOID:0000000004362343

1. CHECK GROUND CONNECTION

1. Turn ignition switch OFF.
2. Check ground connection E9. Refer to Ground Inspection in GI-45, "Circuit Inspection".

Is the inspection result normal?

YES >> GO TO 2.
NO >> Repair or replace ground connection.

2. RETIGHTEN A/F SENSOR 1

Loosen and retighten the A/F sensor 1. Refer to EM-136, "Removal and Installation".

>> GO TO 3.

3. CHECK HARNESS CONNECTOR

1. Turn ignition switch OFF.
2. Disconnect A/F sensor 1 harness connector.
3. Check that water is not inside connectors.

Is the inspection result normal?

YES >> GO TO 4.
NO >> Repair or replace harness connector.

4. CHECK FOR INTAKE AIR LEAKAGE

1. Start engine and run it at idle.
2. Listen for an intake air leakage after the mass air flow sensor.

Is intake air leakage detected?

YES >> GO TO 5.
NO >> Repair or replace malfunctioning part.

5. CLEAR THE MIXTURE RATIO SELF-LEARNING VALUE

1. Clear the mixture ratio self-learning value. Refer to EC-1055, "MIXTURE RATIO SELF-LEARNING VALUE CLEAR : Special Repair Requirement".
2. Run engine for at least 10 minutes at idle speed.

Is the 1st trip DTC P0171, P0172, P0174 or P0175 detected? Is it difficult to start engine?

YES >> Perform trouble diagnosis for DTC P0171, P0174 or P0172, P0175. Refer to EC-1266, "DTC Logic" or EC-1270, "DTC Logic".
NO >> GO TO 6.

6. CHECK AIR FUEL RATIO (A/F) SENSOR 1 POWER SUPPLY CIRCUIT

1. Disconnect A/F sensor 1 harness connector.
2. Turn ignition switch ON.

3. Check the voltage between A/F sensor 1 harness connector and ground.

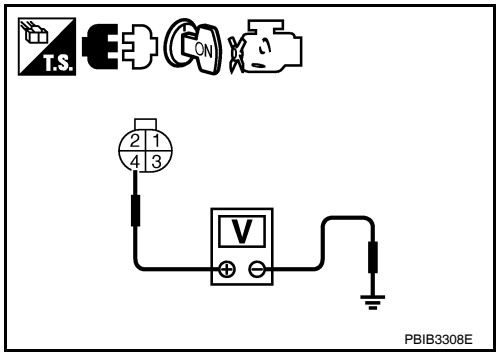

DTC	A/F sensor			Ground	Voltage (V)
	Bank	Connector	Terminal		
P2A00	1	F12	4	Ground	Battery voltage
P2A03	2	F61	4		

Is the inspection result normal?

YES >> GO TO 8.
NO >> GO TO 7.

7. DETECT MALFUNCTIONING PART

Check the following.
- IPDM E/R harness connector F10
- 15 A fuse (No. 37)
- Harness for open or short between A/F sensor 1 and IPDM E/R

>> Repair or replace harness or connectors.

8. CHECK A/F SENSOR 1 INPUT SIGNAL CIRCUIT FOR OPEN AND SHORT

1. Turn ignition switch OFF.
2. Disconnect ECM harness connector.
3. Check the continuity between A/F sensor 1 harness connector and ECM harness connector.

DTC	A/F sensor 1			ECM		Continuity
	Bank	Connector	Terminal	Connector	Terminal	
P2A00	1	F12	1	F13	45	Existed
			2		49	
P2A03	2	F61	1		53	
			2		57	

4. Check the continuity between A/F sensor 1 harness connector and ground, or ECM harness connector and ground.

DTC	A/F sensor 1			Ground	Continuity
	Bank	Connector	Terminal		
P2A00	1	F12	1	Ground	Not existed
			2		
P2A03	2	F61	1		
			2		

DTC	ECM		Ground	Continuity
	Connector	Terminal		
P2A00	F13	45	Ground	Not existed
		49		
P2A03		53		
		57		

5. Also check harness for short to power.

Is the inspection result normal?

YES >> GO TO 9.
NO >> Repair open circuit, short to ground or short to power in harness or connectors.

9. CHECK INTERMITTENT INCIDENT

Perform GI-42, "Intermittent Incident".

Is the inspection result normal?

YES >> GO TO 10.
NO >> Repair or replace malfunctioning part.

10. REPLACE AIR FUEL RATIO (A/F) SENSOR 1

Replace malfunctioning air fuel ratio (A/F) sensor 1.

CAUTION:

- **Discard any A/F sensor which has been dropped from a height of more than 0.5 m (19.7 in) onto a hard surface such as a concrete floor; use a new one.**
- **Before installing new A/F sensor, clean exhaust system threads using Oxygen Sensor Thread Cleaner [commercial service tool (J-43897-18 or J-43897-12)] and approved anti-seize lubricant (commercial service tool).**

>> INSPECTION END

ASCD BRAKE SWITCH

Description

INFOID:0000000004362344

When the brake pedal is depressed, ASCD brake switch is turned OFF and stop lamp switch is turned ON. ECM detects the state of the brake pedal by those two types of input (ON/OFF signal).
Refer to EC-1090, "System Diagram" for the ASCD function.

Component Function Check

INFOID:0000000004362345

1. CHECK ASCD BRAKE SWITCH FUNCTION

With CONSULT-III

1. Turn ignition switch ON.
2. Select “BRAKE SW1” in “DATA MONITOR” mode with CONSULT-III.
3. Check “BRAKE SW1” indication under the following conditions.

Monitor item	Condition		Indication
BRAKE SW1	Brake pedal (CVT) Brake pedal and clutch pedal (M/T)	Slightly depressed	OFF
		Fully released	ON

Without CONSULT-III

1. Turn ignition switch ON.
2. Check the voltage between ECM harness connectors.

ECM			Condition		Voltage
Con-nector	+	–			
	Terminal	Terminal			
E10	110 (ASCD brake switch signal)	112	Brake pedal (CVT) Brake pedal and clutch pedal (M/T)	Slightly depressed	Approx. 0 V
				Fully re-leased	Battery voltage

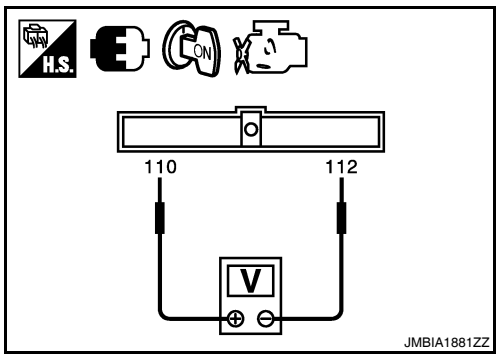

Is the inspection result normal?

YES >> INSPECTION END
NO >> Go to EC-1467, "Diagnosis Procedure".

Diagnosis Procedure

INFOID:0000000004458156

1. CHECK OVERALL FUNCTION-I

Check which type of transmission the vehicle is equipped with.

Which type of transmission?

CVT >> GO TO 2.
M/T >> GO TO 6.

2. CHECK ASCD BRAKE SWITCH POWER SUPPLY CIRCUIT

1. Turn ignition switch OFF.
2. Disconnect ASCD brake switch harness connector.
3. Turn ignition switch ON.

4. Check the voltage between ASCD brake switch harness connector and ground.

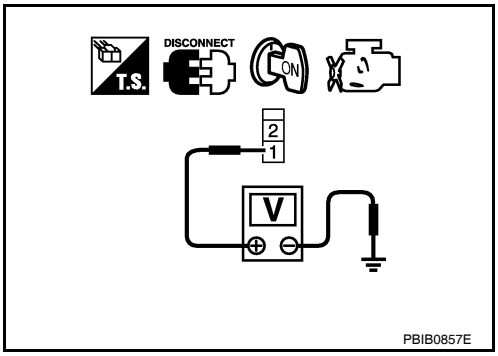

ASCD brake switch		Ground	Voltage (V)
Connector	Terminal		
E37	1	Ground	Battery voltage

Is the inspection result normal?

YES >> GO TO 4.
NO >> GO TO 3.

3. DETECT MALFUNCTIONING PART

Check the following.
- Fuse block (J/B) connector E6
- 10 A fuse (No. 3)
- Harness for open or short between ASCD brake switch and fuse

>> Repair open circuit, short to ground or short to power in harness or connectors.

4. CHECK ASCD BRAKE SWITCH INPUT SIGNAL CIRCUIT FOR OPEN AND SHORT

1. Turn ignition switch OFF.
2. Disconnect ECM harness connector.
3. Check the continuity between ASCD brake switch harness connector and ECM harness connector.

ASCD brake switch		ECM		Continuity
Connector	Terminal	Connector	Terminal	
E37	2	E10	110	Existed

4. Also check harness for short to ground and short to power.

Is the inspection result normal?

YES >> GO TO 5.
NO >> Repair open circuit, short to ground or short to power in harness or connectors.

5. CHECK ASCD BRAKE SWITCH

Refer to EC-1470, "Component Inspection (ASCD Brake Switch)"

Is the inspection result normal?

YES >> GO TO 13.
NO >> Replace ASCD brake switch.

6. CHECK ASCD BRAKE SWITCH CIRCUIT

1. Turn ignition switch OFF.
2. Disconnect ASCD clutch switch harness connector.
3. Turn ignition switch ON.
4. Check the voltage between ASCD clutch switch harness connector and ground.

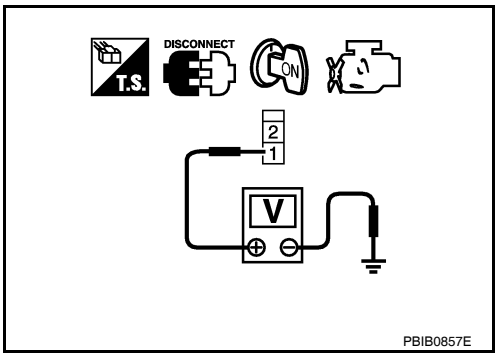

ASCD clutch switch		Ground	Condition		Voltage (V)
Connector	Terminal				
E39	1	Ground	Brake pedal	Slightly depressed	Approx. 0
				Fully released	Battery voltage

Is the inspection result normal?

YES >> GO TO 11.
NO >> GO TO 7.

7. CHECK ASCD BRAKE SWITCH POWER SUPPLY CIRCUIT

1. Turn ignition switch OFF.
2. Disconnect ASCD brake switch harness connector.
3. Turn ignition switch ON.
4. Check the voltage between ASCD brake switch harness connector and ground.

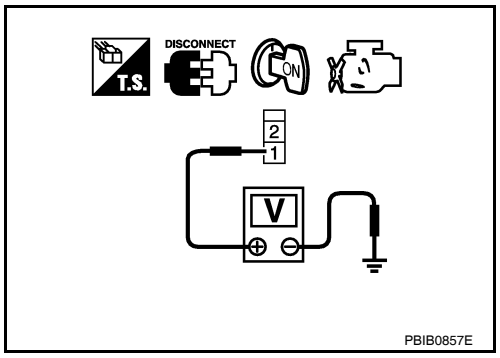

ASCD brake switch		Ground	Voltage (V)
Connector	Terminal		
E37	1	Ground	Battery voltage

Is the inspection result normal?

YES >> GO TO 9.
NO >> GO TO 8.

8. DETECT MALFUNCTIONING PART

Check the following.
- Fuse block (J/B) connector E6
- 10 A fuse (No. 3)
- Harness for open or short between ASCD brake switch and fuse

>> Repair open circuit, short to ground or short to power in harness or connectors.

9. CHECK ASCD BRAKE SWITCH INPUT SIGNAL CIRCUIT FOR OPEN AND SHORT

1. Turn ignition switch OFF.
2. Check the continuity between ASCD brake switch harness connector and ASCD clutch switch harness connector.

ASCD brake switch		ASCD clutch switch		Continuity
Connector	Terminal	Connector	Terminal	
E37	2	E39	1	Existed

3. Also check harness for short to ground and short to power.

Is the inspection result normal?

YES >> GO TO 10.
NO >> Repair open circuit, short to ground or short to power in harness or connectors.

10. CHECK ASCD BRAKE SWITCH

Refer to EC-1470, "Component Inspection (ASCD Brake Switch)"

Is the inspection result normal?

YES >> GO TO 13.
NO >> Replace ASCD brake switch.

11. CHECK ASCD BRAKE SWITCH INPUT SIGNAL CIRCUIT FOR OPEN AND SHORT

1. Turn ignition switch OFF.
2. Disconnect ECM harness connector.
3. Check the continuity between ASCD clutch switch harness connector and ECM harness connector.

ASCD clutch switch		ECM		Continuity
Connector	Terminal	Connector	Terminal	
E39	2	E10	110	Existed

4. Also check harness for short to ground and short to power.

Is the inspection result normal?

YES >> GO TO 12.
NO >> Repair open circuit, short to ground or short to power in harness or connectors.

12. CHECK ASCD CLUTCH SWITCH

Refer to EC-1470, "Component Inspection (ASCD Clutch Switch)"

Is the inspection result normal?

YES >> GO TO 13.
NO >> Replace ASCD clutch switch.

13. CHECK INTERMITTENT INCIDENT

Refer to GI-42, "Intermittent Incident".

>> INSPECTION END

Component Inspection (ASCD Brake Switch)

INFOID:0000000004362347

1. CHECK ASCD BRAKE SWITCH-I

1. Turn ignition switch OFF.
2. Disconnect ASCD brake switch harness connector.
3. Check the continuity between ASCD brake switch terminals under the following conditions.

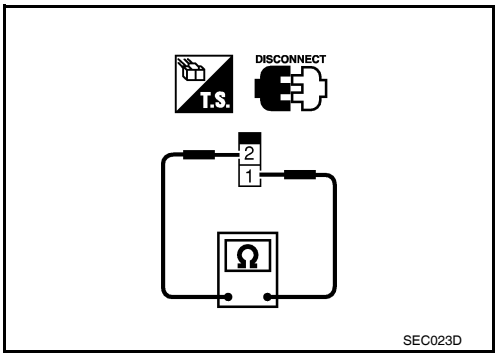

Terminals	Condition		Continuity
1 and 2	Brake pedal	Fully released	Existed
		Slightly depressed	Not existed

Is the inspection result normal?

YES >> INSPECTION END
NO >> GO TO 2.

2. CHECK ASCD BRAKE SWITCH-II

1. Adjust ASCD brake switch installation. Refer to BR-13, "Inspection and Adjustment".
2. Check the continuity between ASCD brake switch terminals under the following conditions.

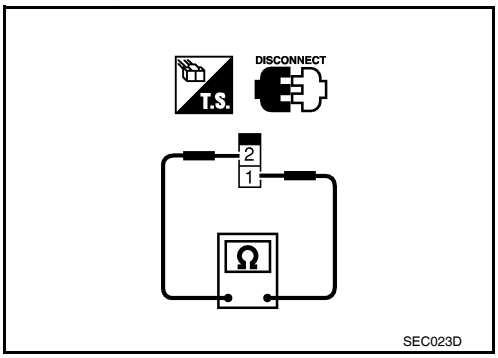

Terminals	Condition		Continuity
1 and 2	Brake pedal	Fully released	Existed
		Slightly depressed	Not existed

Is the inspection result normal?

YES >> INSPECTION END
NO >> Replace ASCD brake switch.

Component Inspection (ASCD Clutch Switch)

INFOID:0000000004455900

1. CHECK ASCD CLUTCH SWITCH-I

1. Turn ignition switch OFF.
2. Disconnect ASCD clutch switch harness connector.
3. Check harness continuity between ASCD clutch switch terminals under the following conditions.

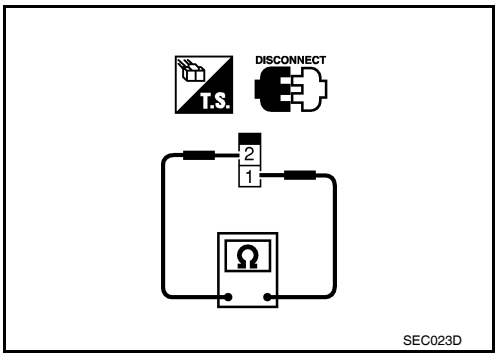

Terminals	Condition		Continuity
1 and 2	Clutch pedal	Fully released	Existed
		Slightly depressed	Not existed

Is the inspection result normal?

YES >> INSPECTION END
NO >> GO TO 2.

2. CHECK ASCD CLUTCH SWITCH-II

1. Adjust ASCD clutch switch installation. Refer to BR-13, "Inspection and Adjustment".
2. Check harness continuity between ASCD clutch switch terminals under the following conditions.

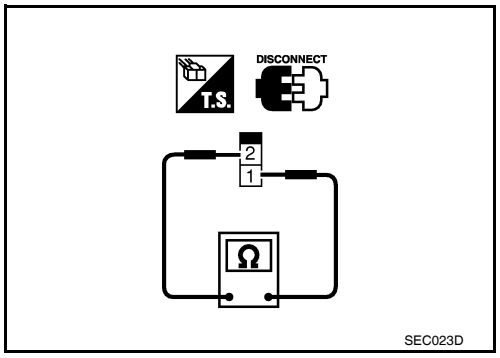

Terminals	Condition		Continuity
1 and 2	Clutch pedal	Fully released	Existed
		Slightly depressed	Not existed

Is the inspection result normal?

YES >> INSPECTION END
NO >> Replace ASCD clutch switch.

ASCD INDICATOR

Description

INFOID:0000000004458198

The ASCD operation status is indicated by two indicators, (CRUISE and SET on the information display) on the combination meter.
CRUISE indicator is displayed to indicate that ASCD system is ready for operation when MAIN switch on ASCD steering switch is turned ON.
SET indicator is displayed when the following conditions are met.
- CRUISE indicator is displayed.
- SET/COAST switch on ASCD steering switch is turned ON while vehicle speed is within the range of ASCD setting.

SET indicator is displayed during ASCD control.
Refer to EC-67, "System Description" for the ASCD function.

Component Function Check

INFOID:0000000004458199

1.ASCD INDICATOR FUNCTION

Check ASCD indicator under the following conditions.

ASCD INDICATOR	CONDITION		SPECIFICATION
CRUISE	• Ignition switch: ON	• MAIN switch: Pressed at the 1st time →at the 2nd time	ON → OFF
SET	• MAIN switch: ON • When vehicle speed: Between 40 km/h (25 MPH) and 144 km/h (89 MPH)	• ASCD: Operating	ON
		• ASCD: Not operating	OFF

Is the inspection result normal?

YES >> INSPECTION END
NO >> Go to EC-1472, "Diagnosis Procedure".

Diagnosis Procedure

INFOID:0000000004458200

1.CHECK DTC

Check that DTC UXXXX is not displayed.

Is the inspection result normal?

YES >> GO TO 2.
NO >> Perform trouble diagnosis for DTC UXXXX.

2.CHECK COMBINATION METER OPERATION

Refer to MWI-38, "CONSULT-III Function (METER/M&A)".

Is the inspection result normal?

YES >> GO TO 3.
NO >> Check combination meter circuit. Refer to EC-1179, "Diagnosis Procedure".

3.CHECK INTERMITTENT INCIDENT

Refer to GI-42, "Intermittent Incident".

>> INSPECTION END

COOLING FAN

Description

INFOID:0000000004362351

The ECM controls the cooling fan corresponding to the vehicle speed, engine coolant temperature, refrigerant pressure, and air conditioner ON signal. The control system has 4-step control [HIGH/MIDDLE/LOW/OFF].

COOLING FAN MOTOR

The cooling fan operates at each speed when the current flows in the cooling fan motor as per the following.

Cooling fan speed	Cooling fan motor terminals	
	(+)	(–)
Middle (MID)	1	3 and 4
	2	3 and 4
	1 and 2	3
	1 and 2	4
High (HI)	1 and 2	3 and 4

The cooling fan operates at low (LOW) speed when cooling fan motors-1 and -2 are circuited in series under the middle speed condition.
Refer to EC-1099, "System Diagram".

Component Function Check

INFOID:0000000004362352

1. CHECK COOLING FAN FUNCTION

With CONSULT-III

1. Turn ignition switch ON.
2. Perform “COOLING FAN” in “ACTIVE TEST” mode with CONSULT-III.
3. Check that cooling fan operates at each speed.

Without CONSULT-III

1. Perform IPDM E/R auto active test and check cooling fan motors operation, refer to PCS-14, "Diagnosis Description".
2. Check that cooling fan operates at each speed.

Is the inspection result normal?

YES >> INSPECTION END
NO >> Go to EC-1473, "Diagnosis Procedure".

Diagnosis Procedure

INFOID:0000000004362353

1. CHECK COOLING FAN RELAY POWER SUPPLY CIRCUIT

1. Turn ignition switch OFF.
2. Disconnect cooling fan relays-2, -3.
3. Turn ignition switch ON.
4. Check the voltage between cooling fan relays-2, -3 harness connectors and ground.

Cooling fan relay		Ground	Voltage
Connector	Terminal		
E42 (cooling fan relay-2)	2	Ground	Battery voltage
	5		
E43 (cooling fan relay-3)	2		
	5		

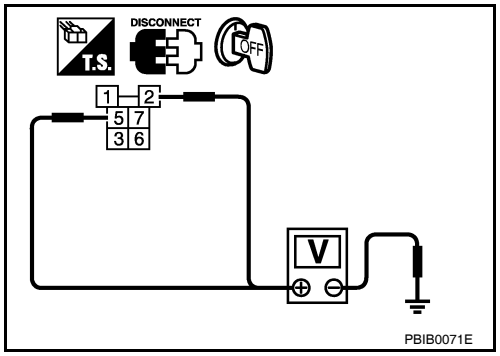

Is the inspection result normal?

YES >> GO TO 3.

NO >> GO TO 2.

2. DETECT MALFUNCTIONING PART

Check the following.
- 10 A fuse (No. 33)
- 40 A fusible link (letter K)
- IPDM E/R harness connector E18
- Harness for open or short between cooling fan relay-2 and battery
- Harness for open or short between cooling fan relay-3 and battery
- Harness for open or short between cooling fan relay-2 and IPDM E/R
- Harness for open or short between cooling fan relay-3 and IPDM E/R

>> Repair open circuit, short to ground or short to power in harness or connectors.

3. CHECK COOLING FAN RELAY OUTPUT SIGNAL CIRCUIT

1. Turn ignition switch OFF.
2. Disconnect IPDM E/R harness connectors.
3. Check the continuity between cooling fan relay-2, -3 harness connectors and IPDM E/R harness connector.

Cooling fan relay		IPDM E/R		Continuity
Connector	Terminal	Connector	Terminal	
E42 (cooling fan relay-2)	1	E17	42	Existed
E43 (cooling fan relay-3)	1	E18	34	

4. Also check harness for short to ground and short to power.

Is the inspection result normal?

YES >> GO TO 5.
NO >> GO TO 4.

4. DETECT MALFUNCTIONING PART

Check the following.
- Harness for open or short between cooling fan relay-2 and IPDM E/R
- Harness for open or short between cooling fan relay-3 and IPDM E/R

>> Repair open circuit, short to ground or short to power in harness or connectors.

5. CHECK COOLING FAN MOTOR POWER SUPPLY CIRCUIT

1. Disconnect cooling fan motor-1 harness connector.
2. Check the voltage between cooling fan motor-1 harness connector and ground.

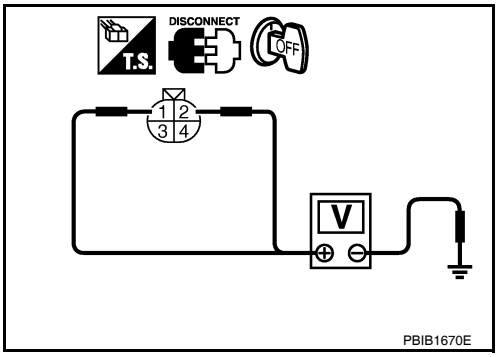

Cooling fan motor-1		Ground	Voltage
Connector	Terminal		
E220	1	Ground	Battery voltage
	2		

Is the inspection result normal?

YES >> GO TO 7.
NO >> GO TO 6.

6. DETECT MALFUNCTIONING PART

Check the following.
- 40 A fusible link (letter M)
- Harness connector E12, E203
- Harness for open or short between cooling fan motor-1 and battery

>> Repair open circuit, short to ground or short to power in harness or connectors.

7. CHECK COOLING FAN MOTOR CIRCUIT-I

1. Disconnect cooling fan motor-2 harness connector.
2. Check the continuity between cooling fan relay-2, -3 harness connectors and cooling fan motor-1, -2 harness connectors.

Cooling fan relay		Cooling fan motor		Continuity
Connector	Terminal	Connector	Terminal	
E42 (cooling fan relay-2)	3	E221 (Cooling fan motor-2)	2	Existed
	7	E220 (Cooling fan motor-1)	3	
E43 (cooling fan relay-3)	3	E221 (Cooling fan motor-2)	1	
	7	E220 (Cooling fan motor-1)	4	

3. Also check harness for short to ground and short to power.

Is the inspection result normal?

YES >> GO TO 9.
NO >> GO TO 8.

8. DETECT MALFUNCTIONING PART

Check the following.
- Harness connector E12, E203
- Harness for open or short between cooling fan motor-1 and cooling fan relay-2
- Harness for open or short between cooling fan motor-1 and cooling fan relay-3
- Harness for open or short between cooling fan motor-2 and cooling fan relay-2
- Harness for open or short between cooling fan motor-2 and cooling fan relay-3

>> Repair open circuit, short to ground or short to power in harness or connectors.

9. CHECK COOLING FAN MOTOR CIRCUIT-II

1. Check the continuity between IPDM E/R harness connector and cooling fan motor-1, -2 harness connector.

IPDM E/R		Cooling fan motor		Continuity
Connector	Terminal	Connector	Terminal	
E18	35	E220 (Cooling fan motor-1)	4	Existed
	38	E221 (Cooling fan motor-2)	1	

2. Also check harness for short to ground and short to power.

Is the inspection result normal?

YES >> GO TO 11.
NO >> GO TO 10.

10. DETECT MALFUNCTIONING PART

Check the following.
- Harness connector E70, E305
- Harness for open or short between cooling fan motor-1 and IPDM E/R
- Harness for open or short between cooling fan motor-2 and IPDM E/R

>> Repair open circuit, short to ground or short to power in harness or connectors.

11. CHECK COOLING FAN MOTOR CIRCUIT-III

1. Check the continuity between cooling fan relay-2, -3 harness connectors and ground.

Cooling fan motor		Ground	Continuity
Connector	Terminal		
E42 (cooling fan relay-2)	6	Ground	Existed
E43 (cooling fan relay-3)	6		

2. Also check harness for short to ground and short to power.

Is the inspection result normal?

YES >> GO TO 12.
NO >> Repair open circuit, short to ground or short to power in harness or connectors.

12. CHECK COOLING FAN MOTOR CIRCUIT-IV

1. Check the continuity between cooling fan motor-2 harness connector and ground.

Cooling fan motor-2		Ground	Continuity
Connector	Terminal		
E221	3	Ground	Existed
	4		

2. Also check harness for short to ground and short to power.

Is the inspection result normal?

YES >> GO TO 13.
NO >> Repair open circuit, short to ground or short to power in harness or connectors.

13. CHECK COOLING FAN RELAYS-2 AND -3

Refer to EC-1477, "Component Inspection (Cooling Fan Relay)".

Is the inspection result normal?

YES >> GO TO 14.
NO >> Replace malfunctioning cooling fan relay.

14. CHECK COOLING FAN MOTORS-1 AND -2

Refer to EC-1476, "Component Inspection (Cooling Fan Motor)".

Is the inspection result normal?

YES >> GO TO 15.
NO >> Replace malfunctioning cooling fan motor.

15. CHECK INTERMITTENT INCIDENT

Perform GI-42, "Intermittent Incident".

Is the inspection result normal?

YES >> Replace IPDM E/R.
NO >> Repair or replace harness connectors.

Component Inspection (Cooling Fan Motor)

INFOID:0000000004362354

1. CHECK COOLING FAN MOTOR

1. Turn ignition switch OFF.
2. Disconnect cooling fan motor harness connector.

3. Supply cooling fan motor terminals with battery voltage and check operation.

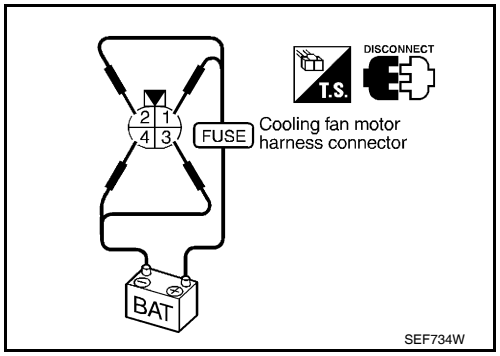

	Condition	Terminals	
		+	–
Cooling fan motor	A	1	3 and 4
		2	3 and 4
		1 and 2	3
		1 and 2	4
	B	1, 2	3, 4

Check that cooling fan speed of condition B is higher than that of A.

Is the inspection result normal?

YES >> INSPECTION END
NO >> Replace cooling fan motor.

Component Inspection (Cooling Fan Relay)

INFOID:0000000004362355

1. CHECK COOLING FAN RELAY

1. Disconnect cooling fan relays -2, -3 harness connectors.
2. Check continuity between cooling fan relay -2, -3 terminals under the following conditions.

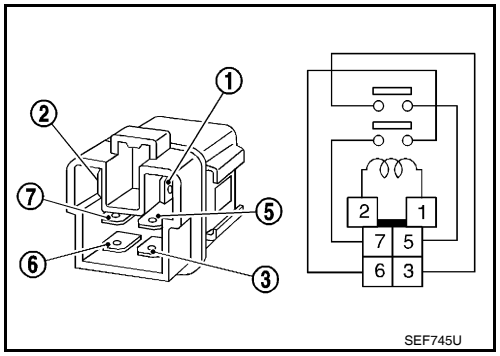

Terminals	Conditions	Continuity
3 and 5 6 and 7	12 V direct current supply between terminals 1 and 2	Existed
	No current supply	Not existed

Is the inspection result normal?

YES >> INSPECTION END
NO >> Replace cooling fan relay.

ELECTRICAL LOAD SIGNAL

Description

INFOID:0000000004362356

The electrical load signal (Headlamp switch signal, rear window defogger switch signal, etc.) is transferred via the CAN communication.

Component Function Check

INFOID:0000000004362357

1.CHECK REAR WINDOW DEFOGGER SWITCH FUNCTION

1. Turn ignition switch ON.
2. Connect CONSULT-III and select “DATA MONITOR” mode.
3. Select “LOAD SIGNAL” and check indication under the following conditions.

Monitor item	Condition		Indication
LOAD SIGNAL	Rear window defogger switch	ON	ON
		OFF	OFF

Is the inspection result normal?

YES >> GO TO 2.
NO >> Go to EC-1478, "Diagnosis Procedure".

2.CHECK LIGHTING SWITCH FUNCTION

Check “LOAD SIGNAL” indication under the following conditions.

Monitor item	Condition		Indication
LOAD SIGNAL	Lighting switch	ON at 2nd position	ON
		OFF	OFF

Is the inspection result normal?

YES >> GO TO 3.
NO >> Go to EC-1478, "Diagnosis Procedure".

3.CHECK HEATER FAN CONTROL SWITCH FUNCTION

Select “HEATER FAN SW” and check indication under the following conditions.

Monitor item	Condition		Indication
HEATER FAN SW	Heater fan control switch	ON	ON
		OFF	OFF

Is the inspection result normal?

YES >> INSPECTION END
NO >> Go to EC-1478, "Diagnosis Procedure".

Diagnosis Procedure

INFOID:0000000004362358

1.INSPECTION START

Confirm the malfunctioning circuit (rear window defogger, headlamp or heater fan). Refer to EC-1478, "Component Function Check".

Which circuit is related to the incident?

Rear window defogger>>GO TO 2.
Headlamp>>GO TO 3.
Heater fan>>GO TO 4.

2.CHECK REAR WINDOW DEFOGGER SYSTEM

Refer to DEF-3, "Work Flow".

>> INSPECTION END

3. CHECK HEADLAMP SYSTEM

Refer to EXL-4, "Work Flow".

>> INSPECTION END

4. CHECK HEATER FAN CONTROL SYSTEM

Refer to HAC-4, "Work Flow" (automatic air conditioner) or HAC-101, "Work Flow" (manual air conditioner).

>> INSPECTION END

ELECTRONIC CONTROLLED ENGINE MOUNT

Description

INFOID:0000000004362359

The electronic controlled engine mount control solenoid valve controls the intake manifold vacuum signal for electronic controlled engine mount. The electronic controlled engine mount control solenoid valve is moved by ON/OFF signal from the ECM. When the solenoid is OFF, the vacuum signal from the intake manifold is cut. When the solenoid is ON, the intake manifold vacuum signal is sent to the electronic controlled engine mount.

Component Function Check

INFOID:0000000004362360

1.CHECK OVERALL FUNCTION

1. Start engine and warm it up to normal operating temperature.
2. Shift selector lever to D position (CVT) or 1st position (M/T) while depressing the brake pedal and parking brake pedal.
3. Disconnect electronic controlled engine mount control solenoid valve harness connector.
4. Check that body vibration increases compared to the condition of step 2 above (with vehicle stopped).

Is the inspection result normal?

YES >> INSPECTION END
NO >> EC-1480, "Diagnosis Procedure".

Diagnosis Procedure

INFOID:0000000004362361

1.CHECK VACUUM SOURCE

1. Turn ignition switch OFF.
2. Reconnect electronic controlled engine mount control solenoid valve harness connector.
3. Disconnect vacuum hose connected to electronic controlled engine mount.
4. Start engine and let it idle.
5. Check vacuum hose for vacuum existence.

Vacuum should exist.

Is the inspection result normal?

YES >> GO TO 7.
NO >> GO TO 2.

2.CHECK VACUUM HOSES AND VACUUM GALLERY

1. Turn ignition switch OFF.
2. Check vacuum hoses and vacuum gallery for clogging, cracks or improper connection. Refer to EC-1107, "System Description".

Is the inspection result normal?

YES >> GO TO 3.
NO >> Repair or replace vacuum hoses and vacuum gallery.

3.CHECK ELECTRONIC CONTROLLED ENGINE MOUNT CONTROL SOLENOID VALVE POWER SUPPLY CIRCUIT

1. Disconnect electronic controlled engine mount control solenoid valve harness connector.
2. Turn ignition switch ON.
3. Check the voltage between front electronic controlled engine mount harness connector and ground.

Electronic controlled engine mount control solenoid valve		Ground	Voltage
Connector	Terminal		
F64	1	Ground	Battery voltage

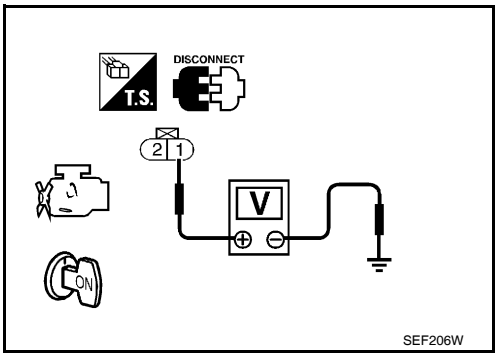

Is the inspection result normal?

YES >> GO TO 5.

NO >> GO TO 4.

4. DETECT MALFUNCTIONING PART

Check the following.
- 10 A fuse (No. 3)
- Fuse block (J/B) connector E6
- Harness connectors E3, F1
- Harness for open or short between electronic controlled engine mount control solenoid valve and fuse

>> Repair open circuit, short to ground or short to power in harness or connectors.

5. CHECK ELECTRONIC CONTROLLED ENGINE MOUNT CONTROL SOLENOID VALVE OUTPUT SIGNAL CIRCUIT FOR OPEN AND SHORT

1. Disconnect ECM harness connector.
2. Check the continuity between ECM harness connector and electronic controlled engine mount control solenoid valve harness connector.

ECM		Electronic controlled engine mount control solenoid valve		Continuity
Connector	Terminal	Connector	Terminal	
F14	28	F64	2	Existed

3. Also check harness for short to ground and short to power.

Is the inspection result normal?

YES >> GO TO 6.
NO >> Repair open circuit, short to ground or short to power in harness connectors.

6. CHECK ELECTRONIC CONTROLLED ENGINE MOUNT CONTROL SOLENOID VALVE

Refer to EC-1481, "Component Inspection".

Is the inspection result normal?

YES >> GO TO 7.
NO >> Replace electronic controlled engine mount control solenoid valve.

7. CHECK ELECTRONIC CONTROLLED ENGINE MOUNT

1. Turn ignition switch OFF.
2. Install vacuum pump (A) to electronic controlled engine mount (1).
3. Check that a vacuum is maintained when applying the vacuum of -40 kPa (-0.41 kg/cm^2, -5.8 psi) to electronic controlled engine mount.
4. Also visually check electronic controlled engine mount.

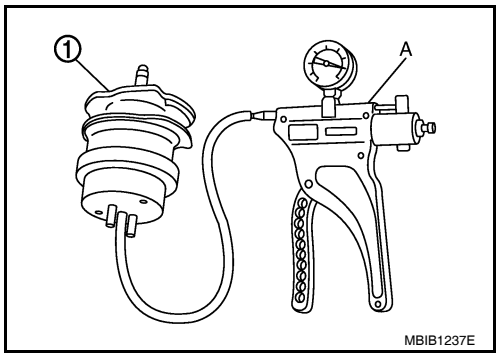

Is the inspection result normal?

YES >> GO TO 8.
NO >> Replace electronic controlled engine mount.

8. CHECK INTERMITTENT INCIDENT

Refer to GI-42, "Intermittent Incident".

Is the inspection result normal?

YES >> Replace intake manifold collector.
NO >> Repair or replace malfunctioning part.

Component Inspection

INFOID:0000000004362362

1. CHECK ELECTRONIC CONTROLLED ENGINE MOUNT CONTROL SOLENOID VALVE

With CONSULT-III

1. Turn ignition switch OFF.

2. Reconnect electronic controlled engine mount control solenoid valve harness connector.
3. Disconnect vacuum hoses connected to electronic controlled engine mount control solenoid valve.
4. Turn ignition switch ON.
5. Select “ENGINE MOUNTING” in “ACTIVE TEST” mode with CONSULT-III.
6. Check air passage continuity and operation delay time under the following conditions.

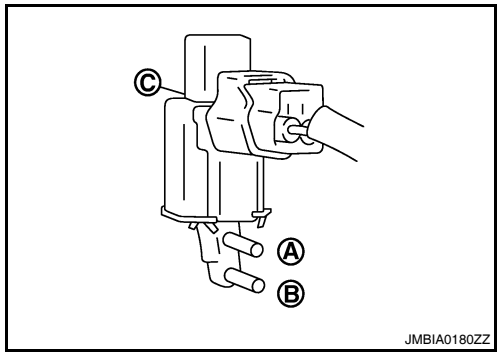

Condition (ENGINE MOUNTING)	Air passage continuity between (A) and (B)	Air passage continuity between (A) and (C)
TRVL	Existed	Not existed
IDLE	Not existed	Existed

Without CONSULT-III

1. Turn ignition switch OFF.
2. Disconnect electronic controlled engine mount control solenoid valve harness connector.
3. Disconnect vacuum hoses connected to electronic controlled engine mount control solenoid valve.
4. Check air passage continuity and operation delay time under the following conditions.

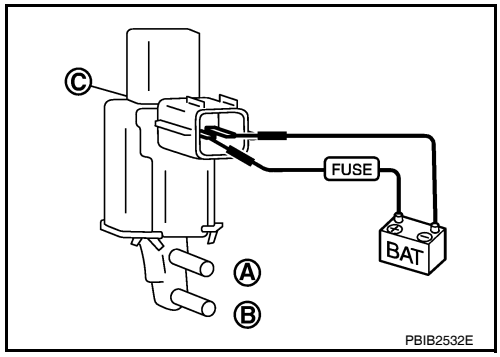

Condition	Air passage continuity between (A) and (B)	Air passage continuity between (A) and (C)
12 V direct current supply between terminals 1 and 2	Existed	Not existed
No supply	Not existed	Existed

Is the inspection result normal?

YES >> INSPECTION END
NO >> Replace electronic controlled engine mount control solenoid valve.

FUEL INJECTOR

Description

INFOID:0000000004362363

The fuel injector is a small, precise solenoid valve. When the ECM supplies a ground to the fuel injector circuit, the coil in the fuel injector is energized. The energized coil pulls the ball valve back and allows fuel to flow via the fuel injector into the intake manifold. The amount of fuel injected depends upon the injection pulse duration. Pulse duration is the length of time the fuel injector remains open. The ECM controls the injection pulse duration based on engine fuel needs.

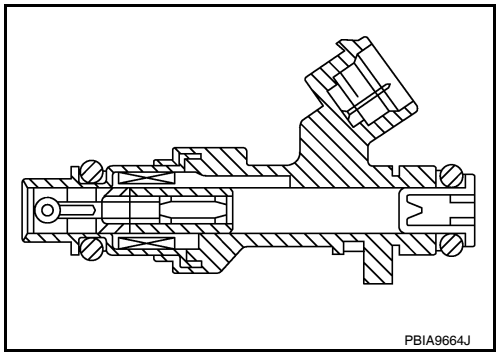

Component Function Check

INFOID:0000000004362364

1. INSPECTION START

Turn ignition switch to START.

Are any cylinders ignited?

YES >> GO TO 2.
NO >> Go to EC-1483, "Diagnosis Procedure".

2. CHECK FUEL INJECTOR FUNCTION

With CONSULT-III

1. Start engine.
2. Perform “POWER BALANCE” in “ACTIVE TEST” mode with CONSULT-III.
3. Check that each circuit produces a momentary engine speed drop.

Without CONSULT-III

1. Start engine.
2. Listen to each fuel injector operating sound.

Clicking sound should be heard.

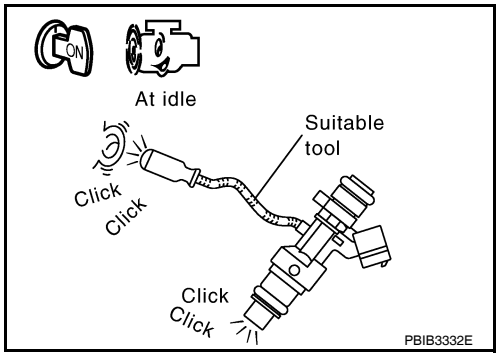

Is the inspection result normal?

YES >> INSPECTION END
NO >> Go to EC-1483, "Diagnosis Procedure".

Diagnosis Procedure

INFOID:0000000004362365

1. CHECK FUEL INJECTOR POWER SUPPLY CIRCUIT

1. Turn ignition switch OFF.
2. Disconnect fuel injector harness connector.
3. Turn ignition switch ON.

4. Check the voltage between fuel injector harness connector and ground.

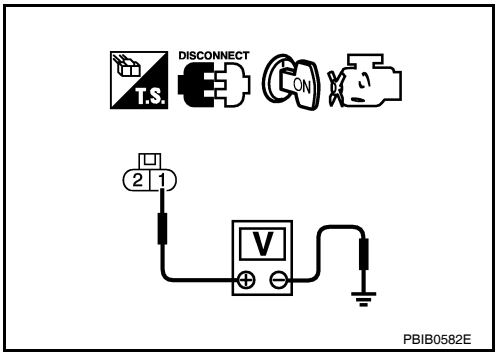

Fuel injector			Ground	Voltage
Cylinder	Connector	Terminal		
1	F17	1	Ground	Battery voltage
2	F18	1		
3	F19	1		
4	F20	1		
5	F21	1		
6	F22	1		

Is the inspection result normal?

YES >> GO TO 3.
NO >> GO TO 2.

2. DETECT MALFUNCTIONING PART

Check the following.
- 10 A fuse (No. 35)
- IPDM E/R harness connector E10
- Harness for open or short between fuel injector and IPDM E/R

>> Repair open circuit, short to ground or short to power in harness or connectors.

3. CHECK FUEL INJECTOR OUTPUT SIGNAL CIRCUIT FOR OPEN AND SHORT

1. Turn ignition switch OFF.
2. Disconnect ECM harness connector.
3. Check the continuity between fuel injector harness connector and ECM harness connector.

Fuel injector			ECM		Continuity
Cylinder	Connector	Terminal	Connector	Terminal	
1	F17	2	F14	32	Existed
2	F18	2		31	
3	F19	2		30	
4	F20	2		29	
5	F21	2		3	
6	F22	2		1	

4. Also check harness for short to ground and short to power.

Is the inspection result normal?

YES >> GO TO 4.
NO >> Repair open circuit, short to ground or short to power in harness or connectors.

4. CHECK FUEL INJECTOR

Refer to EC-1485, "Component Inspection".

Is the inspection result normal?

YES >> GO TO 5.
NO >> Replace malfunctioning fuel injector.

5. CHECK INTERMITTENT INCIDENT

Refer to GI-42, "Intermittent Incident".

Is the inspection result normal?

YES >> Replace IPDM E/R.
NO >> INSPECTION END

Component Inspection

INFOID:0000000004362366

1. CHECK FUEL INJECTOR

1. Turn ignition switch OFF.
2. Disconnect fuel injector harness connector.
3. Check resistance between fuel injector terminals as per the following.

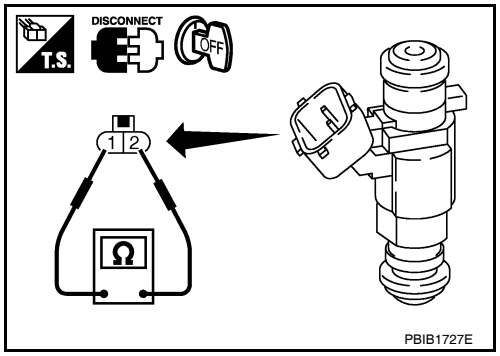

Terminals	Resistance
1 and 2	11.1 - 14.5 Ω [at 10 - 60°C (50 - 140°F)]

Is the inspection result normal?

YES >> INSPECTION END
NO >> Replace malfunctioning fuel injector.

FUEL PUMP

Description

INFOID:0000000004362367

Sensor	Input signal to ECM	ECM Function	Actuator
Crankshaft position sensor (POS) Camshaft position sensor (PHASE)	Engine speed*	Fuel pump control	Fuel pump relay ↓ Fuel pump
Battery	Battery voltage*		

*: ECM determines the start signal status by the signals of engine speed and battery voltage.

The ECM activates the fuel pump for several seconds after the ignition switch is turned ON to improve engine start ability. If the ECM receives a engine speed signal from the camshaft position sensor (PHASE), it knows that the engine is rotating, and causes the pump to operate. If the engine speed signal is not received when the ignition switch is ON, the engine stalls. The ECM stops pump operation and prevents battery discharging, thereby improving safety. The ECM does not directly drive the fuel pump. It controls the ON/OFF fuel pump relay, which in turn controls the fuel pump.

Condition	Fuel pump operation
Ignition switch is turned to ON.	Operates for 1 second.
Engine running and cranking	Operates.
When engine is stopped	Stops in 1.5 seconds.
Except as shown above	Stops.

Component Function Check

INFOID:0000000004362368

1.CHECK FUEL PUMP FUNCTION

1. Turn ignition switch ON.
2. Pinch fuel feed hose with two fingers.

- ⇦: Vehicle front (Illustration shows the view with intake air duct removed)

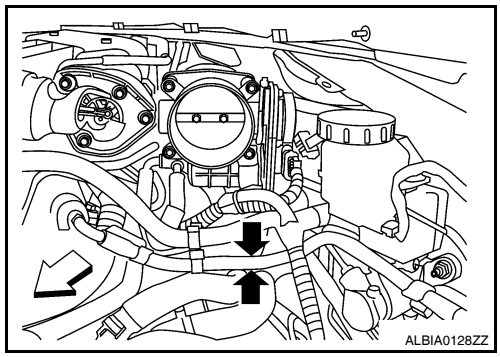

Fuel pressure pulsation should be felt on the fuel feed hose for 1 second after ignition switch is turned ON.

Is the inspection result normal?

YES >> INSPECTION END
NO >> EC-1486, "Diagnosis Procedure".

Diagnosis Procedure

INFOID:0000000004362369

1.CHECK FUEL PUMP POWER SUPPLY CIRCUIT-I

1. Turn ignition switch OFF.
2. Disconnect ECM harness connector.
3. Turn ignition switch ON.
4. Check the voltage between ECM harness connectors.

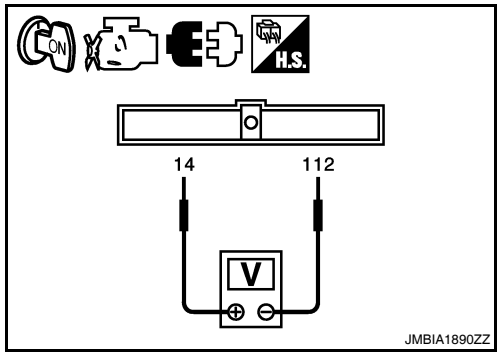

ECM				Voltage
+		–		
Connector	Terminal	Connector	Terminal	
F14	14	E10	112	Battery voltage

Is the inspection result normal?

YES >> GO TO 4.
NO >> GO TO 2.

2. CHECK FUEL PUMP POWER SUPPLY CIRCUIT-II

Check the voltage between IPDM E/R harness connector and ground.

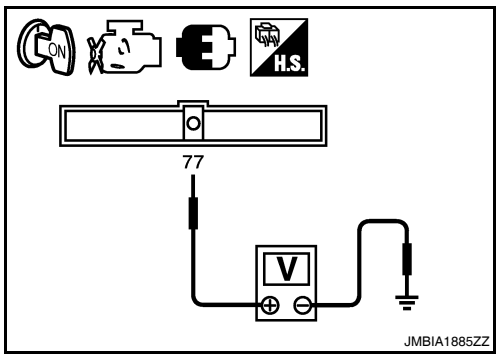

IPDM E/R		Ground	Voltage
Connector	Terminal		
F10	77	Ground	Battery voltage

Is the inspection result normal?

YES >> GO TO 3.
NO >> GO TO 16.

3. DETECT MALFUNCTIONING PART

Check the following.
- IPDM E/R harness connector F10
- Harness for open or short between IPDM E/R and ECM

>> Repair open circuit, short to ground or short to power in harness or connectors.

4. CHECK CONDENSER-1 POWER SUPPLY CIRCUIT-I

1. Turn ignition switch OFF.
2. Reconnect all harness connectors disconnected.
3. Disconnect condenser-1 harness connector.
4. Turn ignition switch ON.
5. Check the voltage between condenser-1 harness connector and ground.

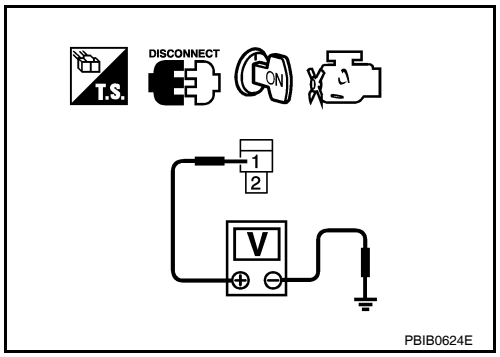

Condenser-1		Ground	Voltage (V)
Connector	Terminal		
B17	1	Ground	Battery voltage should exist for 1 seconds after ignition switch is turned ON.

Is the inspection result normal?

YES >> GO TO 8.
NO >> GO TO 5.

5. CHECK 15A FUSE

1. Turn ignition switch OFF.
2. Disconnect 15 A fuse (No. 32).
3. Check 15 A fuse.

Is the inspection result normal?

YES >> GO TO 6.
NO >> Replace fuse.

6. CHECK CONDENSER-1 POWER SUPPLY CIRCUIT-II

1. Disconnect IPDM E/R harness connector E18.
2. Check the continuity between IPDM E/R harness connector and condenser-1 harness connector.

IPDM E/R		Condenser-1		Continuity
Connector	Terminal	Connector	Terminal	
E18	13	B17	1	Existed

3. Also check harness for short to ground and short to power.

Is the inspection result normal?

YES >> GO TO 16.
NO >> GO TO 7.

7. DETECT MALFUNCTIONING PART

Check the following.
- Harness connectors B10, E29
- IPDM E/R connector E18
- Harness for open or short between IPDM E/R and condenser-1

>> Repair open circuit or short to power in harness or connectors.

8. CHECK CONDENSER-1 GROUND CIRCUIT

1. Turn ignition switch OFF.
2. Check the continuity between condenser-1 harness connector and ground.

Condenser-1		Ground	Continuity
Connector	Terminal		
B17	2	Ground	Existed

3. Also check harness for short to power.

Is the inspection result normal?

YES >> GO TO 10.
NO >> GO TO 9.

9. DETECT MALFUNCTIONING PART

Check the following.
- Harness connectors B10, E29 (with rear view monitor)
- Harness for open or short between condenser-1 and ground

>> Repair open circuit or short to power in harness or connectors.

10. CHECK CONDENSER-1

Refer to EC-1489, "Component Inspection (Condenser-1)".

Is the inspection result normal?

YES >> GO TO 11.
NO >> Replace condenser-1.

11. CHECK FUEL PUMP POWER SUPPLY CIRCUIT-III

1. Disconnect “fuel level sensor unit and fuel pump” harness connector.
2. Check harness continuity between IPDM E/R harness connector and “fuel level sensor unit and fuel pump” harness connector.

IPDM E/R		Fuel level sensor unit and fuel pump		Continuity
Connector	Terminal	Connector	Terminal	
E18	13	B42	1	Existed

Is the inspection result normal?

YES >> GO TO 13.
NO >> GO TO 12.

12. DETECT MALFUNCTIONING PART

Check the following.
- Harness connectors B10, E29
- Harness for open or short between “fuel level sensor unit and fuel pump” and IPDM E/R

>> Repair open circuit or short to power in harness or connectors.

13. CHECK FUEL PUMP GROUND CIRCUIT

1. Disconnect “fuel level sensor unit and fuel pump” harness connector.
2. Check the continuity between “fuel level sensor unit and fuel pump” harness connector and ground.

Fuel level sensor unit and fuel pump		Ground	Continuity
Connector	Terminal		
B42	3	Ground	Existed

Is the inspection result normal?

YES >> GO TO 15.
NO >> GO TO 14.

14. DETECT MALFUNCTIONING PART

Check the following.
- Harness connectors B10, E29 (with rear view monitor)
- Harness for open or short between “fuel level sensor unit and fuel pump” and ground

>> Repair open circuit or short to power in harness or connectors.

15. CHECK FUEL PUMP

Refer to EC-1489, "Component Inspection (Fuel Pump)".

Is the inspection result normal?

YES >> GO TO 8.
NO >> Replace fuel pump.

16. CHECK INTERMITTENT INCIDENT

Refer to GI-42, "Intermittent Incident".

Is the inspection result normal?

YES >> Replace IPDM E/R.
NO >> Repair or replace harness or connectors.

Component Inspection (Fuel Pump)

INFOID:0000000004362370

1. CHECK FUEL PUMP

1. Turn ignition switch OFF.
2. Disconnect “fuel level sensor unit and fuel pump” harness connector.
3. Check resistance between “fuel level sensor unit and fuel pump” terminals as per the following.

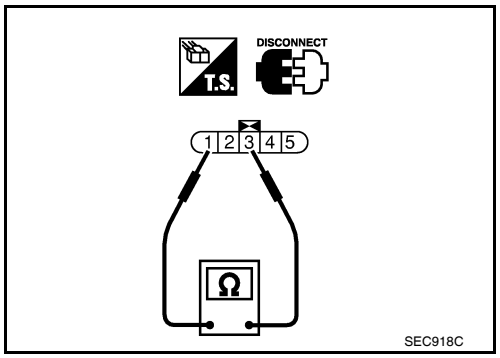

Terminals	Resistance
1 and 3	0.2 - 5.0 Ω [at 25°C (77°F)]

Is the inspection result normal?

YES >> INSPECTION END
NO >> Replace “fuel level sensor unit and fuel pump”

Component Inspection (Condenser-1)

INFOID:0000000004458313

1. CHECK CONDENSER

1. Turn ignition switch OFF.
2. Disconnect condenser-1 harness connector.

3. Check resistance between condenser-1 terminals as follows.

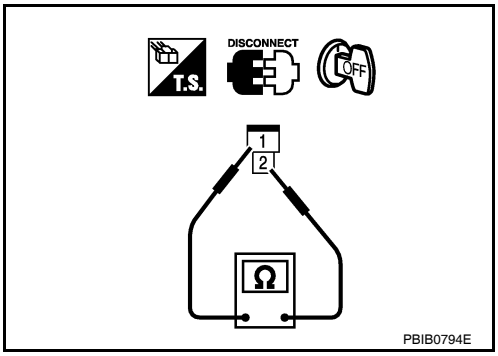

Terminals	Resistance
1 and 2	Above 1 MΩ [at 25°C (77°F)]

Is the inspection result normal?

YES >> INSPECTION END
NO >> Replace condenser.

IGNITION SIGNAL

Description

INFOID:0000000004362371

The ignition signal from the ECM is sent to and amplified by the power transistor. The power transistor turns ON and OFF the ignition coil primary circuit. This ON/OFF operation induces the proper high voltage in the coil secondary circuit.

Component Function Check

INFOID:0000000004362372

1. INSPECTION START

Turn ignition switch OFF, and restart engine.

Does the engine start?

YES-1 >> With CONSULT-III: GO TO 2.
YES-2 >> Without CONSULT-III: GO TO 3.
NO >> Go to EC-1491, "Diagnosis Procedure".

2. CHECK IGNITION SIGNAL FUNCTION

With CONSULT-III

1. Perform “POWER BALANCE” in “ACTIVE TEST” mode with CONSULT-III.
2. Check that each circuit produces a momentary engine speed drop.

Is the inspection result normal?

YES >> INSPECTION END
NO >> Go to EC-1491, "Diagnosis Procedure".

3. CHECK IGNITION SIGNAL FUNCTION

Without CONSULT-III

1. Let engine idle.
2. Read the voltage signal between ECM harness connector terminals with an oscilloscope.

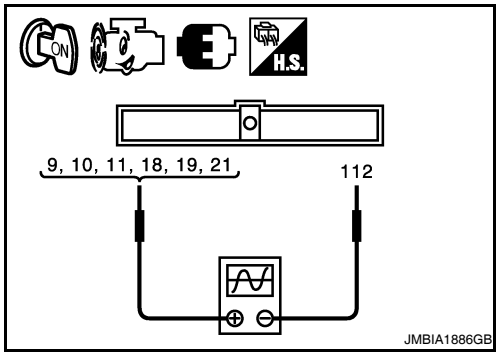

ECM				Voltage signal
+		–		
Connector	Terminal	Connector	Terminal	
F14	9	E10	112	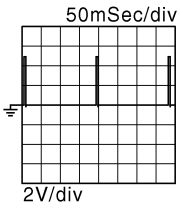
	10			
	11			
	18			
	19			
	21			

NOTE:

The pulse cycle changes depending on rpm at idle.

Is the inspection result normal?

YES >> INSPECTION END
NO >> Go to EC-1491, "Diagnosis Procedure".

Diagnosis Procedure

INFOID:0000000004362373

1. CHECK IGNITION COIL POWER SUPPLY CIRCUIT-I

1. Turn ignition switch OFF, wait at least 10 seconds and then turn it ON.

2. Check the voltage between ECM harness connector and ground.

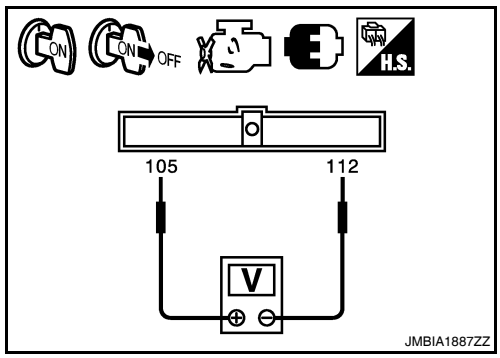

ECM			Voltage
Connector	+	–	
	Terminal	Terminal	
E10	105	112	Battery voltage

Is the inspection result normal?

YES >> GO TO 2.
NO >> Refer to EC-1175, "Diagnosis Procedure".

2. CHECK IGNITION COIL POWER SUPPLY CIRCUIT-II

1. Turn ignition switch OFF.
2. Disconnect condenser harness connector.
3. Turn ignition switch ON.
4. Check the voltage between condenser harness connector and ground.

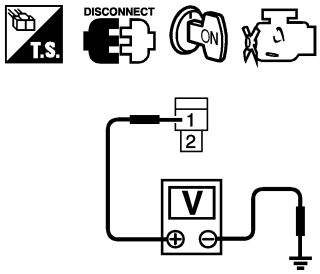

Condenser		Ground	Voltage
Connector	Terminal		
F26	1	Ground	Battery voltage

Is the inspection result normal?

YES >> GO TO 4.
NO >> GO TO 3.

3. CHECK IGNITION COIL POWER SUPPLY CIRCUIT-III

1. Turn ignition switch OFF.
2. Disconnect IPDM E/R harness connector.
3. Check the continuity between IPDM E/R harness connector and condenser harness connector.

IPDM E/R		Condenser		Continuity
Connector	Terminal	Connector	Terminal	
F10	49	F26	1	Existed

4. Also check harness for short to ground and short to power.

Is the inspection result normal?

YES >> Refer to EC-1175, "Diagnosis Procedure".
NO >> Repair open circuit, short to ground or short to power in harness or connectors.

4. CHECK CONDENSER GROUND CIRCUIT FOR OPEN AND SHORT

1. Turn ignition switch OFF.
2. Check the continuity between condenser harness connector and ground.

Condenser		Ground	Continuity
Connector	Terminal		
F26	2	Ground	Existed

3. Also check harness for short to power.

Is the inspection result normal?

YES >> GO TO 5.
NO >> Repair open circuit or short to power in harness or connectors.

5. CHECK CONDENSER

Refer to EC-1495, "Component Inspection (Condenser)"

Is the inspection result normal?

YES >> GO TO 6.
NO >> Replace condenser.

6. CHECK IGNITION COIL POWER SUPPLY CIRCUIT-V

1. Reconnect all harness connectors disconnected.
2. Disconnect ignition coil harness connector.
3. Turn ignition switch ON.
4. Check the voltage between ignition coil harness connector and ground.

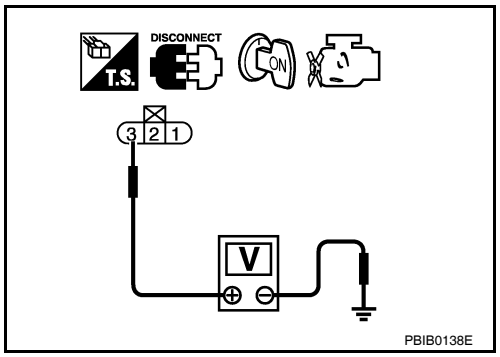

Ignition coil			Ground	Voltage
Cylinder	Connector	Terminal		
1	F34	3	Ground	Battery voltage
2	F35	3		
3	F36	3		
4	F37	3		
5	F38	3		
6	F39	3		

Is the inspection result normal?

YES >> GO TO 7.
NO >> Repair or replace harness or connectors.

7. CHECK IGNITION COIL GROUND CIRCUIT FOR OPEN AND SHORT

1. Turn ignition switch OFF.
2. Check the continuity between ignition coil harness connector and ground.

Ignition coil			Ground	Continuity
Cylinder	Connector	Terminal		
1	F34	2	Ground	Existed
2	F35	2		
3	F36	2		
4	F37	2		
5	F38	2		
6	F39	2		

3. Also check harness for short to power.

Is the inspection result normal?

YES >> GO TO 8.
NO >> Repair open circuit or short to power in harness or connectors.

8. CHECK IGNITION COIL OUTPUT SIGNAL CIRCUIT FOR OPEN AND SHORT

1. Disconnect ECM harness connector.
2. Check the continuity between ignition coil harness connector and ECM harness connector.

Ignition coil			ECM		Continuity
Cylinder	Connector	Terminal	Connector	Terminal	
1	F34	1	F14	11	Existed
2	F35	1		10	
3	F36	1		9	
4	F37	1		21	
5	F38	1		19	
6	F39	1		18	

3. Also check harness for short to ground and short to power.

Is the inspection result normal?

YES >> GO TO 9.
NO >> Repair open circuit, short to ground or short to power in harness or connectors.

9. CHECK IGNITION COIL WITH POWER TRANSISTOR

Refer to EC-1494, "Component Inspection (Ignition Coil with Power Transistor)".

Is the inspection result normal?

YES >> GO TO 10.
NO >> Replace malfunctioning ignition coil with power transistor.

10. CHECK INTERMITTENT INCIDENT

Refer to GI-42, "Intermittent Incident".

>> INSPECTION END

Component Inspection (Ignition Coil with Power Transistor)

INFOID:0000000004362374

1. CHECK IGNITION COIL WITH POWER TRANSISTOR-I

1. Turn ignition switch OFF.
2. Disconnect ignition coil harness connector.
3. Check resistance between ignition coil terminals as per the following.

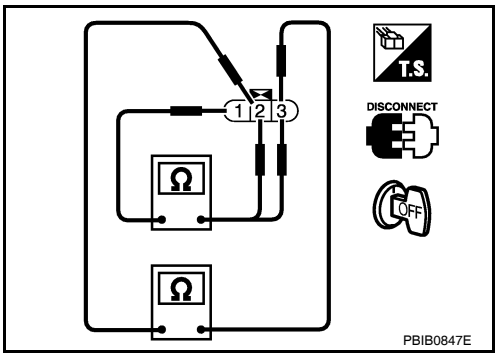

Terminal No. (Polarity)	Resistance Ω [at 25°C (77°F)]
1 and 2	Except 0 or ∞
1 and 3	Except 0
2 and 3	

Is the inspection result normal?

YES >> GO TO 2.
NO >> Replace malfunctioning ignition coil with power transistor.

2. CHECK IGNITION COIL WITH POWER TRANSISTOR-II

CAUTION:
Perform the following procedure in a place with no combustible objects and good ventilation.

1. Turn ignition switch OFF.
2. Reconnect all harness connectors disconnected.
3. Remove fuel pump fuse in IPDM E/R to release fuel pressure.
   NOTE:
   Do not use CONSULT-III to release fuel pressure, or fuel pressure applies again during the following procedure.
4. Start engine.
5. After engine stalls, crank it 2 or 3 times to release all fuel pressure.
6. Turn ignition switch OFF.

7. Remove all ignition coil harness connectors to avoid the electrical discharge from the ignition coils.
8. Remove ignition coil and spark plug of the cylinder to be checked.
9. Crank engine for 5 seconds or more to remove combustion gas in the cylinder.
10. Connect spark plug and harness connector to ignition coil.
11. Fix ignition coil using a rope etc. with gap of 13 - 17 mm (0.52 - 0.66 in) between the edge of the spark plug and grounded metal portion as shown in the figure.
12. Crank engine for approximately 3 seconds, and check whether spark is generated between the spark plug and the grounded metal portion.

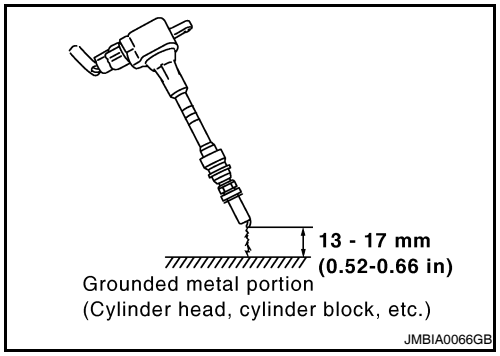

Spark should be generated.

CAUTION:
- **Never place the spark plug and the ignition coil within 50 cm (19.7 in) each other. Be careful not to get an electrical shock while checking, because the electrical discharge voltage becomes 20 kV or more.**
- **It might damage the ignition coil if the gap of more than 17 mm (0.66 in) is made.**

NOTE:
When the gap is less than 13 mm (0.52 in), a spark might be generated even if the coil is malfunctioning.

Is the inspection result normal?

YES >> INSPECTION END
NO >> Replace malfunctioning ignition coil with power transistor.

Component Inspection (Condenser)

INFOID:0000000004362375

1. CHECK CONDENSER

1. Turn ignition switch OFF.
2. Disconnect condenser harness connector.
3. Check resistance between condenser terminals as per the following.

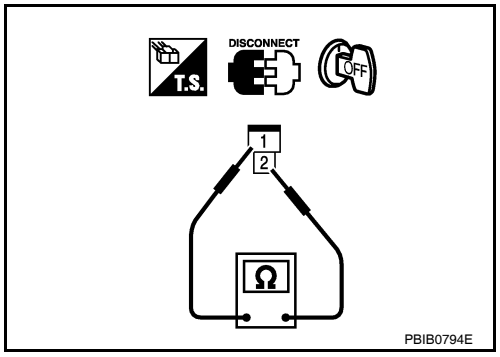

Terminals	Resistance
1 and 2	Above 1 MΩ [at 25C° (77C°)]

Is the inspection result normal?

YES >> INSPECTION END
NO >> Replace condenser.

MALFUNCTION INDICATOR LAMP

Description

INFOID:0000000004362376

The Malfunction Indicator Lamp (MIL) is located on the combination meter.
The MIL will illuminate when the ignition switch is turned ON without the engine running. This is a bulb check.
When the engine is started, the MIL should turn off. If the MIL remains illuminated, the on board diagnostic system has detected an engine system malfunction.
For details, refer to EC-1142, "Diagnosis Description".

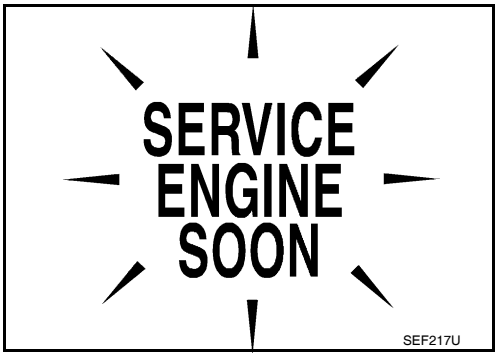

Component Function Check

INFOID:0000000004362377

1. CHECK MIL FUNCTION

1. Turn ignition switch ON.
2. Check that MIL illuminates.

Is the inspection result normal?

YES >> INSPECTION END
NO >> Go to EC-1496, "Diagnosis Procedure".

Diagnosis Procedure

INFOID:0000000004362378

1. CHECK DTC

Check that DTC UXXXX is not displayed.

Is the inspection result normal?

YES >> GO TO 2.
NO >> Perform trouble diagnosis for DTC UXXXX. Refer to EC-1179, "Description".

2. CHECK COMBINATION METER FUNCTION

Refer to MWI-95, "DTC Index".

Is the inspection result normal?

YES >> GO TO 3.
NO >> Repair or replace.

3. CHECK INTERMITTENT INCIDENT

Refer to GI-42, "Intermittent Incident".

Is the inspection result normal?

YES >> Replace combination meter.
NO >> Repair or replace.

ON BOARD REFUELING VAPOR RECOVERY (ORVR)

Description

INFOID:0000000004362379

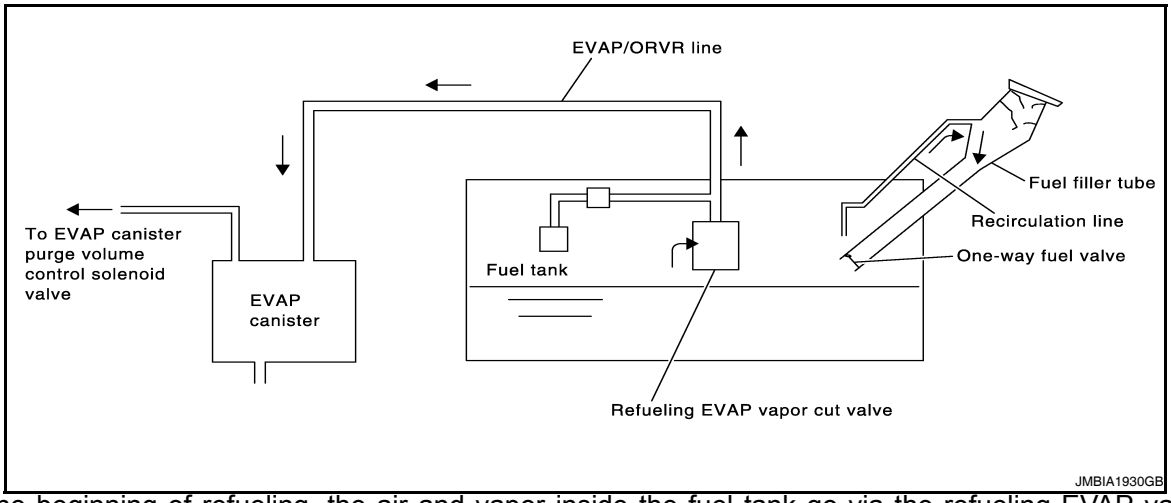

From the beginning of refueling, the air and vapor inside the fuel tank go via the refueling EVAP vapor cut valve and EVAP/ORVR line to the EVAP canister. The vapor is absorbed by the EVAP canister and the air is released to the atmosphere.

When the refueling has reached the full level of the fuel tank, the refueling EVAP vapor cut valve is closed and refueling is stopped because of auto shut-off. The vapor which was absorbed by the EVAP canister is purged during driving.

WARNING:

When conducting inspections below, be sure to observe the following:

- **Put a “CAUTION: FLAMMABLE” sign in workshop.**
- **Never smoke while servicing fuel system. Keep open flames and sparks away from work area.**
- **Always to furnish the workshop with a CO_2 fire extinguisher.**

CAUTION:

- **Before removing fuel line parts, carry out the following procedures:**
- **Put drained fuel in an explosion-proof container and put lid on securely.**
- **Release fuel pressure from fuel line. Refer to EC-1579, "Inspection".**
- **Disconnect battery ground cable.**
- **Always replace O-ring when the fuel gauge retainer is removed.**
- **Never kink or twist hose and tube when they are installed.**
- **Never tighten hose and clamps excessively to avoid damaging hoses.**
- **After installation, run engine and check for fuel leakage at connections.**
- **Never attempt to top off the fuel tank after the fuel pump nozzle shuts off automatically. Continued refueling may cause fuel overflow, resulting in fuel spray and possibly a fire.**

Component Function Check

INFOID:0000000004362380

1. CHECK ORVR FUNCTION

Check whether the following symptoms are present.

- Fuel odor from EVAP canister is strong.
- Cannot refuel/Fuel odor from the fuel filler opening is strong while refueling.

Are any symptoms present?

YES >> Go to EC-1497, "Diagnosis Procedure".
NO >> INSPECTION END

Diagnosis Procedure

INFOID:0000000004362381

1. INSPECTION START

Check whether the following symptoms are present.
A: Fuel odor from EVAP canister is strong.
B: Cannot refuel/Fuel odor from the fuel filler opening is strong while refueling.

A or B

A >> GO TO 2.
B >> GO TO 7.

2. CHECK EVAP CANISTER

1. Remove EVAP canister with EVAP canister vent control valve and EVAP control system pressure sensor attached.
2. Weigh the EVAP canister with EVAP canister vent control valve and EVAP control system pressure sensor attached.
   The weight should be less than 2.1 kg (4.6 lb).

Is the inspection result normal?

YES >> GO TO 3.
NO >> GO TO 4.

3. CHECK IF EVAP CANISTER IS SATURATED WITH WATER

Check if water will drain from EVAP canister

Does water drain from the EVAP canister?

YES >> GO TO 4.
NO >> GO TO 6.

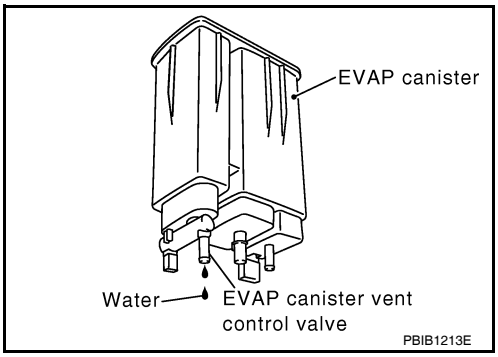

4. REPLACE EVAP CANISTER

Replace EVAP canister with a new one.

>> GO TO 5.

5. DETECT MALFUNCTIONING PART

Check the EVAP hose between EVAP canister and vehicle frame for clogging or poor connection.

>> Repair or replace EVAP hose.

6. CHECK REFUELING EVAP VAPOR CUT VALVE

Refer to EC-1500, "Component Inspection".

Is the inspection result normal?

YES >> INSPECTION END
NO >> Replace refueling EVAP vapor cut valve with fuel tank.

7. CHECK EVAP CANISTER

1. Remove EVAP canister with EVAP canister vent control valve and EVAP control system pressure sensor attached.
2. Weigh the EVAP canister with EVAP canister vent control valve and EVAP control system pressure sensor attached.
   The weight should be less than 2.1 kg (4.6 lb).

Is the inspection result normal?

YES >> GO TO 8.
NO >> GO TO 9.

8. CHECK IF EVAP CANISTER IS SATURATED WITH WATER

Check if water will drain from EVAP canister.

Does water drain from the EVAP canister?

YES >> GO TO 6.
NO >> GO TO 11.

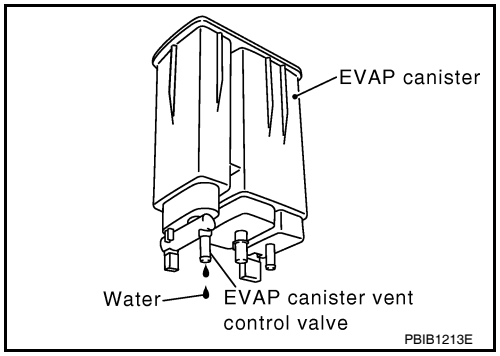

9. REPLACE EVAP CANISTER

Replace EVAP canister with a new one.

>> GO TO 10.

10. DETECT MALFUNCTIONING PART

Check the EVAP hose between EVAP canister and vehicle frame for clogging or poor connection.

>> Repair or replace EVAP hose.

11. CHECK VENT HOSES AND VENT TUBES

Check hoses and tubes between EVAP canister and refueling control valve for clogging, kinks, looseness and improper connection.

Is the inspection result normal?

YES >> GO TO 12.
NO >> Repair or replace hoses and tubes.

12. CHECK RECIRCULATION LINE

Check recirculation line for clogging, dents and cracks.

Is the inspection result normal?

YES >> GO TO 13.
NO >> Replace fuel filler tube.

13. CHECK REFUELING EVAP VAPOR CUT VALVE

Refer to EC-1500, "Component Inspection".

Is the inspection result normal?

YES >> GO TO 14.
NO >> Replace refueling EVAP vapor cut valve with fuel tank.

14. CHECK FUEL FILLER TUBE

Check fuel filler tube and hose connected to the fuel tank for clogging, dents and cracks.

Is the inspection result normal?

YES >> GO TO 15.
NO >> Replace fuel filler tube.

15. CHECK ONE-WAY FUEL VALVE-I

Check one-way valve for clogging.

Is the inspection result normal?

YES >> GO TO 16.
NO >> Repair or replace one-way fuel valve with fuel tank.

16. CHECK ONE-WAY FUEL VALVE-II

1. Check that fuel is drained from the tank.
2. Remove fuel filler tube and hose.

3. Check one-way fuel valve for operation as per the following.
   When a stick is inserted, the valve should open, when removing stick it should close.
   Do not drop any material into the tank.

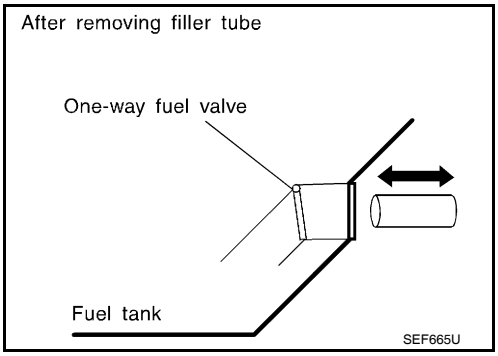

Is the inspection result normal?

YES >> INSPECTION END
NO >> Replace fuel filler tube or replace one-way fuel valve with fuel tank.

Component Inspection

INFOID:0000000004362382

1. INSPECTION START

Will CONSULT-III be used?

Will CONSULT-III be used?

YES >> GO TO 2.
NO >> GO TO 3.

2. CHECK REFUELING EVAP VAPOR CUT VALVE

With CONSULT-III

1. Turn ignition switch OFF.
2. Remove fuel tank. Refer to FL-10, "Removal and Installation".
3. Drain fuel from the tank as per the following:
- Remove fuel feed hose located on the fuel gauge retainer.
- Connect a spare fuel hose, one side to fuel gauge retainer where the hose was removed and the other side to a fuel container.
- Drain fuel using “FUEL PUMP RELAY” in “ACTIVE TEST” mode with CONSULT-III.
4. Check refueling EVAP vapor cut valve for being stuck to close as per the following.
   Blow air into the refueling EVAP vapor cut valve (from the end of EVAP/ORVR line hose), and check that the air flows freely into the tank.
5. Check refueling EVAP vapor cut valve for being stuck to open as per the following.
- Connect vacuum pump to hose end.
- Remove fuel gauge retainer with fuel gauge unit.

Always replace O-ring with new one.

- Turn fuel tank upside down.
- Apply vacuum pressure to hose end [–13.3 kPa (–0.136 kg/cm^3, –1.93 psi)] with fuel gauge retainer remaining open and check that the pressure is applicable.

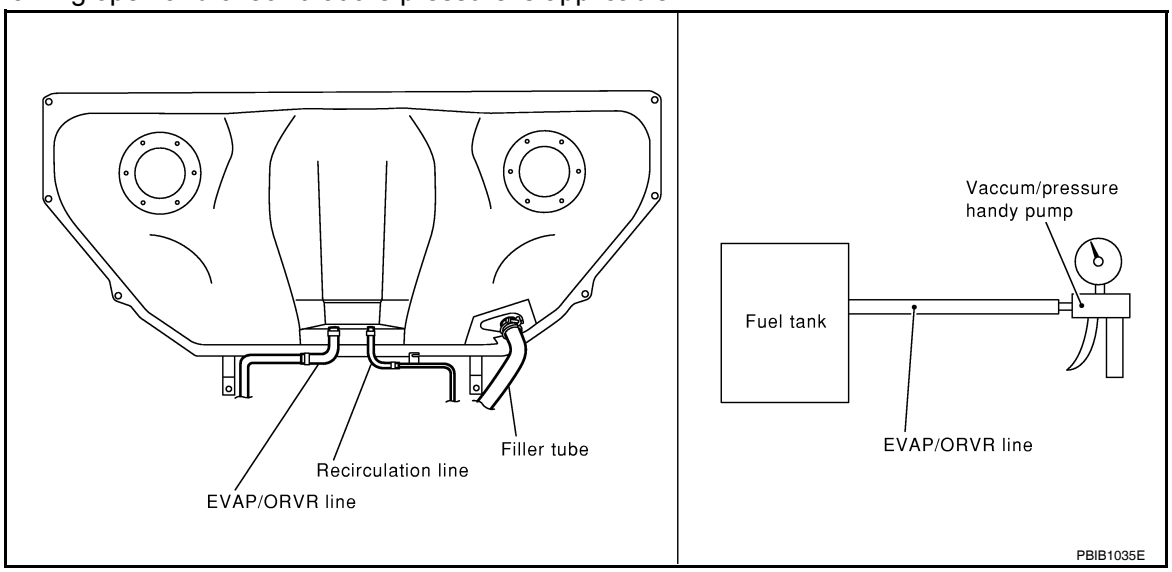

Is the inspection result normal?

YES >> INSPECTION END

NO >> Replace refueling EVAP vapor cut valve with fuel tank.

3. CHECK REFUELING EVAP VAPOR CUT VALVE

Without CONSULT-III

1. Turn ignition switch OFF.
2. Remove fuel tank. Refer to FL-10, "Removal and Installation".
3. Drain fuel from the tank as per the following:
- Remove fuel gauge retainer.
- Drain fuel from the tank using a handy pump into a fuel container.
4. Check refueling EVAP vapor cut valve for being stuck to close as per the following.
   Blow air into the refueling EVAP vapor cut valve (from the end of EVAP/ORVR line hose), and check that the air flows freely into the tank.
5. Check refueling EVAP vapor cut valve for being stuck to open as per the following.
- Connect vacuum pump to hose end.
- Remove fuel gauge retainer with fuel gauge unit.

Always replace O-ring with new one.

- Turn fuel tank upside down.
- Apply vacuum pressure to hose end [–13.3 kPa (–0.136 kg/cm^3, –1.93 psi)] with fuel gauge retainer remaining open and check that the pressure is applicable.

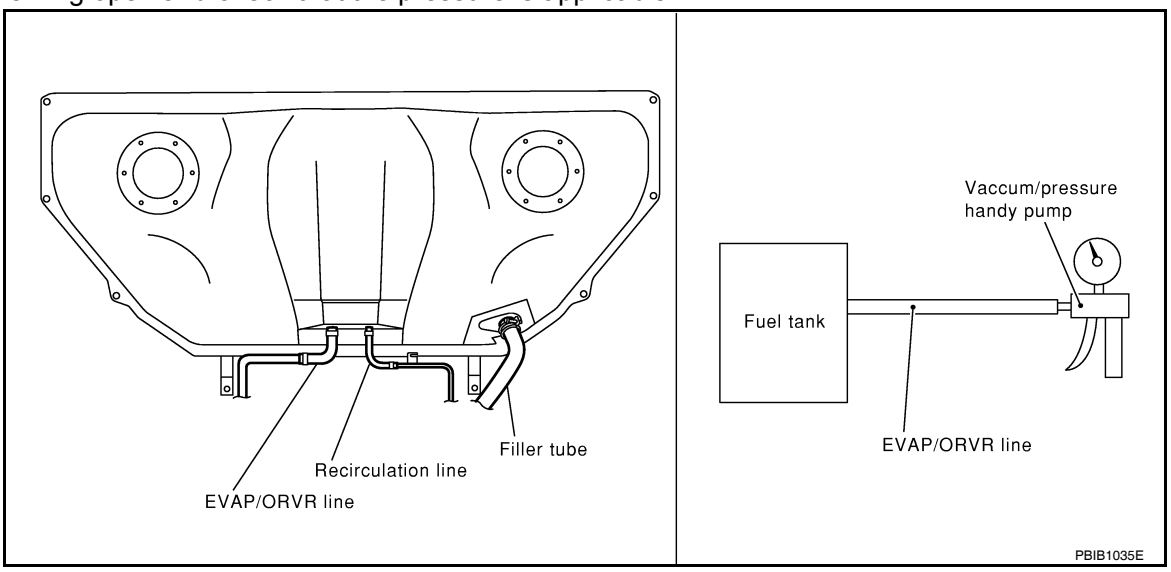

Is the inspection result normal?

YES >> INSPECTION END
NO >> Replace refueling EVAP vapor cut valve with fuel tank.

POSITIVE CRANKCASE VENTILATION

Description

INFOID:0000000004362383

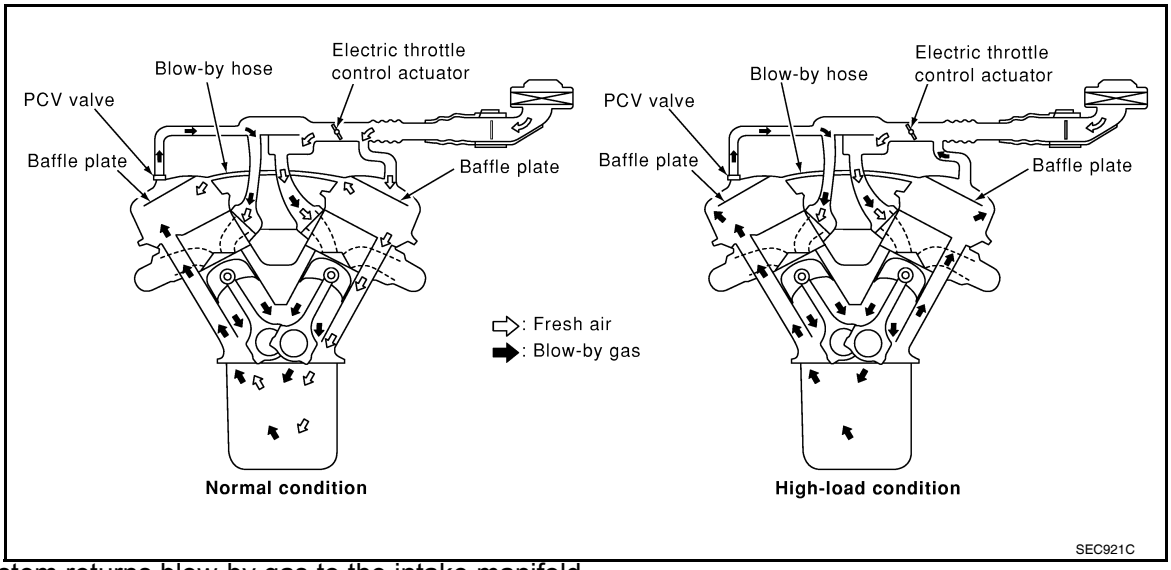

This system returns blow-by gas to the intake manifold.
The positive crankcase ventilation (PCV) valve is provided to conduct crankcase blow-by gas to the intake manifold.
During partial throttle operation of the engine, the intake manifold sucks the blow-by gas via the PCV valve. Normally, the capacity of the valve is sufficient to handle any blow-by and a small amount of ventilating air.
The ventilating air is drawn from the air inlet tubes into the crankcase. In this process the air passes via the hose connecting air inlet tubes to rocker cover.
Under full-throttle condition, the manifold vacuum is insufficient to draw the blow-by flow via the valve.
The flow goes via the hose connection in the reverse direction.
On vehicles with an excessively high blow-by, the valve does not meet the requirement. This is because some of the flow will go via the hose connection to the air inlet tubes under all conditions.

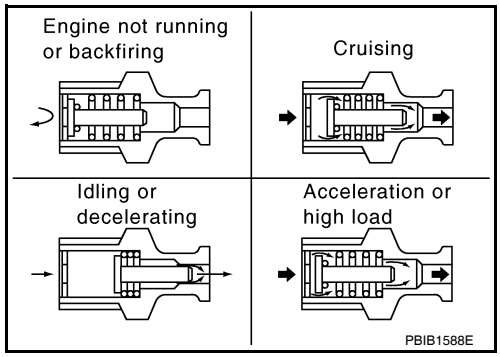

Component Inspection

INFOID:0000000004362384

1. CHECK PCV VALVE

With engine running at idle, remove PCV valve from rocker cover. A properly working valve makes a hissing noise as air passes via the it. A strong vacuum should be felt immediately when a finger is placed over valve inlet.

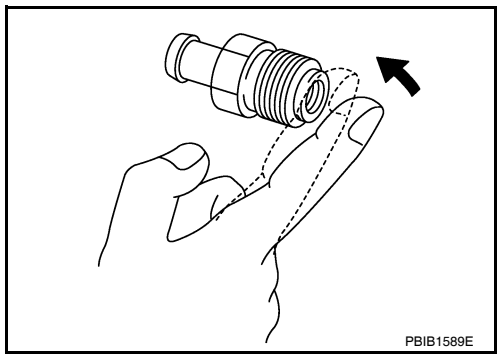

Is the inspection result normal?

YES >> INSPECTION END
NO >> Replace PCV valve.

REFRIGERANT PRESSURE SENSOR

Description

INFOID:0000000004362385

The refrigerant pressure sensor is installed at the condenser of the air conditioner system. The sensor uses an electrostatic volume pressure transducer to convert refrigerant pressure to voltage. The voltage signal is sent to ECM, and ECM controls cooling fan system.

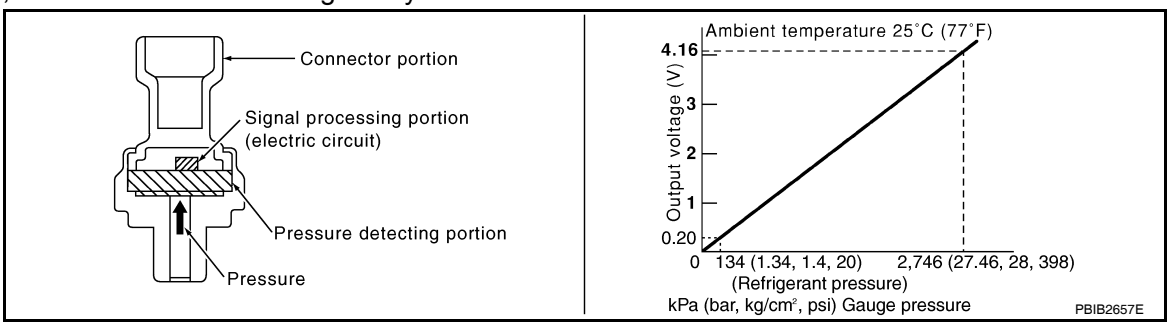

Component Function Check

INFOID:0000000004362386

1. CHECK REFRIGERANT PRESSURE SENSOR FUNCTION

1. Start engine and warm it up to normal operating temperature.
2. Turn A/C switch and blower fan switch ON.
3. Check the voltage between ECM harness connector terminals under the following conditions.

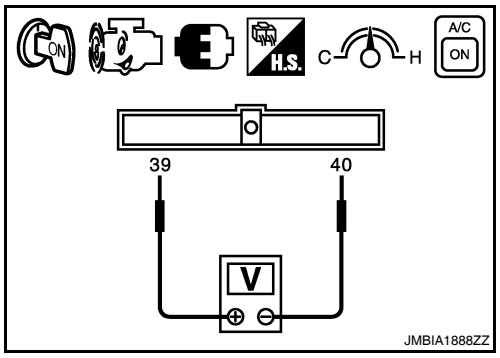

ECM			Voltage (V)
Connector	+	–	
	Terminal	Terminal	
F13	39 (Refrigerant pressure sensor signal)	40 (Sensor ground)	1.0 - 4.0

Is the inspection result normal?

YES >> INSPECTION END
NO >> Go to EC-1503, "Diagnosis Procedure".

Diagnosis Procedure

INFOID:0000000004362387

1. CHECK GROUND CONNECTION

1. Turn A/C switch and blower fan switch OFF.
2. Stop engine.
3. Turn ignition switch OFF.
4. Check ground connection E9. Refer to Ground Inspection in GI-45, "Circuit Inspection".

Is the inspection result normal?

YES >> GO TO 2.
NO >> Repair or replace ground connection.

2. CHECK REFRIGERANT PRESSURE SENSOR POWER SUPPLY CIRCUIT

1. Disconnect refrigerant pressure sensor harness connector.

2. Check the voltage between refrigerant pressure sensor harness connector and ground.

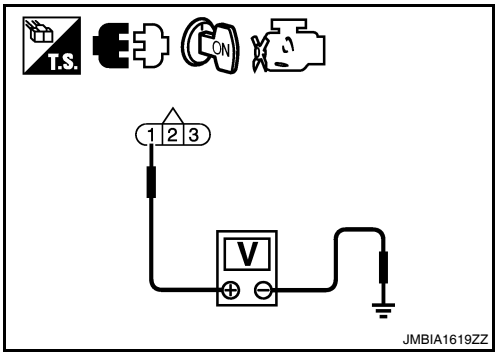

Refrigerant pressure sensor		Ground	Voltage (V)
Connector	Terminal		
E219	1	Ground	Approx. 5

Is the inspection result normal?

YES >> GO TO 4.
NO >> GO TO 3.

3. DETECT MALFUNCTIONING PART

Check the following.
- Harness connectors E3, F1
- IPDM E/R harness connectors E18, E201
- IPDM E/R
- Harness for open or short between ECM and refrigerant pressure sensor

>> Repair open circuit, short to ground or short to power in harness or connectors.

4. CHECK REFRIGERANT PRESSURE SENSOR GROUND CIRCUIT FOR OPEN AND SHORT

1. Turn ignition switch OFF.
2. Disconnect ECM harness connector.
3. Check the continuity between refrigerant pressure sensor harness connector and ECM harness connector.

Refrigerant pressure sensor		ECM		Continuity
Connector	Terminal	Connector	Terminal	
E219	3	F13	40	Existed

4. Also check harness for short to ground and short to power.

Is the inspection result normal?

YES >> GO TO 6.
NO >> GO TO 5.

5. DETECT MALFUNCTIONING PART

Check the following.
- Harness connectors E3, F1
- IPDM E/R harness connectors E18, E201
- IPDM E/R
- Harness for open or short between ECM and refrigerant pressure sensor

>> Repair open circuit, short to ground or short to power in harness or connectors.

6. CHECK REFRIGERANT PRESSURE SENSOR INPUT SIGNAL CIRCUIT FOR OPEN AND SHORT

1. Check the continuity between refrigerant pressure sensor harness connector and ECM harness connector.

Refrigerant pressure sensor		ECM		Continuity
Connector	Terminal	Connector	Terminal	
E219	2	F13	39	Existed

2. Also check harness for short to ground and short to power.

Is the inspection result normal?

YES >> GO TO 8.
NO >> GO TO 7.

7. DETECT MALFUNCTIONING PART

Check the following.
- Harness connectors E3, F1
- IPDM E/R harness connectors E18, E201
- IPDM E/R
- Harness for open or short between ECM and refrigerant pressure sensor

>> Repair open circuit, short to ground or short to power in harness or connectors.

8. CHECK INTERMITTENT INCIDENT

Refer to GI-42, "Intermittent Incident".

Is the inspection result normal?

YES >> Replace refrigerant pressure sensor.
NO >> Repair or replace malfunctioning part.

VARIABLE INDUCTION AIR SYSTEM

Description

INFOID:0000000004362388

Power Valves 1 and 2

The power valves 1 and 2 are installed in intake manifold collector and used to control the suction passage of the variable induction air control system. They are set in the fully closed or fully opened position by the power valve actuators 1 and 2 operated by the vacuum stored in the vacuum tank. The vacuum to power valve actuators is controlled by the VIAS control solenoid valves 1 and 2.

Component Function Check

INFOID:0000000004458327

1. CHECK OVERALL FUNCTION-I

With CONSULT-III

1. Start engine and warm it up to the normal operating temperature.
2. Perform “VIAS S/V-1” in “ACTIVE TEST” mode with CONSULT-III.
3. Turn VIAS control solenoid valve 1 ON and OFF, and check that power valve actuator 1 rod moves.

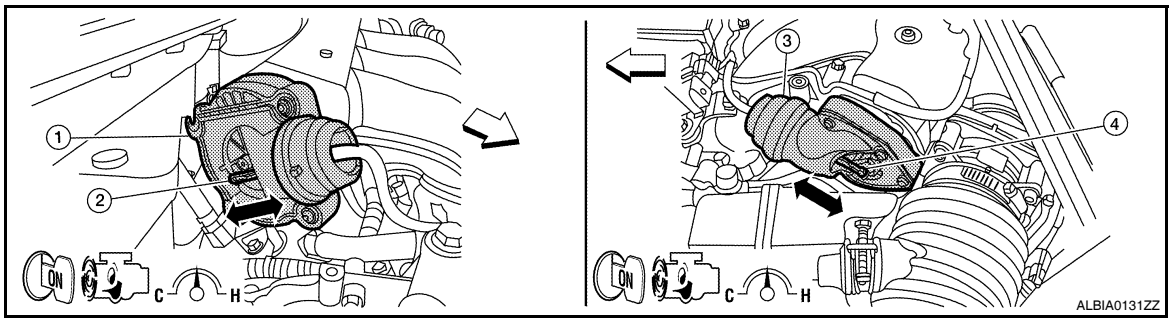

1. Power valve actuator 1
2. Power valve actuator 1 rod
3. Power valve actuator 2
4. Power valve actuator 2 rod

⇦ : Vehicle front

Without CONSULT-III

1. Start engine and warm it up to the normal operating temperature.
2. Rev engine quickly up to approximately 5,000 rpm.
3. Check that power valve actuator 1 rod moves.

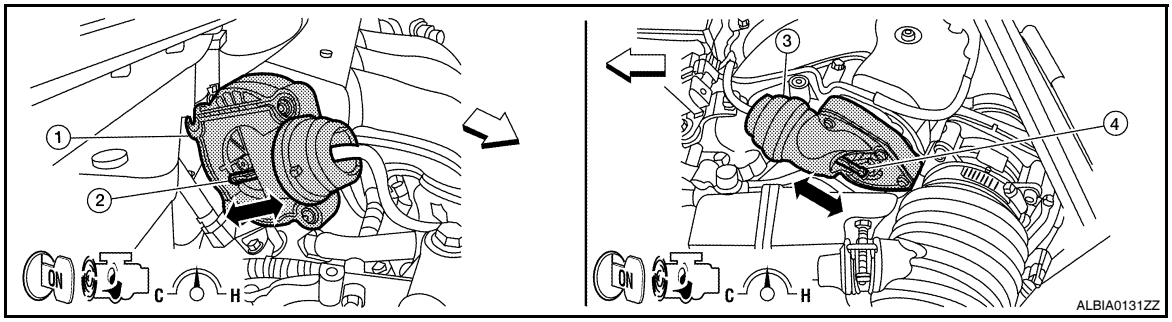

1. Power valve actuator 1
2. Power valve actuator 1 rod
3. Power valve actuator 2
4. Power valve actuator 2 rod

⇦ : Vehicle front

Is the inspection result normal?

YES >> GO TO 2.
NO >> EC-1507, "Diagnosis Procedure".

2. CHECK OVERALL FUNCTION-II

With CONSULT-III

1. Perform “VIAS S/V-2” in “ACTIVE TEST” mode with CONSULT-III.
2. Turn VIAS control solenoid valve 2 ON and OFF, and check that power valve actuator 2 rod moves.

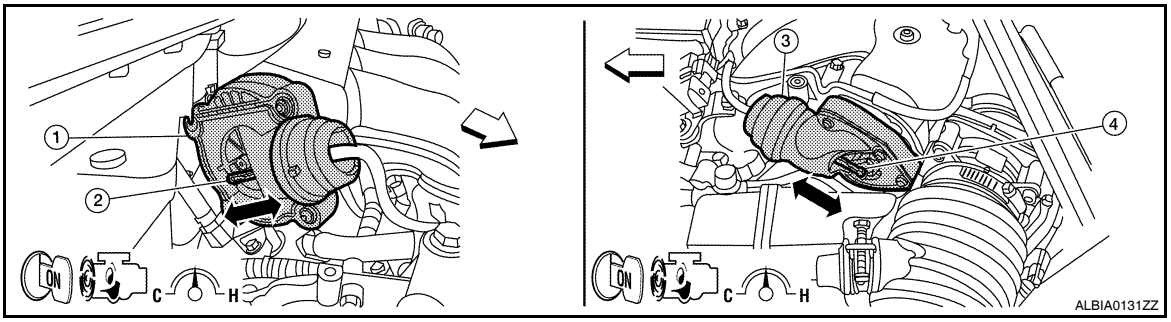

1. Power valve actuator 1
2. Power valve actuator 1 rod
3. Power valve actuator 2
4. Power valve actuator 2 rod

⇦ : Vehicle front

Without CONSULT-III

1. When revving engine up to 5,000 rpm quickly.
2. Rev engine quickly up to approximately 5,000 rpm.
3. Check that power valve actuator 2 rod moves.

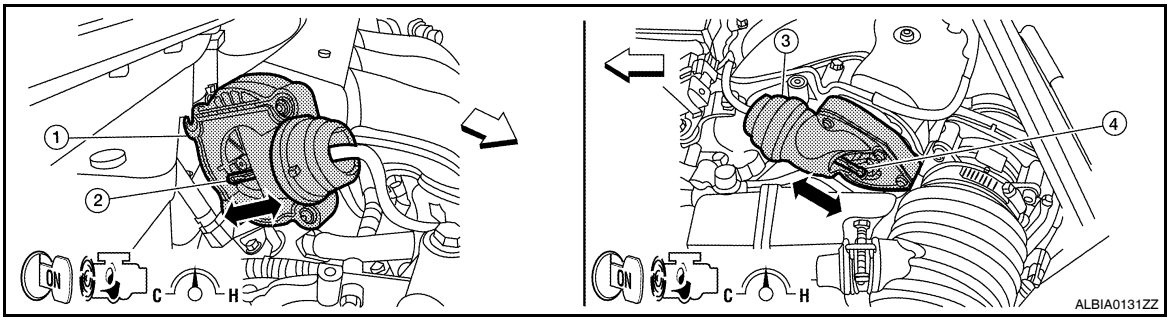

1. Power valve actuator 1
2. Power valve actuator 1 rod
3. Power valve actuator 2
4. Power valve actuator 2 rod

⇦ : Vehicle front

Is the inspection result normal?

YES >> INSPECTION END
NO >> EC-1507, "Diagnosis Procedure".

Diagnosis Procedure

INFOID:0000000004458328

1. INSPECTION START

Confirm the malfunctioning system (power valve 1 or power valve 2). Refer to EC-1506, "Component Function Check".

Which system is related to the incident?

Power valve 1>>GO TO 2.
Power valve 2>>GO TO 6.

2. CHECK VACUUM EXISTENCE-I

With CONSULT-III

1. Stop engine and disconnect vacuum hose connected to power valve actuator 1.
2. Start engine and let it idle.
3. Perform “VIAS S/V-1” in “ACTIVE TEST” mode with CONSULT-III.
4. Turn VIAS control solenoid valve 1 ON and OFF, and check vacuum existence under the following conditions.

VIAS S/V-1	Vacuum
ON	Existed
OFF	Not existed

Without CONSULT-III

1. Stop engine and disconnect vacuum hose connected to power valve actuator 1.
2. Disconnect VIAS control solenoid valve 1 harness connector.
3. Start engine.
4. Rev engine quickly up to approximately 5,000 rpm.
5. Check vacuum existence under the following conditions.

Condition	Vacuum
Idle	Existed
Rev engine quickly up to approximately 5,000 rpm	Not existed

Is the inspection result normal?

YES >> Repair or replace power valve actuator 1.
NO >> GO TO 3.

3. CHECK VACUUM TANK

1. Stop engine and disconnect vacuum hose connected to intake manifold collector.
2. Start engine and let it idle.
3. Check vacuum existence from intake manifold collector.

Does vacuum existence from the intake manifold collector?

YES >> GO TO 4.
NO >> Replace intake manifold collector.

4. CHECK VACUUM HOSE

1. Stop engine.
2. Check vacuum hose for cracks, clogging, improper connection or disconnection. Refer to EC-1133, "System Diagram".

Is the inspection result normal?

YES >> GO TO 5.
NO >> Repair hoses or tubes.

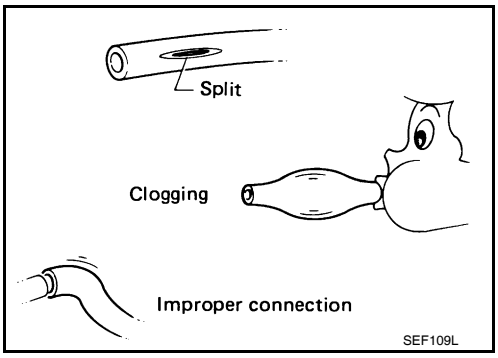

5. CHECK VIAS CONTROL SOLENOID VALVE 1

Refer to EC-1429, "Component Inspection".

Is the inspection result normal?

YES >> GO TO 9.
NO >> Replace VIAS control solenoid valve 1.

6. CHECK VACUUM EXISTENCE-II

With CONSULT-III

1. Stop engine and disconnect vacuum hose connected to power valve actuator 2.
2. Start engine and let it idle.
3. Perform “VIAS S/V-2” in “ACTIVE TEST” mode with CONSULT-III.
4. Turn VIAS control solenoid valve 2 ON and OFF, and check vacuum existence under the following conditions.

VIAS S/V-2	Vacuum
ON	Existed
OFF	Not existed

Without CONSULT-III

1. Stop engine and disconnect vacuum hose connected to power valve actuator 2.
2. Disconnect VIAS control solenoid valve 1 harness connector.
3. Start engine.
4. Rev engine quickly up to approximately 5,000 rpm.
5. Check vacuum existence under the following conditions.

Condition	Vacuum
Idle	Existed
Rev engine quickly up to approximately 5,000 rpm	Not existed

Is the inspection result normal?

YES >> Repair or replace power valve actuator 2.
NO >> GO TO 7.

7. CHECK VACUUM HOSE

1. Stop engine.
2. Check vacuum hose for cracks, clogging, improper connection or disconnection. Refer to EC-1133, "System Diagram".

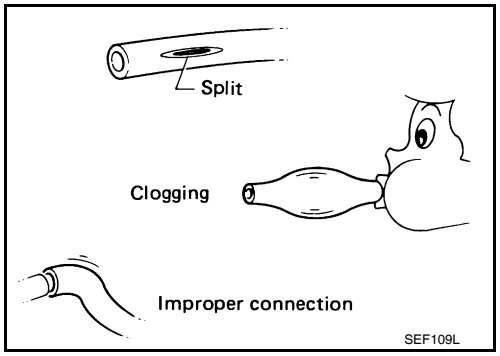

Is the inspection result normal?

YES >> GO TO 8.
NO >> Repair hoses or tubes.

8. CHECK VIAS CONTROL SOLENOID VALVE 2

Refer to EC-1432, "Component Inspection".

Is the inspection result normal?

YES >> GO TO 9.
NO >> Replace VIAS control solenoid valve 2.

9. CHECK INTERMITTENT INCIDENT

Refer to GI-42, "Intermittent Incident".

>> INSPECTION END

ECU DIAGNOSIS

ECM

Reference Value

INFOID:0000000004362391

VALUES ON THE DIAGNOSIS TOOL

Remarks:

- Specification data are reference values.
- Specification data are output/input values which are detected or supplied by the ECM at the connector.
  * Specification data may not be directly related to their components signals/values/operations.
  I.e. Adjust ignition timing with a timing light before monitoring IGN TIMING, because the monitor may show the specification data in spite of the ignition timing not being adjusted to the specification data. This IGN TIMING monitors the data calculated by the ECM according to the signals input from the camshaft position sensor and other ignition timing related sensors.

Monitor Item	Condition		Values/Status
ENG SPEED	Run engine and compare CONSULT-III value with the tachometer indication.		Almost the same speed as the tachometer indication.
MAS A/F SE-B1	See EC-1167, "Description".		
B/FUEL SCHDL	See EC-1167, "Description".		
A/F ALPHA-B1	See EC-1167, "Description".		
A/F ALPHA-B2	See EC-1167, "Description".		
COOLAN TEMP/S	• Engine: After warming up		More than 70°C (158°F)
A/F SEN1 (B1)	• Engine: After warming up	Maintaining engine speed at 2,000 rpm	Fluctuates around 2.2 V
A/F SEN1 (B2)	• Engine: After warming up	Maintaining engine speed at 2,000 rpm	Fluctuates around 2.2 V
HO2S2 (B1)	• Revving engine from idle to 3,000 rpm quickly after the following conditions are met. - Engine: After warming up - After keeping engine speed between 3,500 and 4,000 rpm for 1 minute and at idle for 1 minute under no load		0 - 0.3 V ←→ Approx. 0.6 - 1.0 V
HO2S2 (B2)	• Revving engine from idle to 3,000 rpm quickly after the following conditions are met. - Engine: After warming up - After keeping engine speed between 3,500 and 4,000 rpm for 1 minute and at idle for 1 minute under no load		0 - 0.3 V ←→ Approx. 0.6 - 1.0 V
HO2S2 MNTR (B1)	• Revving engine from idle to 3,000 rpm quickly after the following conditions are met. - Engine: After warming up - After keeping engine speed between 3,500 and 4,000 rpm for 1 minute and at idle for 1 minute under no load		LEAN ←→ RICH
HO2S2 MNTR (B2)	• Revving engine from idle to 3,000 rpm quickly after the following conditions are met. - Engine: After warming up - After keeping engine speed between 3,500 and 4,000 rpm for 1 minute and at idle for 1 minute under no load		LEAN ←→ RICH
VHCL SPEED SE	• Turn drive wheels and compare CONSULT-III value with the speedometer indication.		Almost the same speed as speedometer indication
BATTERY VOLT	• Ignition switch: ON (Engine stopped)		11 - 14 V
ACCEL SEN 1	• Ignition switch: ON (Engine stopped)	Accelerator pedal: Fully released	0.65 - 0.87 V
		Accelerator pedal: Fully depressed	More than 4.3 V
ACCEL SEN 2*1	• Ignition switch: ON (Engine stopped)	Accelerator pedal: Fully released	0.56 - 0.96 V
		Accelerator pedal: Fully depressed	More than 4.0 V

Monitor Item	Condition		Values/Status
TP SEN 1-B1	• Ignition switch: ON (Engine stopped) • Selector lever position: D (CVT), 1st (M/T)	Accelerator pedal: Fully released	More than 0.36 V
		Accelerator pedal: Fully depressed	Less than 4.75 V
TP SEN 2-B1*1	• Ignition switch: ON (Engine stopped) • Selector lever position: D (CVT), 1st (M/T)	Accelerator pedal: Fully released	More than 0.36 V
		Accelerator pedal: Fully depressed	Less than 4.75 V
FUEL T/TMP SE	• Ignition switch: ON		Indicates fuel tank temperature
INT/A TEMP SE	• Ignition switch: ON		Indicates intake air temperature
EVAP SYS PRES	• Ignition switch: ON		Approx. 1.8 - 4.8 V
FUEL LEVEL SE	• Ignition switch: ON		Depending on fuel level of fuel tank
START SIGNAL	• Ignition switch: ON → START → ON		OFF → ON → OFF
CLSD THL POS	• Ignition switch: ON (Engine stopped)	Accelerator pedal: Fully released	ON
		Accelerator pedal: Slightly depressed	OFF
AIR COND SIG	• Engine: After warming up, idle the engine	Air conditioner switch: OFF	OFF
		Air conditioner switch: ON (Compressor operates.)	ON
P/N POSI SW	• Ignition switch: ON	Selector lever position: P or N (CVT), neutral (M/T)	ON
		Selector lever position: Except above	OFF
PW/ST SIGNAL	• Engine: After warming up, idle the engine	Steering wheel: Not being turned	OFF
		Steering wheel: Being turned	ON
LOAD SIGNAL	• Ignition switch: ON	Rear window defogger switch: ON and/or Lighting switch: 2nd position	ON
		Rear window defogger switch and lighting switch: OFF	OFF
IGNITION SW	• Ignition switch: ON → OFF → ON		ON → OFF → ON
HEATER FAN SW	• Engine: After warming up, idle the engine	Heater fan switch: ON	ON
		Heater fan switch: OFF	OFF
BRAKE SW	• Ignition switch: ON	Brake pedal: Fully released	OFF
		Brake pedal: Slightly depressed	ON
INJ PULSE-B1	• Engine: After warming up • Selector lever position: P or N (CVT), neutral (M/T) • Air conditioner switch: OFF • No load	Idle	2.0 - 3.0 msec
		2,000 rpm	1.9 - 2.9 msec
INJ PULSE-B2	• Engine: After warming up • Selector lever position: P or N (CVT), neutral (M/T) • Air conditioner switch: OFF • No load	Idle	2.0 - 3.0 msec
		2,000 rpm	1.9 - 2.9 msec
IGN TIMING	• Engine: After warming up • Selector lever position: P or N (CVT), neutral (M/T) • Air conditioner switch: OFF • No load	Idle	7 - 17° BTDC
		2,000 rpm	25 - 45° BTDC

Monitor Item	Condition		Values/Status
CAL/LD VALUE	• Engine: After warming up • Selector lever position: P or N (CVT), neutral (M/T) • Air conditioner switch: OFF • No load	Idle	5 - 35%
		2,500 rpm	5 - 35%
MASS AIRFLOW	• Engine: After warming up • Selector lever position: P or N (CVT), neutral (M/T) • Air conditioner switch: OFF • No load	Idle	2.0 - 6.0 g·m/s
		2,500 rpm	7.0 - 20.0 g·m/s
PURG VOL C/V	• Engine: After warming up • Selector lever position: P or N (CVT), neutral (M/T) • Air conditioner switch: OFF • No load	Idle (Accelerator pedal: Not depressed even slightly, after engine starting.)	0%
		2,000 rpm	—
INT/V TIM (B1)	• Engine: After warming up • Selector lever position: P or N (CVT), neutral (M/T) • Air conditioner switch: OFF • No load	Idle	–5 - 5°CA
		2,000 rpm	Approx. 0 - 30°CA
INT/V TIM (B2)	• Engine: After warming up • Selector lever position: P or N (CVT), neutral (M/T) • Air conditioner switch: OFF • No load	Idle	–5 - 5°CA
		2,000 rpm	Approx. 0 - 30°CA
INT/V SOL (B1)	• Engine: After warming up • Selector lever position: P or N (CVT), neutral (M/T) • Air conditioner switch: OFF • No load	Idle	0 - 2%
		2,000 rpm	Approx. 0 - 50%
INT/V SOL (B2)	• Engine: After warming up • Selector lever position: P or N (CVT), neutral (M/T) • Air conditioner switch: OFF • No load	Idle	0 - 2%
		2,000 rpm	Approx. 0 - 50%
VIAS S/V-1	• Engine: After warming up • Selector lever position: P or N (CVT), neutral (M/T) • Air conditioner switch: OFF • No load	Rev engine quickly up to approximately 5,000 rpm	OFF →ON → OFF
VIAS S/V-2	• Engine: After warming up • Selector lever position: P or N (CVT), neutral (M/T) • Air conditioner switch: OFF • No load	Rev engine quickly up to approximately 5,000 rpm	OFF →ON → OFF
AIR COND RLY	• Engine: After warming up, idle the engine	Air conditioner switch: OFF	OFF
		Air conditioner switch: ON (Compressor operates)	ON
ENGINE MOUNT	• Engine: After warming up	Below 950 rpm	IDLE
		Above 950 rpm	TRVL
FUEL PUMP RLY	• For 1 second after turning ignition switch: ON • Engine running or cranking		ON
	• Except above		OFF
VENT CONT/V	• Ignition switch: ON		OFF
THRTL RELAY	• Ignition switch: ON		ON

Monitor Item	Condition		Values/Status
COOLING FAN	• Engine: After warming up, idle the engine • Air conditioner switch: OFF	Engine coolant temperature: 97°C (206°F) or less	OFF
		Engine coolant temperature: Between 98°C (208°F) and 99°C (210°F)	Low
		Engine coolant temperature: Between 100°C (212°F) and 104°C (219°F)	Mid
		Engine coolant temperature: 105°C (221°F) or more	Hi
HO2S2 HTR (B1)	• Engine speed: Below 3,600 rpm after the following conditions are met. - Engine: After warming up - Keeping the engine speed between 3,500 and 4,000 rpm for 1 minute and at idle for 1 minute under no load		ON
	• Engine speed: Above 3,600 rpm		OFF
HO2S2 HTR (B2)	• Engine speed: Below 3,600 rpm after the following conditions are met. - Engine: After warming up - Keeping the engine speed between 3,500 and 4,000 rpm for 1 minute and at idle for 1 minute under no load		ON
	• Engine speed: Above 3,600 rpm		OFF
VEHICLE SPEED	• Turn drive wheels and compare CONSULT-III value with the speedometer indication.		Almost the same speed as the speedometer indication
IDL A/V LEARN	• Engine: Running	Idle air volume learning has not been performed yet.	YET
		Idle air volume learning has already been performed successfully.	CMPLT
ENG OIL TEMP	• Engine: After warming up		More than 70°C (158°F)
TRVL AFTER MIL	• Ignition switch: ON	Vehicle has traveled after MIL has illuminated.	0 - 65,535 km (0 - 40,723 miles)
A/F S1 HTR (B1)	• Engine: After warming up, idle the engine (More than 140 seconds after starting engine)		4 - 100%
A/F S1 HTR (B2)	• Engine: After warming up, idle the engine (More than 140 seconds after starting engine)		4 - 100%
AC PRESS SEN	• Engine: Idle • Both A/C switch and blower fan switch: ON (Compressor operates)		1.0 - 4.0 V
VHCL SPEED SE	• Turn drive wheels and compare CONSULT-III value with the speedometer indication.		Almost the same speed as the speedometer indication
SET VHCL SPD	• Engine: Running	ASCD: Operating	The preset vehicle speed is displayed
MAIN SW	• Ignition switch: ON	MAIN switch: Pressed	ON
		MAIN switch: Released	OFF
CANCEL SW	• Ignition switch: ON	CANCEL switch: Pressed	ON
		CANCEL switch: Released	OFF
RESUME/ACC SW	• Ignition switch: ON	RESUME/ACCELERATE switch: Pressed	ON
		RESUME/ACCELERATE switch: Released	OFF
SET SW	• Ignition switch: ON	SET/COAST switch: Pressed	ON
		SET/COAST switch: Released	OFF

Monitor Item	Condition		Values/Status
BRAKE SW1 (ASCD brake switch)	• Ignition switch: ON	• Brake pedal: Fully released (CVT) • Brake pedal and clutch pedal: Fully released (M/T)	ON
		• Brake pedal: Slightly depressed (CVT) • Brake pedal and clutch pedal: Slightly depressed (M/T)	OFF
BRAKE SW2 (Stop lamp switch)	• Ignition switch: ON	Brake pedal: Fully released	OFF
		Brake pedal: Slightly depressed	ON
VHCL SPD CUT	• Ignition switch: ON		NON
LO SPEED CUT	• Ignition switch: ON		NON
AT OD MONITOR	• Ignition switch: ON		OFF
AT OD CANCEL	• Ignition switch: ON		OFF
CRUISE LAMP	• Ignition switch: ON	MAIN switch: Pressed at the 1st time → at the 2nd time	ON → OFF
SET LAMP	• MAIN switch: ON • When vehicle speed is between 40 km/h (25 MPH) and 144 km/h (89 MPH)	ASCD: Operating	ON
		ASCD: Not operating	OFF
ALT DUTY	• Engine: Idle		0 - 80%
A/F ADJ-B1	• Engine: Running		–0.330 - 0.330
A/F ADJ-B2	• Engine: Running		–0.330 - 0.330
BAT CUR SEN	• Engine speed: Idle • Battery: Fully charged*2 • Selector lever position: P or N (CVT), neutral (M/T) • Air conditioner switch: OFF • No load		Approx. 2,600 - 3,500 mV
ALT DUTY SIG	• Power generation voltage variable control: Operating		ON
	• Power generation voltage variable control: Not operating		OFF

*1: Accelerator pedal position sensor 2 signal and throttle position sensor 2 signal are converted by ECM internally. Thus, they differ from ECM terminals voltage signal.

*2: Before measuring the terminal voltage, confirm that the battery is fully charged. Refer to PG-3, "How to Handle Battery".

TERMINAL LAYOUT

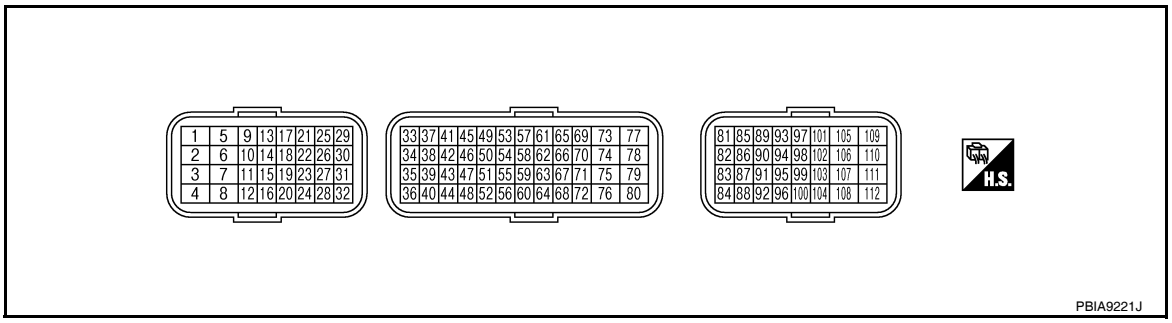

PHYSICAL VALUES

NOTE:
- ECM is located in the engine room left side near battery.
- Specification data are reference values.
- Pulse signal is measured by CONSULT-III.

Terminal No.		Description		Condition	Value (Approx.)
+	–	Signal name	Input/ Output		
1 (P/B) 3 (L/W) 29 (LG/R) 30 (R/Y) 31 (R/W) 32 (R/B)	112 (B)	Fuel injector No. 6 Fuel injector No. 5 Fuel injector No. 4 Fuel injector No. 3 Fuel injector No. 2 Fuel injector No. 1	Output	[Engine is running] • Warm-up condition • Idle speed **NOTE:** The pulse cycle changes depending on rpm at idle	BATTERY VOLTAGE (11 - 14 V)★ 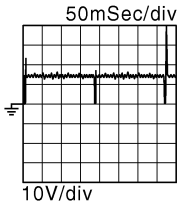 JMBIA0047GB
				[Engine is running] • Warm-up condition • Engine speed: 2,000 rpm	BATTERY VOLTAGE (11 - 14 V)★ 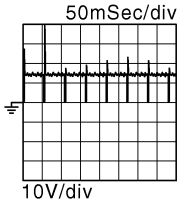 JMBIA0048GB
2 (G/W)	112 (B)	Throttle control motor power supply	Input	[Ignition switch: ON]	BATTERY VOLTAGE (11 - 14 V)
4 (BR/Y)	112 (B)	A/F sensor 1 heater (bank 1)	Output	[Engine is running] • Warm-up condition • Idle speed (More than 140 seconds after starting engine)	2.9 - 8.8 V★ 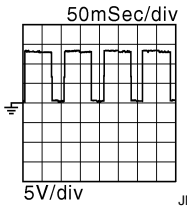 JMBIA0902GB
5 (L)	112 (B)	Throttle control motor (Open)	Output	[Ignition switch: ON] • Engine stopped • Selector lever position: D (CVT), 1st (M/T) • Accelerator pedal: Fully depressed	0 - 14 V★ 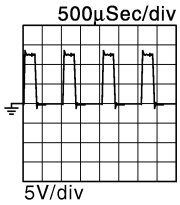 JMBIA0031GB
				[Ignition switch: ON] • Engine stopped • Selector lever position: D (CVT), 1st (M/T) • Accelerator pedal: Fully released	0 - 14 V★ 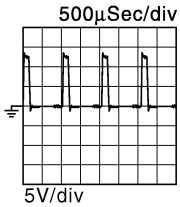 JMBIA0032GB
6 (P)	112 (B)	Throttle control motor (Close)	Output	[Ignition switch: ON] • Engine stopped • Selector lever position: D (CVT), 1st (M/T) • Accelerator pedal: Fully released	0 - 14 V★ 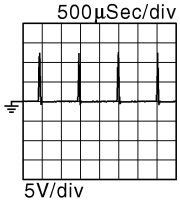 JMBIA1125GB

Terminal No.		Description		Condition	Value (Approx.)
+	—	Signal name	Input/ Output		
8 (SB)	112 (B)	A/F sensor 1 heater (bank 2)	Output	[Engine is running] • Warm-up condition • Idle speed (More than 140 seconds after starting engine)	2.9 - 8.8 V★ 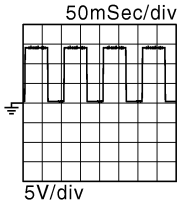
9 (L/B) 10 (G/R) 11 (Y/R) 18 (GR/R) 19 (P/W) 21 (GR/W)	112 (B)	Ignition signal No. 3 Ignition signal No. 2 Ignition signal No. 1 Ignition signal No. 6 Ignition signal No. 5 Ignition signal No. 4	Output	[Engine is running] • Warm-up condition • Idle speed **NOTE:** The pulse cycle changes depending on rpm at idle	0 - 0.2 V★ 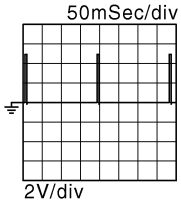
				[Engine is running] • Warm-up condition • Engine speed: 2,000 rpm	0.1 - 0.4 V★ 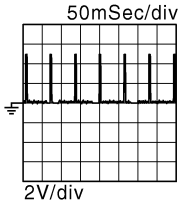
12 (B)	—	ECM ground	—	—	—
13 (P/Y)	112 (B)	Heated oxygen sensor 2 heater (bank 1)	Output	[Engine is running] • Engine speed: Below 3,600 rpm after the following conditions are met - Engine: after warming up - Keeping the engine speed between 3,500 and 4,000 rpm for 1 minute and at idle for 1 minute under no load	10 V★ 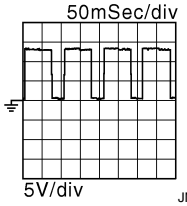
				[Ignition switch: ON] • Engine stopped [Engine is running] • Engine speed: Above 3,600 rpm	BATTERY VOLTAGE (11 - 14 V)
14 (B/R)	112 (B)	Fuel pump relay	Output	[Ignition switch: ON] • For 1 second after turning ignition switch ON [Engine is running]	0 - 1.5 V
				[Ignition switch: ON] • More than 1 second after turning ignition switch ON	BATTERY VOLTAGE (11 - 14 V)
15 (O)	112 (B)	Throttle control motor relay	Output	[Ignition switch: ON → OFF]	0 - 1.0 V ↓ BATTERY VOLTAGE (11 - 14 V) ↓ 0 V
				[Ignition switch: ON]	0 - 1.0 V
16 (B)	—	ECM ground	—	—	—

Terminal No. +	Terminal No. –	Description: Signal name	Description: Input/Output	Condition	Value (Approx.)
17 (R)	112 (B)	Heated oxygen sensor 2 heater (bank 2)	Output	[Engine is running] • Engine speed: Below 3,600 rpm after the following conditions are met - Engine: after warming up - Keeping the engine speed between 3,500 and 4,000 rpm for 1 minute and at idle for 1 minute under no load	10 V★ 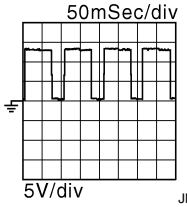
				[Ignition switch: ON] • Engine stopped [Engine is running] • Engine speed: Above 3,600 rpm	BATTERY VOLTAGE (11 - 14 V)
24 (W/B)	112 (B)	ECM relay (Self shut-off)	Output	[Engine is running] [Ignition switch: OFF] • A few seconds after turning ignition switch OFF	0 - 1.5 V
				[Ignition switch: OFF] • More than a few seconds after turning ignition switch OFF	BATTERY VOLTAGE (11 - 14 V)
25 (P/L)	112 (B)	EVAP canister purge volume control solenoid valve	Output	[Engine is running] • Idle speed • Accelerator pedal: Not depressed even slightly, after engine starting	BATTERY VOLTAGE (11 - 14 V)★ 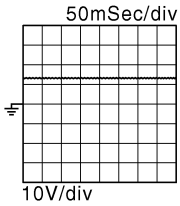
				[Engine is running] • Engine speed: approximately 2,000 rpm (More than 100 seconds after starting engine)	BATTERY VOLTAGE (11 - 14 V)★ 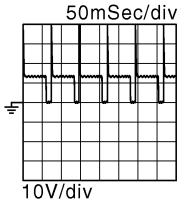
26 (GR)	112 (B)	VIAS control solenoid valve 2	Output	[Engine is running] • Warm-up condition • Idle speed	BATTERY VOLTAGE (11 - 14 V)
				[Engine is running] • Warm-up condition • When revving engine up to 5,000 rpm quickly	BATTERY VOLTAGE (11 - 14 V) ↓ 0 - 1.0 V ↓ BATTERY VOLTAGE (11 - 14 V)
27 (V)	112 (B)	VIAS control solenoid valve 1	Output	[Engine is running] • Warm-up condition • Idle speed	BATTERY VOLTAGE (11 - 14 V)
				[Engine is running] • Warm-up condition • When revving engine up to 5,000 rpm quickly	BATTERY VOLTAGE (11 - 14 V) ↓ 0 - 1.0 V ↓ BATTERY VOLTAGE (11 - 14 V)

Terminal No.		Description		Condition	Value (Approx.)
+	—	Signal name	Input/ Output		
28 (BR/W)	112 (B)	Electronic controlled engine mount control solenoid valve	Output	[Engine is running] • Idle speed	0 - 1.0 V
				[Engine is running] • Engine speed: More than 950 rpm	BATTERY VOLTAGE (11 - 14 V)
33 (W)	35 (B)	Heated oxygen sensor 2 (bank 1)	Input	[Engine is running] • Revving engine from idle to 3,000 rpm quickly after the following conditions are met - Engine: after warming up - Keeping the engine speed between 3,500 and 4,000 rpm for 1 minute and at idle for 1 minute under no load	0 - 1.0 V
34 (W/L)	35 (B)	Heated oxygen sensor 2 (bank 2)	Input	[Engine is running] • Revving engine from idle to 3,000 rpm quickly after the following conditions are met - Engine: after warming up - Keeping the engine speed between 3,500 and 4,000 rpm for 1 minute and at idle for 1 minute under no load	0 - 1.0 V
35 (B)	—	Sensor ground (Heated oxygen sensor 2)	—	—	—
36 (B)	—	Sensor ground (Throttle position sensor)	—	—	—
37 (W)	36 (B)	Throttle position sensor 1	Input	[Ignition switch: ON] • Engine stopped • Selector lever position: D (CVT), 1st (M/T) • Accelerator pedal: Fully released	More than 0.36 V
				[Ignition switch: ON] • Engine stopped • Selector lever position: D (CVT), 1st (M/T) • Accelerator pedal: Fully depressed	Less than 4.75 V
38 (R)	36 (B)	Throttle position sensor 2	Input	[Ignition switch: ON] • Engine stopped • Selector lever position: D (CVT), 1st (M/T) • Accelerator pedal: Fully released	Less than 4.75 V
				[Ignition switch: ON] • Engine stopped • Selector lever position: D (CVT), 1st (M/T) • Accelerator pedal: Fully depressed	More than 0.36 V
39 (R)	40 (G)	Refrigerant pressure sensor	Input	[Engine is running] • Warm-up condition • Both A/C switch and blower fan motor switch: ON (Compressor operates)	1.0 - 4.0 V

Terminal No.		Description		Condition	Value (Approx.)
+	–	Signal name	Input/ Output		
40 (G)	—	Sensor ground (Refrigerant pressure sensor)	—	—	—
41 (O/B)	48 (B/P)	Power steering pressure sensor	Input	[Engine is running] • Steering wheel: Being turned	0.5 - 4.5 V
				[Engine is running] • Steering wheel: Not being turned	0.4 - 0.8 V
42 (G)	44 (G/B)	Battery current sensor	Input	[Engine is running] • Battery: Fully charged*2 • Idle speed	2.6 - 3.5 V
44 (G/B)	—	Sensor ground (Battery current sensor)	—	—	—
45 (B/W)	49 (L)	A/F sensor 1 (bank 1)	Input	[Ignition switch: ON]	2.2 V
46 (Y)	52 (B/G)	Engine coolant temperature sensor	Input	[Engine is running]	0 - 4.8 V Output voltage varies with engine coolant temperature.
47 (G)	36 (B)	Sensor power supply (Throttle position sensor)	—	[Ignition switch: ON]	5 V
48 (B/P)	—	Sensor ground (Power steering pressure sensor)	—	—	—
49 (L)	112 (B)	A/F sensor 1 (bank 1)	Input	[Engine is running] • Warm-up condition • Engine speed: 2,000 rpm	1.8 V Output voltage varies with air fuel ratio.
50 (L/Y)	56 (G/B)	Intake air temperature sensor	Input	[Engine is running]	0 - 4.8 V Output voltage varies with intake air temperature.
51 (R/Y)	44 (G/B)	Sensor power supply (Battery current sensor)	—	[Ignition switch: ON]	5 V
52 (B/G)	—	Sensor ground (Engine coolant temperature sensor/Engine oil temperature sensor)	—	—	—
53 (V)	112 (B)	A/F sensor 1 (bank 2)	Input	[Ignition switch: ON]	2.2 V
54 (G/R)	52 (B/G)	Engine oil temperature sensor	Input	[Engine is running]	0 - 4.8 V Output voltage varies with engine oil temperature.
55 (G/Y)	48 (B/P)	Sensor power supply (Power steering pressure sensor)	—	[Ignition switch: ON]	5 V
56 (G/B)	—	Sensor ground (Mass air flow sensor/Intake air temperature sensor)	—	—	—
57 (LG)	112 (B)	A/F sensor 1 (bank 2)	Input	[Engine is running] • Warm-up condition • Engine speed: 2,000 rpm	1.8 V Output voltage varies with air fuel ratio.

Terminal No.		Description		Condition	Value (Approx.)
+	—	Signal name	Input/ Output		
58 (O)	56 (G/B)	Mass air flow sensor	Input	[Engine is running] • Warm-up condition • Idle speed	0.9 - 1.2 V
				[Engine is running] • Warm-up condition • Engine speed: 2,500 rpm	1.6 - 1.9 V
59 (G/W)	64 (B/R)	Sensor power supply [Camshaft position sensor (PHASE) (bank 1)]	—	[Ignition switch: ON]	5 V
60 (Y/B)	—	Sensor ground [Crankshaft position sensor (POS)]	—	—	—
61 (GR)	67 (GR/B)	Knock sensor (bank 1)	Input	[Engine is running] • Idle speed	2.5 V*1
62 (W)	67 (GR/B)	Knock sensor (bank 2)	Input	[Engine is running] • Idle speed	2.5 V*1
63 (R/W)	68 (Y/G)	Sensor power supply [Camshaft position sensor (PHASE) (bank 2)]	—	[Ignition switch: ON]	5 V
64 (B/R)	—	Sensor ground [Camshaft position sensor (PHASE) (bank 1)]	—	—	—
65 (W)	60 (Y/B)	Crankshaft position sensor (POS)	Input	[Engine is running] • Warm-up condition • Idle speed **NOTE:** The pulse cycle changes depending on rpm at idle	4.0 - 5.0 V★ 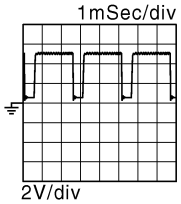 JMBIA0041GB
				[Engine is running] • Engine speed: 2,000 rpm	4.0 - 5.0 V★ 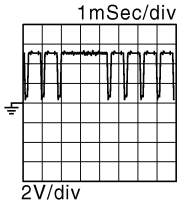 JMBIA0042GB
67 (GR/B)	—	Sensor ground (Knock sensor)	—	—	—
68 (Y/G)	—	Sensor ground [Camshaft position sensor (PHASE) (bank 2)]	—	—	—

Terminal No. +	Terminal No. –	Description: Signal name	Description: Input/Output	Condition	Value (Approx.)
69 (BR/W)	68 (Y/G)	Camshaft position sensor (PHASE) (bank 2)	Input	[Engine is running] • Warm-up condition • Idle speed **NOTE:** The pulse cycle changes depending on rpm at idle	3.0 - 5.0 V★ 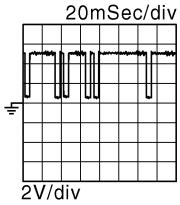 JMBIA0045GB
				[Engine is running] • Engine speed is 2,000 rpm	3.0 - 5.0 V★ 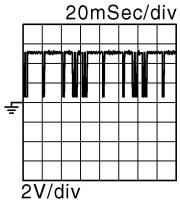 JMBIA0046GB
70 (W/R)	64 (B/R)	Camshaft position sensor (PHASE) (bank 1)	Input	[Engine is running] • Warm-up condition • Idle speed **NOTE:** The pulse cycle changes depending on rpm at idle	3.0 - 5.0 V★ 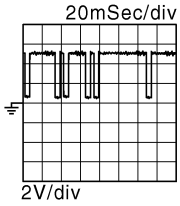 JMBIA0045GB
				[Engine is running] • Engine speed is 2,000 rpm	3.0 - 5.0 V★ 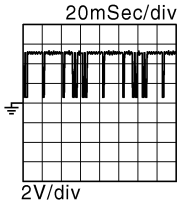 JMBIA0046GB
72 (BR/W)	40 (G)	Sensor power supply (Refrigerant pressure sensor)	—	[Ignition switch: ON]	5 V
75 (Y)	112 (B)	Intake valve timing control solenoid valve (bank 2)	Output	[Engine is running] • Warm-up condition • Idle speed	BATTERY VOLTAGE (11 - 14 V)
				[Engine is running] • Warm-up condition • Engine speed: 2,000 rpm	7 - 12 V★ 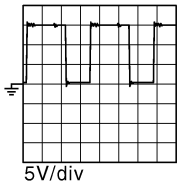 JMBIA0038GB
76 (R/G)	60 (Y/B)	Sensor power supply [Crankshaft position sensor (POS)]	—	[Ignition switch: ON]	5 V
77 (W/L)	112 (B)	Power supply for ECM (Back-up)	Input	[Ignition switch: OFF]	BATTERY VOLTAGE (11 - 14 V)

Terminal No.		Description		Condition	Value (Approx.)
+	—	Signal name	Input/ Output		
78 (R/L)	112 (B)	Intake valve timing control solenoid valve (bank 1)	Output	[Engine is running] • Warm-up condition • Idle speed	BATTERY VOLTAGE (11 - 14 V)
				[Engine is running] • Warm-up condition • Engine speed: 2,000 rpm	7 - 12 V★ 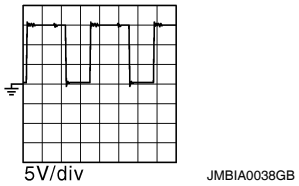
81 (W)	84 (B)	Accelerator pedal position sensor 1	Input	[Ignition switch: ON] • Engine stopped • Accelerator pedal: Fully released	0.65 - 0.87 V
				[Ignition switch: ON] • Engine stopped • Accelerator pedal: Fully depressed	More than 4.3 V
82 (O)	100 (G)	Accelerator pedal position sensor 2	Input	[Ignition switch: ON] • Engine stopped • Accelerator pedal: Fully released	0.28 - 0.48 V
				[Ignition switch: ON] • Engine stopped • Accelerator pedal: Fully depressed	More than 2.0 V
83 (GR)	84 (B)	Sensor power supply (Accelerator pedal position sensor 1)	—	[Ignition switch: ON]	5 V
84 (B)	—	Sensor ground (Accelerator pedal position sensor 1)	—	—	—
85 (G/Y)	92 (R)	ASCD steering switch	Input	[Ignition switch: ON] • ASCD steering switch: OFF	4 V
				[Ignition switch: ON] • MAIN switch: Pressed	0 V
				[Ignition switch: ON] • CANCEL switch: Pressed	1 V
				[Ignition switch: ON] • RESUME/ACCELERATE switch: Pressed	3 V
				[Ignition switch: ON] • SET/COAST switch: Pressed	2 V
86 (SB)	96 (GR)	EVAP control system pressure sensor	Input	[Ignition switch: ON]	1.8 - 4.8 V
87 (BR)	100 (G)	Sensor power supply (Accelerator pedal position sensor 2)	—	[Ignition switch: ON]	5 V
88 (O)	—	Data link connector	Input/ Output	—	—
91 (V)	96 (GR)	Sensor power supply (EVAP control system pressure sensor)	—	[Ignition switch: ON]	5 V

Terminal No. +	Terminal No. –	Description: Signal name	Description: Input/Output	Condition	Value (Approx.)
92 (R)	—	Sensor ground (ASCD steering switch)	—	—	—
93 (Y)	112 (B)	Ignition switch	Input	[Ignition switch: OFF]	0 V
				[Ignition switch: ON]	BATTERY VOLTAGE (11 - 14 V)
94 (V/W)	112 (B)	Engine speed output signal	Output	[Engine is running] • Warm-up condition • Idle speed **NOTE:** The pulse cycle changes depending on rpm at idle	1 V★ 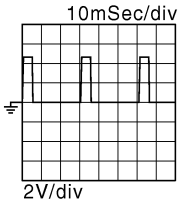 JMBIA0076GB
				[Engine is running] • Engine speed: 2,000 rpm	1 V★ 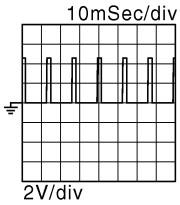 JMBIA0077GB
95 (Y)	104 (P)	Fuel tank temperature sensor	Input	[Engine is running]	0 - 4.8 V Output voltage varies with fuel tank temperature.
96 (GR)	—	Sensor ground (EVAP control system pressure sensor)	—	—	—
97 (P)	—	CAN communication line	Input/Output	—	—
98 (L)	—	CAN communication line	Input/Output	—	—
100 (G)	—	Sensor ground (Accelerator pedal position sensor 2)	—	—	—
102 (R/B)	112 (B)	PNP signal	Input	[Ignition switch: ON] • Selector lever position: P or N (CVT), neutral (M/T)	BATTERY VOLTAGE (11 - 14 V)
				[Ignition switch: ON] • Selector lever position: Except above	0 V
104 (P)	—	Sensor ground (Fuel tank temperature sensor)	—	—	—
105 (V)	112 (B)	Power supply for ECM	Input	[Ignition switch: ON]	BATTERY VOLTAGE (11 - 14 V)
106 (SB)	112 (B)	Stop lamp switch	Input	[Ignition switch: OFF] • Brake pedal: Fully released	0 V
				[Ignition switch: OFF] • Brake pedal: Slightly depressed	BATTERY VOLTAGE (11 - 14 V)

Terminal No.		Description		Condition	Value (Approx.)
+	—	Signal name	Input/ Output		
107 (B) 108 (B)	—	ECM ground	—	—	—
109 (W)	112 (B)	EVAP canister vent control valve	Output	[Ignition switch: ON]	BATTERY VOLTAGE (11 - 14 V)
110 (G/W)	112 (B)	ASCD brake switch	Input	[Ignition switch: ON] • Brake pedal: Slightly de-pressed	0 V
				[Ignition switch: ON] • Brake pedal: Fully released	BATTERY VOLTAGE (11 - 14 V)
111 (B) 112 (B)	—	ECM ground	—	—	—

★: Average voltage for pulse signal (Actual pulse signal can be confirmed by oscilloscope.)

*1: This may vary depending on internal resistance of the tester.

*2: Before measuring the terminal voltage, confirm that the battery is fully charged. Refer to PG-3, "How to Handle Battery".

Wiring Diagram—ENGINE CONTROL SYSTEM—

INFOID:0000000004362392

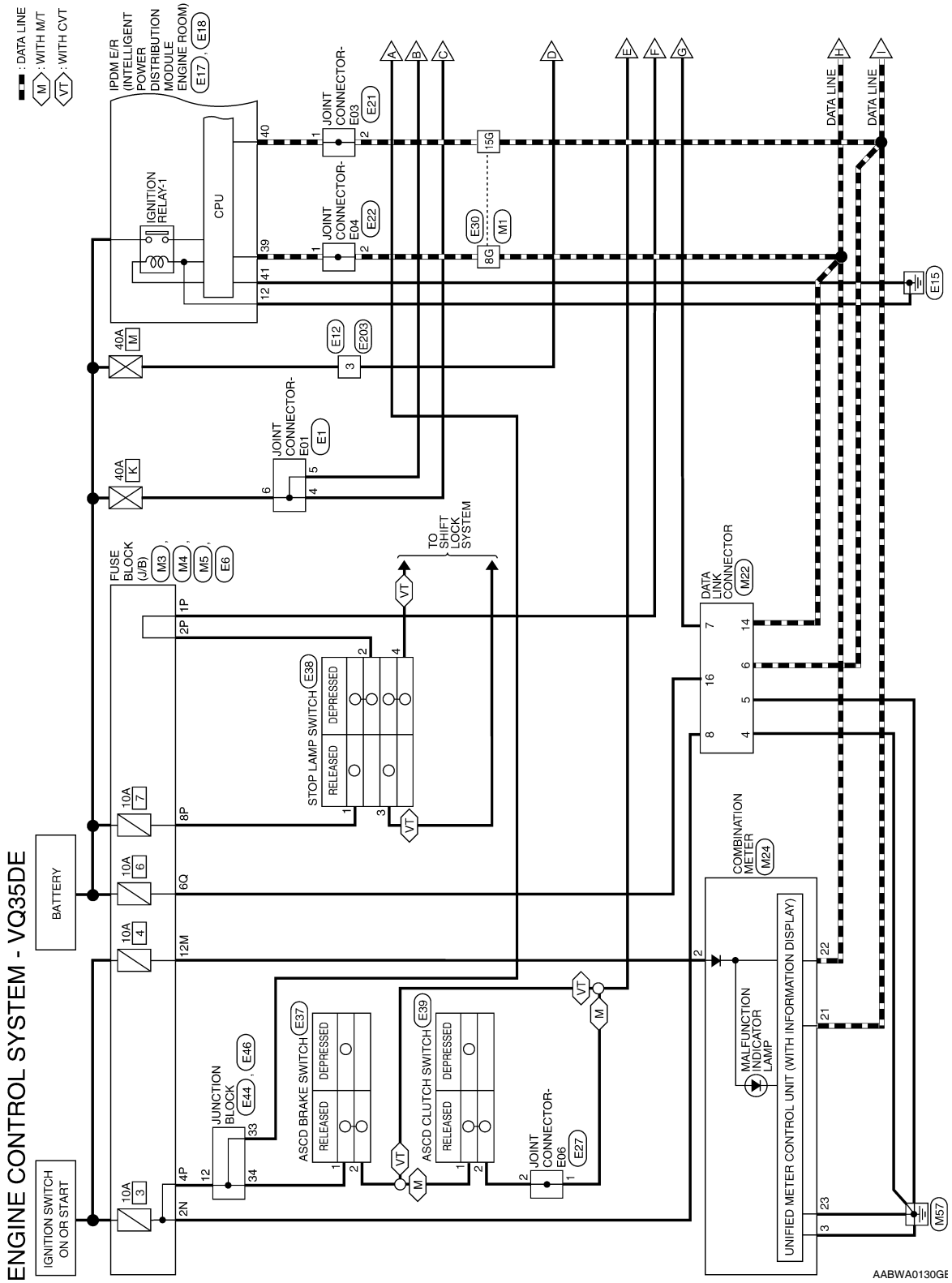

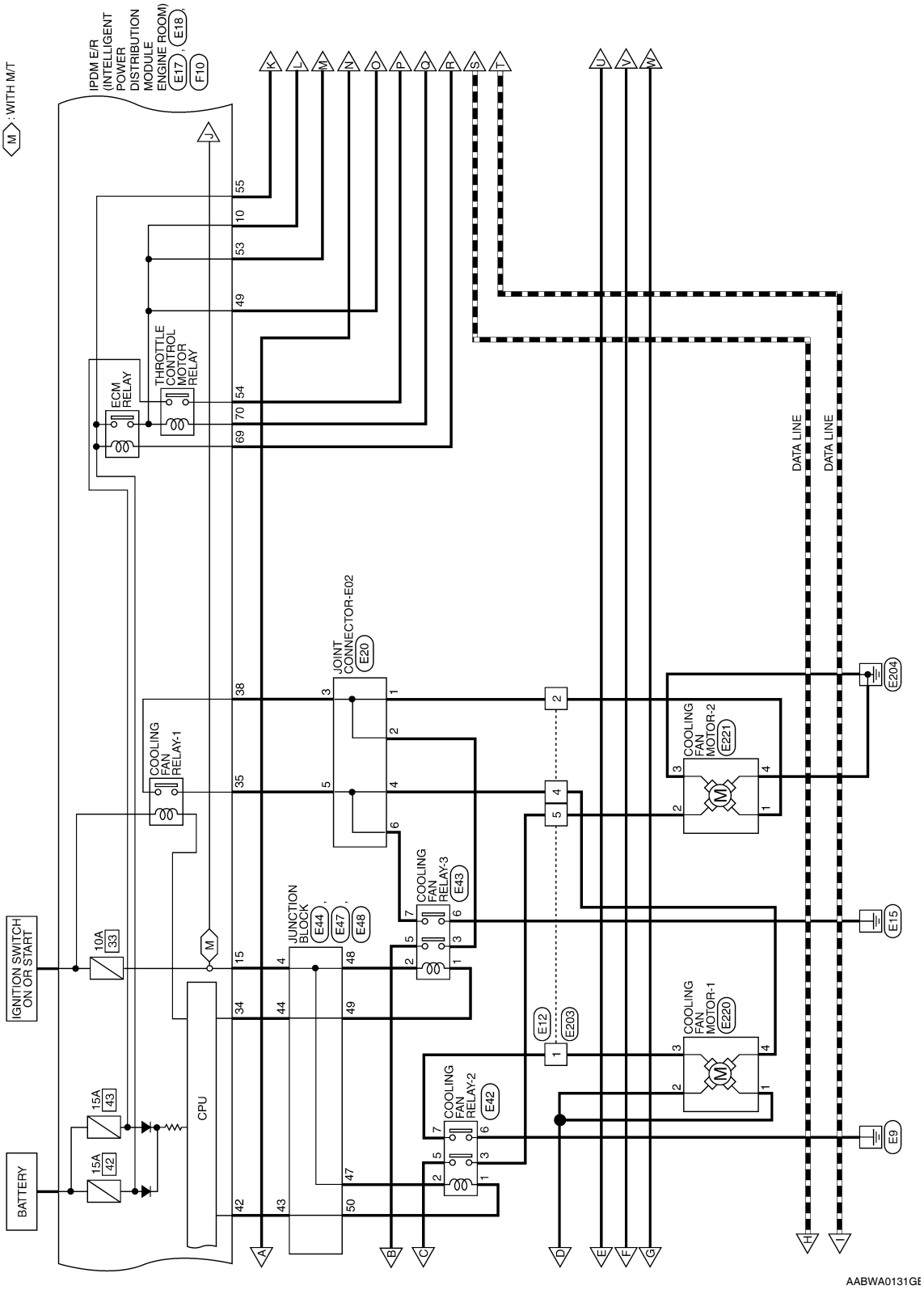
: DATA LINE
M : WITH M/T
IPDM E/R (INTELLIGENT POWER DISTRIBUTION MODULE ENGINE ROOM)
E17, E18
F10
ECM RELAY
THROTTLE CONTROL MOTOR RELAY
COOLING FAN RELAY-1
JOINT CONNECTOR-E02
E20
JUNCTION BLOCK
E44, E47, E48
COOLING FAN RELAY-3
E43
COOLING FAN RELAY-2
E42
COOLING FAN MOTOR-2
E221
COOLING FAN MOTOR-1
E220
E12
E203
E204
E15
E9
DATA LINE
DATA LINE
IGNITION SWITCH ON OR START
BATTERY
10A 33
15A 43
15A 42
CPU
AABWA0131GB

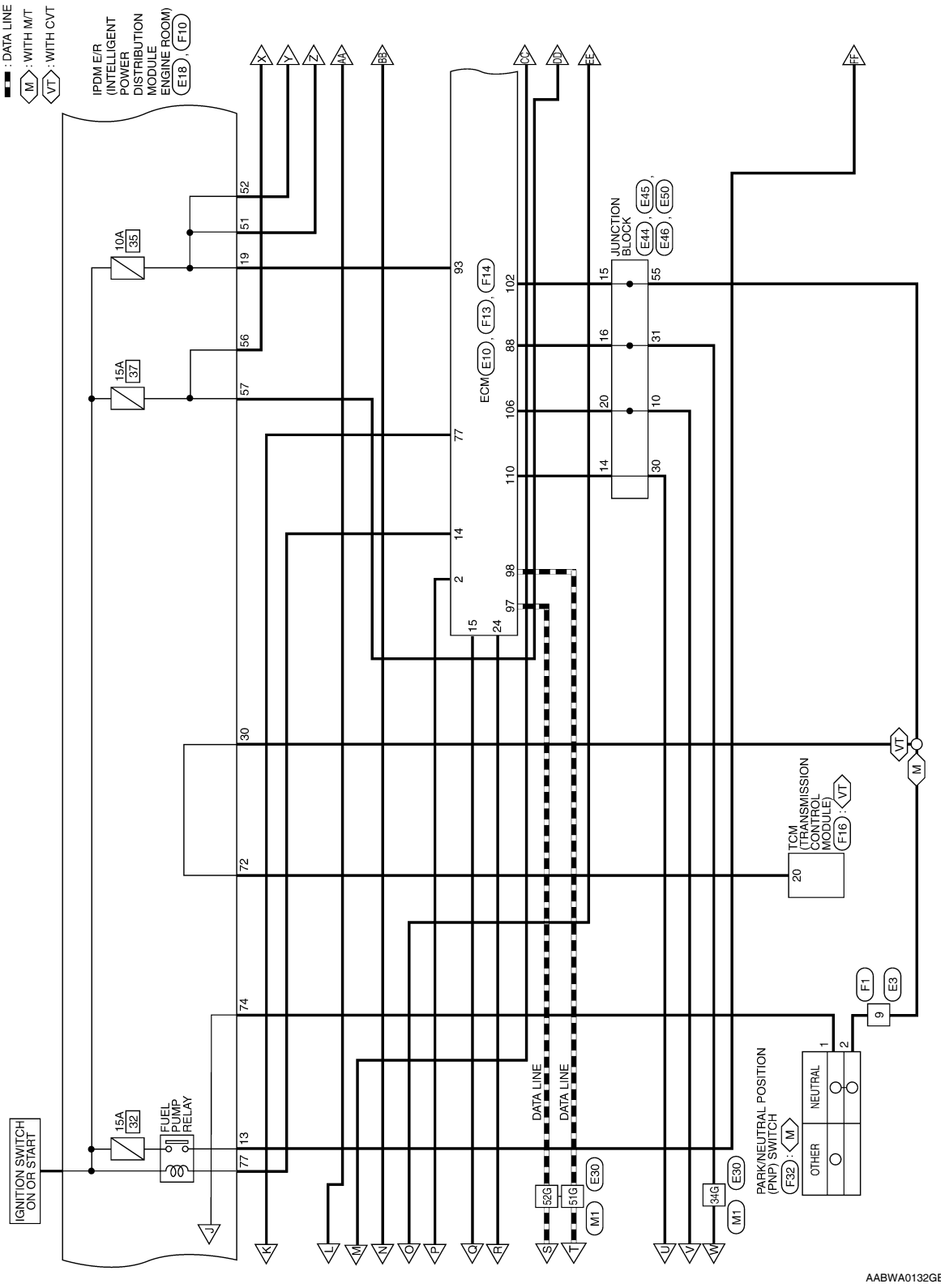
: DATA LINE
M : WITH M/T
VT : WITH CVT
IPDM E/R (INTELLIGENT POWER DISTRIBUTION MODULE ENGINE ROOM) E18, F10
10A 35
15A 37
15A 32
FUEL PUMP RELAY
IGNITION SWITCH ON OR START
ECM E10, F13, F14
JUNCTION BLOCK E44, E45, E46, E50
TCM (TRANSMISSION CONTROL MODULE) F16 : VT
PARK/NEUTRAL POSITION (PNP) SWITCH F32 : M
NEUTRAL
OTHER
DATA LINE
DATA LINE
52G
51G
34G
M1
E30
F1
E3
9
AABWA0132GE

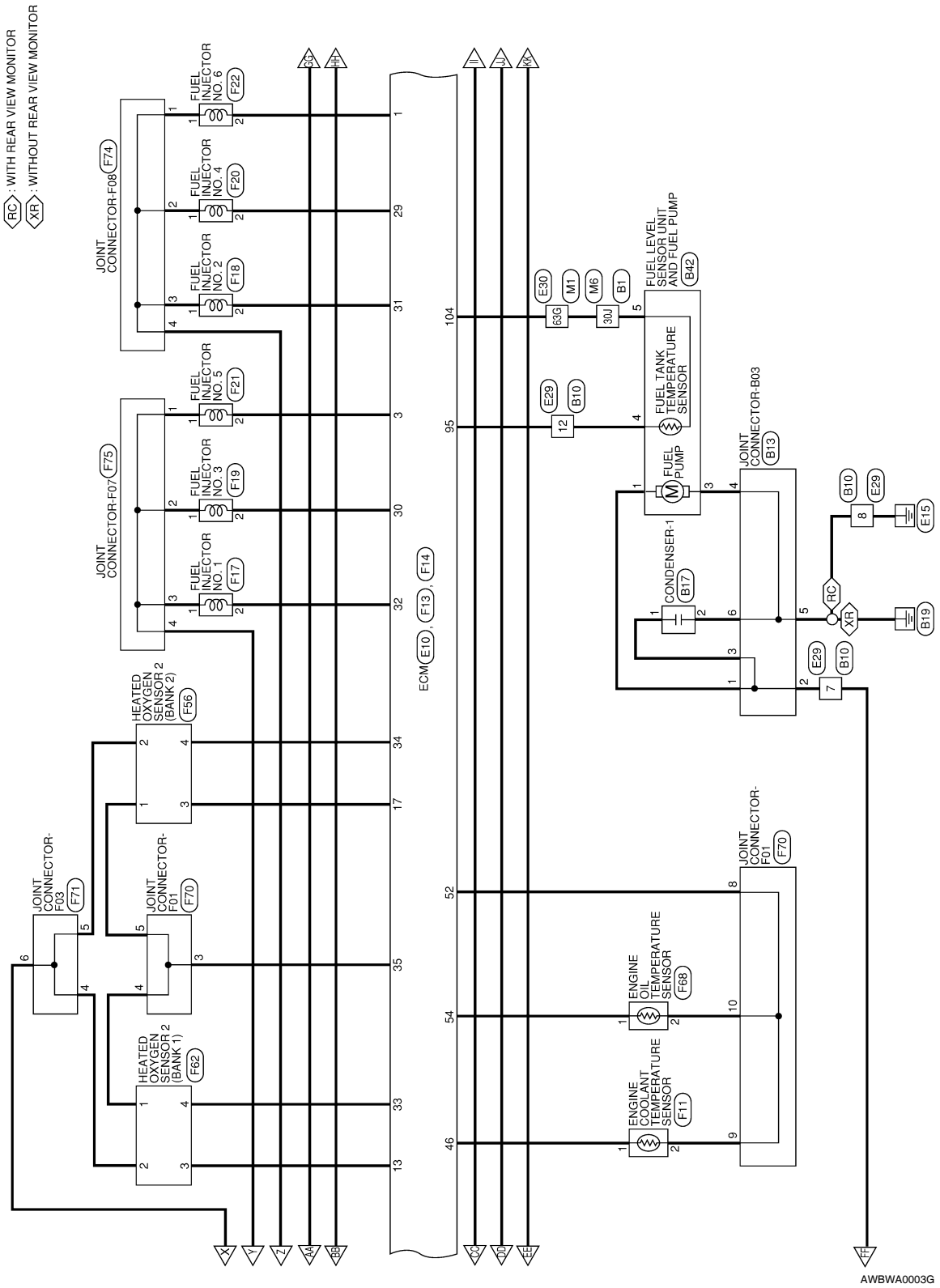
RC : WITH REAR VIEW MONITOR
XR : WITHOUT REAR VIEW MONITOR
JOINT CONNECTOR-F08 (F74)
JOINT CONNECTOR-F07 (F75)
FUEL INJECTOR NO. 1 (F17)
FUEL INJECTOR NO. 2 (F18)
FUEL INJECTOR NO. 3 (F19)
FUEL INJECTOR NO. 4 (F20)
FUEL INJECTOR NO. 5 (F21)
FUEL INJECTOR NO. 6 (F22)
HEATED OXYGEN SENSOR 2 (BANK 2) (F56)
HEATED OXYGEN SENSOR 2 (BANK 1) (F62)
JOINT CONNECTOR-F03 (F71)
JOINT CONNECTOR-F01 (F70)
ECM (E10), (F13), (F14)
FUEL LEVEL SENSOR UNIT AND FUEL PUMP (B42)
FUEL TANK TEMPERATURE SENSOR
FUEL PUMP
CONDENSER-1 (B17)
JOINT CONNECTOR-B03 (B13)
ENGINE OIL TEMPERATURE SENSOR (F68)
ENGINE COOLANT TEMPERATURE SENSOR (F11)
JOINT CONNECTOR-F01 (F70)
AWBWA0003G

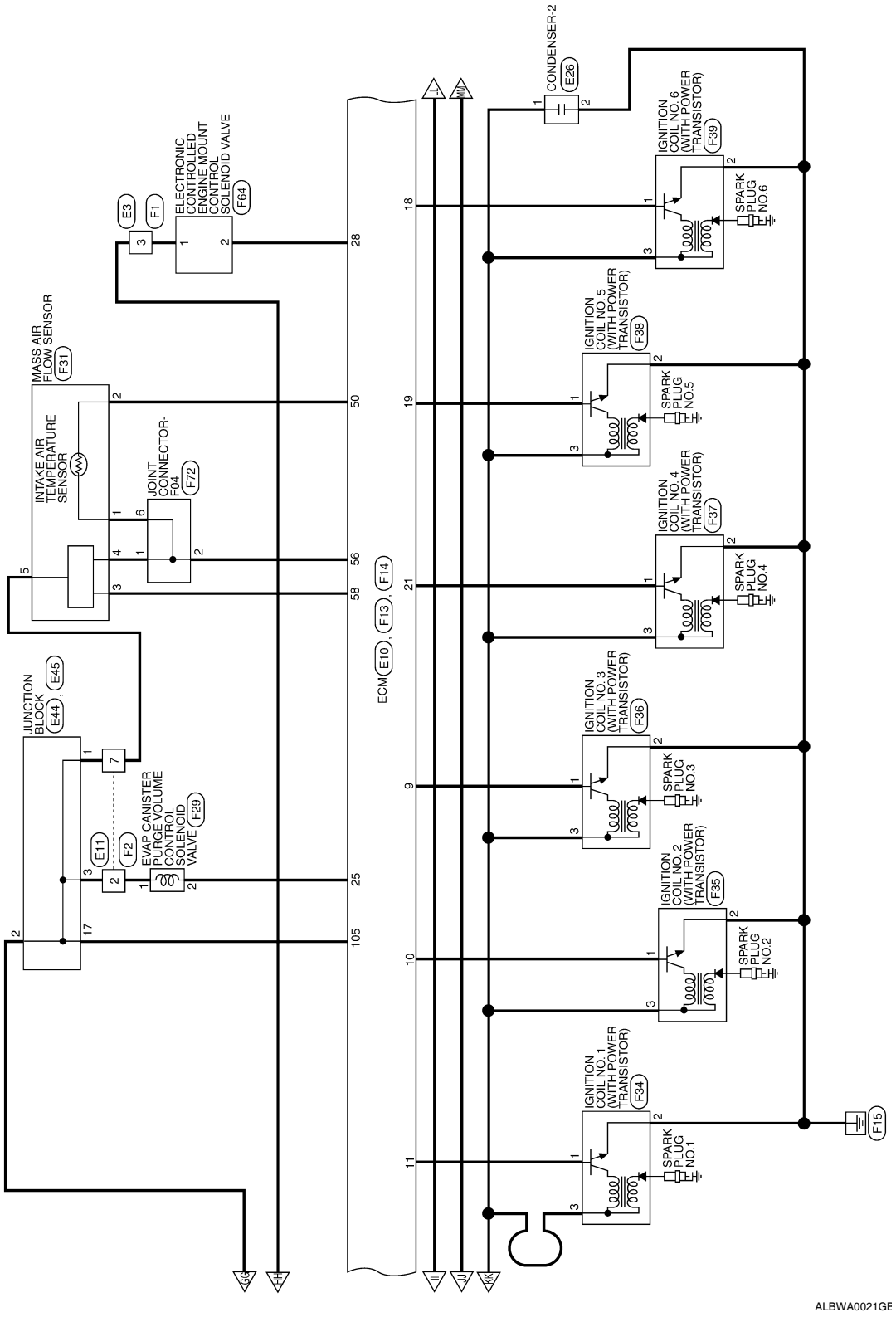
CONDENSER-2
E26
IGNITION COIL NO.6 (WITH POWER TRANSISTOR)
F39
SPARK PLUG NO.6
IGNITION COIL NO.5 (WITH POWER TRANSISTOR)
F38
SPARK PLUG NO.5
IGNITION COIL NO.4 (WITH POWER TRANSISTOR)
F37
SPARK PLUG NO.4
IGNITION COIL NO.3 (WITH POWER TRANSISTOR)
F36
SPARK PLUG NO.3
IGNITION COIL NO.2 (WITH POWER TRANSISTOR)
F35
SPARK PLUG NO.2
IGNITION COIL NO.1 (WITH POWER TRANSISTOR)
F34
SPARK PLUG NO.1
F15
ELECTRONIC CONTROLLED ENGINE MOUNT CONTROL SOLENOID VALVE
F64
E3
F1
MASS AIR FLOW SENSOR
F31
INTAKE AIR TEMPERATURE SENSOR
JOINT CONNECTOR-F04
F72
JUNCTION BLOCK
E44, E45
EVAP CANISTER PURGE VOLUME CONTROL SOLENOID VALVE
F29
E11
F2
ECM E10, F13, F14
ALBWA0021GE

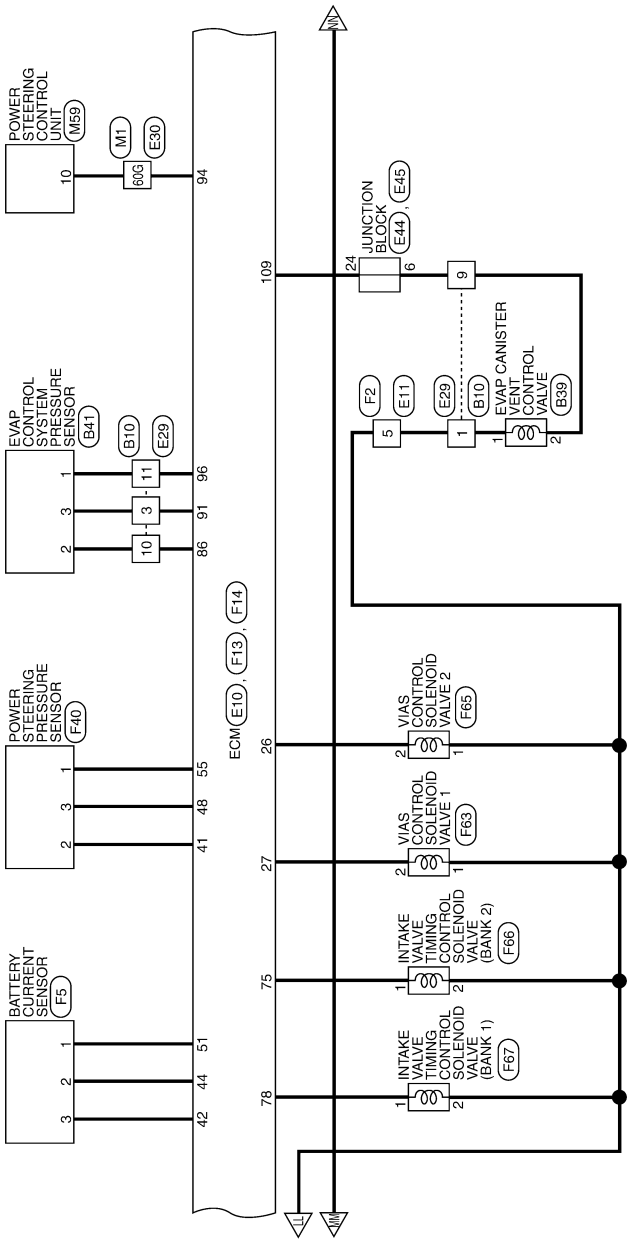

ALBWA0022GE

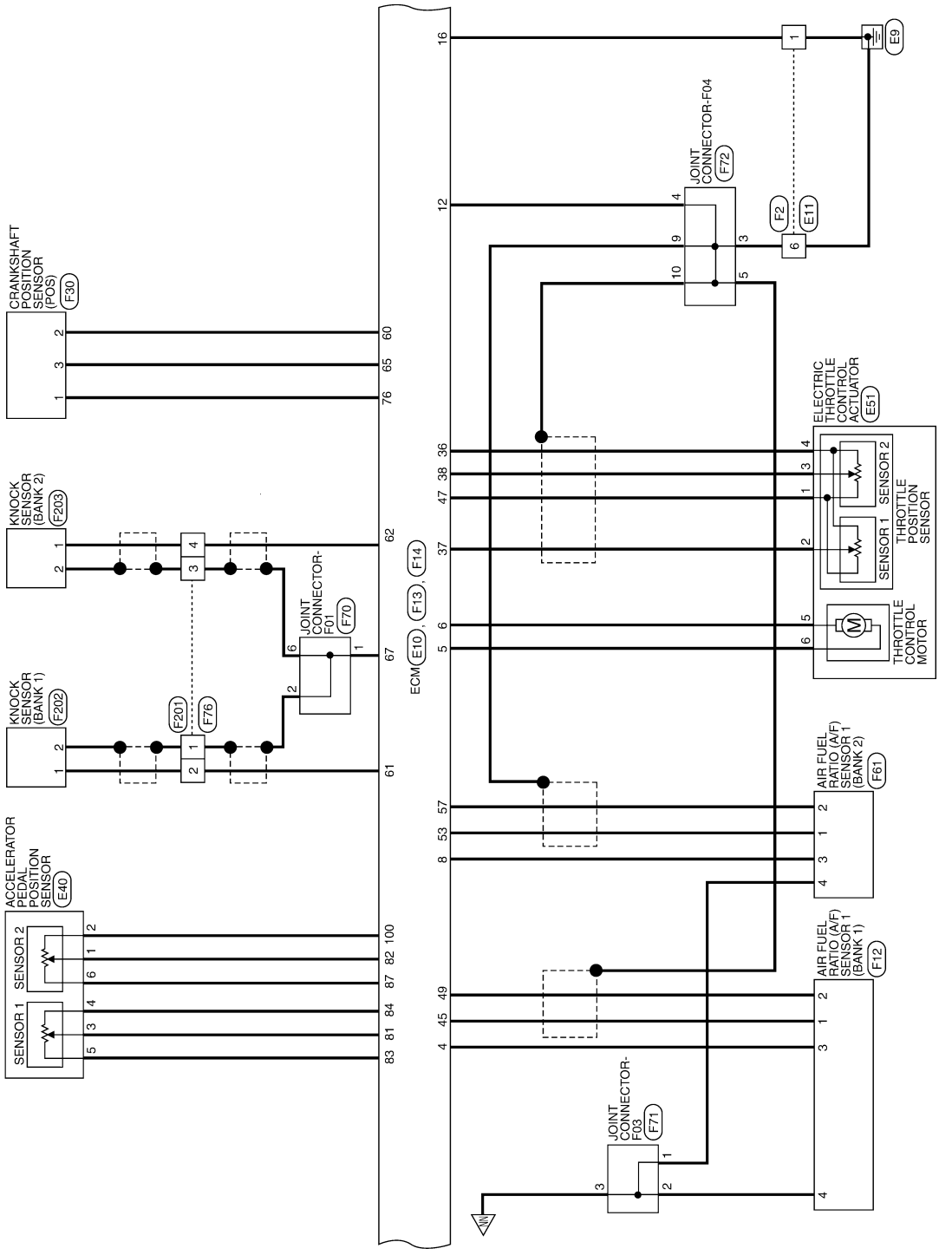
CRANKSHAFT POSITION SENSOR (POS)
F30
KNOCK SENSOR (BANK 2)
F203
KNOCK SENSOR (BANK 1)
F202
ACCELERATOR PEDAL POSITION SENSOR
E40
SENSOR 1
SENSOR 2
F201
F76
JOINT CONNECTOR-F01
F70
ECM
E10, F13, F14
JOINT CONNECTOR-F04
F72
F2
E11
E9
ELECTRIC THROTTLE CONTROL ACTUATOR
E51
THROTTLE POSITION SENSOR
THROTTLE CONTROL MOTOR
AIR FUEL RATIO (A/F) SENSOR 1 (BANK 2)
F61
AIR FUEL RATIO (A/F) SENSOR 1 (BANK 1)
F12
JOINT CONNECTOR-F03
F71
ALBWA0023GE

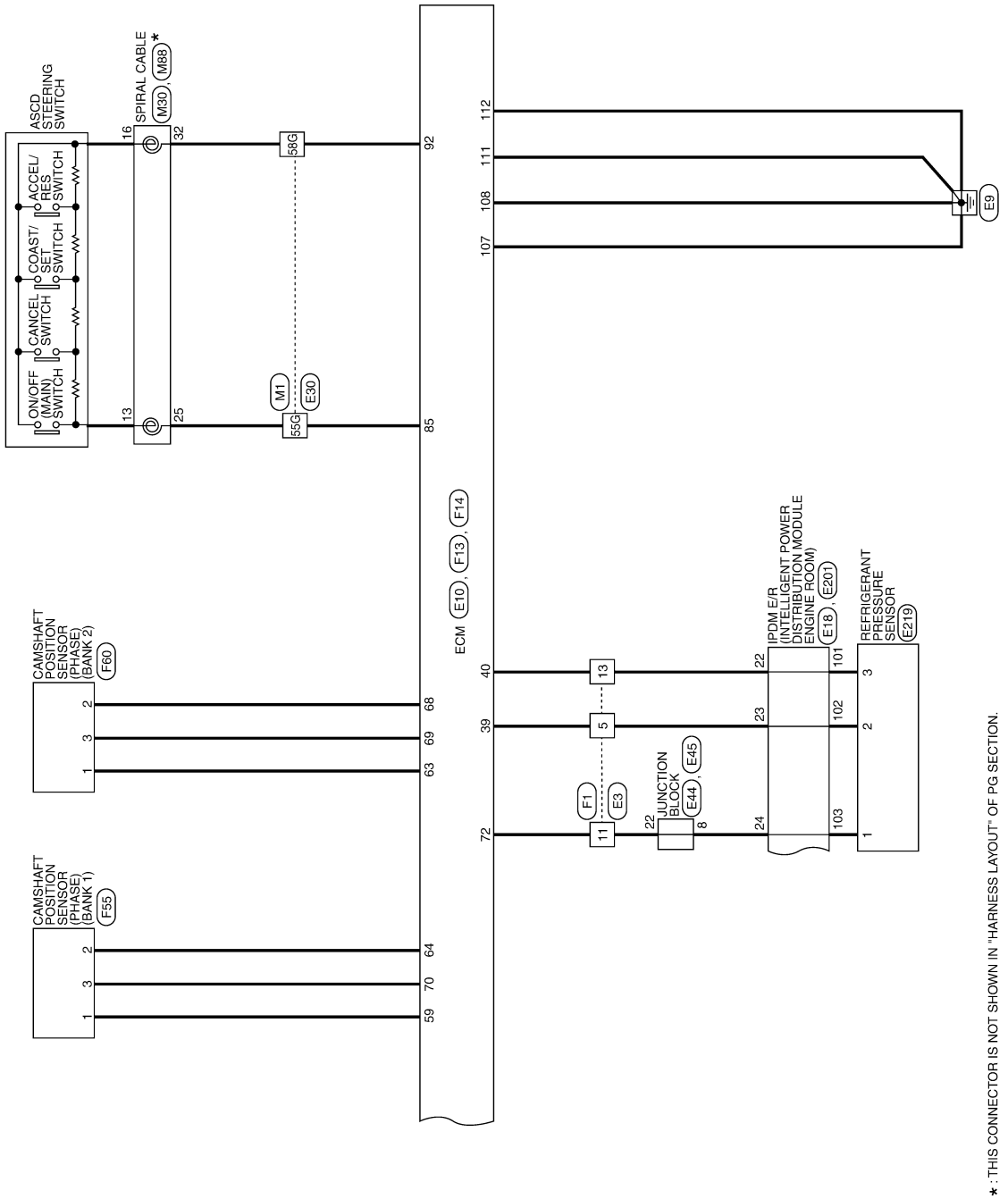
ASCD STEERING SWITCH
ON/OFF (MAIN) SWITCH
CANCEL SWITCH
COAST/ SET SWITCH
ACCEL/ RES SWITCH
SPIRAL CABLE
M30, M88
16
32
13
25
58G
55G
M1
E30
92
85
112
111
108
107
E9
CAMSHAFT POSITION SENSOR (PHASE) (BANK 2)
F60
CAMSHAFT POSITION SENSOR (PHASE) (BANK 1)
F55
68
69
63
64
70
59
ECM E10, F13, F14
40
39
72
13
5
11
F1
E3
JUNCTION BLOCK
E44, E45
22
8
24
IPDM E/R (INTELLIGENT POWER DISTRIBUTION MODULE ENGINE ROOM)
E18, E201
101
102
103
REFRIGERANT PRESSURE SENSOR
E219
3
2
1
★ : THIS CONNECTOR IS NOT SHOWN IN "HARNESS LAYOUT" OF PG SECTION.
AABWA0133GE

ENGINE CONTROL SYSTEM CONNECTORS - VQ35DE

Connector No.	M1
Connector Name	WIRE TO WIRE
Connector Color	WHITE

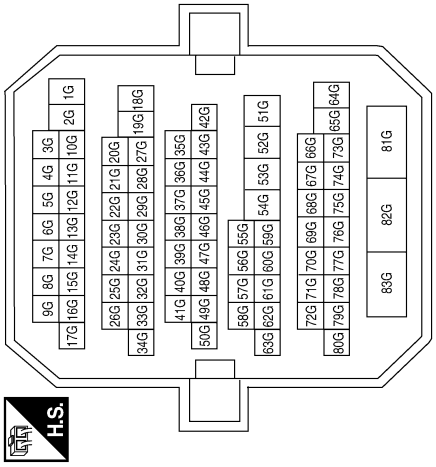

Connector No.	M3
Connector Name	FUSE BLOCK (J/B)
Connector Color	WHITE

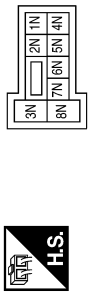

Terminal No.	Color of Wire	Signal Name
2N	G	–

Terminal No.	Color of Wire	Signal Name
8G	P	–
15G	L	–
34G	O	–
51G	L	–
52G	P	–
55G	G/Y	–
58G	R	–
60G	V/W	–
63G	B/W	–

Connector No.	M4
Connector Name	FUSE BLOCK (J/B)
Connector Color	WHITE

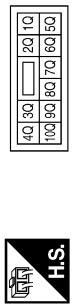

Terminal No.	Color of Wire	Signal Name
6Q	Y/R	–

Connector No.	M5
Connector Name	FUSE BLOCK (J/B)
Connector Color	WHITE

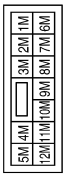

Terminal No.	Color of Wire	Signal Name
12M	P	–

AABIA0128GB

Connector No.	M6
Connector Name	WIRE TO WIRE
Connector Color	WHITE

H.S.

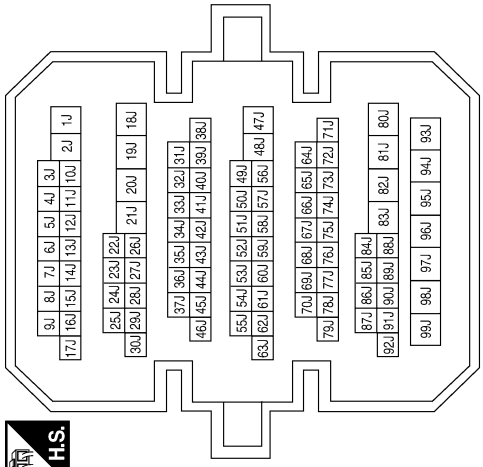

Terminal No.	Color of Wire	Signal Name
30J	B/W	–

Connector No.	M22
Connector Name	DATA LINK CONNECTOR
Connector Color	WHITE

H.S.

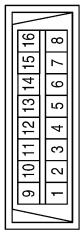

Terminal No.	Color of Wire	Signal Name
4	B	GND
5	B	GND
6	L	CAN-H
7	O	KLINE
8	G	IGN_SW
14	P	CAN-L
16	Y/R	BATT

Connector No.	M24
Connector Name	COMBINATION METER
Connector Color	WHITE

H.S.

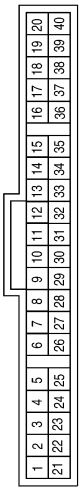

Terminal No.	Color of Wire	Signal Name
2	O	IGN
3	B	GND
21	L	CAN-H
22	P	CAN-L
23	B	GND

Connector No.	M30
Connector Name	SPIRAL CABLE
Connector Color	GRAY

H.S.

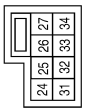

Terminal No.	Color of Wire	Signal Name
25	G/Y	ASCD_SW
32	R	ASCD_GND

Connector No.	M59
Connector Name	POWER STEERING CONTROL UNIT
Connector Color	WHITE

H.S.

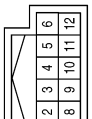

Terminal No.	Color of Wire	Signal Name
10	V/W	ENG_TACHO

Connector No.	M88
Connector Name	SPIRAL CABLE
Connector Color	GRAY

H.S.

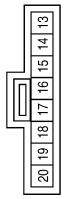

Terminal No.	Color of Wire	Signal Name
13	Y	ASCD_SW
16	B	ASCD_GND

AABIA0129GB

Connector No.	E1
Connector Name	JOINT CONNECTOR-E01
Connector Color	WHITE

Terminal No.	Color of Wire	Signal Name
4	Y	–
5	Y	–
6	Y	–

Connector No.	E3
Connector Name	WIRE TO WIRE
Connector Color	WHITE

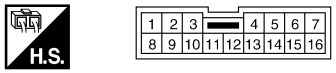

Terminal No.	Color of Wire	Signal Name
3	Y	–
5	GR	–
9	BR	–
11	GR	–
13	SB	–

Connector No.	E6
Connector Name	FUSE BLOCK (J/B)
Connector Color	WHITE

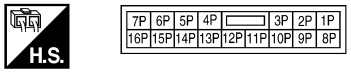

Terminal No.	Color of Wire	Signal Name
1P	SB	–
2P	LG	–
4P	G/R	–
8P	R	–

Connector No.	E10
Connector Name	ECM
Connector Color	BLACK

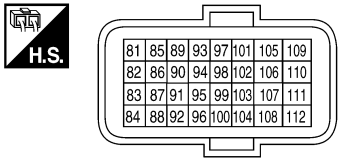

Terminal No.	Color of Wire	Signal Name
81	W	APS1
82	O	APS2
83	GR	AVCC1-APS1
84	B	GNDA-APS1
85	G/Y	ASCDSW
86	SB	FTPRES
87	BR	AVCC2-APS2
88	O	KLINE

AABIA0130GB

Terminal No.	Color of Wire	Signal Name
89	–	–
90	–	–
91	V	AVCC2-FTPRES
92	R	GNDA-ASCDSW
93	Y	IGNSW
94	V/W	TACHO(CABIN)
95	Y	TF
96	GR	GNDA-FTRES
97	P	CAN-L
98	L	CAN-H
99	–	–
100	G	GNDA-APS2
101	–	–
102	R/B	NEUT-H
103	–	–
104	P	GNDA-TF

Terminal No.	Color of Wire	Signal Name
105	V	VBR
106	SB	BRAKE
107	B	GND
108	B	GND
109	W	CDCV
110	G/B	BNCSW
111	B	GND
112	B	GND

Connector No.	E11
Connector Name	WIRE TO WIRE
Connector Color	WHITE

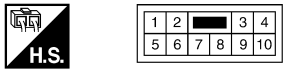

Terminal No.	Color of Wire	Signal Name
1	B	–
2	L	–
5	R	–
6	B	–
7	O	–

Connector No.	E12
Connector Name	WIRE TO WIRE
Connector Color	WHITE

Terminal No.	Color of Wire	Signal Name
1	R	–
2	GR	–
3	BR	–
4	P	–
5	L	–

Connector No.	E17
Connector Name	IPDM E/R (INTELLIGENT POWER DISTRIBUTION MODULE ENGINE ROOM)
Connector Color	WHITE

Terminal No.	Color of Wire	Signal Name
39	P	CAN-L
40	L	CAN-H
41	B	GND (SIGNAL)
42	SB	MOTOR_FAN_RLY_MID

Connector No.	E18
Connector Name	IPDM E/R (INTELLIGENT POWER DISTRIBUTION MODULE ENGINE ROOM)
Connector Color	WHITE

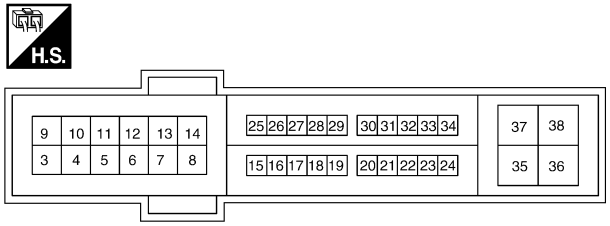

AABIA0131GB

Terminal No.	Color of Wire	Signal Name
10	BR	ECM_VB
12	B	P-GND
13	SB	FUEL_PUMP
15	W	START_IG-E/R
19	Y	BCM_IGNSW
22	SB	PD_SENS_GND-E/R
23	GR	PD_SENS_SIG-E/R
24	BR/W	PD_SENSPWR-E/R
30	BR	CLUTCH_I/L_SW
34	O	MOTOR_FAN_RLY_HI
35	P	MOTOR_FAN_LO
38	GR	F/L_MOTOR_FAN

Connector No.	E20
Connector Name	JOINT CONNECTOR-E02
Connector Color	WHITE

Terminal No.	Color of Wire	Signal Name
1	GR	–
2	GR	–
3	GR	–
4	P	–
5	P	–
6	P	–

Connector No.	E21
Connector Name	JOINT CONNECTOR-E03
Connector Color	WHITE

Terminal No.	Color of Wire	Signal Name
1	L	–
2	L	–

Connector No.	E22
Connector Name	JOINT CONNECTOR-E04
Connector Color	WHITE

Terminal No.	Color of Wire	Signal Name
1	P	–
2	P	–

Connector No.	E27
Connector Name	JOINT CONNECTOR-E06
Connector Color	WHITE

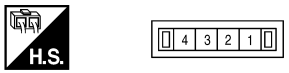

Terminal No.	Color of Wire	Signal Name
1	W	–
2	W	–

Connector No.	E29
Connector Name	WIRE TO WIRE
Connector Color	WHITE

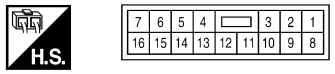

Terminal No.	Color of Wire	Signal Name
1	R	–
3	V	–
7	SB	–
8	B/Y	–
9	W	–
10	SB	–
11	GR	–
12	Y	–

Connector No.	E30
Connector Name	WIRE TO WIRE
Connector Color	WHITE

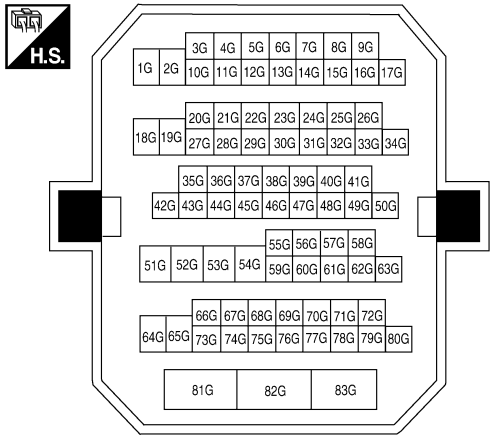

Terminal No.	Color of Wire	Signal Name
8G	P	–
15G	L	–
34G	O	–
51G	L	–
52G	P	–
55G	Y	–
58G	BR	–
60G	V/W	–
63G	P	–

AABIA0132GB

Connector No.	E37
Connector Name	ASCD BRAKE SWITCH
Connector Color	BROWN

Terminal No.	Color of Wire	Signal Name
1	L	–
2	W	– (WITH CVT)
2	BR	– (WITH M/T)

Connector No.	E38
Connector Name	STOP LAMP SWITCH (WITH CVT)
Connector Color	WHITE

Terminal No.	Color of Wire	Signal Name
1	R	–
2	LG	–
3	G/R	–
4	R/W	–

Connector No.	E38
Connector Name	STOP LAMP SWITCH (WITH M/T)
Connector Color	BLACK

Terminal No.	Color of Wire	Signal Name
1	R	–
2	LG	–

Connector No.	E39
Connector Name	ASCD CLUTCH SWITCH
Connector Color	BROWN

Terminal No.	Color of Wire	Signal Name
1	BR	–
2	W	–

Connector No.	E40
Connector Name	ACCELERATOR PEDAL POSITION SENSOR
Connector Color	BLACK

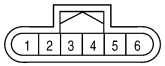

Terminal No.	Color of Wire	Signal Name
1	O	APS2
2	G	GND-A2
3	W	APS1
4	B	GND-A1
5	GR	AVCC1
6	BR	AVCC2

Connector No.	E42
Connector Name	COOLING FAN RELAY-2
Connector Color	BROWN

Terminal No.	Color of Wire	Signal Name
1	SB	–
2	G	–
3	L	–
5	Y	–
6	B	–
7	R	–

AABIA0133GB

Connector No.	E43
Connector Name	COOLING FAN RELAY-3
Connector Color	BROWN

Terminal No.	Color of Wire	Signal Name
1	O	–
2	Y	–
3	GR	–
5	Y	–
6	B	–
7	P	–

Connector No.	E44
Connector Name	JUNCTION BLOCK
Connector Color	BROWN

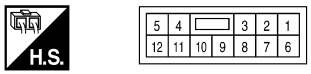

Terminal No.	Color of Wire	Signal Name
1	O	–
2	BR	–
3	L	–
4	W	–
6	W	–
8	G	–
10	SB	–
12	G/R	–

Connector No.	E45
Connector Name	JUNCTION BLOCK
Connector Color	WHITE

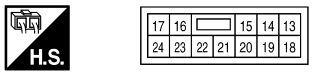

Terminal No.	Color of Wire	Signal Name
14	G	–
15	R	–
16	O	–
17	V	–
20	SB	–
22	GR	–
24	W	–

Connector No.	E46
Connector Name	JUNCTION BLOCK
Connector Color	WHITE

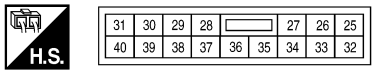

Terminal No.	Color of Wire	Signal Name
30	W	–
31	O	–
33	G/R	–
34	L	–

Connector No.	E47
Connector Name	JUNCTION BLOCK
Connector Color	WHITE

Terminal No.	Color of Wire	Signal Name
43	SB	–
44	O	–

Connector No.	E48
Connector Name	JUNCTION BLOCK
Connector Color	WHITE

Terminal No.	Color of Wire	Signal Name
47	G	–
48	Y	–
49	O	–
50	SB	–

AABIA0134GB

Connector No.	E50
Connector Name	JUNCTION BLOCK
Connector Color	WHITE

Terminal No.	Color of Wire	Signal Name
55	BR	–

Connector No.	E201
Connector Name	IPDM E/R (INTELLIGENT POWER DISTRIBUTION MODULE ENGINE ROOM)
Connector Color	WHITE

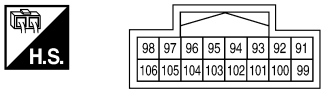

Terminal No.	Color of Wire	Signal Name
101	O/L	PD_SENS_GND
102	R/B	PD_SENS_SIG
103	P	PD_SEND_PWR

Connector No.	E203
Connector Name	WIRE TO WIRE
Connector Color	WHITE

Terminal No.	Color of Wire	Signal Name
1	R	–
2	R/W	–
3	R/Y	–
4	L/B	–
5	L	–

Connector No.	E219
Connector Name	REFRIGERANT PRESSURE SENSOR
Connector Color	BLACK

Terminal No.	Color of Wire	Signal Name
1	P	AVCC2
2	R	SIGNAL
3	W	GND

Connector No.	E220
Connector Name	COOLING FAN MOTOR-1
Connector Color	GRAY

Terminal No.	Color of Wire	Signal Name
1	R/Y	LO +
2	R/Y	HI +
3	R	HI -
4	L/B	LO -

Connector No.	E221
Connector Name	COOLING FAN MOTOR-2
Connector Color	GRAY

Terminal No.	Color of Wire	Signal Name
1	R/W	LO +
2	L	HI +
3	B	HI -
4	B	LO -

AABIA0135GB

Connector No.	F1
Connector Name	WIRE TO WIRE
Connector Color	WHITE

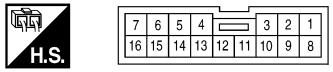

Terminal No.	Color of Wire	Signal Name
3	G/R	–
5	R	–
9	R/B	–
11	BR/W	–
13	G	–

Connector No.	F2
Connector Name	WIRE TO WIRE
Connector Color	WHITE

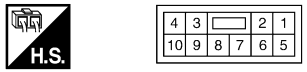

Terminal No.	Color of Wire	Signal Name
1	B	–
2	R/W	–
5	R/B	–
6	B	–
7	R/G	–

Connector No.	F5
Connector Name	BATTERY CURRENT SENSOR
Connector Color	BLACK

Terminal No.	Color of Wire	Signal Name
1	R/L	AVCC1
2	G/B	GND
3	G	SIGNAL

Connector No.	F10
Connector Name	IPDM E/R (INTELLIGENT POWER DISTRIBUTION MODULE ENGINE ROOM)
Connector Color	WHITE

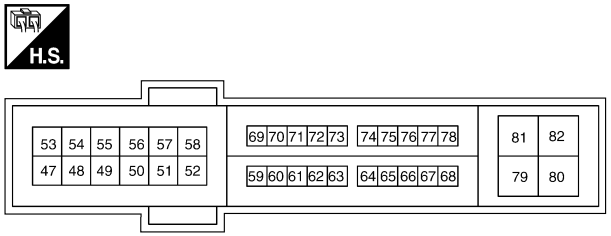

AABIA0136GB

Terminal No.	Color of Wire	Signal Name
47	–	–
48	–	–
49	R/B	IGN_COIL

Terminal No.	Color of Wire	Signal Name
50	–	–
51	LG	INJECTOR_#1
52	Y/G	INJECTOR_#2
53	B/R	VIAS
54	G/W	ETC
55	W/L	ECM_BAT
56	R/Y	O2_SENS_#1
57	O	O2_SENS #2
58	–	–
59	–	–
60	–	–
61	–	–
62	–	–
63	–	–
64	–	–
65	–	–
66	–	–

Terminal No.	Color of Wire	Signal Name
67	–	–
68	–	–
69	W/B	SSOFF
70	O	MOTRLY
71	–	–
72	R/B	NPSW
73	–	–
74	Y	START_IG-EGI
75	–	–
76	–	–
77	B/R	FPR
78	–	–
79	–	–
80	–	–
81	–	–
82	–	–

Connector No.	F11
Connector Name	ENGINE COOLANT TEMPERATURE SENSOR
Connector Color	GRAY

Terminal No.	Color of wire	Signal Name
1	Y	TW
2	B/G	GND

Connector No.	F12
Connector Name	AIR FUEL RATIO (A/F) SENSOR 1 (BANK 1)
Connector Color	GRAY

Terminal No.	Color of Wire	Signal Name
1	B/W	AF(+)
2	L	AF(-)
3	BR/Y	HEATER(-)
4	O	HEATER(+)

Connector No.	F13
Connector Name	ECM
Connector Color	BROWN

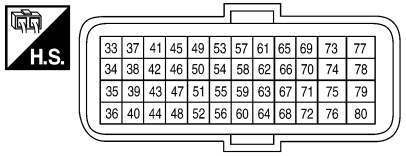

Terminal No.	Color of Wire	Signal Name
33	W	O2SR1
34	W/L	O2SR2
35	B	GNDA-02SR1, 02SR2
36	B	GNDA-TPS-B1
37	W	TPS1-B1
38	R	TPS2-B1
39	R	PDPRES
40	G	GNDA-PDPRES
41	O/B	PSPRES
42	G	CURSEN
43	–	–

Terminal No.	Color of Wire	Signal Name
44	G/B	GNDA-CURSEN, INTPRES1
45	B/W	AF+1
46	Y	TW
47	G	AVCC1-TPS-B1
48	B/P	GNDA-PSPRES
49	L	AF-1
50	L/Y	TA1
51	R/L	AVCC1-CURSEN, INTPRES1
52	B/G	GNDA-TW, T01
53	V	AF+2
54	G/R	TO1
55	G/Y	AVCC1-PSPRES
56	G/B	QA1, GNDA-TA1
57	LG	AF-2
58	O	QA1+
59	G/W	AVCC1-PHASE 1
60	Y/B	GND-POS
61	GR	KNK1
62	W	KNK2

Terminal No.	Color of Wire	Signal Name
63	R/W	AVCC1-PHASE 2, E-PHASE#2
64	B/R	AVCC1-PHASE 1, E-PHASE#1
65	W	POS
66	–	–
67	GR/B	GNDA-KNK 1, KNK 2
68	Y/G	GND-PHASE 2, E-PHASE#2
69	BR/W	PHASE 2
70	W/R	PHASE 1
71	–	–
72	BR/W	AVCC2-PDPRES
73	–	–
74	–	–
75	Y	CVTC#2
76	R/G	AVCC2-POS
77	W/L	BATT
78	R/L	CVTC#1
79	–	–
80	–	–

AABIA0137GB

Connector No.	F14
Connector Name	ECM
Connector Color	GRAY

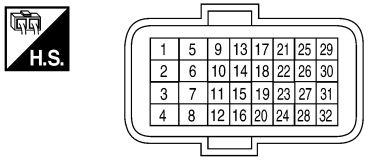

Terminal No.	Color of Wire	Signal Name
1	P/B	INJ #6
2	G/W	VMOT-B1
3	L/W	INJ #5
4	BR/Y	AFH1

Terminal No.	Color of wire	Signal Name
5	L	MOTOR1-B1
6	P	MOTOR2-B1
7	–	–
8	SB	AFH2
9	L/B	IGN #3
10	G/R	IGN #2
11	Y/R	IGN #1
12	B	GND
13	P/Y	O2HR1
14	B/R	FPR
15	O	MOTRLY-B1
16	B	GND
17	R	O2HR2

Terminal No.	Color of Wire	Signal Name
18	GR/R	IGN #6
19	P/W	IGN #5
20	–	–
21	GR/W	IGN #4
22	–	–
23	–	–
24	W/B	SSOFF
25	P/L	EVAP
26	GR	VIAS2
27	V	VIAS1
28	BR/W	EMMNV
29	LG/R	INJ #4
30	R/Y	INJ #3
31	R/W	INJ #2
32	R/B	INJ #1

Connector No.	F16
Connector Name	TCM (TRANSMISSION CONTROL MODULE)
Connector Color	BLACK

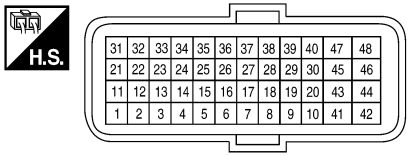

Terminal No.	Color of Wire	Signal Name
20	R/B	ST_RLY

Connector No.	F17
Connector Name	FUEL INJECTOR NO. 1
Connector Color	GRAY

Terminal No.	Color of Wire	Signal Name
1	LG	IGN
2	R/B	GND

Connector No.	F18
Connector Name	FUEL INJECTOR NO. 2
Connector Color	GRAY

Terminal No.	Color of Wire	Signal Name
1	Y/G	IGN
2	R/W	C/U

AABIA0138GB

Connector No.	F19
Connector Name	FUEL INJECTOR NO. 3
Connector Color	GRAY

Terminal No.	Color of Wire	Signal Name
1	LG	IGN
2	R/Y	GND

Connector No.	F20
Connector Name	FUEL INJECTOR NO. 4
Connector Color	GRAY

Terminal No.	Color of Wire	Signal Name
1	Y/G	IGN
2	LG/R	GND

Connector No.	F21
Connector Name	FUEL INJECTOR NO. 5
Connector Color	GRAY

Terminal No.	Color of Wire	Signal Name
1	LG	IGN
2	L/W	GND

Connector No.	F22
Connector Name	FUEL INJECTOR NO. 6
Connector Color	GRAY

Terminal No.	Color of Wire	Signal Name
1	Y/G	IGN
2	P/B	GND

Connector No.	F26
Connector Name	CONDENSER-2
Connector Color	GRAY

Terminal No.	Color of Wire	Signal Name
1	R/W	VBR
2	B	GND

Connector No.	F29
Connector Name	EVAP CANISTER PURGE VOLUME CONTROL SOLENOID VALVE
Connector Color	GRAY

Terminal No.	Color of Wire	Signal Name
1	R/W	VBR
2	P/L	GND

AABIA0139GB

Connector No.	F30
Connector Name	CRANKSHAFT POSITION SENSOR (POS)
Connector Color	BLACK

Terminal No.	Color of Wire	Signal Name
1	R/G	AVCC2
2	Y/B	GND
3	W	POS

Connector No.	F31
Connector Name	MASS AIR FLOW SENSOR
Connector Color	BLACK

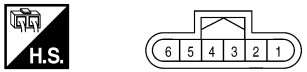

Terminal No.	Color of Wire	Signal Name
1	G/B	TA-
2	L/Y	TA+
3	O	QA+
4	G/B	GND
5	R/G	VB

Connector No.	F32
Connector Name	PARK/NEUTRAL POSITION (PNP) SWITCH
Connector Color	WHITE

Terminal No.	Color of Wire	Signal Name
1	Y	–
2	R/B	–

Connector No.	F34
Connector Name	IGNITION COIL NO. 1 (WITH POWER TRANSISTOR)
Connector Color	GRAY

Terminal No.	Color of Wire	Signal Name
1	Y/R	SIGNAL
2	B	GND
3	R/G	VBR

Connector No.	F35
Connector Name	IGNITION COIL NO. 2 (WITH POWER TRANSISTOR)
Connector Color	GRAY

Terminal No.	Color of Wire	Signal Name
1	G/R	SIGNAL
2	B	GND
3	R/W	VBR

Connector No.	F36
Connector Name	IGNITION COIL NO. 3 (WITH POWER TRANSISTOR)
Connector Color	GRAY

Terminal No.	Color of Wire	Signal Name
1	L/B	SIGNAL
2	B	GND
3	R/G	VBR

AABIA0140GB

Connector No.	F37
Connector Name	IGNITION COIL NO. 4 (WITH POWER TRANSISTOR)
Connector Color	GRAY

Terminal No.	Color of wire	Signal Name
1	GR/W	SIGNAL
2	B	GND
3	R/W	VBR

Connector No.	F38
Connector Name	IGNITION COIL NO. 5 (WITH POWER TRANSISTOR)
Connector Color	GRAY

Terminal No.	Color of wire	Signal Name
1	P/W	SIGNAL
2	B	GND
3	R/G	VBR

Connector No.	F39
Connector Name	IGNITION COIL NO. 6 (WITH POWER TRANSISTOR)
Connector Color	GRAY

Terminal No.	Color of Wire	Signal Name
1	GR/W	SIGNAL
2	B	GND
3	R/W	VBR

Connector No.	F40
Connector Name	POWER STEERING PRESSURE SENSOR
Connector Color	BLACK

Terminal No.	Color of Wire	Signal Name
1	G/Y	AVCC1
2	O/B	OUTPUT
3	B/P	GND

Connector No.	F55
Connector Name	CAMSHAFT POSITION SENSOR (PHASE) (BANK 1)
Connector Color	BLACK

Terminal No.	Color of Wire	Signal Name
1	G/W	AVCC1
2	B/R	GND
3	W/R	PHASE

Connector No.	F56
Connector Name	HEATED OXYGEN SENSOR 2 (BANK 2)
Connector Color	BLACK

Terminal No.	Color of Wire	Signal Name
1	B/L	SENSOR(-)
2	R/Y	HEATER(+)
3	R	HEATER(-)
4	W/L	SENSOR(+)

AABIA0141GB

Connector No.	F57
Connector Name	ELECTRIC THROTTLE CONTROL ACTUATOR
Connector Color	BLACK

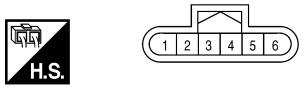

Terminal No.	Color of Wire	Signal Name
1	G	INPUT
2	W	OUTPUT1
3	R	OUTPUT2
4	B	GND
5	P	MOTOR2
6	L	MOTOR1

Connector No.	F60
Connector Name	CAMSHAFT POSITION SENSOR (PHASE) (BANK 2)
Connector Color	BLACK

Terminal No.	Color of Wire	Signal Name
1	R/W	AVCC1
2	Y/G	GND
3	BR/W	PHASE

Connector No.	F61
Connector Name	AIR FUEL RATIO (A/F) SENSOR 1 (BANK 2)
Connector Color	GRAY

Terminal No.	Color of Wire	Signal Name
1	V	AF(+)
2	LG	AF(-)
3	SB	HEATER(-)
4	O	HEATER(+)

Connector No.	F62
Connector Name	HEATED OXYGEN SENSOR 2 (BANK 1)
Connector Color	BLACK

Terminal No.	Color of Wire	Signal Name
1	B	SENSOR(-)
2	R/Y	HEATER(+)
3	P/Y	HEATER(-)
4	W	SENSOR(+)

Connector No.	F63
Connector Name	VIAS CONTROL SOLENOID VALVE 1
Connector Color	BLACK

Terminal No.	Color of Wire	Signal Name
1	R/W	VBR
2	V	GND

Connector No.	F64
Connector Name	ELECTRONIC CONTROLLED ENGINE MOUNT CONTROL SOLENOID VALVE
Connector Color	BLACK

Terminal No.	Color of Wire	Signal Name
1	G/R	IGN
2	BR/W	ENMN1

AABIA0142GB

Connector No.	F65
Connector Name	VIAS CONTROL SOLENOID VALVE 2
Connector Color	BLACK

Terminal No.	Color of Wire	Signal Name
1	R/W	VBR
2	GR	GND

Connector No.	F66
Connector Name	INTAKE VALVE TIMING CONTROL SOLENOID VALVE (BANK 2)
Connector Color	GREEN

Terminal No.	Color of Wire	Signal Name
1	Y	CVTC
2	R/W	VBR

Connector No.	F67
Connector Name	INTAKE VALVE TIMING CONTROL SOLENOID VALVE (BANK 1)
Connector Color	GREEN

Terminal No.	Color of Wire	Signal Name
1	R/L	CVTC
2	R/G	VBR

Connector No.	F68
Connector Name	ENGINE OIL TEMPERATURE SENSOR
Connector Color	GRAY

Terminal No.	Color of Wire	Signal Name
1	G/R	TO
2	B/G	GND

Connector No.	F70
Connector Name	JOINT CONNECTOR-F01
Connector Color	BLACK

Terminal No.	Color of Wire	Signal Name
1	GR/B	–
2	SHIELD	–
3	B	–
4	B	–
5	B/L	–
6	SHIELD	–
8	B/G	–
9	B/G	–
10	B/G	–

Connector No.	F71
Connector Name	JOINT CONNECTOR-F03
Connector Color	GREEN

Terminal No.	Color of Wire	Signal Name
1	O	–
2	O	–
3	O	–
4	R/Y	–
5	R/Y	–
6	R/Y	–

AABIA0143GB

Connector No.	F72
Connector Name	JOINT CONNECTOR-F04
Connector Color	BLACK

Terminal No.	Color of Wire	Signal Name
1	G/B	–
2	G/B	–
3	B	–
4	B	–
5	SHIELD	–
6	G/B	–
9	SHIELD	–
10	SHIELD	–

Connector No.	F74
Connector Name	JOINT CONNECTOR-F08
Connector Color	WHITE

Terminal No.	Color of Wire	Signal Name
1	Y/G	–
2	Y/G	–
3	Y/G	–
4	Y/G	–

Connector No.	F75
Connector Name	JOINT CONNECTOR-F07
Connector Color	WHITE

Terminal No.	Color of Wire	Signal Name
1	LG	–
2	LG	–
3	LG	–
4	LG	–

Connector No.	F76
Connector Name	WIRE TO WIRE
Connector Color	BLUE

Terminal No.	Color of Wire	Signal Name
1	SHIELD	–
2	G/R	–
3	SHIELD	–
4	W	–

Connector No.	F201
Connector Name	WIRE TO WIRE
Connector Color	BLUE

Terminal No.	Color of Wire	Signal Name
1	GR/B	–
2	GR	–
3	SHIELD	–
4	W	–

Connector No.	F202
Connector Name	KNOCK SENSOR (BANK 1)
Connector Color	GRAY

Terminal No.	Color of Wire	Signal Name
1	W	KNK
2	SHIELD	–

AABIA0144GB

Terminal No.	Color of Wire	Signal Name
30J	B/W	–

Connector No.	B1
Connector Name	WIRE TO WIRE
Connector Color	WHITE

H.S.

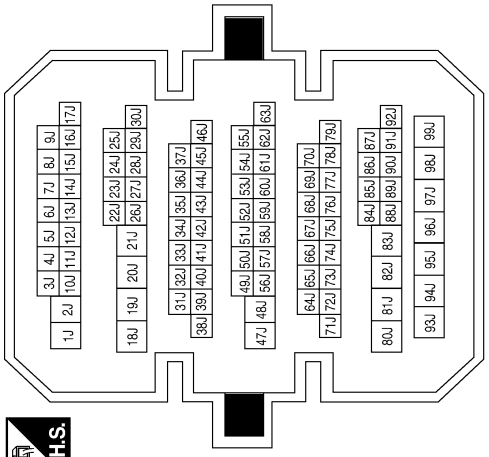

Connector No.	B13
Connector Name	JOINT CONNECTOR-B03
Connector Color	WHITE

H.S.

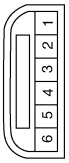

Terminal No.	Color of Wire	Signal Name
1	SB	–
2	SB	–
3	W	–
4	B/Y	–
5	B/Y	–
6	B/Y	–

Terminal No.	Color of Wire	Signal Name
9	LG/W	–
10	LG	–
11	V	–
12	R/Y	–

Connector No.	F203
Connector Name	KNOCK SENSOR (BANK 2)
Connector Color	GRAY

H.S.

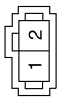

Terminal No.	Color of Wire	Signal Name
1	W	KNK
2	SHIELD	–

Connector No.	B10
Connector Name	WIRE TO WIRE
Connector Color	WHITE

H.S.

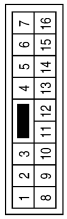

Terminal No.	Color of Wire	Signal Name
1	R	–
3	BR/L	–
7	SB	–
8	B/Y	–

AABIA0145GB

Connector No.	B17
Connector Name	CONDENSER-1
Connector Color	WHITE

Terminal No.	Color of Wire	Signal Name
1	W	(+)
2	B/Y	(-)

Connector No.	B39
Connector Name	EVAP CANISTER VENT CONTROL VALVE
Connector Color	BLACK

Terminal No.	Color of Wire	Signal Name
1	R	BATT
2	LG/W	C/U

Connector No.	B41
Connector Name	EVAP CONTROL SYSTEM PRESSURE SENSOR
Connector Color	GRAY

Terminal No.	Color of Wire	Signal Name
1	V	GND
2	LG	SIGNAL
3	BR/L	AVCC2

Connector No.	B42
Connector Name	FUEL LEVEL SENSOR UNIT AND FUEL PUMP
Connector Color	GRAY

Terminal No.	Color of Wire	Signal Name
1	S/B	IGN
3	B/Y	GND
4	R/Y	TEMP SENS
5	B/W	SENSOR -

AABIA0146GB

Fail-safe

INFOID:0000000004362393

NON DTC RELATED ITEM

Engine operating condition in fail-safe mode	Detected items	Remarks	Reference page
Engine speed will not rise more than 2,500 rpm due to the fuel cut	Malfunction indicator lamp circuit	When there is an open circuit on MIL circuit, the ECM cannot warn the driver by illuminating MIL when there is malfunction on engine control system. Therefore, when electrical controlled throttle and part of ECM related diagnoses are continuously detected as NG for 5 trips, ECM warns the driver that engine control system malfunctions and MIL circuit is open by means of operating the fail-safe function. The fail-safe function also operates when above diagnoses except MIL circuit are detected and demands the driver to repair the malfunction.	EC-1496

DTC RELATED ITEM

DTC No.	Detected items	Engine operating condition in fail-safe mode	
P0011 P0021	Intake valve timing control	The signal is not energized to the intake valve timing control solenoid valve and the valve control does not function.	
P0102 P0103	Mass air flow sensor circuit	Engine speed will not rise more than 2,400 rpm due to the fuel cut.	
P0117 P0118	Engine coolant temperature sensor circuit	Engine coolant temperature will be determined by ECM based on the following condition. CONSULT-III displays the engine coolant temperature decided by ECM.	
		Condition	Engine coolant temperature decided (CONSULT-III display)
		Just as ignition switch is turned ON or START	40°C (104°F)
		Approx 4 minutes or more after engine starting	80°C (176°F)
		Except as shown above	40 - 80°C (104 - 176°F) (Depends on the time)
		When the fail-safe system for engine coolant temperature sensor is activated, the cooling fan operates while engine is running.	
P0122 P0123 P0222 P0223 P2135	Throttle position sensor	The ECM controls the electric throttle control actuator in regulating the throttle opening in order for the idle position to be within +10 degrees. The ECM regulates the opening speed of the throttle valve to be slower than the normal condition. Therefore, the acceleration will be poor.	
P0500	Vehicle speed sensor	The cooling fan operates (Highest) while engine is running.	
P0605	ECM	(When ECM calculation function is malfunctioning:) ECM stops the electric throttle control actuator control, throttle valve is maintained at a fixed opening (approx. 5 degrees) by the return spring. ECM deactivates ASCD operation.	
P0643	Sensor power supply	ECM stops the electric throttle control actuator control, throttle valve is maintained at a fixed opening (approx. 5 degrees) by the return spring.	
P1805	Brake switch	ECM controls the electric throttle control actuator by regulating the throttle opening to a small range. Therefore, acceleration will be poor.	
		Vehicle condition	Driving condition
		When engine is idling	Normal
		When accelerating	Poor acceleration
P2100 P2103	Throttle control motor relay	ECM stops the electric throttle control actuator control, throttle valve is maintained at a fixed opening (approx. 5 degrees) by the return spring.	
P2101	Electric throttle control function	ECM stops the electric throttle control actuator control, throttle valve is maintained at a fixed opening (approx. 5 degrees) by the return spring.	
P2118	Throttle control motor	ECM stops the electric throttle control actuator control, throttle valve is maintained at a fixed opening (approx. 5 degrees) by the return spring.	

DTC No.	Detected items	Engine operating condition in fail-safe mode
P2119	Electric throttle control actuator	(When electric throttle control actuator does not function properly due to the return spring malfunction:) ECM controls the electric throttle actuator by regulating the throttle opening around the idle position. The engine speed will not rise more than 2,000 rpm.
		(When throttle valve opening angle in fail-safe mode is not in specified range:) ECM controls the electric throttle control actuator by regulating the throttle opening to 20 degrees or less.
		(When ECM detects the throttle valve is stuck open:) While the vehicle is being driven, it slows down gradually because of fuel cut. After the vehicle stops, the engine stalls. The engine can restart in the N or P position (CVT) or neutral position (M/T), and engine speed will not exceed 1,000 rpm or more.
P2122 P2123 P2127 P2128 P2138	Accelerator pedal position sensor	The ECM controls the electric throttle control actuator in regulating the throttle opening in order for the idle position to be within +10 degrees. The ECM regulates the opening speed of the throttle valve to be slower than the normal condition. Therefore, the acceleration will be poor.

DTC Inspection Priority Chart

INFOID:0000000004362394

If some DTCs are displayed at the same time, perform inspections one by one based on the following priority chart.

Priority	Detected items (DTC)
1	• U0101 U1001 CAN communication line • P0101 P0102 P0103 Mass air flow sensor • P0112 P0113 P0127 Intake air temperature sensor • P0116 P0117 P0118 P0125 Engine coolant temperature sensor • P0122 P0123 P0222 P0223 P1225 P1226 P2135 Throttle position sensor • P0128 Thermostat function • P0181 P0182 P0183 Fuel tank temperature sensor • P0327 P0328 P0332 P0333 Knock sensor • P0335 Crankshaft position sensor (POS) • P0340 P0345 Camshaft position sensor (PHASE) • P0460 P0461 P0462 P0463 Fuel level sensor • P0500 Vehicle speed sensor • P0605 P0607 ECM • P0643 Sensor power supply • P0705 P0850 Park/Neutral position (PNP) switch • P1550 P1551 P1552 P1553 P1554 Battery current sensor • P1610 - P1615 NATS • P1700 CVT control system • P2122 P2123 P2127 P2128 P2138 Accelerator pedal position sensor
2	• P0031 P0032 P0051 P0052 Air fuel ratio (A/F) sensor 1 heater • P0037 P0038 P0057 P0058 Heated oxygen sensor 2 heater • P0075 P0081 Intake valve timing control solenoid valve • P0130 P0131 P0132 P0133 P0150 P0151 P0152 P0153 P2A00 P2A03 Air fuel ratio (A/F) sensor 1 • P0137 P0138 P0139 P0157 P0158 P0159 Heated oxygen sensor 2 • P0441 EVAP control system purge flow monitoring • P0443 P0444 P0445 EVAP canister purge volume control solenoid valve • P0447 P0448 EVAP canister vent control valve • P0451 P0452 P0453 EVAP control system pressure sensor • P0550 Power steering pressure sensor • P0603 ECM power supply • P0710 P0715 P0720 P0740 P0744 P0745 P0746 P0776 P0778 P0840 P0845 P1740 CVT related sensors, solenoid valves and switches • P1217 Engine over temperature (OVERHEAT) • P1720 Vehicle speed sensor • P1777 P1778 CVT step motor • P1800 P1801 VIAS control solenoid valve • P1805 Brake switch • P2100 P2103 Throttle control motor relay • P2101 Electric throttle control function • P2118 Throttle control motor
3	• P0011 P0021 Intake valve timing control • P0171 P0172 P0174 P0175 Fuel injection system function • P0300 - P0306 Misfire • P0420 P0430 Three way catalyst function • P0442 P0456 EVAP control system (SMALL LEAKAGE, VERY SMALL LEAKAGE) • P0455 EVAP control system (GROSS LEAKAGE) • P0506 P0507 Idle speed control system • P1148 P1168 Closed loop control • P1212 TCS communication line • P1421 Cold start control • P1564 ASCD steering switch • P1572 ASCD brake switch • P1574 ASCD vehicle speed sensor • P1715 Primary speed sensor • P2119 Electric throttle control actuator

DTC Index

INFOID:0000000004362395

×:Applicable —: Not applicable

DTC*1		Items (CONSULT-III screen terms)	SRT code	Trip	MIL	Reference page
CONSULT-III GST*2	ECM*3					
U0101	0101*4	LOST COMM (ECM)	—	1	×	EC-1179
U1001	1001*4	CAN COMM CIRCUIT	—	2	—	EC-1179
P0000	**0000**	**NO DTC IS DETECTED. FURTHER TESTING MAY BE REQUIRED.**	—	—	**Flashing*7**	**—**
P0011	0011	INT/V TIM CONT-B1	—	2	×	EC-1180
P0021	0021	INT/V TIM CONT-B2	—	2	×	EC-1180
P0031	0031	A/F SEN1 HTR (B1)	—	2	×	EC-1184
P0032	0032	A/F SEN1 HTR (B1)	—	2	×	EC-1184
P0037	0037	HO2S2 HTR (B1)	—	2	×	EC-1187
P0038	0038	HO2S2 HTR (B1)	—	2	×	EC-1187
P0051	0051	A/F SEN1 HTR (B2)	—	2	×	EC-1184
P0052	0052	A/F SEN1 HTR (B2)	—	2	×	EC-1184
P0057	0057	HO2S2 HTR (B2)	—	2	×	EC-1187
P0058	0058	HO2S2 HTR (B2)	—	2	×	EC-1187
P0075	0075	INT/V TIM V/CIR-B1	—	2	×	EC-1191
P0081	0081	INT/V TIM V/CIR-B2	—	2	×	EC-1191
P0101	0101	MAF SEN/CIRCUIT-B1	—	2	×	EC-1194
P0102	0102	MAF SEN/CIRCUIT-B1	—	1	×	EC-1201
P0103	0103	MAF SEN/CIRCUIT-B1	—	1	×	EC-1201
P0112	0112	IAT SEN/CIRCUIT-B1	—	2	×	EC-1207
P0113	0113	IAT SEN/CIRCUIT-B1	—	2	×	EC-1207
P0116	0116	ECT SEN/CIRC	—	2	×	EC-1210
P0117	0117	ECT SEN/CIRC	—	1	×	EC-1212
P0118	0118	ECT SEN/CIRC	—	1	×	EC-1212
P0122	0122	TP SEN 2/CIRC-B1	—	1	×	EC-1215
P0123	0123	TP SEN 2/CIRC-B1	—	1	×	EC-1215
P0125	0125	ECT SENSOR	—	2	×	EC-1218
P0127	0127	IAT SENSOR-B1	—	2	×	EC-1221
P0128	0128	THERMSTAT FNCTN	—	2	×	EC-1223
P0130	0130	A/F SENSOR1 (B1)	—	2	×	EC-1225
P0131	0131	A/F SENSOR1 (B1)	—	2	×	EC-1229
P0132	0132	A/F SENSOR1 (B1)	—	2	×	EC-1233
P0133	0133	A/F SENSOR1 (B1)	×	2	×	EC-1237
P0137	0137	HO2S2 (B1)	×	2	×	EC-1242
P0138	0138	HO2S2 (B1)	×	2	×	EC-1249
P0139	0139	HO2S2 (B1)	×	2	×	EC-1259
P0150	0150	A/F SENSOR1 (B2)	—	2	×	EC-1225
P0151	0151	A/F SENSOR1 (B2)	—	2	×	EC-1229
P0152	0152	A/F SENSOR1 (B2)	—	2	×	EC-1233

DTC*1		Items (CONSULT-III screen terms)	SRT code	Trip	MIL	Reference page
CONSULT-III GST*2	ECM*3					
P0153	0153	A/F SENSOR1 (B2)	×	2	×	EC-1237
P0157	0157	HO2S2 (B2)	×	2	×	EC-1242
P0158	0158	HO2S2 (B2)	×	2	×	EC-1249
P0159	0159	HO2S2 (B2)	×	2	×	EC-1259
P0171	0171	FUEL SYS-LEAN-B1	—	2	×	EC-1266
P0172	0172	FUEL SYS-RICH-B1	—	2	×	EC-1270
P0174	0174	FUEL SYS-LEAN-B2	—	2	×	EC-1266
P0175	0175	FUEL SYS-RICH-B2	—	2	×	EC-1270
P0181	0181	FTT SENSOR	—	2	×	EC-1274
P0182	0182	FTT SEN/CIRCUIT	—	2	×	EC-1277
P0183	0183	FTT SEN/CIRCUIT	—	2	×	EC-1277
P0222	0222	TP SEN 1/CIRC-B1	—	1	×	EC-1280
P0223	0223	TP SEN 1/CIRC-B1	—	1	×	EC-1280
P0300	0300	MULTI CYL MISFIRE	—	1 or 2	×	EC-1283
P0301	0301	CYL 1 MISFIRE	—	1 or 2	×	EC-1283
P0302	0302	CYL 2 MISFIRE	—	1 or 2	×	EC-1283
P0303	0303	CYL 3 MISFIRE	—	1 or 2	×	EC-1283
P0304	0304	CYL 4 MISFIRE	—	1 or 2	×	EC-1283
P0305	0305	CYL 5 MISFIRE	—	1 or 2	×	EC-1283
P0306	0306	CYL 6 MISFIRE	—	1 or 2	×	EC-1283
P0327	0327	KNOCK SEN/CIRC-B1	—	2	—	EC-1289
P0328	0328	KNOCK SEN/CIRC-B1	—	2	—	EC-1289
P0332	0332	KNOCK SEN/CIRC-B2	—	2	—	EC-1289
P0333	0333	KNOCK SEN/CIRC-B2	—	2	—	EC-1289
P0335	0335	CKP SEN/CIRCUIT	—	2	×	EC-1292
P0340	0340	CMP SEN/CIRC-B1	—	2	×	EC-1296
P0345	0345	CMP SEN/CIRC-B2	—	2	×	EC-1296
P0420	0420	TW CATALYST SYS-B1	×	2	×	EC-1300
P0430	0430	TW CATALYST SYS-B2	×	2	×	EC-1300
P0441	0441	EVAP PURG FLOW/MON	×	2	×	EC-1305
P0442	0442	EVAP SMALL LEAKAGE	×	2	×	EC-1310
P0443	0443	PURG VOLUME CONT/V	—	2	×	EC-1316
P0444	0444	PURG VOLUME CONT/V	—	2	×	EC-1321
P0445	0445	PURG VOLUME CONT/V	—	2	×	EC-1321
P0447	0447	VENT CONTROL VALVE	—	2	×	EC-1324
P0448	0448	VENT CONTROL VALVE	—	2	×	EC-1328
P0451	0451	EVAP SYS PRES SEN	—	2	×	EC-1332
P0452	0452	EVAP SYS PRES SEN	—	2	×	EC-1335
P0453	0453	EVAP SYS PRES SEN	—	2	×	EC-1340
P0455	0455	EVAP GROSS LEAKAGE	—	2	×	EC-1346
P0456	0456	EVAP VERY SML LEAKAGE	×*6	2	×	EC-1352
P0460	0460	FUEL LEV SEN SLOSH	—	2	×	EC-1359

DTC*1		Items (CONSULT-III screen terms)	SRT code	Trip	MIL	Reference page
CONSULT-III GST*2	ECM*3					
P0461	0461	FUEL LEVEL SENSOR	—	2	×	EC-1361
P0462	0462	FUEL LEVL SEN/CIRC	—	2	×	EC-1363
P0463	0463	FUEL LEVL SEN/CIRC	—	2	×	EC-1363
P0500	0500	VEH SPEED SEN/CIRC*5	—	2	×	EC-1365
P0506	0506	ISC SYSTEM	—	2	×	EC-1367
P0507	0507	ISC SYSTEM	—	2	×	EC-1369
P0550	0550	PW ST P SEN/CIRC	—	2	—	EC-1371
P0603	0603	ECM BACK UP/CIRCUIT	—	2	×	EC-1374
P0605	0605	ECM	—	1 or 2	× or —	EC-1376
P0607	0607	ECM	—	1 (CVT models) 2 (M/T models)	× (CVT models) — (M/T models)	EC-1378
P0643	0643	SENSOR POWER/CIRC	—	1	×	EC-1379
P0705	0705	PNP SW/CIRC	—	2	×	TM-129
P0710	0710	ATF TEMP SEN/CIRC	—	1	×	TM-132
P0715	0715	INPUT SPD SEN/CIRC	—	2	×	TM-135
P0720	0720	VEH SPD SEN/CIR AT*5	—	2	×	TM-138
P0740	0740	TCC SOLENOID/CIRC	—	2	×	TM-144
P0744	0744	A/T TCC S/V FNCTN	—	2	×	TM-146
P0745	0745	L/PRESS SOL/CIRC	—	2	×	TM-148
P0746	0746	PRS CNT SOL/A FCTN	—	1	×	TM-150
P0776	0776	PRS CNT SOL/B FCTN	—	2	×	TM-152
P0778	0778	PRS CNT SOL/B CIRC	—	2	×	TM-155
P0840	0840	TR PRS SENS/A CIRC	—	2	×	TM-160
P0845	0845	TR PRS SENS/B CIRC	—	2	×	TM-166
P0850	0850	P-N POS SW/CIRCUIT	—	2	×	EC-1382
P1148	1148	CLOSED LOOP-B1	—	1	×	EC-1386
P1168	1168	CLOSED LOOP-B2	—	1	×	EC-1386
P1212	1212	TCS/CIRC	—	2	—	EC-1387
P1217	1217	ENG OVER TEMP	—	1	×	EC-1388
P1225	1225	CTP LEARNING-B1	—	2	—	EC-1392
P1226	1226	CTP LEARNING-B1	—	2	—	EC-1394
P1421	1421	COLD START CONTROL	—	2	×	EC-1396
P1550	1550	BAT CURRENT SENSOR	—	2	—	EC-1398
P1551	1551	BAT CURRENT SENSOR	—	2	—	EC-1401
P1552	1552	BAT CURRENT SENSOR	—	2	—	EC-1401
P1553	1553	BAT CURRENT SENSOR	—	2	—	EC-1404
P1554	1554	BAT CURRENT SENSOR	—	2	—	EC-1407
P1564	1564	ASCD SW	—	1	—	EC-1410
P1572	1572	ASCD BRAKE SW	—	1	—	EC-1413
P1574	1574	ASCD VHL SPD SEN	—	1	—	EC-1421

DTC*1		Items (CONSULT-III screen terms)	SRT code	Trip	MIL	Reference page
CONSULT-III GST*2	ECM*3					
P1610	1610	LOCK MODE	—	2	—	SEC-64 or SEC-263
P1611	1611	ID DISCORD IMMU-ECM	—	2	—	SEC-68 or SEC-267
P1612	1612	CHAIN OF ECM-IMMU	—	2	—	SEC-69 or SEC-268
P1615	1615	DIFFERENCE OF KEY	—	2	—	SEC-67 or SEC-266
P1700	1700	CVT C/U FUNCT	—	1	—	EC-1423
P1715	1715	IN PULY SPEED	—	2	—	EC-1424
P1720	1720	V/SP SEN(A/T OUT)	—	2	—	EC-1426
P1740	1740	LU-SLCT SOL/CIRC	—	2	×	TM-181
P1777	1777	STEP MOTR CIRC	—	1	×	TM-184
P1778	1778	STEP MOTR FNC	—	2	×	TM-187
P1800	1800	VIAS S/V-1	—	2	—	EC-1428
P1801	1801	VIAS S/V-2	—	2	—	EC-1431
P1805	1805	BRAKE SW/CIRCUIT	—	2	—	EC-1434
P2100	2100	ETC MOT PWR-B1	—	1	×	EC-1437
P2101	2101	ETC FNCTN/CIRC-B1	—	1	×	EC-1439
P2103	2103	ETC MOT PWR	—	1	×	EC-1437
P2118	2118	ETC MOT-B1	—	1	×	EC-1443
P2119	2119	ETC ACTR-B1	—	1	×	EC-1446
P2122	2122	APP SEN 1/CIRC	—	1	×	EC-1448
P2123	2123	APP SEN 1/CIRC	—	1	×	EC-1448
P2127	2127	APP SEN 2/CIRC	—	1	×	EC-1451
P2128	2128	APP SEN 2/CIRC	—	1	×	EC-1451
P2135	2135	TP SENSOR-B1	—	1	×	EC-1455
P2138	2138	APP SENSOR	—	1	×	EC-1458
P2A00	2A00	A/F SENSOR1 (B1)	—	2	×	EC-1463
P2A03	2A03	A/F SENSOR1 (B2)	—	2	×	EC-1463

*1: 1st trip DTC No. is the same as DTC No.
*2: This number is prescribed by SAE J2012.
*3: In Diagnostic Test Mode II (Self-diagnostic results), this number is controlled by NISSAN.
*4: The troubleshooting for this DTC needs CONSULT-III.
*5: When the fail-safe operations for both self-diagnoses occur, the MIL illuminates.
*6: SRT code will not be set if the self-diagnostic result is NG.
*7: When the ECM is in the mode that displays SRT status, MIL may flash. For the details, refer to “How to Display SRT Status”.

How to Set SRT Code

INFOID:0000000004362396

To set all SRT codes, self-diagnoses for the items indicated above must be performed one or more times. Each diagnosis may require a long period of actual driving under various conditions.

WITH CONSULT-III

Perform corresponding DTC Confirmation Procedure one by one based on Performance Priority in the table on “SRT Item”.

WITHOUT CONSULT-III

The most efficient driving pattern in which SRT codes can be properly set is explained below. The driving pattern should be performed one or more times to set all SRT codes.

DRIVING PATTERN

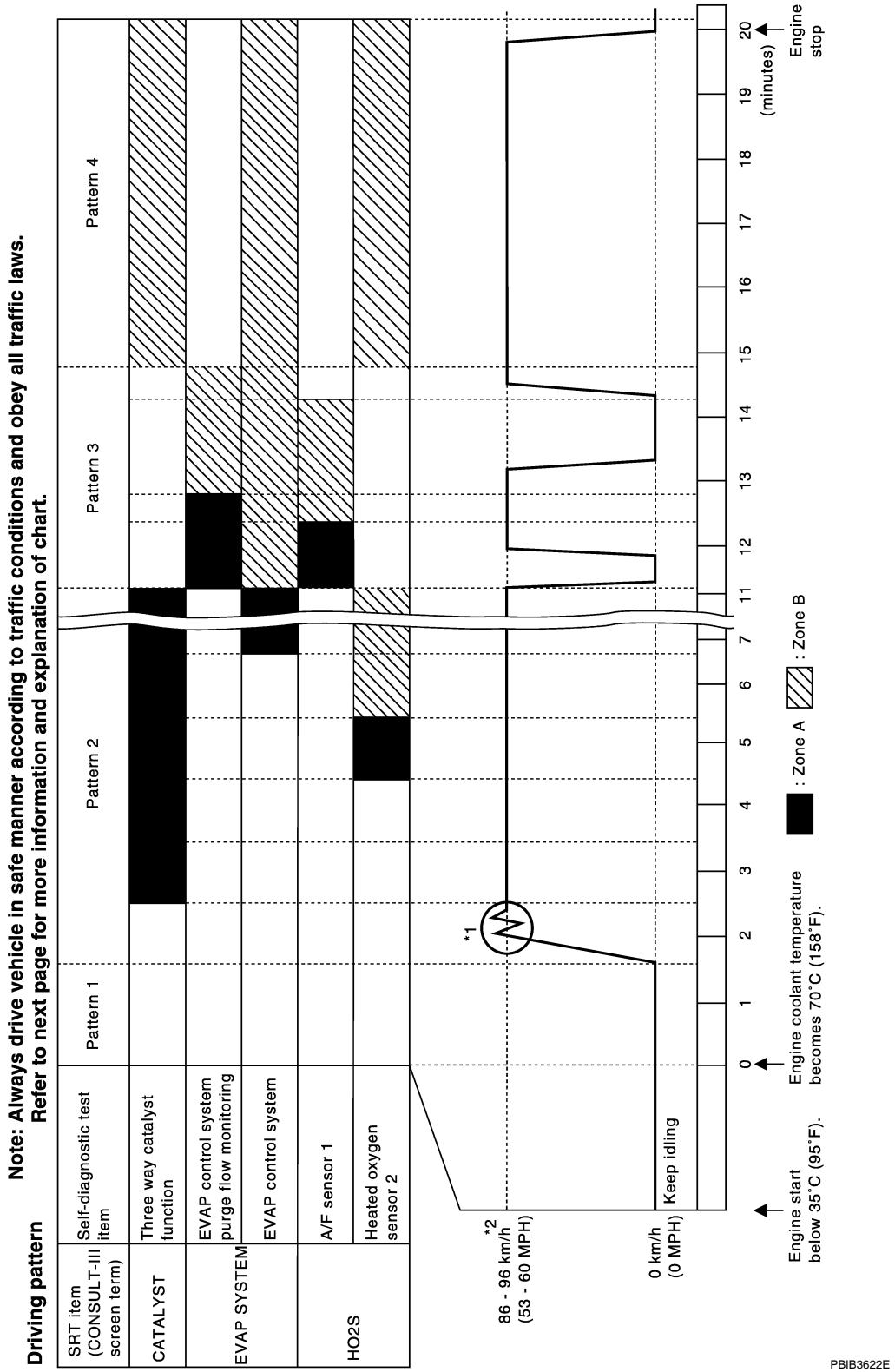

- The time required for each diagnosis varies with road surface conditions, weather, altitude, individual driving habits, etc.
  Zone A refers to the range where the time, required for the diagnosis under normal conditions*, is the shortest.
  Zone B refers to the range where the diagnosis can still be performed if the diagnosis is not completed within zone A.

*: Normal conditions refer to the following:

- Sea level
- Flat road
- Ambient air temperature: 20 - 30°C (68 - 86°F)
- Diagnosis is performed as quickly as possible under normal conditions.
  Under different conditions [For example: ambient air temperature other than 20 - 30°C (68 - 86°F)], diagnosis may also be performed.

Pattern 1:

- **The engine is started at the engine coolant temperature of −10 to 35°C (14 to 95°F) (where the voltage between the ECM terminal 46 and ground is 3.0 - 4.3 V).**
- **The engine must be operated at idle speed until the engine coolant temperature is greater than 70°C (158°F) (where the voltage between the ECM terminal 46 and ground is lower than 1.4 V).**
- **The engine is started at the fuel tank temperature of warmer than 0°C (32°F) (where the voltage between the ECM terminal 95 and ground is less than 4.1 V).**

Pattern 2:

- When steady-state driving is performed again even after it is interrupted, each diagnosis can be conducted. In this case, the time required for diagnosis may be extended.

Pattern 3:

- Operate vehicle following the driving pattern shown in the figure.
- Release the accelerator pedal during deceleration of vehicle speed from 90 km/h (56 MPH) to 0 km/h (0 MPH).

Pattern 4:

- The accelerator pedal must be held very steady during steady-state driving.
- If the accelerator pedal is moved, the test must be conducted again.

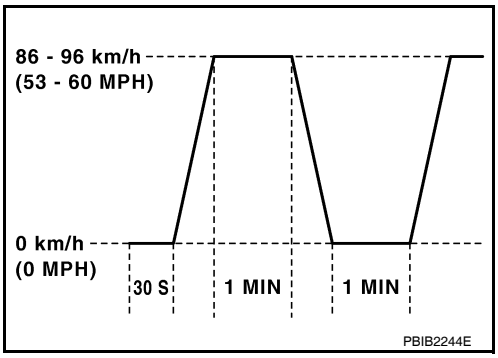

*1: Depress the accelerator pedal until vehicle speed is 90 km/h (56 MPH), then release the accelerator pedal and keep it released for more than 10 seconds. Depress the accelerator pedal until vehicle speed is 90 km/h (56 MPH) again.
*2: Checking the vehicle speed with GST is advised.

Suggested Transmission Gear Position for CVT Models
Set the selector lever in the D position.

Test Value and Test Limit

INFOID:0000000004362397

The following is the information specified in Service $06 of SAE J1979.
The test value is a parameter used to determine whether a system/circuit diagnostic test is OK or NG while being monitored by the ECM during self-diagnosis. The test limit is a reference value which is specified as the maximum or minimum value and is compared with the test value being monitored.
These data (test value and test limit) are specified by On Board Monitor ID(OBDMID), Test ID (TID), Unit and Scaling ID and can be displayed on the GST screen.
The items of the test value and test limit will be displayed with GST screen which items are provided by the ECM. (eg., if bank 2 is not applied on this vehicle, only the items of bank 1 are displayed)

Item	OBD-MID	Self-diagnostic test item	DTC	Test value and Test limit (GST display)		Description
				TID	Unit and Scaling ID	
HO2S	01H	Air fuel ratio (A/F) sensor 1 (Bank 1)	P0131	83H	0BH	Minimum sensor output voltage for test cycle
			P0131	84H	0BH	Maximum sensor output voltage for test cycle
			P0130	85H	0BH	Minimum sensor output voltage for test cycle
			P0130	86H	0BH	Maximum sensor output voltage for test cycle
			P0133	87H	04H	Response rate: Response ratio (Lean to Rich)
			P0133	88H	04H	Response rate: Response ratio (Rich to Lean)
			P2A00	89H	84H	The amount of shift in air fuel ratio
			P2A00	8AH	84H	The amount of shift in air fuel ratio
			P0130	8BH	0BH	Difference in sensor output voltage
			P0133	8CH	83H	Response gain at the limited frequency
	02H	Heated oxygen sensor 2 (Bank 1)	P0138	07H	0CH	Minimum sensor output voltage for test cycle
			P0137	08H	0CH	Maximum sensor output voltage for test cycle
			P0138	80H	0CH	Sensor output voltage
			P0139	81H	0CH	Difference in sensor output voltage
	03H	Heated oxygen sensor 3 (Bank 1)	P0143	07H	0CH	Minimum sensor output voltage for test cycle
			P0144	08H	0CH	Maximum sensor output voltage for test cycle
			P0146	80H	0CH	Sensor output voltage
			P0145	81H	0CH	Difference in sensor output voltage

Item	OBD-MID	Self-diagnostic test item	DTC	Test value and Test limit (GST display)		Description
				TID	Unit and Scaling ID	
HO2S	05H	Air fuel ratio (A/F) sensor 1 (Bank 2)	P0151	83H	0BH	Minimum sensor output voltage for test cycle
			P0151	84H	0BH	Maximum sensor output voltage for test cycle
			P0150	85H	0BH	Minimum sensor output voltage for test cycle
			P0150	86H	0BH	Maximum sensor output voltage for test cycle
			P0153	87H	04H	Response rate: Response ratio (Lean to Rich)
			P0153	88H	04H	Response rate: Response ratio (Rich to Lean)
			P2A03	89H	84H	The amount of shift in air fuel ratio
			P2A03	8AH	84H	The amount of shift in air fuel ratio
			P0150	8BH	0BH	Difference in sensor output voltage
			P0153	8CH	83H	Response gain at the limited frequency
	06H	Heated oxygen sensor 2 (Bank 2)	P0158	07H	0CH	Minimum sensor output voltage for test cycle
			P0157	08H	0CH	Maximum sensor output voltage for test cycle
			P0158	80H	0CH	Sensor output voltage
			P0159	81H	0CH	Difference in sensor output voltage
	07H	Heated oxygen sensor 3 (Bank2)	P0163	07H	0CH	Minimum sensor output voltage for test cycle
			P0164	08H	0CH	Maximum sensor output voltage for test cycle
			P0166	80H	0CH	Sensor output voltage
			P0165	81H	0CH	Difference in sensor output voltage
CATA-LYST	21H	Three way catalyst function (Bank1)	P0420	80H	01H	O2 storage index
			P0420	82H	01H	Switching time lag engine exhaust index value
			P2423	83H	0CH	Difference in 3rd O2 sensor output voltage
			P2423	84H	84H	O2 storage index in HC trap catalyst
	22H	Three way catalyst function (Bank2)	P0430	80H	01H	O2 storage index
			P0430	82H	01H	Switching time lag engine exhaust index value
			P2424	83H	0CH	Difference in 3rd O2 sensor output voltage
			P2424	84H	84H	O2 storage index in HC trap catalyst

Item	OBD-MID	Self-diagnostic test item	DTC	Test value and Test limit (GST display)		Description
				TID	Unit and Scaling ID	
EGR SYSTEM	31H	EGR function	P0400	80H	96H	Low Flow Faults: EGR temp change rate (short term)
			P0400	81H	96H	Low Flow Faults: EGR temp change rate (long term)
			P0400	82H	96H	Low Flow Faults: Difference between max EGR temp and EGR temp under idling condition
			P0400	83H	96H	Low Flow Faults: Max EGR temp
			P1402	84H	96H	High Flow Faults: EGR temp increase rate
VVT SYSTEM	35H	VVT Monitor (Bank1)	P0011	80H	9DH	VTC intake function diagnosis (VTC alignment check diagnosis)
			P0014	81H	9DH	VTC exhaust function diagnosis (VTC alignment check diagnosis)
			P0011	82H	9DH	VTC intake function diagnosis (VTC drive failure diagnosis)
			P0014	83H	9DH	VTC exhaust function diagnosis (VTC drive failure diagnosis)
	36H	VVT Monitor (Bank2)	P0021	80H	9DH	VTC intake function diagnosis (VTC alignment check diagnosis)
			P0024	81H	9DH	VTC exhaust function diagnosis (VTC alignment check diagnosis)
			P0021	82H	9DH	VTC intake function diagnosis (VTC drive failure diagnosis)
			P0024	83H	9DH	VTC exhaust function diagnosis (VTC drive failure diagnosis)
EVAP SYSTEM	39H	EVAP control system leak (Cap Off)	P0455	80H	0CH	Difference in pressure sensor output voltage before and after pull down
	3BH	EVAP control system leak (Small leak)	P0442	80H	05H	Leak area index (for more than 0.04 inch)
	3CH	EVAP control system leak (Very small leak)	P0456	80H	05H	Leak area index (for more than 0.02 inch)
			P0456	81H	FDH	Maximum internal pressure of EVAP system during monitoring
	3DH	Purge flow system	P0441	83H	0CH	Difference in pressure sensor output voltage before and after vent control valve close
O2 SENSOR HEATER	41H	A/F sensor 1 heater (Bank 1)	Low Input:P0031 High Input:P0032	81H	0BH	Converted value of Heater electric current to voltage
	42H	Heated oxygen sensor 2 heater (Bank 1)	Low Input:P0037 High Input:P0038	80H	0CH	Converted value of Heater electric current to voltage
	43H	Heated oxygen sensor 3 heater (Bank 1)	P0043	80H	0CH	Converted value of Heater electric current to voltage
	45H	A/F sensor 1 heater (Bank 2)	Low Input:P0051 High Input:P0052	81H	0BH	Converted value of Heater electric current to voltage
	46H	Heated oxygen sensor 2 heater (Bank 2)	Low Input:P0057 High Input:P0058	80H	0CH	Converted value of Heater electric current to voltage
	47H	Heated oxygen sensor 3 heater (Bank 2)	P0063	80H	0CH	Converted value of Heater electric current to voltage

Item	OBD-MID	Self-diagnostic test item	DTC	Test value and Test limit (GST display)		Description
				TID	Unit and Scaling ID	
SECOND-ARY AIR	71H	Secondary Air system	P0411	80H	01H	Secondary Air Injection System Incorrect Flow Detected
			Bank1: P0491 Bank2: P0492	81H	01H	Secondary Air Injection System Insufficient Flow
			P2445	82H	01H	Secondary Air Injection System Pump Stuck Off
			P2448	83H	01H	Secondary Air Injection System High Airflow
			Bank1: P2440 Bank2: P2442	84H	01H	Secondary Air Injection System Switching Valve Stuck Open
			P2440	85H	01H	Secondary Air Injection System Switching Valve Stuck Open
			P2444	86H	01H	Secondary Air Injection System Pump Stuck On
FUEL SYSTEM	81H	Fuel injection system function (Bank 1)	P0171 or P0172	80H	2FH	Long term fuel trim
			P0171 or P0172	81H	24H	The number of lambda control clamped
	82H	Fuel injection system function (Bank 2)	P0174 or P0175	80H	2FH	Long term fuel trim
			P0174 or P0175	81H	24H	The number of lambda control clamped

Item	OBD-MID	Self-diagnostic test item	DTC	Test value and Test limit (GST display)		Description
				TID	Unit and Scaling ID	
MISFIRE	A1H	Multiple Cylinder Misfires	P0301	80H	24H	Misfiring counter at 1000 revolution of the first cylinder
			P0302	81H	24H	Misfiring counter at 1000 revolution of the second cylinder
			P0303	82H	24H	Misfiring counter at 1000 revolution of the third cylinder
			P0304	83H	24H	Misfiring counter at 1000 revolution of the fourth cylinder
			P0305	84H	24H	Misfiring counter at 1000 revolution of the fifth cylinder
			P0306	85H	24H	Misfiring counter at 1000 revolution of the sixth cylinder
			P0307	86H	24H	Misfiring counter at 1000 revolution of the seventh cylinder
			P0308	87H	24H	Misfiring counter at 1000 revolution of the eighth cylinder
			P0300	88H	24H	Misfiring counter at 1000 revolution of the multiple cylinders
			P0301	89H	24H	Misfiring counter at 200 revolution of the first cylinder
			P0302	8AH	24H	Misfiring counter at 200 revolution of the second cylinder
			P0303	8BH	24H	Misfiring counter at 200 revolution of the third cylinder
			P0304	8CH	24H	Misfiring counter at 200 revolution of the fourth cylinder
			P0305	8DH	24H	Misfiring counter at 200 revolution of the fifth cylinder
			P0306	8EH	24H	Misfiring counter at 200 revolution of the sixth cylinder
			P0307	8FH	24H	Misfiring counter at 200 revolution of the seventh cylinder
			P0308	90H	24H	Misfiring counter at 200 revolution of the eighth cylinder
			P0300	91H	24H	Misfiring counter at 1000 revolution of the single cylinder
			P0300	92H	24H	Misfiring counter at 200 revolution of the single cylinder
			P0300	93H	24H	Misfiring counter at 200 revolution of the multiple cylinders

Item	OBD-MID	Self-diagnostic test item	DTC	Test value and Test limit (GST display)		Description
				TID	Unit and Scaling ID	
MISFIRE	A2H	No. 1 Cylinder Misfire	P0301	0BH	24H	EWMA (Exponential Weighted Moving Average) misfire counts for last 10 driving cycles
			P0301	0CH	24H	Misfire counts for last/current driving cycles
	A3H	No. 2 Cylinder Misfire	P0302	0BH	24H	EWMA (Exponential Weighted Moving Average) misfire counts for last 10 driving cycles
			P0302	0CH	24H	Misfire counts for last/current driving cycles
	A4H	No. 3 Cylinder Misfire	P0303	0BH	24H	EWMA (Exponential Weighted Moving Average) misfire counts for last 10 driving cycles
			P0303	0CH	24H	Misfire counts for last/current driving cycles
	A5H	No. 4 Cylinder Misfire	P0304	0BH	24H	EWMA (Exponential Weighted Moving Average) misfire counts for last 10 driving cycles
			P0304	0CH	24H	Misfire counts for last/current driving cycles
	A6H	No. 5 Cylinder Misfire	P0305	0BH	24H	EWMA (Exponential Weighted Moving Average) misfire counts for last 10 driving cycles
			P0305	0CH	24H	Misfire counts for last/current driving cycles
	A7H	No. 6 Cylinder Misfire	P0306	0BH	24H	EWMA (Exponential Weighted Moving Average) misfire counts for last 10 driving cycles
			P0306	0CH	24H	Misfire counts for last/current driving cycles
	A8H	No. 7 Cylinder Misfire	P0307	0BH	24H	EWMA (Exponential Weighted Moving Average) misfire counts for last 10 driving cycles
			P0307	0CH	24H	Misfire counts for last/current driving cycles
	A9H	No. 8 Cylinder Misfire	P0308	0BH	24H	EWMA (Exponential Weighted Moving Average) misfire counts for last 10 driving cycles
			P0308	0CH	24H	Misfire counts for last/current driving cycles

SYMPTOM DIAGNOSIS

ENGINE CONTROL SYSTEM SYMPTOMS

Symptom Table

INFOID:0000000004362398

SYSTEM — BASIC ENGINE CONTROL SYSTEM

		SYMPTOM													Reference page
		HARD/NO START/RESTART (EXCP. HA)	ENGINE STALL	HESITATION/SURGING/FLAT SPOT	SPARK KNOCK/DETONATION	LACK OF POWER/POOR ACCELERATION	HIGH IDLE/LOW IDLE	ROUGH IDLE/HUNTING	IDLING VIBRATION	SLOW/NO RETURN TO IDLE	OVERHEATS/WATER TEMPERATURE HIGH	EXCESSIVE FUEL CONSUMPTION	EXCESSIVE OIL CONSUMPTION	BATTERY DEAD (UNDER CHARGE)	
Warranty symptom code		AA	AB	AC	AD	AE	AF	AG	AH	AJ	AK	AL	AM	HA	
Fuel	Fuel pump circuit	1	1	2	3	2		2	2			3		2	EC-1486
	Fuel pressure regulator system	3	3	4	4	4	4	4	4	4		4			EC-1579
	Fuel injector circuit	1	1	2	3	2		2	2			2			EC-1483
	Evaporative emission system	3	3	4	4	4	4	4	4	4		4			EC-1116
Air	Positive crankcase ventilation system	3	3	4	4	4	4	4	4	4		4	1		EC-1502
	Incorrect idle speed adjustment						1	1	1	1		1			EC-1048
	Electric throttle control actuator	1	1	2	3	3	2	2	2	2		2		2	EC-1439, EC-1446
Ignition	Incorrect ignition timing adjustment	3	3	1	1	1		1	1			1			EC-1048
	Ignition circuit	1	1	2	2	2		2	2			2			EC-1491
Power supply and ground circuit		2	2	3	3	3		3	3		2	3			EC-1175
Mass air flow sensor circuit		1	1	2	2	2		2	2			2			EC-1194, EC-1201
Engine coolant temperature sensor circuit					3		3			3					EC-1212, EC-1218
Air fuel ratio (A/F) sensor 1 circuit			1	2	3	2		2	2			2			EC-1225, EC-1229, EC-1233, EC-1237, EC-1463
Throttle position sensor circuit							2			2					EC-1215, EC-1280, EC-1392, EC-1394, EC-1455
Accelerator pedal position sensor circuit				3	2	1									EC-1379, EC-1448, EC-1451, EC-1458

	SYMPTOM													Reference page
	HARD/NO START/RESTART (EXCP. HA)	ENGINE STALL	HESITATION/SURGING/FLAT SPOT	SPARK KNOCK/DETONATION	LACK OF POWER/POOR ACCELERATION	HIGH IDLE/LOW IDLE	ROUGH IDLE/HUNTING	IDLING VIBRATION	SLOW/NO RETURN TO IDLE	OVERHEATS/WATER TEMPERATURE HIGH	EXCESSIVE FUEL CONSUMPTION	EXCESSIVE OIL CONSUMPTION	BATTERY DEAD (UNDER CHARGE)	
Warranty symptom code	AA	AB	AC	AD	AE	AF	AG	AH	AJ	AK	AL	AM	HA	
Knock sensor circuit			2								3			EC-1289
Crankshaft position sensor (POS) circuit	2	2												EC-1292
Camshaft position sensor (PHASE) circuit	3	2												EC-1296
Vehicle speed signal circuit		2	3		3						3			EC-1365
Power steering pressure sensor circuit		2					3	3						EC-1371
ECM	2	2	3	3	3	3	3	3	3	3	3			EC-1374, EC-1376
Intake valve timing control solenoid valve circuit		3	2		1	3	2	2	3		3			EC-1191
PNP signal circuit			3		3		3	3			3			EC-1382
VIAS control solenoid valve 1 circuit					1									EC-1428
VIAS control solenoid valve 2 circuit					1									EC-1431
Refrigerant pressure sensor circuit		2				3			3		4			EC-1503
Electrical load signal circuit							3							EC-1478
Air conditioner circuit	2	2	3	3	3	3	3	3	3		3		2	HAC-21, HAC-114
ABS actuator and electric unit (control unit)			4											BRC-149

1 - 6: The numbers refer to the order of inspection.

(continued on next page)

SYSTEM — ENGINE MECHANICAL & OTHER

		SYMPTOM													Reference page
		HARD/NO START/RESTART (EXCP. HA)	ENGINE STALL	HESITATION/SURGING/FLAT SPOT	SPARK KNOCK/DETONATION	LACK OF POWER/POOR ACCELERATION	HIGH IDLE/LOW IDLE	ROUGH IDLE/HUNTING	IDLING VIBRATION	SLOW/NO RETURN TO IDLE	OVERHEATS/WATER TEMPERATURE HIGH	EXCESSIVE FUEL CONSUMPTION	EXCESSIVE OIL CONSUMPTION	BATTERY DEAD (UNDER CHARGE)	
Warranty symptom code		AA	AB	AC	AD	AE	AF	AG	AH	AJ	AK	AL	AM	HA	
Fuel	Fuel tank	5	5												FL-10
	Fuel piping			5	5	5		5	5			5			FL-4
	Vapor lock														—
	Valve deposit	5		5	5	5		5	5			5			—
	Poor fuel (Heavy weight gasoline, Low octane)														—
Air	Air duct		5	5		5		5	5			5			EM-129
	Air cleaner														EM-129
	Air leakage from air duct (Mass air flow sensor — electric throttle control actuator)	5			5		5			5					EM-129
	Electric throttle control actuator														EM-130
	Air leakage from intake manifold/ Collector/Gasket														EM-129, EM-130
Cranking	Battery	1	1	1		1		1	1					1	PG-68, PG-139
	Generator circuit														CHG-29
	Starter circuit	3										1			STR-32
	Signal plate	6													EM-216
	PNP signal	4													TM-129, TM-20
Engine	Cylinder head	5	5	5	5	5		5	5			5			EM-191
	Cylinder head gasket										4		3		
	Cylinder block	6	6	6	6	6		6	6			6	4		EM-206
	Piston														
	Piston ring														
	Connecting rod														
	Bearing														
	Crankshaft														

		SYMPTOM													Reference page
		HARD/NO START/RESTART (EXCP. HA)	ENGINE STALL	HESITATION/SURGING/FLAT SPOT	SPARK KNOCK/DETONATION	LACK OF POWER/POOR ACCELERATION	HIGH IDLE/LOW IDLE	ROUGH IDLE/HUNTING	IDLING VIBRATION	SLOW/NO RETURN TO IDLE	OVERHEATS/WATER TEMPERATURE HIGH	EXCESSIVE FUEL CONSUMPTION	EXCESSIVE OIL CONSUMPTION	BATTERY DEAD (UNDER CHARGE)	
Warranty symptom code		AA	AB	AC	AD	AE	AF	AG	AH	AJ	AK	AL	AM	HA	
Valve mechanism	Timing chain	5	5	5	5	5		5	5			5			EM-166
	Camshaft														EM-177
	Intake valve timing control														EM-166
	Intake valve												3		EM-191
	Exhaust valve														
Exhaust	Exhaust manifold/Tube/Muffler/Gasket	5	5	5	5	5		5	5			5			EM-136, EX-10
	Three way catalyst														
Lubrication	Oil pan/Oil strainer/Oil pump/Oil filter/Oil gallery/Oil cooler	5	5	5	5	5		5	5			5			LU-23, LU-25, LU-27, LU-30
	Oil level (Low)/Filthy oil														LU-23
Cooling	Radiator/Hose/Radiator filler cap	5	5	5	5	5		5	5		4	5			CO-38
	Thermostat									5					CO-46
	Water pump														CO-42
	Water gallery														CO-48
	Cooling fan									5					CO-40
	Coolant level (Low)/Contaminated coolant														CO-34
NVIS (NISSAN Vehicle Immobilizer System — NATS)		1	1												SEC-22, SEC-221

1 - 6: The numbers refer to the order of inspection.

NORMAL OPERATING CONDITION

Description

INFOID:0000000004362399

FUEL CUT CONTROL (AT NO LOAD AND HIGH ENGINE SPEED)

If the engine speed is above 1,400 rpm under no load (for example, the selector lever position is P or N and engine speed is over 1,400 rpm) fuel will be cut off after some time. The exact time when the fuel is cut off varies based on engine speed.
Fuel cut will be operated until the engine speed reaches 1,000 rpm, then fuel cut will be cancelled.
NOTE:
This function is different from deceleration control listed under Multiport Fuel Injection (MFI) System, EC-1065, "System Description".

PRECAUTION

PRECAUTIONS

Precaution for Supplemental Restraint System (SRS) "AIR BAG" and "SEAT BELT PRE-TENSIONER"

INFOID:0000000004362400

The Supplemental Restraint System such as “AIR BAG” and “SEAT BELT PRE-TENSIONER”, used along with a front seat belt, helps to reduce the risk or severity of injury to the driver and front passenger for certain types of collision. This system includes seat belt switch inputs and dual stage front air bag modules. The SRS system uses the seat belt switches to determine the front air bag deployment, and may only deploy one front air bag, depending on the severity of a collision and whether the front occupants are belted or unbelted.
Information necessary to service the system safely is included in the SR and SB section of this Service Manual.

WARNING:

- **To avoid rendering the SRS inoperative, which could increase the risk of personal injury or death in the event of a collision which would result in air bag inflation, all maintenance must be performed by an authorized NISSAN/INFINITI dealer.**
- **Improper maintenance, including incorrect removal and installation of the SRS, can lead to personal injury caused by unintentional activation of the system. For removal of Spiral Cable and Air Bag Module, see the SR section.**
- **Do not use electrical test equipment on any circuit related to the SRS unless instructed to in this Service Manual. SRS wiring harnesses can be identified by yellow and/or orange harnesses or harness connectors.**

Precautions For Xenon Headlamp Service

INFOID:0000000004362401

WARNING:

Comply with the following warnings to prevent any serious accident.

- **Disconnect the battery cable (negative terminal) or the power supply fuse before installing, removing, or touching the xenon headlamp (bulb included). The xenon headlamp contains high-voltage generated parts.**
- **Never work with wet hands.**
- **Check the xenon headlamp ON-OFF status after assembling it to the vehicle. Never turn the xenon headlamp ON in other conditions. Connect the power supply to the vehicle-side connector. (Turning it ON outside the lamp case may cause fire or visual impairments.)**
- **Never touch the bulb glass immediately after turning it OFF. It is extremely hot.**

CAUTION:

Comply with the following cautions to prevent any error and malfunction.

- **Install the xenon bulb securely. (Insufficient bulb socket installation may melt the bulb, the connector, the housing, etc. by high-voltage leakage or corona discharge.)**
- **Never perform HID circuit inspection with a tester.**
- **Never touch the xenon bulb glass with hands. Never put oil and grease on it.**
- **Dispose of the used xenon bulb after packing it in thick vinyl without breaking it.**
- **Never wipe out dirt and contamination with organic solvent (thinner, gasoline, etc.).**

Precaution for Procedure without Cowl Top Cover

INFOID:0000000004362402

When performing the procedure after removing cowl top cover, cover the lower end of windshield with urethane, etc.

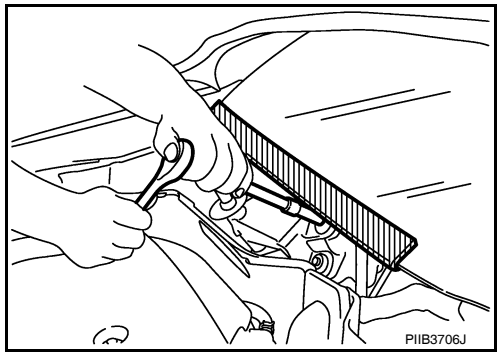

On Board Diagnostic (OBD) System of Engine and CVT

INFOID:0000000004362403

The ECM has an on board diagnostic system. It will illuminate the malfunction indicator lamp (MIL) to warn the driver of a malfunction causing emission deterioration.

CAUTION:

- **Always to turn the ignition switch OFF and disconnect the negative battery cable before any repair or inspection work. The open/short circuit of related switches, sensors, solenoid valves, etc. will cause the MIL to illuminate.**
- **Always to connect and lock the connectors securely after work. A loose (unlocked) connector will cause the MIL to illuminate due to the open circuit. (Always the connector is free from water, grease, dirt, bent terminals, etc.)**
- **Certain systems and components, especially those related to OBD, may use a new style slide-locking type harness connector. For description and how to disconnect, refer to PG-58, "Description" (coupe) or PG-129, "Description" (sedan).**
- **Always route and secure the harnesses properly after work. The interference of the harness with a bracket, etc. may cause the MIL to illuminate due to the short circuit.**
- **Always to connect rubber tubes properly after work. A misconnected or disconnected rubber tube may cause the MIL to illuminate due to the malfunction of the EVAP system or fuel injection system, etc.**
- **Always to erase the unnecessary malfunction information (repairs completed) from the ECM and TCM (Transmission control module) before returning the vehicle to the customer.**

General Precautions

INFOID:0000000004362404

- **Always use a 12 volt battery as power source.**
- **Never attempt to disconnect battery cables while engine is running.**
- **Before connecting or disconnecting the ECM harness connector, turn ignition switch OFF and disconnect negative battery cable. Failure to do so may damage the ECM because battery voltage is applied to ECM even if ignition switch is turned OFF.**
- **Before removing parts, turn ignition switch OFF and then disconnect battery ground cable.**

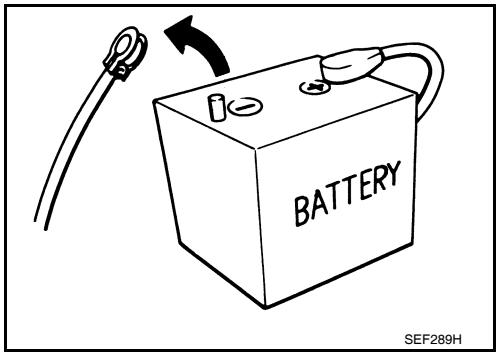

- **Never disassemble ECM.**
- **If a battery cable is disconnected, the memory will return to the ECM value.**
  The ECM will now start to self-control at its initial value. Thus, engine operation can vary slightly in this case. However, this is not an indication of a malfunction. Never replace parts because of a slight variation.
- **If the battery is disconnected, the following emission-related diagnostic information will be lost within 24 hours.**

- **Diagnostic trouble codes**
- **1st trip diagnostic trouble codes**
- **Freeze frame data**
- **1st trip freeze frame data**
- **System readiness test (SRT) codes**
- **Test values**

- **When connecting ECM harness connector, fasten (B) it securely with a lever (1) as far as it will go as shown in the figure.**

- **ECM (2)**
- **Loosen (A)**

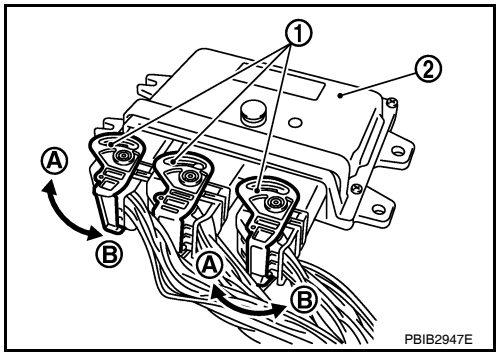

- **When connecting or disconnecting pin connectors into or from ECM, never damage pin terminals (bends or break). Check that there are not any bends or breaks on ECM pin terminal, when connecting pin connectors.**
- **Securely connect ECM harness connectors. A poor connection can cause an extremely high (surge) voltage to develop in coil and condenser, thus resulting in damage to ICs.**
- **Keep engine control system harness at least 10 cm (4 in) away from adjacent harness, to prevent engine control system malfunctions due to receiving external noise, degraded operation of ICs, etc.**
- **Keep engine control system parts and harness dry.**
- **Before replacing ECM, perform ECM Terminals and Reference Value inspection and check that the ECM functions properly. Refer to EC-1510, "Reference Value".**
- **Handle mass air flow sensor carefully to avoid damage.**
- **Never clean mass air flow sensor with any type of detergent.**
- **Never disassemble electric throttle control actuator.**
- **Even a slight leakage in the air intake system can cause serious incidents.**
- **Never shock or jar the camshaft position sensor (PHASE), crankshaft position sensor (POS).**

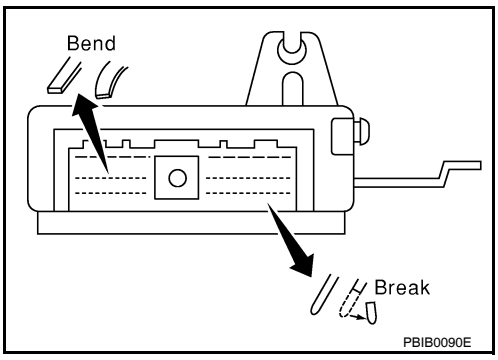

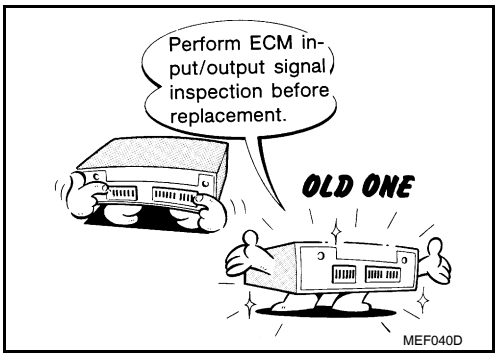

- **After performing each TROUBLE DIAGNOSIS, perform DTC Confirmation Procedure or Component Function Check. The DTC should not be displayed in the DTC Confirmation Procedure if the repair is completed. The Component Function Check should be a good result if the repair is completed.**

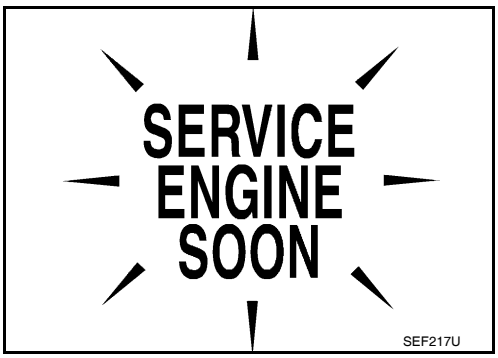

- **When measuring ECM signals with a circuit tester, never allow the two tester probes to contact.**
  Accidental contact of probes will cause a short circuit and damage the ECM power transistor.

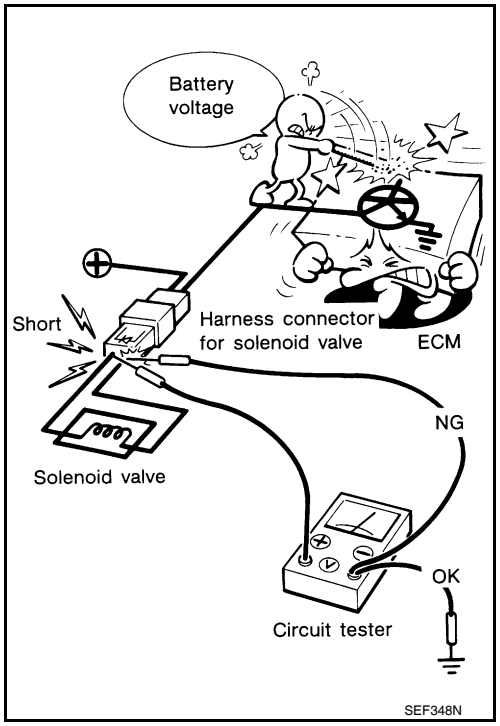

- **B1 indicates bank 1, B2 indicates bank 2 as shown in the figure.**
- **Never operate fuel pump when there is no fuel in lines.**
- **Tighten fuel hose clamps to the specified torque.**

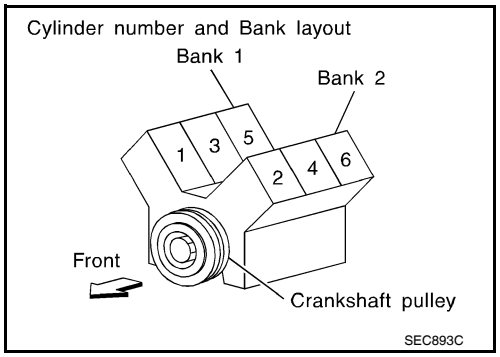

- **Never depress accelerator pedal when starting.**
- **Immediately after starting, never rev up engine unnecessarily.**
- **Never rev up engine just prior to shutdown.**

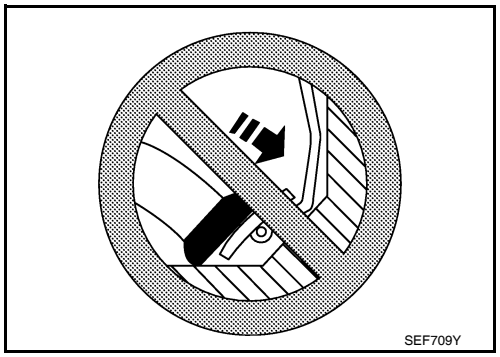

- **When installing C.B. ham radio or a mobile phone, be sure to observe the following as it may adversely affect electronic control systems depending on installation location.**
  - **Keep the antenna as far as possible from the electronic control units.**
  - **Keep the antenna feeder line more than 20 cm (8 in) away from the harness of electronic controls.**
    Never let them run parallel for a long distance.
  - **Adjust the antenna and feeder line so that the standing-wave ratio can be kept smaller.**
  - **Be sure to ground the radio to vehicle body.**

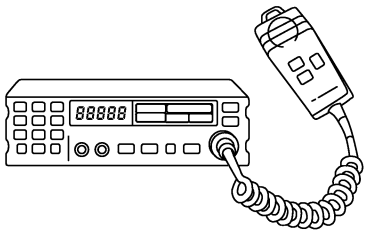

SEF708Y

PREPARATION

PREPARATION

Special Service Tools

INFOID:0000000004362405

The actual shapes of Kent-Moore tools may differ from those of special service tools illustrated here.

Tool number (Kent-Moore No.) Tool name	Description
(J-44321) Fuel pressure gauge kit 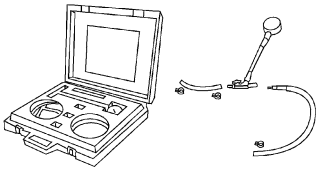 LEC642	Checks fuel pressure
(J-44321-6) Fuel pressure adapter 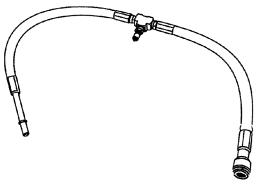 LBIA0376E	Connects fuel pressure gauge to quick connector type fuel lines

Commercial Service Tools

INFOID:0000000004362406

Tool name (Kent-Moore No.)	Description
(J-45488) Quick connector release PBIC0198E	Removes fuel tube quick connectors in engine room
Leakage detector i.e.: (J-41416) 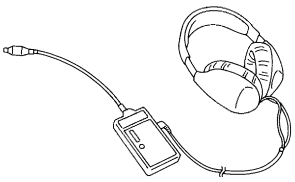 S-NT703	Locates the EVAP leakage
EVAP service port adapter i.e.: (J-41413-OBD) 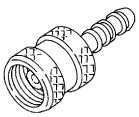 S-NT704	Applys positive pressure via the EVAP service port

Tool name (Kent-Moore No.)	Description
Fuel filler cap adapter i.e.: (MLR-8382) 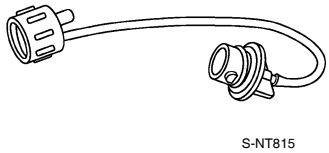 S-NT815	Checks fuel tank vacuum relief valve opening pressure
Socket wrench 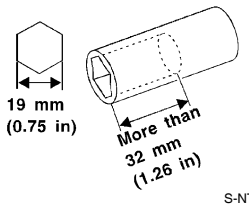 S-NT705	Removes and installs engine coolant temperature sensor
Oxygen sensor thread cleaner i.e.: (J-43897-18) (J-43897-12)	Reconditions the exhaust system threads before installing a new oxygen sensor. Use with anti-seize lubricant shown below. **a: 18 mm diameter with pitch 1.5 mm for Zirconia Oxygen Sensor** **b: 12 mm diameter with pitch 1.25 mm for Titania Oxygen Sensor**
Anti-seize lubricant i.e.: (Permatex™ 133AR or equivalent meeting MIL specification MIL-A-907)	Lubricates oxygen sensor thread cleaning tool when reconditioning exhaust system threads.

ON-VEHICLE MAINTENANCE

FUEL PRESSURE

Inspection

INFOID:0000000004362407

FUEL PRESSURE RELEASE

With CONSULT-III

1. Turn ignition switch ON.
2. Perform “FUEL PRESSURE RELEASE” in “WORK SUPPORT” mode with CONSULT-III.
3. Start engine.
4. After engine stalls, crank it 2 or 3 times to release all fuel pressure.
5. Turn ignition switch OFF.

Without CONSULT-III

1. Remove fuel pump fuse (2) located in IPDM E/R (1).
   - ⇦: Vehicle front
2. Start engine.
3. After engine stalls, crank it 2 or 3 times to release all fuel pressure.
4. Turn ignition switch OFF.
5. Reinstall fuel pump fuse after servicing fuel system.

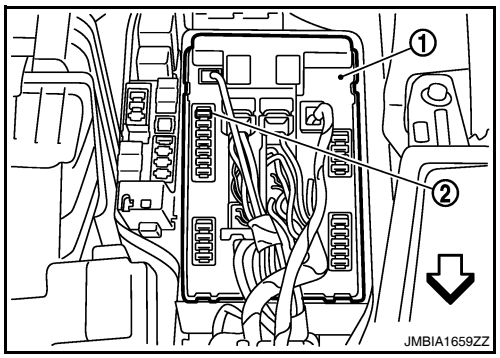

FUEL PRESSURE CHECK

CAUTION:

Before disconnecting fuel line, release fuel pressure from fuel line to eliminate danger.

NOTE:

- **Prepare pans or saucers under the disconnected fuel line because the fuel may spill out. The fuel pressure cannot be completely released because L32 models do not have fuel return system.**
- **Be careful not to scratch or get the fuel hose connection area dirty when servicing, so that the quick connector o-ring maintains seal ability.**
- **Use Fuel Pressure Gauge Kit [SST (J-44321)] and Fuel Pressure Adapter [SST (J-44321-6)] to check fuel pressure.**

1. Release fuel pressure to zero.
2. Remove fuel hose using Quick Connector Release [SST (J-45488)].
   - Do not twist or kink fuel hose because it is plastic hose.
   - Do not remove fuel hose from quick connector.
   - Keep fuel hose connections clean.
3. Install Fuel Pressure Adapter [SST (J-44321-6)] and Fuel Pressure Gauge kit [SST (J44321)] as shown in figure.
   - Do not distort or bend fuel rail tube when installing fuel pressure gauge adapter.
   - When reconnecting fuel hose, check the original fuel hose for damage and abnormality.
4. Turn ignition switch ON (reactivate fuel pump) and check for fuel leakage.
5. Start engine and check for fuel leakage.
6. Read the indication of fuel pressure gauge kit [SST (J-44321)].
   - During fuel pressure check, check for fuel leakage from fuel connection every 3 minutes.

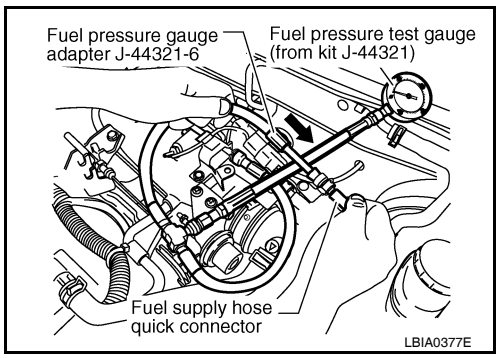

At idling : Approximately 350 kPa (3.57 kg/cm^2, 51 psi)

7. If result is unsatisfactory, go to next step.
8. Check the following.
   - Fuel hoses and fuel tubes for clogging
   - Fuel filter for clogging
   - Fuel pump
   - Fuel pressure regulator for clogging
9. If OK, replace fuel pressure regulator.
   If NG, repair or replace malfunctioning part.
10. Before disconnecting Fuel Pressure Gauge kit [SST (J-44321)] and Fuel Pressure Adapter [SST (J-44321-6)], release fuel pressure to zero.

EVAP LEAK CHECK

Inspection

INFOID:0000000004362408

CAUTION:
- **Never use compressed air or a high pressure pump.**
- **Never exceed 4.12 kPa (0.042 kg/cm^2, 0.6 psi) of pressure in EVAP system.**

NOTE:
- Do not start engine.
- Improper installation of EVAP service port adapter (commercial service tool) to the EVAP service port may cause a leakage.

WITH CONSULT-III

1. To locate the EVAP leakage, install EVAP service port adapter (commercial service tool) and pressure pump to EVAP service port.
2. Turn ignition switch ON.
3. Select the “EVAP SYSTEM CLOSE” of “WORK SUPPORT MODE” with CONSULT-III.
4. Touch “START”. A bar graph (Pressure indicating display) will appear on the screen.
5. Apply positive pressure to the EVAP system until the pressure indicator reaches the middle of the bar graph.
6. Remove EVAP service port adapter (commercial service tool) and hose with pressure pump.
7. Locate the leakage using a leakage detector (commercial service tool). Refer to EC-1116, "System Diagram".

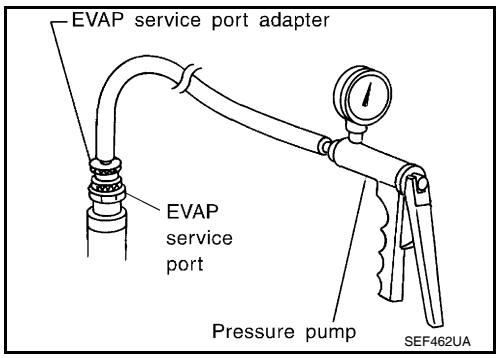

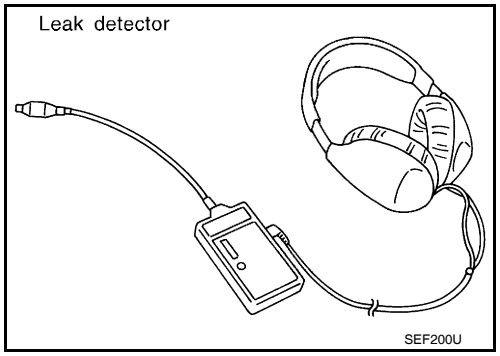

WITHOUT CONSULT-III

1. To locate the EVAP leakage, install EVAP service port adapter (commercial service tool) and pressure pump to EVAP service port.
2. Apply battery voltage between the terminals of EVAP canister vent control valve to make a closed EVAP system.
3. To locate the leakage, deliver positive pressure to the EVAP system until pressure gauge points reach 1.38 to 2.76 kPa (0.014 to 0.028 kg/cm^2, 0.2 to 0.4 psi).
4. Remove EVAP service port adapter (commercial service tool) and hose with pressure pump.

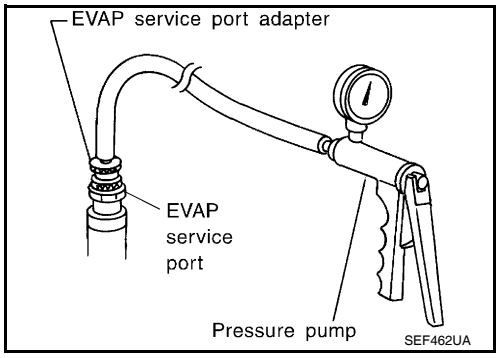

5. Locate the leakage using a leakage detector (commercial service tool). Refer to EC-1116, "System Diagram".

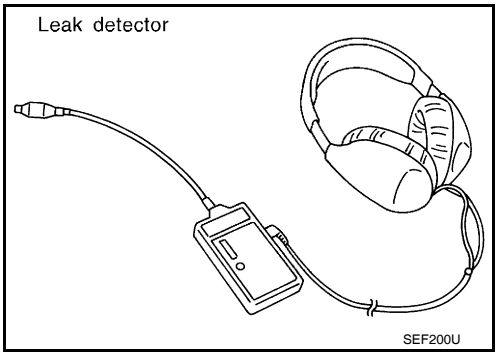

ON-VEHICLE REPAIR

EVAP CANISTER

Exploded View

INFOID:0000000004362409

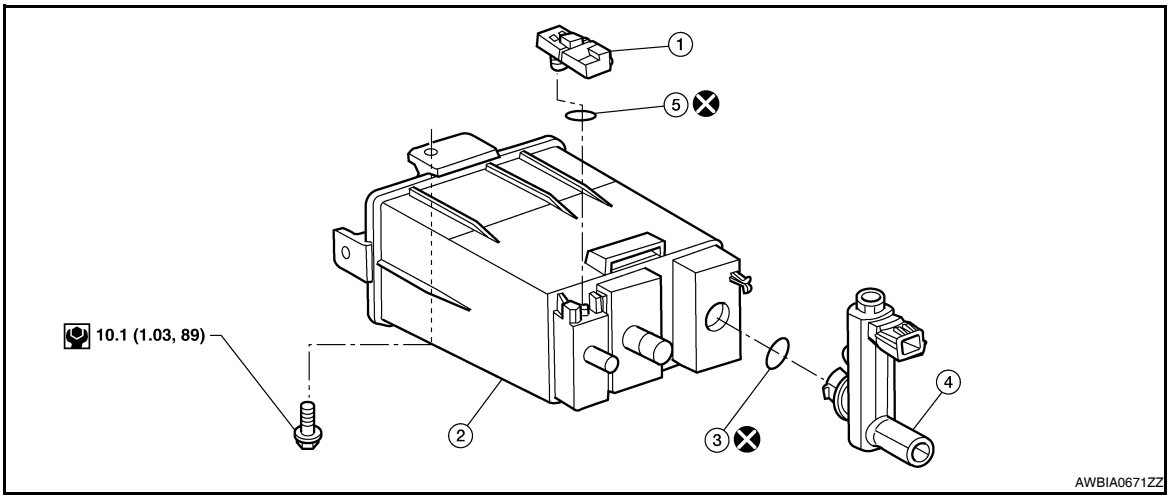

1. EVAP control system pressure sensor
2. EVAP canister
3. O-ring
4. EVAP canister vent control valve
5. O-ring

Removal and Installation

INFOID:0000000004362410

REMOVAL

1. Lift up the vehicle.
2. Remove EVAP canister fixing bolt.
3. Remove EVAP canister.

NOTE:
The EVAP canister vent control valve and EVAP canister system pressure sensor can be removed without removing the EVAP canister.

INSTALLATION

Install in the reverse order of removal.
NOTE:
Tighten EVAP canister fixing bolt to the specified torque.

DISASSEMBLY

1. Turn EVAP canister vent control valve counterclockwise.

A : Lock
B : Unlock

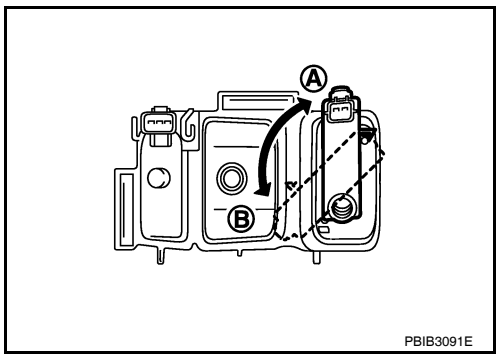

2. Remove the EVAP canister vent control valve.

ASSEMBLY

Assemble in the reverse order of disassembly.
CAUTION:
Always replace O-ring with a new one.

Inspection

INFOID:0000000004362411

Check EVAP canister as per the following:

1. Block port (B).
2. Blow air into port (A) and check that it flows freely out of port (C).
3. Release blocked port (B).
4. Apply vacuum pressure to port (B) and check that vacuum pressure exists at the ports (A) and (C).
5. Block port (A) and (B).
6. Apply pressure to port (C) and check that there is no leakage.

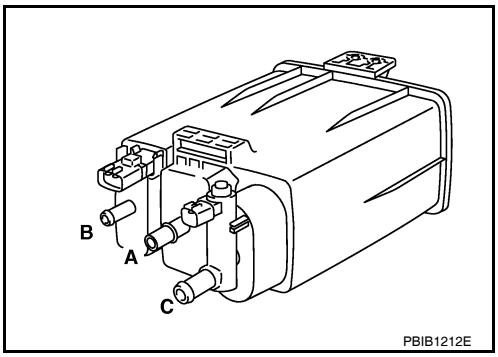

SERVICE DATA AND SPECIFICATIONS (SDS)

SERVICE DATA AND SPECIFICATIONS (SDS)

Idle Speed

INFOID:0000000004460289

Transmission	Condition	Specification
CVT	No load* (in P or N position)	600 ± 50 rpm
M/T	No load* (in neutral position)	600 ± 50 rpm

*: Under the following conditions
- A/C switch: OFF
- Electric load: OFF (Lights, heater fan & rear window defogger)
- Steering wheel: Kept in straight-ahead position

Ignition Timing

INFOID:0000000004460290

Transmission	Condition	Specification
CVT	No load* (in P or N position)	18 ± 2°BTDC
M/T	No load* (in neutral position)	18 ± 2°BTDC

*: Under the following conditions
- A/C switch: OFF
- Electric load: OFF (Lights, heater fan & rear window defogger)
- Steering wheel: Kept in straight-ahead position

Calculated Load Value

INFOID:0000000004362414

Condition	Specification (Using CONSULT-III or GST)
At idle	10 – 35 %
At 2,500 rpm	10 – 35 %

Mass Air Flow Sensor

INFOID:0000000004362415

Supply voltage	Battery voltage (11 – 14 V)
Output voltage at idle (in N position)	0.9 – 1.2 V*
Mass air flow (Using CONSULT-III or GST)	2.0 – 6.0 g·m/sec at idle* 7.0 – 20.0 g·m/sec at 2,500 rpm*

*: Engine is warmed up to normal operating temperature and running under no load.