SECTION BRM
BODY REPAIR

CONTENTS

VEHICLE INFORMATION

BODY EXTERIOR PAINT COLOR

Body Exterior Paint Color

INFOID:0000000007988507

SEC. 620 • 623 • 760 • 805 • 825 • 843 • 850 • 963

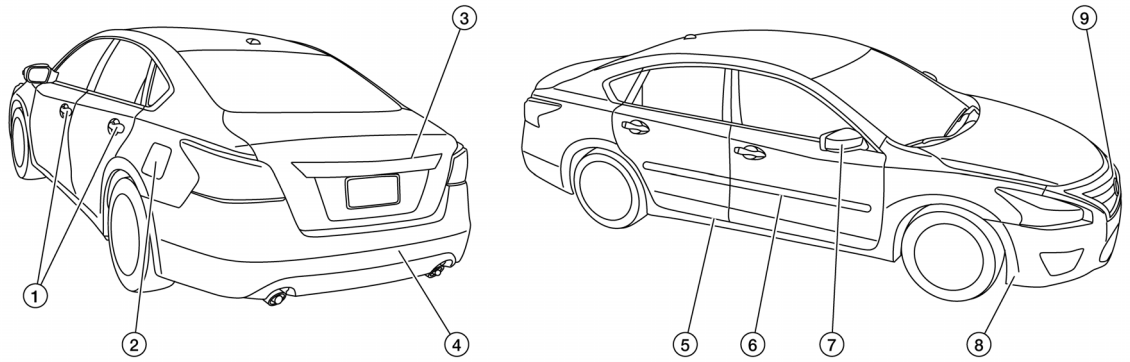

Component			Color code	CAJ	K23	KAH	KH3	NAH	QAB	RBD	KBC
			Description	Brown	Silver	Beige	Black	Red	White	Blue	Grey
			Paint type	M	M	M	S	M	P	M	M
			Hard clear coat	t	t	t	t	t	t	t	t
1	Outside door handles		Chromium plate	CR2P	CR2P	CR2P	CR2P	CR2P	CR2P	CR2P	CR2P
2	Fuel filler lid		Body color	CAJ	K23	KAH	KH3	NAH	QAB	RBD	KBC
3	License plate finisher		Chromium plate	CR2P	CR2P	CR2P	CR2P	CR2P	CR2P	CR2P	CR2P
4	Rear bumper fascia		Body color	CAJ	K23	KAH	KH3	NAH	QAB	RBD	KBC
5	Lower rocker finisher		Body color	CAJ	K23	KAH	KH3	NAH	QAB	RBD	KBC
6	Body side molding		Body color	CAJ	K23	KAH	KH3	NAH	QAB	RBD	KBC
7	Door outside mirror	Cover	Body color	CAJ	K23	KAH	KH3	NAH	QAB	RBD	KBC
8	Front bumper fascia		Body color	CAJ	K23	KAH	KH3	NAH	QAB	RBD	KBC
9	Radiator grille	Center	Black	KH3	KH3	KH3	KH3	KH3	KH3	KH3	KH3
		Surround	Chromium plate	CR2P	CR2P	CR2P	CR2P	CR2P	CR2P	CR2P	CR2P

M = Metallic, S = Solid, 2S = Solid and Clear, 2P = 2-Coat Pearl, 3P = 3-Coat Pearl, PM = Pearl Metallic, t = Primerless Diamond Clear coat, Black is solvent based, all others are water based.

PRECAUTION

PRECAUTIONS

Precaution for Supplemental Restraint System (SRS) "AIR BAG" and "SEAT BELT PRE-TENSIONER"

INFOID:0000000008777873

The Supplemental Restraint System such as “AIR BAG” and “SEAT BELT PRE-TENSIONER”, used along with a front seat belt, helps to reduce the risk or severity of injury to the driver and front passenger for certain types of collision. Information necessary to service the system safely is included in the SR and SB section of this Service Manual.

WARNING:

- **To avoid rendering the SRS inoperative, which could increase the risk of personal injury or death in the event of a collision which would result in air bag inflation, all maintenance must be performed by an authorized NISSAN/INFINITI dealer.**
- **Improper maintenance, including incorrect removal and installation of the SRS, can lead to personal injury caused by unintentional activation of the system. For removal of Spiral Cable and Air Bag Module, see the SR section.**
- **Do not use electrical test equipment on any circuit related to the SRS unless instructed to in this Service Manual. SRS wiring harnesses can be identified by yellow and/or orange harnesses or harness connectors.**

PRECAUTIONS WHEN USING POWER TOOLS (AIR OR ELECTRIC) AND HAMMERS

WARNING:

- **When working near the Airbag Diagnosis Sensor Unit or other Airbag System sensors with the Ignition ON or engine running, DO NOT use air or electric power tools or strike near the sensor(s) with a hammer. Heavy vibration could activate the sensor(s) and deploy the air bag(s), possibly causing serious injury.**
- **When using air or electric power tools or hammers, always switch the Ignition OFF, disconnect the battery and wait at least 3 minutes before performing any service.**

PRECAUTIONS IN REPAIRING HIGH STRENGTH STEEL

High Strength Steel (HSS)

INFOID:0000000007988525

High strength steel is used for body panels in order to reduce vehicle weight.
Accordingly, precautions in repairing automotive bodies made of high strength steel are described below:

Tensile strength	Nissan/Infiniti designation	Major applicable parts
373 N/mm^2 (38kg/mm^2,54klb/sq in)	SP130	• Front side member assembly • Hoodledge assembly • Upper dash • Front pillar reinforcement assembly • Rear side member assembly • Other reinforcements

SP130 is the most commonly used HSS.

Read the following precautions when repairing HSS:

1. Additional points to consider
   - The repair of reinforcements (such as side members) by heating is not recommended since it may weaken the component. When heating is unavoidable, do not heat HSS parts above 550°C (1,022°F).
     Verify heating temperature with a thermometer.
     (Crayon-type and other similar type thermometer are appropriate.)

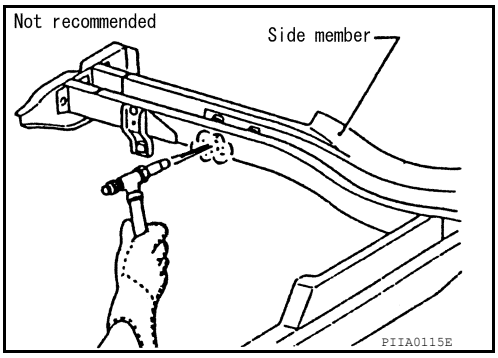

   - When straightening body panels, use caution in pulling any HSS panel. Because HSS is very strong, pulling may cause deformation in adjacent portions of the body. In this case, increase the number of measuring points, and carefully pull the HSS panel.

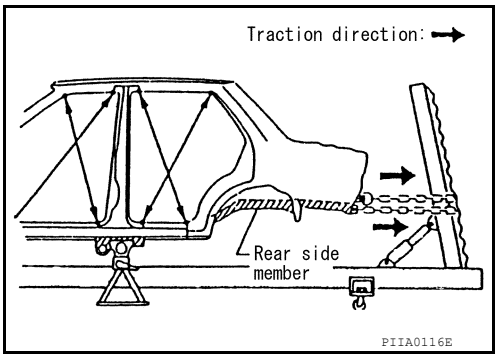

   - When cutting HSS panels, avoid gas (torch) cutting if possible. Instead, use a saw to avoid weakening surrounding areas due to heat. If gas (torch) cutting is unavoidable, allow a minimum margin of 50 mm (1.97in).

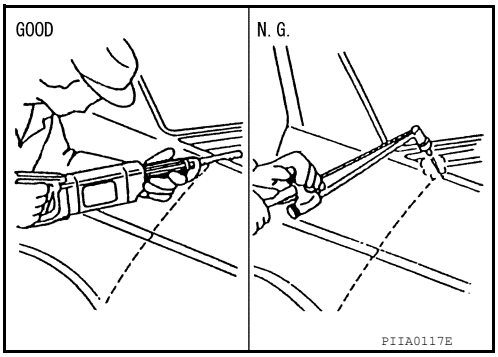

- When welding HSS panels, use spot welding whenever possible in order to minimize weakening surrounding areas due to heat.
  If spot welding is impossible, use M.I.G. welding. Do not use gas (torch) welding because it is inferior in welding strength.

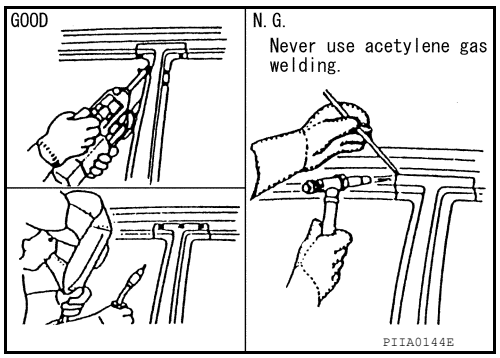

- The spot weld on HSS panels is harder than that of an ordinary steel panel.
  Therefore, when cutting spot welds on a HSS panel, use a low speed high torque drill (1,000 to 1,200 rpm) to increase drill bit durability and facilitate the operation.

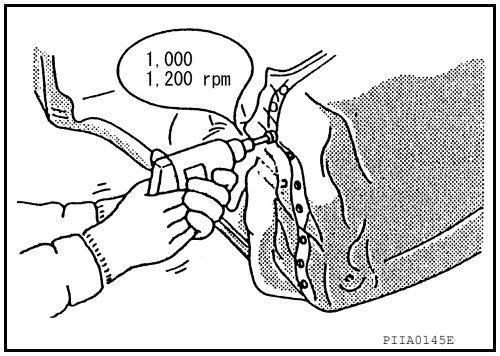

2. Precautions in spot welding HSS
   This work should be performed under standard working conditions. Always note the following when spot welding HSS:
   - The electrode tip diameter must be sized properly according to the metal thickness.

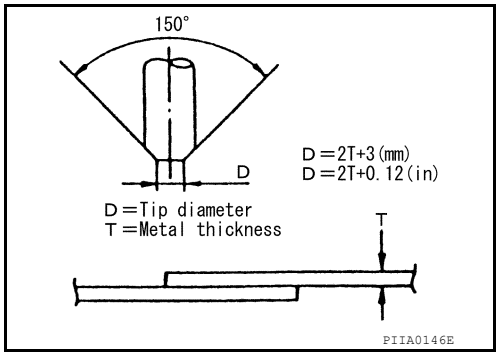

- The panel surfaces must fit flush to each other, leaving no gaps.

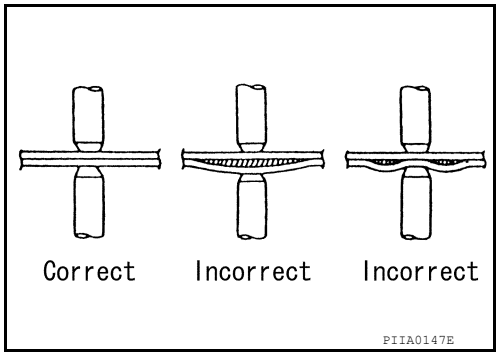

- Follow the specifications for the proper welding pitch.

Unit: mm (in)

Thickness (T)	Minimum pitch (L)
0.6 (0.024)	10 (0.39) or over
0.8 (0.031)	12 (0.47) or over
1.0 (0.039)	18 (0.71) or over
1.2 (0.047)	20 (0.79) or over
1.6 (0.063)	27 (1.06) or over
1.8 (0.071)	31 (1.22) or over

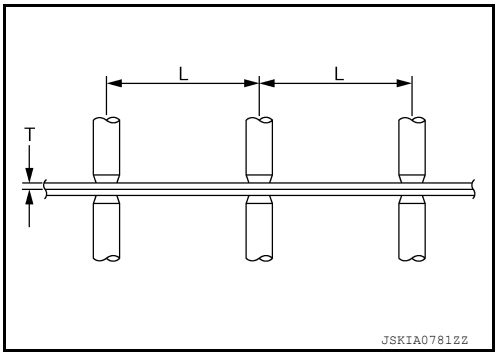

Handling of Ultra High Strength Steel Plate Parts

INFOID:0000000008674463

PROHIBITION OF CUT AND CONNECTION

Do not cut and join the lower lock pillar reinforcement (center pillar reinforcement inside frame parts) because its material is high strength steel plate (ultra high strength steel plate).
The center pillar reinforcement must be replaced if this part is damaged.

PREPARATION

REPAIRING MATERIAL

Foam Repair

INFOID:0000000007988538

During factory assembly, foam insulators are installed in certain body panels and locations around the vehicle. Use the following procedure(s) to replace any factory-installed foam insulators.

URETHANE FOAM APPLICATIONS

Use commercially available Urethane foam for sealant (foam material) repair of material used on vehicle.

<Urethane foam for foaming agent>	**3M™ Automix™ Flexible Foam 08463 or equivalent**

Read instructions on product for fill procedures.

FILL PROCEDURES

Example of foaming agent filling operation procedure:

1. Fill procedures after installation of service part.
a. Eliminate foam material remaining on vehicle side.
b. Clean area after eliminating form insulator and foam material.
c. Install service part.
d. Insert nozzle into hole (A) near fill area and fill foam material (1) or fill enough to close gap with the service part.

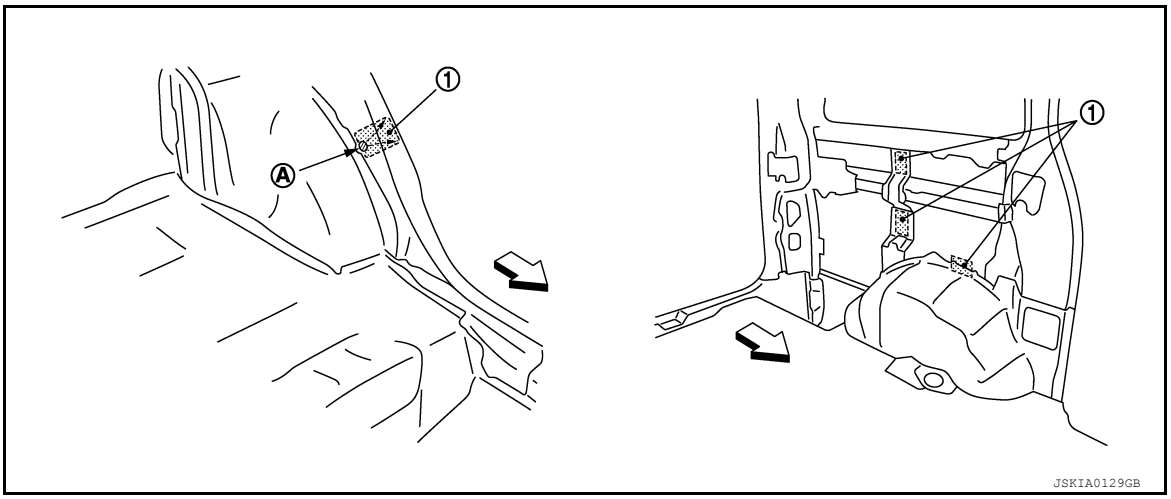

1. Urethane foam A. Nozzle insert hole ⇦ Front

2. Fill procedures before installation of service part:
a. Eliminate foam material remaining on vehicle side.
b. Clean area after eliminating foam insulator and foam material.
c. Fill with enough foam material on the wheelhouse outer side to close the gap with the service part while avoiding the flange area.

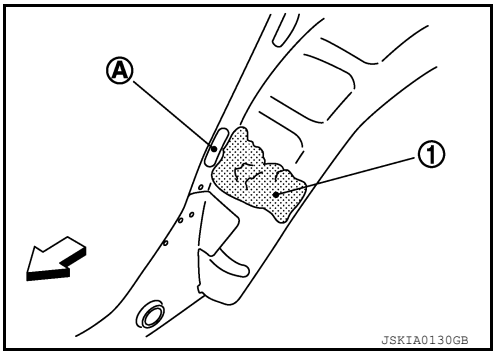

1. Urethane foam
A. Fill while avoiding flange area

⇦: Front

d. Install service part.
NOTE:
Refer to the label on the urethane foam container for information on working times.

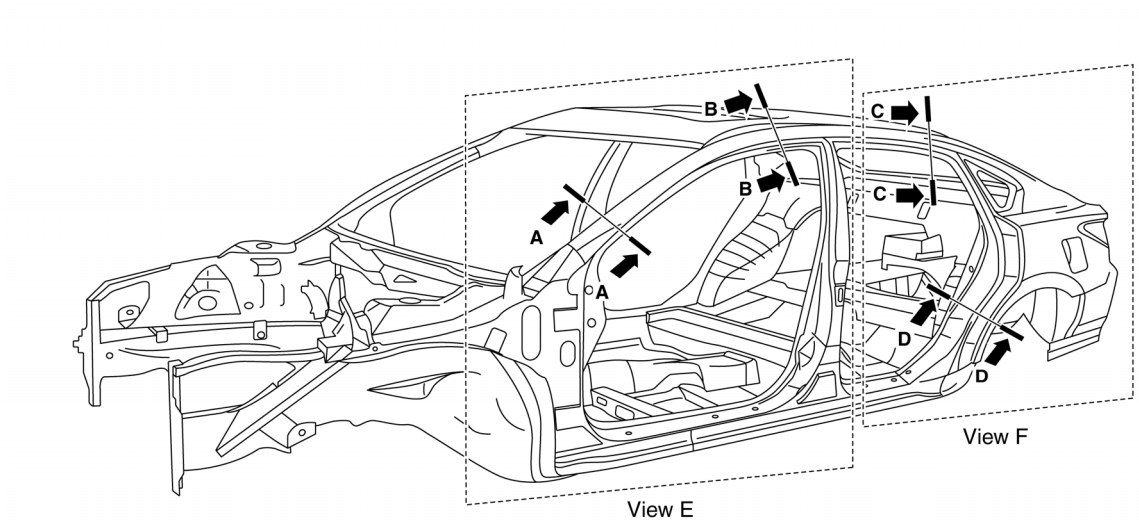

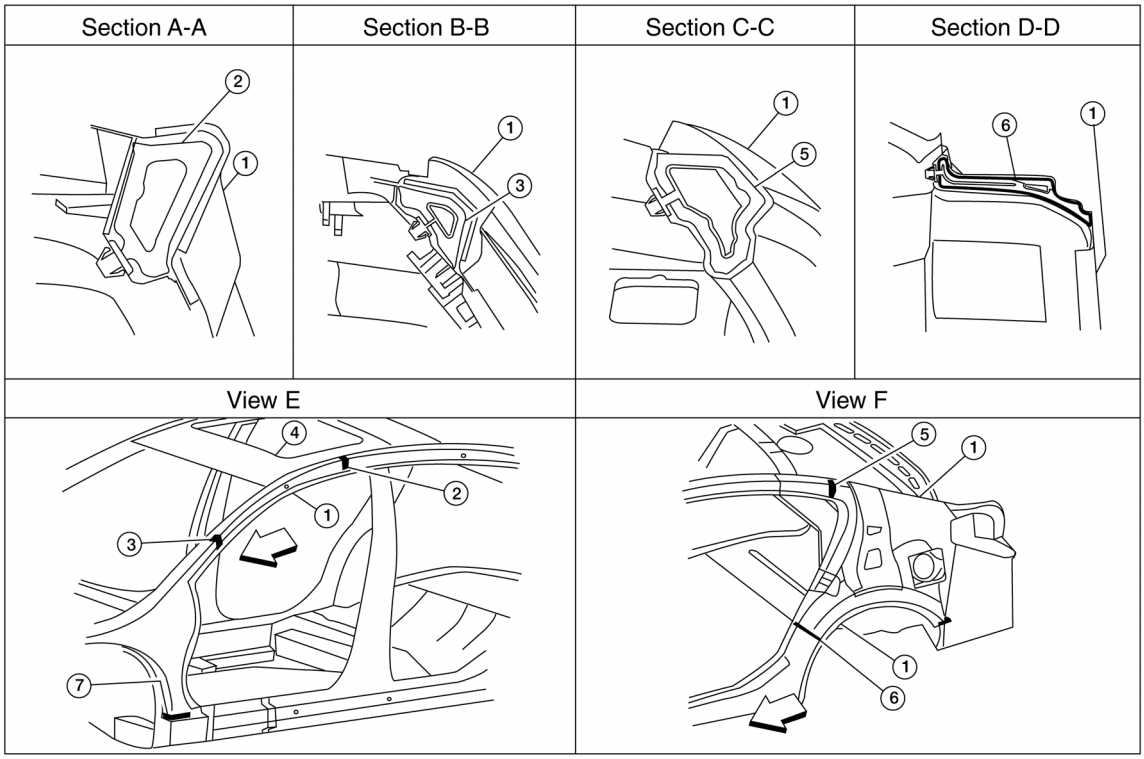

ALKIA2576GB

1. Body side outer
2. Body side insulation (foam) front pillar
3. Body side insulation (foam) roof side rail
4. Roof panel assembly
5. Body side insulation (foam) rear pillar
6. Body side insulation (foam) rear pillar lower
7. Body side insulation strip, front pillar lower reinforcement

⇦ Front

BODY COMPONENT PARTS

Underbody Component Parts

INFOID:0000000007988510

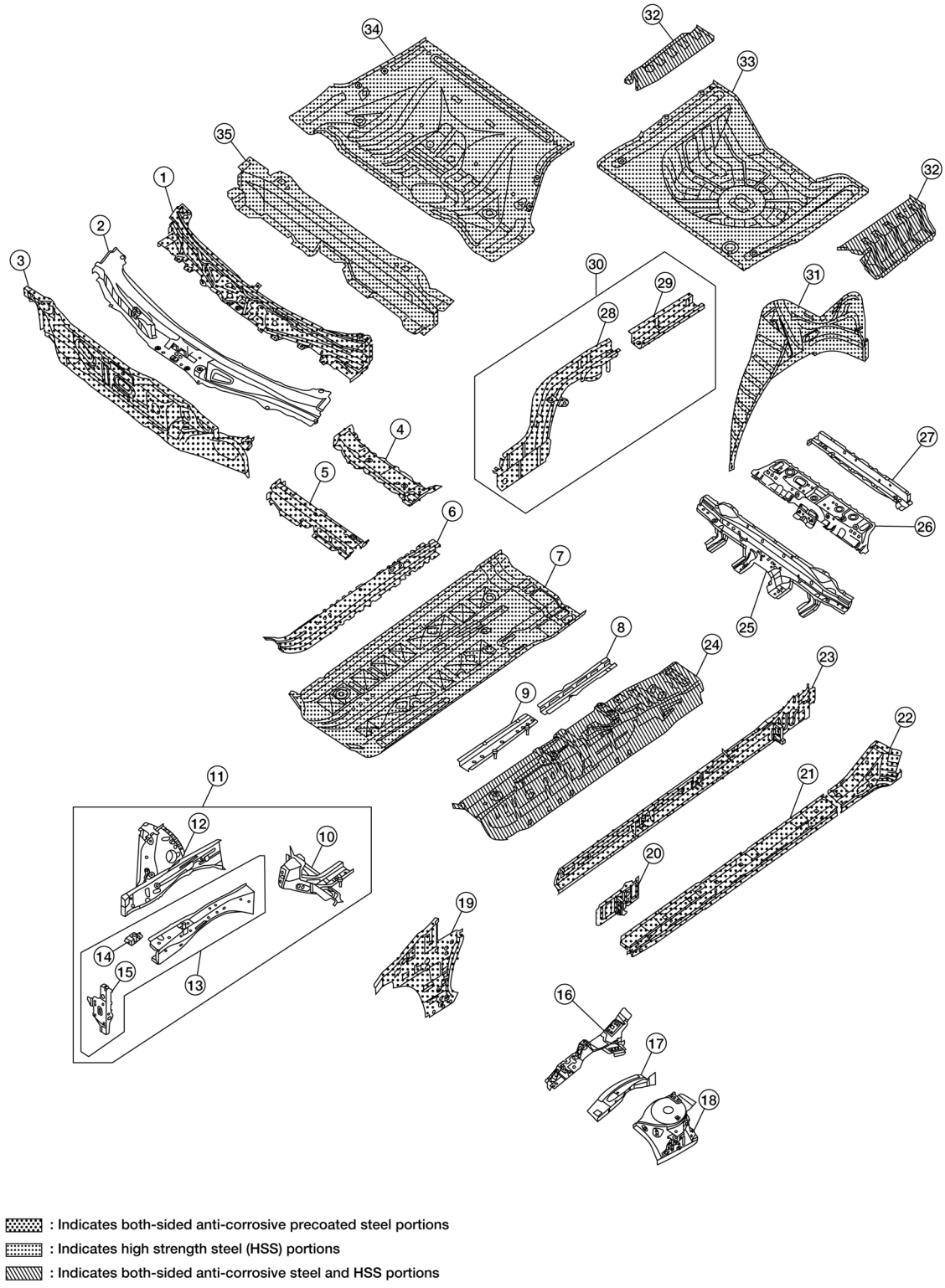

1. Upper dash assembly
2. Air box assembly
3. Lower dash assembly
4. Rear crossmember (RH, LH)
5. Front crossmember (RH, LH)
6. Front side member reinforcement upper (RH, LH)

7. Front floor assembly (RH, LH)
8. Front side member center extension (RH, LH)
9. Front side member reinforcement lower (RH, LH)
10. Front side member rear extension (RH, LH)
11. Front side member assembly (RH, LH)
12. Closing plate assembly (RH, LH)
13. Front side member sub-assembly (RH, LH)
14. Front suspension mounting bracket (RH, LH)
15. Radiator core side support (RH, LH)
16. Hoodledge reinforcement assembly (RH, LH)
17. Upper hoodledge (RH, LH)
18. Lower rear hoodledge assembly
19. Dash side (RH, LH)
20. Outer sill support bracket (RH, LH)
21. Outer sill (RH, LH)
22. Rear sill outer reinforcement (RH, LH)
23. Inner sill (RH, LH)
24. Front floor center
25. Rear seat crossmember assembly
26. Lower rear seat crossmember
27. Rear center crossmember
28. Rear side member (RH, LH)
29. Rear side member extension (RH, LH)
30. Rear side member assembly (RH, LH)
31. Rear wheel housing outer (RH, LH)
32. Rear floor rear side (RH, LH)
33. Rear floor rear
34. Rear floor front
35. Rear center crossmember assembly

Body Component Parts

INFOID:0000000007988511

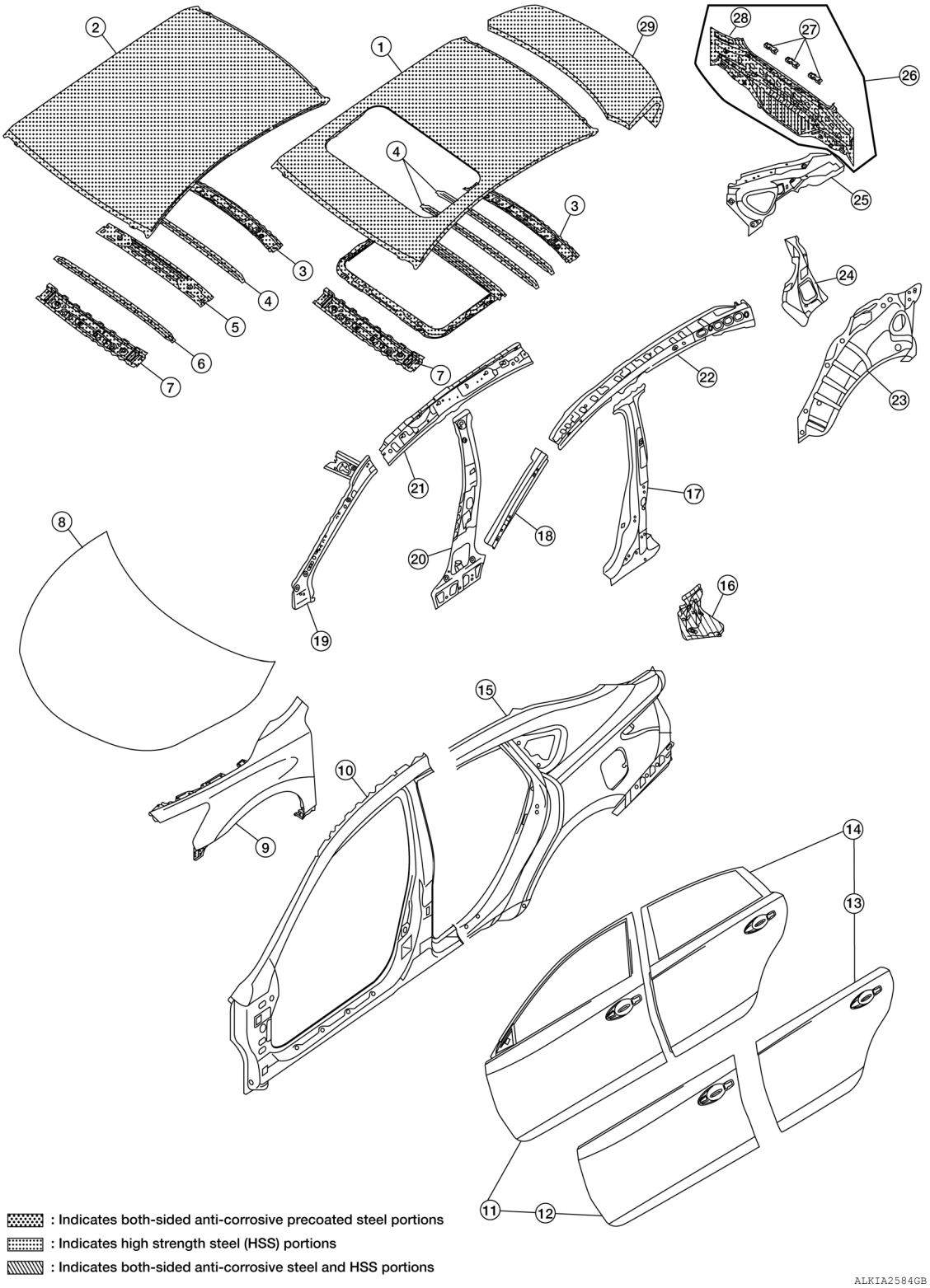

1. Moonroof panel assembly
2. Roof panel assembly
3. Rear roof rail
4. 3rd roof rail
5. 2nd roof rail
6. 1st roof rail
7. Front roof rail
8. Hood assembly
9. Fender (RH, LH)
10. Front body side outer (RH, LH)
11. Front door assembly (RH, LH)
12. Outer front door panel (RH, LH)
13. Outer rear door panel (RH, LH)
14. Rear door assembly (RH, LH)
15. Rear body side outer (RH, LH)

16. Rear fender corner (RH, LH)
17. Center pillar reinforcement (RH, LH)
18. Front pillar reinforcement (RH, LH)
19. Front pillar inner (RH, LH)
20. Center pillar inner (RH, LH)
21. Roof side rail inner (RH, LH)
22. Roof side rail reinforcement (RH, LH)
23. Rear wheel well housing outer (RH, LH)
24. Rear pillar reinforcement (RH, LH)
25. Rear pillar inner reinforcement (RH, LH)
26. Rear panel assembly
27. Rear bumper fascia bracket (RH, center, LH)
28. Rear panel
29. Trunk lid assembly

REMOVAL AND INSTALLATION

CORROSION PROTECTION

Description

INFOID:0000000007988512

To provide improved corrosion prevention, the following anti-corrosive measures have been implemented in NISSAN production plants. When repairing or replacing body panels, it is necessary to use the same anti-corrosive measures.

Anti-Corrosive Precoated Steel (Galvannealed Steel)

To improve repairability and corrosion resistance, a new type of anti-corrosive precoated steel sheet has been adopted replacing conventional zinc-coated steel sheet.
Galvannealed steel is electroplated and heated to form Zinc-iron alloy, which provides excellent and long term corrosion resistance with cationic electrodeposition primer.

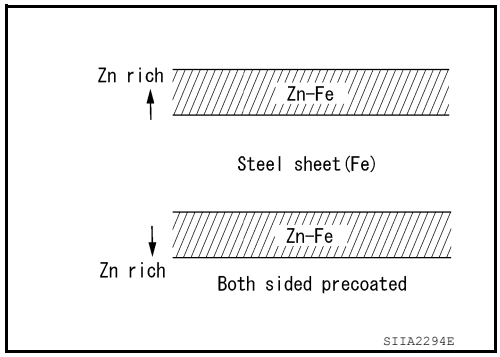

Nissan Genuine Service Parts are fabricated from galvannealed steel. Therefore, it is recommended that GENUINE NISSAN PARTS or equivalent be used for panel replacement to maintain the anti-corrosive performance built into the vehicle at the factory.

Phosphate Coating Treatment and Cationic Electrodeposition Primer

A phosphate coating treatment and a cationic electrodeposition primer, which provide excellent corrosion protection, are employed on all body components.

CAUTION:

Confine paint removal during welding operations to an absolute minimum.

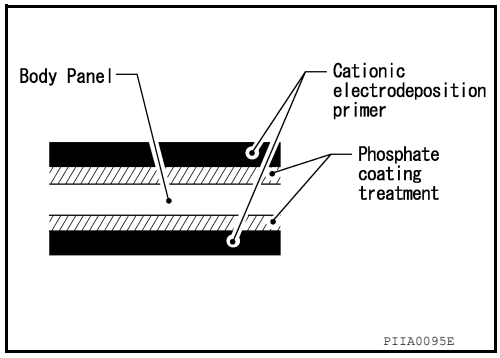

Nissan Genuine Service Parts are also treated in the same manner. Therefore, it is recommended that GENUINE NISSAN PARTS or equivalent be used for panel replacement to maintain anti-corrosive performance built into the vehicle at the factory.

Anti-Corrosive Wax

INFOID:0000000007988513

To improve corrosion resistance, anti-corrosive wax is applied inside the body sill and inside other closed sections. Accordingly, when replacing these parts, be sure to apply anti-corrosive wax to the appropriate areas of the new parts. Select an excellent anti-corrosive wax which will penetrate after application and has a long shelf life.

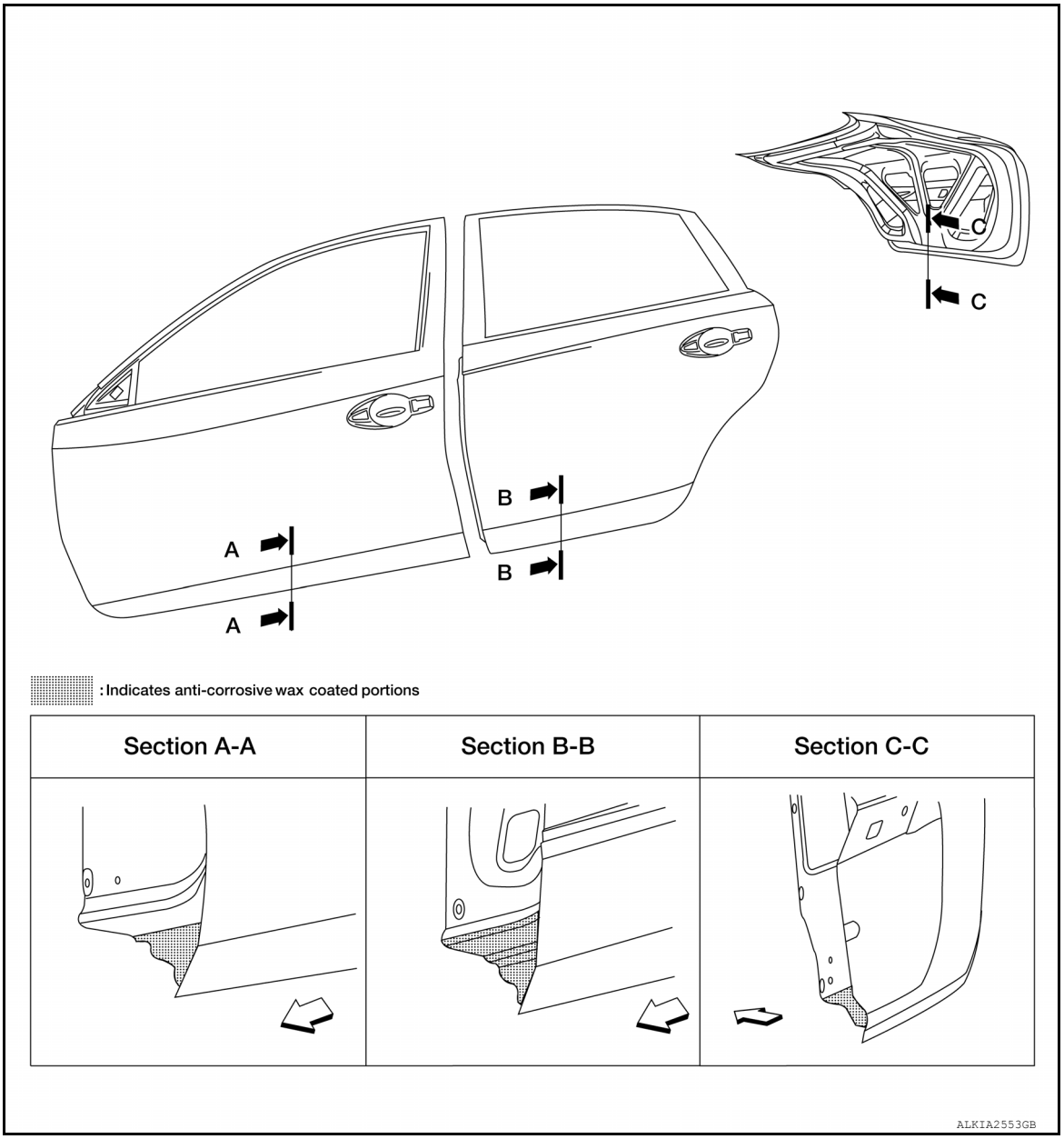

⇦ Front

Undercoating

INFOID:0000000007988514

The underside of the floor and wheelhouse are undercoated to prevent rust, vibration, noise and stone chipping. Therefore, when such a panel is replaced or repaired, apply undercoating to that part. Use an undercoating which is rust preventive, soundproof, vibration-proof, shock-resistant, adhesive, and durable.

Precautions in Undercoating

1. Do not apply undercoating to any place unless specified (such as the areas above the muffler and three way catalyst which are subjected to heat).
2. Do not undercoat the exhaust pipe or other parts which become hot.
3. Do not undercoat rotating parts.
4. Apply bitumen wax after applying undercoating.

5. After putting seal on the vehicle, put undercoating on it.

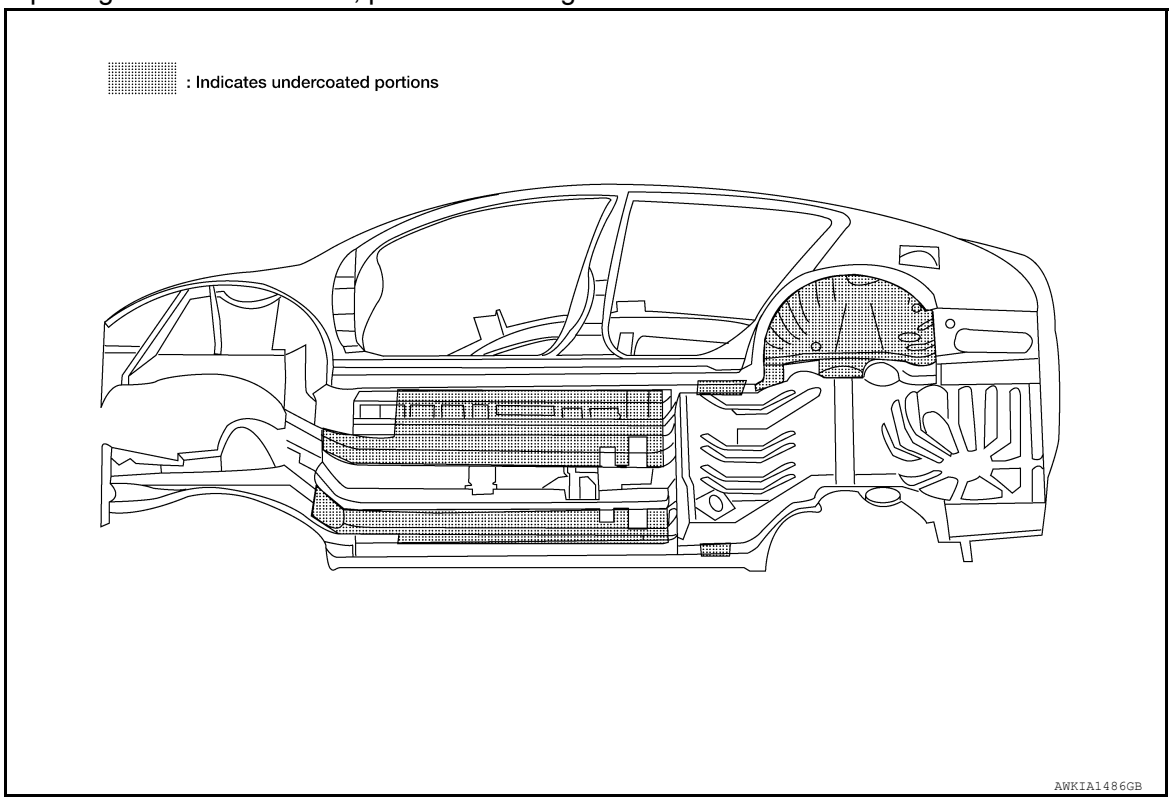

BODY SEALING

Description

INFOID:0000000007988516

The following figure shows the areas which are sealed at the factory. Sealant which has been applied to these areas should be smooth and free from cuts or gaps. Care should be taken not to apply an excess amount of sealant and not to allow other unaffected parts to come into contact with the sealant.

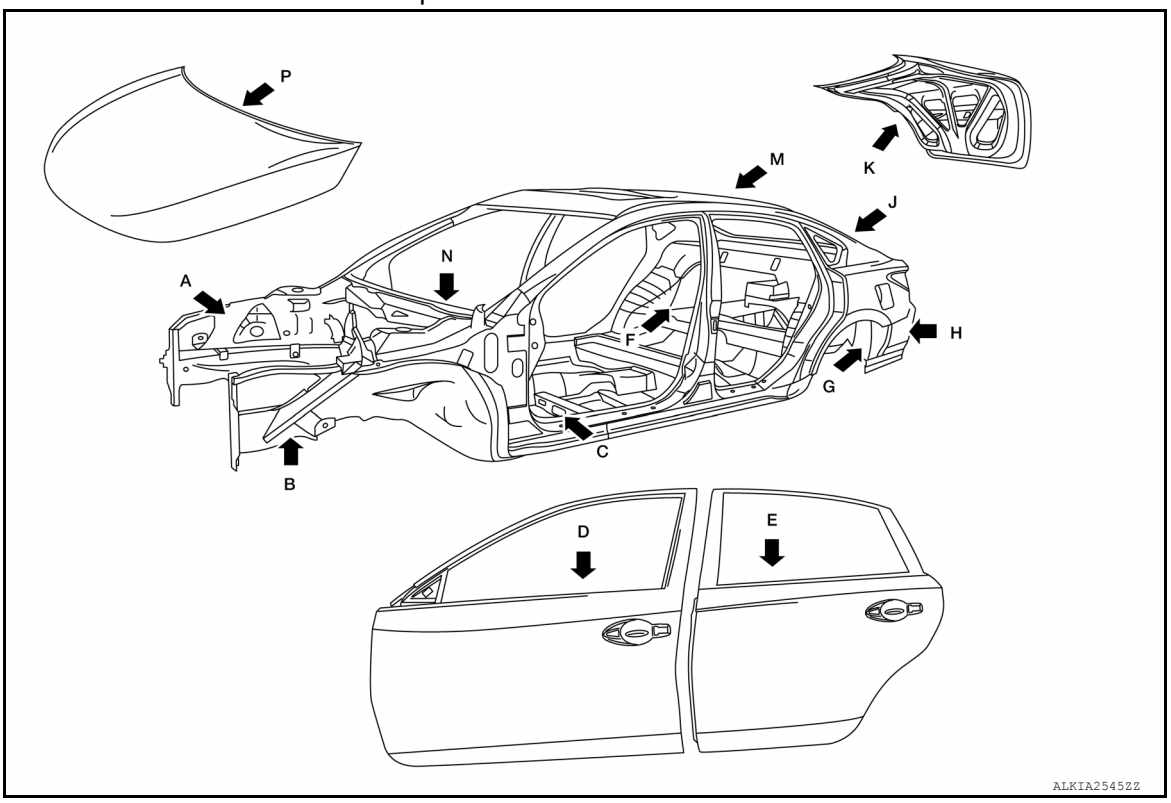

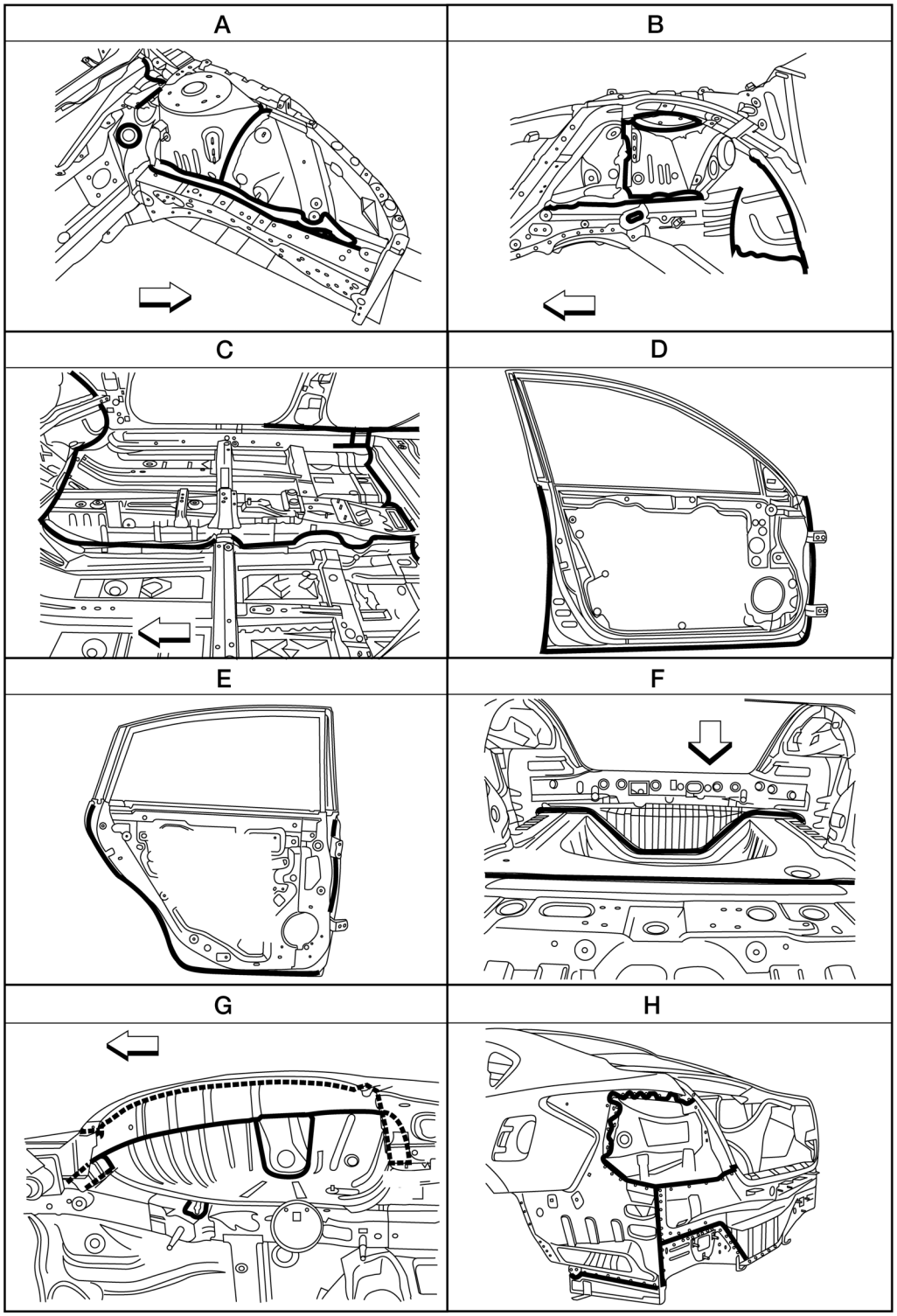

ALKIA2562ZZ

⇦ Front

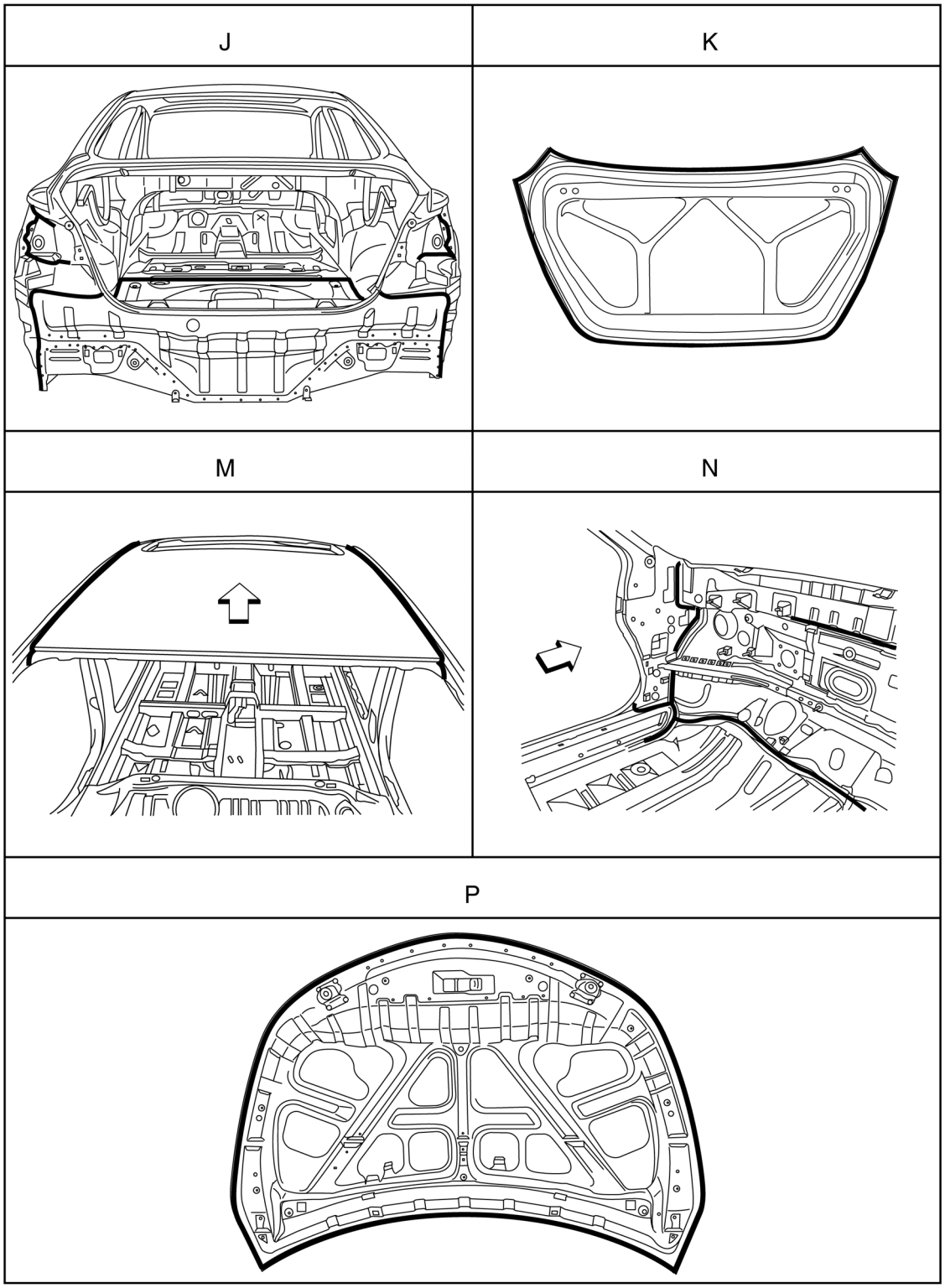

⇦ Front

REPLACEMENT OPERATIONS

Description

INFOID:0000000007988526

This section is prepared for technicians who have attained a high level of skill and experience in repairing collision-damaged vehicles and also use modern service tools and equipment. Persons unfamiliar with body repair techniques should not attempt to repair collision-damaged vehicles by using this section.

Technicians are also encouraged to read Body Repair Manual (Fundamentals) in order to ensure that the original functions and quality of the vehicle can be maintained. The Body Repair Manual (Fundamentals) contains additional information, including cautions and warning, that are not including in this manual. Technicians should refer to both manuals to ensure proper repairs.

Please note that these information are prepared for worldwide usage, and as such, certain procedures might not apply in some regions or countries.

The symbols used in this section for cutting and welding/brazing operations are shown below.

Saw cut or air chisel cut	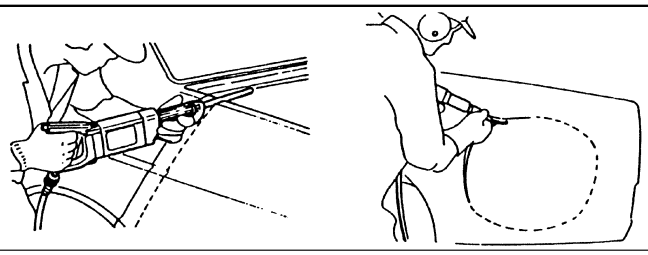
Spot weld: 2-spot welds	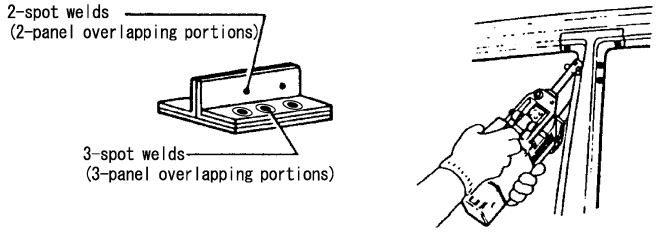
Spot weld: 3-spot welds	
MIG plug weld	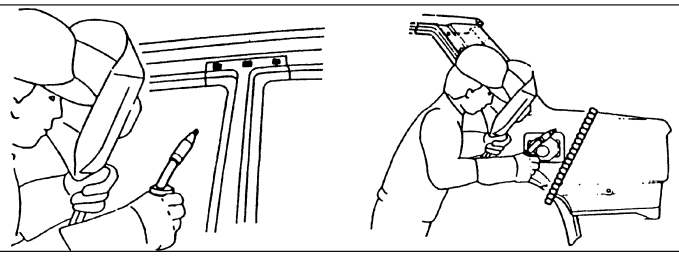
MIG seam weld/ Point weld	
Brazing	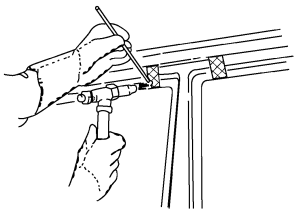
Soldering	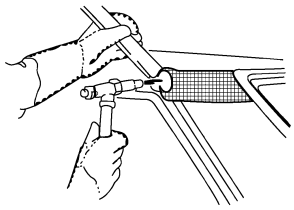
Sealing	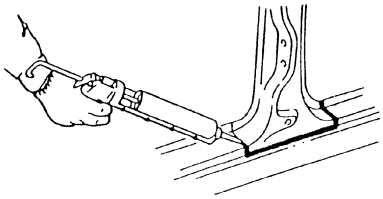

PIIA0149E

- Front pillar butt joint can be determined anywhere within shaded area as shown in the figure. The best location for the butt joint is at position A due to the construction of the vehicle. Refer to the front pillar section.

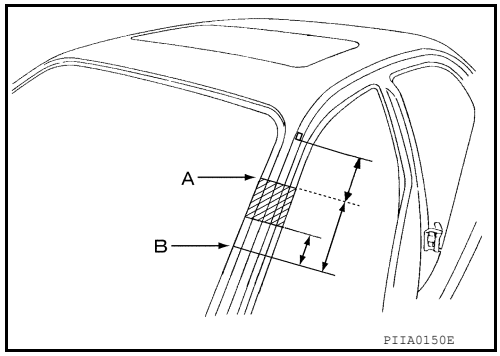

- Determine cutting position and record distance from the locating indent. Use this distance when cutting the service part. Cut outer front pillar over 60 mm above inner front pillar cut position.

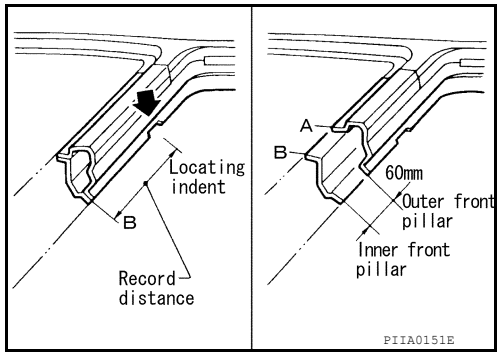

- Prepare a cutting jig to make outer pillar easier to cut. Also, this will permit service part to be accurately cut at joint position.

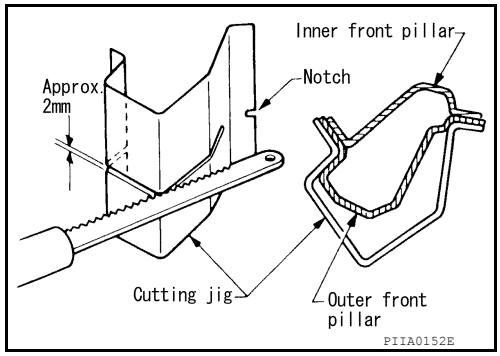

- An example of cutting operation using a cutting jig is as follows.

1. Mark cutting lines.
   A: Cut position of outer pillar
   B: Cut position of inner pillar
2. Align cutting line with notch on jig. Clamp jig to pillar.
3. Cut outer pillar along groove of jig. (At position A)
4. Remove jig and cut remaining portions.
5. Cut inner pillar at position B in same manner.

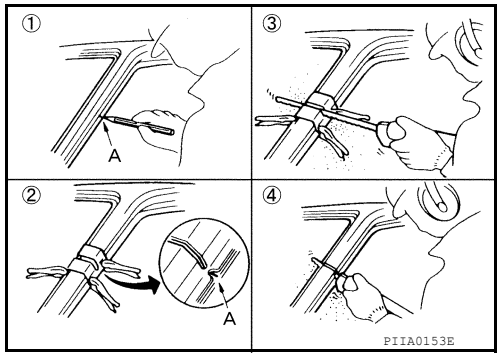

Hoodledge

INFOID:0000000007988527

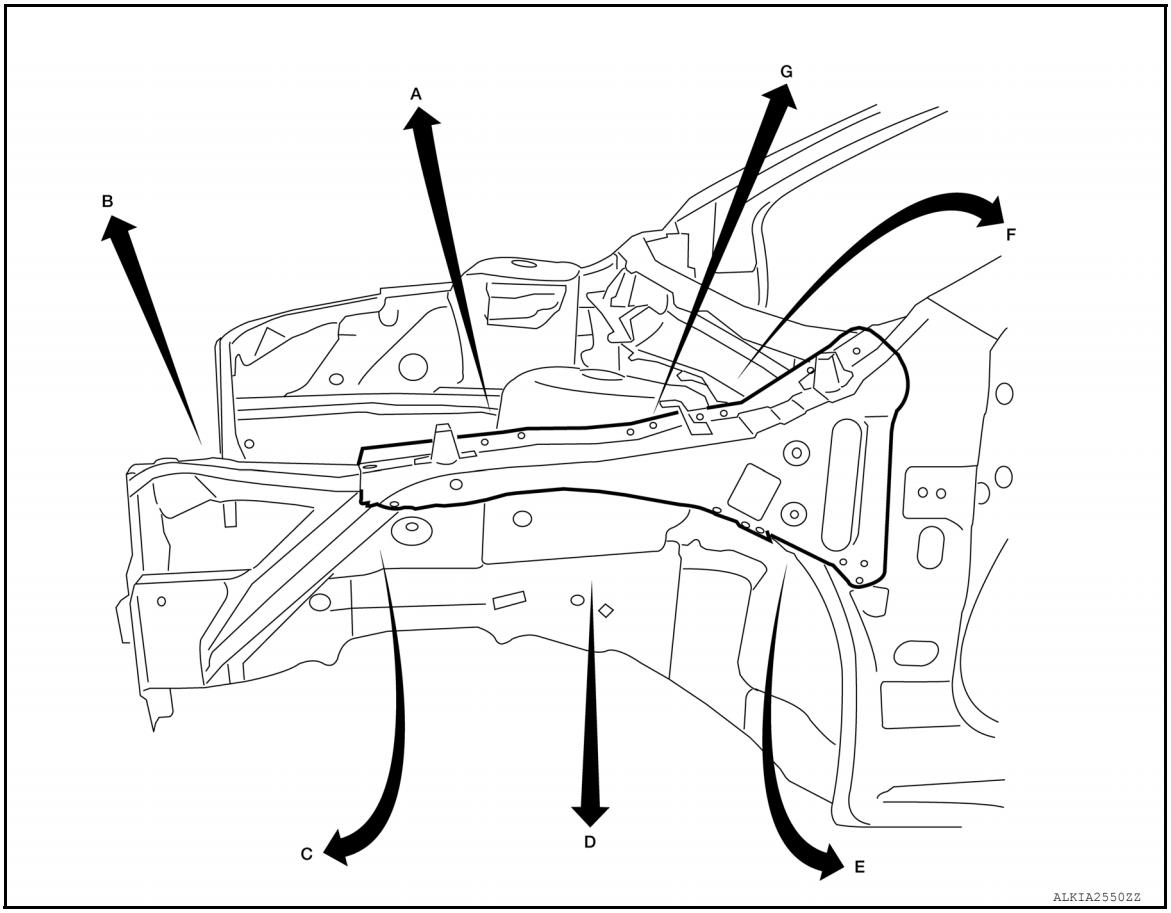

Change parts

- Front strut housing (LH)
- Hoodledge connector
- Upper front hoodledge
- Radiator core support upper
- Hoodledge reinforcement
- Hoodledge reinforcement rear

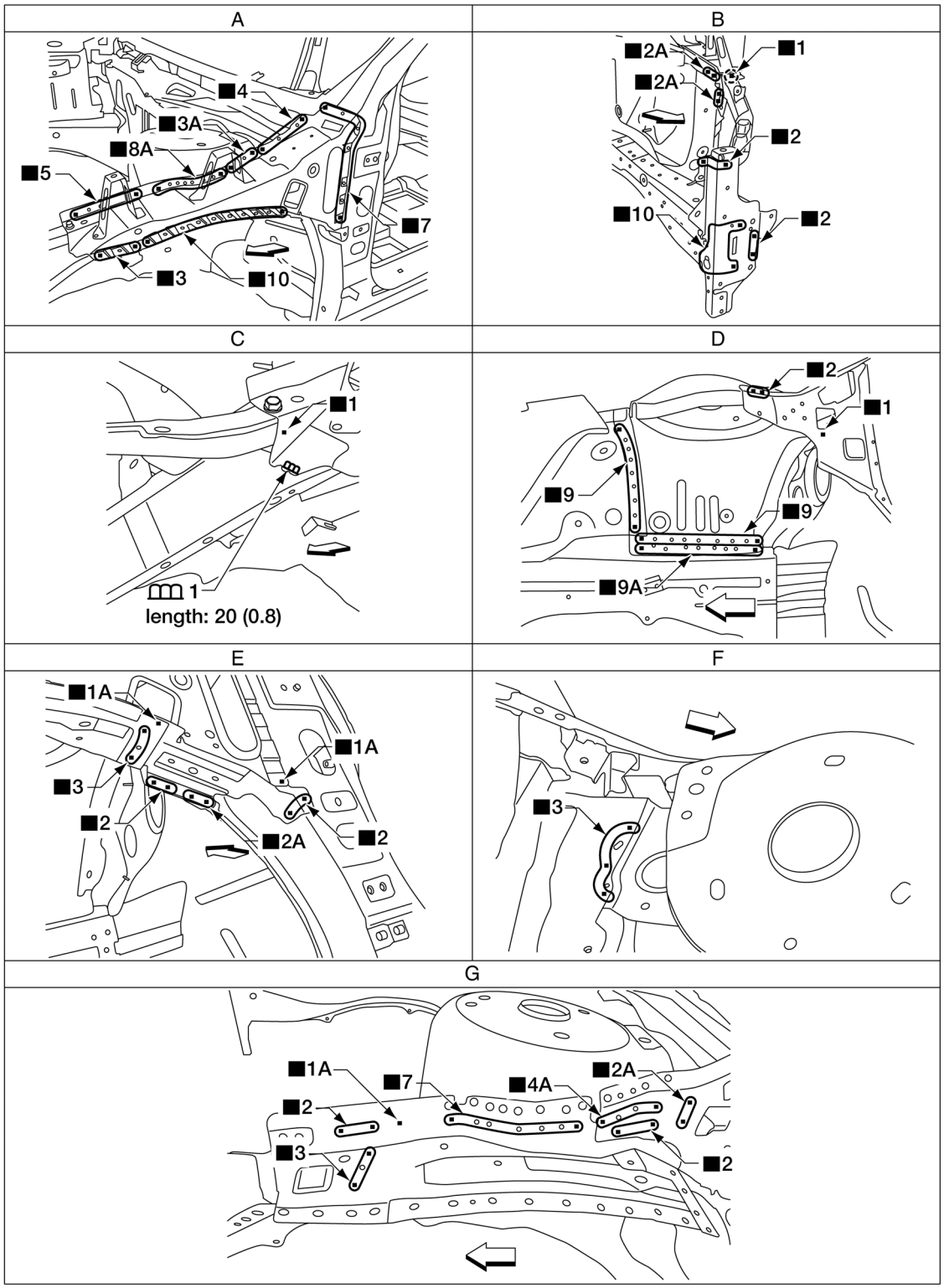

Unit: mm (in)

⇦ Front

Front Side Member (Partial Replacement)

INFOID:0000000007988529

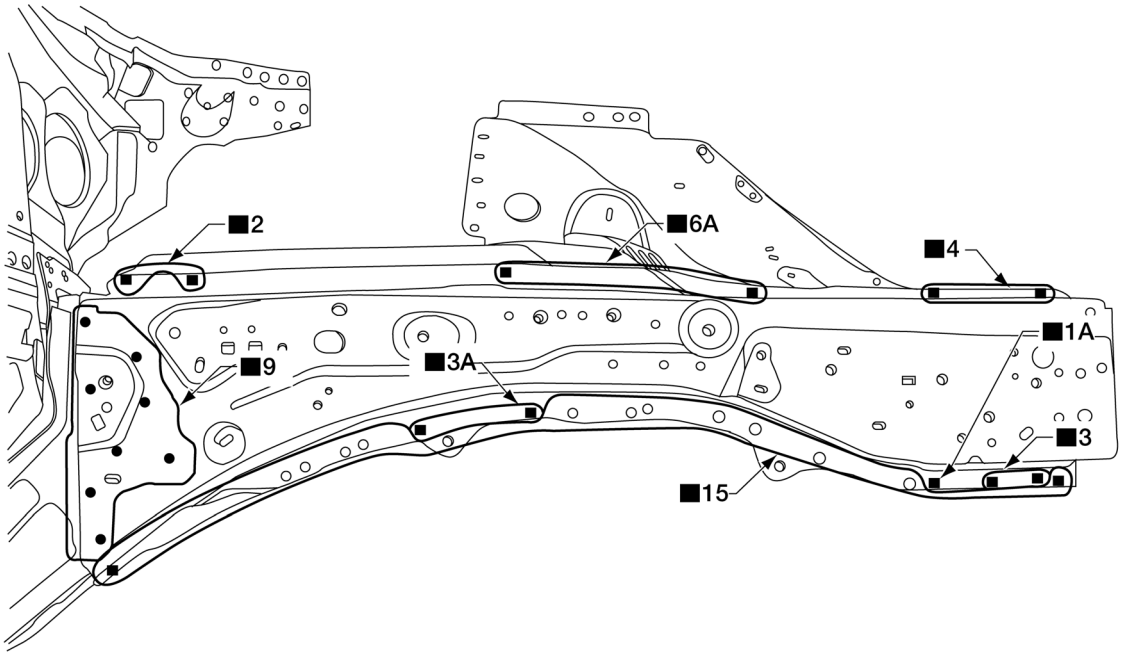

ALKIA2585ZZ

Change parts

- Front side member front assembly

Front Pillar

INFOID:0000000007988530

OUTER

- Work after hoodledge and hoodledge reinforcement rear has been removed.

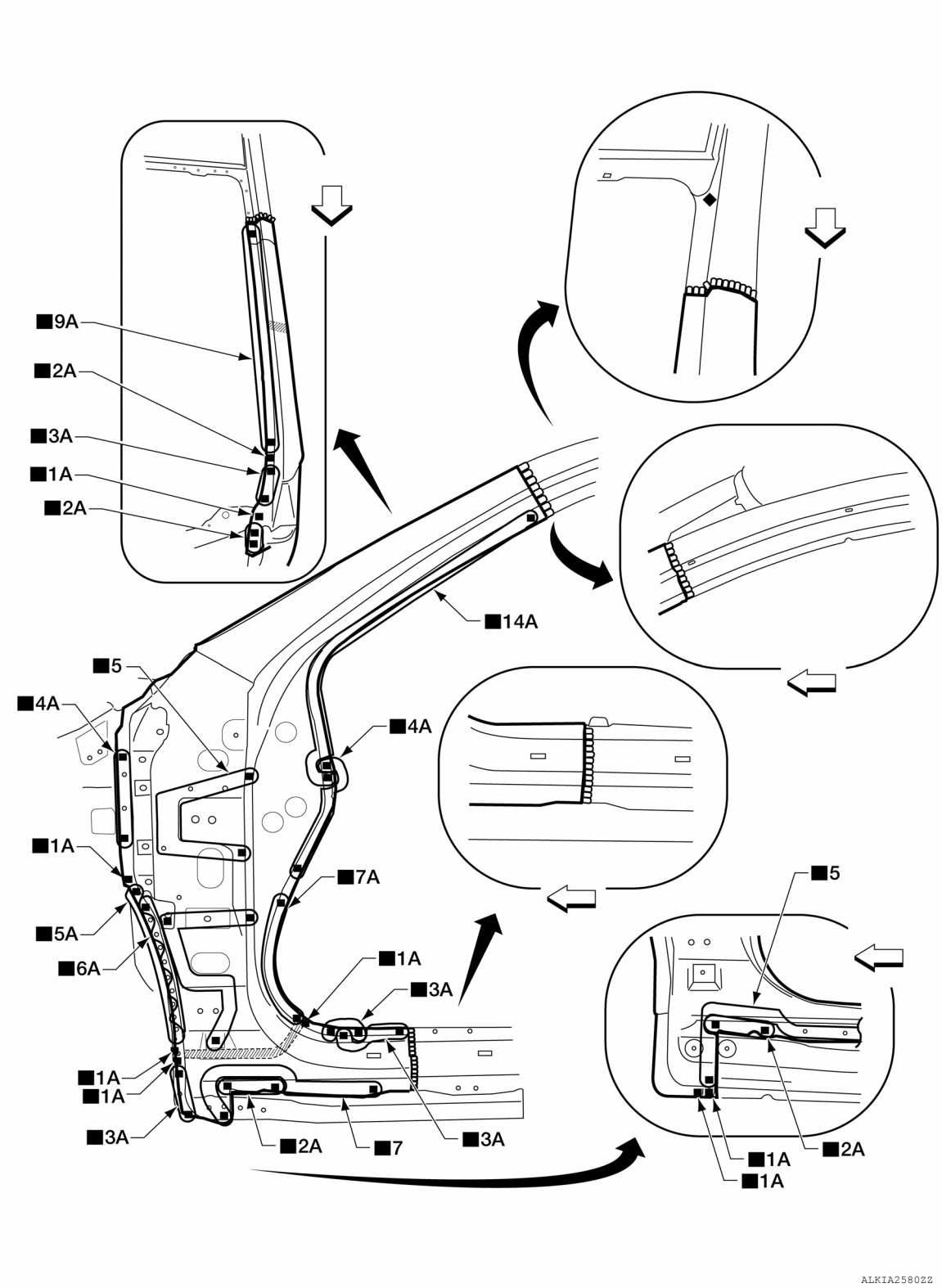

Change parts

- Front pillar section of body side outer A. Recommended sectioning location ⇦ Front

REINFORCEMENT

- Work after front pillar outer has been removed.

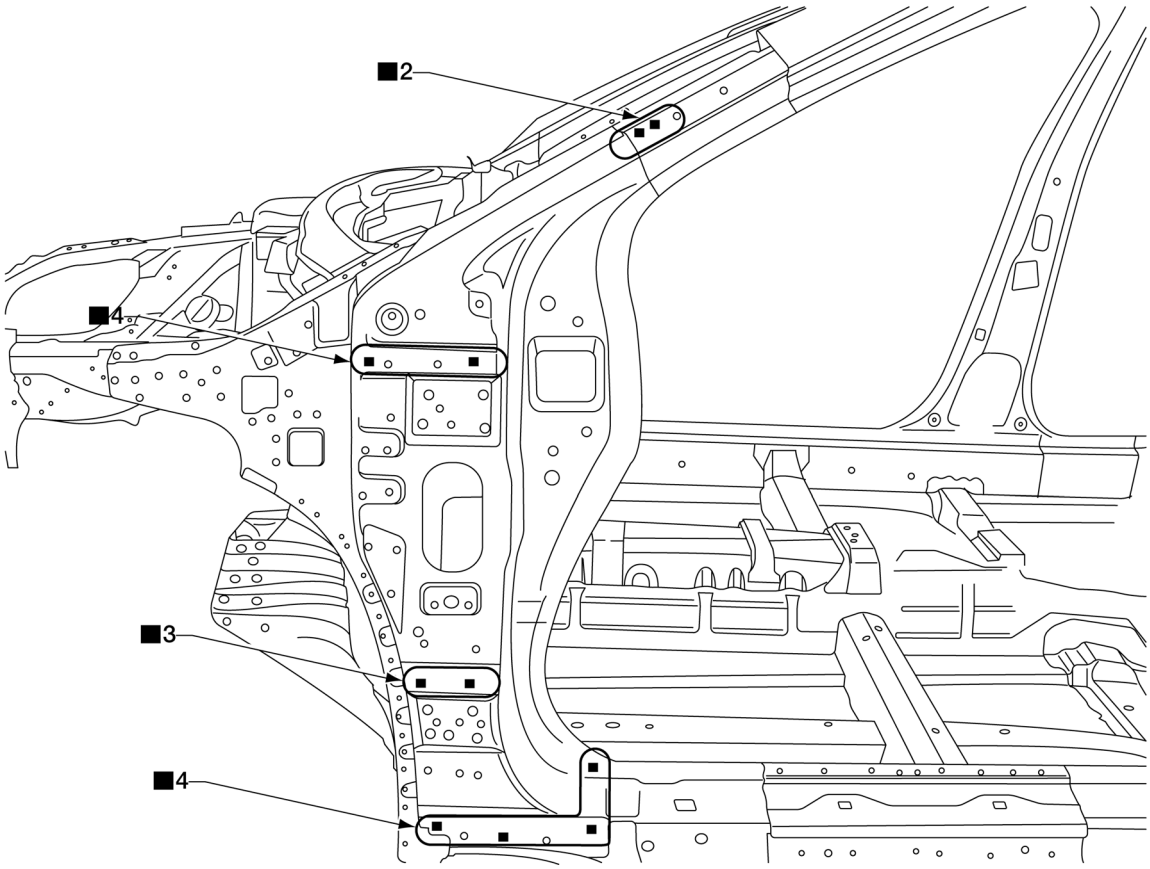

ALKIA2582ZZ

Change parts

- Front pillar reinforcement

INNER

- Work after front pillar reinforcement has been removed.

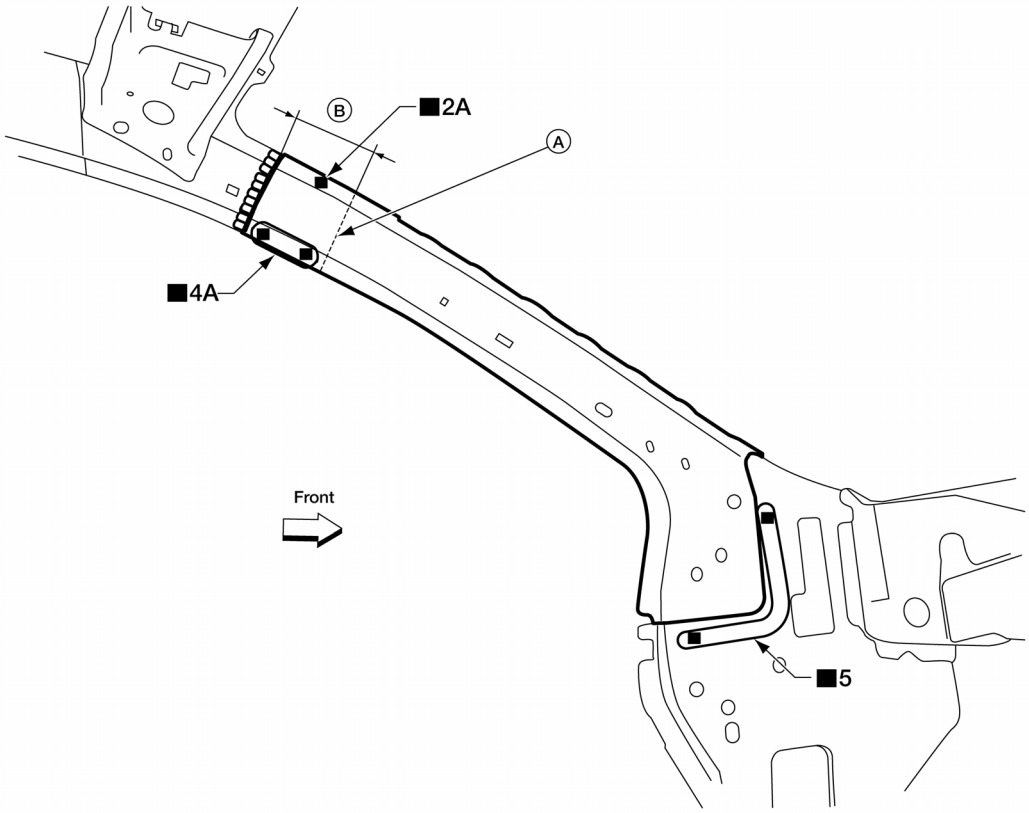

AWKIA2033ZZ

Change parts

- Front pillar inner reinforcement

A. Original panel cut line

B. 75 mm (2.95 in)

Dash Side

INFOID:0000000007988531

Work with front pillar reinforcement removed.

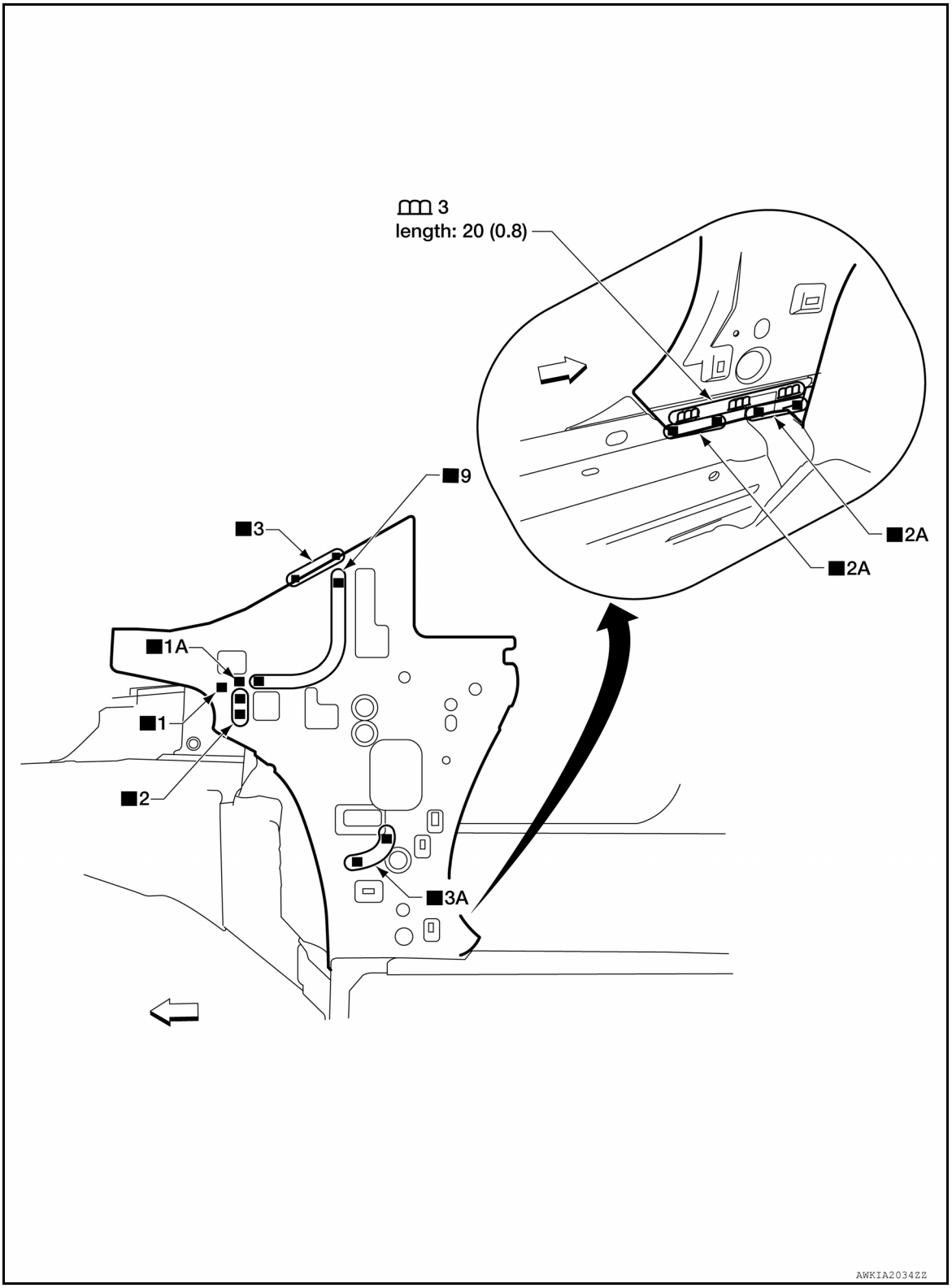

Unit: mm (in)

Change parts

- Dash side

Front

Center Pillar

INFOID:0000000007988532

OUTER

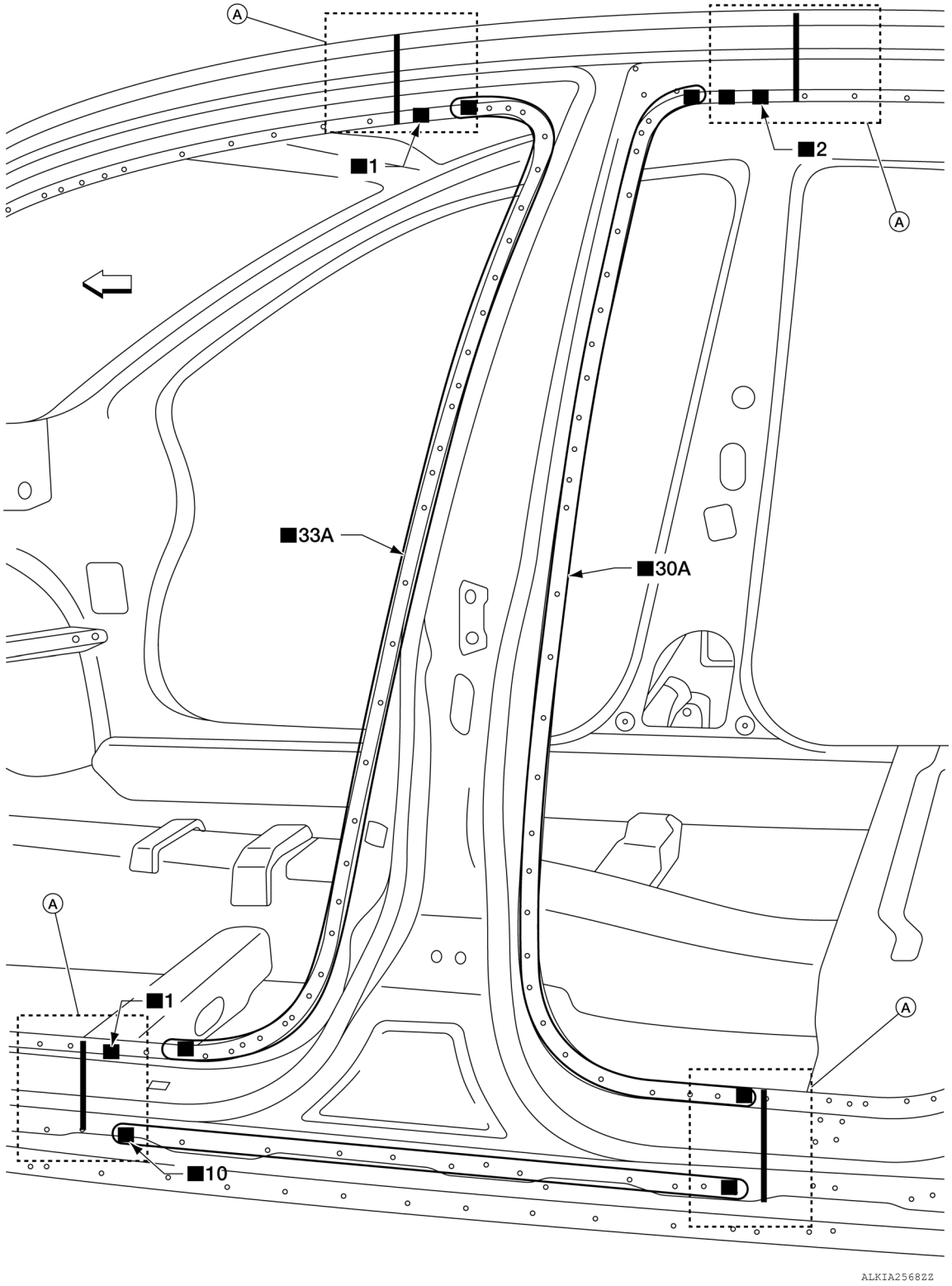

Change parts

A. Center pillar portion of body side outer recommended sectioning area.

⇦ Front

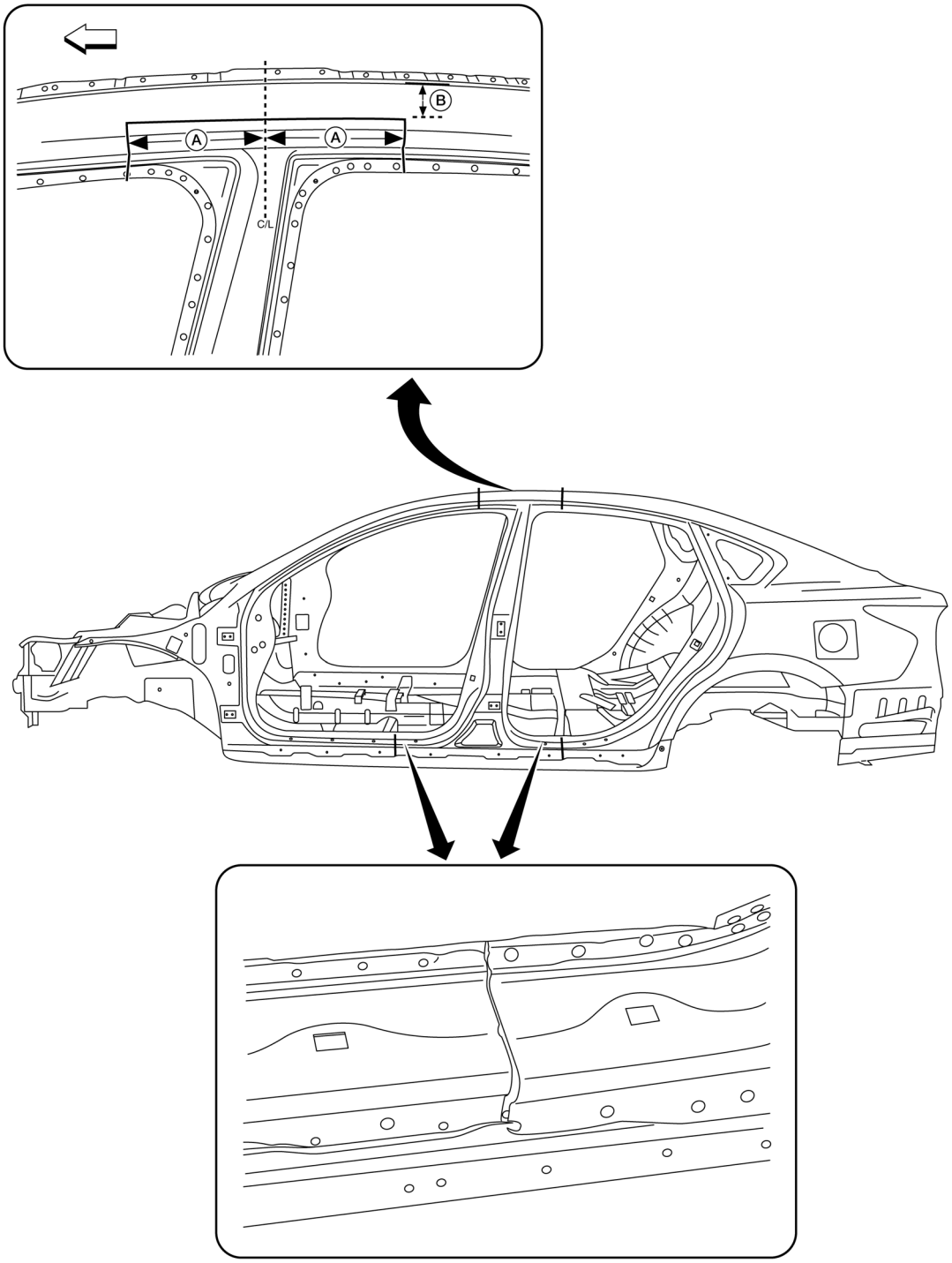

Change parts

A. 140 mm (5.5 in)
B. 45 mm (1.8 in)
⇦ Front

Removal

1. Use a cut off wheel to make pre-measured cut in upper center pillar outer body side.

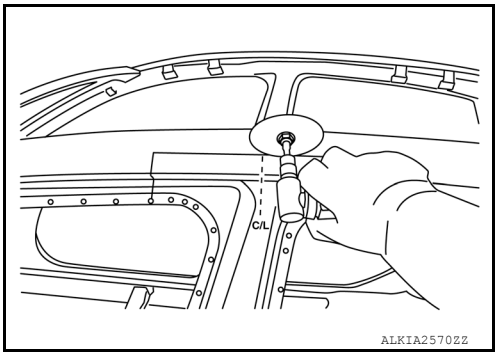

2. Cut the rocker area A between the sill plate holes B on the lower center pillar outer body side.

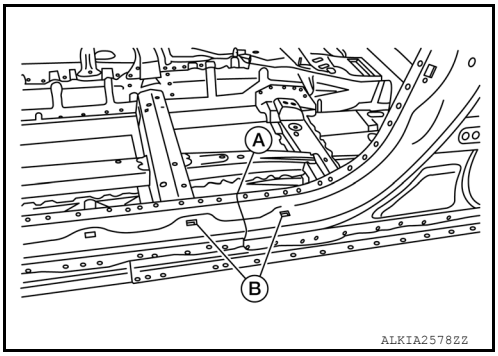

3. Drill spot welds that attach the center pillar outer body side. Only drill through the outer panel.

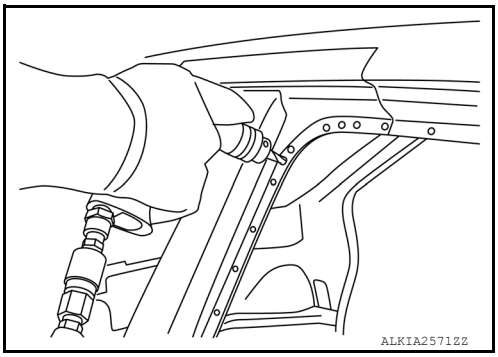

4. Remove the center pillar outer body side.

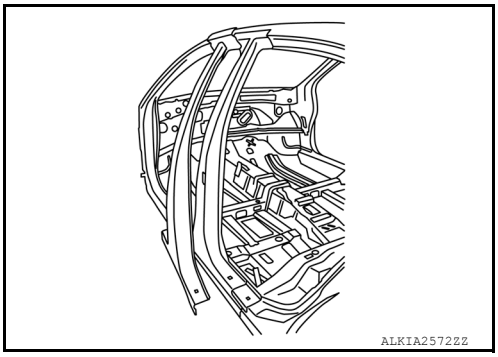

Installation
Match welds locations from removed part onto new panel and weld into place.

REINFORCEMENT

Work after center pillar outer has been removed.

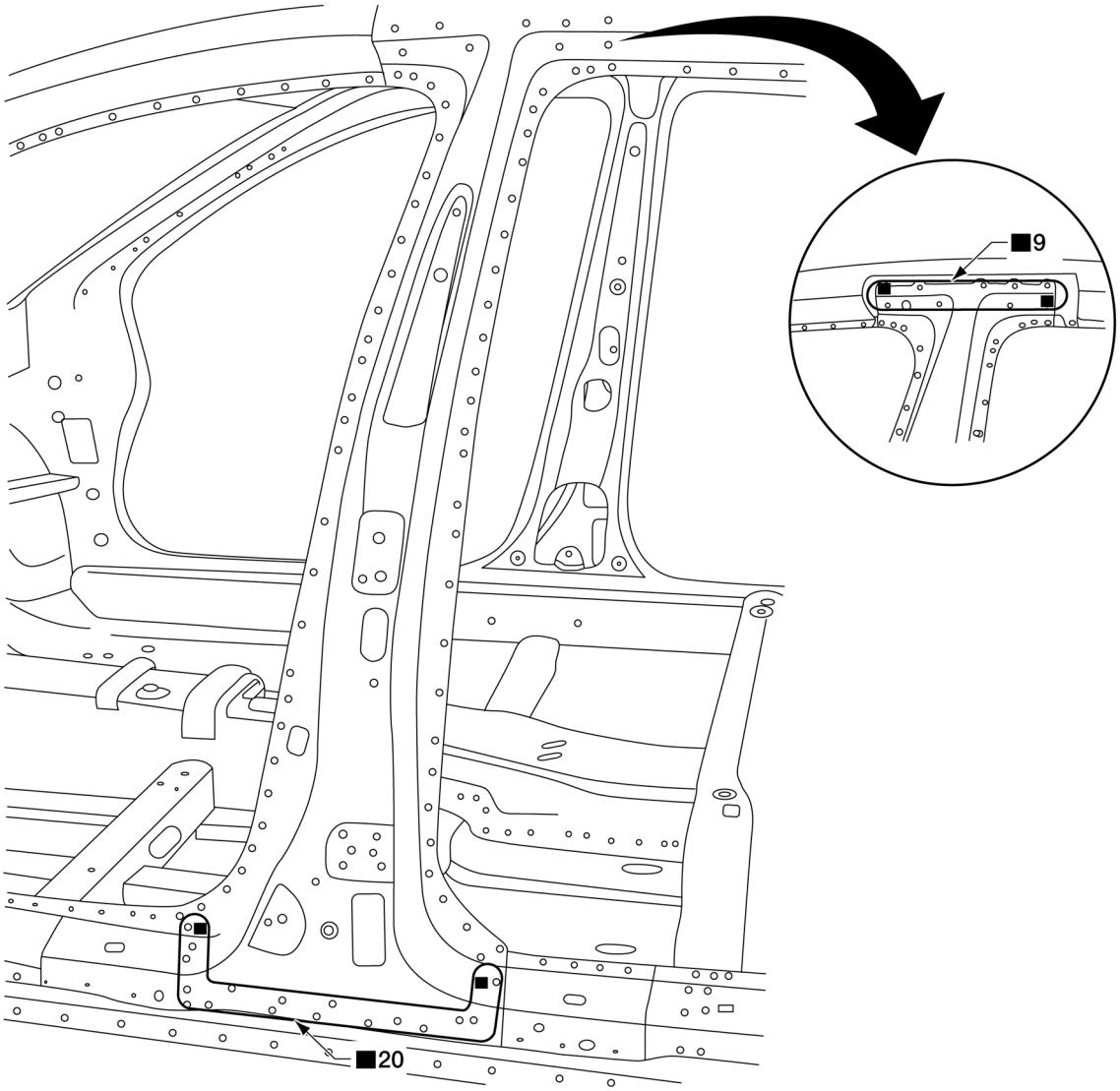

ALKIA2579ZZ

Change parts

- Center pillar reinforcement

Roof

INFOID:0000000008493312

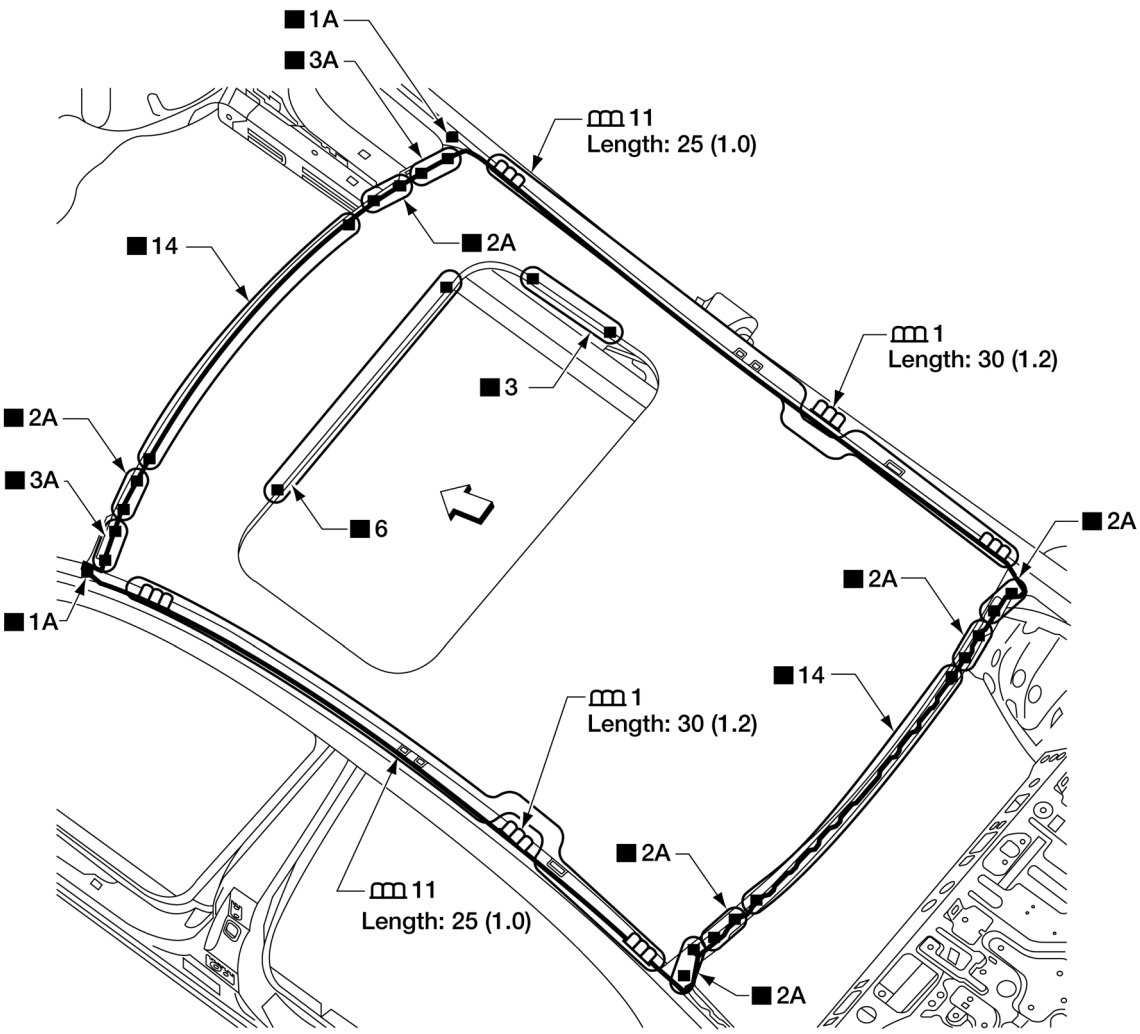

AWKIA2036ZZ

Unit: mm (in)

Replacement parts

- Moonroof panel

⇦ Front

REMOVAL

1. Remove the headlining. Refer to INT-30, "Removal and Installation".

2. Remove the roof side moldings (RH/LH). Refer to EXT-36, "Removal and Installation".
3. Remove the windshield glass. Refer to GW-12, "Removal and Installation".
4. Remove the rear window glass. Refer to GW-25, "Removal and Installation".

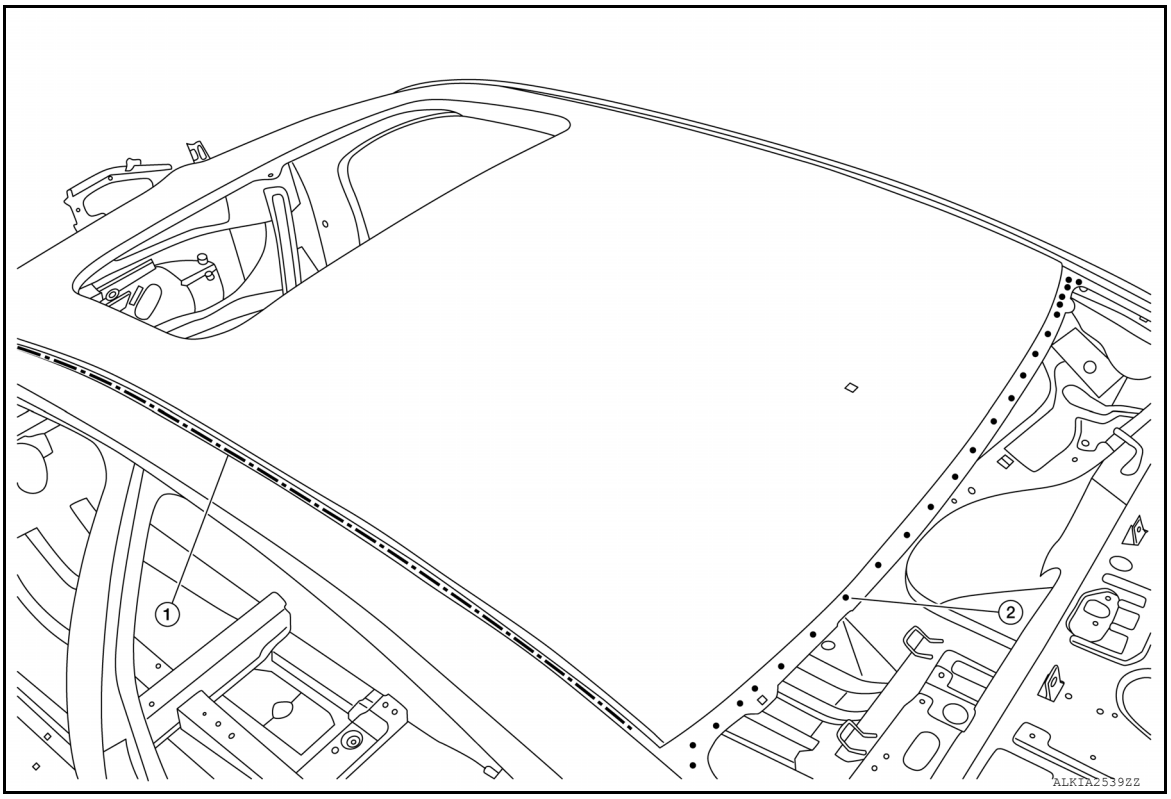

1. Laser welds
2. Spot welds

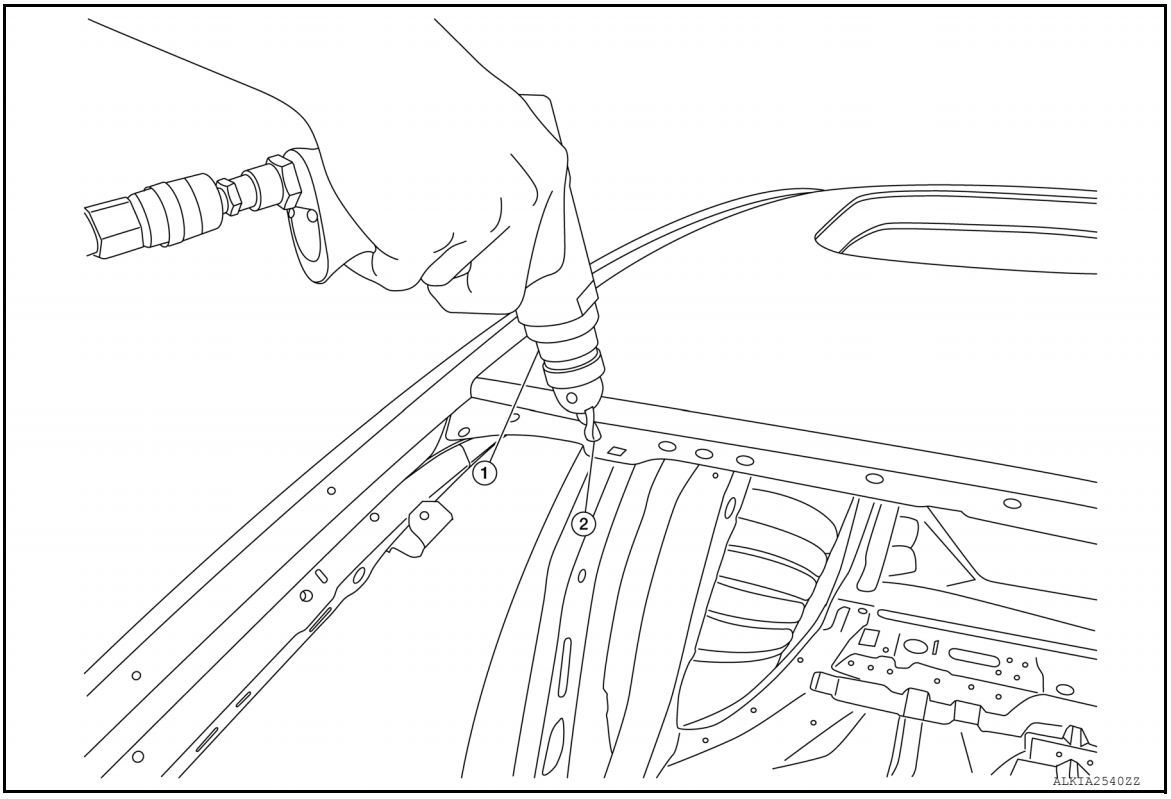

1. Air or electric drill
2. 8.0 mm (0.31 in) spot weld removal drill bit

NOTE:
Only drill through the first layer of metal (the roof outer panel)

5. Drill out spot welds using a 8.0 mm (0.31 in) spot weld removing bit on the windshield and rear window glass flanges.

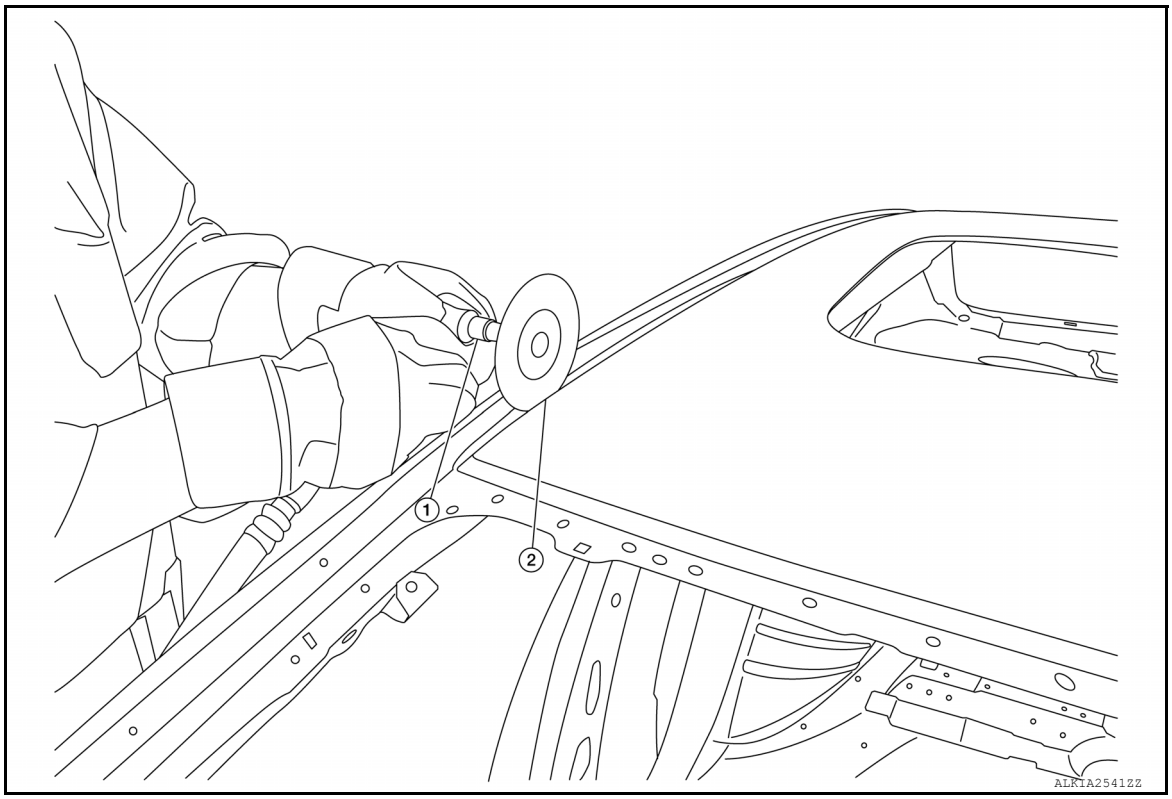

1. Air or electric angle head grinder
2. 3.18 mm (0.125 in) cutting wheel

NOTE:
Only grind through the first layer or metal (the roof outer panel)

6. Using an angle head grinder and a 3.18 mm (0.125 in) cutting wheel to grind through the first layer only on the laser welded areas (roof panel sides) to release the weld.

7. Remove roof panel (1).

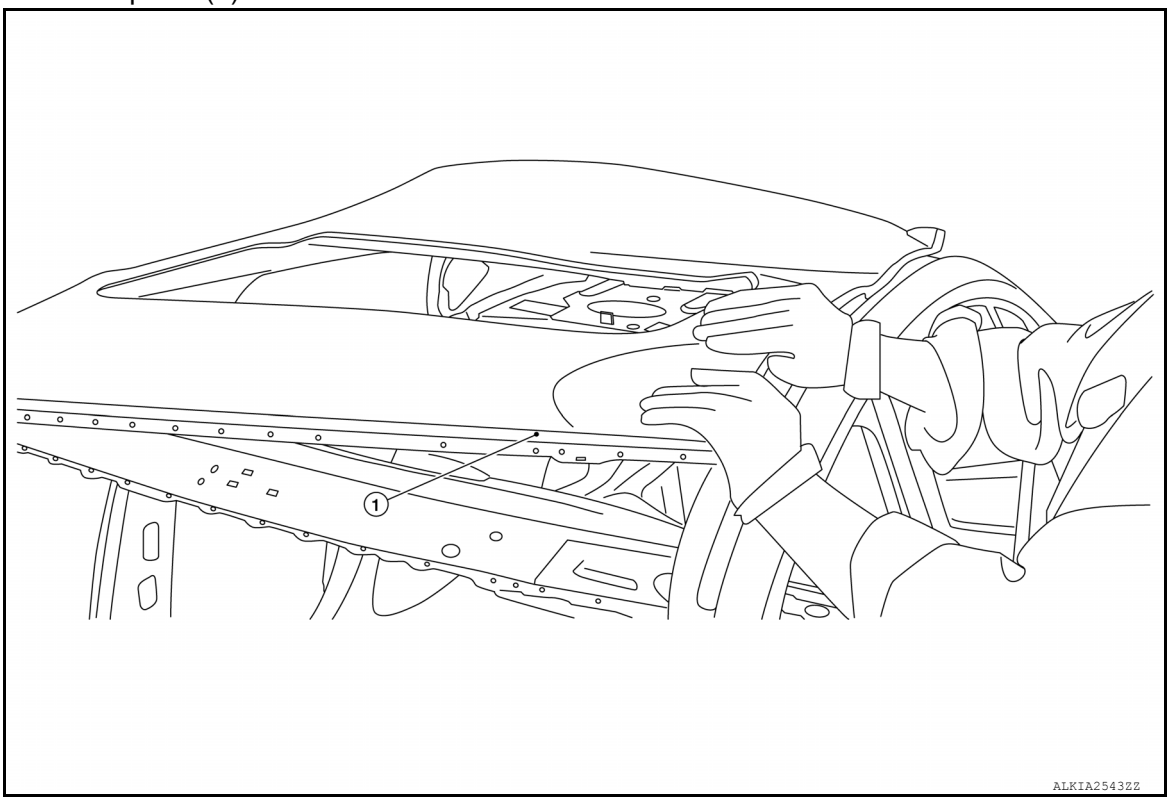

PREPARATION

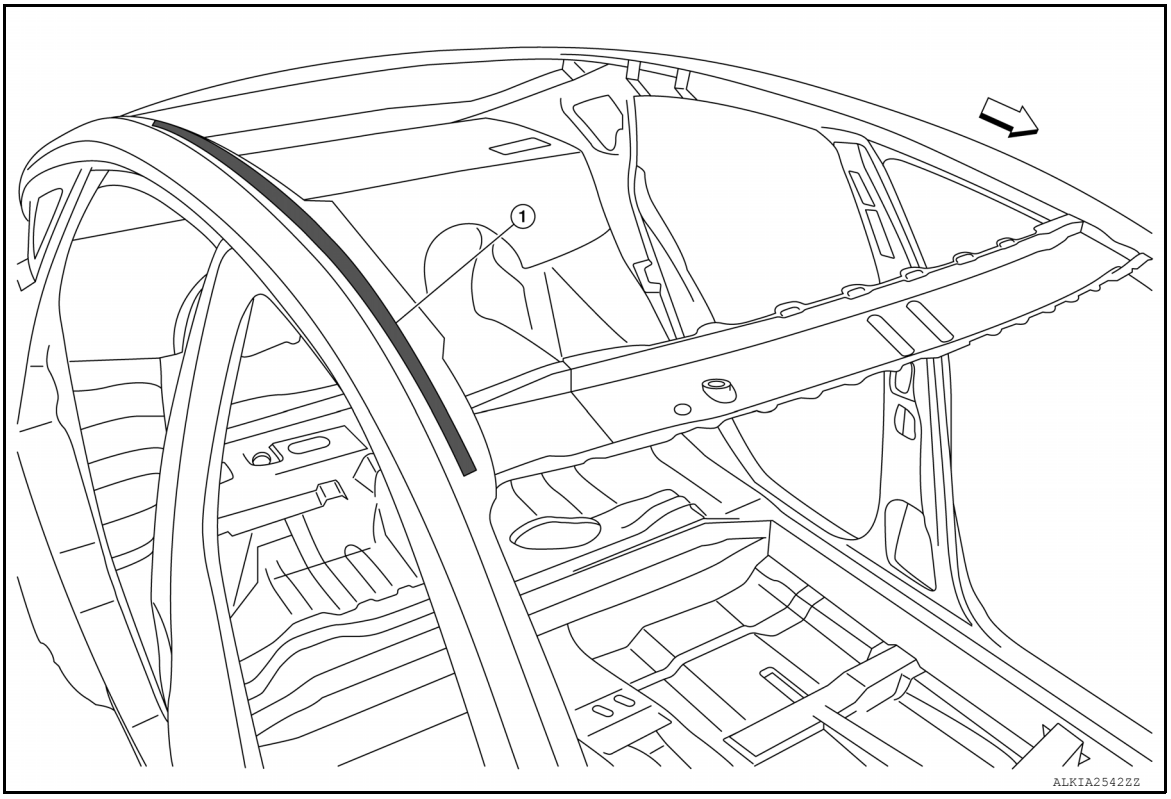

1. Weld through primer ⇦ Front

1. Grind all mating surfaces around the roof flanges.
2. Test panel for proper alignment and fit.

3. Remove panel.
4. Compare to the removed panel, then drill 8.0 mm (.31 in) holes in the same location on the new service roof panel.
5. Use 3M weld through primer to prime the front and rear window flanges

INSTALLATION

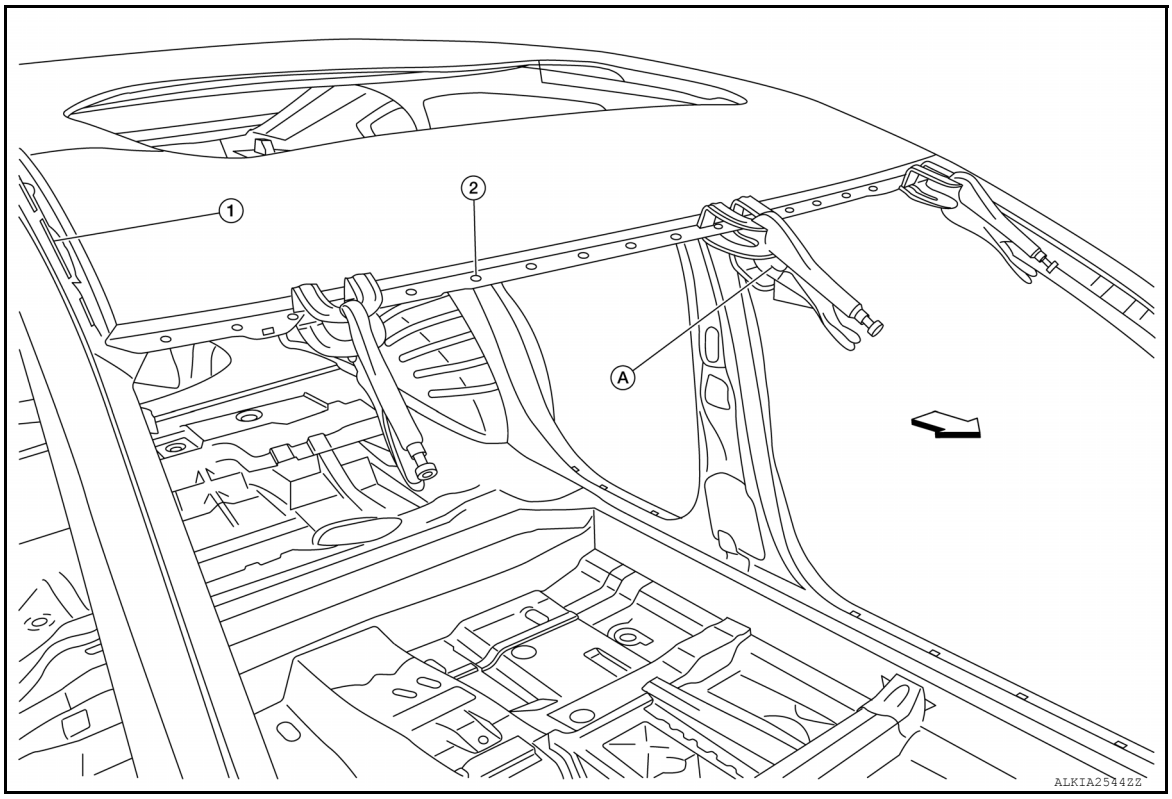

1. Panel bonding area
2. Plug welds
A. Clamping pliers

⇦ Front

1. Check the dimensions and fit.
2. Use clamping pliers to retain the roof panel to the front and rear window flanges.
3. Plug weld as necessary.
4. Use stitch welds in place of the laser welds in the same location.
5. Dress welds as necessary to allow proper glass fit.
6. Refer to NISSAN approved panel refinishing.
7. Install the headlining. Refer to INT-30, "Removal and Installation".
8. Install rear window glass. Refer to GW-25, "Removal and Installation".
9. Install windshield glass. Refer to GW-12, "Removal and Installation".
10. Install roof side moldings (RH/LH). Refer to EXT-36, "Removal and Installation".

Outer Sill

INFOID:0000000007988533

Work after the front pillar reinforcement, center pillar reinforcement, and rear fender have been removed.

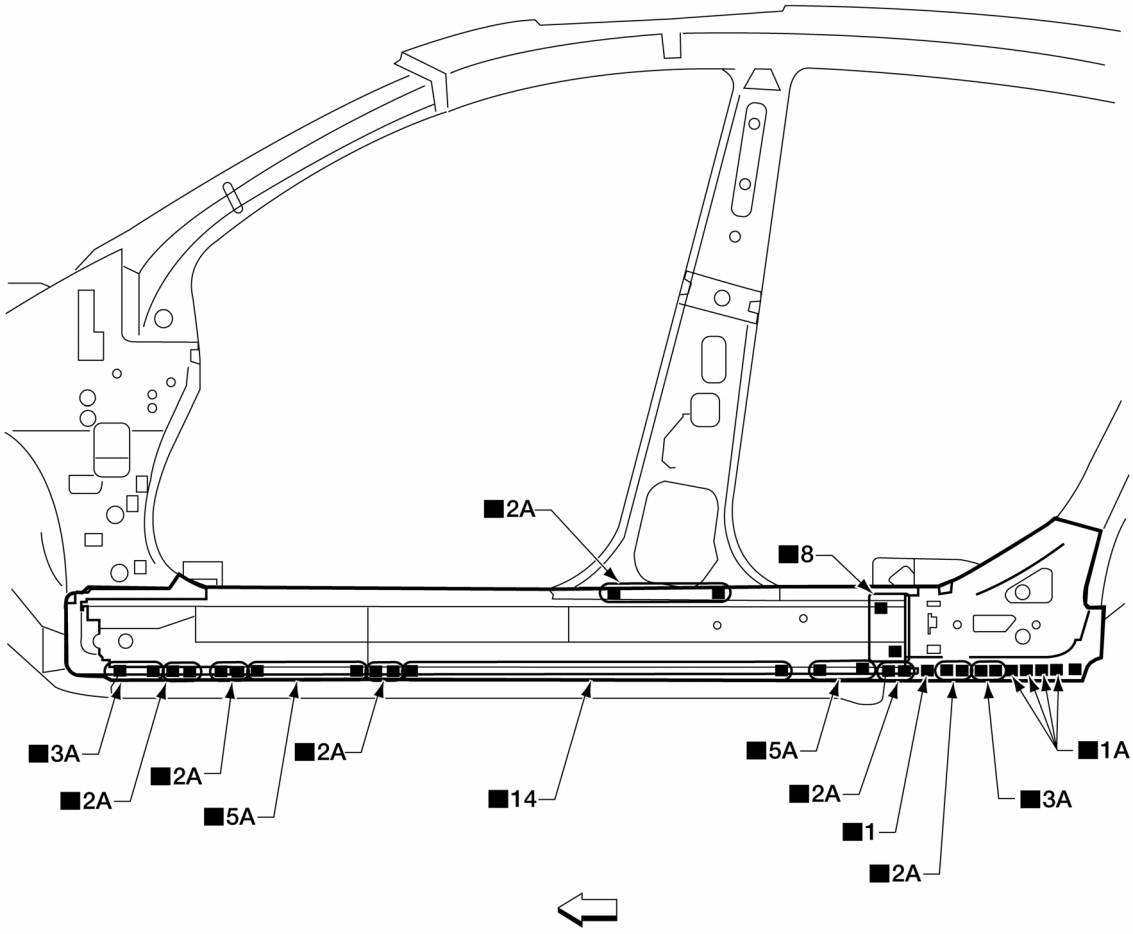

Change parts

- Outer sill reinforcement

⇦ Front

Rear Fender

INFOID:0000000007988534

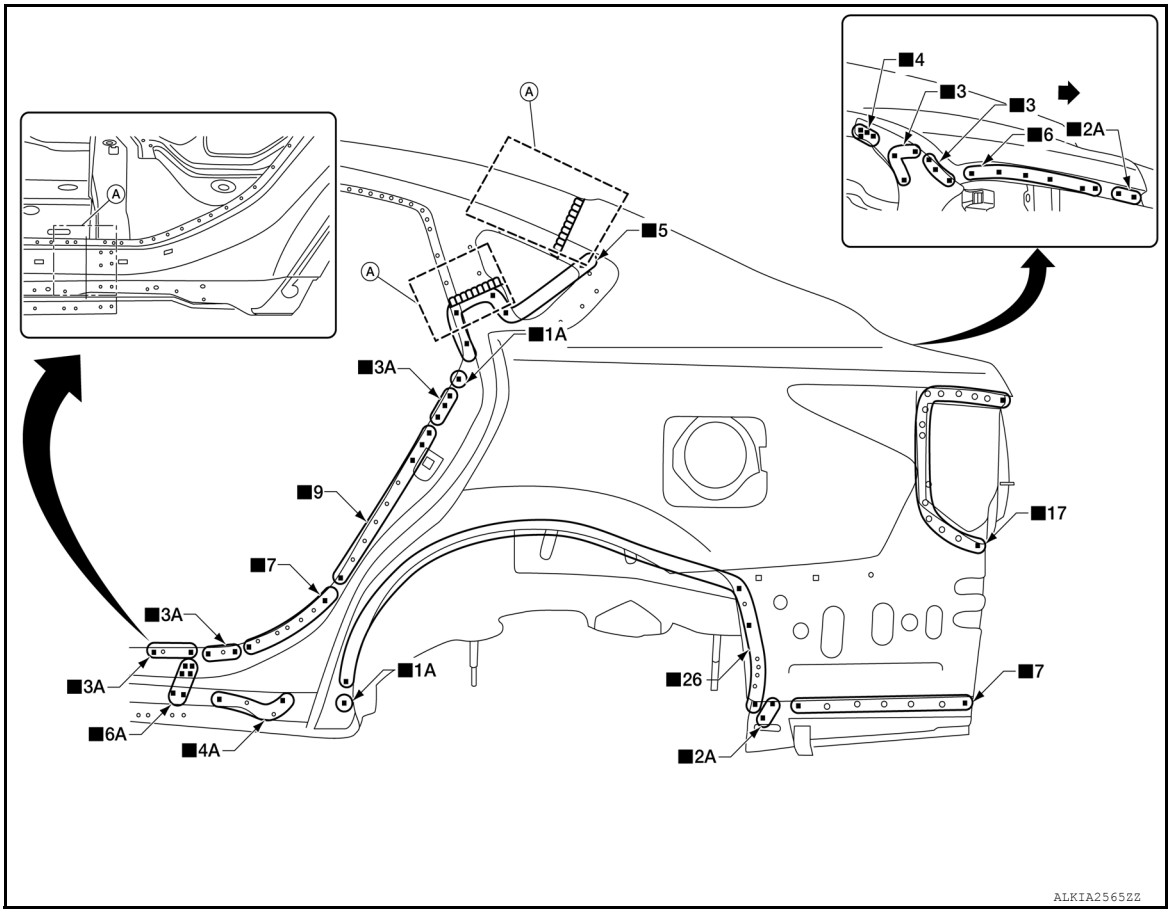

Change parts

A Recommended cut zone

Rear Panel

INFOID:0000000007988535

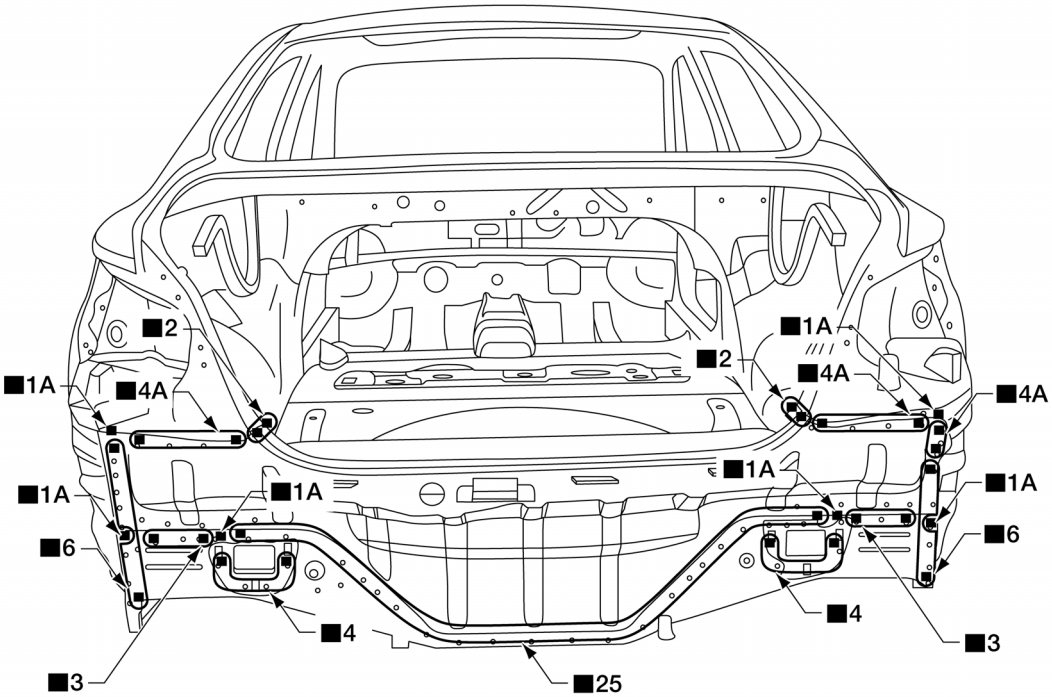

ALKIA2548ZZ

Change parts

- Rear panel assembly

⇦ Front

Rear Floor Rear

INFOID:0000000007988536

- Work after rear panel assembly has been removed.

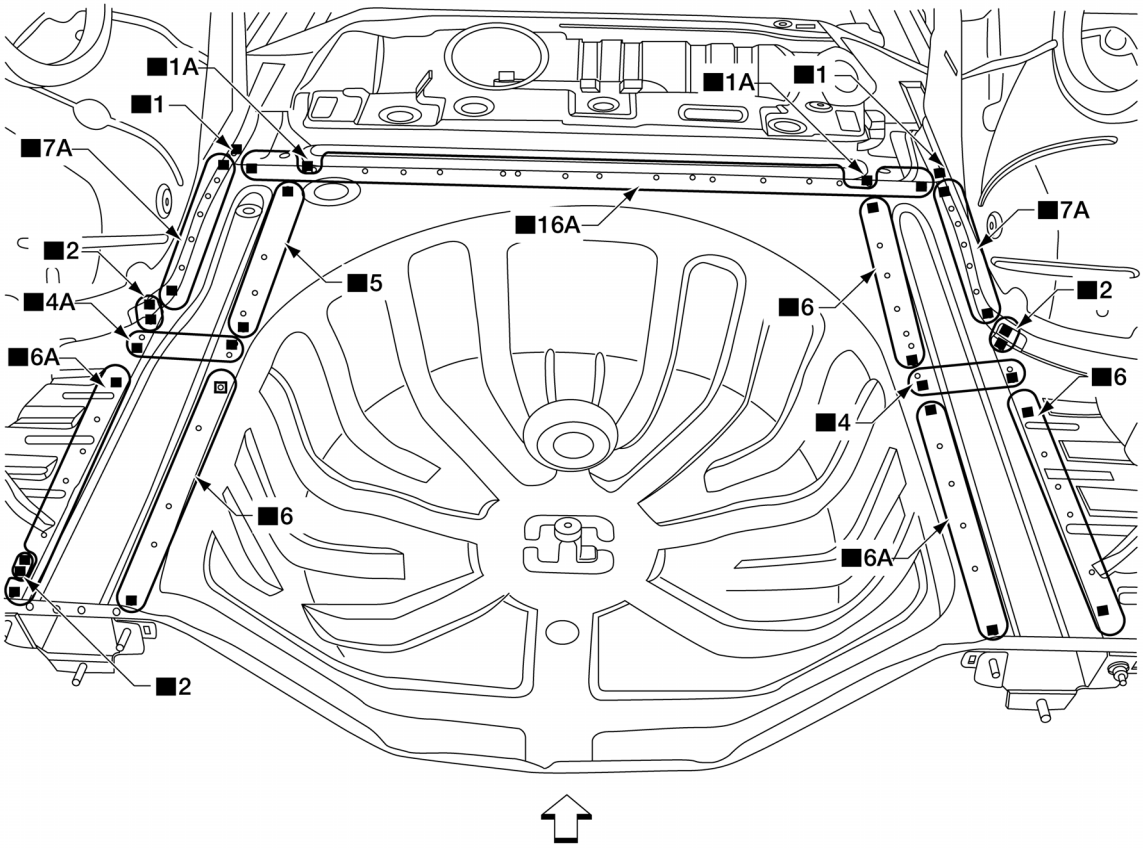

Change parts

- Rear floor rear

⇦ Front

Rear Side Member Extension

INFOID:0000000007988537

- Work after rear panel assembly and rear floor rear have been removed.

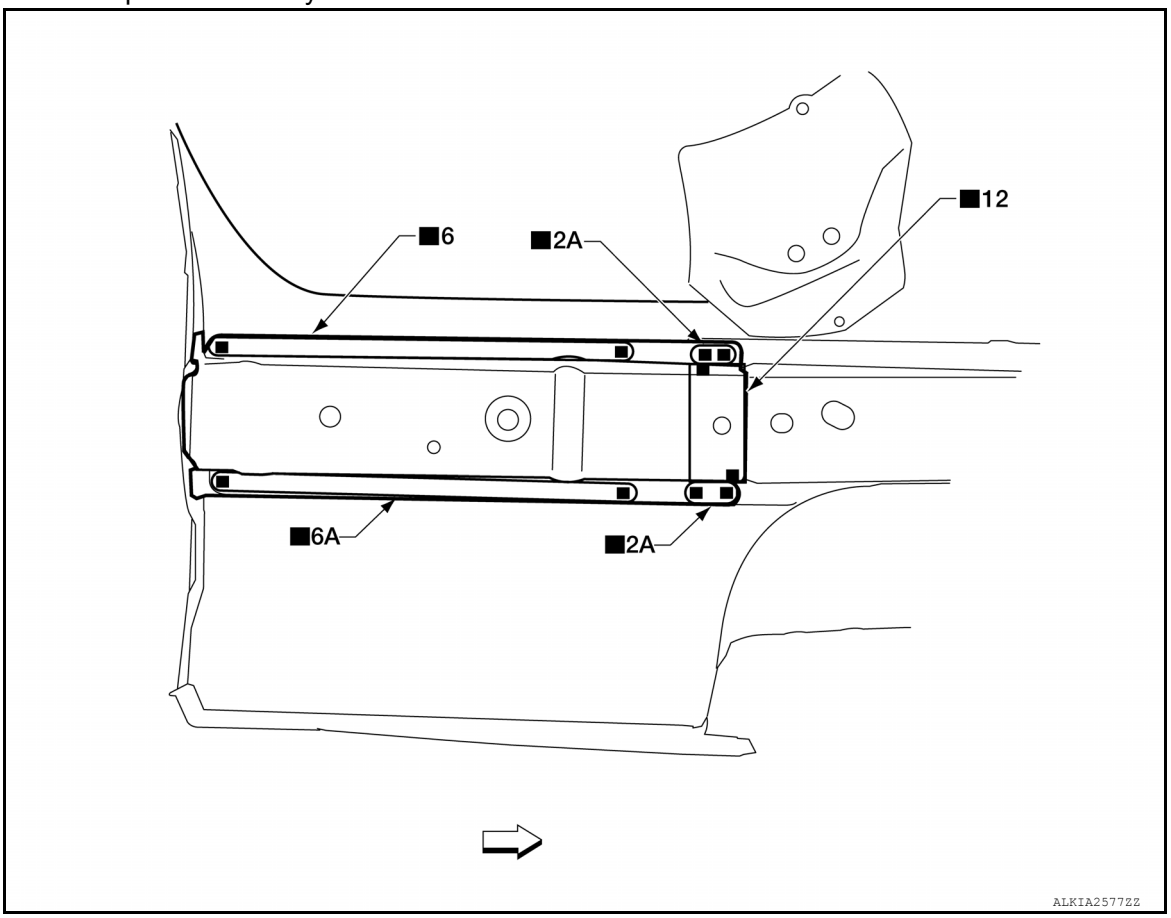

Change parts

- Rear side member extension ⇦ Front

SERVICE DATA AND SPECIFICATIONS (SDS)

BODY ALIGNMENT

Body Center Marks

INFOID:0000000007988518

A mark has been placed on each part of the body to indicate the vehicle center. When repairing parts damaged by an accident which might affect the vehicle frame (members, pillars, etc.), more accurate and effective repair will be possible by using these marks together with body alignment specifications.

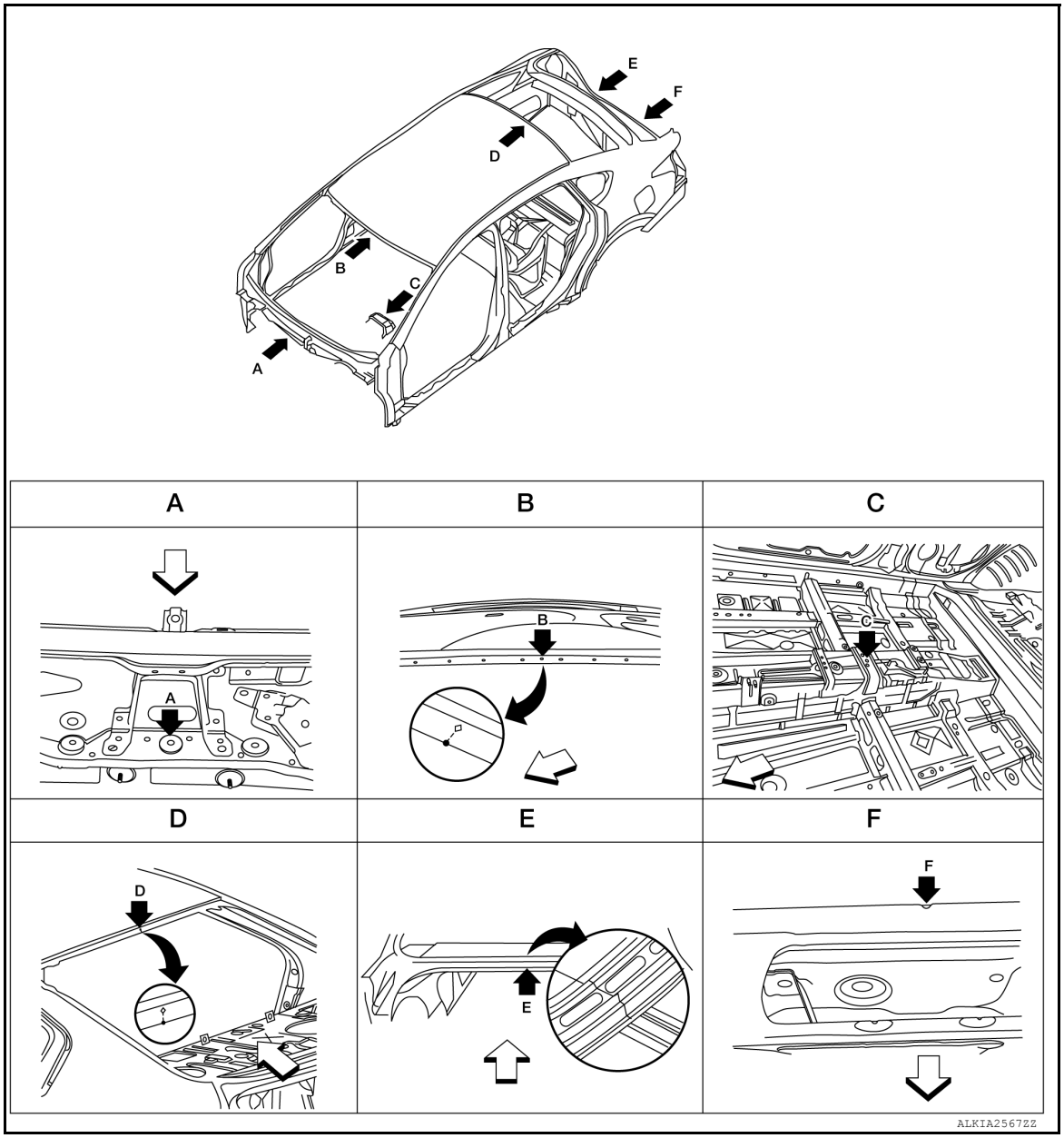

⇦ Front

Unit: mm (in)

Point	Portion	Mark	Dimension
A	Cowl top extension	Hole	Dia 7.0 (0.28)
B	Front roof position mark for alignment	Raised dimple	—
C	Shift selector bracket center hole	Hole	Dia 14 (0.55)
D	Rear roof position mark for alignment	Raised dimple	—

Point	Portion	Mark	Dimension
E	Raised dimple in rear waist flange	Raised dimple	—
F	Rear panel upper	Notch	—

Panel Parts Matching Marks

INFOID:0000000007988519

A mark has been placed on each body panel to indicate the parts matching positions. When repairing parts damaged by an accident which might affect the vehicle structure (members, pillars, etc.), more accurate and effective repair will be possible by using these marks together with body alignment specifications.

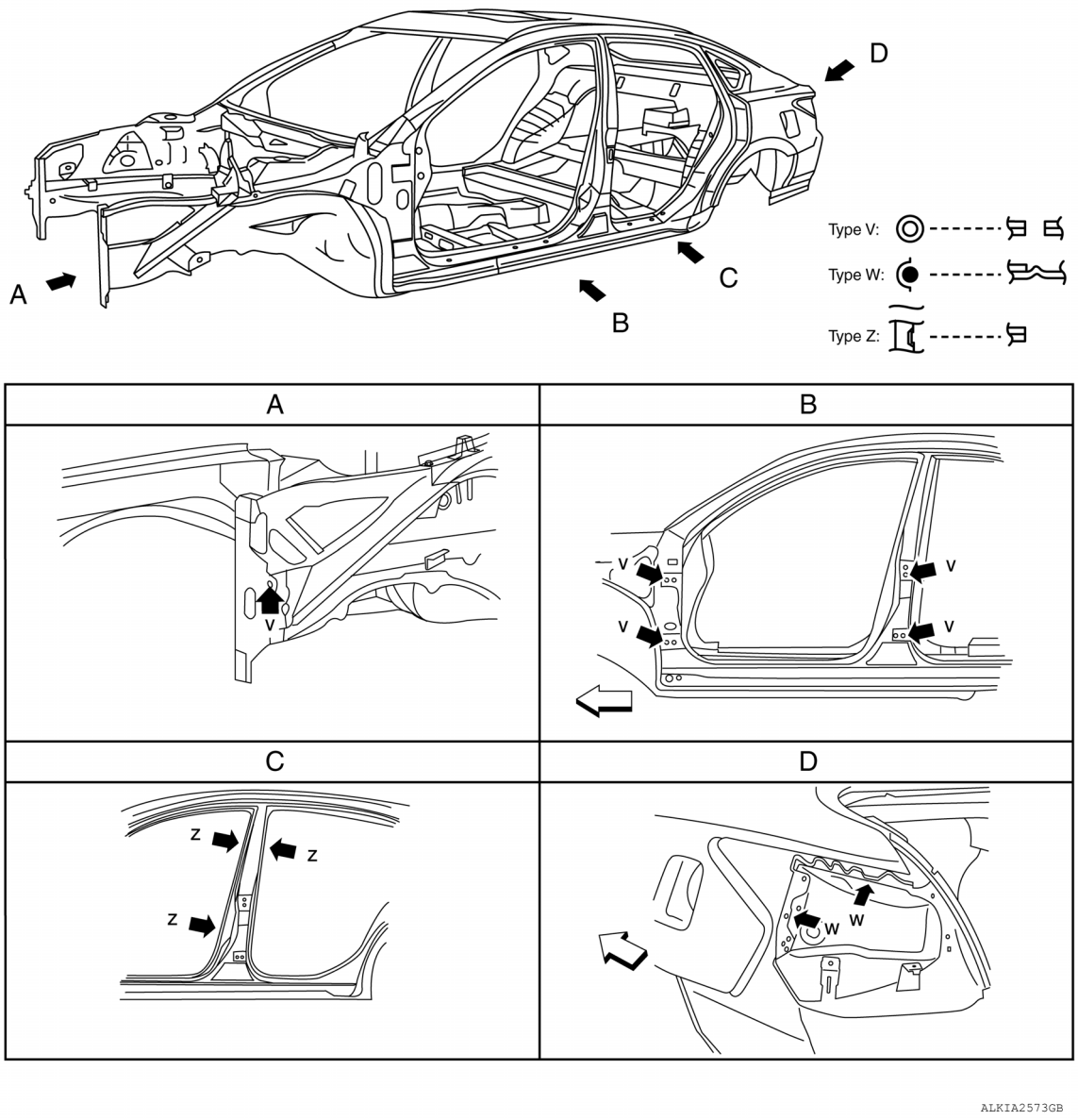

Description

INFOID:0000000007988520

- All dimensions indicated in the figures are actual.
- When using a tracking gauge, adjust both pointers to equal length. Then check the pointers and gauge itself to make sure there is no free play.
- When a measuring tape is used, check to be sure there is no elongation, twisting or bending.
- Measurements should be taken at the center of the mounting holes.

- An asterisk (*) following the value at the measuring point indicates that the measuring point on the other side is symmetrically the same value.
- The coordinates of the measurement points are the distances measured from the standard line of ″X″, ″Y″ and ″Z″.

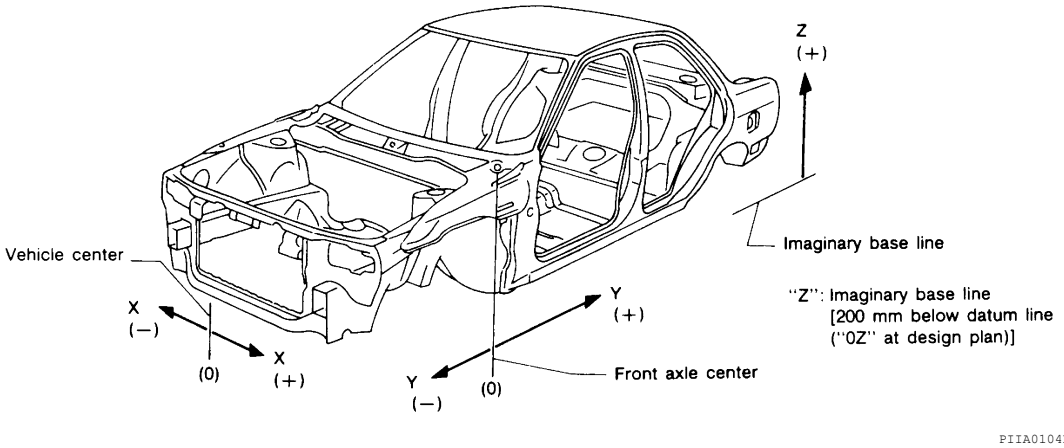

Engine Compartment

INFOID:0000000007988521

Measurement

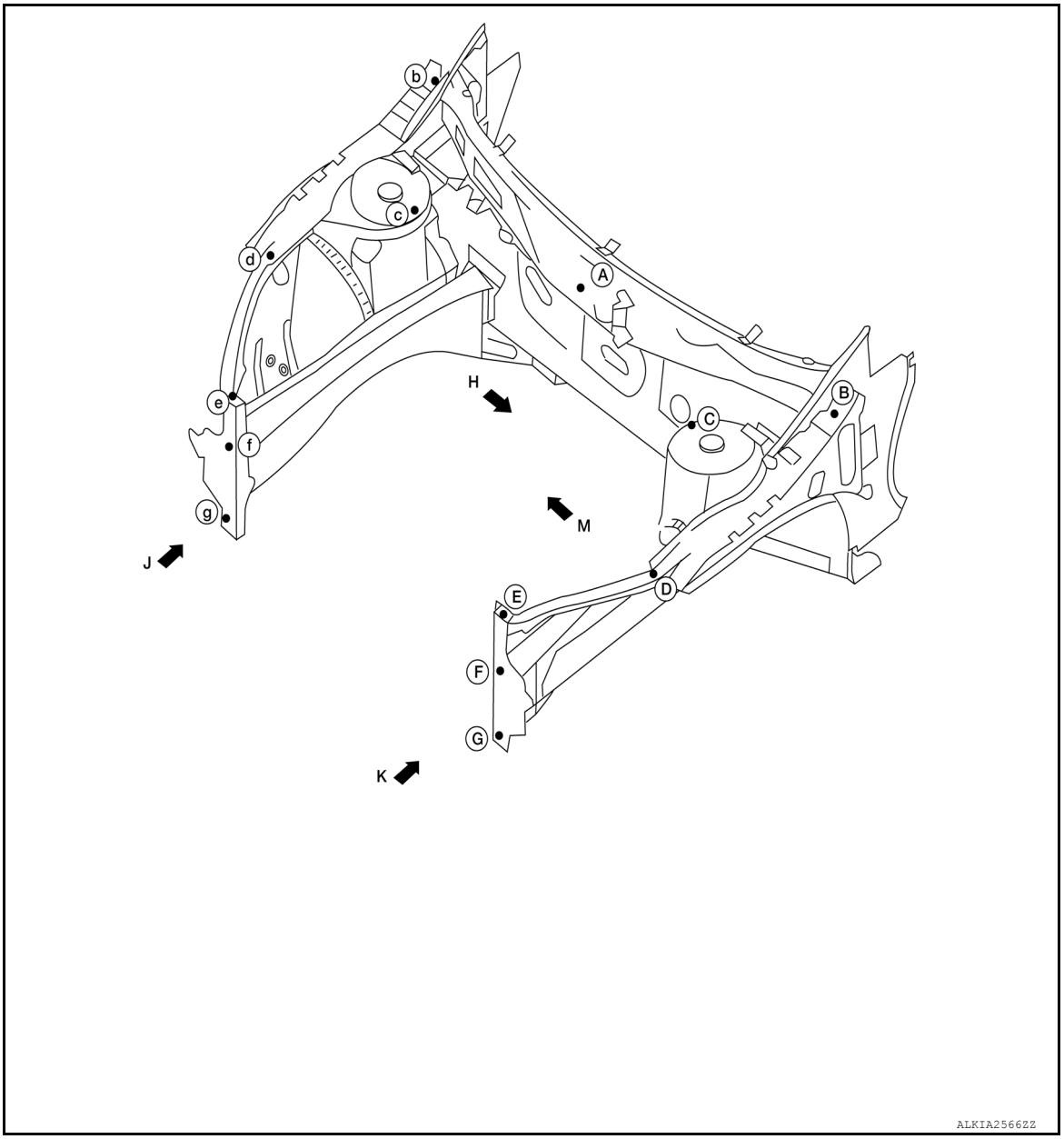

Unit: mm (in)

Dimension	Measurement	Dimension	Measurement	Dimension	Measurement
A-B*	780 (30.7)	A-D*	844 (33.2)	A-E*	913 (35.9)
B-b	1530 (60.2)	B-e*	1557 (61.3)	C-c	1014 (39.9)
C-e*	1204 (47.4)	D-d	1436 (56.5)	D-e*	1251(49.3)
E-e	978 (38.5)	f-G*	1001 (39.4)	F-f	974 (38.3)
G-g	980 (38.6)				

*Figures marked with an (*) indicate symmetrically identical dimensions on both the RH and LH side of the vehicle.

Measurement Points

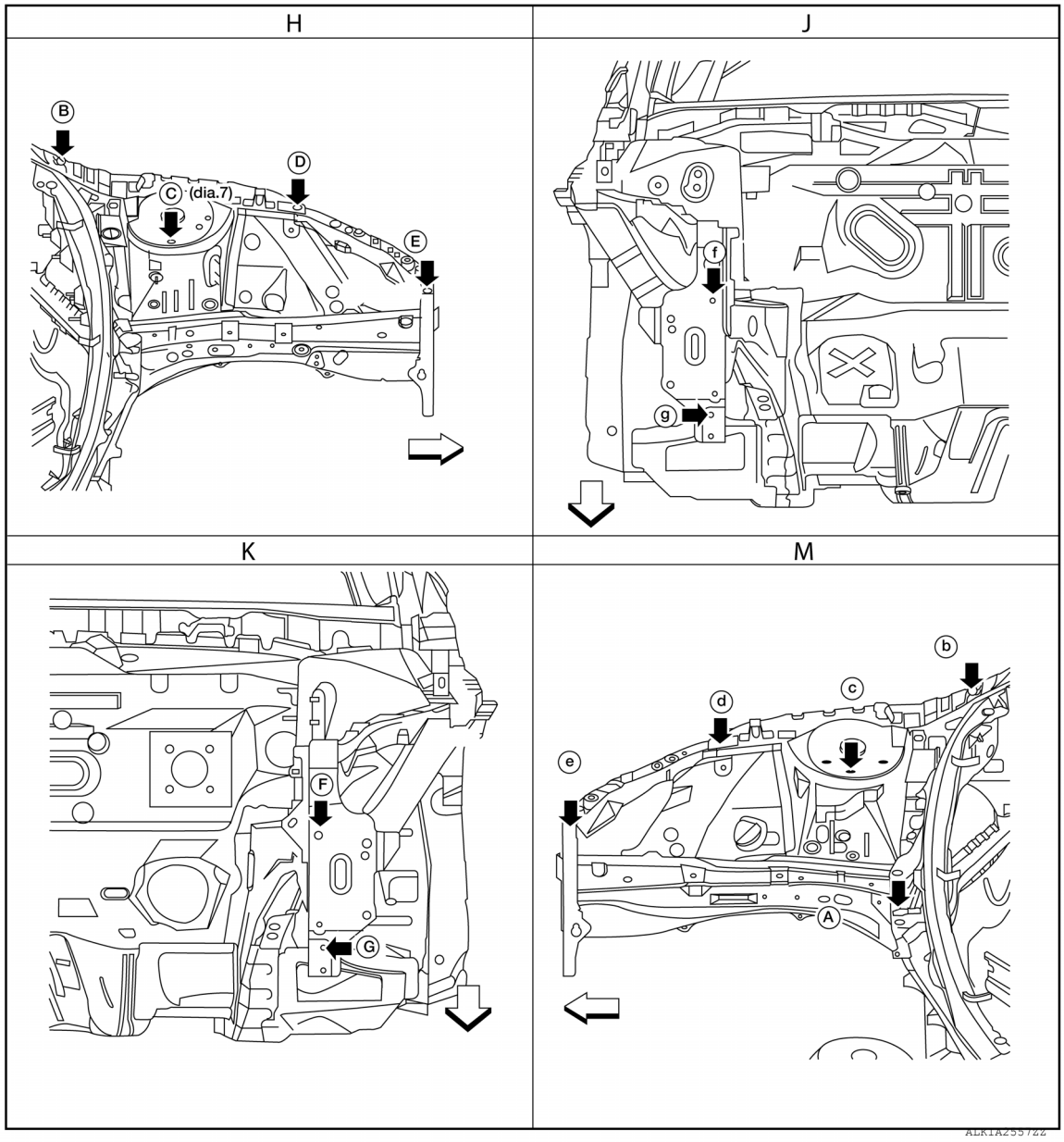

⇦ Front

Unit: mm (in)

Position	Description	Measurement
A	Hole for cowl top extension	7.0 (0.28)
B, b	Hood hinge upper hole	11.0 (0.43)
C, c	Hole for cowl top extension	9.0 (0.35)
D, d	Radiator core support body assembly hole	11.0 (0.43)
E, e	Front end module upper radiator core support hole	13.0 (0.51)
F, f	Hole for upper inner bumper stay	9.0 (0.35)
G, g	Front end module lower radiator core support hole	8.0 (0.31)

Underbody

INFOID:0000000007988522

Measurement

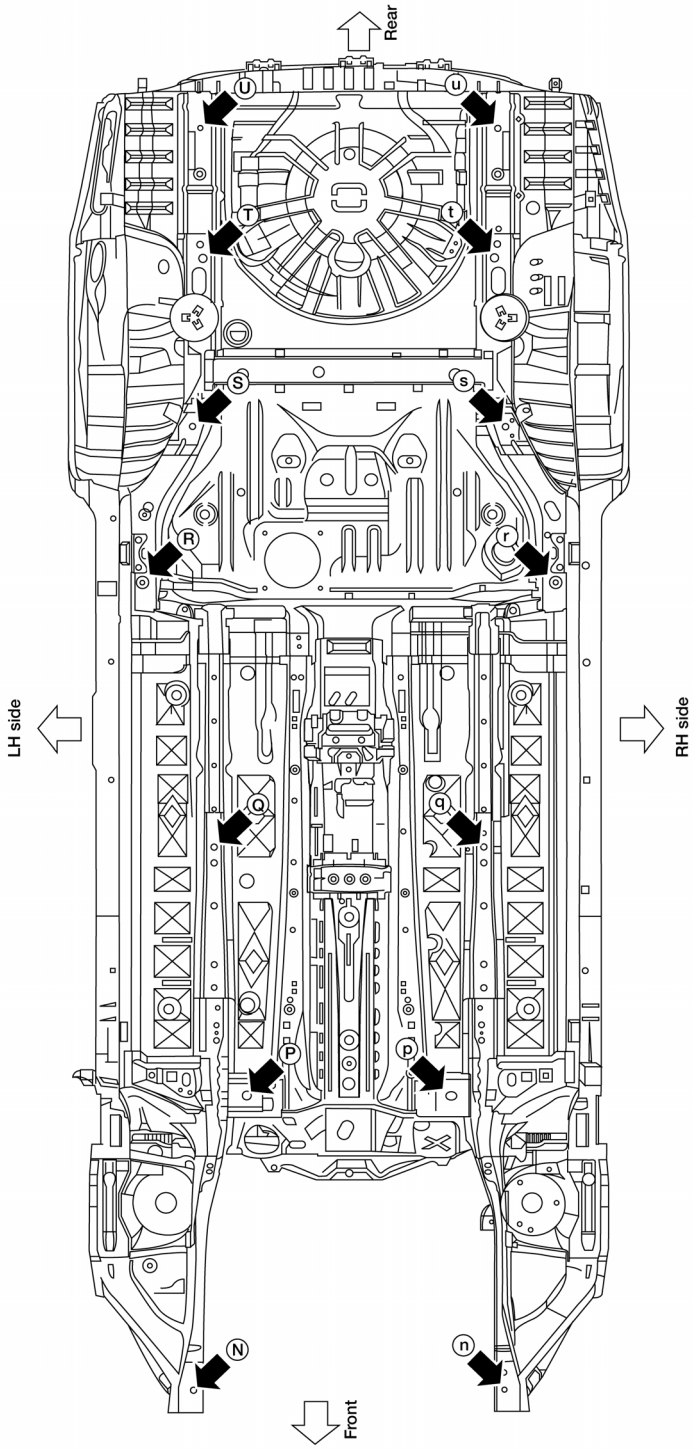

ALKIA2560GB

NOTE:
- All dimensions indicated in the figure are actual.
- As viewed from underside.

Unit: mm (in)

Point	Description	Measurement
N, n	Front suspension member front weld nut hole	17.0 (0.7)
P, p	Front suspension member rear weld nut hole	LH: dia 28.5 (1.1) RH: 28.5 x 33.1 (1.1 x 1.3)

Point	Description	Measurement
Q, q	Front side member center extension locating hole	20 x 16.0 (0.8 x 0.6)
R, r	Rear side member assembly hole	16.0 (0.6)
S, s	Rear suspension member front stud tip	—
T, t	Rear suspension member rear stud tip	—
U, u	Rear side member stamping hole	18.0 x 16.0 (0.7 x0.6)

Unit: mm (in)

Dimension	Measurement	Dimension	Measurement	Dimension	Measurement
N - n	996 (39.2)	N - P	981 (38.6)	N - p	1270 (50.0)
n - p	982 (38.7)	n - P	1271 (50.0)	P - p	654 (25.7)
P - Q*	814 (32.0)	P- q*	1107 (43.6)	Q - q	862 (33.9)
Q - R*	888 (35.0)	Q - r*	1389 (54.7)	R - r	1322 (52.0)
R - S*	529 (20.8)	R - s*	1267 (49.9)	S - s	1002 (39.4)
S - T*	551 (21.7)	S - t*	1112 (43.8)	T - t	932 (36.7)
T - U*	433 (17.0)	T - u*	1037 (40.8)	U - u	952 (37.5)

*Figures marked with an (*) indicate symmetrically identical dimensions on both the RH and LH side of the vehicle.

Passenger Compartment

INFOID:0000000007988523

Measurement

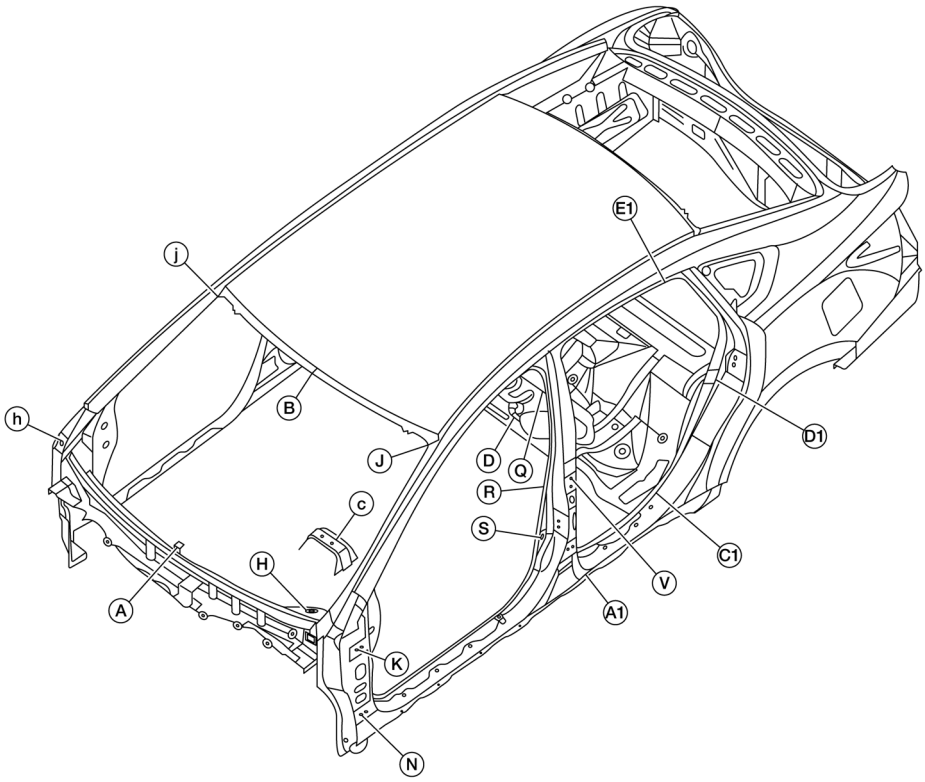

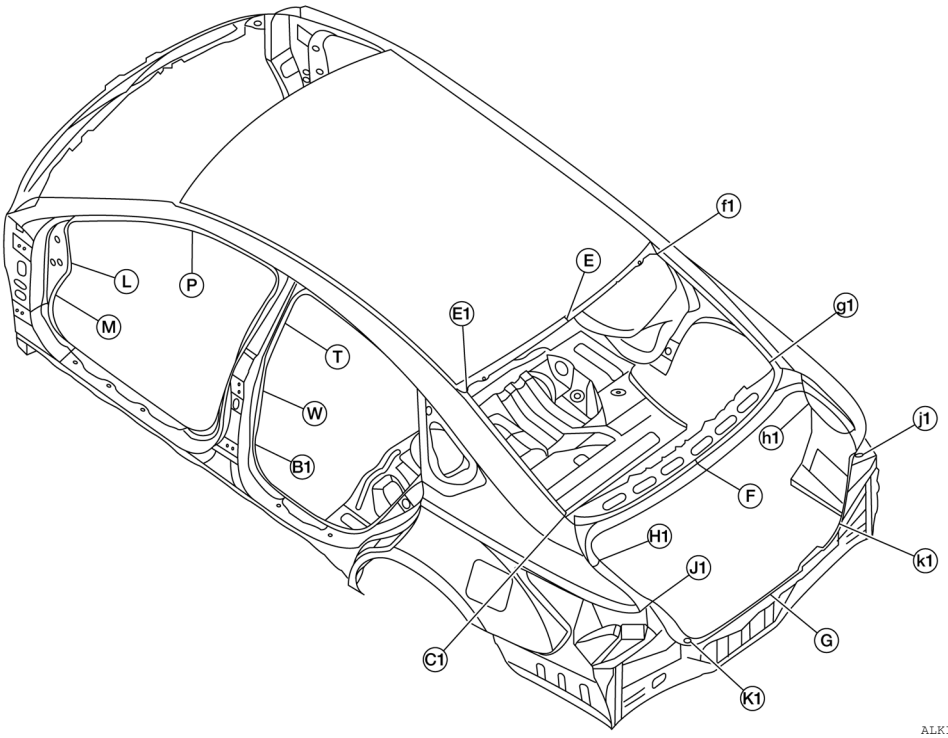

Unit: mm (in)

Dimension	Measurement	Dimension	Measurement	Dimension	Measurement
A-B	846.0 (33.3)	AJ*	1052.1(41.4)	A-H	723.4 (28.5)
B-J*	586.6 (23.1)	B-H*	1042.0 (41.0)	H-J*	794.4 (31.3)
P-M*	961.5 (37.9)	P-Q*	447.0 (17.6)	P-S*	736.4 (29.0)
Q-M*	1243.1 (48.9)	Q-S*	607.8 (23.9)	L-R*	904.6 (35.6)

Dimension	Measurement	Dimension	Measurement	Dimension	Measurement
M-S*	918.0 (36.1)	C-P*	1095.7 (43.1)	C-M*	912.4 (35.9)
C-Q*	1186.0 (46.7)	C-L*	937.0 (36.9)	C-R*	984.7 (38.8)
C-S*	876.0 (34.5)	T-E1*	612.0 (24.1)	T-C1*	883.0 (34.8)
T-B1*	681.1 (26.8)	B1-E1*	1037.3 (40.8)	C1-E1*	915.7 (36.1)
W-D1*	753.8 (29.7)	B1-C1*	491.4 (19.3)	D-T*	996.0 (39.2)
D-E1*	1061.4 (41.8)	D-W*	830.8 (32.7)	D-B1*	743.4 (29.3)
D-D1*	860.2 (33.9)	D-C1*	685.0 (27.0)	E-F	794.0 (31.3)
E-G1*	831.8 (32.7)	E-F1	527.5 (20.8)	F1-G1*	632.5 (24.9)
F-F1*	972.6 (38.3)	F-G1*	597.7 (23.5)	F-G	560.3 (22.1)
F-K1*	658.5 (25.9)	H1-h1	1225.7 (48.3)	H1-K1*	486.0 (19.1)
G-H1*	796.8 (31.4)	J1-j1	1104.3 (43.5)	J1-K1*	270.8 (10.7)
K1-k1	856.5 (33.7)	G-J1*	631.4 (24.9)		

*Figures marked with an (*) indicate symmetrically identical dimensions on both the RH and LH side of the vehicle.

Measurement Points

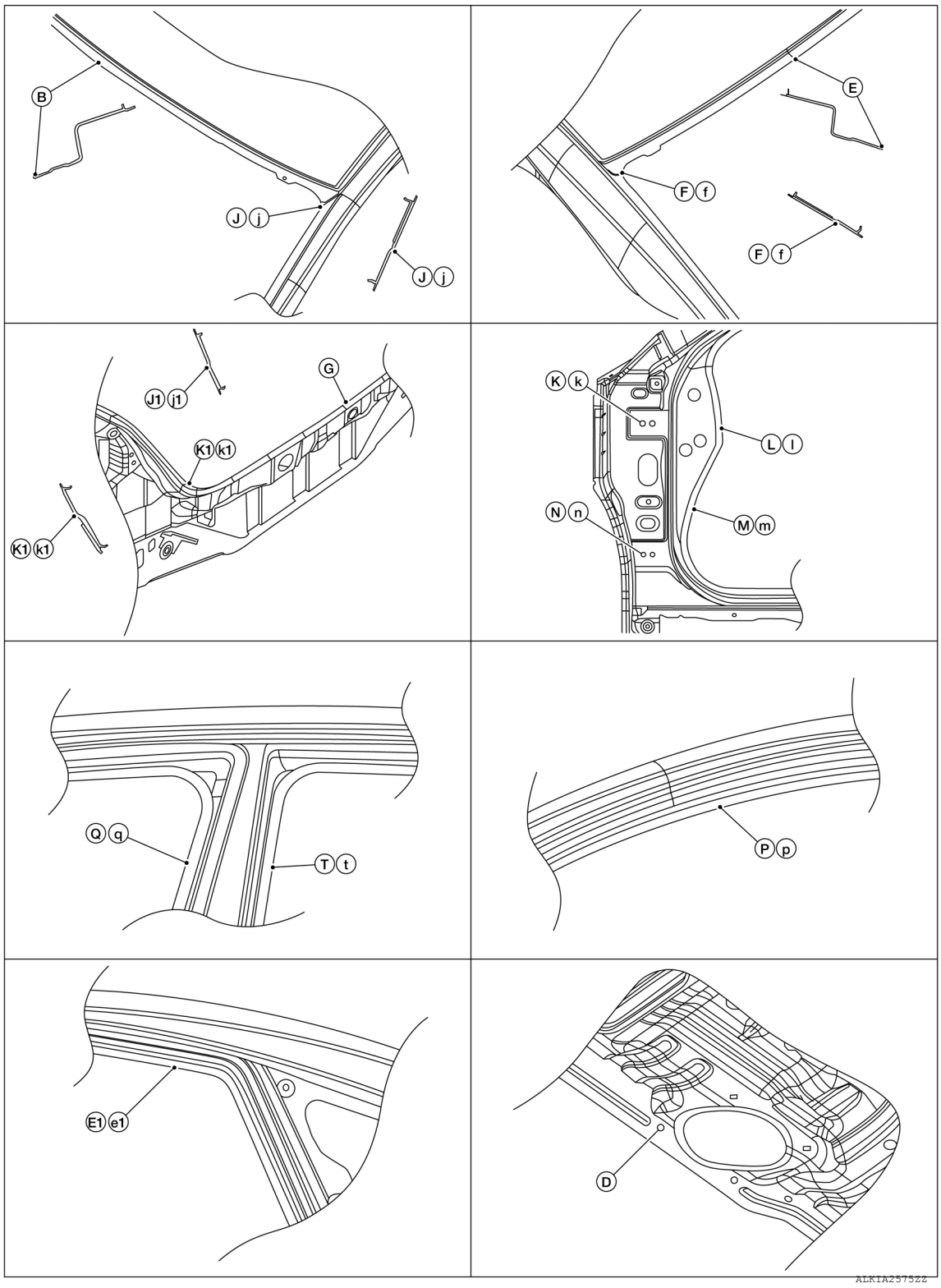

Unit: mm (in)

Position	Description	Position	Description	Position	Description
B	Roof position mark	D	Floor - RR, FR	E	Roof position mark
E 1- e1	Body side outer location notch	F -f	Body side outer joggle corner	G	RR panel upper notch
K- k	Body side outer hinge hole	L - l	Body side outer notch	J - j	Body side outer joggle corner
K1 - k1	Base - RR combination lamp corner	M - m	Body side outer notch	N - n	Body side outer hinge hole
P - p	Body side outer location notch	Q - q	Body side outer location notch	T - t	Body side outer location notch

*Figures marked with an (*) indicate symmetrically identical dimensions on both the RH and LH side of the vehicle.

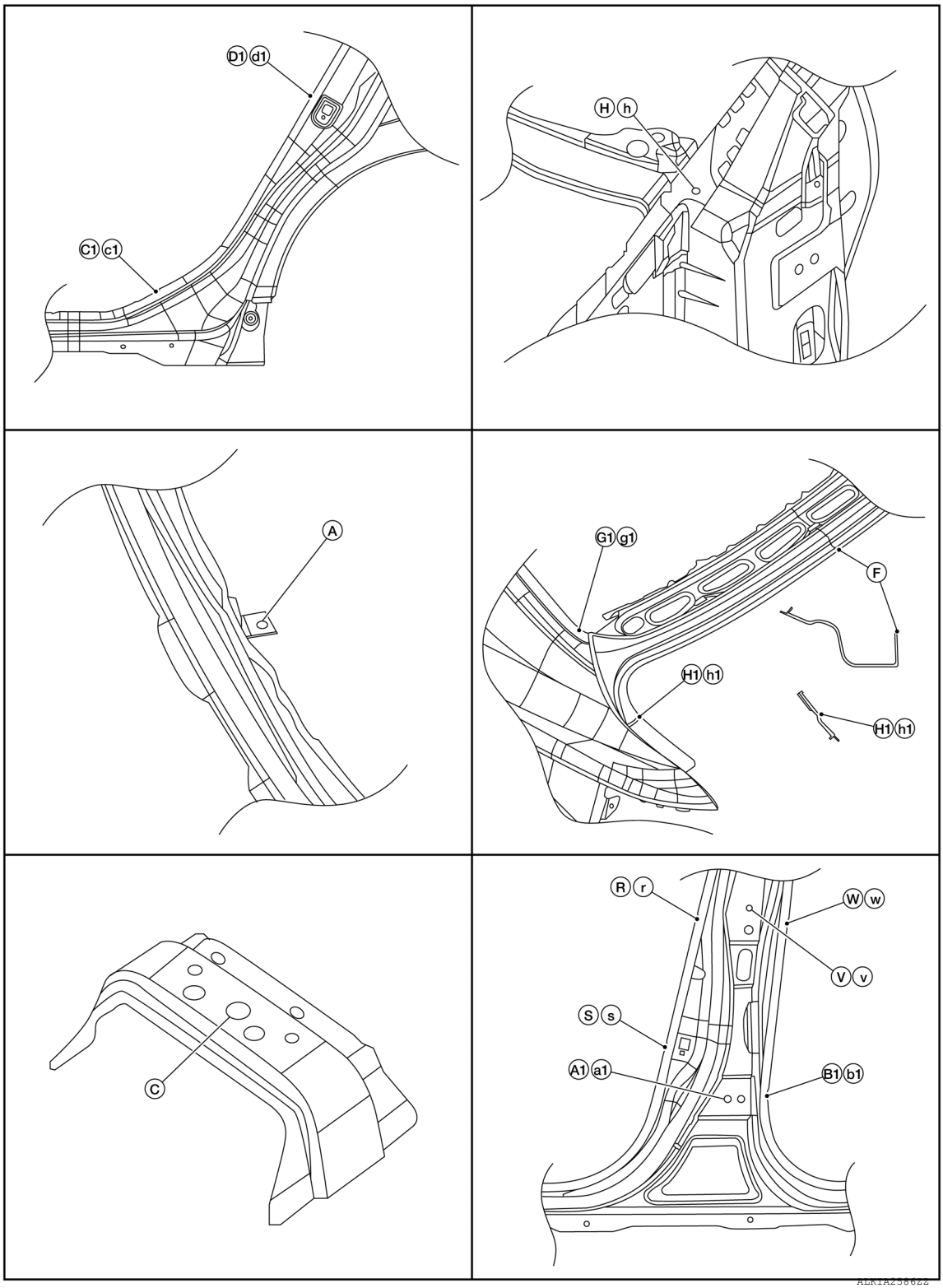

Unit: mm (in)

Position	Description	Position	Description	Position	Description
A	Bracket - cowl top hole	A1 - a1	Body side outer hinge hole	B1- b1	Body side outer location notch
C	Reinforcement hole center	C1 -c1	Body side outer location notch	D1 - d1	Body side outer location notch
F	Waist - RR flange end	G1 - g1	Body side outer location notch	H - h	Body side outer location notch

Position	Description	Position	Description	Position	Description
H1 -h1	Body side outer joggle corner	R -r	Body side outer location notch	S - s	Body side outer location notch
V -v	Body side outer location notch	W -w	Body side outer location notch		

*Figures marked with an (*) indicate symmetrically identical dimensions on both the RH and LH side of the vehicle.

HANDLING PRECAUTIONS FOR PLASTICS

Precautions For Plastics

INFOID:0000000007988509

Abbre-viation	Material name	Heat resisting temperature °C(°F)	Resistance to gasoline and solvents	Other cautions
PE	Polyethylene	60(140)	Gasoline and most solvents are harmless if applied for a very short time (wipe up quickly).	Flammable
PVC	Poly Vinyl Chloride	80(176)	Same as above.	Poison gas is emitted when burned.
EPM/ EPDM	Ethylene Propylene (Diene) co-polymer	80(176)	Same as above.	Flammable
PP	Polypropylene	90(194)	Same as above.	Flammable, avoid bat-tery acid.
UP	Unsaturated Polyester	90(194)	Same as above.	Flammable
PS	Polystyrene	80(176)	Avoid solvents.	Flammable
ABS	Acrylonitrile Butadiene Styrene	80(176)	Avoid gasoline and solvents.	
PMMA	Poly Methyl Methacrylate	85(185)	Same as above.	
EVAC	Ethylene Vinyl Acetate	90(194)	Same as above.	
ASA	Acrylonitrile Styrene Acrylate	100(222)	Same as above.	Flammable
PPE	Poly Phenylene Ether	110(230)	Same as above.	
PC	Polycarbonate	120(248)	Same as above.	
PAR	Polyarylate	180(356)	Same as above.	
PUR	Polyurethane	90(194)	Same as above.	
POM	Poly Oxymethylene	120(248)	Same as above.	Avoid battery acid.
PBT+ PC	Poly Butylene Terephthalate + Polycarbonate	120(248)	Same as above.	Flammable
PA	Polyamide	140(284)	Same as above.	Avoid immersing in wa-ter.
PBT	Poly Butylene Terephthalate	140(284)	Same as above.	
PET	Polyester	180(356)	Same as above.	
PEI	Polyetherimide	200(392)	Same as above.	

1. When repairing and painting a portion of the body adjacent to plastic parts, consider their characteristics (influence of heat and solvent) and remove them if necessary or take suitable measures to protect them.
2. Plastic parts should be repaired and painted using methods suiting the materials' characteristics.

LOCATION OF PLASTIC PARTS

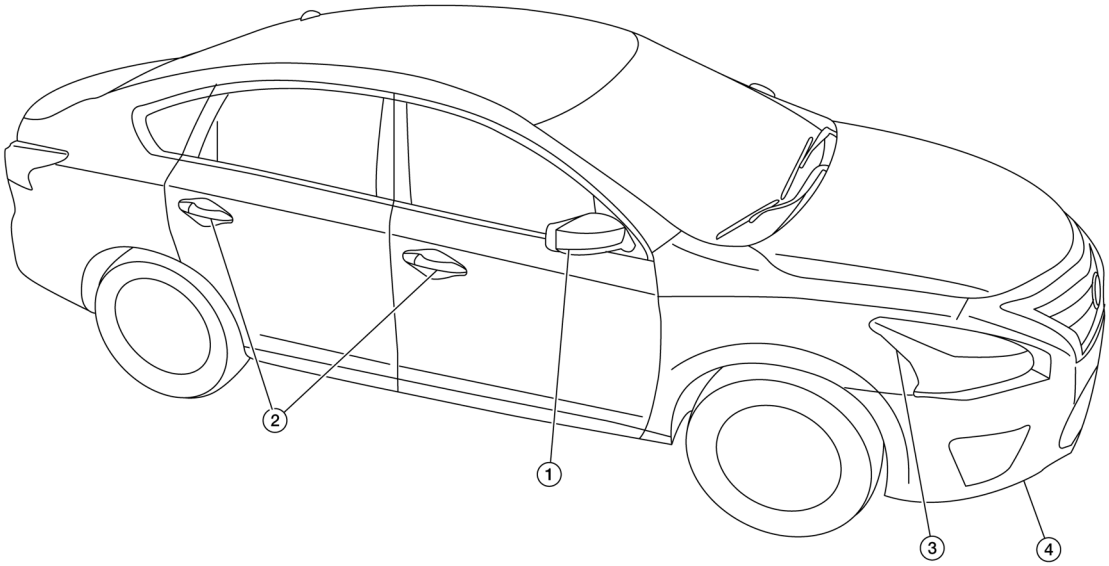

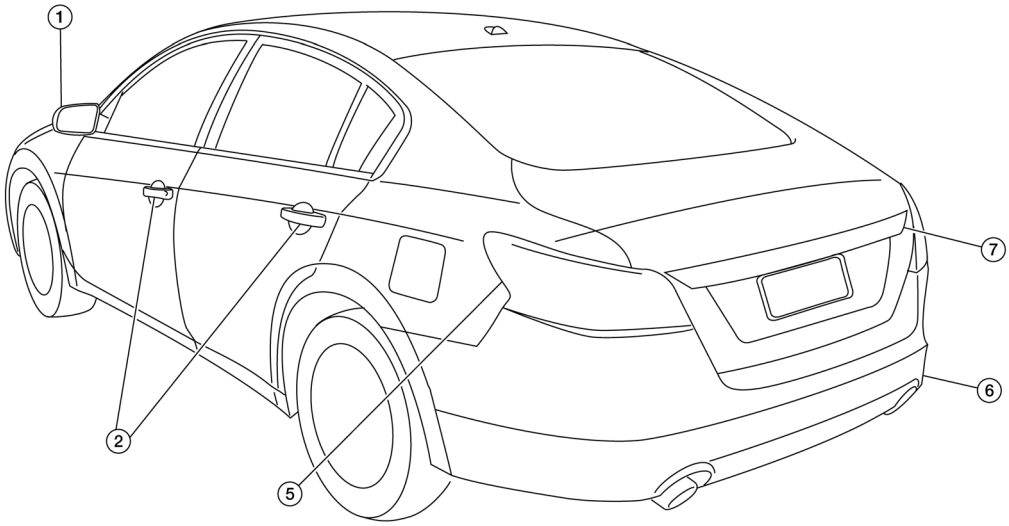

ALKIA2538ZZ

Item	Component		Abbreviation	Material
1.	Door Mirror	Case	ASA	Acronitrile Styrene Acrylate
		Skull cap	ABS	Acronitrile Butadiene Acrylate
2.	Outside door handle	Grip	PC	Polycarbonate
		Escutcheon	PA	Polyamide (Nylon)

Item	Component		Abbreviation	Material
3.	Front combination lamp	Lens	PC	Polycarbonate
		Housing	PP	Polypropylene
4.	Front bumper fascia		PP + EPM	Polypropylene + Ethylene Propylene (Diene) copolymer
5.	Rear combination lamp	Lens	PMMA	Poly Methyl Methacrylate
		Housing	ABS	Acronitrile Butadiene Acrylate
6.	Rear bumper fascia		PP + EPM	Polypropylene + Ethylene Propylene (Diene) copolymer
7.	Trunk lid finisher		ABS + PC	Acronitrile Butadiene Acrylate + Polycarbonate

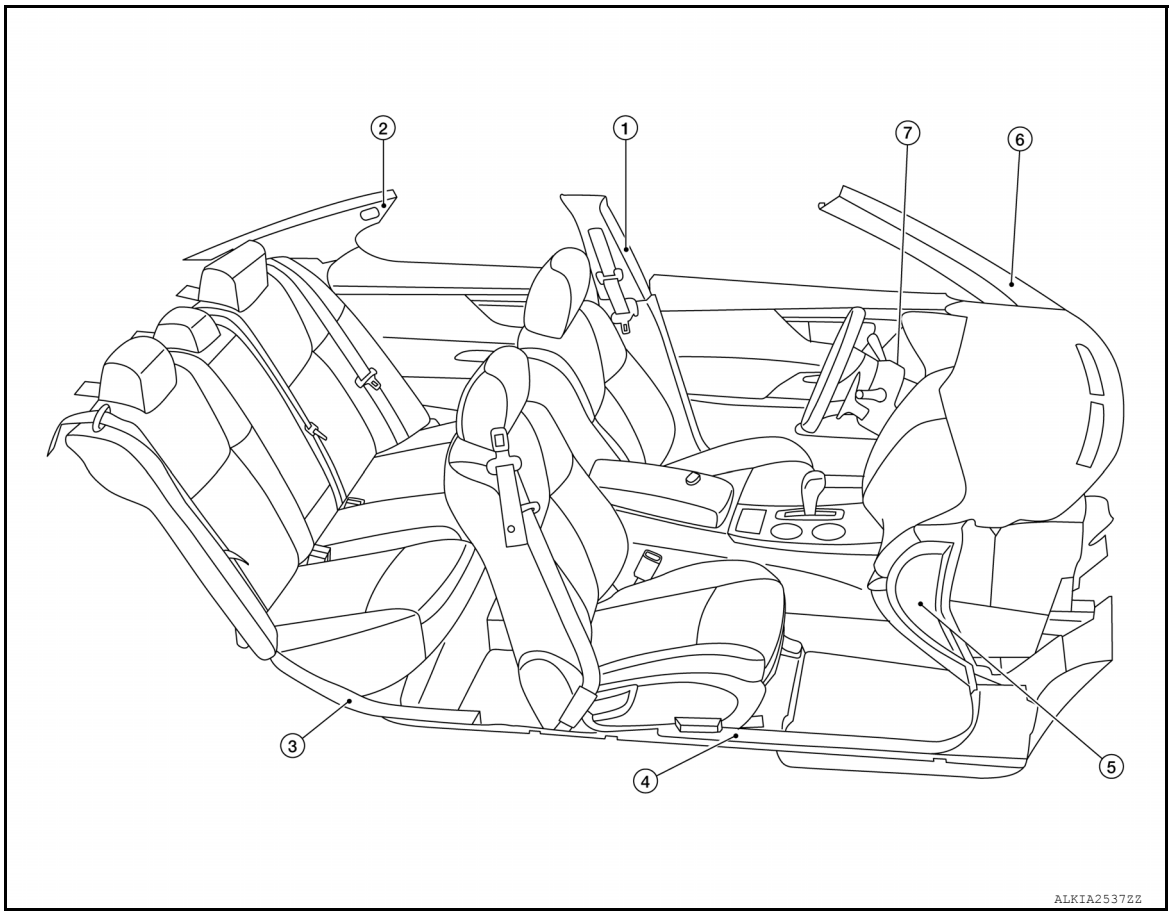

Item	Component	Abbreviation	Material
1.	Upper center pillar trim	PP	Polypropylene
2.	Rear finisher	PP	Polycarbonate
3.	Rear kicking plate	PP	Polypropylene
4.	Front kicking plate	PP	Polypropylene
5.	Instrument panel side finisher	PP	Polypropylene
6.	Front pillar finisher	PP	Polypropylene
7.	Steering column covers	PP	Polypropylene