SECTION PCS
POWER CONTROL SYSTEM

CONTENTS

IPDM E/R

POWER DISTRIBUTION SYSTEM

PRECAUTION

PRECAUTIONS

Precaution for Supplemental Restraint System (SRS) "AIR BAG" and "SEAT BELT PRE-TENSIONER"

INFOID:0000000008722324

The Supplemental Restraint System such as “AIR BAG” and “SEAT BELT PRE-TENSIONER”, used along with a front seat belt, helps to reduce the risk or severity of injury to the driver and front passenger for certain types of collision. Information necessary to service the system safely is included in the SR and SB section of this Service Manual.

WARNING:

- **To avoid rendering the SRS inoperative, which could increase the risk of personal injury or death in the event of a collision which would result in air bag inflation, all maintenance must be performed by an authorized NISSAN/INFINITI dealer.**
- **Improper maintenance, including incorrect removal and installation of the SRS, can lead to personal injury caused by unintentional activation of the system. For removal of Spiral Cable and Air Bag Module, see the SR section.**
- **Do not use electrical test equipment on any circuit related to the SRS unless instructed to in this Service Manual. SRS wiring harnesses can be identified by yellow and/or orange harnesses or harness connectors.**

PRECAUTIONS WHEN USING POWER TOOLS (AIR OR ELECTRIC) AND HAMMERS

WARNING:

- **When working near the Airbag Diagnosis Sensor Unit or other Airbag System sensors with the Ignition ON or engine running, DO NOT use air or electric power tools or strike near the sensor(s) with a hammer. Heavy vibration could activate the sensor(s) and deploy the air bag(s), possibly causing serious injury.**
- **When using air or electric power tools or hammers, always switch the Ignition OFF, disconnect the battery and wait at least 3 minutes before performing any service.**

Precaution for Procedure without Cowl Top Cover

INFOID:0000000007986585

When performing the procedure after removing cowl top cover, cover the lower end of windshield with urethane, etc.

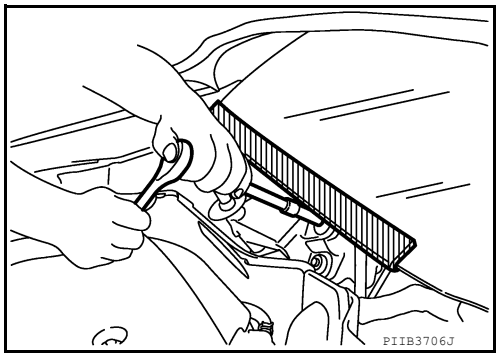

SYSTEM DESCRIPTION

COMPONENT PARTS

Component Parts Location

INFOID:0000000007986559

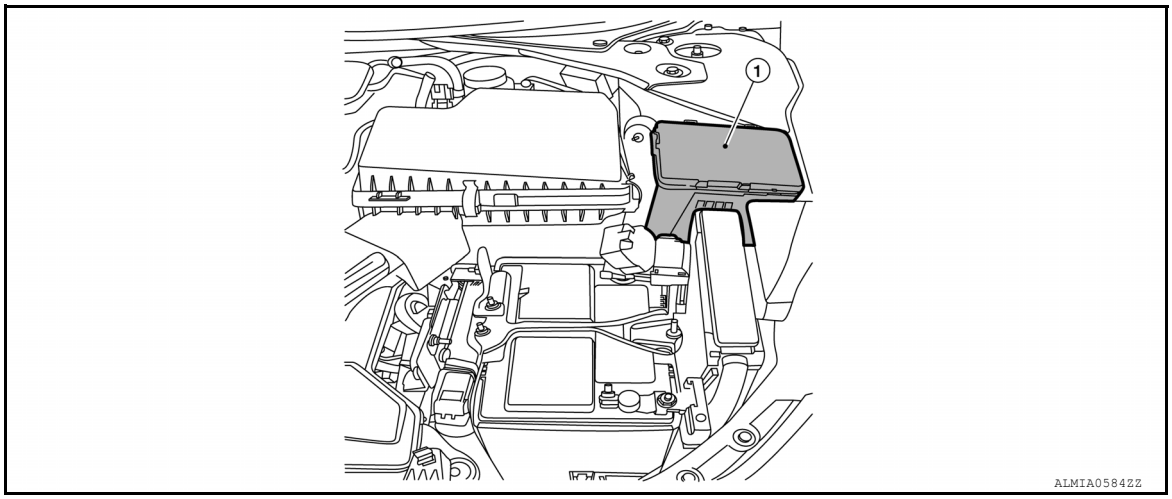

1. IPDM E/R

SYSTEM

RELAY CONTROL SYSTEM

RELAY CONTROL SYSTEM : System Diagram

INFOID:0000000007986557

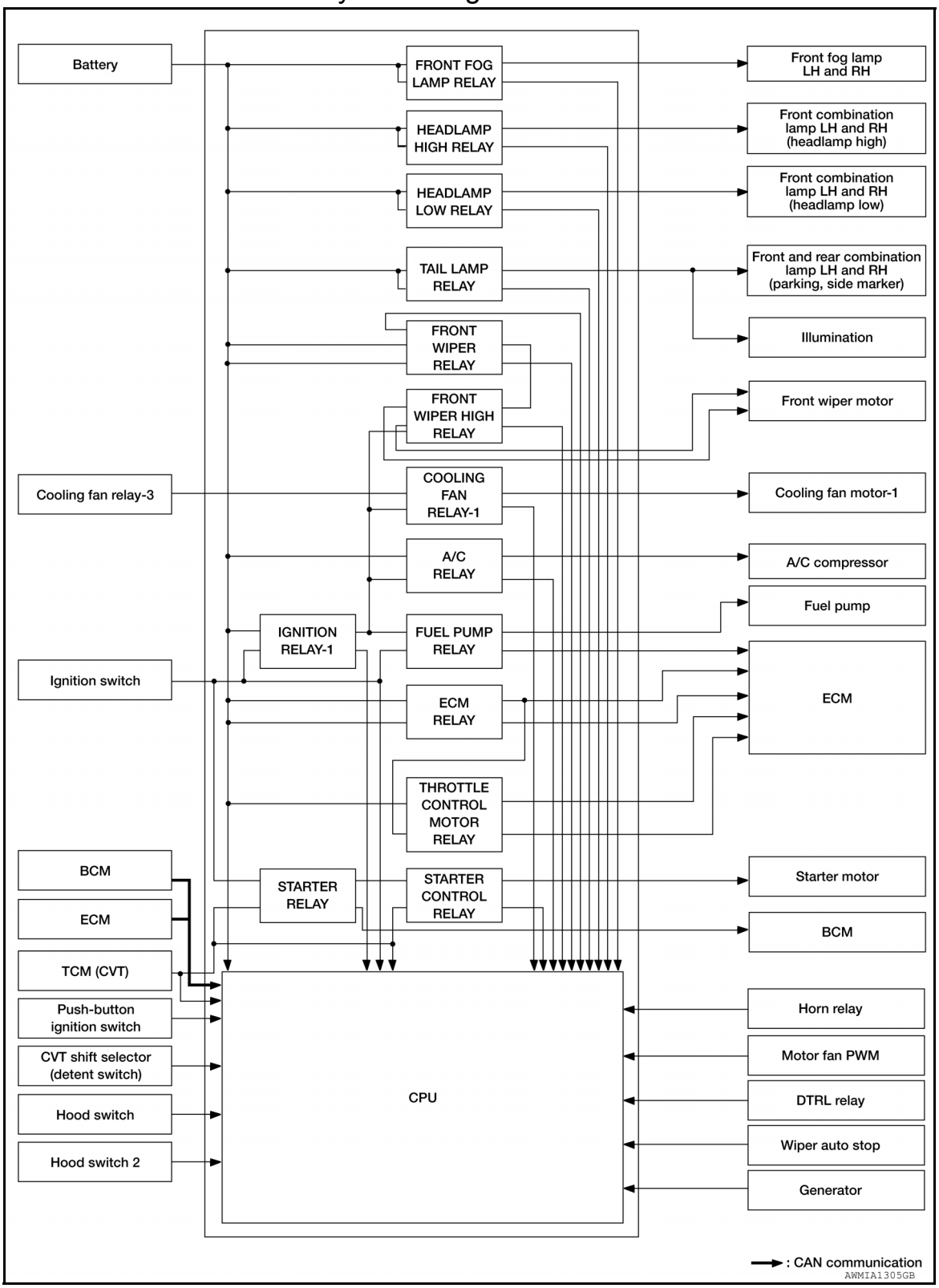

RELAY CONTROL SYSTEM : System Description

INFOID:0000000007986558

IPDM E/R activates the internal control circuit to perform the relay ON-OFF control according to the input signals from various sensors and the request signals received from control units via CAN communication.

CAUTION:

IPDM E/R integrated relays cannot be removed.

Control relay	Input/output	Transmit unit	Control part	Reference page
Front fog lamp relay	Front fog lamp request signal	BCM (CAN)	Front fog lamp	EXL-100
Headlamp high relay	High beam request signal	BCM (CAN)	Headlamp high	EXL-90
Headlamp low relay	Low beam request signal	BCM (CAN)	Headlamp low	EXL-92 (halogen) EXL-93 (xenon)
Tail lamp relay	Position light request signal	BCM (CAN)	• Parking lamp • Side marker lamp • License plate lamp • Tail lamp	EXL-102
• Front wiper relay • Front wiper high relay	Front wiper request signal	BCM (CAN)	Front wiper	WW-48
	Front wiper auto stop signal	Front wiper motor		
Cooling fan relay-1	Cooling fan request signal	ECM	Cooling fan	EC-497 (QR25DE) EC-955 (VQ35DE)
A/C relay	A/C compressor request signal	ECM (CAN)	A/C compressor	HAC-87 (automatic air conditioner) HAC-152 (manual air conditioner)
Ignition relay-1	Ignition switch ON signal	BCM (CAN)	Ignition relay-1	PCS-57
	Vehicle speed signal	Combination meter (CAN)		
	Push-button ignition switch	Push-button ignition switch		
Fuel pump relay	Fuel pump request signal	ECM	Fuel pump	EC-506 (QR25DE) EC-967 (VQ35DE)
ECM relay	ECM relay control signal	ECM	ECM relay	EC-204 (QR25DE) EC-707 (VQ35DE)
Throttle control motor relay	Throttle control motor relay signal	ECM	Throttle control motor relay	EC-473 (QR25DE) EC-935 (VQ35DE)
Starter relay	Starter relay control signal	BCM	Starter motor	PCS-12
Starter control relay				

POWER CONSUMPTION CONTROL SYSTEM

POWER CONSUMPTION CONTROL SYSTEM : System Diagram

INFOID:0000000007986564

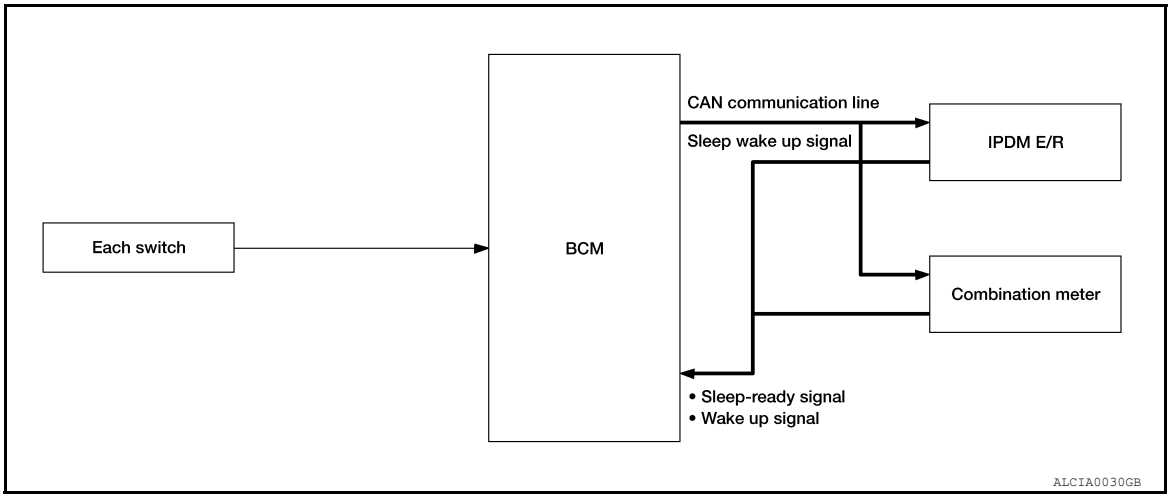

POWER CONSUMPTION CONTROL SYSTEM : System Description

INFOID:0000000007986565

OUTLINE

- IPDM E/R incorporates a power consumption control function that reduces the power consumption according to the vehicle status.
- IPDM E/R changes its status (control mode) with the sleep wake up signal received from BCM via CAN communication.

Normal mode (wake-up)
- CAN communication is normally performed with other control units.
- Individual unit control by IPDM E/R is normally performed.

Low power consumption mode (sleep)
- Low power consumption control is active.
- CAN transmission is stopped.

SLEEP MODE ACTIVATION

- IPDM E/R judges that the sleep-ready conditions are fulfilled when the ignition switch is OFF and none of the conditions below are present. Then it transmits a sleep-ready signal (ready) to BCM via CAN communication.
- Front wiper fail-safe operation
- Outputting signals to actuators
- Switches or relays operating
- Auto active test is starting
- Emergency OFF
- Output requests are being received from control units via CAN communication.
- IPDM E/R stops CAN communication and enters the low power consumption mode when it receives a sleep wake up signal (sleep) from BCM and the sleep-ready conditions are fulfilled.

WAKE-UP OPERATION

- IPDM E/R changes from the low power consumption mode to the normal mode when it receives a sleep wake-up signal (wake up) from BCM or any of the following conditions is fulfilled. In addition, it transmits a sleep-ready signal (not-ready) to BCM via CAN communication to report the CAN communication start.
- Ignition switch ON
- An output request is received from a control unit via CAN communication.

IGNITION BATTERY SAVER LOGIC

If the ignition is ON for 30 minutes with the engine OFF, the IPDM E/R and BCM turn OFF to save the battery.

DIAGNOSIS SYSTEM (IPDM E/R)

Diagnosis Description

INFOID:0000000007986567

AUTO ACTIVE TEST

Description

In auto active test mode, the IPDM E/R sends a drive signal to the following systems to check their operation.

- Front wiper (LO, HI)
- Front fog lamps
- Parking lamps
- Side marker lamps
- Tail lamps
- License plate lamps
- Daytime running lamps
- Headlamps (LO, HI)
- A/C compressor
- Cooling fans (LO, HI)

Operation Procedure

CAUTION:

Do not start the engine.

NOTE:

When auto active test is performed with hood opened, sprinkle water on windshield before hand.

NOTE:

- If auto active test mode cannot be actuated, check door switch system. Refer to DLK-99, "Component Function Check".
- When auto active test mode has to be cancelled halfway through test, turn ignition switch OFF.

1. Close the hood and lift the wiper arms from the windshield. (Prevent windshield damage due to wiper operation)
2. Turn ignition switch OFF.
3. Turn the ignition switch ON, and within 20 seconds, press the front door switch LH 10 times. Then turn the ignition switch OFF.
4. Turn the ignition switch ON within 10 seconds. After that the horn sounds once, and the auto active test starts.
5. After a series of the following operations is repeated 3 times, auto active test is completed.

Inspection in Auto Active Test Mode

When auto active test mode is actuated, the following operation sequence is repeated 3 times.

Operation sequence	Inspection Location	Operation
1	Front wiper	LO for 3 seconds → HI for 3 seconds
2	• Front fog lamps • Parking lamps • Side marker lamps • Tail lamps • License plate lamps	10 seconds
3	Daytime running lamps	10 seconds
4	Headlamps	LO ⇔ HI 5 times
5	A/C compressor	ON ⇔ OFF 5 times
6*	Cooling fans	LO for 5 seconds → HI for 5 seconds

*: Outputs duty ratio of 50% for 5 seconds → duty ratio of 100% for 5 seconds on the cooling fan control module.

Concept of auto active test

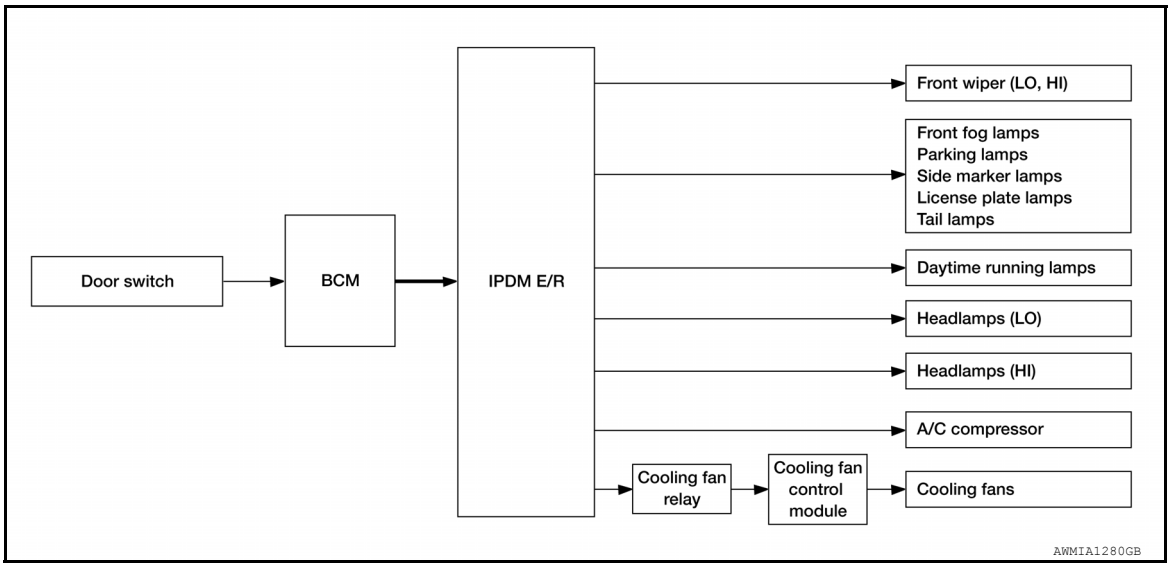

- IPDM E/R starts the auto active test with the door switch signals transmitted by BCM via CAN communication. Therefore, the CAN communication line between IPDM E/R and BCM is considered normal if the auto active test starts successfully.
- The auto active test facilitates troubleshooting if any systems controlled by IPDM E/R cannot be operated.

Diagnosis chart in auto active test mode

Symptom	Inspection contents		Possible cause
Any of the following components do not operate • Front fog lamps • Parking lamps • Side marker lamps • License plate lamps • Tail lamps • Daytime running lamps • Headlamp (HI, LO) • Front wiper	Perform auto active test. Does the applicable system operate?	YES	BCM signal input circuit
		NO	• Lamp or motor • Lamp or motor ground circuit • Harness or connector between IPDM E/R and applicable system • IPDM E/R
Cooling fans do not operate	Perform auto active test. Do the cooling fans operate?	YES	• ECM signal input circuit • CAN communication signal between ECM and IPDM E/R
		NO	• Cooling fans • Harness or connectors between cooling fans and cooling fan control module • Cooling fan control module • Harness or connectors between cooling fan relay and cooling fan control module • Cooling fan relay • Harness or connectors between IPDM E/R and cooling fan relay • IPDM E/R

CONSULT Function (IPDM E/R)

INFOID:0000000007986568

APPLICATION ITEM

CONSULT performs the following functions via CAN communication with IPDM E/R.

Direct Diagnostic Mode	Description
Ecu Identification	The IPDM E/R part number is displayed.
Self Diagnostic Result	The IPDM E/R self diagnostic results are displayed.
Data Monitor	The IPDM E/R input/output data is displayed in real time.
Active Test	The IPDM E/R activates outputs to test components.
CAN Diag Support Mntr	The result of transmit/receive diagnosis of CAN communication is displayed.

ECU IDENTIFICATION

The IPDM E/R part number is displayed.

SELF DIAGNOSTIC RESULT

Refer to PCS-20, "DTC Index".

DATA MONITOR

Monitor Item [Unit]	Main Signals	Description
MOTOR FAN REQ [%]	×	Indicates cooling fan speed signal received from ECM on CAN communication line
AC COMP REQ [On/Off]	×	Indicates A/C compressor request signal received from ECM on CAN communication line
TAIL&CLR REQ [On/Off]	×	Indicates position light request signal received from BCM on CAN communication line
HL LO REQ [On/Off]	×	Indicates low beam request signal received from BCM on CAN communication line
HL HI REQ [On/Off]	×	Indicates high beam request signal received from BCM on CAN communication line
FR FOG REQ [On/Off]	×	Indicates front fog light request signal received from BCM on CAN communication line
FR WIP REQ [Stop/1LOW/Low/Hi]	×	Indicates front wiper request signal received from BCM on CAN communication line
WIP AUTO STOP [STOP P/ACT P]	×	Indicates condition of front wiper auto stop signal
WIP PROT [Off/BLOCK]	×	Indicates condition of front wiper fail-safe operation
IGN RLY1 -REQ [On/Off]		Indicates ignition switch ON signal received from BCM on CAN communication line
IGN RLY [On/Off]	×	Indicates condition of ignition relay
PUSH SW [On/Off]		Indicates condition of push-button ignition switch
INTER/NP SW [On/Off]		Indicates condition of CVT shift position
ST RLY CONT [On/Off]		Indicates starter relay status signal received from BCM on CAN communication line
IHBT RLY -REQ [On/Off]		Indicates starter control relay signal received from BCM on CAN communication line
ST/INHI RLY [Off/ ST /INHI]		Indicates condition of starter relay and starter control relay
DETENT SW [On/Off]		Indicates condition of CVT shift selector (park position switch)
DTRL REQ [Off]		Indicates daytime light request signal received from BCM on CAN communication line
HOOD SW [On/Off]		Indicates condition of hood switch
THFT HRN REQ [On/Off]		Indicates theft warning horn request signal received from BCM on CAN communication line
HORN CHIRP [On/Off]		Indicates horn reminder signal received from BCM on CAN communication line
HOOD SW 2 [On/Off]		Indicates condition of hood switch 2

ACTIVE TEST

Test item	Description
HORN	This test is able to check horn operation [On].
FRONT WIPER	This test is able to check wiper motor operation [Hi/Lo/Off].
MOTOR FAN	This test is able to check cooling fan operation [4/3/2/1].
EXTERNAL LAMPS	This test is able to check external lamp operation [Fog/Hi/Lo/TAIL/Off].

CAN DIAG SUPPORT MNTR

Refer to LAN-15, "CAN Diagnostic Support Monitor".

ECU DIAGNOSIS INFORMATION

IPDM E/R (INTELLIGENT POWER DISTRIBUTION MODULE ENGINE ROOM)

Reference Value

INFOID:0000000007986579

VALUES ON THE DIAGNOSIS TOOL

Monitor Item	Condition		Value/Status
RAD FAN REQ	Engine idle speed	Changes depending on engine coolant temperature, air conditioner operation status, vehicle speed, etc.	1, 2, 3, 4
AC COMP REQ	Engine running	A/C switch OFF	Off
		A/C switch ON (Compressor is operating)	On
TAIL&CLR REQ	Lighting switch OFF		Off
	Lighting switch 1ST, 2ND, HI or AUTO (Light is illuminated)		On
HL LO REQ	Lighting switch OFF		Off
	Lighting switch 2ND HI or AUTO (Light is illuminated)		On
HL HI REQ	Lighting switch OFF		Off
	Lighting switch HI		On
FR FOG REQ	Lighting switch 2ND or AUTO (Light is illuminated)	Front fog lamp switch OFF	Off
		• Front fog lamp switch ON • Daytime running light activated (Only for Canada models)	On
FR WIP REQ	Ignition switch ON	Front wiper switch OFF	STOP
		Front wiper switch INT	1LOW
		Front wiper switch LO	Low
		Front wiper switch HI	Hi
WIP AUTO STOP	Ignition switch ON	Front wiper stop position	STOP P
		Any position other than front wiper stop position	ACT P
WIP PROT	Ignition switch ON	Front wiper operates normally	Off
		Front wiper stops at fail-safe operation	BLOCK
IGN RLY1 -REQ	Ignition switch OFF or ACC		Off
	Ignition switch ON		On
IGN RLY	Ignition switch OFF or ACC		Off
	Ignition switch ON		On
PUSH SW	Release the push-button ignition switch		Off
	Press the push-button ignition switch		On
INTER/NP SW	Ignition switch ON	CVT selector lever in any position other than P or N	Off
		CVT selector lever in P or N position	On
ST RLY CONT	Ignition switch ON		Off
	At engine cranking		On
IHBT RLY -REQ	Ignition switch ON		Off
	At engine cranking		On

Monitor Item	Condition		Value/Status
ST/INHI RLY	Ignition switch ON		Off
	At engine cranking		ST →INHI
	The status of starter relay or starter control relay cannot be recognized by the battery voltage malfunction, etc. when the starter relay is ON and the starter control relay is OFF		UNKWN
DETENT SW	Ignition switch ON	• Press the selector button with CVT selector lever in P position • CVT selector lever in any position other than P	Off
	Release the CVT selector button with CVT selector lever in P position		On
DTRL REQ	DTRL OFF		Off
	DTRL ON		On
HOOD SW	Hood closed		Off
	Hood open		On
THFT HRN REQ	Not operated		Off
	• Panic alarm is activated • Horn is activated with VEHICLE SECURITY (THEFT WARNING) SYSTEM		On
HORN CHIRP	Not operated		Off
	Door locking with Intelligent Key (horn chirp mode)		On
HOOD SW 2	Hood closed		Off
	Hood open		On

TERMINAL LAYOUT

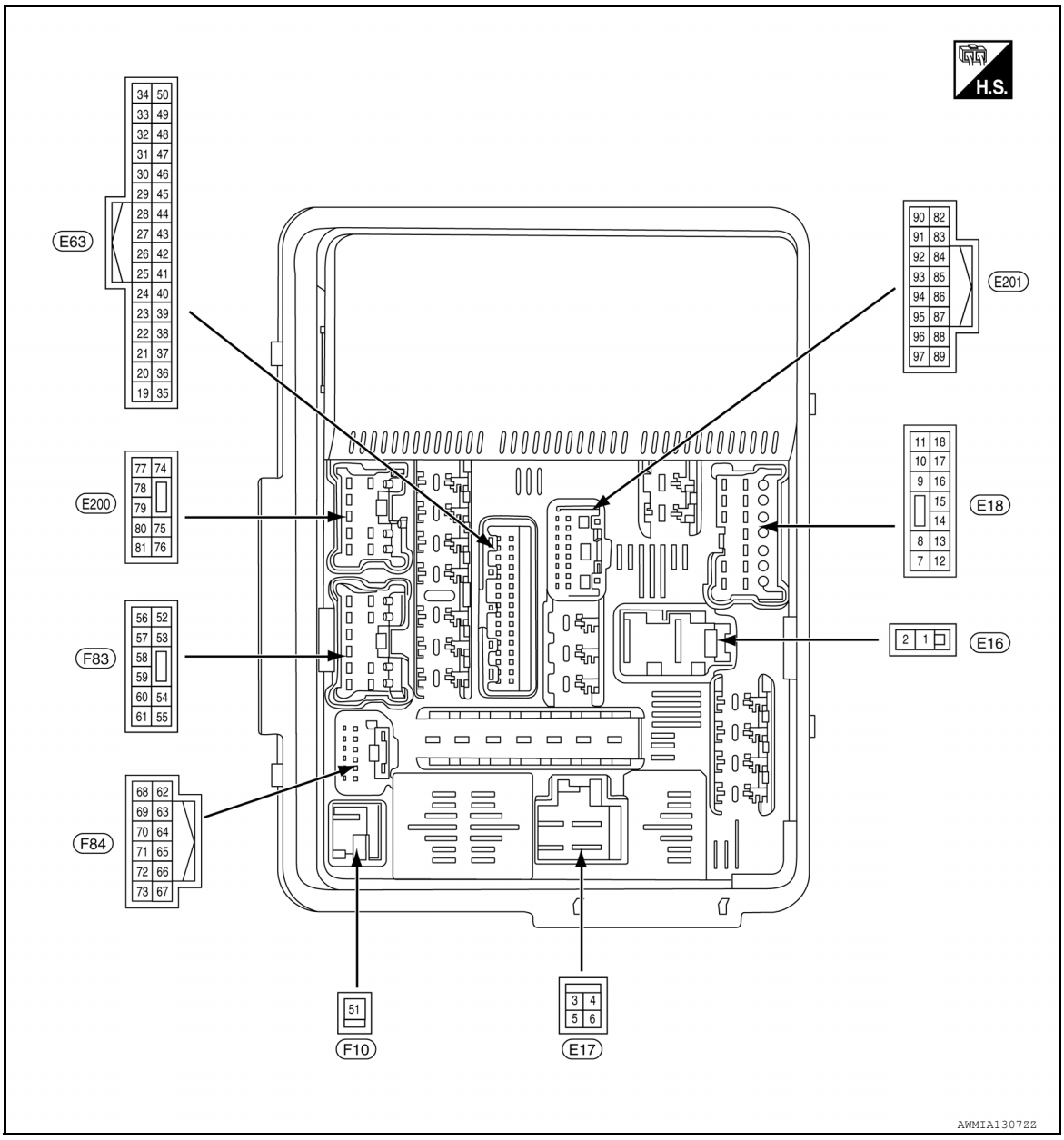

PHYSICAL VALUES

Terminal No. (Wire color)		Description		Condition	Value (Approx.)
+	–	Signal name	Input/ Output		
1 (R)	Ground	Fusible link main	Input	Ignition switch OFF	Battery voltage
2 (L)	Ground	Fusible link IPDM E/R	Input	Ignition switch OFF	Battery voltage
3 (G)	Ground	Fusible link ignition switch	Input	Ignition switch ON	Battery voltage
4 (P)	Ground	Motor fan 1	Output	Ignition switch OFF	0V
				Ignition switch ON	Battery voltage
6 (R)	Ground	Fusible link motor fan	Input	Ignition switch OFF	0V
				Ignition switch ON	Battery voltage

Terminal No. (Wire color)		Description		Condition		Value (Approx.)
+	–	Signal name	Input/ Output			
7 (B)	Ground	Ground (Power)	—	Ignition switch ON		0V
9 (SB)	Ground	Tail RH	Output	Ignition switch ON	Lighting switch OFF	0V
					Lighting switch 1ST	Battery voltage
10 (V)	Ground	Tail LH	Output	Ignition switch ON	Lighting switch OFF	0V
					Lighting switch 1ST	Battery voltage
11 (Y)	Ground	Front wiper LO	Output	Ignition switch ON	Front wiper switch OFF	0V
					Front wiper switch LO	Battery voltage
13 (LG)	Ground	ECM battery	Output	Ignition switch OFF		0V
				Ignition switch ON		Battery voltage
14 (Y)	Ground	Daytime running lamps	Output	Ignition switch OFF		Battery voltage
15 (R)	Ground	Fuel pump	Output	Approximately 1 second or more after turning the ignition switch ON		0V
				• Approximately 1 second after turning the ignition switch ON • Engine running		Battery voltage
18 (L)	Ground	Front wiper HI	Output	Ignition switch ON	Front wiper switch OFF	0V
					Front wiper switch HI	Battery voltage
19 (BR)	Ground	Power steering control unit	Output	Ignition switch OFF		0V
				Ignition switch ON		Battery voltage
21 (L)	Ground	ECM ignition switch	Output	Ignition switch OFF		0V
				Ignition switch ON		Battery voltage
22 (W)	Ground	Horn relay	Input	The horn is deactivated		Battery voltage
				The horn is activated		0V
23 (V)	Ground	Horn switch	Input	The horn is deactivated		Battery voltage
				The horn is activated		0V
27 (BG)	Ground	Fan motor relay mid	Input	Ignition switch OFF		0V
				Ignition switch ON		0.7V
28 (P)	—	CAN-L	Input/ Output	—		—
29 (L)	—	CAN-H	Input/ Output	—		—
31 (Y)	Ground	Detent switch	Input	Ignition switch ON	Press the CVT selector button (CVT selector lever P)	Battery voltage
					• CVT selector lever in any position other than P • Release the CVT selector button (CVT selector lever P)	0V
33 (R)	Ground	Starter control	Input	Ignition switch ON	CVT selector lever in any position other than P or N	0V
					CVT selector lever P or N	Battery voltage
34 (SB)	Ground	Wiper autostop	Input	Ignition switch ON	Front wiper stop position	0V
					Any position other than front wiper stop position	Battery voltage

Terminal No. (Wire color)		Description		Condition		Value (Approx.)
+	–	Signal name	Input/ Output			
35 (BR)	Ground	ABS actuator and electric unit (control unit)	Output	Ignition switch OFF		0V
				Ignition switch ON		Battery voltage
36 (W)	Ground	Cooling fan relay-2, 3	Output	Ignition switch OFF		0V
				Ignition switch ON		Battery voltage
37 (W)	Ground	Transmission range switch signal	Input	Ignition switch ON	CVT selector lever in P (park) or N (neutral) position	Battery voltage
					CVT selector lever in any position other than P (park) or N (neutral) position	0V
38 (G)	Ground	Push start switch	Input	Press the push-button ignition switch		0V
				Release the push-button ignition switch		Battery voltage
39 (G)	Ground	Motor fan relay HI	Input	Ignition switch OFF		0V
				Ignition switch ON		0.7V
41 (B)	Ground	Ground (signal)	—	Ignition switch ON		0V
43 (LG)	Ground	Ignition signal[1]	Input	Ignition switch OFF or ACC		Battery voltage
				Ignition switch ON		0V
45[2] (V)	Ground	Power distribution sensor signal-E/R	—	• Ignition switch ON (READY) • Both A/C switch and blower motor switch ON (A/C compressor operates)		1.0 - 4.0V
45[3] (P)						
47[2] (O)	Ground	Power distribution sensor power-E/R	—	Ignition switch ON		5V
47[3] (BG)						
48 (SB)	Ground	Power distribution sensor ground-E/R	—	Ignition switch ON		0V
49 (P)	Ground	Ambient sensor signal-E/R	—	Ignition switch ON		5V
50 (BG)	Ground	Ambient sensor ground-E/R	—	Ignition switch ON		0V
51 (R)	Ground	Starter motor	Output	At engine cranking		Battery voltage
52[2] (G)	Ground	O2 sensor #2	Output	Ignition switch OFF		0V
52[3] (P)				Ignition switch ON		Battery voltage
53[2] (W)	Ground	O2 sensor #1	Output	Ignition switch OFF		0V
53[3] (G)				Ignition switch ON		Battery voltage
54 (LG)	Ground	Injector #1	Output	Ignition switch OFF		0V
				Ignition switch ON		Battery voltage

Terminal No. (Wire color)		Description		Condition		Value (Approx.)
+	–	Signal name	Input/ Output			
55[2] (W)	Ground	Ignition coil	Output	Ignition switch OFF (For a few seconds after turning ignition switch OFF)		0V
55[3] (G)				• Ignition switch ON • Ignition switch OFF (More than a few seconds after turning ignition switch OFF)		Battery voltage
56 (SB)	Ground	A/C compressor	Output	Engine running	A/C compressor OFF	0V
					A/C compressor ON (A/C compressor is operating)	Battery voltage
57 (R)	Ground	Electronic throttle control	Output	Ignition switch OFF (For a few seconds after turning ignition switch OFF)		0V
				• Ignition switch ON • Ignition switch OFF (More than a few seconds after turning ignition switch OFF)		Battery voltage
58 (SB)	Ground	ECM battery	Output	Ignition switch OFF		Battery voltage
59 (L)	Ground	Engine solenoid	Output	Ignition switch OFF (For a few seconds after turning ignition switch OFF)		0V
				• Ignition switch ON • Ignition switch OFF (More than a few seconds after turning ignition switch OFF)		Battery voltage
60 (Y)	Ground	Injector #2	Output	Ignition switch OFF		0V
				Ignition switch ON		Battery voltage
61 (Y)	Ground	Transmission control module	Output	Ignition switch OFF		0V
				Ignition switch ON		Battery voltage
65[2] (BR)	Ground	Throttle control motor relay	Output	Ignition switch ON → OFF		0 -1.0V ↓ Battery voltage ↓ 0V
65[3] (L)				Ignition switch ON		0 - 1.0V
66 (LG)	Ground	N/P switch	Input	Ignition switch ON	CVT selector lever in P or N position	Battery voltage
					CVT selector lever in any position other than P or N position	0V
69 (V)	Ground	Fuel pump relay	Output	• Approximately 1 second after turning the ignition switch ON • Engine running		0 - 1.0V
				Approximately 1 second or more after turning the ignition switch ON		Battery voltage

Terminal No. (Wire color) +	Terminal No. (Wire color) –	Description: Signal name	Description: Input/ Output	Condition		Value (Approx.)
71 (SB)	Ground	Alternator C	Output	Ignition switch ON		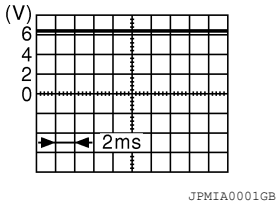 6.3V
				40% is set on “Active test”, “ALTERNATOR DUTY” of “ENGINE”		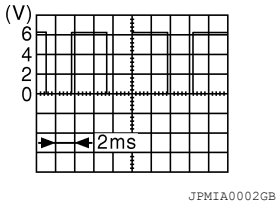 3.8V
				80% is set on “Active test”, “ALTERNATOR DUTY” of “ENGINE”		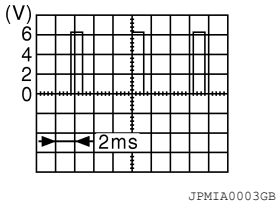 1.4V
72[2] (V)	Ground	ECM relay (Self shut-off)	Output	Ignition switch OFF (For a few seconds after turning ignition switch OFF)		Battery voltage
72[3] (Y)				• Ignition switch ON • Ignition switch OFF (More than a few seconds after turning ignition switch OFF)		0 - 1.5V
74 (BG)	Ground	Washer motor	Output	Ignition switch ON		Battery voltage
75 (R)	Ground	Headlamp LO RH	Output	Ignition switch ON	Lighting switch OFF	0V
					Lighting switch 2ND	Battery voltage
76 (P)	Ground	Headlamp LO LH	Output	Ignition switch ON	Lighting switch OFF	0V
					Lighting switch 2ND	Battery voltage
78 (W)	Ground	Front fog lamp RH	Output	Ignition switch ON	Fog lamp switch OFF	0V
					Fog lamp switch ON	Battery voltage
79 (G)	Ground	Front fog lamp LH	Output	Ignition switch ON	Fog lamp switch OFF	0V
					Fog lamp switch ON	Battery voltage
80 (L)	Ground	Headlamp HI RH	Output	Ignition switch ON	• Lighting switch HI • Lighting switch PASS	Battery voltage
					Lighting switch OFF	0V
81 (Y)	Ground	Headlamp HI LH	Output	Ignition switch ON	• Lighting switch HI • Lighting switch PASS	Battery voltage
					Lighting switch OFF	0V

Terminal No. (Wire color)		Description		Condition		Value (Approx.)
+	–	Signal name	Input/ Output			
82 (W)	Ground	Power distribution sensor signal-fem	—	• Ignition switch ON (READY) • Both A/C switch and blower motor switch ON (electric compressor operates)		1.0 - 4.0V
83 (G)	Ground	Power distribution sensor power-fem	—	Ignition switch ON		5V
85 (V)	Ground	Daytime running lamps relay	Output	Ignition switch ON	Daytime light system active	Battery voltage
				Ignition switch ON	Daytime light system inactive	0V
86 (R)	Ground	Power distribution sensor ground-fem	—	Ignition switch ON		0V
87 (P)	Ground	Ambient sensor signal-fem	—	Ignition switch ON		5V
90 (LG)	Ground	Clearance lamps	Output	Ignition switch ON	Lighting switch 1ST	Battery voltage
					Lighting switch OFF	0V
94 (SB)	Ground	Hood switch 2	Input	Ignition switch ON	Hood closed	0V
					Hood open	Battery voltage
95 (BG)	Ground	Ambient sensor ground-fem	—	Ignition switch ON		0V
96 (Y)	Ground	Hood switch	Input	Ignition switch ON	Hood closed	0V
					Hood open	Battery voltage

[1]: Ignition battery saver logic turns OFF the IPDM E/R and BCM if the ignition is ON for 30 minutes with the engine OFF.

[2]: With QR25DE.

[3]: With VQ35DE.

Fail Safe

INFOID:0000000007986580

CAN COMMUNICATION CONTROL

When CAN communication with ECM and BCM is impossible, IPDM E/R performs fail-safe control. After CAN communication recovers normally, it also returns to normal control.

If No CAN Communication Is Available With BCM

Control part	Fail-safe in operation
Headlamp	• Turns ON the headlamp low relay when the ignition switch is turned ON • Turns OFF the headlamp low relay when the ignition switch is turned OFF • Headlamp high relay OFF
• Parking lamps • Side marker lamps • License plate lamps • Tail lamps	• Turns ON the tail lamp relay when the ignition switch is turned ON • Turns OFF the tail lamp relay when the ignition switch is turned OFF
Front wiper	• The status just before activation of fail-safe control is maintained until the ignition switch is turned OFF while the front wiper is operating at LO or HI speed. • The wiper is operated at LO speed until the ignition switch is turned OFF if the fail-safe control is activated while the front wiper is set in the INT mode and the front wiper motor is operating.
Horn	Horn OFF
Ignition relay	The status just before activation of fail-safe is maintained.

IGNITION RELAY MALFUNCTION DETECTION FUNCTION

• IPDM E/R monitors the voltage at the contact circuit and excitation coil circuit of the ignition relay inside it.

- IPDM E/R judges the ignition relay error if the voltage differs between the contact circuit and the excitation coil circuit.
- If the ignition relay cannot turn OFF due to contact seizure, it activates the tail lamp relay for 10 minutes to alert the user to the ignition relay malfunction when the ignition switch is turned OFF.

DTC	Ignition switch	Ignition relay	Tail lamp relay
—	ON	ON	—
—	OFF	OFF	—
B2098: IGN RELAY ON	OFF	ON	ON (10 minutes)
B2099: IGN RELAY OFF	ON	OFF	—

NOTE:
The tail lamp turns OFF when the ignition switch is turned ON.

FRONT WIPER CONTROL

IPDM E/R detects front wiper stop position by a front wiper auto stop signal.
When a front wiper auto stop signal is in the conditions listed below, IPDM E/R stops power supply to wiper after repeating a front wiper 10 second activation and 20 second stop five times.

Ignition switch	Front wiper switch	Auto stop signal
ON	OFF	Front wiper stop position signal cannot be input 10 seconds.
	ON	The signal does not change for 10 seconds.

NOTE:
This operation status can be confirmed on the IPDM E/R “Data Monitor” that displays “BLOCK” for the item “WIP PROT” while the wiper is stopped.

STARTER MOTOR PROTECTION FUNCTION

IPDM E/R turns OFF the starter control relay to protect the starter motor when the starter control relay remains active for 90 seconds.

DTC Index

INFOID:0000000007986581

CONSULT display	Fail-safe	TIME[NOTE]		Refer to
No DTC is detected. Further testing may be required.	—	—	—	—
U1000: CAN COMM CIRCUIT	×	CRNT	1 – 39	PCS-27
U1010: CONTROL UNIT (CAN)	×	CRNT	1 – 39	PCS-28
B2098: IGN RELAY ON	×	CRNT	1 – 39	PCS-29
B2099: IGN RELAY OFF	—	CRNT	1 – 39	PCS-30
B210B: INHIBIT relay ON stuck failure	—	CRNT	1 – 39	SEC-74
B210C: INHIBIT relay OFF stuck failure	—	CRNT	1 – 39	SEC-75
B210D: STARTER relay ON stuck failure	—	CRNT	1 – 39	SEC-76
B210E: STARTER relay OFF stuck failure	—	CRNT	1 – 39	SEC-77
B210F: Interlock/NP switch ON stuck failure	—	CRNT	1 – 39	SEC-79
B2110: Interlock/NP switch OFF stuck failure	—	CRNT	1 – 39	SEC-81

NOTE:
The details of TIME display are as follows.
- CRNT: The malfunctions that are detected now
- 1 - 39: The number is indicated when it is normal at present and a malfunction was detected in the past. It increases like 0 → 1 → 2 ··· 38 → 39 after returning to the normal condition whenever IGN OFF → ON. It is fixed to 39 until the self-diagnosis results are erased if it is over 39. It returns to 0 when a malfunction is detected again in the process.

WIRING DIAGRAM

IPDM E/R (INTELLIGENT POWER DISTRIBUTION MODULE ENGINE ROOM)

Wiring Diagram

INFOID:0000000007986583

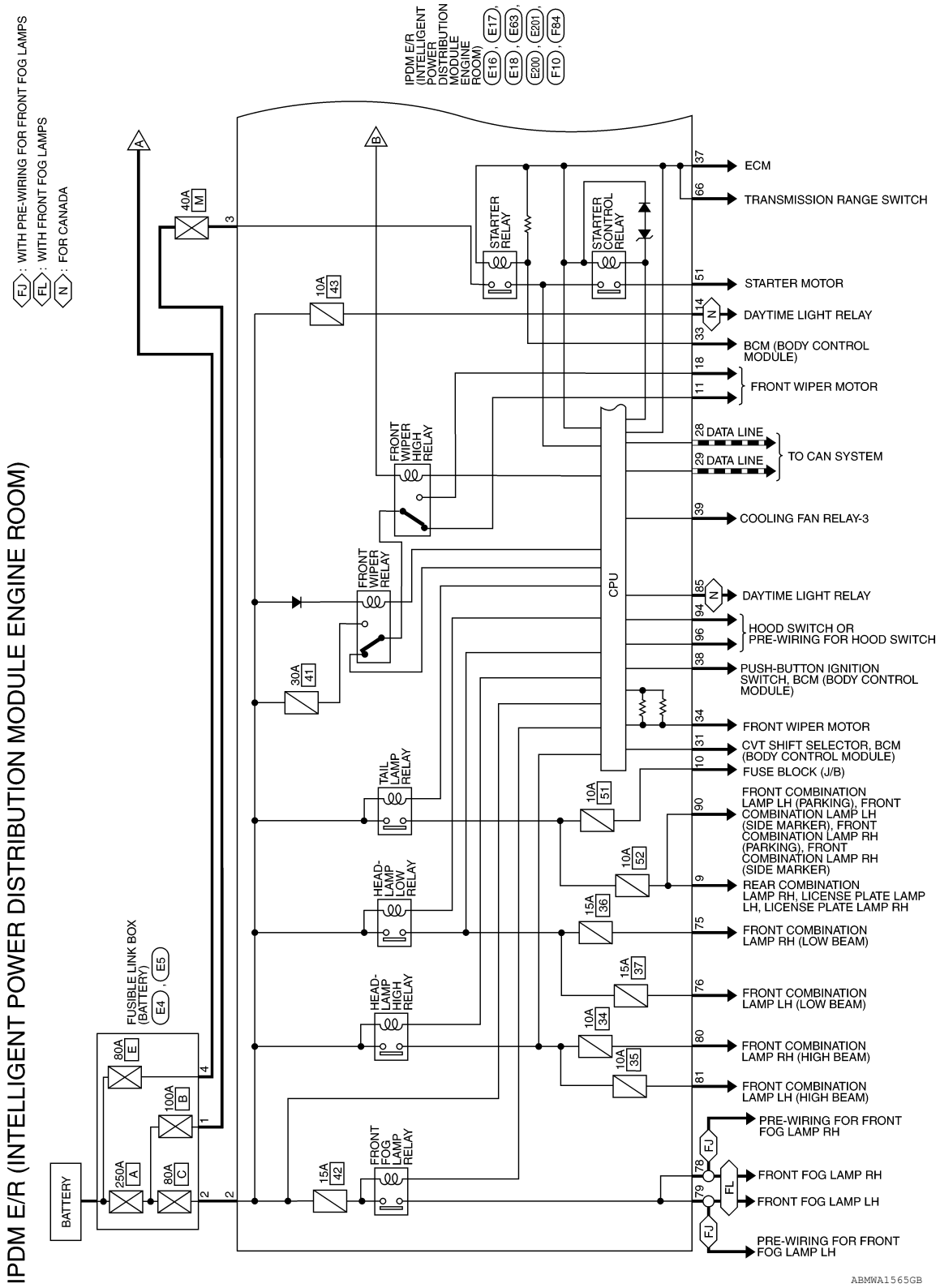

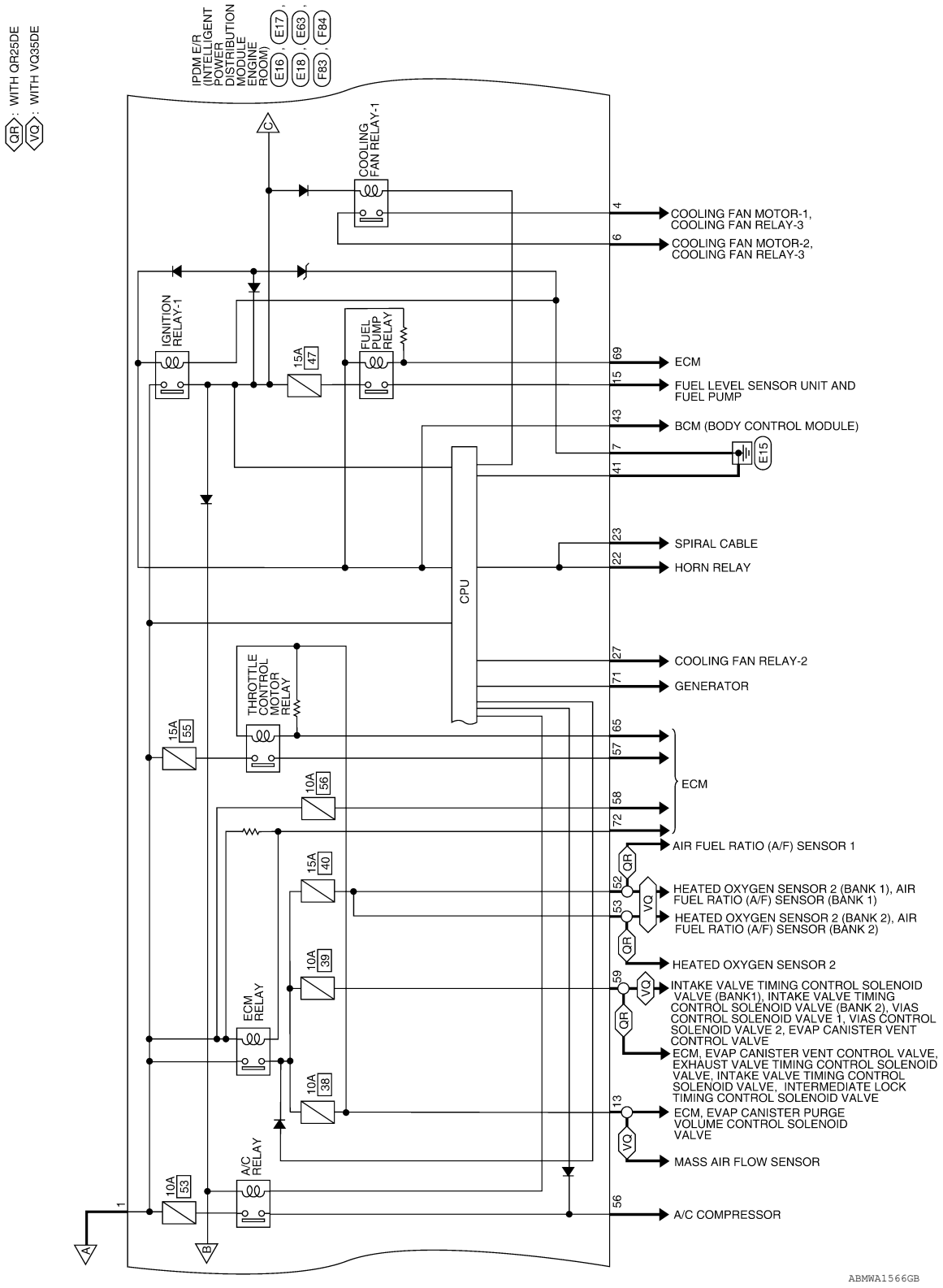
QR : WITH QR25DE
VQ : WITH VQ35DE
IPDM E/R (INTELLIGENT POWER DISTRIBUTION MODULE ENGINE ROOM)
E17, E63, F84
E16, E18, F83
COOLING FAN RELAY-1
IGNITION RELAY-1
FUEL PUMP RELAY
15A 47
THROTTLE CONTROL MOTOR RELAY
15A 55
10A 56
15A 40
10A 39
10A 38
ECM RELAY
A/C RELAY
10A 53
CPU
COOLING FAN MOTOR-1, COOLING FAN RELAY-3
COOLING FAN MOTOR-2, COOLING FAN RELAY-3
ECM
FUEL LEVEL SENSOR UNIT AND FUEL PUMP
BCM (BODY CONTROL MODULE)
E15
SPIRAL CABLE
HORN RELAY
COOLING FAN RELAY-2
GENERATOR
ECM
AIR FUEL RATIO (A/F) SENSOR 1
HEATED OXYGEN SENSOR 2 (BANK 1), AIR FUEL RATIO (A/F) SENSOR (BANK 1)
HEATED OXYGEN SENSOR 2 (BANK 2), AIR FUEL RATIO (A/F) SENSOR (BANK 2)
HEATED OXYGEN SENSOR 2
INTAKE VALVE TIMING CONTROL SOLENOID VALVE (BANK1), INTAKE VALVE TIMING CONTROL SOLENOID VALVE (BANK 2), VIAS CONTROL SOLENOID VALVE 1, VIAS CONTROL SOLENOID VALVE 2, EVAP CANISTER VENT CONTROL VALVE
ECM, EVAP CANISTER VENT CONTROL VALVE, EXHAUST VALVE TIMING CONTROL SOLENOID VALVE, INTAKE VALVE TIMING CONTROL SOLENOID VALVE, INTERMEDIATE LOCK TIMING CONTROL SOLENOID VALVE
ECM, EVAP CANISTER PURGE VOLUME CONTROL SOLENOID VALVE
MASS AIR FLOW SENSOR
A/C COMPRESSOR
ABMWA1566GB

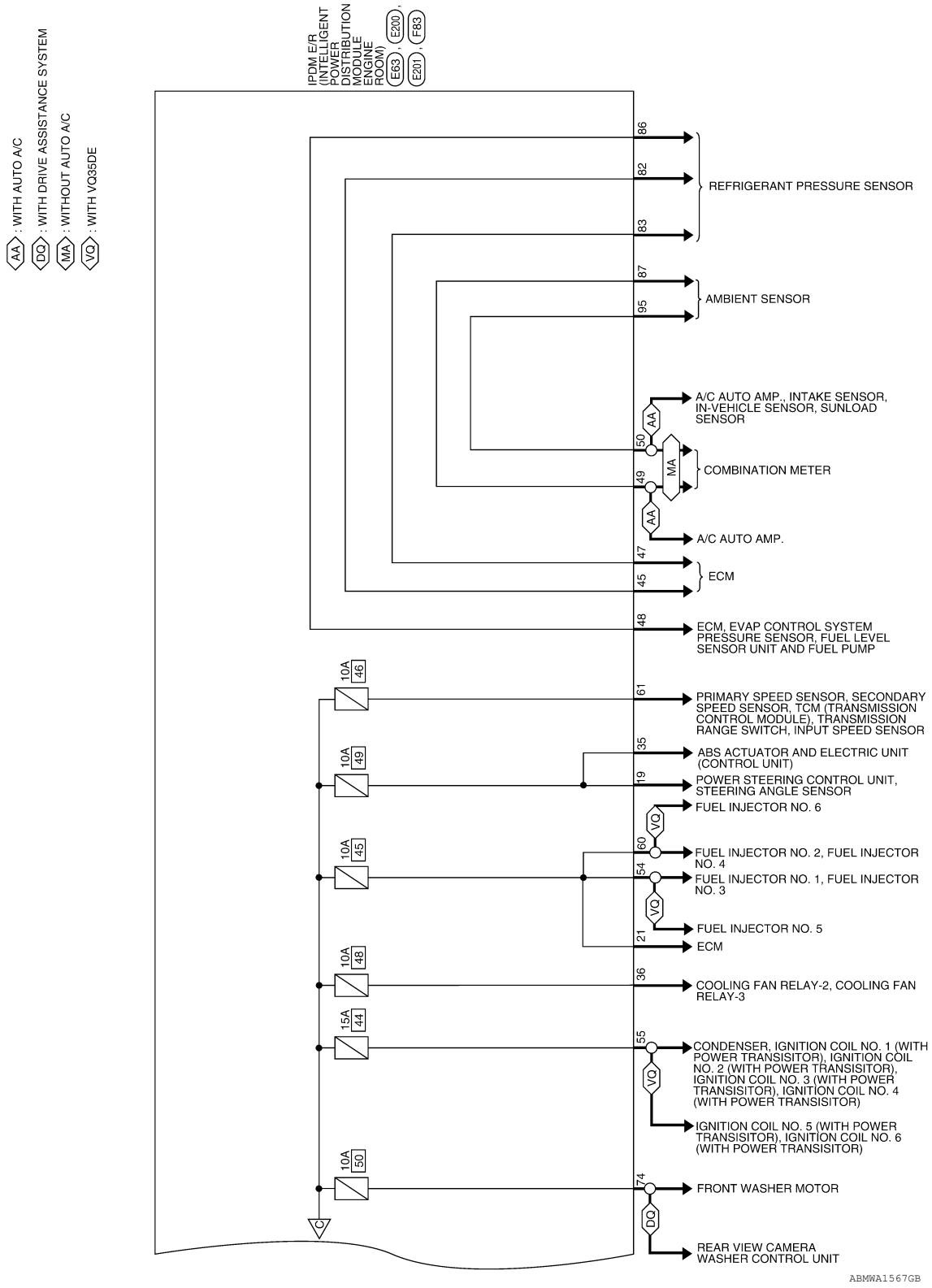
AA : WITH AUTO A/C
DQ : WITH DRIVE ASSISTANCE SYSTEM
MA : WITHOUT AUTO A/C
VQ : WITH VQ35DE
IPDM E/R (INTELLIGENT POWER DISTRIBUTION MODULE ENGINE ROOM)
E63, E200, E201, F83
86
82
83
87
95
REFRIGERANT PRESSURE SENSOR
AMBIENT SENSOR
A/C AUTO AMP., INTAKE SENSOR, IN-VEHICLE SENSOR, SUNLOAD SENSOR
50
49
MA
COMBINATION METER
A/C AUTO AMP.
47
45
ECM
48
ECM, EVAP CONTROL SYSTEM PRESSURE SENSOR, FUEL LEVEL SENSOR UNIT AND FUEL PUMP
10A 46
10A 49
10A 45
10A 48
15A 44
10A 50
61
PRIMARY SPEED SENSOR, SECONDARY SPEED SENSOR, TCM (TRANSMISSION CONTROL MODULE), TRANSMISSION RANGE SWITCH, INPUT SPEED SENSOR
35
ABS ACTUATOR AND ELECTRIC UNIT (CONTROL UNIT)
19
POWER STEERING CONTROL UNIT, STEERING ANGLE SENSOR
FUEL INJECTOR NO. 6
VQ
60
FUEL INJECTOR NO. 2, FUEL INJECTOR NO. 4
54
FUEL INJECTOR NO. 1, FUEL INJECTOR NO. 3
VQ
FUEL INJECTOR NO. 5
21
ECM
36
COOLING FAN RELAY-2, COOLING FAN RELAY-3
55
CONDENSER, IGNITION COIL NO. 1 (WITH POWER TRANSISITOR), IGNITION COIL NO. 2 (WITH POWER TRANSISITOR), IGNITION COIL NO. 3 (WITH POWER TRANSISITOR), IGNITION COIL NO. 4 (WITH POWER TRANSISITOR)
VQ
IGNITION COIL NO. 5 (WITH POWER TRANSISITOR), IGNITION COIL NO. 6 (WITH POWER TRANSISITOR)
74
FRONT WASHER MOTOR
DQ
REAR VIEW CAMERA WASHER CONTROL UNIT
C
ABMWA1567GB

IPDM E/R (INTELLIGENT POWER DISTRIBUTION MODULE ENGINE ROOM) CONNECTORS

Connector No.	E4
Connector Name	FUSIBLE LINK BOX (BATTERY)
Connector Color	BROWN

Terminal No.	Color of Wire	Signal Name
1	W	–
2	L	–

Connector No.	E5
Connector Name	FUSIBLE LINK BOX (BATTERY)
Connector Color	GRAY

Terminal No.	Color of Wire	Signal Name
4	R	–

Connector No.	E16
Connector Name	IPDM E/R (INTELLIGENT POWER DISTRIBUTION MODULE ENGINE ROOM)
Connector Color	BLACK

Terminal No.	Color of Wire	Signal Name
1	R	F/L MAIN
2	L	F/L USM

Connector No.	E17
Connector Name	IPDM E/R (INTELLIGENT POWER DISTRIBUTION MODULE ENGINE ROOM)
Connector Color	WHITE

Terminal No.	Color of Wire	Signal Name
3	G	F/L IGNSW
4	P	MOTOR FAN 1
5	–	–
6	R	F/L MOTOR FAN

Connector No.	E18
Connector Name	IPDM E/R (INTELLIGENT POWER DISTRIBUTION MODULE ENGINE ROOM)
Connector Color	WHITE

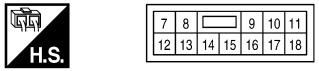

Terminal No.	Color of Wire	Signal Name
7	B	GND (POWER)
8	–	–
9	SB	TAIL RH
10	V	TAIL LH

Terminal No.	Color of Wire	Signal Name
11	Y	FR WIPER LO
12	–	–
13	LG	ECM VB
14	Y	DTRL
15	R	FUEL PUMP
16	–	–
17	–	–
18	L	FR WIPER HI

ABMIA3762GB

Connector No.	E63
Connector Name	IPDM E/R (INTELLIGENT POWER DISTRIBUTION MODULE ENGINE ROOM)
Connector Color	WHITE

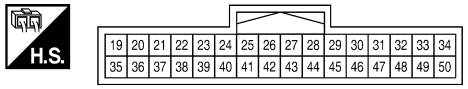

Terminal No.	Color of Wire	Signal Name
19	BR	SUB ECU
20	–	–
21	L	BCM IGNSW
22	W	HORN RLY
23	V	HORN SW
24	–	–
25	–	–
26	–	–
27	BG	MOTOR FAN RLY MID
28	P	CAN-L
29	L	CAN-H
30	–	–
31	Y	DETENT SW
32	–	–
33	R	START CONT
34	SB	WIPER AUTOSTOP
35	BR	ABS ECU
36	W	START IG-E/R
37	W	TRANS RANGE SW
38	G	PUSH START SW
39	G	MOTOR FAN RLY HI
40	–	–
41	B	GND (SIGNAL)
42	–	–
43	LG	IGN SIGNAL
44	–	–
45	V	PD SENS SIG-E/R (WITH QR25DE)
45	P	PD SENS SIG-E/R (WITH VQ35DE)
46	–	–
47	O	PD SENS PWR-E/R (WITH QR25DE)
47	BG	PD SENS PWR-E/R (WITH VQ35DE)
48	SB	PD SENS GND-E/R
49	P	AMB SENS SIG-E/R
50	BG	AMB SENS GND-E/R

Connector No.	E200
Connector Name	IPDM E/R (INTELLIGENT POWER DISTRIBUTION MODULE ENGINE ROOM)
Connector Color	WHITE

Terminal No.	Color of Wire	Signal Name
74	BG	WASH MTR
75	R	HEADLAMP LO RH
76	P	HEADLAMP LO LH
77	–	–
78	W	FR FOG LAMP RH
79	G	FR FOG LAMP LH
80	L	HEADLAMP HI RH
81	Y	HEADLAMP HI LH

Connector No.	E201
Connector Name	IPDM E/R (INTELLIGENT POWER DISTRIBUTION MODULE ENGINE ROOM)
Connector Color	WHITE

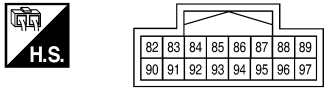

Terminal No.	Color of Wire	Signal Name
82	W	PD SENS SIG-FEM
83	G	PD SENS PWR-FEM
84	–	–
85	V	DTRL RLY
86	R	PD SENS GND-FEM
87	BG	AMB SENS SIG-FEM
88	–	–
89	–	–
90	LG	CLEARANCE
91	–	–
92	–	–
93	–	–
94	SB	HOODSW 2
95	R	AMB SENS GND-FEM
96	Y	HOODSW
97	–	–

ABMIA3763GB

Connector No.	F10
Connector Name	IPDM E/R (INTELLIGENT POWER DISTRIBUTION MODULE ENGINE ROOM)
Connector Color	BLACK

Terminal No.	Color of Wire	Signal Name
51	R	STARTER MOTOR

Connector No.	F83
Connector Name	IPDM E/R (INTELLIGENT POWER DISTRIBUTION MODULE ENGINE ROOM)
Connector Color	WHITE

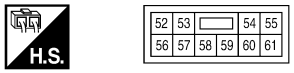

Terminal No.	Color of Wire	Signal Name
52	G	O2SENS #2 (WITH QR25DE)
52	P	O2SENS #2 (WITH VQ35DE)
53	W	O2SENS #1 (WITH QR25DE)
53	G	O2SENS #1 (WITH VQ35DE)
54	LG	INJECTOR #1
55	W	IGN COIL (WITH QR25DE)
55	G	IGN COIL (WITH VQ35DE)
56	SB	A/C COMP
57	R	ETC
58	SB	ECM BAT
59	L	ENG SOL
60	V	INJECTOR #2
61	Y	AT ECU

Connector No.	F84
Connector Name	IPDM E/R (INTELLIGENT POWER DISTRIBUTION MODULE ENGINE ROOM)
Connector Color	WHITE

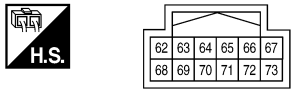

Terminal No.	Color of Wire	Signal Name
62	–	–
63	–	–
64	–	–
65	BR	MOTRLY (WITH QR25DE)
65	L	MOTRLY (WITH VQ35DE)
66	LG	NPSW
67	–	–
68	–	–
69	V	FPR
70	–	–
71	SB	ALT C
72	V	SSOFF (WITH QR25DE)
72	Y	SSOFF (WITH VQ35DE)
73	–	–

ABMIA3764GB

DTC/CIRCUIT DIAGNOSIS

U1000 CAN COMM CIRCUIT

Description

INFOID:0000000007986569

Refer to LAN-9, "CAN COMMUNICATION SYSTEM : System Description".

DTC Logic

INFOID:0000000007986570

DTC DETECTION LOGIC

CONSULT Display	DTC Detection Condition	Possible Cause
CAN COMM CIRCUIT [U1000]	When IPDM E/R cannot communicate with CAN communication signal continuously for 2 seconds or more	In CAN communication system, any item (or items) of the following listed below is malfunctioning. • Transmission • Receiving (ECM) • Receiving (BCM) • Receiving (Combination meter)

Diagnosis Procedure

INFOID:0000000007986571

1. PERFORM SELF DIAGNOSTIC RESULT

1. Turn ignition switch ON and wait for 2 second or more.
2. Check “SELF-DIAG RESULTS” of IPDM E/R.

Is “CAN COMM CIRCUIT” displayed?

YES >> Refer to LAN-18, "Trouble Diagnosis Flow Chart".
NO >> Refer to GI-47, "Intermittent Incident".

U1010 CONTROL UNIT (CAN)

DTC Logic

INFOID:0000000008671048

DTC DETECTION LOGIC

CONSULT Display	DTC Detection Condition	Possible Cause
CAN COMM CIRCUIT [U1010]	IPDM E/R detected internal CAN communication circuit malfunction.	IPDM E/R

Diagnosis Procedure

INFOID:0000000008671049

1. REPLACE IPDM E/R

When DTC U1010 is detected, replace IPDM E/R.

>> Replace IPDM E/R. Refer to PCS-32, "Removal and Installation".

B2098 IGNITION RELAY ON STUCK

Description

INFOID:0000000007986572

- IPDM E/R operates the ignition relay when it receives an ignition switch ON signal from BCM via CAN communication.
- Turn the ignition relay OFF by pressing the push-button ignition switch once when the vehicle speed is 4 km/h (2.5 MPH) or less.
- Turn the ignition relay OFF with the following operation when the vehicle speed is more than 4 km/h (2.5 MPH) or when an abnormal condition occurs in CAN communication from the combination meter (Emergency OFF)

- Press and hold the push-button ignition switch for 2 seconds or more.
- Press the push-button ignition switch 3 times within 1.5 seconds.

NOTE:
The ignition relay does not turn ON for 3 seconds after emergency OFF even if the push-button ignition switch is pressed.

DTC Logic

INFOID:0000000007986573

DTC DETECTION LOGIC

CONSULT Display	DTC Detection Condition	Possible Cause
IGN RELAY ON [B2098]	The ignition relay ON is detected for 1 second at ignition switch OFF (CPU monitors the status at the contact and excitation coil circuits of the ignition relay inside it)	Ignition relay malfunction

Diagnosis Procedure

INFOID:0000000007986574

1. PERFORM SELF DIAGNOSTIC RESULT

1. Turn the ignition switch ON.
2. Erase “SELF-DIAG RESULTS” of IPDM E/R.
3. Turn ignition switch OFF, and wait for 1 second or more.
4. Turn the ignition switch ON. Check “SELF-DIAG RESULTS” again.

Is “IGN RELAY ON” displayed?

YES >> Replace IPDM E/R. Refer to PCS-32, "Removal and Installation".
NO >> Refer to GI-47, "Intermittent Incident".

B2099 IGNITION RELAY OFF STUCK

Description

INFOID:0000000007986575

- IPDM E/R operates the ignition relay when it receives an ignition switch ON signal from BCM via CAN communication.
- Turn the ignition relay OFF by pressing the push-button ignition switch once when the vehicle speed is 4 km/h (2.5 MPH) or less.
- Turn the ignition relay OFF with the following operation when the vehicle speed is more than 4 km/h (2.5 MPH) or when an abnormal condition occurs in CAN communication from the combination meter (Emergency OFF)

- Press and hold the push-button ignition switch for 2 seconds or more.
- Press the push-button ignition switch 3 times within 1.5 seconds.

NOTE:
The ignition relay does not turn ON for 3 seconds after emergency OFF even if the push-button ignition switch is pressed.

DTC Logic

INFOID:0000000007986576

DTC DETECTION LOGIC

CONSULT Display	DTC Detection Condition	Possible Cause
IGN RELAY OFF [B2099]	The ignition relay OFF is detected for 1 second at ignition switch ON (CPU monitors the status at the contact and excitation coil circuits of the ignition relay inside it)	Ignition relay malfunction

Diagnosis Procedure

INFOID:0000000007986577

1. PERFORM SELF DIAGNOSTIC RESULT

1. Turn the ignition switch ON.
2. Erase “SELF-DIAG RESULTS”.
3. Turn ignition switch OFF.
4. Turn the ignition switch ON. Check “SELF-DIAG RESULTS” again.

Is “IGN RELAY OFF” displayed?

YES >> Replace IPDM E/R. Refer to PCS-32, "Removal and Installation".
NO >> Refer to GI-47, "Intermittent Incident".

POWER SUPPLY AND GROUND CIRCUIT

Diagnosis Procedure

INFOID:0000000007986578

Regarding Wiring Diagram information, refer to PCS-21, "Wiring Diagram".

1. CHECK FUSIBLE LINKS

Check that the following fusible links are not blown.

Terminal No.	Signal name	Fusible link No.
1	Fusible link main	E (80A)
2	Fusible link IPDM E/R	A (250A), C (80A)
3	Fusible link ignition switch	A (250A), B (100A), M (40A)

Is the fusible link blown?

YES >> Replace the blown fusible link after repairing the affected circuit.
NO >> GO TO 2

2. CHECK POWER SUPPLY CIRCUIT

1. Disconnect IPDM E/R connectors E16 and E17.
2. Check voltage between IPDM E/R connectors and ground.

IPDM E/R		Ground	Voltage (Approx.)
Connector	Terminal		
E16	1	—	Battery voltage
	2		
E17	3		

Is the inspection result normal?

YES >> GO TO 3
NO >> Repair or replace harness or connectors.

3. CHECK GROUND CIRCUIT

1. Disconnect IPDM E/R connectors E18 and E63.
2. Check continuity between IPDM E/R connectors and ground.

IPDM E/R		Ground	Continuity
Connector	Terminal		
E18	7	—	Yes
E63	41		

Is the inspection result normal?

YES >> Inspection End.
NO >> Repair or replace harness or connectors.

REMOVAL AND INSTALLATION

IPDM E/R (INTELLIGENT POWER DISTRIBUTION MODULE ENGINE ROOM)

Removal and Installation

INFOID:0000000007986586

CAUTION:
IPDM E/R integrated relays are not serviceable parts and must not be removed from unit.

REMOVAL

1. Disconnect the negative battery terminal. Refer to PG-72, "Removal and Installation (Battery)".
2. Release the pawls and separate the IPDM E/R (1) from the case.
   ◌: Pawl

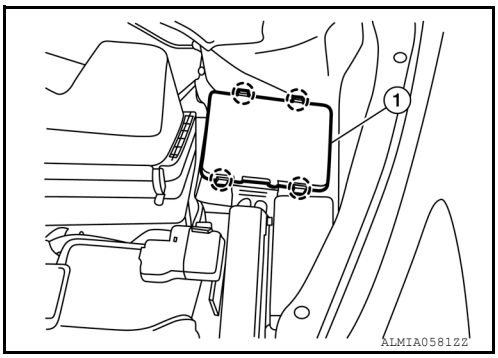

3. Disconnect all harness connectors (A) and remove the IPDM E/R (1).

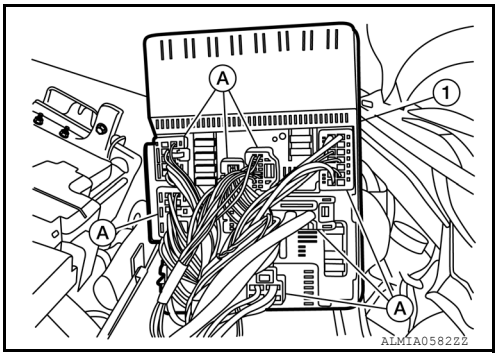

INSTALLATION
Installation is in the reverse order of removal.

PRECAUTION

PRECAUTIONS

Precaution for Supplemental Restraint System (SRS) "AIR BAG" and "SEAT BELT PRE-TENSIONER"

INFOID:0000000008722325

The Supplemental Restraint System such as “AIR BAG” and “SEAT BELT PRE-TENSIONER”, used along with a front seat belt, helps to reduce the risk or severity of injury to the driver and front passenger for certain types of collision. Information necessary to service the system safely is included in the SR and SB section of this Service Manual.

WARNING:

- **To avoid rendering the SRS inoperative, which could increase the risk of personal injury or death in the event of a collision which would result in air bag inflation, all maintenance must be performed by an authorized NISSAN/INFINITI dealer.**
- **Improper maintenance, including incorrect removal and installation of the SRS, can lead to personal injury caused by unintentional activation of the system. For removal of Spiral Cable and Air Bag Module, see the SR section.**
- **Do not use electrical test equipment on any circuit related to the SRS unless instructed to in this Service Manual. SRS wiring harnesses can be identified by yellow and/or orange harnesses or harness connectors.**

PRECAUTIONS WHEN USING POWER TOOLS (AIR OR ELECTRIC) AND HAMMERS

WARNING:

- **When working near the Airbag Diagnosis Sensor Unit or other Airbag System sensors with the Ignition ON or engine running, DO NOT use air or electric power tools or strike near the sensor(s) with a hammer. Heavy vibration could activate the sensor(s) and deploy the air bag(s), possibly causing serious injury.**
- **When using air or electric power tools or hammers, always switch the Ignition OFF, disconnect the battery and wait at least 3 minutes before performing any service.**

Precaution for Work

INFOID:0000000008722326

- When removing or disassembling each component, be careful not to damage or deform it. If a component may be subject to interference, be sure to protect it with a shop cloth.
- When removing (disengaging) components with a screwdriver or similar tool, be sure to wrap the component with a shop cloth or vinyl tape to protect it.
- Protect the removed parts with a shop cloth and prevent them from being dropped.
- Replace a deformed or damaged clip.
- If a part is specified as a non-reusable part, always replace it with a new one.
- Be sure to tighten bolts and nuts securely to the specified torque.
- After installation is complete, be sure to check that each part works properly.
- Follow the steps below to clean components:

- Water soluble dirt:
- Dip a soft cloth into lukewarm water, wring the water out of the cloth and wipe the dirty area.
- Then rub with a soft, dry cloth.

- Oily dirt:
- Dip a soft cloth into lukewarm water with mild detergent (concentration: within 2 to 3%) and wipe the dirty area.
- Then dip a cloth into fresh water, wring the water out of the cloth and wipe the detergent off.
- Then rub with a soft, dry cloth.

- Do not use organic solvent such as thinner, benzene, alcohol or gasoline.
- For genuine leather seats, use a genuine leather seat cleaner.

PREPARATION

PREPARATION

Special Service Tool

INFOID:0000000007986646

The actual shapes of Kent-Moore tools may differ from those of special service tools illustrated here.

Tool number (Kent-Moore No.) Tool name	Description
— (J-46534) Trim Tool Set 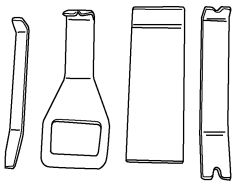 AWJIA0483ZZ	Removing trim components

SYSTEM DESCRIPTION

COMPONENT PARTS

Component Parts Location

INFOID:0000000007986589

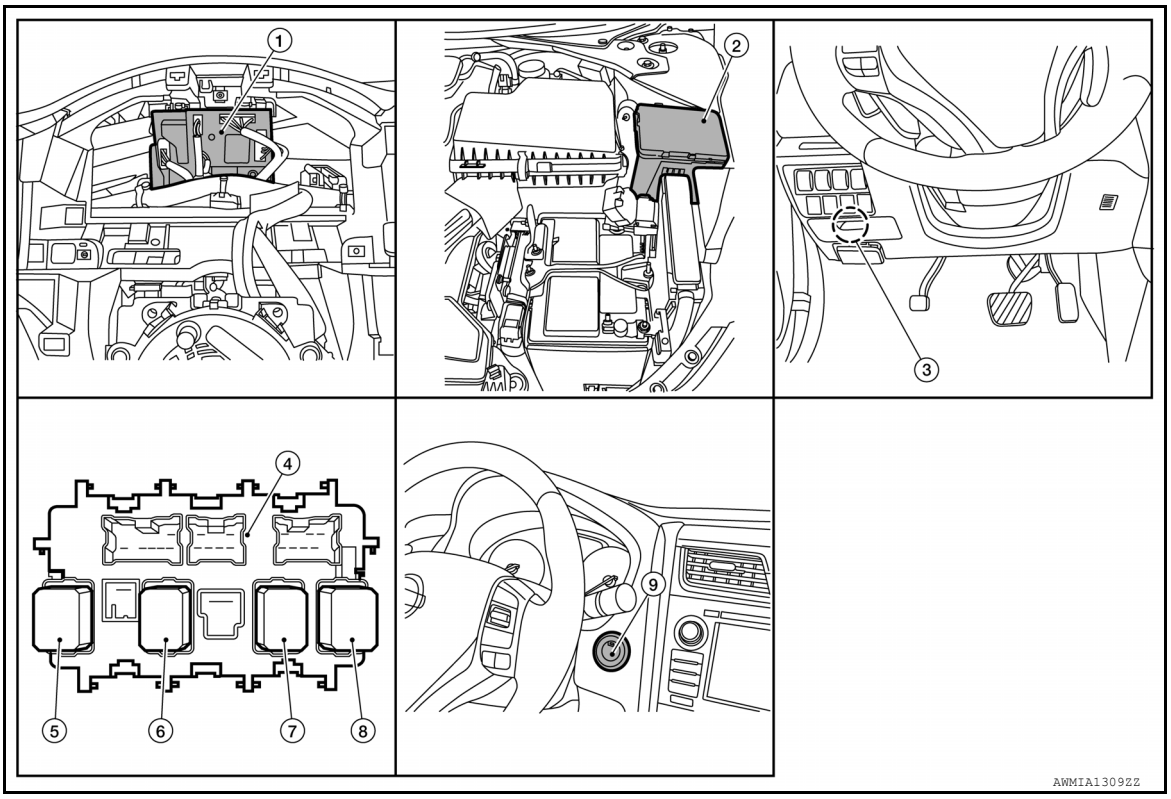

1.	BCM (view with combination meter removed)	2.	IPDM E/R (contains Ignition relay-1)	3.	Fuse block (J/B)
4.	Fuse block (J/B) (back side shown)	5.	Ignition relay-2	6.	Front blower motor relay
7.	Rear window defogger relay	8.	Accessory relay-1	9.	Push-button ignition switch

SYSTEM

POWER DISTRIBUTION SYSTEM

POWER DISTRIBUTION SYSTEM : System Diagram

INFOID:0000000008672344

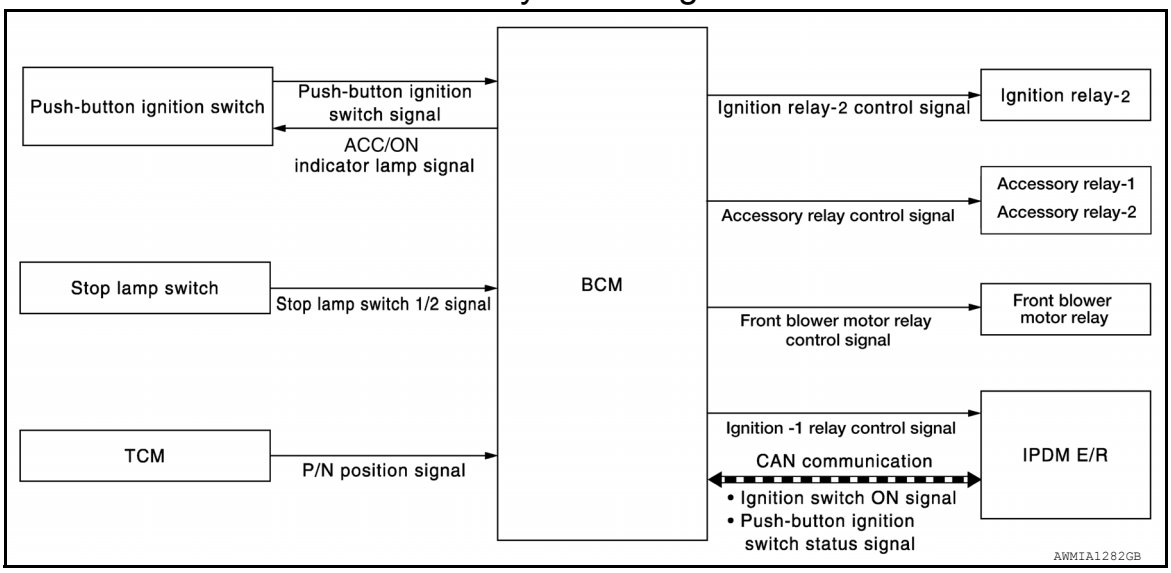

POWER DISTRIBUTION SYSTEM : System Description

INFOID:0000000007986588

SYSTEM DESCRIPTION

- PDS (POWER DISTRIBUTION SYSTEM) is the system that BCM controls with the operation of the push-button ignition switch and performs the power distribution to each power circuit. This system is used instead of the mechanical power supply changing mechanism with the operation of the conventional key cylinder.
- The push-button ignition switch can be operated when Intelligent Key is in the following condition.
  - Intelligent Key is in the detection area of the inside key antenna.
  - Intelligent Key backside is contacted to push-button ignition switch.
- The push-button ignition switch operation is input to BCM as a signal. BCM changes the power supply position according to the status and operates the following relays to supply power to each power circuit.
  - Ignition relay-1
  - Ignition relay-2
  - Accessory relay-1
  - Accessory relay-2
  - Front blower motor relay

  NOTE:
  The engine switch operation changes due to the conditions of brake pedal, selector lever and vehicle speed.
- The power supply position can be confirmed with the lighting of the indicators in the push-button ignition switch.

BATTERY SAVER SYSTEM

When all the following conditions are met for 30 minutes, the battery saver system will cut off the power supply to prevent battery discharge.

- The ignition switch is in the ACC or ON position
- All doors are closed
- Selector lever is in the P (park) position

Reset Condition of Battery Saver System

In order to prevent the battery from discharging, the battery saver system will cut off the power supply when all doors are closed, the selector lever is in P (park) position and the ignition switch is left in the ACC or ON position for 30 minutes. If any of the following conditions are met the battery saver system is released and the steering will change automatically to lock position from OFF position.

- Opening any door
- Operating door request switch on door handle
- Operating Intelligent Key

POWER SUPPLY POSITION CHANGE TABLE BY PUSH-BUTTON IGNITION SWITCH OPERATION

The power supply position changing operation can be performed with the following operations.

NOTE:

- When an Intelligent Key is within the detection area of inside key antenna and when Intelligent Key backside is contacted to push-button ignition switch, it is equivalent to the operations below.
- When starting the engine, the BCM monitors under the engine start conditions:
- Brake pedal operating condition
- Selector lever position
- Vehicle speed

Vehicle speed: less than 4 km/h (2.5 MPH)

Power supply position	Engine start/stop condition		Push-button ignition switch operation frequency
	Selector lever position	Brake pedal operation condition	
OFF → ACC	—	Not depressed	1
OFF → ACC → ON	—	Not depressed	2
OFF → ACC → ON → OFF	—	Not depressed	3
OFF → START ACC → START ON → START	P or N position	Depressed	1
Engine is running → OFF	—	—	1

Vehicle speed: 4 km/h (2.5 MPH) or more

Power supply position	Engine start/stop condition		Push-button ignition switch operation frequency
	Selector lever position	Brake pedal operation condition	
Engine is running → ACC	—	—	Emergency stop operation
Engine stall return operation while driving	N position	Not depressed	1

Emergency stop operation

- Press and hold the push-button ignition switch for 2 seconds or more.
- Press the push-button ignition switch 3 times or more within 1.5 seconds.

DIAGNOSIS SYSTEM (BCM)

COMMON ITEM

COMMON ITEM : CONSULT Function (BCM - COMMON ITEM)

INFOID:0000000008672345

APPLICATION ITEM

CONSULT performs the following functions via CAN communication with BCM.

Direct Diagnostic Mode	Description
Ecu Identification	The BCM part number is displayed.
Self Diagnostic Result	The BCM self diagnostic results are displayed.
Data Monitor	The BCM input/output data is displayed in real time.
Active Test	The BCM activates outputs to test components.
Work support	The settings for BCM functions can be changed.
Configuration	• The vehicle specification can be read and saved. • The vehicle specification can be written when replacing BCM.
CAN Diag Support Mntr	The result of transmit/receive diagnosis of CAN communication is displayed.

SYSTEM APPLICATION

BCM can perform the following functions.

System	Sub System	Direct Diagnostic Mode						
		Ecu Identification	Self Diagnostic Result	Data Monitor	Active Test	Work support	Configuration	CAN Diag Support Mntr
Door lock	DOOR LOCK		×	×	×	×		
Rear window defogger	REAR DEFOGGER			×	×	×		
Warning chime	BUZZER			×	×			
Interior room lamp timer	INT LAMP			×	×	×		
Remote keyless entry system	MULTI REMOTE ENT			×	×	×		
Exterior lamp	HEADLAMP			×	×	×		
Wiper and washer	WIPER			×	×	×		
Turn signal and hazard warning lamps	FLASHER			×	×			
Air conditioner	AIR CONDITIONER			×				
Intelligent Key system	INTELLIGENT KEY		×	×	×	×		
Combination switch	COMB SW			×				
BCM	BCM	×	×			×	×	×
Immobilizer	IMMU		×	×	×			
Interior room lamp battery saver	BATTERY SAVER			×	×			
Trunk open	TRUNK			×				
Vehicle security system	THEFT ALM			×	×	×		
RAP system	RETAINED PWR			×				
Signal buffer system	SIGNAL BUFFER			×				
TPMS	AIR PRESSURE MONITOR		×	×	×	×		

INTELLIGENT KEY

INTELLIGENT KEY : CONSULT Function (BCM - INTELLIGENT KEY)

INFOID:0000000008672346

SELF DIAGNOSTIC RESULT

Refer to BCS-49, "DTC Index".

DATA MONITOR

Monitor Item [Unit]	Main	Description
REQ SW -DR [On/Off]	×	Indicates condition of door request switch LH.
REQ SW -AS [On/Off]	×	Indicates condition of door request switch RH.
PUSH SW [On/Off]		Indicates condition of push-button ignition switch.
SHIFTLOCK SOLENOID POWER SUPPLY [On/Off]	×	Indicates condition of power supply to shiftlock solenoid.
BRAKE SW 1 [On/Off]	×	Indicates condition of brake switch.
BRAKE SW 2 [On/Off]		Indicates condition of brake switch.
DETE/CANCL SW [On/Off]	×	Indicates condition of P (park) position.
SFT PN/N SW [On/Off]	×	Indicates condition of P (park) or N (neutral) position.
UNLK SEN -DR [On/Off]	×	Indicates condition of door unlock sensor.
PUSH SW -IPDM [On/Off]		Indicates condition of push-button ignition switch received from IPDM E/R on CAN communication line.
IGN RLY1 -F/B [On/Off]		Indicates condition of ignition relay 1 received from IPDM E/R on CAN communication line.
DETE SW -IPDM [On/Off]		Indicates condition of detent switch received from TCM on CAN communication line.
SFT PN -IPDM [On/Off]		Indicates condition of P (park) or N (neutral) position from TCM on CAN communication line.
SFT P -MET [On/Off]		Indicates condition of P (park) position from TCM on CAN communication line.
SFT N -MET [On/Off]		Indicates condition of N (neutral) position from IPDM E/R on CAN communication line.
ENGINE STATE [Stop/Start/Crank/Run]	×	Indicates condition of engine state from ECM on CAN communication line.
VEH SPEED 1 [mph/km/h]	×	Indicates condition of vehicle speed signal received from ABS on CAN communication line.
VEH SPEED 2 [mph/km/h]	×	Indicates condition of vehicle speed signal received from combination meter on CAN communication line.
DOOR STAT -DR [LOCK/READY/UNLK]	×	Indicates condition of driver side door status.
DOOR STAT -AS [LOCK/READY/UNLK]	×	Indicates condition of passenger side door status.
DOOR STAT -RR [LOCK/READY/UNLK]	×	Indicates condition of rear right side door status.
DOOR STAT -RL [LOCK/READY/UNLK]	×	Indicates condition of rear left side door status.
ID OK FLAG [Set/Reset]		Indicates condition of Intelligent Key ID.
PRMT ENG STRT [Set/Reset]		Indicates condition of engine start possibility.
PRMT RKE STRT [Set/Reset]		Indicates condition of engine start possibility from Intelligent Key.
I-KEY OK FLAG [Key ON/Key OFF]	×	Indicates condition of Intelligent Key OK flag.
PRBT ENG STRT [Set/Reset]		Indicates condition of engine start prohibit.
ID VERI CANCL [STOP]		Indicates condition of Intelligent Key ID authentication.
ACC BATTERY SAVER [STOP]		Indicates condition of battery saver.
CRNK PRBT TMR [On/Off]		Indicates condition of crank prohibit timer.
AUT CRNK TMR [On/Off]		Indicates condition of automatic engine crank timer from Intelligent Key.
CRNK PRBT TME [sec]		Indicates condition of engine crank prohibit time.
AUTO CRNK TME [sec]		Indicates condition of automatic engine crank time from Intelligent Key.
CRANKING TME [sec]		Indicates condition of engine cranking time from Intelligent Key.

Monitor Item [Unit]	Main	Description
DETE SW PWR [On/Off]		Indicates condition of detent switch voltage.
ACC RLY -REQ [On/Off]		Indicates condition of accessory relay control request.
RKE OPE COUN1 [0-19]	×	When remote keyless entry receiver receives the signal transmitted while operating on Intelligent Key, the numerical value start changing.
RKE OPE COUN2 [0-19]	×	When remote keyless entry receiver receives the signal transmitted while operating on Intelligent Key, the numerical value start changing.
TRNK/HAT MNTR [On/Off]		Indicates condition of trunk room lamp switch.
RKE-LOCK [On/Off]		Indicates condition of lock signal from Intelligent Key.
RKE-UNLOCK [On/Off]		Indicates condition of unlock signal from Intelligent Key.
RKE-TR/BD [On/Off]		Indicates condition of trunk open signal from Intelligent Key.
RKE-PANIC [On/Off]		Indicates condition of panic signal from Intelligent Key.
RKE-MODE CHG [On/Off]		Indicates condition of mode change signal from Intelligent Key.

ACTIVE TEST

Test Item	Description
INTELLIGENT KEY LINK (CAN)	This test is able to check Intelligent Key identification number [Off/ID No1/ID N02/ID No3/ID No4/ID No5].
INT LAMP	This test is able to check interior room lamp operation [On/Off].
FLASHER	This test is able to check hazard lamp operation [LH/RH/Off].
HORN	This test is able to check horn operation [On].
BATTERY SAVER	This test is able to check battery saver operation [On/Off].
TRUNK/BACK DOOR	This test is able to check trunk actuator operation [Open].
OUTSIDE BUZZER	This test is able to check Intelligent Key warning buzzer operation [On/Off].
INSIDE BUZZER	This test is able to check combination meter warning chime operation [Take Out/Knob/Key/Off].
INDICATOR	This test is able to check combination meter warning lamp operation [KEY ON/KEY IND/Off].
IGN CONT2	This test is able to check ignition relay-2 control operation [On/Off].
ENGINE SW ILLUMI	This test is able to check push-button ignition switch START indicator operation [On/Off].
PUSH SWITCH INDICATOR	This test is able to check push-button ignition switch indicator operation [On/Off].
ACC CONT	This test is able to check accessory relay control operation [On/Off].
IGN CONT1	This test is able to check ignition relay-1 control operation [On/Off].
ST CONT LOW	This test is able to check starter control relay operation [On/Off].
IGNITION RELAY	This test is able to ignition relay operation [On/Off].
REVERSE LAMP TEST	This test is able to check reverse lamp illumination operation [On/Off].
TRUNK/LUGGAGE LAMP TEST	This test is able to check cargo lamp illumination operation [On/Off].
KEYFOB PW TEST	This test is able to check power window operation using the Intelligent Key [Off/DOWN/UP].
SHIFTLOCK SOLENOID TEST	This test is able to check shift lock solenoid operation [On/Off].

WORK SUPPORT

Support Item	Setting	Description
IGN/ACC BATTERY SAVER	On*	Battery saver function ON.
	Off	Battery saver function OFF.
REMOTE ENGINE STARTER	On*	Remote engine start function ON.
	Off	Remote engine start function OFF.

Support Item	Setting		Description
ANSWERBACK I-KEY LOCK UNLOCK	BUZZER		Buzzer reminder function by door lock/unlock request switch ON.
	HORN		Horn chirp reminder function by door lock request switch ON.
	Off*		No reminder function by door lock/unlock request switch.
	INVALID		This mode is not used.
ANSWERBACK KEYLESS LOCK UN-LOCK	On		Buzzer or horn chirp reminder when doors are locked/unlocked with Intelligent Key.
	Off*		No buzzer or horn chirp reminder when doors are locked/unlocked with Intelligent Key.
ANSWER BACK	On*		Horn chirp reminder when doors are locked with Intelligent Key.
	Off		No horn chirp reminder when doors are locked with Intelligent Key.
RETRACTABLE MIRROR SET	On		Retractable mirror set ON.
	Off*		Retractable mirror set OFF.
LOCK/UNLOCK BY I-KEY	On*		Door lock/unlock function from Intelligent Key ON.
	Off		Door lock/unlock function from Intelligent Key OFF.
ENGINE START BY I-KEY	On*		Engine start function from Intelligent Key ON.
	Off		Engine start function from Intelligent Key OFF.
INTELLIGENT KEY LINK SET	On		Intelligent Key link set ON.
	Off*		Intelligent Key link set OFF.
SHORT CRANKING OUTPUT	Start	70 msec	Starter motor operation duration times.
		100 msec	
		200 msec	
	End		—
INSIDE ANT DIAGNOSIS	—		This function allows inside key antenna self-diagnosis.
AUTO LOCK SET	MODE7	5 min	Auto door lock time can be set in this mode.
	MODE6	4 min	
	MODE5	3 min	
	MODE4	2 min	
	MODE3*	1 min	
	MODE2	30 sec	
	MODE1	Off	

*: Initial Setting

ECU DIAGNOSIS INFORMATION

BCM, IPDM E/R

List of ECU Reference

INFOID:0000000008672349

ECU	Reference
BCM	BCS-28, "Reference Value"
	BCS-47, "Fail Safe"
	BCS-47, "DTC Inspection Priority Chart"
	BCS-49, "DTC Index"
IPDM E/R	PCS-12, "Reference Value"
	PCS-19, "Fail Safe"
	PCS-20, "DTC Index"

WIRING DIAGRAM

POWER DISTRIBUTION SYSTEM

Wiring Diagram

INFOID:0000000007986642

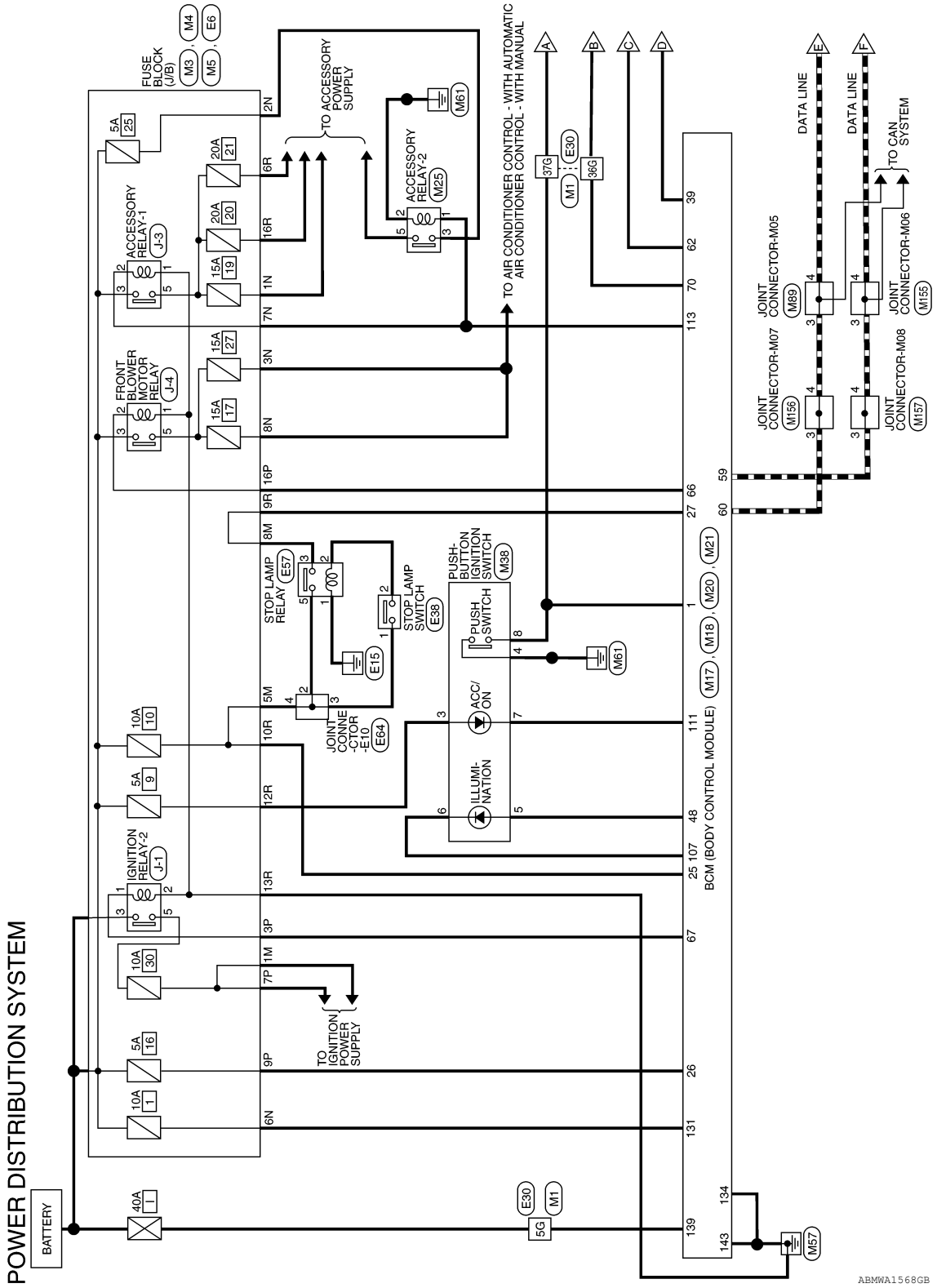

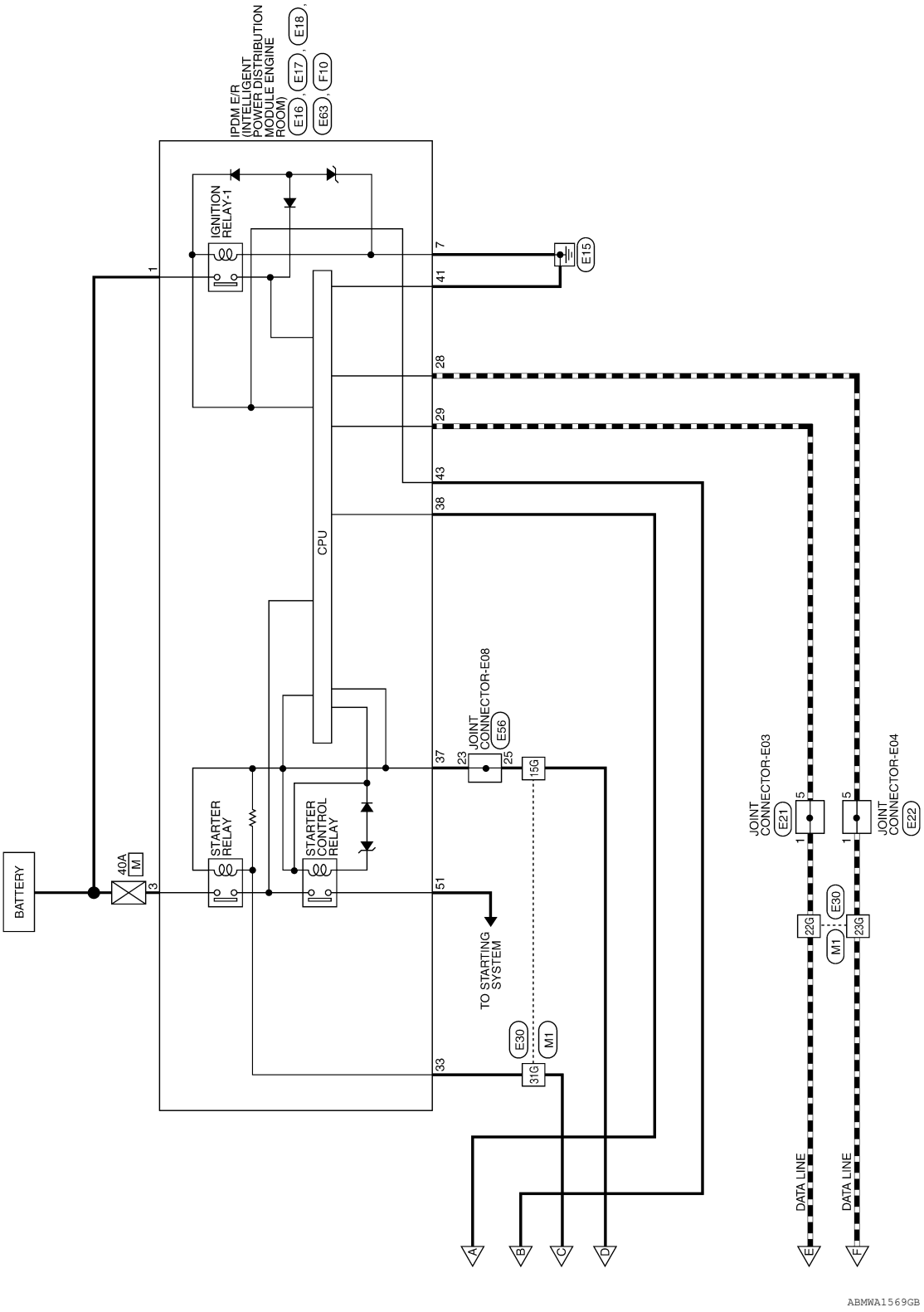
IPDM E/R
(INTELLIGENT
POWER DISTRIBUTION
MODULE ENGINE
ROOM)
E16
E63
E17
F10
E18
IGNITION
RELAY-1
E15
CPU
JOINT
CONNECTOR-E08
E56
15G
STARTER
RELAY
STARTER
CONTROL
RELAY
BATTERY
40A
M
TO STARTING
SYSTEM
E30
M1
31G
JOINT
CONNECTOR-E03
E21
22G
23G
JOINT
CONNECTOR-E04
E22
DATA LINE
DATA LINE
A
B
C
D
E
F
ABMWA1569GB

POWER DISTRIBUTION SYSTEM CONNECTORS

Connector No.	M1
Connector Name	WIRE TO WIRE
Connector Color	WHITE

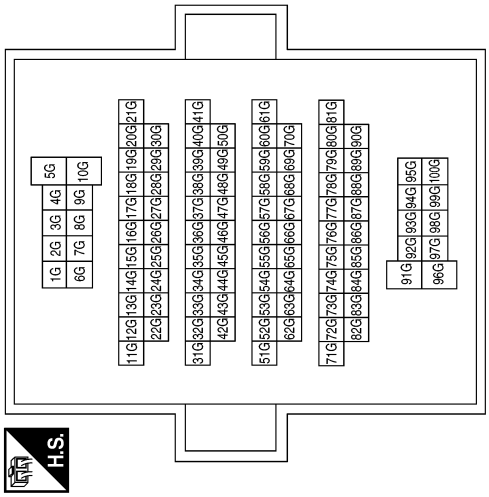

Terminal No.	Color of Wire	Signal Name
5G	W	–
15G	L	–
22G	L	–
23G	P	–
31G	BR	–
36G	G	–
37G	R	–

Connector No.	M3
Connector Name	FUSE BLOCK (J/B)
Connector Color	WHITE

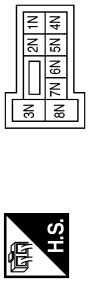

Terminal No.	Color of Wire	Signal Name
1N	V	–
2N	LG	–
3N	W	–
6N	W	–
7N	P	–
8N	W	–

Connector No.	M4
Connector Name	FUSE BLOCK (J/B)
Connector Color	BROWN

Terminal No.	Color of Wire	Signal Name
6R	LG	–
9R	G	–
10R	BG	–
12R	W	–
13R	B	–
16R	LG	–

ABMIA3765GB

Connector No.	M5
Connector Name	FUSE BLOCK (J/B)
Connector Color	WHITE

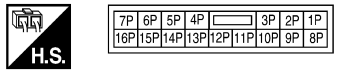

Terminal No.	Color of Wire	Signal Name
3P	W	–
7P	G	–
9P	Y	–
16P	LG	–

Connector No.	M17
Connector Name	BCM (BODY CONTROL MODULE)
Connector Color	GREEN

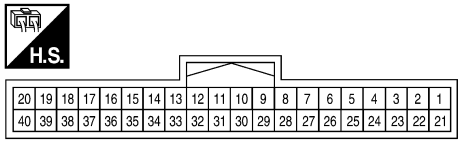

Terminal No.	Color of Wire	Signal Name
1	R	ENG START SW NO ESCL
25	BG	BRAKE SW FUSE
26	Y	SHORTING INPUT
27	G	BRAKE SW LAMP
39	L	SHIFT N/P

Connector No.	M18
Connector Name	BCM (BODY CONTROL MODULE)
Connector Color	BLACK

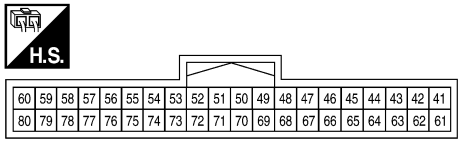

Terminal No.	Color of Wire	Signal Name
48	BR	HIGH SIDE START SW LED
59	P	CAN-L
60	L	CAN-H
62	BR	STARTER RELAY OUT
66	R	BLOWER FAN RELAY OUT
67	W	IGN ELEC RELAY OUT 2
70	G	IGN USM OUT 1

Connector No.	M20
Connector Name	BCM (BODY CONTROL MODULE)
Connector Color	BLACK

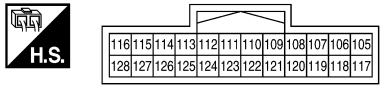

Terminal No.	Color of Wire	Signal Name
107	W	LOW SIDE START SW LED
111	Y	ACC LED
113	P	ACC RELAY OUT

Connector No.	M21
Connector Name	BCM (BODY CONTROL MODULE)
Connector Color	WHITE

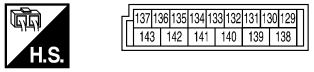

Terminal No.	Color of Wire	Signal Name
131	W	BAT BCM FUSE
134	B	GND2
139	W	BAT POWER F/L
143	B	GND1

Connector No.	M25
Connector Name	ACCESSORY RELAY-2
Connector Color	BLUE

Terminal No.	Color of Wire	Signal Name
1	W	–
2	B	–
3	LG	–
5	P	–

ABMIA3766GB

Connector No.	M38
Connector Name	PUSH-BUTTON IGNITION SWITCH
Connector Color	WHITE

Terminal No.	Color of Wire	Signal Name
3	W	–
4	B	–
5	BR	–
6	W	–
7	Y	–
8	R	–

Connector No.	M89
Connector Name	JOINT CONNECTOR-M05
Connector Color	WHITE

Terminal No.	Color of Wire	Signal Name
3	L	–
4	L	–

Connector No.	M155
Connector Name	JOINT CONNECTOR-M06
Connector Color	WHITE

Terminal No.	Color of Wire	Signal Name
3	P	–
4	P	–

Connector No.	M156
Connector Name	JOINT CONNECTOR-M07
Connector Color	WHITE

Terminal No.	Color of Wire	Signal Name
3	L	–
4	L	–

Connector No.	M157
Connector Name	JOINT CONNECTOR-M08
Connector Color	WHITE

Terminal No.	Color of Wire	Signal Name
3	P	–
4	P	–

Connector No.	E6
Connector Name	FUSE BLOCK (J/B)
Connector Color	WHITE

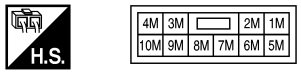

Terminal No.	Color of Wire	Signal Name
1M	BG	–
5M	G	–
8M	W	–

ABMIA3767GB

Connector No.	E16
Connector Name	IPDM E/R (INTELLIGENT POWER DISTRIBUTION MODULE ENGINE ROOM)
Connector Color	BLACK

Terminal No.	Color of Wire	Signal Name
1	R	F/L MAIN

Connector No.	E17
Connector Name	IPDM E/R (INTELLIGENT POWER DISTRIBUTION MODULE ENGINE ROOM)
Connector Color	WHITE

Terminal No.	Color of Wire	Signal Name
3	G	F/L IGNSW

Connector No.	E18
Connector Name	IPDM E/R (INTELLIGENT POWER DISTRIBUTION MODULE ENGINE ROOM)
Connector Color	WHITE

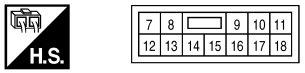

Terminal No.	Color of Wire	Signal Name
7	B	GND (POWER)

Connector No.	E21
Connector Name	JOINT CONNECTOR-E03
Connector Color	GRAY

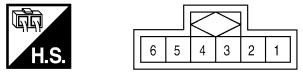

Terminal No.	Color of Wire	Signal Name
1	L	–
5	L	–

Connector No.	E22
Connector Name	JOINT CONNECTOR-E04
Connector Color	GRAY

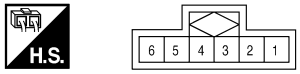

Terminal No.	Color of Wire	Signal Name
1	P	–
5	P	–

ABMIA3768GB

Connector No.	E38
Connector Name	STOP LAMP SWITCH
Connector Color	WHITE

H.S.

Terminal No.	Color of Wire	Signal Name
1	G	–
2	R	–

Terminal No.	Color of Wire	Signal Name
5G	P	–
15G	W	–
22G	L	–
23G	P	–
31G	R	–
36G	LG	–
37G	G	–

Connector No.	E30
Connector Name	WIRE TO WIRE
Connector Color	WHITE

H.S.

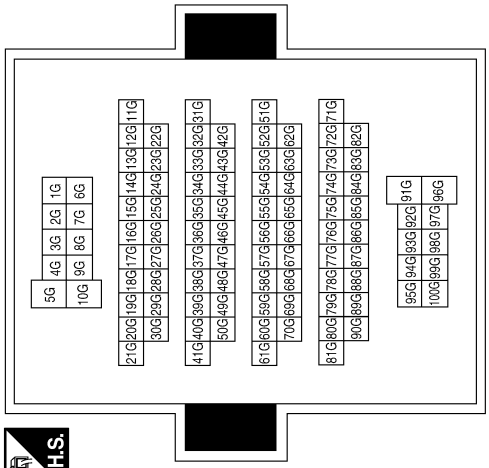

Connector No.	E57
Connector Name	STOP LAMP RELAY
Connector Color	BLUE

H.S.

Terminal No.	Color of Wire	Signal Name
1	B	–
2	R	–
3	W	–
5	G	–

Connector No.	E56
Connector Name	JOINT CONNECTOR-E08
Connector Color	WHITE

H.S.

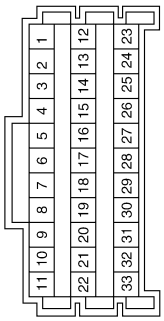

Terminal No.	Color of Wire	Signal Name
23	W	–
25	W	–

ABMIA3769GB

Connector No.	E64
Connector Name	JOINT CONNECTOR-E10
Connector Color	WHITE

H.S.

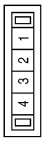

Terminal No.	Color of Wire	Signal Name
2	G	–
3	G	–
4	G	–

Terminal No.	Color of Wire	Signal Name
28	P	CAN-L
29	L	CAN-H
33	R	START CONT
37	W	CLUTCH I/L SW
38	G	PUSH START SW
41	B	GND (SIGNAL)
43	LG	IGN SIGNAL

Connector No.	E63
Connector Name	IPDM E/R (INTELLIGENT POWER DISTRIBUTION MODULE ENGINE ROOM)
Connector Color	WHITE

H.S.

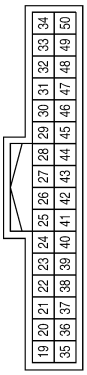

Connector No.	J-1
Connector Name	FUSE BLOCK (J/B) (IGNITION RELAY-2)
Connector Color	–

T.S.

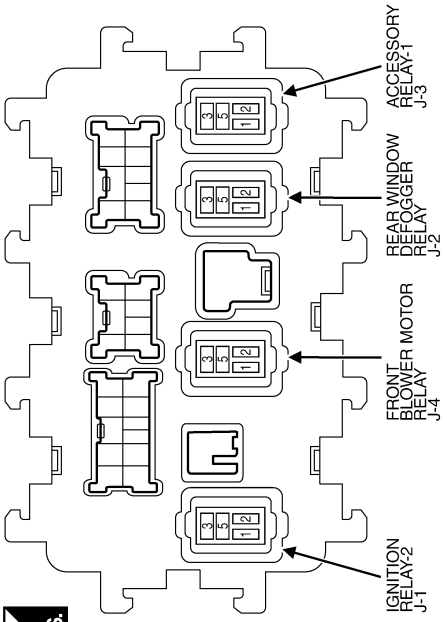

Connector No.	F10
Connector Name	IPDM E/R (INTELLIGENT POWER DISTRIBUTION MODULE ENGINE ROOM)
Connector Color	BLACK

H.S.

Terminal No.	Color of Wire	Signal Name
51	R	STARTER MOTOR

ABMIA3770GB

Connector No.	J-4
Connector Name	FUSE BLOCK (J/B) (FRONT BLOWER MOTOR RELAY)
Connector Color	–

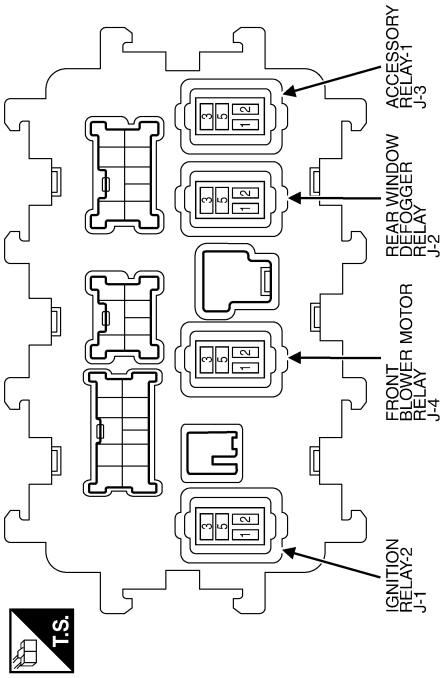

Connector No.	J-3
Connector Name	FUSE BLOCK (J/B) (ACCESSORY RELAY-1)
Connector Color	–

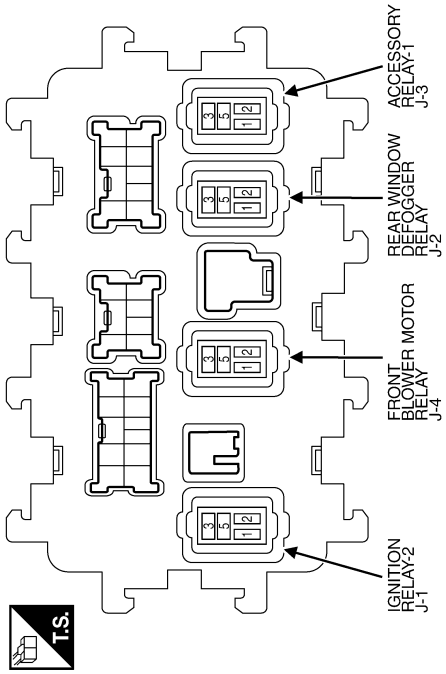

ABMIA3771GB

BASIC INSPECTION

DIAGNOSIS AND REPAIR WORKFLOW

Work Flow

INFOID:0000000008672348

OVERALL SEQUENCE

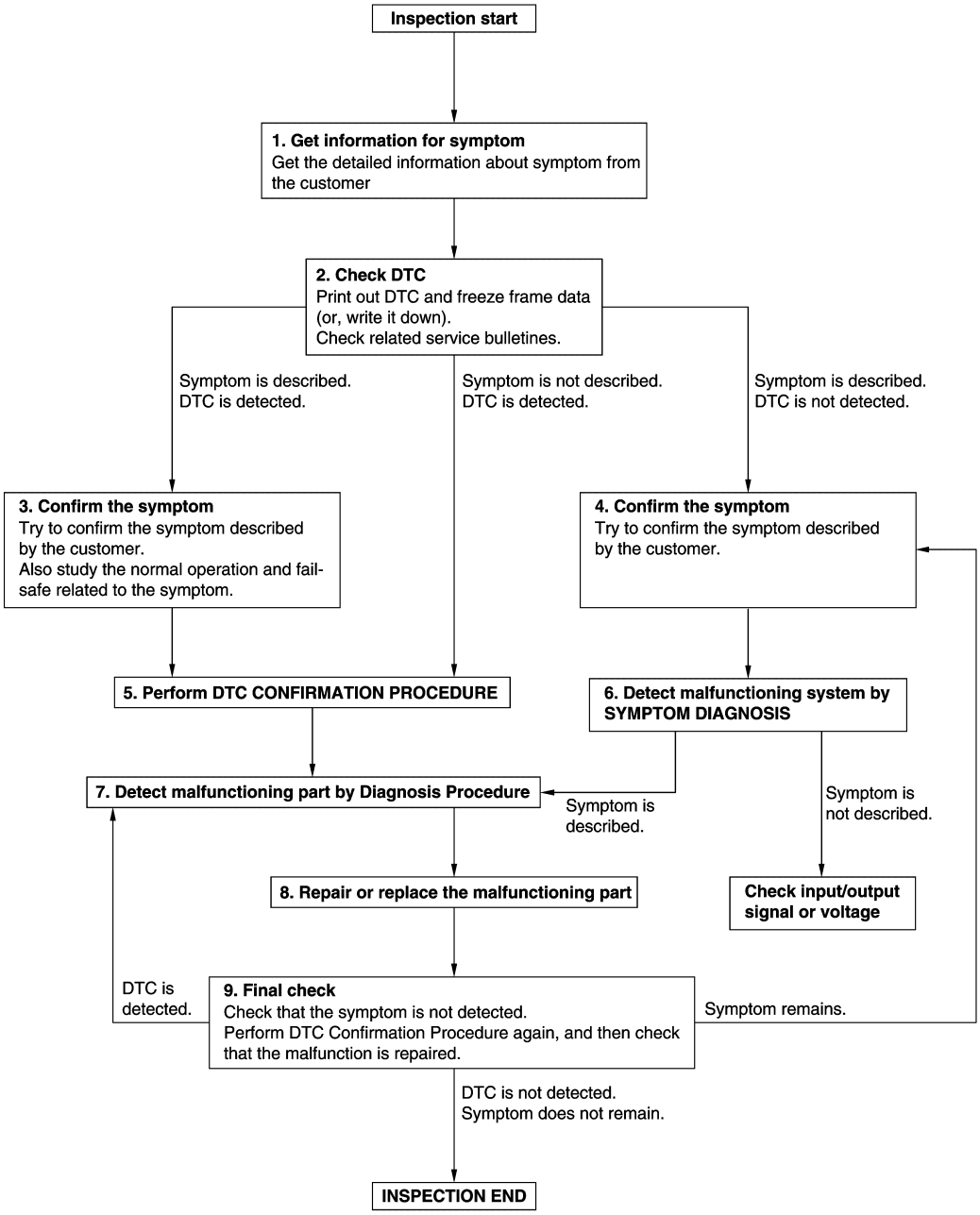

JMKIA8652GB

DETAILED FLOW

1. GET INFORMATION FOR SYMPTOM

1. Get detailed information from the customer about the symptom (the condition and the environment when the incident/malfunction occurs).
2. Check operation condition of the component or system that is malfunctioning.

>> GO TO 2.

2. CHECK DTC

1. Check DTC.
2. Perform the following procedure if DTC is detected.
- Record DTC and freeze frame data (Print them out using CONSULT).
- Erase DTC.
- Study the relationship between the cause detected by DTC and the symptom described by the customer.
3. Check related service bulletins for information.

Are any symptoms described and any DTC detected?

Symptom is described, DTC is detected>>GO TO 3.
Symptom is described, DTC is not detected>>GO TO 4.
Symptom is not described, DTC is detected>>GO TO 5.

3. CONFIRM THE SYMPTOM

Try to confirm the symptom described by the customer.
Also study the normal operation and fail-safe related to the symptom.
Verify relation between the symptom and the condition when the symptom is detected.

>> GO TO 5.

4. CONFIRM THE SYMPTOM

Try to confirm the symptom described by the customer.
Verify relation between the symptom and the condition when the symptom is detected.
NOTE:
Freeze frame data is useful if the DTC is not detected.

>> GO TO 6.

5. PERFORM DTC CONFIRMATION PROCEDURE

Perform DTC CONFIRMATION PROCEDURE for the detected DTC, and then check that DTC is detected again. At this time, always connect CONSULT to the vehicle, and check self diagnostic results in real time.
If two or more DTCs are detected, refer to BCS-47, "DTC Inspection Priority Chart", and determine trouble diagnosis order.

Is DTC detected?

YES >> GO TO 7.
NO >> Refer to GI-47, "Intermittent Incident".

6. DETECT MALFUNCTIONING SYSTEM BY SYMPTOM DIAGNOSIS

Detect malfunctioning system according to SYMPTOM DIAGNOSIS based on the confirmed symptom in step 4, and determine the trouble diagnosis order based on possible causes and symptom.

Is the symptom described?

YES >> GO TO 7.
NO >> Monitor input data from related sensors or check voltage of related module terminals using CONSULT.

7. DETECT MALFUNCTIONING PART BY DIAGNOSIS PROCEDURE

Inspect according to Diagnosis Procedure of the system.

Is malfunctioning part detected?

YES >> GO TO 8.
NO >> Refer to GI-47, "Intermittent Incident".

8. REPAIR OR REPLACE THE MALFUNCTIONING PART

1. Repair or replace the malfunctioning part.
2. Reconnect parts or connectors disconnected during Diagnosis Procedure again after repair and replacement.
3. Check DTC. If DTC is detected, erase it.

>> GO TO 9.

9. FINAL CHECK

When DTC is detected in step 2, perform DTC CONFIRMATION PROCEDURE again, and then check that the malfunction is repaired securely.
When symptom is described by the customer, refer to confirmed symptom in step 3 or 4, and check that the symptom is not detected.

Is DTC detected and does symptom remain?

YES-1 >> DTC is detected: GO TO 7.
YES-2 >> Symptom remains: GO TO 4.
NO >> Inspection End.

DTC/CIRCUIT DIAGNOSIS

U1000 CAN COMM CIRCUIT

Description

INFOID:0000000007986593

Refer to LAN-9, "CAN COMMUNICATION SYSTEM : System Description".

DTC Logic

INFOID:0000000007986594

DTC DETECTION LOGIC

NOTE:
U1000 can be set if a module harness was disconnected and reconnected, perhaps during a repair. Confirm that there are actual CAN diagnostic symptoms and a present DTC by performing the Self Diagnostic Result procedure.

CONSULT Display	DTC Detection Condition	Possible cause
CAN COMM CIRCUIT [U1000]	When any listed module cannot communicate with CAN communication signal continuously for 2 seconds or more with ignition switch ON	In CAN communication system, any item (or items) of the following listed below is malfunctioning. • Transmission • Receiving (ECM) • Receiving (VDC/TCS/ABS) • Receiving (METER/M&A) • Receiving (TCM) • Receiving (IPDM E/R)

Diagnosis Procedure

INFOID:0000000007986595

1. PERFORM SELF DIAGNOSTIC RESULT

1. Turn ignition switch ON and wait for 2 second or more.
2. Check “SELF- DIAG RESULTS”.

Is “CAN COMM CIRCUIT” displayed?

YES >> Perform CAN Diagnosis as described in DIAGNOSIS section of CONSULT Operation Manual.
NO >> Refer to GI-47, "Intermittent Incident".

U1010 CONTROL UNIT (CAN)

DTC Logic

INFOID:0000000007986596

DTC DETECTION LOGIC

CONSULT Display	DTC Detection Condition	Possible Cause
CAN COMM CIRCUIT [U1010]	BCM detected internal CAN communication circuit malfunction.	BCM

Diagnosis Procedure

INFOID:0000000007986597

1. REPLACE BCM

When DTC U1010 is detected, replace BCM.

>> Replace BCM. Refer to BCS-77, "Removal and Installation".

B260A IGNITION RELAY

DTC Logic

INFOID:0000000007986602

DTC DETECTION LOGIC

NOTE:
- If DTC B260A is displayed with DTC U1000, first perform the trouble diagnosis for DTC U1000. Refer to PCS-55, "DTC Logic".
- If DTC B260A is displayed with DTC U1010, first perform the trouble diagnosis for DTC U1010. Refer to PCS-56, "DTC Logic".
- If DTC B260A is displayed with DTC B261A, first perform the trouble diagnosis for DTC B261A. Refer to PCS-67, "DTC Logic".

CONSULT Display	DTC Detection Condition	Possible Cause
IGNITION RELAY [B260A]	BCM detects a difference of signal for 2 seconds or more between the following information: • Ignition relay-1 operation request. • Ignition relay-1 feedback from IPDM E/R (CAN).	• Harness or connectors • IPDM E/R • BCM

DTC CONFIRMATION PROCEDURE

1. PERFORM SELF DIAGNOSTIC RESULT

1. Turn ignition switch ON under the following conditions, and wait for at least 2 seconds.
- CVT selector lever is in the P (park) or N (neutral) position.
- Release the brake pedal.
2. Perform self diagnostic result.

Is DTC B260A detected?

YES >> Refer to PCS-57, "Diagnosis Procedure".
NO >> Inspection End.

Diagnosis Procedure

INFOID:0000000007986603

Regarding Wiring Diagram information, refer to PCS-43, "Wiring Diagram".

1. CHECK SELF DIAGNOSTIC RESULT FOR IPDM E/R

Perform self diagnostic result for IPDM E/R.

Are any DTCs detected?

YES >> Refer to PCS-20, "DTC Index".
NO >> GO TO 2

2. CHECK IGNITION RELAY-1 POWER SUPPLY (IPDM E/R)

Check voltage between IPDM E/R connector E63 terminal 43 and ground.

IPDM E/R		Ground	Condition	Voltage (Approx.)
Connector	Terminal			
E63	43	—	Ignition: OFF	0V
			Ignition: ON	Battery voltage

Is the inspection result normal?

YES >> Replace IPDM E/R. Refer to PCS-32, "Removal and Installation".
NO >> GO TO 3.

3. CHECK IGNITION RELAY-1 POWER SUPPLY (BCM)

Check voltage between BCM connector M18 terminal 70 and ground.

BCM		Ground	Condition	Voltage (Approx.)
Connector	Terminal			
M18	70	—	Ignition: OFF	0V
			Ignition: ON	Battery voltage

Is the inspection result normal?

YES >> Refer to GI-47, "Intermittent Incident".
NO >> Replace BCM. Refer to BCS-77, "Removal and Installation".

B2614 ACC RELAY CIRCUIT

DTC Logic

INFOID:0000000007986608

DTC DETECTION LOGIC

CONSULT Display	DTC detecting condition	Possible cause
ACC RELAY CIRCUIT [B2614]	An immediate operation of accessory relay-1 and accessory relay-2 is requested by BCM, but there is no response for more than 1 second.	• Harness or connectors • Accessory relay-1 • Accessory relay-2 • Fuse block J/B • BCM

DTC CONFIRMATION PROCEDURE

1. PERFORM SELF DIAGNOSTIC RESULT

1. Turn the power supply position to ACC under the following conditions, and wait for at least 1 second.
- CVT selector lever is in the P (park) or N (neutral) position.
- Release the brake pedal.
2. Perform self diagnostic result.

Is DTC B2614 detected?

YES >> Refer to PCS-59, "Diagnosis Procedure".
NO >> Inspection End.

Diagnosis Procedure

INFOID:0000000007986609

Regarding Wiring Diagram information, refer to PCS-43, "Wiring Diagram".

1. CHECK ACCESSORY RELAY-1 AND ACCESSORY RELAY-2 POWER SUPPLY CIRCUIT

1. Turn ignition switch OFF.
2. Disconnect accessory relay-1 and accessory relay-2.
3. Disconnect BCM connector M20.
4. Check continuity between accessory relay-1 connector J-3 terminal 2 and BCM connector M20 terminal 113.

Accessory relay-1		BCM		Continuity
Connector	Terminal	Connector	Terminal	
J-3	2	M20	113	Yes

5. Check continuity between accessory relay-2 connector M25 terminal 1 and BCM connector M20 terminal 113.

Accessory relay-2		BCM		Continuity
Connector	Terminal	Connector	Terminal	
M25	1	M20	113	Yes

6. Check continuity between BCM connector M20 terminal 113 and ground.

BCM		Ground	Continuity
Connector	Terminal		
M20	113	—	No

Is the inspection result normal?

YES >> GO TO 2.
NO >> Repair or replace harness or connectors.

2. CHECK ACCESSORY RELAY-1 AND ACCESSORY RELAY-2 GROUND CIRCUIT

1. Turn ignition switch OFF.
2. Check continuity between accessory relay-1 connector J-3 terminal 1 and ground.

Accessory relay-1		Ground	Continuity
Connector	Terminal		
J-3	1	—	Yes

3. Check continuity between accessory relay-2 connector M25 terminal 2 and ground.

Accessory relay-2		Ground	Continuity
Connector	Terminal		
M25	2	—	Yes

Is the inspection result normal?

YES >> GO TO 3.
NO >> Repair or replace harness or connectors.

3. CHECK ACCESSORY RELAYS

Perform the relay component inspection. Refer to PCS-60, "Component Inspection (Relay)".

Is the inspection result normal?

YES >> GO TO 4.
NO >> Replace relay.

4. CHECK ACCESSORY RELAY-1 AND ACCESSORY RELAY-2 POWER SUPPLY (BCM)

Check voltage between BCM connector M20 terminal 113 and ground.

BCM		Ground	Condition	Voltage (Approx.)
Connector	Terminal			
M20	113	—	Ignition: OFF	0V
			Ignition: ACC	Battery voltage

Is the inspection result normal?

YES >> Refer to GI-47, "Intermittent Incident".
NO >> Replace BCM. Refer to BCS-77, "Removal and Installation".

Component Inspection (Relay)

INFOID:0000000007986610

1. CHECK RELAY

1. Remove relay.
2. Check the continuity between relay terminals under the following conditions.

Relay terminals	Condition	Continuity
3 and 5	Battery voltage applied to terminal 1 and ground to terminal 2.	Yes
	Voltage and ground removed.	No

Is the inspection result normal?

YES >> Inspection End.
NO >> Replace relay.

B2615 BLOWER RELAY CIRCUIT

DTC Logic

INFOID:0000000007986612

DTC DETECTION LOGIC

CONSULT Display	DTC Detection Condition	Possible Cause
BLOWER RELAY CIRCUIT [B2615]	An immediate operation of front blower motor relay is requested by BCM, but there is no response for more than 1 second.	• Harness or connectors. • Front blower motor relay. • Fuse block J/B. • BCM.

DTC CONFIRMATION PROCEDURE

1. PERFORM SELF DIAGNOSTIC RESULT

1. Turn ignition switch ON under the following conditions, and wait for at least 1 second.
- CVT selector lever is in the P (park) or N (neutral) position.
- Release brake pedal.
2. Perform self diagnostic result.

Is DTC B2615 detected?

YES >> Refer to PCS-61, "Diagnosis Procedure".
NO >> Inspection End.

Diagnosis Procedure

INFOID:0000000007986613

Regarding Wiring Diagram information, refer to PCS-43, "Wiring Diagram".

1. CHECK FRONT BLOWER MOTOR RELAY POWER SUPPLY CIRCUIT

1. Turn ignition switch OFF.
2. Disconnect front blower motor relay.
3. Disconnect BCM connector M19.
4. Check continuity between front blower motor relay connector J-4 terminal 2 and BCM connector M18 terminal 66.

Front blower motor relay		BCM		Continuity
Connector	Terminal	Connector	Terminal	
J-4	2	M18	66	Yes

5. Check continuity between front blower motor relay connector J-4 terminal 2 and ground.

Front blower motor relay		Ground	Continuity
Connector	Terminal		
J-4	2	—	No

Is the inspection result normal?

YES >> GO TO 2.
NO >> Repair or replace harness or connectors.

2. CHECK FRONT BLOWER MOTOR RELAY GROUND CIRCUIT

1. Turn ignition switch OFF.
2. Check continuity between front blower motor relay connector J-4 terminal 1 and ground.

Front blower motor relay		Ground	Continuity
Connector	Terminal		
J-4	1	—	Yes

Is the inspection result normal?

YES >> GO TO 3.
NO >> Repair or replace harness or connectors.

3. CHECK FRONT BLOWER MOTOR RELAY

Perform the relay component inspection. Refer to PCS-62, "Component Inspection (Relay)".

Is the inspection result normal?

YES >> GO TO 4.
NO >> Replace front blower motor relay.

4. CHECK FRONT BLOWER MOTOR RELAY POWER SUPPLY (BCM)

Check voltage between BCM connector M19 terminal 66 and ground.

BCM		Ground	Condition	Voltage (Approx.)
Connector	Terminal			
M19	66	—	Ignition: OFF	0V
			Ignition: ON	Battery voltage

Is the inspection result normal?

YES >> Refer to GI-47, "Intermittent Incident".
NO >> Replace BCM. Refer to BCS-77, "Removal and Installation".

Component Inspection (Relay)

INFOID:0000000008671052

1. CHECK RELAY

1. Remove relay.
2. Check the continuity between relay terminals under the following conditions.

Relay terminals	Condition	Continuity
3 and 5	Battery voltage applied to terminal 1 and ground to terminal 2.	Yes
	Voltage and ground removed.	No

Is the inspection result normal?

YES >> Inspection End.
NO >> Replace relay.

B2616 IGNITION RELAY CIRCUIT

DTC Logic

INFOID:0000000007986616

DTC DETECTION LOGIC

CONSULT Display	DTC Detection Condition	Possible Cause
IGNITION RELAY CIRCUIT [B2616]	An immediate operation of ignition relay-2 is requested by BCM, but there is no response for more than 1 second.	• Harness or connectors. • Ignition relay-2. • Fuse block J/B. • BCM.

DTC CONFIRMATION PROCEDURE

1. PERFORM SELF DIAGNOSTIC RESULT

1. Turn ignition switch ON under the following conditions, and wait for at least 1 second.
- CVT selector lever is in the P (park) or N (neutral) position.
- Release brake pedal
2. Perform self diagnostic result.

Is DTC B2616 detected?

YES >> Refer to PCS-63, "Diagnosis Procedure".
NO >> Inspection End.

Diagnosis Procedure

INFOID:0000000007986617

Regarding Wiring Diagram information, refer to PCS-43, "Wiring Diagram".

1. CHECK IGNITION RELAY-2 POWER SUPPLY CIRCUIT

1. Turn ignition switch OFF.
2. Disconnect BCM connector M19.
3. Check continuity between ignition relay-2 connector J-1 terminal 1 and BCM connector M18 terminal 67.

Ignition relay-2		BCM		Continuity
Connector	Terminal	Connector	Terminal	
J-1	1	M18	67	Yes

4. Check continuity between ignition relay-2 connector J-1 terminal 1 and ground.

Ignition relay-2		Ground	Continuity
Connector	Terminal		
J-1	1	—	No

Is the inspection result normal?

YES >> GO TO 2.
NO >> Repair or replace harness or connectors.

2. CHECK IGNITION RELAY-2 GROUND CIRCUIT

1. Turn ignition switch OFF.
2. Check continuity between ignition relay-2 connector J-1 terminal 2 and ground.

Ignition relay-2		Ground	Continuity
Connector	Terminal		
J-1	2	—	Yes

Is the inspection result normal?

YES >> GO TO 3.
NO >> Repair or replace harness or connectors.

3. CHECK IGNITION RELAY-2

Perform the relay component inspection. Refer to PCS-64, "Component Inspection (Relay)".

Is the inspection result normal?

YES >> GO TO 4.
NO >> Replace ignition relay-2.

4. CHECK IGNITION RELAY-2 POWER SUPPLY (BCM)

Check voltage between BCM connector M18 terminal 67 and ground.

BCM		Ground	Condition	Voltage (Approx.)
Connector	Terminal			
M18	67	—	Ignition: OFF	0V
			Ignition: ON	Battery voltage

Is the inspection result normal?

YES >> Refer to GI-47, "Intermittent Incident".
NO >> Replace BCM. Refer to BCS-77, "Removal and Installation".

Component Inspection (Relay)

INFOID:0000000008671053

1. CHECK RELAY

1. Remove relay.
2. Check the continuity between relay terminals under the following conditions.

Relay terminals	Condition	Continuity
3 and 5	Battery voltage applied to terminal 1 and ground to terminal 2.	Yes
	Voltage and ground removed.	No

Is the inspection result normal?

YES >> Inspection End.
NO >> Replace relay.

B2618 BCM

DTC Logic

INFOID:0000000007986620

DTC DETECTION LOGIC

NOTE:
- If DTC B2618 is displayed with DTC U1000, first perform the trouble diagnosis for DTC U1000. Refer to PCS-55, "DTC Logic".
- If DTC B2618 is displayed with DTC U1010, first perform the trouble diagnosis for DTC U1010. Refer to PCS-56, "DTC Logic".

CONSULT Display	DTC Detection Condition	Possible Cause
BCM [B2618]	An immediate operation of ignition relay-1 is requested by BCM, but there is no response for more than 1 second	• BCM

DTC CONFIRMATION PROCEDURE

1. PERFORM SELF DIAGNOSTIC RESULT

1. Turn ignition switch ON under the following conditions, and wait for at least 1 second.
- CVT selector lever is in the P (park) or N (neutral) position.
- Release brake pedal
2. Perform self diagnostic result.

Is DTC B2618 detected?

YES >> Refer to PCS-65, "Diagnosis Procedure".
NO >> Inspection End.

Diagnosis Procedure

INFOID:0000000007986621

Regarding Wiring Diagram information, refer to PCS-43, "Wiring Diagram".

1. CHECK SELF DIAGNOSTIC RESULT FOR IPDM E/R

Perform self diagnostic result for IPDM E/R.

Are any DTCs detected?

YES >> Refer to PCS-20, "DTC Index".
NO >> GO TO 2

2. CHECK IGNITION RELAY-1 POWER SUPPLY (IPDM E/R)

Check voltage between IPDM E/R connector E63 terminal 43 and ground.

IPDM E/R		Ground	Condition	Voltage (Approx.)
Connector	Terminal			
E63	43	—	Ignition: OFF	0V
			Ignition: ON	Battery voltage

Is the inspection result normal?

YES >> Replace IPDM E/R. Refer to PCS-32, "Removal and Installation".
NO >> GO TO 3.

3. CHECK IGNITION RELAY-1 POWER SUPPLY (BCM)

Check voltage between BCM connector M18 terminal 70 and ground.

BCM		Ground	Condition	Voltage (Approx.)
Connector	Terminal			

M18	70	—	Ignition: OFF	0V
			Ignition: ON	Battery voltage

Is the inspection result normal?

YES >> Refer to GI-47, "Intermittent Incident".
NO >> Replace BCM. Refer to BCS-77, "Removal and Installation".

B261A PUSH-BUTTON IGNITION SWITCH

DTC Logic

INFOID:0000000007986623

DTC DETECTION LOGIC

CONSULT Display	DTC Detection Condition	Possible Cause
PUSH-BUTTON IGNITION SWITCH [B261A]	BCM detects a difference of signal for 1 second or more between the following information: • Power supply position by push-button ignition switch. • Power supply position from IPDM E/R (CAN).	• Harness or connectors • Push-button ignition switch • BCM

DTC CONFIRMATION PROCEDURE

1. PERFORM SELF DIAGNOSTIC RESULT

1. Press the push-button ignition switch under the following conditions, and wait for at least 1 second.
- CVT selector lever is in the P (park) or N (neutral) position.
- Release the brake pedal.
2. Perform self diagnostic result.

Is DTC B261A detected?

YES >> Refer to PCS-67, "Diagnosis Procedure".
NO >> Inspection End.

Diagnosis Procedure

INFOID:0000000007986624

Regarding Wiring Diagram information, refer to PCS-43, "Wiring Diagram".

1. CHECK PUSH-BUTTON IGNITION SWITCH OUTPUT SIGNAL (PUSH-BUTTON IGNITION SWITCH)

1. Disconnect push-button ignition switch connector.
2. Check voltage between push-button ignition switch connector M38 terminal 8 and ground.

Push-button ignition switch		Ground	Voltage (Approx.)
Connector	Terminal		
M38	8	—	Battery voltage

Is the inspection result normal?

YES >> GO TO 2.
NO >> GO TO 4.

2. CHECK IGNITION SWITCH OUTPUT SIGNAL (IPDM E/R)

Check voltage between IPDM E/R connector E63 terminal 38 and ground.

IPDM E/R		Ground	Voltage (Approx.)
Connector	Terminal		
E63	38	—	Battery voltage

Is the inspection result normal?

YES >> GO TO 3.
NO >> Replace IPDM E/R. Refer to PCS-32, "Removal and Installation".

3. CHECK PUSH-BUTTON IGNITION SWITCH CIRCUIT (IPDM E/R)

1. Turn ignition switch OFF.
2. Disconnect IPDM E/R connector E63 and BCM connector M17.

3. Check continuity between IPDM E/R connector E63 terminal 38 and push-button ignition switch connector M38 terminal 8.

IPDM E/R		Push-button ignition switch		Continuity
Connector	Terminal	Connector	Terminal	
E63	38	M38	8	Yes

4. Check continuity between IPDM E/R connector E63 terminal 38 and ground.

IPDM E/R		Ground	Continuity
Connector	Terminal		
E63	38	—	No

Is the inspection result normal?

YES >> Refer to GI-47, "Intermittent Incident".
NO >> Repair or replace harness or connectors.

4. CHECK IGNITION SWITCH OUTPUT SIGNAL (BCM)

Check voltage between BCM connector M17 terminal 1 and ground.

BCM		Ground	Voltage (Approx.)
Connector	Terminal		
M17	1	—	Battery voltage

Is the inspection result normal?

YES >> GO TO 5.
NO >> Replace BCM. Refer to BCS-77, "Removal and Installation".

5. CHECK PUSH-BUTTON IGNITION SWITCH CIRCUIT (BCM)

1. Turn ignition switch OFF.
2. Disconnect BCM connector M17 and IPDM E/R connector E63.
3. Check continuity between BCM connector M17 terminal 1 and push-button ignition switch connector M38 terminal 8.

BCM		Push-button ignition switch		Continuity
Connector	Terminal	Connector	Terminal	
M17	1	M38	8	Yes

4. Check continuity between BCM connector M17 terminal 1 and ground.

BCM		Ground	Continuity
Connector	Terminal		
M17	1	—	No

Is the inspection result normal?

YES >> Refer to GI-47, "Intermittent Incident".
NO >> Repair or replace harness or connectors.

B26F1 IGNITION RELAY

DTC Logic

INFOID:0000000008671055

DTC DETECTION LOGIC

CONSULT Display	DTC detecting condition	Possible cause
IGN RELAY OFF [B26F1]	BCM transmits the ignition relay control signal, but does not receive ignition switch ON signal (CAN) from IPDM E/R.	• Harness or connectors • BCM • IPDM E/R

DTC CONFIRMATION PROCEDURE

1.PERFORM SELF DIAGNOSTIC RESULT

1. Turn ignition switch ON under the following conditions, and wait for 2 seconds or more.
- CVT selector lever is in the P (park) or N (neutral) position.
- Do not depress brake pedal.
2. Perform self diagnostic result.

Is DTC B26F1detected?

YES >> Go to PCS-69, "Diagnosis Procedure".
NO >> Inspection End.

Diagnosis Procedure

INFOID:0000000008671056

Regarding Wiring Diagram information, refer to PCS-43, "Wiring Diagram".

1. CHECK SELF DIAGNOSTIC RESULT FOR IPDM E/R

1. Perform self diagnostic result for IPDM E/R.
2. Erase DTCs.
3. Turn ignition switch OFF.
4. Turn ignition switch ON.
5. Perform self diagnostic result for IPDM E/R.

Are any DTCs detected?

YES >> Refer to PCS-20, "DTC Index".
NO >> GO TO 2.

2.CHECK IGNITION RELAY-1 CONTROL SIGNAL (IPDM E/R)

Check voltage between BCM connector M18 terminal 70 and ground.

BCM		Ground	Condition	Voltage (Approx.)
Connector	Terminal			
M18	70	—	Ignition: OFF	0V
			Ignition: ON	Battery voltage

Is the inspection result normal?

YES >> GO TO 3.
NO >> Replace BCM. Refer to BCS-77, "Removal and Installation".

3.CHECK IGNITION RELAY-1 CONTROL SIGNAL CIRCUIT

1. Turn ignition switch OFF.
2. Disconnect IPDM E/R connector E63 and BCM connector M18.
3. Check continuity between IPDM E/R connector E63 terminal 43 and BCM connector M18 terminal 70.

IPDM E/R		BCM		Continuity
Connector	Terminal	Connector	Terminal	
E63	43	M18	70	Yes

4. Check continuity between IPDM E/R connector E63 terminal 43 and ground.

IPDM E/R		Ground	Continuity
Connector	Terminal		
E63	43	—	No

Is the inspection result normal?

YES >> Replace IPDM E/R. Refer to PCS-32, "Removal and Installation".
NO >> Repair or replace harness or connectors.

B26F2 IGNITION RELAY

DTC Logic

INFOID:0000000008671057

DTC DETECTION LOGIC

CONSULT Display	DTC detecting condition	Possible cause
IGN RELAY ON [B26F2]	BCM transmits the ignition relay control signal, but does not receive ignition switch ON signal (CAN) from IPDM E/R.	• Harness or connectors • BCM • IPDM E/R

DTC CONFIRMATION PROCEDURE

1. PERFORM SELF DIAGNOSTIC RESULT

1. Turn ignition switch ON under the following conditions, and wait for 2 seconds or more.
- CVT selector lever is in the P (park) or N (neutral) position.
- Do not depress brake pedal.
2. Perform self diagnostic result.

Is DTC B26F2 detected?

YES >> Go to PCS-71, "Diagnosis Procedure".
NO >> Inspection End.

Diagnosis Procedure

INFOID:0000000008671058

Regarding Wiring Diagram information, refer to PCS-43, "Wiring Diagram".

1. CHECK SELF DIAGNOSTIC RESULT FOR IPDM E/R

1. Perform self diagnostic result for IPDM E/R.
2. Erase DTCs.
3. Turn ignition switch OFF.
4. Turn ignition switch ON.
5. Perform self diagnostic result for IPDM E/R.

Are any DTCs detected?

YES >> Refer to PCS-20, "DTC Index".
NO >> GO TO 2.

2. CHECK IGNITION RELAY-1 CONTROL SIGNAL (IPDM E/R)

1. Turn ignition switch OFF.
2. Disconnect IPDM E/R connector E63.
3. Check voltage between IPDM E/R connector E63 terminal 43 and ground.

IPDM E/R		Ground	Condition	Voltage (Approx.)
Connector	Terminal			
E63	43	—	Ignition: OFF	0V

Is the inspection result normal?

YES >> Replace IPDM E/R. Refer to PCS-32, "Removal and Installation".
NO >> GO TO 3.

3. CHECK IGNITION RELAY-1 CONTROL SIGNAL CIRCUIT

1. Disconnect BCM connector M18.
2. Check voltage between IPDM E/R connector E63 terminal 43 and ground.

IPDM E/R		Ground	Condition	Voltage (Approx.)
Connector	Terminal			
E63	43	—	Ignition: OFF	0V

Is the inspection result normal?

YES >> Replace BCM. Refer to BCS-77, "Removal and Installation".
NO >> Repair or replace harness or connectors.

B26F6 BCM

DTC Logic

INFOID:0000000008671059

DTC DETECTION LOGIC

NOTE:
- If DTC B26F6 is displayed with DTC U1000, first perform the trouble diagnosis for DTC U1000. Refer to PCS-55, "DTC Logic".
- If DTC B26F6 is displayed with DTC U1010, first perform the trouble diagnosis for DTC U1010. Refer to PCS-56, "DTC Logic".

CONSULT Display	DTC Detection Condition	Possible Cause
BCM [B26F6]	Ignition relay ON signal is not transmitted from IPDM E/R (CAN) when BCM turns ignition relay ON.	BCM

DTC CONFIRMATION PROCEDURE

1. PERFORM SELF DIAGNOSTIC RESULT

1. Turn ignition switch ON under the following conditions, and wait for 2 seconds or more.
- CVT selector lever is in the P (park) or N (neutral) position.
- Do not depress brake pedal.
2. Perform self diagnostic result.

Is DTC B26F6 detected?

YES >> Go to PCS-73, "Diagnosis Procedure".
NO >> Inspection End.

Diagnosis Procedure

INFOID:0000000008671060

Regarding Wiring Diagram information, refer to PCS-43, "Wiring Diagram".

1. CHECK SELF DIAGNOSTIC RESULT FOR IPDM E/R

Perform self diagnostic result for IPDM E/R.

Are any DTCs detected?

YES >> Refer to PCS-20, "DTC Index".
NO >> GO TO 2

2. CHECK IGNITION RELAY-1 POWER SUPPLY (IPDM E/R)

Check voltage between IPDM E/R connector E63 terminal 43 and ground.

IPDM E/R		Ground	Condition	Voltage (Approx.)
Connector	Terminal			
E63	43	—	Ignition: OFF	0V
			Ignition: ON	Battery voltage

Is the inspection result normal?

YES >> Replace IPDM E/R. Refer to PCS-32, "Removal and Installation".
NO >> GO TO 3.

3. CHECK IGNITION RELAY-1 POWER SUPPLY (BCM)

Check voltage between BCM connector M18 terminal 70 and ground.

BCM		Ground	Condition	Voltage (Approx.)
Connector	Terminal			

M18	70	—	Ignition: OFF	0V
			Ignition: ON	Battery voltage

Is the inspection result normal?

YES >> Refer to GI-47, "Intermittent Incident".
NO >> Replace BCM. Refer to BCS-77, "Removal and Installation".

PUSH-BUTTON IGNITION SWITCH

Component Function Check

INFOID:0000000008671061

1. CHECK FUNCTION

1. Select “PUSH SW” in “Data Monitor” of BCM with CONSULT.
2. Check the push-button ignition switch signal under the following conditions.

Test item	Condition	Status
PUSH SW	Push-button ignition switch is pressed	On
	Push-button ignition switch is not pressed	Off

Is the indication normal?

YES >> Inspection End.
NO >> Go to PCS-75, "Diagnosis Procedure".

Diagnosis Procedure

INFOID:0000000008671062

Regarding Wiring Diagram information, refer to PCS-43, "Wiring Diagram".

1. CHECK PUSH-BUTTON IGNITION SWITCH OUTPUT SIGNAL (PUSH-BUTTON IGNITION SWITCH)

1. Turn ignition switch OFF.
2. Disconnect push-button ignition switch connector and IPDM E/R connector E63.
3. Check voltage between push-button ignition switch connector M38 terminal 8 and ground.

Push-button ignition switch		Ground	Voltage (Approx.)
Connector	Terminal		
M38	8	—	Battery voltage

Is the inspection result normal?

YES >> GO TO 3.
NO >> GO TO 2.

2. CHECK PUSH-BUTTON IGNITION SWITCH CIRCUIT (BCM)

1. Disconnect BCM connector M17.
2. Check continuity between BCM connector M17 terminal 1 and push-button ignition switch connector M38 terminal 8.

BCM		Push-button ignition switch		Continuity
Connector	Terminal	Connector	Terminal	
M17	1	M38	8	Yes

3. Check continuity between BCM connector M17 terminal 1 and ground.

BCM		Ground	Continuity
Connector	Terminal		
M17	1	—	No

Is the inspection result normal?

YES >> Replace BCM. Refer to BCS-77, "Removal and Installation".
NO >> Repair or replace harness or connectors.

3. CHECK IGNITION SWITCH OUTPUT SIGNAL (IPDM E/R)

Check voltage between IPDM E/R connector E63 terminal 38 and ground.

IPDM E/R		Ground	Voltage (Approx.)
Connector	Terminal		
E63	38	—	Battery voltage

Is the inspection result normal?

YES >> GO TO 5.
NO >> GO TO 4.

4. CHECK PUSH-BUTTON IGNITION SWITCH CIRCUIT (IPDM E/R)

1. Disconnect BCM connector M17.
2. Check continuity between IPDM E/R connector E63 terminal 38 and push-button ignition switch connector M38 terminal 8.

IPDM E/R		Push-button ignition switch		Continuity
Connector	Terminal	Connector	Terminal	
E63	38	M38	8	Yes

3. Check continuity between IPDM E/R connector E63 terminal 38 and ground.

IPDM E/R		Ground	Continuity
Connector	Terminal		
E63	38	—	No

Is the inspection result normal?

YES >> Replace IPDM E/R. Refer to PCS-32, "Removal and Installation".
NO >> Repair or replace harness or connectors.

5. CHECK PUSH-BUTTON IGNITION SWITCH GROUND CIRCUIT

Check continuity between push-button ignition switch connector M38 terminal 4 and ground.

Push-button ignition switch		Ground	Continuity
Connector	Terminal		
M38	4	—	Yes

Is the inspection result normal?

YES >> GO TO 6.
NO >> Repair or replace harness or connectors.

6. CHECK PUSH-BUTTON IGNITION SWITCH

Refer to PCS-76, "Component Inspection".

Is the inspection result normal?

YES >> Refer to GI-47, "Intermittent Incident".
NO >> Replace push-button ignition switch.

Component Inspection

INFOID:0000000008671063

1. CHECK PUSH-BUTTON IGNITION SWITCH

1. Turn ignition switch OFF.
2. Disconnect push-button ignition switch connector.
3. Check continuity between push-button ignition switch terminals.

Push-button ignition switch terminals	Condition	Continuity
4 – 8	Pressed	Yes
	Not pressed	No

Is the inspection result normal?

YES >> Inspection End.
NO >> Replace push-button ignition switch.

POWER SUPPLY AND GROUND CIRCUIT

BCM

BCM : Diagnosis Procedure

INFOID:0000000008672347

Regarding Wiring Diagram information, refer to BCS-52, "Wiring Diagram".

1. CHECK FUSE AND FUSIBLE LINK

Check that the following fuse and fusible link are not blown.

Terminal No.	Signal name	Fuse and fusible link No.
139	Fusible link battery power	I (40A)
131	BCM battery fuse	1 (10A)

Is the fuse or fusible link blown?

YES >> Replace the blown fuse or fusible link after repairing the affected circuit.
NO >> GO TO 2

2. CHECK POWER SUPPLY CIRCUIT

1. Disconnect BCM connector M21.
2. Check voltage between BCM connector M21 terminals 131, 139 and ground.

BCM		Ground	Voltage (Approx.)
Connector	Terminal		
M21	131	—	Battery voltage
	139		

Is the inspection result normal?

YES >> GO TO 3
NO >> Repair or replace harness or connectors.

3. CHECK GROUND CIRCUIT

Check continuity between BCM connector M21 terminals 134, 143 and ground.

BCM		Ground	Continuity
Connector	Terminal		
M21	134	—	Yes
	143		

Is the inspection result normal?

YES >> Inspection End.
NO >> Repair or replace harness or connectors.

IPDM E/R (INTELLIGENT POWER DISTRIBUTION MODULE ENGINE ROOM)

IPDM E/R (INTELLIGENT POWER DISTRIBUTION MODULE ENGINE ROOM) : Diagnosis Procedure

INFOID:0000000008671054

Regarding Wiring Diagram information, refer to PCS-21, "Wiring Diagram".

1. CHECK FUSIBLE LINKS

Check that the following fusible links are not blown.

Terminal No.	Signal name	Fusible link No.
1	Fusible link main	E (80A)
2	Fusible link IPDM E/R	A (250A), C (80A)
3	Fusible link ignition switch	A (250A), B (100A), M (40A)

Is the fusible link blown?

YES >> Replace the blown fusible link after repairing the affected circuit.
NO >> GO TO 2

2. CHECK POWER SUPPLY CIRCUIT

1. Disconnect IPDM E/R connectors E16 and E17.
2. Check voltage between IPDM E/R connectors and ground.

IPDM E/R		Ground	Voltage (Approx.)
Connector	Terminal		
E16	1	—	Battery voltage
	2		
E17	3		

Is the inspection result normal?

YES >> GO TO 3
NO >> Repair or replace harness or connectors.

3. CHECK GROUND CIRCUIT

1. Disconnect IPDM E/R connectors E18 and E63.
2. Check continuity between IPDM E/R connectors and ground.

IPDM E/R		Ground	Continuity
Connector	Terminal		
E18	7	—	Yes
E63	41		

Is the inspection result normal?

YES >> Inspection End.
NO >> Repair or replace harness or connectors.

SYMPTOM DIAGNOSIS

PUSH-BUTTON IGNITION SWITCH DOES NOT OPERATE

Description

INFOID:0000000008671050

Check that vehicle is under the condition shown in “Conditions of vehicle” before starting diagnosis, and check each symptom.

NOTE:

The engine start function, door lock function, power distribution system, and NATS-IVIS in the Intelligent Key system are closely related to each other regarding control. The vehicle security function can operate only when the door lock and power distribution system are operating normally.

Conditions of Vehicle (Operating Conditions)

- “ENGINE START BY I-KEY” in “WORK SUPPORT” is ON when setting on CONSULT.
- One or more of Intelligent Keys with registered Intelligent Key ID is in the vehicle.

Diagnosis Procedure

INFOID:0000000008671051

1. PERFORM WORK SUPPORT

Perform “INSIDE ANT DIAGNOSIS” on Work Support of “INTELLIGENT KEY”.
Refer to PCS-39, "INTELLIGENT KEY : CONSULT Function (BCM - INTELLIGENT KEY)".

>> GO TO 2.

2. PERFORM SELF-DIAGNOSTIC RESULT

Perform self diagnostic result.

Are any DTCs detected?

YES >> Refer to BCS-49, "DTC Index".
NO >> GO TO 3.

3. CHECK PUSH-BUTTON IGNITION SWITCH

Check push-button ignition switch.
Refer to PCS-75, "Component Function Check".

Is the operation normal?

YES >> GO TO 4.
NO >> Repair or replace malfunctioning parts.

4. CONFIRM THE OPERATION

Confirm the operation again.

Is the inspection normal?

YES >> Check intermittent incident. Refer to GI-47, "Intermittent Incident".
NO >> GO TO 1.

REMOVAL AND INSTALLATION

BCM (BODY CONTROL MODULE)

Removal and Installation

INFOID:0000000007986647

For removal and installation of the BCM (Body Control Module), refer to BCS-77, "Removal and Installation".

PUSH BUTTON IGNITION SWITCH

Exploded View

INFOID:0000000008738452

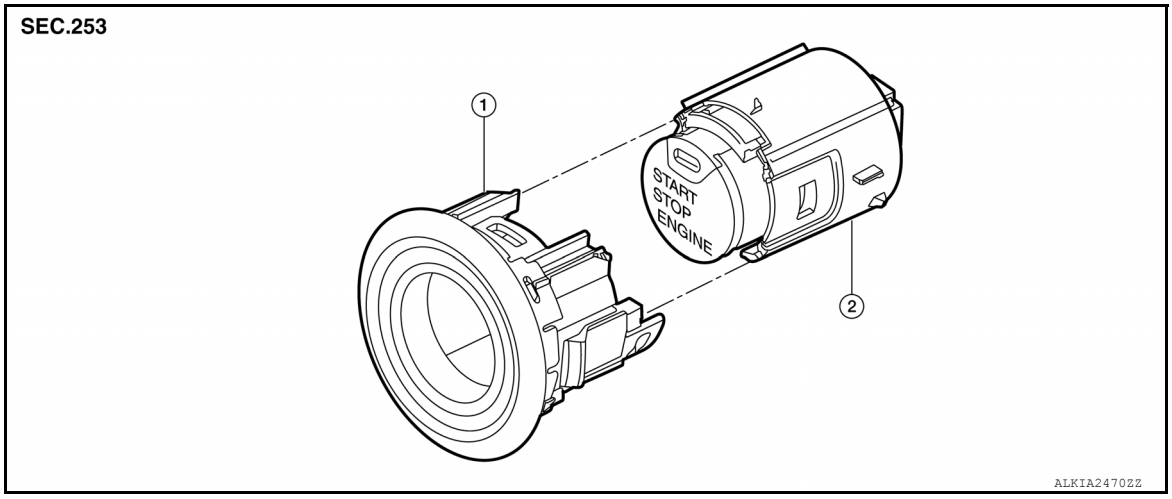

1. NATS antenna amp.
2. Push-button ignition switch

Removal and Installation

INFOID:0000000008738453

REMOVAL

1. Remove instrument pad LH. Refer to IP-14, "Exploded View".
2. Release the pawl on each side of NATS antenna amp (1) using a suitable tool and remove from the instrument pad LH.
   ◌: Pawl

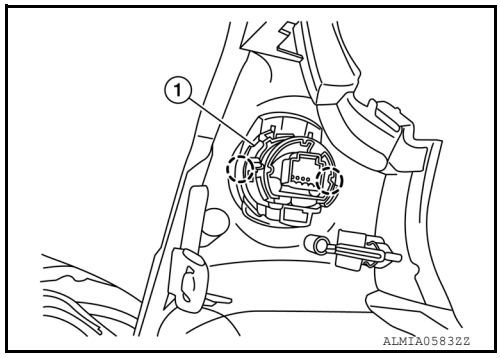

3. Release the pawl on each side using a suitable tool and remove the push-button ignition switch from the NATS antenna amp.

INSTALLATION

Installation is in the reverse order of removal.