SECTION ST
STEERING SYSTEM

CONTENTS

PRECAUTION

PRECAUTIONS

Precaution for Supplemental Restraint System (SRS) "AIR BAG" and "SEAT BELT PRE-TENSIONER"

INFOID:0000000009951723

The Supplemental Restraint System such as “AIR BAG” and “SEAT BELT PRE-TENSIONER”, used along with a front seat belt, helps to reduce the risk or severity of injury to the driver and front passenger for certain types of collision. Information necessary to service the system safely is included in the SR and SB section of this Service Manual.

WARNING:

- **To avoid rendering the SRS inoperative, which could increase the risk of personal injury or death in the event of a collision which would result in air bag inflation, all maintenance must be performed by an authorized NISSAN/INFINITI dealer.**
- **Improper maintenance, including incorrect removal and installation of the SRS, can lead to personal injury caused by unintentional activation of the system. For removal of Spiral Cable and Air Bag Module, see the SR section.**
- **Do not use electrical test equipment on any circuit related to the SRS unless instructed to in this Service Manual. SRS wiring harnesses can be identified by yellow and/or orange harnesses or harness connectors.**

PRECAUTIONS WHEN USING POWER TOOLS (AIR OR ELECTRIC) AND HAMMERS

WARNING:

- **When working near the Airbag Diagnosis Sensor Unit or other Airbag System sensors with the Ignition ON or engine running, DO NOT use air or electric power tools or strike near the sensor(s) with a hammer. Heavy vibration could activate the sensor(s) and deploy the air bag(s), possibly causing serious injury.**
- **When using air or electric power tools or hammers, always switch the Ignition OFF, disconnect the battery and wait at least three minutes before performing any service.**

Precaution for Steering System

INFOID:0000000009461240

- Before disassembly, thoroughly clean the outside of the unit.
- Disassembly should be done in a clean work area. It is important to prevent the internal parts from becoming contaminated by dirt or other foreign matter.
- For easier and proper assembly, place disassembled parts in order on a parts rack.
- Use nylon cloth or paper towels to clean the parts; common shop rags can leave lint that might interfere with their operation.
- Before inspection or reassembly, carefully clean all parts with a general purpose, non-flammable solvent.
- Before assembly, apply a coat of recommended Genuine NISSAN PSF or equivalent to hydraulic parts. Petroleum jelly may be applied to O-rings and seals. Do not use any grease.
- Replace all gaskets, seals and O-rings. Avoid damaging O-rings, seals and gaskets during installation. Perform functional tests whenever designated.

Precaution for Work

INFOID:0000000009461241

- When removing or disassembling each component, be careful not to damage or deform it. If a component may be subject to interference, be sure to protect it with a shop cloth.
- When removing (disengaging) components with a screwdriver or similar tool, be sure to wrap the component with a shop cloth or vinyl tape to protect it.
- Protect the removed parts with a shop cloth and prevent them from being dropped.
- Replace a deformed or damaged clip.
- If a part is specified as a non-reusable part, always replace it with a new one.
- Be sure to tighten bolts and nuts securely to the specified torque.
- After installation is complete, be sure to check that each part works properly.
- Follow the steps below to clean components:
- Water soluble dirt:
- Dip a soft cloth into lukewarm water, wring the water out of the cloth and wipe the dirty area.
- Then rub with a soft, dry cloth.
- Oily dirt:

< PRECAUTION >

- Dip a soft cloth into lukewarm water with mild detergent (concentration: within 2 to 3%) and wipe the dirty area.
- Then dip a cloth into fresh water, wring the water out of the cloth and wipe the detergent off.
- Then rub with a soft, dry cloth.

- Do not use organic solvent such as thinner, benzene, alcohol or gasoline.
- For genuine leather seats, use a genuine leather seat cleaner.

PREPARATION

PREPARATION

Special Service Tool

INFOID:0000000009461242

The actual shapes of the tools may differ from those illustrated here.

Tool number (TechMate No.) Tool name		Description
ST3127S000 (See J-25765-A) Preload gauge 1. GG9103000 (J-25765-A) Torque wrench 2. HT62940000 (—) Socket adapter 3. HT62900000 (—) Socket adapter	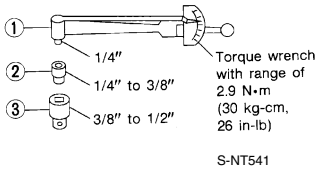	Inspecting of rotating torque for ball joint
KV48103500 (J-26357) Pressure gauge	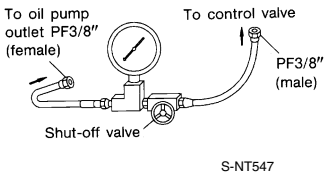	Measuring oil pump relief pressure
KV48102500 (J-33914) Pressure gauge adapter	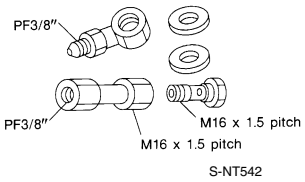	Measuring oil pump relief pressure
— (J-44372) Spring gauge	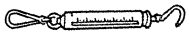	Measuring steering wheel turning force or rack sliding force
HT72520000 (J-25730-A) Ball joint remover	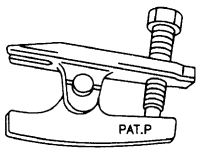	Removing ball joint

Commercial Service Tool

INFOID:0000000009461243

Tool name	Description
Steering wheel puller 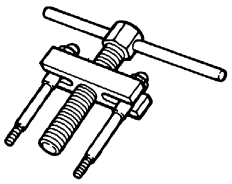 ZZA0819D	Removing steering wheel
Power tool 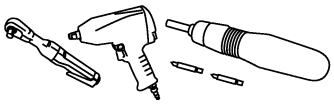 PIIB1407E	Loosening nuts, screws and bolts

SYSTEM DESCRIPTION

COMPONENT PARTS

HEATED STEERING WHEEL SYSTEM

HEATED STEERING WHEEL SYSTEM : Component Parts Location

INFOID:0000000009461244

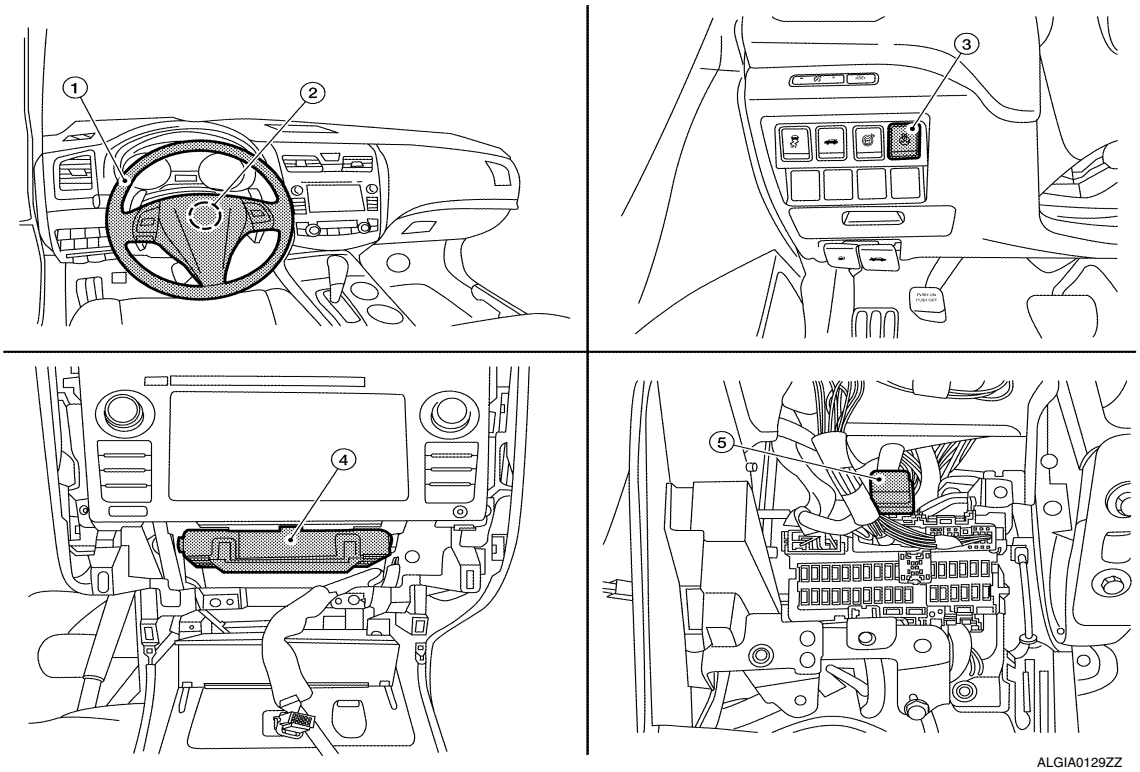

1. Heated steering wheel
2. Spiral cable
3. Heated steering wheel switch
4. A/C Auto amp. (view with cluster lid C removed)
5. Heated steering relay

HEATED STEERING WHEEL SYSTEM : Component Description

INFOID:0000000009461245

Components	Description
A/C Auto amp.	Controls the heated steering relay by providing a ground signal to the coil.
Heated steering wheel switch	• Controls the heated steering relay by providing a ground signal to A/C Auto amp. • Provides switch indicator for system.
Heated steering relay	Provides battery power supply to heated steering wheel and switch indicator.
Heated steering wheel	Contains heating element and over-heat protection.
Spiral cable	Provides rotating electrical connection for heated steering wheel.

SYSTEM

HEATED STEERING WHEEL SYSTEM

HEATED STEERING WHEEL SYSTEM : System Diagram

INFOID:0000000009461246

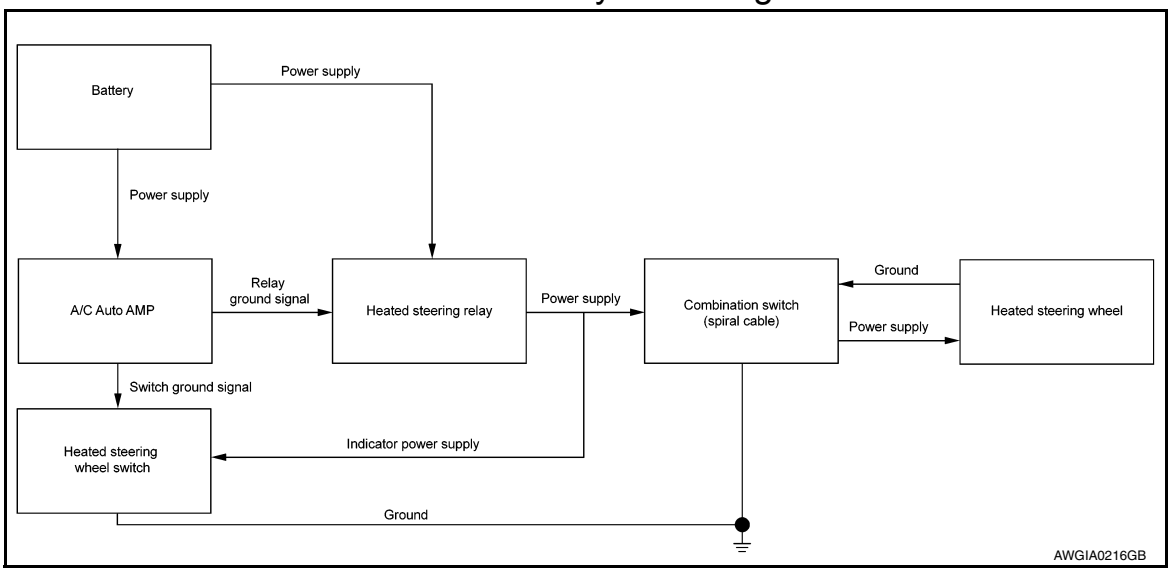

HEATED STEERING WHEEL SYSTEM : System Description

INFOID:0000000009461247

The heated steering wheel switch controls the heated steering relay through the A/C Auto amp. When the switch is turned on, the relay is energized and the heated steering system will operate. The heated steering system will turn off when the steering wheel temperature reaches approximately 86° F (30° C). Heated steering system operation can also be canceled by pressing the heated steering wheel switch again. If the surface temperature of the steering wheel is below 68° F (20° C), the system will heat the steering wheel and cycle off and on to maintain a temperature above 68° F (20° C). The indicator light will remain on as long as the system is on.

ECU DIAGNOSIS INFORMATION

A/C AUTO AMP.

List of ECU Reference

INFOID:0000000009461248

ECU	Reference
A/C auto amp.	HAC-28, "Reference Value"
	HAC-30, "DTC Inspection Priority Chart"
	HAC-31, "DTC Index"

WIRING DIAGRAM

HEATED STEERING WHEEL

Wiring Diagram

INFOID:0000000009461249

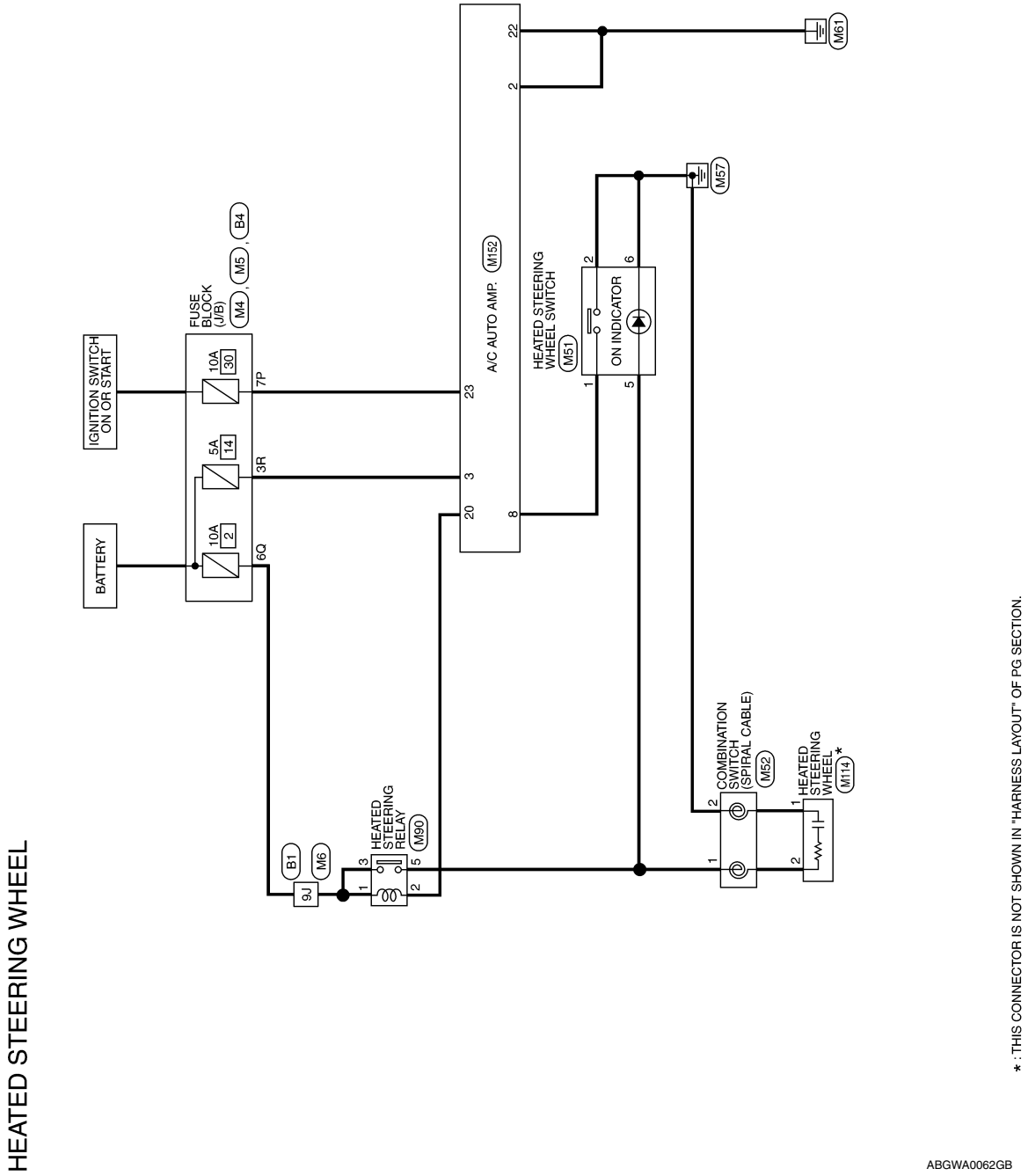

HEATED STEERING WHEEL CONNECTORS

Connector No.	M4
Connector Name	FUSE BLOCK (J/B)
Connector Color	BROWN

H.S.

Terminal No.	Color of Wire	Signal Name
3R	SB	–

Connector No.	M5
Connector Name	FUSE BLOCK (J/B)
Connector Color	WHITE

H.S.

Terminal No.	Color of Wire	Signal Name
7P	G	–

Connector No.	M6
Connector Name	WIRE TO WIRE
Connector Color	GRAY

H.S.

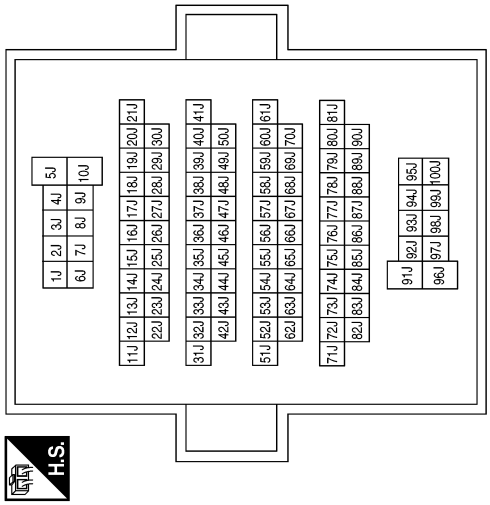

Terminal No.	Color of Wire	Signal Name
9J	W	–

Connector No.	M51
Connector Name	HEATED STEERING WHEEL SWITCH
Connector Color	BLUE

H.S.

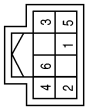

Terminal No.	Color of Wire	Signal Name
1	BR	–
2	B	–
5	BG	–
6	B	–

Connector No.	M52
Connector Name	COMBINATION SWITCH (SPIRAL CABLE)
Connector Color	WHITE

H.S.

Terminal No.	Color of Wire	Signal Name
1	BG	–
2	B	–

ABGIA0101GB

Connector No.	M152
Connector Name	A/C AUTO AMP. (WITH AUTO A/C)
Connector Color	WHITE

H.S.

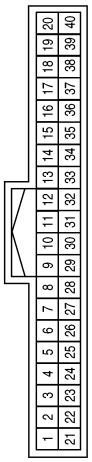

Terminal No.	Color of Wire	Signal Name
2	B	GND
3	SB	BATT
8	BR	STRG HTR SW
20	P	STRG HTR RLY
22	B	P GND
23	G	IGN

Connector No.	M114
Connector Name	HEATED STEERING WHEEL
Connector Color	WHITE

H.S.

Terminal No.	Color of Wire	Signal Name
1	Y	–
2	L	–

Connector No.	M90
Connector Name	HEATED STEERING RELAY
Connector Color	BLUE

H.S.

Terminal No.	Color of Wire	Signal Name
1	W	–
2	P	–
3	W	–
5	BG	–

Connector No.	B4
Connector Name	FUSE BLOCK (J/B)
Connector Color	WHITE

H.S.

Terminal No.	Color of Wire	Signal Name
6Q	W	–

Terminal No.	Color of Wire	Signal Name
9J	W	–

Connector No.	B1
Connector Name	WIRE TO WIRE
Connector Color	GRAY

H.S.

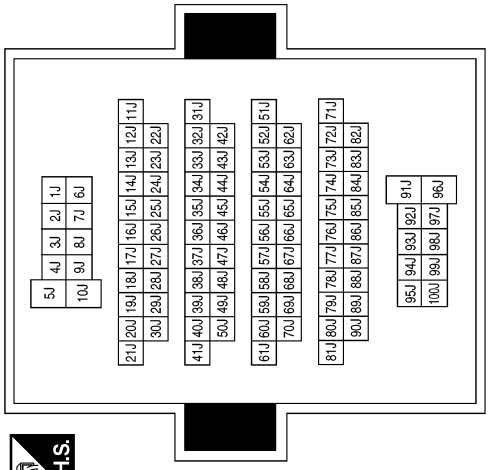

ABGIA0102GB

BASIC INSPECTION

DIAGNOSIS AND REPAIR WORK FLOW

Work Flow

INFOID:0000000009461250

OVERALL SEQUENCE

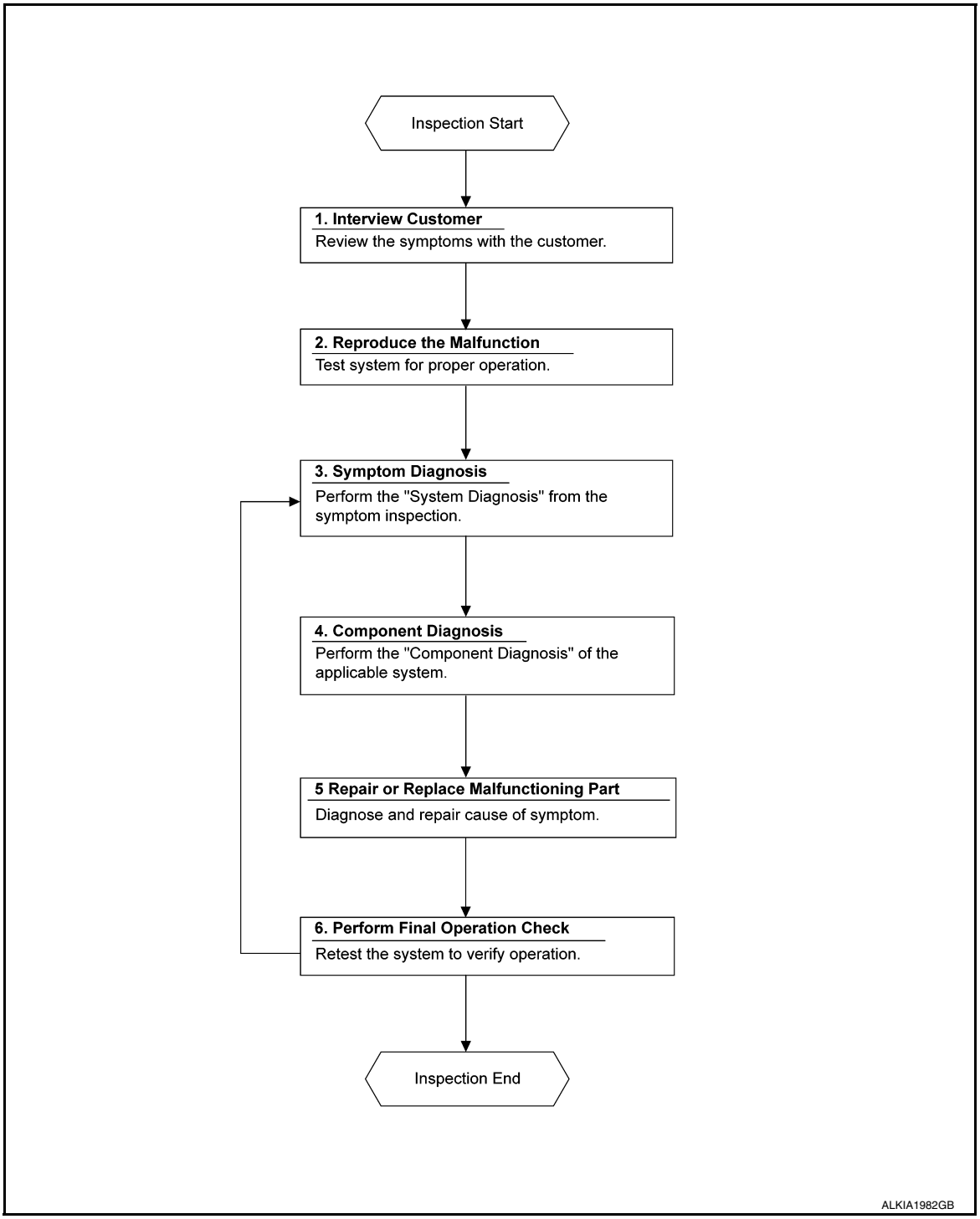

DETAILED FLOW

1. OBTAIN INFORMATION ABOUT SYMPTOM

Interview the customer to obtain as much information as possible about the conditions and environment under which the malfunction occurred.

>> GO TO 2.

2. CONFIRM THE SYMPTOM

Check the malfunction on the vehicle that the customer describes.
Inspect the relation of the symptoms and the condition when the symptoms occur.

>> GO TO 3.

3. IDENTIFY THE MALFUNCTIONING SYSTEM WITH SYMPTOM DIAGNOSIS

Use Symptom diagnosis from the symptom inspection result in step 2 and then identify where to start performing the diagnosis based on possible causes and symptoms. Refer to ST-28, "Symptom Table".

>> GO TO 4.

4. PERFORM THE COMPONENT DIAGNOSIS OF THE OF THE APPLICABLE SYSTEM

Perform the diagnosis with Component diagnosis of the applicable system.

>> GO TO 5.

5. REPAIR OR REPLACE THE MALFUNCTIONING PARTS

Repair or replace the specified malfunctioning parts.

>> GO TO 6.

6. FINAL CHECK

Check that malfunctions are not reproduced when obtaining the malfunction information from the customer, referring to the symptom inspection result in step 2.

Are the malfunctions corrected?

YES >> Inspection End.
NO >> GO TO 3.

POWER STEERING FLUID

Inspection

INFOID:0000000009461251

FLUID LEVEL

Check power steering fluid level at the scale on reservoir tank cap indicator.

- Check power steering fluid level with engine stopped and the fluid temp between 0 – 30° C (32 – 86° F).
- Power steering fluid level should be between the hatching area of the indicator on the power steering reservoir tank cap.

CAUTION:

- **Do not overfill.**
- **Do not reuse used power steering fluid.**
- **Recommended power steering fluid is Genuine NISSAN E-PSF or equivalent. Refer to MA-11, "FOR USA AND CANADA : Fluids and Lubricants".**

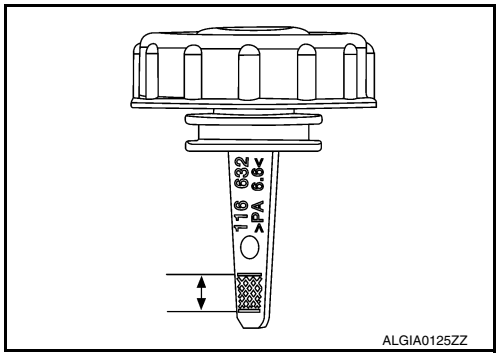

FLUID LEAKAGE

Check the power steering hydraulic system for leaks, cracks, damage, loose connections, chafing or deterioration. Repair or replace as necessary.

1. Start engine and allow engine to idle.
2. Turn steering wheel right-to-left several times.
3. Hold steering wheel at each “lock” position for five seconds to check fluid leakage.
   CAUTION:
   Do not hold steering wheel in a locked position for more than 10 seconds. Damage to power steering oil pump may occur.

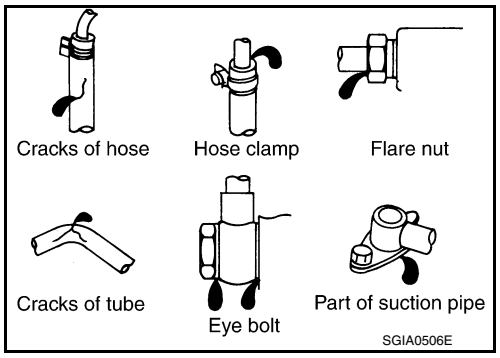

4. If power steering fluid leakage at connections is noticed, loosen flare nut and retighten.
   CAUTION:
   Do not over tighten flare nut as damage to O-ring and connection can occur.
5. If power steering fluid leakage from the power steering oil pump is noticed, repair connection or replace power steering oil pump. Refer to ST-15, "Inspection".
6. Check steering gear boots for accumulation of power steering fluid. Power steering fluid indicates a leak from the power steering gear, replace as necessary. Refer to ST-36, "Removal and Installation".

STEERING WHEEL

Inspection

INFOID:0000000009461252

CONDITION OF INSTALLATION

- Check installation condition of power steering gear assembly, front suspension, front drive shaft and steering column.
- Check if movement exists when steering wheel is moved up and down, to the left and right and to the axial direction.

Steering wheel axial end play **: Refer to ST-46, "Steering Wheel".**

- Verify that the power steering gear nuts are tightened to specification. Refer to ST-36, "Exploded View".

STEERING WHEEL PLAY

1. Turn tires straight ahead, start engine, then turn steering wheel to the left and right lightly. Measure steering wheel movement on the outer circumference of the steering wheel when it is turned to the point where tires start moving.

Steering wheel play **: Refer to ST-46, "Steering Wheel".**

NEUTRAL POSITION ON STEERING WHEEL

- Check neutral position on steering wheel after confirming that front wheel alignment is correct. Refer to FSU-25, "Wheel Alignment (Unladen*1)".

1. Turn tires straight ahead, check if steering wheel is in the neutral position.
2. If it is not in the neutral position, remove steering wheel and reinstall it correctly.
3. If the neutral position cannot be attained by repositioning the steering wheel two teeth or less on steering stem, loosen tie-rod lock nuts of power steering gear outer sockets, then adjust tie-rods by the same amount in the opposite direction.

STEERING WHEEL TURNING FORCE

1. Park vehicle on a level, dry surface and set parking brake.
2. Start engine.
3. Bring power steering fluid up to operating temperature.
4. Verify that the tires are inflated to the specified pressure. Refer to WT-60, "Tire".
5. Check steering wheel turning force using Tool when steering wheel has been turned 360° from the neutral position.

Tool number **: — (J-44372)**

Steering wheel turning force **: Refer to ST-46, "Steering Wheel".**

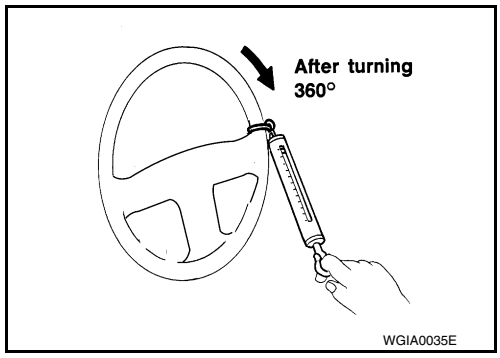

6. If steering wheel turning force is out of specification, inspect steering column. Refer to ST-18, "Inspection".
7. If steering column meets specification, inspect steering gear. Refer to ST-20, "Inspection".

CHECKING FRONT WHEEL TURNING ANGLE

- Check front wheel turning angle after toe-in inspection. Place front wheels on turning radius gauges and rear wheels on stands. Check the maximum inner and outer wheel turning angles for LH and RH road wheels.

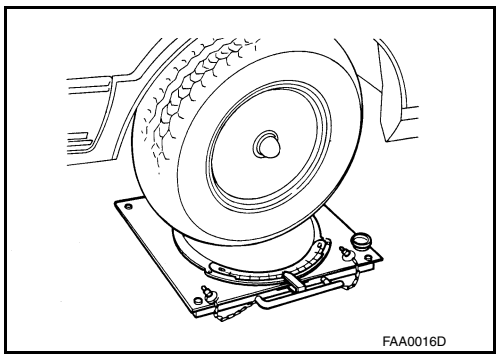

- Measure the turning angles with the engine at idle, then turn the steering wheel from full left stop to full right stop and measure the turning angle. Refer to ST-46, "Steering Angle".

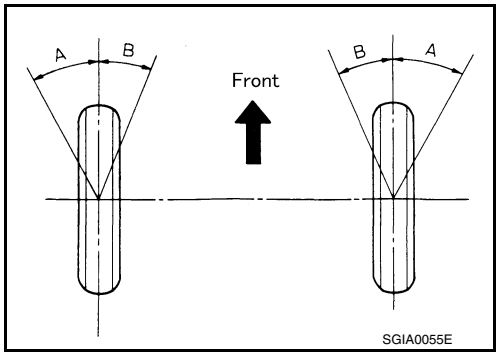

- Measure the rack stroke specification with vehicle in neutral position. Refer to ST-20, "Inspection".

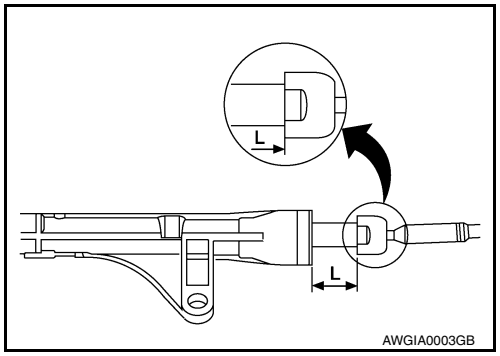

STEERING COLUMN

Inspection

INFOID:0000000009461253

HOLE COVER SEAL, HOLE COVER AND LOWER SHAFT ASSEMBLY

Check each part of hole cover seal, hole cover and steering column and lower shaft assembly for damage or other malfunctions. Replace if necessary.

STEERING COLUMN ASSEMBLY

- Check each part of steering column assembly for damage or other malfunctions. Replace entire steering column assembly if any parts are damaged.
- Measure the length (L) as shown if vehicle has been involved in a minor collision. Replace steering column assembly if outside the specifications.

Steering column length (L) : **Refer to** **ST-46, "Steering Column"**.

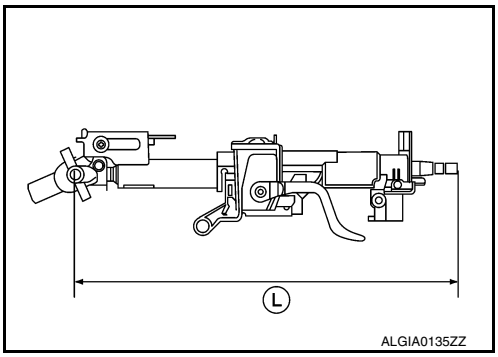

- Measure steering column rotating torque using Tool. Replace steering column assembly if outside the standard.

Tool number : **ST3127S000 (J-25765-A)**

Rotating torque : **Refer to** **ST-46, "Steering Column"**.

- Check tilt and telescopic mechanism operating range (L^1), (L^2) as shown.

Tilt operating range (L^1) : **Refer to** **ST-46, "Steering Column"**.

Telescopic operating range (L^2) : **Refer to** **ST-46, "Steering Column"**.

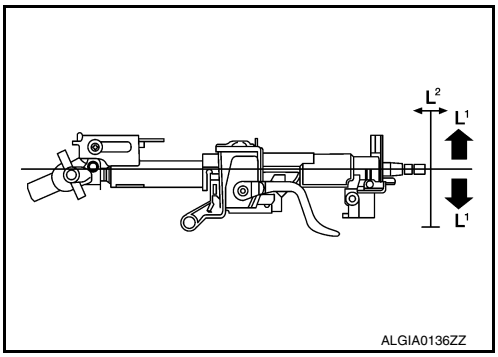

POWER STEERING OIL PUMP

Inspection

INFOID:0000000009461254

RELIEF OIL PRESSURE

CAUTION:
Make sure that belt tension is normal before starting the following procedure.

1. Connect the Tool between oil pump discharge connector and high-pressure hose. Bleed air from the hydraulic circuit while opening valve fully. Refer to ST-30, "Air Bleeding Hydraulic System".

   Tool numbers : KV48103500 (J-26357)
   : KV48102500 (J-33914)

2. Start engine. Run engine until power steering fluid temperature reaches 50° - 80°C (122° - 176°F).
   CAUTION:
   - **Leave the valve of the hydraulic pressure gauge fully open while starting and running engine. If engine is started with the valve closed, the hydraulic pressure in oil pump goes up to the relief pressure along with unusual increase of fluid temperature.**
   - **Be sure to keep hose clear of belts and other parts when engine is started.**
3. Fully close the Tool valve with engine at idle and measure the relief oil pressure.
   CAUTION:
   Do not keep valve closed for 10 seconds or longer.

   Relief oil pressure : Refer to ST-48, "Power Steering Oil Pump"

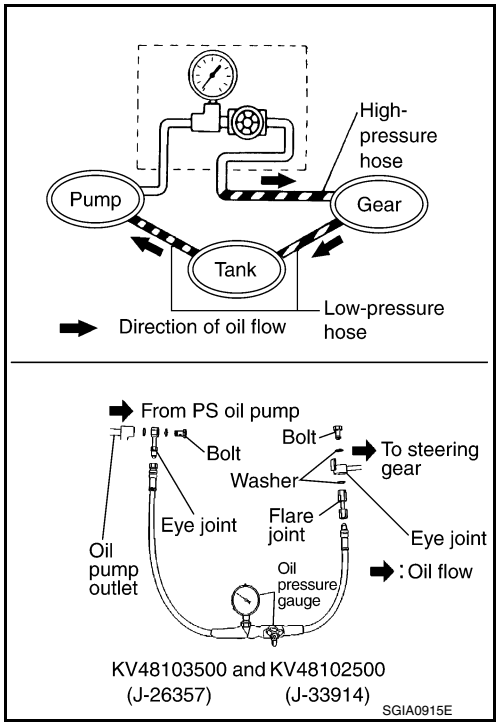

4. Open the valve slowly after measuring. Replace oil pump if the relief oil pressure is outside the standard.
5. After inspection, disconnect the Tool from hydraulic circuit, then add fluid and bleed air. Refer to ST-30, "Air Bleeding Hydraulic System".

STEERING GEAR AND LINKAGE

Inspection

INFOID:0000000009461255

BOOT

Check boot for cracks. Replace if any damage is found.

OUTER SOCKET AND INNER SOCKET

- Ball joint swinging torque
- Hook a spring balance to the ball stud and inner socket measuring point (*) and pull the spring balance. Make sure that the spring balance reads the specified value when ball stud and inner socket start to move. Replace outer socket and inner socket if they are outside the specification.

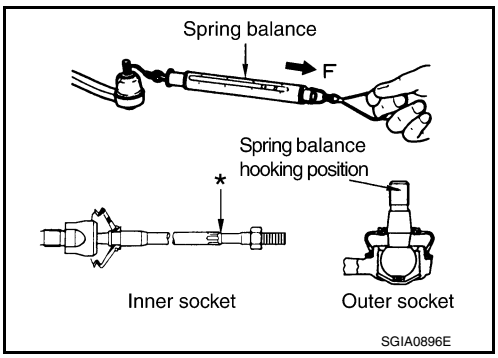

Tool number : — (J-44372)

Swinging torque : Refer to ST-47, "Power Steering Gear".

- Ball joint rotating torque
- Make sure that the reading is within the following specified range using Tool. Replace outer socket if the reading is outside the specification.

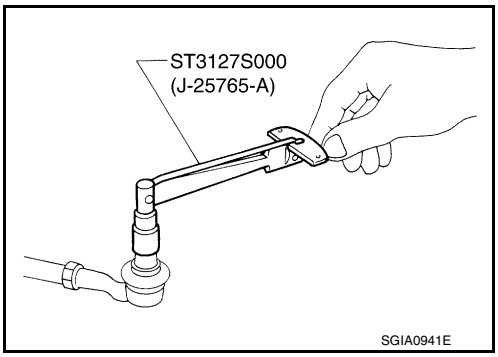

Tool number : ST3127S000 (J-25765-A)

Rotating torque : Refer to ST-47, "Power Steering Gear".

- Ball joint axial end play
- Apply an axial load of 490 N (50 kg, 111 lb.) to ball stud. Measuring the amount of stud movement using a dial gauge, make sure that the value is within specification. Replace outer socket and inner socket if the measured value is outside specification.

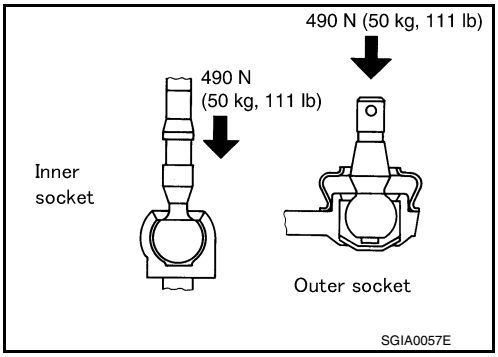

Axial end play : Refer to ST-47, "Power Steering Gear".

DTC/CIRCUIT DIAGNOSIS

POWER SUPPLY AND GROUND CIRCUIT

A/C AUTO AMP.

A/C AUTO AMP. : Diagnosis Procedure

INFOID:0000000009952472

Regarding Wiring Diagram information, refer to HAC-34, "Wiring Diagram".

1. CHECK FUSE

Check fuses [No. 14, 25 and 30, located in the fuse block (J/B)].
NOTE:
Refer to PG-70, "Terminal Arrangement".

Is the inspection result normal?

YES >> GO TO 2.
NO >> Replace the blown fuse after repairing the affected circuit.

2. CHECK A/C AUTO AMP. POWER SUPPLY

1. Turn ignition switch OFF.
2. Disconnect A/C auto amp. connector.
3. Check voltage between A/C auto amp. harness connector and ground.

+		–	Voltage		
A/C auto amp.			Ignition switch position		
Connector	Terminal		OFF	ACC	ON
M152	3	Ground	Battery voltage	Battery voltage	Battery voltage
	13		Approx. 0 V	Battery voltage	Battery voltage
	23		Approx. 0 V	Approx. 0 V	Battery voltage
	40		Approx. 0 V	Approx. 0 V	Battery voltage

Is the inspection result normal?

YES >> GO TO 3.
NO >> Repair harness or connector between A/C auto amp. and fuse block (J/B).

3. CHECK A/C AUTO AMP. GROUND CIRCUIT

1. Turn ignition switch OFF.
2. Check continuity between A/C auto amp. harness connector and ground.

A/C auto amp.		—	Continuity
Connector	Terminal		
M152	2	Ground	Yes
	22		

Is the inspection result normal?

YES >> Inspection End.
NO >> Repair harness or connector.

HEATED STEERING WHEEL SYSTEM

Component Function Check

INFOID:0000000009461257

1. CHECK HEATED STEERING WHEEL SYSTEM

Check operation of heated steering wheel system. Refer to ST-8, "HEATED STEERING WHEEL SYSTEM : System Description".

Is the inspection result normal?

YES >> Inspection End.
NO >> Go to ST-22, "Diagnosis Procedure".

Diagnosis Procedure

INFOID:0000000009461258

Regarding Wiring Diagram information, refer to ST-10, "Wiring Diagram".

1. CHECK POWER CIRCUIT

1. Turn ignition switch OFF.
2. Remove the steering wheel. Refer to ST-31, "Removal and Installation".
3. Turn ignition switch ON.
4. Turn heated steering wheel switch ON.
5. Check voltage between heated steering wheel harness connector M114.

Connector	Terminal		Voltage (Approx.)
	+	-	
M114	2	1	Battery voltage

Is the inspection result normal?

YES >> GO TO 2.
NO >> GO TO 3.

2. CHECK HEATED STEERING WHEEL

Check heated steering wheel. Refer to ST-25, "Component Inspection (Heated Steering Wheel)".

Is the inspection result normal?

YES >> Inspection End.
NO >> Replace heated steering wheel. Refer to ST-31, "Removal and Installation".

3. CHECK GROUND CIRCUIT

Check continuity between heated steering wheel harness connector terminal M114 and ground.

Connector	Terminal	Ground	Continuity
M114	1		Yes

Is the inspection result normal?

YES >> GO TO 4.
NO >> Repair or replace the harness or connector.

4. CHECK HARNESS BETWEEN HEATED STEERING WHEEL RELAY AND HEATED STEERING WHEEL

1. Turn ignition switch OFF.
2. Disconnect heated steering wheel relay connector.
3. Check continuity between heated steering wheel relay harness connector terminal M90 and steering wheel harness connector terminal M114.

Heated steering wheel relay		Heated steering wheel		Continuity
Connector	Terminal	Connector	Terminal	
M90	5	M114	2	Yes

4. Check continuity between heated steering wheel relay harness connector terminal M90 and ground.

Heated steering wheel relay		Ground	Continuity
Connector	Terminal		
M90	5		No

Is the inspection result normal?

YES >> GO TO 5.
NO >> Repair or replace the harness or connector.

5. CHECK HEATED STEERING RELAY

Check heated steering relay. Refer to ST-24, "Component Inspection (Heated Steering Relay)".

Is the inspection result normal?

YES >> GO TO 6.
NO >> Replace heated steering relay.

6. CHECK POWER TO HEATED STEERING RELAY

Check the following.
- Battery
- Harness for open or short between battery and 10A fuse (No. 2)
- 10A fuse (No. 2)
- Harness for open or short between 10A fuse (No. 2) and heated steering relay

Is the inspection result normal?

YES >> GO TO 7.
NO >> Repair or replace damaged parts.

7. CHECK GROUND CIRCUIT

1. Disconnect heated steering wheel switch.
2. Check continuity between heated steering wheel switch harness connector terminal M51 and ground.

Connector	Terminal	Ground	Continuity
M51	2		Yes

Is the inspection result normal?

YES >> GO TO 8.
NO >> Repair or replace the harness or connector.

8. CHECK HARNESS BETWEEN HEATED STEERING RELAY AND A/C AUTO AMP.

1. Disconnect A/C auto amp.
2. Check continuity between heated steering wheel relay harness connector terminal M90 and A/C auto amp. harness connector terminal M152.

Heated steering relay		A/C Auto amp.		Continuity
Connector	Terminal	Connector	Terminal	
M90	2	M152	20	Yes

3. Check continuity between heated steering relay harness connector terminal M90 and ground.

Heated steering relay		Ground	Continuity
Connector	Terminal		
M90	2		No

Is the inspection result normal?

YES >> GO TO 9.

NO >> Repair or replace harness or connector.

9. CHECK HARNESS BETWEEN A/C AUTO AMP. AND HEATED STEERING WHEEL SWITCH

1. Check continuity between A/C auto amp. harness connector terminal M152 and heated steering wheel switch harness connector M51.

A/C Auto amp.		Heated steering wheel switch		Continuity
Connector	Terminal	Connector	Terminal	
M152	8	M51	1	Yes

2. Check continuity between A/C auto amp. harness connector M152 and ground.

A/C Auto amp.		Ground	Continuity
Connector	Terminal		
M152	8		No

Is the inspection result normal?

YES >> GO TO 10.
NO >> Repair or replace the harness or connector.

10. CHECK HEATED STEERING WHEEL SWITCH

Check heated steering wheel switch. Refer to ST-24, "Component Inspection (Heated Steering Wheel Switch)".

Is the inspection result normal?

YES >> Replace A/C Auto amp. Refer to HAC-102, "Removal and Installation".
NO >> Replace heated steering wheel switch.

Component Inspection (Heated Steering Wheel Switch)

INFOID:0000000009461259

1. CHECK HEATED STEERING WHEEL SWITCH

1. Turn ignition switch OFF.
2. Remove the heated steering wheel switch connector M51.
3. Check continuity between heated steering wheel switch terminals.

Terminal		Condition	Continuity
1	2	Switch pressed	Yes
		Switch released	No

Is the inspection result normal?

YES >> GO TO 2.
NO >> Replace heated steering wheel switch.

2. CHECK HEATED STEERING WHEEL SWITCH INDICATOR LAMP

Apply 12V direct current between heated steering wheel switch terminals and check that the indicator lamp turns ON.

Terminals		Condition	Indicator lamp status
+	–		
5	6	Apply 12V direct current between terminals	ON

Is the inspection result normal?

YES >> Inspection End.
NO >> Replace heated steering wheel switch.

Component Inspection (Heated Steering Relay)

INFOID:0000000009461260

1. CHECK HEATED STEERING RELAY CONTINUITY

1. Turn ignition switch OFF.
2. Remove heated steering relay. Refer to ST-7, "HEATED STEERING WHEEL SYSTEM : Component Parts Location".
3. Apply 12V direct current between heated steering relay terminals and check continuity.

Terminal	Condition	Continuity
3 – 5	12V direct current applied between terminals 1 and 2.	Yes
	No current applied.	No

Is the inspection result normal?

YES >> Inspection End.
NO >> Replace heated steering wheel relay.

Component Inspection (Heated Steering Wheel)

INFOID:0000000009461261

1. CHECK HEATED STEERING WHEEL CONTINUITY

1. Turn ignition switch OFF.
2. Remove the steering wheel. Refer to ST-31, "Removal and Installation".
3. Check continuity between steering wheel connector terminals.

Terminals	Condition	Continuity
1 – 2	Surface temperature of less than 30°C (86°F)	Yes
	Surface temperature of 30°C (86°F) or more	No

Is the inspection result normal?

YES >> GO TO 2.
NO >> Replace heated steering wheel.

2. CHECK HEATED STEERING WHEEL RESISTANCE

Check resistance between heated steering wheel connector terminals.

Terminals	Condition	Resistance
1 – 2	Surface temperature of 20°C (68°F)	1.7 – 2.17 Ω

Is the inspection result normal?

YES >> Inspection End.
NO >> Replace heated steering wheel. Refer to ST-31, "Removal and Installation".

HEATED STEERING WHEEL SWITCH INDICATOR LAMP

Component Function Check

INFOID:0000000009461262

1.CHECK HEATED STEERING WHEEL SWITCH INDICATOR LAMP

1. Turn ignition switch ON.
2. Turn heated steering wheel switch ON. Observe indicator.
3. Turn heated steering wheel switch OFF. Observe indicator.

Does heated steering wheel switch indicator lamp turn ON and then OFF?

YES >> Inspection End.
NO >> Go to ST-26, "Diagnosis Procedure".

Diagnosis Procedure

INFOID:0000000009461263

1.CHECK POWER CIRCUIT

1. Turn ignition switch OFF.
2. Remove the heated steering wheel switch.
3. Turn ignition switch ON.
4. Check voltage between heated steering wheel switch harness connector M51.

Connector	Terminal		Voltage (Approx.)
	+	-	
M51	1	2	Battery voltage

Is the inspection result normal?

YES >> GO TO 2.
NO >> GO TO 3.

2.CHECK GROUND CIRCUIT

1. Turn ignition switch OFF.
2. Disconnect heated steering wheel switch connector.
3. Check continuity between heated steering wheel switch harness connector terminal M51 and ground.

Connector	Terminal	Ground	Continuity
M51	6		Yes

Is the inspection result normal?

YES >> GO TO 3.
NO >> Repair or replace the harness or connectors.

3.CHECK HARNESS BETWEEN HEATED STEERING RELAY AND HEATED STEERING WHEEL SWITCH

1. Disconnect heated steering relay connector.
2. Check continuity between heated steering relay harness connector terminal M90 and heated steering wheel switch harness connector M51.

Heated steering relay		Heated steering wheel switch		Continuity
Connector	Terminal	Connector	Terminal	
M90	5	M51	5	Yes

3. Check continuity between heated steering relay harness connector M90 and ground.

Connector	Terminal	Ground	Continuity
M90	5		No

Is the inspection result normal?

YES >> GO TO 4.
NO >> Repair or replace harness or connectors.

4. CHECK HEATED STEERING RELAY

Check heated steering relay. Refer to ST-24, "Component Inspection (Heated Steering Relay)".

Is the inspection result normal?

YES >> GO TO 5.
NO >> Replace heated steering relay.

5. CHECK BATTERY POWER

Check the following:
- Battery
- Harness for open or short between battery and 10A fuse (No. 2)
- 10A fuse (No. 2)
- Harness for open or short between 10A fuse (No. 2) and heated steering wheel relay

Is the inspection result normal?

YES >> GO TO 6.
NO >> Repair harness or connector.

6. CHECK HARNESS BETWEEN A/C AUTO AMP. AND HEATED STEERING WHEEL SWITCH

1. Check continuity between A/C Auto amp. harness connector M152 and heated steering wheel switch harness connector M51.

A/C Auto amp.		Heated steering wheel switch		Continuity
Connector	Terminal	Connector	Terminal	
M152	8	M51	1	Yes

2. Check continuity between A/C Auto amp. harness connector M152 and ground.

A/C auto amp.		Ground	Continuity
Connector	Terminal		
M152	8		No

Is the inspection result normal?

YES >> GO TO 7.
NO >> Repair or replace the harness or connectors.

7. CHECK HEATED STEERING WHEEL SWITCH

Check heated steering wheel switch. Refer to ST-24, "Component Inspection (Heated Steering Wheel Switch)".

Is the inspection result normal?

YES >> Replace A/C Auto amp. Refer to HAC-102, "Removal and Installation".
NO >> Replace heated steering wheel switch.

SYMPTOM DIAGNOSIS

STEERING COLUMN

Symptom Table

INFOID:0000000009461264

HEATED STEERING WHEEL

Symptom	Inspection item
Heated steering wheel system inoperative	Refer to ST-22, "Diagnosis Procedure".
Heated steering wheel switch indicator lamp inoperative	Refer to ST-26, "Diagnosis Procedure".

NOISE, VIBRATION AND HARSHNESS (NVH) TROUBLESHOOTING

NVH Troubleshooting Chart

INFOID:0000000009461265

Use chart below to help you find the cause of the symptom. If necessary, repair or replace these parts.

		Reference page	ST-15, "Inspection"	—	ST-20, "Inspection"	ST-20, "Inspection"	ST-20, "Inspection"	ST-15, "Inspection"	ST-16, "Inspection"	ST-20, "Inspection"	—	—	ST-20, "Inspection"	ST-18, "Inspection"	ST-18, "Inspection"	ST-20, "Inspection"	Refer to ST-29, "NVH Troubleshooting Chart"	Refer to FSU-6, "NVH Troubleshooting Chart" Refer to ST-29, "NVH Troubleshooting Chart"	Refer to ST-29, "NVH Troubleshooting Chart"	Refer to ST-29, "NVH Troubleshooting Chart"	Refer to ST-29, "NVH Troubleshooting Chart"	Refer to ST-29, "NVH Troubleshooting Chart"
Possible cause and SUSPECTED PARTS			Fluid level	Air in hydraulic system	Outer socket ball joint swinging force	Outer socket ball joint rotating torque	Outer socket ball joint end play	Steering fluid leakage	Steering wheel play	Steering gear rack sliding force	Improper steering wheel	Improper installation or looseness of tilt lock lever	Mounting rubber deterioration	Steering column deformation or damage	Improper installation or looseness of steering column	Steering linkage looseness	WHEEL HUB	AXLE and SUSPENSION	TIRES	ROAD WHEEL	DRIVE SHAFT	BRAKES
Symptom	Steering	Noise	×	×	×	×	×	×	×	×							×	×	×	×	×	×
		Shake									×		×					×	×	×	×	×
		Vibration									×		×	×	×			×	×		×	
		Shimmy									×		×			×		×	×	×		×
		Shudder											×			×		×	×	×		×

×: Applicable

PERIODIC MAINTENANCE

POWER STEERING FLUID

Draining and Refilling

INFOID:0000000009461266

DRAINING

1. Disconnect the high and low pressure piping from power steering gear.
2. Drain power steering fluid into a suitable container.

REFILLING

1. Fill power steering reservoir while checking power steering fluid level.
2. Bleed air from power steering hydraulic system. Refer to ST-30, "Air Bleeding Hydraulic System".
3. Check for power steering fluid leaks.

Air Bleeding Hydraulic System

INFOID:0000000009461267

AIR BLEEDING HYDRAULIC SYSTEM

If air bleeding is not complete, excessive noise in the power steering oil pump will be present.

1. Make sure engine is off.
2. Turn the steering wheel from the full right stop position and then to full left stop position several times. Repeat until bubbles are no longer being generated in the reservoir.
3. When the power steering fluid level lowers, refill the reservoir.
   CAUTION:
   Do not allow the power steering fluid level to drop below the hatching area.

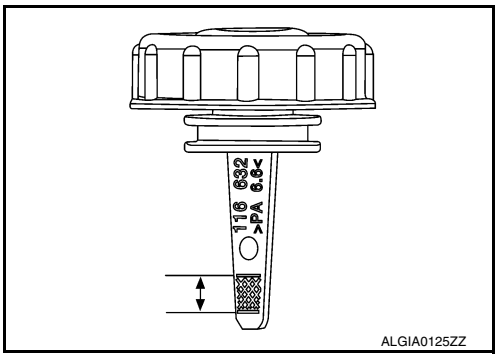

4. Repeat steps one and two until the power steering fluid level stabilizes.
5. Start the engine and run at idle.
6. Turn the steering wheel from the full right stop position and then to full left stop position several times. Repeat until bubbles or fluid discoloration are no longer being generated in the reservoir.
7. When the power steering fluid level lowers, refill the reservoir.
8. Stop the engine.
9. Verify proper power steering fluid level. Power steering fluid level should be between the hatching area of the indicator on the power steering reservoir tank cap.

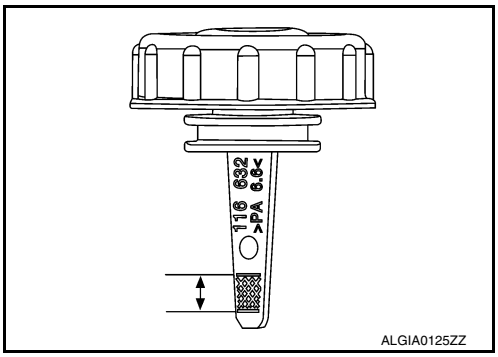

REMOVAL AND INSTALLATION

STEERING WHEEL

Exploded View

INFOID:0000000009461268

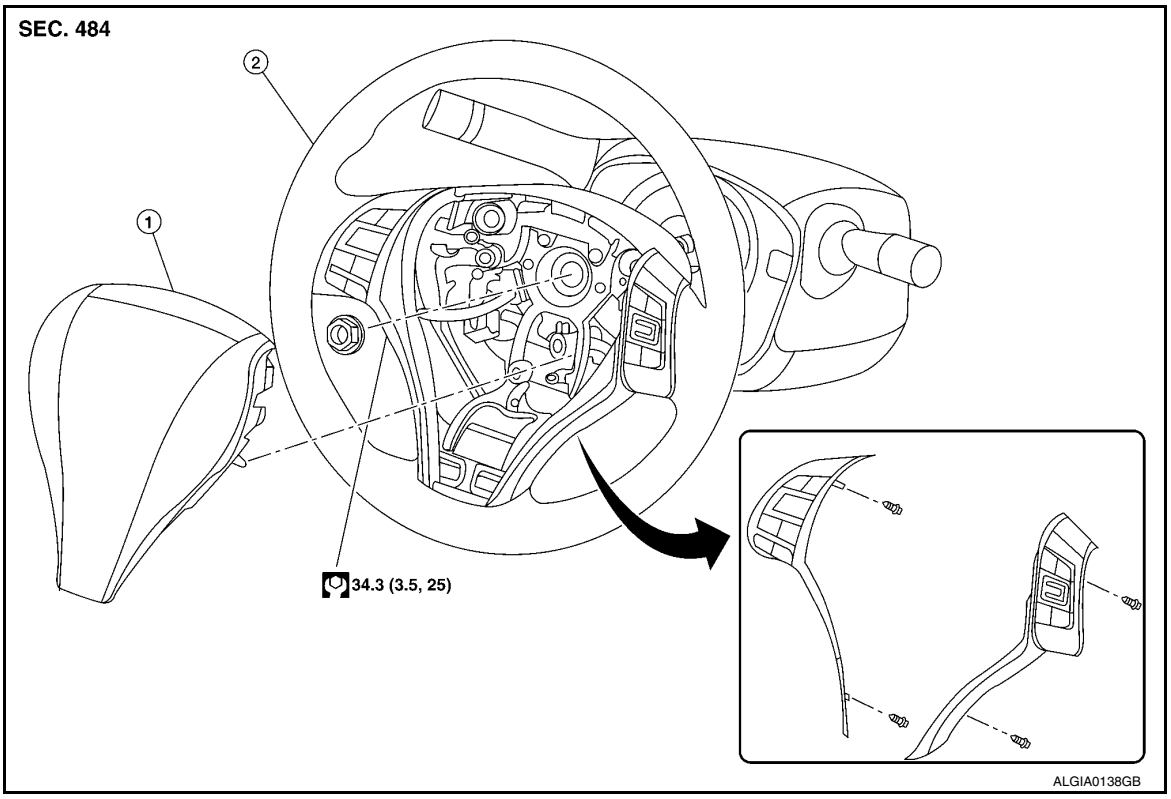

1. Driver air bag module
2. Steering wheel

Removal and Installation

INFOID:0000000009461269

REMOVAL

1. Set vehicle to the straight-ahead position.
2. Remove driver air bag module. Refer to SR-11, "Removal and Installation".
3. Disconnect the harness connectors from clipping locations.
4. Remove steering wheel lock nut.
5. Remove steering wheel using suitable tool (A).
   NOTE:
   When reconnecting spiral cable, fix cable with a tape so that fixing case and rotating part keep aligned. This will omit neutral position alignment procedure during spiral cable installation.

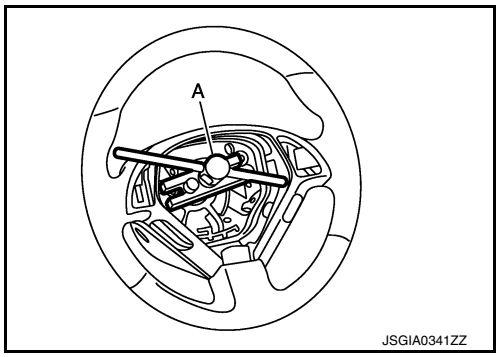

INSTALLATION

1. Ensure spiral cable locating pin (white rubber pin) is in the 12 o'clock position.
2. Install the steering wheel to the steering column assembly.
   NOTE:

- Ensure tick mark on steering wheel is aligned with tick mark on the steering column pin.
- Ensure spiral cable location pin (white rubber pin) is aligned to the steering wheel locating pin hole.
- Route driver airbag module connector(s) and steering wheel heater connector harnesses through the steering wheel.

3. Connect steering wheel switch connector to spiral cable.
4. Connect steering wheel heater connector (from spiral cable) to connector on steering wheel (if equipped).
5. Insert steering wheel heater harness into hook part of the steering wheel back cover.

STEERING COLUMN

Exploded View

INFOID:0000000009461270

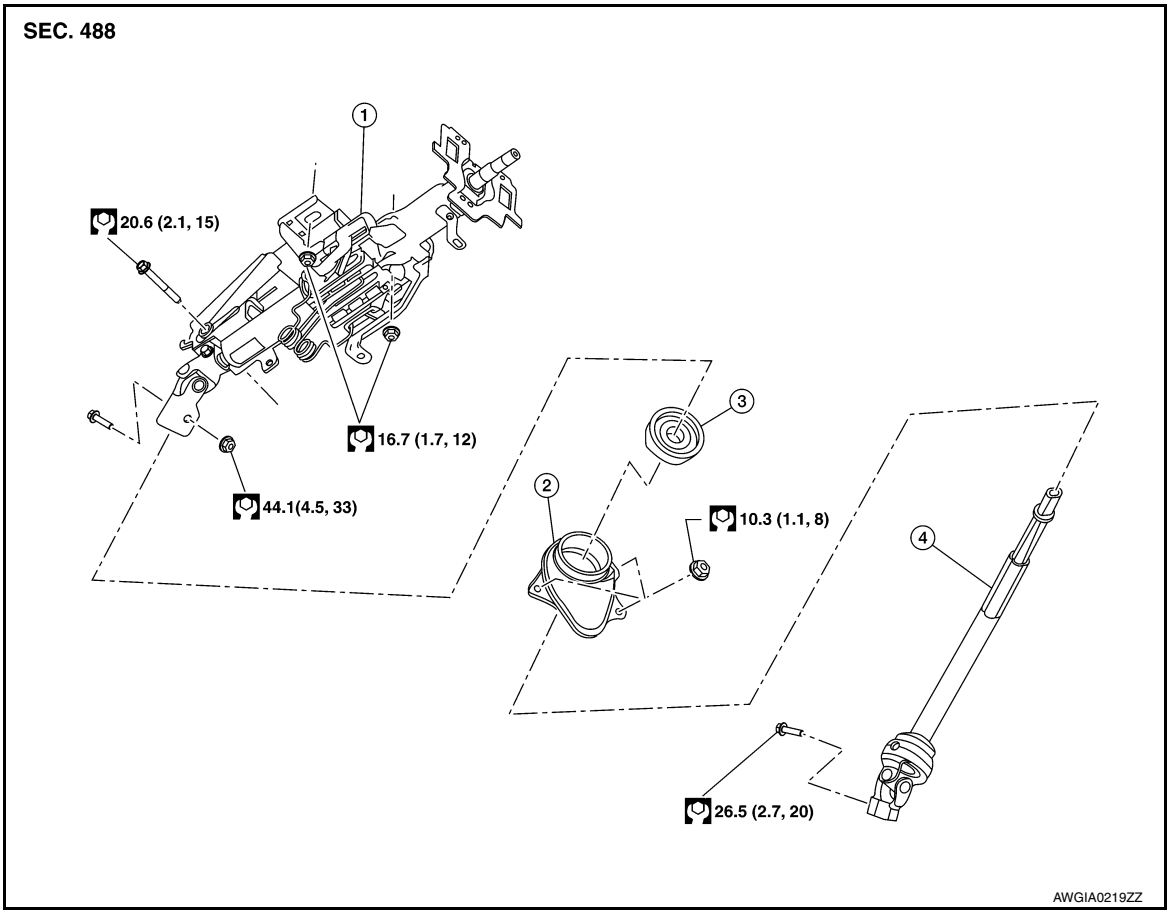

1. Steering column assembly
2. Hole cover
3. Hole cover seal
4. Lower shaft assembly

Removal and Installation

INFOID:0000000009461271

REMOVAL

Hole Cover Seal, Hole Cover and Lower Shaft Assembly

1. Set wheels to the straight-ahead position.
2. Remove the instrument lower panel LH. Refer to IP-14, "Exploded View".
3. Remove lower side bolt (A) of lower shaft assembly (1).
   - Steering gear (2)

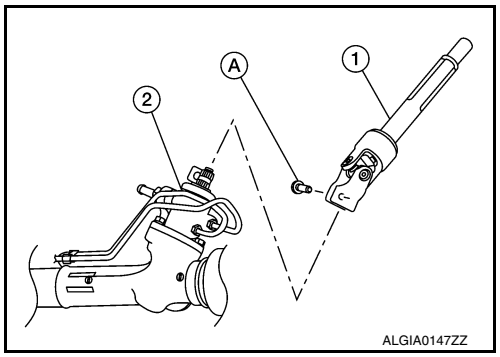

4. Remove bolt (A) and nut (B) of column upper joint (2), then remove lower shaft assembly (1).
5. Loosen herbie clip, then remove hole cover seal from hole cover.
6. Remove nuts of hole cover, then remove clamp and hole cover from dash panel.

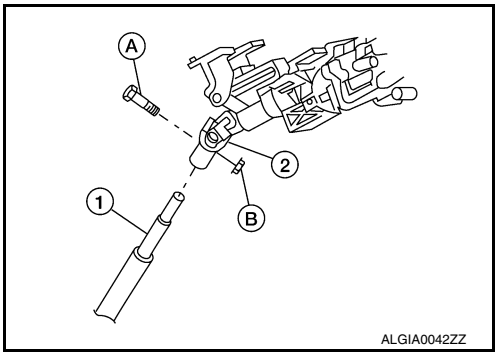

Steering Column Assembly

1. Remove the spiral cable from the steering column assembly. Refer to SR-15, "Removal and Installation".
2. Remove the steering angle sensor from the steering column assembly. Refer to BRC-132, "Removal and Installation".
3. Remove steering column cover upper and lower. Refer to IP-14, "Exploded View".
4. Remove instrument lower panel LH. Refer to IP-14, "Exploded View".
5. Remove the instrument panel brace bolts and the instrument panel brace.

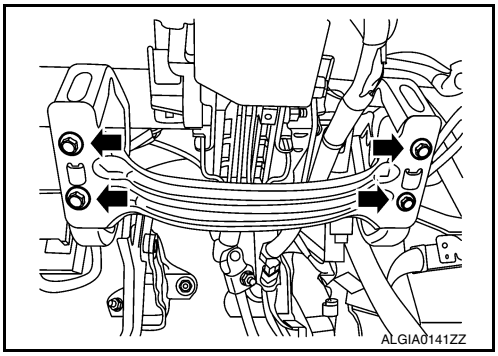

6. Disconnect each harness connector from the steering column assembly, then disconnect harness from steering column assembly.
7. Remove bolt (A) and nut (B) of column upper joint (2).
   - Lower shaft assembly (1)

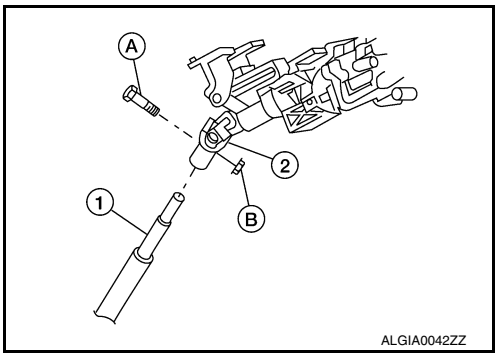

8. Remove steering column assembly and nuts, then remove steering column assembly.

INSTALLATION

Steering Column Assembly

CAUTION:

Any time the ignition switch has been disconnected, removed or installed, the keys must be re-registered in the BCM. Refer to CONSULT operations IVIS/NVIS.

Installation is in the reverse order of removal.

Hole Cover Seal, Hole Cover and Lower Shaft Assembly

Installation is in the reverse order of removal.

- When installing lower shaft assembly to steering gear assembly, follow the procedure listed below.
- Set rack of steering gear in the neutral position.

NOTE:
To get the neutral position of rack, turn gear sub-assembly. Measure the distance of inner socket, and then measure the intermediate position of the distance.

- Align rear cover cap projection (A) with the marking position (B) of gear housing assembly.
- Install slit part of lower shaft assembly (C) aligning with the projection (A) of rear cover cap (1). Make sure that the slit part of lower shaft assembly (C) is aligned with both the projection (A) of rear cover cap (1) and the marking position (B) of gear housing assembly.

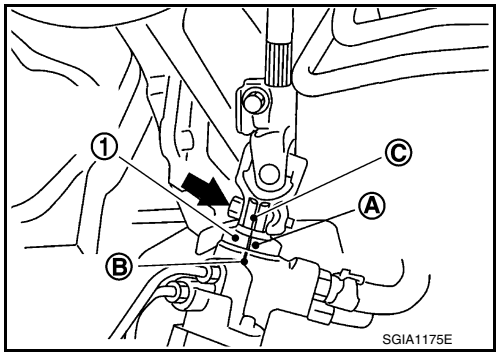

STEERING GEAR AND LINKAGE

Exploded View

INFOID:0000000009461272

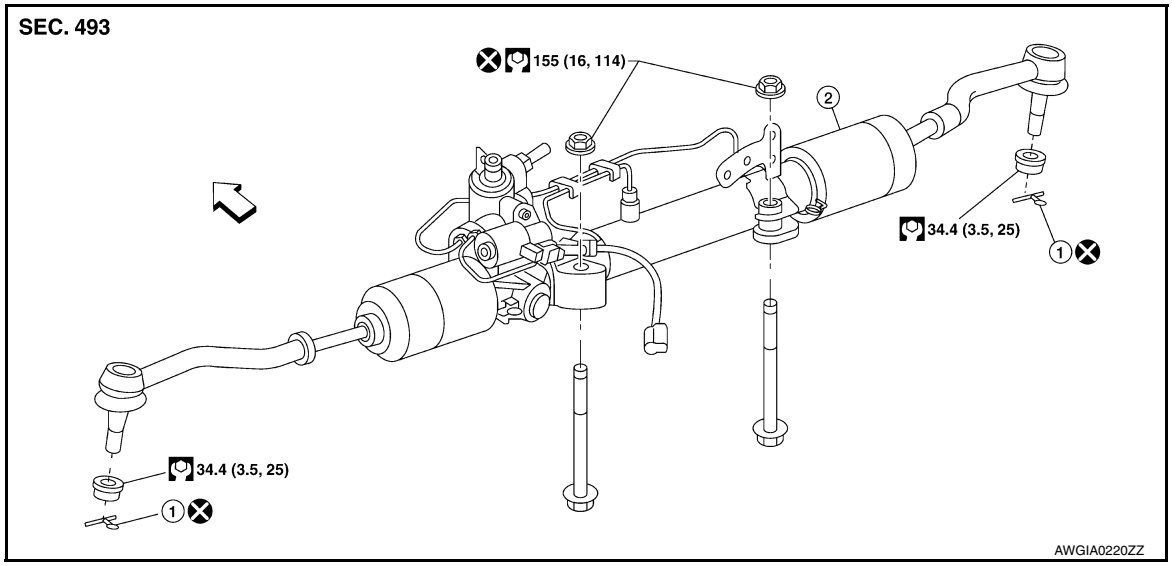

1. Cotter pin
2. Steering gear assembly
⇦ Front

Removal and Installation

INFOID:0000000009461273

NOTE:
When removing components such as hoses, tubes/lines, etc., cap or plug openings to prevent fluid from spilling.

REMOVAL

1. Remove the front wheels and tires using power tool. Refer to WT-55, "Adjustment".
2. Disconnect stabilizer connecting rods at steering knuckles and reposition. Refer to FSU-19, "Exploded View".
3. Remove cotter pin (1) from outer socket and then loosen the nut.
4. Remove steering outer socket (2) from steering knuckle (3) so as not to damage ball joint boot (4) using the Tool.
   CAUTION:
   Temporarily tighten the nut to prevent damage to threads and to prevent the Tool from suddenly coming off.

   Tool number : HT72520000 (J-25730-A)

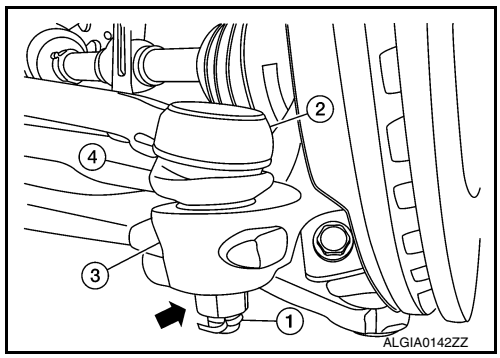

5. Remove lower side bolt of lower joint.

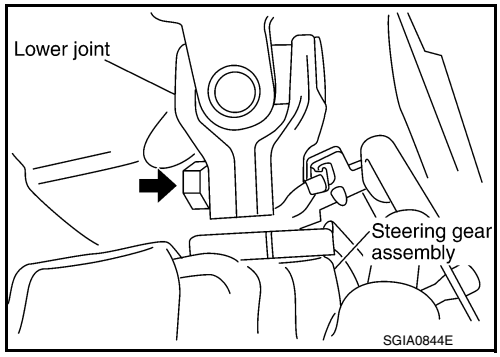

6. Remove front exhaust tube. Refer to EX-5, "Exploded View" (QR25DE), EX-10, "Exploded View" (VQ35DE).
7. Disconnect the high and low pressure piping from the steering gear assembly.
8. Remove steering hydraulic piping bracket bolts from the steering gear assembly.

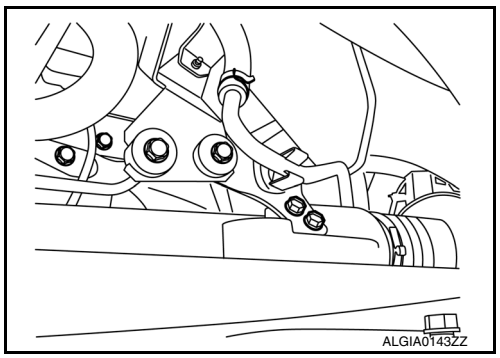

9. Remove bolts and nuts of steering gear assembly, then remove steering gear assembly from vehicle.

INSTALLATION

Installation is in the reverse order of removal.

CAUTION:

Do not reuse O-rings or copper sealing washers.

- When installing lower joint to steering gear assembly, follow the procedure listed below.
- Set rack of steering gear in the neutral position.

  NOTE:

  To get the neutral position of rack, turn gear-sub assembly and measure the distance of inner socket, and then measure the intermediate position of the distance.
- Align rear cover cap projection (A) with the marking position (B) of gear housing assembly.
- Install slit part of lower joint (C) aligning with the projection (A) of rear cover cap (1). Make sure that the slit part of lower joint (C) is aligned with both the projection (A) of rear cover cap (1) and the marking position (B) of gear housing assembly.

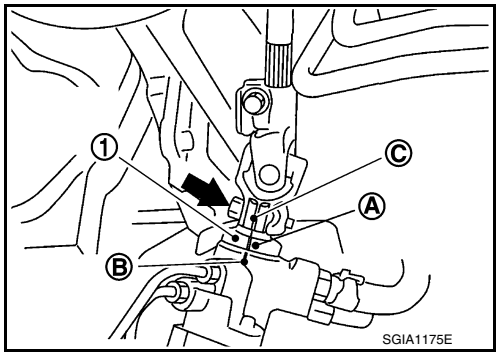

- After installation, bleed air from the steering hydraulic system. Refer to ST-15, "Inspection".
- Perform final tightening of nuts and bolts on each part under unladen conditions with tires on level ground when removing steering gear assembly.
- Check wheel alignment. Refer to FSU-7, "Inspection and Adjustment".
- Perform neutral position steering angle adjustment. Refer to BRC-58, "Work Procedure".

POWER STEERING OIL PUMP

Exploded View

INFOID:0000000009461274

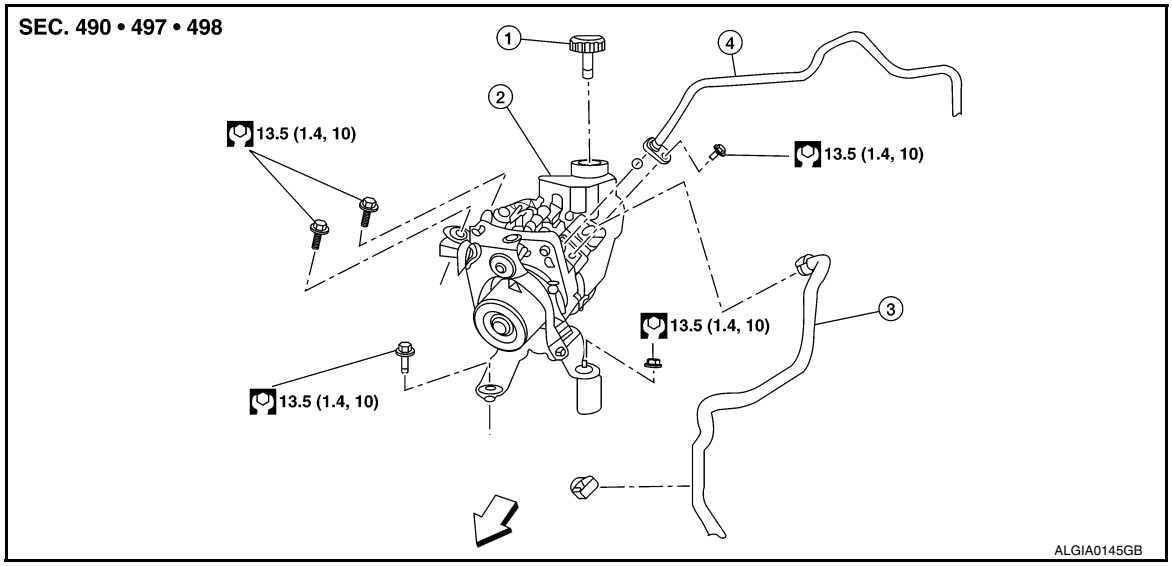

1. Power steering reservoir cap
2. Power steering oil pump assembly
3. Low pressure piping
4. High pressure piping

⇦ Front

Removal and Installation

INFOID:0000000009461275

NOTE:
When removing components such as hoses, tubes/lines, etc., cap or plug openings to prevent fluid from spilling.

REMOVAL

1. Remove the power steering oil pump cover (1).

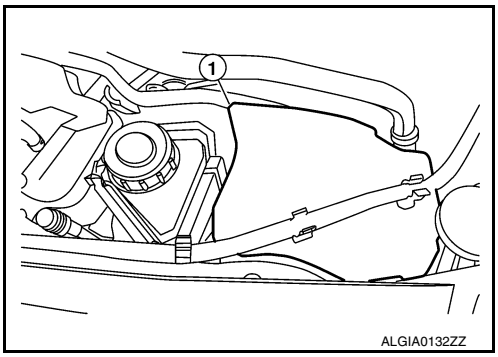

2. Drain power steering fluid. Refer to ST-30, "Draining and Refilling".

3. Remove the bolt from the power steering pressure line bracket.

4. Disconnect the following components from the power steering oil pump:
   - LH power steering pump connector (A).
   - Reservoir hose (B).
   - RH power steering pump connector (C).
   - High pressure piping (D).
5. Remove power steering oil pump bolts, then remove power steering oil pump.

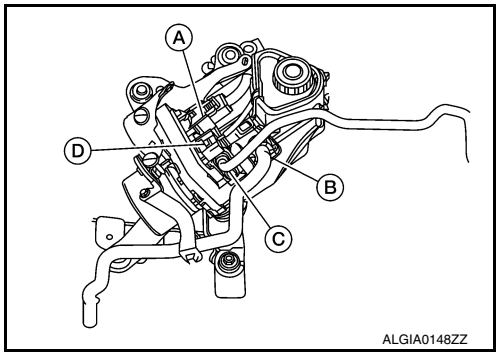

INSTALLATION

Installation is in the reverse order of removal.

1. Install power steering pressure line to power steering oil pump.
   - Install power steering pressure line hold down bolt hand tight.
   - Install power steering pressure line bracket and tighten to specified torque.
   - Tighten power steering pressure line hold down bolt to specified torque.
2. Bleed air from power steering system.
   CAUTION:
   Do not reuse O-rings.

HYDRAULIC LINE

Exploded View

INFOID:0000000009461276

QR25DE

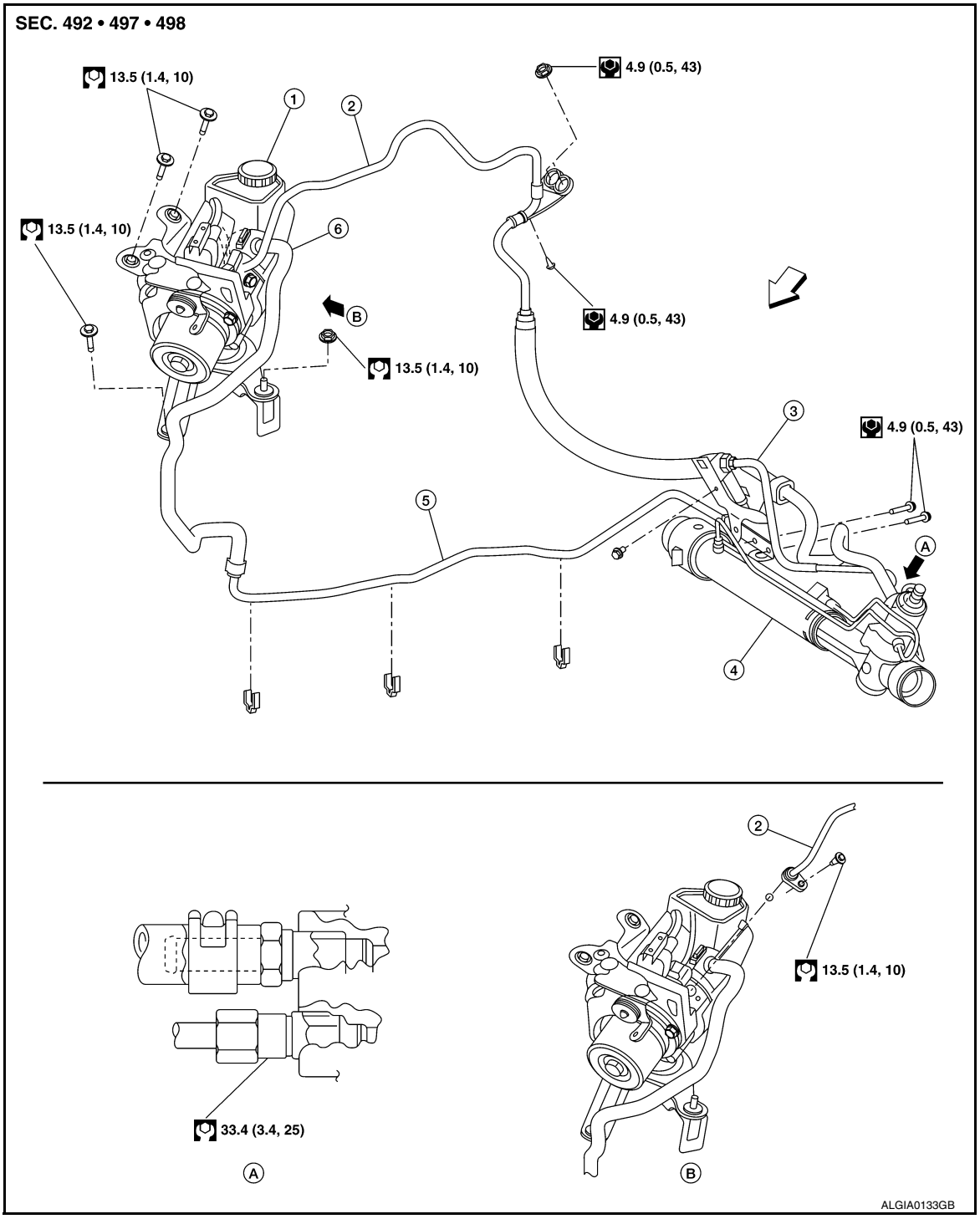

1.	Power steering pump assembly	2.	High pressure piping (upper)	3.	High pressure piping (lower)
4.	Power steering gear assembly	5.	Low pressure piping (lower)	6.	Low pressure piping (upper)
A.	View A	B.	View B	⇦	Front

VQ35DE

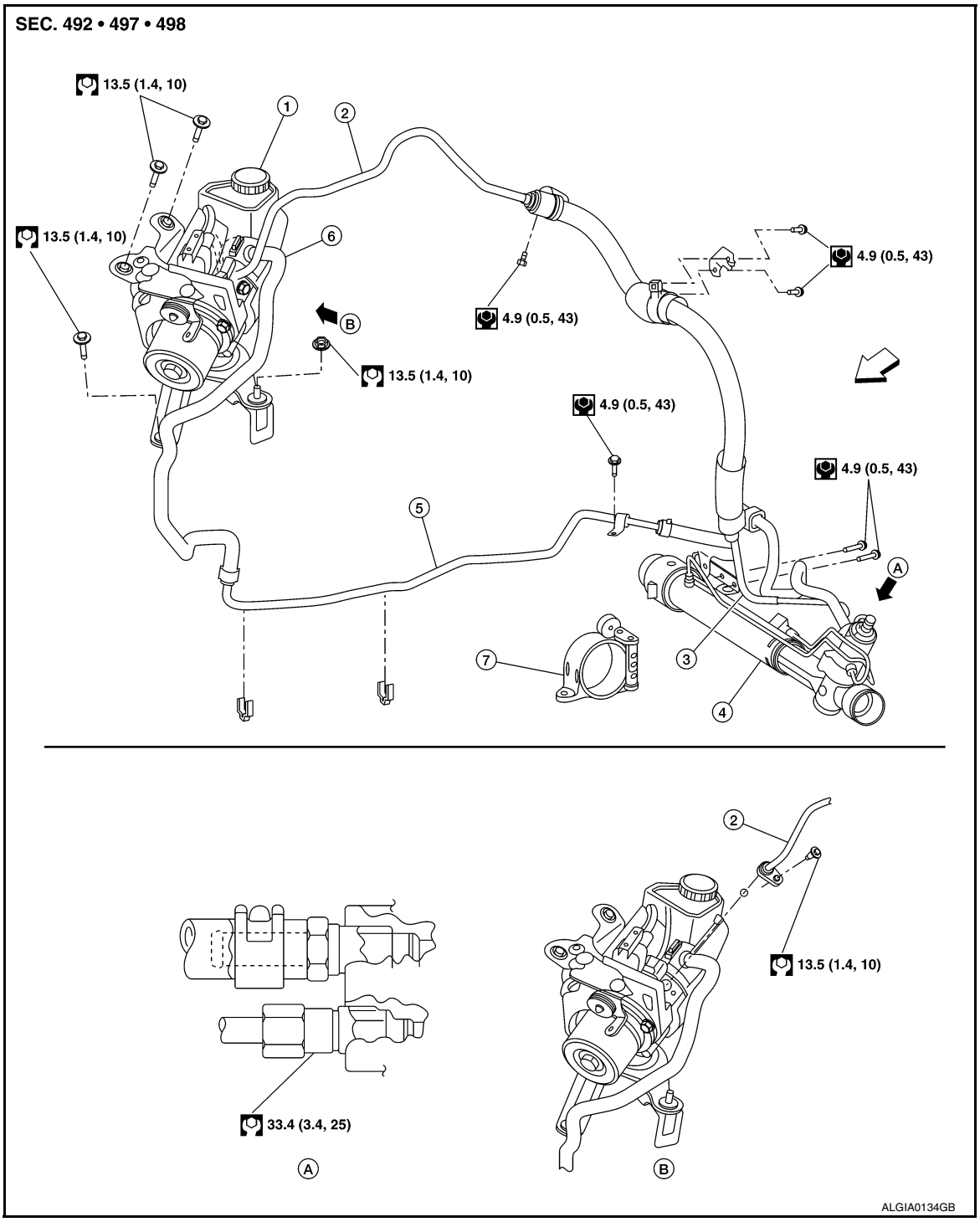

1.	Power steering pump assembly	2.	High pressure piping (upper)	3.	Low pressure piping (lower)
4.	Power steering gear assembly	5.	Low pressure piping (lower)	6.	Low pressure piping (upper)
7.	Engine mount bracket	A.	View A	B.	View B
⇦	Front				

Removal and Installation

INFOID:0000000009461277

NOTE:
When removing components such as hoses, tubes/lines, etc., cap or plug openings to prevent fluid from spilling.

REMOVAL

Refer to the component parts location illustration for hydraulic line removal. Refer to ST-40, "Exploded View".

CAUTION:
Do not reuse O-rings.

INSTALLATION

Installation is in the reverse order of removal.

- Bleed air from power steering system. Refer to ST-30, "Air Bleeding Hydraulic System".
- Check for fluid leaks. Repair as necessary.
  CAUTION:
  Do not reuse O-rings.

UNIT DISASSEMBLY AND ASSEMBLY

STEERING GEAR AND LINKAGE

Exploded View

INFOID:0000000009461278

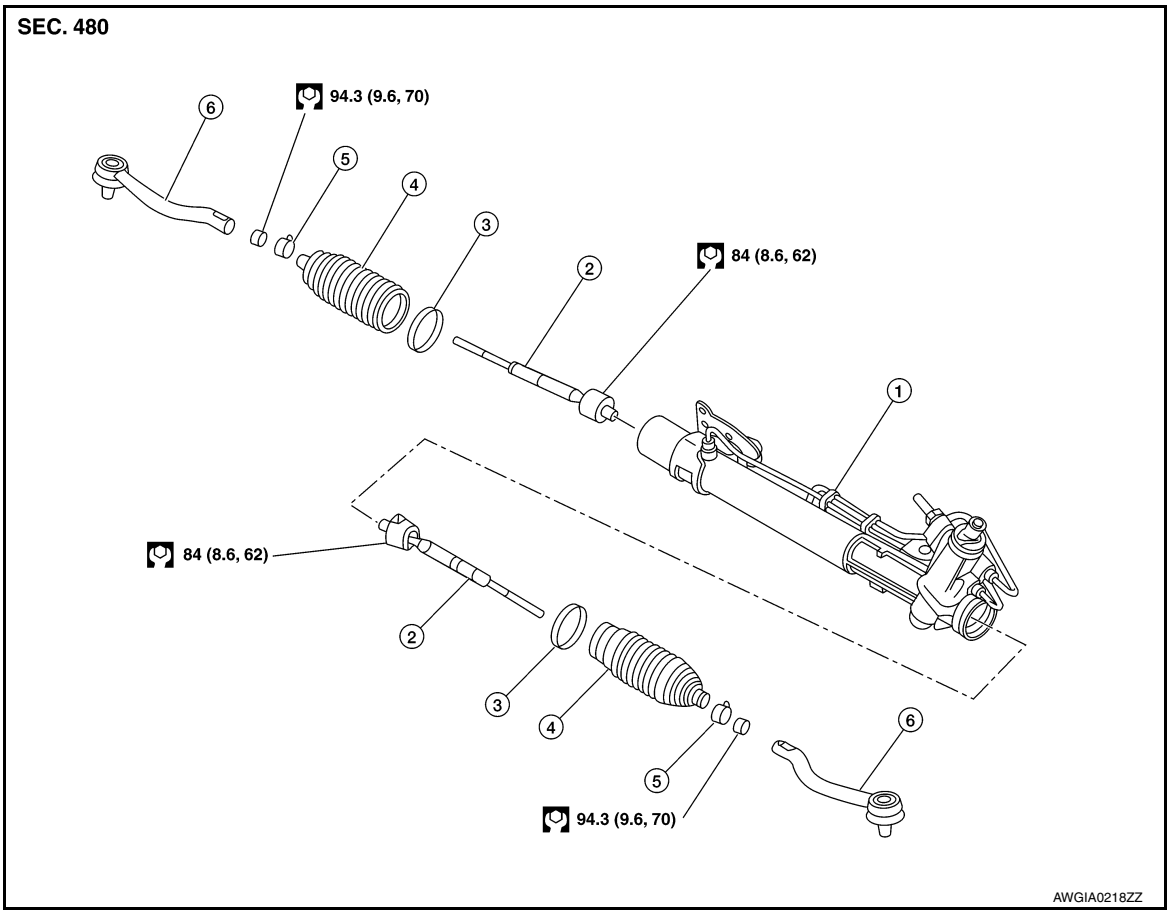

1.	Steering gear assembly	2.	Inner socket	3.	Inner boot clamp
4.	Boot	5.	Outer boot clamp	6.	Outer socket

Disassembly and Assembly

INFOID:0000000009461279

DISASSEMBLY

1. Remove outer socket locknut and outer socket.
2. Remove boot clamps and boot.
3. Remove inner socket.

ASSEMBLY

1. Apply Three Bond 1111B or equivalent to inner socket and turn pinion fully to retract inner socket into gear housing assembly.

2. Install large end (1) of boot (2) to gear housing assembly.
3. Install small end (3) of boot (2) to inner socket boot mounting groove.

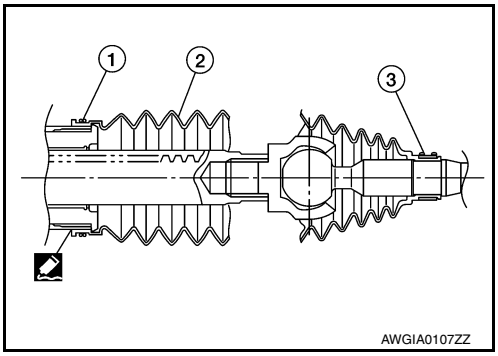

4. Install boot clamp to boot small end.
5. Install boot clamp to boot large end using Tool.
   CAUTION:
   Do not reuse boot clamps.

   Tool number : KV40107300 (—)

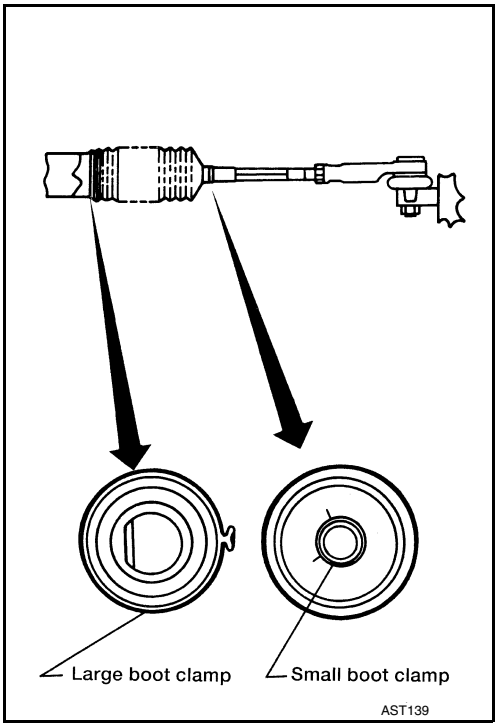

6. Adjust inner socket to standard length (L), and then tighten lock nut to the specified torque. Check length of inner socket (L) again after tightening lock nut. Make sure that the length is the standard.

   Inner socket length (L) : Refer to ST-47, "Power Steering Gear".

   CAUTION:
   Adjust toe-in after this procedure. The length achieved after toe-in adjustment is not necessarily the above value.

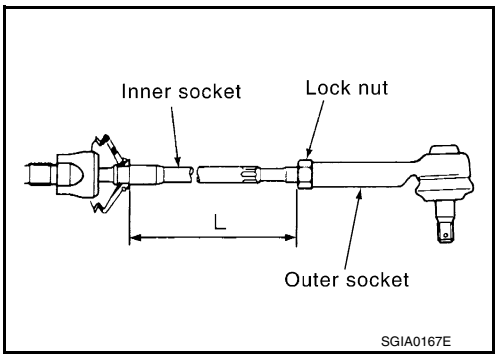

POWER STEERING OIL PUMP

Disassembly and Assembly

INFOID:0000000009461280

The power steering oil pump is not serviceable and should be replaced as an assembly. Refer to ST-38, "Removal and Installation".

SERVICE DATA AND SPECIFICATIONS (SDS)

SERVICE DATA AND SPECIFICATIONS (SDS)

Steering Wheel

INFOID:0000000009461281

Steering wheel axial end play	0 mm (0 in)
Steering wheel play	0 - 35 mm (0 - 1.38 in)
Steering wheel turning force	39 N (4 kg-f, 9 lb-f) or less

Steering Angle

INFOID:0000000009461282

Unit: Degree minute (Decimal Degree)

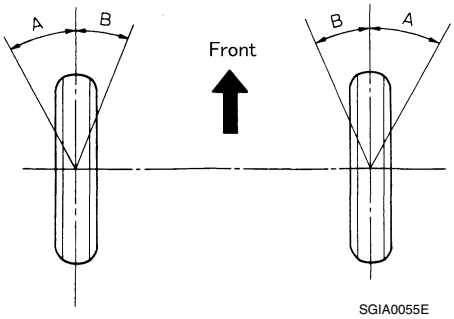

SGIA0055E

Tire size		P215/60R16	P215/55R17 - P235/45R18
Inner wheel angle (A)	Minimum	36° 30′ (36.5°)	34° 30′ (34.5°)
	Nominal	39° 30′ (39.5°)	37° 30′ (37.5°)
	Maximum	40° 30′ (40.5°)	38° 30′ (38.5°)
Outer wheel angle (B)	Nominal	32° 30′ (32.5°)	31° 30′ (31.5°)

Steering Column

INFOID:0000000009461283

STEERING COLUMN LENGTH

Unit: mm (in)

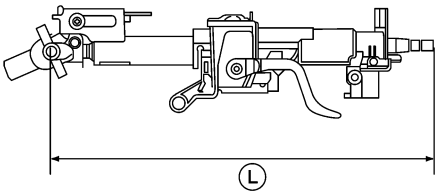

ALGIA0135ZZ

Steering column length	Length (L)	513 (20.2)
	Telescopic maximum	590 - 620 (23.2 - 24.4)
	Telescopic minimum	560 - 590 (22.0 - 23.2)

TILT MECHANISM OPERATING RANGE

Unit: mm (in)

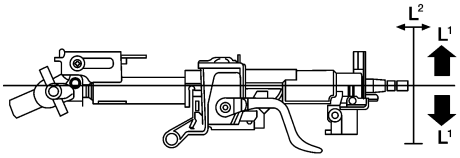

ALGIA0136ZZ

Tilt operating range (L^1)	50 (1.97)
Telescopic operating range (L^2)	60 (2.4)

Power Steering Gear

INFOID:0000000009461284

STEERING OUTER SOCKET AND INNER SOCKET

Outer socket	Rocking torque	0.3 - 2.9 N·m (0.03 - 0.29 kg-m, 3.0 - 25 in-lb)
	• Measurement on spring balance • Measuring point: cotter pin hole of stud	1.4 - 42.7 N (0.14 - 4.4 kg, 12 - 31 lb)
	Rotating torque	0.3 - 2.9 N·m (0.03 - 0.29 kg-m, 3.0 - 25 in-lb)
	Axial end play	0.4 mm (0.020 in) or less
Inner socket	Rocking torque	0.1 - 7.8 N·m (0.01 - 0.79 kg-m, 1.0 - 69 in-lb)
	• Measurement on spring balance • Measuring point at * mark shown	0.8 - 64 N (0.082 - 6.5 kg, 0.18 - 14.4 lb)
	Axial end play	0.2 mm (0.008 in) or less
Inner socket length (L)		89.7 mm (3.5in) or less

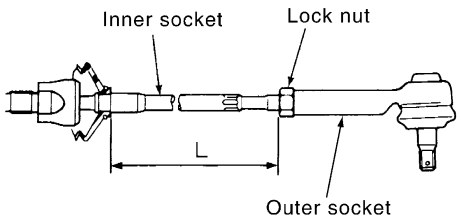

SGIA0167E

RACK STROKE

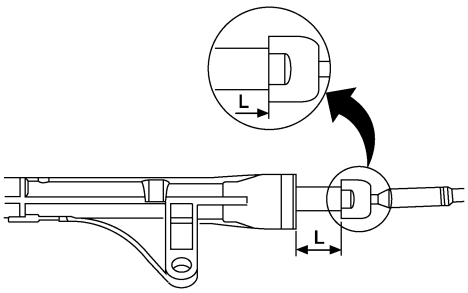

AWGIA0003GB

	P215/60R16	P215/55R17 - P245/45R18
Rack stroke in neutral position (L)	72.5 mm (2.9in)	70.0 mm (2.8in)

RACK SLIDING FORCE

Average	330 N (33.7 kg, 74.2 lb)

Power Steering Oil Pump

INFOID:0000000009461285

Relief oil pressure	9,700 - 10,300 kPa (98.9 - 105.1 kg/cm^2, 1406.5 - 1493.5 psi)

Power Steering Fluid

INFOID:0000000009461286

Fluid type	E-PSF
Fluid capacity	1.1 ℓ (1-1/8 US qt, 1 Imp qt)