# SECTION ATC

# AUTOMATIC AIR CONDITIONER

## CONTENTS

# PRECAUTIONS

PFP:00001

## Precautions for Supplemental Restraint System (SRS) “AIR BAG” and “SEAT BELT PRE-TENSIONER”

EJS005D7

The Supplemental Restraint System such as “AIR BAG” and “SEAT BELT PRE-TENSIONER”, used along with a front seat belt, helps to reduce the risk or severity of injury to the driver and front passenger for certain types of collision. This system includes seat belt switch inputs and dual stage front air bag modules. The SRS system uses the seat belt switches to determine the front air bag deployment, and may only deploy one front air bag, depending on the severity of a collision and whether the front occupants are belted or unbelted.
Information necessary to service the system safely is included in the SRS and SB section of this Service Manual.

**WARNING:**

- **To avoid rendering the SRS inoperative, which could increase the risk of personal injury or death in the event of a collision which would result in air bag inflation, all maintenance must be performed by an authorized NISSAN/INFINITI dealer.**
- **Improper maintenance, including incorrect removal and installation of the SRS, can lead to personal injury caused by unintentional activation of the system. For removal of Spiral Cable and Air Bag Module, see the SRS section.**
- **Do not use electrical test equipment on any circuit related to the SRS unless instructed to in this Service Manual. SRS wiring harnesses can be identified by yellow and/or orange harnesses or harness connectors.**

## Precautions for Working with HFC-134a (R-134a)

EJS005D8

**WARNING:**

- **CFC-12 (R-12) refrigerant and HFC-134a (R-134a) refrigerant are not compatible. If the refrigerants are mixed compressor failure is likely to occur. Refer to ATC-5, "Contaminated Refrigerant" . To determine the purity of HFC-134a (R-134a) in the vehicle and recovery tank, use recovery/recycling equipment and refrigerant identifier.**
- **Use only specified oil for the HFC-134a (R-134a) A/C system and HFC-134a (R-134a) components. If oil other than that specified is used, compressor failure is likely to occur.**
- **The specified HFC-134a (R-134a) oil rapidly absorbs moisture from the atmosphere. The following handling precautions must be observed:**
  - **When removing refrigerant components from a vehicle, immediately cap (seal) the component to minimize the entry of moisture from the atmosphere.**
  - **When installing refrigerant components to a vehicle, do not remove the caps (unseal) until just before connecting the components. Connect all refrigerant loop components as quickly as possible to minimize the entry of moisture into system.**
  - **Only use the specified oil from a sealed container. Immediately reseal containers of oil. Without proper sealing, oil will become moisture saturated and should not be used.**
  - **Avoid breathing A/C refrigerant and oil vapor or mist. Exposure may irritate eyes, nose and throat. Remove HFC-134a (R-134a) from the A/C system using certified service equipment meeting requirements of SAE J2210 [HFC-134a (R-134a) recycling equipment], or J2209 [HFC-134a (R-134a) recovery equipment]. If accidental system discharge occurs, ventilate work area before resuming service. Additional health and safety information may be obtained from refrigerant and oil manufacturers.**
  - **Do not allow A/C oil to come in contact with styrofoam parts. Damage may result.**

## Contaminated Refrigerant

EJS005D9

**If a refrigerant other than pure HFC-134a (R-134a) is identified in a vehicle, your options are:**

- Explain to the customer that environmental regulations prohibit the release of contaminated refrigerant into the atmosphere.
- Explain that recovery of the contaminated refrigerant could damage your service equipment and refrigerant supply.
- Suggest the customer return the vehicle to the location of previous service where the contamination may have occurred.
- If you choose to perform the repair, recover the refrigerant using only **dedicated equipment and containers. Do not recover contaminated refrigerant into your existing service equipment.** If your facility

does not have dedicated recovery equipment, you may contact a local refrigerant product retailer for available service. This refrigerant must be disposed of in accordance with all federal and local regulations. In addition, replacement of all refrigerant system components on the vehicle is recommended.

- If the vehicle is within the warranty period, the air conditioner warranty is void. Please contact NISSAN Customer Affairs for further assistance.

## General Refrigerant Precautions

EJS005DA

**WARNING:**

- **Do not release refrigerant into the air. Use approved recovery/recycling equipment to capture the refrigerant every time an air conditioning system is discharged.**
- **Always wear eye and hand protection (goggles and gloves) when working with any refrigerant or air conditioning system.**
- **Do not store or heat refrigerant containers above 52°C (125°F).**
- **Do not heat a refrigerant container with an open flame; if container warming is required, place the bottom of the container in a warm pail of water.**
- **Do not intentionally drop, puncture, or incinerate refrigerant containers.**
- **Keep refrigerant away from open flames: poisonous gas will be produced if refrigerant burns.**
- **Refrigerant will displace oxygen, therefore be certain to work in well ventilated areas to prevent suffocation.**
- **Do not pressure test or leak test HFC-134a (R-134a) service equipment and/or vehicle air conditioning systems with compressed air during repair. Some mixtures of air and HFC-134a (R-134a) have been shown to be combustible at elevated pressures. These mixtures, if ignited, may cause injury or property damage. Additional health and safety information may be obtained from refrigerant manufacturers.**

## Precautions for Leak Detection Dye

EJS005DB

- The A/C system contains a fluorescent leak detection dye used for locating refrigerant leaks. An ultraviolet (UV) lamp is required to illuminate the dye when inspecting for leaks.
- Always wear fluorescence enhancing UV safety goggles to protect your eyes and enhance the visibility of the fluorescent dye.
- The fluorescent dye leak detector is not a replacement for an electronic refrigerant leak detector. The fluorescent dye leak detector should be used in conjunction with an electronic refrigerant leak detector (J-41995).
- For your safety and the customer's satisfaction, read and follow all manufacturer's operating instructions and precautions prior to performing work.
- A compressor shaft seal should not be repaired because of dye seepage. The compressor shaft seal should only be repaired after confirming the leak with an electronic refrigerant leak detector (J-41995).
- Always remove any dye from the leak area after repairs are complete to avoid a misdiagnosis during a future service.
- Do not allow dye to come into contact with painted body panels or interior components. If dye is spilled, clean immediately with the approved dye cleaner. Fluorescent dye left on a surface for an extended period of time **cannot be removed** .
- Do not spray the fluorescent dye cleaning agent on hot surfaces (engine exhaust manifold, etc.).
- Do not use more than one refrigerant dye bottle (1/4 ounce / 7.4 cc) per A/C system.
- Leak detection dyes for HFC-134a (R-134a) and CFC-12 (R-12) A/C systems are different. Do not use HFC-134a (R-134a) leak detection dye in CFC-12 (R-12) A/C systems or CFC-12 (R-12) leak detection dye in HFC-134a (R-134a) A/C systems or A/C system damage may result.
- The fluorescent properties of the dye will remain for over three (3) years unless a compressor failure occurs.

## A/C Identification Label

EJS005DC

Vehicles with factory installed fluorescent dye have this identification label on the underside of hood.

## Precautions for Refrigerant Connection

EJS005DD

A new type refrigerant connection has been introduced to all refrigerant lines except the following locations.

- Expansion valve to cooling unit
- Evaporator pipes to evaporator (inside cooling unit)
- Refrigerant pressure sensor

## FEATURES OF NEW TYPE REFRIGERANT CONNECTION

- The O-ring has been relocated. It has also been provided with a groove for proper installation. This reduces the possibility of the O-ring being caught in, or damaged by, the mating part. The sealing direction of the O-ring is now set vertically in relation to the contacting surface of the mating part to improve sealing characteristics.
- The reaction force of the O-ring will not occur in the direction that causes the joint to pull out, thereby facilitating piping connections.

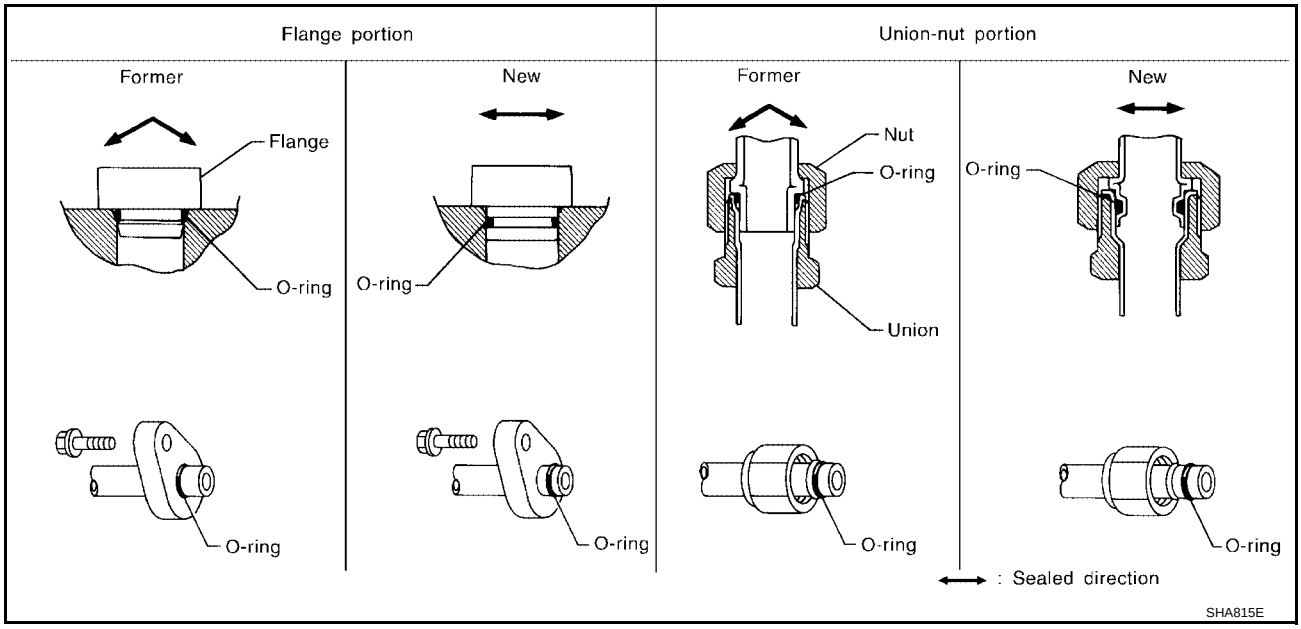

## O-RING AND REFRIGERANT CONNECTION

### Front A/C Compressor and Condenser

SEC. 214 • 271 • 274 • 276

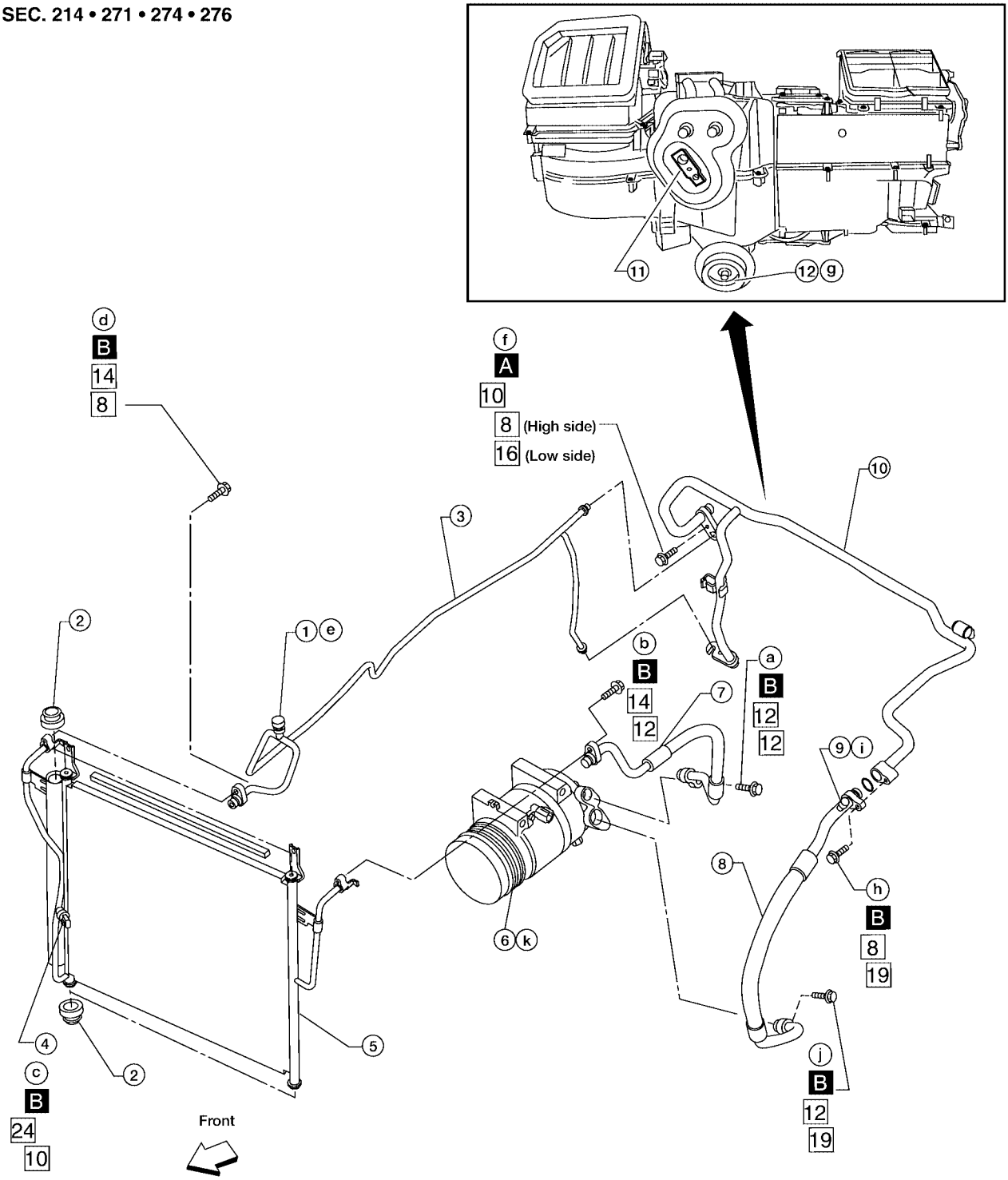


○ : Refrigerant leak checking order (a-k)

□ : Tightening torque

□ □ : Wrench size

□ : O-ring size

: N·m (kg-m, in-lb)

A : 3.4 (0.35 , 30)

B : 9.3 (0.95 , 82)

WJIA1578E

1. High-pressure service valve
2. Grommet
3. High-pressure pipe
4. Refrigerant pressure sensor
5. Condenser
6. Compressor shaft seal
7. High-pressure flexible hose
8. Low-pressure flexible hose
9. Low-pressure service valve
10. Low-pressure pipe
11. Expansion valve (front)
12. Drain hose

## Rear A/C

SEC. 214 • 271 • 274 • 276

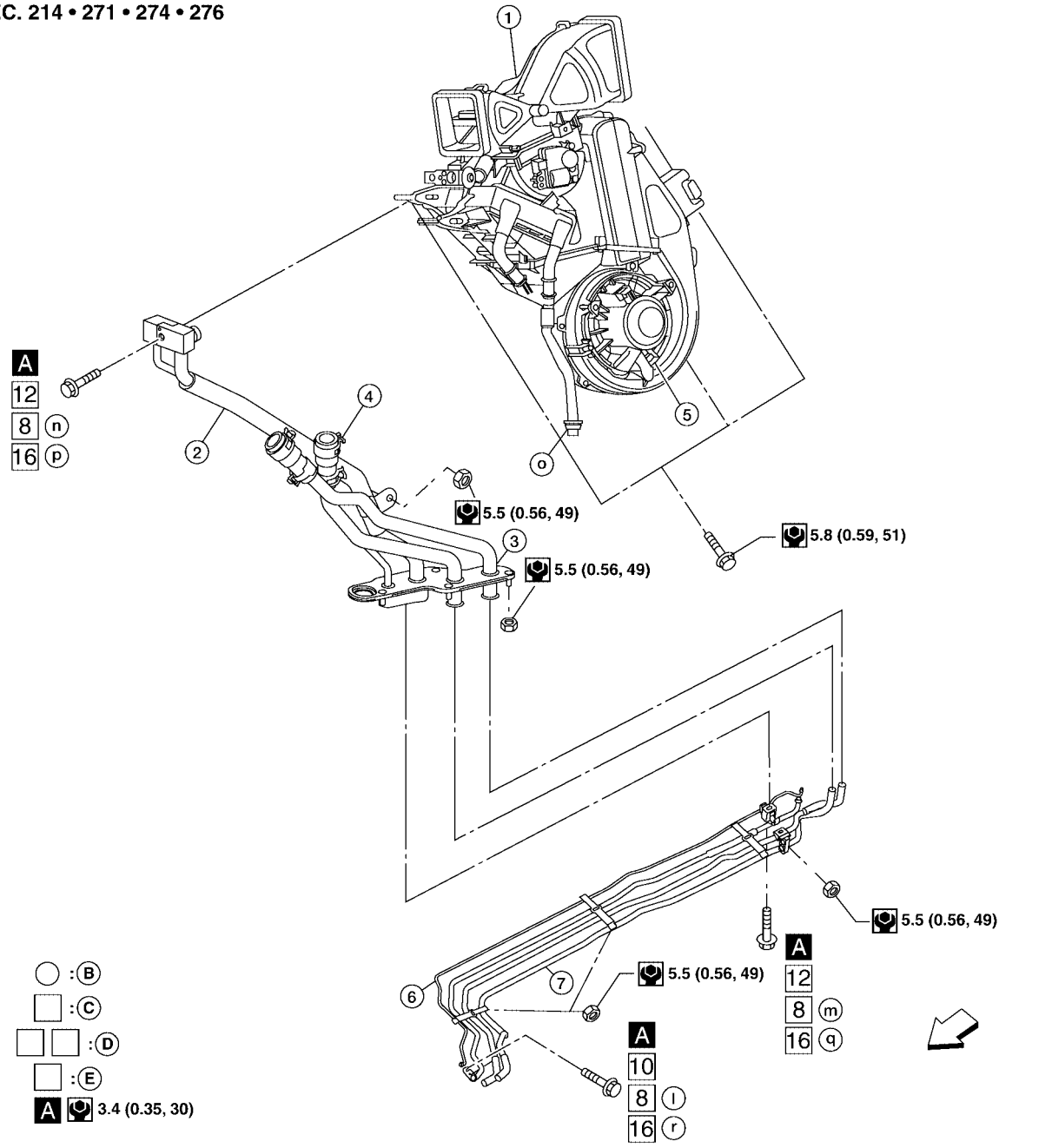


1. Rear heater and cooling unit assembly
2. Rear A/C pipes
3. Rear A/C heater core pipes
4. Rear heater core hose
5. Rear blower motor
6. Underfloor rear A/C pipes
7. Underfloor rear heater core pipes
A. Bolt torque specifications
B. Leak checking order (l - r)
C. Tightening torque
D. Wrench size
E. O-ring size

⇐ Front

NOTE: The O-ring size 8 is the high-side and the O-ring size 16 is the low-side.

**CAUTION:**
**The new and former refrigerant connections use different O-ring configurations. Do not confuse O-rings since they are not interchangeable. If a wrong O-ring is installed, refrigerant will leak at or around the connection.**

## O-Ring Part Numbers and Specifications

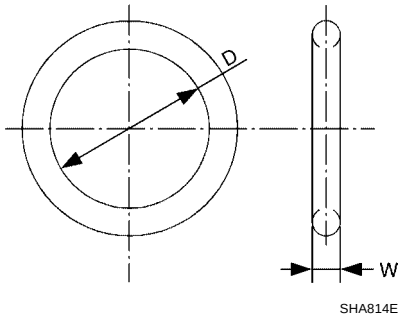


| Connection type | O-ring size | Part number* | D mm (in) | W mm (in) |
|---|---|---|---|---|
| New | 8 | 92471 N8210 | 6.8 (0.268) | 1.85 (0.0728) |
| Former | 10 | J2476 89956 | 9.25 (0.3642) | 1.78 (0.0701) |
| New | 12 | 92472 N8210 | 10.9 (0.429) | 2.43 (0.0957) |
| Former | | 92475 71L00 | 11.0 (0.433) | 2.4 (0.094) |
| New | 16 | 92473 N8210 | 13.6 (0.535) | 2.43 (0.0957) |
| Former | | 92475 72L00 | 14.3 (0.563) | 2.3 (0.091) |
| New | 19 | 92474 N8210 | 16.5 (0.650) | 2.43 (0.0957) |
| Former | | 92477 N8200 | 17.12 (0.6740) | 1.78 (0.0701) |
| New | 24 | 92195 AH300 | 21.8 (0.858) | 2.4 (0.094) |

*: Always check with the Parts Department for the latest parts information.

**WARNING:**
**Make sure all refrigerant is discharged into the recycling equipment and the pressure in the system is less than atmospheric pressure. Then gradually loosen the discharge side hose fitting and remove it.**

**CAUTION:**
**When replacing or cleaning refrigerant cycle components, observe the following.**

- **When the compressor is removed, store it in the same position as it is when mounted on the car. Failure to do so will cause oil to enter the low pressure chamber.**
- **When connecting tubes, always use a torque wrench and a back-up wrench.**
- **After disconnecting tubes, immediately plug all openings to prevent entry of dirt and moisture.**
- **When installing an air conditioner in the vehicle, connect the pipes as the final stage of the operation. Do not remove the seal caps of pipes and other components until just before required for connection.**
- **Allow components stored in cool areas to warm to working area temperature before removing seal caps. This prevents condensation from forming inside A/C components.**
- **Thoroughly remove moisture from the refrigeration system before charging the refrigerant.**
- **Always replace used O-rings.**
- **When connecting tube, apply oil to circle of the O-rings shown in illustration. Be careful not to apply oil to threaded portion.**
  **Oil name: NISSAN A/C System Oil Type S or equivalent**
- **O-ring must be closely attached to dented portion of tube.**
- **When replacing the O-ring, be careful not to damage O-ring and tube.**
- **Connect tube until you hear it click, then tighten the nut or bolt by hand until snug. Make sure that the O-ring is installed to tube correctly.**
- **After connecting line, conduct leak test and make sure that there is no leakage from connections. When the gas leaking point is found, disconnect that line and replace the O-ring. Then tighten connections of seal seat to the specified torque.**

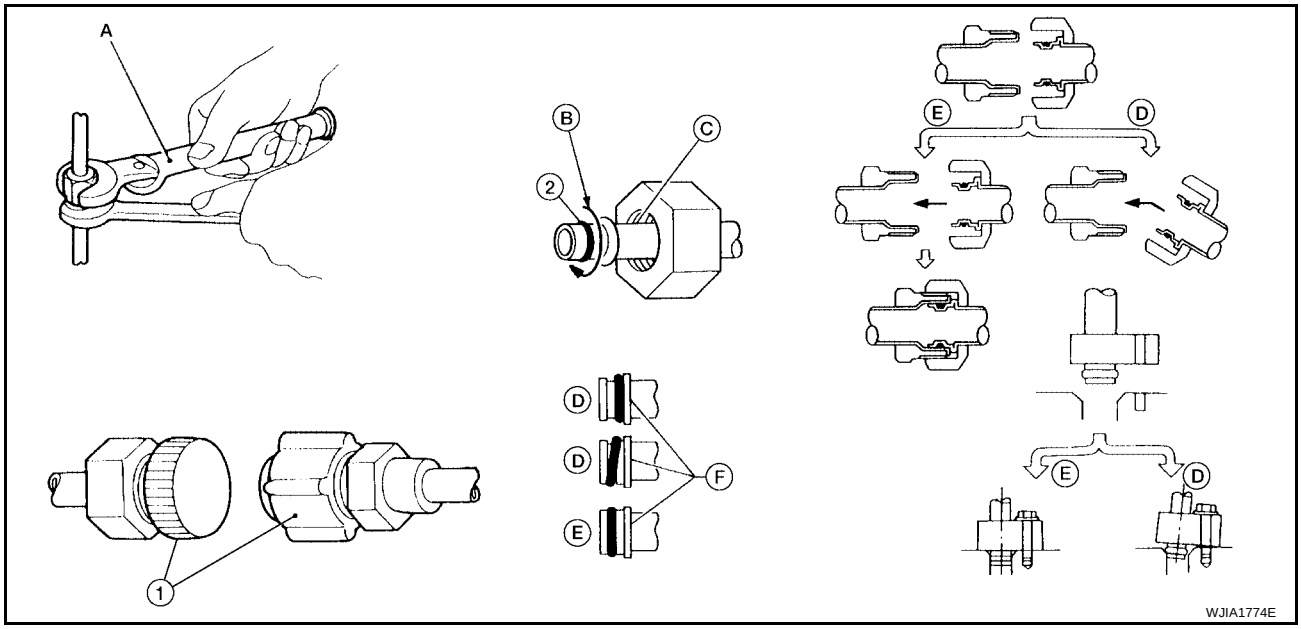


| | | | | | |
|---|---|---|---|---|---|
| 1. | Plug | 2. | O-ring | A. | Torque wrench |
| B. | Apply oil | C. | Do not apply oil to threads | D. | NG (no good) |
| E. | OK (okay) | F. | Inflated portion | | |

## Precautions for Servicing Compressor

EJS005DE

- **Plug all openings to prevent moisture and foreign matter from entering.**
- **When the compressor is removed, store it in the same position as it is when mounted on the car.**
- **When replacing or repairing compressor, follow “Maintenance of Oil Quantity in Compressor” exactly. Refer to ATC-22, "Maintenance of Oil Quantity in Compressor" .**
- **Keep friction surfaces between clutch and pulley clean. If the surface is contaminated with oil, wipe it off by using a clean waste cloth moistened with thinner.**
- **After compressor service operation, turn the compressor shaft by hand more than 5 turns in both directions. This will equally distribute oil inside the compressor. After the compressor is installed, let the engine idle and operate the compressor for 1 hour.**
- **After replacing the compressor magnet clutch, apply voltage to the new one and check for normal operation. Refer to ATC-226, "Removal and Installation for Compressor Clutch" .**

## Precautions for Service Equipment

EJS005DF

### RECOVERY/RECYCLING EQUIPMENT

Follow the manufacturer's instructions for machine operation and machine maintenance. Never introduce any refrigerant other than that specified into the machine.

### ELECTRONIC LEAK DETECTOR

Follow the manufacturer's instructions for tester operation and tester maintenance.

## VACUUM PUMP

The oil contained inside the vacuum pump is not compatible with the specified oil for HFC-134a (R-134a) A/C systems. The vent side of the vacuum pump is exposed to atmospheric pressure so the vacuum pump oil may migrate out of the pump into the service hose. This is possible when the pump is switched off after evacuation (vacuuming) and hose is connected to it.
To prevent this migration, use a manual valve situated near the hose-to-pump connection, as follows.

- Usually vacuum pumps have a manual isolator valve as part of the pump. Close this valve to isolate the service hose from the pump.
- For pumps without an isolator, use a hose equipped with a manual shut-off valve near the pump end. Close the valve to isolate the hose from the pump.
- If the hose has an automatic shut off valve, disconnect the hose from the pump: as long as the hose is connected, the valve is open and lubricating oil may migrate.

Some one-way valves open when vacuum is applied and close under a no vacuum condition. Such valves may restrict the pump's ability to pull a deep vacuum and are not recommended.

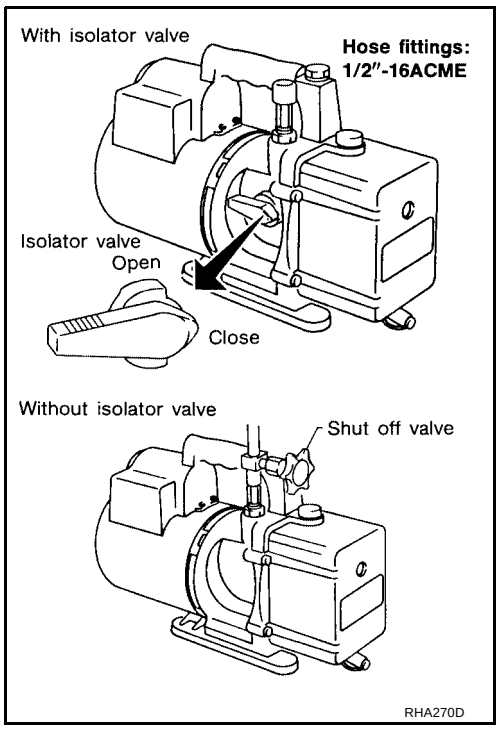


## MANIFOLD GAUGE SET

Be certain that the gauge face indicates HFC-134a (R-134a or 134a). Make sure the gauge set has 1/2″-16 ACME threaded connections for service hoses. Confirm the set has been used only with refrigerant HFC-134a (R-134a) along with specified oil.

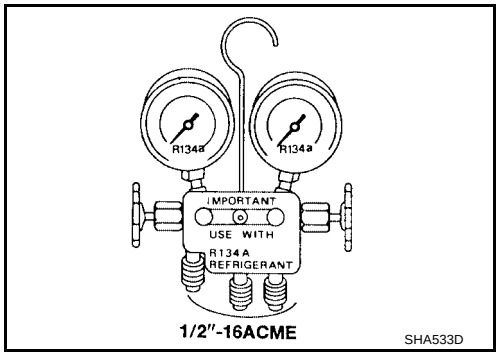


## SERVICE HOSES

Be certain that the service hoses display the markings described (colored hose with black stripe). All hoses must include positive shut-off devices (either manual or automatic) near the end of the hoses opposite the manifold gauge.

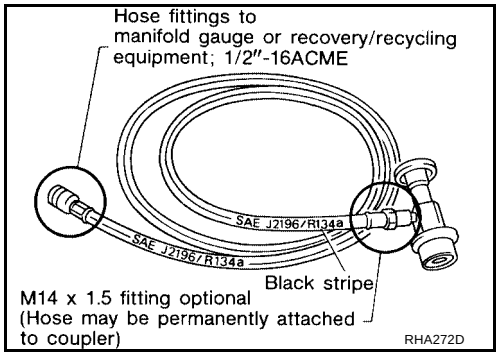

## SERVICE COUPLERS

Never attempt to connect HFC-134a (R-134a) service couplers to a CFC-12 (R-12) A/C system. The HFC-134a (R-134a) couplers will not properly connect to the CFC-12 (R-12) system. If an improper connection is attempted, discharging and contamination may occur.

| Shut-off valve rotation | A/C service valve |
|---|---|
| Clockwise | Open |
| Counterclockwise | Close |

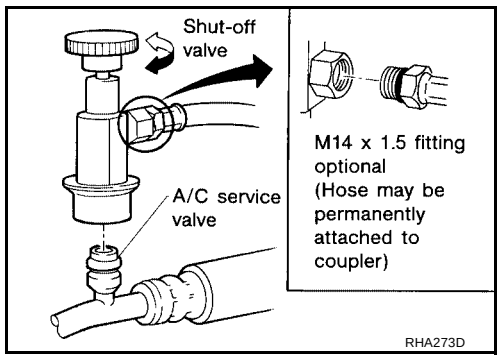


## REFRIGERANT WEIGHT SCALE

Verify that no refrigerant other than HFC134a (R-134a) and specified oils have been used with the scale. If the scale controls refrigerant flow electronically, the hose fitting must be 1/2”-16 ACME.

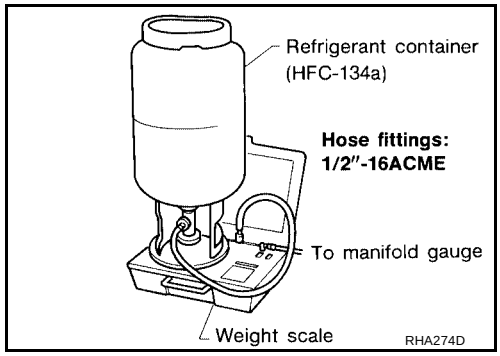


## CHARGING CYLINDER

Using a charging cylinder is not recommended. Refrigerant may be vented into air from cylinder's top valve when filling the cylinder with refrigerant. Also, the accuracy of the cylinder is generally less than that of an electronic scale or of quality recycle/recharge equipment.

# PREPARATION

PFP:00002

## Special Service Tools

EJS005DG

The actual shapes of Kent-Moore tools may differ from those of special service tools illustrated here.

| Tool number<br>(Kent-Moore No.)<br>Tool name | Description |
|---|---|
| —<br>(J-38873-A)<br>Pulley installer<br> 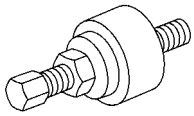 <br>LHA171 | Installing pulley |
| KV99233130<br>(J-29884)<br>Pulley puller<br> 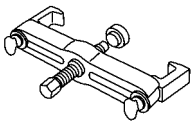 <br>LHA172 | Removing pulley |

## HFC-134a (R-134a) Service Tools and Equipment

EJS005DH

Never mix HFC-134a (R-134a) refrigerant and/or the specified oil with CFC-12 (R-12) refrigerant and/or the oil.
Separate and non-interchangeable service equipment must be used for handling each type of refrigerant/oil.
Refrigerant container fittings, service hose fittings and service equipment fittings (equipment which handles refrigerant and/or oil) are different between CFC-12 (R-12) and HFC-134a (R-134a). This is to avoid mixed use of the refrigerants/oil.
Adapters that convert one size fitting to another must never be used refrigerant/oil contamination will occur and compressor failure will result.

| Tool number<br>(Kent-Moore No.)<br>Tool name | Description |
|---|---|
| HFC-134a (R-134a)<br>( — )<br>Refrigerant<br> 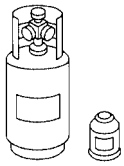 <br>S-NT196 | Container color: Light blue<br>Container marking: HFC-134a (R-134a)<br>Fitting size: Thread size<br>● large container 1/2”-16 ACME |
| —<br>( — )<br>NISSAN A/C System Oil Type S<br>  <br><br>S-NT197 | Type: Poly alkylene glycol oil (PAG), type S<br>Application: HFC-134a (R-134a) swash plate compressors (NISSAN only)<br>Lubricity: 40 m ℓ (1.4 US fl oz, 1.4 Imp fl oz) |
| KV991J0130<br>(ACR2005-NI)<br>ACR5 A/C Service Center<br> 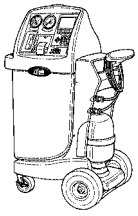 <br>WJIA0293E | Refrigerant recovery, recycling and re-charging |

| Tool number<br>(Kent-Moore No.)<br>Tool name | | Description |
|---|---|---|
| —<br>(J-41995)<br>Electronic refrigerant leak detector | 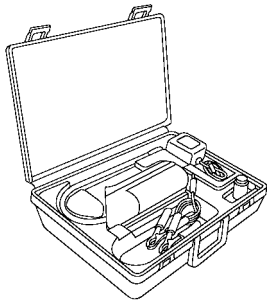 <br>AHA281A | Power supply:<br>● DC 12V (battery terminal) |
| —<br>(J-43926)<br>Refrigerant dye leak detection kit<br>Kit includes:<br>(J-42220) UV lamp and UV safety goggles<br>(J-41459) Refrigerant dye injector<br>(J-41447) qty. 24<br>HFC-134a (R-134a) refrigerant dye<br>(J-43872) Refrigerant dye cleaner | 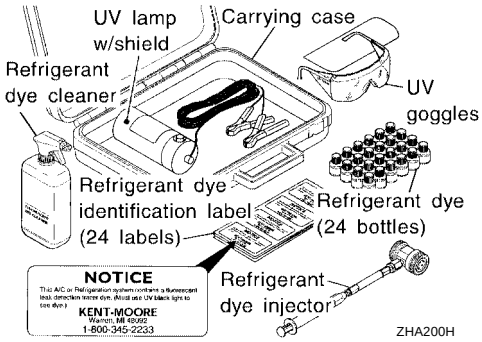 <br><br>ZHA200H | Power supply:<br>● DC 12V (battery terminal) |
| —<br>(J-42220)<br>Fluorescent dye leak detector | 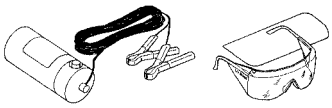 <br>SHA438F | Power supply:<br>● DC 12V (battery terminal)<br>For checking refrigerant leak when fluorescent dye is installed in A/C system. Includes: UV lamp and UV safety goggles |
| —<br>(J-41447)<br>HFC-134a (R-134a) Fluorescent leak detection dye<br>(Box of 24, 1/4 ounce bottles) | 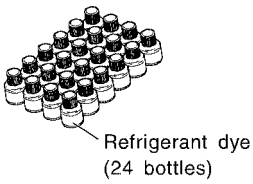 <br><br>SHA439F | Application: For HFC-134a (R-134a) PAG oil<br>Container: 1/4 ounce (7.4cc) bottle (Includes self-adhesive dye identification labels for affixing to vehicle after charging system with dye.) |
| —<br>(J-41459)<br>HFC-134a (R-134a) Dye injector<br>Use with J-41447, 1/4 ounce bottle | 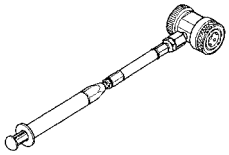 <br>SHA440F | For injecting 1/4 ounce of fluorescent leak detection dye into A/C system. |
| —<br>(J-43872)<br>Refrigerant dye cleaner |  <br>SHA441F | For cleaning dye spills. |

| Tool number<br>(Kent-Moore No.)<br>Tool name | | Description |
|---|---|---|
| —<br>(J-39183-C)<br>Manifold gauge set (with hoses and couplers) | 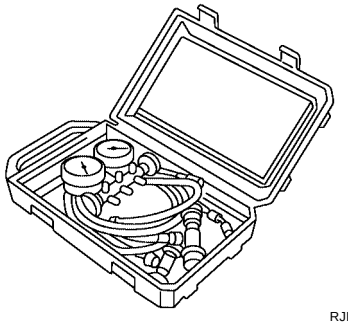 <br>RJIA0196E | Identification:<br>● The gauge face indicates R-134a.<br>Fitting size-Thread size<br>● 1/2”-16 ACME |
| Service hoses:<br>● High side hose (J-39500-72B)<br>● Low side hose (J-39500-72R)<br>● Utility hose (J-39500-72Y) | 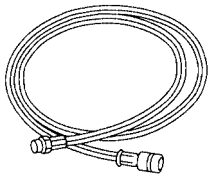 <br>S-NT201 | Hose color:<br>● Low side hose: Blue with black stripe<br>● High side hose: Red with black stripe<br>● Utility hose: Yellow with black stripe or green with black stripe<br>Hose fitting to gauge:<br>● 1/2”-16 ACME |
| Service couplers<br>● High side coupler (J-39500-20A)<br>● Low side coupler (J-39500-24A) | 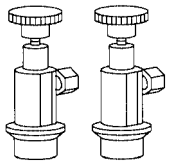 <br>S-NT202 | Hose fitting to service hose:<br>● M14 x 1.5 fitting is optional or permanently attached. |
| —<br>(J-39699)<br>Refrigerant weight scale | 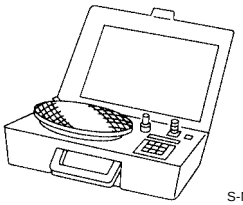 <br>S-NT200 | For measuring of refrigerant<br>Fitting size-Thread size<br>● 1/2”-16 ACME |
| —<br>(J-39649)<br>Vacuum pump<br>(Including the isolator valve) | 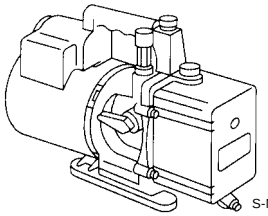 <br>S-NT203 | Capacity:<br>● Air displacement: 4 CFM<br>● Micron rating: 20 microns<br>● Oil capacity: 482 g (17 oz)<br>Fitting size-Thread size<br>● 1/2”-16 ACME |

## Commercial Service Tools

EJS005DI

| Tool name | | Description |
|---|---|---|
| (J-41810-NI)<br>Refrigerant identifier equipment (R-134a) | 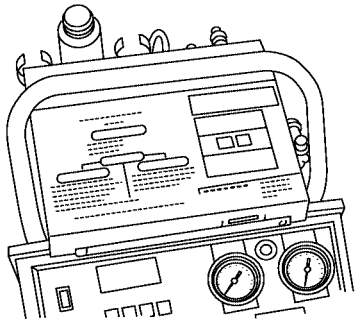 <br>RJIA0197E | For checking refrigerant purity and system contamination |
| Power tool | 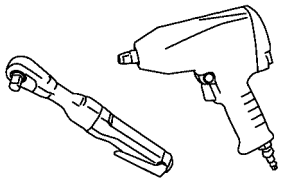 <br>PBIC0190E | Loosening bolts and nuts |
| (J-44614)<br>Clutch disc holding tool | 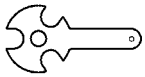 <br>WHA230 | Clutch disc holding tool |

# REFRIGERATION SYSTEM

PFP:KA990

## Refrigerant Cycle

EJS005DJ

### REFRIGERANT FLOW

The refrigerant flows in the standard pattern, that is, through the compressor, the condenser with liquid tank, through the front and rear evaporators, and back to the compressor. The refrigerant evaporation through the evaporator coils are controlled by front and rear externally equalized expansion valves, located inside the front and rear evaporator cases.

## Refrigerant System Protection

EJS005DK

### REFRIGERANT PRESSURE SENSOR

The refrigerant system is protected against excessively high or low pressures by the refrigerant pressure sensor, located on the condenser. If the system pressure rises above or falls below the specifications, the refrigerant pressure sensor detects the pressure inside the refrigerant line and sends a voltage signal to the ECM. The ECM de-energizes the A/C relay to disengage the magnetic compressor clutch when pressure on the high pressure side detected by refrigerant pressure sensor is over about 2,746 kPa (28 kg/cm$^2$ , 398 psi), or below about 120 kPa (1.22 kg/cm$^2$ , 17.4 psi).

## PRESSURE RELIEF VALVE

The refrigerant system is also protected by a pressure relief valve, located in the rear head of the compressor. When the pressure of refrigerant in the system increases to an abnormal level [more than 2,990 kPa (30.5 kg/cm$^2$ , 433.6 psi)], the release port on the pressure relief valve automatically opens and releases refrigerant into the atmosphere.

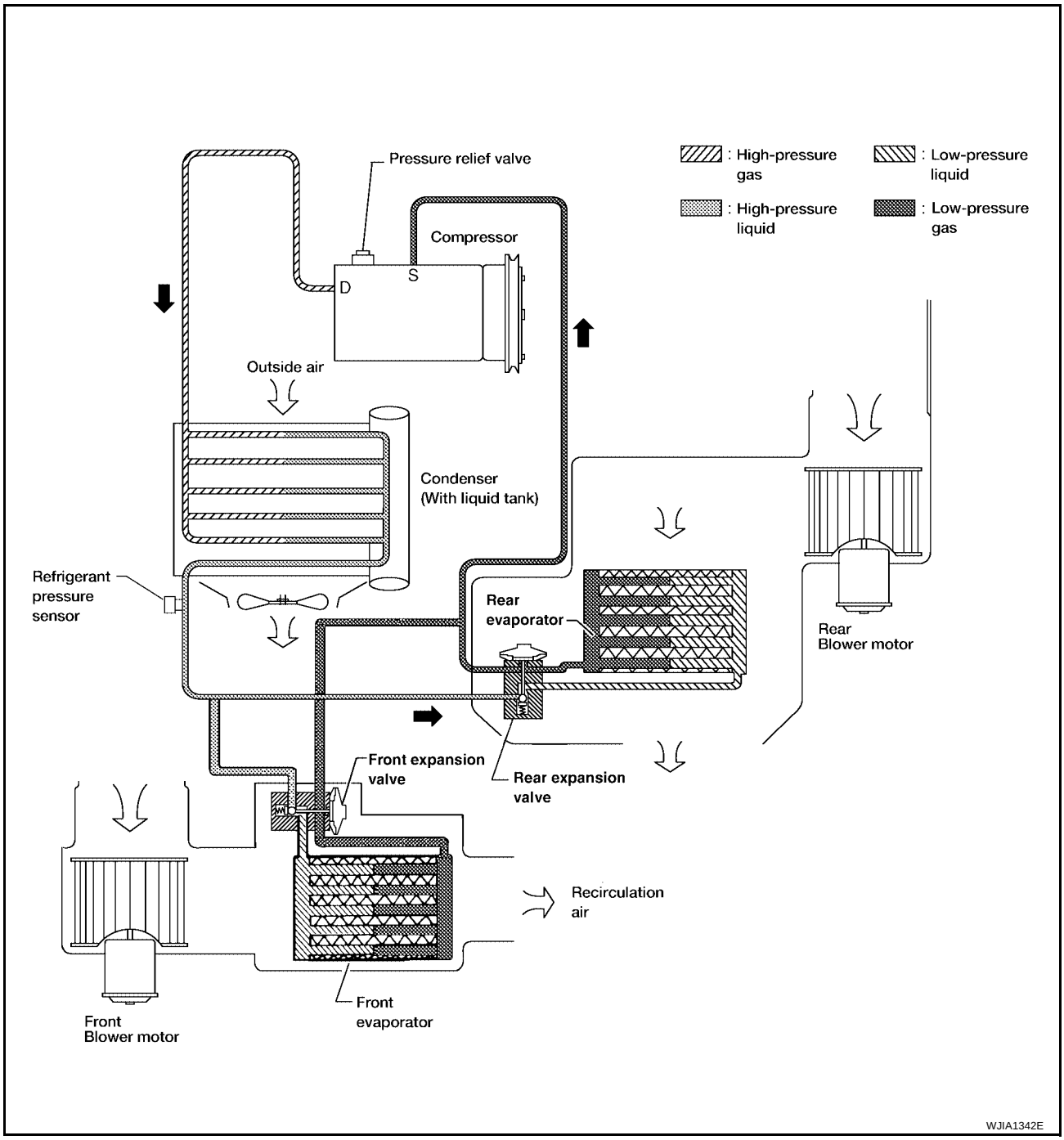

## Component Layout

EJS005DL

### FRONT REFRIGERATION SYSTEM

SEC. 270 • 271

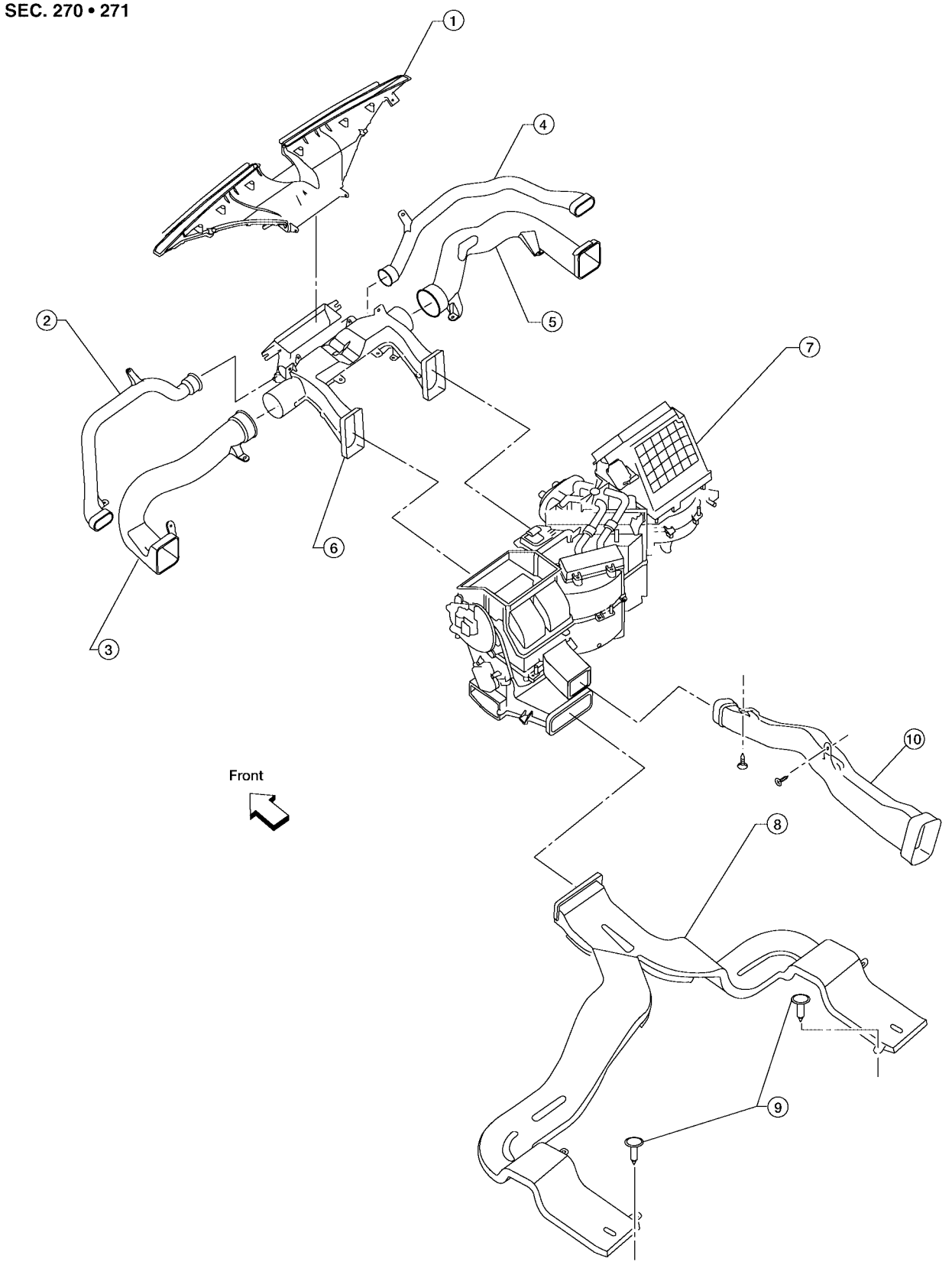


WJIA0956E

1. Defroster nozzle
2. LH side demister duct
3. LH ventilator duct
4. RH side demister duct
5. RH ventilator duct
6. Center ventilator duct
7. Front heater and cooling unit assembly
8. Floor duct
9. Clips
10. Heat duct

## REAR REFRIGERATION SYSTEM

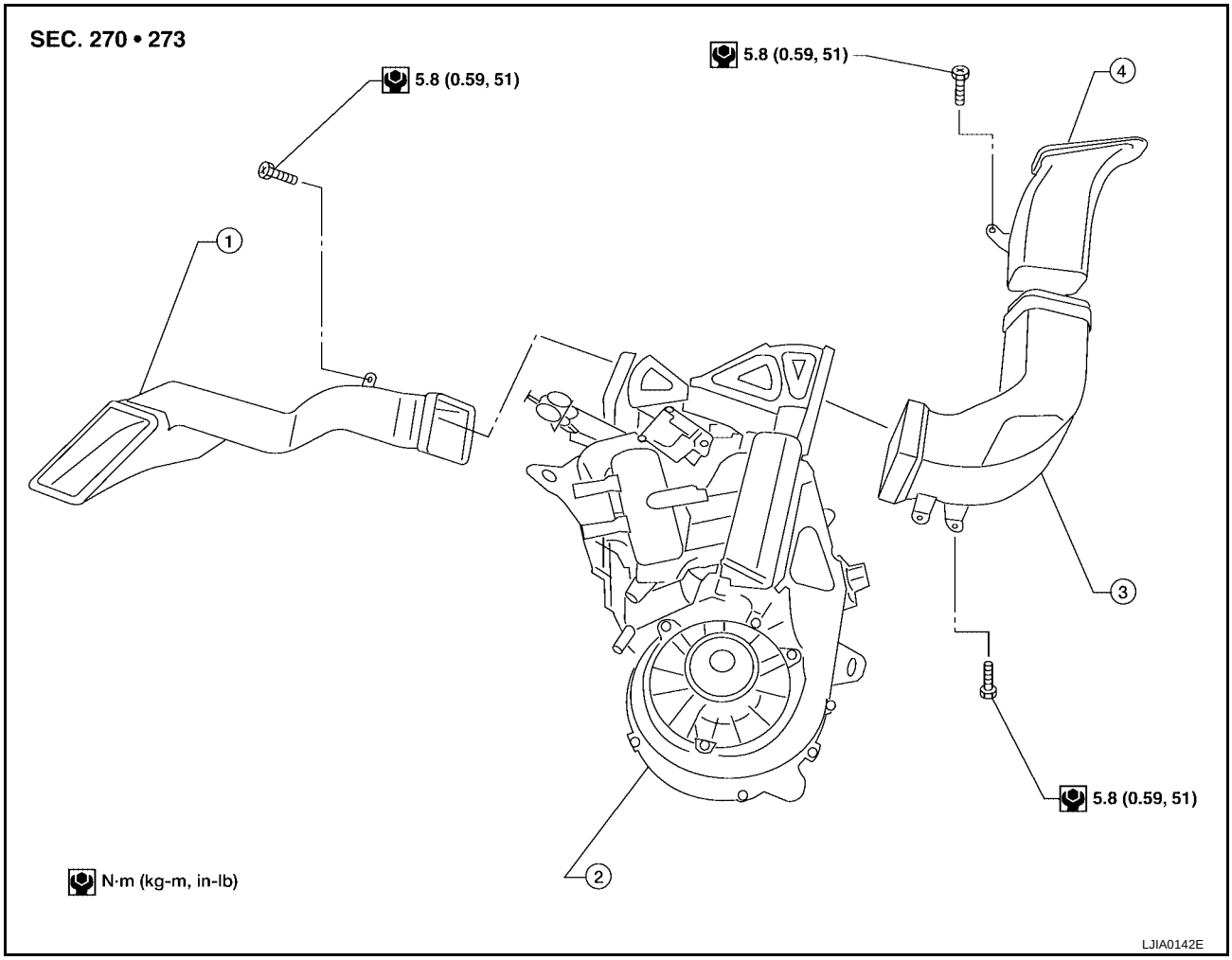


1. Rear floor duct
2. Rear heater and cooling unit assembly
3. Rear lower overhead duct
4. Rear upper overhead duct

# OIL

PFP:KLG00

## Maintenance of Oil Quantity in Compressor

EJS005DM

The oil in the compressor circulates through the system with the refrigerant. Add oil to compressor when replacing any component or after a large refrigerant leakage has occurred. It is important to maintain the specified amount.
If oil quantity is not maintained properly, the following malfunctions may result:

- Lack of oil: May lead to a seized compressor
- Excessive oil: Inadequate cooling (thermal exchange interference)

### OIL

**Name: NISSAN A/C System Oil Type S or equivalent**

### CHECKING AND ADJUSTING

**CAUTION:**
**If excessive oil leakage is noted, do not perform the oil return operation.**
Start the engine and set the following conditions:

**Test Condition**

- **Engine speed: Idling to 1,200 rpm**
- **A/C switch: On**
- **Blower fan speed: MAX position**
- **Temp. control: Optional [Set so that intake air temperature is 25° to 30° C (77° to 86°F)]**
- **Intake position: Recirculation ( )**
- **Perform oil return operation for about ten minutes**

Adjust the oil quantity according to the following table.

### Oil Adjusting Procedure for Components Replacement Except Compressor

After replacing any of the following major components, add the correct amount of oil to the system.

**Amount of Oil to be Added**

| Part replaced | Oil to be added to system<br>Amount of oil<br>m ℓ (US fl oz, Imp fl oz) | Remarks |
|---|---|---|
| Front evaporator | 75 (2.5, 2.6) | — |
| Rear evaporator | 75 (2.5, 2.6) | — |
| Condenser | 75 (2.5, 2.6) | — |
| Liquid tank | 5 (0.2, 0.2) | Add if compressor is not replaced. |
| In case of refrigerant leak | 30 (1.0, 1.1) | Large leak |
| | — | Small leak *1 |

- *1: If refrigerant leak is small, no addition of oil is needed.

## Oil Adjustment Procedure for Compressor Replacement

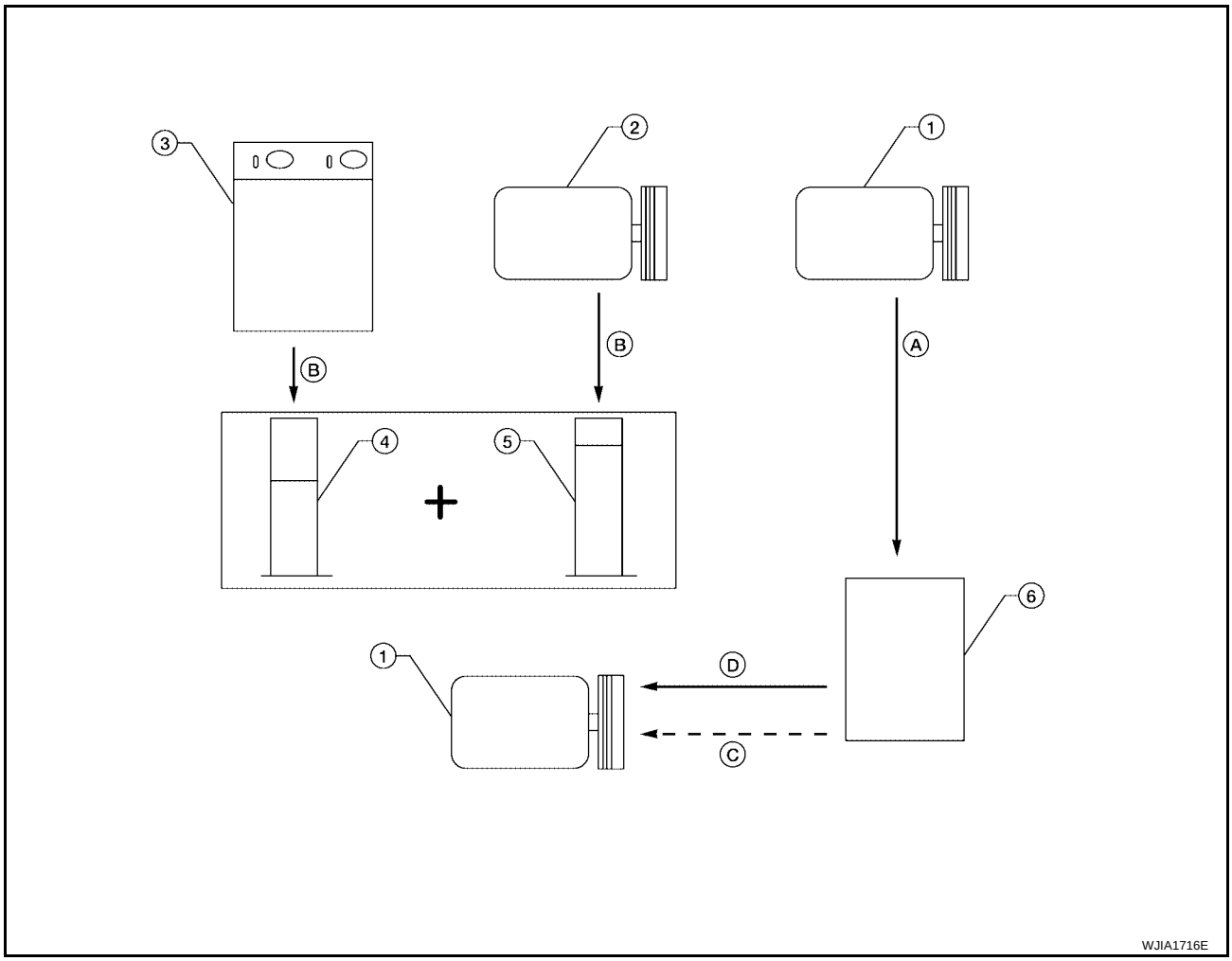


| | | | | | |
|---|---|---|---|---|---|
| 1. | New compressor | 2. | Old compressor | 3. | Recovery/recycling equipment |
| 4. | Measuring cup X | 5. | Measuring cup Y | 6. | New oil |
| A. | Drain oil from the new compressor into clean container | B. | Record amount of oil recovered | C. | Add an additional 5 m ℓ (0.2 US fl oz, 0.2 Imp fl oz) of new oil when replacing liquid tank |
| D. | Install new oil equal to recorded amounts in measuring cups X plus Y | | | | |

1. Before connecting recovery/recycling equipment to vehicle, check recovery/recycling equipment gauges. No refrigerant pressure should be displayed. If NG, recover refrigerant from equipment lines.
2. Connect recovery/recycling equipment to vehicle. Confirm refrigerant purity in supply tank using recovery/recycling equipment and refrigerant identifier. If NG, refer to ATC-5, "Contaminated Refrigerant" .
3. Confirm refrigerant purity in vehicle A/C system using recovery/recycling equipment and refrigerant identifier. If NG, refer to ATC-5, "Contaminated Refrigerant" .
4. Discharge refrigerant into the refrigerant recovery/recycling equipment. Measure oil discharged into the recovery/recycling equipment.
5. Drain the oil from the “old” (removed) compressor into a graduated container and recover the amount of oil drained.
6. Drain the oil from the “new” compressor into a separate, clean container.
7. Measure an amount of new oil installed equal to amount drained from “old” compressor. Add this oil to “new” compressor through the suction port opening.
8. Measure an amount of new oil equal to the amount recovered during discharging. Add this oil to “new” compressor through the suction port opening.
9. If the liquid tank also needs to be replaced, add an additional 5 m ℓ (0.2 US fl oz, 0.2 Imp fl oz) of oil at this time.

**CAUTION:**
**Do not add this 5 mℓ (0.2 US fl oz, 0.2 Imp fl oz) of oil if only replacing the compressor.**

# AIR CONDITIONER CONTROL

PFP:27500

## Description

EJS005DN

The front air control provides automatic regulation of the vehicle's interior temperature. The system is based on the driver's and passenger's selected "set temperature", regardless of the outside temperature changes. This is done by utilizing a microcomputer, also referred to as the front air control, which receives input signals from the following seven sensors:

- Ambient sensor
- In-vehicle sensor
- Intake sensor
- Optical sensor (one sensor for driver and passenger side)
- PBR (Position Balanced Resistor) built into the mode door motor, air mix door motors, and defroster door motor.
- Vehicle speed sensor (via CAN communication)
- Engine coolant temperature (via CAN communication)

The front air control uses these signals (including the set temperature) to automatically control:

- Outlet air volume
- Air temperature
- Air distribution

The front air control also provides separate regulation of the vehicle's interior temperature for the rear passenger area. The system is based on the temperature and rear blower settings selected from rear control switches located on the front air control, or from the temperature and rear blower settings selected from rear control switches on the rear air control, when the front air control switches are set to the rear position.

The front air control is used to select:

- Outlet air volume
- Air temperature/distribution

## Operation

EJS005DO

### AIR MIX DOORS CONTROL

The air mix doors are automatically controlled so that in-vehicle temperature is maintained at a predetermined value by the temperature setting, ambient temperature, in-vehicle temperature and amount of sunload.

### BLOWER SPEED CONTROL

Blower speed is automatically controlled by the temperature setting, ambient temperature, in-vehicle temperature, intake temperature, amount of sunload and air mix door position.
When AUTO switch is pressed, the blower motor starts to gradually increase air flow volume (if required).
When engine coolant temperature is low, the blower motor operation is delayed to prevent cool air from flowing.

### INTAKE DOOR CONTROL

The intake door is automatically controlled by the temperature setting, ambient temperature, in-vehicle temperature, intake temperature, amount of sunload and by the ON-OFF operation of the compressor.

### MODE DOOR CONTROL

The mode door is automatically controlled by the temperature setting, ambient temperature, in-vehicle temperature, intake temperature and amount of sunload.

### DEFROSTER DOOR CONTROL

The defroster door is controlled by turning the defroster dial to front defroster.

## MAGNET CLUTCH CONTROL

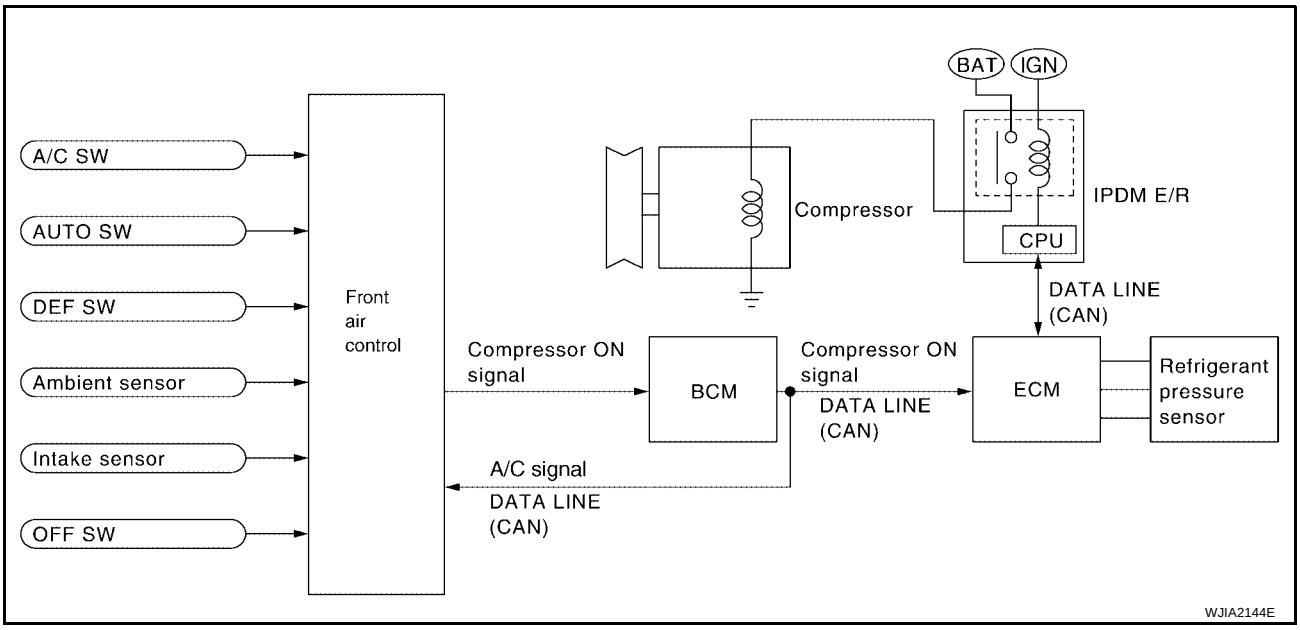


When A/C switch or DEF switch is pressed, front air control inputs compressor ON signal to BCM.
BCM sends compressor ON signal to ECM and front air control, via CAN communication line.
ECM judges whether compressor can be turned ON, based on each sensor status (refrigerant pressure sensor signal, throttle angle sensor, etc.). If it judges compressor can be turned ON, it sends compressor ON signal to IPDM E/R, via CAN communication line.
Upon receipt of compressor ON signal from ECM, IPDM E/R turns air conditioner relay ON to operate compressor.

## SELF-DIAGNOSTIC SYSTEM

The self-diagnostic system is built into the front air control to quickly locate the cause of certain symptoms. Refer to ATC-67, "A/C System Self-diagnosis Function"

## Description of Control System

EJS005DP

The control system consists of input sensors, switches, the front air control (microcomputer) and outputs. The relationship of these components is shown in the figure below:

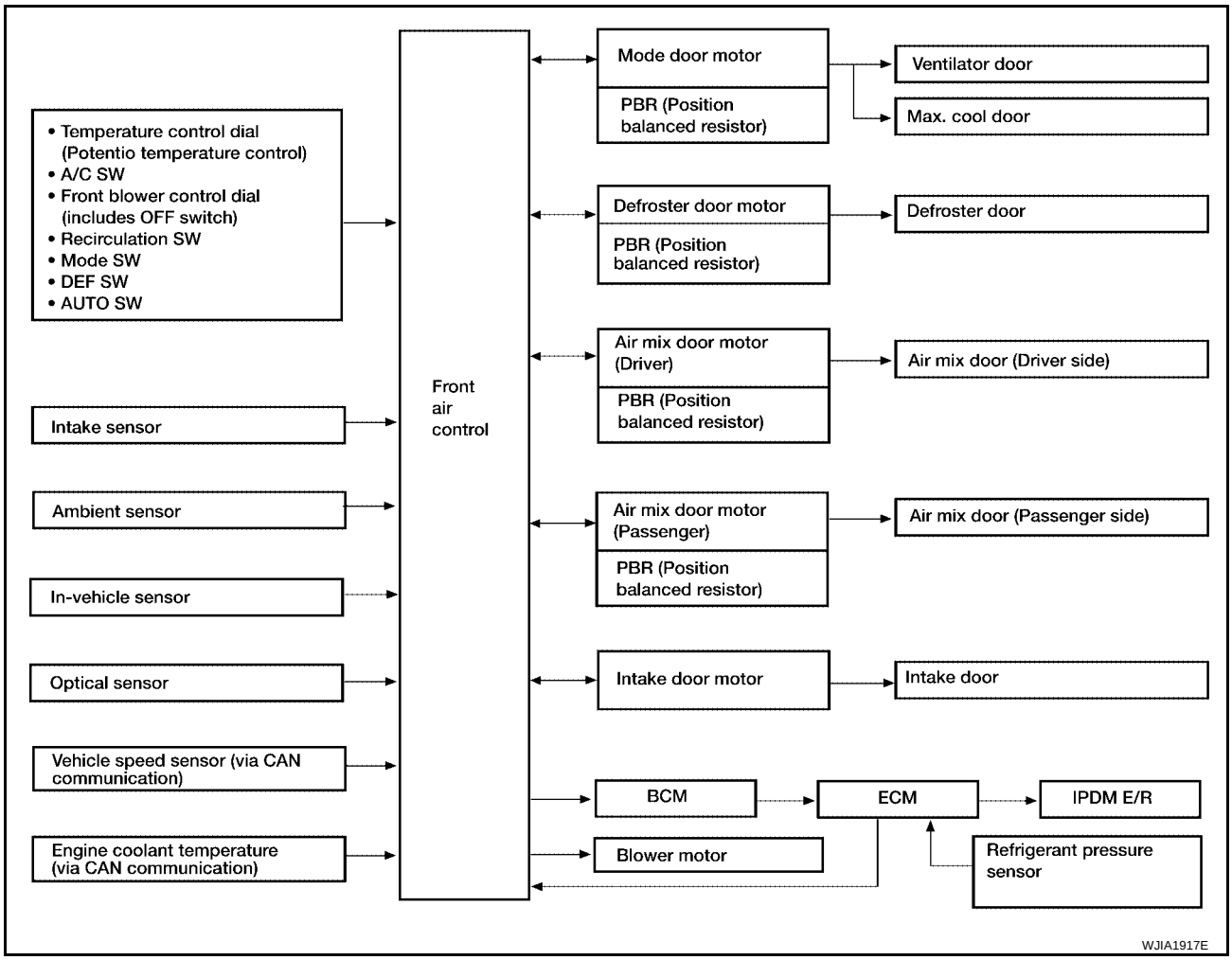


## Control Operation

EJS005DQ

### Front air control

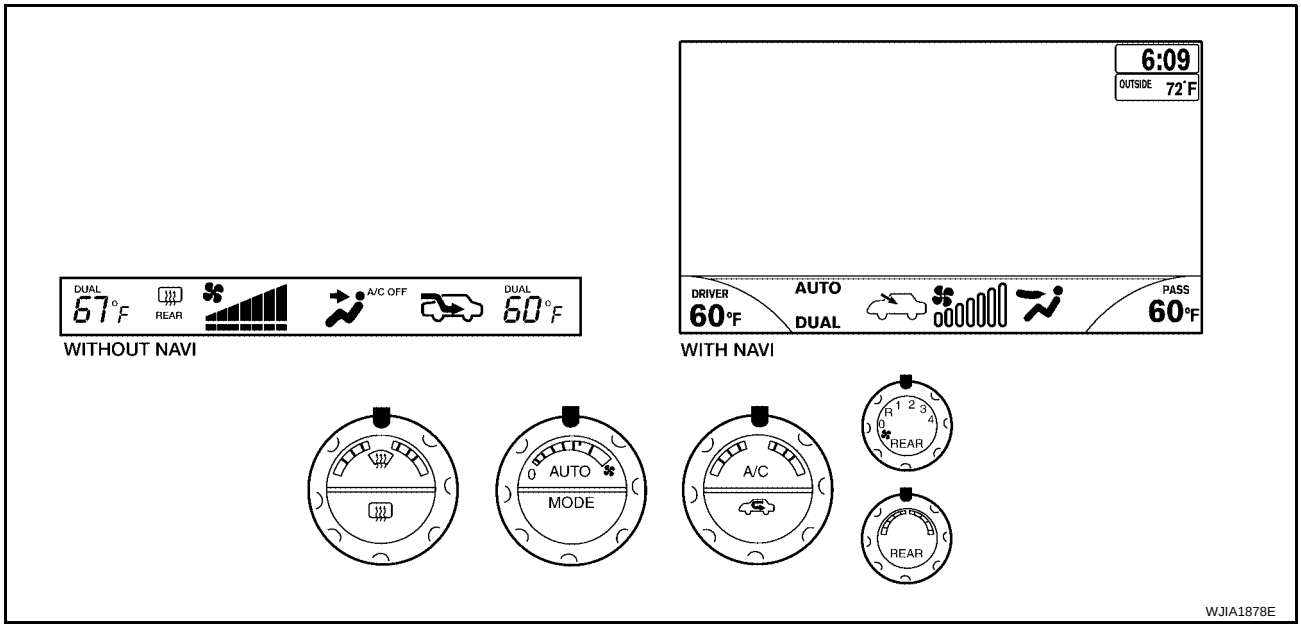

### DISPLAY SCREEN

Displays the operational status of the system.

### AUTO SWITCH

- The compressor, intake door, air mix doors, outlet doors and blower speed are automatically controlled so that the in-vehicle temperature will reach, and be maintained at the set temperature selected by the operator.
- When pressing AUTO switch, air inlet, air outlet, blower speed, and discharge air temperature are automatically controlled.

### TEMPERATURE CONTROL DIAL (TEMPERATURE CONTROL) (DRIVER SIDE)

Increases or decreases the set temperature.

### TEMPERATURE CONTROL DIAL (TEMPERATURE CONTROL) (PASSENGER SIDE)

Increases or decreases the set temperature.

### TEMPERATURE CONTROL DIAL (TEMPERATURE AND MODE CONTROL) (REAR)

Increases or decreases the set temperature. The mode also changes from foot at full hot setting, to foot/vent mid-range (warm) setting, and then to panel on full cold setting.

### RECIRCULATION () SWITCH

- When REC switch is ON, REC switch indicator turns ON, and air inlet is set to REC.
- When REC switch is turned OFF, or when compressor is turned from ON to OFF, REC switch is automatically turned OFF. REC mode can be re-entered by pressing REC switch again.
- REC switch is not operated when DEF switch is turned ON, at the D/F position, or in floor position.

### DEFROSTER () SWITCH

Positions the air outlet doors to the defrost position. Also positions the intake doors to the outside air position.

### REAR WINDOW DEFOGGER SWITCH

When switch is ON, rear window and door mirrors are defogged.

### OFF SWITCH

The compressor and blower are OFF, the intake doors are set to the outside air position, and the air outlet doors are set to the foot (75% foot and 25% defrost) position.

### A/C SWITCH

The compressor is ON or OFF.
(Pressing the A/C switch when the AUTO switch is ON will turn off the A/C switch and compressor.)

### MODE SWITCH (FRONT)

Controls the air discharge outlets.

### FRONT BLOWER CONTROL DIAL

Manually control the blower speed. Seven speeds are available for manual control (as shown on the display).

**Rear Air Control**

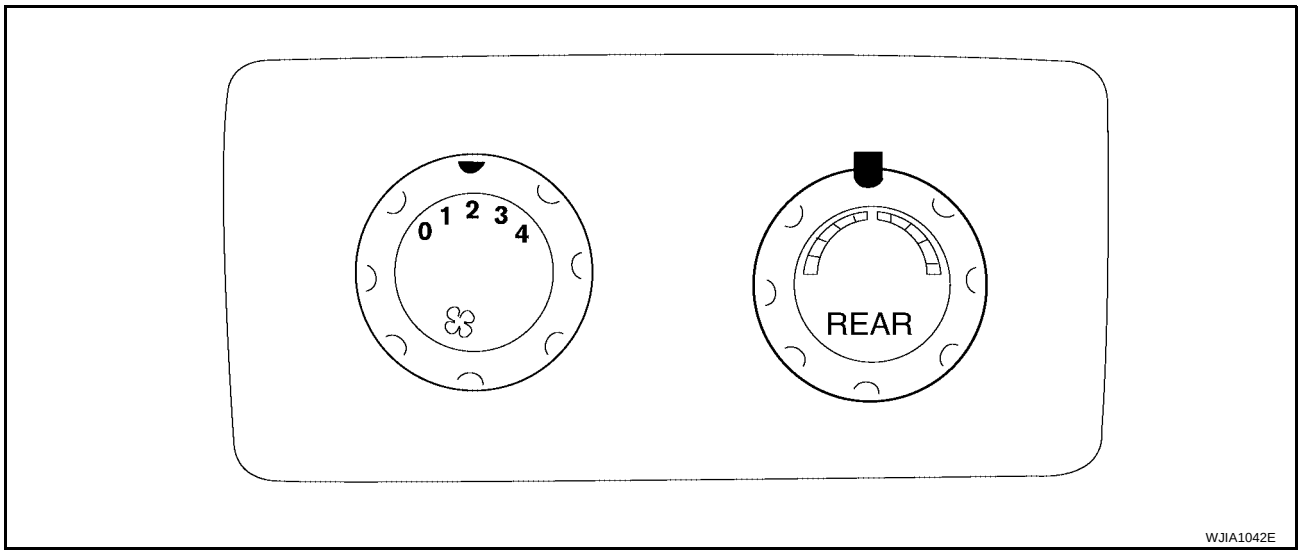


## TEMPERATURE CONTROL DIAL (TEMPERATURE AND MODE CONTROL)

The temperature increases or decreases the set temperature. The mode also changes from foot at full hot setting, to foot/vent at mid-range (warm) setting, and then to vent at full cold setting.

## REAR BLOWER CONTROL DIAL

When the rear blower switch (front) is in the OFF position, the rear blower motor cannot operate.
When the rear blower switch (front) is in the REAR position, it allows the rear blower switch (rear) to control the rear blower motor speed. In any other position (1-4), the rear blower switch (front) controls the rear blower motor speed regardless of the rear blower switch (rear) position.

## Discharge Air Flow

EJS005DR

### FRONT

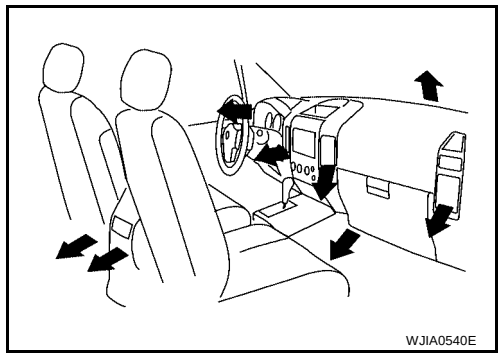


**Discharge air flow**

| Mode door position | Air outlet/distribution | | |
|---|---|---|---|
| | Vent | Foot | Defroster |
| | 100% | – | – |
| | 50% | 50% | – |
| | – | 75%(100%) | 25% (–) |
| | – | 60% | 40% |
| | – | – | 100% |

( ): Manually control

WJIA0528E

### REAR

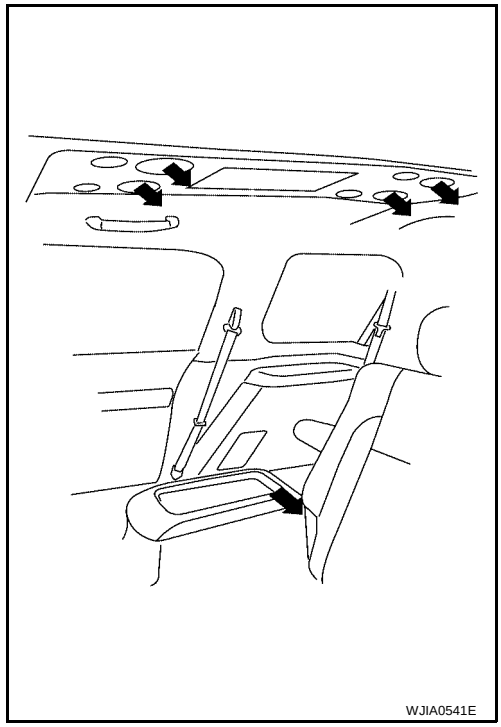


**Discharge air flow**

| Mode door position | Air outlet/distribution | |
|---|---|---|
| | Vent | Foot |
| | 100% | – |
| | 50% | 50% |
| | – | 100% |

WJIA1236E

## System Description (Front)

EJS005DS

### SWITCHES AND THEIR CONTROL FUNCTION

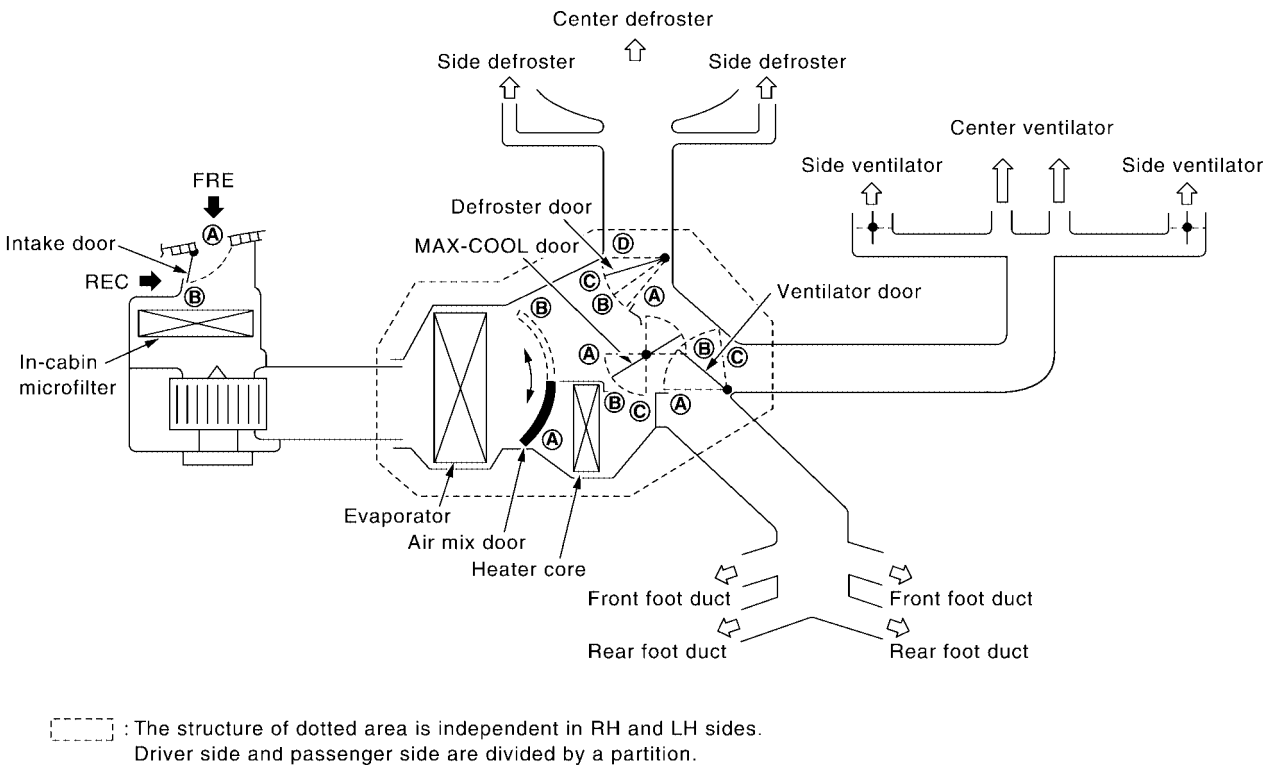


WJIA1680E

| Door \ Position or switch | MODE SW | | | | DEF SW | | REC SW | | Temperature control dial | | | OFF SW |
|---|---|---|---|---|---|---|---|---|---|---|---|---|
| | VENT | B/L | FOOT | D/F | ON | OFF | ON | OFF | | | | |
| | | | | | FRONT | | | | | | | OFF |
| | | | | | | ○ | | ○ | COLD | ~ | HOT | |
| Ventilator door | Ⓐ | Ⓑ | Ⓒ | Ⓒ | Ⓒ | ——— | ——— | | ——— | | | Ⓒ |
| MAX-COOL door | Ⓐ | Ⓑ | Ⓑ | Ⓑ | Ⓒ | | ——— | | ——— | | | Ⓑ |
| Defroster door | Ⓓ | Ⓓ | Ⓓ or Ⓒ | Ⓑ | Ⓐ | | ——— | | ——— | | | Ⓒ |
| Intake door | ——— | | | | Ⓑ | | Ⓐ | Ⓑ | ——— | | | Ⓑ |
| Air mix door | ——— | | | | ——— | | ——— | | Ⓐ | AUTO | Ⓑ | ——— |

WJIA1237E

## System Description (Rear)

EJS005DT

### SWITCHES AND THEIR CONTROL FUNCTION

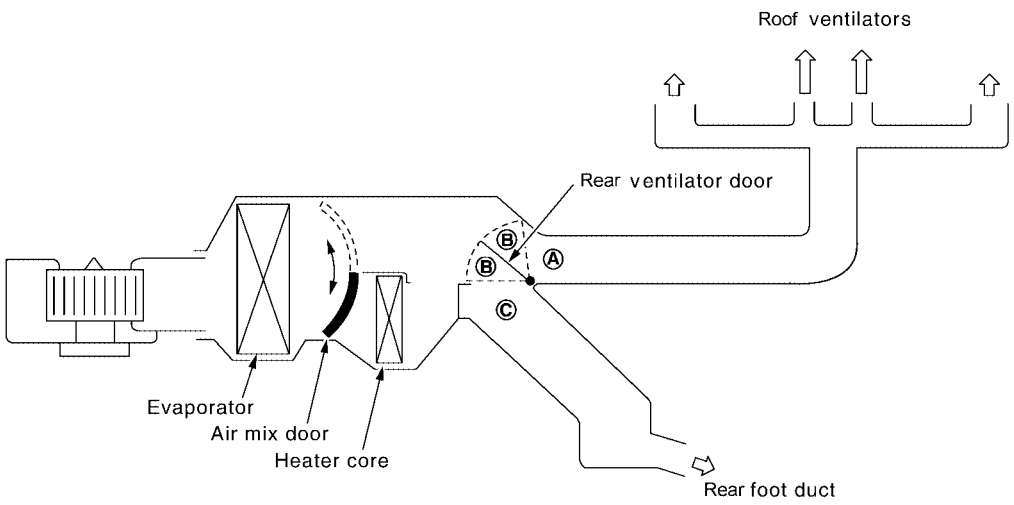


WJIA0623E

| Position or switch / Door | MODE SW | | | Temp Control Dial | | | OFF SW |
|---|---|---|---|---|---|---|---|
| | VENT | B/L | FOOT | COLD | ~ | HOT | OFF |
| Mode door | Ⓐ | Ⓑ | Ⓒ | —— | | | Ⓒ |
| Air mix door | —— | | | Ⓐ | AUTO | Ⓑ | —— |

WJIA1067E

## CAN Communication System Description

EJS005DU

Refer to LAN-4, "SYSTEM DESCRIPTION" .

# TROUBLE DIAGNOSIS

PFP:00004

## CONSULT-II Function (HVAC)

EJS005DV

CONSULT-II can display each diagnostic item using the diagnostic test modes shown following.

| Diagnostic mode | Description |
|---|---|
| SELF-DIAG RESULTS | Displays front air control self-diagnosis results. |
| DATA MONITOR | Displays front air control input/output data in real time. |
| CAN DIAG SUPPORT MNTR | The result of transmit/receive diagnosis of CAN communication can be read. |
| ECU PART NUMBER | Front air control part number can be read. |

### CONSULT-II START PROCEDURE

Refer to GI-38, "CONSULT-II Start Procedure" .

### SELF-DIAGNOSIS

#### Display Item List

| DTC | Description | Reference page |
|---|---|---|
| B2573 | Battery voltage out of range | SC-4, "BATTERY" |
| B2578 | In-vehicle sensor circuit out of range (low) | ATC-181, "In-vehicle Sensor Circuit" |
| B2579 | In-vehicle sensor circuit out of range (high) | |
| B257B | Ambient sensor circuit short | ATC-177, "Ambient Sensor Circuit" |
| B257C | Ambient sensor circuit open | |
| B257F | Optical sensor (Driver) circuit open or short | ATC-186, "Optical Sensor Circuit" |
| B2580 | Optical sensor (Passenger) circuit open or short | |
| B2581 | Intake sensor circuit short | ATC-189, "Intake Sensor Circuit" |
| B2582 | Intake sensor circuit open | |
| U1000 | CAN bus fault | LAN-4, "CAN Communication System" |
| B2587 | Stuck button | ATC-193, "FRONT AIR CONTROL" |

### DATA MONITOR

#### Display Item List

| Monitor item | Value | Contents |
|---|---|---|
| BATT VIA CAN | "V" | Displays battery voltage signal. |
| IGN VIA CAN | "ON/OFF" | Displays ignition switch signal. |
| DVR SUNLD SEN | "w/m2" | Displays optical sensor (driver) signal. |
| PAS SUNLD SEN | "w/m2" | Displays optical sensor (passenger) signal. |
| AMB TEMP SEN | "°C/°F" | Displays ambient sensor signal. |
| EVAP TEMP SEN | "°C/°F" | Displays intake sensor signal. |
| INCAR TMP SEN | "°C/°F" | Displays in-vehicle sensor signal. |
| RR TEMPSET FR | "V" | Displays air mix door (front) set point signal. |
| RR TEMPSET RR | "V" | Displays air mix door (rear) set point signal. |
| MODE FDBCK | "V" | Displays mode door motor feedback signal. |
| DVR MIX FDBCK | "V" | Displays air mix door motor (driver) feedback signal. |
| PAS MIX FDBCK | "V" | Displays air mix door motor (passenger) feedback signal. |
| RR FDBCK | "V" | Displays air mix door motor (rear) feedback signal. |
| DEF FDBCK | "V" | Displays defroster door motor feedback signal. |
| RECIRC | "ON/OFF" | Displays recirculation switch signal. |

| Monitor item | Value | Contents |
|---|---|---|
| DEFROST | "ON/OFF" | Displays defroster switch signal. |
| AUTO | "ON/OFF" | Displays AUTO switch signal. |
| A/C | "ON/OFF" | Displays A/C switch signal. |
| MODE | "ON/OFF" | Displays MODE switch signal. |
| L TEMP UP | "ON/OFF" | Displays driver side temperature control dial (temp increase) signal. |
| L TEMP DOWN | "ON/OFF" | Displays driver side temperature control dial (temp decrease) signal. |
| R TEMP UP | "ON/OFF" | Displays rear temperature control dial [front (temp increase)] signal. |
| R TEMP DOWN | "ON/OFF" | Displays rear temperature control dial [front (temp decrease)] signal. |
| RR DEFOG | "ON/OFF" | Displays rear defroster request signal. |
| FANUP | "ON/OFF" | Displays front blower motor (blower speed increase) signal. |
| FANDOWN | "ON/OFF" | Displays front blower motor (blower speed decrease) signal. |
| MODE SELECT | " [ PNL ]"<br>" [ MIX ]"<br>" [ FLR ]"<br>" [ DEFR ]"<br>" [ MAX ]"<br>" [ DENT ]" | Displays mode door motor position. |

*: DENT is displayed when MODE switch is between selections.

## CONSULT-II Function (BCM)

EJS005DW

CONSULT-II can display each diagnostic item using the diagnostic test modes shown following.

| BCM diagnostic test item | Diagnostic mode | Description |
|---|---|---|
| Inspection by part | WORK SUPPORT | Supports inspections and adjustments. Commands are transmitted to the BCM for setting the status suitable for required operation, input/output signals are received from the BCM and received data is displayed. |
| | DATA MONITOR | Displays BCM input/output data in real time. |
| | ACTIVE TEST | Operation of electrical loads can be checked by sending drive signal to them. |
| | SELF-DIAG RESULTS | Displays BCM self-diagnosis results. |
| | CAN DIAG SUPPORT MNTR | The result of transmit/receive diagnosis of CAN communication can be read. |
| | ECU PART NUMBER | BCM part number can be read. |
| | CONFIGURATION | Performs BCM configuration read/write functions. |

### CONSULT-II START PROCEDURE

Refer to GI-38, "CONSULT-II Start Procedure" .

### DATA MONITOR

### Display Item List

| Monitor item name “operation or unit” | | Contents |
|---|---|---|
| IGN ON SW | “ON/OFF” | Displays “IGN Position (ON)/OFF, ACC Position (OFF)” status as judged from ignition switch signal. |
| COMP ON SIG | “ON/OFF” | Displays “COMP (ON)/COMP (OFF)” status as judged from air conditioner switch signal. |
| FAN ON SIG | “ON/OFF” | Displays “FAN (ON)/FAN (OFF)” status as judged from blower motor switch signal. |

## How to Perform Trouble Diagnosis for Quick and Accurate Repair

EJS005DX

### WORK FLOW

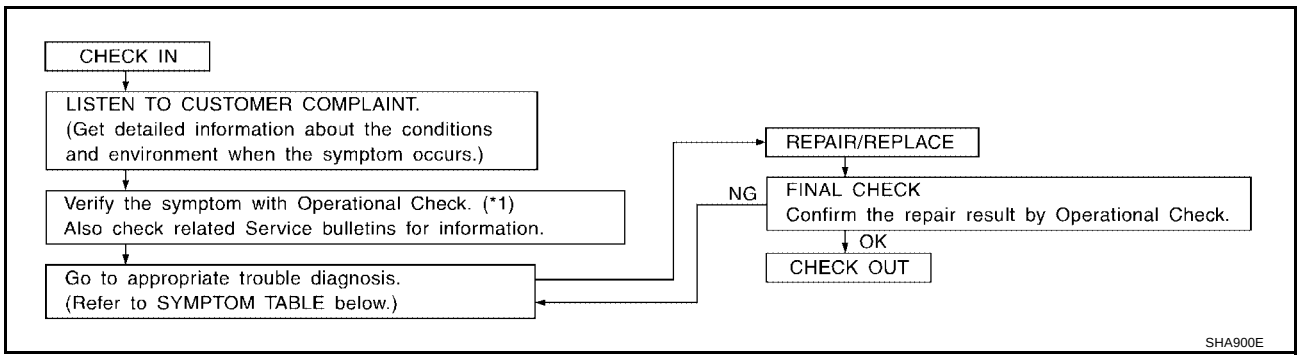


*1 ATC-69, "Operational Check (Front)" or ATC-71, "Operational Check (Rear)" .

### SYMPTOM TABLE

| Symptom | Reference Page | |
|---|---|---|
| A/C system does not come on. | Go to Trouble Diagnosis Procedure for A/C System. | ATC-72 |
| A/C system display is malfunctioning (with navi). | Go to Navigation System. | AV-88 |
| A/C system display is malfunctioning (without navi). | Go to Control Unit. | ATC-193 |
| A/C system cannot be controlled. | Go to Self-diagnosis Function. | ATC-67 |
| Air outlet does not change. | Go to Trouble Diagnosis Procedure for Mode Door Motor. | ATC-76 |
| Mode door motor is malfunctioning. | | |

| Symptom | Reference Page | |
|---|---|---|
| Discharge air temperature does not change. | Go to Trouble Diagnosis Procedure for Air Mix Door Motor. | ATC-86 |
| Air mix door motor is malfunctioning. | | |
| Intake door does not change. | Go to Trouble Diagnosis Procedure for Intake Door Motor. | ATC-110 |
| Intake door motor is malfunctioning. | | |
| Defroster door motor is malfunctioning. | Go to Trouble Diagnosis Procedure for Defroster Door Motor. | ATC-115 |
| Front blower motor operation is malfunctioning. | Go to Trouble Diagnosis Procedure for Front Blower Motor. | ATC-124 |
| Rear blower motor operation is malfunctioning. | Go to Trouble Diagnosis Procedure for Rear Blower Motor. | ATC-136 |
| Rear discharge air temperature and/or air outlet does not change. | Go to Trouble Diagnosis Procedure for Rear Air Control circuit. | ATC-147 |
| Magnet clutch does not engage. | Go to Trouble Diagnosis Procedure for Magnet Clutch. | ATC-150 |
| Insufficient cooling | Go to Trouble Diagnosis Procedure for Insufficient Cooling. | ATC-159 |
| Insufficient heating | Go to Trouble Diagnosis Procedure for Insufficient Heating. | ATC-167 |
| Noise | Go to Trouble Diagnosis Procedure for Noise. | ATC-169 |
| Self-diagnosis cannot be performed. | Go to Trouble Diagnosis Procedure for Self-diagnosis. | ATC-171 |
| Memory function does not operate. | Go to Trouble Diagnosis Procedure for Memory Function. | ATC-173 |

## Component Parts and Harness Connector Location

EJS005DY

### ENGINE COMPARTMENT

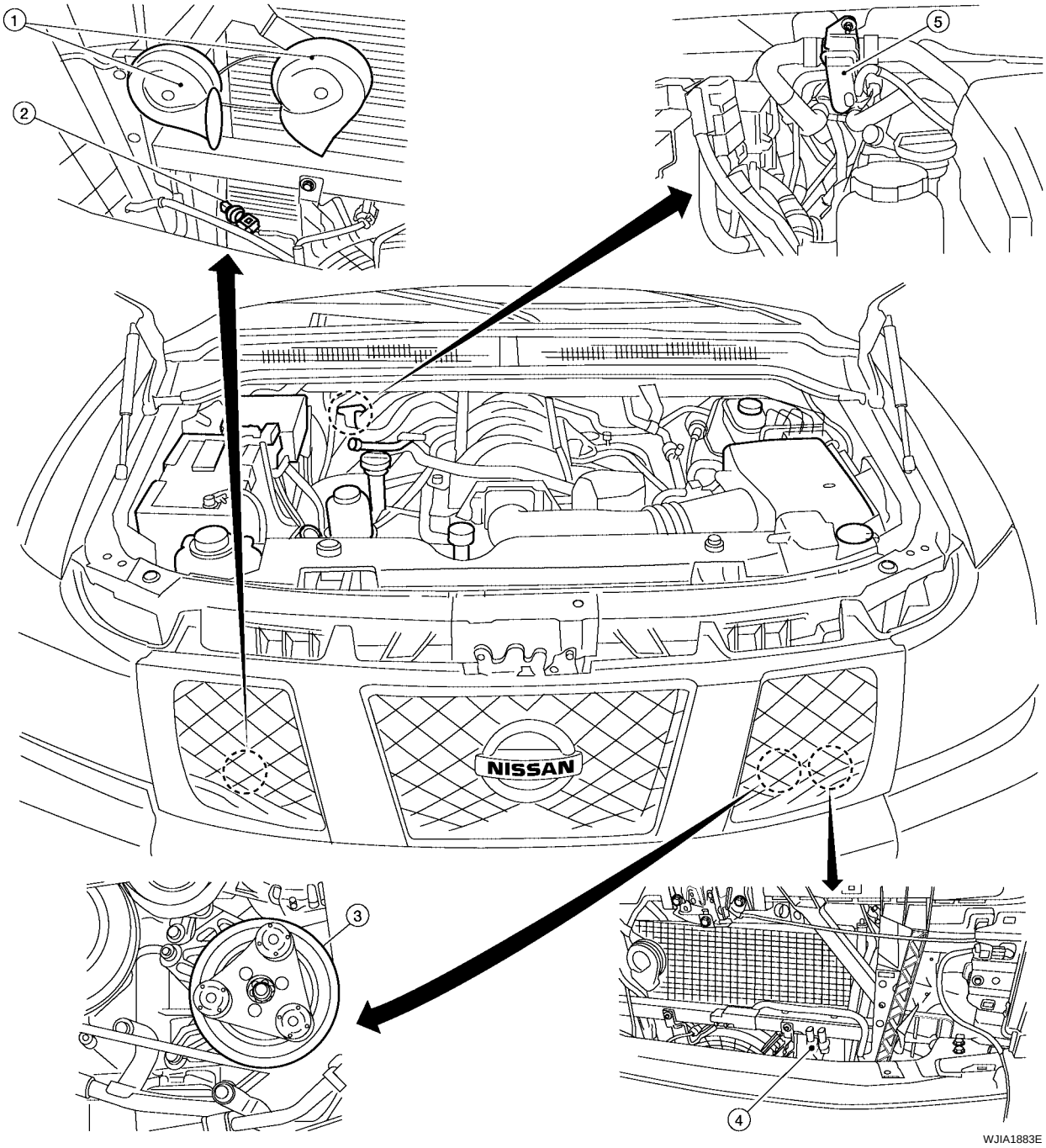


1. Horn (view with grille removed)
2. Refrigerant pressure sensor E111 (view with grille removed)
3. A/C Compressor F3
4. Ambient sensor E1
5. Water valve F68

## FRONT PASSENGER COMPARTMENT

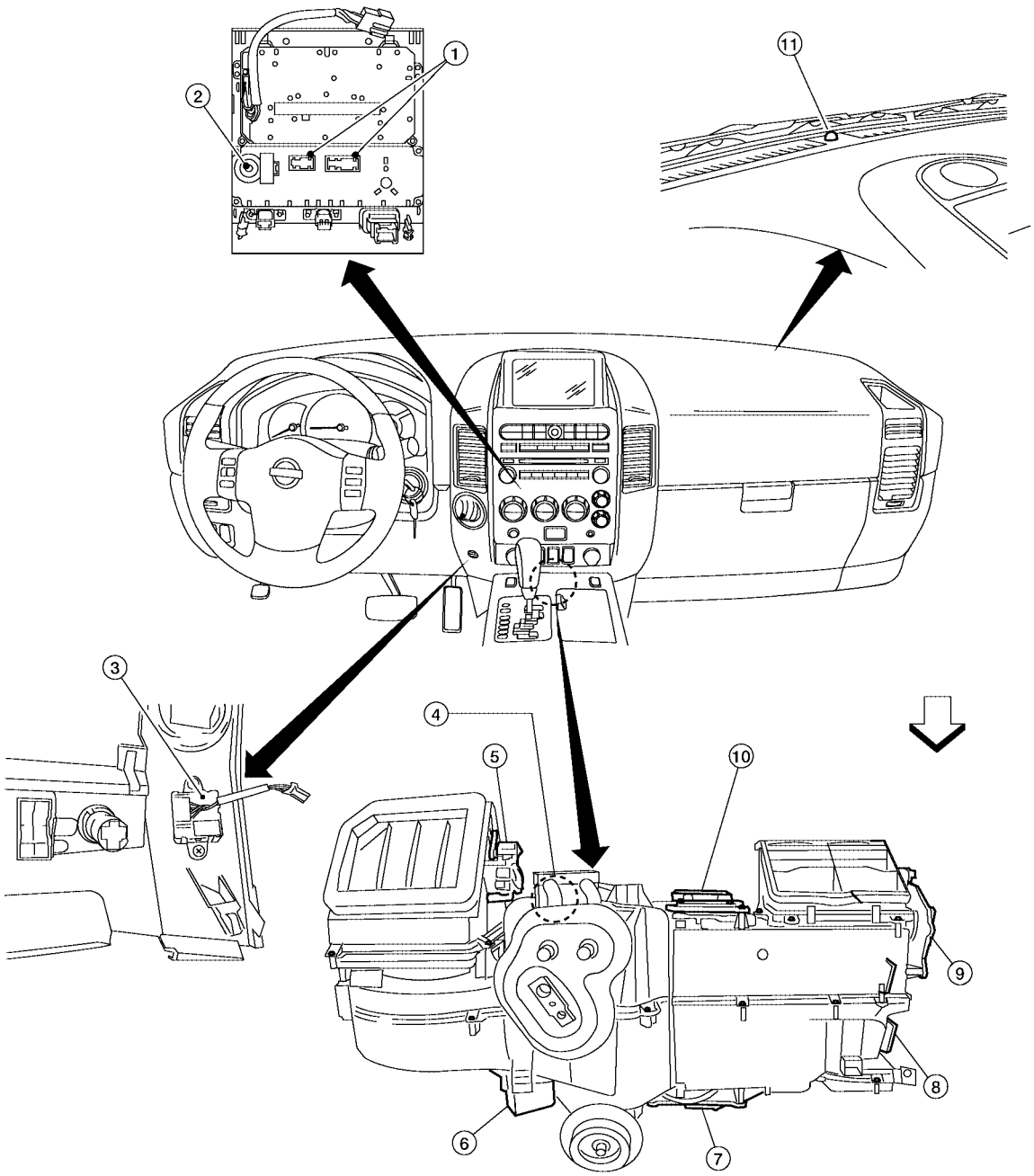


WJIA1884E

| | | | | | |
|---|---|---|---|---|---|
| 1. | Front air control M49, M50 | 2. | Rear blower switch (front) M52 | 3. | In-vehicle sensor M32 |
| 4. | Intake sensor M146 | 5. | Intake door motor M58 | 6. | Variable blower control M122 |
| 7. | Air mix door motor (passenger) M143 | 8. | Mode door motor M142 | 9. | Defroster door motor M144 |
| 10. | Air mix door motor (driver) M147 | 11. | Optical sensor M402 | ⇐ | : Front |

## REAR PASSENGER COMPARTMENT

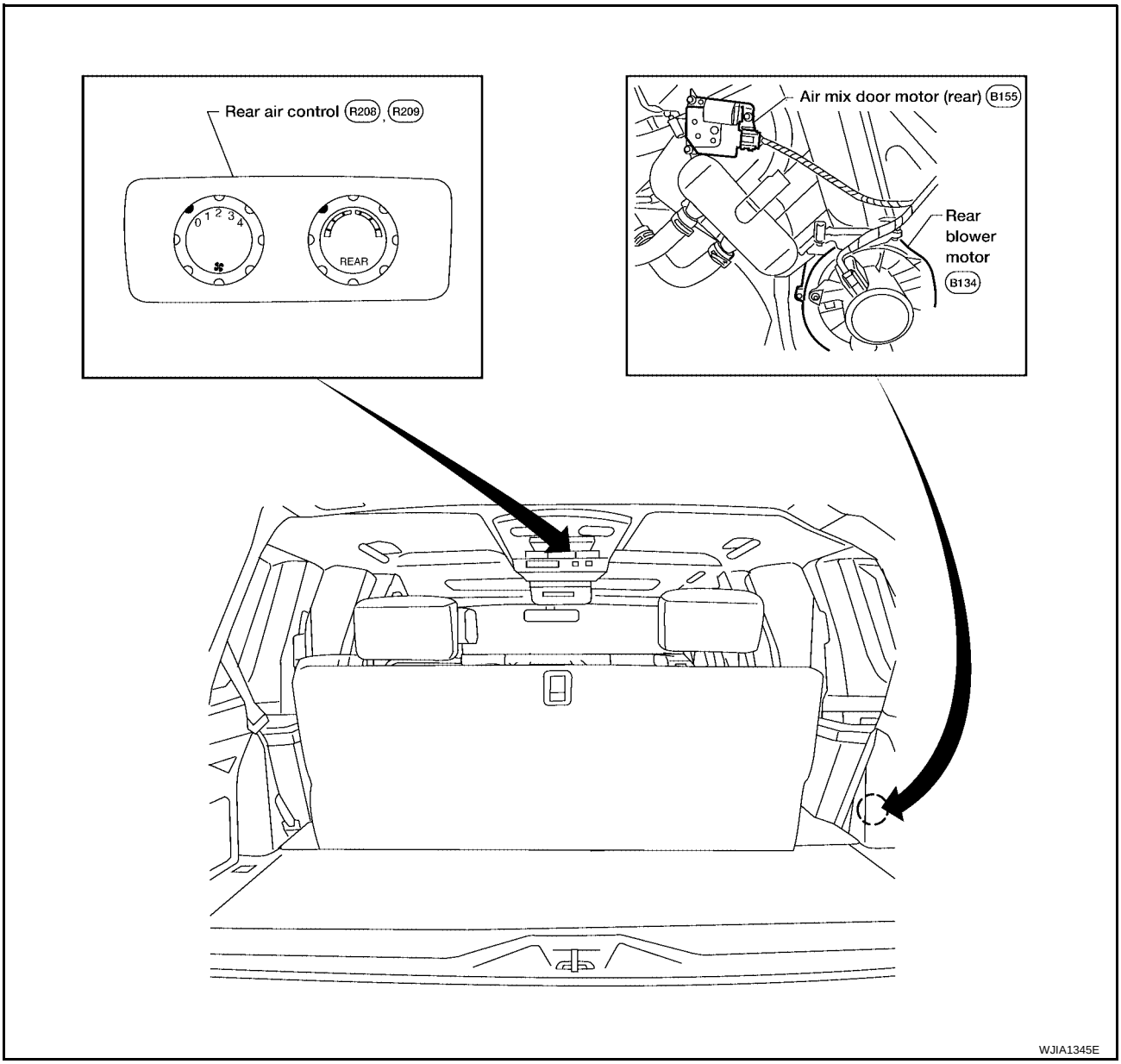

## Schematic
### WITH NAVI

EJS005DZ

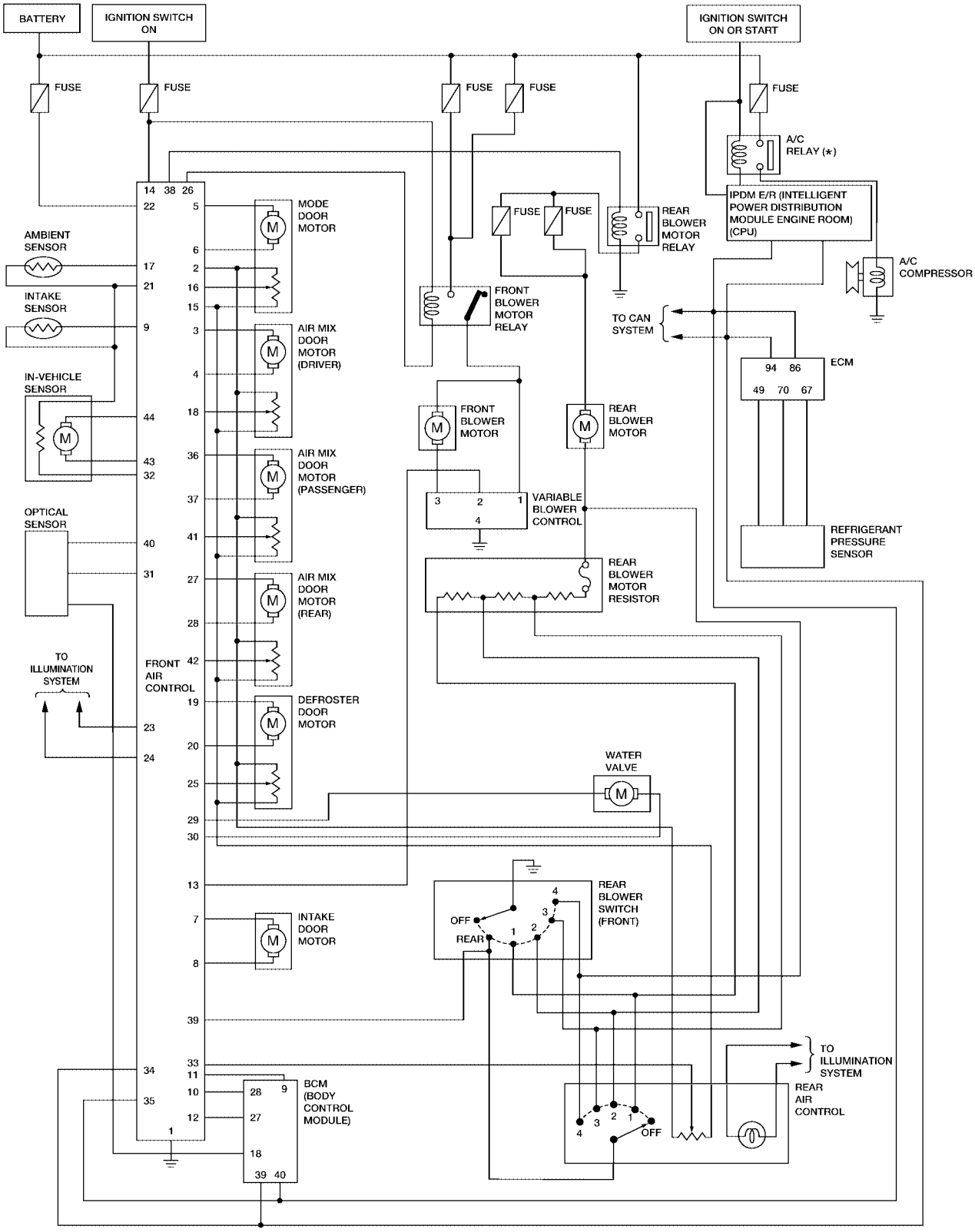


* : THIS RELAY IS BUILT INTO THE IPDM E/R (INTELLIGENT POWER DISTRIBUTION MODULE ENGINE ROOM).

WJWA0288E

## WITHOUT NAVI

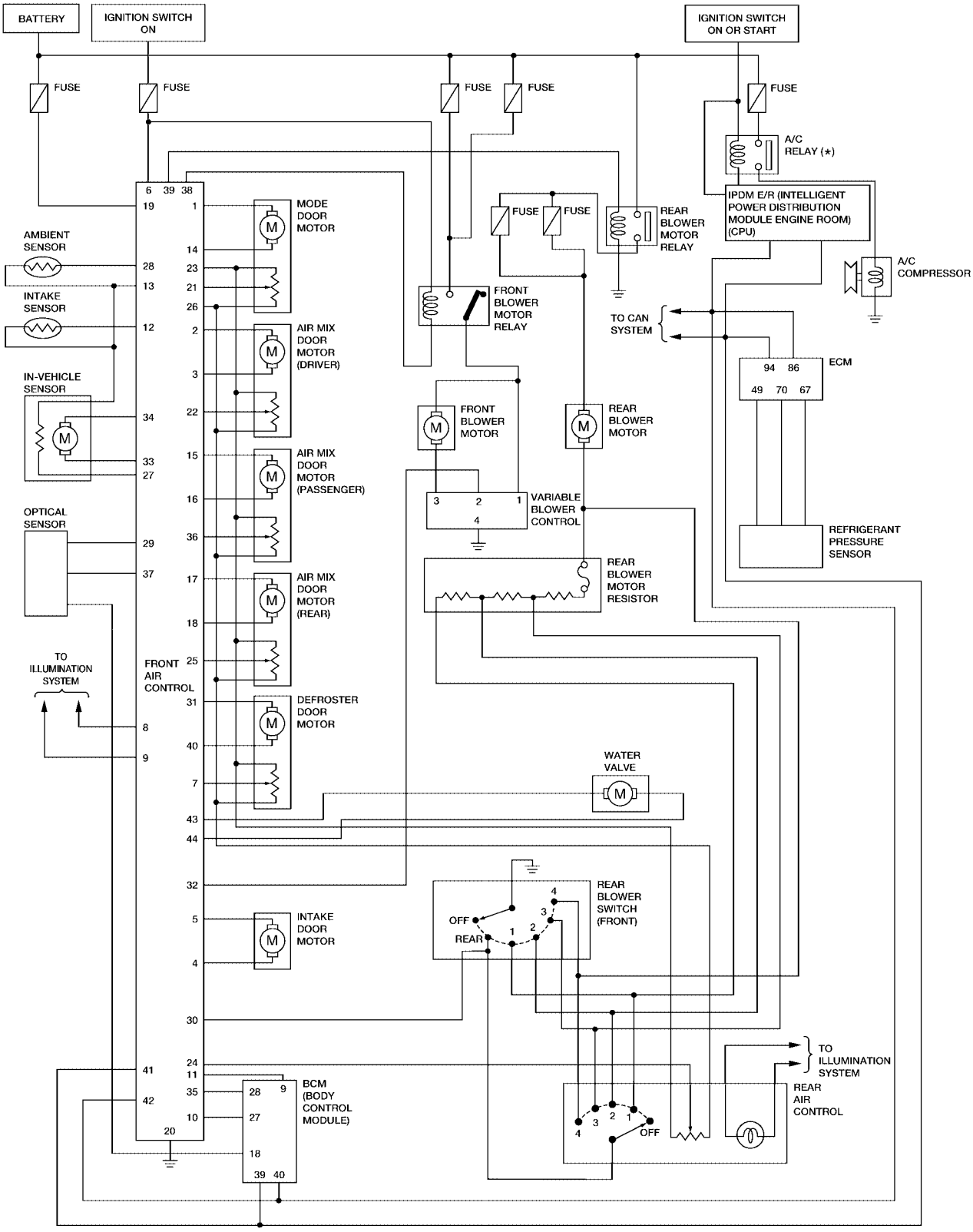


* : THIS RELAY IS BUILT INTO THE IPDM E/R (INTELLIGENT POWER DISTRIBUTION MODULE ENGINE ROOM).

WJWA0299E

## Wiring Diagram — A/C,A —
### WITH NAVI

EJS005E0

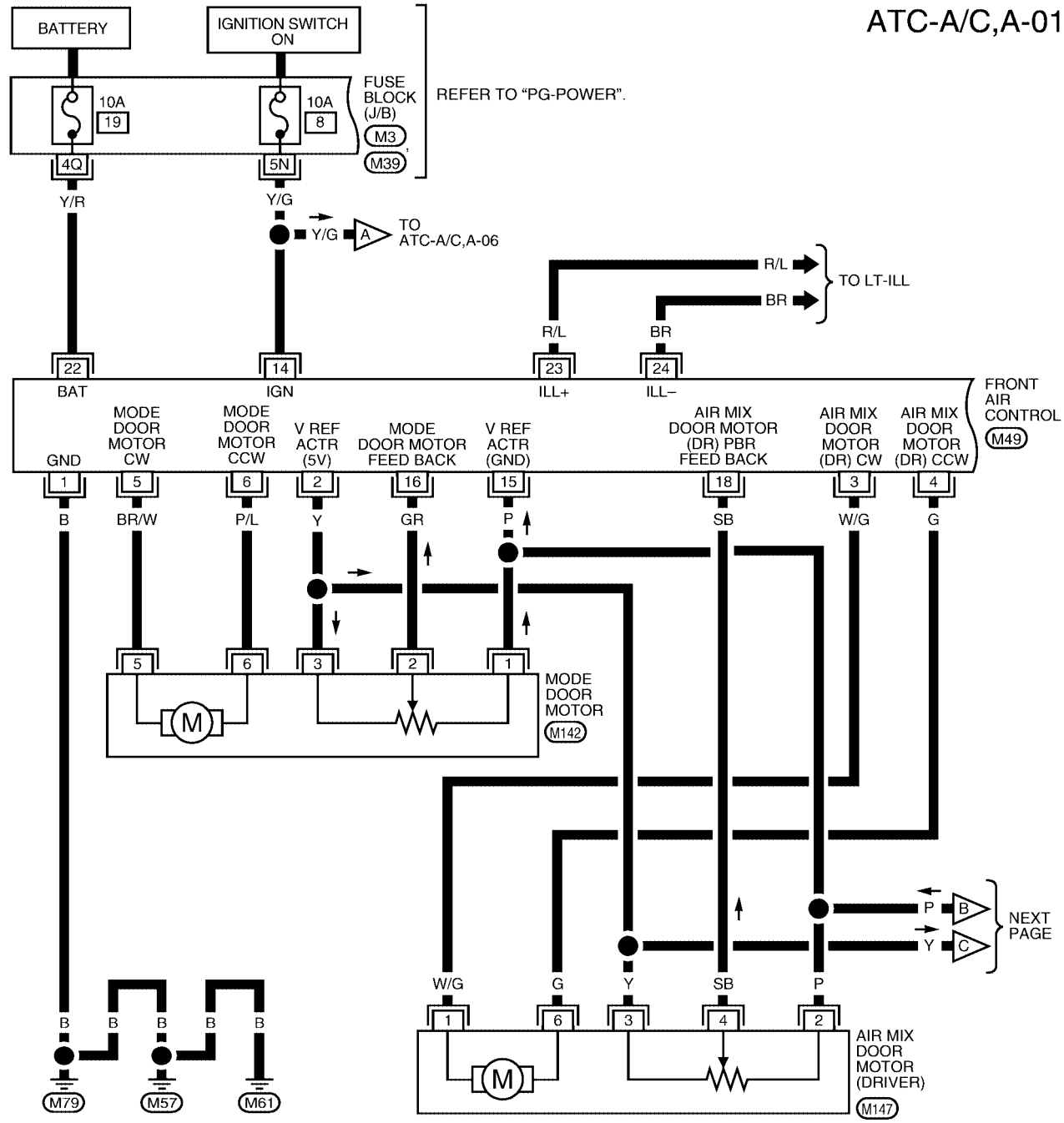


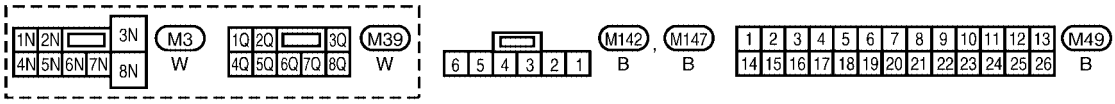


WJWA0289E

ATC-A/C,A-02

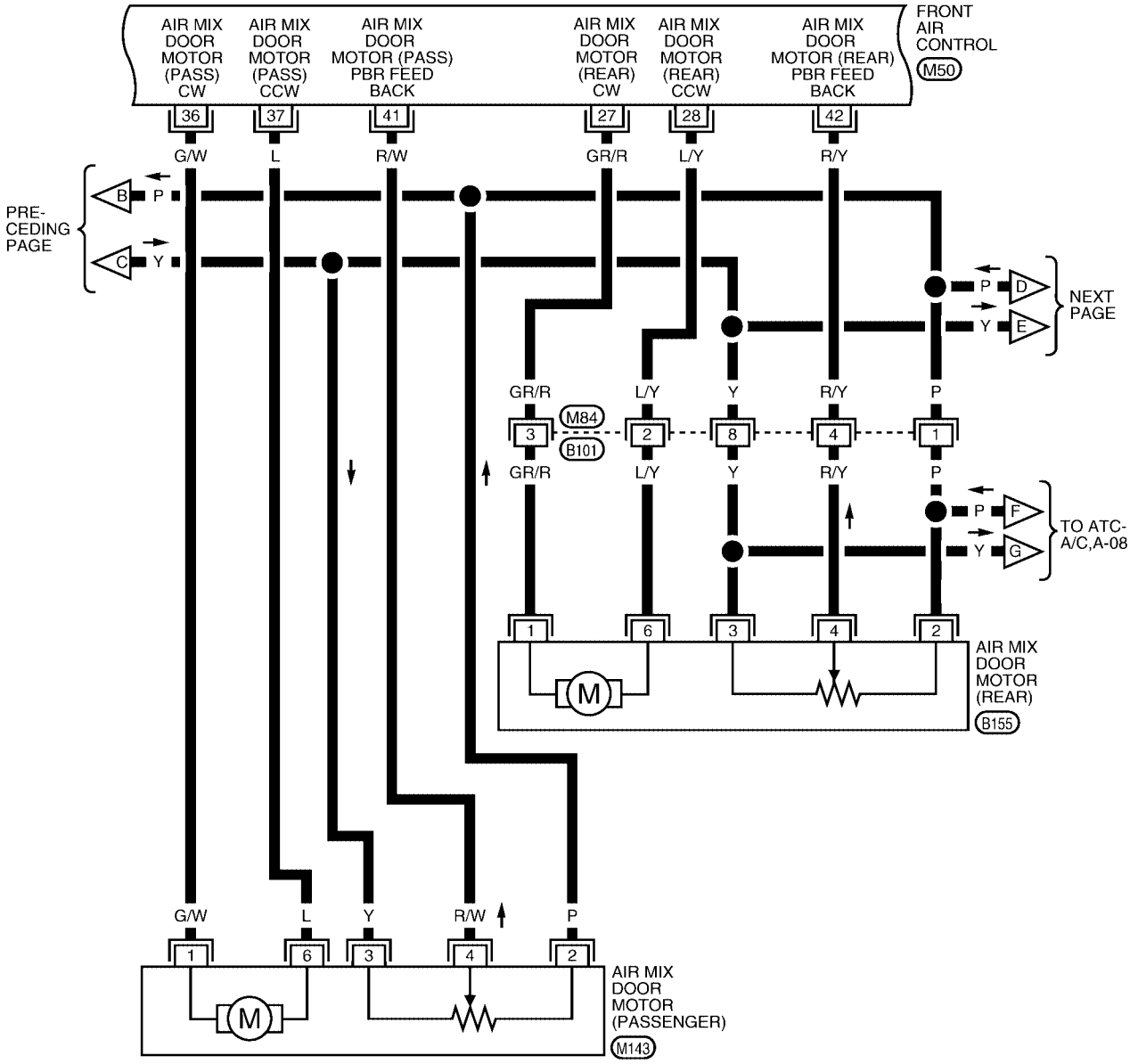


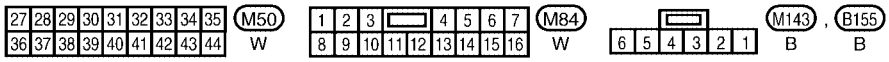


WJWA0290E

ATC-A/C,A-03

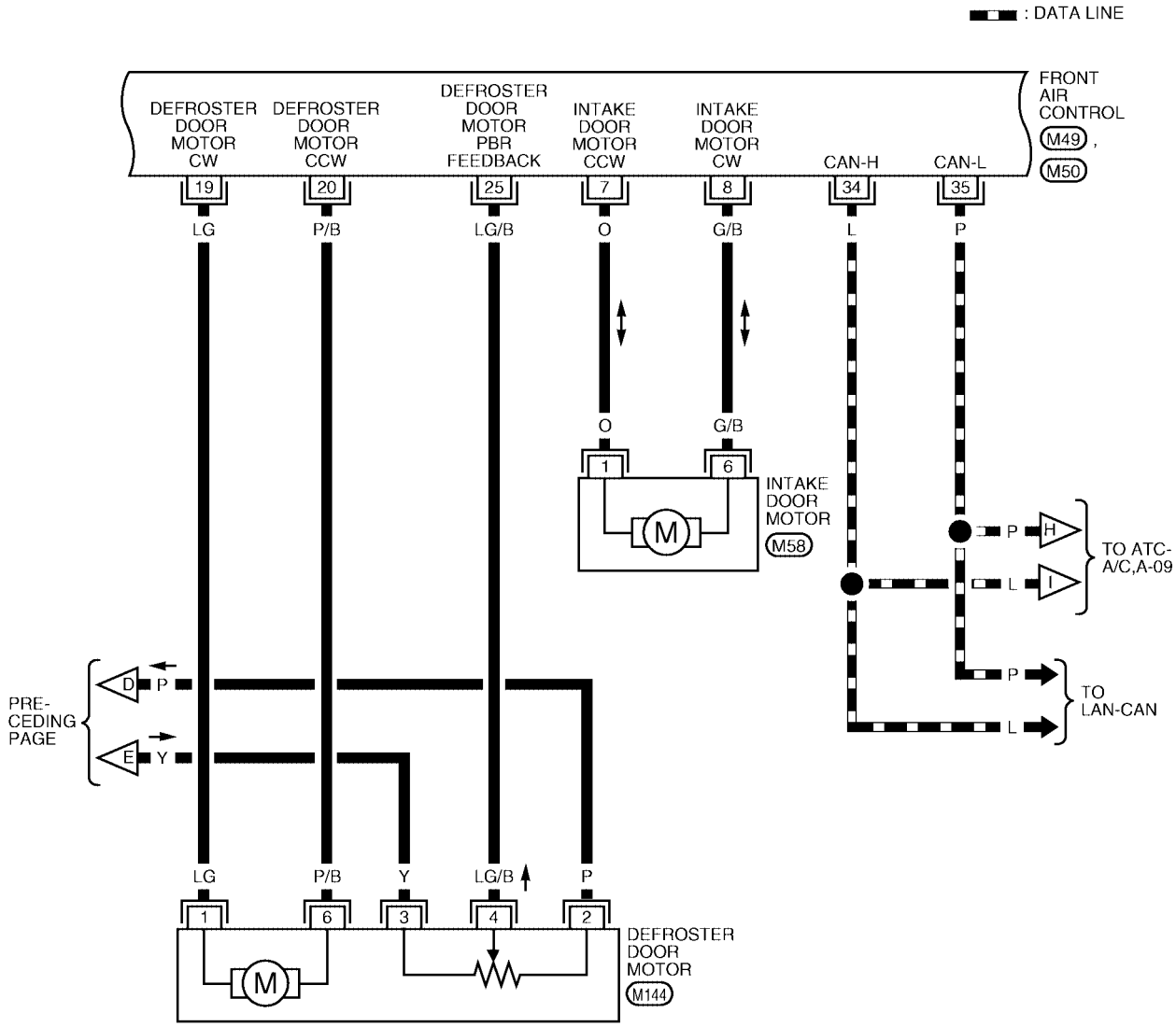


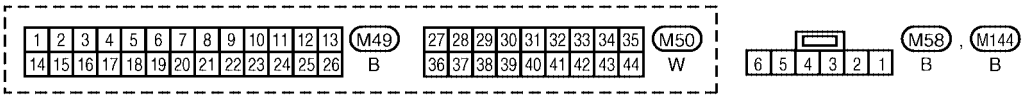


WJWA0291E

ATC-A/C,A-04

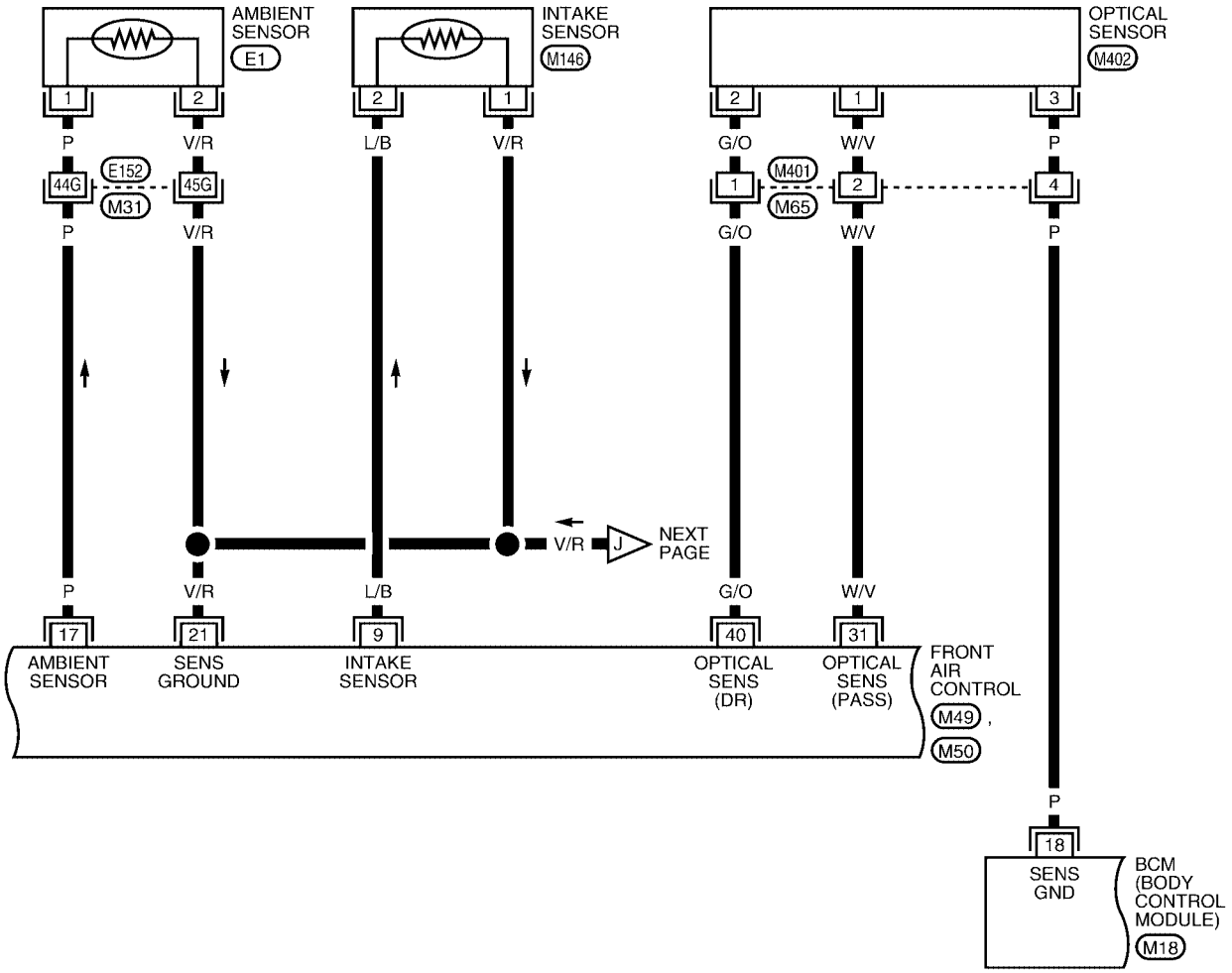


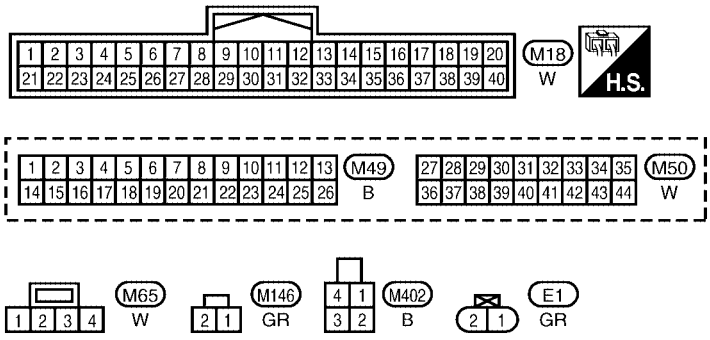


REFER TO THE FOLLOWING.
M31 - SUPER MULTIPLE JUNCTION (SMJ)

WJWA0292E

ATC-A/C,A-05

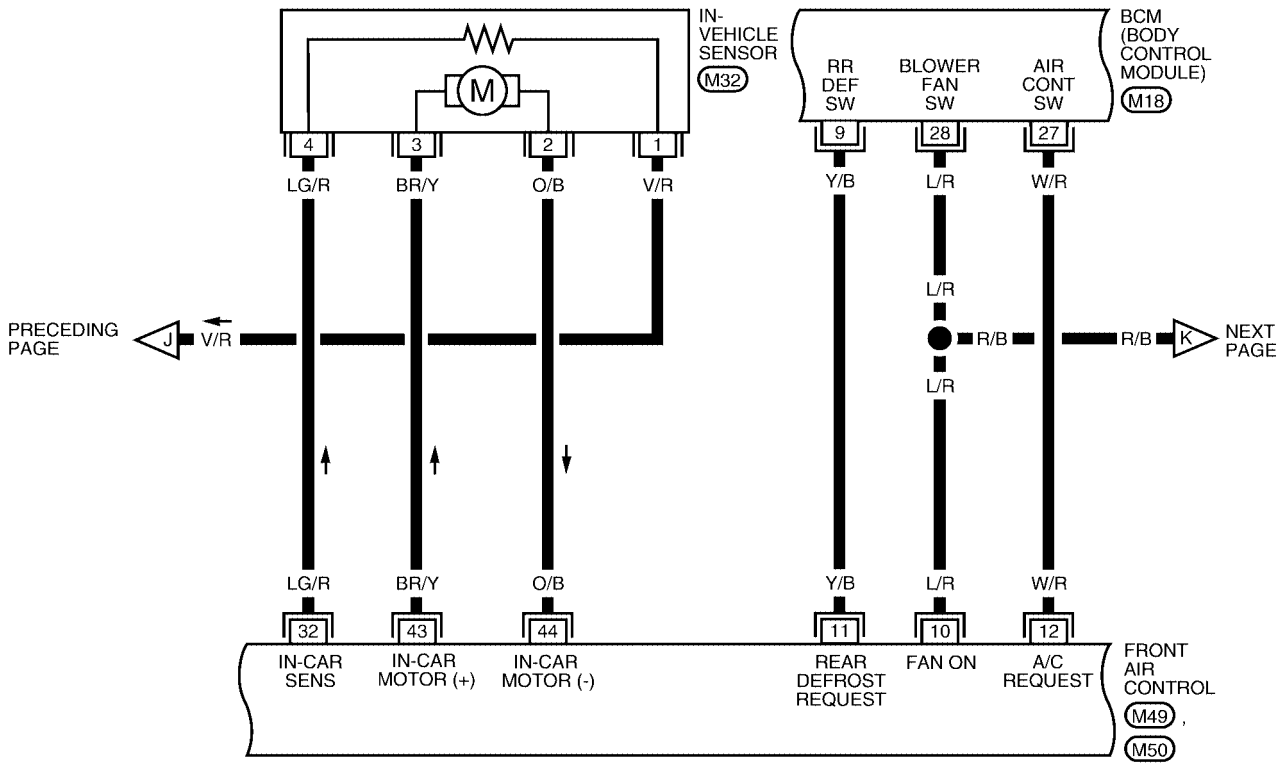


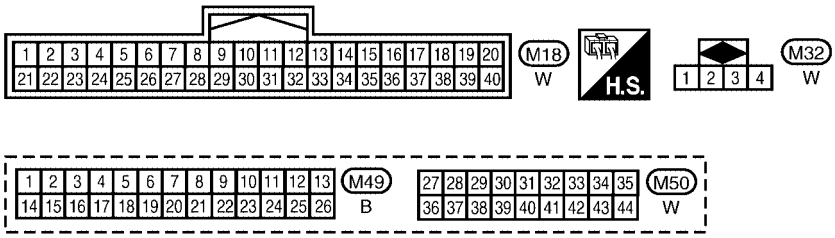


WJWA0293E

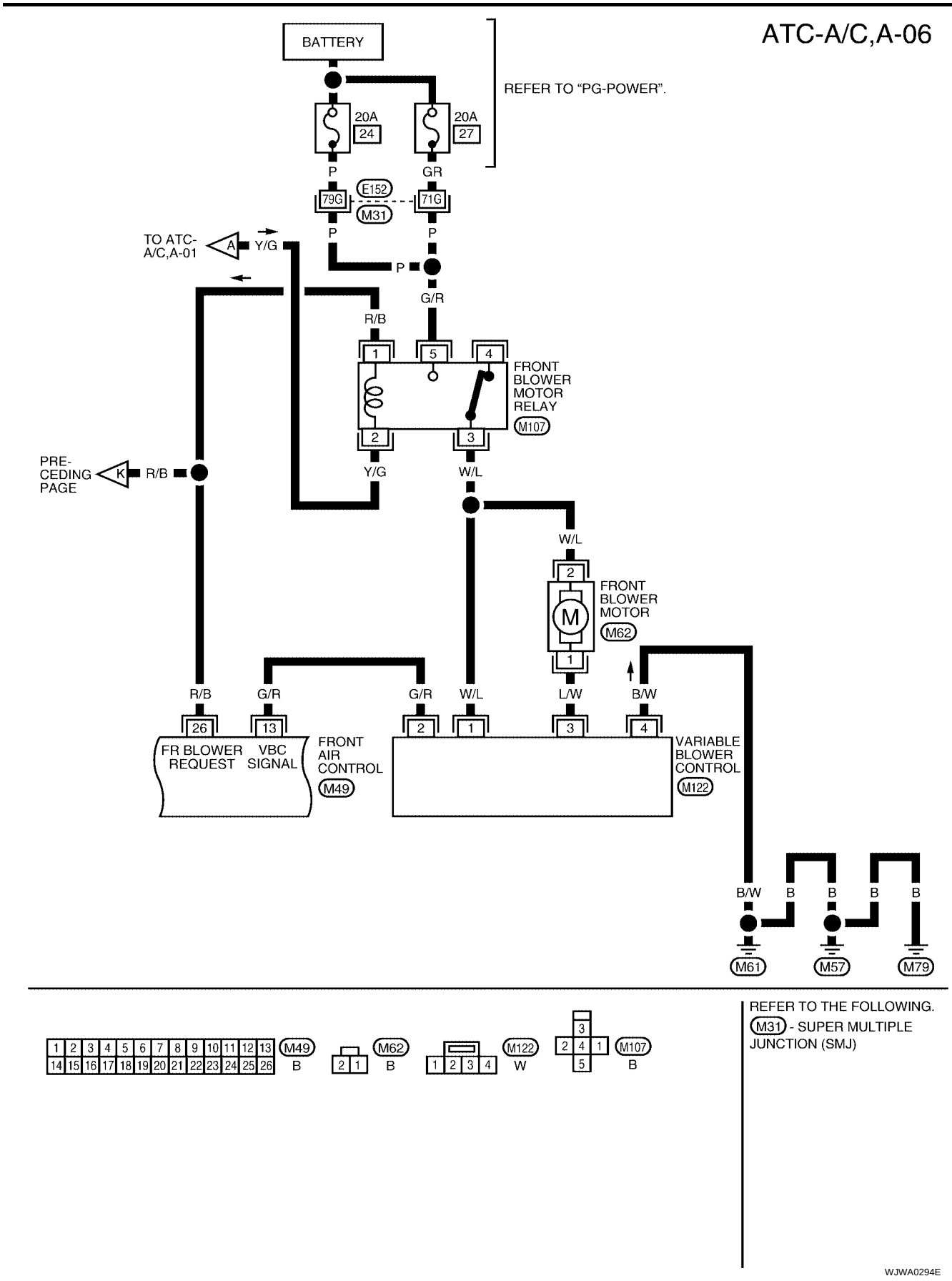
ATC-A/C,A-06
BATTERY
REFER TO "PG-POWER".
20A
24
20A
27
P
GR
E152
79G
71G
M31
TO ATC-A/C,A-01
A
Y/G
P
G/R
R/B
1
5
4
FRONT BLOWER MOTOR RELAY
M107
2
3
PRE-CEDING PAGE
K
R/B
Y/G
W/L
W/L
2
FRONT BLOWER MOTOR
M62
1
R/B
G/R
G/R
W/L
L/W
B/W
26
13
2
1
3
4
FR BLOWER REQUEST
VBC SIGNAL
FRONT AIR CONTROL
M49
VARIABLE BLOWER CONTROL
M122
B/W
B
B
B
B
M61
M57
M79
M49
B
M62
B
M122
W
M107
B
REFER TO THE FOLLOWING.
M31 - SUPER MULTIPLE JUNCTION (SMJ)
WJWA0294E

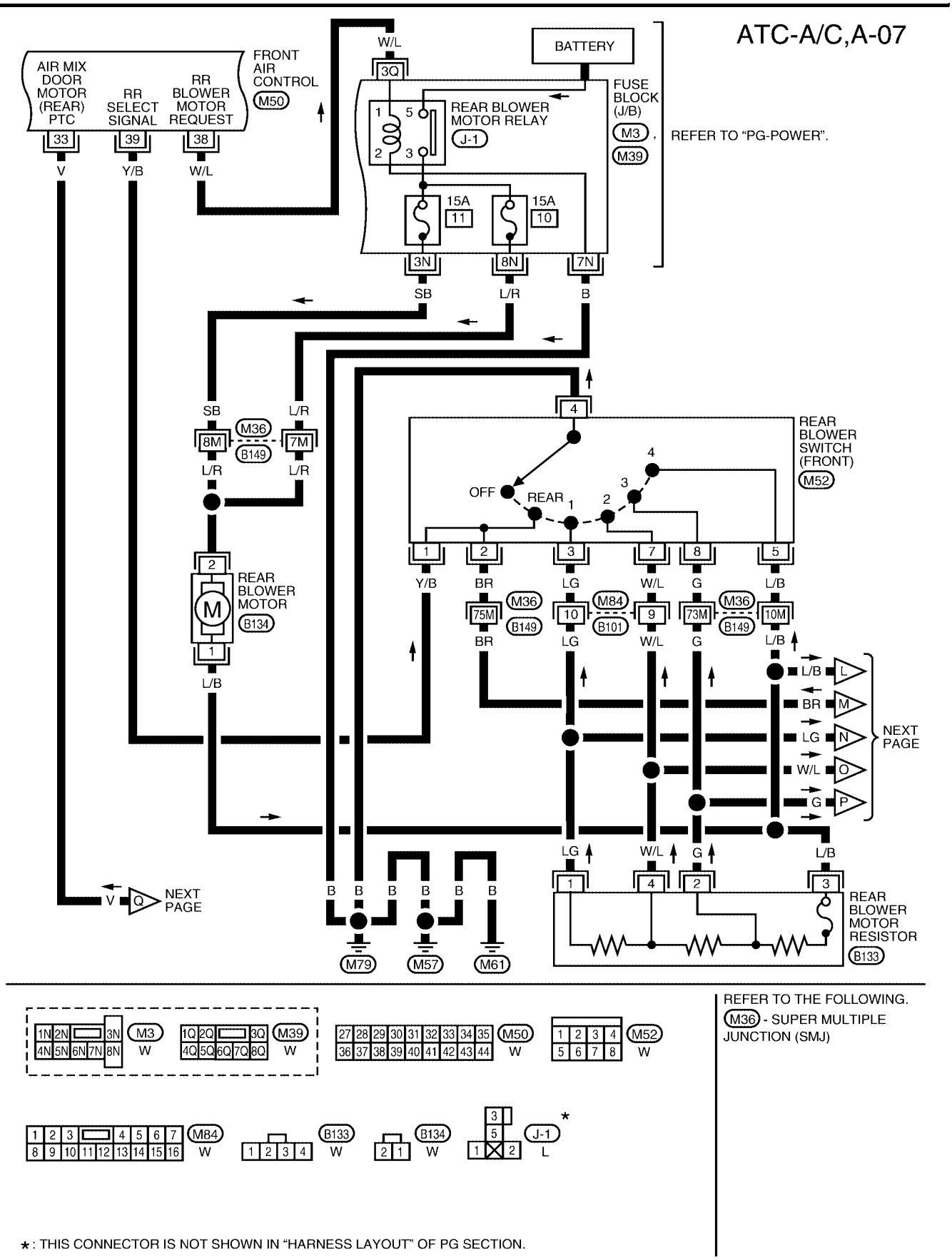


REFER TO THE FOLLOWING.
M36 - SUPER MULTIPLE JUNCTION (SMJ)

*: THIS CONNECTOR IS NOT SHOWN IN "HARNESS LAYOUT" OF PG SECTION.

WJWA0295E

ATC-A/C,A-08

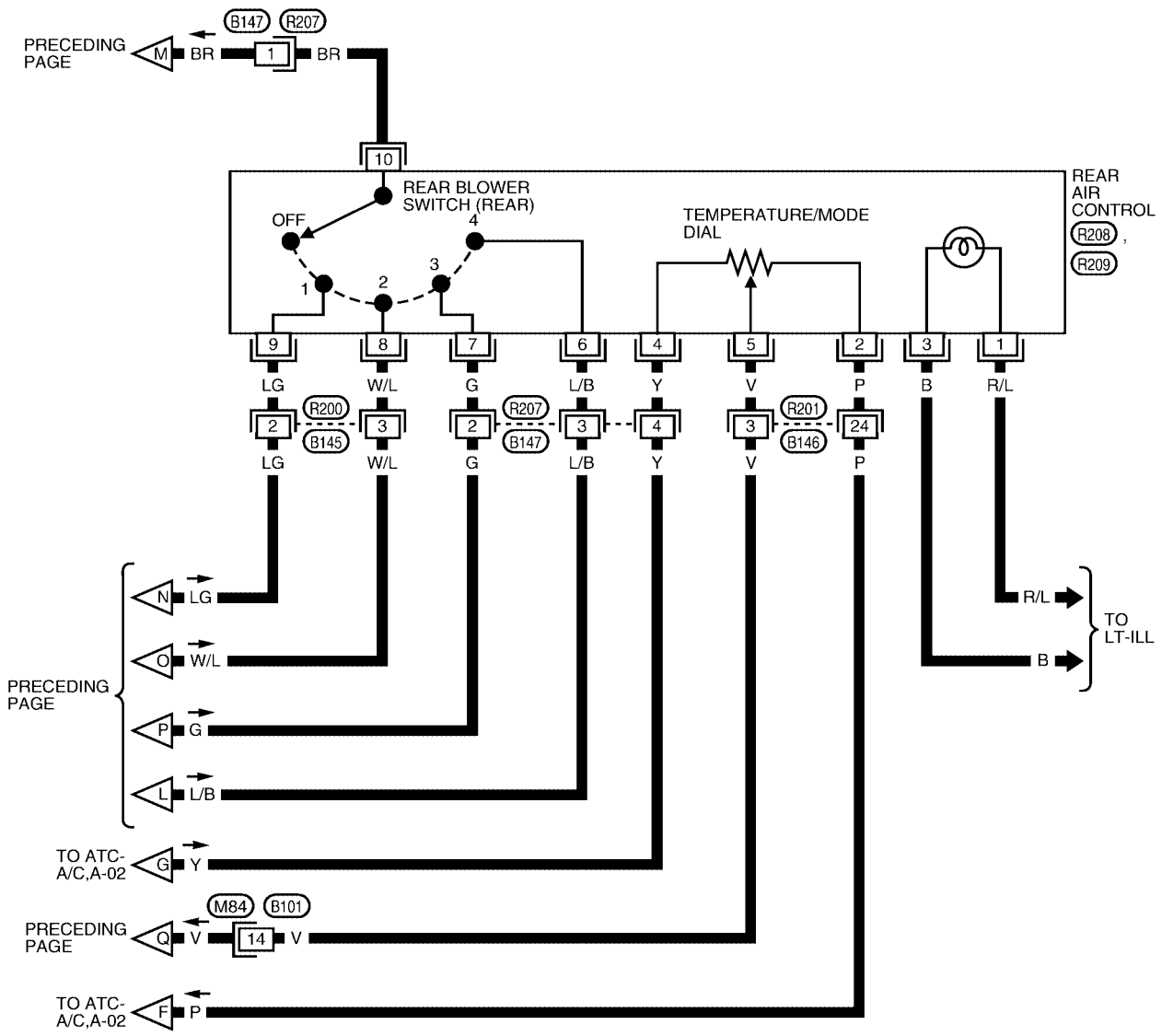


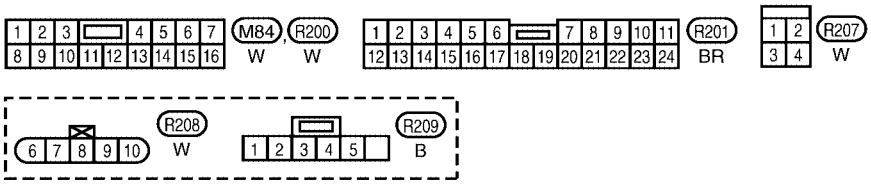


WJWA0296E

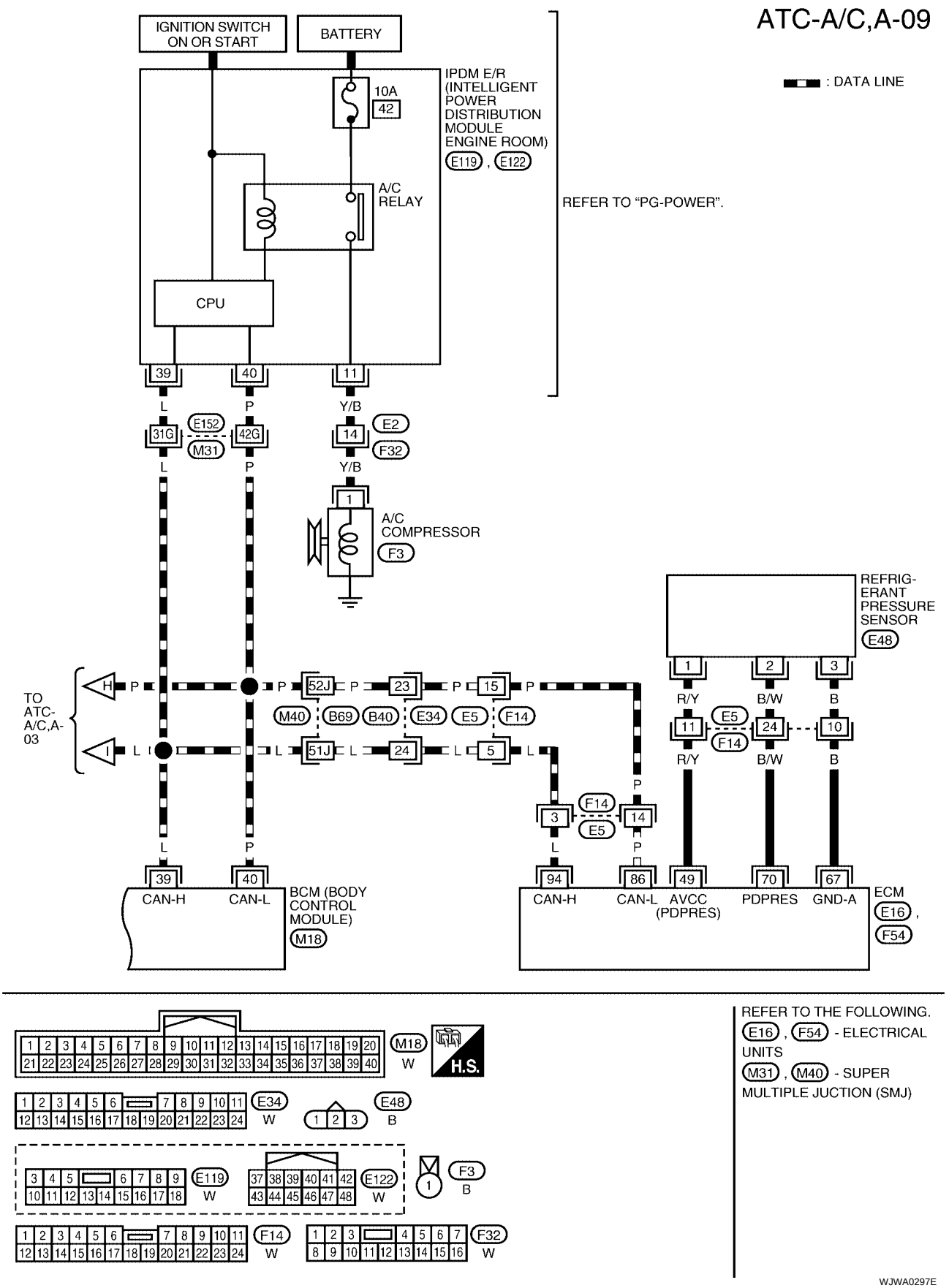
ATC-A/C,A-09
: DATA LINE
IGNITION SWITCH ON OR START
BATTERY
10A
42
IPDM E/R (INTELLIGENT POWER DISTRIBUTION MODULE ENGINE ROOM)
E119 , E122
A/C RELAY
CPU
REFER TO "PG-POWER".
39
40
11
L
P
Y/B
31G
E152
M31
42G
14
E2
F32
A/C COMPRESSOR
F3
REFRIG-ERANT PRESSURE SENSOR
E48
TO ATC-A/C,A-03
H
I
52J
23
15
M40
B69
B40
E34
E5
F14
51J
24
5
R/Y
B/W
B
11
10
3
94
86
49
70
67
CAN-H
CAN-L
BCM (BODY CONTROL MODULE)
M18
AVCC (PDPRES)
PDPRES
GND-A
ECM
E16 , F54
M18
W
H.S.
E34
W
E48
B
E119
W
E122
W
F3
B
F14
W
F32
W
REFER TO THE FOLLOWING.
E16 , F54 - ELECTRICAL UNITS
M31 , M40 - SUPER MULTIPLE JUCTION (SMJ)
WJWA0297E

ATC-A/C,A-10

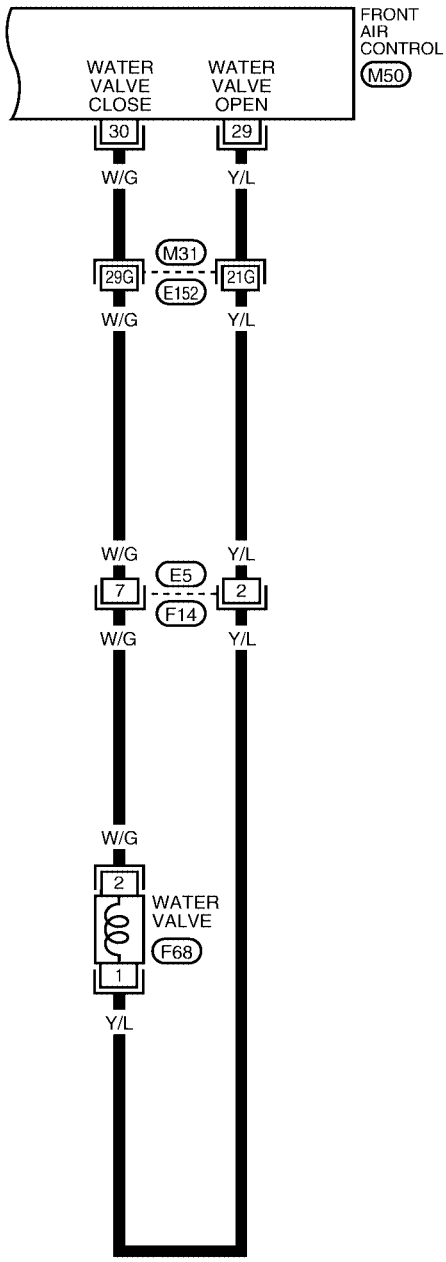


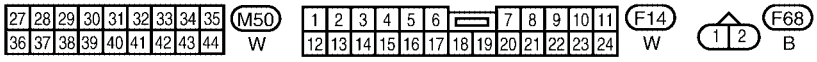


REFER TO THE FOLLOWING.
M31 - SUPER MULTIPLE JUNCTION (SMJ)

WJWA0298E

## WITHOUT NAVI

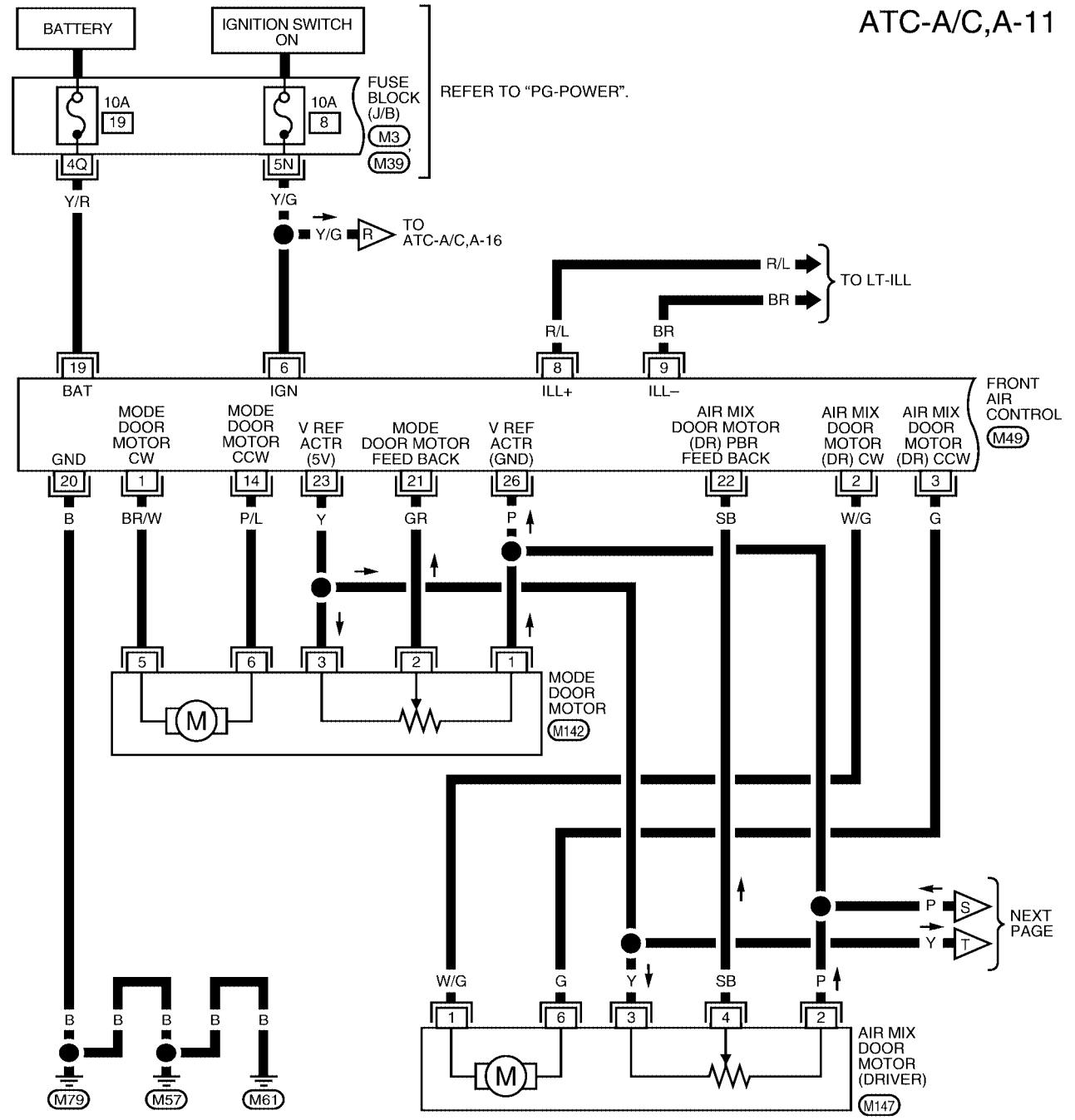


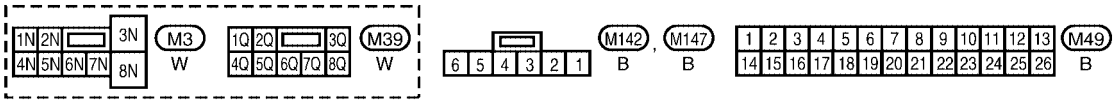


WJWA0300E

ATC-A/C,A-12

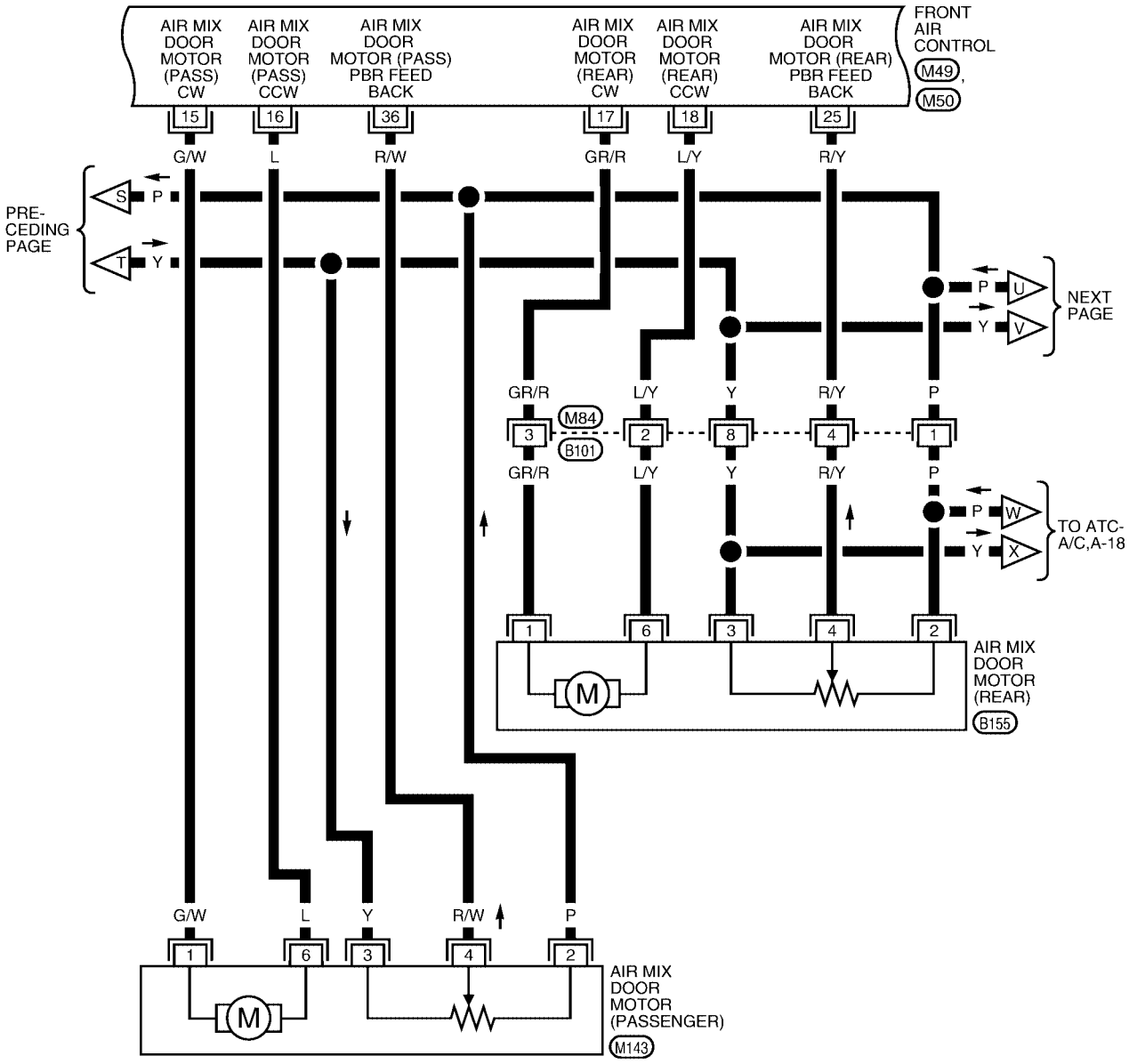


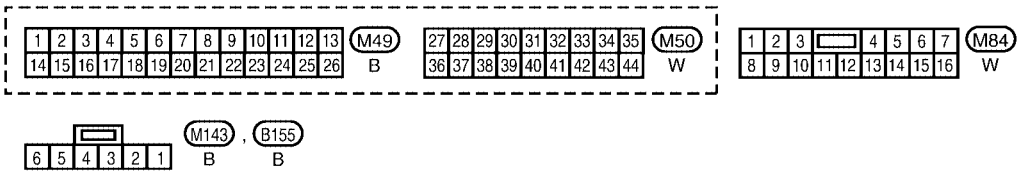


WJWA0301E

ATC-A/C,A-13

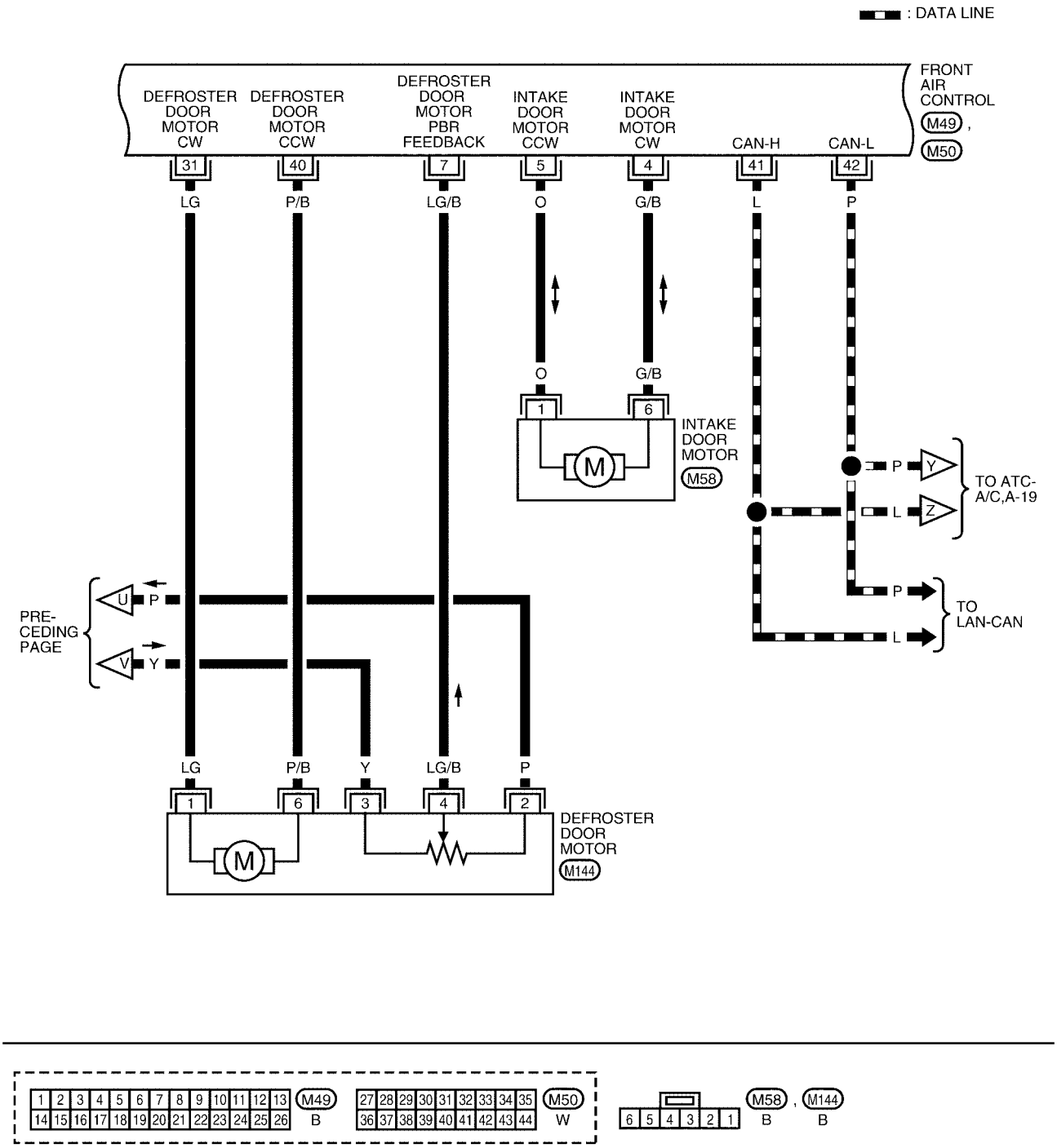


WJWA0302E

ATC-A/C,A-14

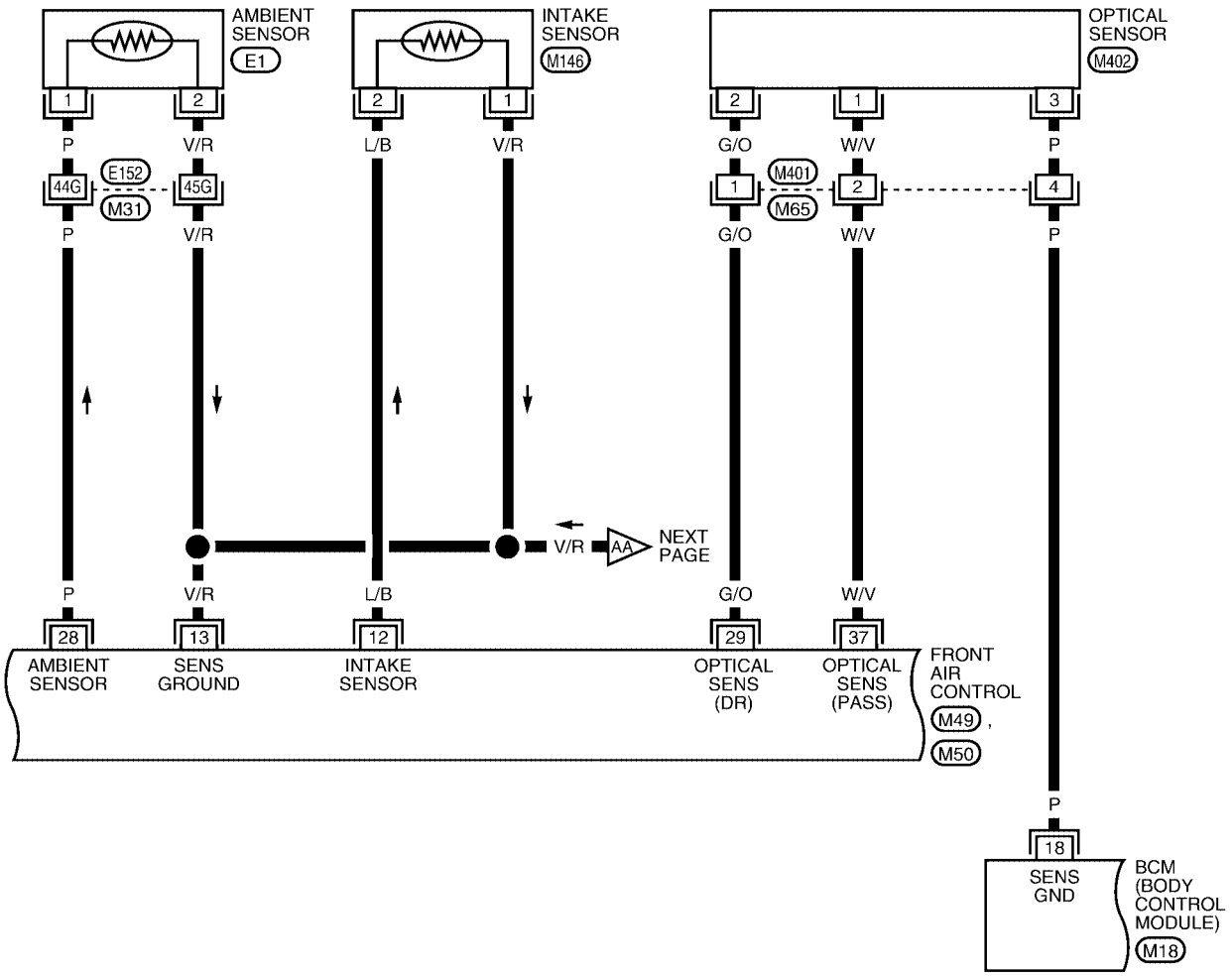


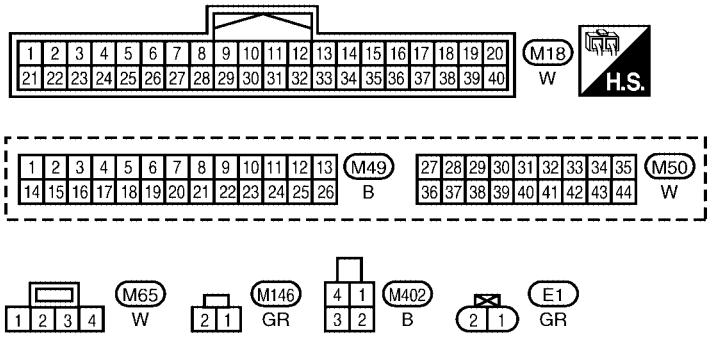


REFER TO THE FOLLOWING.
M31 - SUPER MULTIPLE JUNCTION (SMJ)

WJWA0303E

ATC-A/C,A-15

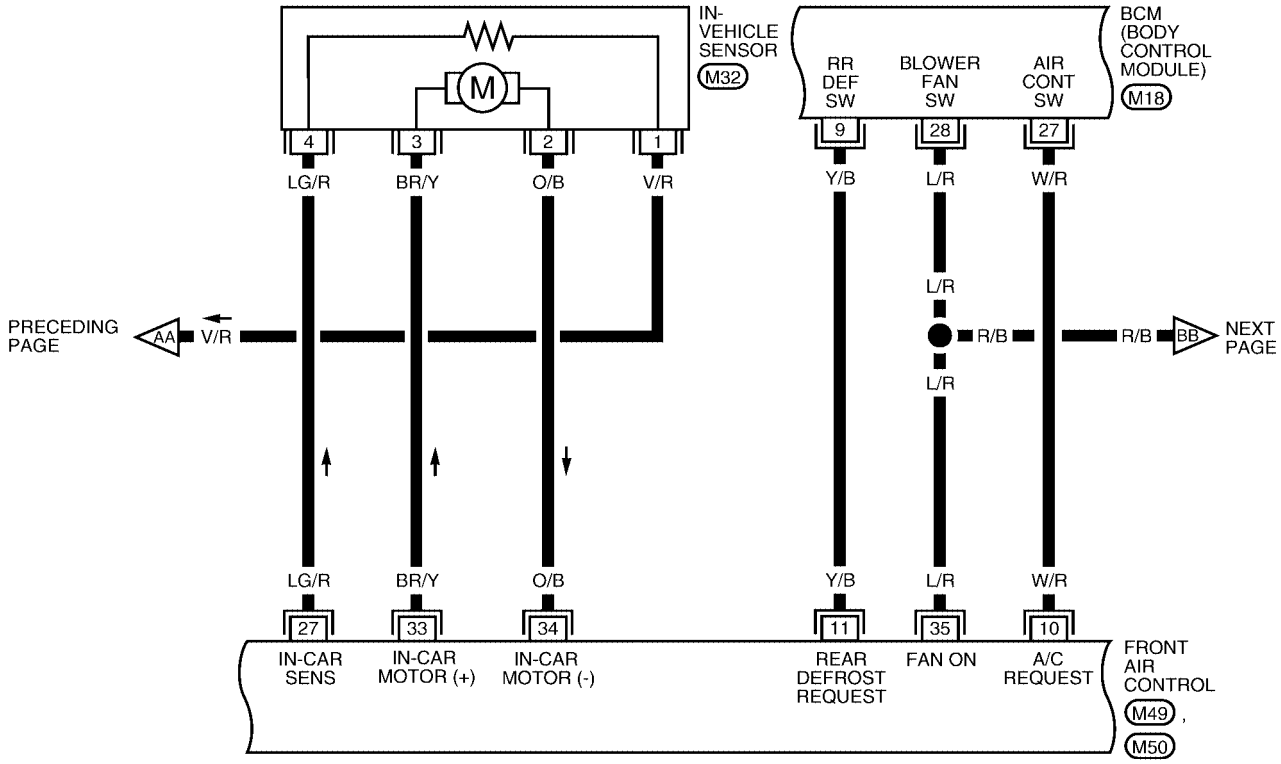


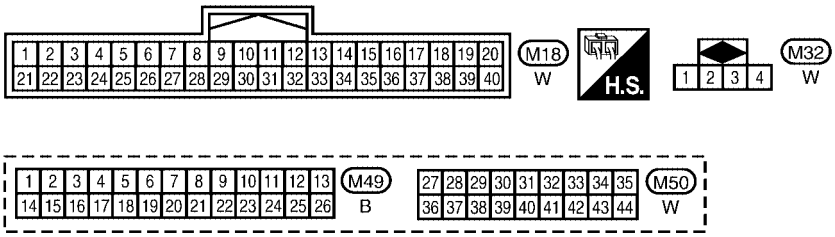


WJWA0304E

ATC-A/C,A-16

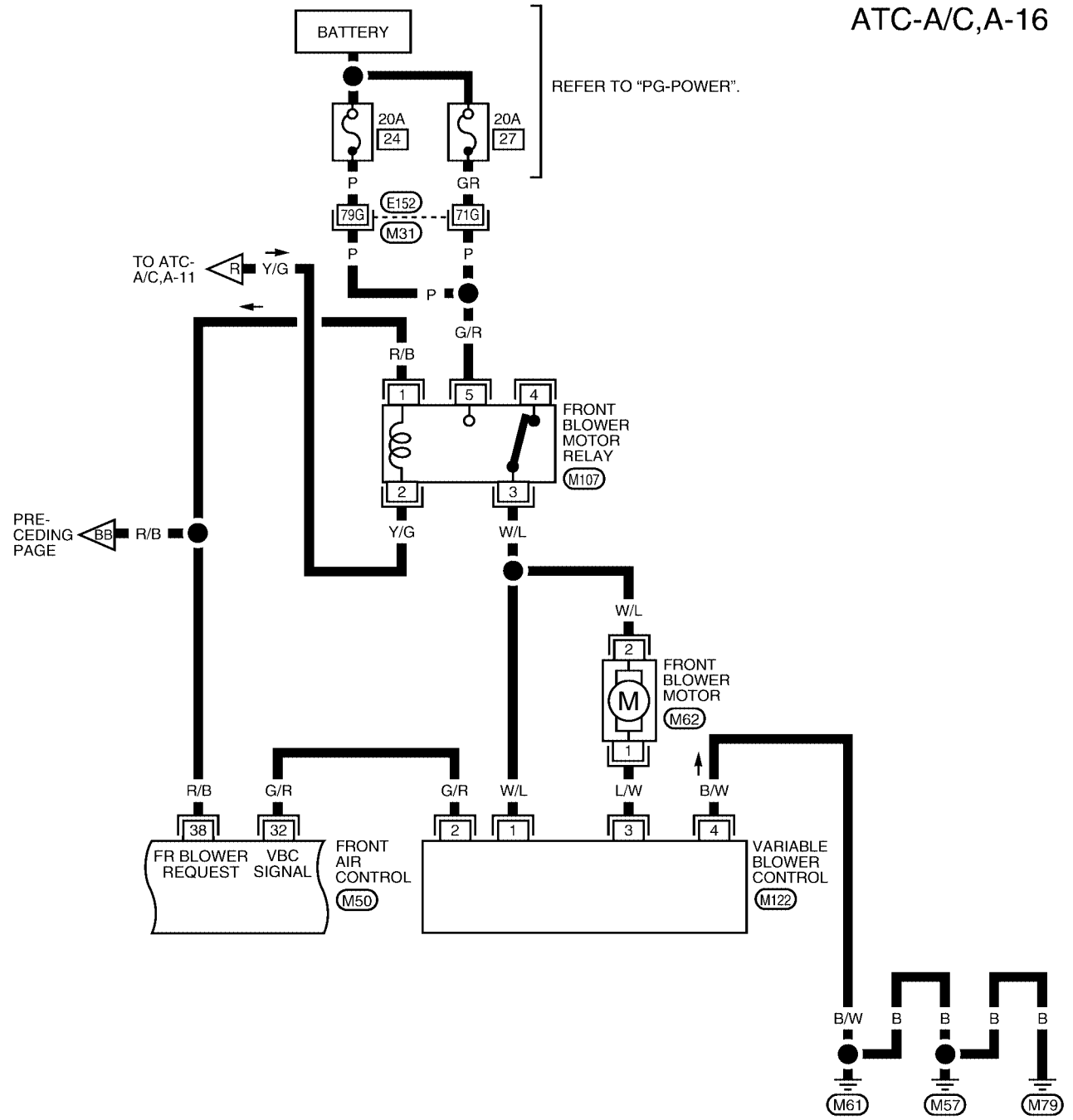


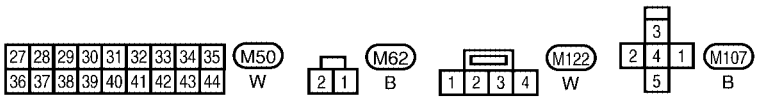


REFER TO THE FOLLOWING.
M31 - SUPER MULTIPLE JUNCTION (SMJ)

WJWA0305E

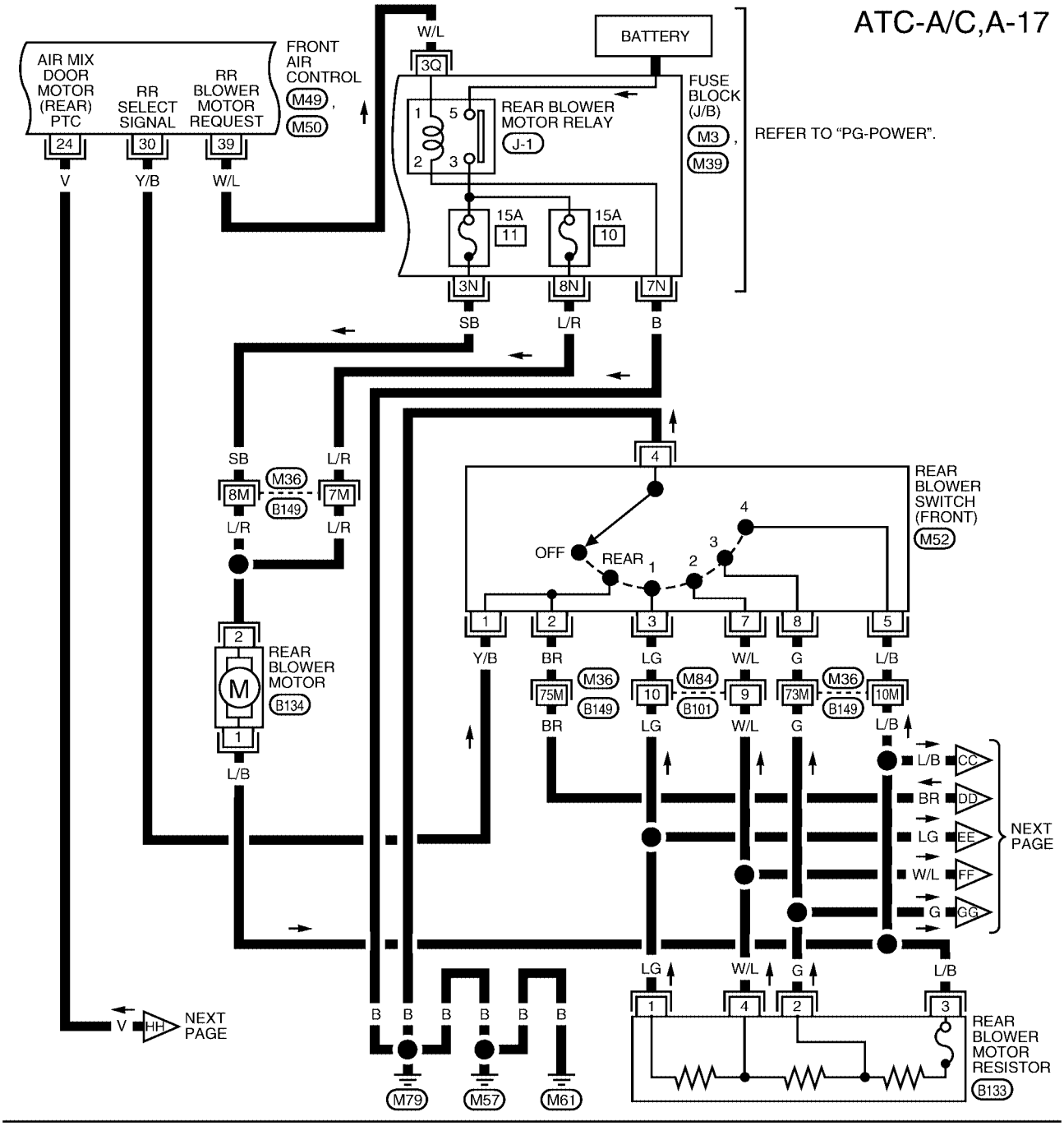
ATC-A/C,A-17
AIR MIX DOOR MOTOR (REAR) PTC
RR SELECT SIGNAL
RR BLOWER MOTOR REQUEST
FRONT AIR CONTROL
M49
M50
24
30
39
V
Y/B
W/L
W/L
3Q
BATTERY
REAR BLOWER MOTOR RELAY
J-1
FUSE BLOCK (J/B)
M3
M39
REFER TO "PG-POWER".
15A
11
15A
10
3N
8N
7N
SB
L/R
B
SB
L/R
8M
M36
B149
7M
L/R
L/R
REAR BLOWER MOTOR
B134
L/B
REAR BLOWER SWITCH (FRONT)
M52
OFF
REAR
Y/B
BR
LG
W/L
G
L/B
75M
M36
B149
10
M84
B101
9
73M
M36
B149
10M
BR
LG
W/L
G
L/B
CC
DD
EE
FF
GG
NEXT PAGE
V
HH
NEXT PAGE
B
M79
M57
M61
REAR BLOWER MOTOR RESISTOR
B133

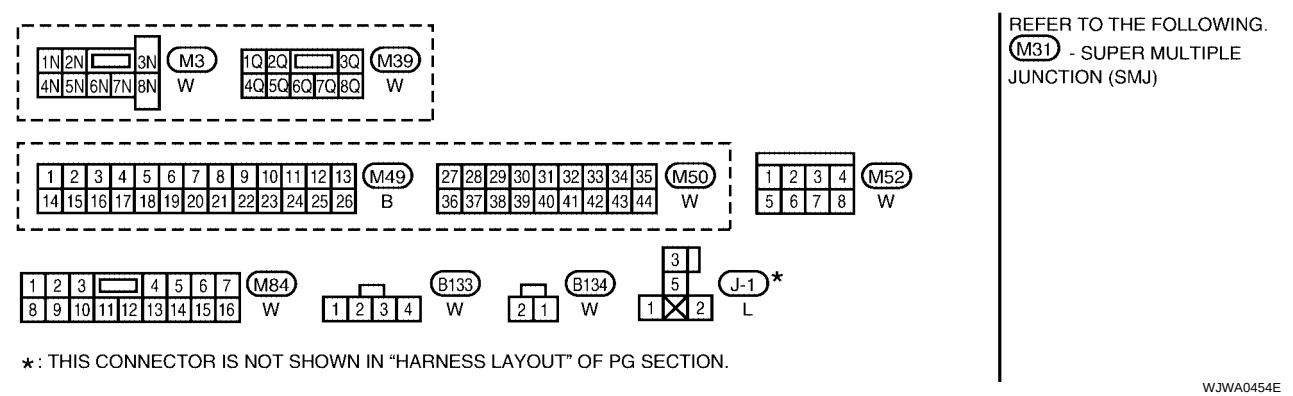
M3
W
M39
W
M49
B
M50
W
M52
W
M84
W
B133
W
B134
W
J-1*
L
REFER TO THE FOLLOWING.
M31 - SUPER MULTIPLE JUNCTION (SMJ)
*: THIS CONNECTOR IS NOT SHOWN IN "HARNESS LAYOUT" OF PG SECTION.
WJWA0454E

ATC-A/C,A-18

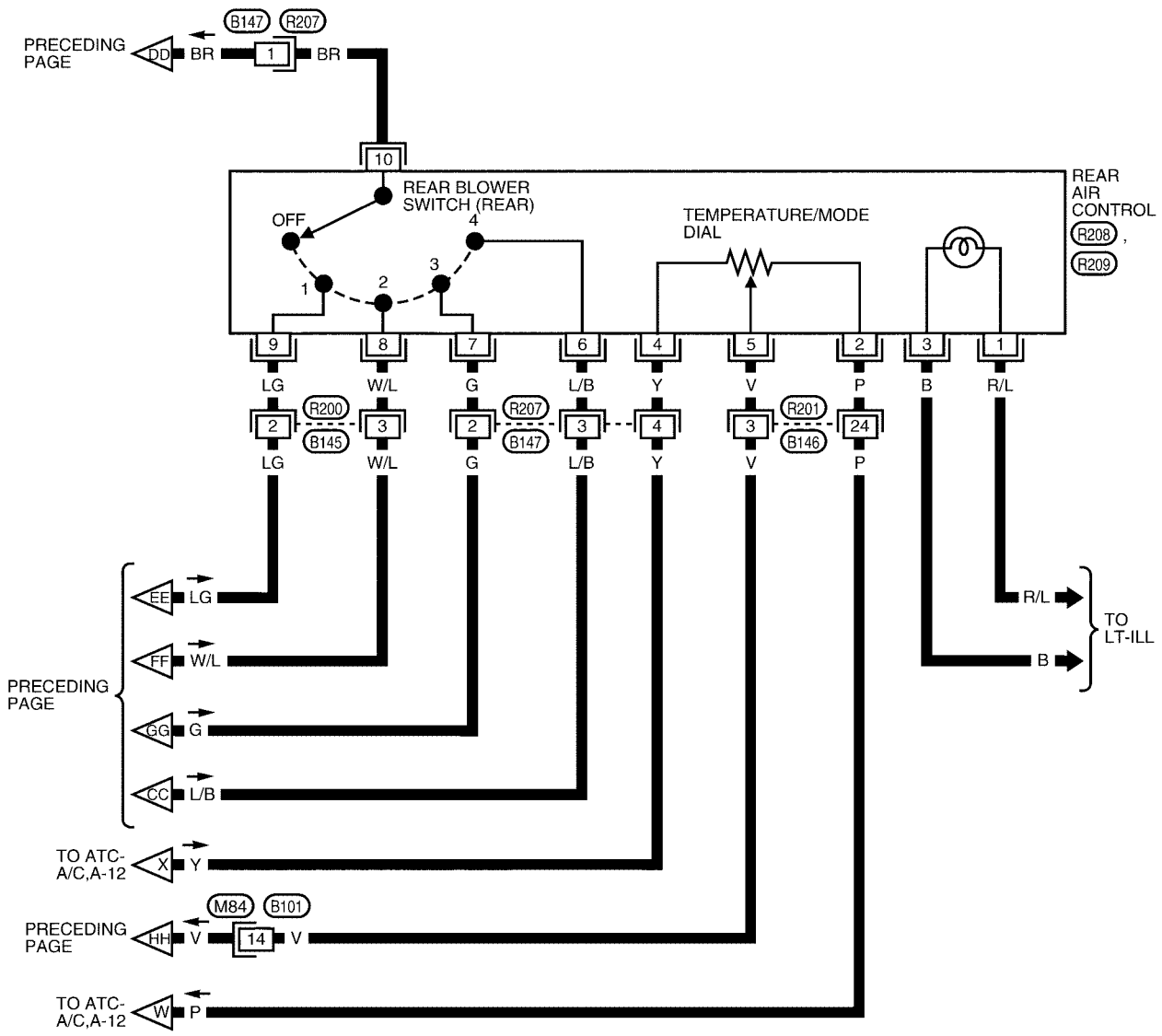


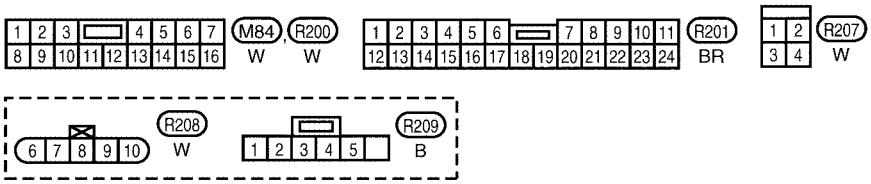


WJWA0307E

ATC-A/C,A-19

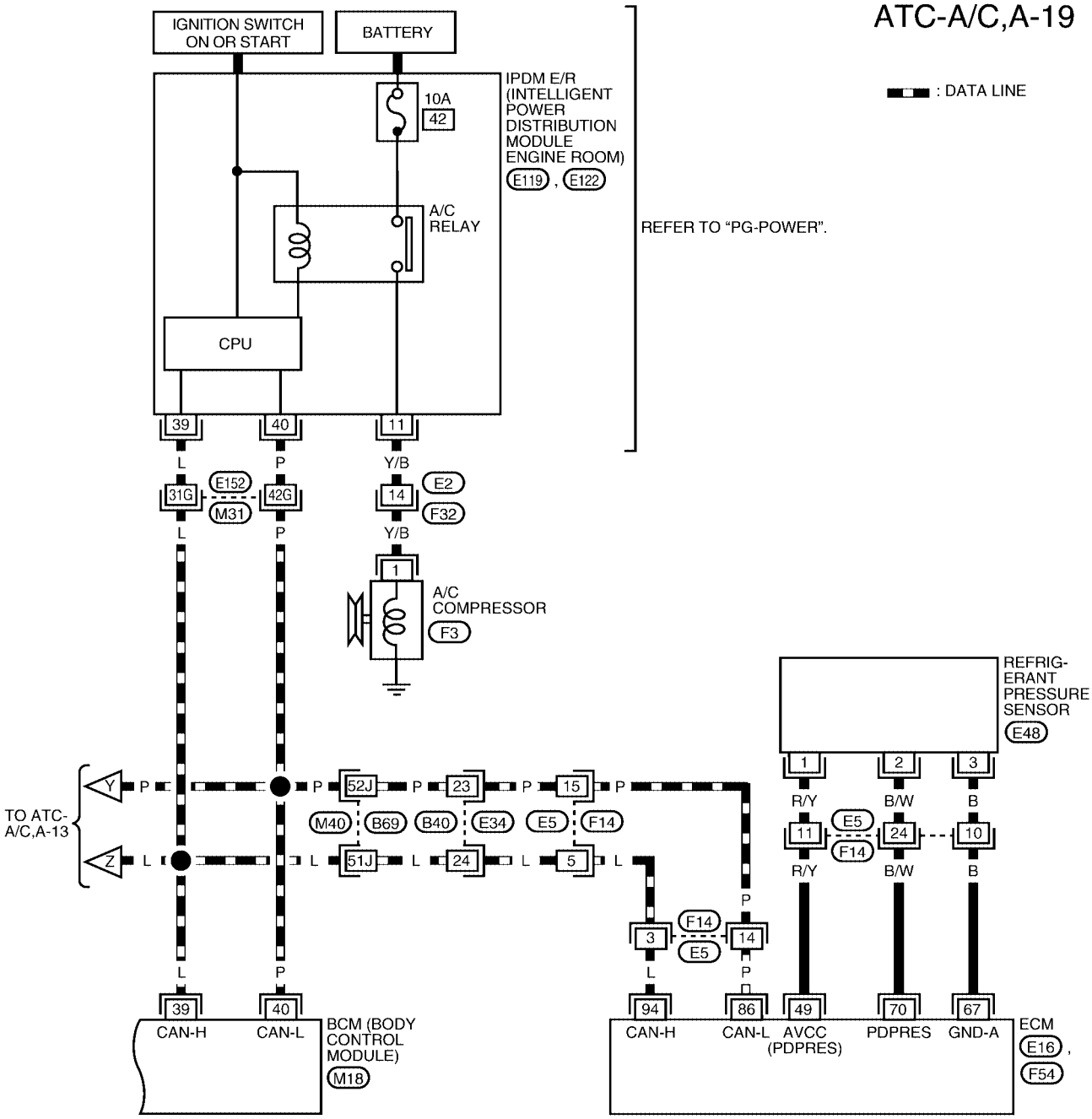


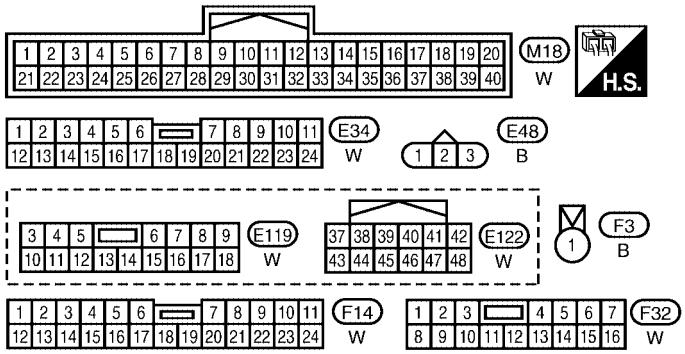


REFER TO THE FOLLOWING.
E16 , F54 - ELECTRICAL UNITS
M31 , M40 - SUPER MULTIPLE JUCTION (SMJ)

WJWA0308E

ATC-A/C,A-20

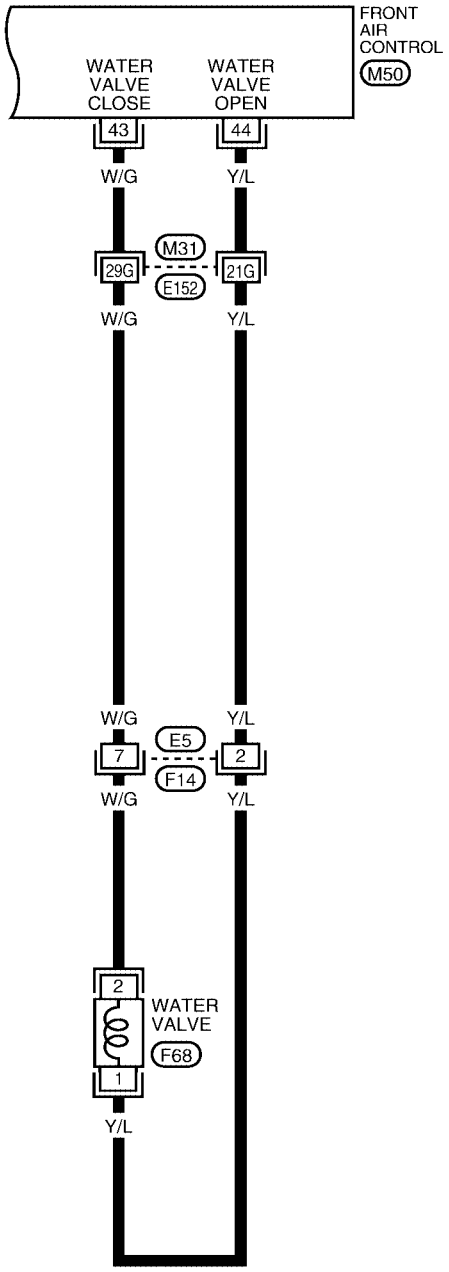


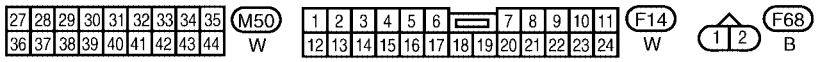


REFER TO THE FOLLOWING.
M31 - SUPER MULTIPLE JUNCTION (SMJ)

WJWA0309E

## Front Air Control Terminals and Reference Values

EJS005E1

Measure voltage between each terminal and ground by following Terminals and Reference Value for front air control.

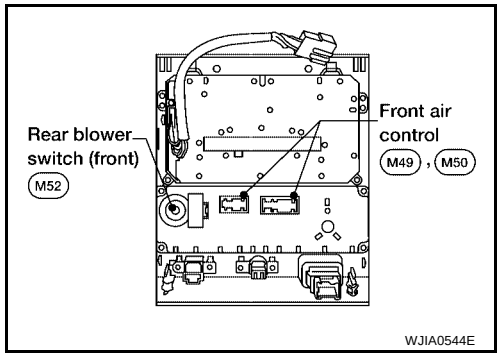


### FRONT AIR CONTROL HARNESS CONNECTOR TERMINAL LAYOUT

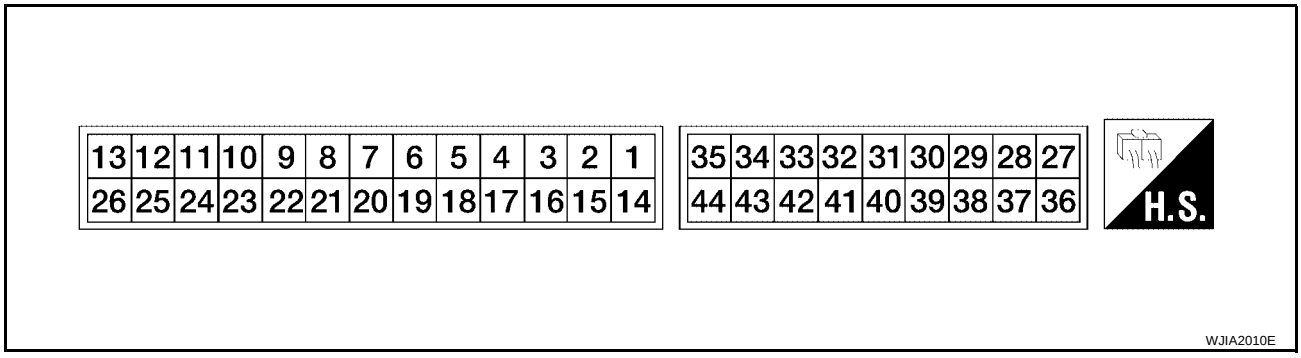


### TERMINALS AND RERERENCE VALUES FOR FRONT AIR CONTROL (WITH NAVI)

| Terminal No. | Wire color | Item | Ignition switch | Condition | Voltage (V) (Approx.) |
|---|---|---|---|---|---|
| 1 | B | Ground | - | - | 0V |
| 2 | Y | Sensor power | ON | - | 5V |
| 3 | W/G | Air mix door motor (Driver) CW | ON | Clockwise rotation | Battery voltage |
| 4 | G | Air mix door motor (Driver) CCW | ON | Counterclockwise rotation | Battery voltage |
| 5 | BR/W | Mode door motor CW | ON | Clockwise rotation | Battery voltage |
| 6 | P/L | Mode door motor CCW | ON | Counterclockwise rotation | Battery voltage |
| 7 | O | Intake door motor CCW | ON | Counterclockwise rotation | Battery voltage |
| 8 | G/B | Intake door motor CW | ON | Clockwise rotation | Battery voltage |
| 9 | L/B | Intake sensor | ON | - | 0 - 5V |
| 10 | L/R | Fan ON signal | ON | Blower switch OFF | 5V |
| | | | ON | Blower switch ON | 0V |
| 11 | Y/B | Rear defroster request | ON | - | Battery voltage |
| 12 | W/R | Compressor ON signal | ON | A/C switch OFF | 5V |
| | | | ON | A/C switch ON | 0V |
| 13 | G/R | Variable blower control | ON | - | 0 - 5V |
| 14 | Y/G | Power supply for IGN | ON | - | Battery voltage |
| 15 | P | Sensor ground | ON | - | 0V |
| 16 | GR | Mode door motor feedback | ON | - | 0 - 5V |
| 17 | P | Ambient sensor | ON | - | 0 - 5V |
| 18 | SB | Air mix door motor (Driver) feedback | ON | - | 0 - 5V |
| 19 | LG | Defroster door motor CW | ON | Clockwise rotation | Battery voltage |
| 20 | P/B | Defroster door motor CCW | ON | Counterclockwise rotation | Battery voltage |
| 21 | V/R | Sensor return | ON | - | 0 - 5V |

| Terminal No. | Wire color | Item | Ignition switch | Condition | Voltage (V) (Approx.) |
|---|---|---|---|---|---|
| 22 | Y/R | Power supply for BAT | - | - | Battery voltage |
| 23 | R/L | Illumination + | ON | Park lamps ON | Battery voltage |
| 24 | BR | Illumination - | - | Park lamps ON | 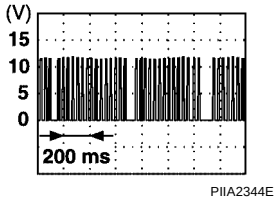 |
| 25 | LG/B | Defroster door motor feedback | ON | - | 0 - 5V |
| 26 | R/B | Front blower request | ON | Front blower motor OFF | Battery voltage |
| | | | | Front blower motor ON | 0V |
| 27 | GR/R | Air mix door motor (Rear) CW | ON | Clockwise rotation | Battery voltage |
| 28 | L/Y | Air mix door motor (Rear) CCW | ON | Counterclockwise rotation | Battery voltage |
| 29 | Y/L | Water valve | ON | Water valve open | Battery voltage |
| | | | | Water valve closed | 0V |
| 30 | W/G | Water valve | ON | Water valve open | 0V |
| | | | | Water valve closed | Battery voltage |
| 31 | W/V | Optical sensor (Passenger) | ON | - | 0 - 5V |
| 32 | LG/R | In-vehicle sensor signal | ON | - | 0 - 5V |
| 33 | V | Air mix door (Rear) set point | ON | - | 0 - 5V |
| 34 | L | CAN-H | ON | - | 0 - 5V |
| 35 | P | CAN-L | ON | - | 0 - 5V |
| 36 | G/W | Air mix door motor (Passenger) CW | ON | Clockwise rotation | Battery voltage |
| 37 | L | Air mix door motor (Passenger) CCW | ON | Counter clockwise rotation | Battery voltage |
| 38 | W/L | Rear blower request | ON | Front blower motor OFF | Battery voltage |
| | | | | Front blower motor ON | 0V |
| 39 | Y/B | Rear select signal | ON | - | 0V - Battery voltage |
| 40 | G/O | Optical sensor (Driver) | ON | - | 0 - 5V |
| 41 | R/W | Air mix door motor (Passenger) feedback | ON | - | 0 - 5V |
| 42 | R/Y | Air mix door motor (Rear) feedback | ON | - | 0 - 5V |
| 43 | BR/Y | In-vehicle sensor motor (+) | ON | - | Battery voltage |
| 44 | O/B | In-vehicle sensor motor (-) | ON | - | 0V |

## TERMINALS AND REFERENCE VALUES FOR FRONT AIR CONTROL (WITHOUT NAVI)

| Terminal No. | Wire color | Item | Ignition switch | Condition | Voltage (V) (Approx.) |
|---|---|---|---|---|---|
| 1 | BR/W | Mode door motor CW | ON | Clockwise rotation | Battery voltage |
| 2 | W/G | Air mix door motor (Driver) CW | ON | Clockwise rotation | Battery voltage |
| 3 | G | Air mix door motor (Driver) CCW | ON | Counterclockwise rotation | Battery voltage |
| 4 | G/B | Intake door motor CW | ON | Clockwise rotation | Battery voltage |
| 5 | O | Intake door motor CCW | ON | Counterclockwise rotation | Battery voltage |
| 6 | Y/G | Power supply for IGN | ON | - | Battery voltage |
| 7 | LG/B | Defroster door motor feedback | ON | - | 0 - 5V |
| 8 | R/L | Illumination + | ON | Park lamps ON | Battery voltage |
| 9 | BR | Illumination - | - | Park lamps ON | 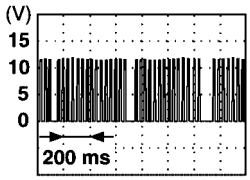  PIIA2344E |
| 10 | W/R | Compressor ON signal | ON | A/C switch OFF | 5V |
| | | | ON | A/C switch ON | 0V |
| 11 | Y/B | Rear defroster request | ON | - | Battery voltage |
| 12 | L/B | Intake sensor | ON | - | 0 - 5V |
| 13 | V/R | Sensor return | ON | - | 0 - 5V |
| 14 | P/L | Mode door motor CCW | ON | Counterclockwise rotation | Battery voltage |
| 15 | G/W | Air mix door motor (Passenger) CW | ON | Clockwise rotation | Battery voltage |
| 16 | L | Air mix door motor (Passenger) CCW | ON | Counter clockwise rotation | Battery voltage |
| 17 | GR/R | Air mix door motor (Rear) CW | ON | Clockwise rotation | Battery voltage |
| 18 | L/Y | Air mix door motor (Rear) CCW | ON | Counterclockwise rotation | Battery voltage |
| 19 | Y/R | Power supply for BAT | - | - | Battery voltage |
| 20 | B | Ground | - | - | 0V |
| 21 | GR | Mode door motor feedback | ON | - | 0 - 5V |
| 22 | SB | Air mix door motor (Driver) feedback | ON | - | 0 - 5V |
| 23 | Y | Sensor power | ON | - | 5V |
| 24 | V | Air mix door (Rear) set point | ON | - | 0 - 5V |
| 25 | R/Y | Air mix door motor (Rear) feedback | ON | - | 0 - 5V |
| 26 | P | Sensor ground | ON | - | 0V |
| 27 | LG/R | In-vehicle sensor signal | ON | - | 0 - 5V |
| 28 | P | Ambient sensor | ON | - | 0 - 5V |
| 29 | G/O | Optical sensor (Driver) | ON | - | 0 - 5V |
| 30 | Y/B | Rear select signal | ON | - | 0V - Battery voltage |
| 31 | LG | Defroster door motor CW | ON | Clockwise rotation | Battery voltage |
| 32 | G/R | Variable blower control | ON | - | 0 - 5V |
| 33 | BR/Y | In-vehicle sensor motor (+) | ON | - | Battery voltage |
| 34 | O/B | In-vehicle sensor motor (-) | ON | - | 0V |
| 35 | L/R | Fan ON signal | ON | Blower switch OFF | 5V |
| | | | ON | Blower switch ON | 0V |

| Terminal No. | Wire color | Item | Ignition switch | Condition | Voltage (V) (Approx.) |
|---|---|---|---|---|---|
| 36 | R/W | Air mix door motor (Passenger) feedback | ON | - | 0 - 5V |
| 37 | W/V | Optical sensor (Passenger) | ON | - | 0 - 5V |
| 38 | R/B | Front blower request | ON | Front blower motor OFF | Battery voltage |
| | | | | Front blower motor ON | 0V |
| 39 | W/L | Rear blower request | ON | Front blower motor OFF | Battery voltage |
| | | | | Front blower motor ON | 0V |
| 40 | P/B | Defroster door motor CCW | ON | Counterclockwise rotation | Battery voltage |
| 41 | L | CAN-H | ON | - | 0 - 5V |
| 42 | P | CAN-L | ON | - | 0 - 5V |
| 43 | W/G | Water valve | ON | Water valve open | 0V |
| | | | | Water valve closed | Battery voltage |
| 44 | Y/L | Water valve | ON | Water valve open | Battery voltage |
| | | | | Water valve closed | 0V |

## A/C System Self-diagnosis Function

EJS005E2

### DESCRIPTION

The self-diagnostic system diagnoses sensors, CAN system, battery voltage and stuck button on front air control. Refer to applicable sections (items) for details. Fault codes (if any are present) will be displayed in the ambient temperature display area (with navi) and displayed in the driver temp display area (non-navi). Refer to ATC-68, "SELF-DIAGNOSIS CODE CHART" .

Ignition must be ON to run self test.
Self test must be run at an ambient of at least 10°C(50°F).

**Self Test Via AV Switch w/navi Unit (color display)**

Note: Radio must be OFF.

1. On the AV switch, hold the memory "4" button and twist the audio "POWER/VOLUME" knob until the Self Diagnostic screen shows on the display.
2. Scroll down and select "Confirmation/Adjustment" with the joystick.
3. Scroll over and select the "Auto Climate Control" with the joystick to start the self-test.
4. The fan bars will flash on the display during the self-test, and then the fault codes will display in the ambient temperature area. They will continue scrolling until diagnostic mode is exited.
5. Exit by pressing the "BACK" button on AV switch until display returns to its normal operation screen. HVAC system will be OFF.

**Self Test Without Navi**

1. Press the AUTO button.
2. Twist the fan knob to the left & twist the passenger knob (either way) at the same time.
3. Release the knobs and then press the AUTO button within 2 seconds to start the self test.
4. The fan bars will flash on the display and then the fault codes will be displayed on the LCD. They will continue scrolling until diagnostic mode is exited.
5. To exit diagnostic mode, press any button (the system will turn OFF).

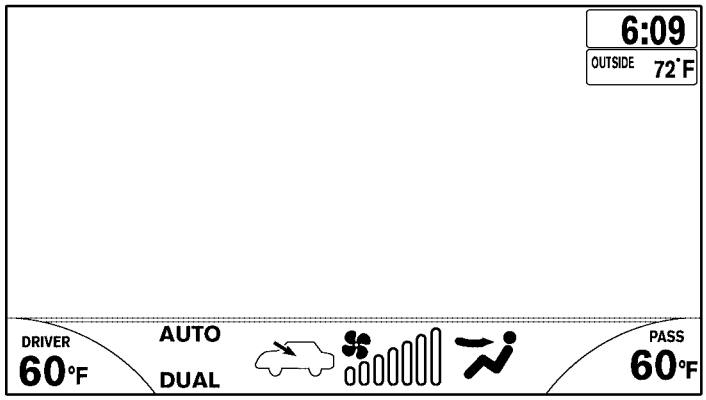


WITH NAVI

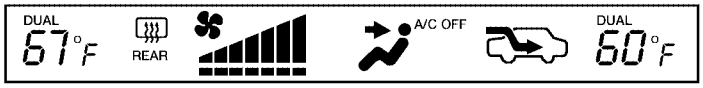


WITHOUT NAVI

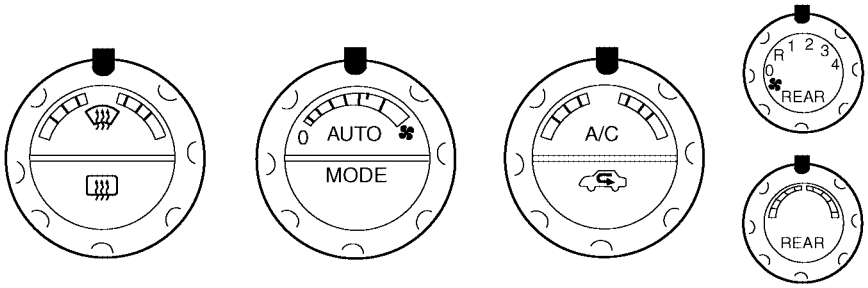


WJIA1879E

## SELF-DIAGNOSIS CODE CHART

| Code No. | Reference page | |
|---|---|---|
| 02 | EE changed by calibration | ATC-193, "FRONT AIR CONTROL" |
| 03 | Battery voltage out of range | SC-4, "BATTERY" |
| 12 | Air mix door motor (Passenger) circuit failure | ATC-96, "DIAGNOSTIC PROCEDURE FOR AIR MIX DOOR MOTOR (PASSENGER)" |
| 20 | BCM not responding to A/C request | ATC-151, "DIAGNOSTIC PROCEDURE FOR MAGNET CLUTCH" |
| 21 | BCM not responding to rear defroster request | GW-68, "REAR WINDOW DEFOGGER" |
| 22 | Air mix door motor (Driver) circuit failure | ATC-89, "DIAGNOSTIC PROCEDURE FOR AIR MIX DOOR MOTOR (DRIVER)" |
| 30 | In-vehicle sensor circuit out of range (low) | ATC-181, "In-vehicle Sensor Circuit" |
| 31 | In-vehicle sensor circuit out of range (high) | |
| 38 | Air mix door motor (rear) circuit failure | ATC-103, "DIAGNOSTIC PROCEDURE FOR AIR MIX DOOR MOTOR (REAR)" |
| 40 | Ambient sensor circuit short | ATC-177, "Ambient Sensor Circuit" |
| 41 | Ambient sensor circuit open | |
| 44 | In-vehicle sensor motor circuit open | ATC-195, "IN-VEHICLE SENSOR" |
| 46 | In-vehicle sensor motor circuit short | |
| 50 | Optical sensor (Driver) circuit open or short | ATC-186, "Optical Sensor Circuit" |
| 52 | Optical sensor (Passenger) circuit open or short | |
| 56 | Intake sensor circuit short | ATC-189, "Intake Sensor Circuit" |
| 57 | Intake sensor circuit open | |
| 62 | Defroster door motor circuit failure | ATC-115, "Defroster Door Motor Circuit" |
| 80 | CAN bus fault | LAN-4, "CAN Communication System" |
| 82 | Intake door motor (driver) circuit malfunction | ATC-112, "DIAGNOSTIC PROCEDURE FOR INTAKE DOOR MOTOR" |
| 90 | Stuck button | ATC-193, "FRONT AIR CONTROL" |
| 92 | Mode door motor circuit failure | ATC-76, "Mode Door Motor Circuit" |

## Operational Check (Front)

EJS005E3

The purpose of the operational check is to confirm that the system operates properly.

**Conditions : Engine running and at normal operating temperature**

### CHECKING MEMORY FUNCTION

1. Set the temperature to 32° (90°F).
2. Turn front blower control dial counterclockwise until system shuts OFF.
3. Turn ignition switch OFF.
4. Turn ignition switch ON.
5. Press the AUTO switch.
6. Confirm that the set temperature remains at previous temperature.
7. Turn front blower control counterclockwise until system shuts OFF.

If NG, go to trouble diagnosis procedure for ATC-173, "Memory Function" .
If OK, continue with next check.

### CHECKING BLOWER

1. Turn front blower control clockwise, blower should operate on low speed. The fan display should have one bar lit (on display).
2. Turn the front blower control dial again, and continue checking blower speed and fan display until all speeds are checked.
3. Leave blower on maximum speed.

If NG, go to trouble diagnosis procedure for ATC-126, "DIAGNOSTIC PROCEDURE FOR BLOWER MOTOR" .
If OK, continue with next check.

### CHECKING DISCHARGE AIR

1. Press MODE switch four times and the DEF switch.
2. Each position indicator should change shape (on display).
3. Confirm that discharge air comes out according to the air distribution table. Refer to ATC-30, "Discharge Air Flow" .

Mode door position is checked in the next step.
If NG, go to trouble diagnosis procedure for ATC-76, "Mode Door Motor Circuit" .
If OK, continue the check.

**NOTE:**
Confirm that the compressor clutch is engaged (sound or visual inspection) and intake door position is at fresh when the DEF or D/F is selected.

### CHECKING RECIRCULATION (, ONLY)

1. Press recirculation ( ) switch one time. Recirculation indicator should illuminate.
2. Press recirculation ( ) switch one more time. Recirculation indicator should go off.
3. Listen for intake door position change (blower sound should change slightly).

If NG, go to trouble diagnosis procedure for ATC-110, "Intake Door Motor Circuit" .
If OK, continue the check.

**NOTE:**
Confirm that the compressor clutch is engaged (sound or visual inspection) and intake door position is at fresh when the DEF or D/F is selected. REC ( ) is not allowed in DEF ( ) D/F ( ) or FOOT ( ).

### CHECKING TEMPERATURE DECREASE

1. Rotate temperature control dial (driver side or passenger side) counterclockwise until 16°C (60°F) is displayed.
2. Check for cold air at appropriate discharge air outlets.

If NG, listen for sound of air mix door motor operation. If OK, go to trouble diagnosis procedure for ATC-159, "Insufficient Cooling" . If air mix door motor appears to be malfunctioning, go to ATC-89, "DIAGNOSTIC PRO-

CEDURE FOR AIR MIX DOOR MOTOR (DRIVER)" or ATC-96, "DIAGNOSTIC PROCEDURE FOR AIR MIX DOOR MOTOR (PASSENGER)" .
If OK, continue the check.

### CHECKING TEMPERATURE INCREASE

1. Rotate temperature control dial clockwise (driver side or passenger side) until 32°C (90°F) is displayed.
2. Check for hot air at appropriate discharge air outlets.

If NG, listen for sound of air mix door motor operation. If OK, go to trouble diagnosis procedure for ATC-167, "Insufficient Heating" . If air mix door motor appears to be malfunctioning, go to ATC-89, "DIAGNOSTIC PROCEDURE FOR AIR MIX DOOR MOTOR (DRIVER)" or ATC-96, "DIAGNOSTIC PROCEDURE FOR AIR MIX DOOR MOTOR (PASSENGER)" .
If OK, continue with next check.

### CHECK A/C SWITCH

1. Press A/C switch when AUTO switch is ON, or in manual mode.
2. A/C switch indicator will turn ON.
   - Confirm that the compressor clutch engages (sound or visual inspection).

**NOTE:**
If current mode setting is DEF or D/F, compressor clutch may already be engaged.
If NG, go to trouble diagnosis procedure for ATC-150, "Magnet Clutch Circuit" .
If OK, continue with next check.

### CHECKING AUTO MODE

1. Press AUTO switch.
2. Display should indicate AUTO.
   - If ambient temperature is warm, and selected temperature is cool, confirm that the compressor clutch engages (sound or visual inspection). (Discharge air and blower speed will depend on ambient, in-vehicle, and set temperatures.)

If NG, go to trouble diagnosis procedure for ATC-72, "Power Supply and Ground Circuit for Front Air Control" , then if necessary, trouble diagnosis procedure for ATC-150, "Magnet Clutch Circuit" .
If all operational checks are OK (symptom cannot be duplicated), go to malfunction Simulation Tests in ATC-36, "How to Perform Trouble Diagnosis for Quick and Accurate Repair" and perform tests as outlined to simulate driving conditions environment. If symptom appears. Refer to ATC-36, "How to Perform Trouble Diagnosis for Quick and Accurate Repair" , ATC-36, "SYMPTOM TABLE" and perform applicable trouble diagnosis procedures.

## Operational Check (Rear)

EJS005E4

The purpose of the operational check is to confirm that the system operates properly.

**Conditions : Engine running and at normal operating temperature**

### CHECKING BLOWER

1. Turn the rear blower control dial to switch position "1". Blower should operate on low speed.
2. Turn the rear blower control dial counterclockwise to switch position "2", "3", and "4" until all speeds are checked.
3. Leave blower on maximum speed.

If NG, go to trouble diagnosis procedure for ATC-136, "Rear Blower Motor Circuit" .
If OK, continue the check.

### CHECKING TEMPERATURE DECREASE

1. Rotate temperature and mode dial fully counterclockwise.
2. Check for cold air at appropriate discharge air outlets.

If NG, listen for sound of air mix door motor operation if OK, go to trouble diagnosis procedure for ATC-159, "Insufficient Cooling" . If air mix door motor appears to be malfunctioning, go to ATC-103, "DIAGNOSTIC PROCEDURE FOR AIR MIX DOOR MOTOR (REAR)" .
If OK, continue the check.

### CHECKING TEMPERATURE INCREASE

1. Rotate temperature and mode dial clockwise.
2. Check for hot air at appropriate discharge air outlets.

If NG, listen for sound of air mix door motor operation. If OK, go to trouble diagnosis procedure for ATC-167, "Insufficient Heating" . If air mix door motor appears to be malfunctioning, go to ATC-103, "DIAGNOSTIC PROCEDURE FOR AIR MIX DOOR MOTOR (REAR)" .
If OK, continue the check.

## Power Supply and Ground Circuit for Front Air Control

EJS005E5

SYMPTOM: A/C system does not come on.

### INSPECTION FLOW

### 1. CONFIRM SYMPTOM BY PERFORMING OPERATIONAL CHECK - AUTO MODE

1. Press AUTO switch.
2. Display should indicate AUTO. Confirm that the compressor clutch engages (sound or visual inspection). (Discharge air and blower speed will depend on ambient, in-vehicle and set temperatures.)

Can a symptom be duplicated?

YES >> GO TO 3.
NO >> GO TO 2.

### 2. PERFORM COMPLETE OPERATIONAL CHECK

Perform a complete operational check and check for any symptoms. Refer to ATC-69, "Operational Check (Front)" .

Can a symptom be duplicated

YES >> Refer to ATC-36, "SYMPTOM TABLE" .
NO >> System OK.

### 3. CHECK FOR SERVICE BULLETINS

Check for any service bulletins.

>> GO TO 4.

### 4. CHECK POWER AND GROUND CIRCUIT

Check main power supply and ground circuit. Refer to ATC-73, "DIAGNOSTIC PROCEDURE FOR A/C SYSTEM" .

OK or NG

OK >> System OK.
NO >> Replace front air control. Refer to ATC-193, "FRONT AIR CONTROL" .

## COMPONENT DESCRIPTION

### Front Air Control

The front air control has a built-in microcomputer which processes information sent from various sensors needed for air conditioner operation. The air mix door motors, mode door motor, intake door motor, defroster door motor, blower motor and compressor are then controlled.
The front air control is unitized with control mechanisms. When the various switches and temperature dials are operated, data is input to the front air control.
Self-diagnostic functions are also built into the front air control to provide quick check of malfunctions in the auto air conditioner system.

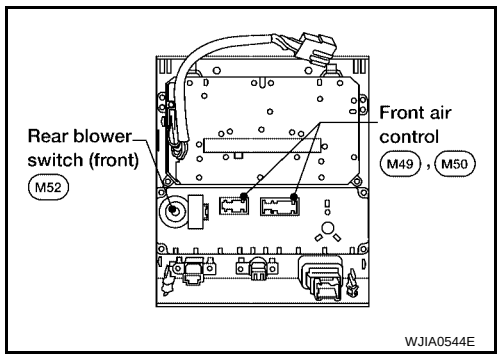


### Potentio Temperature Control (PTC)

There are two PTCs (passenger and driver) built into the front air control. They can be set at an interval of 0.5°C (1.0°F) in the 16°C (60°F) to 32°C (90°F) temperature range by rotating the temperature dial. The set temperature is displayed.

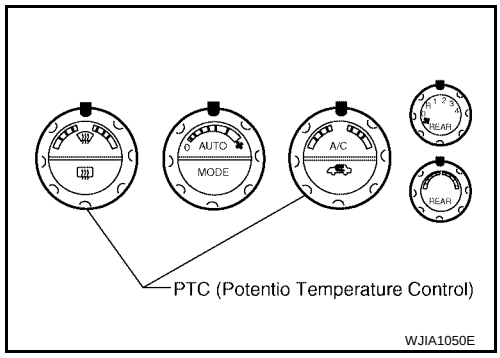


## DIAGNOSTIC PROCEDURE FOR A/C SYSTEM

SYMPTOM: A/C system does not come on.

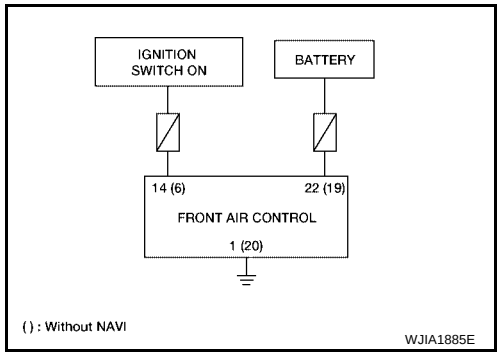


## 1. CHECK VEHICLE EQUIPMENT

Is vehicle equipped with navi?

YES or NO

YES >> GO TO 2.
NO >> GO TO 4.

## 2. CHECK POWER SUPPLY CIRCUITS FOR FRONT AIR CONTROL

1. Disconnect front air control connector.
2. Check voltage between front air control harness connector M49 terminals 14 and 22, and ground.

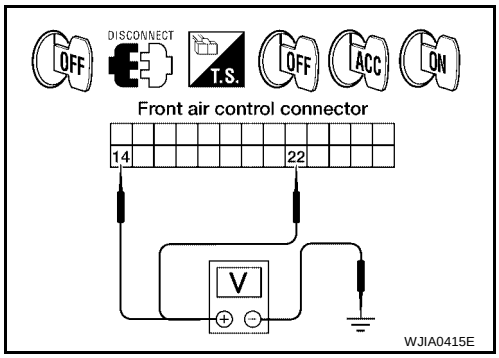


| Terminals | | | Ignition switch position | | |
|---|---|---|---|---|---|
| (+) | | (-) | OFF | ACC | ON |
| Front air control connector | Terminal No. | | | | |
| M49 | 14 | Ground | Approx. 0V | Approx. 0V | Battery voltage |
| M49 | 22 | | Battery voltage | Battery voltage | Battery voltage |

OK or NG

OK >> GO TO 3.

NG >> Check 10A fuses [Nos. 8 and 19, located in the fuse block (J/B)]. Refer to PG-76, "FUSE BLOCK-JUNCTION BOX (J/B)" .

- If fuses are OK, check harness for open circuit. Repair or replace as necessary.
- If fuses are NG, replace fuse and check harness for short circuit. Repair or replace as necessary.

## 3. CHECK GROUND CIRCUIT FOR FRONT AIR CONTROL

1. Turn ignition switch OFF.
2. Check continuity between front air control harness connector M49 terminal 1 and ground.

**1 - Ground : Continuity should exist.**

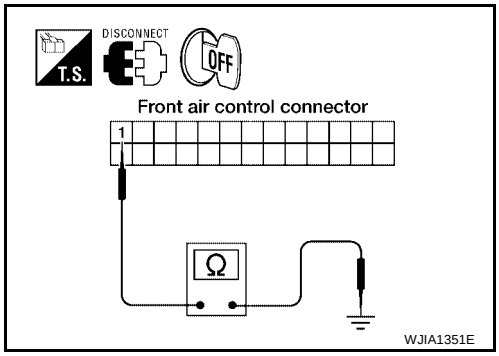


OK or NG

OK >> Replace front air control. Refer to ATC-193, "FRONT AIR CONTROL" .

NG >> Repair harness or connector.

## 4. CHECK POWER SUPPLY CIRCUITS FOR FRONT AIR CONTROL

1. Disconnect front air control connector.
2. Check voltage between front air control harness connector M49 terminals 6 and 19, and ground.

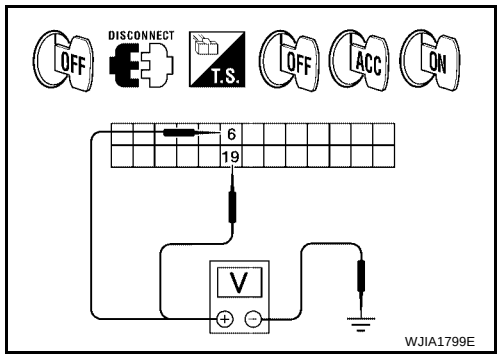


| Terminals | | | Ignition switch position | | |
|---|---|---|---|---|---|
| (+) | | (-) | OFF | ACC | ON |
| Front air control connector | Terminal No. | | | | |
| M49 | 6 | Ground | Approx. 0V | Approx. 0V | Battery voltage |
| M49 | 19 | | Battery voltage | Battery voltage | Battery voltage |

OK or NG

OK >> GO TO 5.

NG >> Check 10A fuses [Nos. 8 and 19, located in the fuse block (J/B)]. Refer to PG-76, "FUSE BLOCK-JUNCTION BOX (J/B)" .

- If fuses are OK, check harness for open circuit. Repair or replace as necessary.
- If fuses are NG, replace fuse and check harness for short circuit. Repair or replace as necessary.

## 5. CHECK GROUND CIRCUIT FOR FRONT AIR CONTROL

1. Turn ignition switch OFF.
2. Check continuity between front air control harness connector M49 terminal 20 and ground.

**20 - Ground : Continuity should exist.**

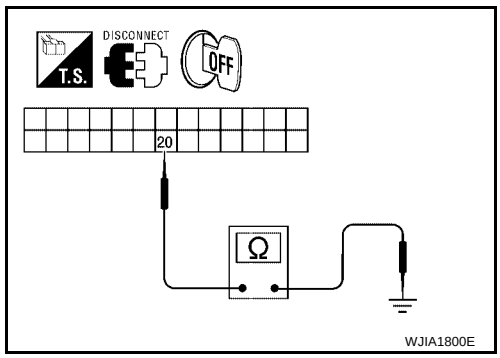


OK or NG

OK >> Replace front air control. Refer to ATC-193, "FRONT AIR CONTROL" .

NG >> Repair harness or connector.

## Mode Door Motor Circuit

EJS005E6

SYMPTOM:

- Air outlet does not change.
- Mode door motor does not operate normally.

### INSPECTION FLOW

### 1. CONFIRM SYMPTOM BY PERFORMING OPERATIONAL CHECK - DISCHARGE AIR

1. Press mode switch four times and then press the (DEF) switch. Each position indicator should change shape (on display).
2. Confirm that discharge air comes out according to the air distribution table. Refer to ATC-30, "Discharge Air Flow" .

   **NOTE:**
   Confirm that the compressor clutch is engaged (visual inspection) and intake door position is at FRESH when DEF ( ) or D/F ( ) is selected.

Can a symptom be duplicated?

YES >> GO TO 3.
NO >> GO TO 2.

### 2. PERFORM COMPLETE OPERATIONAL CHECK

Perform a complete operational check and check for any symptoms. Refer to ATC-69, "Operational Check (Front)" .

Can a symptom be duplicated?

YES >> Refer to ATC-36, "SYMPTOM TABLE" .
NO >> System OK.

### 3. CHECK FOR SERVICE BULLETINS

Check for any service bulletins.

>> GO TO 4.

### 4. CHECK MODE DOOR OPERATION

Check and verify mode door mechanism for smooth operation in each mode.

OK or NG

OK >> GO TO 5.
NG >> Repair as necessary.

### 5. PERFORM SELF-DIAGNOSIS

Perform self-diagnosis to check for any codes. Refer to ATC-67, "A/C System Self-diagnosis Function" .

Are any self-diagnosis codes present?

YES >> Refer to ATC-68, "SELF-DIAGNOSIS CODE CHART" .
NO >> GO TO 6.

### 6. CHECK THE MODE DOOR MOTOR PBR CIRCUIT

Perform diagnostic procedure for the mode door motor. Refer to ATC-79, "DIAGNOSTIC PROCEDURE FOR MODE DOOR MOTOR" .

OK or NG

OK >> GO TO 7.
NG >> Repair PBR circuit or replace motor.

## 7. RECHECK FOR CODES

Perform self-diagnosis. Refer to ATC-67, "A/C System Self-diagnosis Function" .

Are any self-diagnostic codes present?

YES >> Refer to ATC-68, "SELF-DIAGNOSIS CODE CHART" .
NO >> GO TO 8.

## 8. RECHECK FOR SYMPTOMS

Perform a complete operational check and check for any symptoms. Refer to ATC-69, "Operational Check (Front)" .

Does another symptom exist?

YES >> Repair as necessary.
NO >> Replace front air control. Refer to ATC-193, "FRONT AIR CONTROL" .

## SYSTEM DESCRIPTION

### Component Parts

Mode door control system components are:

- Front air control
- Mode door motor
- PBR (built into mode door motor)
- In-vehicle sensor
- Ambient sensor
- Optical sensor
- Intake sensor

### System Operation

The mode door position (vent, B/L, foot, D/F, and defrost) is set by the front air control by means of the mode door motor. When a mode door position is selected on the front air control, voltage is applied to one circuit of the mode door motor while ground is applied to the other circuit, causing the mode door motor to rotate. The direction of rotation is determined by which circuit has voltage applied to it, and which one has ground applied to it. The front air control monitors the mode door position by measuring the voltage signal on the PBR circuit. In AUTO mode the mode door position is set by the front air control which determines the proper position based on inputs from the in-vehicle sensor, ambient sensor, optical sensor, intake sensor, and the temperature selected by the driver or passenger.

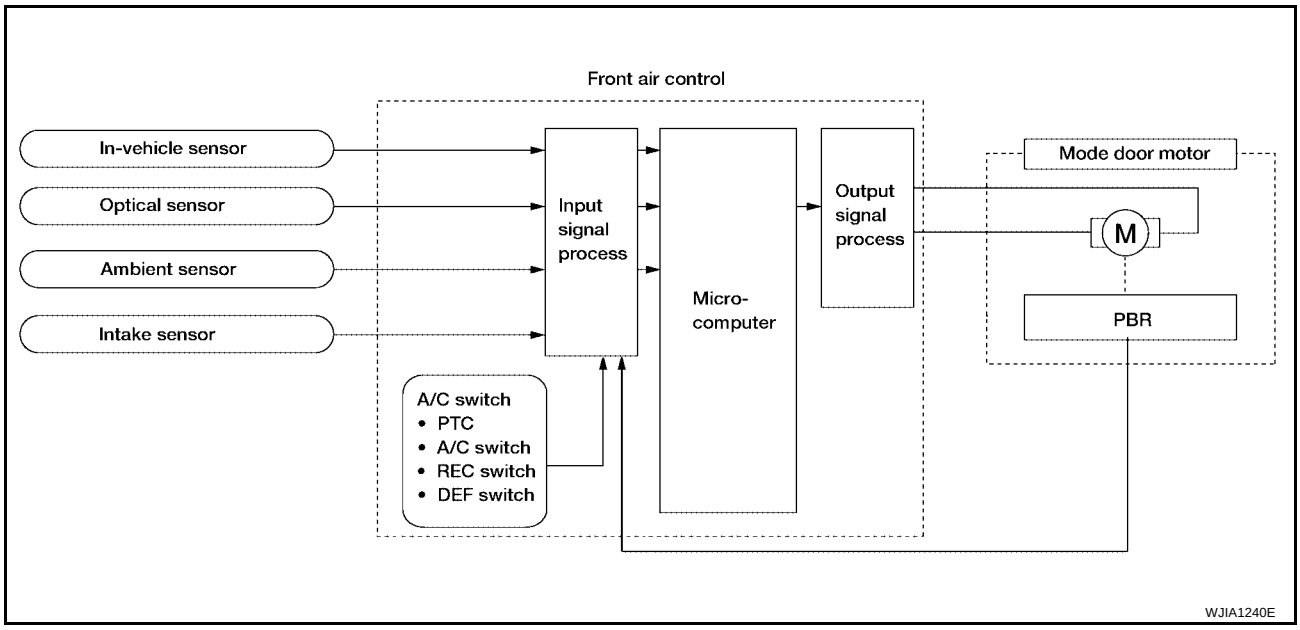


### Mode Door Control Specification

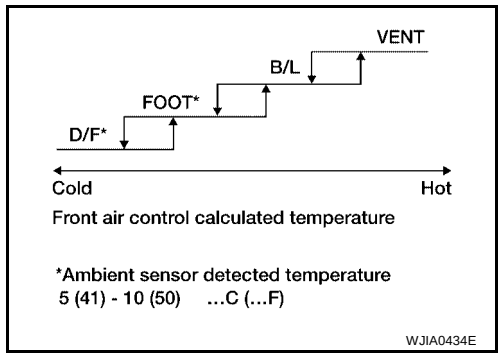

## COMPONENT DESCRIPTION

### Mode Door Motor

The mode door motor is attached to the heater & cooling unit assembly. It rotates so that air is discharged from the outlet as indicated by the front air control. Motor rotation is conveyed to a link which activates the mode door.

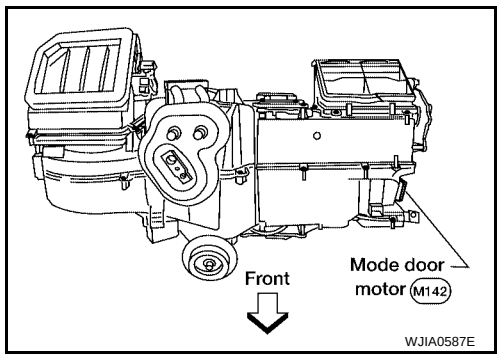


## DIAGNOSTIC PROCEDURE FOR MODE DOOR MOTOR

### 1. CHECK VEHICLE EQUIPMENT

Is vehicle equipped with navi?

YES or NO

YES >> GO TO 2.
NO >> GO TO 14.

### 2. CHECK FRONT AIR CONTROL FOR POWER AND GROUND

1. Turn ignition switch ON.
2. Press the mode switch to the B/L ( ) mode.
3. Check voltage between front air control harness connector M49 terminal 5 and terminal 6 while pressing the mode switch to the floor ( ) mode.

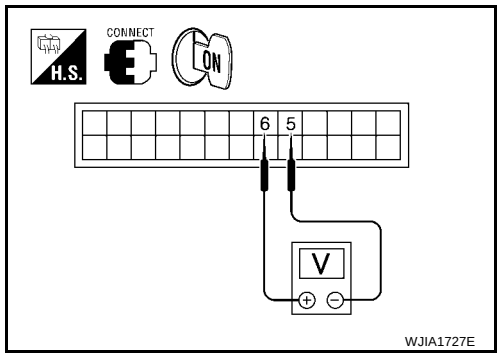


| Connector | Terminals | | Condition | Voltage (Approx.) |
|---|---|---|---|---|
| | (+) | (-) | | |
| Front air control: M49 | 6 | 5 | Press mode switch | Battery voltage |

OK or NG

OK >> GO TO 4.
NG >> GO TO 3.

### 3. CHECK MODE DOOR MOTOR CIRCUITS FOR SHORT TO GROUND

1. Turn ignition switch OFF.
2. Disconnect the front air control harness connector.
3. Check continuity between front air control harness connector M49 terminal 5, 6 and ground.

**5 - Ground : Continuity should not exist.**
**6 - Ground : Continuity should not exist.**

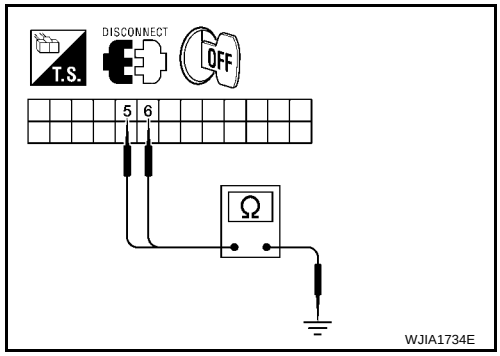


OK or NG

OK >> Replace front air control. Refer to ATC-193, "FRONT AIR CONTROL" .
NG >> Repair or replace harness as necessary.

## 4. CHECK FRONT AIR CONTROL FOR GROUND AND POWER

1. Press the mode switch to the D/F ( ) mode.
2. Check voltage between front air control harness connector M49 terminal 5 and terminal 6 while pressing the mode switch to the vent ( ) mode.

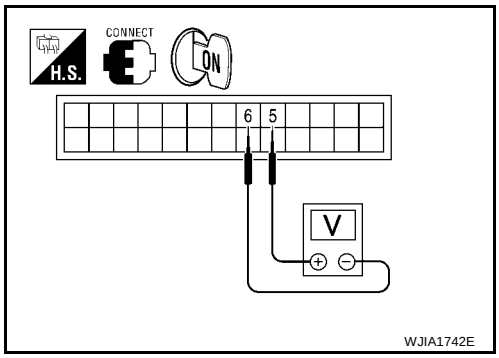


| Connector | Terminals | | Condition | Voltage (Approx.) |
|---|---|---|---|---|
| | (+) | (-) | | |
| Front air control: M49 | 5 | 6 | Press mode switch | Battery voltage |

OK or NG

OK >> GO TO 5.
NG >> Replace front air control. Refer to ATC-193, "FRONT AIR CONTROL" .

## 5. CHECK MODE DOOR MOTOR AND CIRCUITS FOR OPEN

1. Turn ignition switch OFF.
2. Disconnect the front air control harness connector.
3. Check continuity between front air control harness connector M49 terminal 5 and terminal 6.

**Continuity should exist.**

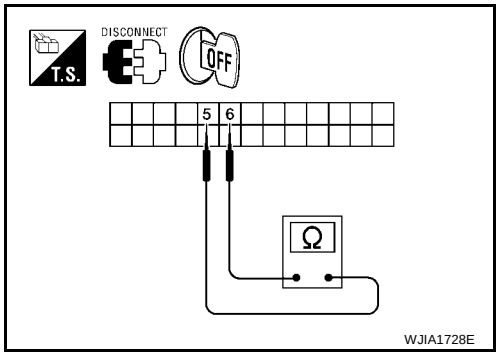


OK or NG

OK >> GO TO 7.
NG >> GO TO 6.

## 6. CHECK MODE DOOR MOTOR CIRCUITS FOR OPEN

1. Disconnect the mode door motor harness connector.
2. Check continuity between front air control harness connector M49 terminal 5, 6 and the mode door motor harness connector terminal 5, 6.

**5 - 5 : Continuity should exist.**
**6 - 6 : Continuity should exist.**

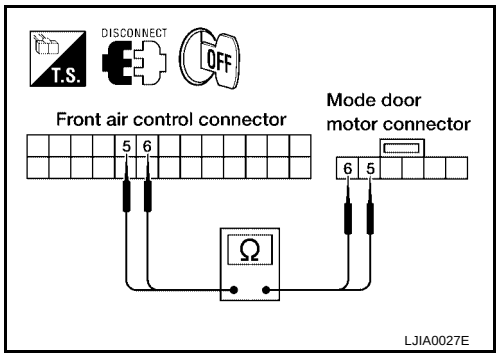


OK or NG

OK >> Replace mode door motor. Refer to ATC-211, "MODE DOOR MOTOR" .
NG >> Repair or replace harness as necessary.

## 7. CHECK FRONT AIR CONTROL FOR PBR POWER AND GROUND

1. Reconnect front air control harness connector.
2. Turn ignition switch ON.
3. Check voltage between front air control harness connector M49 terminal 2 and terminal 15.

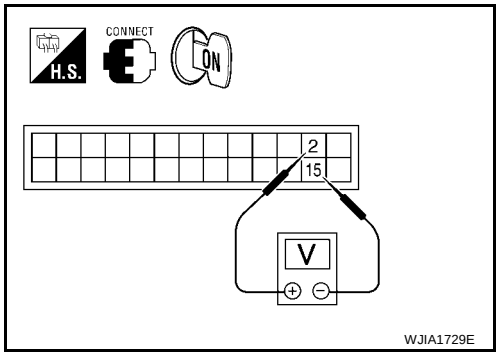


| Connector | Terminals | | Voltage (Approx.) |
|---|---|---|---|
| | (+) | (-) | |
| Front air control: M49 | 2 | 15 | 5V |

OK or NG

OK >> GO TO 9.
NG >> GO TO 8.

## 8. CHECK PBR REFERENCE VOLTAGE CIRCUIT FOR SHORT TO GROUND

1. Turn ignition switch OFF.
2. Disconnect the front air control harness connector.
3. Check continuity between front air control harness connector M49 terminal 2 and ground.

**Continuity should not exist.**

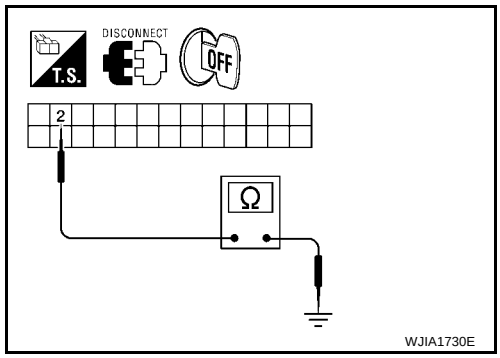


OK or NG

OK >> Replace front air control. Refer to ATC-193, "FRONT AIR CONTROL" .

NG >> Repair or replace harness as necessary.

## 9. CHECK PBR REFERENCE VOLTAGE AND GROUND CIRCUITS

1. Turn ignition switch OFF.
2. Disconnect the front air control harness connector.
3. Check continuity between front air control harness connector M49 terminal 2 and terminal 15.

**Continuity should exist.**

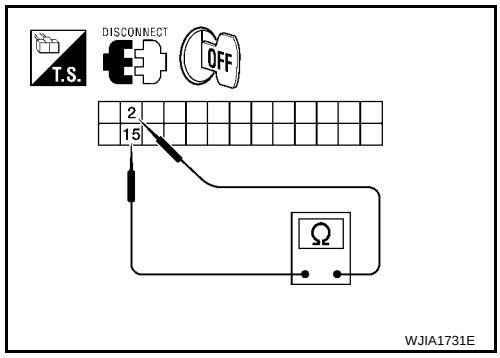


OK or NG

OK >> GO TO 11.

NG >> GO TO 10

## 10. CHECK PBR REFERENCE VOLTAGE CIRCUIT FOR OPEN

1. Disconnect the mode door motor harness connector.
2. Check continuity between mode door motor harness connector M304 (B) terminal 3, 1 and front air control harness connector M49 (A) terminal 2, 15.

**2 - 3 : Continuity should exist.**

**15 - 1 : Continuity should exist.**

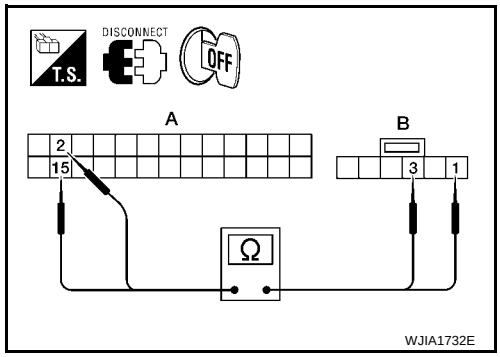


OK or NG

OK >> Replace mode door motor. Refer to ATC-211, "MODE DOOR MOTOR" .

NG >> Repair or replace harness as necessary.

## 11. CHECK PBR FEEDBACK VOLTAGE

1. Reconnect the front air control harness connector.
2. Turn ignition switch ON.
3. Check voltage between front air control harness connector M49 terminal 16 and ground while cycling mode switch through all modes.

**Voltage : Approx. 1V - 4.5V**

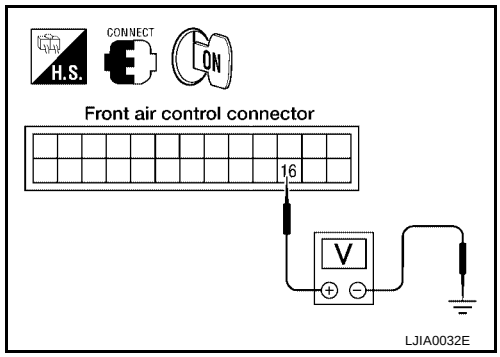


OK or NG

OK >> GO TO 13.

NG >> GO TO 12.

## 12. CHECK PBR FEEDBACK SIGNAL CIRCUIT FOR SHORT TO GROUND

1. Turn ignition switch OFF.
2. Disconnect front air control harness connector.
3. Check continuity between front air control harness connector M49 terminal 16 and ground.

**Continuity should not exist.**

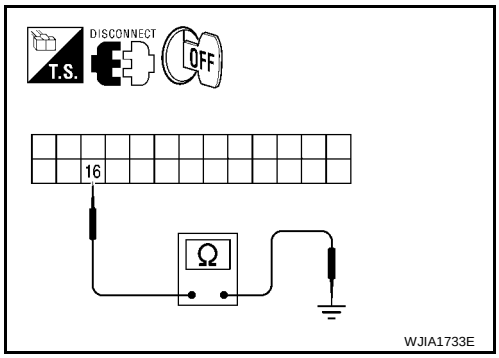


OK or NG

OK >> Replace front air control. Refer to ATC-193, "FRONT AIR CONTROL" .

NG >> Repair or replace harness as necessary.

## 13. CHECK PBR FEEDBACK CIRCUIT FOR OPEN

1. Turn ignition switch OFF.
2. Disconnect the mode door motor harness connector and front air control harness connector.
3. Check continuity between mode door motor harness connector M304 terminal 2 and front air control harness connector M49 terminal 16.

**Continuity should exist.**

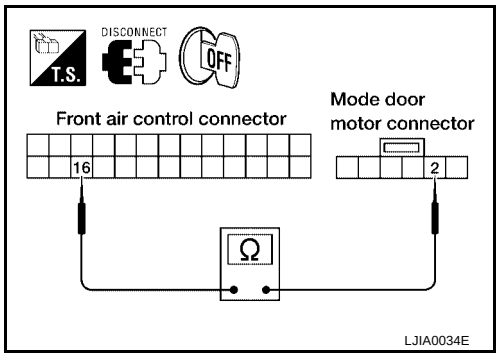


OK or NG

OK >> Replace mode door motor. Refer to ATC-211, "MODE DOOR MOTOR" .

NG >> Repair or replace harness as necessary.

## 14. CHECK FRONT AIR CONTROL FOR POWER AND GROUND

1. Turn ignition switch ON.
2. Press the mode switch to the B/L ( ) mode.
3. Check voltage between front air control harness connector M49 terminal 1 and terminal 14 while pressing the mode switch to the floor ( ) mode.

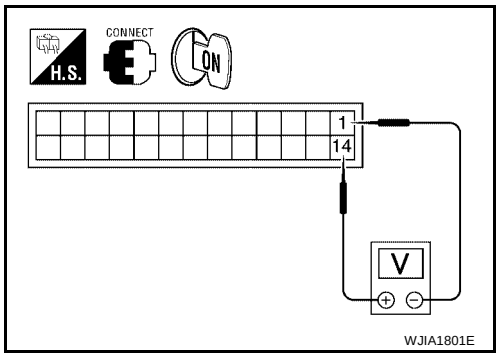


| Connector | Terminals | | Condition | Voltage (Approx.) |
|---|---|---|---|---|
| | (+) | (-) | | |
| Front air control: M49 | 14 | 1 | Press mode switch | Battery voltage |

OK or NG

OK >> GO TO 16

NG >> GO TO 15

## 15. CHECK MODE DOOR MOTOR CIRCUITS FOR SHORT TO GROUND

1. Turn ignition switch OFF.
2. Disconnect the front air control harness connector.
3. Check continuity between front air control harness connector M49 terminal 1, 14 and ground.

**1 - Ground : Continuity should not exist.**
**14 - Ground : Continuity should not exist.**

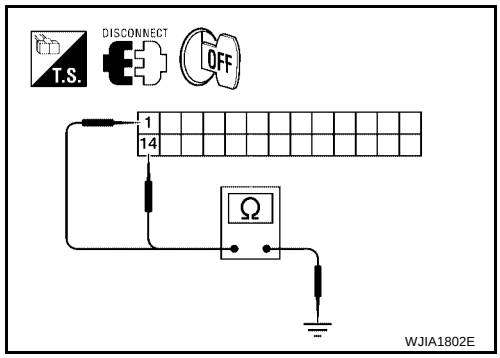


OK or NG

OK >> Replace front air control. Refer to ATC-193, "FRONT AIR CONTROL" .
NG >> Repair or replace harness as necessary.

## 16. CHECK FRONT AIR CONTROL FOR GROUND AND POWER

1. Press the mode switch to the D/F ( ) mode.
2. Check voltage between front air control harness connector M49 terminal 1 and terminal 14 while pressing the mode switch to the vent ( ) mode.

| Connector | Terminals | | Condition | Voltage (Approx.) |
|---|---|---|---|---|
| | (+) | (-) | | |
| Front air control: M49 | 1 | 14 | Press mode switch | Battery voltage |

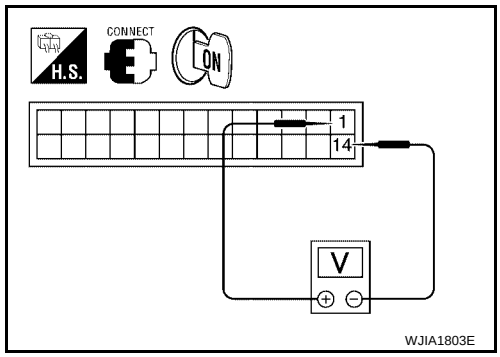


OK or NG

OK >> GO TO 17.
NG >> Replace front air control. Refer to ATC-193, "FRONT AIR CONTROL" .

## 17. CHECK MODE DOOR MOTOR AND CIRCUITS FOR OPEN

1. Turn ignition switch OFF.
2. Disconnect the front air control harness connector.
3. Check continuity between front air control harness connector M49 terminal 1 and terminal 14.

**Continuity should exist.**

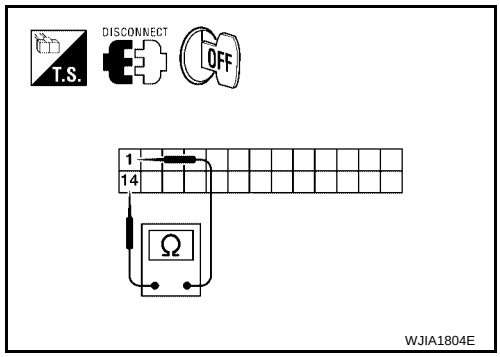


OK or NG

OK >> GO TO 19.
NG >> GO TO 18.

## 18. CHECK MODE DOOR MOTOR CIRCUITS FOR OPEN

1. Disconnect the mode door motor harness connector.
2. Check continuity between front air control harness connector M49 (A) terminal 1, 14 and the mode door motor harness connector M142 (B) terminal 5, 6.

**1 - 5 : Continuity should exist.**
**14 - 6 : Continuity should exist.**

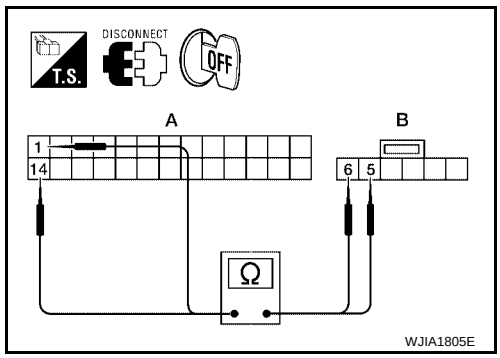


OK or NG

OK >> Replace mode door motor. Refer to ATC-211, "MODE DOOR MOTOR" .
NG >> Repair or replace harness as necessary.

## 19. CHECK FRONT AIR CONTROL FOR PBR POWER AND GROUND

1. Reconnect front air control harness connector.
2. Turn ignition switch ON.
3. Check voltage between front air control harness connector M49 terminal 23 and terminal 26.

| Connector | Terminals | | Voltage (Approx.) |
|---|---|---|---|
| | (+) | (-) | |
| Front air control: M49 | 23 | 26 | 5V |

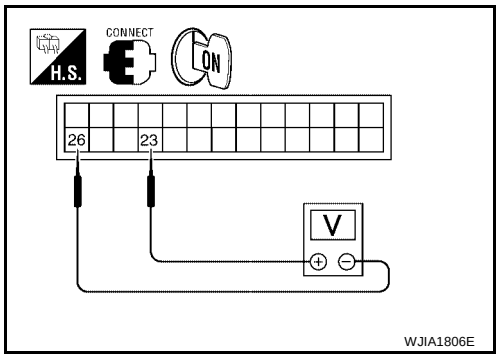


OK or NG

OK >> GO TO 21.
NG >> GO TO 20.

## 20. CHECK PBR REFERENCE VOLTAGE CIRCUIT FOR SHORT TO GROUND

1. Turn ignition switch OFF.
2. Disconnect the front air control harness connector.
3. Check continuity between front air control harness connector M49 terminal 23 and ground.

**Continuity should not exist.**

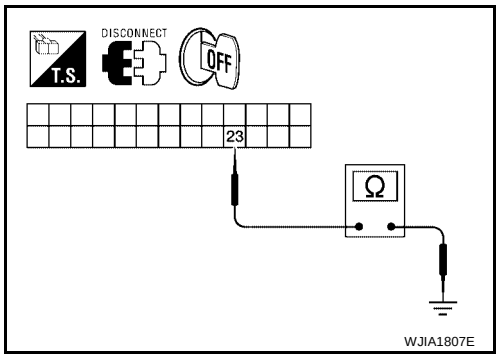


OK or NG

OK >> Replace front air control. Refer to ATC-193, "FRONT AIR CONTROL" .
NG >> Repair or replace harness as necessary.

## 21. CHECK PBR REFERENCE VOLTAGE AND GROUND CIRCUITS

1. Turn ignition switch OFF.
2. Disconnect the front air control harness connector.
3. Check continuity between front air control harness connector M49 terminal 23 and terminal 26.

**Continuity should exist.**

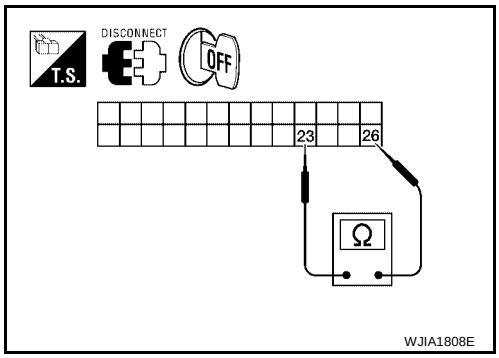


OK or NG

OK >> GO TO 23.
NG >> GO TO 22.

## 22. CHECK PBR REFERENCE VOLTAGE CIRCUIT FOR OPEN

1. Disconnect the mode door motor harness connector.
2. Check continuity between mode door motor harness connector M304 (B) terminal 3, 1 and front air control harness connector M49 (A) terminal 23, 26.

**23 - 3 : Continuity should exist.**
**26 - 1 : Continuity should exist.**

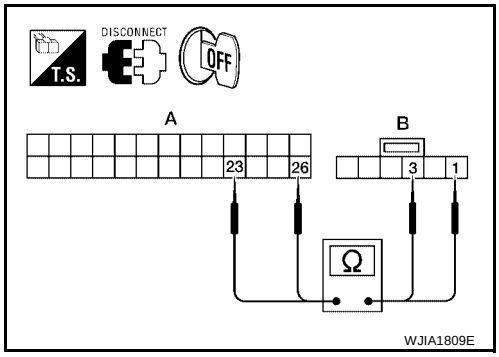


OK or NG

OK >> Replace mode door motor. Refer to ATC-211, "MODE DOOR MOTOR" .
NG >> Repair or replace harness as necessary.

## 23. CHECK PBR FEEDBACK VOLTAGE

1. Reconnect the front air control harness connector.
2. Turn ignition switch ON.
3. Check voltage between front air control harness connector M49 terminal 21 and ground while cycling mode switch through all modes.

**Voltage : Approx. 1V - 4.5V**

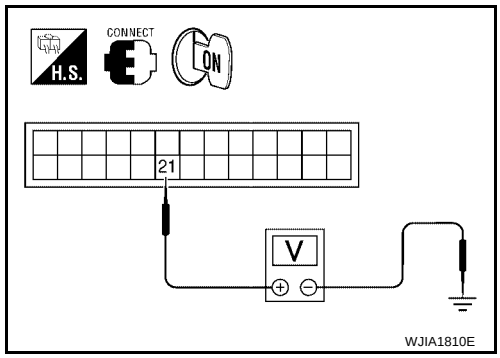


OK or NG

OK >> GO TO 25.
NG >> GO TO 24.

## 24. CHECK PBR FEEDBACK SIGNAL CIRCUIT FOR SHORT TO GROUND

1. Turn ignition switch OFF.
2. Disconnect front air control harness connector.
3. Check continuity between front air control harness connector M49 terminal 21 and ground.

**Continuity should not exist.**

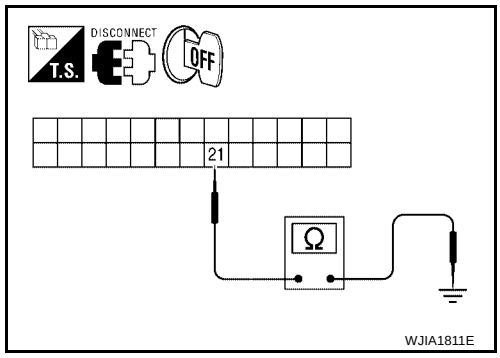


OK or NG

OK >> Replace front air control. Refer to ATC-193, "FRONT AIR CONTROL" .
NG >> Repair or replace harness as necessary.

## 25. CHECK PBR FEEDBACK CIRCUIT FOR OPEN

1. Turn ignition switch OFF.
2. Disconnect the mode door motor harness connector and front air control harness connector.
3. Check continuity between mode door motor harness connector M304 (B) terminal 2 and front air control harness connector M49 (A) terminal 21.

**Continuity should exist.**

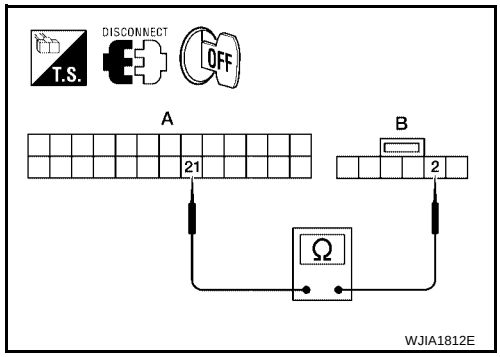


OK or NG

OK >> Replace mode door motor. Refer to ATC-211, "MODE DOOR MOTOR" .
NG >> Repair or replace harness as necessary.

## Air Mix Door Motor Circuit

EJS005E7

SYMPTOM:

- Discharge air temperature does not change.
- Air mix door motor does not operate.

### INSPECTION FLOW

### 1. CONFIRM SYMPTOM BY PERFORMING OPERATIONAL CHECK - TEMPERATURE INCREASE

1. Turn the temperature control dial (driver) clockwise until 32°C (90°F) is displayed.
2. Check for hot air at discharge air outlets.

>> GO TO 2.

### 2. CONFIRM SYMPTOM BY PERFORMING OPERATIONAL CHECK - TEMPERATURE DECREASE

1. Turn the temperature control dial (driver) counterclockwise until 16°C (60°F) is displayed.
2. Check for cold air at discharge air outlets.

Can a symptom be duplicated?

YES >> GO TO 4.
NO >> GO TO 3.

### 3. PERFORM COMPLETE OPERATIONAL CHECK

Perform a complete operational check and check for any symptoms. Refer to ATC-69, "Operational Check (Front)" .

Can a symptom be duplicated?

YES >> Refer to ATC-36, "SYMPTOM TABLE" .
NO >> System OK.

### 4. CHECK FOR SERVICE BULLETINS

Check for any service bulletins.

>> GO TO 5.

### 5. CHECK AIR MIX DOOR OPERATION

Check and verify air mix door mechanism for smooth operation from 16°C (60°F) to 32°C (90°F) in each mode.

OK or NG

OK >> GO TO 6.
NG >> Repair as necessary.

### 6. PERFORM SELF-DIAGNOSIS

Perform self-diagnosis to check for any codes. Refer to ATC-67, "A/C System Self-diagnosis Function" .

Are any self-diagnosis codes present?

YES >> Refer to ATC-68, "SELF-DIAGNOSIS CODE CHART" .
NO >> GO TO 7.

### 7. CHECK THE AIR MIX DOOR MOTOR PBR CIRCUIT

Perform diagnostic procedure for the air mix door motors. Refer to ATC-86, "Air Mix Door Motor Circuit" .

OK or NG

OK >> GO TO 8.
NG >> Repair PBR circuit or replace air mix door motor. Refer to ATC-212, "AIR MIX DOOR MOTOR" .

## 8. RECHECK FOR CODES

Perform self-diagnosis. Refer to ATC-67, "A/C System Self-diagnosis Function" .

Are any self-diagnostic codes present?

YES >> Refer to ATC-68, "SELF-DIAGNOSIS CODE CHART" .
NO >> GO TO 9.

## 9. RECHECK FOR ANY SYMPTOMS

Perform a complete operational check for any symptoms. Refer to ATC-69, "Operational Check (Front)" .

Does another symptom exist?

YES >> Refer to ATC-36, "SYMPTOM TABLE" .
NO >> Replace front air control. Refer to ATC-193, "FRONT AIR CONTROL" .

## SYSTEM DESCRIPTION

### Component Parts

Air mix door control system components are:

- Front air control.
- Air mix door motors (Driver, Passenger, and rear)
- PBR (built-into air mix door motors)
- In-vehicle sensor
- Ambient sensor
- Optical sensor
- Intake sensor

### System Operation

The front air control receives data from the temperature selected by the driver side, passenger side, and rear. The front air control then applies a voltage to one circuit of the appropriate air mix door motor, while ground is applied to the other circuit, causing the appropriate air mix door motor to rotate. The direction of rotation is determined by which circuit has voltage applied to it, and which one has ground applied to it. The front air control monitors the air mix door positions by measuring the voltage signal on the PBR circuits of each door.
In AUTO mode the air mix, intake, mode door, and defrost door positions are set by the front air control which determines the proper position based on inputs from the in-vehicle sensor, ambient sensor, optical sensor, intake sensor, and the temperature selected by the driver and front and rear passengers.
Subsequently, HOT/COLD or DEFROST/VENT or FRESH/RECIRCULATION operation is selected. The new door position data is returned to the front air control.

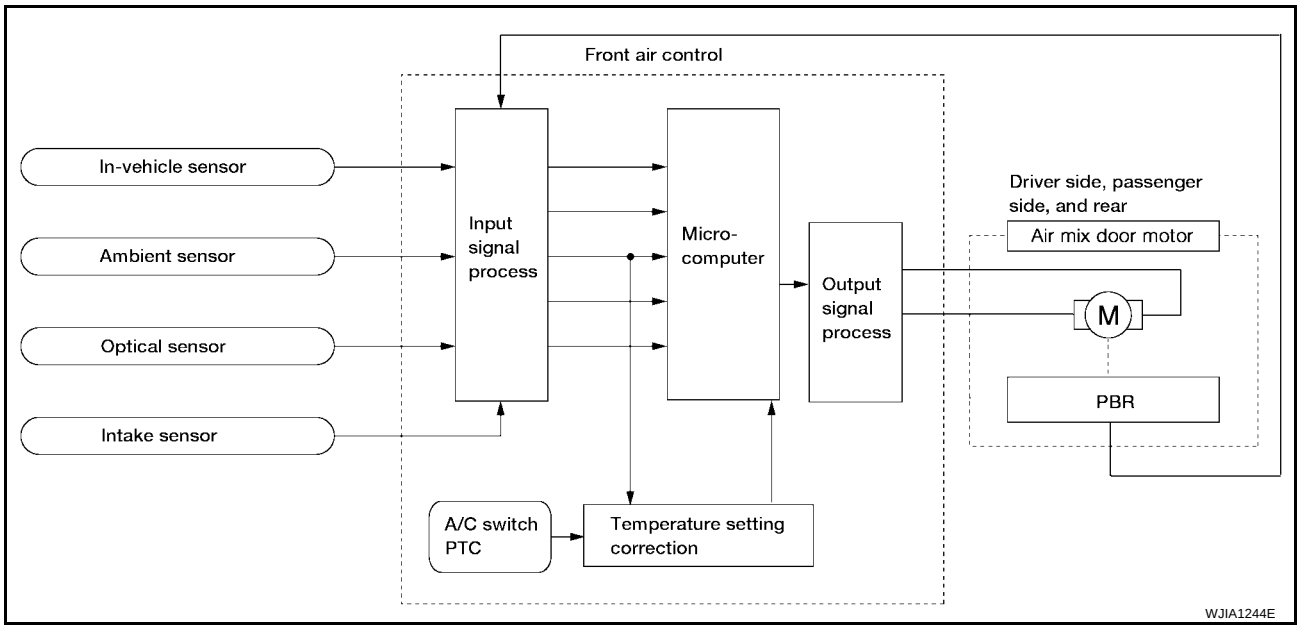


### Air Mix Door Control Specification

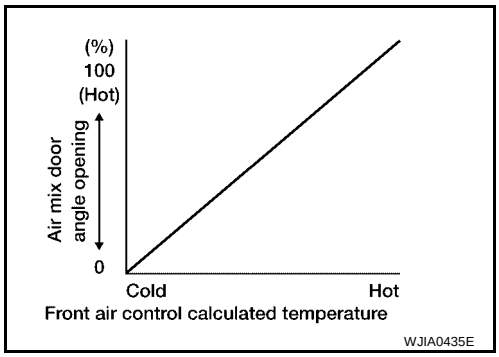

## COMPONENT DESCRIPTION

### Air Mix Door Motors

The driver (1) and front passenger (2) air mix door motors are attached to the front heater & cooling unit assembly. The rear air mix door motor is attached to the rear heater & cooling unit assembly. These motors rotate so that the air mix door is opened or closed to a position set by the front (or rear) air control. Motor rotation is then conveyed through a shaft and the air mix door position is then fed back to the front air control by the PBR built into the air mix door motors.

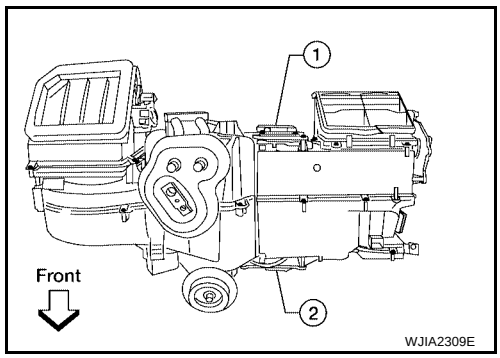


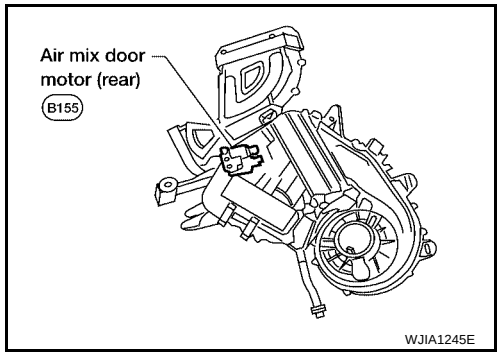


## DIAGNOSTIC PROCEDURE FOR AIR MIX DOOR MOTOR (DRIVER)

### 1. CHECK VEHICLE EQUIPMENT

Is vehicle equipped with navi?

YES or NO

YES >> GO TO 2.
NO >> GO TO 14.

### 2. CHECK FRONT AIR CONTROL FOR POWER AND GROUND

1. Turn ignition switch ON.
2. Rotate temperature control dial (driver) to 32°C (90°F).
3. Check voltage between front air control harness connector M49 terminal 3 and terminal 4 while rotating temperature control dial (driver) to 16°C (60°F).

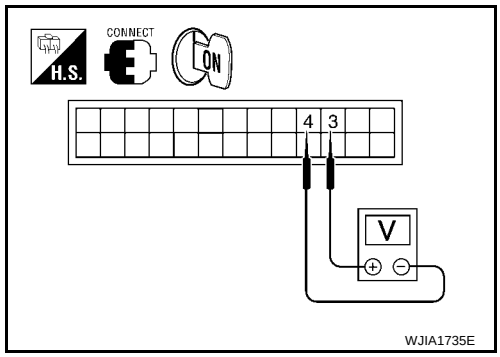


| Connector | Terminals | | Condition | Voltage (Approx.) |
|---|---|---|---|---|
| | (+) | (-) | | |
| Front air control: M49 | 3 | 4 | Rotate temp control dial | Battery voltage |

OK or NG

OK >> GO TO 4.
NG >> GO TO 3.

## 3. CHECK AIR MIX DOOR MOTOR (DRIVER) CIRCUITS FOR SHORT TO GROUND

1. Turn ignition switch OFF.
2. Disconnect the front air control harness connector.
3. Check continuity between front air control harness connector M49 terminal 3, 4 and ground.

**3 - Ground : Continuity should not exist.**

**4 - Ground : Continuity should not exist.**

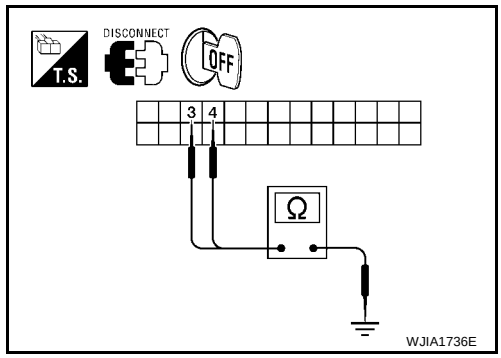


OK or NG

OK >> Replace front air control. Refer to ATC-193, "FRONT AIR CONTROL" .

NG >> Repair or replace harness as necessary.

## 4. CHECK FRONT AIR CONTROL FOR POWER AND GROUND

1. Turn ignition switch ON.
2. Rotate temperature control dial (driver) to 32°C (90°F).
3. Check voltage between front air control harness connector M49 terminal 3 and terminal 4 while rotating temperature control dial (driver) to 16°C (60°F).

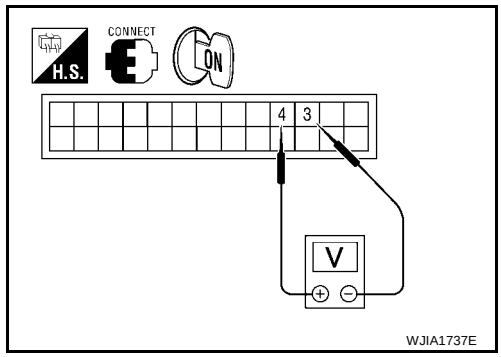


| Connector | Terminals | | Condition | Voltage (Approx.) |
|---|---|---|---|---|
| | (+) | (-) | | |
| Front air control: M49 | 4 | 3 | Rotate temp control dial | Battery voltage |

OK or NG

OK >> GO TO 5.

NG >> Replace front air control. Refer to ATC-193, "FRONT AIR CONTROL" .

## 5. CHECK AIR MIX DOOR MOTOR (DRIVER) CIRCUITS FOR OPEN

1. Turn ignition switch OFF.
2. Disconnect the front air control harness connector.
3. Check continuity between front air control harness connector M49 terminal 3 and terminal 4.

**Continuity should exist.**

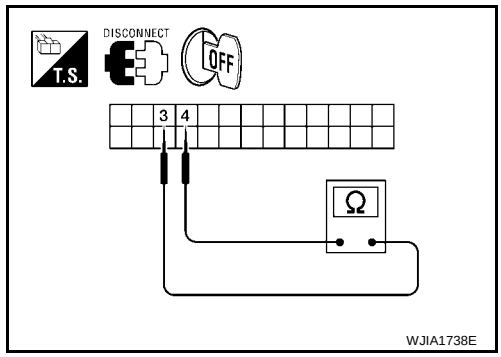


OK or NG

OK >> GO TO 7.

NG >> GO TO 6.

## 6. CHECK AIR MIX DOOR MOTOR (DRIVER) CIRCUITS FOR OPEN

1. Disconnect the air mix door motor (driver) harness connector.
2. Check continuity between front air control harness connector M49 terminal 3, 4 and the air mix door motor (driver) harness connector M147 terminal 1, 6.

**3 - 1 : Continuity should exist.**

**4 - 6 : Continuity should exist.**

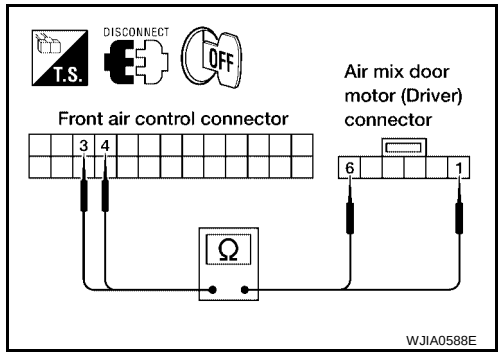


OK or NG

OK >> Replace air mix door motor (driver). Refer to ATC-213, "FRONT AIR MIX DOOR MOTOR (PASSENGER)" .

NG >> Repair or replace harness as necessary.

## 7. CHECK FRONT AIR CONTROL FOR PBR POWER AND GROUND

1. Reconnect front air control harness connector.
2. Turn ignition switch ON.
3. Check voltage between front air control harness connector M49 terminal 2 and terminal 15.

| Connector | Terminals | | Voltage (Approx.) |
|---|---|---|---|
| | (+) | (-) | |
| Front air control: M49 | 2 | 15 | 5V |

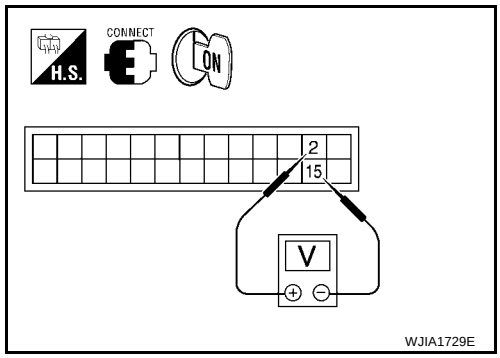


OK or NG

OK >> GO TO 9.
NG >> GO TO 8.

## 8. CHECK PBR REFERENCE VOLTAGE CIRCUIT FOR SHORT TO GROUND

1. Turn ignition switch OFF.
2. Disconnect the front air control harness connector.
3. Check continuity between front air control harness connector M49 terminal 2 and ground.

**Continuity should not exist.**

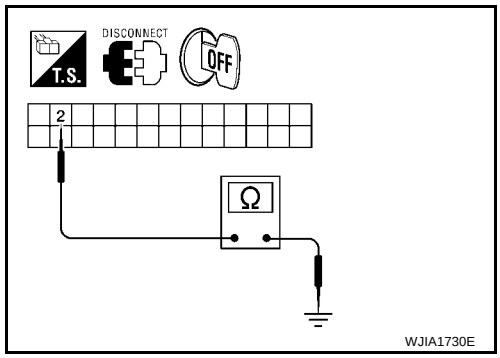


OK or NG

OK >> Replace front air control. Refer to ATC-193, "FRONT AIR CONTROL" .
NG >> Repair or replace harness as necessary.

## 9. CHECK PBR REFERENCE VOLTAGE AND GROUND CIRCUITS

1. Turn ignition switch OFF.
2. Disconnect the front air control harness connector.
3. Check continuity between front air control harness connector M49 terminal 2 and terminal 15.

**Continuity should exist.**

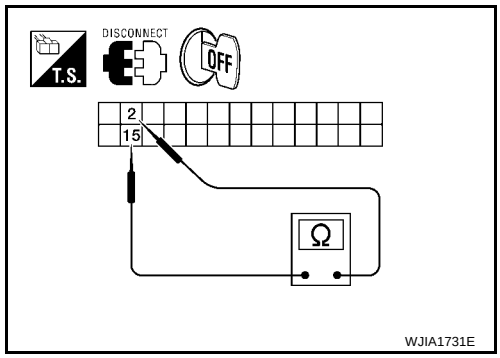


OK or NG

OK >> GO TO 11.
NG >> GO TO 10.

## 10. CHECK PBR REFERENCE VOLTAGE CIRCUIT FOR OPEN

1. Disconnect the air mix door motor (driver) harness connector.
2. Check continuity between air mix door motor (driver) harness connector M147 (B) terminal 3, 2 and front air control harness connector M49 (A) terminal 2, 15.

**2 - 3 : Continuity should exist.**
**15 - 2 : Continuity should exist.**

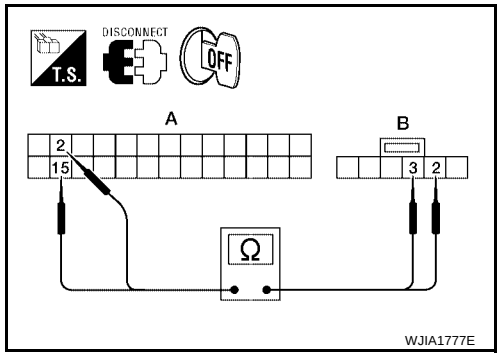


OK or NG

OK >> Replace air mix door motor (driver). Refer to ATC-213, "FRONT AIR MIX DOOR MOTOR (PASSENGER)" .
NG >> Repair or replace harness as necessary.

## 11. CHECK PBR FEEDBACK VOLTAGE

1. Reconnect the front air control harness connector.
2. Turn ignition switch ON.
3. Check voltage between front air control harness connector M49 terminal 18 and ground while rotating temperature control dial from 32°C (90°F) to 16°C (60°F).

**Voltage : Approx. .5V - 4.5V**

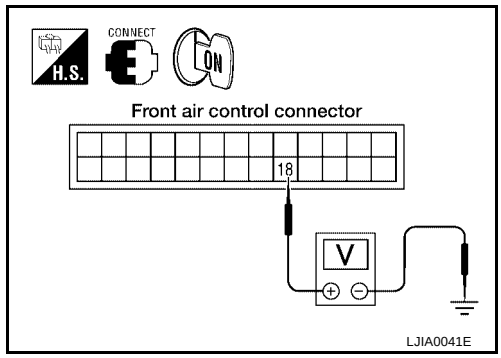


OK or NG

OK >> GO TO 13.
NG >> GO TO 12.

## 12. CHECK PBR FEEDBACK SIGNAL CIRCUIT FOR SHORT TO GROUND

1. Turn ignition switch OFF.
2. Disconnect front air control harness connector.
3. Check continuity between front air control harness connector M49 terminal 18 and ground.

**Continuity should not exist.**

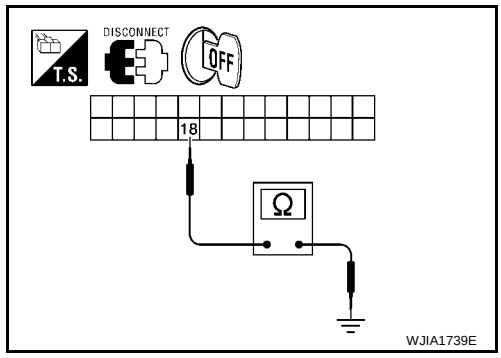


OK or NG

OK >> Replace front air control. Refer to ATC-193, "FRONT AIR CONTROL" .
NG >> Repair or replace harness as necessary.

## 13. CHECK PBR FEEDBACK CIRCUIT FOR OPEN

1. Turn ignition switch OFF.
2. Disconnect the air mix door motor (driver) harness connector and front air control harness connector.
3. Check continuity between air mix door motor (driver) harness connector M147 terminal 4 and front air control harness connector M49 terminal 18.

**Continuity should exist.**

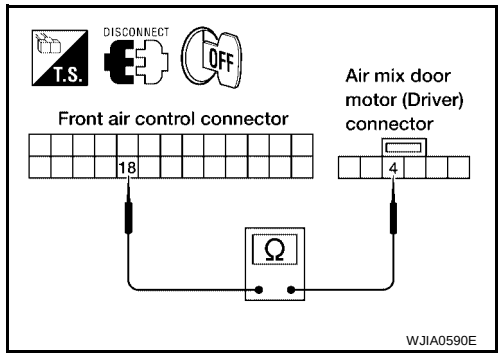


OK or NG

OK >> Replace air mix door motor (driver). Refer to ATC-213, "FRONT AIR MIX DOOR MOTOR (PASSENGER)" .
NG >> Repair or replace harness as necessary.

## 14. CHECK FRONT AIR CONTROL FOR POWER AND GROUND

1. Turn ignition switch ON.
2. Rotate temperature control dial (driver) to 32°C (90°F).
3. Check voltage between front air control harness connector M49 terminal 2 and terminal 3 while rotating temperature control dial (driver) to 60°F.

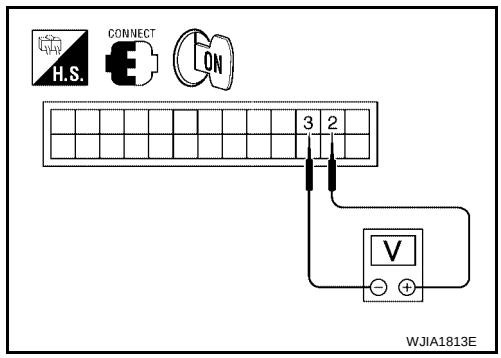


| Connector | Terminals | | Condition | Voltage (Approx.) |
|---|---|---|---|---|
| | (+) | (-) | | |
| Front air control: M49 | 2 | 3 | Rotate temp control dial | Battery voltage |

OK or NG

OK >> GO TO 16.
NG >> GO TO 15.

## 15. CHECK AIR MIX DOOR MOTOR (DRIVER) CIRCUITS FOR SHORT TO GROUND

1. Turn ignition switch OFF.
2. Disconnect the front air control harness connector.
3. Check continuity between front air control harness connector M49 terminal 2, 3 and ground.

**3 - Ground : Continuity should not exist.**
**2 - Ground : Continuity should not exist.**

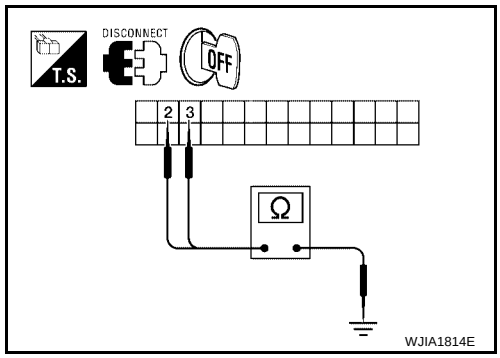


OK or NG

OK >> Replace front air control. Refer to ATC-193, "FRONT AIR CONTROL" .
NG >> Repair or replace harness as necessary.

## 16. CHECK FRONT AIR CONTROL FOR POWER AND GROUND

1. Turn ignition switch ON.
2. Rotate temperature control dial (driver) to 32°C (90°F).
3. Check voltage between front air control harness connector M49 terminal 2 and terminal 3 while rotating temperature control dial (driver) to 60°F.

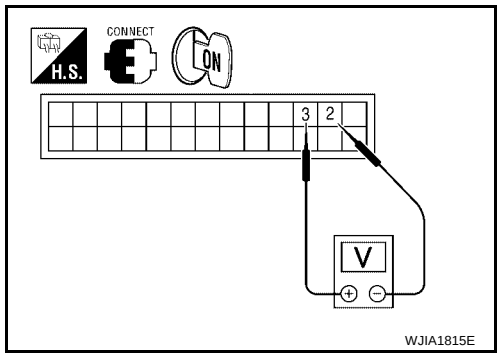


| Connector | Terminals | | Condition | Voltage (Approx.) |
|---|---|---|---|---|
| | (+) | (-) | | |
| Front air control: M49 | 3 | 2 | Rotate temp control dial | Battery voltage |

OK or NG

OK >> GO TO 17.
NG >> Replace front air control. Refer to ATC-193, "FRONT AIR CONTROL" .

## 17. CHECK AIR MIX DOOR MOTOR (DRIVER) CIRCUITS FOR OPEN

1. Turn ignition switch OFF.
2. Disconnect the front air control harness connector.
3. Check continuity between front air control harness connector M49 terminal 2 and terminal 3.

**Continuity should exist.**

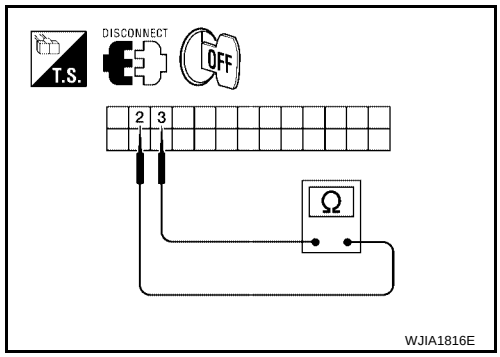


OK or NG

OK >> GO TO 19.
NG >> GO TO 18.

## 18. CHECK AIR MIX DOOR MOTOR (DRIVER) CIRCUITS FOR OPEN

1. Disconnect the air mix door motor (driver) harness connector.
2. Check continuity between front air control harness connector M49 (A) terminal 2, 3 and the air mix door motor (driver) harness connector M147 (B) terminal 1, 6.

**2 - 1 : Continuity should exist.**
**3 - 6 : Continuity should exist.**

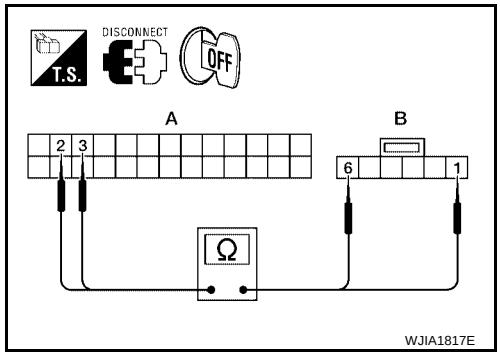


OK or NG

OK >> Replace air mix door motor (driver). Refer to ATC-213, "FRONT AIR MIX DOOR MOTOR (PASSENGER)" .
NG >> Repair or replace harness as necessary.

## 19. CHECK FRONT AIR CONTROL FOR PBR POWER AND GROUND

1. Reconnect front air control harness connector.
2. Turn ignition switch ON.
3. Check voltage between front air control harness connector M49 terminal 23 and terminal 26.

| Connector | Terminals | | Voltage (Approx.) |
|---|---|---|---|
| | (+) | (-) | |
| Front air control: M49 | 23 | 26 | 5V |

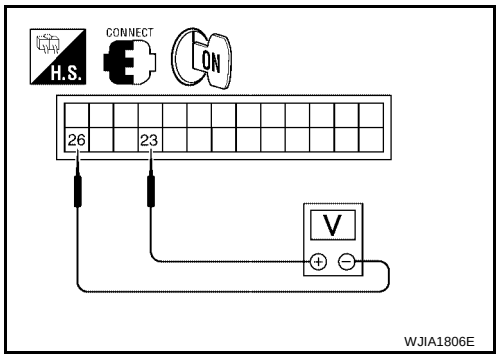


OK or NG

OK >> GO TO 21.
NG >> GO TO 20.

## 20. CHECK PBR REFERENCE VOLTAGE CIRCUIT FOR SHORT TO GROUND

1. Turn ignition switch OFF.
2. Disconnect the front air control harness connector.
3. Check continuity between front air control harness connector M49 terminal 23 and ground.

**Continuity should not exist.**

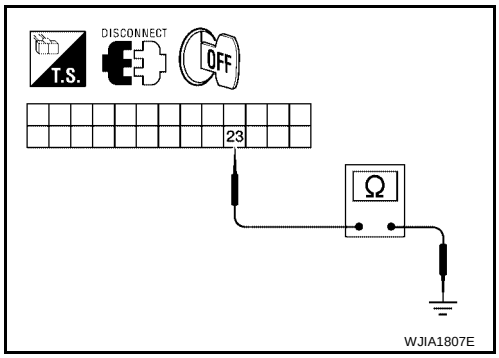


OK or NG

OK >> Replace front air control. Refer to ATC-193, "FRONT AIR CONTROL" .
NG >> Repair or replace harness as necessary.

## 21. CHECK PBR REFERENCE VOLTAGE AND GROUND CIRCUITS

1. Turn ignition switch OFF.
2. Disconnect the front air control harness connector.
3. Check continuity between front air control harness connector M49 terminal 23 and terminal 26.

**Continuity should exist.**

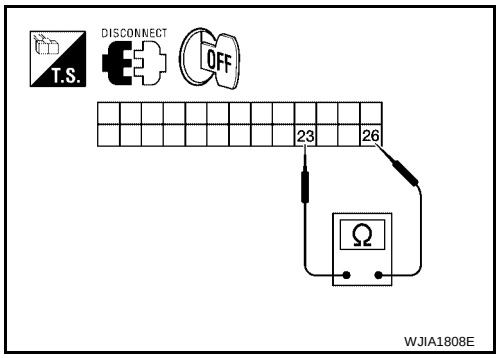


OK or NG

OK >> GO TO 23.
NG >> GO TO 22.

## 22. CHECK PBR REFERENCE VOLTAGE CIRCUIT FOR OPEN

1. Disconnect the air mix door motor (driver) harness connector.
2. Check continuity between air mix door motor (driver) harness connector M147 (B) terminal 3, 2 and front air control harness connector M49 (A) terminal 23, 26.

**23 - 3 : Continuity should exist.**
**26 - 2 : Continuity should exist.**

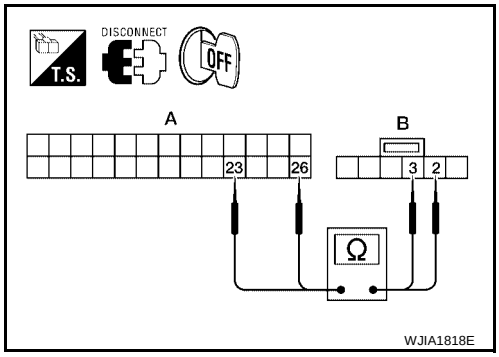


OK or NG

OK >> Replace air mix door motor (driver). Refer to ATC-213, "FRONT AIR MIX DOOR MOTOR (PASSENGER)" .
NG >> Repair or replace harness as necessary.

## 23. CHECK PBR FEEDBACK VOLTAGE

1. Reconnect the front air control harness connector.
2. Turn ignition switch ON.
3. Check voltage between front air control harness connector M49 terminal 22 and ground while rotating temperature control dial from 32°C (90°F) to 16°C (60°F).

**Voltage : Approx. .5V - 4.5V**

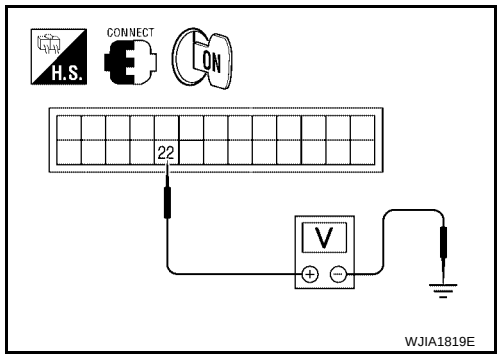


OK or NG

OK >> GO TO 25.
NG >> GO TO 24.

## 24. CHECK PBR FEEDBACK SIGNAL CIRCUIT FOR SHORT TO GROUND

1. Turn ignition switch OFF.
2. Disconnect front air control harness connector.
3. Check continuity between front air control harness connector M49 terminal 22 and ground.

**Continuity should not exist.**

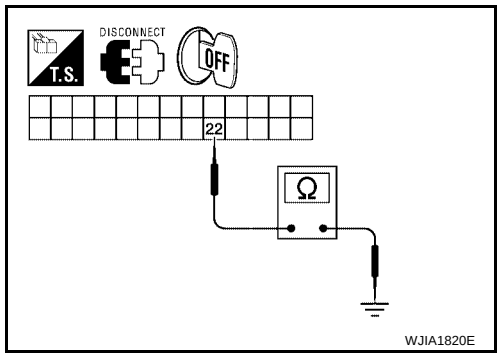


OK or NG

OK >> Replace front air control. Refer to ATC-193, "FRONT AIR CONTROL" .
NG >> Repair or replace harness as necessary.

## 25. CHECK PBR FEEDBACK CIRCUIT FOR OPEN

1. Turn ignition switch OFF.
2. Disconnect the air mix door motor (driver) harness connector and front air control harness connector.
3. Check continuity between air mix door motor (driver) harness connector M39 (B) terminal 4 and front air control harness connector M49 (A) terminal 22.

**Continuity should exist.**

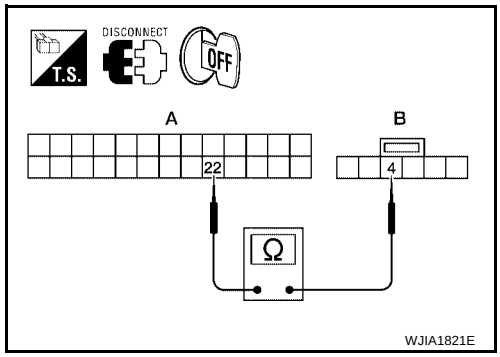


OK or NG

OK >> Replace air mix door motor (driver). Refer to ATC-213, "FRONT AIR MIX DOOR MOTOR (PASSENGER)" .
NG >> Repair or replace harness as necessary.

## DIAGNOSTIC PROCEDURE FOR AIR MIX DOOR MOTOR (PASSENGER)

### 1. CHECK VEHICLE EQUIPMENT

Is vehicle equipped with navi?

YES or NO

YES >> GO TO 2.
NO >> GO TO 14.

### 2. CHECK FRONT AIR CONTROL FOR POWER AND GROUND

1. Turn ignition switch ON.
2. Rotate temperature control dial (passenger) to 32°C (90°F).
3. Check voltage between front air control harness connector M50 terminal 36 and terminal 37 while rotating temperature control dial (passenger) to 16°C (60°F).

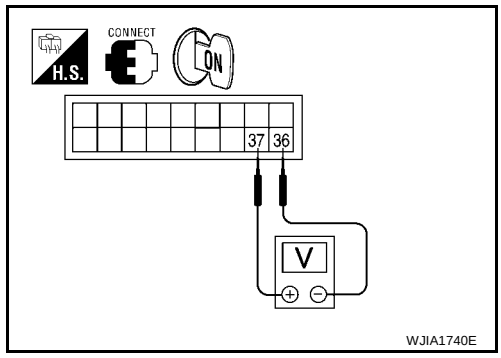


| Connector | Terminals | | Condition | Voltage (Approx.) |
|---|---|---|---|---|
| | (+) | (-) | | |
| Front air control: M50 | 37 | 36 | Rotate temp control dial | Battery voltage |

OK or NG

OK >> GO TO 4.
NG >> GO TO 3.

### 3. CHECK AIR MIX DOOR MOTOR (PASSENGER) CIRCUITS FOR SHORT TO GROUND

1. Turn ignition switch OFF.
2. Disconnect the front air control harness connector.
3. Check continuity between front air control harness connector M50 terminal 36, 37 and ground.

**36 - Ground : Continuity should not exist.**
**37 - Ground : Continuity should not exist.**

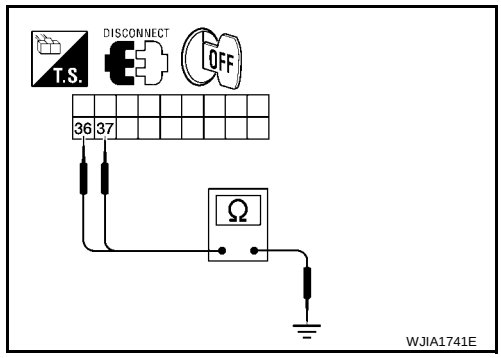


OK or NG

OK >> Replace front air control. Refer to ATC-193, "FRONT AIR CONTROL" .
NG >> Repair or replace harness as necessary.

### 4. CHECK FRONT AIR CONTROL FOR POWER AND GROUND

1. Turn ignition switch ON.
2. Rotate temperature control dial (passenger) to 16°C (60°F).
3. Check voltage between front air control harness connector M50 terminal 36 and terminal 37 while rotating temperature control dial (passenger) to 32°C (90°F).

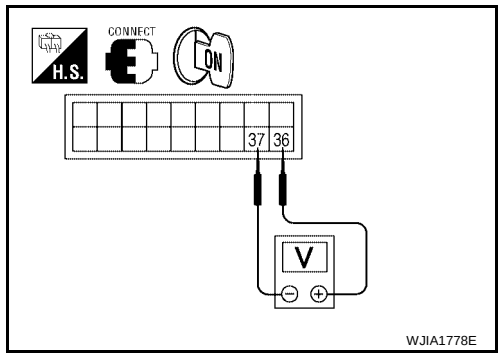


| Connector | Terminals | | Condition | Voltage (Approx.) |
|---|---|---|---|---|
| | (+) | (-) | | |
| Front air control: M50 | 36 | 37 | Rotate temp control dial | Battery voltage |

OK or NG

OK >> GO TO 5.
NG >> Replace front air control. Refer to ATC-193, "FRONT AIR CONTROL" .

## 5. CHECK AIR MIX DOOR MOTOR (PASSENGER) CIRCUITS FOR OPEN

1. Turn ignition switch OFF.
2. Disconnect the front air control harness connector.
3. Check continuity between front air control harness connector M50 terminal 36 and terminal 37.

**Continuity should exist.**

OK or NG

OK >> GO TO 7.
NG >> GO TO 6.

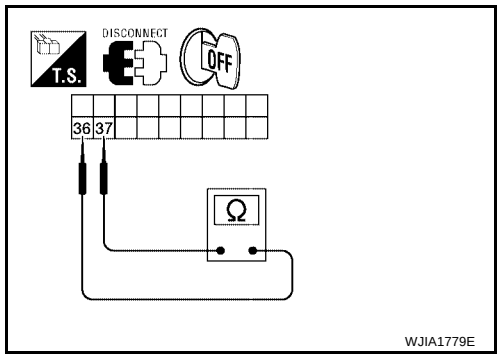


## 6. CHECK AIR MIX DOOR MOTOR (PASSENGER) CIRCUITS FOR OPEN

1. Disconnect the air mix door motor (passenger) harness connector.
2. Check continuity between front air control harness connector M50 terminal 36, 37 and the air mix door motor (passenger) harness connector M143 terminal 1, 6.

**36 - 1 : Continuity should exist.**
**37 - 6 : Continuity should exist.**

OK or NG

OK >> Replace air mix door motor (passenger). Refer to ATC-212, "FRONT AIR MIX DOOR MOTOR (DRIVER)" .
NG >> Repair or replace harness as necessary.

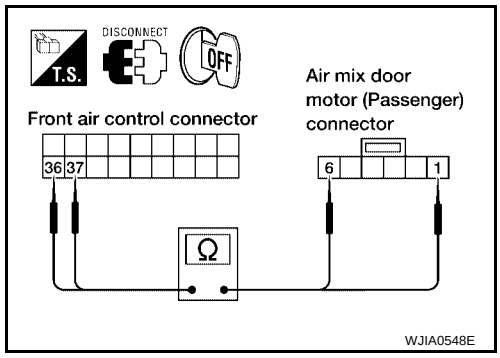


## 7. CHECK FRONT AIR CONTROL FOR PBR POWER AND GROUND

1. Reconnect front air control harness connector.
2. Turn ignition switch ON.
3. Check voltage between front air control harness connector M49 terminal 2 and terminal 15.

| Connector | Terminals | | Voltage (Approx.) |
|---|---|---|---|
| | (+) | (-) | |
| Front air control: M49 | 2 | 15 | 5V |

OK or NG

OK >> GO TO 9.
NG >> GO TO 8.

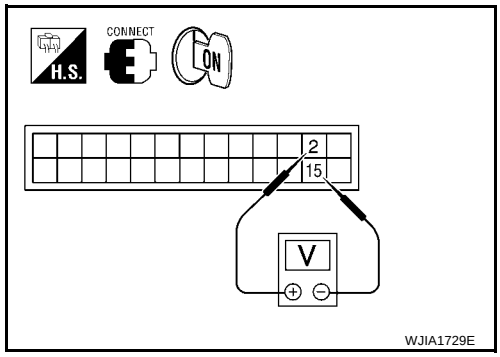


## 8. CHECK PBR REFERENCE VOLTAGE CIRCUIT FOR SHORT TO GROUND

1. Turn ignition switch OFF.
2. Disconnect the front air control harness connector.
3. Check continuity between front air control harness connector M49 terminal 2 and ground.

**Continuity should not exist.**

OK or NG

OK >> Replace front air control. Refer to ATC-193, "FRONT AIR CONTROL" .
NG >> Repair or replace harness as necessary.

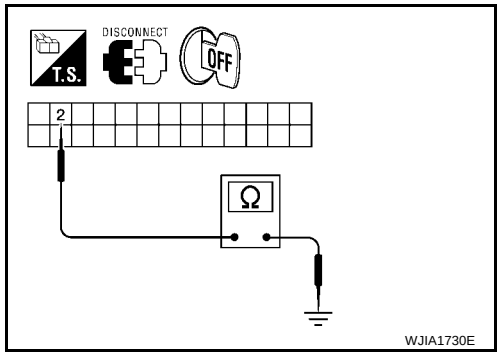

## 9. CHECK PBR REFERENCE VOLTAGE AND GROUND CIRCUITS

1. Turn ignition switch OFF.
2. Disconnect the front air control harness connector.
3. Check continuity between front air control harness connector M49 terminal 2 and terminal 15.

**Continuity should exist.**

OK or NG

OK >> GO TO 11.
NG >> GO TO 10.

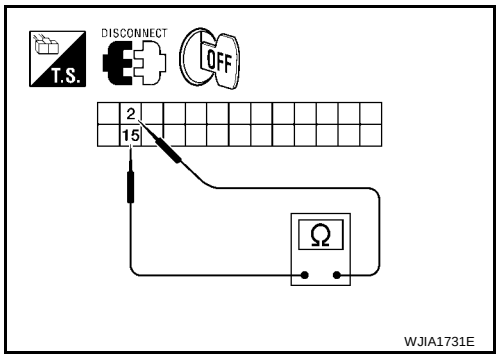


## 10. CHECK PBR REFERENCE VOLTAGE CIRCUIT FOR OPEN

1. Disconnect the air mix door motor (passenger) harness connector.
2. Check continuity between air mix door motor (passenger) harness connector M143 (B) terminal 3, 2 and front air control harness connector M49 (A) terminal 2, 15.

**2 - 3 : Continuity should exist.**
**15 - 2 : Continuity should exist.**

OK or NG

OK >> Replace air mix door motor (passenger). Refer to ATC-212, "FRONT AIR MIX DOOR MOTOR (DRIVER)" .
NG >> Repair or replace harness as necessary.

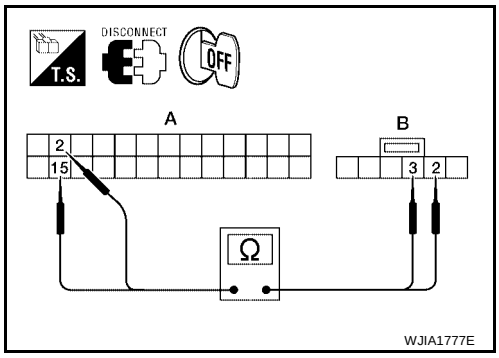


## 11. CHECK PBR FEEDBACK VOLTAGE

1. Reconnect the front air control harness connector.
2. Turn ignition switch ON.
3. Check voltage between front air control harness connector M50 terminal 41 and ground while rotating temperature control dial (passenger) from 32°C (90° F) to 16° (60° F).

**Voltage : Approx. .5V - 4.5V**

OK or NG

OK >> GO TO 13.
NG >> GO TO 12.

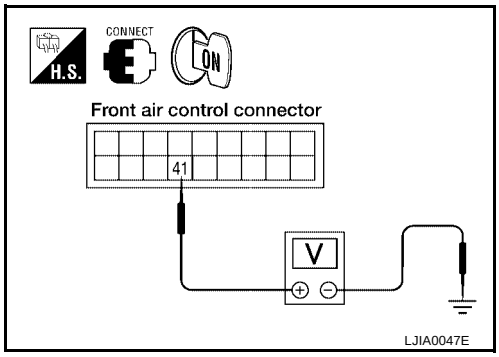


## 12. CHECK PBR FEEDBACK SIGNAL CIRCUIT FOR SHORT TO GROUND

1. Turn ignition switch OFF.
2. Disconnect front air control harness connector.
3. Check continuity between front air control harness connector M50 terminal 41 and ground.

**Continuity should not exist.**

OK or NG

OK >> Replace front air control. Refer to ATC-193, "FRONT AIR CONTROL" .
NG >> Repair or replace harness as necessary.

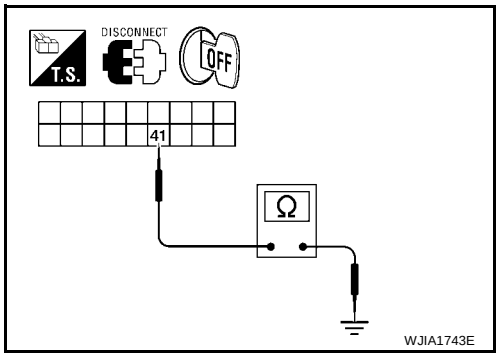

## 13. CHECK PBR FEEDBACK CIRCUIT FOR OPEN

1. Turn ignition switch OFF.
2. Disconnect the air mix door motor (passenger) harness connector and front air control harness connector.
3. Check continuity between air mix door motor (passenger) harness connector M143 terminal 4 and front air control harness connector M50 terminal 41.

**Continuity should exist.**

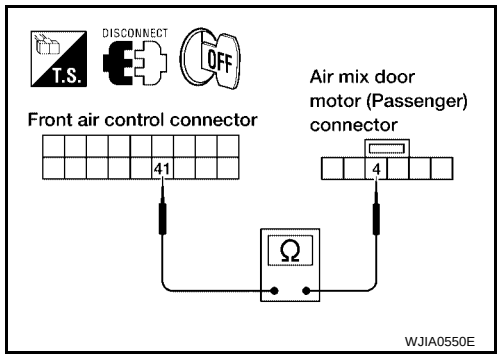


OK or NG

OK >> Replace air mix door motor (passenger). Refer to ATC-212, "FRONT AIR MIX DOOR MOTOR (DRIVER)" .

NG >> Repair or replace harness as necessary.

## 14. CHECK FRONT AIR CONTROL FOR POWER AND GROUND

1. Turn ignition switch ON.
2. Rotate temperature control dial (passenger) to 32°C (90°F).
3. Check voltage between front air control harness connector M49 terminal 15 and terminal 16 while rotating temperature control dial (passenger) to 16°C (60°F).

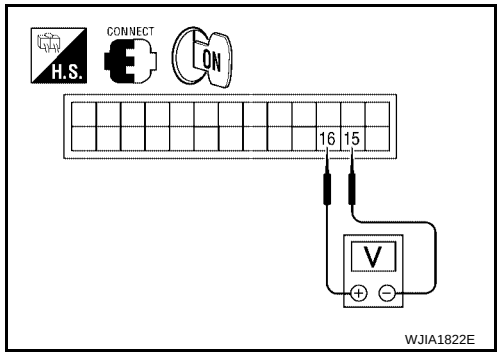


| Connector | Terminals | | Condition | Voltage (Approx.) |
|---|---|---|---|---|
| | (+) | (-) | | |
| Front air control: M49 | 16 | 15 | Rotate temp control dial | Battery voltage |

OK or NG

OK >> GO TO 16.

NG >> GO TO 15.

## 15. CHECK AIR MIX DOOR MOTOR (PASSENGER) CIRCUITS FOR SHORT TO GROUND

1. Turn ignition switch OFF.
2. Disconnect the front air control harness connector.
3. Check continuity between front air control harness connector M49 terminal 15, 16 and ground.

**15 - Ground : Continuity should not exist.**

**16 - Ground : Continuity should not exist.**

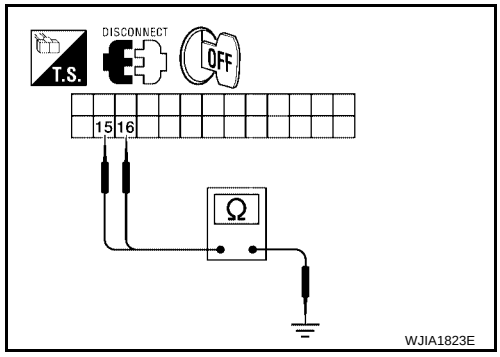


OK or NG

OK >> Replace front air control. Refer to ATC-193, "FRONT AIR CONTROL" .

NG >> Repair or replace harness as necessary.

## 16. CHECK FRONT AIR CONTROL FOR POWER AND GROUND

1. Turn ignition switch ON.
2. Rotate temperature control dial (passenger) to 16°C (60°F).
3. Check voltage between front air control harness connector M49 terminal 15 and terminal 16 while rotating temperature control dial (passenger) to 32°C (90°F).

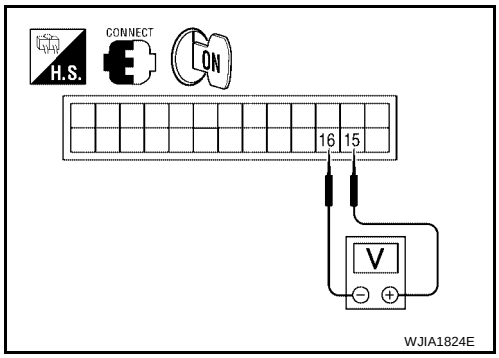


| Connector | Terminals | | Condition | Voltage (Approx.) |
|---|---|---|---|---|
| | (+) | (-) | | |
| Front air control: M49 | 15 | 16 | Rotate temp control dial | Battery voltage |

OK or NG

OK >> GO TO 17.
NG >> Replace front air control. Refer to ATC-193, "FRONT AIR CONTROL" .

## 17. CHECK AIR MIX DOOR MOTOR (PASSENGER) CIRCUITS FOR OPEN

1. Turn ignition switch OFF.
2. Disconnect the front air control harness connector.
3. Check continuity between front air control harness connector M49 terminal 15 and terminal 16.

**Continuity should exist.**

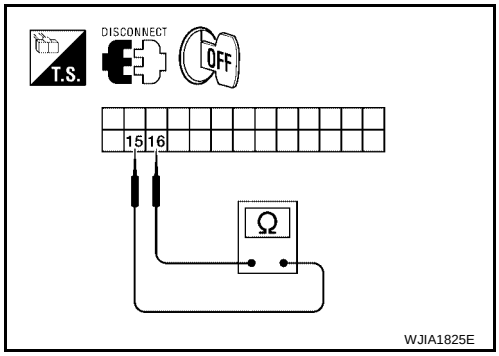


OK or NG

OK >> GO TO 19.
NG >> GO TO 18.

## 18. CHECK AIR MIX DOOR MOTOR (PASSENGER) CIRCUITS FOR OPEN

1. Disconnect the air mix door motor (passenger) harness connector.
2. Check continuity between front air control harness connector M49 (A) terminal 15, 16 and the air mix door motor (passenger) harness connector M143 (B) terminal 1, 6.

**15 - 1 : Continuity should exist.**
**16 - 6 : Continuity should exist.**

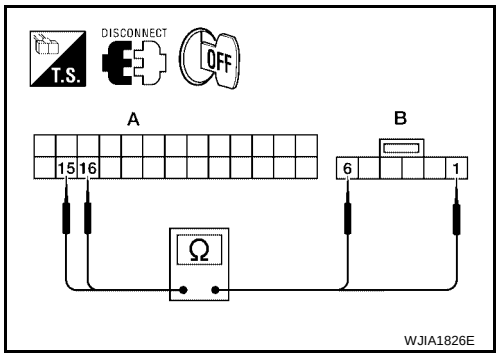


OK or NG

OK >> Replace air mix door motor (passenger). Refer to ATC-212, "FRONT AIR MIX DOOR MOTOR (DRIVER)" .
NG >> Repair or replace harness as necessary.

## 19. CHECK FRONT AIR CONTROL FOR PBR POWER AND GROUND

1. Reconnect front air control harness connector.
2. Turn ignition switch ON.
3. Check voltage between front air control harness connector M49 terminal 23 and terminal 26.

| Connector | Terminals | | Voltage (Approx.) |
|---|---|---|---|
| | (+) | (-) | |
| Front air control: M49 | 23 | 26 | 5V |

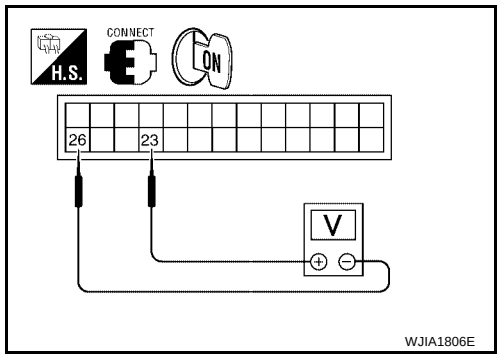


OK or NG

OK >> GO TO 21.
NG >> GO TO 20.

## 20. CHECK PBR REFERENCE VOLTAGE CIRCUIT FOR SHORT TO GROUND

1. Turn ignition switch OFF.
2. Disconnect the front air control harness connector.
3. Check continuity between front air control harness connector M49 terminal 23 and ground.

**Continuity should not exist.**

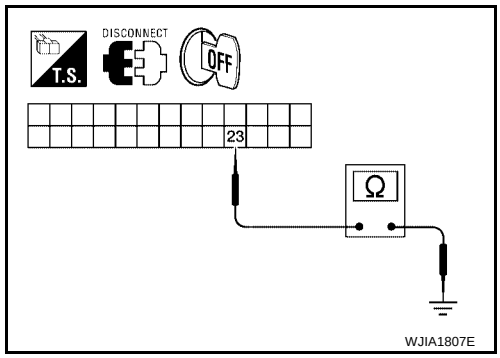


OK or NG

OK >> Replace front air control. Refer to ATC-193, "FRONT AIR CONTROL" .
NG >> Repair or replace harness as necessary.

## 21. CHECK PBR REFERENCE VOLTAGE AND GROUND CIRCUITS

1. Turn ignition switch OFF.
2. Disconnect the front air control harness connector.
3. Check continuity between front air control harness connector M49 terminal 23 and terminal 26.

**Continuity should exist.**

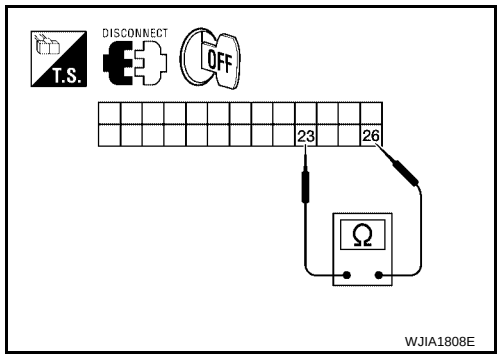


OK or NG

OK >> GO TO 23.
NG >> GO TO 22.

## 22. CHECK PBR REFERENCE VOLTAGE CIRCUIT FOR OPEN

1. Disconnect the air mix door motor (passenger) harness connector.
2. Check continuity between air mix door motor (passenger) harness connector M143 (B) terminal 3, 2 and front air control harness connector M49 (A) terminal 23, 26.

**23 - 3 : Continuity should exist.**
**26 - 2 : Continuity should exist.**

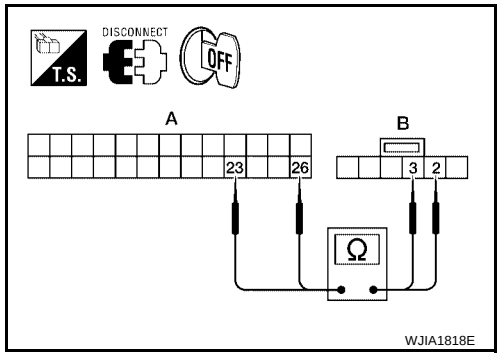


OK or NG

OK >> Replace air mix door motor (passenger). Refer to ATC-212, "FRONT AIR MIX DOOR MOTOR (DRIVER)" .
NG >> Repair or replace harness as necessary.

## 23. CHECK PBR FEEDBACK VOLTAGE

1. Reconnect the front air control harness connector.
2. Turn ignition switch ON.
3. Check voltage between front air control harness connector M50 terminal 36 and ground while rotating temperature control dial (passenger) from 32°C (90° F) to 16° (60° F).

**Voltage : Approx. .5V - 4.5V**

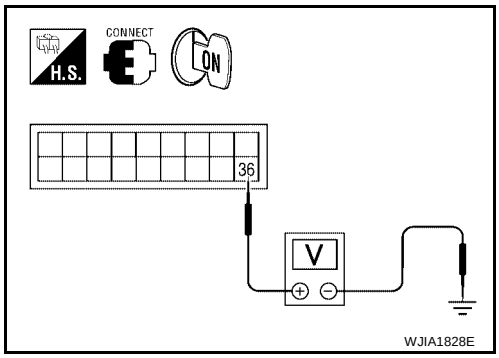


OK or NG

OK >> GO TO 25.
NG >> GO TO 24.

## 24. CHECK PBR FEEDBACK SIGNAL CIRCUIT FOR SHORT TO GROUND

1. Turn ignition switch OFF.
2. Disconnect front air control harness connector.
3. Check continuity between front air control harness connector M50 terminal 36 and ground.

**Continuity should not exist.**

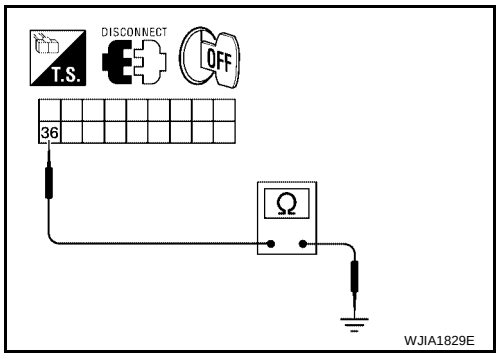


OK or NG

OK >> Replace front air control. Refer to ATC-193, "FRONT AIR CONTROL" .
NG >> Repair or replace harness as necessary.

## 25. CHECK PBR FEEDBACK CIRCUIT FOR OPEN

1. Turn ignition switch OFF.
2. Disconnect the air mix door motor (passenger) harness connector and front air control harness connector.
3. Check continuity between air mix door motor (passenger) harness connector M143 (B) terminal 4 and front air control harness connector M50 (A) terminal 36.

**Continuity should exist.**

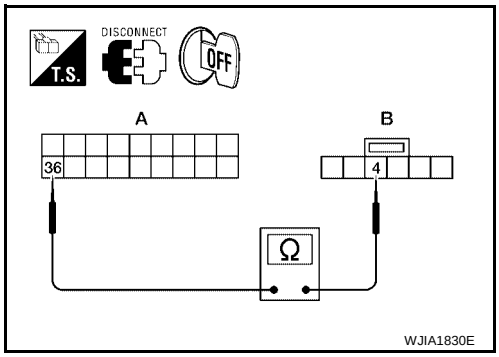


OK or NG

OK >> Replace air mix door motor (passenger). Refer to ATC-212, "FRONT AIR MIX DOOR MOTOR (DRIVER)" .
NG >> Repair or replace harness as necessary.

## DIAGNOSTIC PROCEDURE FOR AIR MIX DOOR MOTOR (REAR)

### 1. CHECK VEHICLE EQUIPMENT

Is vehicle equipped with navi?

YES or NO

YES >> GO TO 2.
NO >> GO TO 14.

### 2. CHECK FRONT AIR CONTROL FOR POWER AND GROUND

1. Turn ignition switch ON.
2. Rotate temperature control dial (rear) to maximum heat.
3. Check voltage between front air control harness connector M50 terminal 27 and terminal 28 while rotating temperature control dial (rear) to maximum cold.

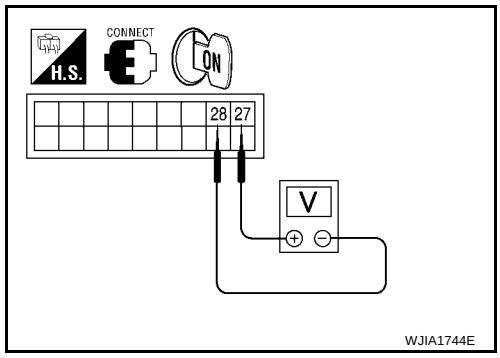


| Connector | Terminals | | Condition | Voltage (Approx.) |
|---|---|---|---|---|
| | (+) | (-) | | |
| Front air control: M50 | 27 | 28 | Rotate temp control dial | Battery voltage |

OK or NG

OK >> GO TO 4.
NG >> GO TO 3.

### 3. CHECK AIR MIX DOOR MOTOR (REAR) CIRCUITS FOR SHORT TO GROUND

1. Turn ignition switch OFF.
2. Disconnect the front air control harness connector.
3. Check continuity between front air control harness connector M50 terminal 27, 28 and ground.

**27 - Ground : Continuity should not exist.**
**28 - Ground : Continuity should not exist.**

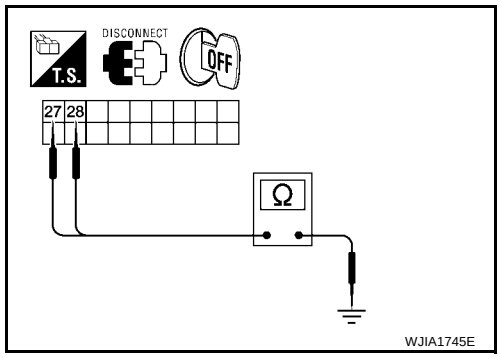


OK or NG

OK >> Replace front air control. Refer to ATC-193, "FRONT AIR CONTROL" .
NG >> Repair or replace harness as necessary.

### 4. CHECK FRONT AIR CONTROL FOR POWER AND GROUND

1. Turn ignition switch ON.
2. Rotate temperature control dial (rear) to maximum cold.
3. Check voltage between front air control harness connector M50 terminal 27 and terminal 28 while rotating temperature control dial (rear) to maximum heat.

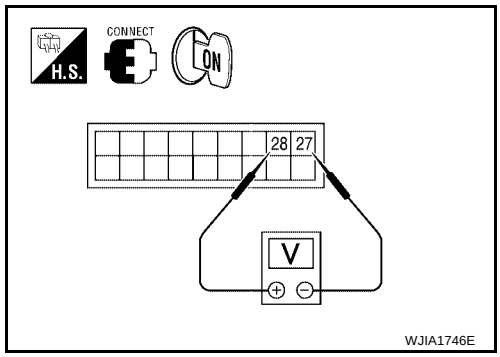


| Connector | Terminals | | Condition | Voltage (Approx.) |
|---|---|---|---|---|
| | (+) | (-) | | |
| Front air control: M50 | 28 | 27 | Rotate temp control dial | Battery voltage |

OK or NG

OK >> GO TO 5.
NG >> Replace front air control. Refer to ATC-193, "FRONT AIR CONTROL" .

## 5. CHECK AIR MIX DOOR MOTOR (REAR) CIRCUITS FOR OPEN

1. Turn ignition switch OFF.
2. Disconnect the front air control harness connector.
3. Check continuity between front air control harness connector M50 terminal 27 and terminal 28.

**Continuity should exist.**

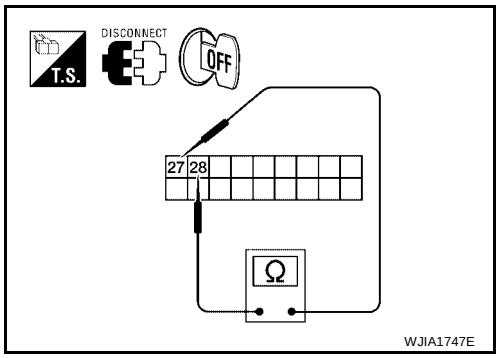


OK or NG

OK >> GO TO 7.
NG >> GO TO 6.

## 6. CHECK AIR MIX DOOR MOTOR (REAR) CIRCUITS FOR OPEN

1. Disconnect the air mix door motor (rear) harness connector.
2. Check continuity between front air control harness connector M50 terminal 27, 28 and the air mix door motor (rear) harness connector B146 terminal 1, 6.

**27 - 1 : Continuity should exist.**
**28 - 6 : Continuity should exist.**

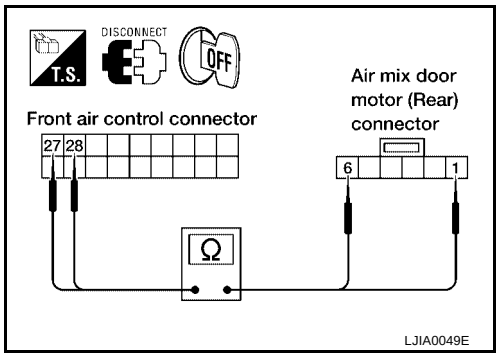


OK or NG

OK >> Replace air mix door motor (rear). Refer to ATC-213, "REAR AIR MIX DOOR MOTOR" .
NG >> Repair or replace harness as necessary.

## 7. CHECK FRONT AIR CONTROL FOR PBR POWER AND GROUND

1. Reconnect front air control harness connector.
2. Turn ignition switch ON.
3. Check voltage between front air control harness connector M49 terminal 2 and terminal 15.

| Connector | Terminals | | Voltage (Approx.) |
|---|---|---|---|
| | (+) | (-) | |
| Front air control: M49 | 2 | 15 | 5V |

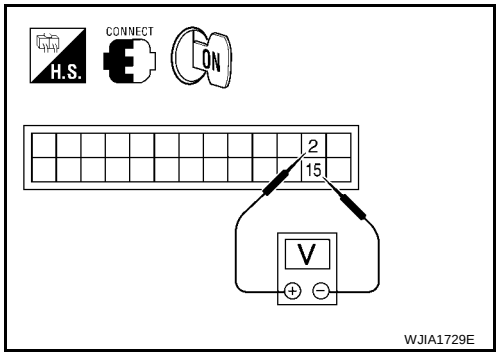


OK or NG

OK >> GO TO 9.
NG >> GO TO 8.

## 8. CHECK PBR REFERENCE VOLTAGE CIRCUIT FOR SHORT TO GROUND

1. Turn ignition switch OFF.
2. Disconnect the front air control harness connector.
3. Check continuity between front air control harness connector M49 terminal 2 and ground.

**Continuity should not exist.**

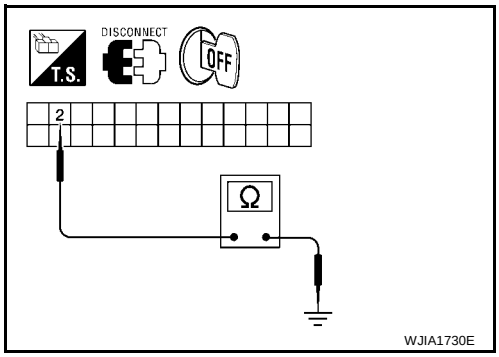


OK or NG

OK >> Replace front air control. Refer to ATC-193, "FRONT AIR CONTROL" .
NG >> Repair or replace harness as necessary.

## 9. CHECK PBR REFERENCE VOLTAGE AND GROUND CIRCUITS

1. Turn ignition switch OFF.
2. Disconnect the front air control harness connector.
3. Check continuity between front air control harness connector M49 terminal 2 and terminal 15.

**Continuity should exist.**

OK or NG

OK >> GO TO 11.
NG >> GO TO 10.

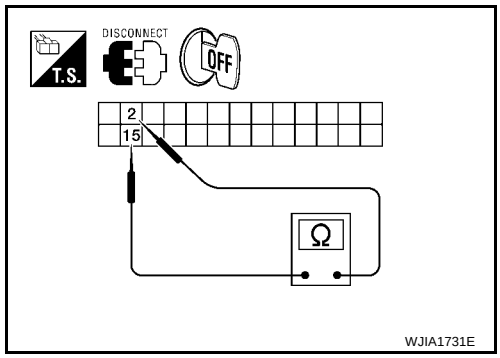


## 10. CHECK PBR REFERENCE VOLTAGE CIRCUIT FOR OPEN

1. Disconnect the air mix door motor (rear) harness connector.
2. Check continuity between air mix door motor (rear) harness connector B155 (B) terminal 3, 2 and front air control harness connector M49 (A) terminal 2, 15.

**2 - 3 : Continuity should exist.**
**15 - 2 : Continuity should exist.**

OK or NG

OK >> Replace air mix door motor (rear). Refer to ATC-213, "REAR AIR MIX DOOR MOTOR" .
NG >> Repair or replace harness as necessary.

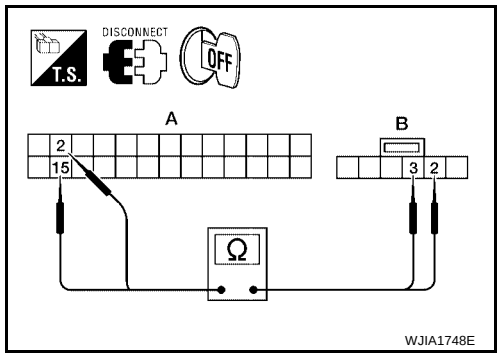


## 11. CHECK PBR FEEDBACK VOLTAGE

1. Reconnect the front air control harness connector.
2. Turn ignition switch ON.
3. Check voltage between front air control harness connector M50 terminal 42 and ground while rotating temperature control dial (rear) from maximum cold to maximum heat.

**Voltage : Approx. 1V - 4.5V**

OK or NG

OK >> GO TO 13.
NG >> GO TO 12.

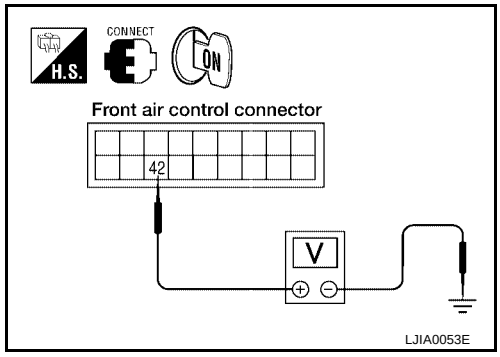


## 12. CHECK PBR FEEDBACK SIGNAL CIRCUIT FOR SHORT TO GROUND

1. Turn ignition switch OFF.
2. Disconnect front air control harness connector.
3. Check continuity between front air control harness connector M50 terminal 42 and ground.

**Continuity should not exist.**

OK or NG

OK >> Replace front air control. Refer to ATC-193, "FRONT AIR CONTROL" .
NG >> Repair or replace harness as necessary.

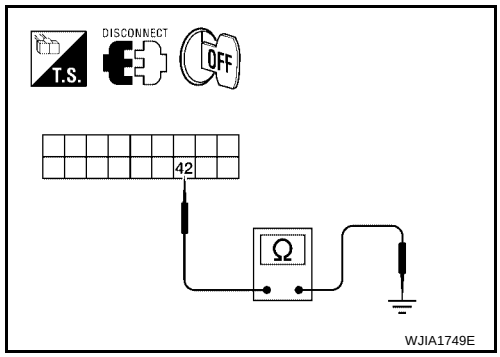

## 13. CHECK PBR FEEDBACK CIRCUIT FOR OPEN

1. Turn ignition switch OFF.
2. Disconnect the air mix door motor (rear) harness connector and front air control harness connector.
3. Check continuity between air mix door motor (rear) harness connector B155 terminal 4 and front air control harness connector M50 terminal 42.

**Continuity should exist.**

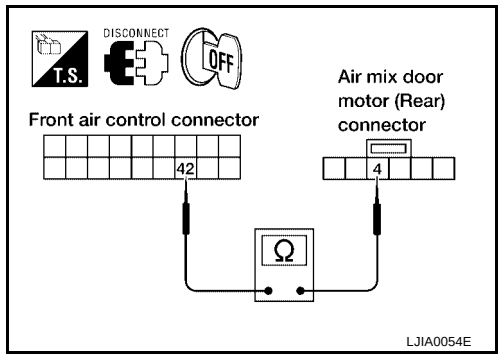


OK or NG

OK >> Replace air mix door motor (rear). Refer to ATC-213, "REAR AIR MIX DOOR MOTOR" .

NG >> Repair or replace harness as necessary.

## 14. CHECK FRONT AIR CONTROL FOR POWER AND GROUND

1. Turn ignition switch ON.
2. Rotate temperature control dial (rear) to maximum heat.
3. Check voltage between front air control harness connector M49 terminal 17 and terminal 18 while rotating temperature control dial (rear) to maximum cold.

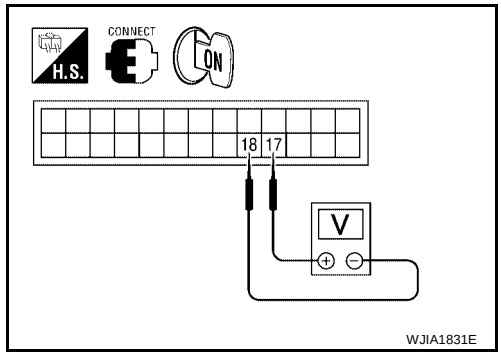


| Connector | Terminals | | Condition | Voltage (Approx.) |
|---|---|---|---|---|
| | (+) | (-) | | |
| Front air control: M49 | 17 | 18 | Rotate temp control dial | Battery voltage |

OK or NG

OK >> GO TO 16.

NG >> GO TO 15.

## 15. CHECK AIR MIX DOOR MOTOR (REAR) CIRCUITS FOR SHORT TO GROUND

1. Turn ignition switch OFF.
2. Disconnect the front air control harness connector.
3. Check continuity between front air control harness connector M49 terminal 17, 18 and ground.

**17 - Ground : Continuity should not exist.**

**18 - Ground : Continuity should not exist.**

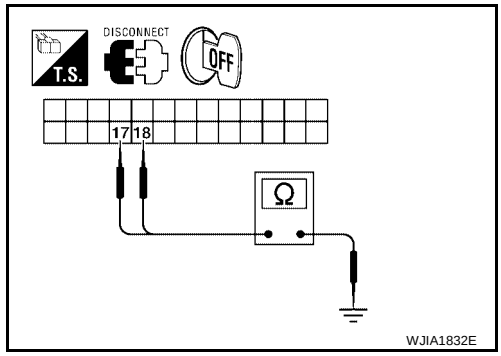


OK or NG

OK >> Replace front air control. Refer to ATC-193, "FRONT AIR CONTROL" .

NG >> Repair or replace harness as necessary.

## 16. CHECK FRONT AIR CONTROL FOR POWER AND GROUND

1. Turn ignition switch ON.
2. Rotate temperature control dial (rear) to maximum cold.
3. Check voltage between front air control harness connector M49 terminal 17 and terminal 18 while rotating temperature control dial (rear) to maximum heat.

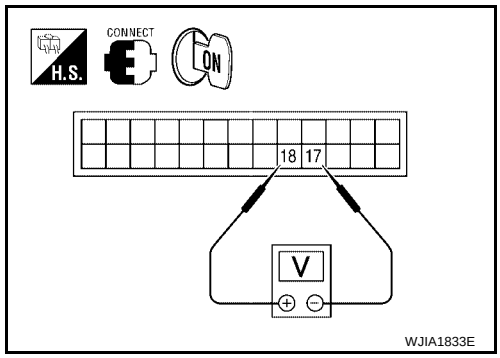


| Connector | Terminals | | Condition | Voltage (Approx.) |
|---|---|---|---|---|
| | (+) | (-) | | |
| Front air control: M49 | 18 | 17 | Rotate temp control dial | Battery voltage |

OK or NG

OK >> GO TO 17.
NG >> Replace front air control. Refer to ATC-193, "FRONT AIR CONTROL" .

## 17. CHECK AIR MIX DOOR MOTOR (REAR) CIRCUITS FOR OPEN

1. Turn ignition switch OFF.
2. Disconnect the front air control harness connector.
3. Check continuity between front air control harness connector M49 terminal 17 and terminal 18.

**Continuity should exist.**

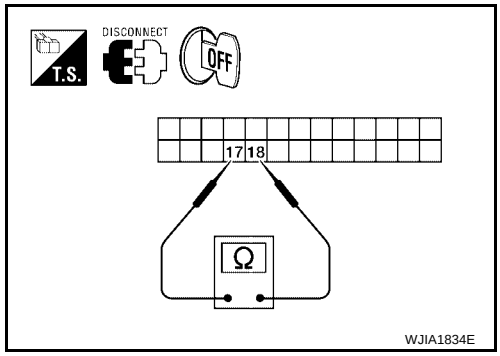


OK or NG

OK >> GO TO 19.
NG >> GO TO 18.

## 18. CHECK AIR MIX DOOR MOTOR (REAR) CIRCUITS FOR OPEN

1. Disconnect the air mix door motor (rear) harness connector.
2. Check continuity between front air control harness connector M49 (A) terminal 17, 18 and the air mix door motor (rear) harness connector B155 (B) terminal 1, 6.

**17 - 1 : Continuity should exist.**
**18 - 6 : Continuity should exist.**

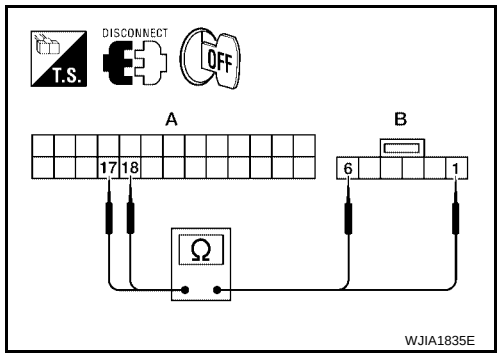


OK or NG

OK >> Replace air mix door motor (rear). Refer to ATC-213, "REAR AIR MIX DOOR MOTOR" .
NG >> Repair or replace harness as necessary.

## 19. CHECK FRONT AIR CONTROL FOR PBR POWER AND GROUND

1. Reconnect front air control harness connector.
2. Turn ignition switch ON.
3. Check voltage between front air control harness connector M49 terminal 23 and terminal 26.

| Connector | Terminals | | Voltage (Approx.) |
|---|---|---|---|
| | (+) | (-) | |
| Front air control: M49 | 23 | 26 | 5V |

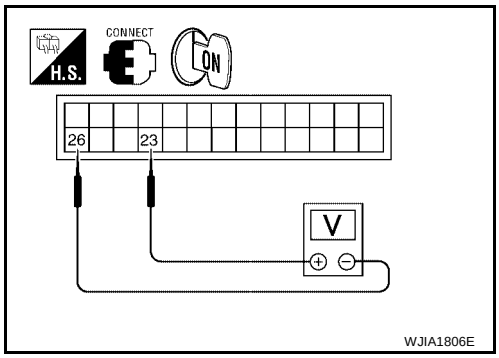


OK or NG

OK >> GO TO 21.
NG >> GO TO 20.

## 20. CHECK PBR REFERENCE VOLTAGE CIRCUIT FOR SHORT TO GROUND

1. Turn ignition switch OFF.
2. Disconnect the front air control harness connector.
3. Check continuity between front air control harness connector M49 terminal 23 and ground.

**Continuity should not exist.**

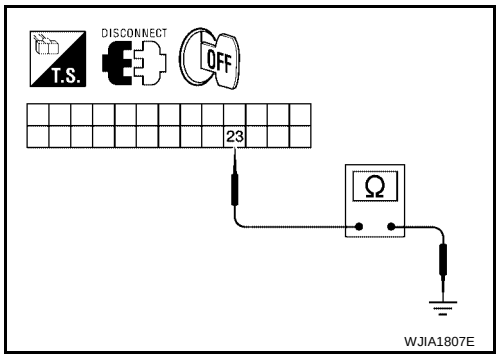


OK or NG

OK >> Replace front air control. Refer to ATC-193, "FRONT AIR CONTROL" .
NG >> Repair or replace harness as necessary.

## 21. CHECK PBR REFERENCE VOLTAGE AND GROUND CIRCUITS

1. Turn ignition switch OFF.
2. Disconnect the front air control harness connector.
3. Check continuity between front air control harness connector M49 terminal 2 and terminal 15.

**Continuity should exist.**

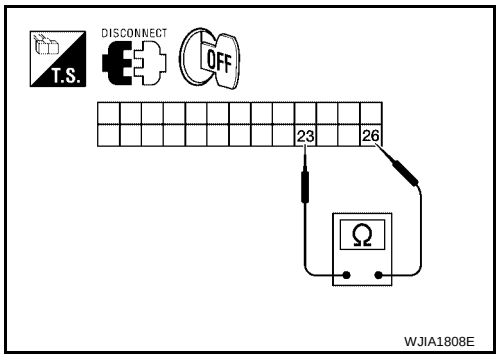


OK or NG

OK >> GO TO 23.
NG >> GO TO 22.

## 22. CHECK PBR REFERENCE VOLTAGE CIRCUIT FOR OPEN

1. Disconnect the air mix door motor (rear) harness connector.
2. Check continuity between air mix door motor (rear) harness connector B155 (B) terminal 3, 2 and front air control harness connector M49 (A) terminal 23, 26.

**23 - 3 : Continuity should exist.**
**26 - 2 : Continuity should exist.**

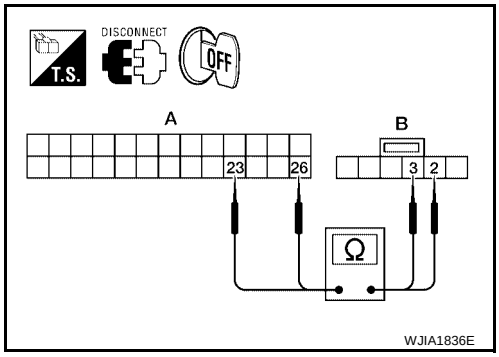


OK or NG

OK >> Replace air mix door motor (rear). Refer to ATC-213, "REAR AIR MIX DOOR MOTOR" .
NG >> Repair or replace harness as necessary.

## 23. CHECK PBR FEEDBACK VOLTAGE

1. Reconnect the front air control harness connector.
2. Turn ignition switch ON.
3. Check voltage between front air control harness connector M49 terminal 25 and ground while rotating temperature control dial (rear) from maximum cold to maximum heat.

**Voltage : Approx. 1V - 4.5V**

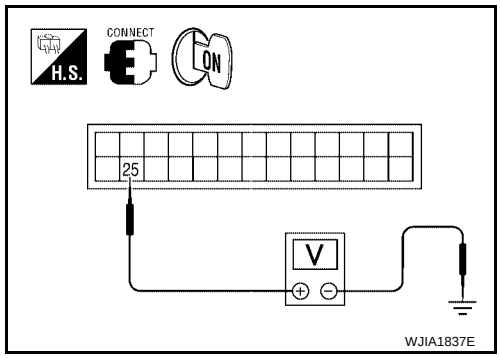


OK or NG

OK >> GO TO 25.
NG >> GO TO 24.

## 24. CHECK PBR FEEDBACK SIGNAL CIRCUIT FOR SHORT TO GROUND

1. Turn ignition switch OFF.
2. Disconnect front air control harness connector.
3. Check continuity between front air control harness connector M49 terminal 25 and ground.

**Continuity should not exist.**

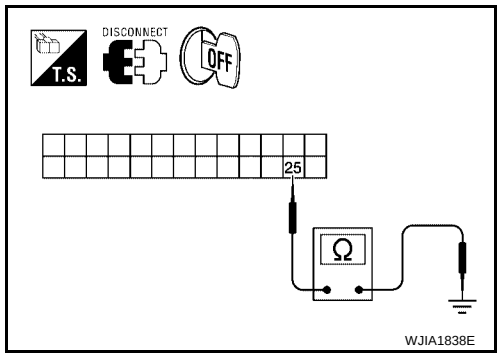


OK or NG

OK >> Replace front air control. Refer to ATC-193, "FRONT AIR CONTROL" .
NG >> Repair or replace harness as necessary.

## 25. CHECK PBR FEEDBACK CIRCUIT FOR OPEN

1. Turn ignition switch OFF.
2. Disconnect the air mix door motor (rear) harness connector and front air control harness connector.
3. Check continuity between air mix door motor (rear) harness connector B155 (B) terminal 4 and front air control harness connector M49 (A) terminal 25.

**Continuity should exist.**

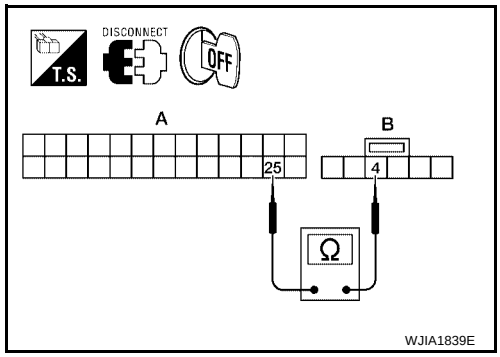


OK or NG

OK >> Replace air mix door motor (rear). Refer to ATC-213, "REAR AIR MIX DOOR MOTOR" .
NG >> Repair or replace harness as necessary.

## Intake Door Motor Circuit

EJS005E8

SYMPTOM:

- Intake door does not change.
- Intake door motor does not operate normally.

### INSPECTION FLOW

### 1. CONFIRM SYMPTOM BY PERFORMING OPERATIONAL CHECK - REC ( )

1. Press the mode switch to vent mode( ).
2. Press REC ( ) switch. The REC ( )indicator should illuminate.
3. Press REC ( ) switch again. The REC ( ) indicator should go out.
4. Listen for intake door position change (you should hear blower sound changes slightly).

Can a symptom be duplicated?

YES >> GO TO 3.
NO >> GO TO 2.

### 2. PERFORM COMPLETE OPERATIONAL CHECK

Perform a complete operational check and check for any symptoms. Refer to ATC-69, "Operational Check (Front)" .

Can a symptom be duplicated?

YES >> Refer to ATC-36, "SYMPTOM TABLE" .
NO >> System OK.

### 3. CHECK FOR SERVICE BULLETINS

Check for any service bulletins.

>> GO TO 4.

### 4. CHECK INTAKE DOOR OPERATION

Check and verify intake door mechanism for smooth operation.

OK or NG

OK >> GO TO 5.
NG >> Repair intake door mechanism.

### 5. PERFORM SELF-DIAGNOSIS

Perform self-diagnosis to check for any codes. Refer to ATC-67, "A/C System Self-diagnosis Function" .

Are any self-diagnosis codes present?

YES >> Refer to ATC-68, "SELF-DIAGNOSIS CODE CHART" .
NO >> GO TO 6.

### 6. RECHECK FOR ANY SYMPTOMS

Perform a complete operational check for any symptoms. Refer to ATC-69, "Operational Check (Front)" .

Does another symptom exist?

YES >> Refer to ATC-36, "SYMPTOM TABLE" .
NO >> Replace front air control. Refer to ATC-193, "FRONT AIR CONTROL" .

## SYSTEM DESCRIPTION

### Component Parts

Intake door control system components are:

- Front air control
- Intake door motor (PRB built into the intake door motor)
- In-vehicle sensor
- Ambient sensor
- Optical sensor
- Intake sensor

### System Operation

The intake door control determines the intake door position based on the position of the recirculation switch. When the recirculation switch is depressed the intake door motor rotates closing off the fresh air inlet and recirculating the cabin air. If the recirculation switch is depressed again, the intake door motor rotates in the opposite direction, again allowing fresh air into the cabin.
In the AUTO mode, the front air control determines the intake door position based on the ambient temperature, the intake air temperature and the in-vehicle temperature. When the DEF, D/F, FLOOR or OFF switches are pushed, the front air control sets the intake door at the fresh position.

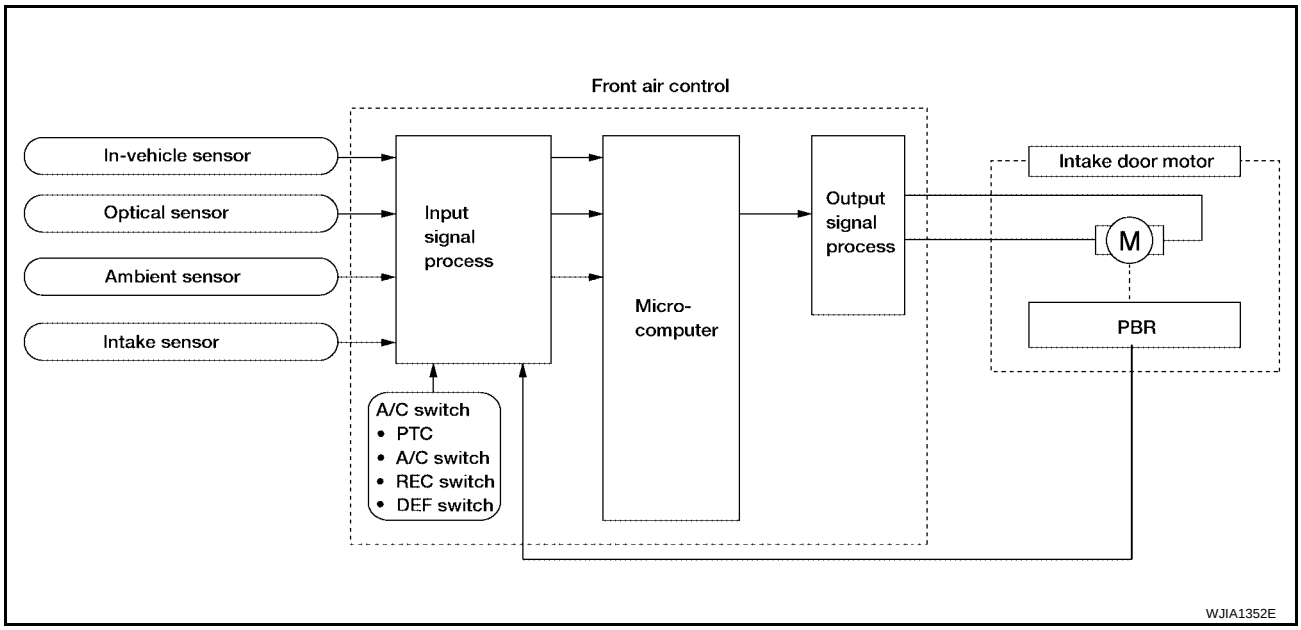


### Intake Door Control Specification

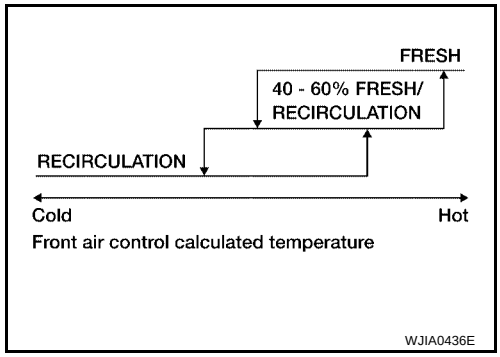

## COMPONENT DESCRIPTION

### Intake door motor

The intake door motor is attached to the intake unit. It rotates so that air is drawn from inlets set by the front air control. Motor rotation is conveyed to a lever which activates the intake door.

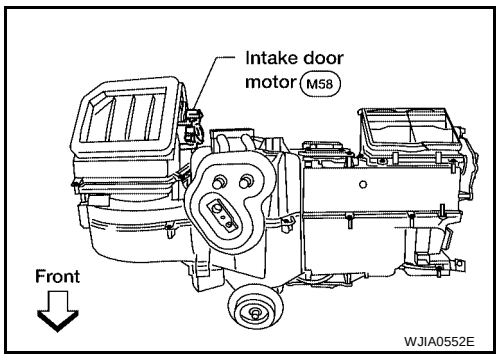


## DIAGNOSTIC PROCEDURE FOR INTAKE DOOR MOTOR

### 1. CHECK VEHICLE EQUIPMENT

Is vehicle equipped with navi?

YES or NO

YES >> GO TO 2.
NO >> GO TO 7.

### 2. CHECK FRONT AIR CONTROL FOR POWER AND GROUND

1. Turn ignition switch ON.
2. Check voltage between front air control harness connector M49 terminal 7 and terminal 8 while placing the HVAC system into self-diagnostic mode.

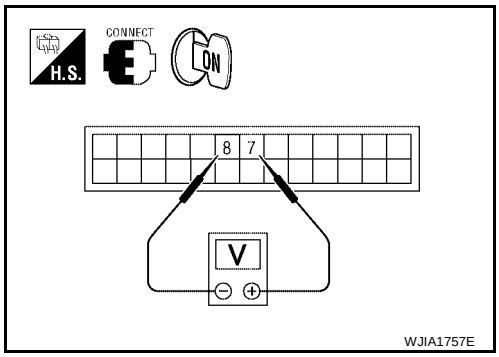


| Connector | Terminals | | Condition | Voltage (Approx.) |
|---|---|---|---|---|
| | (+) | (-) | | |
| Front air control: M49 | 7 | 8 | Self-diagnostic mode | Battery voltage |

OK or NG

OK >> GO TO 4.
NG >> GO TO 3.

### 3. CHECK INTAKE DOOR MOTOR CIRCUITS FOR SHORT TO GROUND

1. Turn ignition switch OFF.
2. Disconnect the front air control harness connector.
3. Check continuity between front air control harness connector M49 terminal 7, 8 and ground.

**7 - Ground : Continuity should not exist.**
**8 - Ground : Continuity should not exist.**

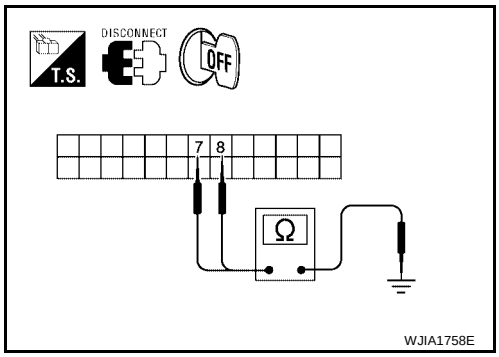


OK or NG

OK >> Replace front air control. Refer to ATC-193, "FRONT AIR CONTROL" .
NG >> Repair or replace harness as necessary.

## 4. CHECK FRONT AIR CONTROL FOR GROUND AND POWER

1. Press the BACK button to back out of self-diagnostic mode.
2. Check voltage between front air control harness connector M49 terminal 7 and terminal 8 while placing the HVAC system into self-diagnostic mode.

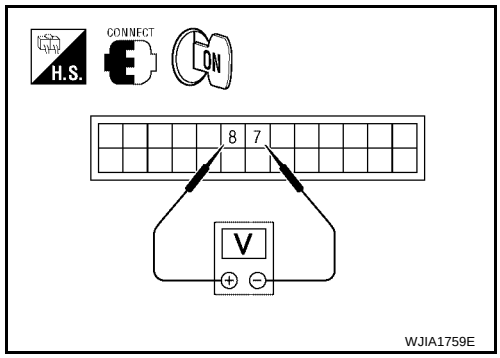


| Connector | Terminals | | Condition | Voltage (Approx.) |
|---|---|---|---|---|
| | (+) | (-) | | |
| Front air control: M49 | 8 | 7 | Self-diagnostic mode | Battery voltage |

OK or NG

OK >> GO TO 5.
NG >> Replace front air control. Refer to ATC-193, "FRONT AIR CONTROL" .

## 5. CHECK INTAKE DOOR MOTOR AND CIRCUITS FOR OPEN

1. Turn ignition switch OFF.
2. Disconnect the front air control harness connector.
3. Check continuity between front air control harness connector M49 terminal 7 and terminal 8.

**Continuity should exist.**

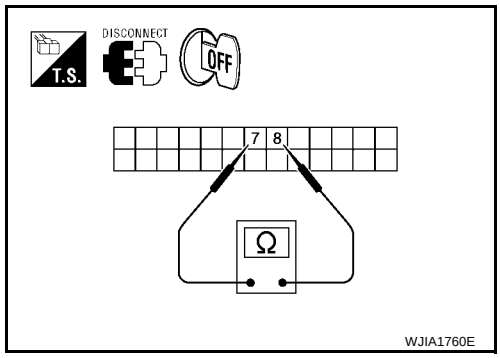


OK or NG

OK >> Replace intake door motor. Refer to ATC-210, "INTAKE DOOR MOTOR" .
NG >> GO TO 6.

## 6. CHECK INTAKE DOOR MOTOR CIRCUITS FOR OPEN

1. Disconnect the intake door motor harness connector.
2. Check continuity between front air control harness connector M49 terminal 7, 8 and the intake door motor harness connector M58 terminal 1, 6.

**1 - 7 : Continuity should exist.**
**6 - 8 : Continuity should exist.**

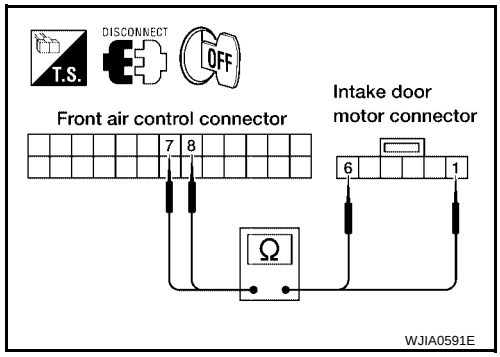


OK or NG

OK >> Replace intake door motor. Refer to ATC-210, "INTAKE DOOR MOTOR" .
NG >> Repair or replace harness as necessary.

## 7. CHECK FRONT AIR CONTROL FOR POWER AND GROUND

1. Turn ignition switch ON.
2. Check voltage between front air control harness connector M49 terminal 5 and terminal 4 while placing the HVAC system into self-diagnostic mode.

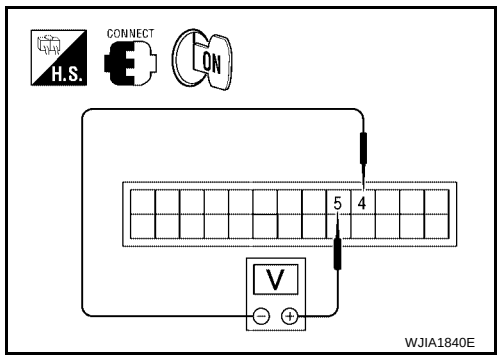


| Connector | Terminals | | Condition | Voltage (Approx.) |
|---|---|---|---|---|
| | (+) | (-) | | |
| Front air control: M49 | 5 | 4 | Self-diagnostic mode | Battery voltage |

OK or NG

OK >> GO TO 9.
NG >> GO TO 8.

## 8. CHECK INTAKE DOOR MOTOR CIRCUITS FOR SHORT TO GROUND

1. Turn ignition switch OFF.
2. Disconnect the front air control harness connector.
3. Check continuity between front air control harness connector M49 terminal 5, 4 and ground.

**5 - Ground : Continuity should not exist.**
**4 - Ground : Continuity should not exist.**

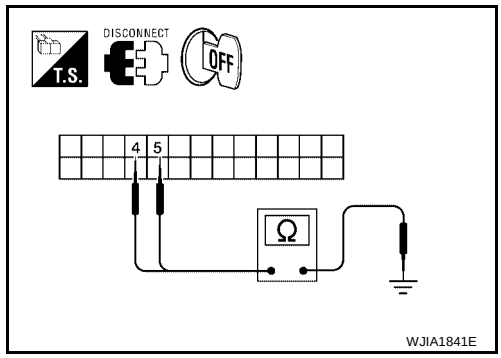


OK or NG

OK >> Replace front air control. Refer to ATC-193, "FRONT AIR CONTROL" .
NG >> Repair or replace harness as necessary.

## 9. CHECK FRONT AIR CONTROL FOR GROUND AND POWER

1. Press the BACK button to back out of self-diagnostic mode.
2. Check voltage between front air control harness connector M49 terminal 5 and terminal 4 while placing the HVAC system into self-diagnostic mode.

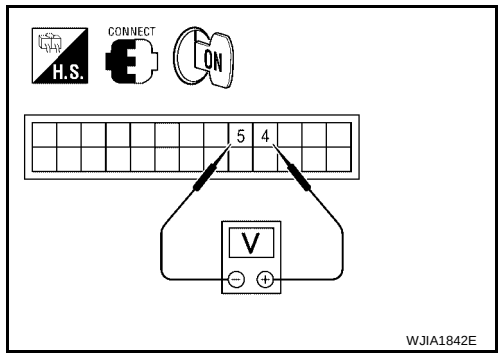


| Connector | Terminals | | Condition | Voltage (Approx.) |
|---|---|---|---|---|
| | (+) | (-) | | |
| Front air control: M49 | 4 | 5 | Self-diagnostic mode | Battery voltage |

OK or NG

OK >> GO TO 10.
NG >> Replace front air control. Refer to ATC-193, "FRONT AIR CONTROL" .

## 10. CHECK INTAKE DOOR MOTOR AND CIRCUITS FOR OPEN

1. Turn ignition switch OFF.
2. Disconnect the front air control harness connector.
3. Check continuity between front air control harness connector M49 terminal 4 and terminal 5.

**Continuity should exist.**

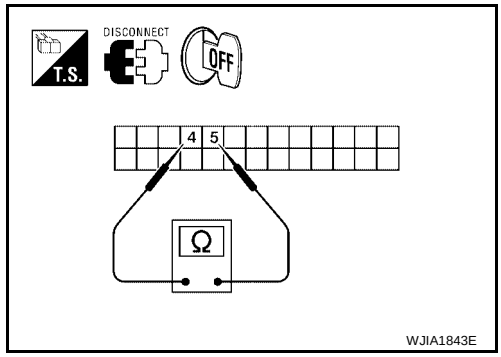


OK or NG

OK >> Replace intake door motor. Refer to ATC-210, "INTAKE DOOR MOTOR" .
NG >> GO TO 11.

## 11. CHECK INTAKE DOOR MOTOR CIRCUITS FOR OPEN

1. Disconnect the intake door motor harness connector.
2. Check continuity between front air control harness connector M49 (A) terminal 5, 4 and the intake door motor harness connector M58 (B) terminal 1, 6.

**1 - 5 : Continuity should exist.**
**6 - 4 : Continuity should exist.**

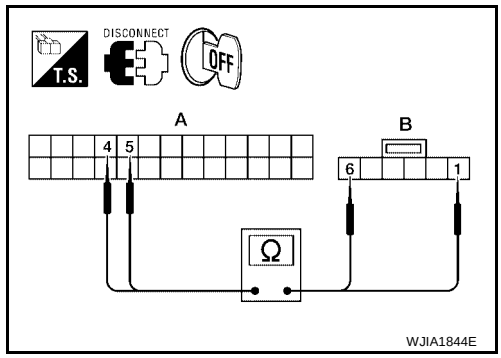


OK or NG

OK >> Replace intake door motor. Refer to ATC-210, "INTAKE DOOR MOTOR" .
NG >> Repair or replace harness as necessary.

## Defroster Door Motor Circuit

EJS005E9

### SYMPTOM:

- Defroster door does not change.
- Defroster door motor does not operate normally.

### INSPECTION FLOW

#### 1. CONFIRM SYMPTOM BY PERFORMING OPERATIONAL CHECK - DEFROSTER DOOR

1. Press the mode switch and select vent ( ).
2. Press the defrost switch ( ). Defroster indicator should illuminate (on display).
3. Listen for defroster door position change (blower sound should change slightly).

Can the symptom be duplicated?

YES >> GO TO 3.
NO >> GO TO 2.

#### 2. CHECK FOR ANY SYMPTOMS

Perform a complete operational check for any symptoms. Refer to ATC-69, "Operational Check (Front)" .

Does another symptom exist?

YES >> Refer to ATC-36, "SYMPTOM TABLE" .
NO >> GO TO 6.

#### 3. CHECK FOR SERVICE BULLETINS

Check for any service bulletins.

>> GO TO 4.

#### 4. CHECK DEFROSTER DOOR MOTOR

Perform diagnostic procedure for defroster door motor. Refer to ATC-117, "DIAGNOSTIC PROCEDURE FOR DEFROSTER DOOR MOTOR" .

OK or NG

OK >> GO TO 5.
NG >> Repair PBR circuit or replace defroster door motor. Refer to ATC-209, "DEFROSTER DOOR MOTOR" .

#### 5. CHECK DEFROSTER DOOR OPERATION

Check and verify defroster door mechanism for smooth operation.

OK or NG

OK >> Replace defroster door motor. Refer to ATC-209, "DEFROSTER DOOR MOTOR" .
NG >> Repair defroster door mechanism.

## SYSTEM DESCRIPTION

### Component Parts

Defroster door control system components are:

- Front air control
- Defroster door motor
- PBR (Built into defroster door motor)
- In-vehicle sensor
- Ambient sensor
- Optical sensor
- Intake sensor

### System Operation

The front air control determines defroster door position based on the position of the defroster switch. When the defroster switch is depressed, the defroster door motor rotates directing air to the defroster ducts. When any mode other than defroster is selected, the defroster motor rotates in the opposite direction closing off air flow to the defroster ducts.
In the AUTO mode, the front air control determines defroster door position based on the ambient temperature, the intake air temperature and the in-vehicle temperature.

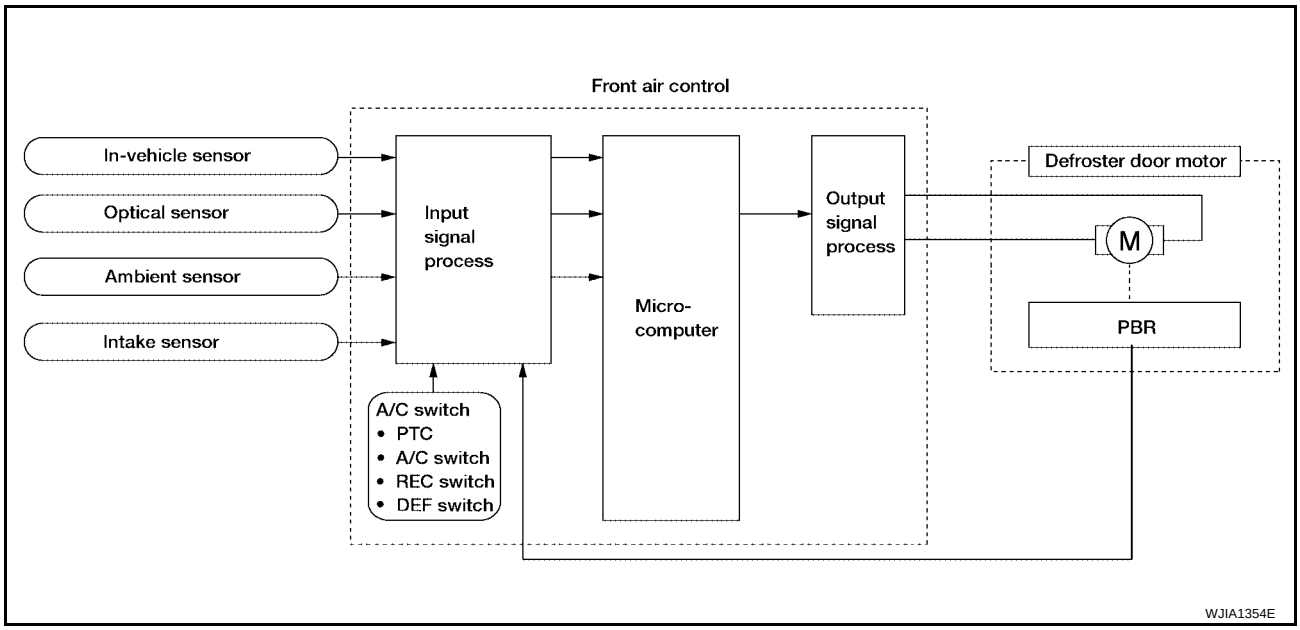


## COMPONENT DESCRIPTION

### Defroster door motor

The defroster door motor is attached to the front heater & cooling unit assembly. The front air control sends a voltage to rotate to the defroster door directing the air flow either to the defroster ducts, or to the floor ducts, depending on which way the voltage and ground are applied to the motor leads. Motor rotation is conveyed to a lever which activates the defroster door.

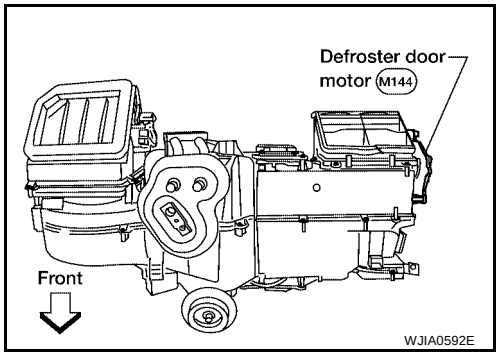

## DIAGNOSTIC PROCEDURE FOR DEFROSTER DOOR MOTOR

### 1. CHECK VEHICLE EQUIPMENT

Is vehicle equipped with navi?

YES or NO

YES >> GO TO 2.
NO >> GO TO 14.

### 2. CHECK FRONT AIR CONTROL FOR POWER AND GROUND

1. Turn ignition switch ON.
2. Press the defroster switch ( ).
3. Check voltage between front air control harness connector M49 terminal 20 and terminal 19 and press the defroster switch ( ) again.

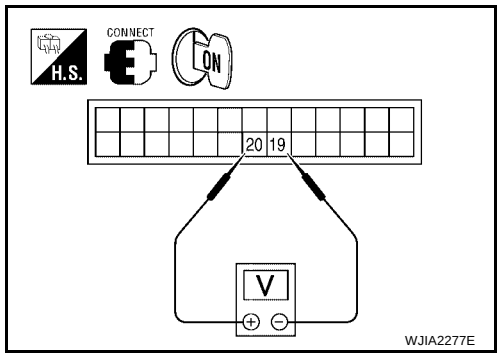


| Connector | Terminals | | Condition | Voltage (Approx.) |
|---|---|---|---|---|
| | (+) | (-) | | |
| Front air control: M49 | 20 | 19 | Press defroster switch | Battery voltage |

OK or NG

OK >> GO TO 4.
NG >> GO TO 3.

### 3. CHECK DEFROSTER DOOR MOTOR CIRCUITS FOR SHORT TO GROUND

1. Turn ignition switch OFF.
2. Disconnect the front air control harness connector.
3. Check continuity between front air control harness connector M49 terminal 19, 20 and ground.

**19 - Ground : Continuity should not exist.**
**20 - Ground : Continuity should not exist.**

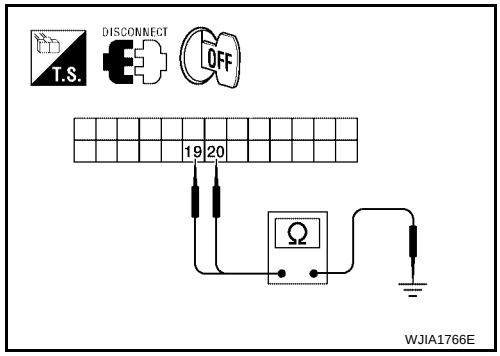


OK or NG

OK >> Replace front air control. Refer to ATC-193, "FRONT AIR CONTROL" .
NG >> Repair or replace harness as necessary.

### 4. CHECK FRONT AIR CONTROL FOR GROUND AND POWER

1. Press the defroster switch ( ).
2. Check voltage between front air control harness connector M49 terminal 19 and terminal 20 and press the defroster switch ( ) again.

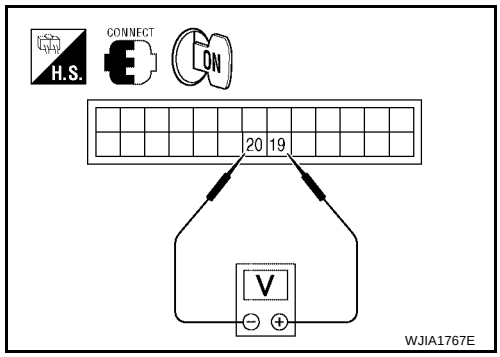


| Connector | Terminals | | Condition | Voltage (Approx.) |
|---|---|---|---|---|
| | (+) | (-) | | |
| Front air control: M49 | 19 | 20 | Press defroster switch | Battery voltage |

OK or NG

OK >> GO TO 5.
NG >> Replace front air control. Refer to ATC-193, "FRONT AIR CONTROL" .

## 5. CHECK DEFROSTER DOOR MOTOR AND CIRCUITS FOR OPEN

1. Turn ignition switch OFF.
2. Disconnect the front air control harness connector.
3. Check continuity between front air control harness connector M49 terminal 19 and terminal 20.

**Continuity should exist.**

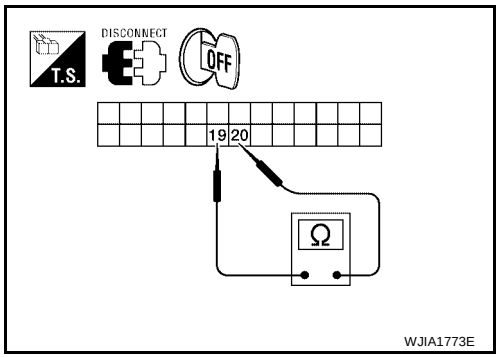


OK or NG

OK >> GO TO 7.
NG >> GO TO 6.

## 6. CHECK DEFROSTER DOOR MOTOR CIRCUITS FOR OPEN

1. Disconnect the defroster door motor harness connector.
2. Check continuity between front air control harness connector M49 terminal 19, 20 and the defroster door motor harness connector M144 terminal 1, 6.

**19 - 1 : Continuity should exist.**
**20 - 6 : Continuity should exist.**

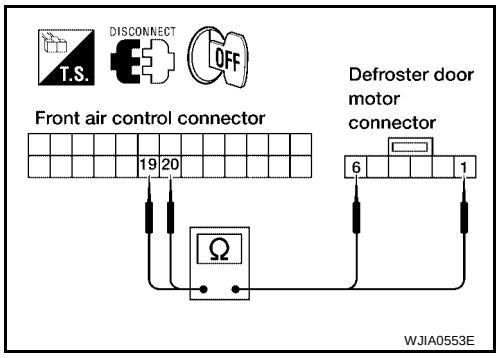


OK or NG

OK >> Replace defroster door motor. Refer to ATC-209, "DEFROSTER DOOR MOTOR" .
NG >> Repair or replace harness as necessary.

## 7. CHECK FRONT AIR CONTROL FOR PBR POWER AND GROUND

1. Reconnect front air control harness connector.
2. Turn ignition switch ON.
3. Check voltage between front air control harness connector M49 terminal 2 and terminal 15.

| Connector | Terminals | | Voltage (Approx.) |
|---|---|---|---|
| | (+) | (-) | |
| Front air control: M49 | 2 | 15 | 5V |

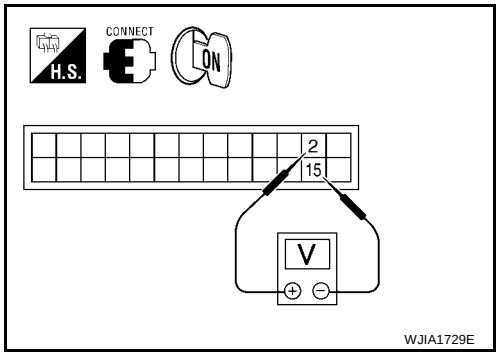


OK or NG

OK >> GO TO 9.
NG >> GO TO 8.

## 8. CHECK PBR REFERENCE VOLTAGE CIRCUIT FOR SHORT TO GROUND

1. Turn ignition switch OFF.
2. Disconnect the front air control harness connector.
3. Check continuity between front air control harness connector M49 terminal 2 and ground.

**Continuity should not exist.**

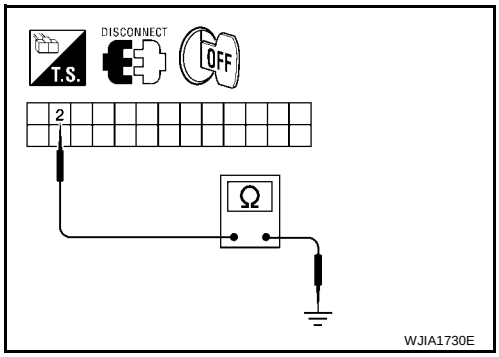


OK or NG

OK >> Replace front air control. Refer to ATC-193, "FRONT AIR CONTROL" .
NG >> Repair or replace harness as necessary.

## 9. CHECK PBR REFERENCE VOLTAGE AND GROUND CIRCUITS

1. Turn ignition switch OFF.
2. Disconnect the front air control harness connector.
3. Check continuity between front air control harness connector M49 terminal 2 and terminal 15.

**Continuity should exist.**

OK or NG

OK >> GO TO 11.
NG >> GO TO 10.

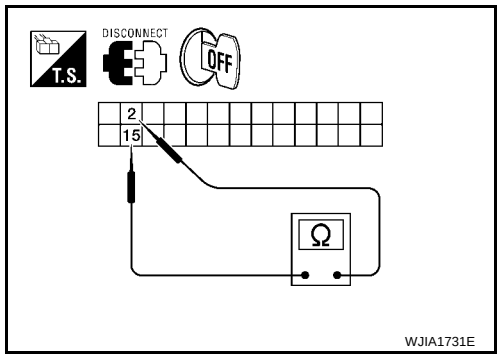


## 10. CHECK PBR REFERENCE VOLTAGE CIRCUIT FOR OPEN

1. Disconnect the defroster door motor harness connector.
2. Check continuity between defroster door motor harness connector M144 (B) terminal 3, 2 and front air control harness connector M49 (A) terminal 2, 15.

**2 - 3 : Continuity should exist.**
**15 - 2 : Continuity should exist.**

OK or NG

OK >> Replace defroster door motor. Refer to ATC-209, "DEFROSTER DOOR MOTOR" .
NG >> Repair or replace harness as necessary.

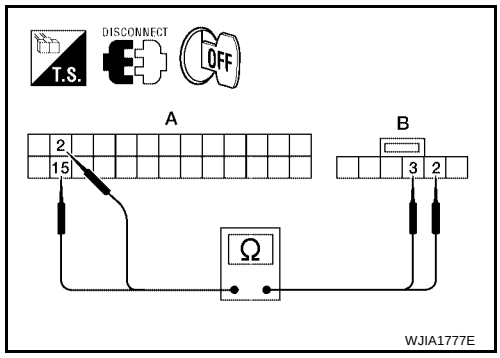


## 11. CHECK PBR FEEDBACK VOLTAGE

1. Reconnect the front air control harness connector.
2. Turn ignition switch ON.
3. Check voltage between front air control harness connector M49 terminal 25 and ground while cycling defroster switch on and off.

**Voltage : Approx. 1V - 4.5V**

OK or NG

OK >> GO TO 13.
NG >> GO TO 12.

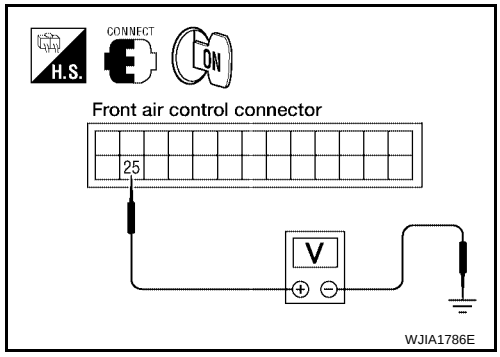


## 12. CHECK PBR FEEDBACK SIGNAL CIRCUIT FOR SHORT TO GROUND

1. Turn ignition switch OFF.
2. Disconnect front air control harness connector.
3. Check continuity between front air control harness connector M49 terminal 25 and ground.

**Continuity should not exist.**

OK or NG

OK >> Replace front air control. Refer to ATC-193, "FRONT AIR CONTROL" .
NG >> Repair or replace harness as necessary.

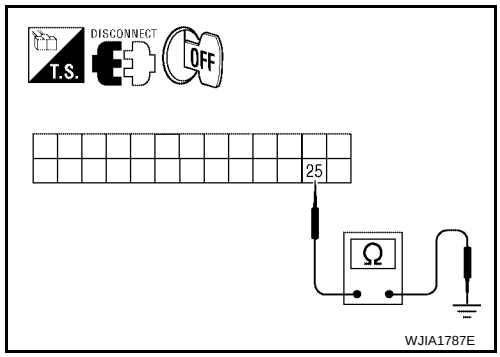

## 13. CHECK PBR FEEDBACK CIRCUIT FOR OPEN

1. Turn ignition switch OFF.
2. Disconnect the defroster door motor harness connector and front air control harness connector.
3. Check continuity between defroster door motor harness connector M144 terminal 4 and front air control harness connector M49 terminal 25

**Continuity should exist.**

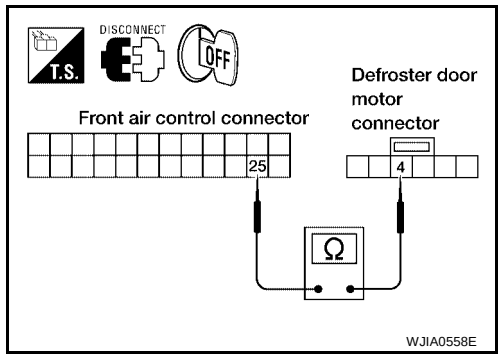


OK or NG

OK >> Replace defroster door motor. Refer to ATC-209, "DEFROSTER DOOR MOTOR" .

NG >> Repair or replace harness as necessary.

## 14. CHECK FRONT AIR CONTROL FOR POWER AND GROUND

1. Turn ignition switch ON.
2. Press the defroster switch ( ).
3. Check voltage between front air control harness connector M50 terminal 40 and terminal 31 and press the defroster switch ( ) again.

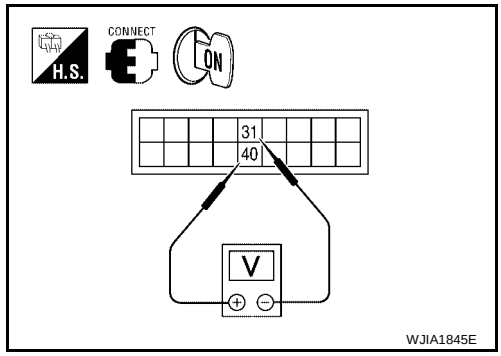


| Connector | Terminals | | Condition | Voltage (Approx.) |
|---|---|---|---|---|
| | (+) | (-) | | |
| Front air control: M50 | 40 | 31 | Press defroster switch | Battery voltage |

OK or NG

OK >> GO TO 16.

NG >> GO TO 15.

## 15. CHECK DEFROSTER DOOR MOTOR CIRCUITS FOR SHORT TO GROUND

1. Turn ignition switch OFF.
2. Disconnect the front air control harness connector.
3. Check continuity between front air control harness connector M50 terminal 31, 40 and ground.

**31 - Ground : Continuity should not exist.**

**40 - Ground : Continuity should not exist.**

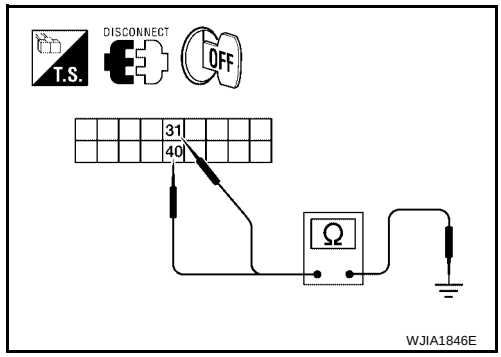


OK or NG

OK >> Replace front air control. Refer to ATC-193, "FRONT AIR CONTROL" .

NG >> Repair or replace harness as necessary.

## 16. CHECK FRONT AIR CONTROL FOR GROUND AND POWER

1. Press the defroster switch ( ).
2. Check voltage between front air control harness connector M50 terminal 31 and terminal 40 and press the defroster switch ( ) again.

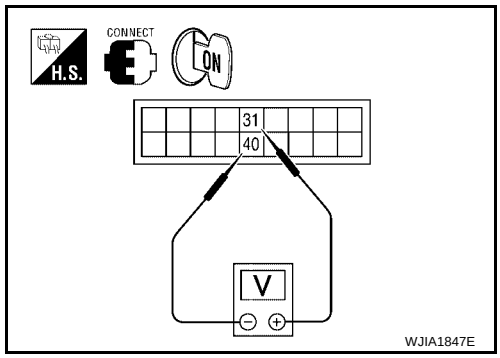


| Connector | Terminals | | Condition | Voltage (Approx.) |
|---|---|---|---|---|
| | (+) | (-) | | |
| Front air control: M50 | 31 | 40 | Press defroster switch | Battery voltage |

OK or NG

OK >> GO TO 17.
NG >> Replace front air control. Refer to ATC-193, "FRONT AIR CONTROL" .

## 17. CHECK DEFROSTER DOOR MOTOR AND CIRCUITS FOR OPEN

1. Turn ignition switch OFF.
2. Disconnect the front air control harness connector.
3. Check continuity between front air control harness connector M50 terminal 31 and terminal 40.

**Continuity should exist.**

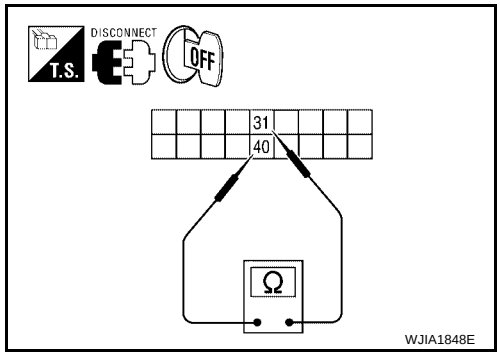


OK or NG

OK >> GO TO 19.
NG >> GO TO 18.

## 18. CHECK DEFROSTER DOOR MOTOR CIRCUITS FOR OPEN

1. Disconnect the defroster door motor harness connector.
2. Check continuity between front air control harness connector M50 (A) terminal 31, 40 and the defroster door motor harness connector M144 (B) terminal 1, 6.

**31 - 1 : Continuity should exist.**
**40 - 6 : Continuity should exist.**

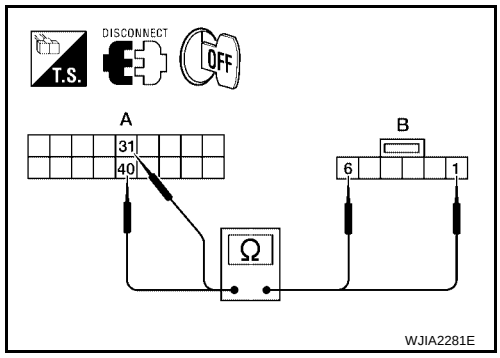


OK or NG

OK >> Replace defroster door motor. Refer to ATC-209, "DEFROSTER DOOR MOTOR" .
NG >> Repair or replace harness as necessary.

## 19. CHECK FRONT AIR CONTROL FOR PBR POWER AND GROUND

1. Reconnect front air control harness connector.
2. Turn ignition switch ON.
3. Check voltage between front air control harness connector M49 terminal 23 and terminal 26.

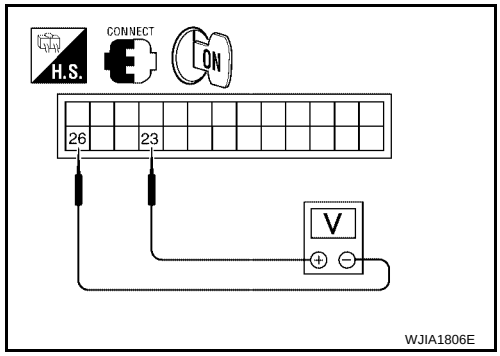


| Connector | Terminals | | Voltage (Approx.) |
|---|---|---|---|
| | (+) | (-) | |
| Front air control: M49 | 23 | 26 | 5V |

OK or NG

OK >> GO TO 21.
NG >> GO TO 20.

## 20. CHECK PBR REFERENCE VOLTAGE CIRCUIT FOR SHORT TO GROUND

1. Turn ignition switch OFF.
2. Disconnect the front air control harness connector.
3. Check continuity between front air control harness connector M49 terminal 23 and ground.

**Continuity should not exist.**

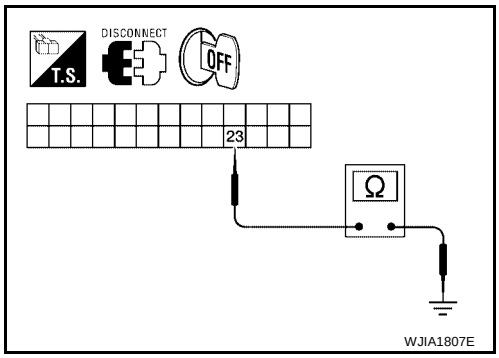


OK or NG

OK >> Replace front air control. Refer to ATC-193, "FRONT AIR CONTROL" .

NG >> Repair or replace harness as necessary.

## 21. CHECK PBR REFERENCE VOLTAGE AND GROUND CIRCUITS

1. Turn ignition switch OFF.
2. Disconnect the front air control harness connector.
3. Check continuity between front air control harness connector M49 terminal 23 and terminal 26.

**Continuity should exist.**

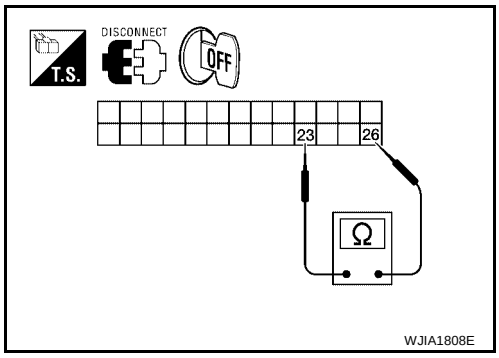


OK or NG

OK >> GO TO 23.

NG >> GO TO 22.

## 22. CHECK PBR REFERENCE VOLTAGE CIRCUIT FOR OPEN

1. Disconnect the defroster door motor harness connector.
2. Check continuity between defroster door motor harness connector M144 (B) terminal 3, 2 and front air control harness connector M49 (A) terminal 23, 26.

**23 - 3 : Continuity should exist.**

**26 - 2 : Continuity should exist.**

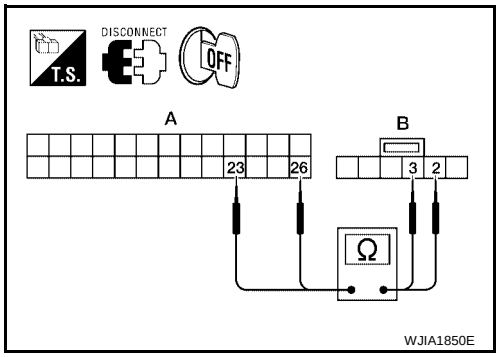


OK or NG

OK >> Replace defroster door motor. Refer to ATC-209, "DEFROSTER DOOR MOTOR" .

NG >> Repair or replace harness as necessary.

## 23. CHECK PBR FEEDBACK VOLTAGE

1. Reconnect the front air control harness connector.
2. Turn ignition switch ON.
3. Check voltage between front air control harness connector M49 terminal 7 and ground while cycling defroster switch on and off.

**Voltage : Approx. 1V - 4.5V**

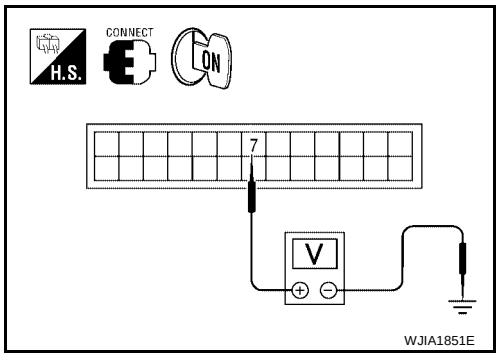


OK or NG

OK >> GO TO 25.

NG >> GO TO 24.

## 24. CHECK PBR FEEDBACK SIGNAL CIRCUIT FOR SHORT TO GROUND

1. Turn ignition switch OFF.
2. Disconnect front air control harness connector.
3. Check continuity between front air control harness connector M49 terminal 7 and ground.

**Continuity should not exist.**

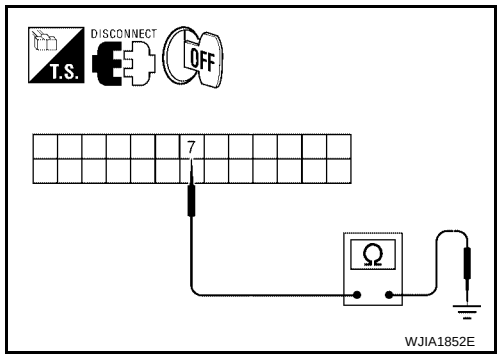


OK or NG

OK >> Replace front air control. Refer to ATC-193, "FRONT AIR CONTROL" .

NG >> Repair or replace harness as necessary.

## 25. CHECK PBR FEEDBACK CIRCUIT FOR OPEN

1. Turn ignition switch OFF.
2. Disconnect the defroster door motor harness connector and front air control harness connector.
3. Check continuity between defroster door motor harness connector M144 (B) terminal 4 and front air control harness connector M49 (A) terminal 7.

**Continuity should exist.**

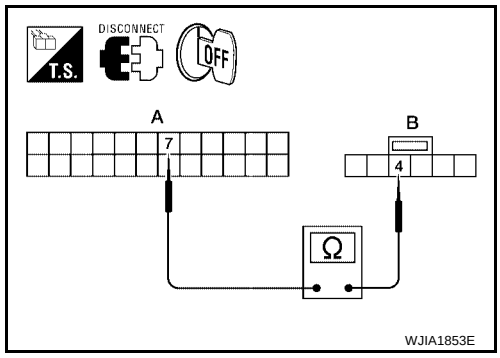


OK or NG

OK >> Replace defroster door motor. Refer to ATC-209, "DEFROSTER DOOR MOTOR" .

NG >> Repair or replace harness as necessary.

## Front Blower Motor Circuit

EJS005EA

SYMPTOM:

- Blower motor operation is malfunctioning.

### INSPECTION FLOW

### 1. CONFIRM SYMPTOM BY PERFORMING OPERATIONAL CHECK - FRONT BLOWER

1. Rotate the front blower control dial clockwise. Blower should operate.
2. Rotate the front blower control dial clockwise, and continue checking blower speed and fan symbol until all speeds are checked.

Can the symptom be duplicated?

YES >> GO TO 3.
NO >> GO TO 2.

### 2. CHECK FOR ANY SYMPTOMS

Perform a complete operational check for any symptoms. Refer to ATC-69, "Operational Check (Front)" .

Does another symptom exist?

YES >> Refer to ATC-36, "SYMPTOM TABLE" .
NO >> System OK.

### 3. CHECK FOR SERVICE BULLETINS

Check for any service bulletins.

>> GO TO 4.

### 4. PERFORM SELF-DIAGNOSIS

Perform self-diagnosis to check for any codes. Refer to ATC-67, "A/C System Self-diagnosis Function" .

Are any self-diagnosis codes present?

YES >> Refer to ATC-68, "SELF-DIAGNOSIS CODE CHART" .
NO >> GO TO 5.

### 5. CHECK BLOWER MOTOR OPERATION

Check and verify blower motor operates manually in all speeds.

Does blower motor operate in all speeds?

YES >> GO TO 6.
NO >> Refer to ATC-126, "DIAGNOSTIC PROCEDURE FOR BLOWER MOTOR" .

### 6. CHECK ENGINE COOLANT TEMPERATURE SENSOR CIRCUIT

Check engine coolant temperature sensor circuit. Refer to EC-224, "DTC P0117, P0118 ECT SENSOR"

OK or NG?

OK >> GO TO 7.
NG >> Refer to EC-227, "Diagnostic Procedure" .

### 7. RECHECK FOR ANY SYMPTOMS

Perform a complete operational check for any symptoms. Refer to ATC-69, "Operational Check (Front)" .

Does another symptom exist?

YES >> Refer to ATC-36, "SYMPTOM TABLE" .
NO >> Replace front air control. Refer to ATC-193, "FRONT AIR CONTROL" .

## SYSTEM DESCRIPTION

### Component Parts

Blower speed control system components are:

- Front air control
- Variable blower control
- Front blower motor relay
- Front blower motor
- In-vehicle sensor
- Ambient sensor
- Optical sensor
- Intake sensor

### System Operation

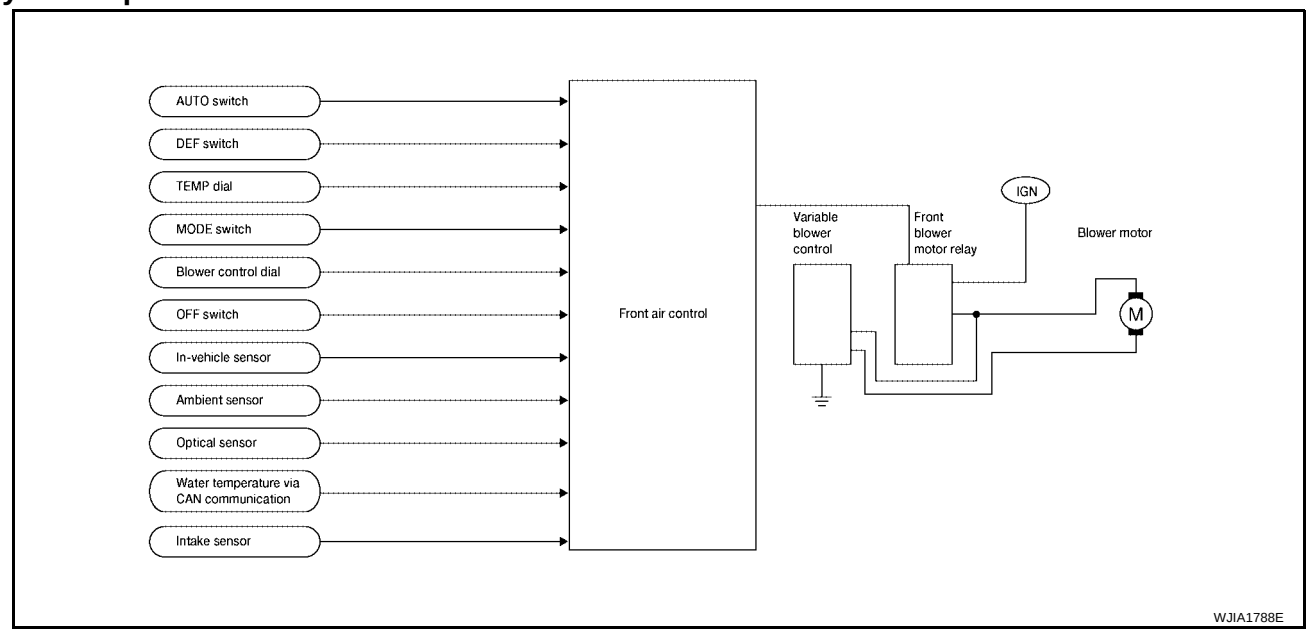


### Automatic Mode

In the automatic mode, the blower motor speed is calculated by the front air control and variable blower control based on input from the in-vehicle sensor, optical sensor, intake sensor and ambient sensor, and potentio temperature control (PTC).
When the air flow is increased, the blower motor speed is adjusted gradually to prevent a sudden increase in air flow.
In addition to manual air flow control and the usual automatic air flow control, starting air flow control, low water temperature starting control and high passenger compartment temperature starting control are available.

### Starting Blower Speed Control

Start up from cold soak condition (Automatic mode).
In a cold start up condition where the engine coolant temperature is below 50°C (122°F), the blower will not operate at blower speed 1 for a short period of time (up to 210 seconds). The exact start delay time varies depending on the ambient and engine coolant temperatures.
In the most extreme case (very low ambient temperature) the blower starting delay will be 210 seconds as described above. After the coolant temperature reaches 50°C (122°F), or the 210 seconds has elapsed, the blower speed will increase to the objective blower speed.

Start up from usual operating or hot soak condition (Automatic mode).
The blower will begin operation momentarily after the AUTO switch is pushed. The blower speed will gradually rise to the objective speed over a time period of 3 seconds or less (actual time depends on the objective blower speed).

## Blower Speed Compensation - Sunload

When the in-vehicle temperature and the set temperature are very close, the blower will be operating at low speed. The speed will vary depending on the sunload. During conditions of low or no sunload, the blower operates at low speed. During high sunload conditions, the front air control causes the blower speed to increase.

## Blower Speed Control Specification

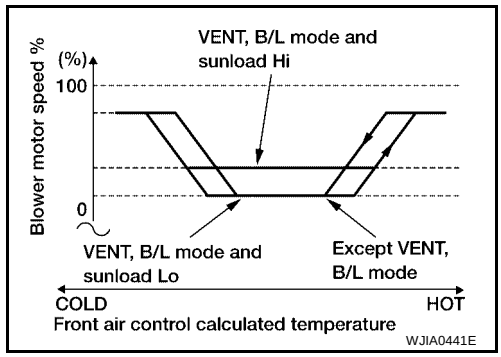


## COMPONENT DESCRIPTION

### Variable Blower Control

The variable blower control is located on the cooling unit. The variable blower control receives a gate voltage from the front air control to steplessly maintain the blower motor voltage in the 0 to 5 volt range (approx.).

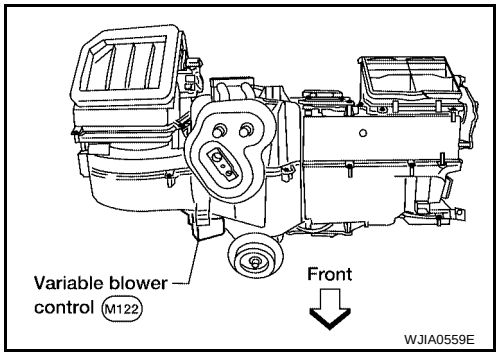


## DIAGNOSTIC PROCEDURE FOR BLOWER MOTOR

SYMPTOM: Blower motor operation is malfunctioning under starting blower speed control.

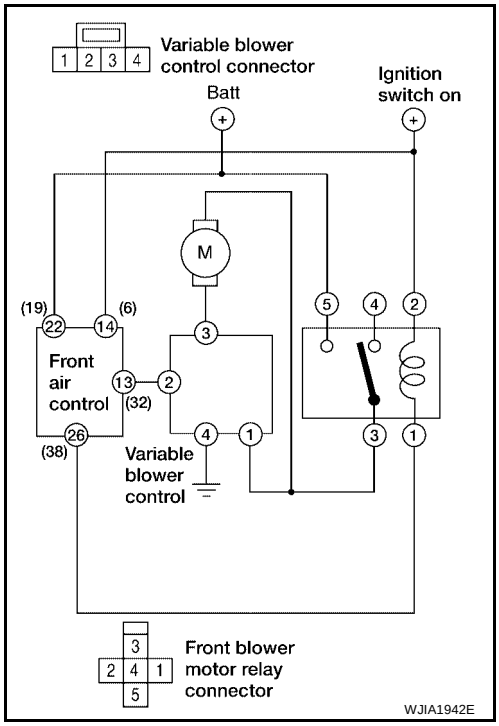

## 1. CHECK VEHICLE EQUIPMENT

Is vehicle equipped with navi?

YES or NO

YES >> GO TO 2.
NO >> GO TO 17.

## 2. CHECK FUSES

Check 20A fuses [No. 24 and 27 (Located in the fuse and fusible link box)]. For fuse layout. Refer to PG-77, "FUSE AND FUSIBLE LINK BOX" .

**Fuses are good.**

OK or NG

OK >> GO TO 3.
NG >> GO TO 11.

## 3. CHECK FRONT BLOWER MOTOR POWER SUPPLY CIRCUIT

1. Turn ignition switch OFF.
2. Disconnect front blower motor connector.
3. Turn ignition switch ON.
4. Press the mode switch to select any mode except OFF.
5. Turn the front blower control dial to high.
6. Check voltage between front blower motor harness connector M62 terminal 2 and ground.

**2 - Ground : Battery voltage**

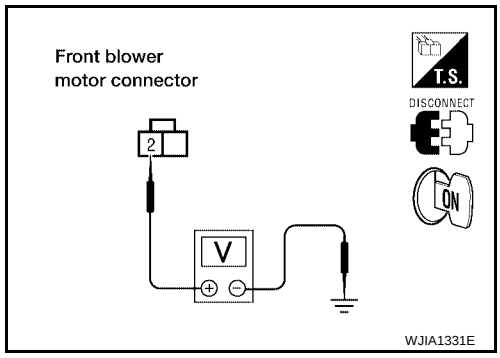


OK or NG

OK >> GO TO 13.
NG >> GO TO 4.

## 4. CHECK FRONT BLOWER MOTOR RELAY (SWITCH SIDE) POWER SUPPLY CIRCUIT

1. Turn ignition switch OFF.
2. Disconnect front blower motor relay.
3. Check voltage between front blower motor relay harness connector M107 terminal 5 and ground.

**5 - Ground : Battery voltage**

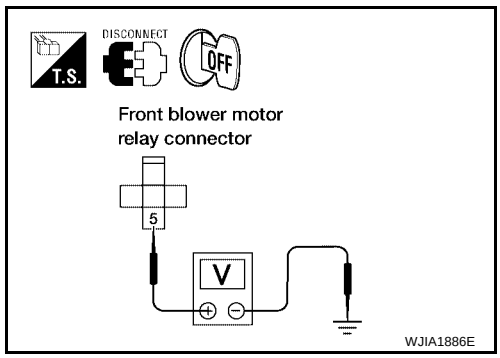


OK or NG

OK >> GO TO 5.
NG >> Repair harness or connector.

## 5. CHECK FRONT BLOWER MOTOR RELAY

Turn ignition switch OFF.
Check front blower motor relay. Refer to ATC-135, "Front Blower Motor Relay" .

OK or NG

OK >> GO TO 6.
NG >> Replace front blower motor relay.

## 6. CHECK FRONT BLOWER MOTOR RELAY (SWITCH SIDE) CIRCUIT FOR OPEN

Check continuity between front blower motor relay harness connector M107 terminal 3 and front blower motor harness connector M62 terminal 2.

**3 - 2** **: Continuity should exist.**

OK or NG

OK >> GO TO 7.
NG >> Repair harness or connector.

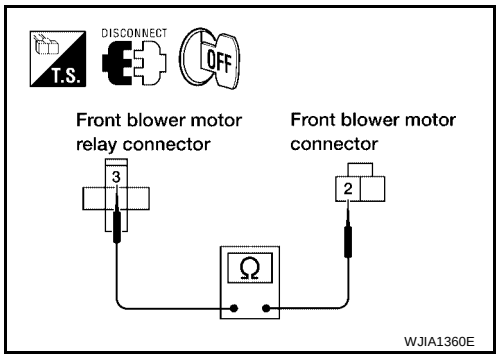


## 7. CHECK VARIABLE BLOWER CONTROL POWER SUPPLY CIRCUIT FOR OPEN

1. Disconnect variable blower control harness connector.
2. Check continuity between front blower motor relay harness connector M107 terminals 3 and variable blower control harness connector M122 terminal 1.

**3 - 1** **: Continuity should exist.**

OK or NG

OK >> GO TO 8.
NG >> Repair harness or connector.

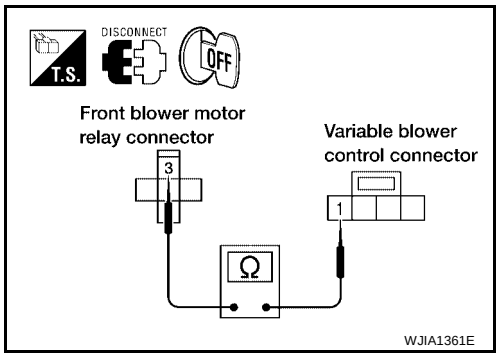


## 8. CHECK VARIABLE BLOWER CONTROL SIGNAL CIRCUIT

1. Disconnect front air control connector.
2. Check continuity between front air control harness connector M49 terminal 13 and variable blower control harness connector M122 terminal 2.

**13 - 2** **: Continuity should exist.**

OK or NG

OK >> GO TO 9.
NG >> Repair harness or connector.

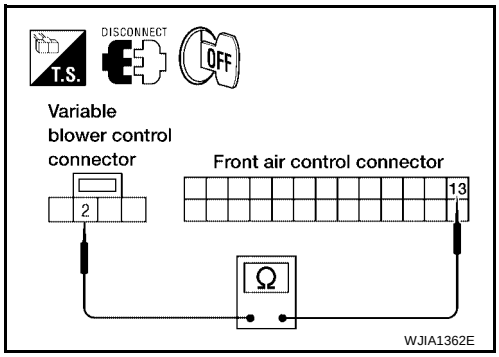


## 9. CHECK FRONT BLOWER MOTOR RELAY (COIL SIDE) POWER SUPPLY

1. Turn ignition switch ON.
2. Check voltage between front blower motor relay harness connector M107 terminal 2 and ground.

**2 - Ground** **: Battery voltage**

OK or NG

OK >> GO TO 10.
NG >> Repair harness or connector.

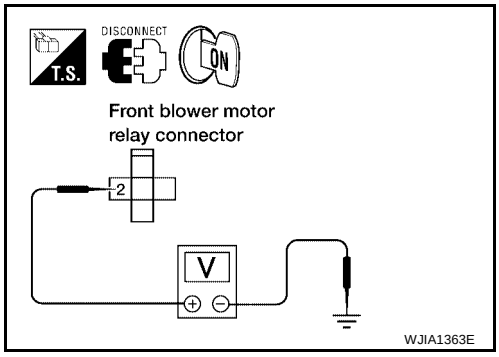

## 10. CHECK FRONT BLOWER MOTOR RELAY (COIL SIDE) GROUND CIRCUIT

1. Turn ignition switch OFF.
2. Check continuity between front blower motor relay connector M107 terminal 1 and front air control harness connector M49 terminal 26.

**1 - 26 : Continuity should exist.**

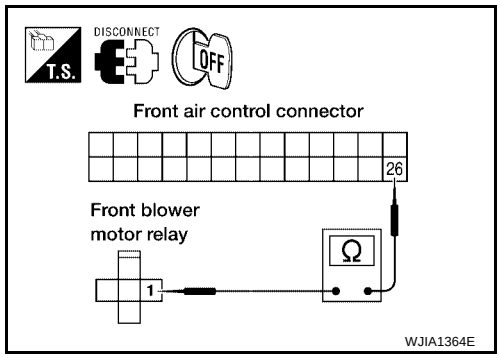


OK or NG

OK >> Replace front air control. Refer to ATC-193, "FRONT AIR CONTROL" .

NG >> Repair harness or connector.

## 11. REPLACE FUSES

1. Replace fuses.
2. Activate the front blower motor.
3. Do fuses blow?

YES or NO

YES >> GO TO 12.

NO >> Inspection End.

## 12. CHECK FRONT BLOWER MOTOR POWER SUPPLY CIRCUIT FOR SHORT

1. Turn ignition switch OFF.
2. Disconnect front blower motor connector and variable blower control connector.
3. Check continuity between variable blower control harness connector M122 terminal 1 and ground.

**1 - Ground. : Continuity should not exist.**

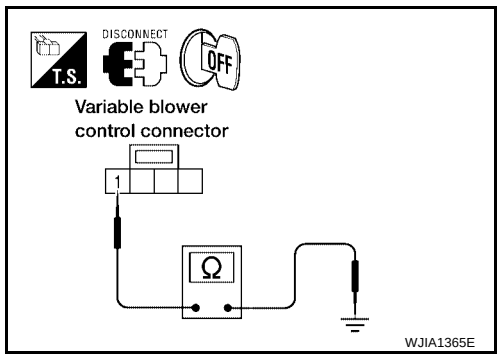


OK or NG

OK >> GO TO 13.

NG >> Repair harness or connector.

## 13. CHECK VARIABLE BLOWER CONTROL SIGNAL CIRCUIT

1. Disconnect front air control connector.
2. Check continuity between front air control harness connector M49 terminal 13 and variable blower control harness connector M122 terminal 2.

**13 - 2 : Continuity should exist.**

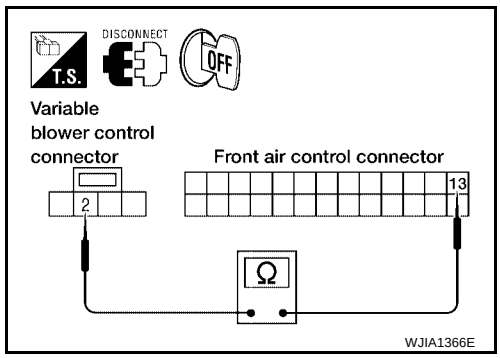


OK or NG

OK >> GO TO 14.

NG >> Repair harness or connector.

## 14. CHECK FRONT BLOWER MOTOR

Check front blower motor. Refer to ATC-135, "Front Blower Motor" .

OK or NG

OK >> GO TO 15.

NG >> Replace front blower motor. Refer to ATC-198, "FRONT BLOWER MOTOR" .

## 15. CHECK BLOWER MOTOR GROUND CIRCUIT

Check continuity between front blower motor harness connector M62 terminal 1 and variable blower control harness connector M122 terminal 3.

**1 - 3 : Continuity should exist.**

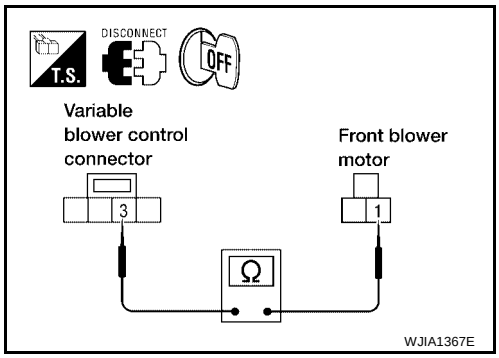


OK or NG

OK >> GO TO 16.
NG >> Repair harness or connector.

## 16. CHECK VARIABLE BLOWER CONTROL GROUND CIRCUIT

Check continuity between variable blower control harness connector M122 terminal 4 and ground.

**4 - ground : Continuity should exist.**

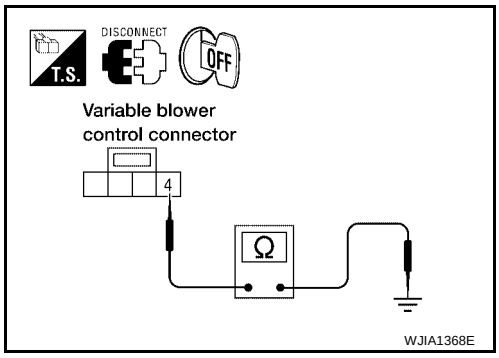


OK or NG

OK >> Replace variable blower control. Refer to ATC-214, "VARIABLE BLOWER CONTROL" .
NG >> Repair harness or connector.

## 17. CHECK FUSES

Check 20A fuses [No. 24 and 27 (Located in the fuse and fusible link box)]. For fuse layout. Refer to PG-77, "FUSE AND FUSIBLE LINK BOX" .

**Fuses are good.**

OK or NG

OK >> GO TO 18.
NG >> GO TO 26.

## 18. CHECK FRONT BLOWER MOTOR POWER SUPPLY CIRCUIT

1. Turn ignition switch OFF.
2. Disconnect front blower motor connector.
3. Turn ignition switch ON.
4. Press the mode switch to select any mode except OFF.
5. Turn the front blower control dial to high.
6. Check voltage between front blower motor harness connector M62 terminal 2 and ground.

**2 - Ground : Battery voltage**

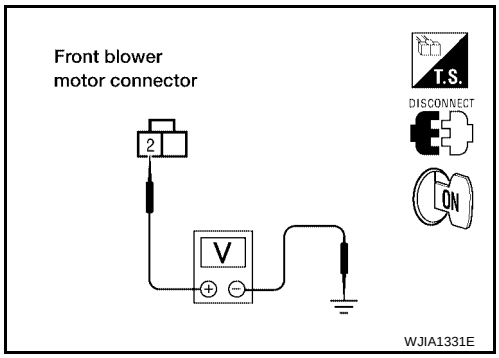


OK or NG

OK >> GO TO 28.
NG >> GO TO 19.

## 19. CHECK FRONT BLOWER MOTOR RELAY (SWITCH SIDE) POWER SUPPLY CIRCUIT

1. Turn ignition switch OFF.
2. Disconnect front blower motor relay.
3. Check voltage between front blower motor relay harness connector M107 terminals 5 and ground.

**5 - Ground : Battery voltage**

OK or NG

OK >> GO TO 20.
NG >> Repair harness or connector.

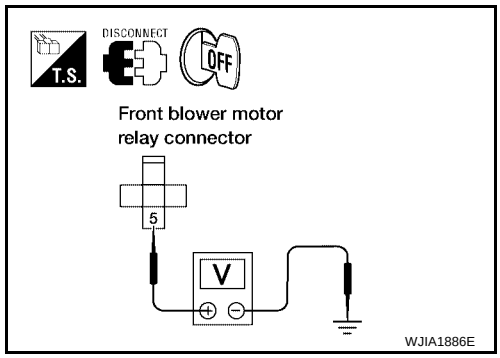


## 20. CHECK FRONT BLOWER MOTOR RELAY

Turn ignition switch OFF.
Check front blower motor relay. Refer to ATC-135, "Front Blower Motor Relay" .

OK or NG

OK >> GO TO 21.
NG >> Replace front blower motor relay.

## 21. CHECK FRONT BLOWER MOTOR RELAY (SWITCH SIDE) CIRCUIT FOR OPEN

Check continuity between front blower motor relay harness connector M107 terminal 3 and front blower motor harness connector M62 terminal 2.

**3 - 2 : Continuity should exist.**

OK or NG

OK >> GO TO 22.
NG >> Repair harness or connector.

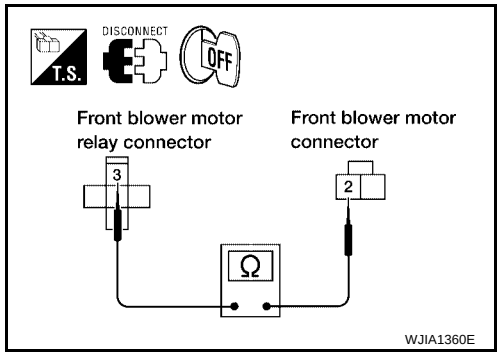


## 22. CHECK VARIABLE BLOWER CONTROL POWER SUPPLY CIRCUIT FOR OPEN

1. Disconnect variable blower control harness connector.
2. Check continuity between front blower motor relay harness connector M107 terminals 3 and variable blower control harness connector M122 terminal 1.

**3 - 1 : Continuity should exist.**

OK or NG

OK >> GO TO 23.
NG >> Repair harness or connector.

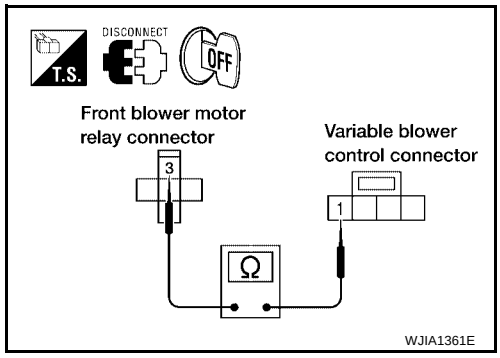

## 23. CHECK VARIABLE BLOWER CONTROL SIGNAL CIRCUIT

1. Disconnect front air control connector.
2. Check continuity between front air control harness connector M50 (B) terminal 32 and variable blower control harness connector M122 (A) terminal 2.

**32 - 2 : Continuity should exist.**

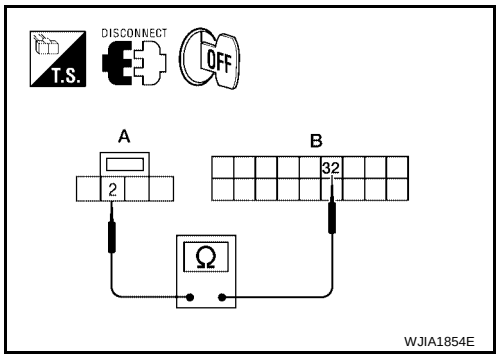


OK or NG

OK >> GO TO 24.
NG >> Repair harness or connector.

## 24. CHECK FRONT BLOWER MOTOR RELAY (COIL SIDE) POWER SUPPLY

1. Turn ignition switch ON.
2. Check voltage between front blower motor relay harness connector M107 terminal 2 and ground.

**2 - Ground : Battery voltage**

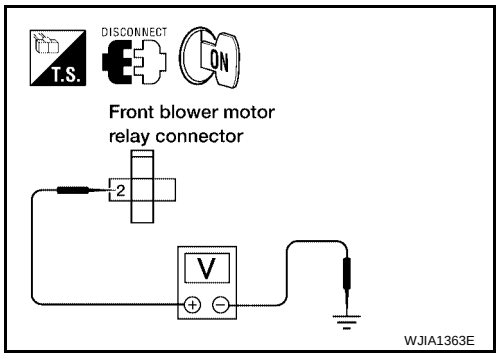


OK or NG

OK >> GO TO 25.
NG >> Repair harness or connector.

## 25. CHECK FRONT BLOWER MOTOR RELAY (COIL SIDE) GROUND CIRCUIT

1. Turn ignition switch OFF.
2. Check continuity between front blower motor relay connector M107 (B) terminal 1 and front air control harness connector M50 (A) terminal 38.

**1 - 38 : Continuity should exist.**

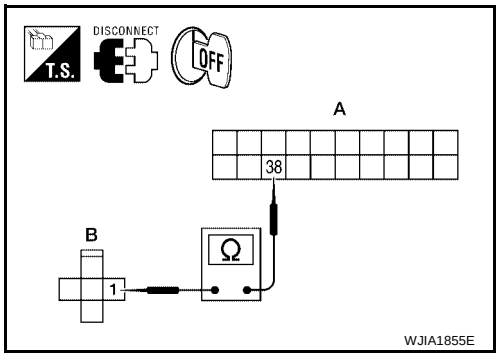


OK or NG

OK >> Replace front air control. Refer to ATC-193, "FRONT AIR CONTROL" .
NG >> Repair harness or connector.

## 26. REPLACE FUSES

1. Replace fuses.
2. Activate the front blower motor.
3. Do fuses blow?

YES or NO

YES >> GO TO 27.
NO >> Inspection End.

## 27. CHECK FRONT BLOWER MOTOR POWER SUPPLY CIRCUIT FOR SHORT

1. Turn ignition switch OFF.
2. Disconnect front blower motor connector and variable blower control connector.
3. Check continuity between variable blower control harness connector M122 terminal 1 and ground.

**1 - Ground. : Continuity should not exist.**

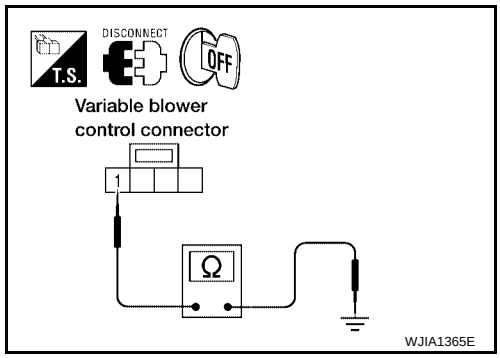


OK or NG

OK >> GO TO 28.
NG >> Repair harness or connector.

## 28. CHECK VARIABLE BLOWER CONTROL SIGNAL CIRCUIT

1. Disconnect front air control connector.
2. Check continuity between front air control harness connector M50 (B) terminal 32 and variable blower control harness connector M122 (A) terminal 2.

**32 - 2 : Continuity should exist.**

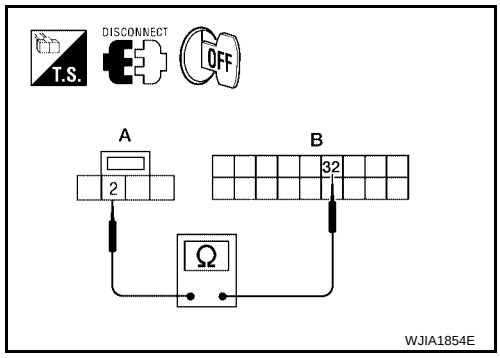


OK or NG

OK >> GO TO 29.
NG >> Repair harness or connector.

## 29. CHECK FRONT BLOWER MOTOR

Check front blower motor. Refer to ATC-135, "Front Blower Motor" .

OK or NG

OK >> GO TO 30.
NG >> Replace front blower motor. Refer to ATC-198, "FRONT BLOWER MOTOR" .

## 30. CHECK BLOWER MOTOR GROUND CIRCUIT

Check continuity between front blower motor harness connector M62 terminal 1 and variable blower control harness connector M122 terminal 3.

**1 - 3 : Continuity should exist.**

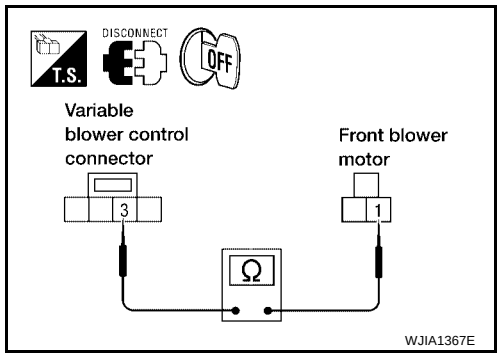


OK or NG

OK >> GO TO 31.
NG >> Repair harness or connector.

## 31. CHECK VARIABLE BLOWER CONTROL GROUND CIRCUIT

Check continuity between variable blower control harness connector M122 terminal 4 and ground.

**4 - ground : Continuity should exist.**

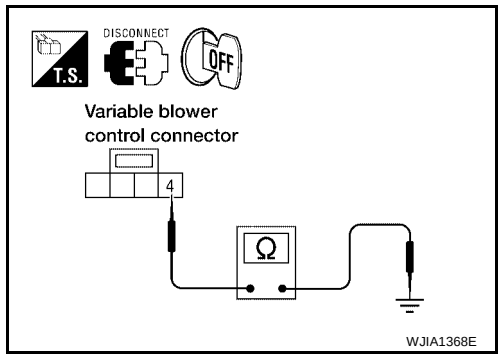


OK or NG

OK >> Replace variable blower control. Refer to ATC-214, "VARIABLE BLOWER CONTROL" .

NG >> Repair harness or connector.

## COMPONENT INSPECTION

### Front Blower Motor Relay

Check continuity between terminals by supplying 12 volts and ground to coil side terminals of relay.

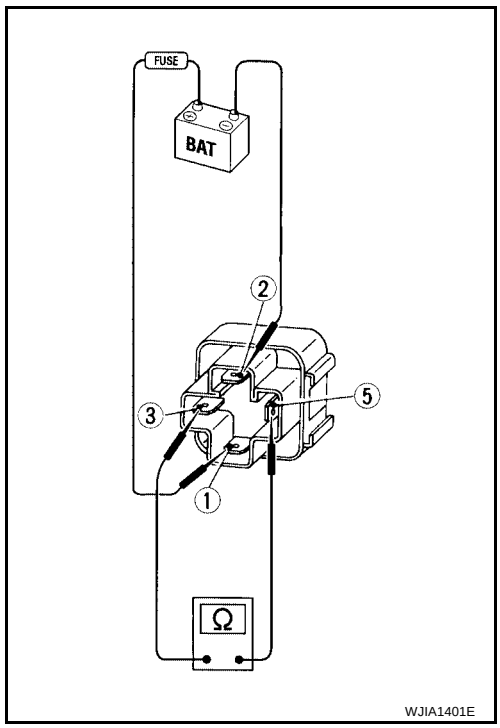


### Front Blower Motor

Confirm smooth rotation of the blower motor.

- Ensure that there are no foreign particles inside the blower unit.
- Apply 12 volts to terminal 2 and ground to terminal 1 and verify that the motor operates freely and quietly.

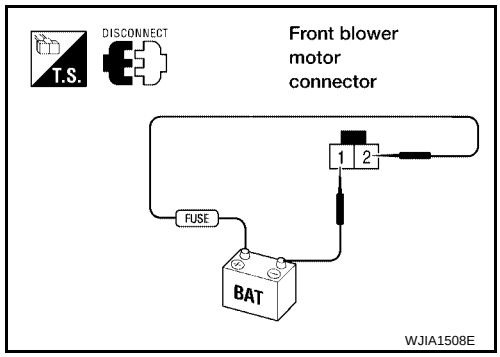

## Rear Blower Motor Circuit

EJS005EB

SYMPTOM:

- Blower motor operation is malfunctioning.

### INSPECTION FLOW

### 1. CONFIRM SYMPTOM BY PERFORMING OPERATIONAL CHECK - REAR AIR CONTROL (FRONT)

1. Press AUTO switch.
2. Set the rear blower control dial (front) to REAR position.
3. Turn the rear blower control dial (rear) and check for rear blower operation.

   **NOTE:**
   If the engine coolant temperature increases above 111.9°C (233.6°F) the front air control turns OFF the rear blower motor. When the engine coolant temperature drops below 110°C (230°F) the front air control turns the rear blower motor back ON.
4. Continue checking that rear blower speed increases as the rear blower control dial is rotated clockwise.

Does the rear blower motor operate correctly?

YES >> GO TO 3.
NO >> GO TO 2.

### 2. CHECK FOR ANY SYMPTOMS

Perform a complete operational check for any symptoms. Refer to ATC-69, "Operational Check (Front)" .

Does another symptom exist?

YES >> Refer to ATC-36, "SYMPTOM TABLE" .
NO >> System OK.

### 3. CHECK FOR SERVICE BULLETINS

Check for any service bulletins.

>> GO TO 4.

### 4. CHECK REAR BLOWER CONTROL DIAL (FRONT) CIRCUIT

Check and verify rear blower control dial (front) operates the rear blower motor in all speeds.

Does blower motor operate in all speeds?

YES >> GO TO 5.
NO >> Refer to ATC-148, "DIAGNOSTIC PROCEDURE FOR REAR AIR CONTROL" .

### 5. PERFORM SELF-DIAGNOSIS

Perform self-diagnosis to check for any codes. Refer to ATC-67, "A/C System Self-diagnosis Function" .

Are any self-diagnosis codes present?

YES >> Refer to ATC-68, "SELF-DIAGNOSIS CODE CHART" .
NO >> GO TO 6.

### 6. RECHECK FOR ANY SYMPTOMS

Perform a complete operational check for any symptoms. Refer to ATC-69, "Operational Check (Front)" .

Does another symptom exist?

YES >> Refer to ATC-36, "SYMPTOM TABLE" .
NO >> Replace front air control. Refer to ATC-193, "FRONT AIR CONTROL" .

## SYSTEM DESCRIPTION

### Component Parts

Rear blower speed control system components are:

- Front air control
- Rear blower switch (front)
- Rear air control
- Rear blower motor resistor
- Rear blower motor
- Rear blower motor relay

### System Operation

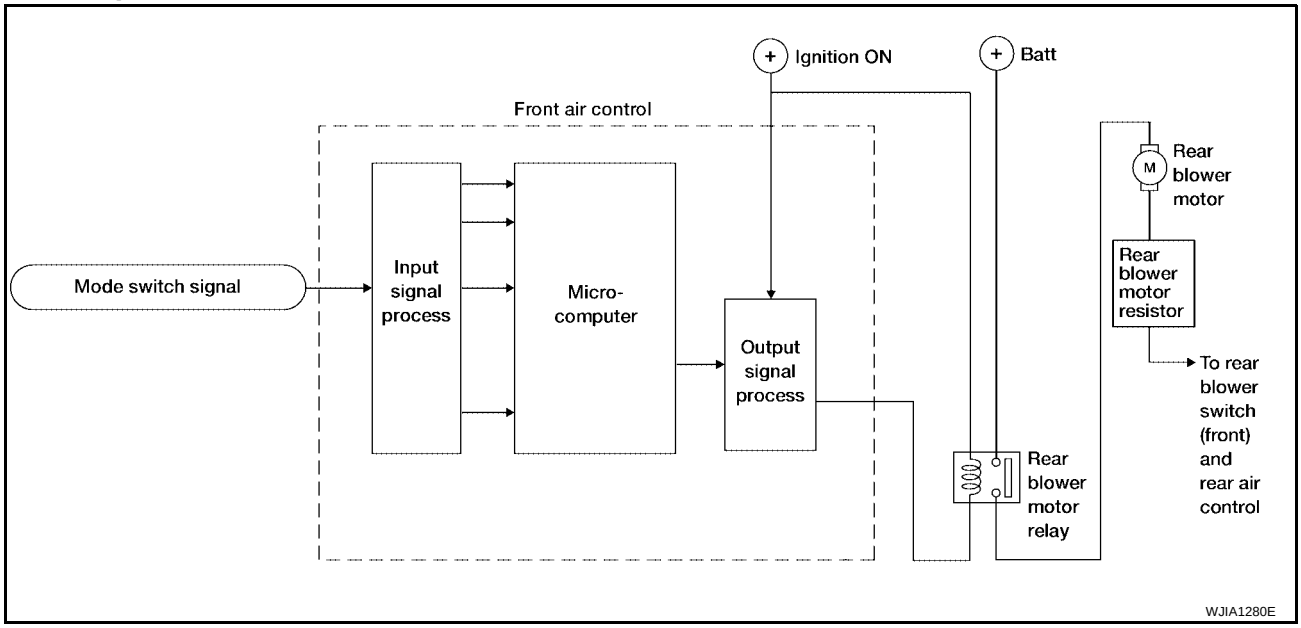


### Rear Blower Control

When the rear blower control dial (front) is in the OFF position, the rear blower motor cannot operate.
When the rear blower control dial (front) is in the REAR position, it allows the rear blower switch (rear) to control the rear blower motor speed. In any other position (1-4), the rear blower switch (front) controls the rear blower motor speed regardless of the rear blower switch (rear) position.

## DIAGNOSTIC PROCEDURE FOR REAR BLOWER MOTOR

### Rear Blower Switch (Rear) Circuit

SYMPTOM:

- Rear blower motor does not rotate when rear blower switch (front) is set to REAR position and the rear blower switch (rear) is set at 1-4 speed.

### 1. CHECK REAR BLOWER MOTOR OPERATION

Blower motor rotates normally when rear blower control dial (front) is set at 1 - 4 speed.

OK or NG

OK >> GO TO 2.
NG >> Refer to ATC-139, "Trouble Diagnosis Procedure For Rear Blower Motor (1 - 4 Speed)" .

### 2. CHECK REAR BLOWER SWITCH (FRONT)

Refer to ATC-145, "Rear Blower Switch (Front)" .

OK or NG

OK >> GO TO 3.
NG >> Replace rear blower switch (front). Refer to ATC-193, "FRONT AIR CONTROL" .

## 3. CHECK REAR AIR CONTROL

Check rear air control. Refer to ATC-137, "Rear Blower Switch (Rear) Circuit" .

OK or NG

OK >> GO TO 4.
NG >> Replace rear blower switch (rear). Refer to ATC-193, "REAR AIR CONTROL" .

## 4. CHECK CIRCUIT CONTINUITY

1. Turn ignition switch OFF.
2. Disconnect rear blower switch (front) connector and rear air control connector.
3. Check continuity between rear blower switch (front) harness connector M52 terminal 2 and rear blower switch (rear) harness connector R208 terminal 10.

**2 - 10 : Continuity should exist.**

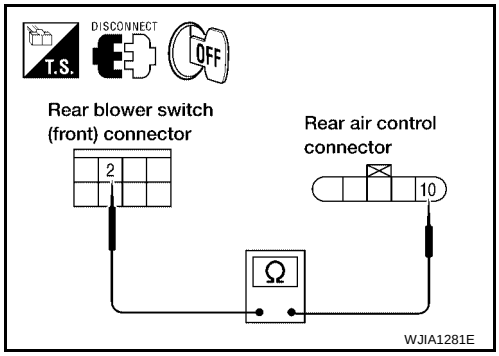


OK or NG

OK >> Inspection End.
NG >> Repair harness or connector.

## Trouble Diagnosis Procedure For Rear Blower Motor (1 - 4 Speed)

SYMPTOM:

- Rear blower motor does not rotate when rear blower control dial (front) is set at 1 - 4 speed.

### Inspection Flow

### 1. CONFIRM SYMPTOM BY PERFORMING OPERATIONAL CHECK - REAR BLOWER MOTOR

1. Press AUTO switch.
2. Set the rear blower control dial (front) to REAR position.
3. Turn the rear blower control dial (rear) to rear blower speed position 1 and check for rear blower operation.
4. Continue checking that rear blower speed increases as the rear blower control dial is rotated clockwise.

Does the rear blower motor operate correctly?

YES >> GO TO 3.
NO >> GO TO 2.

### 2. CHECK FOR ANY SYMPTOMS

Perform a complete operational check for any symptoms. Refer to ATC-69, "Operational Check (Front)" .

Does another symptom exist?

YES >> Refer to ATC-36, "SYMPTOM TABLE" .
NO >> System OK.

### 3. CHECK FOR SERVICE BULLETINS

Check for any service bulletins.

>> GO TO 4.

### 4. CHECK REAR BLOWER MOTOR CIRCUIT

Check and verify rear blower motor operates in all speeds.

Does blower motor operate in all speeds?

YES >> GO TO 5.
NO >> Refer to ATC-139, "Trouble Diagnosis Procedure For Rear Blower Motor (1 - 4 Speed)" .

### 5. PERFORM SELF-DIAGNOSIS

Perform self-diagnosis to check for any codes. Refer to ATC-67, "A/C System Self-diagnosis Function" .

Are any self-diagnosis codes present?

YES >> Refer to ATC-68, "SELF-DIAGNOSIS CODE CHART" .
NO >> GO TO 6.

### 6. RECHECK FOR ANY SYMPTOMS

Perform a complete operational check for any symptoms. Refer to ATC-69, "Operational Check (Front)" .

Does another symptom exist?

YES >> Refer to ATC-36, "SYMPTOM TABLE" .
NO >> Replace front air control. Refer to ATC-193, "FRONT AIR CONTROL" .

## 1. DIAGNOSTIC PROCEDURE

Blower motor rotates normally at each speed.

OK or NG

OK >> Inspection End.
NG >> 1. Does not rotate at any speed, GO TO 2.
2. Does not rotate at 1 - 3 speed, GO TO 13.
3. Does not rotate at 4 speed, GO TO 18.

## 2. CHECK FUSES

Check 15A fuses [Nos. 10 and 11, located in the fuse block (J/B)]. Refer to PG-76, "FUSE BLOCK-JUNCTION BOX (J/B)" .

OK or NG

OK >> GO TO 3.
NG >> GO TO 8.

## 3. CHECK REAR BLOWER MOTOR POWER SUPPLY

1. Turn ignition switch OFF.
2. Disconnect rear blower motor connector.
3. Select any rear blower speed except OFF.
4. Turn ignition switch ON.
5. Check voltage between rear blower motor harness connector B134 terminal 2 and ground.

**2 - Ground : Battery voltage.**

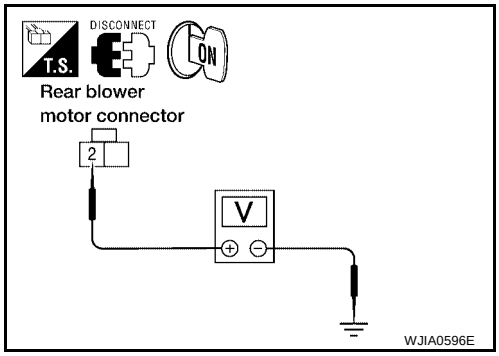


OK or NG

OK >> GO TO 11.
NG >> GO TO 4.

## 4. CHECK REAR BLOWER MOTOR RELAY

Turn ignition switch OFF.
Check rear blower motor relay. Refer to ATC-145, "Rear Blower Motor Relay" .

OK or NG

OK >> GO TO 5.
NG >> Replace rear blower motor relay.

## 5. CHECK REAR BLOWER MOTOR POWER FROM RELAY TO REAR BLOWER MOTOR

1. Reconnect rear blower motor connector.
2. Disconnect rear blower motor relay J-1.
3. Turn ignition switch ON.
4. Set rear blower switch (front) to any position except OFF, REAR, or 4 - speed.
5. Momentarily (no more than 4 seconds), connect a jumper wire between rear blower motor relay connector J-1 (harness side) terminals 3 and 5.

**Rear blower motor should rotate.**

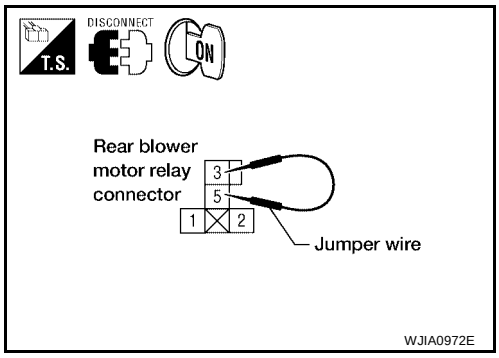


OK or NG

OK >> GO TO 6.
NG >> GO TO 10.

## 6. CHECK REAR BLOWER MOTOR RELAY (COIL SIDE) POWER SUPPLY CIRCUIT

1. Turn ignition switch OFF.
2. Disconnect fuse block (J/B) connector M39.
3. Turn ignition switch ON.
4. Set rear blower switch (front) to any position except OFF, REAR, or 4 - speed.
5. Check voltage between fuse block (J/B) harness connector M39 terminal 3Q and ground.

**3Q - Ground : Battery voltage.**

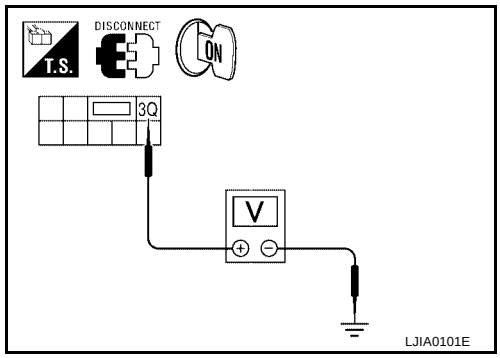


OK or NG

OK >> GO TO 7.
NG >> GO TO 20.

## 7. CHECK REAR BLOWER MOTOR RELAY (COIL SIDE) GROUND CIRCUIT

1. Turn ignition switch OFF.
2. Disconnect fuse block (J/B) connector M3.
3. Check continuity between fuse block (J/B) harness connector M3 terminal 7N and ground.

**7N - Ground : Continuity should exist.**

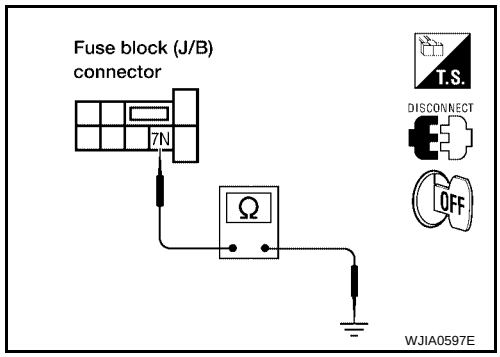


OK or NG

OK >> Replace fuse block (J/B).
NG >> Repair harness or connector.

## 8. REPLACE FUSE

Replace Fuse. Refer to PG-76, "FUSE BLOCK-JUNCTION BOX (J/B)"
Fuse should not open when rear blower motor is activated.

OK or NG

OK >> Inspection End.
NG >> GO TO 9.

## 9. CHECK REAR BLOWER MOTOR POWER SUPPLY CIRCUIT FOR SHORT

1. Turn ignition switch OFF.
2. Disconnect fuse block (J/B) connector M3 and rear blower motor connector.
3. Check continuity between rear blower motor harness connector B134 terminal 2 and ground.

**2 - Ground : Continuity should not exist.**

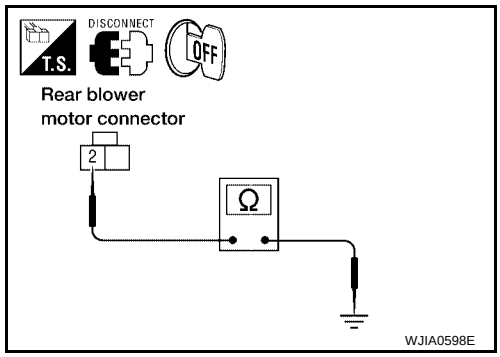


OK or NG

OK >> Check rear blower motor. Refer to ATC-135, "Front Blower Motor" .
NG >> Repair harness or connector.

## 10. CHECK REAR BLOWER MOTOR RELAY (SWITCH SIDE) POWER SUPPLY CIRCUIT

1. Turn ignition switch OFF.
2. Disconnect fuse block (J/B) and rear blower motor connectors.
3. Check continuity between fuse block (J/B) harness connector M3 terminal 3N and 8N and rear blower motor harness connector B134 terminal 2.

**3N, 8N - 2 : Continuity should exist.**

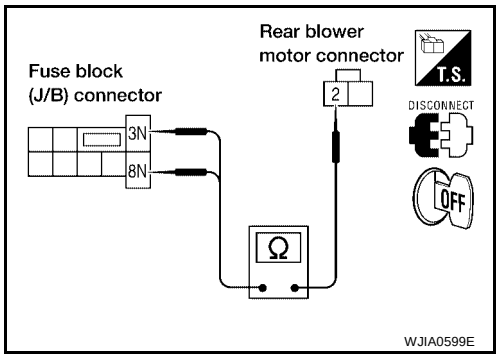


OK or NG

OK >> GO TO 20.
NG >> Repair harness or connector.

## 11. CHECK REAR BLOWER MOTOR

Check rear blower motor. Refer to ATC-146, "Rear Blower Motor" .

OK or NG

OK >> GO TO 12.
NG >> Replace rear blower motor. refer to ATC-199, "REAR BLOWER MOTOR"

## 12. CHECK REAR BLOWER SWITCH (FRONT)

Check rear blower switch (front). Refer to ATC-145, "Rear Blower Switch (Front)" .

OK or NG

OK >> GO TO 15.
NG >> Replace rear blower switch (front). Refer to ATC-193, "FRONT AIR CONTROL"

## 13. CHECK REAR BLOWER MOTOR RESISTOR

Check rear blower motor resistor. Refer to ATC-146, "Rear Blower Motor Resistor" .

OK or NG

OK >> GO TO 14.
NG >> Replace rear blower motor resistor. Refer to ATC-215, "REAR BLOWER MOTOR RESISTOR"

## 14. CHECK REAR BLOWER SWITCH (FRONT) CIRCUIT

1. Turn ignition switch OFF.
2. Disconnect rear blower switch (front) M52.
3. Turn ignition switch ON.
4. Reconnect rear blower motor resistor harness connector B133.
5. Check voltage between each rear blower switch (front) connector M52 terminals 3, 7, and 8, and ground.

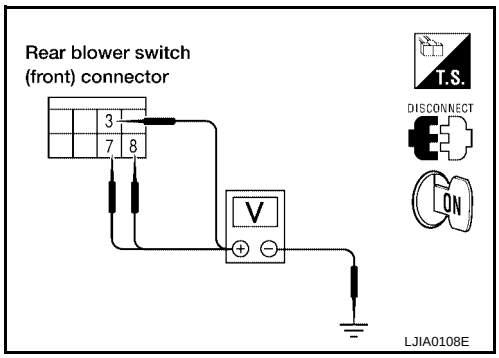


| Terminal No. | | Voltage |
|---|---|---|
| (+) | (-) | |
| 3 | Ground | Approx. 12V |
| 7 | | |
| 8 | | |

OK or NG

OK >> GO TO 17.
NG >> GO TO 16.

## 15. CHECK REAR BLOWER MOTOR GROUND CIRCUIT TO REAR BLOWER MOTOR RESISTOR

1. Turn ignition switch OFF.
2. Disconnect rear blower motor and rear blower motor resistor connectors.
3. Check continuity between rear blower motor connector B134 (A) terminal 1 and rear blower motor resistor harness connector B133 (B) terminal 3.

**1 - 3 : Continuity should exist.**

4. Check continuity between rear blower motor connector B134 (A) terminal 1 and ground.

**1 - Ground : Continuity should not exist.**

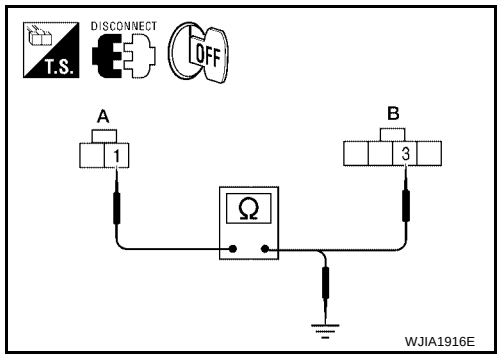


OK or NG

OK >> GO TO 16.
NG >> Repair harness or connector.

## 16. CHECK REAR BLOWER SWITCH (FRONT) CIRCUIT

1. Turn ignition switch OFF.
2. Disconnect rear blower motor resistor connector.
3. Check continuity between rear blower switch (front) connector M52 (A) terminals 3, 7, and 8, and rear blower motor resistor connector B133 (B) terminals 1, 4, and 2.

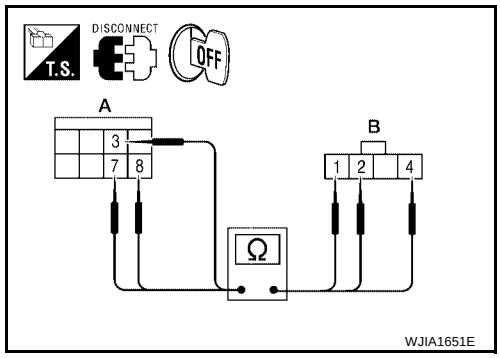


| Terminal No. | | Continuity |
|---|---|---|
| Rear blower switch (front) | Rear blower motor resistor | |
| 3 | 1 | Yes |
| 7 | 4 | |
| 8 | 2 | |

OK or NG

OK >> Inspection End.
NG >> Repair harness or connector.

## 17. CHECK REAR BLOWER SWITCH (FRONT) CIRCUIT

1. Turn ignition switch OFF.
2. Disconnect rear blower switch (rear) connectors.
3. Check continuity between rear blower switch (front) connector M52 terminals 3, 5, 7, and 8, and rear blower switch (rear) connector R208 terminals 9, 6, 8, and 7.

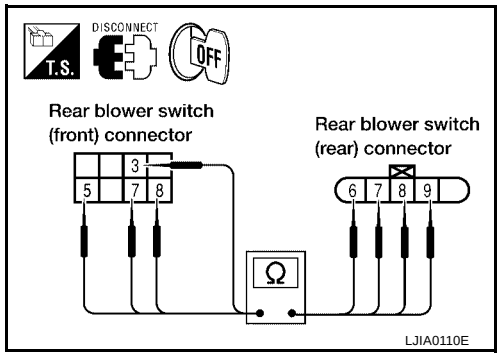


| Terminal No. | | Continuity |
|---|---|---|
| Rear blower switch (front) | Rear blower switch (rear) | |
| 3 | 9 | Yes |
| 5 | 6 | |
| 7 | 8 | |
| 8 | 7 | |

OK or NG

OK >> GO TO 18.
NG >> Repair harness or connector.

## 18. CHECK REAR BLOWER SWITCH (FRONT)

Check rear blower switch (front). Refer to ATC-145, "Rear Blower Switch (Front)" .

OK or NG

OK >> GO TO 19.
NG >> Replace rear blower switch (front). Refer to ATC-193, "FRONT AIR CONTROL"

## 19. CHECK REAR BLOWER SWITCH (REAR)

Check rear blower switch (rear). Refer to ATC-145, "Rear Blower Switch (Rear)" .

OK or NG

OK >> Inspection End.
NG >> Replace rear blower switch (rear). Refer to ATC-193, "REAR AIR CONTROL"

## 20. CHECK VEHICLE EQUIPMENT

Is vehicle equipped with navi?

YES or NO

YES >> GO TO 21.
NO >> GO TO 22.

## 21. CHECK CIRCUIT BETWEEN FRONT AIR CONTROL AND FUSE BLOCK (J/B) [REAR BLOWER MOTOR RELAY (COIL SIDE) POWER]

1. Disconnect front air control and fuse block (J/B) connectors M39.
2. Check continuity between front air control harness connector M50 terminal 38 and fuse block (J/B) connector M39 terminal 3Q.

**Continuity should exist.**

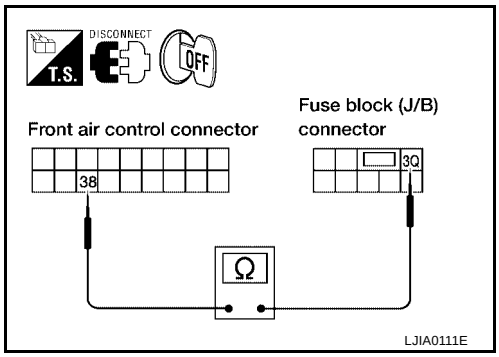


OK or NG

OK >> Replace front air control. Refer to ATC-193, "FRONT AIR CONTROL" .
NG >> Repair harness or connector.

## 22. CHECK CIRCUIT BETWEEN FRONT AIR CONTROL AND FUSE BLOCK (J/B) [REAR BLOWER MOTOR RELAY (COIL SIDE) POWER]

1. Disconnect front air control and fuse block (J/B) connectors M39.
2. Check continuity between front air control harness connector M50 (A) terminal 39 and fuse block (J/B) connector M39 (B) terminal 3Q.

**Continuity should exist.**

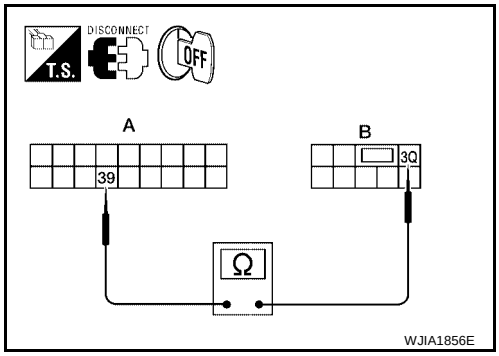


OK or NG

OK >> Replace front air control. Refer to ATC-193, "FRONT AIR CONTROL" .
NG >> Repair harness or connector.

## COMPONENT INSPECTION

### Rear Blower Motor Relay

Check circuit continuity between terminals by supplying 12 volts and ground to coil side terminals of relays.

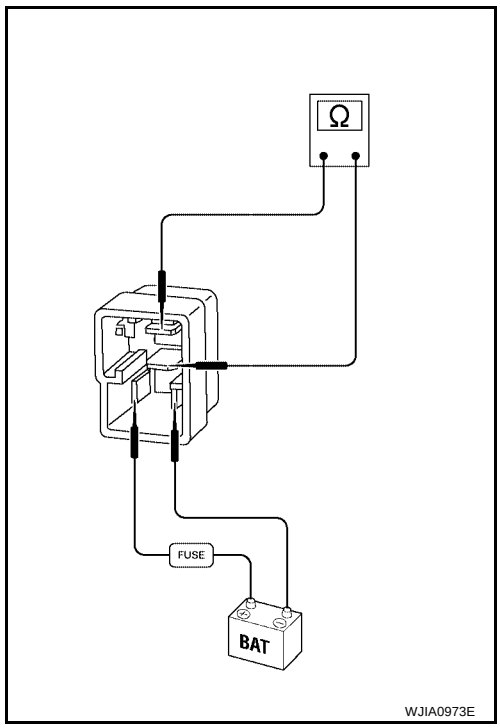


### Rear Blower Switch (Rear)

Check continuity between terminals at each switch position.

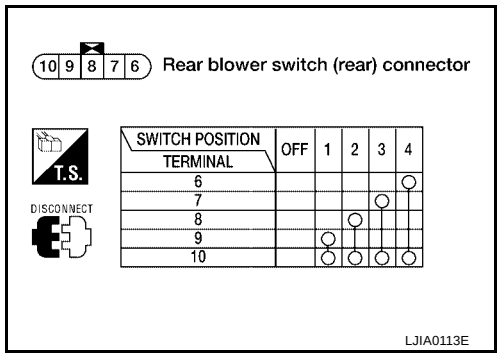


| SWITCH POSITION / TERMINAL | OFF | 1 | 2 | 3 | 4 |
|---|---|---|---|---|---|
| 6 | | | | | ○ |
| 7 | | | | ○ | |
| 8 | | | ○ | | |
| 9 | | ○ | | | |
| 10 | | ○ | ○ | ○ | ○ |

### Rear Blower Switch (Front)

Check continuity between terminals at each switch position.

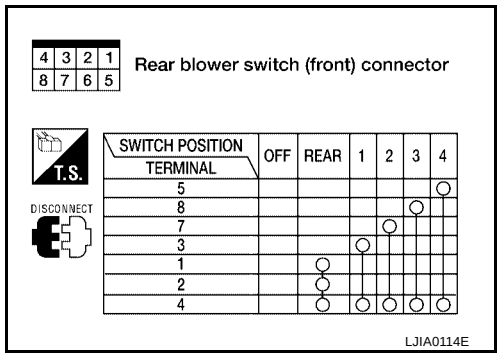


| SWITCH POSITION / TERMINAL | OFF | REAR | 1 | 2 | 3 | 4 |
|---|---|---|---|---|---|---|
| 5 | | | | | | ○ |
| 8 | | | | | ○ | |
| 7 | | | | ○ | | |
| 3 | | | ○ | | | |
| 1 | | ○ | | | | |
| 2 | | ○ | | | | |
| 4 | | ○ | ○ | ○ | ○ | ○ |

## Rear Blower Motor

Check that there are no foreign particles inside the intake unit.
Apply 12 volts to terminal 2 and ground to terminal 1 and ensure that the blower motor rotates freely and quietly.

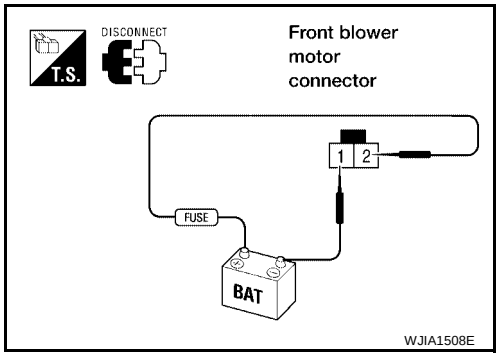


## Rear Blower Motor Resistor

Check continuity between terminals. There will be resistance, but there should not be an open or short between any two terminals.

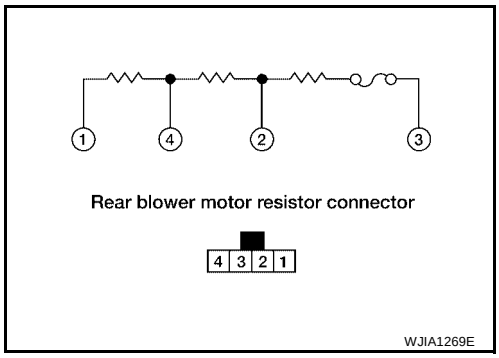

## Rear Air Control Circuit

EJS005EC

SYMPTOM:

- Temperature cannot be adjusted from the rear air control.

### INSPECTION FLOW

### 1. CONFIRM SYMPTOM BY PERFORMING OPERATIONAL CHECK - TEMPERATURE INCREASE

1. Press AUTO switch.
2. Turn the rear blower motor on (1-4 speed).
3. Turn the rear temperature/mode control dial clockwise.
4. Check for hot air at rear foot discharge air outlets.

>> GO TO 2.

### 2. CONFIRM SYMPTOM BY PERFORMING OPERATIONAL CHECK - TEMPERATURE DECREASE

1. Turn the rear temperature/mode control dial counterclockwise.
2. Check for cold air at rear vent discharge air outlets.

OK or NG?

YES >> GO TO 3.
NO >> GO TO 4.

### 3. CHECK FOR ANY SYMPTOMS

Perform a complete operational check for any symptoms. Refer to ATC-69, "Operational Check (Front)" .

Does another symptom exist?

YES >> Refer to ATC-36, "SYMPTOM TABLE" .
NO >> System OK.

### 4. CHECK FOR SERVICE BULLETINS

Check for any service bulletins.

>> GO TO 5.

### 5. PERFORM SELF-DIAGNOSIS

Perform self-diagnosis to check for any codes. Refer to ATC-67, "A/C System Self-diagnosis Function" .

Are any self-diagnosis codes present?

YES >> Refer to ATC-68, "SELF-DIAGNOSIS CODE CHART" .
NO >> GO TO 6.

### 6. CHECK REAR TEMPERATURE/MODE CONTROL DIAL OPERATION

Check and verify rear outlet position and temperature change when adjusted from front air control.

OK or NG?

YES >> Check rear air control circuit. Refer to ATC-148, "DIAGNOSTIC PROCEDURE FOR REAR AIR CONTROL" .
NO >> Check air mix door motor (rear). Refer to ATC-103, "DIAGNOSTIC PROCEDURE FOR AIR MIX DOOR MOTOR (REAR)" .

## SYSTEM DESCRIPTION

### Component Parts

Rear air control system components are:

- Front air control
- Rear air control
- Air mix door motor (rear)
- Rear blower motor relay
- Rear blower motor resistor
- Rear blower motor

### System Operation

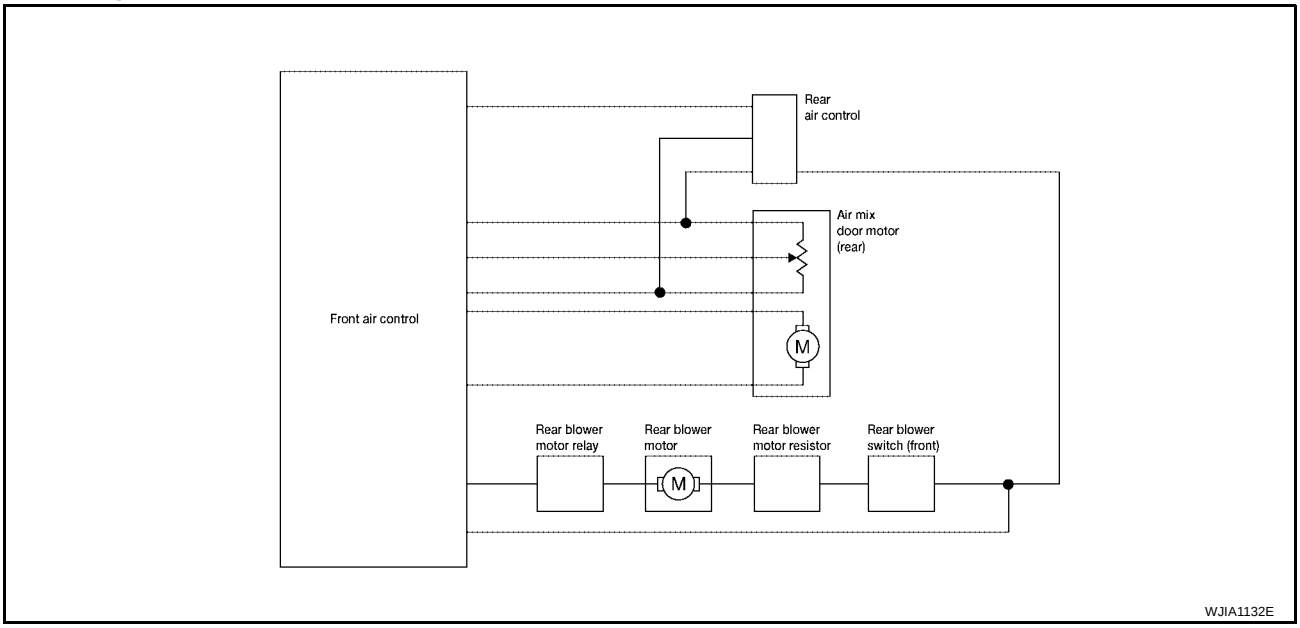


### Rear Air Control

When the rear blower switch (front) (integral to the front air control) is in the REAR position the rear blower motor speeds and the rear temperature and mode are controlled by the rear blower switch (rear) and the rear temperature switch (rear) (both integral to the rear air control).

## DIAGNOSTIC PROCEDURE FOR REAR AIR CONTROL

SYMPTOM:

- Blower motor operation is malfunctioning. Refer to ATC-136, "Rear Blower Motor Circuit" .
- Temperature and mode operation is malfunctioning.

### 1. CHECK OPERATION FROM FRONT AIR CONTROL

Does rear temperature and mode operate normally from front air control?

YES or NO

YES >> GO TO 2.
NO >> Refer to ATC-103, "DIAGNOSTIC PROCEDURE FOR AIR MIX DOOR MOTOR (REAR)" .

### 2. CHECK VEHICLE EQUIPMENT

Is vehicle equipped with navi?

YES or NO

YES >> GO TO 3.
NO >> GO TO 4.

## 3. CHECK CIRCUIT BETWEEN REAR AIR CONTROL AND FRONT AIR CONTROL FOR OPEN AND SHORT

1. Turn ignition switch OFF.
2. Disconnect front air control and rear air control connectors.
3. Check continuity between front air control harness connector M50 terminal 33 and rear air control harness connector R209 terminal 5.

   **33 - 5** **Continuity should exist.**

4. Check continuity between rear air control harness connector R209 terminal 5 and ground.

   **5 - Ground** **Continuity should not exist.**

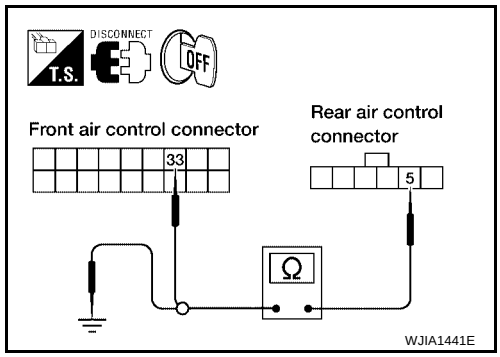


OK or NG

OK >> GO TO 5.
NG >> Repair harness or connector.

## 4. CHECK CIRCUIT BETWEEN REAR AIR CONTROL AND FRONT AIR CONTROL FOR OPEN AND SHORT

1. Turn ignition switch OFF.
2. Disconnect front air control and rear air control connectors.
3. Check continuity between front air control harness connector M49 (A) terminal 24 and rear air control harness connector R209 (B) terminal 5.

   **24 - 5** **Continuity should exist.**

4. Check continuity between rear air control harness connector R209 terminal 5 and ground.

   **5 - Ground** **Continuity should not exist.**

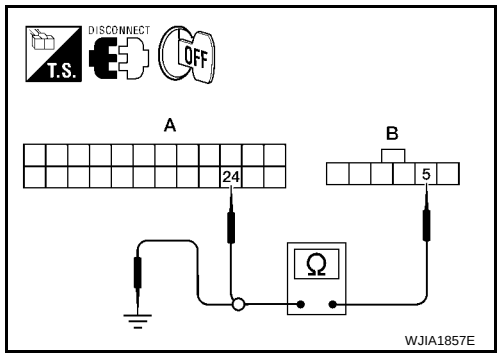


OK or NG

OK >> GO TO 5.
NG >> Repair harness or connector.

## 5. CHECK CIRCUIT BETWEEN REAR AIR CONTROL AND AIR MIX DOOR MOTOR (REAR) FOR OPEN OR SHORT

1. Disconnect air mix door motor (rear) connector.
2. Check continuity between rear air control harness connector R209 terminal 2 and 4 and air mix door motor (rear) harness connector B155 terminal 2 and 3.

   **2 - 2** **Continuity should exist.**
   **4 - 3** **Continuity should exist.**

3. Check continuity between rear air control harness connector R209 terminals 2 and 4 and ground.

   **2, 4 - Ground** **Continuity should not exist.**

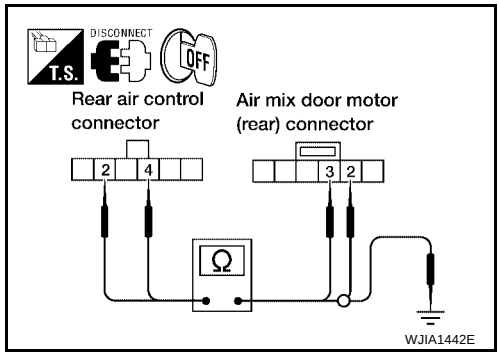


OK or NG

OK >> Replace rear air control. Refer to ATC-193, "REAR AIR CONTROL"
NG >> Repair harness or connector.

## Magnet Clutch Circuit

EJS005ED

SYMPTOM: Magnet clutch does not engage.

### INSPECTION FLOW

### 1. CONFIRM SYMPTOM BY PERFORMING OPERATIONAL CHECK - MAGNET CLUTCH

1. Turn ignition switch ON.
2. Press the A/C switch.
3. Press vent switch ( ).
4. Display shows , A/C. Confirm that the compressor clutch engages (sound or visual inspection). (Discharge air and blower speed will depend on ambient, in-vehicle and set temperatures.)

Can the symptom be duplicated?

YES >> GO TO 3.
NO >> GO TO 2.

### 2. CHECK FOR ANY SYMPTOMS

Perform a complete operational check for any symptoms. Refer to ATC-69, "Operational Check (Front)" .

Does another symptom exist?

YES >> Refer to ATC-36, "SYMPTOM TABLE" .
NO >> System OK.

### 3. CHECK FOR SERVICE BULLETINS

Check for any service bulletins.

>> GO TO 4.

### 4. PERFORM SELF-DIAGNOSIS

Perform self-diagnosis to check for any codes. Refer to ATC-67, "A/C System Self-diagnosis Function" .

Are any self-diagnosis codes present?

YES >> Refer to ATC-68, "SELF-DIAGNOSIS CODE CHART" .
NO >> GO TO 5.

### 5. CHECK AMBIENT SENSOR

Check and verify ambient sensor circuit. Refer to ATC-177, "Ambient Sensor Circuit" .

>> GO TO 6.

### 6. CHECK INTAKE SENSOR

Check and verify intake sensor circuit. Refer to ATC-189, "Intake Sensor Circuit" .

>> GO TO 7.

### 7. RECHECK FOR ANY SYMPTOMS

Perform a complete operational check for any symptoms. Refer to ATC-69, "Operational Check (Front)" .

Does another symptom exist?

YES >> Refer to ATC-36, "SYMPTOM TABLE" .
NO >> Replace front air control. Refer to ATC-193, "FRONT AIR CONTROL" .

## SYSTEM DESCRIPTION

The front air control controls compressor operation based on ambient and intake temperature and a signal from ECM.

### Low Temperature Protection Control

The front air control will turn the compressor ON or OFF as determined by a signal detected by the intake sensor and the ambient sensor.
When intake air temperature is higher than the preset value, the compressor turns ON. The compressor turns OFF when intake air temperature is lower than the preset value. That preset value is dependent on the ambient temperature, refer to the following table.

| Ambient temperature °C (°F) | Compressor ON intake temperature °C (°F) | Compressor OFF intake temperature °C (°F) |
|---|---|---|
| 0 (32) | 2.5 (37) | 2.0 (36) |
| 10 (50) | 2.5 (37) | 2.0 (36) |
| 20 (68) | 2.5 (37) | 1.5 (35) |
| 30 (86) | 2.0 (36) | 0.5 (33) |
| 40 (104) | 2.0 (36) | 0.5 (33) |
| 50 (122) | 2.0 (36) | 0.5 (33) |

## DIAGNOSTIC PROCEDURE FOR MAGNET CLUTCH

SYMPTOM: Magnet clutch does not engage when A/C switch is ON.

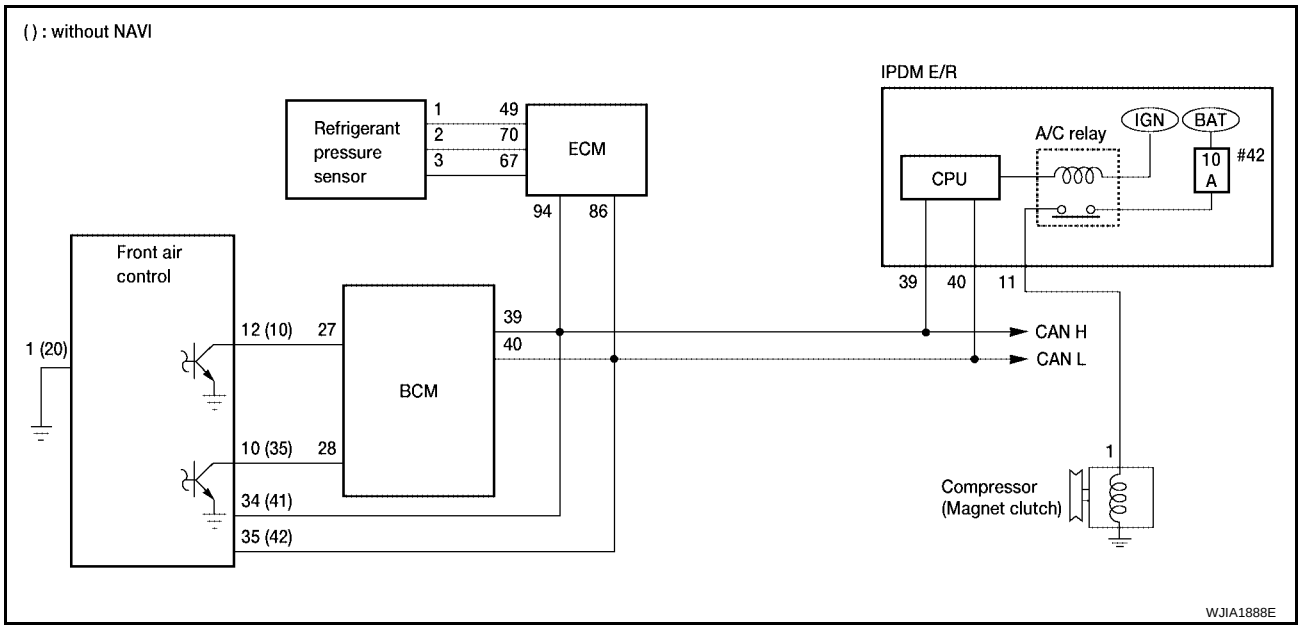


### 1. CHECK VEHICLE EQUIPMENT

Is vehicle equipped with navi?

YES or NO

YES >> GO TO 2.
NO >> GO TO 14.

### 2. CHECK INTAKE AND AMBIENT SENSOR CIRCUITS

Check intake and ambient sensors. Refer to ATC-67, "A/C System Self-diagnosis Function" .

OK or NG

OK >> GO TO 3.
NG >>
- Malfunctioning intake sensor. Refer to ATC-189, "Intake Sensor Circuit" .
- Malfunctioning ambient sensor. Refer to ATC-189, "Intake Sensor Circuit" .

## 3. PERFORM AUTO ACTIVE TEST

Refer to PG-22, "Auto Active Test" .
Does magnet clutch operate?

YES or NO

YES >> ● WITH CONSULT-II
GO TO 6.

● WITHOUT CONSULT-II
GO TO 7.

NO >> Check 10A fuse (No. 42, located in IPDM E/R), and GO TO 4.

## 4. CHECK CIRCUIT CONTINUITY BETWEEN IPDM E/R AND COMPRESSOR

1. Turn ignition switch OFF.
2. Disconnect IPDM E/R connector and compressor (magnet clutch) connector.
3. Check continuity between IPDM E/R harness connector E119 terminal 11 and compressor harness connector F3 terminal 1.

**11 – 1 : Continuity should exist.**

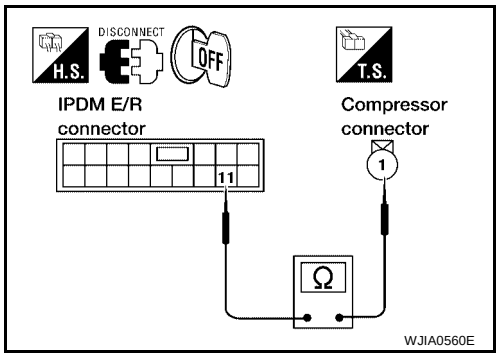


OK or NG

OK >> GO TO 5.
NG >> Repair harness or connector.

## 5. CHECK MAGNET CLUTCH CIRCUIT

Check for operation sound when applying battery voltage direct current to terminal.

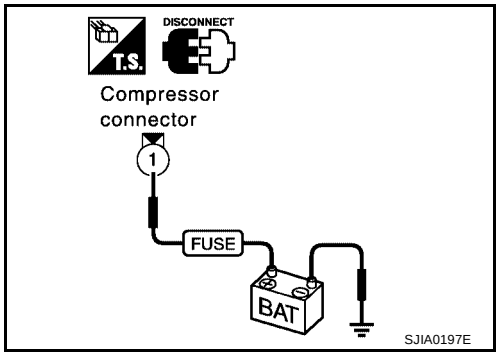


OK or NG

OK >> Replace IPDM E/R. Refer to PG-30, "Removal and Installation of IPDM E/R" .
NG >> Replace magnet clutch. Refer to ATC-226, "Removal and Installation for Compressor Clutch" .

## 6. CHECK BCM INPUT (COMPRESSOR ON) SIGNAL

Check compressor ON/OFF signal. Refer to ATC-34, "CONSULT-II Function (HVAC)" .

**A/C SW ON : COMP ON SIG ON**

**A/C SW OFF : COMP ON SIG OFF**

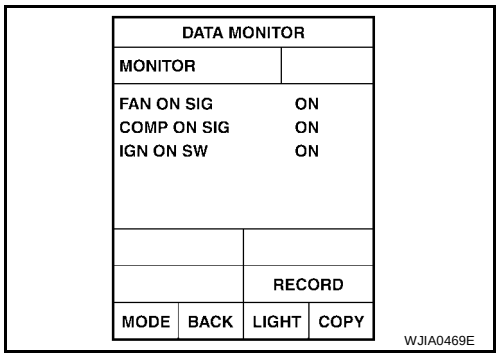


OK or NG

OK >> GO TO 9.
NG >> GO TO 7.

## 7. CHECK CIRCUIT CONTINUITY BETWEEN BCM AND FRONT AIR CONTROL

1. Turn ignition switch OFF.
2. Disconnect BCM connector and front air control connector.
3. Check continuity between BCM harness connector M18 terminal 27 and front air control harness connector M49 terminal 12.

**27 - 12** **Continuity should exist.**

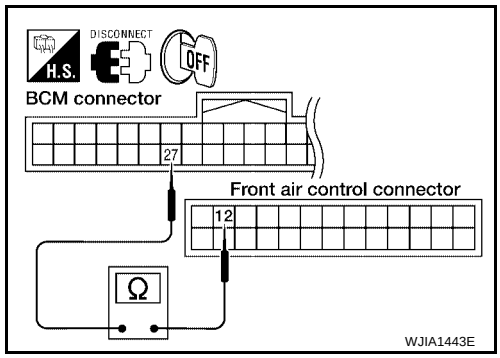


OK or NG

OK >> GO TO 8.
NG >> Repair harness or connector.

## 8. CHECK VOLTAGE FOR FRONT AIR CONTROL (COMPRESSOR ON SIGNAL)

1. Reconnect BCM connector and front air control connector.
2. Turn ignition switch ON.
3. Check voltage between front air control harness connector M49 terminal 12 and ground.

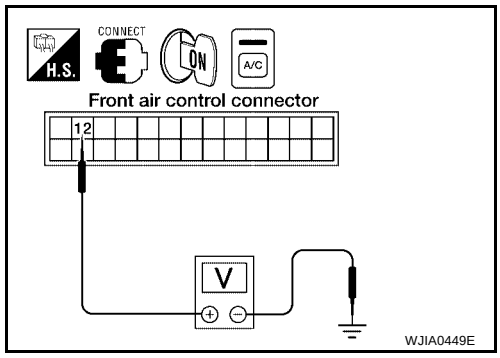


| Terminals | | | Condition | Voltage |
|---|---|---|---|---|
| (+) | | (-) | | |
| Front air control connector | Terminal No. | | | |
| M49 | 12 | Ground | A/C switch: ON | Approx. 0V |
| | | | A/C switch: OFF | Approx. 5V |

OK or NG

OK >> GO TO 9.
NG-1 >> If the voltage is approx. 5V when A/C switch is ON, replace front air control. Refer to ATC-193, "FRONT AIR CONTROL" .
NG-2 >> If the voltage is approx. 0V when A/C switch is OFF, replace BCM. Refer to BCS-26, "Removal and Installation" .

## 9. CHECK REFRIGERANT PRESSURE SENSOR

1. Start engine.
2. Check voltage between ECM harness connector F54 terminal 70 and ground.

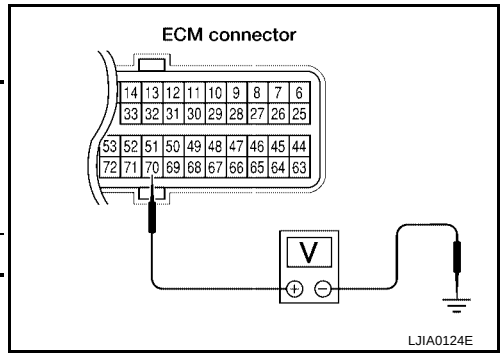


| Terminals | | | Condition | Voltage |
|---|---|---|---|---|
| (+) | | (-) | | |
| ECM connector | Terminal No. | | | |
| F54 | 70 | Ground | A/C switch: ON | Approx. 0.36 - 3.88V |

OK or NG

OK >> GO TO 10.
NG >> Refer to EC-687, "REFRIGERANT PRESSURE SENSOR" .

## 10. CHECK BCM INPUT (FAN ON) SIGNAL

Check FAN ON/OFF signal. Refer to ATC-34, "CONSULT-II Function (HVAC)" .

**FRONT BLOWER CONTROL DIAL ON** : **FAN ON SIG ON**

**FRONT BLOWER CONTROL DIAL OFF** : **FAN ON SIG OFF**

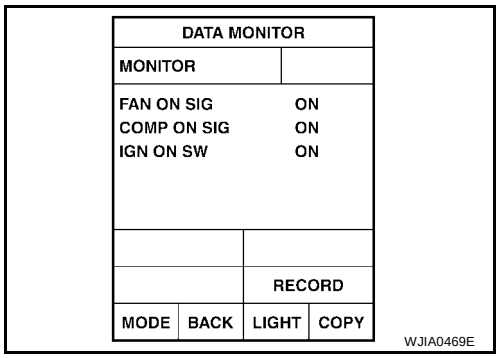


OK or NG

OK >> GO TO 13.
NG >> GO TO 11.

## 11. CHECK CIRCUIT CONTINUITY BETWEEN BCM AND FRONT AIR CONTROL

1. Turn ignition switch OFF.
2. Disconnect BCM connector and front air control connector.
3. Check continuity between BCM harness connector M18 terminal 28 and front air control harness connector M49 terminal 10.

**28 - 10** **Continuity should exist.**

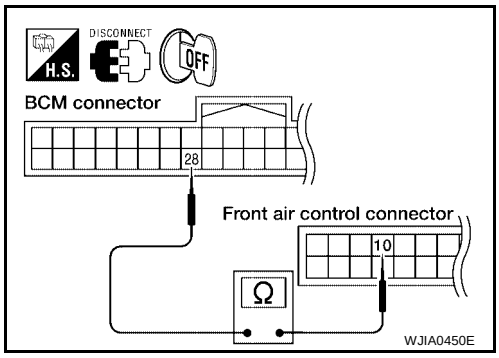


OK or NG

OK >> GO TO 12.
NG >> Repair harness or connector.

## 12. CHECK VOLTAGE FOR FRONT AIR CONTROL (FAN ON SIGNAL)

1. Reconnect BCM connector and front air control connector.
2. Turn ignition switch ON.
3. Check voltage between front air control harness connector M49 terminal 10 and ground.

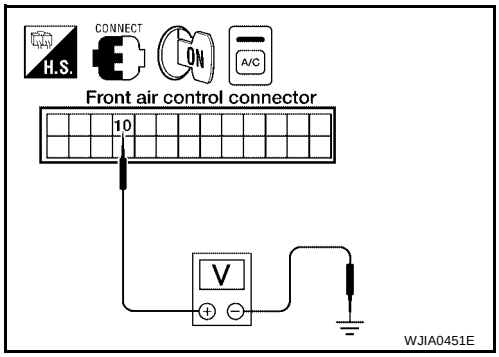


| Terminals | | | Condition | Voltage |
|---|---|---|---|---|
| (+) | | (-) | | |
| Front air control connector | Terminal No. | | | |
| M49 | 10 | Ground | A/C switch: ON Blower motor operates | Approx. 0V |
| | | | A/C switch: OFF | Approx. 5V |

OK or NG

OK >> GO TO 13.
NG-1 >> If the voltage is approx. 5V when blower motor is ON, replace front air control. Refer to ATC-193, "FRONT AIR CONTROL" .
NG-2 >> If the voltage is approx. 0V when blower motor is OFF, replace BCM. Refer to BCS-26, "Removal and Installation" .

## 13. CHECK CAN COMMUNICATION

Check CAN communication. Refer to LAN-4, "CAN Communication System" .

- BCM – ECM
- ECM – IPDM E/R
- ECM – Front air control

OK or NG

OK >> Inspection End.
NG >> Repair or replace malfunctioning part(s).

## 14. CHECK INTAKE AND AMBIENT SENSOR CIRCUITS

Check intake and ambient sensors. Refer to ATC-67, "A/C System Self-diagnosis Function" .

OK or NG

OK >> GO TO 15.
NG >>
- Malfunctioning intake sensor. Refer to ATC-189, "Intake Sensor Circuit" .
- Malfunctioning ambient sensor. Refer to ATC-189, "Intake Sensor Circuit" .

## 15. PERFORM AUTO ACTIVE TEST

Refer to PG-22, "Auto Active Test" .
Does magnet clutch operate?

YES or NO

YES >>
- WITH CONSULT-II
  GO TO 18.
- WITHOUT CONSULT-II
  GO TO 19.

NO >> Check 10A fuse (No. 42, located in IPDM E/R), and GO TO 16.

## 16. CHECK CIRCUIT CONTINUITY BETWEEN IPDM E/R AND COMPRESSOR

1. Turn ignition switch OFF.
2. Disconnect IPDM E/R connector and compressor (magnet clutch) connector.
3. Check continuity between IPDM E/R harness connector E119 terminal 11 and compressor harness connector F3 terminal 1.

**11 – 1 : Continuity should exist.**

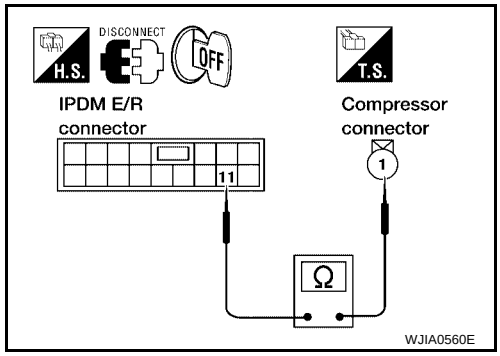


OK or NG

OK >> GO TO 17.
NG >> Repair harness or connector.

## 17. CHECK MAGNET CLUTCH CIRCUIT

Check for operation sound when applying battery voltage direct current to terminal.

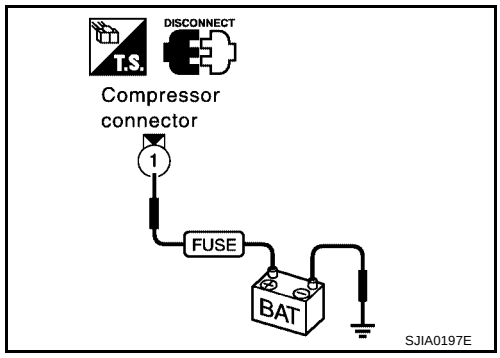


OK or NG

OK >> Replace IPDM E/R. Refer to PG-30, "Removal and Installation of IPDM E/R" .
NG >> Replace magnet clutch. Refer to ATC-226, "Removal and Installation for Compressor Clutch" .

## 18. CHECK BCM INPUT (COMPRESSOR ON) SIGNAL

Check compressor ON/OFF signal. Refer to ATC-34, "CONSULT-II Function (HVAC)" .

**A/C SW ON** **: COMP ON SIG ON**

**A/C SW OFF** **: COMP ON SIG OFF**

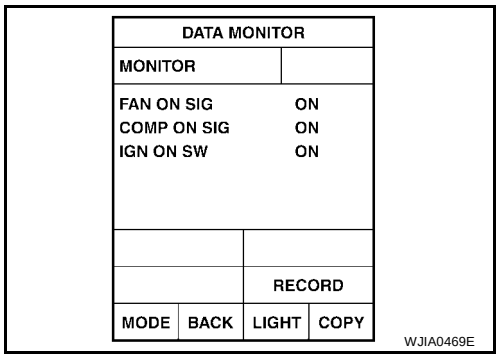


OK or NG

OK >> GO TO 21.
NG >> GO TO 19.

## 19. CHECK CIRCUIT CONTINUITY BETWEEN BCM AND FRONT AIR CONTROL

1. Turn ignition switch OFF.
2. Disconnect BCM connector and front air control connector.
3. Check continuity between BCM harness connector M18 (A) terminal 27 and front air control harness connector M49 (B) terminal 10.

**27 - 10** **Continuity should exist.**

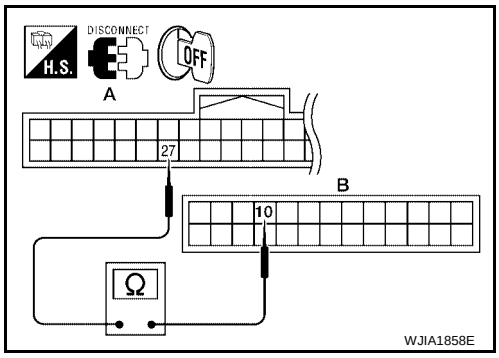


OK or NG

OK >> GO TO 20.
NG >> Repair harness or connector.

## 20. CHECK VOLTAGE FOR FRONT AIR CONTROL (COMPRESSOR ON SIGNAL)

1. Reconnect BCM connector and front air control connector.
2. Turn ignition switch ON.
3. Check voltage between front air control harness connector M49 terminal 10 and ground.

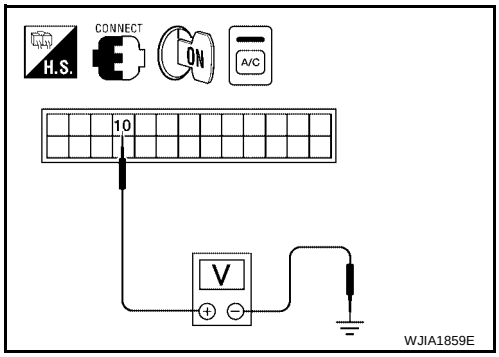


| Terminals | | | Condition | Voltage |
|---|---|---|---|---|
| (+) | | (-) | | |
| Front air control connector | Terminal No. | | | |
| M49 | 10 | Ground | A/C switch: ON | Approx. 0V |
| | | | A/C switch: OFF | Approx. 5V |

OK or NG

OK >> GO TO 21.
NG-1 >> If the voltage is approx. 5V when A/C switch is ON, replace front air control. Refer to ATC-193, "FRONT AIR CONTROL" .
NG-2 >> If the voltage is approx. 0V when A/C switch is OFF, replace BCM. Refer to BCS-26, "Removal and Installation" .

## 21. CHECK REFRIGERANT PRESSURE SENSOR

1. Start engine.
2. Check voltage between ECM harness connector F54 terminal 70 and ground.

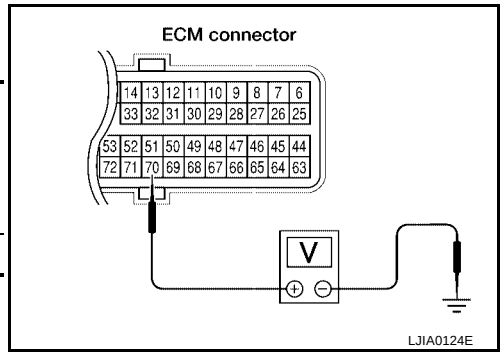


| Terminals | | | Condition | Voltage |
|---|---|---|---|---|
| (+) | | (-) | | |
| ECM connector | Terminal No. | | | |
| F54 | 70 | Ground | A/C switch: ON | Approx. 0.36 - 3.88V |

OK or NG

OK >> GO TO 22.
NG >> Refer to EC-687, "REFRIGERANT PRESSURE SENSOR" .

## 22. CHECK BCM INPUT (FAN ON) SIGNAL

Check FAN ON/OFF signal. Refer to ATC-34, "CONSULT-II Function (HVAC)" .

**FRONT BLOWER CONTROL DIAL ON** **: FAN ON SIG ON**

**FRONT BLOWER CONTROL DIAL OFF** **: FAN ON SIG OFF**

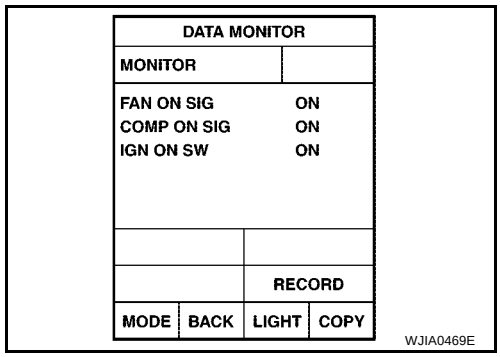


OK or NG

OK >> GO TO 25.
NG >> GO TO 23.

## 23. CHECK CIRCUIT CONTINUITY BETWEEN BCM AND FRONT AIR CONTROL

1. Turn ignition switch OFF.
2. Disconnect BCM connector and front air control connector.
3. Check continuity between BCM harness connector M18 (A) terminal 28 and front air control harness connector M50 (B) terminal 35.

**28 - 35** **Continuity should exist.**

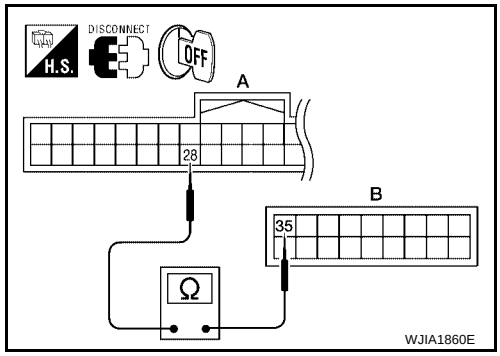


OK or NG

OK >> GO TO 24.
NG >> Repair harness or connector.

## 24. CHECK VOLTAGE FOR FRONT AIR CONTROL (FAN ON SIGNAL)

1. Reconnect BCM connector and front air control connector.
2. Turn ignition switch ON.
3. Check voltage between front air control harness connector M50 terminal 35 and ground.

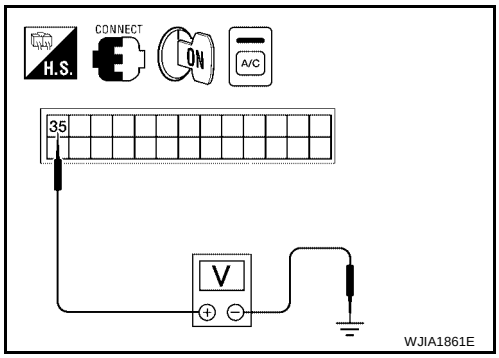


| Terminals | | | Condition | Voltage |
|---|---|---|---|---|
| (+) | | (-) | | |
| Front air control connector | Terminal No. | | | |
| M50 | 35 | Ground | A/C switch: ON<br>Blower motor operates | Approx. 0V |
| | | | A/C switch: OFF | Approx. 5V |

OK or NG

OK >> GO TO 25.

NG-1 >> If the voltage is approx. 5V when blower motor is ON, replace front air control. Refer to ATC-193, "FRONT AIR CONTROL" .

NG-2 >> If the voltage is approx. 0V when blower motor is OFF, replace BCM. Refer to BCS-26, "Removal and Installation" .

## 25. CHECK CAN COMMUNICATION

Check CAN communication. Refer to LAN-4, "SYSTEM DESCRIPTION" .

- BCM – ECM
- ECM – IPDM E/R
- ECM – Front air control

OK or NG

OK >> Inspection End.

NG >> Repair or replace malfunctioning part(s).

## Insufficient Cooling

EJS005EE

SYMPTOM: Insufficient cooling

### INSPECTION FLOW

### 1. CONFIRM SYMPTOM BY PERFORMING OPERATIONAL CHECK - TEMPERATURE DECREASE

1. Press the AUTO switch.
2. Turn temperature control dial (driver) counterclockwise until 16° C (60° F) is displayed.
3. Check for cold air at discharge air outlets.

Can the symptom be duplicated?

YES >> GO TO 3.
NO >> GO TO 2.

### 2. CHECK FOR ANY SYMPTOMS

Perform a complete operational check for any symptoms. Refer to ATC-69, "Operational Check (Front)" .

Does another symptom exist?

YES >> Refer toATC-36, "SYMPTOM TABLE" .
NO >> System OK.

### 3. CHECK FOR SERVICE BULLETINS

Check for any service bulletins.

>> GO TO 3.

### 4. PERFORM SELF-DIAGNOSIS

Perform self-diagnosis Refer to ATC-67, "A/C System Self-diagnosis Function" .

OK or NG

OK >> GO TO 5.
NG >> Refer to ATC-68, "SELF-DIAGNOSIS CODE CHART" .

### 5. CHECK DRIVE BELTS

Check compressor belt tension. Refer to EM-13, "Checking Drive Belts" .

OK or NG

OK >> GO TO 6.
NG >> Adjust or replace compressor belt. Refer to EM-13, "Removal and Installation" .

### 6. CHECK AIR MIX DOOR OPERATION

Check and verify air mix door mechanism for smooth operation.

Does air mix door operate correctly?

YES >> GO TO 7.
NO >> Repair or replace air mix door control linkage.

### 7. CHECK COOLING FAN MOTOR OPERATION

Check and verify cooling fan motor for smooth operation. Refer to EC-511, "Description" .

Does cooling fan motor operate correctly?

YES >> GO TO 8.
NO >> Check cooling fan motor. Refer to EC-511, "DTC P1217 ENGINE OVER TEMPERATURE" .

## 8. CHECK WATER VALVE OPERATION

Check and verify water valve for smooth operation. Refer to ATC-174, "COMPONENT DESCRIPTION" .

Does water valve operate correctly?

YES >> GO TO 8.
NO >> Check water valve circuit. Refer to ATC-174, "DIAGNOSTIC PROCEDURE FOR WATER VALVE" .

## 9. CHECK RECOVERY/RECYCLING EQUIPMENT BEFORE USAGE

Check recovery/recycling equipment before connecting to vehicle. Verify there is no pressure in the recovery/recycling equipment by checking the gauges. If pressure exists, recover refrigerant from equipment lines.

>> GO TO 9.

## 10. CHECK REFRIGERANT PURITY

1. Connect recovery/recycling equipment to vehicle.
2. Confirm refrigerant purity in supply tank using recovery/recycling and refrigerant identifier.

OK or NG

OK >> GO TO 10.
NG >> Check contaminated refrigerant. Refer to ATC-5, "Contaminated Refrigerant" .

## 11. CHECK FOR EVAPORATOR FREEZE UP

Start engine and run A/C. Check for evaporator freeze up.

Does evaporator freeze up?

YES >> Perform performance test diagnoses. Refer to ATC-161, "PERFORMANCE TEST DIAGNOSES" .
NO >> GO TO 11.

## 12. CHECK REFRIGERANT PRESSURE

Check refrigerant pressure with manifold gauge connected. Refer to ATC-163, "Test Reading" .

OK or NG

OK >> Perform performance test diagnoses. Refer to ATC-161, "PERFORMANCE TEST DIAGNOSES" .
NG >> GO TO 12.

## 13. CHECK AIR DUCTS

Check ducts for air leaks.

OK or NG

OK >> System OK.
NG >> Repair air leaks.

## PERFORMANCE TEST DIAGNOSES

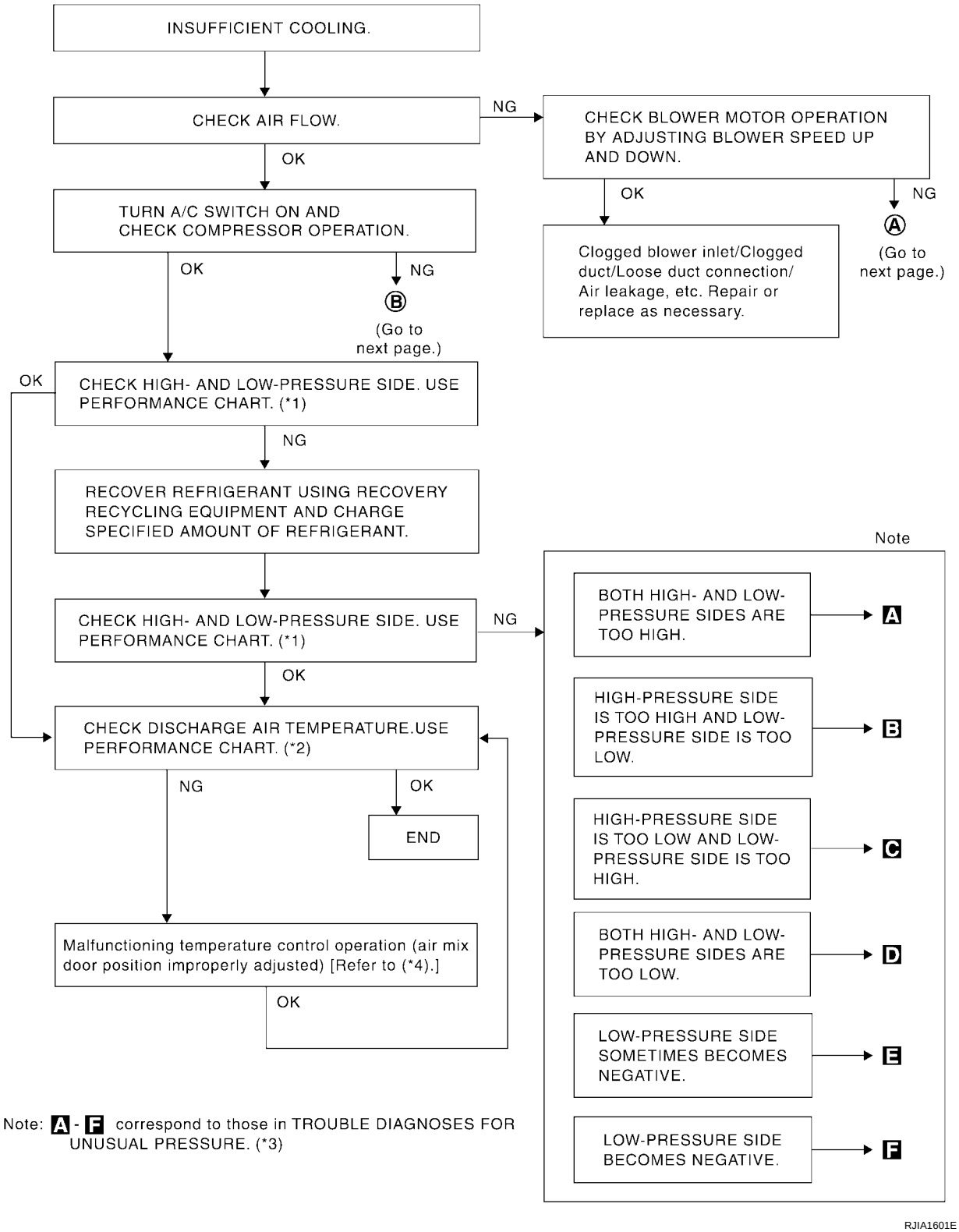


*1 ATC-163, "PERFORMANCE CHART"

*2 ATC-163, "Test Reading"

*3 ATC-164, "Trouble Diagnoses for Unusual Pressure"

*4 ATC-86, "Air Mix Door Motor Circuit"

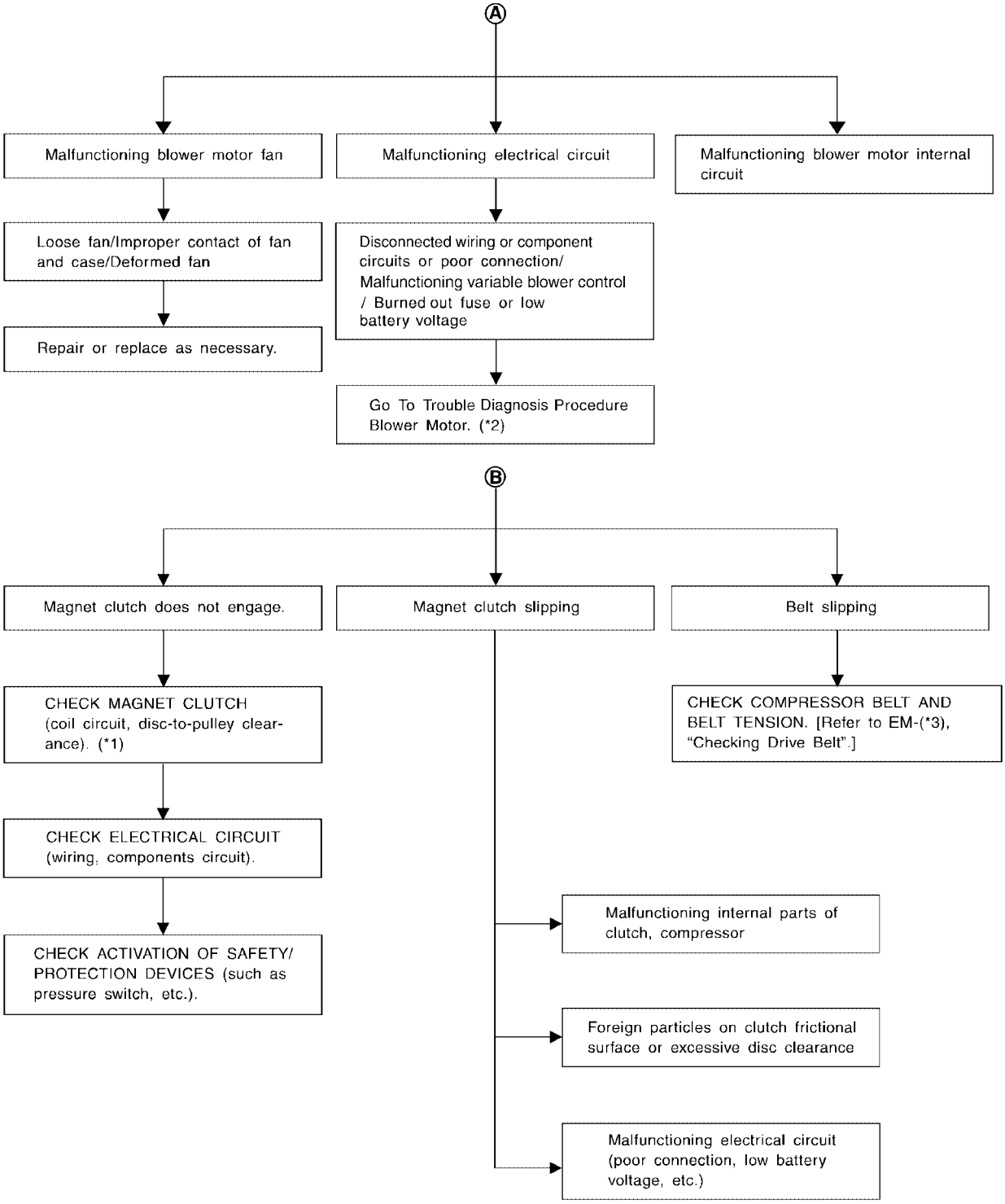


WJIA1371E

*1 ATC-226, "Removal and Installation for Compressor Clutch"

*2 ATC-124, "Front Blower Motor Circuit"

*3 EM-13, "Checking Drive Belts"

## PERFORMANCE CHART

### Test Condition

Testing must be performed as follows:

| Vehicle location | Indoors or in the shade (in a well-ventilated place) |
|---|---|
| Doors | Closed |
| Door window | Open |
| Hood | Open |
| TEMP. | Max. COLD |
| Mode switch | (Ventilation) set |
| Recirculation (REC) switch | (Recirculation) set |
| Blower speed | Max. speed set |
| Engine speed | Idle speed |
| Operate the air conditioning system for 10 minutes before taking measurements. | |

### Test Reading

Recirculating-to-discharge Air Temperature Table

| Inside air (Recirculating air) at blower assembly inlet | | Discharge air temperature at center ventilator °C (°F) |
|---|---|---|
| Relative humidity % | Air temperature °C (°F) | |
| 50 - 60 | 20 (68) | 9.9 - 13.9 (50 - 57) |
| | 25 (77) | 14.6 - 18.6 (58 - 65) |
| | 30 (86) | 16.8 - 21.8 (62 - 71) |
| | 35 (95) | 21.1 - 27.1 (70 - 81) |
| | 40 (104) | 25.3 - 31.5 (78 - 89) |
| 60 - 70 | 20 (68) | 11.4 - 15.2 (53 - 59) |
| | 25 (77) | 15.5 - 20.0 (60 - 68) |
| | 30 (86) | 19.9 - 25.0 (68 - 77) |
| | 35 (95) | 24.5 - 29.6 (76 - 85) |
| | 40 (104) | 28.7 - 34.9 (84 - 95) |

Ambient Air Temperature-to-operating Pressure Table

| Ambient air | | High-pressure (Discharge side) kPa (kg/cm$^2$ , psi) | Low-pressure (Suction side) kPa (kg/cm$^2$ , psi) |
|---|---|---|---|
| Relative humidity % | Air temperature °C (°F) | | |
| 50 - 70 | 20 (68) | 1020 - 1250 (10.4 - 12.7, 147.9 - 181.3) | 160 - 190 (1.63 - 1.94, 23.2 - 27.6) |
| | 25 (77) | 1236 - 1510 (12.6 - 15.4, 179.2 - 219) | 206 - 245 (2.1 - 2.5, 29.9 - 35.6) |
| | 30 (86) | 1569 - 1,922 (16.0 - 19.6, 227.6 - 278.8) | 265 - 324 (2.7 - 3.3, 38.4 - 46.9) |
| | 35 (95) | 1,697 - 2079 (17.3 - 21.2, 246.1 - 301.5) | 304 - 363 (3.1 - 3.7, 44.1 - 52.6) |
| | 40 (104) | 1971 - 2403 (20.1 - 24.5, 285.9 - 348.5) | 373 - 451 (3.8 - 4.6, 54.0 - 65.4) |

## TROUBLE DIAGNOSES FOR UNUSUAL PRESSURE

Whenever system's high and/or low side pressure is unusual, diagnose using a manifold gauge. The marker above the gauge scale in the following tables indicates the standard (usual) pressure range. Since the standard (usual) pressure, however, differs from vehicle to vehicle, refer to above table (Ambient air temperature-to-operating pressure table).

### Both High- and Low-pressure Sides are Too High

| Gauge indication | Refrigerant cycle | Probable cause | Corrective action |
|---|---|---|---|
| Both high- and low-pressure sides are too high. 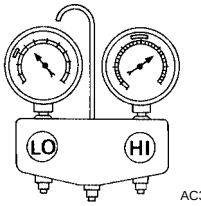  AC359A | Pressure is reduced soon after water is splashed on condenser. | Excessive refrigerant charge in refrigeration cycle | Reduce refrigerant until specified pressure is obtained. |
| | Air suction by cooling fan is insufficient. | Insufficient condenser cooling performance<br>↓<br>1. Condenser fins are clogged.<br>2. Improper fan rotation of cooling fan | ● Clean condenser.<br>● Check and repair cooling fan if necessary. |
| | ● Low-pressure pipe is not cold.<br>● When compressor is stopped high-pressure value quickly drops by approximately 196 kPa (2 kg/cm$^2$ , 28 psi). It then decreases gradually thereafter. | Poor heat exchange in condenser<br>(After compressor operation stops, high-pressure decreases too slowly.)<br>↓<br>Air in refrigeration cycle | Evacuate and recharge system. |
| | Engine tends to overheat. | Engine cooling systems malfunction. | Check and repair engine cooling system. |
| | ● An area of the low-pressure pipe is colder than areas near the evaporator outlet.<br>● Plates are sometimes covered with frost. | ● Excessive liquid refrigerant on low-pressure side<br>● Excessive refrigerant discharge flow<br>● Expansion valve is open a little compared with the specification.<br>↓<br>Improper expansion valve adjustment | Replace expansion valve. |

### High-pressure Side is Too High and Low-pressure Side is Too Low

| Gauge indication | Refrigerant cycle | Probable cause | Corrective action |
|---|---|---|---|
| High-pressure side is too high and low-pressure side is too low. 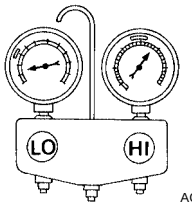  AC360A | Upper side of condenser and high-pressure side are hot, however, liquid tank is not so hot. | High-pressure tube or parts located between compressor and condenser are clogged or crushed. | ● Check and repair or replace malfunctioning parts.<br>● Check oil for contamination. |

## High-pressure Side is Too Low and Low-pressure Side is Too High

| Gauge indication | Refrigerant cycle | Probable cause | Corrective action |
|---|---|---|---|
| High-pressure side is too low and low-pressure side is too high. 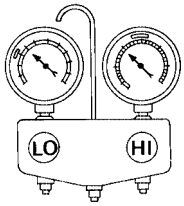  AC356A | High- and low-pressure sides become equal soon after compressor operation stops. | Compressor pressure operation is improper.<br>↓<br>Damaged inside compressor packings. | Replace compressor. |
| | No temperature difference between high- and low-pressure sides. | Compressor pressure operation is improper.<br>↓<br>Damaged inside compressor packings. | Replace compressor. |

## Both High- and Low-pressure Sides are Too Low

| Gauge indication | Refrigerant cycle | Probable cause | Corrective action |
|---|---|---|---|
| Both high- and low-pressure sides are too low. 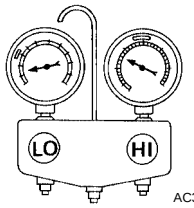  AC353A | ● There is a big temperature difference between liquid tank outlet and inlet. Outlet temperature is extremely low.<br>● Liquid tank inlet and expansion valve are frosted. | Liquid tank inside is slightly clogged. | ● Replace liquid tank.<br>● Check oil for contamination. |
| | ● Temperature of expansion valve inlet is extremely low as compared with areas near liquid tank.<br>● Expansion valve inlet may be frosted.<br>● Temperature difference occurs somewhere in high-pressure side. | High-pressure pipe located between liquit tank and expansion valve is clogged. | ● Check and repair malfunctioning parts.<br>● Check oil for contamination. |
| | Expansion valve and liquid tank are warm or only cool when touched. | Low refrigerant charge.<br>↓<br>Leaking fittings or components. | Check refrigerant system for leaks. Refer to ATC-237, "Checking for Refrigerant Leaks" . |
| | There is a big temperature difference between expansion valve inlet and outlet while the valve itself is frosted. | Expansion valve closes a little compared with the specification.<br>↓<br>1. Improper expansion valve adjustment.<br>2. Malfunctioning expansion valve.<br>3. Outlet and inlet may be clogged. | ● Remove foreign particles by using compressed air.<br>● Check oil for contamination. |
| | An area of the low-pressure pipe is colder than areas near the evaporator outlet. | Low-pressure pipe is clogged or crushed. | ● Check and repair malfunctioning parts.<br>● Check oil for contamination. |
| | Air flow volume is too low. | Evaporator is frozen. | ● Check intake sensor circuit. Refer to ATC-189, "Intake Sensor Circuit" .<br>● Repair evaporator fins.<br>● Replace evaporator.<br>● Refer to ATC-124, "Front Blower Motor Circuit" . |

## Low-pressure Side Sometimes Becomes Negative

| Gauge indication | Refrigerant cycle | Probable cause | Corrective action |
|---|---|---|---|
| Low-pressure side sometimes becomes negative. 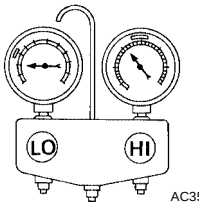  | ● Air conditioning system does not function and does not cyclically cool the compartment air.<br>● The system constantly functions for a certain period of time after compressor is stopped and restarted. | Refrigerant does not discharge cyclically.<br>↓<br>Moisture is frozen at expansion valve outlet and inlet.<br>↓<br>Water is mixed with refrigerant. | ● Drain water from refrigerant or replace refrigerant.<br>● Replace liquid tank. |

## Low-pressure Side Becomes Negative

| Gauge indication | Refrigerant cycle | Probable cause | Corrective action |
|---|---|---|---|
| Low-pressure side becomes negative. 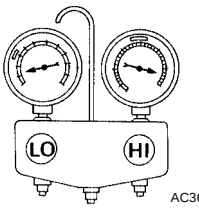  | Liquid tank or front/rear side of expansion valve's pipe is frosted or dewed. | High-pressure side is closed and refrigerant does not flow.<br>↓<br>Expansion valve or liquid tank is frosted. | Leave the system at rest until no frost is present. Start it again to check whether or not the malfunction is caused by water or foreign particles.<br>● If water is the cause, initially cooling is okay. Then the water freezes causing a blockage. Drain water from refrigerant or replace refrigerant.<br>● If due to foreign particles, remove expansion valve and remove the particles with dry and compressed air (not shop air).<br>● If either of the above methods cannot correct the malfunction, replace expansion valve.<br>● Replace liquid tank.<br>● Check oil for contamination. |

## Insufficient Heating

EJS005EF

SYMPTOM: Insufficient heating

### INSPECTION FLOW

### 1. CONFIRM SYMPTOM BY PERFORMING OPERATIONAL CHECK - TEMPERATURE INCREASE

1. Press the AUTO switch.
2. Turn the temperature control dial (driver) clockwise until 32° C (90° F) is displayed.
3. Check for hot air at discharge air outlets.

Can this symptom be duplicated?

YES >> GO TO 2.
NO >> Perform complete system operational check. Refer to ATC-69, "Operational Check (Front)" .

### 2. CHECK FOR SERVICE BULLETINS

Check for any service bulletins.

>> GO TO 3.

### 3. PERFORM SELF-DIAGNOSIS

Perform self-diagnosis. Refer to ATC-67, "A/C System Self-diagnosis Function" .

OK or NG

OK >> GO TO 4.
NG >> Refer to ATC-68, "SELF-DIAGNOSIS CODE CHART" .

### 4. CHECK ENGINE COOLING SYSTEM

1. Check for proper engine coolant level. Refer to CO-10, "LEVEL CHECK" .
2. Check hoses for leaks or kinks.
3. Check radiator cap. Refer to CO-10, "CHECKING RADIATOR CAP" .
4. Check for air in cooling system.

>> GO TO 5.

### 5. CHECK AIR MIX DOOR OPERATION

Check the operation of the air mix door.

OK or NG

OK >> GO TO 6.
NG >> Check the air mix door motor circuit. Refer to ATC-86, "Air Mix Door Motor Circuit" .

### 6. CHECK AIR DUCTS

Check for disconnected or leaking air ducts.

OK or NG

OK >> GO TO 7.
NG >> Repair all disconnected or leaking air ducts.

## 7. CHECK HEATER HOSE TEMPERATURES

1. Start engine and warm it up to normal operating temperature.
2. Touch both the inlet and outlet heater hoses.

OK or NG

OK >> Hot inlet hose and a warm outlet hose: GO TO 8.
NG >> ● Inlet hose cold: GO TO 11.
● Both hoses warm: GO TO 9.

## 8. CHECK ENGINE COOLANT SYSTEM

Check engine control temperature sensor. Refer to EC-224, "DTC P0117, P0118 ECT SENSOR" .

OK or NG

OK >> System OK.
NG >> Repair or replace as necessary. Retest.

## 9. CHECK HEATER HOSES

Check heater hoses for proper installation.

OK or NG

OK >> System OK.
NG >> 1. Back flush heater core.
2. Drain the water from the system.
3. Refill system with new engine coolant. Refer to CO-10, "Changing Engine Coolant" .
4. GO TO 10 to retest.

## 10. CHECK HEATER HOSE TEMPERATURES

1. Start engine and warm it up to normal operating temperature.
2. Touch both the inlet and outlet heater hoses.

OK or NG

OK >> System OK.
NG >> Replace heater core. Refer to ATC-206, "HEATER CORE" .

## 11. CHECK WATER VALVE

Check the operation of the water valve. Refer to ATC-174, "Water Valve Circuit"

OK or NG

OK >> System OK.
NG >> Replace water valve.

## Noise

EJS005EG

SYMPTOM: Noise

### INSPECTION FLOW

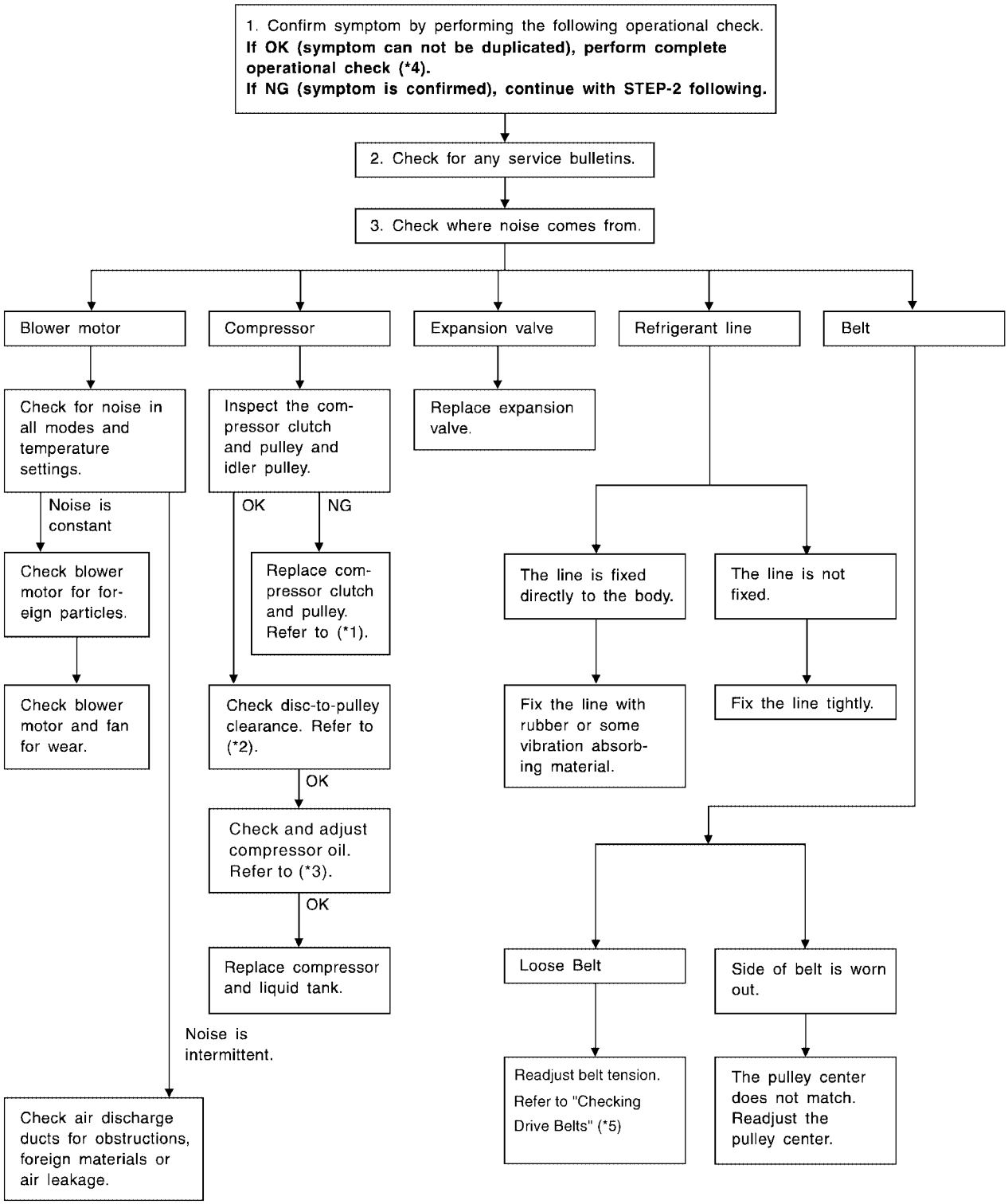


WJIA1972E

*1 ATC-226, "REMOVAL"

*2 ATC-227, "INSTALLATION"

*3 ATC-22, "Maintenance of Oil Quantity in Compressor"

*4 ATC-69, "Operational Check (Front)" or ATC-71, "Operational Check (Rear)"

*5 EM-13, "Checking Drive Belts"

## Self-diagnosis

EJS005EH

SYMPTOM: Self-diagnosis cannot be performed.

### INSPECTION FLOW

### 1. CONFIRM AUTO MODE OPERATION

1. Press the AUTO switch.
2. Display should indicate AUTO. (Discharge air and blower speed will depend on ambient, in-vehicle and set temperatures.)

OK or NG

OK >> GO TO 2.
NG >> GO TO 3.

### 2. PERFORM COMPLETE OPERATIONAL CHECK (FRONT)

Perform a complete operational check and check for any symptoms. Refer to ATC-69, "Operational Check (Front)" .

Can a symptom be duplicated?

YES >> Refer to ATC-36, "SYMPTOM TABLE" .
NO >> System OK.

### 3. CHECK FOR SERVICE BULLETINS

Check for any service bulletins.

Have any service bulletins been issued?

YES >> Refer to appropriate service bulletin.
NO >> GO TO 4.

### 4. CHECK POWER AND GROUND CIRCUIT

Check main power supply and ground circuit. Refer to ATC-73, "DIAGNOSTIC PROCEDURE FOR A/C SYSTEM" .

OK or NG

OK >> GO TO 5.
NG >> Refer to ATC-72, "Power Supply and Ground Circuit for Front Air Control" .

### 5. CHECK AMBIENT SENSOR CIRCUIT

Check ambient sensor circuit. Refer to ATC-177, "Ambient Sensor Circuit" .

OK or NG

OK >> GO TO 6.
NG >> Repair or replace as necessary.

### 6. CHECK IN-VEHICLE SENSOR CIRCUIT

Check in-vehicle sensor circuit. Refer to ATC-181, "In-vehicle Sensor Circuit" .

OK or NG

OK >> GO TO 7.
NG >> Repair or replace as necessary.

### 7. CHECK OPTICAL SENSOR CIRCUIT

Check optical sensor circuit. Refer to ATC-186, "Optical Sensor Circuit" .

OK or NG

OK >> GO TO 8.
NG >> Repair or replace as necessary.

## 8. CHECK INTAKE SENSOR CIRCUIT

Check intake sensor circuit. Refer to ATC-189, "Intake Sensor Circuit" .

OK or NG

OK >> GO TO 9.
NG >> Repair or replace as necessary.

## 9. CHECK AIR MIX DOOR MOTORS PBR CIRCUIT

Check air mix door motors PBR circuit. Refer to ATC-86, "Air Mix Door Motor Circuit" .

OK or NG

OK >> GO TO 10.
NG >> Repair or replace as necessary.

## 10. RECHECK FOR SYMPTOMS

Perform a complete operational check for any symptoms. Refer to ATC-69, "Operational Check (Front)" .

Does another symptom exist?

YES >> Refer to ATC-36, "SYMPTOM TABLE" .
NO >> Replace front air control. Refer to ATC-193, "FRONT AIR CONTROL" .

## Memory Function

EJS005EI

SYMPTOM: Memory function does not operate.

### INSPECTION FLOW

### 1. CONFIRM SYMPTOM BY PERFORMING OPERATIONAL CHECK - MEMORY FUNCTION

1. Set the temperature to 32°C (90°F).
2. Rotate the front blower control dial (driver) to turn system OFF.
3. Turn ignition switch OFF.
4. Turn ignition switch ON.
5. Press the AUTO switch.
6. Confirm that the set temperature remains at previous temperature.
7. Rotate the front blower control dial (driver) to turn system OFF.

Can the symptom be duplicated?

YES >> GO TO 3.
NO >> GO TO 2.

### 2. PERFORM COMPLETE OPERATIONAL CHECK

Perform a complete operational check and check for any symptoms. Refer to ATC-69, "Operational Check (Front)" .

Can a symptom be duplicated?

YES >> Refer to ATC-36, "SYMPTOM TABLE" .
NO >> System OK.

### 3. CHECK FOR SERVICE BULLETINS

Check for any service bulletins.

>> GO TO 4.

### 4. PERFORM SELF-DIAGNOSIS

Perform self-diagnosis to check for any codes. Refer to ATC-67, "A/C System Self-diagnosis Function" .

Are any self-diagnosis codes present?

YES >> Refer to ATC-68, "SELF-DIAGNOSIS CODE CHART" .
NO >> GO TO 5.

### 5. CHECK POWER AND GROUND CIRCUIT

Check main power supply and ground circuit. Refer to ATC-73, "DIAGNOSTIC PROCEDURE FOR A/C SYSTEM" .

OK or NG

OK >> GO TO 6.
NG >> Repair or replace as necessary.

### 6. RECHECK FOR SYMPTOMS

Perform a complete operational check for any symptoms. Refer to ATC-69, "Operational Check (Front)" .

Does another symptom exist?

YES >> Refer to ATC-36, "SYMPTOM TABLE" .
NO >> Replace front air control. Refer to ATC-193, "FRONT AIR CONTROL" .

## Water Valve Circuit

EJS005EJ

### COMPONENT DESCRIPTION

#### Water Valve

The water valve (1) cuts the flow of engine coolant to the front and rear heater cores to allow for maximum cooling during A/C operation. It is controlled by the front air control.

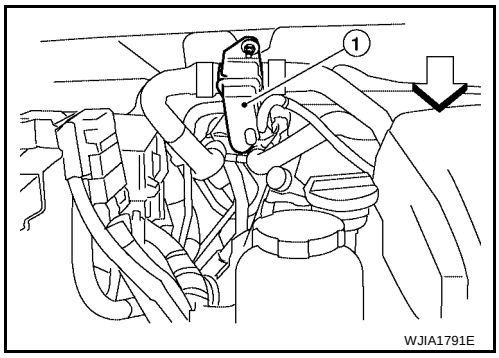


### DIAGNOSTIC PROCEDURE FOR WATER VALVE

#### 1. CHECK VEHICLE EQUIPMENT

Is vehicle equipped with navi?

YES or NO

YES >> GO TO 2.
NO >> GO TO 6.

#### 2. CHECK WATER VALVE POWER AND GROUND CIRCUITS

1. Disconnect water valve connector F68.
2. Turn ignition switch ON.
3. Rotate temperature control dial (driver) to 32°C (90°F).
4. Check voltage between water valve harness connector F68 terminal 1 and terminal 2 while rotating temperature control dial (driver) to 16°C (60°F).

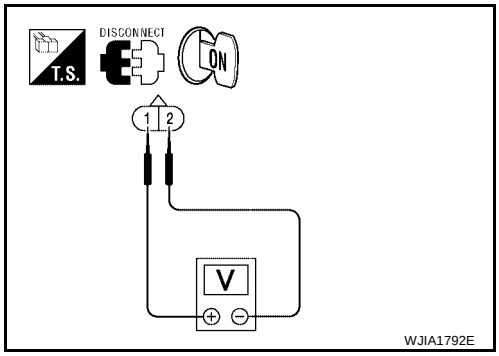


| Connector | Terminals | | Condition | Voltage (Approx.) |
|---|---|---|---|---|
| | (+) | (-) | | |
| Water valve: F68 | 1 | 2 | Rotate temperature control dial | Battery voltage |

OK or NG

OK >> GO TO 4.
NG >> GO TO 3.

#### 3. CHECK WATER VALVE CONTROL OUTPUT CIRCUIT

1. Turn ignition switch OFF.
2. Disconnect front air control connector M50.
3. Check continuity between water valve harness connector F68 (A) terminal 1 and front air control harness connector M50 (B) terminal 29.

   **1 - 29 : Continuity should exist.**

4. Check continuity between water valve harness connector F68 terminal 1 and ground.

   **1 - Ground : Continuity should not exist.**

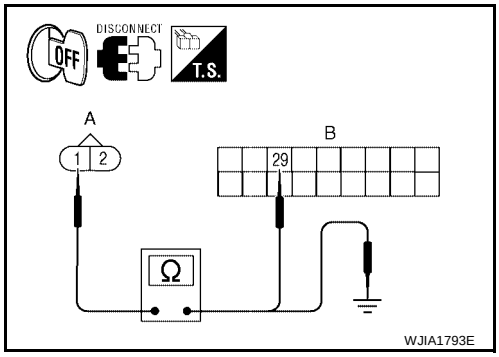


OK or NG

OK >> Replace front air control. Refer to ATC-193, "FRONT AIR CONTROL" .
NG >> Repair harness or connector.

## 4. CHECK WATER VALVE POWER AND GROUND CIRCUITS

1. Rotate temperature control dial (driver) to 16°C (60°F).
2. Check voltage between water valve harness connector F68 terminal 1 and terminal 2 while rotating temperature control dial (driver) to 32°C (90°F).

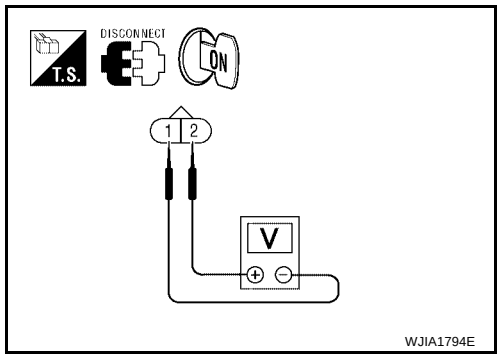


| Connector | Terminals | | Condition | Voltage (Approx.) |
|---|---|---|---|---|
| | (+) | (-) | | |
| Water valve: F68 | 2 | 1 | Rotate temperature control dial | Battery voltage |

OK or NG

OK >> Replace the water valve.
NG >> GO TO 5.

## 5. CHECK WATER VALVE CONTROL OUTPUT CIRCUIT

1. Turn ignition switch OFF.
2. Disconnect front air control connector M50.
3. Check continuity between water valve harness connector F68 (A) terminal 2 and front air control harness connector M50 (B) terminal 30.

   **2 - 30 : Continuity should exist.**

4. Check continuity between water valve harness connector F68 (A) terminal 2 and ground.

   **2 - Ground : Continuity should not exist.**

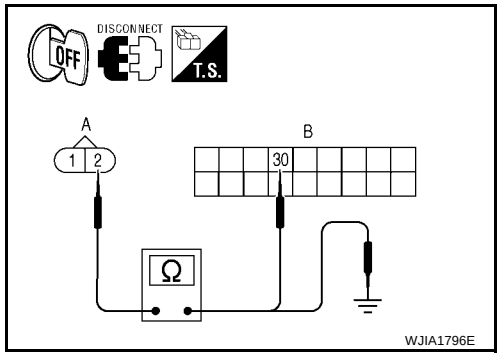


OK or NG

OK >> Replace front air control. Refer to ATC-193, "FRONT AIR CONTROL" .
NG >> Repair harness or connector.

## 6. CHECK WATER VALVE POWER AND GROUND CIRCUITS

1. Disconnect water valve connector F68.
2. Turn ignition switch ON.
3. Rotate temperature control dial (driver) to 32°C (90°F).
4. Check voltage between water valve harness connector F68 terminal 1 and terminal 2 while rotating temperature control dial (driver) to 16°C (60°F).

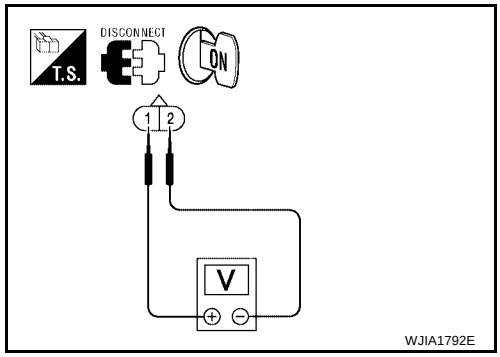


| Connector | Terminals | | Condition | Voltage (Approx.) |
|---|---|---|---|---|
| | (+) | (-) | | |
| Water valve F68 | 1 | 2 | Rotate temperature control dial | Battery voltage |

OK or NG

OK >> GO TO 8.
NG >> GO TO 7.

## 7. CHECK WATER VALVE CONTROL OUTPUT CIRCUIT

1. Turn ignition switch OFF.
2. Disconnect front air control connector M50.
3. Check continuity between water valve harness connector F68 (A) terminal 1 and front air control harness connector M50 (B) terminal 44.

   **1 - 44 : Continuity should exist.**

4. Check continuity between water valve harness connector F68 (A) terminal 1 and ground.

   **1 - Ground : Continuity should not exist.**

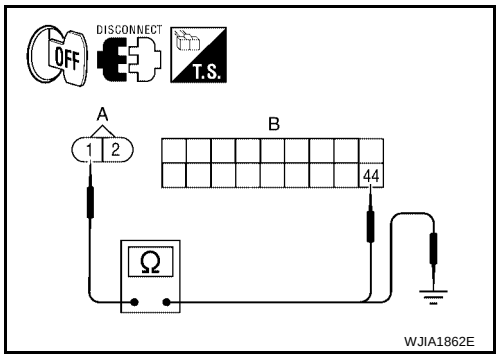


OK or NG

OK >> Replace front air control. Refer to ATC-193, "FRONT AIR CONTROL" .
NG >> Repair harness or connector.

## 8. CHECK WATER VALVE POWER AND GROUND CIRCUITS

1. Rotate temperature control dial (driver) to 60°F (16°C).
2. Check voltage between water valve harness connector F68 terminal 1 and terminal 2 while rotating temperature control dial (driver) to 32°C (90°F).

| Connector | Terminals | | Condition | Voltage (Approx.) |
|---|---|---|---|---|
| | (+) | (-) | | |
| Water valve: F68 | 2 | 1 | Rotate temperature control dial | Battery voltage |

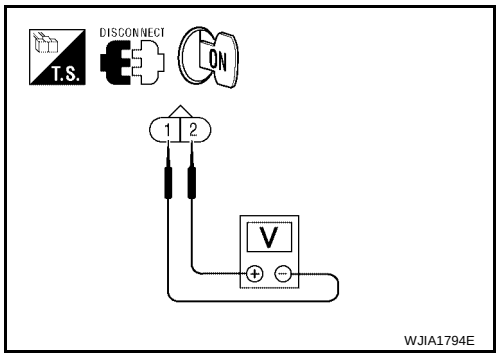


OK or NG

OK >> Replace the water valve.
NG >> GO TO 9.

## 9. CHECK WATER VALVE CONTROL OUTPUT CIRCUIT

1. Turn ignition switch OFF.
2. Disconnect front air control connector M50.
3. Check continuity between water valve harness connector F68 (A) terminal 2 and front air control harness connector M50 (B) terminal 43.

   **2 - 43 : Continuity should exist.**

4. Check continuity between water valve harness connector F68 (A) terminal 2 and ground.

   **2 - Ground : Continuity should not exist.**

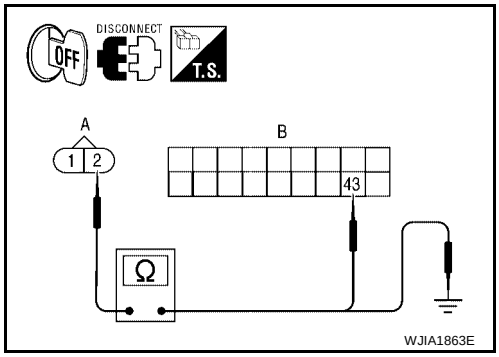


OK or NG

OK >> Replace front air control. Refer to ATC-193, "FRONT AIR CONTROL" .
NG >> Repair harness or connector.

## Ambient Sensor Circuit

EJS005EK

### COMPONENT DESCRIPTION

#### Ambient Sensor

The ambient sensor is attached on the radiator core support (left side). It detects ambient temperature and converts it into a value which is then input into the front air control.

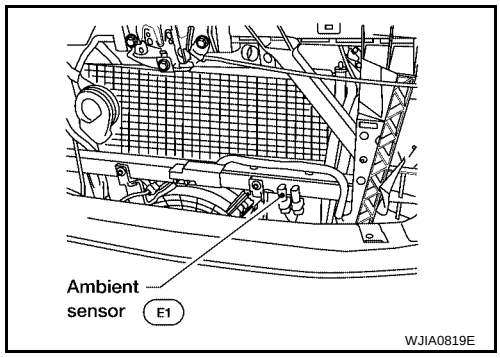


### AMBIENT TEMPERATURE INPUT PROCESS

The front air control includes a processing circuit for the ambient sensor input. However, when the temperature detected by the ambient sensor increases quickly, the processing circuit retards the front air control function. It only allows the front air control to recognize an ambient temperature increase of 0.33°C (0.6°F) per 100 seconds.

This prevents constant adjustments due to momentary conditions, such as stopping after high speed driving. Although the actual ambient temperature has not changed, the temperature detected by the ambient sensor will increase. This is because the heat from the engine compartment can radiate to the front grille area, location of the ambient sensor.

### DIAGNOSTIC PROCEDURE FOR AMBIENT SENSOR

SYMPTOM: Ambient sensor circuit is open or shorted. (40 or 41 is indicated on front air control as a result of conducting the front air control self-diagnosis)

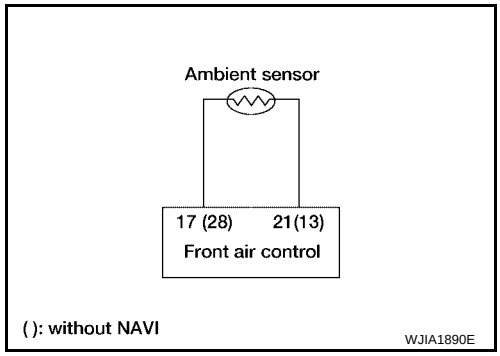


### 1. CHECK VEHICLE EQUIPMENT

Is vehicle equipped with navi?

YES or NO

YES >> GO TO 2.
NO >> GO TO 6.

### 2. CHECK VOLTAGE BETWEEN AMBIENT SENSOR AND GROUND

1. Disconnect ambient sensor connector.
2. Turn ignition switch ON.
3. Check voltage between ambient sensor harness connector E1 terminal 1 and ground.

**1 - Ground : Approx. 5V**

OK or NG

OK >> GO TO 3.
NG >> GO TO 5.

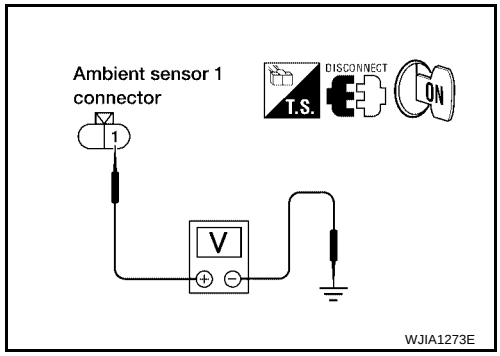

## 3. CHECK CIRCUIT CONTINUITY BETWEEN AMBIENT SENSOR AND FRONT AIR CONTROL

1. Turn ignition switch OFF.
2. Disconnect front air control connector.
3. Check continuity between ambient sensor harness connector E1 terminal 1 and front air control harness connector M49 terminal 17.

**1 - 17 : Continuity should exist.**

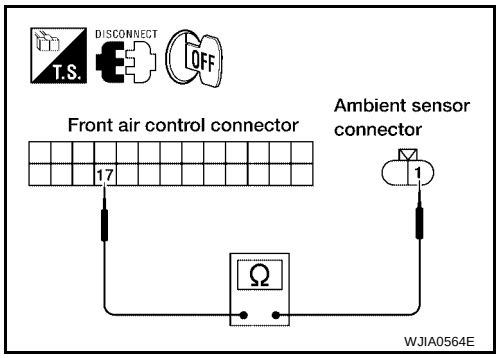


OK or NG

OK >> GO TO 4.
NG >> Repair harness or connector.

## 4. CHECK AMBIENT SENSOR

Refer to ATC-177, "Ambient Sensor Circuit" .

OK or NG

OK >> 1. Replace front air control. Refer to ATC-193, "FRONT AIR CONTROL"
2. Go to ATC-67, "A/C System Self-diagnosis Function" and perform self-diagnosis.

NG >> 1. Replace ambient sensor.
2. Go to ATC-67, "A/C System Self-diagnosis Function" and perform self-diagnosis.

## 5. CHECK CIRCUIT CONTINUITY BETWEEN AMBIENT SENSOR AND FRONT AIR CONTROL

1. Turn ignition switch OFF.
2. Disconnect front air control connector.
3. Check continuity between ambient sensor harness connector E1 terminal 2 and front air control harness connector M49 terminal 21.

**2 - 21 : Continuity should exist.**

4. Check continuity between ambient sensor harness connector E1 terminal 2 and ground.

**2 - Ground : Continuity should not exist.**

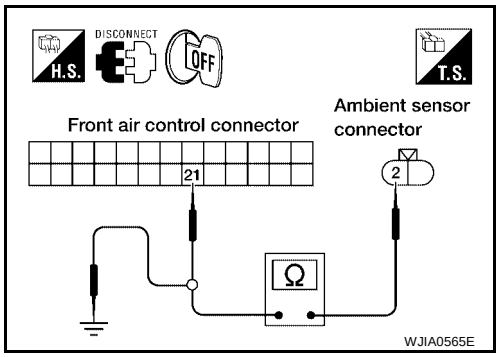


OK or NG

OK >> 1. Replace front air control. Refer to ATC-193, "FRONT AIR CONTROL"
2. Go to ATC-67, "A/C System Self-diagnosis Function" and perform self-diagnosis.

NG >> Repair harness or connector.

## 6. CHECK VOLTAGE BETWEEN AMBIENT SENSOR AND GROUND

1. Disconnect ambient sensor connector.
2. Turn ignition switch ON.
3. Check voltage between ambient sensor harness connector E1 terminal 1 and ground.

**1 - Ground : Approx. 5V**

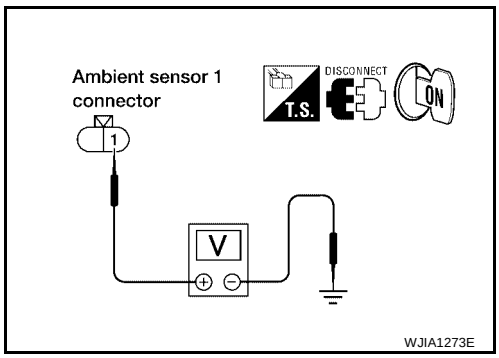


OK or NG

OK >> GO TO 7.
NG >> GO TO 9.

## 7. CHECK CIRCUIT CONTINUITY BETWEEN AMBIENT SENSOR AND FRONT AIR CONTROL

1. Turn ignition switch OFF.
2. Disconnect front air control connector.
3. Check continuity between ambient sensor harness connector E1 (B) terminal 1 and front air control harness connector M50 (B) terminal 28.

**1 - 28 : Continuity should exist.**

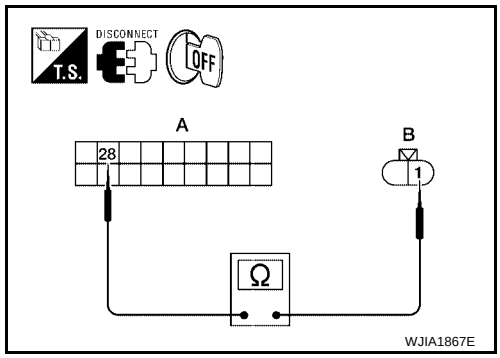


OK or NG

OK >> GO TO 8.
NG >> Repair harness or connector.

## 8. CHECK AMBIENT SENSOR

Refer to ATC-177, "Ambient Sensor Circuit" .

OK or NG

OK >> 1. Replace front air control. Refer to ATC-193, "FRONT AIR CONTROL"
2. Go to ATC-67, "A/C System Self-diagnosis Function" and perform self-diagnosis.

NG >> 1. Replace ambient sensor.
2. Go to ATC-67, "A/C System Self-diagnosis Function" and perform self-diagnosis.

## 9. CHECK CIRCUIT CONTINUITY BETWEEN AMBIENT SENSOR AND FRONT AIR CONTROL

1. Turn ignition switch OFF.
2. Disconnect front air control connector.
3. Check continuity between ambient sensor harness connector E1 (B) terminal 2 and front air control harness connector M49 (A) terminal 13.

**2 - 13 : Continuity should exist.**

4. Check continuity between ambient sensor harness connector E1 terminal 2 and ground.

**2 - Ground : Continuity should not exist.**

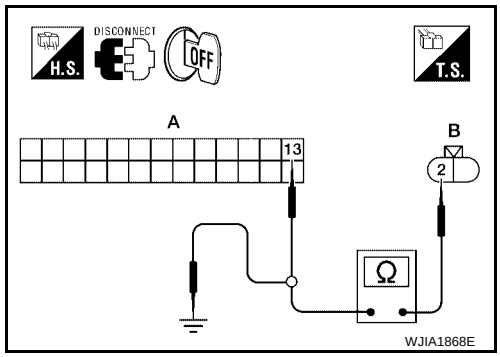


OK or NG

OK >> 1. Replace front air control. Refer to ATC-193, "FRONT AIR CONTROL"
2. Go to ATC-67, "A/C System Self-diagnosis Function" and perform self-diagnosis.

NG >> Repair harness or connector.

## COMPONENT INSPECTION

### Ambient Sensor

After disconnecting ambient sensor (1) connector E1, measure resistance between terminals 1 and 2 at sensor component side, using the table below.

| Temperature °C (°F) | Resistance kΩ |
|---|---|
| –15 (5) | 12.73 |
| –10 (14) | 9.92 |
| –5 (23) | 7.80 |
| 0 (32) | 6.19 |
| 5 (41) | 4.95 |
| 10 (50) | 3.99 |
| 15 (59) | 3.24 |
| 20 (68) | 2.65 |
| 25 (77) | 2.19 |
| 30 (86) | 1.81 |
| 35 (95) | 1.51 |
| 40 (104) | 1.27 |
| 45 (113) | 1.07 |

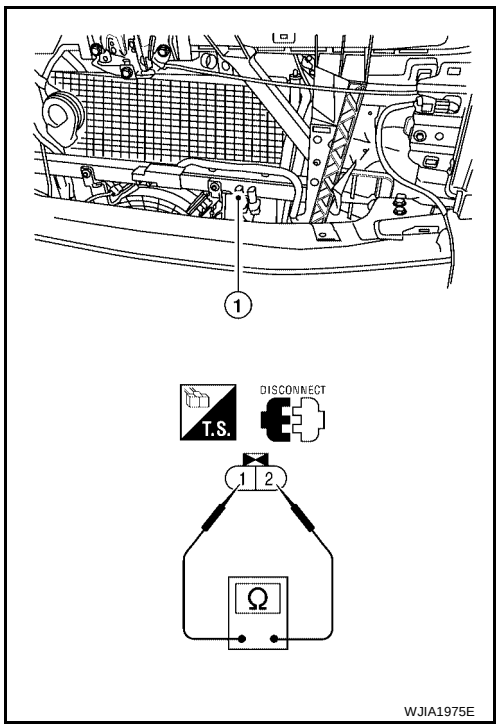


If NG, replace ambient sensor.

# In-vehicle Sensor Circuit

EJS005EL

## COMPONENT DESCRIPTION

### In-vehicle Sensor

The in-vehicle sensor is located on cluster lid D. It converts variations in temperature of passenger compartment air (drawn in through the integrated fan) into a resistance value. It is then input into the front air control.

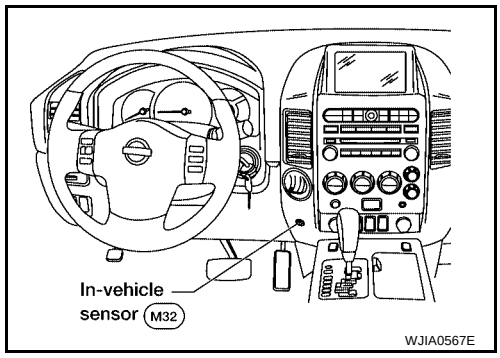


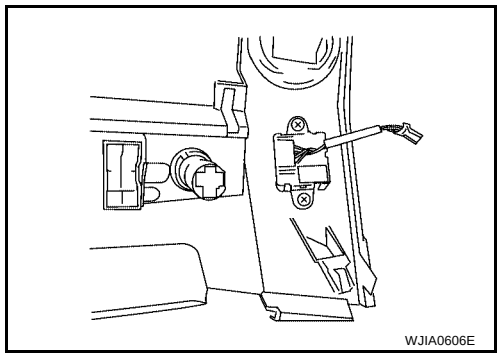

## DIAGNOSTIC PROCEDURE FOR IN-VEHICLE SENSOR

SYMPTOM: In-vehicle sensor circuit is open or shorted. Using the CONSULT-II, DTC B2578 or B2579 is displayed. Without a CONSULT-II code 30, 31, 44 or 46 is indicated on front air control as a result of conducting self-diagnosis.

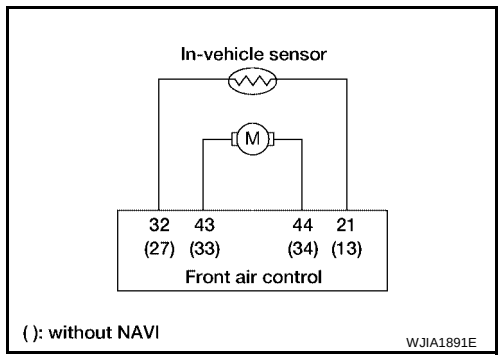


### 1. CHECK VEHICLE EQUIPMENT

Is vehicle equipped with navi?

YES or NO

YES >> GO TO 2.
NO >> GO TO 8.

### 2. CHECK IN-VEHICLE SENSOR CIRCUIT

Self-diagnosis DTC B2578 or B2579 (with CONSULT-II) or code 30, 31 44 or 46 (without CONSULT-II) is present?

YES or NO

YES >> GO TO 7.
NO >> GO TO 3.

### 3. CHECK VOLTAGE BETWEEN IN-VEHICLE SENSOR AND GROUND

1. Disconnect in-vehicle sensor connector.
2. Turn ignition switch ON.
3. Check voltage between in-vehicle sensor harness connector M32 terminal 4 and ground.

**4 - Ground : Approx. 5V.**

OK or NG

OK >> GO TO 4.
NG >> GO TO 6.

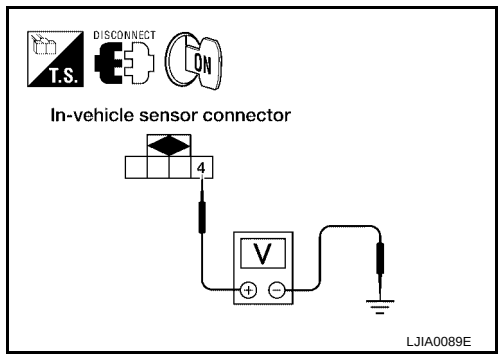


### 4. CHECK CIRCUIT CONTINUITY BETWEEN IN-VEHICLE SENSOR AND FRONT AIR CONTROL

1. Turn ignition switch OFF.
2. Disconnect front air control connector M49.
3. Check continuity between in-vehicle sensor harness connector M32 terminal 1 and front air control harness connector M49 terminal 21.

**1 - 21 : Continuity should exist.**

OK or NG

OK >> GO TO 5.
NG >> Repair harness or connector.

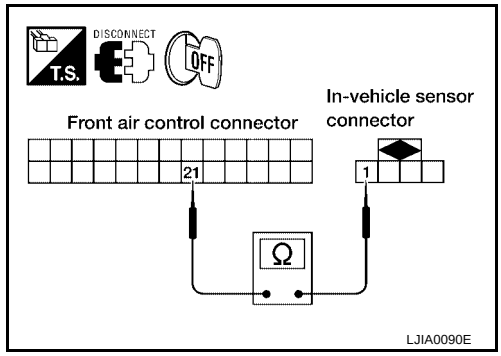

## 5. CHECK IN-VEHICLE SENSOR

Check in-vehicle sensor. Refer to ATC-189, "Intake Sensor Circuit" .

OK or NG

OK >> 1. Replace front air control. Refer to ATC-193, "FRONT AIR CONTROL" .
2. Go to ATC-67, "A/C System Self-diagnosis Function" and perform self-diagnosis.

NG >> 1. Replace in-vehicle sensor. Refer to ATC-195, "IN-VEHICLE SENSOR" .
2. Go to ATC-67, "A/C System Self-diagnosis Function" and perform self-diagnosis.

## 6. CHECK CIRCUIT CONTINUITY BETWEEN IN-VEHICLE SENSOR AND FRONT AIR CONTROL

1. Turn ignition switch OFF.
2. Disconnect front air control connector.
3. Check continuity between in-vehicle sensor harness connector M32 terminal 4 and front air control harness connector M50 terminal 32.

**4 - 32 : Continuity should exist.**

4. Check continuity between in-vehicle sensor harness connector M32 terminal 4 and ground.

**4 - Ground Continuity should not exist.**

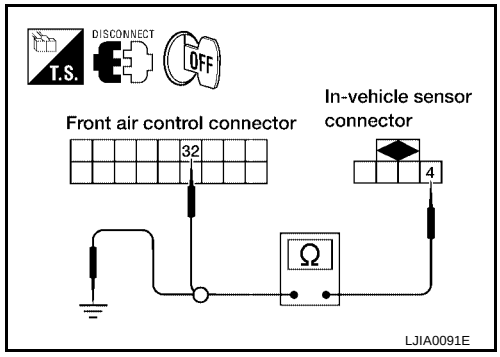


OK or NG

OK >> 1. Replace front air control. Refer to ATC-193, "FRONT AIR CONTROL" .
2. Go to ATC-67, "A/C System Self-diagnosis Function" and perform self-diagnosis.

NG >> Repair harness or connector.

## 7. CHECK CIRCUIT CONTINUITY BETWEEN IN-VEHICLE SENSOR MOTOR AND FRONT AIR CONTROL (SELF-DIAGNOSIS CODES 30, 31, 44, 46 OR DTC B2578, B2579)

1. Turn ignition switch OFF.
2. Disconnect front air control connector and in-vehicle sensor connector.
3. Check continuity between in-vehicle sensor harness connector M32 terminal 2 and 3 and front air control harness connector M50 terminal 44 and 43.

**2 - 44 : Continuity should exist.**
**3 - 43 : Continuity should exist.**

4. Check continuity between in-vehicle sensor harness connector M32 terminal 2 and 3 and ground.

**2, 3 - Ground :Continuity should not exist.**

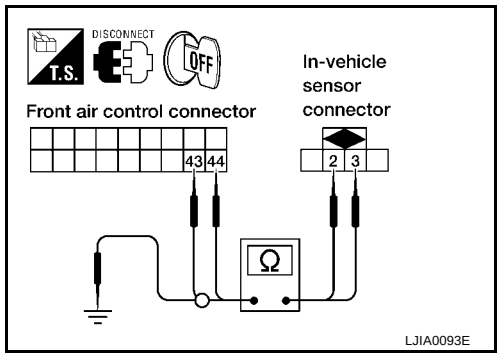


OK or NG

OK >> 1. Replace front air control. Refer to ATC-193, "FRONT AIR CONTROL" .
2. Go to ATC-67, "A/C System Self-diagnosis Function" and perform self-diagnosis.

NG >> Repair harness or connector.

## 8. CHECK IN-VEHICLE SENSOR CIRCUIT

Self-diagnosis DTC B2578 or B2579 (with CONSULT-II) or code 30 31, 44 or 46 (without CONSULT-II) is present?

YES or NO

YES >> GO TO 13.
NO >> GO TO 9.

## 9. CHECK VOLTAGE BETWEEN IN-VEHICLE SENSOR AND GROUND

1. Disconnect in-vehicle sensor connector.
2. Turn ignition switch ON.
3. Check voltage between in-vehicle sensor harness connector M32 terminal 4 and ground.

**4 - Ground : Approx. 5V.**

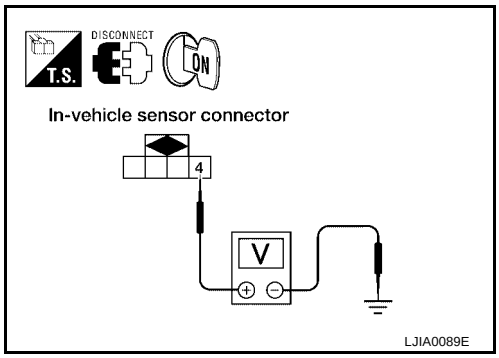


OK or NG

OK >> GO TO 10.
NG >> GO TO 12.

## 10. CHECK CIRCUIT CONTINUITY BETWEEN IN-VEHICLE SENSOR AND FRONT AIR CONTROL

1. Turn ignition switch OFF.
2. Disconnect front air control connector M49.
3. Check continuity between in-vehicle sensor harness connector M32 (B) terminal 1 and front air control harness connector M49 (A) terminal 13.

**1 - 13 : Continuity should exist.**

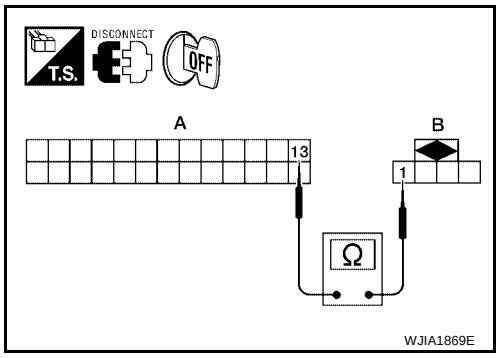


OK or NG

OK >> GO TO 11.
NG >> Repair harness or connector.

## 11. CHECK IN-VEHICLE SENSOR

Check in-vehicle sensor. Refer to ATC-189, "Intake Sensor Circuit" .

OK or NG

OK >> 1. Replace front air control. Refer to ATC-193, "FRONT AIR CONTROL" .
2. Go to ATC-67, "A/C System Self-diagnosis Function" and perform self-diagnosis.

NG >> 1. Replace in-vehicle sensor. Refer to ATC-195, "IN-VEHICLE SENSOR" .
2. Go to ATC-67, "A/C System Self-diagnosis Function" and perform self-diagnosis.

## 12. CHECK CIRCUIT CONTINUITY BETWEEN IN-VEHICLE SENSOR AND FRONT AIR CONTROL

1. Turn ignition switch OFF.
2. Disconnect front air control connector.
3. Check continuity between in-vehicle sensor harness connector M32 (B) terminal 4 and front air control harness connector M50 (A) terminal 27.

**4 - 32 : Continuity should exist.**

4. Check continuity between in-vehicle sensor harness connector M32 (B) terminal 4 and ground.

**4 - Ground Continuity should not exist.**

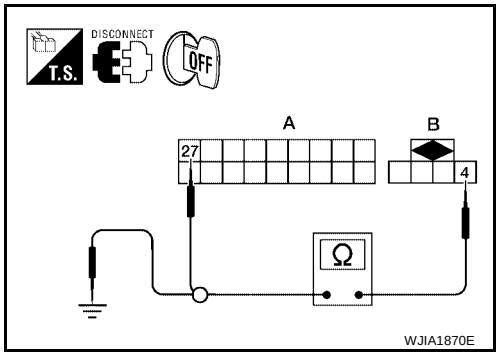


OK or NG

OK >> 1. Replace front air control. Refer to ATC-193, "FRONT AIR CONTROL" .
2. Go to ATC-67, "A/C System Self-diagnosis Function" and perform self-diagnosis.

NG >> Repair harness or connector.

## 13. CHECK CIRCUIT CONTINUITY BETWEEN IN-VEHICLE SENSOR MOTOR AND FRONT AIR CONTROL (SELF-DIAGNOSIS CODES 30, 31 44, 46 OR DTC B2578,B2579)

1. Turn ignition switch OFF.
2. Disconnect front air control connector and in-vehicle sensor connector.
3. Check continuity between in-vehicle sensor harness connector M32 (B) terminal 2 and 3 and front air control harness connector M50 (A) terminal 34 and 33.

   **2 - 34 : Continuity should exist.**

   **3 - 33 : Continuity should exist.**

4. Check continuity between in-vehicle sensor harness connector M32 (B) terminal 2 and 3 and ground.

   **2, 3 - Ground :Continuity should not exist.**

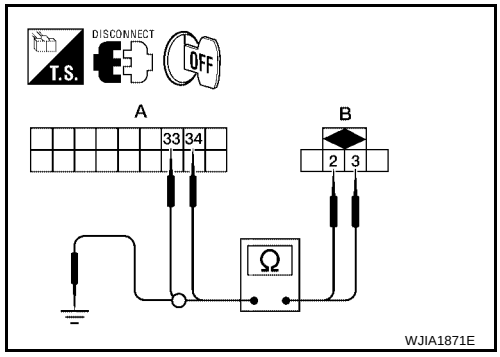


OK or NG

OK >> 1. Replace front air control. Refer to ATC-193, "FRONT AIR CONTROL" .
2. Go to ATC-67, "A/C System Self-diagnosis Function" and perform self-diagnosis.

NG >> Repair harness or connector.

## COMPONENT INSPECTION

### In-vehicle Sensor

After disconnecting in-vehicle sensor connector M32, measure resistance between terminals 1 and 4 at sensor component side, using the table below.

| Temperature °C (°F) | Resistance kΩ |
|---|---|
| –15 (5) | 21.40 |
| –10 (14) | 16.15 |
| –5 (23) | 12.29 |
| 0 (32) | 9.41 |
| 5 (41) | 7.27 |
| 10 (50) | 5.66 |
| 15 (59) | 4.45 |
| 20 (68) | 3.51 |
| 25 (77) | 2.79 |
| 30 (86) | 2.24 |
| 35 (95) | 1.80 |
| 40 (104) | 1.45 |
| 45 (113) | 1.18 |

If NG, replace in-vehicle sensor.

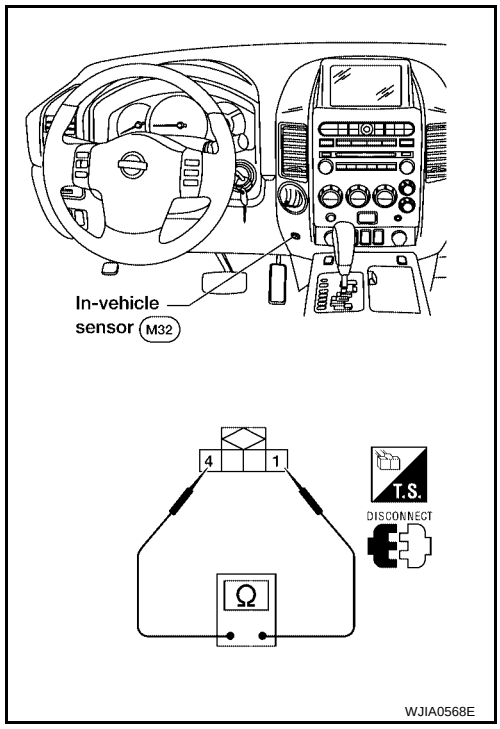

## Optical Sensor Circuit

EJS005EM

### COMPONENT DESCRIPTION

The optical sensor is located in the center of the defroster grille. It detects sunload entering through windshield by means of a photo diode. The sensor converts the sunload into a current value which is then input into the front air control.

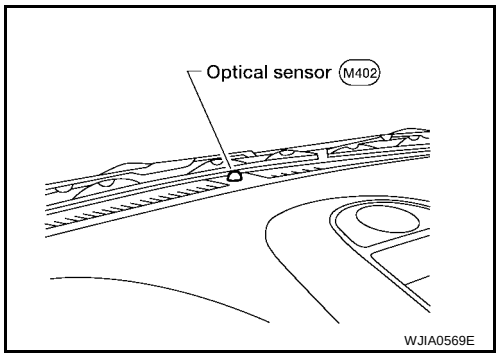


### OPTICAL INPUT PROCESS

The front air control includes a processing circuit which averages the variations in detected sunload over a period of time. This prevents adjustments in the ATC system operation due to small or quick variations in detected sunload.

For example, consider driving along a road bordered by an occasional group of large trees. The sunload detected by the optical sensor will vary whenever the trees obstruct the sunlight. The processing circuit averages the detected sunload over a period of time, so that the (insignificant) effect of the trees momentarily obstructing the sunlight does not cause any change in the ATC system operation. On the other hand, shortly after entering a long tunnel, the system will recognize the change in sunload, and the system will react accordingly.

### DIAGNOSTIC PROCEDURE FOR OPTICAL SENSOR

SYMPTOM: Optical sensor circuit is open or shorted. Using the CONSULT-II, DTC B257F or B2580 is displayed. Without a CONSULT-II code 50 or 52 is indicated on front air control as a result of conducting self-diagnosis.

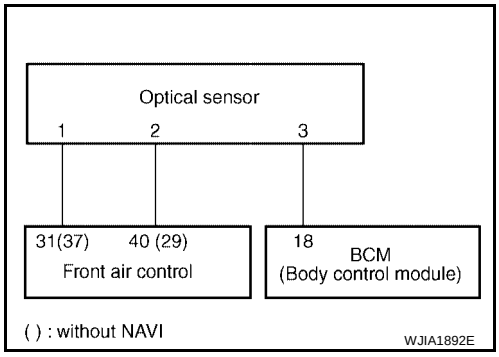


## 1. CHECK VEHICLE EQUIPMENT

Is vehicle equipped with navi?

YES or NO

YES >> GO TO 2.
NO >> GO TO 4.

## 2. CHECK CIRCUIT CONTINUITY BETWEEN OPTICAL SENSOR AND FRONT AIR CONTROL

1. Turn ignition switch OFF.
2. Disconnect front air control connector and optical sensor connector.
3. Check continuity between optical sensor harness connector M402 terminal 1 and 2 and front air control harness connector M50 terminal 31 and 40.

**1 - 31 : Continuity should exist.**
**2 - 40 : Continuity should exist.**

4. Check continuity between optical sensor harness connector M402 terminal 1 and 2 and ground.

**1, 2 - Ground. : Continuity should not exist.**

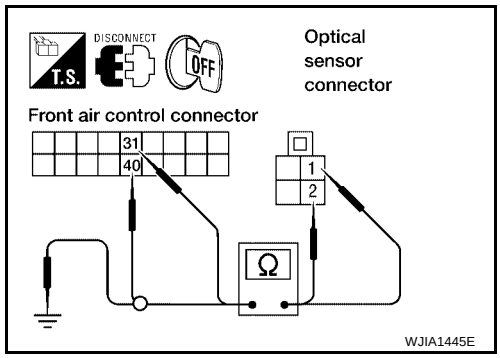


OK or NG

OK >> GO TO 3.
NG >> Repair harness or connector.

## 3. CHECK CIRCUIT CONTINUITY BETWEEN OPTICAL SENSOR AND BCM

1. Disconnect BCM connector.
2. Check continuity between optical sensor harness connector M402 (B) terminal 3 and BCM harness connector M18 (A) terminal 18.

**3 - 18 : Continuity should exist.**

3. Check continuity between optical sensor harness connector M402 (A) terminal 3 and ground.

**3 - Ground : Continuity should not exist.**

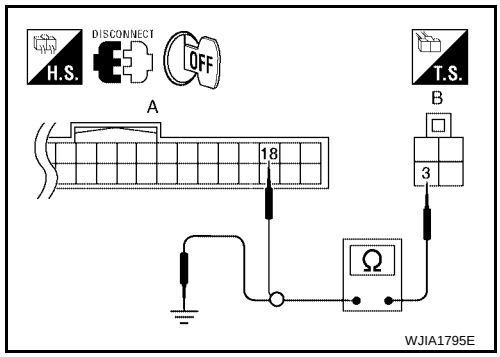


OK or NG

OK >> Replace optical sensor. Refer to ATC-196, "OPTICAL SENSOR" .
NG >> Repair harness or connector.

## 4. CHECK CIRCUIT CONTINUITY BETWEEN OPTICAL SENSOR AND FRONT AIR CONTROL

1. Turn ignition switch OFF.
2. Disconnect front air control connector and optical sensor connector.
3. Check continuity between optical sensor harness connector M402 (B) terminal 1 and 2 and front air control harness connector M50 (A) terminal 37 and 29.

**1 - 37 : Continuity should exist.**
**2 - 29 : Continuity should exist.**

4. Check continuity between optical sensor harness connector M402 terminal 1 and 2 and ground.

**1, 2 - Ground. : Continuity should not exist.**

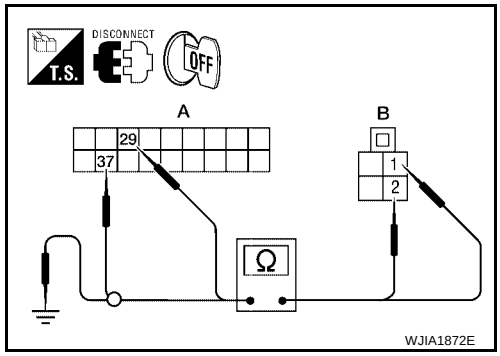


OK or NG

OK >> GO TO 5.
NG >> Repair harness or connector.

## 5. CHECK CIRCUIT CONTINUITY BETWEEN OPTICAL SENSOR AND BCM

1. Disconnect BCM connector.
2. Check continuity between optical sensor harness connector M402 (B) terminal 3 and BCM harness connector M18 (A) terminal 18.

   **3 - 18 : Continuity should exist.**

3. Check continuity between optical sensor harness connector M402 (B) terminal 3 and ground.

   **3 - Ground : Continuity should not exist.**

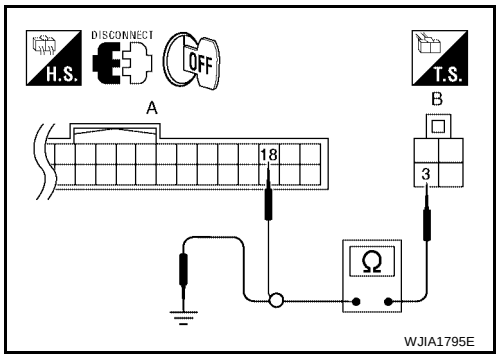


OK or NG

OK >> Replace optical sensor. Refer to ATC-196, "OPTICAL SENSOR" .
NG >> Repair harness or connector.

# Intake Sensor Circuit

EJS005EN

## COMPONENT DESCRIPTION

### Intake Sensor

The intake sensor is located on the heater & cooling unit assembly. It converts temperature of air after it passes through the evaporator into a resistance value which is then input to the front air control.

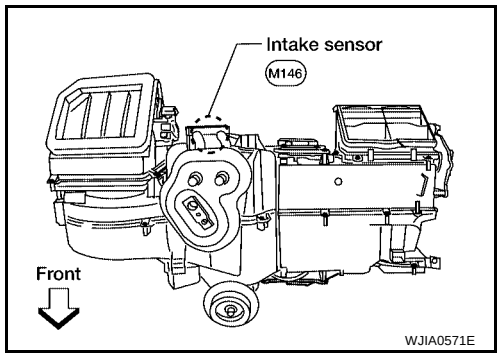


## DIAGNOSTIC PROCEDURE FOR INTAKE SENSOR

SYMPTOM: Intake sensor circuit is open or shorted. Using the CONSULT-II, DTC B2581 or B2582 is displayed. Without a CONSULT-II code 56 or 57 is indicated on front air control as a result of conducting self-diagnosis.

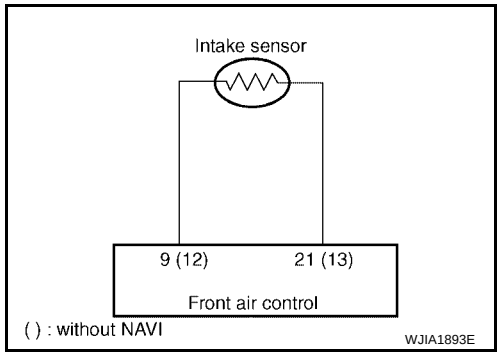


### 1. CHECK VEHICLE EQUIPMENT

Is vehicle equipped with navi?

YES or NO

YES >> GO TO 2.
NO >> GO TO 6.

### 2. CHECK VOLTAGE BETWEEN INTAKE SENSOR AND GROUND

1. Disconnect intake sensor connector.
2. Turn ignition switch ON.
3. Check voltage between intake sensor harness connector M146 terminal 2 and ground.

**2 - Ground : Approx. 5V**

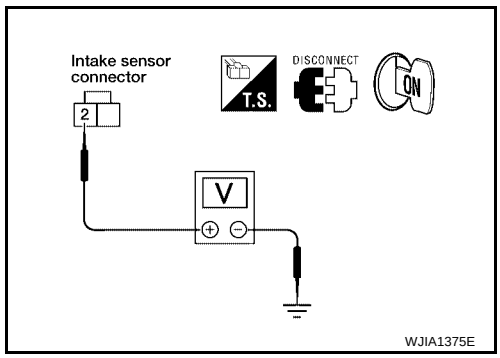


OK or NG

OK >> GO TO 3.
NG >> GO TO 5.

## 3. CHECK CIRCUIT CONTINUITY BETWEEN INTAKE SENSOR AND FRONT AIR CONTROL

1. Turn ignition switch OFF.
2. Disconnect front air control connector.
3. Check continuity between intake sensor harness connector M146 terminal 1 and front air control harness connector M49 terminal 21.

**1 - 21 : Continuity should exist.**

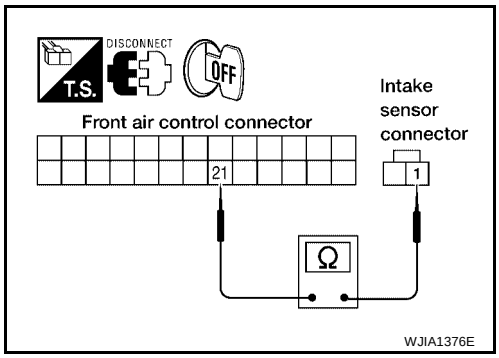


OK or NG

OK >> GO TO 4.
NG >> Repair harness or connector.

## 4. CHECK INTAKE SENSOR

Check intake sensor. Refer to ATC-189, "Intake Sensor Circuit" .

OK or NG

OK >> 1. Replace front air control. Refer to ATC-193, "FRONT AIR CONTROL"
2. Go to ATC-67, "A/C System Self-diagnosis Function" and perform self-diagnosis.

NG >> 1. Replace intake sensor. Refer to ATC-197, "INTAKE SENSOR" .
2. Go to ATC-67, "A/C System Self-diagnosis Function" and perform self-diagnosis.

## 5. CHECK CIRCUIT CONTINUITY BETWEEN INTAKE SENSOR AND FRONT AIR CONTROL

1. Turn ignition switch OFF.
2. Disconnect front air control connector.
3. Check continuity between intake sensor harness connector M146 terminal 2 and front air control harness connector M49 terminal 9.

**2 - 9 : Continuity should exist.**

4. Check continuity between intake sensor harness connector M146 terminal 2 and ground.

**2 - Ground : Continuity should not exist.**

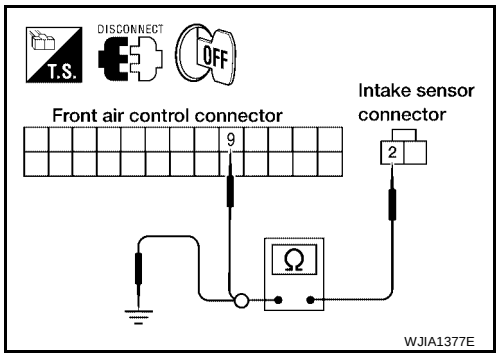


OK or NG

OK >> 1. Replace front air control. Refer to ATC-193, "FRONT AIR CONTROL" .
2. Go to ATC-67, "A/C System Self-diagnosis Function" and perform self-diagnosis.

NG >> Repair harness or connector.

## 6. CHECK VOLTAGE BETWEEN INTAKE SENSOR AND GROUND

1. Disconnect intake sensor connector.
2. Turn ignition switch ON.
3. Check voltage between intake sensor harness connector M146 terminal 2 and ground.

**2 - Ground : Approx. 5V**

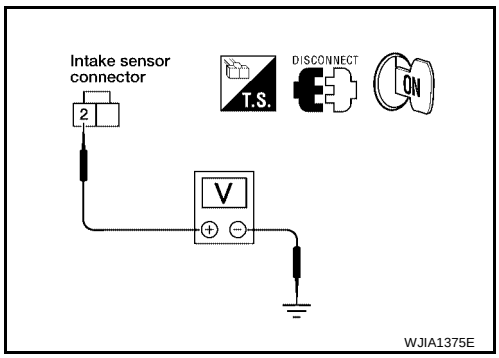


OK or NG

OK >> GO TO 7.
NG >> GO TO 9.

## 7. CHECK CIRCUIT CONTINUITY BETWEEN INTAKE SENSOR AND FRONT AIR CONTROL

1. Turn ignition switch OFF.
2. Disconnect front air control connector.
3. Check continuity between intake sensor harness connector M146 (B) terminal 1 and front air control harness connector M49 (A) terminal 13.

**1 - 13 : Continuity should exist.**

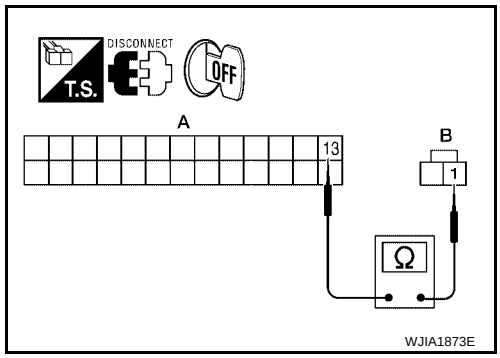


OK or NG

OK >> GO TO 8.
NG >> Repair harness or connector.

## 8. CHECK INTAKE SENSOR

Check intake sensor. Refer to ATC-192, "Intake Sensor" .

OK or NG

OK >> 1. Replace front air control. Refer to ATC-193, "FRONT AIR CONTROL"
2. Go to ATC-67, "A/C System Self-diagnosis Function" and perform self-diagnosis.

NG >> 1. Replace intake sensor. Refer to ATC-197, "INTAKE SENSOR" .
2. Go to ATC-67, "A/C System Self-diagnosis Function" and perform self-diagnosis.

## 9. CHECK CIRCUIT CONTINUITY BETWEEN INTAKE SENSOR AND FRONT AIR CONTROL

1. Turn ignition switch OFF.
2. Disconnect front air control connector.
3. Check continuity between intake sensor harness connector M146 (B) terminal 2 and front air control harness connector M49 (A) terminal 12.

**2 - 12 : Continuity should exist.**

4. Check continuity between intake sensor harness connector M146 (B) terminal 2 and ground.

**2 - Ground : Continuity should not exist.**

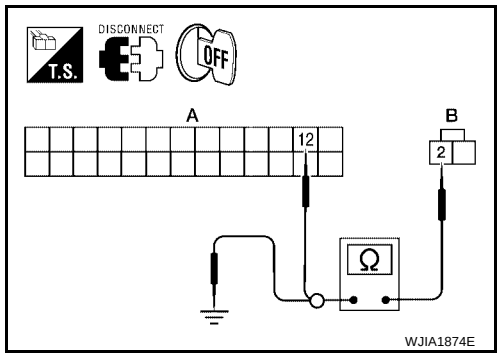


OK or NG

OK >> 1. Replace front air control. Refer to ATC-193, "FRONT AIR CONTROL" .
2. Go to ATC-67, "A/C System Self-diagnosis Function" and perform self-diagnosis.

NG >> Repair harness or connector.

## COMPONENT INSPECTION

### Intake Sensor

After disconnecting intake sensor connector, measure resistance between terminals 1 and 2 at sensor harness side, using the table below.

| Temperature °C (°F) | Resistance kΩ |
|---|---|
| –15 (5) | 209.0 |
| –10 (14) | 160.0 |
| –5 (23) | 123.0 |
| 0 (32) | 95.8 |
| 5 (41) | 74.9 |
| 10 (50) | 58.9 |
| 15 (59) | 46.7 |
| 20 (68) | 37.3 |
| 25 (77) | 30.0 |
| 30 (86) | 24.2 |
| 35 (95) | 19.7 |
| 40 (104) | 16.1 |
| 45 (113) | 13.2 |

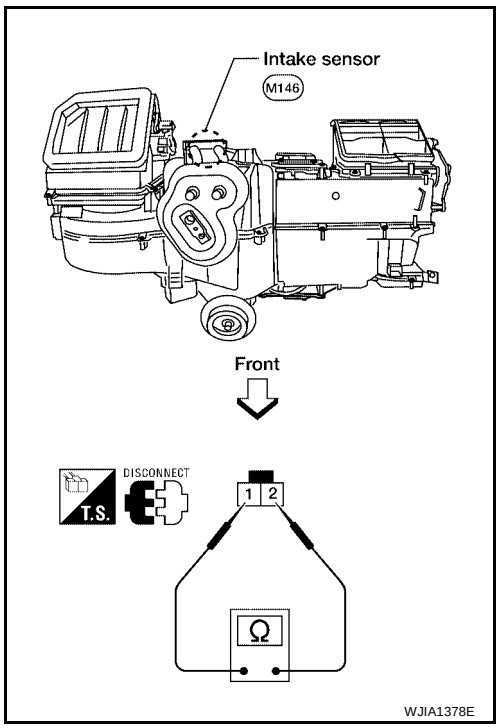


If NG, replace intake sensor.

# CONTROL UNIT

PFP:27500

## Removal and Installation

EJS005EO

### FRONT AIR CONTROL

#### Removal

1. Remove the five control knobs from the front air control unit.
2. Remove the cluster lid C. Refer to IP-11, "CLUSTER LID C" .
3. Remove the four screws securing the front air control unit to cluster lid C.
4. Remove the front air control unit.

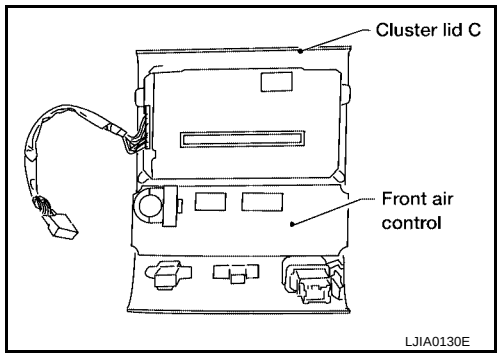


#### Installation

Installation is in the reverse order of removal.

### REAR AIR CONTROL

#### Removal

1. Remove the overhead console from the headlining. Refer to EI-35, "HEADLINING" .
2. Remove the four screws and remove the rear air control.

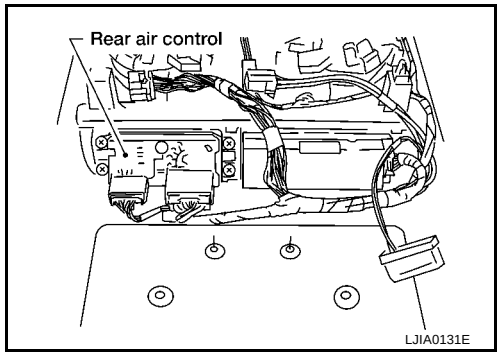


#### Installation

Installation is in the reverse order of removal.

# AMBIENT SENSOR

PFP:27722

## Removal and Installation

EJS005EP

### REMOVAL

1. Disconnect the ambient sensor electrical connector.

   **NOTE:**
   The ambient sensor is located behind the front bumper, in front of the condenser.

2. Release the ambient sensor clip and then remove the ambient sensor.

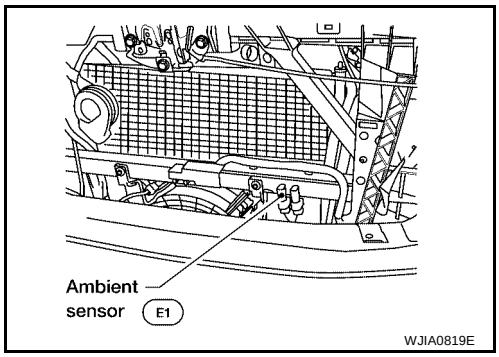


### INSTALLATION

Installation is in the reverse order of removal.

# IN-VEHICLE SENSOR

PFP:27720

## Removal and Installation

EJS005EQ

### REMOVAL

1. Remove the cluster lid D. Refer to IP-12, "CLUSTER LID D" .
2. Remove the two screws and remove the in-vehicle sensor from cluster lid D.

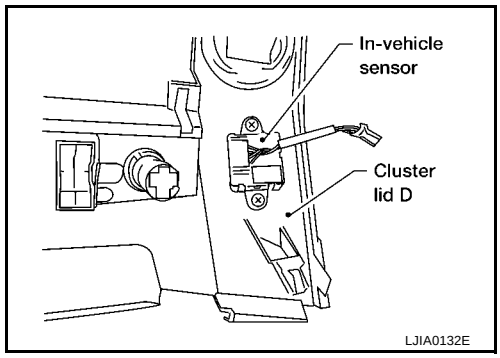


### INSTALLATION

Installation is in the reverse order of removal.

# OPTICAL SENSOR

PFP:28576

## Removal and Installation

EJS005ER

The optical sensor is located in the top center of the instrument panel. Refer to IP-10, "Removal and Installation" .

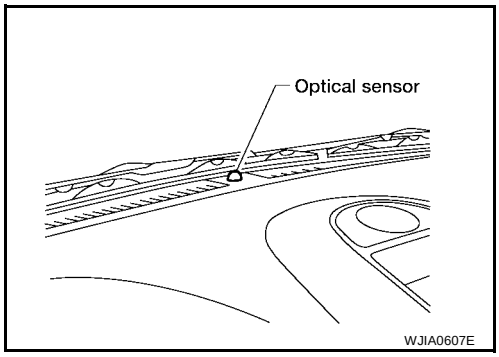

# INTAKE SENSOR

PFP:27723

## Removal and Installation

EJS005ES

### REMOVAL

1. Remove the instrument panel. Refer to IP-10, "Removal and Installation" .
2. Disconnect the intake sensor electrical connector.

   **NOTE:**
   The intake sensor is located on the top of the front heater and cooling unit assembly next to the A/C evaporator cover.
3. Twist the intake sensor to remove the intake sensor from the front heater and cooling unit assembly.

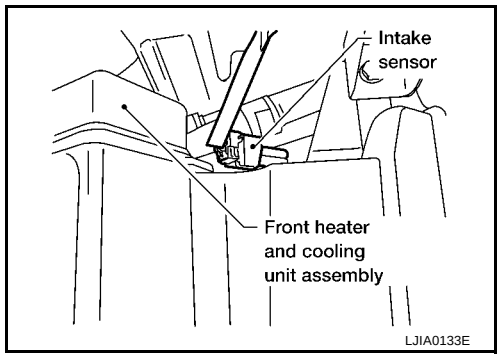


### INSTALLATION

Installation is in the reverse order of removal.

# BLOWER MOTOR

PFP:27226

## Components

EJS005ET

### Front Blower Motor

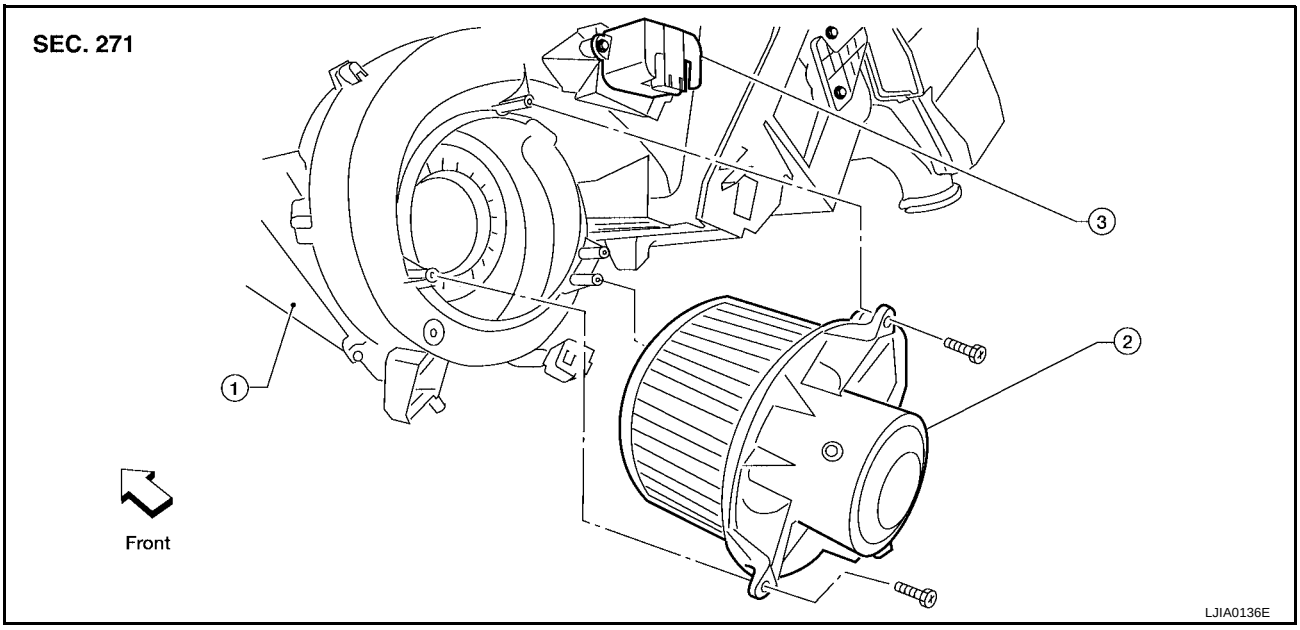


1. Front heater and cooling unit assembly
2. Front blower motor
3. Variable blower control

### Rear Blower Motor

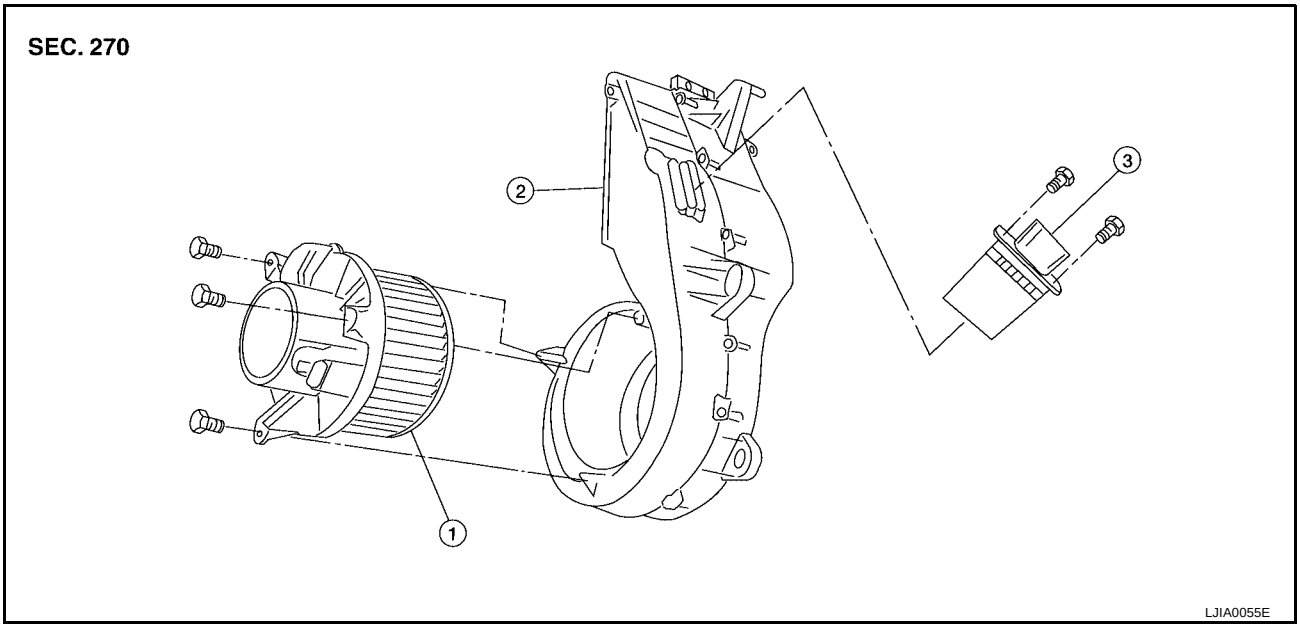


1. Rear blower motor
2. Rear blower motor case
3. Rear blower motor resistor

## Removal and Installation

EJS005EU

### FRONT BLOWER MOTOR

#### Removal

1. Remove the glove box assembly. Refer to IP-13, "LOWER INSTRUMENT PANEL RH AND GLOVE BOX".
2. Disconnect the front blower motor electrical connector.
3. Remove the three screws and remove the front blower motor.

#### Installation

Installation is in the reverse order of removal.

## REAR BLOWER MOTOR

### Removal

1. Remove the luggage side lower finisher RH. Refer to EI-37, "LUGGAGE FLOOR TRIM" .
2. Disconnect the rear blower motor electrical connector.
3. Remove the three screws and remove the rear blower motor.

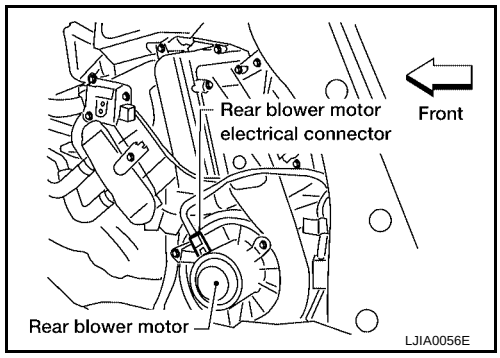


### Installation

Installation is in the reverse order of removal.

# IN-CABIN MICROFILTER

PFP:27277

## Removal and Installation

EJS005EV

### FUNCTION

The air inside the passenger compartment is filtered by the in-cabin microfilters when the heater or A/C controls are set on either the recirculation or fresh mode. The two in-cabin microfilters are located in the front heater and cooling unit assembly. The rear heater and cooling unit assembly only draws in air from the passenger compartment to recirculate into the passenger compartment, so the rear heater and cooling unit assembly is not equipped with in-cabin microfilters.

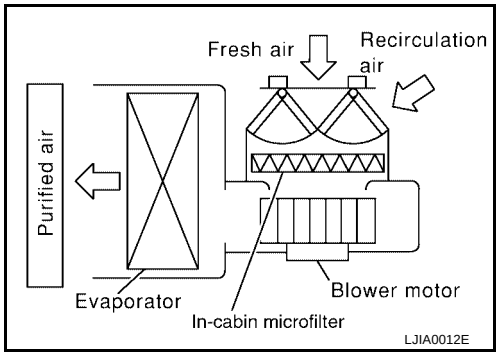


### REPLACEMENT TIMING

Replacement of the two in-cabin microfilters is recommended on a regular interval depending on the driving conditions. Refer to MA-7, "PERIODIC MAINTENANCE" . It may also be necessary to replace the two in-cabin microfilters as part of a component replacement if the in-cabin microfilters are damaged.

### REPLACEMENT PROCEDURE

1. Remove the two lower glove box hinge pins to remove the glove box from the instrument panel and let it hang from the cord.

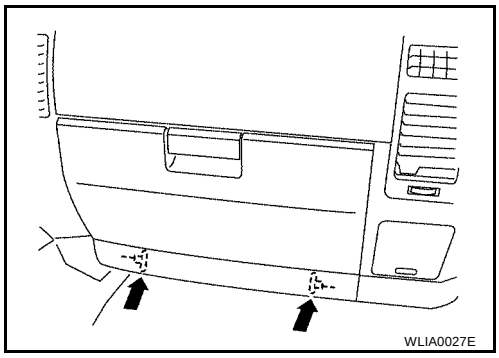


2. Remove the screw and remove the in-cabin microfilter cover.
3. Remove the in-cabin microfilters from the front heater and cooling unit assembly housing.

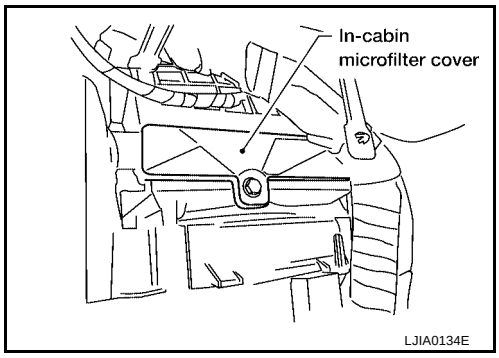


4. Insert the first new in-cabin microfilter into the front heater and cooling unit assembly housing and slide it over to the right. Insert the second new in-cabin microfilter into the front heater and cooling unit assembly housing.

   **NOTE:**
   The in-cabin microfilters are marked with air flow arrows. The end of the microfilter with the arrow should face the rear of the vehicle. The arrows should point downward.

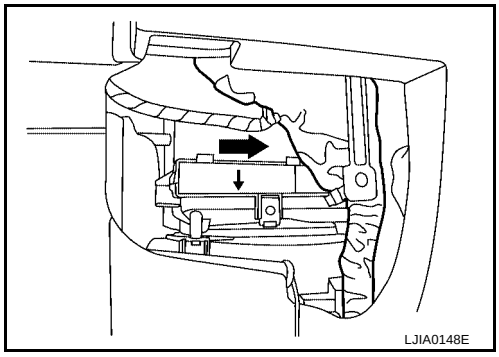

5. Install the in-cabin microfilter cover.

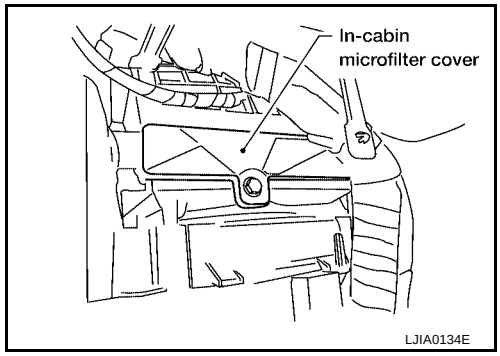


6. Install the lower glove box in the instrument panel and secure it with the two hinge pins.

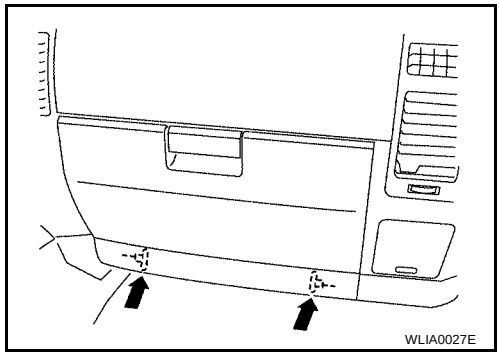

# HEATER & COOLING UNIT ASSEMBLY

PFP:27110

## Components

EJS005EW

### Front Heater and Cooling Unit Assembly

SEC. 271 • 276 • 278

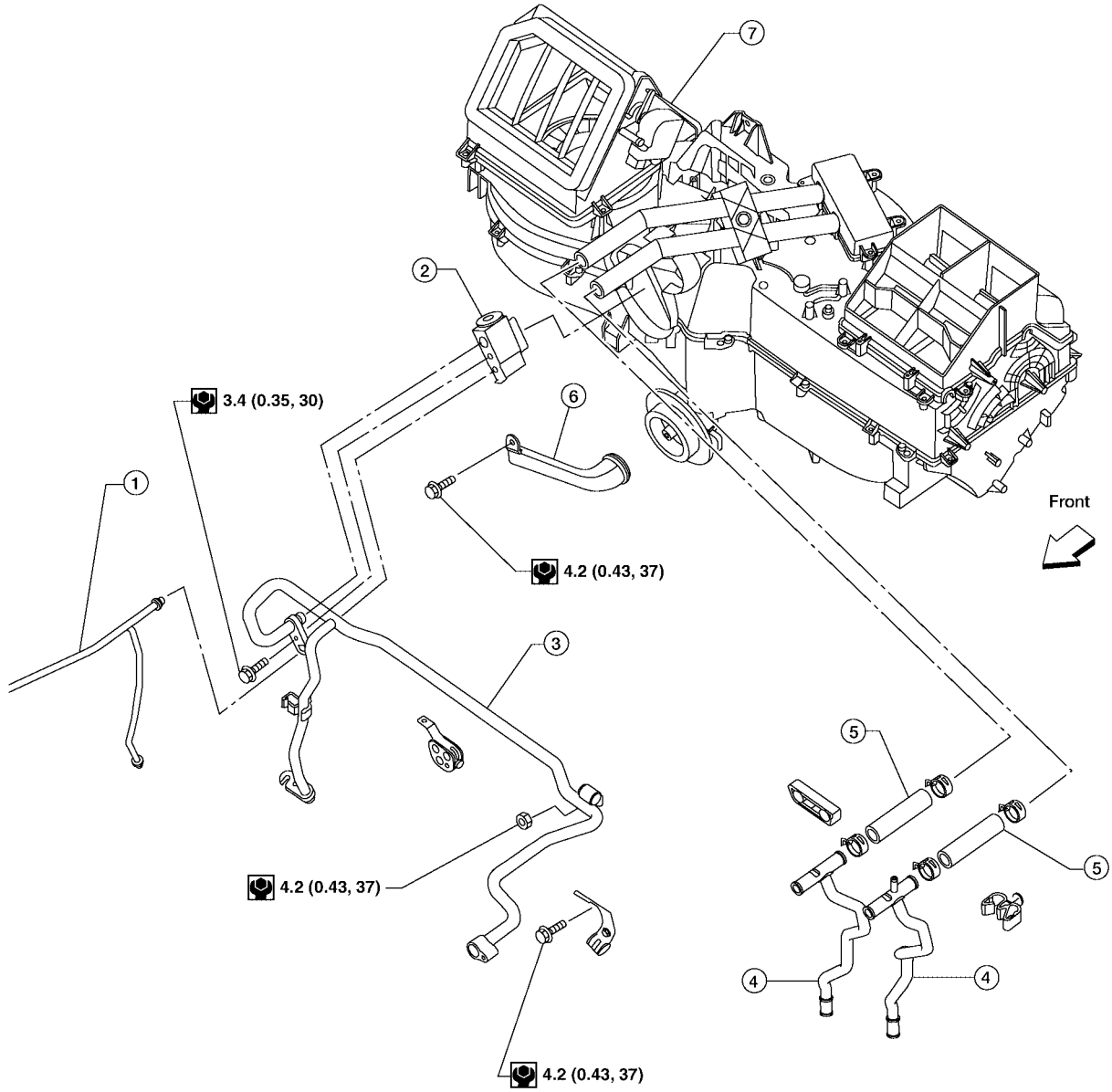


N·m (kg-m, in-lb)

WJIA0957E

1. High-pressure A/C pipe
2. Front expansion valve
3. Low-pressure A/C pipe
4. Front heater core pipe
5. Front heater core hose
6. A/C drain hose
7. Front heater and cooling unit assembly

### Rear Heater and Cooling Unit Assembly

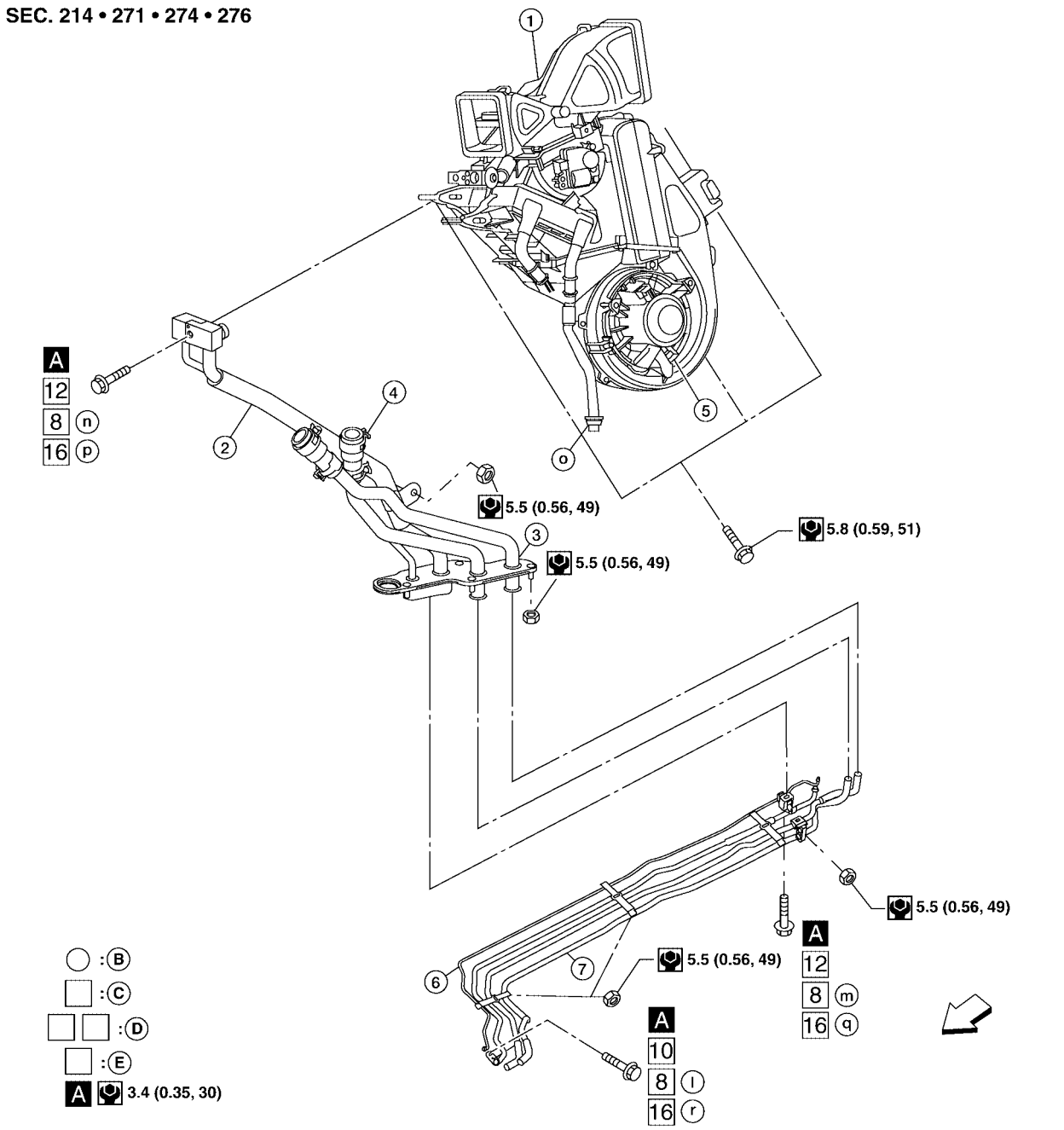


1. Rear heater and cooling unit assembly
2. Rear A/C pipes
3. Rear A/C heater core pipes
4. Rear heater core hose
5. Rear blower motor
6. Underfloor rear A/C pipes
7. Underfloor rear heater core pipes

A. Bolt torque specifications
B. Leak checking order (l - r)
C. Tightening torque
D. Wrench size
E. O-ring size

⇐ Front

NOTE: The O-ring size 8 is the high-side and the O-ring size 16 is the low-side.

## Removal and Installation

EJS005EX

### FRONT HEATER AND COOLING UNIT ASSEMBLY

#### Removal

1. Move the two front seats to the rearmost position on the seat track.
2. Disconnect the battery negative terminal and battery positive terminal.

3. Discharge the refrigerant from the A/C system. Refer to ATC-221, "HFC-134a (R-134a) Service Procedure" .
4. Drain the coolant from the engine cooling system. Refer to MA-13, "Changing Engine Coolant" .
5. Disconnect the front heater hoses from the front heater core.
6. Disconnect the high/low pressure pipes from the front expansion valve.
7. Remove the instrument panel and console panel. Refer to IP-10, "INSTRUMENT PANEL" .
8. Remove the steering column. Refer to PS-10, "STEERING COLUMN" .
9. Disconnect the instrument panel wire harness at the RH and LH in-line connector brackets, and the fuse block (J/B) electrical connectors. Refer to PG-4, "POWER SUPPLY ROUTING CIRCUIT" .
10. Disconnect the steering member from each side of the vehicle body.
11. Remove the front heater and cooling unit assembly with it attached to the steering member, from the vehicle.

    **CAUTION:**
    **Use care not to damage the seats and interior trim panels when removing the front heater and cooling unit assembly with it attached to the steering member.**
12. Remove the front heater and cooling unit assembly from the steering member.

### Installation

Installation is in the reverse order of removal.

**CAUTION:**
- **Replace the O-ring of the low-pressure pipe and high-pressure pipe with a new one, and apply compressor oil to it when installing it.**
- **After charging the refrigerant, check for leaks.**

**NOTE:**
- Fill the engine cooling system with the specified coolant mixture. Refer to MA-13, "Changing Engine Coolant" .
- Recharge the A/C system. Refer to ATC-221, "HFC-134a (R-134a) Service Procedure" .

## REAR HEATER AND COOLING UNIT ASSEMBLY

### Removal

1. Discharge the refrigerant from the A/C system. Refer to ATC-221, "HFC-134a (R-134a) Service Procedure" .
2. Drain the coolant from the engine cooling system. Refer to MA-13, "Changing Engine Coolant" .
3. Disconnect the rear heater core hoses from the rear heater core.
4. Disconnect the rear A/C pipes from the rear expansion valve.
5. Remove the luggage side finisher lower RH. Refer to EI-31, "BODY SIDE TRIM" .
6. Disconnect the following electrical connectors:
   - Rear blower motor
   - Rear blower motor resistor
   - Rear air mix door motor
7. Disconnect the ducts from the rear heater and cooling unit assembly.
8. Remove the rear heater and cooling unit assembly.

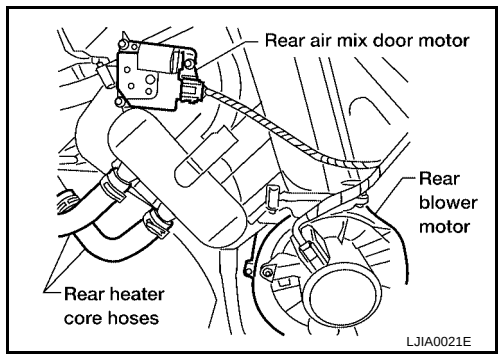


### Installation

Installation is in the reverse order of removal.

**CAUTION:**
- **Replace the O-ring of the low-pressure pipe and high-pressure pipe with a new one, and apply compressor oil to it when installing it.**
- **After charging the refrigerant, check for leaks.**

**NOTE:**
- Fill the engine cooling system with the specified coolant mixture. Refer to MA-13, "Changing Engine Coolant" .

- Recharge the A/C system. Refer to ATC-221, "HFC-134a (R-134a) Service Procedure" .

# HEATER CORE

PFP:27140

## Components

EJS005EY

### Front Heater and Cooling Unit Assembly

SEC. 271

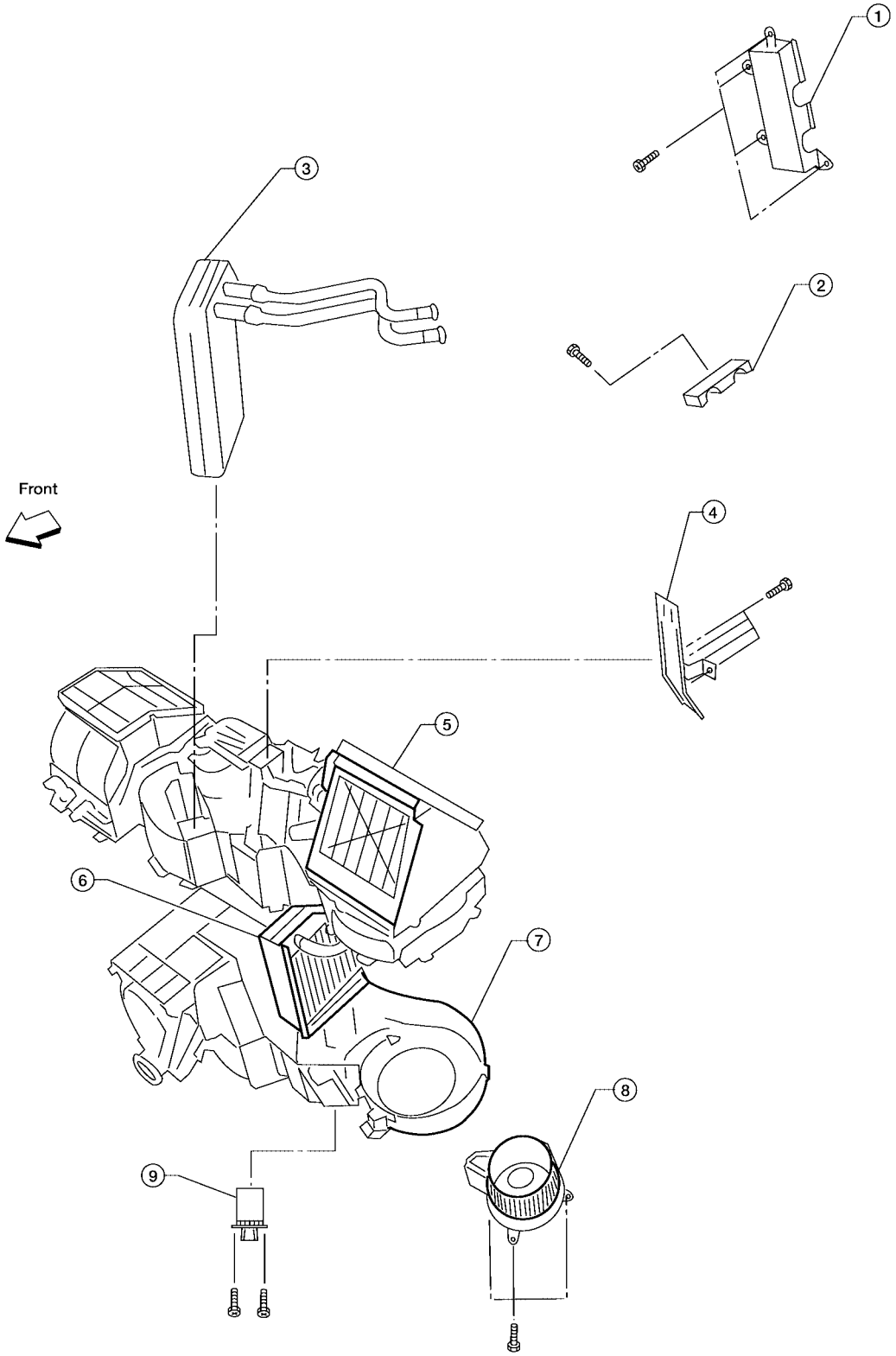


| | | | | | |
|---|---|---|---|---|---|
| 1. | Heater core cover | 2. | Heater core pipe bracket | 3. | Heater core |
| 4. | Upper bracket | 5. | Upper heater and cooling unit case | 6. | A/C evaporator |
| 7. | Lower heater and cooling unit case | 8. | Blower motor | 9. | Variable blower control |

### Rear Heater and Cooling Unit Assembly

SEC. 274

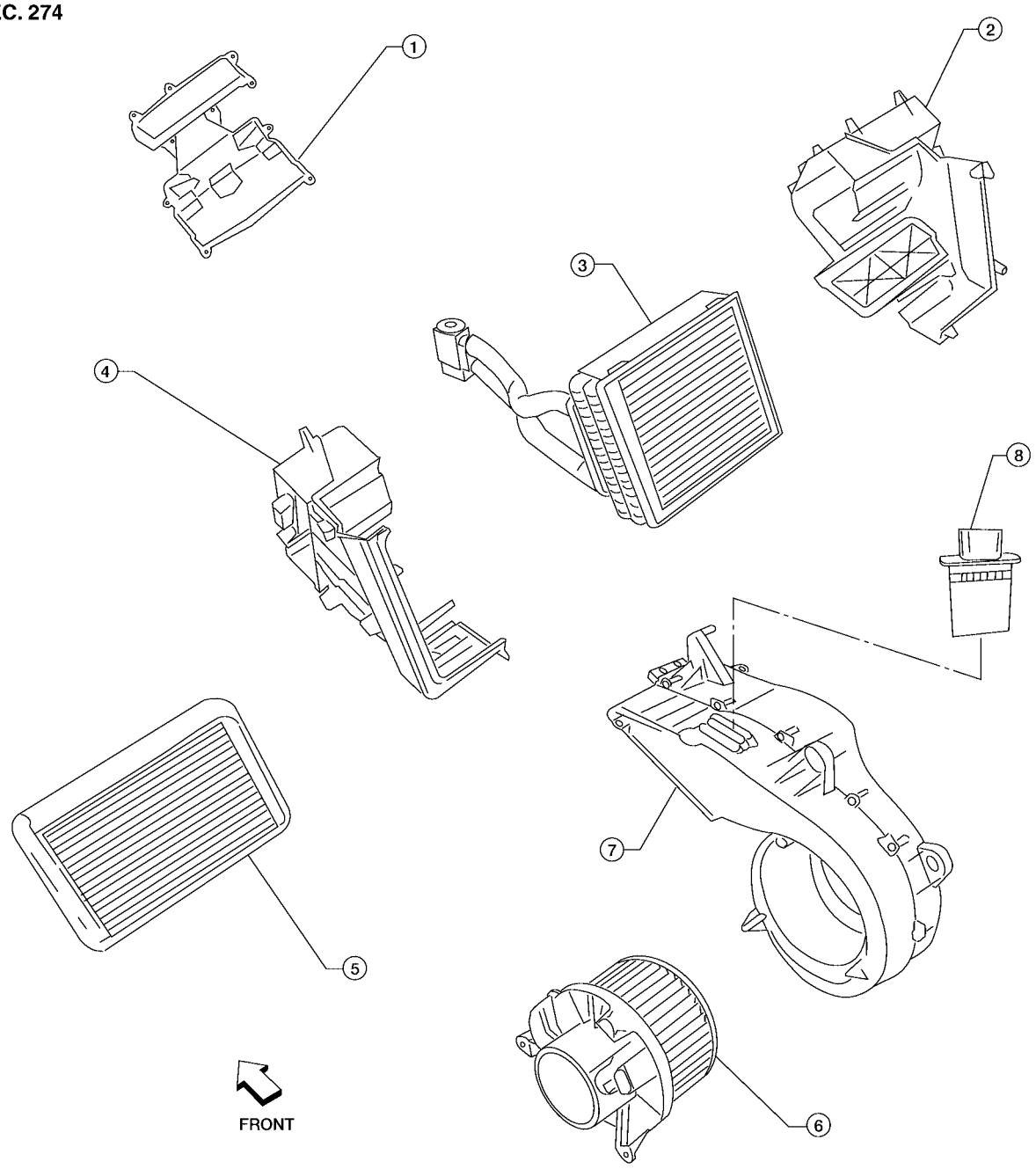


LJIA0135E

| | | | | | |
|---|---|---|---|---|---|
| 1. | Front cover | 2. | Evaporator and heater core case | 3. | Evaporator |
| 4. | Side cover | 5. | Heater core | 6. | Blower motor |
| 7. | Blower motor case | 8. | Blower motor resistor | | |

## Removal and Installation

EJS005EZ

### FRONT HEATER CORE

#### Removal

1. Remove the front heater and cooling unit assembly. Refer to ATC-203, "FRONT HEATER AND COOLING UNIT ASSEMBLY" .
2. Remove the four screws and remove the upper bracket.
3. Remove the four screws and remove the heater core cover.
4. Remove the heater core pipe bracket.

5. Remove the heater core.

   **NOTE:**
   If the in-cabin microfilters are contaminated from coolant leaking from the heater core, replace the in-cabin microfilters with new ones before installing the new heater core.

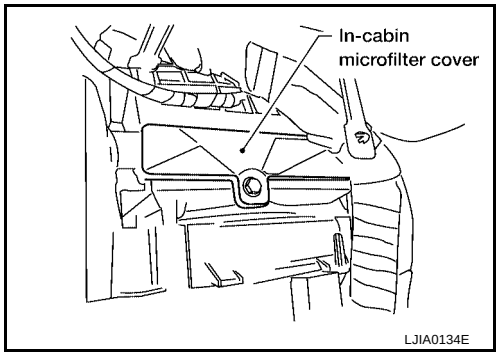


### Installation

Installation is in the reverse order of removal.

## REAR HEATER CORE

### Removal

1. Partially drain the engine cooling system. Refer to MA-13, "Changing Engine Coolant" .
2. Remove the luggage side finisher lower RH. Refer to EI-31, "BODY SIDE TRIM" .
3. Disconnect the rear heater hoses from the heater core.

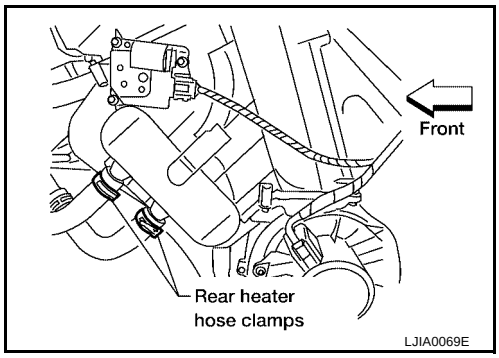


4. Remove the rear heater core bracket.
5. Remove the heater core.

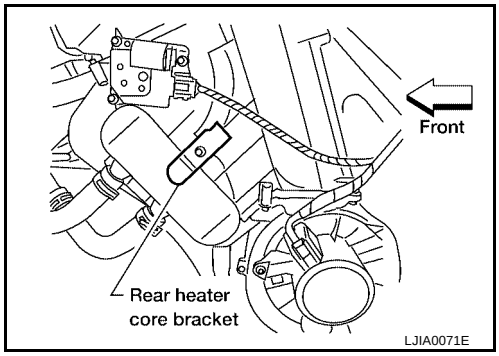


### Installation

Installation is in the reverse order of removal.

# DEFROSTER DOOR MOTOR

PFP:27733

## Removal and Installation

EJS005F0

**Defroster Door Motor - Front Heater and Cooling Unit Assembly**

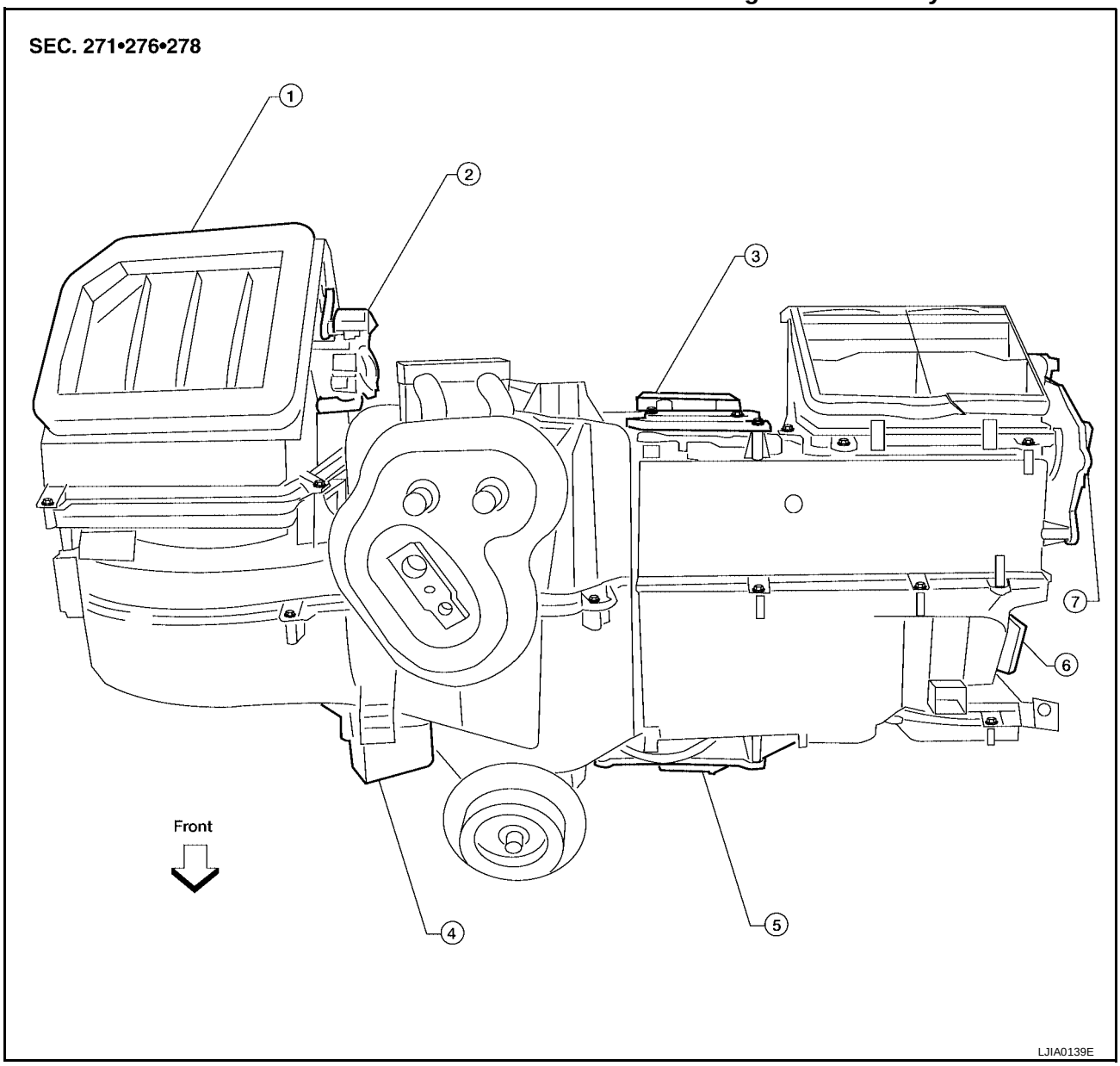


| | | | | | |
|---|---|---|---|---|---|
| 1. | Front heater and cooling unit assembly | 2. | Intake door motor | 3. | Air mix door motor (driver) |
| 4. | Variable blower control | 5. | Air mix door motor (passenger) | 6. | Mode door motor |
| 7. | Defroster door motor | | | | |

### REMOVAL

1. Remove the BCM. Refer to BCS-26, "Removal and Installation" .
2. Remove the Bose speaker amplifier if equipped. Refer to AV-70, "BOSE SPEAKER AMP." .
3. Disconnect the defroster door motor electrical connector.
4. Remove the three screws and remove the defroster door motor.

### INSTALLATION

Installation is in the reverse order of removal.

# INTAKE DOOR MOTOR

PFP:27730

## Removal and Installation

EJS005F1

**Intake Door Motor - Front Heater and Cooling Unit Assembly**

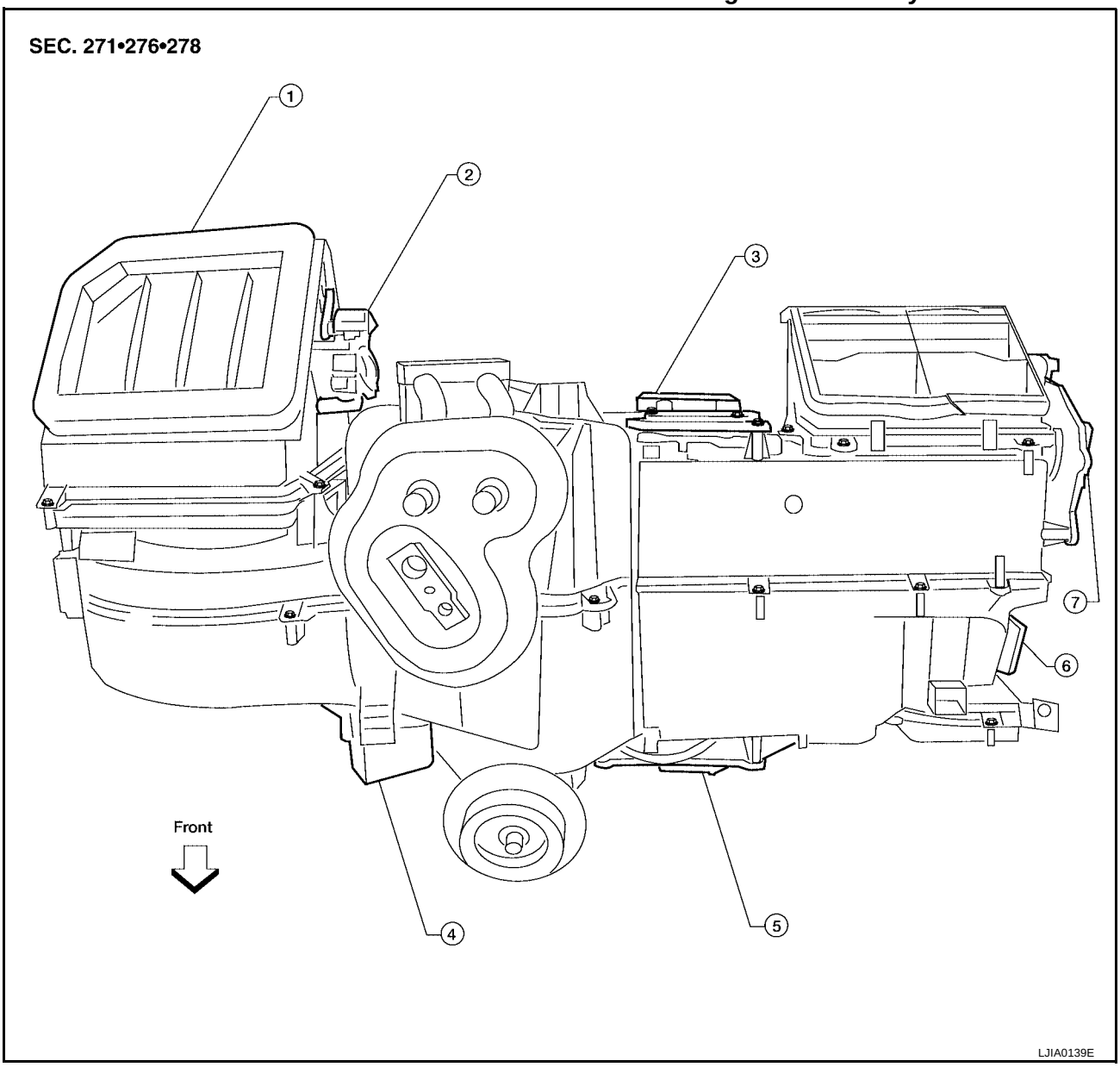


1. Front heater and cooling unit assembly
2. Intake door motor
3. Air mix door motor (driver)
4. Variable blower control
5. Air mix door motor (passenger)
6. Mode door motor
7. Defroster door motor

### REMOVAL

1. Remove the front heater and cooling unit assembly. Refer to ATC-203, "FRONT HEATER AND COOLING UNIT ASSEMBLY" .
2. Remove the steering member from the front heater and cooling unit assembly.
3. Disconnect the intake door motor electrical connector.
4. Remove the three screws and remove the intake door motor.

### INSTALLATION

Installation is in the reverse order of removal.

# MODE DOOR MOTOR

PFP:27731

## Removal and Installation

EJS005F2

### Mode Door Motor - Front Heater and Cooling Unit Assembly

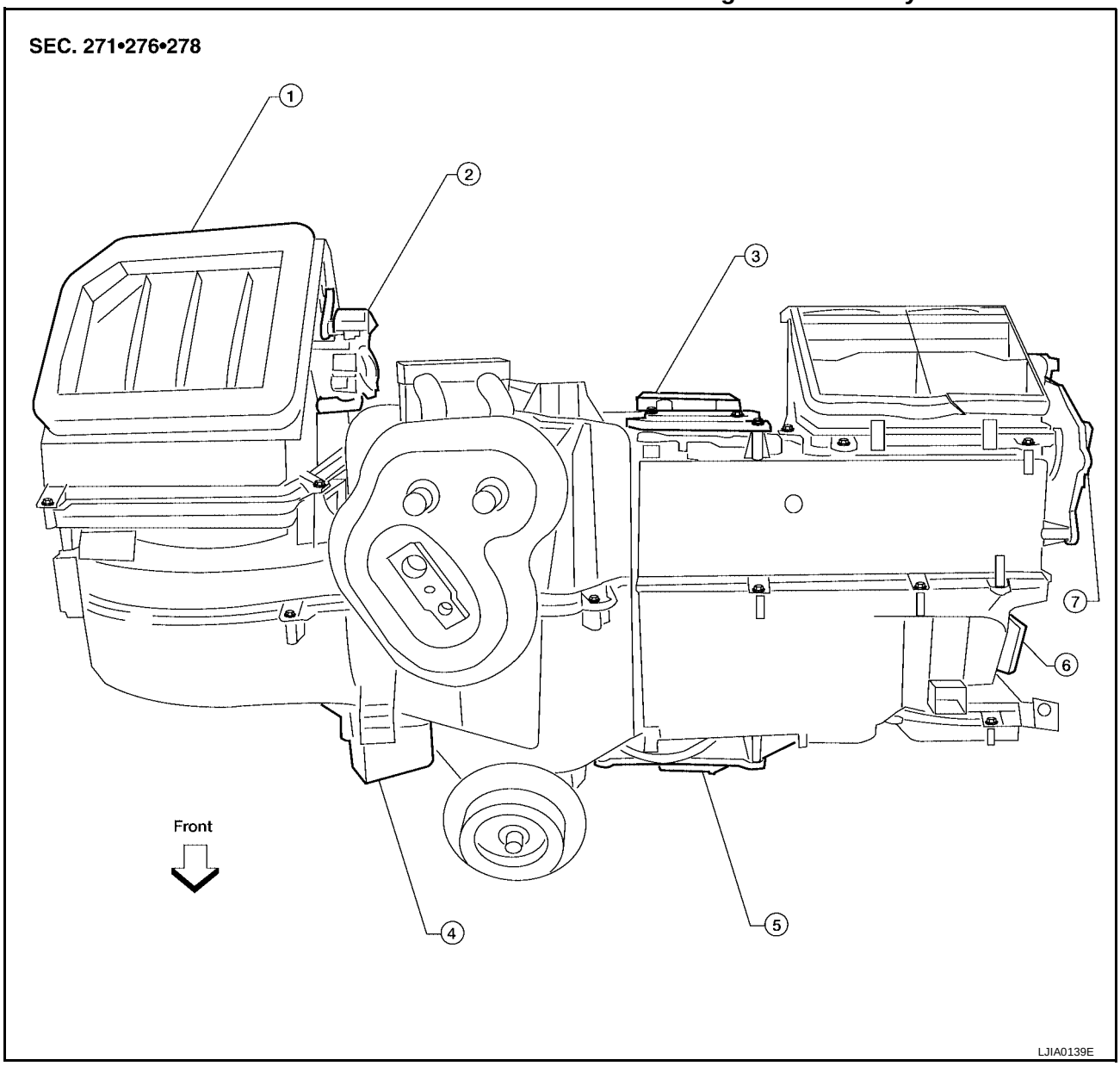


1. Front heater and cooling unit assembly
2. Intake door motor
3. Air mix door motor (driver)
4. Variable blower control
5. Air mix door motor (passenger)
6. Mode door motor
7. Defroster door motor

### REMOVAL

1. Remove the center console lower cover LH. Refer to IP-10, "INSTRUMENT PANEL" .
2. Disconnect the mode door motor electrical connector.
3. Remove the two screws and remove the mode door motor.

### INSTALLATION

Installation is in the reverse order of removal.

# AIR MIX DOOR MOTOR

PFP:27732

## Components

EJS005F3

**Air Mix Door Motors - Front Heater and Cooling Unit Assembly**

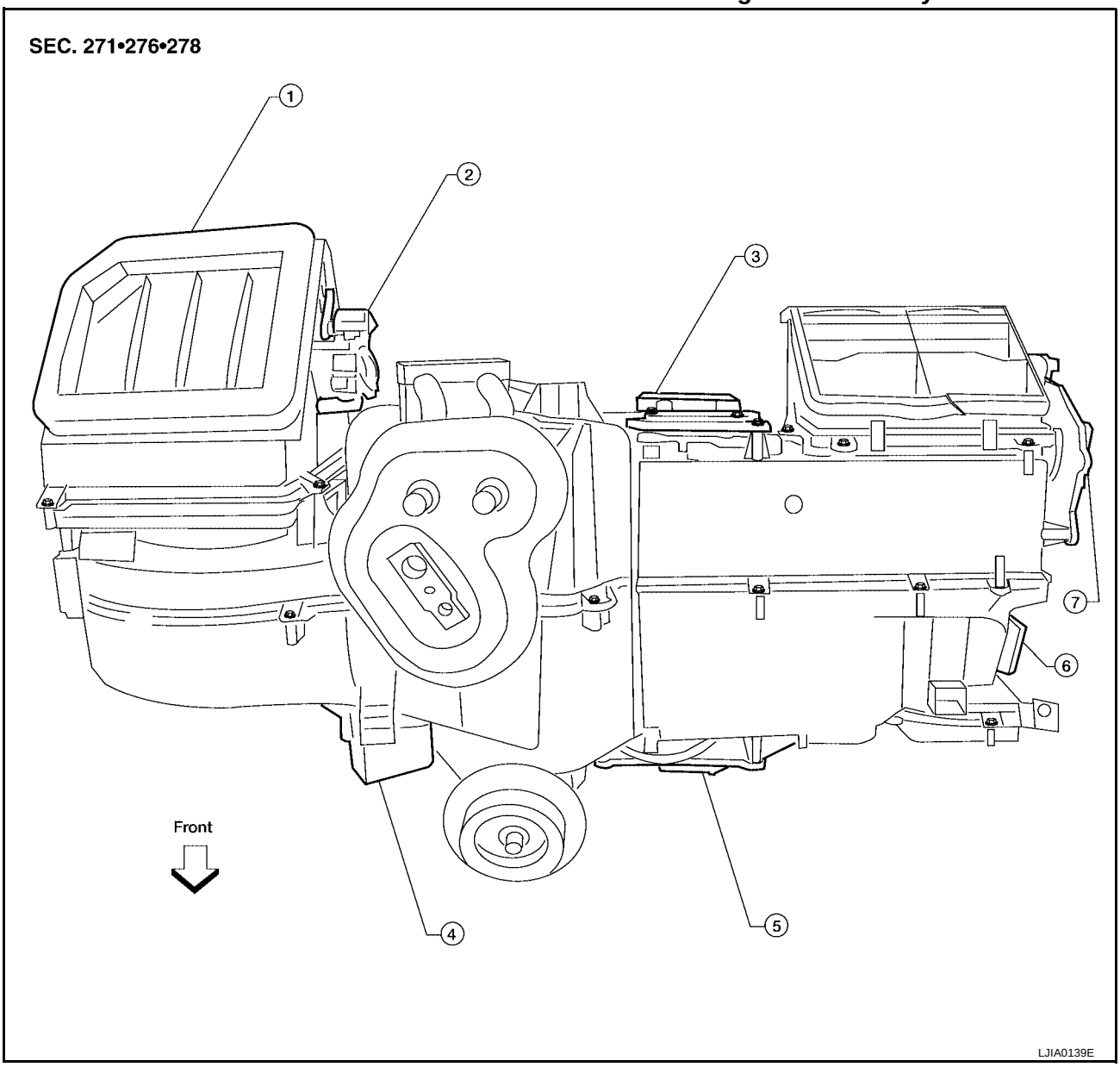


1. Front heater and cooling unit assembly
2. Intake door motor
3. Air mix door motor (driver)
4. Variable blower control
5. Air mix door motor (passenger)
6. Mode door motor
7. Defroster door motor

## Removal and Installation

EJS005F4

### FRONT AIR MIX DOOR MOTOR (DRIVER)

#### Removal

1. Remove the front heater and cooling unit assembly. Refer to ATC-203, "FRONT HEATER AND COOLING UNIT ASSEMBLY" .
2. Remove the steering member from the front heater and cooling unit assembly.
3. Disconnect the air mix door motor electrical connector.
4. Remove the three screws and remove the air mix door motor.

#### Installation

Installation is in the reverse order of removal.

## FRONT AIR MIX DOOR MOTOR (PASSENGER)

### Removal

1. Remove the center console lower cover LH. Refer to IP-10, "INSTRUMENT PANEL" .
2. Disconnect the air mix door motor electrical connector.
3. Remove the three screws and remove the air mix door motor.

### Installation

Installation is in the reverse order of removal.

## REAR AIR MIX DOOR MOTOR

### Removal

1. Remove the luggage side lower finisher RH. Refer to EI-31, "BODY SIDE TRIM" .
2. Disconnect the rear air mix door motor electrical connector.
3. Remove the three screws and remove the rear air mix door motor.

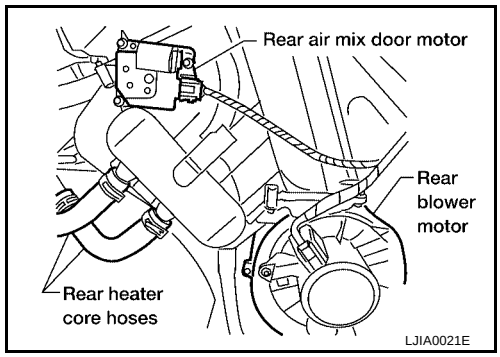


### Installation

Installation is in the reverse order of removal.

# VARIABLE BLOWER CONTROL

PFP:27200

## Removal and Installation

EJS005F5

### Variable Blower Control - Front Heater and Cooling Unit Assembly

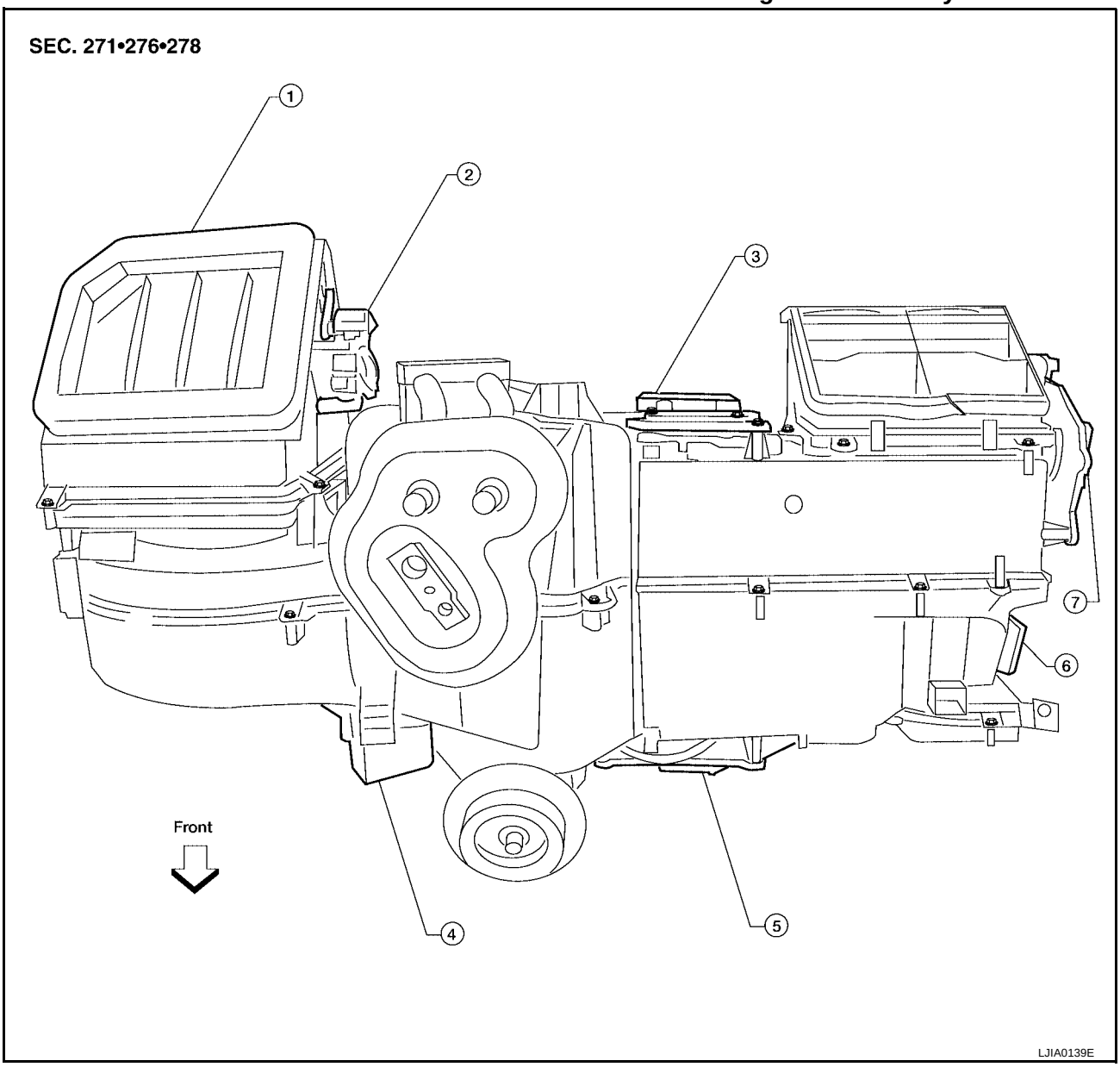


1. Front heater and cooling unit assembly
2. Intake door motor
3. Air mix door motor (driver)
4. Variable blower control
5. Air mix door motor (passenger)
6. Mode door motor
7. Defroster door motor

### REMOVAL

1. Remove the glove box assembly. Refer to IP-13, "LOWER INSTRUMENT PANEL RH AND GLOVE BOX".
2. Disconnect the variable blower control electrical connector.
3. Remove the two screws and remove the variable blower control.

### INSTALLATION

Installation is in the reverse order of removal.

# REAR BLOWER MOTOR RESISTOR

PFP:27150

## Removal and Installation

EJS005F6

**Rear Blower Motor Resistor**

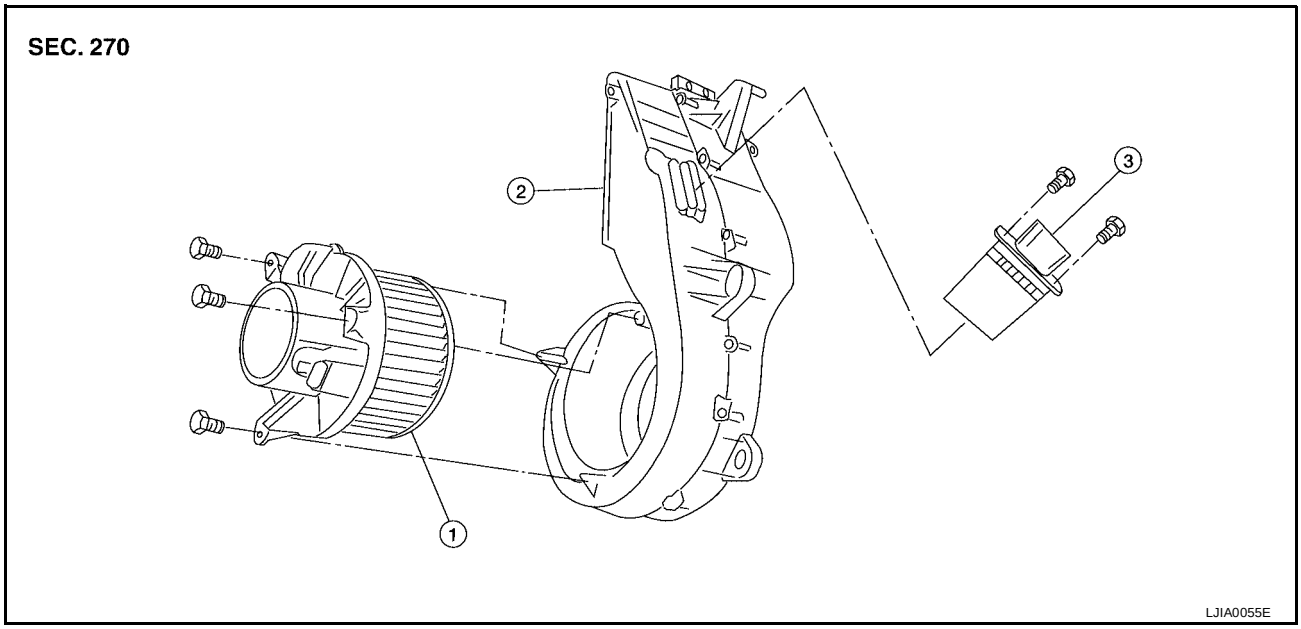


1. Rear blower motor
2. Rear blower motor case
3. Rear blower motor resistor

### REMOVAL

1. Remove the luggage side finisher lower RH. Refer to EI-31, "BODY SIDE TRIM" .
2. Disconnect the rear blower motor resistor electrical connector.
3. Remove the two screws and remove the rear blower motor resistor.

### INSTALLATION

Installation is in the reverse order of removal.

# DUCTS AND GRILLES

PFP:27860

## Components

EJS005F7

### Ducts - Front Heater and Cooling Unit Assembly

SEC. 270 • 271

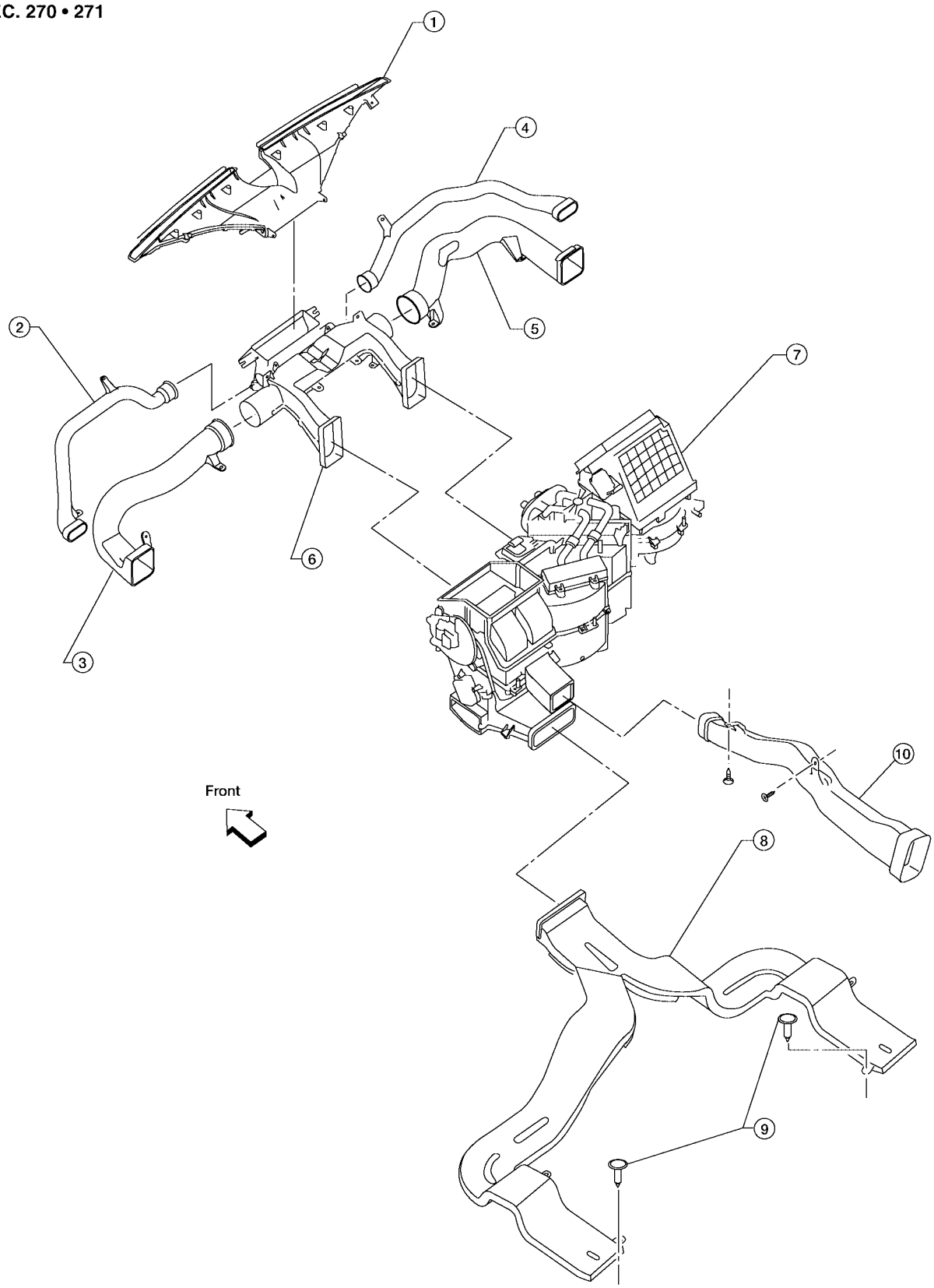


WJIA0956E

1. Defroster nozzle
2. LH side demister duct
3. LH ventilator duct
4. RH side demister duct
5. RH ventilator duct
6. Center ventilator duct
7. Front heater and cooling unit assembly
8. Floor duct
9. Clips
10. Heat duct

## Ducts - Rear Heater and Cooling Unit Assembly

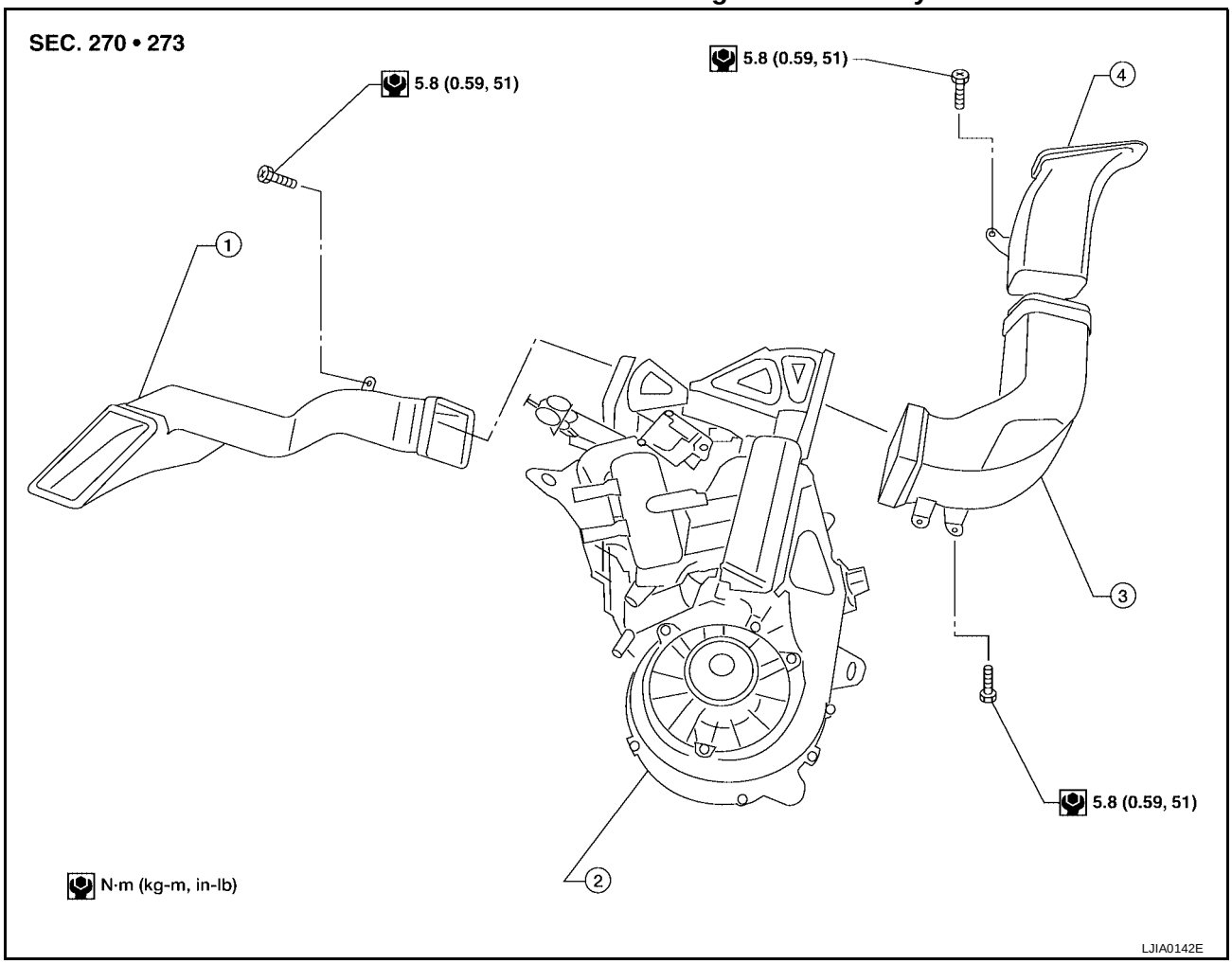


1. Rear floor duct
2. Rear heater and cooling unit assembly
3. Rear lower overhead duct
4. Rear upper overhead duct

## Grilles

**SEC. 685 • 970**

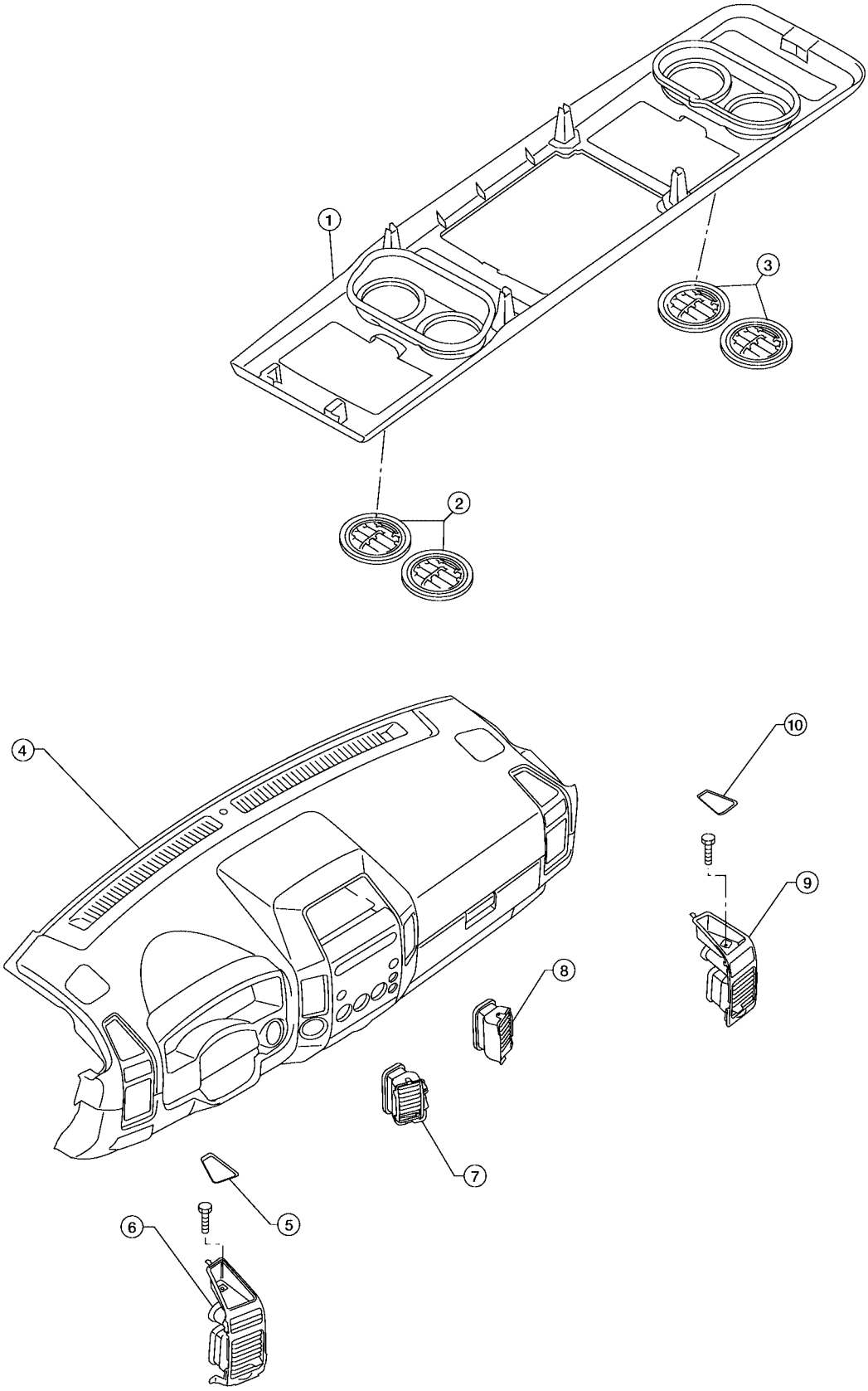


1. Overhead console trim panel
2. Overhead console front grilles (front)
3. Overhead console rear grilles (rear)
4. Instrument panel
5. Storage tray bottom cover (LH)
6. LH side ventilator and demister grille

7. LH ventilator grille
8. RH ventilator grille
9. RH side ventilator and demister grille
10. Storage tray bottom cover (RH)

## Removal and Installation

EJS005F8

### CENTER CONSOLE HEAT DUCT AND REAR FINISHER ASSEMBLY GRILLE

#### Removal

The center console must be removed and disassembled to remove the heat duct and rear finisher assembly grille. Refer to IP-14, "CENTER CONSOLE" .

#### Installation

Installation is in the reverse order of removal.

### DEFROSTER NOZZLE

#### Removal

1. Remove the instrument panel trim. Refer to IP-10, "INSTRUMENT PANEL" .
2. Remove the front heater and cooling unit assembly. Refer to ATC-203, "FRONT HEATER AND COOLING UNIT ASSEMBLY" .
3. Remove the defroster nozzle.

#### Installation

Installation is in the reverse order of removal.

### RH AND LH SIDE DEMISTER DUCT

#### Removal

1. Remove the instrument panel trim. Refer to IP-10, "INSTRUMENT PANEL" .
2. Remove the front heater and cooling unit assembly. Refer to ATC-203, "FRONT HEATER AND COOLING UNIT ASSEMBLY" .
3. Remove the RH or LH side demister duct.

#### Installation

Installation is in the reverse order of removal.

### RH AND LH VENTILATOR DUCT

#### Removal

1. Remove the instrument panel trim. Refer to IP-10, "INSTRUMENT PANEL" .
2. Remove the front heater and cooling unit assembly. Refer to ATC-203, "FRONT HEATER AND COOLING UNIT ASSEMBLY" .
3. Remove the RH or LH ventilator duct.

#### Installation

Installation is in the reverse order of removal.

### CENTER VENTILATOR DUCT

#### Removal

1. Remove the instrument panel trim. Refer to IP-10, "INSTRUMENT PANEL" .
2. Remove the front heater and cooling unit assembly. Refer to ATC-203, "FRONT HEATER AND COOLING UNIT ASSEMBLY" .
3. Remove the defroster nozzle.
4. Remove the RH and LH side demister ducts.
5. Remove the RH and LH ventilator ducts.
6. Remove the center ventilator duct.

#### Installation

Installation is in the reverse order of removal.

### FLOOR DUCT

#### Removal

1. Remove the floor carpet. Refer to EI-34, "FLOOR TRIM" .

2. Remove the two clips and remove the floor duct.

### Installation

Installation is in the reverse order of removal.

## REAR OVERHEAD DUCTS

### Removal

1. Remove the luggage side finisher lower RH. Refer to EI-37, "LUGGAGE FLOOR TRIM" .
2. Remove the headliner. Refer to EI-35, "HEADLINING" .

   **NOTE:**
   The rear headliner duct connected to the rear overhead duct is part of the headlining trim panel and is replaced as an assembly.
3. Remove the two bolts and remove the rear upper and lower overhead ducts.

### Installation

Installation is in the reverse order of removal.

## REAR FLOOR DUCT

### Removal

1. Remove the luggage side finisher lower RH. Refer to EI-37, "LUGGAGE FLOOR TRIM" .
2. Reposition the floor carpet out of the way.
3. Remove the two bolts and remove the rear floor duct.

### Installation

Installation is in the reverse order of removal.

## GRILLES

### Removal

1. Remove the interior trim panels as necessary. Refer to IP-10, "INSTRUMENT PANEL" or EI-35, "HEADLINING" .
2. Remove the grille from the interior trim panel.

   **NOTE:**
   To remove the overhead console front and rear grilles, turn the grille counter-clockwise to release the grille from the overhead console trim panel.

### Installation

Installation is in the reverse order of removal.

# REFRIGERANT LINES

PFP:92600

## HFC-134a (R-134a) Service Procedure

EJS005F9

### SETTING OF SERVICE TOOLS AND EQUIPMENT

#### Discharging Refrigerant

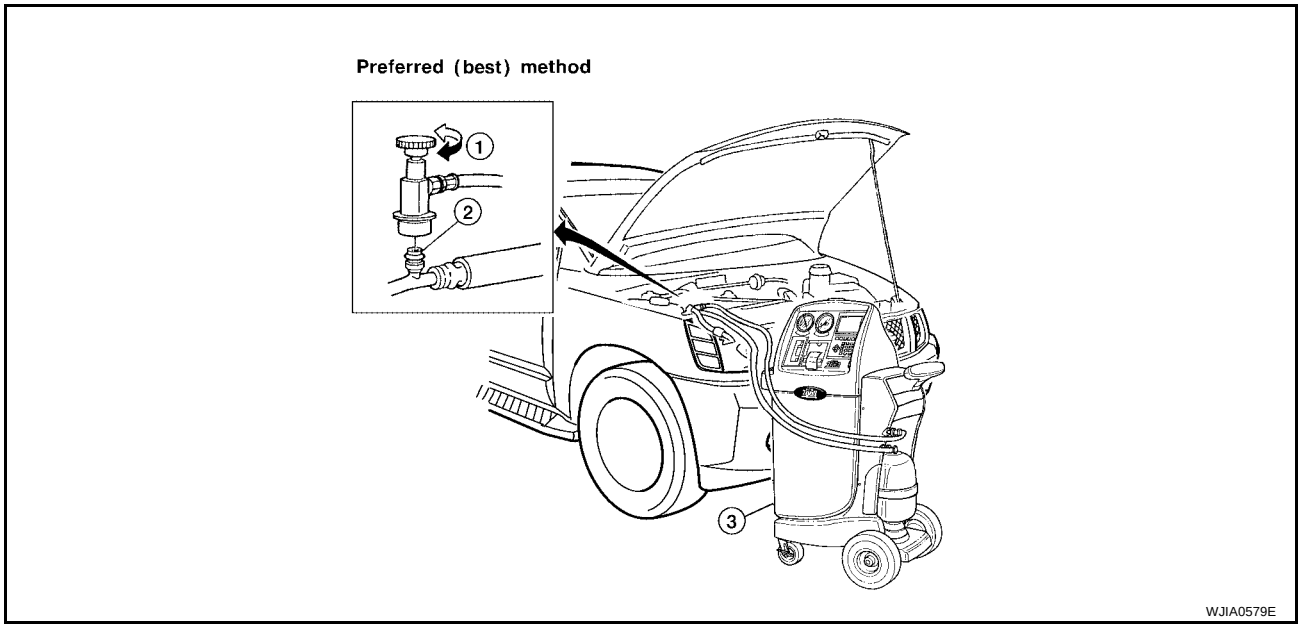


1. Shut-off valve
2. A/C service valve
3. Recovery/recycling equipment

**WARNING:**

**Avoid breathing A/C refrigerant and oil vapor or mist. Exposure may irritate eyes, nose and throat. Remove HFC-134a (R-134a) refrigerant from the A/C system using certified service equipment meeting requirements of SAE J2210 HFC-134a (R-134a) recycling equipment or SAE J2201 HFC-134a (R-134a) recovery equipment. If an accidental system discharge occurs, ventilate the work area before resuming service. Additional health and safety information may be obtained from the refrigerant and oil manufacturers.**

#### Evacuating System and Charging Refrigerant

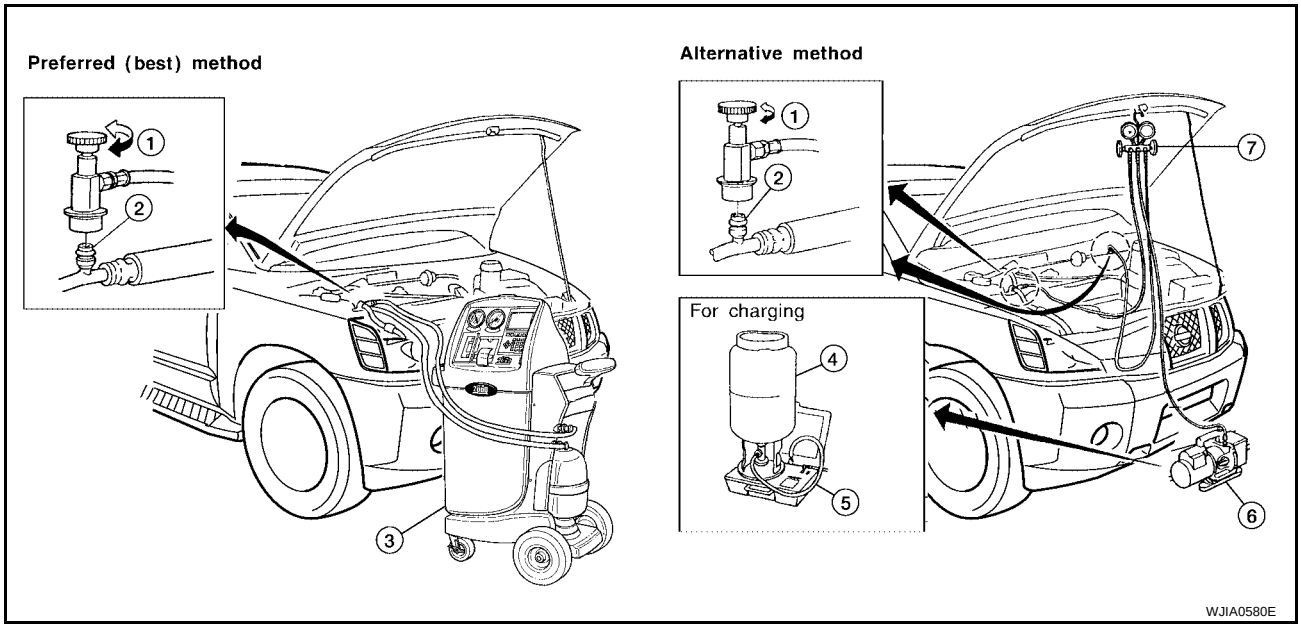


1. Shut-off valve
2. A/C service valve
3. Recovery/recycling equipment
4. Refrigerant container (HFC-134a)
5. Weight scale (J-39650)
6. Evacuating vacuum pump (J-39699)
7. Manifold gauge set (J-39183)

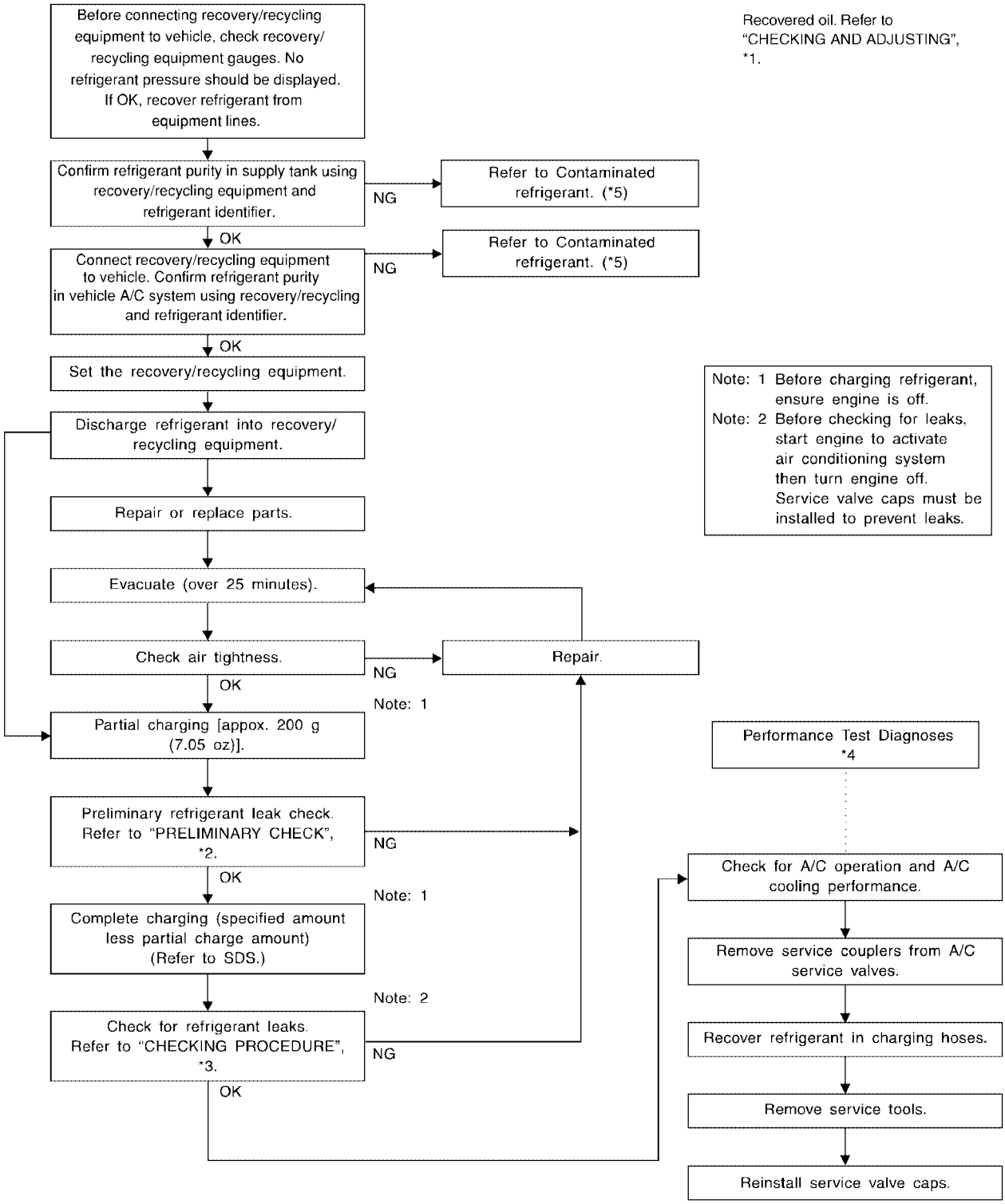


*1 ATC-22, "CHECKING AND ADJUSTING"

*2 ATC-237, "PRELIMINARY CHECK"

*3 ATC-239, "CHECKING PROCEDURE"

*4 ATC-161, "PERFORMANCE TEST DIAGNOSES"

*5 ATC-5, "Contaminated Refrigerant"

## Components

EJS005FA

### Front A/C Compressor and Condenser

SEC. 214 • 271 • 274 • 276

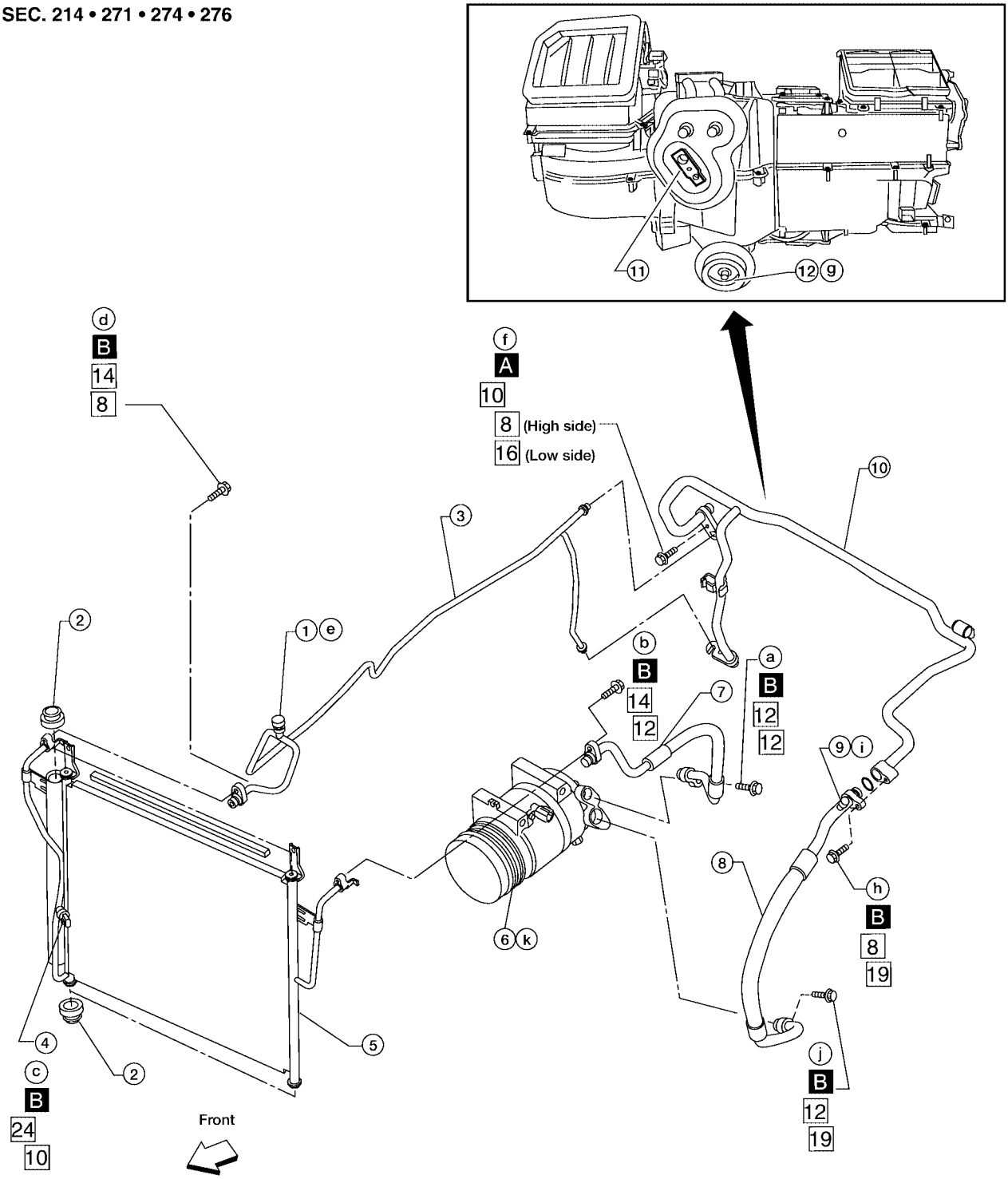


: Refrigerant leak checking order (a-k)

: Tightening torque

: Wrench size

: O-ring size

: N·m (kg-m, in-lb)

A : 3.4 (0.35 , 30)

B : 9.3 (0.95 , 82)

WJIA1578E

1. High-pressure service valve
2. Grommet
3. High-pressure pipe
4. Refrigerant pressure sensor
5. Condenser
6. Compressor shaft seal
7. High-pressure flexible hose
8. Low-pressure flexible hose
9. Low-pressure service valve
10. Low-pressure pipe
11. Expansion valve (front)
12. Drain hose

## Rear A/C

SEC. 214 • 271 • 274 • 276

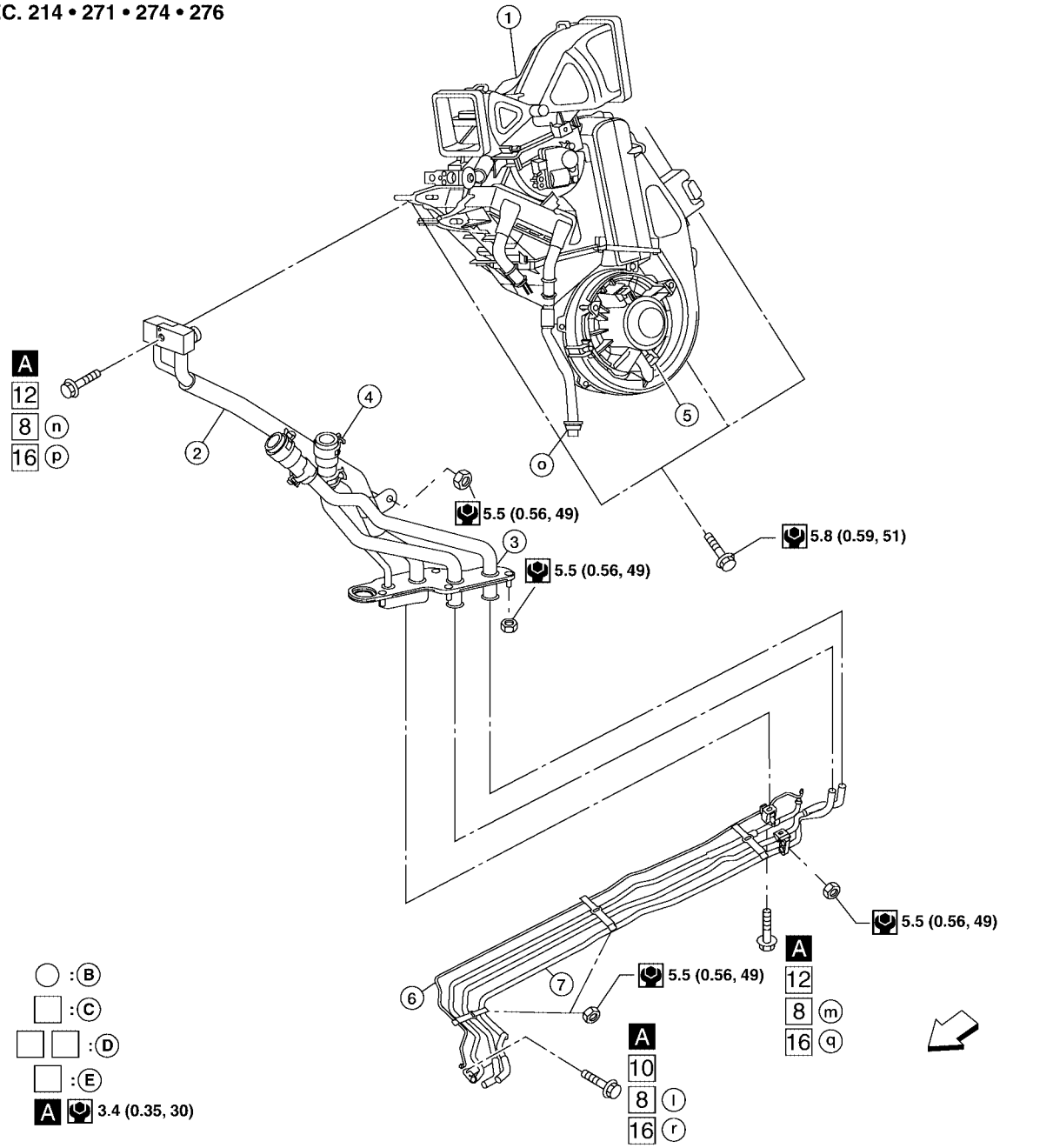


1. Rear heater and cooling unit assembly
2. Rear A/C pipes
3. Rear A/C heater core pipes
4. Rear heater core hose
5. Rear blower motor
6. Underfloor rear A/C pipes
7. Underfloor rear heater core pipes
A. Bolt torque specifications
B. Leak checking order (l - r)
C. Tightening torque
D. Wrench size
E. O-ring size

⇐ Front

NOTE: The O-ring size 8 is the high-side and the O-ring size 16 is the low-side.

**NOTE:**

Refer to ATC-6, "Precautions for Refrigerant Connection" .

## Removal and Installation for Compressor

EJS005FB

### A/C Compressor Mounting

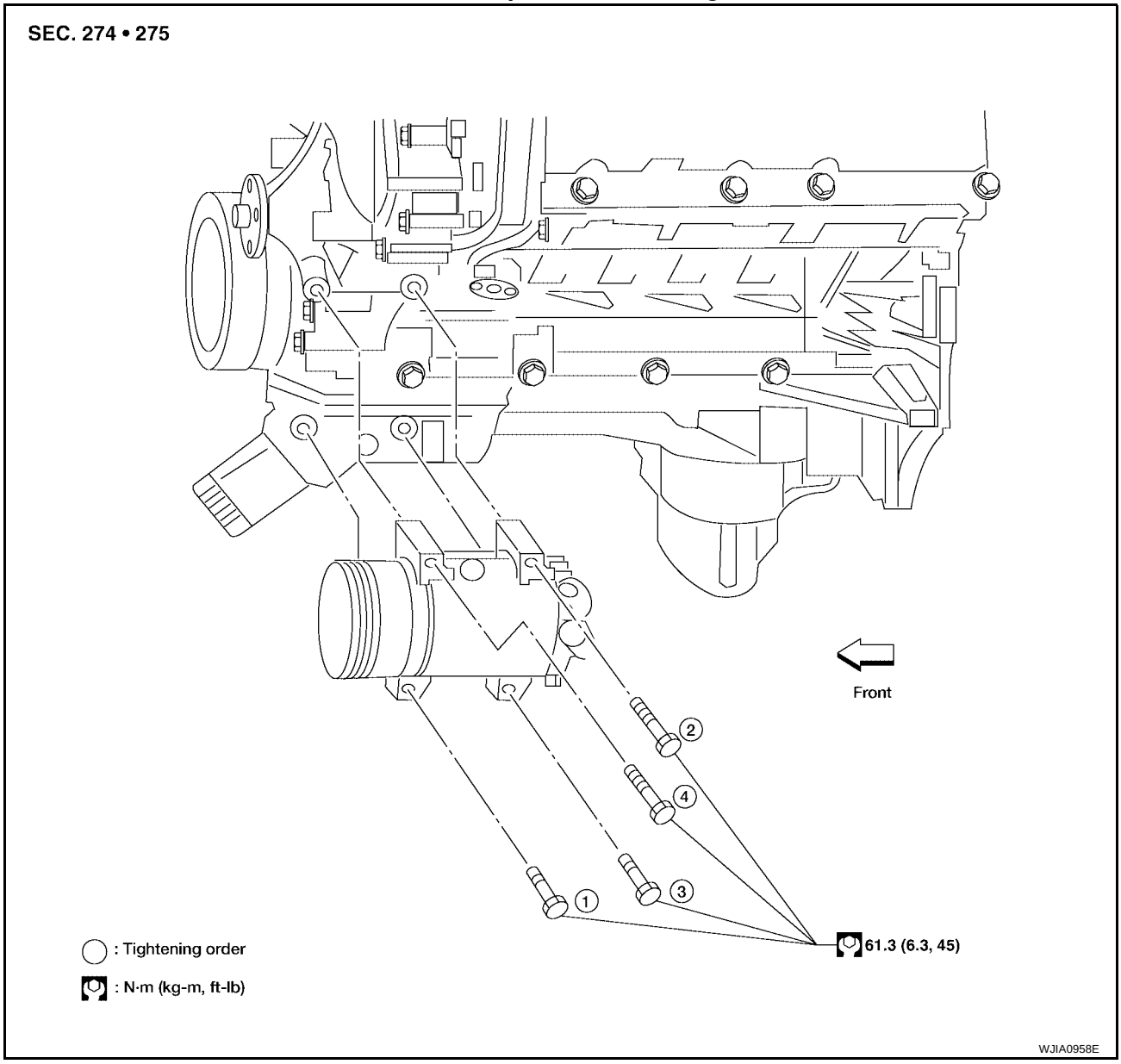


### REMOVAL

1. Discharge the refrigerant. Refer to ATC-221, "HFC-134a (R-134a) Service Procedure" .
2. Remove the front right wheel and tire assembly. Refer to WT-7, "Rotation" .
3. Remove the engine under cover and the splash shield using power tool.
4. Remove the engine air cleaner and air ducts. Refer to EM-15, "AIR CLEANER AND AIR DUCT" .
5. Remove the drive belt. Refer to EM-13, "DRIVE BELTS" .
6. Disconnect the compressor electrical connector.
7. Disconnect the high-pressure flexible hose and low-pressure flexible hose from the compressor.

   **CAUTION:**
   **Cap or wrap the joint of the pipe with suitable material such as vinyl tape to avoid the entry of air.**
8. Remove the compressor bolts and nut using power tools.

## INSTALLATION

Installation is in the reverse order of removal.

**CAUTION:**

- **Replace the O-rings of the low-pressure flexible hose and high-pressure flexible hose with new ones, apply compressor oil to the O-rings when installing them.**
- **After recharging the A/C system with refrigerant, check for leaks.**

## Removal and Installation for Compressor Clutch

EJS005FC

**Magnet Clutch Assembly**

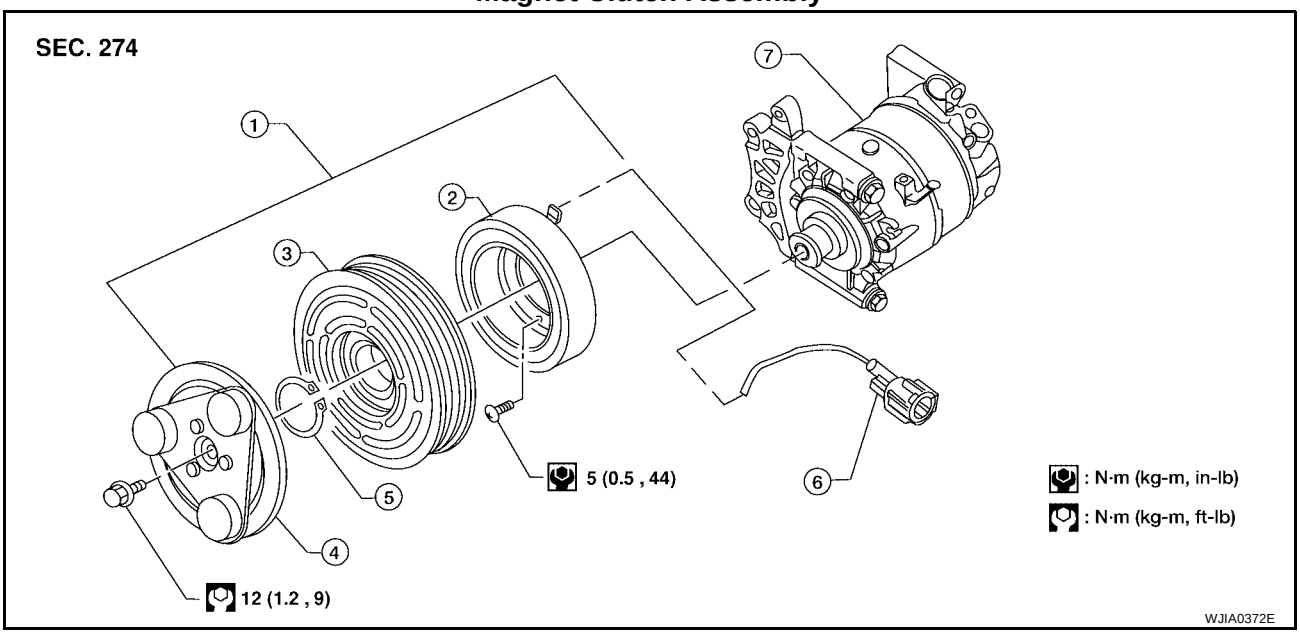


| | | | | | |
|---|---|---|---|---|---|
| 1. | Magnet clutch assembly | 2. | Magnet coil | 3. | Pulley |
| 4. | Clutch disc | 5. | Snap ring | 6. | Thermal protector (built in) |
| 7. | Compressor | | | | |

### REMOVAL

1. Remove the compressor. Refer to ATC-225, "Removal and Installation for Compressor" .
2. Remove the center bolt while holding the clutch disc stationary using Tool as shown.

   **Tool number : J-44614**

3. Remove the clutch disc.

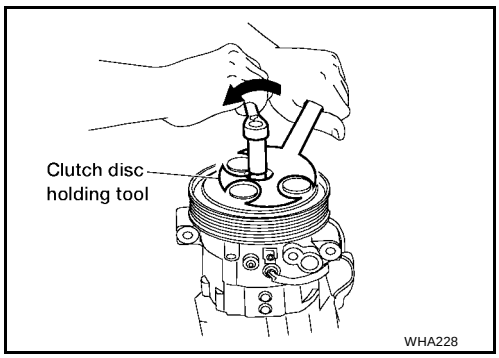


4. Remove the snap ring using external snap ring pliers or suitable tool.

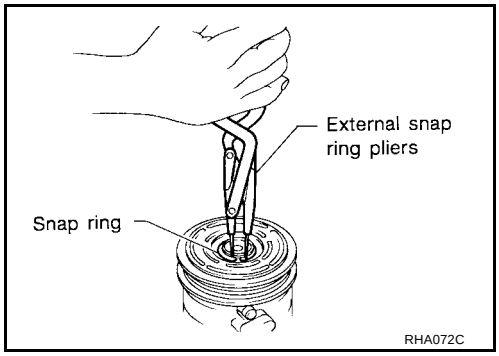

5. Remove the pulley using Tool with a small adapter. Position the small adapter on the end of the drive shaft and the center of the puller on the small adapter.

   **Tool number : KV99233130 (J-29884)**

   **CAUTION:**
   **To prevent deformation of the pulley groove, the puller claws should be hooked under the pulley groove and not into the pulley groove.**

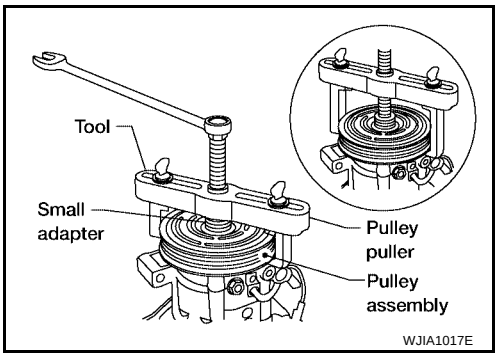


6. Remove the magnet coil harness clip using a screwdriver, remove the three magnet coil fixing screws and remove the magnet coil.

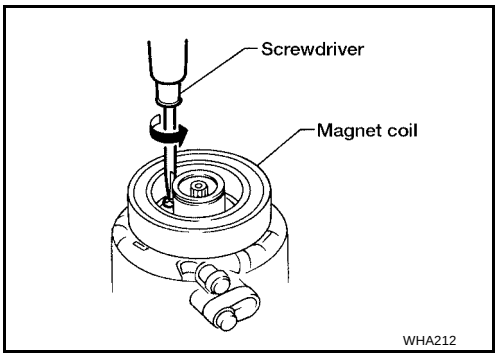


## INSPECTION

### Clutch Disc

If the contact surface shows signs of damage due to excessive heat, replace clutch disc and pulley.

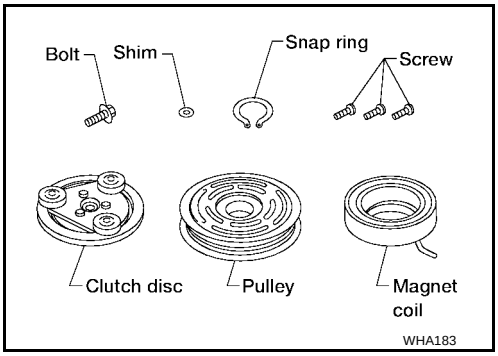


### Pulley

Check the appearance of the pulley assembly. If contact surface of pulley shows signs of excessive grooving, replace clutch disc and pulley. The contact surfaces of the pulley assembly should be cleaned with a suitable solvent before reinstallation.

### Coil

Check magnet coil for loose connections or any cracked insulation.

## INSTALLATION

1. Install the magnet coil.

   **CAUTION:**
   **Be sure to align the magnet coil pin with the hole in the compressor front head.**

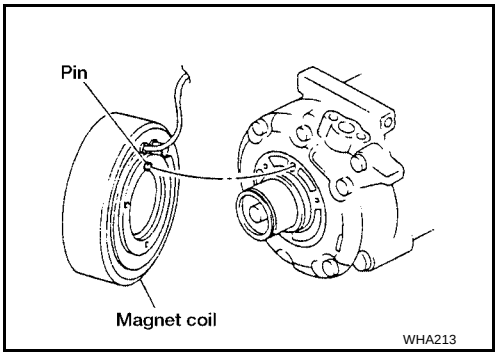

2. Install the magnet coil harness clip using a screwdriver.
3. Install the pulley assembly using Tool and a wrench, then install the snap ring using snap ring pliers.

   **Tool number : — (J-38873-A)**

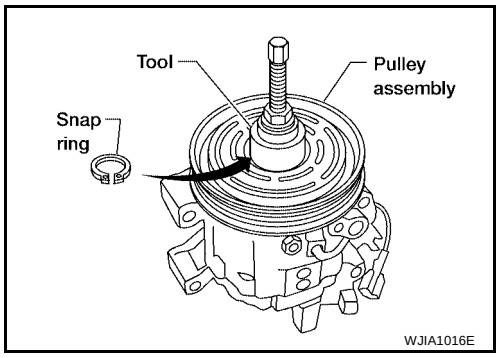


4. Install the clutch disc on the compressor shaft, together with the original shim(s). Press the clutch disc down by hand.

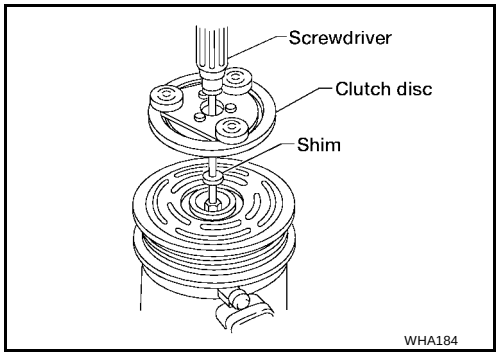


5. Install the clutch pulley bolt using Tool, to prevent the clutch disc from turning and tighten the bolt to specification.

   **Tool number : J-44614**

   **CAUTION:**
   **After tightening the clutch pulley bolt, check that the clutch pulley rotates smoothly.**

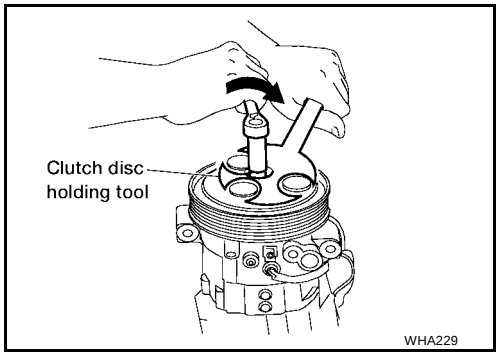


6. Check the pulley clearance all the way around the clutch disc as shown.

   **Clutch disc-to-pulley clearance : 0.3 - 0.6 mm (0.012 - 0.024 in)**

7. If the specified clearance is not obtained, replace the adjusting spacer to readjust.
8. Connect the compressor electrical connector.
9. Install the drive belt. Refer toEM-13, "DRIVE BELTS" .
10. Install the engine under cover and the splash shield.

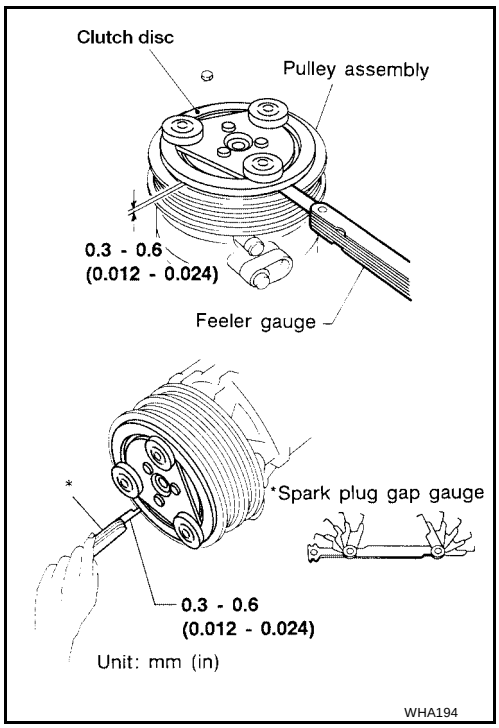

### BREAK-IN OPERATION

When replacing compressor clutch assembly, always conduct the break-in operation. This is done by engaging and disengaging the clutch about 30 times. Break-in operation raises the level of transmitted torque.

## Removal and Installation for Low-pressure Flexible Hose

EJS005FD

### REMOVAL

1. Remove the engine room cover using power tools.
2. Remove the engine air cleaner and air ducts. Refer to EM-15, "AIR CLEANER AND AIR DUCT" .
3. Remove the cowl top extension. Refer to EI-18, "COWL TOP" .
4. Discharge the refrigerant. Refer to ATC-221, "HFC-134a (R-134a) Service Procedure" .

   **CAUTION:**
   **Cap or wrap the joint of the pipe with suitable material such as vinyl tape to avoid the entry of air.**
5. Remove the low-pressure flexible hose.

### INSTALLATION

Installation is in the reverse order of removal.
Refer to ATC-223, "Components" .

**CAUTION:**

- **Replace the O-ring of the low-pressure flexible hose with a new one, then apply compressor oil to it when installing it.**
- **After charging refrigerant, check for leaks.**

## Removal and Installation for High-pressure Flexible Hose

EJS005FE

### REMOVAL

1. Remove the engine under cover.
2. Remove the engine air cleaner and air ducts. Refer to EM-15, "AIR CLEANER AND AIR DUCT" .
3. Discharge the refrigerant. Refer to ATC-221, "HFC-134a (R-134a) Service Procedure" .
4. Remove the high-pressure flexible hose.

   **CAUTION:**
   **Cap or wrap the joint of the pipe with suitable material such as vinyl tape to avoid the entry of air.**

### INSTALLATION

Installation is in the reverse order of removal.
Refer to ATC-223, "Components" .

**CAUTION:**

- **Replace the O-ring of the high-pressure flexible hose with a new one, then apply compressor oil to it when installing it.**
- **After charging refrigerant, check for leaks.**

## Removal and Installation for High-pressure Pipe

EJS005FF

### REMOVAL

1. Remove the cowl top extension. Refer to EI-18, "COWL TOP" .
2. Disconnect the battery negative terminal and positive battery terminal.
3. Reposition the IPDM E/R aside.
4. Remove the front right wheel and tire assembly. Refer to WT-7, "Rotation" .
5. Position aside the front floor insulator.
6. Discharge the refrigerant. Refer to ATC-221, "HFC-134a (R-134a) Service Procedure" .
7. Remove the low pressure pipe. Refer to ATC-230, "Removal and Installation for Low-pressure Pipe" .
8. Remove the high-pressure pipe.

   **CAUTION:**
   **Cap or wrap the joint of the pipe with suitable material such as vinyl tape to avoid the entry of air.**

### INSTALLATION

Installation is in the reverse order of removal.
Refer to ATC-223, "Components" .

**CAUTION:**
- **Replace the O-ring of the high-pressure pipe with a new one, then apply compressor oil to it when installing it.**
- **After charging refrigerant, check for leaks.**

## Removal and Installation for Low-pressure Pipe

EJS005FG

### REMOVAL

1. Discharge the refrigerant. Refer to ATC-221, "HFC-134a (R-134a) Service Procedure" .
2. Remove the cowl top and the cowl top extension. Refer to EI-18, "COWL TOP" .
3. Remove the low-pressure pipe.

   **CAUTION:**
   **Cap or wrap the joint of the pipes with suitable material such as vinyl tape to avoid the entry of air.**

### INSTALLATION

Installation is in the reverse order of removal.
Refer to ATC-223, "Components" .

**CAUTION:**
- **Replace the O-ring of the high/low-pressure pipe with a new one, then apply compressor oil to it when installing it.**
- **After charging refrigerant, check for leaks.**

## Removal and Installation for Rear High- and Low-pressure A/C and Heater Core Pipes

EJS0063M

### REMOVAL

1. Discharge the refrigerant. Refer to ATC-221, "HFC-134a (R-134a) Service Procedure" .
2. Drain the coolant from the engine cooling system. Refer to CO-10, "Changing Engine Coolant" .
3. Disconnect the underfloor rear heater hoses (1 and 2) from the rear heater pipes underneath the vehicle.
   - ⇐: Front
4. Remove the rear high- and low-pressure pipes bolt (A) to disconnect the rear high- and low-pressure pipes from the underfloor rear high- and low-pressure pipes underneath the vehicle.

   **CAUTION:**
   **Cap or wrap the joint of the pipes with suitable material such as vinyl tape to avoid the entry of air.**
5. Remove the rear high- and low-pressure pipes nuts (B) underneath the vehicle.

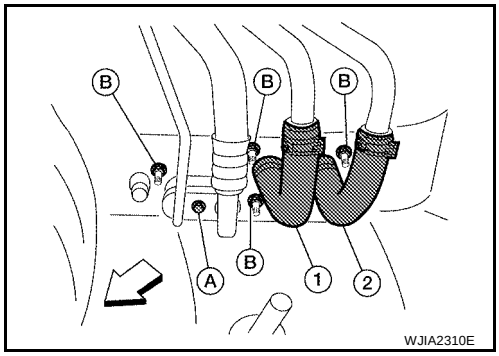


**NOTE:**
The remaining steps are performed inside the rear luggage area of the vehicle.

6. Remove the luggage side finisher lower RH. Refer to EI-37, "LUGGAGE FLOOR TRIM" .
7. Disconnect the rear heater core hoses (1 and 2) from the rear heater core (3).
   - ⇐: Front

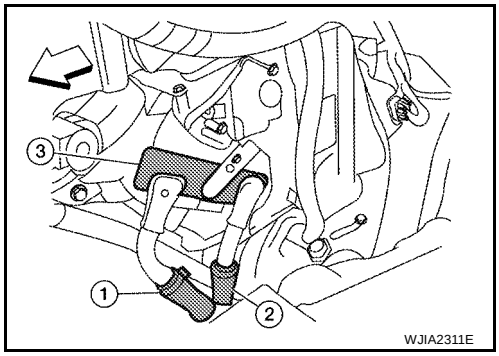

8. Remove the rear high- and low-pressure pipes bracket bolt (A) to release the bracket.
   - Rear blower motor (1)
   - ⇐: Front

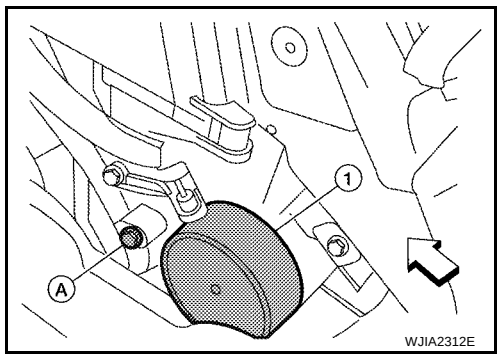


9. Remove the rear high- and low-pressure pipes bolt (A) to disconnect the rear high- and low-pressure pipes from the rear expansion valve (1).
   - ⇐: Front

   **CAUTION:**
   **Cap or wrap the joint of the pipes with suitable material such as vinyl tape to avoid the entry of air.**

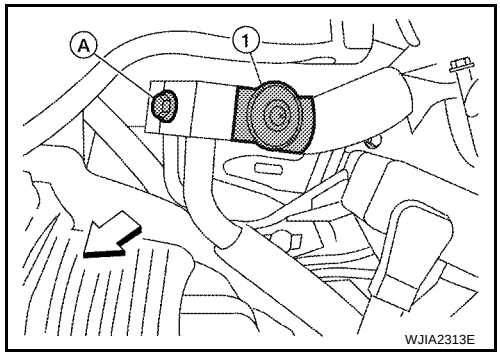


10. Disconnect the following electrical connectors:
    - Rear air mix door motor (1)
    - Rear blower motor resistor (2)
    - Rear blower motor (3)
    - ⇐: Front

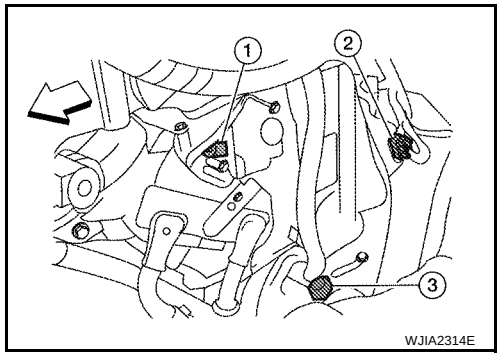


11. Disconnect the ducts from the rear heater and cooling unit assembly. Refer to ATC-216, "Components" .
12. Remove the rear heater and cooling unit assembly.

    **CAUTION:**
    **Cap or wrap the joint of the pipes with suitable material such as vinyl tape to avoid the entry of air.**
13. Remove the rear high- and low-pressure A/C pipes.

### INSTALLATION

Installation is in the reverse order of removal.
Refer to ATC-223, "Components" .

**CAUTION:**
- **Replace the O-ring of the high/low-pressure pipe with a new one, then apply compressor oil to it when installing it.**
- **After charging refrigerant, check for leaks.**

## Removal and Installation for Underfloor Rear High- and Low-pressure A/C and Heater Core Pipes

EJS0063N

### REMOVAL

1. Drain the coolant from the engine cooling system. Refer to CO-10, "Changing Engine Coolant" .
2. Disconnect the battery negative terminal.
3. Disconnect the generator harness.
4. Discharge the refrigerant. Refer to ATC-221, "HFC-134a (R-134a) Service Procedure" .

5. Remove the front and rear bumper fascia. Refer to EI-13, "FRONT BUMPER" (front), EI-15, "REAR BUMPER" (rear).
6. Reposition the front fender protector out of the way. Refer to EI-21, "FENDER PROTECTOR" .
7. Disconnect the chassis harness connector.
8. Remove the spare wheel and tire.
9. Remove the tailpipe and tailpipe hanger bracket. Refer to EX-3, "Removal and Installation" .
10. Remove the seatbelt latch anchor. Refer to RSU-24, "Components" .
11. Remove the front floor heat shield.
12. Disconnect each end of the underfloor rear high- and low-pressure A/C and heater core pipes. Refer to ATC-223, "Components" .

    **CAUTION:**
    **Cap or wrap the joint of the pipes with suitable material such as vinyl tape to avoid the entry of air.**
13. Set two suitable jacks at the RH body mount points to support the vehicle body when it is separated from the RH side of the frame.
14. Remove the RH body mount bolts. Refer to BL-147, "Body Mounting" .
15. Use the vehicle hoist to lower the RH side of the frame from the RH side of the body [approximately 305 mm (12 in)] until there is sufficient clearance to remove the underfloor rear high- and low-pressure A/C and heater core pipes from between the body and the frame.
16. Remove the underfloor rear high- and low-pressure A/C and heater core pipes from the back of the vehicle.

### INSTALLATION

Installation is in the reverse order of removal.
Refer to ATC-223, "Components" .

**CAUTION:**

- **Replace the O-ring of the high/low-pressure pipe with a new one, then apply compressor oil to it when installing it.**
- **After charging refrigerant, check for leaks.**

## Removal and Installation for Refrigerant Pressure Sensor

EJS005FH

### REMOVAL

1. Discharge the refrigerant. Refer to ATC-221, "HFC-134a (R-134a) Service Procedure" .
2. Disconnect the refrigerant pressure sensor electrical connector and remove the refrigerant pressure sensor from the condenser.

   **CAUTION:**
   **Be careful not to damage the condenser fins.**

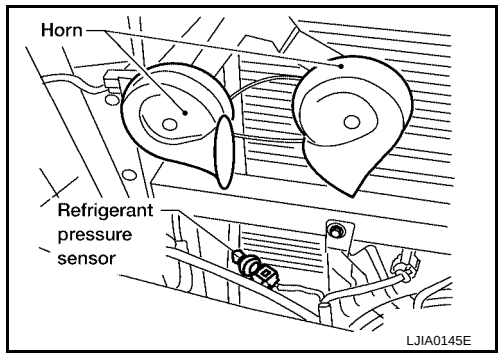


### INSTALLATION

Installation is in the reverse order of removal.
Refer to ATC-223, "Components" .

**CAUTION:**

- **Be careful not to damage the condenser fins.**
- **Replace the O-ring of the refrigerant pressure sensor with a new one, then apply compressor oil to it when installing it.**
- **After charging refrigerant, check for leaks.**

## Removal and Installation for Condenser

EJS005FI

### REMOVAL

1. Discharge the refrigerant. Refer to ATC-221, "HFC-134a (R-134a) Service Procedure" .

2. Remove the radiator. Refer to CO-14, "RADIATOR" .

   **CAUTION:**
   **Be careful not to damage the core surface of the condenser and the radiator.**

3. Disconnect the high-pressure flexible hose and the high-pressure pipe from the condenser.

   **CAUTION:**
   **Cap or wrap the joint of the pipe with suitable material such as vinyl tape to avoid the entry of air.**

4. Disconnect the refrigerant pressure sensor connector.
   - Remove the refrigerant pressure sensor from the condenser as necessary.
5. Lift the condenser out of the mounting grommets to remove the condenser.

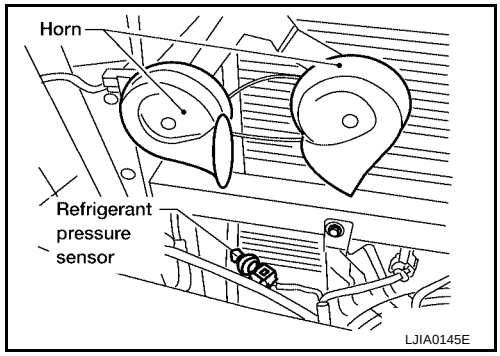


## INSTALLATION

Installation is in the reverse order of removal.
Refer to ATC-223, "Components" .

**CAUTION:**

- **Replace the O-rings of the high-pressure pipe, refrigerant pressure sensor, and high-pressure flexible hose with new ones, then apply compressor oil to them when installing them.**
- **After charging refrigerant, check for leaks.**
- **Replace the grommets as necessary.**

## Removal and Installation for Front Evaporator

EJS005FJ

### Front Heater and Cooling Unit Assembly

SEC. 271

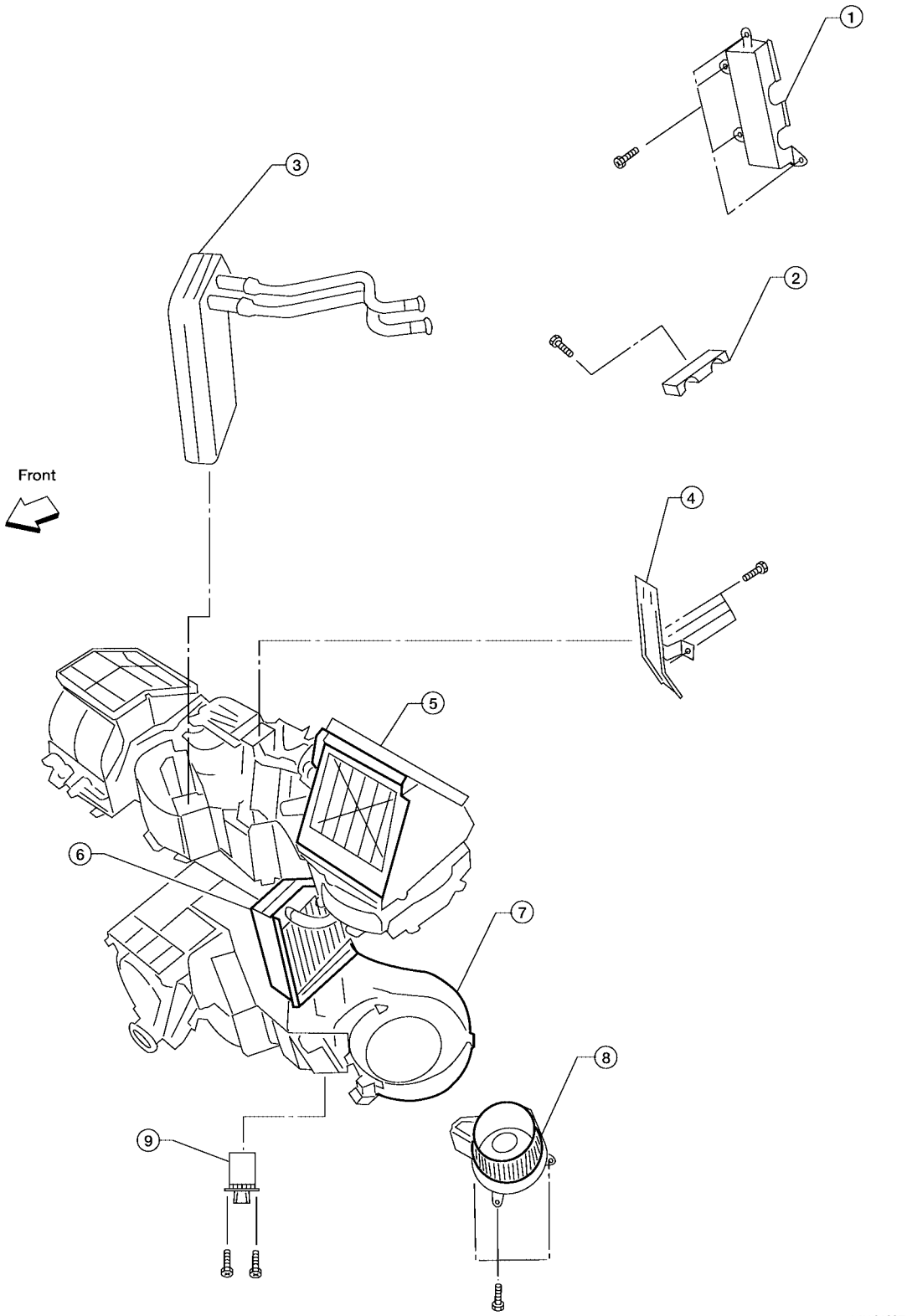


| | | | | | |
|---|---|---|---|---|---|
| 1. | Heater core cover | 2. | Heater core pipe bracket | 3. | Heater core |
| 4. | Upper bracket | 5. | Upper heater and cooling unit case | 6. | A/C evaporator |
| 7. | Lower heater and cooling unit case | 8. | Blower motor | 9. | Variable blower control |

### REMOVAL

1. Remove the front heater core. Refer to ATC-207, "FRONT HEATER CORE" .

2. Remove the defroster mode door arm.
3. Separate the heater core and cooling unit case.
4. Remove the evaporator.

### INSTALLATION

Installation is in the reverse order of removal.

**CAUTION:**

**Replace the O-rings on the low-pressure flexible hose and the high-pressure pipe with new ones. Apply compressor oil to the O-rings when installing them.**

## Removal and Installation for Rear Evaporator

EJS005FK

**Rear Heater and Cooling Unit Assembly**

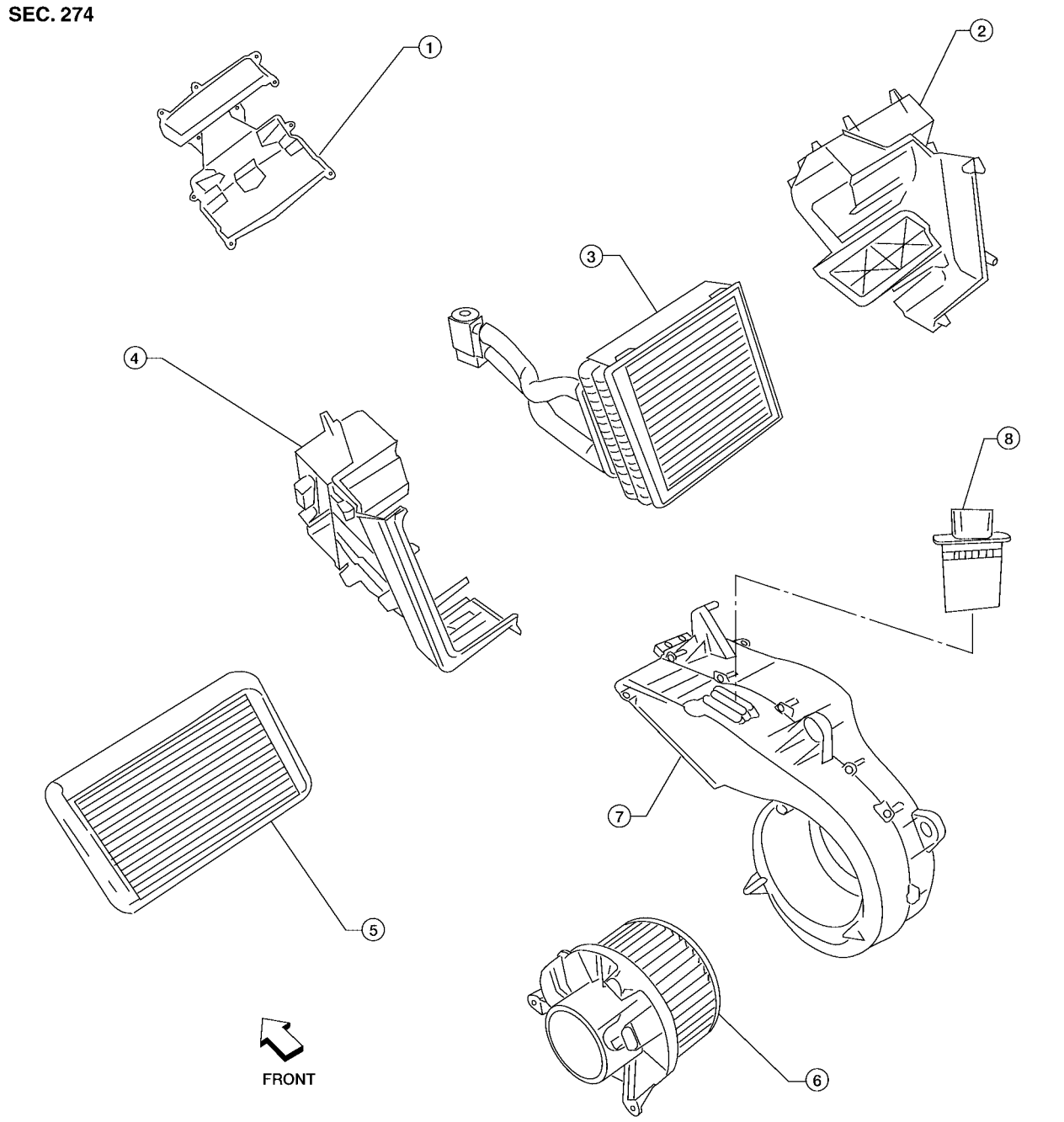


LJIA0135E

1. Front cover
2. Evaporator and heater core case
3. Evaporator
4. Side cover
5. Heater core
6. Rear blower motor
7. Blower motor case
8. Rear blower motor resistor

### REMOVAL

1. Remove the rear heater and cooling unit assembly from the vehicle. Refer to ATC-204, "REAR HEATER AND COOLING UNIT ASSEMBLY" .
2. Remove the rear blower motor.
3. Remove the rear blower speed resistor.
4. Remove the rear air mix door motor.
5. Remove the rear duct and blend door assembly. Refer to ATC-220, "REAR OVERHEAD DUCTS" .
6. Disassemble the rear heater and cooling unit assembly to remove the evaporator.

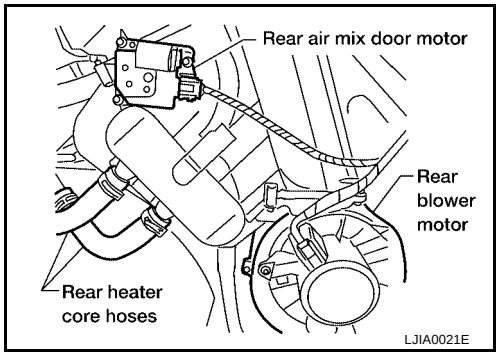


### INSTALLATION

Installation is in the reverse order of removal.

**CAUTION:**

- **Replace the O-rings on the rear A/C pipes with new ones. Apply compressor oil to the O-rings when installing them.**
- **After charging refrigerant, check for leaks.**

## Removal and Installation for Front Expansion Valve

EJS005FL

### REMOVAL

1. Discharge the refrigerant. Refer to ATC-221, "HFC-134a (R-134a) Service Procedure" .
2. Remove the front evaporator. Refer to ATC-234, "Removal and Installation for Front Evaporator" .
3. Remove the cooler grommet.
4. Remove the expansion valve.

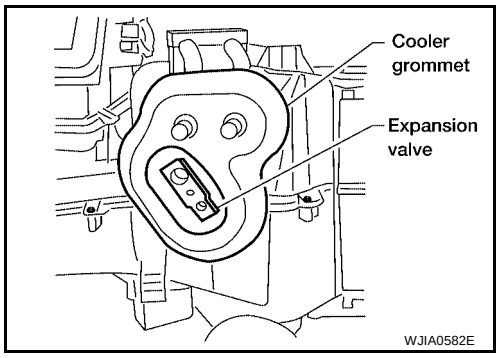


### INSTALLATION

Installation is in the reverse order of removal.

| | |
|---|---|
| **Expansion valve bolts** | **: 4 N·m (0.41 kg-m, 35 in-lb)** |
| **A/C refrigerant pipe to expansion valve bolt** | **: Refer to ATC-223, "Components" .** |

**CAUTION:**

- **Replace the O-rings on the A/C refrigerant pipes with new ones, then apply compressor oil to them when installing them.**
- **After charging refrigerant, check for leaks.**

## Removal and Installation for Rear Expansion Valve

EJS005FM

### REMOVAL

1. Discharge the refrigerant. Refer to ATC-221, "HFC-134a (R-134a) Service Procedure" .
2. Remove the rear RH interior side trim panel. Refer to EI-31, "BODY SIDE TRIM" .
3. Disconnect the A/C refrigerant pipes from the expansion valve.

**CAUTION:**
**Cap or wrap the A/C refrigerant pipe ends with a suitable material such as vinyl tape to avoid the entry of air and contaminants.**

4. Remove the expansion valve.

### INSTALLATION

Installation is in the reverse order of removal.

| | |
|---|---|
| **Expansion valve bolts** | **: 4 N·m (0.41 kg-m, 35 in-lb)** |
| **A/C refrigerant pipe to expansion valve bolt** | **: Refer to ATC-223, "Components"** |

**CAUTION:**
- **Replace the O-rings on the A/C refrigerant pipes with new ones, then apply compressor oil to them when installing them.**
- **After charging refrigerant, check for leaks.**

## Checking for Refrigerant Leaks

EJS005FN

### PRELIMINARY CHECK

Perform a visual inspection of all refrigeration parts, fittings, hoses and components for signs of A/C oil leakage, damage, and corrosion. Any A/C oil leakage may indicate an area of refrigerant leakage. Allow extra inspection time in these areas when using either an electronic refrigerant leak detector (J-41995) or fluorescent dye leak detector (J-42220).
If any dye is observed using a fluorescent dye leak detector (J-42220), confirm the leak using a electronic refrigerant leak detector (J-41995). It is possible that the dye is from a prior leak that was repaired and not properly cleaned.
When searching for leaks, do not stop when one leak is found but continue to check for additional leaks at all system components and connections.
When searching for refrigerant leaks using an electronic refrigerant leak detector (J-41995), move the probe along the suspected leak area at 25 - 50 mm (1 - 2 in) per second and no further than 6 mm (1/4 in) from the component.

**CAUTION:**
**Moving the electronic refrigerant leak detector probe slower and closer to the suspected leak area will improve the chances of finding a leak.**

## Checking System for Leaks Using the Fluorescent Dye Leak Detector

EJS005FO

1. Check the A/C system for leaks using the fluorescent dye leak detector and safety goggles (J-42220) in a low sunlight area (area without windows preferable). Illuminate all components, fittings and lines. The dye will appear as a bright green/yellow area at the point of leakage. Fluorescent dye observed at the evaporator drain opening indicates an evaporator core assembly leak (tubes, core or expansion valve).
2. If the suspected area is difficult to see, use an adjustable mirror or wipe the area with a clean shop rag or cloth, then inspect the shop rag or cloth with the fluorescent dye leak detector (J-42220) for dye residue.
3. After the leak is repaired, remove any residual dye using refrigerant dye cleaner (J-43872) to prevent future misdiagnosis.
4. Perform a system performance check and then verify the leak repair using a electronic refrigerant leak detector (J-41995).

   **NOTE:**
   - Other gases in the work area or substances on the A/C components, for example, anti-freeze, windshield washer fluid, solvents and oils, may falsely trigger the leak detector. Make sure the surfaces to be checked are clean.
   - Clean with a dry cloth or blow off with shop air.
   - Do not allow the sensor tip of the electronic refrigerant leak detector (J-41995) to contact with any substance. This can also cause false readings and may damage the detector.

## Dye Injection

EJS005FP

**NOTE:**
This procedure is only necessary when recharging the system or when the compressor has seized and must be replaced.

1. Check the A/C system static (at rest) pressure. Pressure must be at least 345 kPa (3.52 kg/cm$^2$ , 50 psi).

2. Pour one bottle 7.4 cc (1/4 ounce) of the HFC-134a (R-134a) fluorescent leak detection dye (J-41447) into the HFC-134a (R-134a) dye injector (J-41459).

   **CAUTION:**
   **If repairing the A/C system or replacing a component, pour the HFC-134a (R-134a) fluorescent leak detection dye (J-41447) directly into the open system connection and proceed with the service procedures.**
3. Connect the refrigerant dye injector (J-41459) to the low-pressure service valve.
4. Start the engine and switch the A/C system ON.
5. When the A/C system is operating (compressor running), inject one bottle 7.4 cc (1/4 ounce) of HFC-134a (R-134a) fluorescent leak detection dye (J-41447) through the low-pressure service valve using HFC-134a (R-134a) dye injector (J-41459). Refer to the manufacturer's operating instructions.
6. With the engine still running, disconnect the HFC-134a (R-134a) dye injector (J-41459) from the low-pressure service valve.
7. Operate the A/C system for a minimum of 20 minutes to mix the HFC-134a (R-134a) fluorescent leak detection dye (J-41447) with the A/C system oil. Depending on the leak size, operating conditions and location of the leak, it may take from minutes to days for the HFC-134a (R-134a) fluorescent leak detection dye to penetrate an A/C system leak and become visible.

## Electronic Refrigerant Leak Detector

EJS005FQ

### PRECAUTIONS FOR HANDLING LEAK DETECTOR

**NOTE:**
When performing a refrigerant leak check, use a electronic refrigerant leak detector (J-41995) or equivalent. Ensure that the electronic refrigerant leak detector (J-41995) is calibrated and set properly according to the manufacturer's operating instructions.

The electronic refrigerant leak detector (J-41995) is a delicate device. To use the electronic refrigerant leak detector (J-41995) properly, read the manufacturer's operating instructions and perform any specified maintenance.

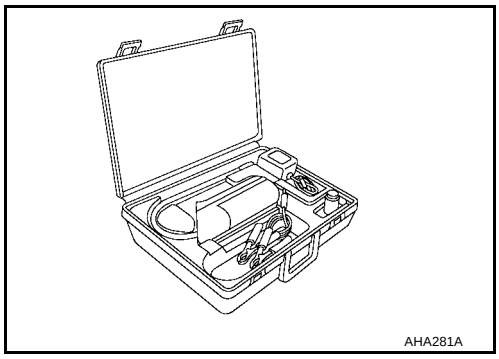


1. Position the probe approximately 5 mm (3/16 in) away from the point to be checked as shown.

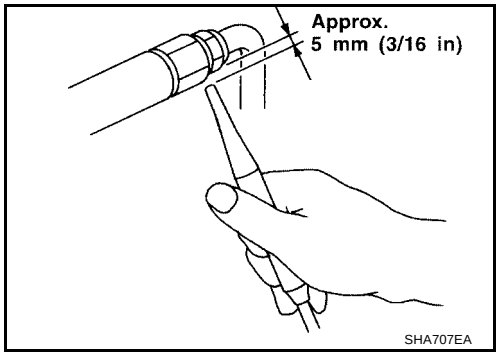

2. When checking for leaks, circle each fitting completely with the probe as shown.

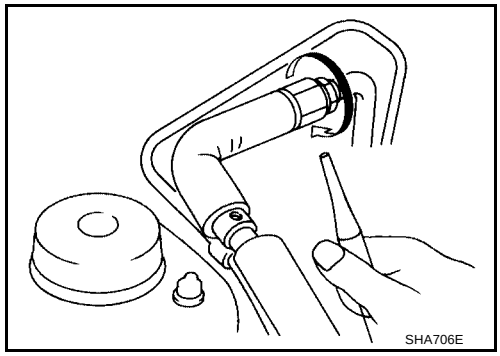


3. Move the probe along each component at a speed of approximately 25 - 50 mm (1 - 2 in)/second as shown.

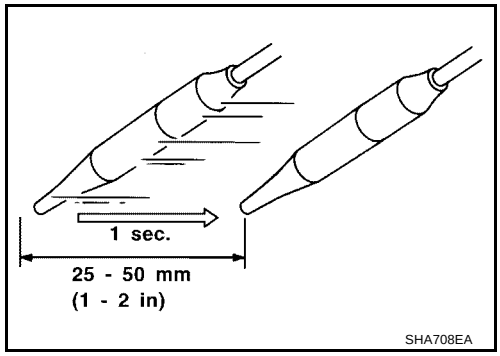


## CHECKING PROCEDURE

**NOTE:**
To prevent inaccurate or false readings, make sure there is no refrigerant vapor, shop chemicals, or cigarette smoke in the vicinity of the vehicle. Perform the leak test in a calm area (low air/wind movement) so that the leaking refrigerant is not dispersed.

1. Turn the engine OFF.
2. Connect the manifold gauge set (J-39183-C) to the A/C service ports. Refer to ATC-221, "SETTING OF SERVICE TOOLS AND EQUIPMENT" .
3. Check if the A/C refrigerant pressure is at least 345 kPa (3.52 kg/cm$^2$ , 50 psi) above a temperature of 16°C (61°F). If less than specification, recover/evacuate and recharge the system with the specified amount of refrigerant. Refer to ATC-221, "HFC-134a (R-134a) Service Procedure" .

   **NOTE:**
   At temperatures below 16°C (61°F), leaks may not be detected since the system may not reach 345 kPa (3.52 kg/cm$^2$ , 50 psi) pressure.
4. Perform the leak test from the high-pressure side (front A/C compressor discharge “a” to evaporator inlet “f” or rear piping connection “l”) to the low-pressure side (front A/C evaporator drain hose “g” to shaft seal “k” and rear A/C evaporator drain hose “o” to piping connection “r”). Refer to ATC-223, "Components" . Clean the component to be checked and carefully move the electronic refrigerant leak detector probe completely around the following connections and components.
   - Check the compressor shaft seal
   - Check the high and low-pressure pipe and hose fittings, relief valve, and compressor shaft seal
   - Check the liquid tank
   - Check the refrigerant pressure sensor
   - Check all around the service valves. Check that the service valve caps are screwed tightly on the service valves (to prevent leaks).

     **NOTE:**
     After removing manifold gauge set (J-39183-C) from the service valves, wipe any residue from the service valves to prevent any false readings by the electronic refrigerant leak detector (J-41995).
   - Evaporator
     With engine OFF, turn blower fan on “High” for at least 15 seconds to dissipate any refrigerant trace in the heater and cooling unit assembly. Wait a minimum of 10 minutes accumulation time (refer to the manufacturer's recommended procedure for actual wait time) before inserting the electronic refrigerant leak detector probe into the heater and cooling unit assembly drain hose.

**NOTE:**
Keep the probe inserted for at least 10 seconds. Use caution not to contaminate the probe tip with water or dirt that may be in the drain hose.

5. If a leak is detected, verify at least once by blowing compressed air into the area of the suspected leak, then repeat the leak check.
6. Do not stop when one leak is found. Continue to check for additional leaks at all system components and connections.
7. If no leaks are found, perform steps 8 - 11.
8. Start the engine.
9. Set the heater A/C controls as follows:

**NOTE:**
For the automatic system, turn OFF the automatic controls and set the heater A/C controls manually.

a. A/C switch to ON
b. Air flow to VENT mode
c. Intake position to RECIRCULATION mode
d. Temperature to MAX cold
e. Blower fan speed to HIGH

10. Run the engine at 1,500 rpm for at least 2 minutes.
11. Turn the engine OFF and perform the leak check again following steps 4 through 6 above.
Refrigerant leaks should be checked immediately after turning the engine OFF. Begin with the leak detector at the compressor. The pressure on the high pressure side will gradually drop after the refrigerant circulation stops and pressure on the low pressure side will gradually rise, as shown in the graph. Some leaks are more easily detected when the pressure is high.

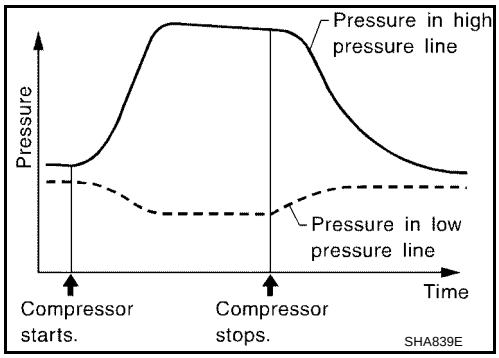


12. Before connecting the recovery/recycling equipment to the vehicle, check the recovery/recycling equipment gauges. No refrigerant pressure should be displayed. If pressure is displayed, recover the refrigerant from the equipment lines and then check the refrigerant purity.
13. Confirm refrigerant purity in supply tank using recovery/recycling equipment and refrigerant identifier equipment (J-41810-NI).
14. Confirm the refrigerant purity in the vehicle's A/C system using recovery/recycling equipment and refrigerant identifier equipment (J-41810-NI).
15. Discharge the A/C system using recovery/recycling equipment. Repair the leaking fitting or component as necessary.
16. Evacuate and recharge the A/C system and perform the leak test to confirm that there are no refrigerant leaks.
17. Conduct the Operational Check to ensure system works properly. Refer to ATC-69, "Operational Check (Front)" and ATC-71, "Operational Check (Rear)" .

# SERVICE DATA AND SPECIFICATIONS (SDS)

PFP:00030

## Service Data and Specifications (SDS)

EJS005FR

### COMPRESSOR

| | |
|---|---|
| Make | ZEXEL VALEO CLIMATE CONTROL |
| Model | DKS-17D |
| Type | Swash plate |
| Displacement | 175.5 $cm^3$ (10.7 $in^3$ ) / revolution |
| Cylinder bore × stroke | 30.5 mm (1.20 in) x 24.0 mm (0.94 in) |
| Direction of rotation | Clockwise (viewed from drive end) |
| Drive belt | Poly V |

### OIL

| | |
|---|---|
| Name | NISSAN A/C System Oil Type S |
| Capacity | 290 m ℓ (9.8 US fl oz, 10.2 Imp fl oz) |

### REFRIGERANT

| | |
|---|---|
| Type | HFC 134a (R-134a) |
| Capacity | 1.08 ± 0.05 kg (2.38 ± 0.11 lb) |

### ENGINE IDLING SPEED

Refer to EC-81, "Idle Speed and Ignition Timing Check" .

### BELT TENSION

Refer to EM-13, "Checking Drive Belts" .