SECTION EM
ENGINE MECHANICAL

CONTENTS

PRECAUTION 3

PRECAUTIONS 3
- Precaution for Supplemental Restraint System (SRS) "AIR BAG" and "SEAT BELT PRE-TENSIONER" 3
- Precaution Necessary for Steering Wheel Rotation After Battery Disconnect 3
- Precaution for Drain Engine Coolant 4
- Precaution for Disconnecting Fuel Piping 4
- Precaution for Removal and Disassembly 4
- Precaution for Inspection, Repair and Replacement 4
- Precaution for Assembly and Installation 4
- Parts Requiring Angular Tightening 4
- Precaution for Liquid Gasket 5

PREPARATION 6

PREPARATION 6
- Special Service Tool 6
- Commercial Service Tool 8

SYSTEM DESCRIPTION 11

NOISE, VIBRATION, AND HARSHNESS (NVH) TROUBLESHOOTING 11
- NVH Troubleshooting - Engine Noise 11
- Use the Chart Below to Help You Find the Cause of the Symptom 12

PERIODIC MAINTENANCE 14

DRIVE BELTS 14
- Checking Drive Belts 14
- Removal and Installation 14
- Drive Belt Auto-Tensioner and Idler Pulley 15

AIR CLEANER FILTER 16
- Removal and Installation (Viscous paper type) 16

SPARK PLUG 17
- Removal and Installation 17

CAMSHAFT VALVE CLEARANCE 19
- Valve Clearance 19

COMPRESSION PRESSURE 24
- Checking Compression Pressure 24

REMOVAL AND INSTALLATION 25

ENGINE ROOM COVER 25
- Removal and Installation 25

AIR CLEANER AND AIR DUCT 26
- Exploded View 26
- Removal and Installation 26

INTAKE MANIFOLD 27
- Exploded View 27
- Removal and Installation 27

EXHAUST MANIFOLD AND THREE WAY CATALYST 32
- Exploded View 32
- Removal and Installation 32

OIL PAN AND OIL STRAINER 35
- Exploded View 35
- Removal and Installation 35

IGNITION COIL 40
- Exploded View 40
- Removal and Installation 40

ROCKER COVER 41
- Exploded View 41
- Removal and Installation 41

FUEL INJECTOR AND FUEL TUBE 43
- Exploded View 43
- Removal and Installation 43

INTAKE VALVE TIMING CONTROL 47

Intake Valve Timing Control Solenoid Valve (LH)... 47
Intake Valve Timing Control Solenoid Valve (RH)... 47
Intake Valve Timing Control Position Sensor (LH)... 48
Intake Valve Timing Control Position Sensor (RH)... 48
Camshaft Position Sensor (PHASE) 48

TIMING CHAIN COVER 50
Exploded View 50
Removal and Installation 50

TIMING CHAIN 56
Exploded View 56
Removal and Installation 57

CAMSHAFT 62
Exploded View 62
Removal and Installation 62
Inspection after Installation 71

OIL SEAL 73
Removal and Installation of Valve Oil Seal 73
Removal and Installation of Front Oil Seal 73
Removal and Installation of Rear Oil Seal 75

CYLINDER HEAD 78
Exploded View 78
Removal and Installation 78
Exploded View 80
Disassembly and Assembly 80
Inspection After Disassembly 82

UNIT REMOVAL AND INSTALLATION 88

ENGINE ASSEMBLY 88
Exploded View 88
Removal and Installation 88

UNIT DISASSEMBLY AND ASSEMBLY ... 92

ENGINE UNIT 92
Exploded View 92
Disassembly and Assembly 93
Inspection After Disassembly 101

HOW TO SELECT PISTON AND BEARING ..111
How to Select Piston and Bearing 111

SERVICE DATA AND SPECIFICATIONS (SDS) 118

SERVICE DATA AND SPECIFICATIONS (SDS) 118
Standard and Limit 118

PRECAUTION

PRECAUTIONS

Precaution for Supplemental Restraint System (SRS) "AIR BAG" and "SEAT BELT PRE-TENSIONER"

INFOID:0000000009824900

The Supplemental Restraint System such as “AIR BAG” and “SEAT BELT PRE-TENSIONER”, used along with a front seat belt, helps to reduce the risk or severity of injury to the driver and front passenger for certain types of collision. This system includes seat belt switch inputs and dual stage front air bag modules. The SRS system uses the seat belt switches to determine the front air bag deployment, and may only deploy one front air bag, depending on the severity of a collision and whether the front occupants are belted or unbelted.
Information necessary to service the system safely is included in the SR and SB section of this Service Manual.

WARNING:

- **To avoid rendering the SRS inoperative, which could increase the risk of personal injury or death in the event of a collision which would result in air bag inflation, all maintenance must be performed by an authorized NISSAN/INFINITI dealer.**
- **Improper maintenance, including incorrect removal and installation of the SRS, can lead to personal injury caused by unintentional activation of the system. For removal of Spiral Cable and Air Bag Module, see the SR section.**
- **Do not use electrical test equipment on any circuit related to the SRS unless instructed to in this Service Manual. SRS wiring harnesses can be identified by yellow and/or orange harnesses or harness connectors.**

PRECAUTIONS WHEN USING POWER TOOLS (AIR OR ELECTRIC) AND HAMMERS

WARNING:

- **When working near the Airbag Diagnosis Sensor Unit or other Airbag System sensors with the Ignition ON or engine running, DO NOT use air or electric power tools or strike near the sensor(s) with a hammer. Heavy vibration could activate the sensor(s) and deploy the air bag(s), possibly causing serious injury.**
- **When using air or electric power tools or hammers, always switch the Ignition OFF, disconnect the battery, and wait at least 3 minutes before performing any service.**

Precaution Necessary for Steering Wheel Rotation After Battery Disconnect

INFOID:0000000009824901

NOTE:

- This Procedure is applied only to models with Intelligent Key system and NATS (NISSAN ANTI-THEFT SYSTEM).
- Remove and install all control units after disconnecting both battery cables with the ignition knob in the ″LOCK″ position.
- Always use CONSULT to perform self-diagnosis as a part of each function inspection after finishing work. If DTC is detected, perform trouble diagnosis according to self-diagnostic results.

For models equipped with the Intelligent Key system and NATS, an electrically controlled steering lock mechanism is adopted on the key cylinder.
For this reason, if the battery is disconnected or if the battery is discharged, the steering wheel will lock and steering wheel rotation will become impossible.
If steering wheel rotation is required when battery power is interrupted, follow the procedure below before starting the repair operation.

OPERATION PROCEDURE

1. Connect both battery cables.
   NOTE:
   Supply power using jumper cables if battery is discharged.
2. Use the Intelligent Key or mechanical key to turn the ignition switch to the ″ACC″ position. At this time, the steering lock will be released.
3. Disconnect both battery cables. The steering lock will remain released and the steering wheel can be rotated.
4. Perform the necessary repair operation.

5. When the repair work is completed, return the ignition switch to the ″LOCK″ position before connecting the battery cables. (At this time, the steering lock mechanism will engage.)
6. Perform a self-diagnosis check of all control units using CONSULT.

Precaution for Drain Engine Coolant

INFOID:0000000009824902

Drain engine coolant when engine is cooled.

Precaution for Disconnecting Fuel Piping

INFOID:0000000009824903

- Before starting work, make sure no fire or spark producing items are in the work area.
- Release fuel pressure before disconnecting and disassembly.
- After disconnecting pipes, plug openings to stop fuel leakage.

Precaution for Removal and Disassembly

INFOID:0000000009824904

- When instructed to use special service tools, use the specified tools. Always be careful to work safely, avoid forceful or uninstructed operations.
- Exercise maximum care to avoid damage to mating or sliding surfaces.
- Cover openings of engine system with tape or the equivalent, if necessary, to seal out foreign materials.
- Mark and arrange disassembly parts in an organized way for easy troubleshooting and assembly.
- When loosening nuts and bolts, as a basic rule, start with the one furthest outside, then the one diagonally opposite, and so on. If the order of loosening is specified, do exactly as specified. Power tools may be used where noted in the step.

Precaution for Inspection, Repair and Replacement

INFOID:0000000009824905

Before repairing or replacing, thoroughly inspect parts. Inspect new replacement parts in the same way, and replace if necessary.

Precaution for Assembly and Installation

INFOID:0000000009824906

- Use torque wrench to tighten bolts or nuts to specification.
- When tightening nuts and bolts, as a basic rule, equally tighten in several different steps starting with the ones in center, then ones on inside and outside diagonally in this order. If the order of tightening is specified, do exactly as specified.
- Replace with new gasket, packing, oil seal or O-ring.
- Thoroughly wash, clean, and air-blow each part. Carefully check engine oil or engine coolant passages for any restriction and blockage.
- Avoid damaging sliding or mating surfaces. Completely remove foreign materials such as cloth lint or dust. Before assembly, oil sliding surfaces well.
- Release air within route when refilling after draining engine coolant.
- Before starting engine, apply fuel pressure to fuel lines with turning ignition switch ON (with engine stopped). Then make sure that there are no leaks at fuel line connections.
- After repairing, start engine and increase engine speed to check engine coolant, fuel, oil, and exhaust systems for leakage.

Parts Requiring Angular Tightening

INFOID:0000000009824907

- For final tightening of the following engine parts use Tool:

Tool number : KV10112100 (BT-8653-A)

- Cylinder head bolts
- Main bearing cap bolts
- Connecting rod cap bolts
- Crankshaft pulley bolt (No angle wrench is required as the bolt flange is provided with notches for angle tightening)

- Do not use a torque value for final tightening.
- The torque value for these parts are for a preliminary step.
- Ensure thread and seat surfaces are clean and lightly coated with engine oil.

Precaution for Liquid Gasket

INFOID:0000000009824908

REMOVAL OF LIQUID GASKET

- After removing the bolts and nuts, separate the mating surface and remove the old liquid gasket using Tool.

Tool number : KV10111100 (J-37228)

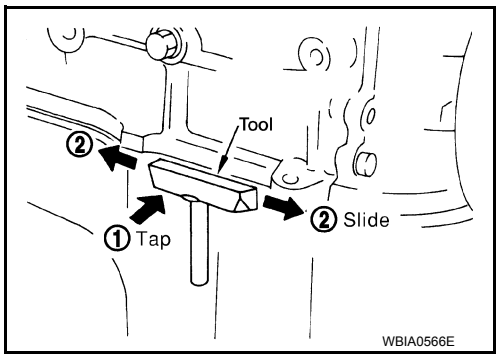

CAUTION:
Do not damage the mating surfaces.

- Tap the seal cutter to insert it (1).
- In areas where the Tool is difficult to use, lightly tap to slide it (2).

LIQUID GASKET APPLICATION PROCEDURE

1. Remove the old liquid gasket adhering to the gasket application surface and the mating surface using suitable tool.
   - Remove the liquid gasket completely from the groove of the liquid gasket application surface, bolts, and bolt holes.
2. Thoroughly clean the mating surfaces and remove adhering moisture, grease and foreign material.

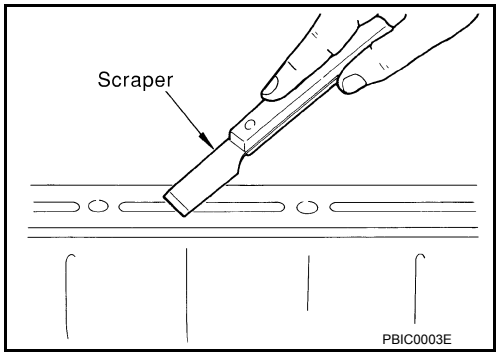

3. Attach the liquid gasket tube to the Tool.

Tool number : WS39930000 (—)

Use Genuine RTV Silicone Sealant or equivalent. Refer to GI-21, "Recommended Chemical Products and Sealants".

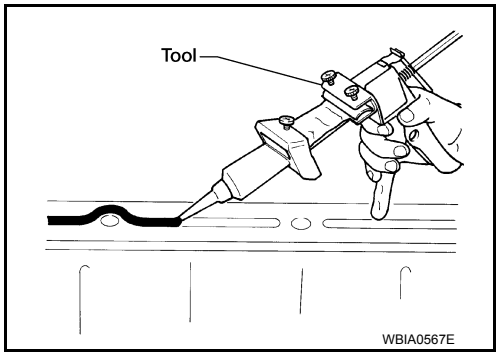

4. Apply the liquid gasket without breaks to the specified location with the specified dimensions.

- If there is a groove for the liquid gasket application, apply the liquid gasket to the groove.
- Normally apply the liquid gasket on the inside edge of the bolt holes. Also apply to the outside edge of the bolt holes when specified in the procedure.
- Within five minutes of liquid gasket application, install the mating component.
- If the liquid gasket protrudes, wipe it off immediately.
- Do not retighten after the installation.
- Wait 30 minutes or more after installation before refilling the engine with oil or coolant.

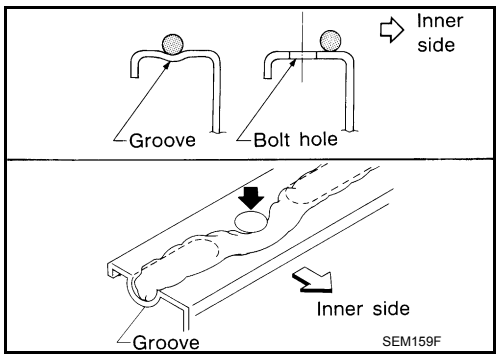

CAUTION:
Carefully follow all of the warnings, cautions, notes, and procedures contained in this manual.

PREPARATION

PREPARATION

Special Service Tool

INFOID:0000000009824909

The actual shapes of Kent-Moore tools may differ from those of special service tools illustrated here.

Tool number (Kent-Moore No.) Tool name	Description
KV10111100 (J-37228) Seal cutter 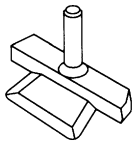 S-NT046	Removing steel oil pan and rear timing chain case
KV991J0050 (J-44626) Air fuel sensor Socket 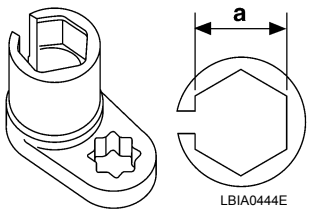 LBIA0444E	Loosening or tightening air fuel ratio A/F sensor **a: 22 mm (0.87 in)**
EG15050500 (J-45402) Compression gauge adapter ZZA1225D	Inspecting compression pressure
KV10116200 (J-26336-B) Valve spring compressor 1. KV10115900 (J-26336-20) Attachment 2. KV10109220 (—) Adapter 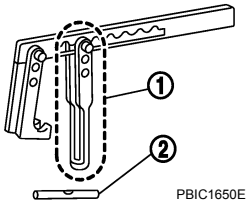 PBIC1650E	Disassembling valve mechanism Part (1) is a component of KV10116200 (J-26336-B), but part (2) is not.
KV10112100 (BT-8653-A) Angle wrench 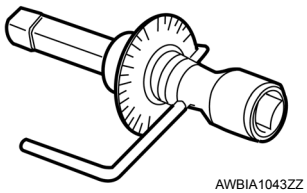 AWBIA1043ZZ	Tightening bolts for cylinder head, main bearing cap and connecting rod cap
KV10107902 (J-38959) Valve oil seal puller 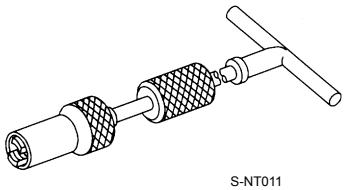 S-NT011	Removing valve oil seal

Tool number (Kent-Moore No.) Tool name	Description
KV10115600 (J-38958) Valve oil seal drift 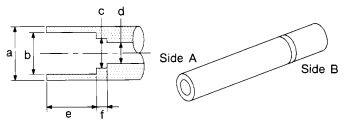 S-NT603	Installing valve oil seal **Use side A.** **a: 20 (0.79) dia.** **d: 8 (0.31) dia.** **b: 13 (0.51) dia.** **e: 10.7 (0.421) dia.** **c: 10.3 (0.406) dia.** **f: 5 (0.20) dia.** Unit: mm (in)
EM03470000 (J-8037) Piston ring compressor 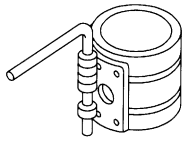 S-NT044	Installing piston assembly into cylinder bore
ST16610001 (J-23907) Pilot bushing puller 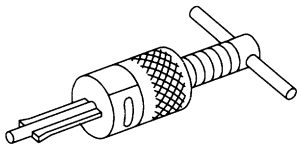 S-NT045	Removing crankshaft pilot bushing
WS39930000 (—) Tube presser 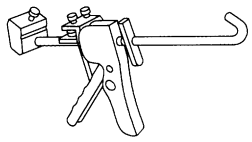 S-NT052	Pressing the tube of liquid gasket
— (J-47245) Ring gear stopper 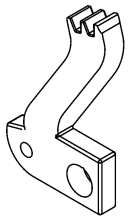 LBIA0451E	Removing and installing crankshaft pulley
16441 6N210 (J-45488) Quick connector release 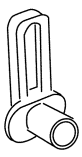 PBIC0198E	Removing fuel tube quick connectors in engine room (Available in SEC. 164 of PARTS CATALOG: Part No. 16441 6N210)

Tool number (Kent-Moore No.) Tool name	Description
— (J-45816) E20 Socket 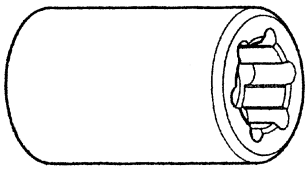 LBIA0285E	Loosening and tightening cylinder head bolts.
— (J-46535) Drive belt tension releaser 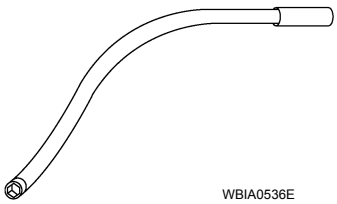 WBIA0536E	Releasing drive belt tension

Commercial Service Tool

INFOID:0000000009824910

(Kent-Moore No.) Tool name	Description
Power tool 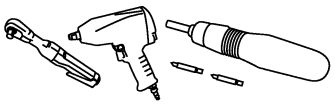 PIIB1407E	Loosening nuts, screws, and bolts
Spark plug wrench 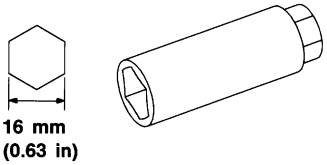 16 mm (0.63 in) S-NT047	Removing and installing spark plug
Valve seat cutter set 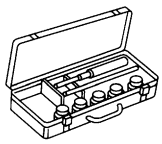 S-NT048	Finishing valve seat dimensions
Pulley puller 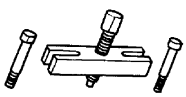 ZZA0010D	Removing crankshaft pulley

(Kent-Moore No.) Tool name	Description
Piston ring expander 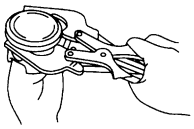 S-NT030	Removing and installing piston ring
Valve guide drift 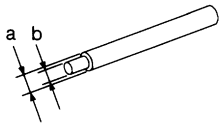 S-NT015	Removing and installing valve guide **Intake & Exhaust:** **a: 9.5 mm (0.374 in) dia.** **b: 5.5 mm (0.217 in) dia.**
Valve guide reamer 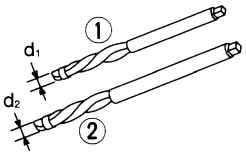 S-NT016	1: Reaming valve guide hole 2: Reaming hole for oversize valve guide **Intake & Exhaust:** **d_1: 6.0 mm (0.236 in) dia.** **d_2: 10.175 - 10.196 mm (0.4006 - 0.4014 in) dia.**
Front oil seal drift 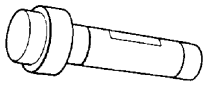 ZZA0012D	Installing front oil seal
Rear oil seal drift 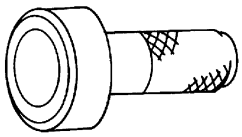 ZZA0025D	Installing rear oil seal
(J-43897-18) (J-43897-12) Oxygen sensor thread cleaner 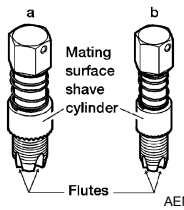 AEM488	Reconditioning the exhaust system threads before installing a new A/F sensor and heated oxygen sensor (Use with anti-seize lubricant shown below.) **a: J-43897-18 (18 mm dia.) (0.71 in) for zirconia heated oxygen sensor** **b: J-43897-12 (12 mm dia.) (0.55 in) for titania heated oxygen sensor**

(Kent-Moore No.) Tool name		Description
Anti-seize lubricant (Permatex 133AR or equivalent meeting MIL specification MIL-A-907)	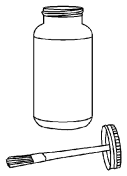 AEM489	Lubricating A/F sensors and heated oxygen sensor thread cleaning tool when reconditioning exhaust system threads
Engine stand assembly 1. Engine stand 2. Base	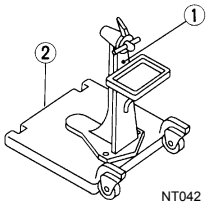 NT042	Disassembling and assembling engine

SYSTEM DESCRIPTION

NOISE, VIBRATION, AND HARSHNESS (NVH) TROUBLESHOOTING

NVH Troubleshooting - Engine Noise

INFOID:0000000009824911

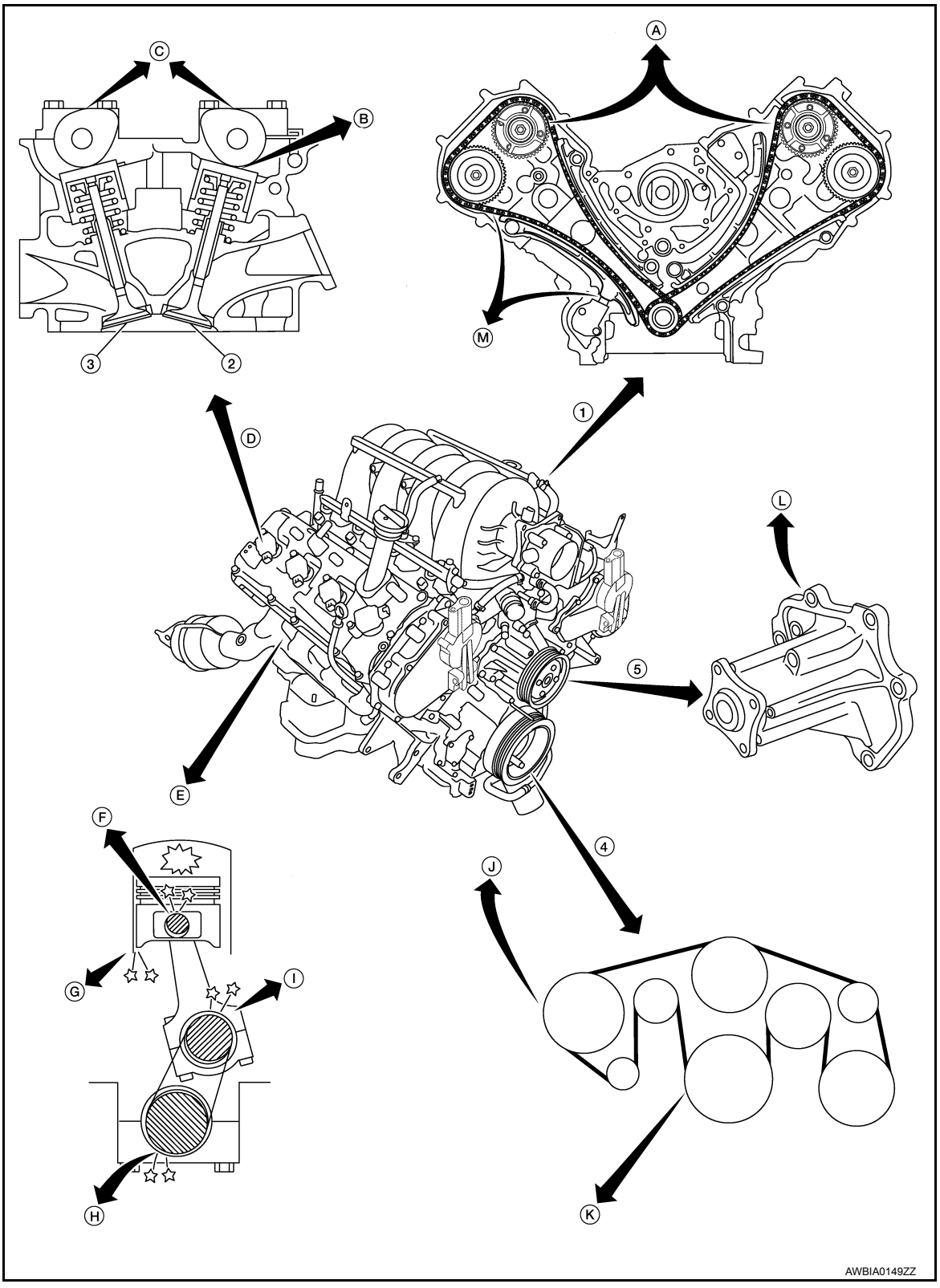

1. Timing chain
2. Intake valve
3. Exhaust valve
4. Drive belt
5. Water pump
A. VTC noise
B. Tappet noise
C. Camshaft bearing noise
D. Valve mechanism
E. Rotation mechanism
F. Piston pin noise
G. Piston slap noise
H. Main bearing noise
I. Connecting rod bearing noise
J. Drive belt noise (slipping)
K. Drive belt noise (stick/slipping)
L. Water pump noise
M. Timing chain and chain tensioner noise

Use the Chart Below to Help You Find the Cause of the Symptom

INFOID:0000000009824912

1. Locate the area where noise occurs.
2. Confirm the type of noise.
3. Specify the operating condition of engine.
4. Check specified noise source.

If necessary, repair or replace these parts.

Location of noise	Type of noise	Operating condition of engine						Source of noise	Check item	Reference page
		Before warm-up	After warm-up	When starting	When idling	When racing	While driving			
Top of engine Rocker cover Cylinder head	Ticking or clicking	C	A	—	A	B	—	Tappet noise	Valve clearance	EM-19
	Rattle	C	A	—	A	B	C	Camshaft bearing noise	Camshaft journal clearance Camshaft runout	EM-62 EM-62
Crankshaft pulley Cylinder block (Side of engine) Oil pan	Slap or knock	—	A	—	B	B	—	Piston pin noise	Piston and piston pin clearance Connecting rod bushing clearance	EM-101 EM-101
	Slap or rap	A	—	—	B	B	A	Piston slap noise	Piston-to-bore clearance Piston ring side clearance Piston ring end gap Connecting rod bend and torsion	EM-101 EM-101 EM-101 EM-101
	Knock	A	B	C	B	B	B	Connecting rod bearing noise	Connecting rod bushing oil clearance (Small end) Connecting rod bearing clearance (Big end)	EM-101 EM-101
	Knock	A	B	—	A	B	C	Main bearing noise	Main bearing oil clearance Crankshaft runout	EM-101 EM-101
Front of engine Chain case cover Front cover	Tapping or ticking	A	A	—	B	B	B	Timing chain and chain tensioner noise	Timing chain cracks and wear Timing chain tensioner operation	EM-57 EM-57

Location of noise	Type of noise	Operating condition of engine						Source of noise	Check item	Reference page
		Before warm-up	After warm-up	When starting	When idling	When racing	While driving			
Front of engine	Squeaking or fizzing	A	B	—	B	—	C	Drive belts (Sticking or slipping)	Drive belts deflection	EM-14
	Creaking	A	B	A	B	A	B	Drive belts (Slipping)	Idler pulley bearing operation	
	Squall Creaking	A	B	—	B	A	B	Water pump noise	Water pump operation	CO-6
	Rattle	—	—	A	—	—	—	VTC	VTC lock pin clearance	EM-71

A: Closely related B: Related C: Sometimes related —: Not related

PERIODIC MAINTENANCE

DRIVE BELTS

Checking Drive Belts

INFOID:0000000009824913

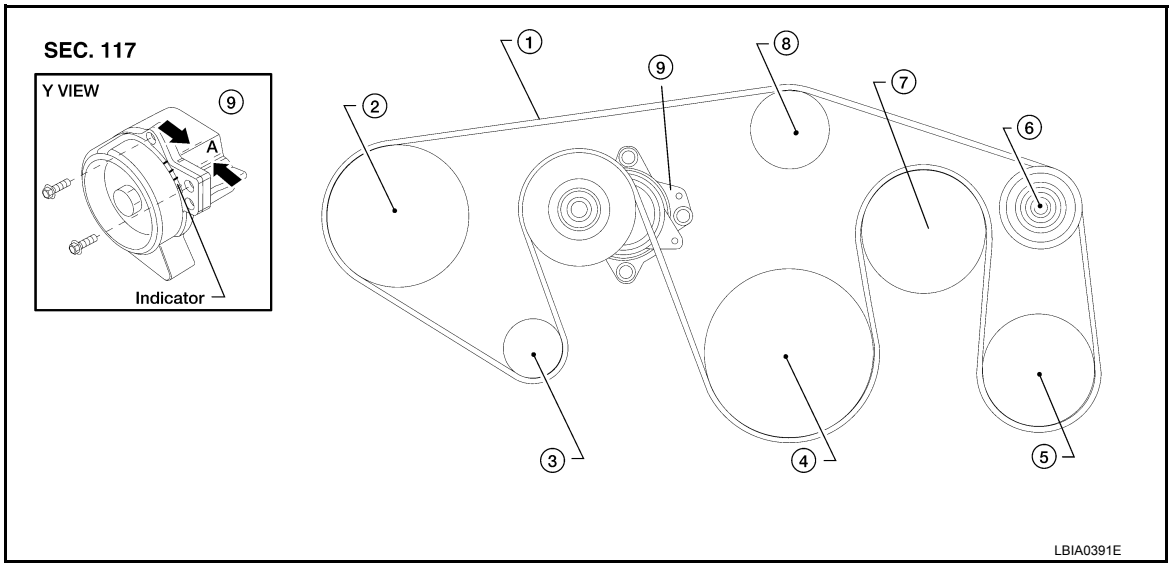

1. Drive belt
2. Power steering pump pulley
3. Generator pulley
4. Crankshaft pulley
5. A/C compressor
6. Idler pulley
7. Cooling fan pulley
8. Water pump pulley
9. Drive belt auto-tensioner
A. Allowable working range

WARNING:

Be sure to perform when the engine is stopped.

1. Remove air duct and resonator assembly when inspecting drive belt.
2. Make sure that indicator (single line notch) of each auto-tensioner is within the allowable working range (between three line notches).
   NOTE:
   - Check the drive belt auto-tensioner indication when the engine is cold.
   - The indicator notch is located on the moving side of the drive belt auto-tensioner.
3. Visually check entire drive belt for wear, damage or cracks.
4. If the indicator is out of allowable working range or drive belt is damaged, replace the drive belt. Refer to EM-14, "Checking Drive Belts".

DRIVE BELT TENSION

There is no manual drive belt tension adjustment. The drive belt tension is automatically adjusted by the drive belt auto-tensioner.

Removal and Installation

INFOID:0000000009824914

REMOVAL

1. Remove the air duct and resonator assembly. Refer to EM-26, "Removal and Installation".

2. Install Tool on drive belt auto-tensioner pulley bolt, move in the direction of arrow (loosening direction of tensioner) as shown.

Tool number : — (J-46535)

WARNING:
Avoid placing hand in a location where pinching may occur if the holding tool accidentally comes off.

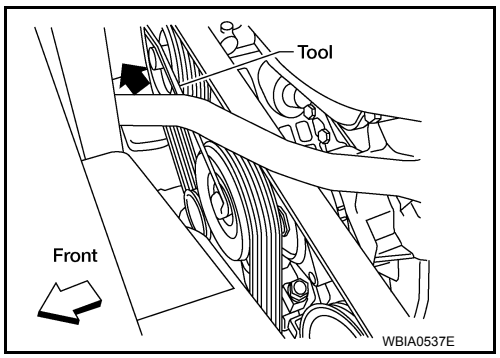

3. Remove the drive belt.

INSTALLATION

Installation is in the reverse order of removal.

CAUTION:
Make sure drive belt is securely installed around all pulleys.

- Rotate the crankshaft pulley several turns clockwise to equalize drive belt tension between pulleys.
- Make sure drive belt tension is within the allowable working range, using the indicator notch on the drive belt auto-tensioner. Refer to EM-14, "Checking Drive Belts".

Drive Belt Auto-Tensioner and Idler Pulley

INFOID:0000000009824915

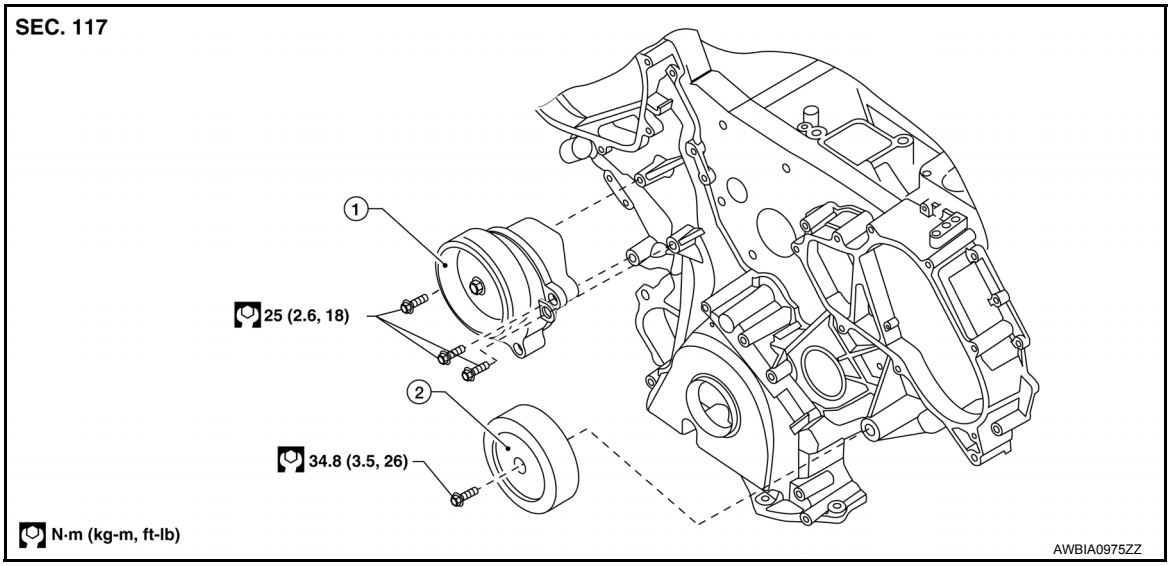

1. Drive belt auto-tensioner
2. Idler pulley

REMOVAL

1. Remove the drive belt. Refer to EM-14, "Removal and Installation".
2. Remove the drive belt auto-tensioner and idler pulley using power tool.

INSTALLATION

Installation is in the reverse order of removal.

AIR CLEANER FILTER

Removal and Installation (Viscous paper type)

INFOID:0000000009824916

REMOVAL

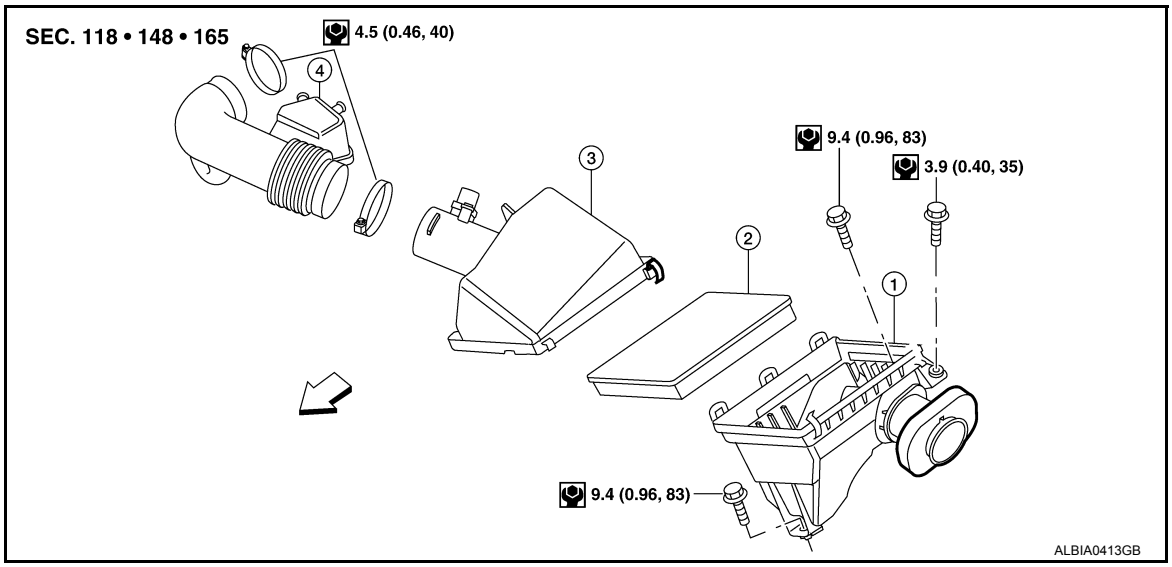

1. Air cleaner case (lower)
2. Air cleaner filter
3. Air cleaner case (upper)
4. Air duct and resonator assembly
⇦ Front

NOTE:
- The viscous paper type filter does not need cleaning between replacement intervals.
- Replace the air filter as necessary for periodic maintenance. Refer to MA-10, "FOR NORTH AMERICA : Introduction of Periodic Maintenance" (United States and Canada), MA-13, "FOR MEXICO : Introduction of Periodic Maintenance" (Mexico).

1. Remove the air cleaner case (upper).
2. Remove the air cleaner filter from the air cleaner case (lower).

INSTALLATION

1. Install the new air cleaner filter in the air cleaner case (lower).
2. Install the air cleaner case (upper).

SPARK PLUG

Removal and Installation

INFOID:0000000009824917

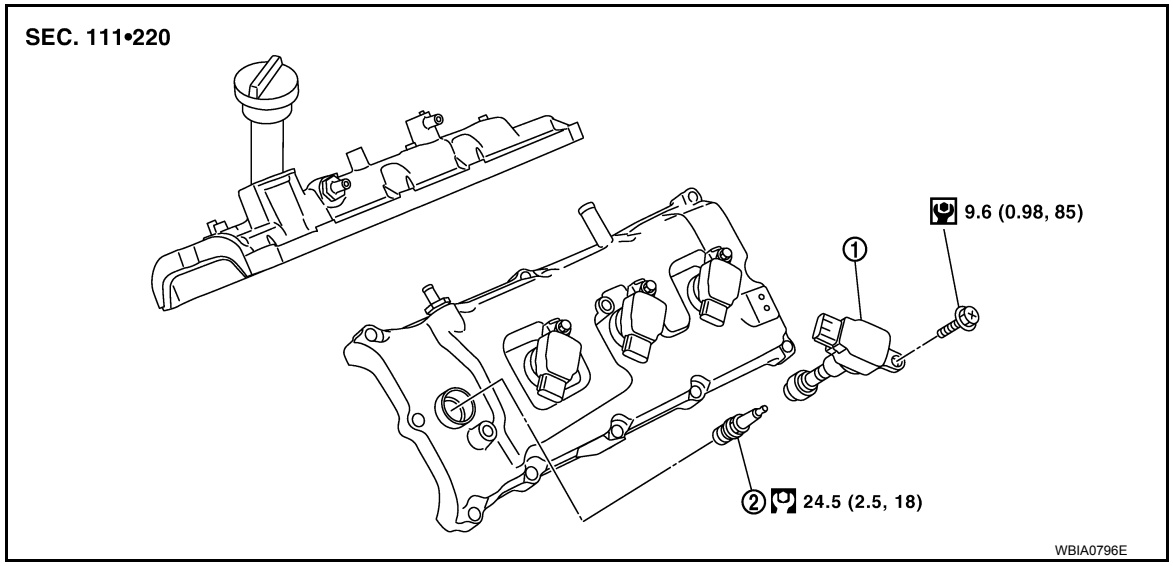

1. Ignition coil
2. Spark plug

REMOVAL

1. Remove ignition coil. Refer to EM-40, "Removal and Installation".
   CAUTION:
   Do not shock ignition coil.
2. Remove spark plug using suitable tool.

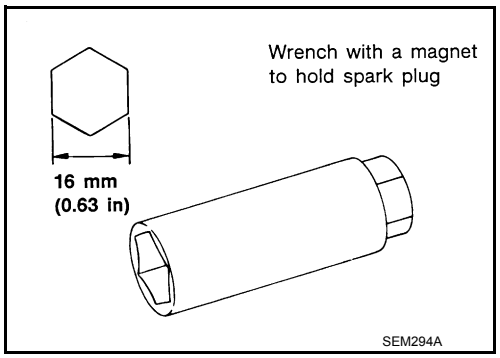

INSPECTION AFTER REMOVAL

- Do not use a wire brush for cleaning.
- If plug tip is covered with carbon, spark plug cleaner may be used.

Cleaner air pressure	**: Less than 588 kPa (6 kg/cm^2, 85 psi)**
Cleaning time	**: Less than 20 seconds**

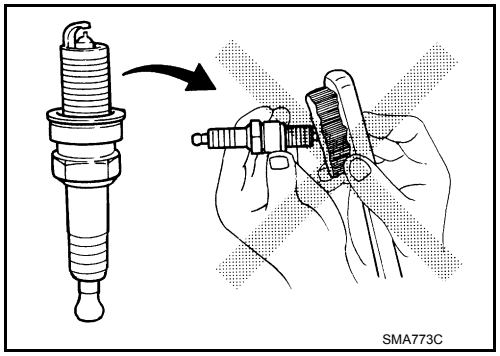

- Checking and adjusting plug gap is not required between change intervals.

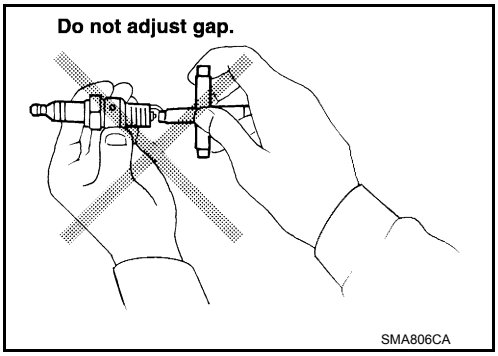

INSTALLATION

Installation is in the reverse order of removal.

Spark Plug Types

Make	NGK	
Model	Standard model	FFV model
Standard type*	DILFR5A-11	DILFR5A-11D
Gap (Nominal)	1.1 mm (0.043 in)	1.1 mm (0.043 in)

*: Always check with the Parts Department for the latest parts information.

CAUTION:

Do not drop or shock spark plug.

CAMSHAFT VALVE CLEARANCE

Valve Clearance

INFOID:0000000009824918

INSPECTION

NOTE:

Perform the following inspection after removal, installation or replacement of camshaft or valve-related parts, or if there are unusual engine conditions due to changes in valve clearance over time (starting, idling, and/or noise).

1. Warm up the engine. Then stop the engine.
2. Remove the air cleaner and resonator assembly. Refer to EM-26, "Removal and Installation".
3. Remove the (RH) bank and (LH) bank rocker covers using power tool. Refer to EM-41, "Removal and Installation".
4. Turn the crankshaft pulley in the normal direction (clockwise when viewed from engine front) to align TDC identification notch (without paint mark) with timing indicator.

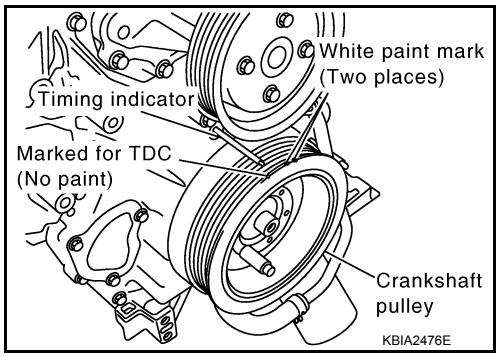

5. At this time, make sure both the intake and exhaust cam noses of No. 1 cylinder (top front on LH bank) face outside.
   - If they do not face outside, turn crankshaft pulley once more.

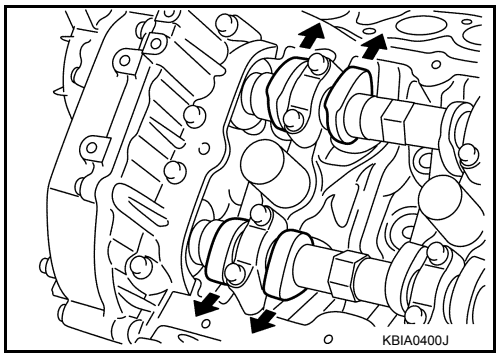

6. Measure valve clearances at the locations marked "×" as shown in the table below (locations indicated with black arrow).

⇦ : Engine front

⬅ : Measurable at No.1 cylinder compression top dead center (black)

⇦ : Measurable at No. 3 cylinder compression top dead center (white)

(A) : (RH)

(B) : (LH)

(C) : Exhaust

(D) : Intake

NOTE:
Firing order 1-8-7-3-6-5-4-2
- No. 1 cylinder compression TDC

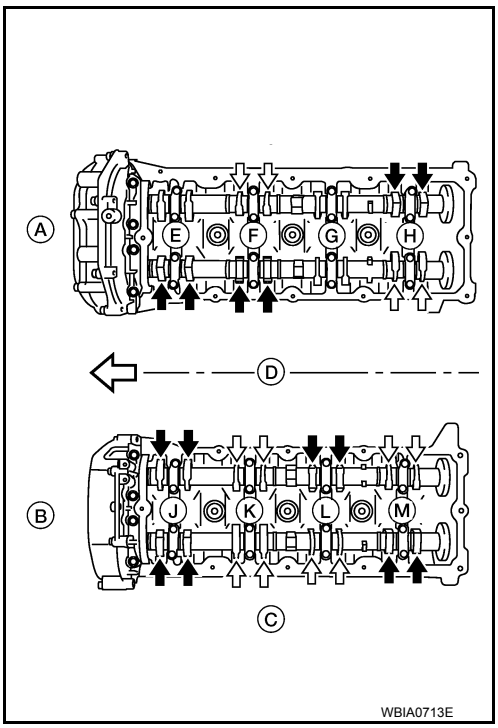

Measuring position (RH bank)		No. 2 cyl (E)	No. 4 cyl (F)	No. 6 cyl (G)	No. 8 cyl (H)
No. 1 cylinder at TDC	EXH				×
	INT	×	×		
Measuring position (LH bank)		No. 1 cyl (J)	No. 3 cyl (K)	No. 5 cyl (L)	No. 7 cyl (M)
No. 1 cylinder at TDC	INT	×		×	
	EXH	×			×

- Measure valve clearance using suitable tool. Refer to EM-118, "Standard and Limit".

CAUTION:
If the inspection was carried out with a cold engine, make sure the values with a fully warmed up engine are still within specifications.

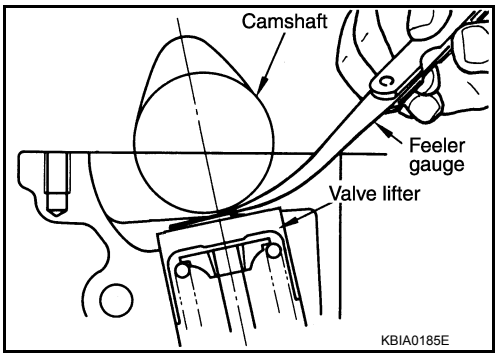

7. Turn the crankshaft pulley clockwise 270° from the position of No. 1 cylinder compression TDC to obtain No. 3 cylinder compression TDC.

8. Measure valve clearances at the locations marked "×" as shown in the table below (locations indicated with white arrow).

⇦ : Engine front

⬅ : Measurable at No.1 cylinder compression top dead center (black)

⇦ : Measurable at No. 3 cylinder compression top dead center (white)

(A) : (RH)

(B) : (LH)

(C) : Exhaust

(D) : Intake

NOTE:
Firing order 1-8-7-3-6-5-4-2
- No. 3 cylinder compression TDC

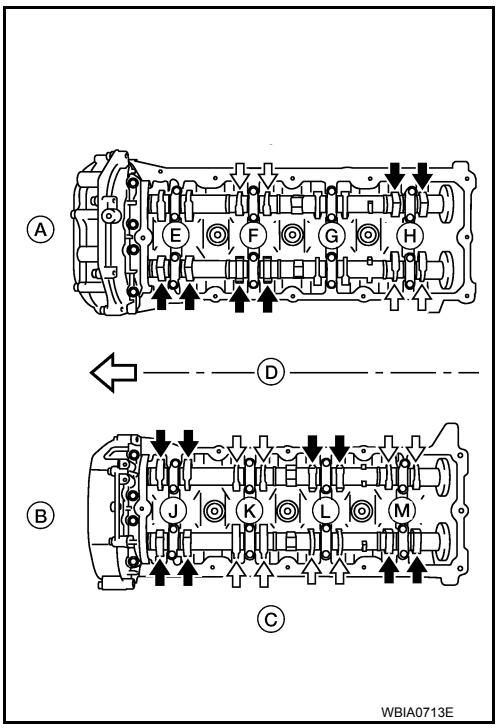

Measuring position (RH bank)		No. 2 cyl (E)	No. 4 cyl (F)	No. 6 cyl (G)	No. 8 cyl (H)
No. 3 cylinder at TDC	EXH		×		
	INT				×
Measuring position (LH bank)		No. 1 cyl (J)	No. 3 cyl (K)	No. 5 cyl (L)	No. 7 cyl (M)
No. 3 cylinder at TDC	INT		×		×
	EXH		×	×	

- Measure valve clearance using suitable tool. Refer to EM-118, "Standard and Limit".

CAUTION:
If the inspection was carried out with a cold engine, make sure the values with a fully warmed up engine are still within specifications.

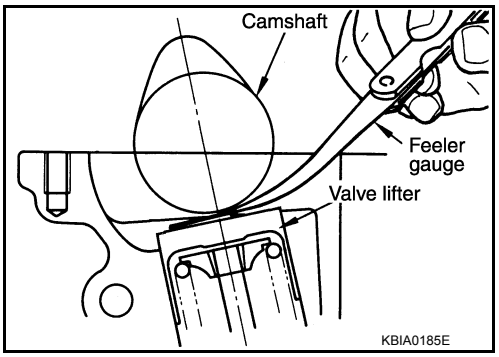

9. Turn the crankshaft pulley clockwise 90° from the position of No. 3 cylinder compression TDC (clockwise by 360° from the position of No. 1 cylinder compression TDC) to measure the intake and exhaust valve clearances of No. 6 cylinder (G) and the exhaust valve clearance of No. 2 cylinder (E).

⇦ : Engine front
(A) : (RH)
(B) : (LH)
(C) : Exhaust
(D) : Intake
(E) : No. 2 cylinder
(F) : No. 4 cylinder
(G) : No. 6 cylinder
(H) : No. 8 cylinder
(J) : No. 1 cylinder
(K) : No. 3 cylinder
(L) : No. 5 cylinder
(M) : No. 7 cylinder

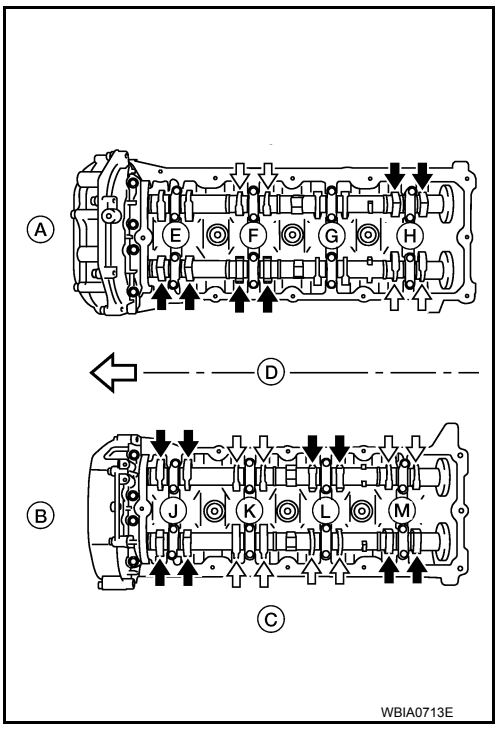

10. If out of specifications, adjust as necessary.

ADJUSTMENT

NOTE:

- Perform adjustment depending on the selected head thickness of the valve lifter.
- The specified valve lifter thickness is the dimension at normal temperatures. Ignore dimensional differences caused by temperature. Use the specifications for hot engine condition to adjust.

1. Remove the camshaft. Refer to EM-62, "Removal and Installation".
2. Remove the valve lifters at the locations that are out of specification.
3. Measure the center thickness of the removed valve lifters using suitable tool.
4. Use the equation below to calculate the valve lifter thickness for replacement.
   - Valve lifter thickness calculation:
     Thickness of replacement valve lifter = t1+ (C1 - C2)
     t1 = Thickness of removed valve lifter
     C1 = Measured valve clearance
     C2= Standard valve clearance:

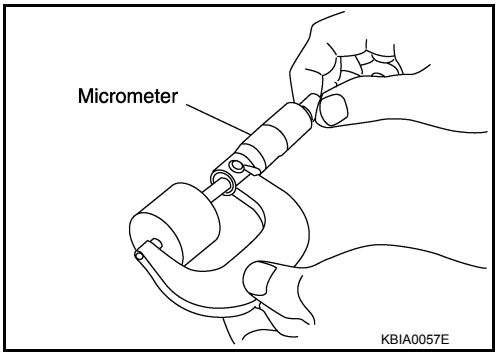

   - Thickness of a new valve lifter can be identified by stamp marks on the reverse side (inside the cylinder).
     Stamp mark N788 indicates 7.88 mm (0.3102 in) in thickness.
   - Available thickness of valve lifter: 25 sizes with range 7.88 to 8.36 mm (0.3102 to 0.3291 in) in steps of 0.02 mm (0.0008 in) (when manufactured at factory). Refer to EM-118, "Standard and Limit".

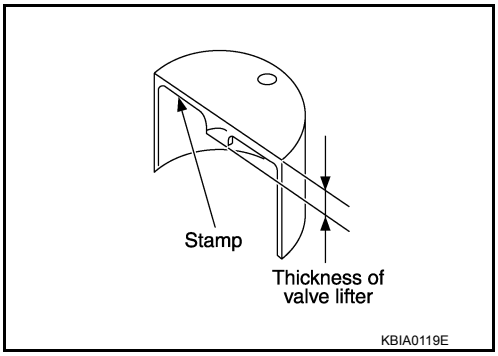

5. Install the selected valve lifter.

6. Install the camshaft.
7. Manually turn the crankshaft pulley a few turns.
8. Make sure the valve clearances for a cold engine are within specifications by referring to the specified values.
9. After completing the repair, check the valve clearances again with the specifications for a warmed engine. Make sure the values are within specifications. Refer to EM-118, "Standard and Limit".

COMPRESSION PRESSURE

Checking Compression Pressure

INFOID:0000000009824919

1. Warm up the engine thoroughly. Then stop the engine.
2. Release the fuel pressure. Refer to EC-494, "Fuel Pressure Check".
   CAUTION:
   If CONSULT is not used to release fuel pressure leave the fuel pump fuse disconnected until step 7.
3. Remove the spark plug from each cylinder. Refer to EM-17, "Removal and Installation".
4. Connect the engine tachometer (not required in use of CONSULT).
5. Install the compression tester with Tool into the spark plug hole.

   Tool number : EG15050500 (J-45402)

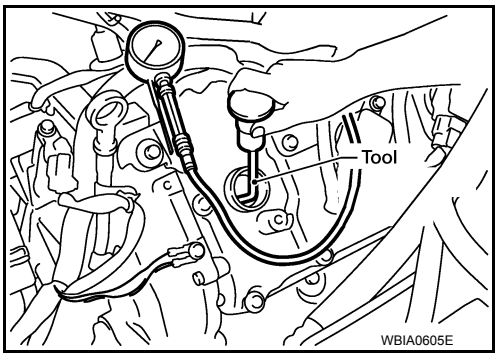

6. With the accelerator pedal fully depressed, turn the ignition switch to “START” for cranking. When the gauge pointer stabilizes, read the compression pressure and engine rpm. Perform these steps to check each cylinder.

Unit: kPa (kg/cm^2, psi) /rpm

Standard	Minimum	Deference limit between cylinders
1,520 (15.5, 220) / 200	1,324 (13.5, 192) / 200	98 (1.0, 14) / 200

CAUTION:
Always use a fully charged battery to obtain specified engine speed.
- If the engine speed is out of the specified range, check the battery liquid for proper gravity. Check the engine speed again with normal battery gravity.
- If the compression pressure is below the minimum value, check the valve clearances and parts associated with the combustion chamber (valve, valve seat, piston, piston ring, cylinder bore, cylinder head, cylinder head gasket). After checking, measure the compression pressure again.
- If some cylinders have low compression pressure, pour a small amount of engine oil into the spark plug hole of the cylinder to re-check it for compression.
  - If the added engine oil improves the compression, the piston rings may be worn out or damaged. Check the piston rings and replace if necessary.
  - If the compression pressure remains at a low level despite the addition of engine oil, the valves may be malfunctioning. Check the valves for damage. Replace the valve or valve seat accordingly.
- If two adjacent cylinders have respectively low compression pressure and their compression remains low even after the addition of engine oil, the gaskets may be leaking, or a valve in adjacent cylinders may be damaged. Inspect and repair as required.

7. Install the components in the reverse order of removal.
8. Start the engine and confirm that it runs smoothly.
9. Perform trouble diagnosis. If DTC appears, erase it. Refer to EC-142, "Description".

REMOVAL AND INSTALLATION

ENGINE ROOM COVER

Removal and Installation

INFOID:0000000009824920

CAUTION:
Do not damage or scratch engine room cover when installing or removing.

REMOVAL

- Remove the engine room cover bolts and engine room cover.

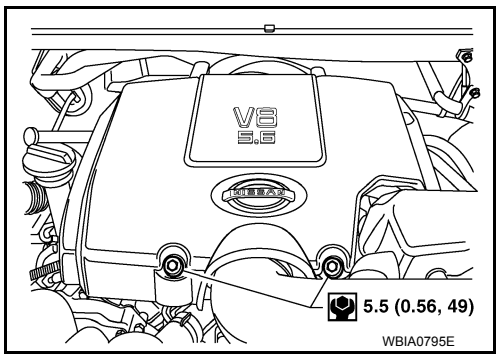

INSTALLATION

Installation is in the reverse order of removal.

AIR CLEANER AND AIR DUCT

Exploded View

INFOID:0000000009824921

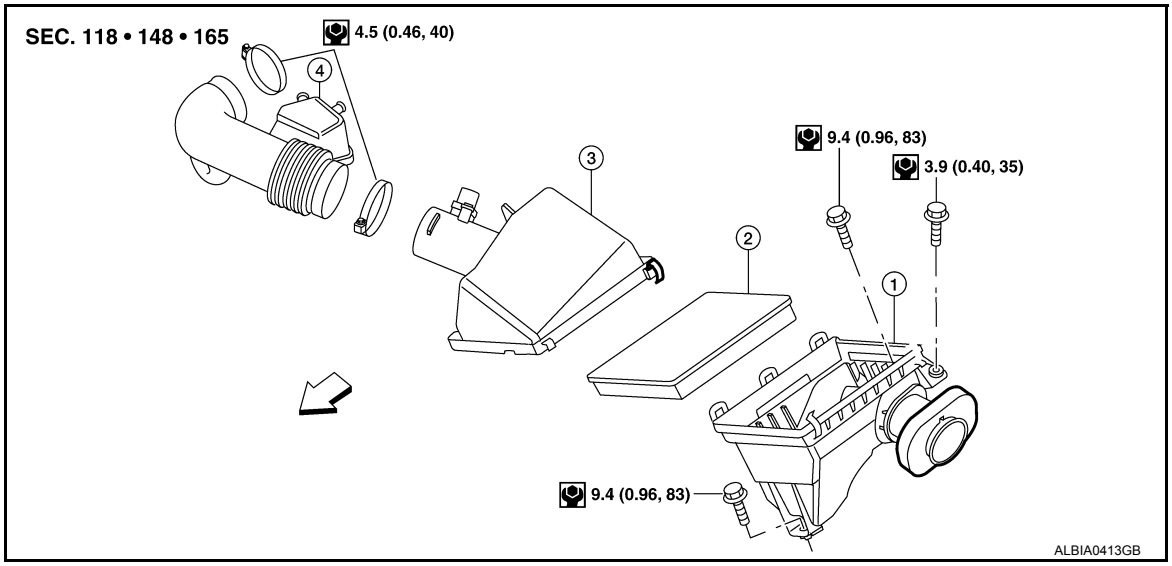

1. Air cleaner case (lower)
2. Air cleaner filter
3. Air cleaner case (upper)
4. Air duct and resonator assembly
⇦ Front

Removal and Installation

INFOID:0000000009824922

CAUTION:
Handle mass air flow sensor with care.
- **Do not shock it.**
- **Do not disassemble it.**
- **Do not touch its sensor,**

REMOVAL

NOTE:
- Add marks as necessary for easier installation.

1. Remove the engine room cover using power tool. Refer to EM-25, "Removal and Installation".
2. Disconnect the harness connector from air cleaner case (upper).
3. Disconnect crankcase ventilation hoses at resonator.
4. Remove the air duct and resonator assembly and air cleaner case (upper).
5. Remove air cleaner filter and air cleaner case (lower)

INSPECTION AFTER REMOVAL

Inspect air duct, resonator assembly, and air cleaner case for cracks or tearing.
- Replace air duct and resonator assembly as necessary.

INSTALLATION

Installation is in the reverse order of removal.

INTAKE MANIFOLD

Exploded View

INFOID:0000000009824923

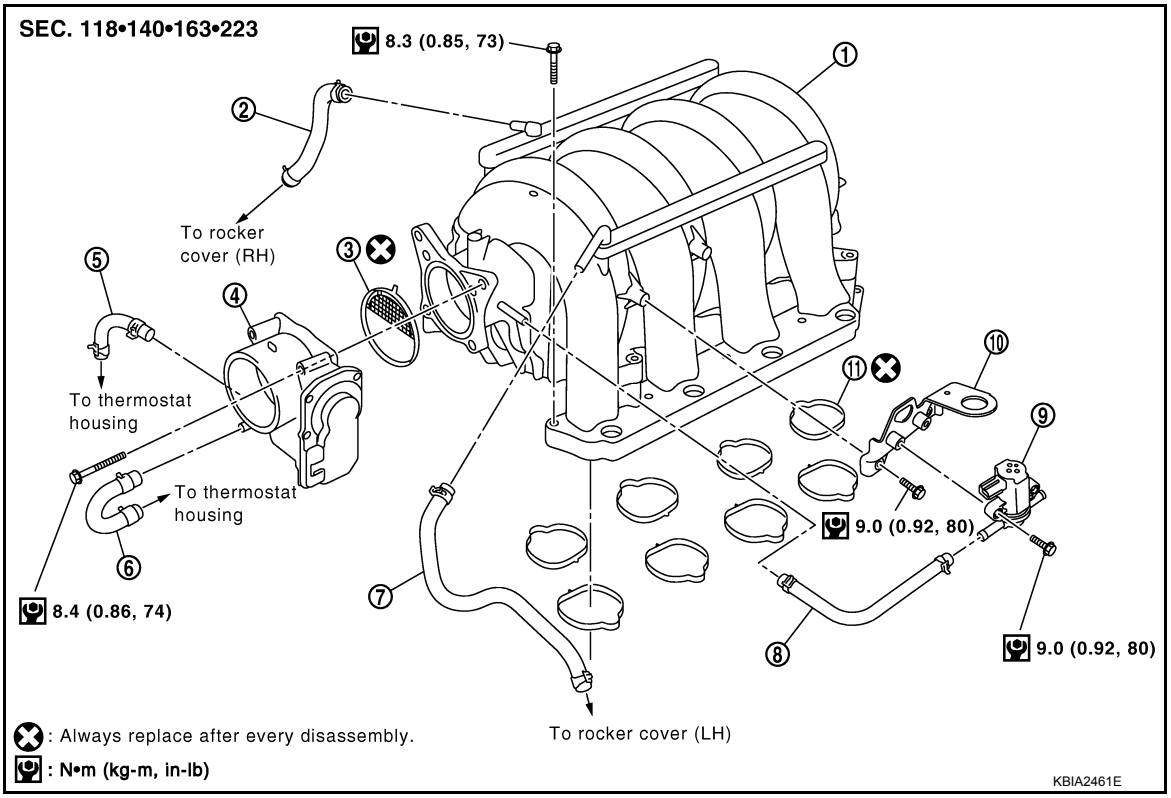

1.	Intake manifold	2.	PCV hose	3.	Gasket
4.	Electric throttle control actuator	5.	Water hose	6.	Water hose
7.	PCV hose	8.	EVAP hose	9.	EVAP canister purge control solenoid valve
10.	Bracket	11.	Gasket		

Removal and Installation

INFOID:0000000009824924

REMOVAL

NOTE:
When removing components such as hoses, tubes/lines, etc., cap or plug openings to prevent fluid from spilling.

1. Partially drain the engine coolant. Refer to CO-11, "Changing Engine Coolant".
   WARNING:
   To avoid the danger of being scalded, do not drain the engine coolant when the engine is hot.
2. Disconnect the negative battery terminal. Refer to PG-77, "Removal and Installation".
3. Release the fuel pressure. Refer to EC-494, "Fuel Pressure Check".
4. Remove the air duct and resonator assembly. Refer to EM-26, "Removal and Installation".
5. Disconnect crankcase ventilation hoses at the intake manifold.

6. Disconnect the fuel tube quick connector on the engine side in the following steps.

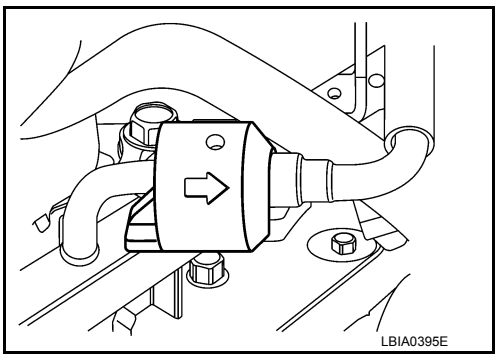

a. Remove quick connector cap (engine side only).

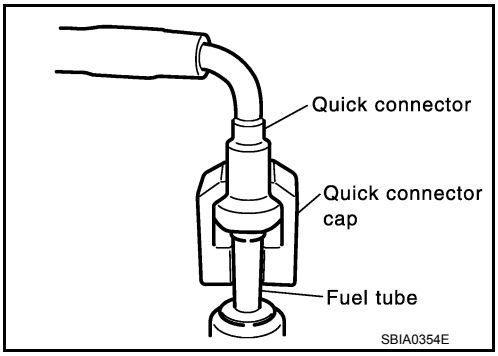

b. With the sleeve side of Tool facing quick connector, install Tool onto fuel tube.

Tool number : 16441 6N210 (J-45488)

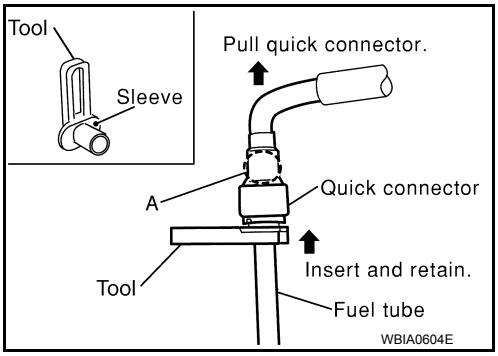

c. Insert Tool into quick connector until sleeve contacts and goes no further. Hold the Tool in that position.
CAUTION:
Inserting the Tool hard will not disconnect quick connector. Hold Tool where it contacts and goes no further.

d. Draw and pull out quick connector straight from fuel tube.
CAUTION:
- **Handle O-ring with bare hands. Do not wear gloves.**
- **Do not reuse O-rings.**
- **Lubricate O-ring with new engine oil.**
- **Do not clean O-ring with solvent.**
- **Prepare container and cloth because fuel will leak.**
- **Avoid fire and sparks.**
- **Be sure to cover openings of disconnected pipes with plug or plastic bag to avoid fuel leaks and entry of foreign materials.**

7. Remove or disconnect harnesses, brake booster vacuum hose and PCV hose and tube from intake manifold.
8. Remove the EVAP canister purge control solenoid valve, if necessary.
9. Remove electric throttle control actuator by loosening bolts diagonally in the reverse order as shown.
CAUTION:
- **Handle carefully to avoid any damage to the electric throttle control actuator.**
- **Do not disassemble.**

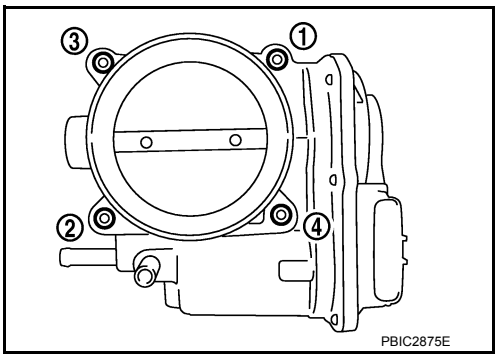

10. Remove the fuel injectors and fuel tube assembly. Refer to EM-43, "Removal and Installation".
11. Loosen the bolts in reverse order shown using power tool.
12. Remove the intake manifold.
    CAUTION:
    Cover engine openings to avoid entry of foreign materials.
    • Clean all gasket mating surfaces, do not reuse gaskets.

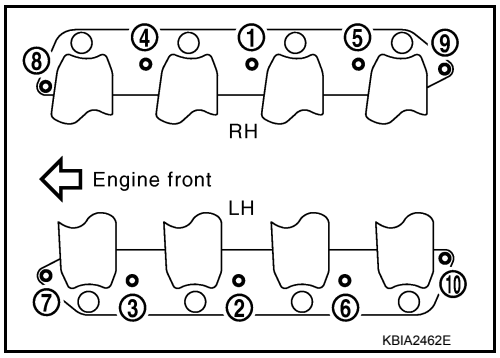

INSTALLATION

Installation is in the reverse order of removal.

• Tighten the intake manifold bolts in numerical order as shown.

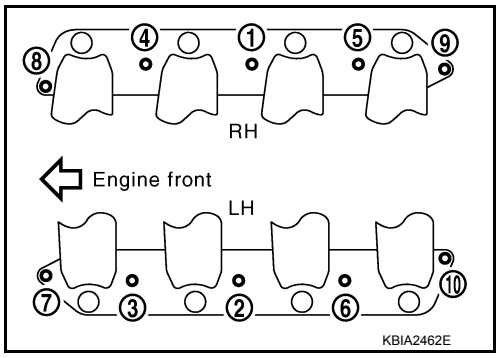

• Install the EVAP canister purge control solenoid valve connector with it facing front of engine.
• Tighten the electronic throttle control actuator bolts of the electric throttle control actuator equally and diagonally in several steps as shown.
• After installation perform procedure in "INSPECTION AFTER INSTALLATION".
• Install the water hose so that its overlap width for connection is between 27 mm (1.06 in) and 32 mm (1.26 in) (target: 27 mm 1.06 in).

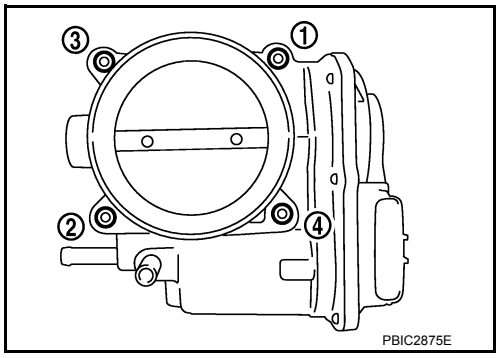

Connecting Quick Connector of Fuel Tube

Install quick connector as follows (the steps are the same for quick connectors on both engine side and vehicle side except for the quick connector cap).

1. Make sure no foreign substances are deposited in and around tube and quick connector, and they are not damaged.
2. Thinly apply new engine oil around the fuel tube from tip end to the spool end.
3. Align center to insert quick connector straight into fuel tube.
   • Insert until the paint mark for engagement identification (white) goes completely inside quick connector so that you cannot see it from the straight side of the connected part. Use a mirror to check this where it is not possible to view directly from the straight side, such as quick connector on vehicle side.

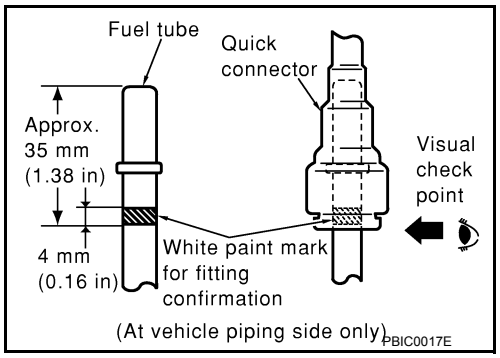

- Insert fuel tube into quick connector until top spool is completely inside quick connector, and 2nd level spool exposes right below quick connector on engine side.
  CAUTION:
  - **Hold (A) position in illustration when inserting fuel tube into quick connector.**
  - **Carefully align center to avoid inclined insertion to prevent damage to O-ring inside quick connector.**
  - **Do not reuse O-rings.**
  - **Insert until you hear a "click" sound and actually feel the engagement.**
  - **To avoid misidentification of engagement with a similar sound, be sure to perform the next step.**

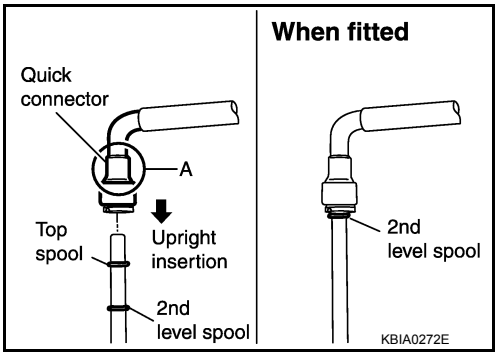

4. Pull quick connector by hand holding (A) position. Make sure it is completely engaged (connected) so that it does not come out from fuel tube.
   NOTE:
   Recommended pulling force is 50 N (5.1 kg, 11.2 lb).
5. Install the quick connector cap on the quick connector joint (on engine side only).
6. Install the fuel hose and tube to hose clamps.
7. Refill the engine coolant. Refer to CO-11, "Changing Engine Coolant".

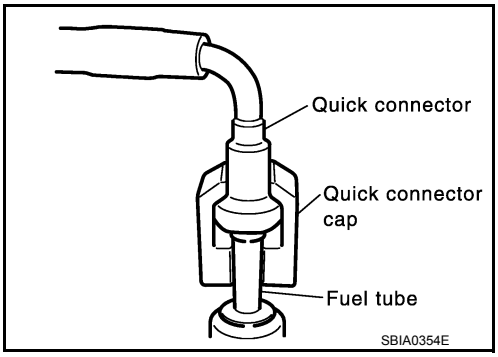

INSPECTION AFTER INSTALLATION

- Before starting engine, check oil/fluid levels including engine coolant and engine oil. If less than required quantity, fill to the specified level. Refer to MA-16, "FOR USA AND CANADA : Fluids and Lubricants" (United States and Canada) or MA-17, "FOR MEXICO : Fluids and Lubricants" (Mexico).
- Perform procedures for “Throttle Valve Closed Position Learning” after finishing repairs. Refer to EC-127, "Throttle Valve Closed Position Learning".
- If electric throttle control actuator is replaced, perform procedures for “Idle Air Volume Learning” after finishing repairs. Refer to EC-128, "Idle Air Volume Learning".
- Use procedure below to check for fuel leakage.
- Turn ignition switch ON (with engine stopped). With fuel pressure applied to fuel piping, check for fuel leakage at connection points.
- Start engine. With engine speed increased, check again for fuel leakage at connection points.
- Run engine to check for unusual noise and vibration.
  NOTE:
  If hydraulic pressure inside timing chain tensioner drops after removal and installation, slack in the guide may generate a pounding noise during and just after engine start. However, this is normal. Noise will stop after hydraulic pressure rises.
- Warm up engine thoroughly to make sure there is no leakage of fuel, exhaust gas, or any oils/fluids including engine oil and engine coolant.
- Bleed air from passages in lines and hoses, such as in cooling system.
- After cooling down engine, again check oil/fluid levels including engine oil and engine coolant. Refill to specified level, if necessary.
- Summary of the inspection items:

Item		Before starting engine	Engine running	After engine stopped
Engine coolant		Level	Leakage	Level
Engine oil		Level	Leakage	Level
Transmission/ transaxle fluid	A/T and CVT Models	Leakage	Level/Leakage	Leakage
	M/T Models	Level/Leakage	Leakage	Level/Leakage
Other oils and fluids*		Level	Leakage	Level

Item	Before starting engine	Engine running	After engine stopped
Fuel	Leakage	Leakage	Leakage
Exhaust gas	—	Leakage	—

*Power steering fluid, brake fluid, etc.

EXHAUST MANIFOLD AND THREE WAY CATALYST

Exploded View

INFOID:0000000009824925

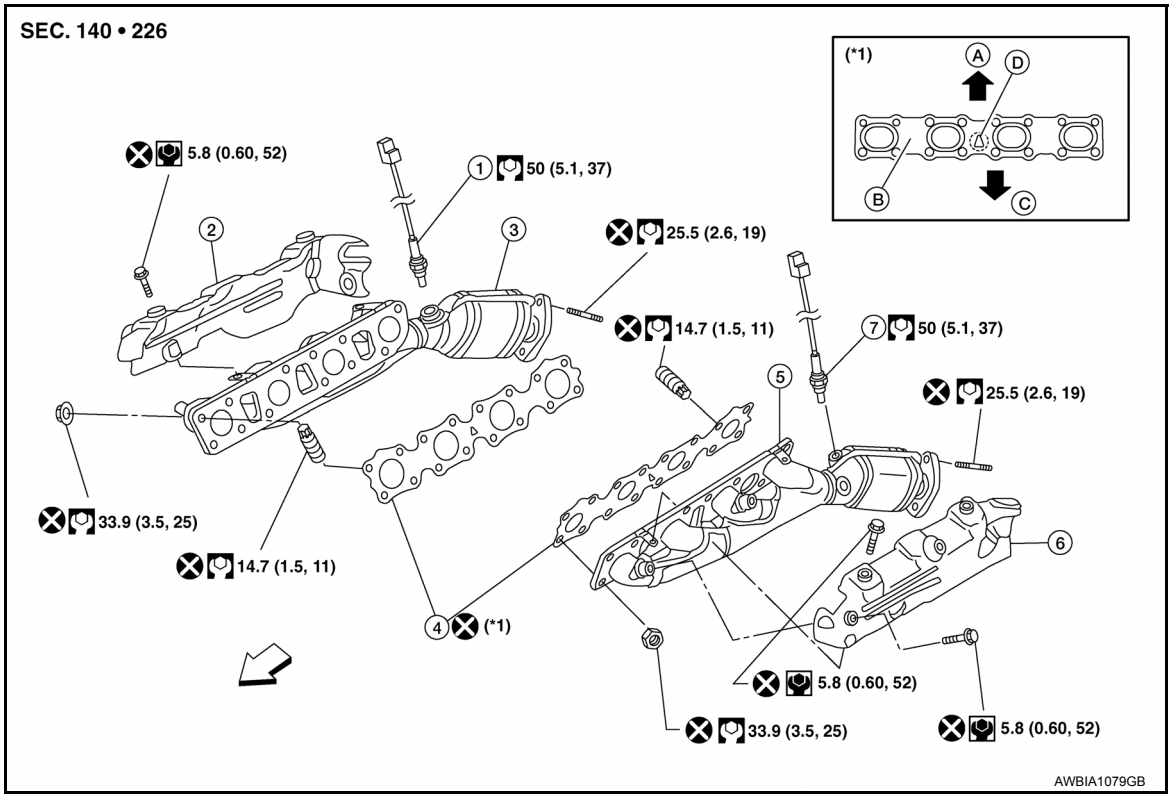

1. Air fuel ratio A/F sensor 1 (bank 2)
2. Exhaust manifold cover (bank 2)
3. Exhaust manifold (bank 2)
4. Gaskets
5. Exhaust manifold (bank 1)
6. Exhaust manifold cover (bank 1)
7. Air fuel ratio A/F sensor 1 (bank 1)
- A. Up
- B. Coated face
- C. Manifold side
- D. Up mark
- ⇦ Front

Removal and Installation

INFOID:0000000009824926

REMOVAL

WARNING:

Perform the work when the exhaust and cooling system have cooled sufficiently.

1. Remove the engine under cover (rear) using power tool (4WD models).
2. Remove front final drive assembly (4WD models). Refer to DLN-213, "Removal and Installation".
3. Remove the main muffler assembly and center exhaust tube. Refer to EX-6, "Removal and Installation".
4. Remove the front exhaust tubes. Refer to EX-6, "Removal and Installation".
5. Remove front tires. Refer to WT-51, "Rotation".
6. Remove fender protectors. Refer to EXT-27, "Removal and Installation".
7. Remove air fuel ratio A/F sensors 1 (bank 1 and bank 2).
   - Follow steps below to remove each air fuel ratio A/F sensor.

a. Remove the harness connector of each air fuel ratio A/F sensor, and harness from bracket and middle clamp.

b. Remove the air fuel ratio A/F sensors from both (LH) and (RH) exhaust manifolds using Tool.

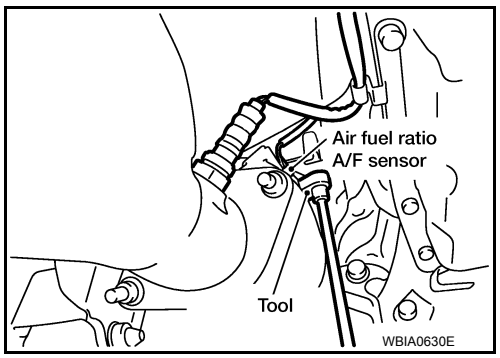

Tool number : KV991J0050 (J-44626)

CAUTION:
- **Do not damage the air fuel ratio A/F sensors**
- **Discard any air fuel ratio A/F sensor which has been dropped from a height of more than 0.5m (19.7 in) onto a hard surface such as a concrete floor. Replace it with a new one.**

8. Support the engine using a suitable tool.
9. Remove the exhaust manifold (LH) (A) following the steps below.

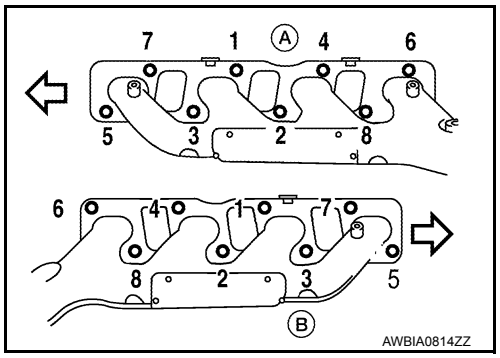

⇦ : Engine front
(B) : Exhaust manifold (RH)

a. Remove the engine mounting insulator. Refer to EM-88, "Exploded View".
b. Remove the exhaust manifold cover.
c. Remove the engine mounting bracket. Refer to EM-88, "Exploded View".
d. Loosen the nuts in reverse order as shown using power tool.
e. Remove the exhaust manifold (LH) (A).

10. Remove the exhaust manifold (RH) (B) following the steps below.

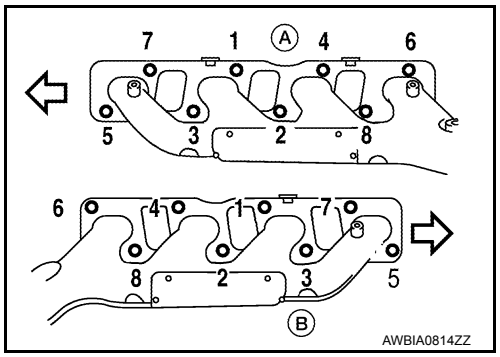

⇦ : Engine front
(A) : Exhaust manifold (LH)

a. Remove the engine mounting insulator. Refer to EM-88, "Exploded View".
b. Remove the exhaust manifold cover.
c. Remove the engine mounting bracket. Refer to EM-88, "Exploded View".
d. Remove the oil level gauge guide. Refer to EM-35, "Exploded View".
e. Loosen the nuts in reverse order as shown using power tool.
f. Remove the exhaust manifold (RH) (B).

INSPECTION AFTER REMOVAL

Surface Distortion

- Check the flatness of each exhaust manifold flange surface using suitable tools.

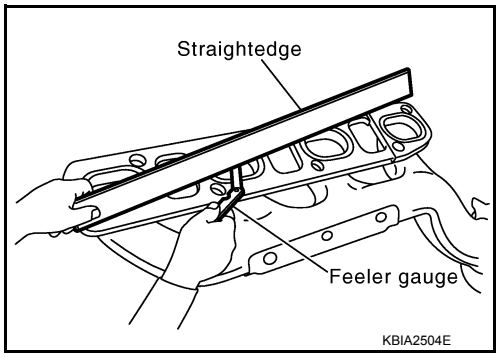

Flatness limit : 0.3 mm (0.012 in)

- If measurement exceeds the limit, replace the exhaust manifold.

INSTALLATION

Installation is in the reverse order of removal.

- Install new exhaust manifold gasket with the top of the triangular up mark on it facing up and its coated face (gray side) toward the exhaust manifold side.

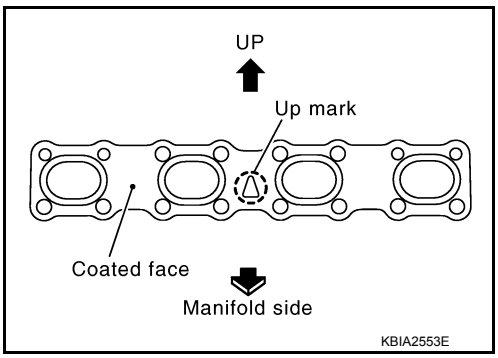

- Tighten the exhaust manifold nuts (LH) and (RH) to specification in the numerical order shown. Then retighten the nuts to specification in the numerical order shown.

(A) : Exhaust manifold (LH)
(B) : Exhaust manifold (RH)
⇦ : Engine front

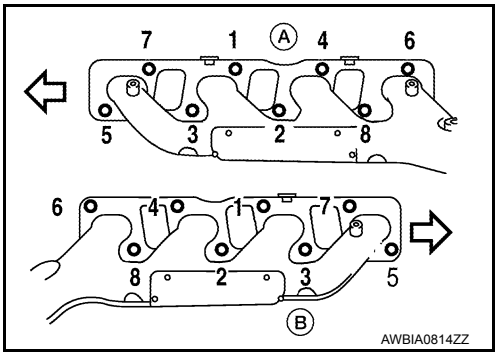

- Before installing new air fuel ratio A/F sensors, clean the exhaust system threads using suitable tool and apply anti-seize lubricant.

Oxygen sensor thread cleaner : (J-43897-12)
Oxygen sensor thread cleaner : (J-43897-18)

CAUTION:
- **Do not over tighten the air fuel ratio A/F sensors. Doing so may cause damage to the sensor, resulting in the MIL coming on.**

OIL PAN AND OIL STRAINER

Exploded View

INFOID:0000000009824927

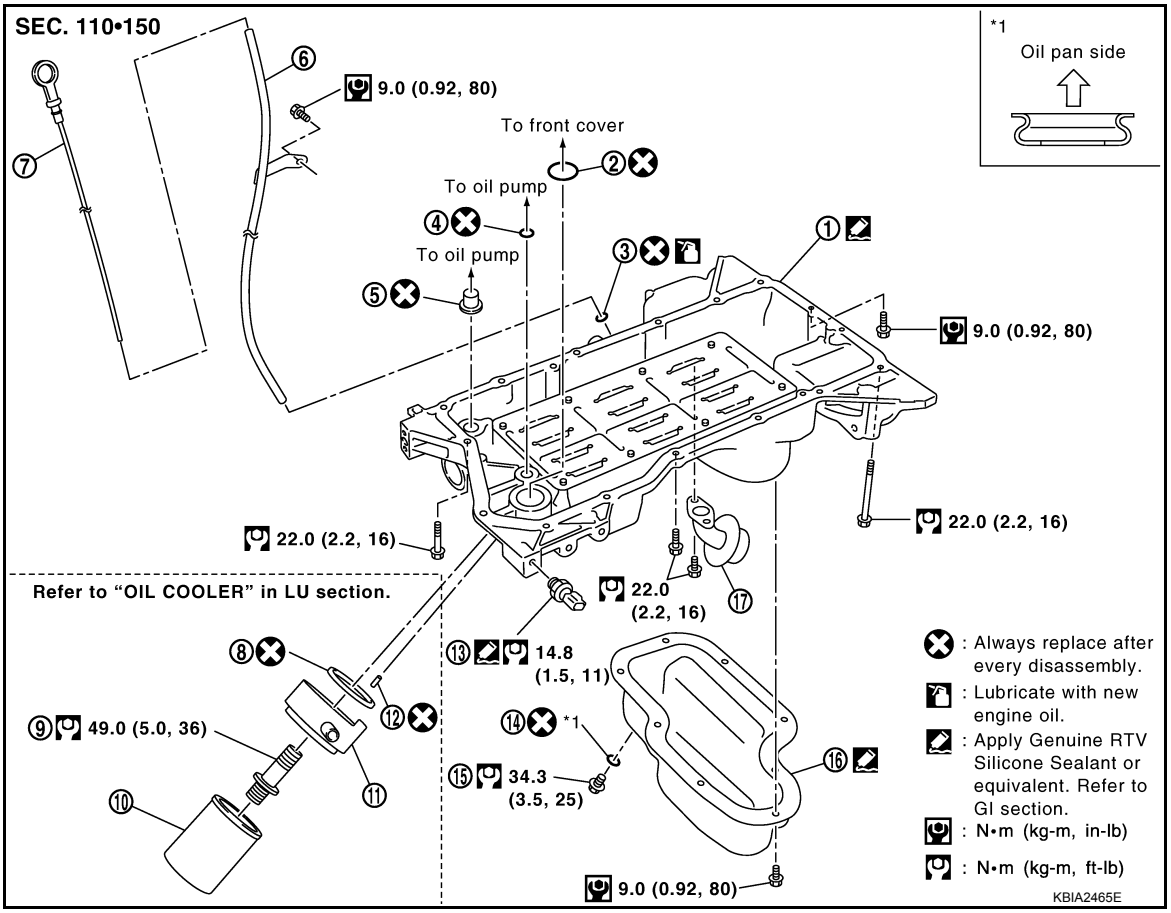

1. Oil pan (upper)
2. O-ring
3. O-ring
4. O-ring
5. O-ring (with collar)
6. Oil level gauge guide
7. Oil level gauge
8. O-ring
9. Connector bolt
10. Oil filter
11. Oil cooler
12. Relief valve
13. Oil pressure switch
14. Gasket
15. Drain plug
16. Oil pan (lower)
17. Oil strainer

Removal and Installation

INFOID:0000000009824928

NOTE:
When removing components such as hoses, tubes/lines, etc., cap or plug openings to prevent fluid from spilling.

REMOVAL

1. Disconnect battery negative terminal. Refer to PG-77, "Removal and Installation".
2. Remove the air dam and under covers (front and rear), (if equipped).
3. Drain engine oil. Refer to LU-9, "Changing Engine Oil".

   WARNING:
   To avoid the danger of being scalded, do not drain the engine oil when the engine is hot.
4. Remove the oil cooler. Refer to LU-12, "Removal and Installation".
5. Disconnect A/T cooler hoses from radiator.
6. Remove lower radiator hose and pipe assembly. Refer to CO-16, "Exploded View".
7. Remove (RH) and (LH) front wheel and tire using power tool. Refer to WT-51, "Rotation".

8. Remove the power steering pump without disconnecting the power steering hoses and position aside. Refer to ST-15, "On-Vehicle Inspection and Service".
9. Remove air duct and resonator assembly. Refer to EM-26, "Removal and Installation".
10. Remove upper radiator hose.
11. Disconnect coolant reservoir hose from radiator.
12. Remove engine cooling fan (crankshaft driven type). Refer to CO-19, "Removal and Installation (Crankshaft Driven Type)".
13. Disconnect the following connectors.
    - Harness ground
    - Power steering switch
    - A/C compressor
    - Oil pressure switch
14. Remove generator and generator bracket. Refer to CHG-28, "Removal and Installation".
15. Remove A/C compressor without disconnecting the A/C pipes and position aside. Refer to HA-31, "Removal and Installation".
16. Remove front frame crossmember using power tool.
17. Remove the front final drive (4WD only). Refer to FAX-9, "Removal and Installation".
18. Remove the steering gear. Refer to ST-22, "Removal and Installation".
19. Remove the oil pressure switch.
20. Remove the oil pan (lower). Using the following steps.

a. Remove the oil pan (lower) bolts in the reverse order as shown using power tool.

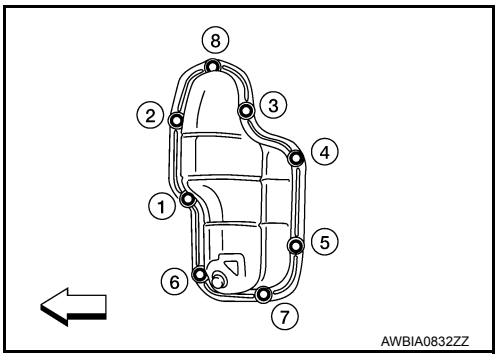

b. Insert Tool between the oil pan (lower) and the oil pan (upper).

Tool number : KV10111100 (J-37228)

CAUTION:
- **Be careful not to damage the mating surface.**
- **Do not insert a screwdriver, this will damage the mating surfaces.**

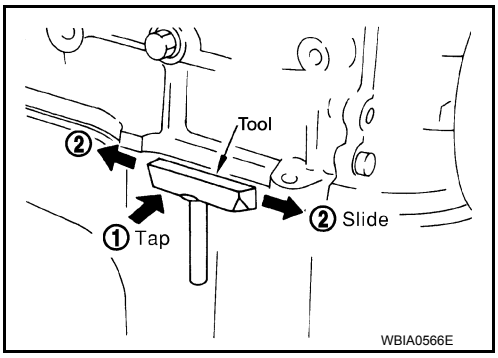

c. Tap (1) Tool to insert it then slide (2) Tool by tapping its side with a hammer to remove the oil pan (lower) from the oil pan (upper).

21. Remove the oil strainer from the oil pan (upper).
22. Remove the oil pan (upper) using the following steps.

a. Remove the oil pan (upper) bolts in the reverse order as shown.

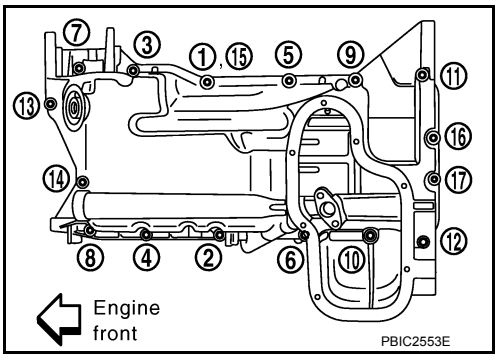

b. Remove the oil pan (upper) from the cylinder block by prying it at the points shown, using suitable tool.

CAUTION:
Do not damage mating surface.

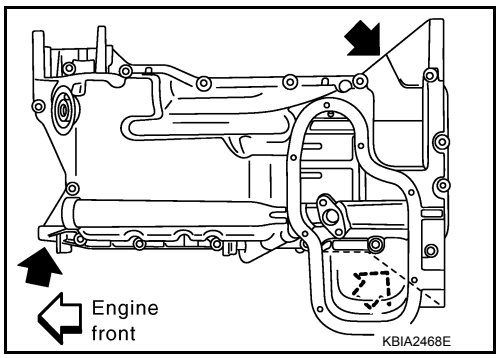

23. Remove the O-rings from the oil pump and front cover.

CAUTION:
Do not reuse O-rings.

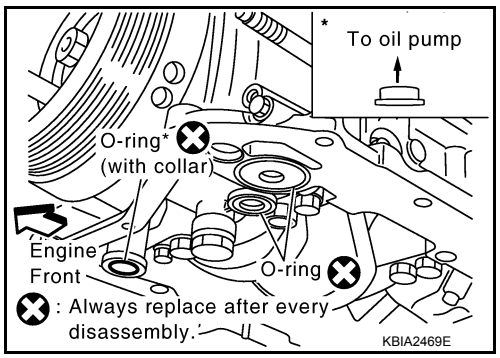

INSPECTION AFTER REMOVAL

Clean the oil strainer.

INSTALLATION

1. Install the oil pan (upper) using the following steps.

a. Using a scraper to remove old liquid gasket from mating surfaces.
- Also remove old liquid gasket from mating surface of oil pan (upper).
- Remove old liquid gasket from bolt holes and threads.

CAUTION:
Do not scratch or damage the mating surfaces when cleaning off old liquid gasket.

b. Apply a continuous bead of liquid gasket as shown using Tool.

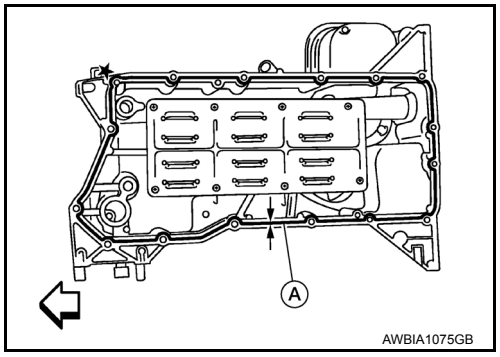

⇦ : Engine front

Tool number : WS39930000 (—)

Bead diameter (A) : 4.0 - 5.0 mm (0.157 - 0.197 in)

Use Genuine RTV Silicone Sealant or equivalent. Refer to GI-21, "Recommended Chemical Products and Sealants".

CAUTION:
- **Apply liquid gasket to outside of bolt hole for the hole shown by ★.**
  Installation should be done within 5 minutes after applying liquid gasket.

c. Install new O-rings to the oil pump and front cover side.
CAUTION:
Do not reuse O-rings.

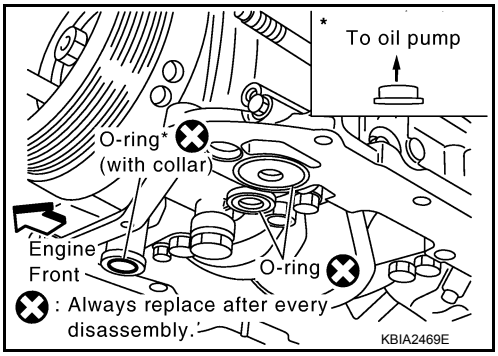

d. Tighten the bolts to the specified torque in numerical order as shown.

M6 × 30 mm (1.18 in) : No. 16, 17
M8 × 25 mm (0.98in) : No. 1(15), 3, 5, 7, 9, 13
M8 × 45 mm (1.77 in) : No. 2, 4, 6, 8, 10, 14
M8 × 123 mm (4.84in) : No. 11, 12

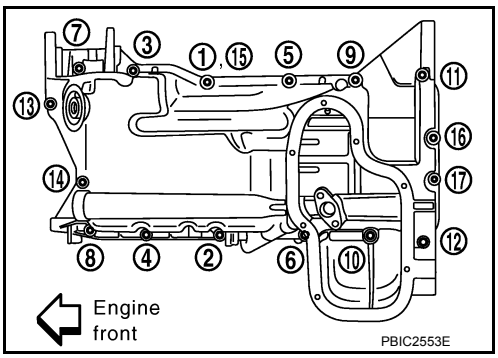

2. Install the oil strainer to the oil pan (upper).
3. Install the oil cooler. Refer to LU-12, "Removal and Installation".
4. Install the oil pan (lower).

a. Using a scraper to remove old liquid gasket from mating surfaces.
- Also remove old liquid gasket from mating surface of oil pan (upper).
- Remove old liquid gasket from bolt holes and thread.

CAUTION:
Do not scratch or damage the mating surfaces when cleaning off old liquid gasket.

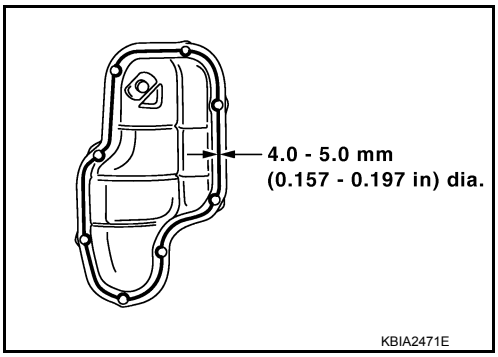

b. Apply a continuous bead of liquid gasket using Tool as shown.

Tool number : WS39930000 (—)

Use Genuine RTV Silicone Sealant or equivalent. Refer to GI-21, "Recommended Chemical Products and Sealants".

CAUTION:
Installation should be done within 5 minutes after applying liquid gasket.

c. Tighten the oil pan (lower) bolts to the specified torque in numerical order as shown.

CAUTION:
Do not fill the engine with oil for at least 30 minutes after oil pan is installed to allow the sealant to cure.

⇦ : Engine front

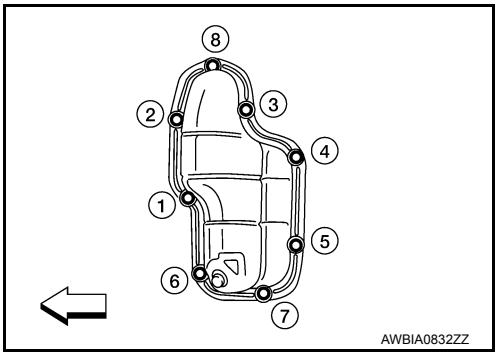

5. Installation of the remaining components is in the reverse order of removal.

INSPECTION AFTER INSTALLATION

- Before starting engine, check oil/fluid levels including engine coolant and engine oil. If less than required quantity, fill to the specified level. Refer to MA-16, "FOR USA AND CANADA : Fluids and Lubricants" (United States and Canada) or MA-17, "FOR MEXICO : Fluids and Lubricants" (Mexico).
- Use procedure below to check for fuel leakage.
- Turn ignition switch ON (with engine stopped). With fuel pressure applied to fuel piping, check for fuel leakage at connection points.
- Start engine. With engine speed increased, check again for fuel leakage at connection points.
- Run engine to check for unusual noise and vibration.

  NOTE:

  If hydraulic pressure inside timing chain tensioner drops after removal and installation, slack in the guide may generate a pounding noise during and just after engine start. However, this is normal. Noise will stop after hydraulic pressure rises.
- Warm up engine thoroughly to make sure there is no leakage of fuel, exhaust gas, or any oils/fluids including engine oil and engine coolant.
- Bleed air from passages in lines and hoses, such as in cooling system.
- After cooling down engine, again check oil/fluid levels including engine oil and engine coolant. Refill to specified level, if necessary.
- Summary of the inspection items:

Item		Before starting engine	Engine running	After engine stopped
Engine coolant		Level	Leakage	Level
Engine oil		Level	Leakage	Level
Transmission/ transaxle fluid	A/T and CVT Models	Leakage	Level/Leakage	Leakage
	M/T Models	Level/Leakage	Leakage	Level/Leakage
Other oils and fluids*		Level	Leakage	Level
Fuel		Leakage	Leakage	Leakage
Exhaust gas		—	Leakage	—

*Power steering fluid, brake fluid, etc.

IGNITION COIL

Exploded View

INFOID:0000000009824929

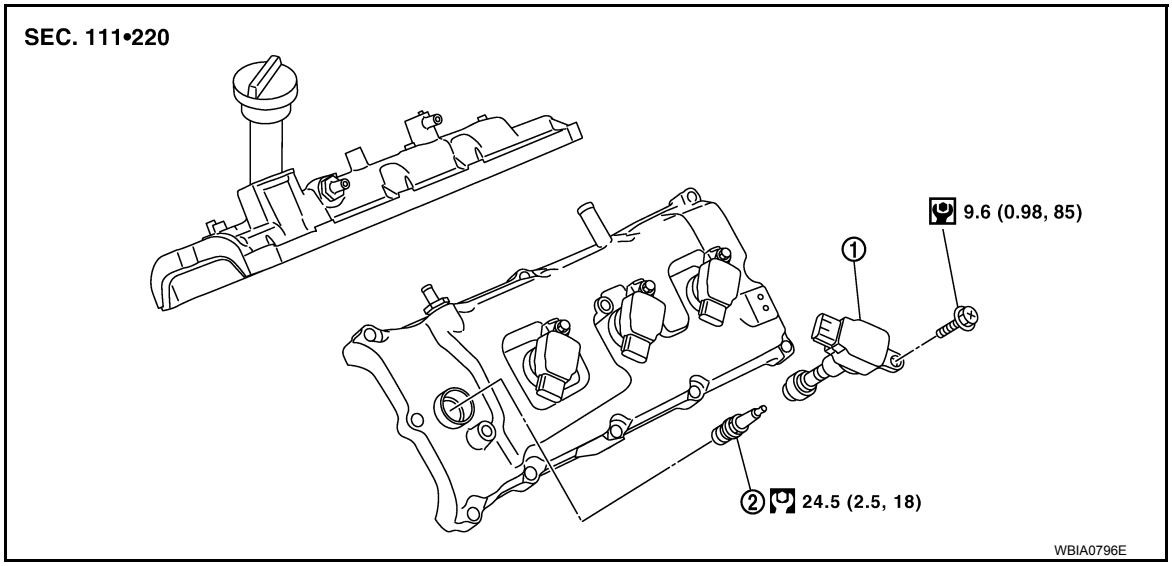

1. Ignition coil
2. Spark plug

Removal and Installation

INFOID:0000000009824930

REMOVAL

1. Remove the engine room cover. Refer to EM-25, "Removal and Installation".
2. Disconnect the harness connector from the ignition coil.
3. Remove the ignition coil.
   CAUTION:
   Do not shock ignition coil.

INSTALLATION

Installation is in the reverse order of removal.

ROCKER COVER

Exploded View

INFOID:0000000009824931

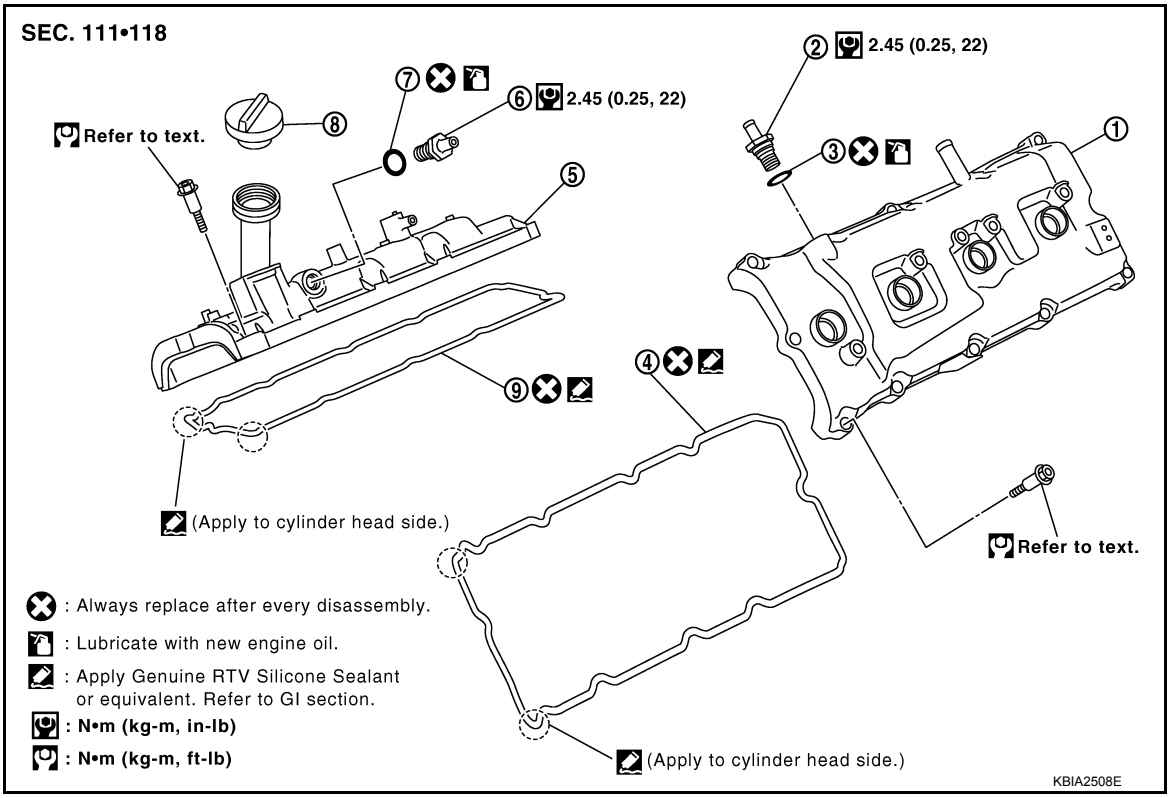

1. Rocker cover (LH)
2. PCV control valve
3. O-ring
4. Rocker cover gasket (LH)
5. Rocker cover (RH)
6. PCV control valve
7. O-ring
8. Oil filler cap
9. Rocker cover gasket (RH)

Removal and Installation

INFOID:0000000009824932

REMOVAL

1. Remove the ignition coils. Refer to EM-40, "Removal and Installation".
2. Remove PCV hoses.
3. Move the harness on the upper rocker cover and its peripheral aside.
4. Loosen the bolts in reverse order shown using power tool for rocker cover (A) or (B).

⇦ : Engine front

CAUTION:
Do not hold the rocker cover (RH) (B) by the oil filler neck.

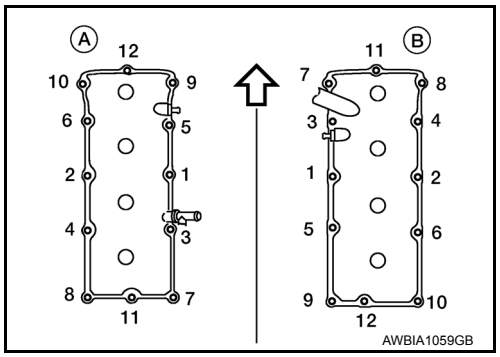

INSTALLATION

1. Apply liquid gasket to the joint part of the cylinder head and camshaft bracket following the steps below.
NOTE:
Illustration shows an example of (LH) side (zoomed in shows No.1 camshaft bracket).

a. Refer to illustration (a) to apply liquid gasket to the joint part of No.1 camshaft bracket and cylinder head.

b. Refer to illustration (b) to apply liquid gasket 90° to illustration (a).
Use Genuine RTV Silicone Sealant or equivalent. Refer to GI-21, "Recommended Chemical Products and Sealants".

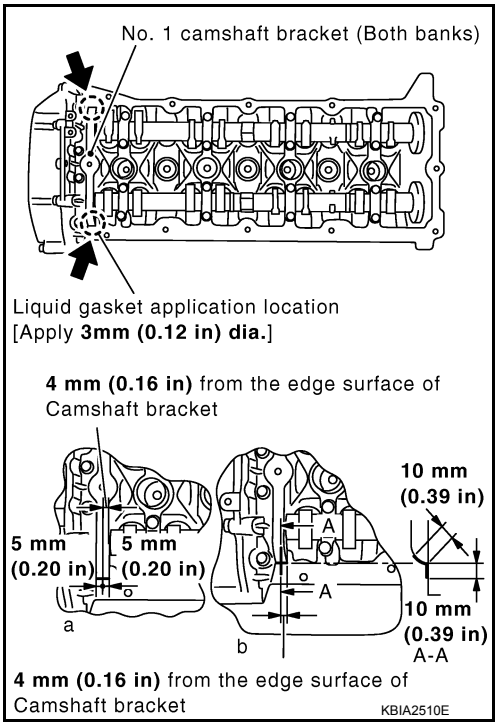

2. Install the rocker cover (A) or (B).
- Make sure the new rocker cover gasket is installed in the groove of the rocker cover (A) or (B).
- Tighten the bolts in two steps in the numerical order shown.

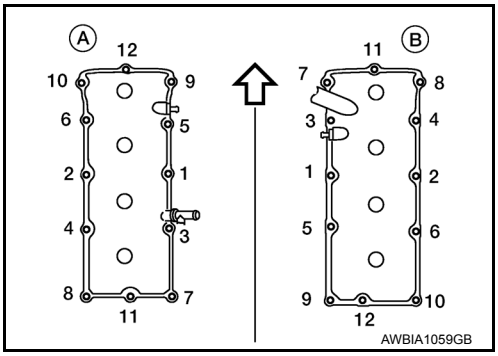

⇦ : Engine front

1st step	**: 2.0 N·m (0.2 kg-m, 18 in-lb)**
2nd step	**: 8.3 N·m (0.85 kg-m, 73 in-lb)**

CAUTION:
Do not hold the rocker cover (RH) (B) by the oil filler neck.

3. Install the PCV hoses.
NOTE:
- Remove foreign materials from inside the hose using compressed air.
- The inserted length is within 25 - 30 mm (0.98 - 1.18 in) [Target: 25 mm (0.98 in)].

4. Installation of the remaining components is in the reverse order of removal.

FUEL INJECTOR AND FUEL TUBE

Exploded View

INFOID:0000000009824933

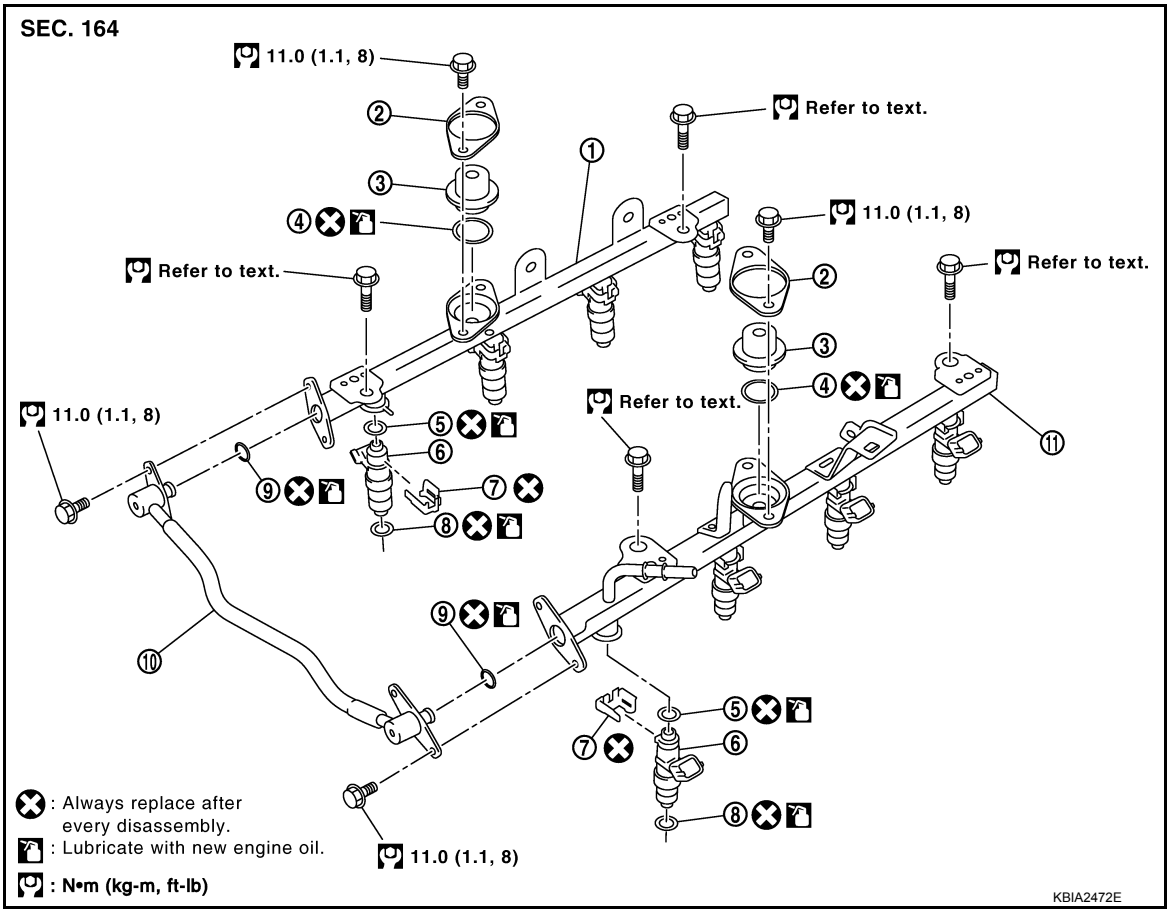

1. Fuel tube (RH bank)	2. Cap	3. Fuel damper
4. O-ring	5. O-ring (Standard model: Blue) (FFV model: Black)	6. Fuel injector
7. Clip	8. O-ring (Standard model: Brown) (FFV model: Green)	9. O-ring
10. Fuel hose assembly	11. Fuel tube (LH bank)	

Removal and Installation

INFOID:0000000009824934

WARNING:
- **Put a “CAUTION FLAMMABLE” sign in the workshop.**
- **Be sure to work in a well ventilated area and furnish workshop with a CO_2 fire extinguisher.**
- **Do not smoke while servicing fuel system. Keep open flames and sparks away from the work area.**

CAUTION:
Do not remove or disassemble parts unless instructed as shown.
NOTE:
When removing components such as hoses, tubes/lines, etc., cap or plug openings to prevent fluid from spilling.

REMOVAL

1. Disconnect the negative battery terminal. Refer to PG-77, "Removal and Installation".
2. Release fuel pressure. Refer to EC-494, "Fuel Pressure Check".
3. Remove air duct and resonator assembly. Refer to EM-26, "Exploded View".
4. Remove PCV hoses.

5. Disconnect fuel injector harness connectors.
6. Disconnect EVAP canister purge control solenoid valve.
7. Disconnect fuel hose assembly from fuel tube (RH bank and LH bank).
   CAUTION:
   - **While hoses are disconnected, plug them to prevent fuel from draining.**
   - **Do not separate fuel connector and fuel hose.**
8. Remove fuel injectors with fuel tube assembly.
9. Remove fuel injector from fuel tube.

a. Spread open to remove clip.

b. Remove fuel injector from the fuel tube by pulling straight out.
   CAUTION:
   - **Be careful with remaining fuel that may leak out from fuel tube.**
   - **Do not damage injector nozzles during removal.**
   - **Do not bump or drop fuel injectors.**
   - **Do not disassemble fuel injectors.**

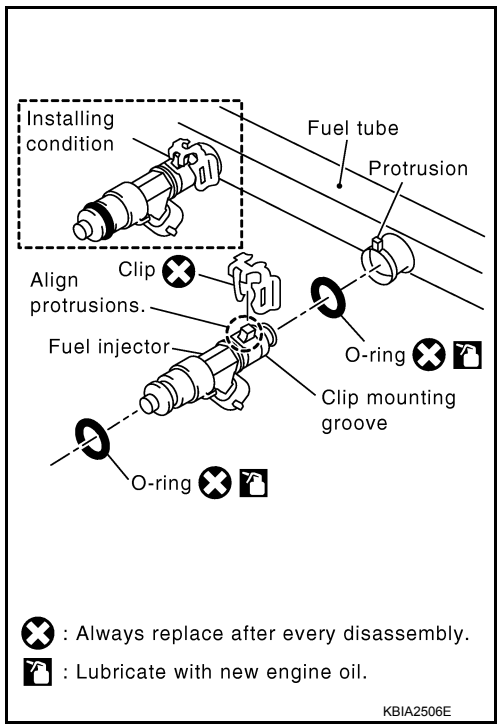

10. Remove fuel damper from each fuel tube.

INSTALLATION

1. Install fuel damper to each fuel tube.

a. Apply engine oil to O-ring and set it into the cap of fuel tube.
   CAUTION:
   - **Handle O-ring with bare hands. Do not wear gloves.**
   - **Do not reuse O-ring.**
   - **Lubricate O-ring with new engine oil.**
   - **Do not clean O-ring with solvent.**
   - **Make sure that O-ring and its mating part are free of foreign material.**
   - **When installing O-ring, be careful not to scratch it.**
   - **Also be careful not to twist or stretch O-ring.**
   - **If O-ring was stretched while it was being attached, allow it to regain it's shape before inserting into fuel tube.**
   - **Insert O-ring straight into fuel tube. Do not angle or twist it.**

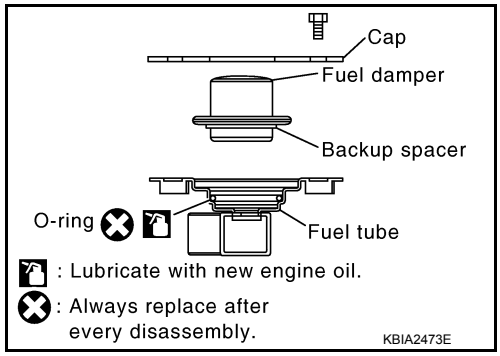

b. Make sure that backup spacer is in the O-ring connecting surface of fuel damper.
   CAUTION:
   Do not reuse O-rings.
   NOTE:
   Backup spacer is fuel damper assembly part.

c. Insert fuel damper until it seats on fuel tube.
   CAUTION:
   - **Insert straight, making sure that the axis is lined up.**
   - **Do not pressure-fit with excessive force.**

Reference value : 130 N (13.3 kg, 29.2 lb)

d. Install cap, and then tighten bolts evenly by turns.
- After tightening bolts, make sure that there is no gap between cap and fuel tube.

2. Install O-rings to fuel injector paying attention to the items below.

CAUTION:
- **Upper and lower O-ring are different.**

Standard model		FFV model	
Fuel tube side	: Blue	Fuel tube side	: Black
Nozzle side	: Brown	Nozzle side	: Green

- **Handle O-ring with bare hands. Do not wear gloves.**
- **Do not reuse O-rings.**
- **Lubricate O-ring with new engine oil.**
- **Do not clean O-ring with solvent.**
- **Make sure that O-ring and its mating part are free of foreign material.**
- **When installing O-ring, be careful not to scratch it.**
- **Also be careful not to twist or stretch O-ring.**
- **If O-ring was stretched while it was being attached, allow it to regain it's shape before inserting into fuel tube.**
- **Insert O-ring straight into fuel tube. Do not angle or twist it.**

3. Install fuel injector to fuel tube.

a. Insert clip into clip mounting groove on fuel injector.
- Insert clip so that lug (A) of fuel injector matches notch (A) of the clip.

CAUTION:
- **Do not reuse clip. Replace it with a new one.**
- **Be careful to keep clip from interfering with O-ring. If interference occurs, replace O-ring.**
- **Do not reuse O-ring.**

b. Insert fuel injector into fuel tube with clip attached.
- Insert it while matching it to the axial center.
- Insert fuel injector so that lug (B) of fuel tube matches notch (B) of the clip.
- Make sure that fuel tube flange is securely fixed in flange fixing groove on clip.

c. Make sure that installation is complete by checking that fuel injector does not rotate or come off.
- Make sure that protrusions of fuel injectors are aligned with cutouts of clips after installation.

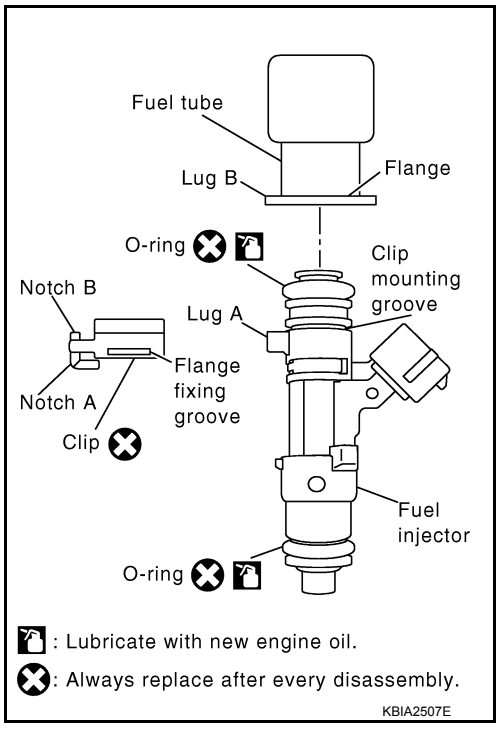

4. Install fuel tube and fuel injector assembly to intake manifold.

CAUTION:
Be careful not to let tip of injector nozzle come in contact with other parts.

- Tighten fuel tube assembly bolts “a” to “b” in illustration and in two steps.

1st step : 12.8 N·m (1.3 kg-m, 9 ft-lb)
2nd step : 24.5 N·m (2.5 kg-m, 18 ft-lb)

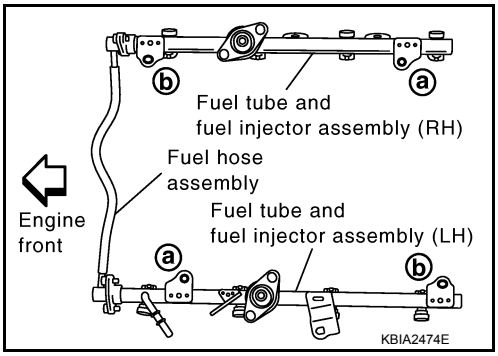

5. Install fuel hose assembly.
   - Refer to precautions for fuel injector when handling O-ring.
   CAUTION:
   Do not reuse O-ring.
   - Insert connectors straight, making sure that the axis is lined up with fuel tube side to prevent O-ring from being damaged.
   - Tighten bolts evenly in several steps.
   - Make sure that there is no gap between flange and fuel tube after tightening bolts.
6. Installation of the remaining components is in the reverse order of removal.

INSPECTION AFTER INSTALLATION

After installing fuel tubes, make sure there are no fuel leaks at connections using the following steps.

1. Apply fuel pressure to fuel lines by turning ignition switch ON (with engine stopped). Then check for fuel leaks at connections.
2. Start the engine and rev it up and check for fuel leaks at connections.

   WARNING:
   Do not touch the engine immediately after stopping, as engine becomes extremely hot.
   NOTE:
   Use mirrors for checking on hidden points.

INTAKE VALVE TIMING CONTROL

Intake Valve Timing Control Solenoid Valve (LH)

INFOID:0000000009824935

REMOVAL

1. Remove engine room cover using power tool. Refer to EM-25, "Removal and Installation".
2. Remove air duct and resonator assembly. Refer to EM-26, "Removal and Installation".
3. Remove drive belt. Refer to EM-14, "Removal and Installation".
4. Disconnect Intake valve timing control solenoid valve harness connector (LH).
5. Remove Intake valve timing control solenoid valve (LH) (2) and O-ring (3) from Intake valve timing control solenoid valve cover (LH) (1).
   CAUTION:
   Do not reuse O-ring.

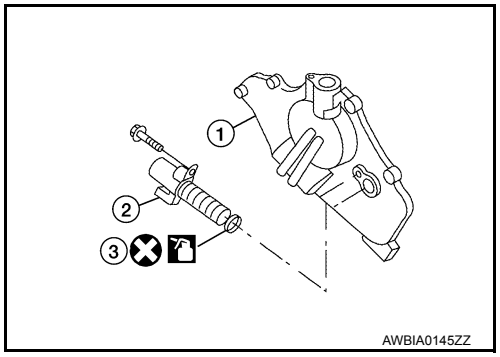

INSTALLATION

Installation is in the reverse order of removal.

CAUTION:

- **Lubricate O-ring with engine oil before installing.**
- **Do not reuse O-ring.**

Intake valve timing control solenoid valve bolt	**: 9.0 N·m (0.92 kg-m, 80 in-lb)**

Intake Valve Timing Control Solenoid Valve (RH)

INFOID:0000000009824936

REMOVAL

1. Remove drive belt. Refer to EM-14, "Removal and Installation".
2. Disconnect Intake valve timing control solenoid valve harness connector (RH).
3. Remove Intake valve timing control solenoid valve (RH) (3) and O-ring (2) from Intake valve timing control solenoid valve cover (RH) (1).
   CAUTION:
   Do not reuse O-ring.

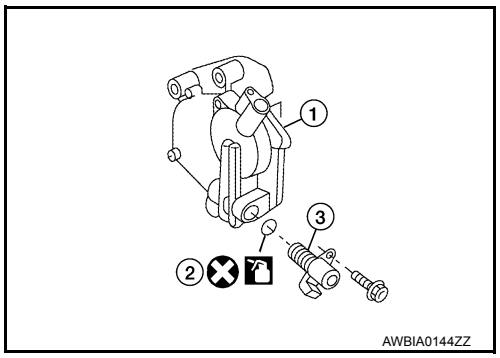

INSTALLATION

Installation is in the reverse order of removal.

CAUTION:

- **Lubricate O-ring with engine oil before installing.**
- **Do not reuse O-ring.**

Intake valve timing control solenoid valve bolt	**: 9.0 N·m (0.92 kg-m, 80 in-lb)**

Intake Valve Timing Control Position Sensor (LH)

INFOID:0000000009824937

REMOVAL

1. Remove engine room cover using power tool. Refer to EM-25, "Removal and Installation".
2. Remove air duct and resonator assembly. Refer to EM-26, "Removal and Installation".
3. Disconnect intake valve timing control position sensor harness connector (LH).
4. Remove intake valve timing control position sensor (LH) (1) and O-ring (2) from Intake valve timing control solenoid valve cover (LH) (3).
   CAUTION:
   Do not reuse O-ring.

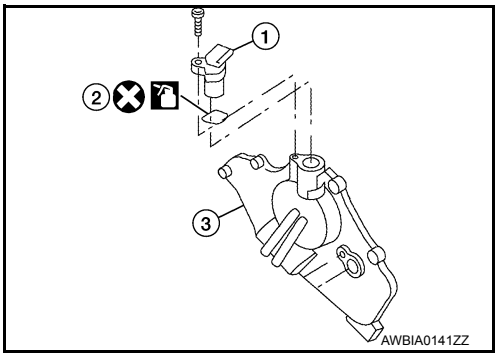

INSTALLATION

Installation is in the reverse order of removal.

CAUTION:

- **Lubricate O-ring with engine oil before installing.**
- **Do not reuse O-ring.**

Intake valve timing control position sensor bolt : 9.0 N·m (0.92 kg-m, 80 in-lb)

Intake Valve Timing Control Position Sensor (RH)

INFOID:0000000009824938

REMOVAL

1. Remove engine room cover using power tool. Refer to EM-25, "Removal and Installation".
2. Disconnect intake valve timing control position sensor harness connector (RH).
3. Remove intake valve timing control position sensor (RH) (1) and O-ring (2) from Intake valve timing control solenoid valve cover (RH) (3).
   CAUTION:
   Do not reuse O-ring.

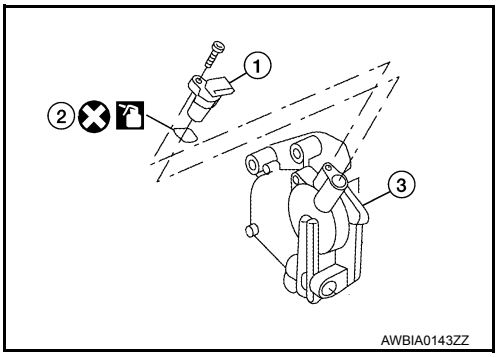

INSTALLATION

Installation is in the reverse order of removal.

CAUTION:

- **Lubricate O-ring with engine oil before installing.**
- **Do not reuse O-ring.**

Intake valve timing control position sensor bolt : 9.0 N·m (0.92 kg-m, 80 in-lb)

Camshaft Position Sensor (PHASE)

INFOID:0000000009824939

REMOVAL

1. Remove engine room cover using power tool. Refer to EM-25, "Removal and Installation".
2. Remove air duct and resonator assembly. Refer to EM-26, "Removal and Installation".
3. Disconnect camshaft position sensor harness connector.

4. Remove camshaft position sensor (2) and O-ring (3) from Intake valve timing control solenoid valve cover (LH) (1).
CAUTION:
Do not reuse O-ring.

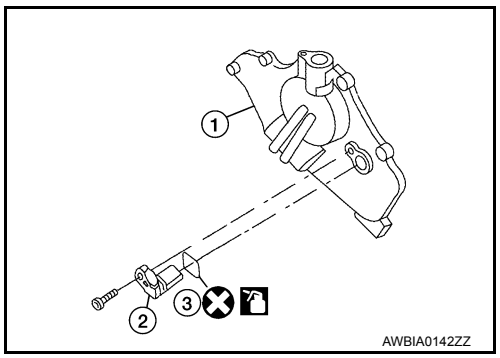

INSTALLATION

Installation is in the reverse order of removal.

CAUTION:
- **Lubricate O-ring with engine oil before installing.**
- **Do not reuse O-ring.**

Camshaft position sensor bolt : 9.0 N·m (0.92 kg-m, 80 in-lb)

TIMING CHAIN COVER

Exploded View

INFOID:0000000009824940

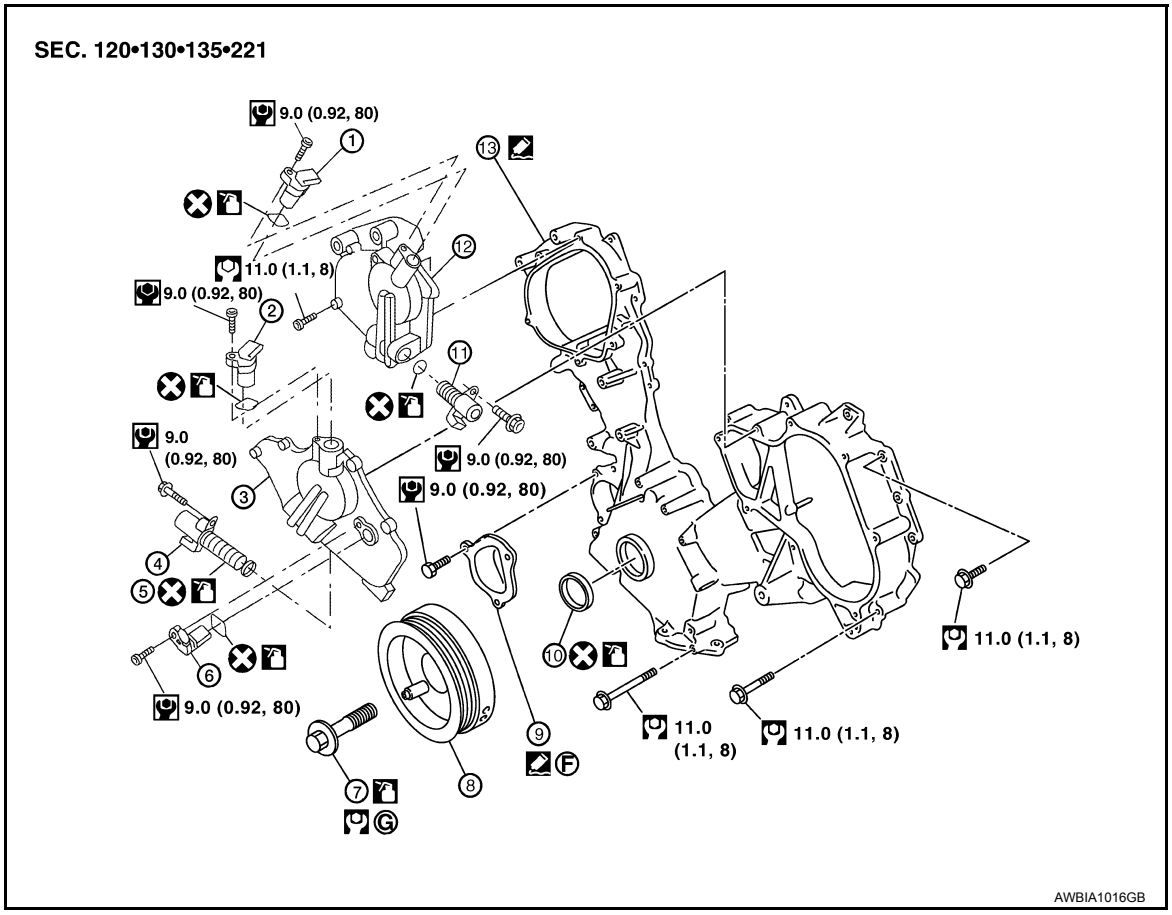

1. Intake valve timing control position sensor (RH)
2. Intake valve timing control position sensor (LH)
3. Intake valve timing control solenoid valve cover (LH)
4. Intake valve timing control solenoid valve (RH)
5. O-ring
6. Camshaft position sensor (PHASE)
7. Crankshaft pulley bolt
8. Crankshaft pulley
9. Chain tensioner cover
10. Front oil seal
11. Intake valve timing control solenoid valve (RH)
12. Intake valve timing control solenoid valve cover (RH)
13. Front cover

Removal and Installation

INFOID:0000000009824941

REMOVAL

1. Remove the upper oil pan. Refer to EM-35, "Removal and Installation".
2. Remove the intake valve timing control solenoid (LH) and (RH). Refer to EM-47, "Intake Valve Timing Control Solenoid Valve (LH)". (LH), and EM-47, "Intake Valve Timing Control Solenoid Valve (RH)" (RH).
3. Remove the intake valve timing control position sensor (LH) and (RH). Refer to EM-48, "Intake Valve Timing Control Position Sensor (LH)" (LH), and EM-48, "Intake Valve Timing Control Position Sensor (RH)" (RH).
4. Remove the camshaft position sensor (PHASE). Refer to EM-48, "Camshaft Position Sensor (PHASE)".
5. Remove the crankshaft driven fan pulley and pulley bracket. Refer to EM-15, "Drive Belt Auto-Tensioner and Idler Pulley"
6. Remove the drive belt auto-tensioner and idler pulley.

7. Remove the intake valve timing control solenoid valve cover (RH) (A) and intake valve timing control solenoid valve cover (LH) (B) as follows:

a. Loosen and remove the bolts in the reverse order as shown.

b. Cut the liquid gasket and remove the covers using Tool.

Tool number : KV10111100 (J-37228)

CAUTION:
Do not damage mating surfaces.

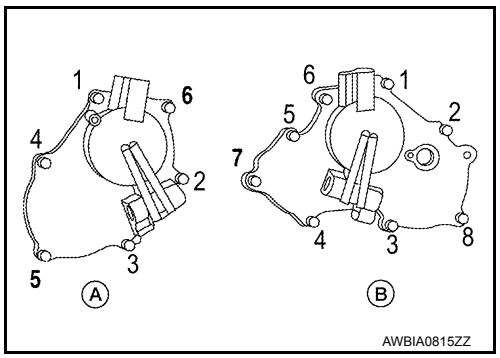

8. Obtain compression TDC of No. 1 cylinder as follows:

a. Turn the crankshaft pulley clockwise to align the TDC identification notch (without paint mark) with the timing indicator on the front cover.

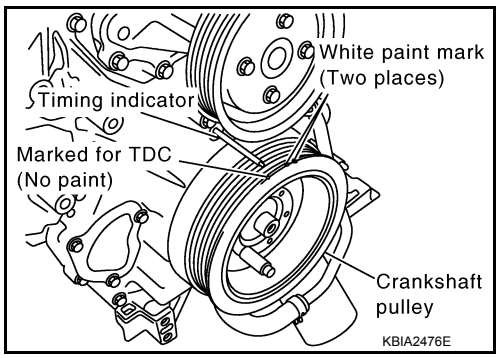

9. Remove drive plate lower cover.

10. Loosen the crankshaft pulley bolts. Use Tool (A) to secure the crankshaft as shown.

Tool number — (J-47245)

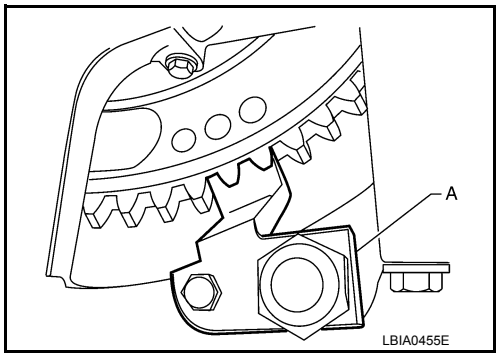

a. Remove the crankshaft pulley from the crankshaft using suitable tool.
- Set the bolts in the two bolt holes [M6 x 1.0 mm (0.04 in)] on the front surface.

NOTE:
The dimension between the centers of the two bolt holes is 61 mm (2.40 in).

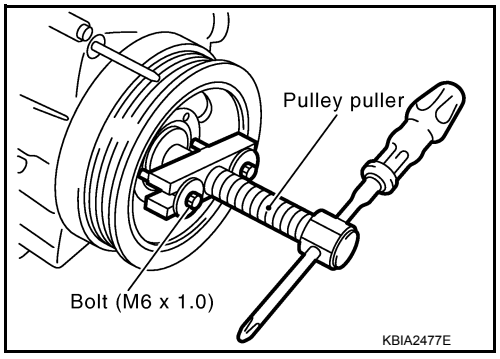

11. Remove the front cover.

a. Loosen and remove the bolts in the reverse order shown.

b. Cut the liquid gasket and remove the covers using Tool.

Tool number : KV10111100 (J-37228)

CAUTION:
Do not damage mating surfaces.

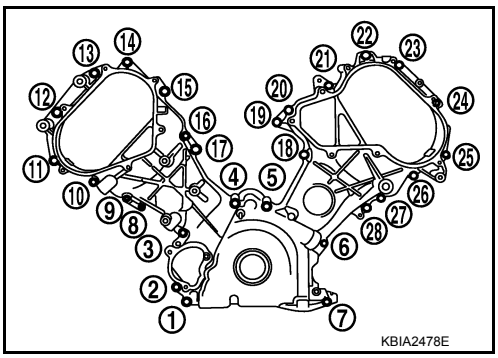

12. Remove the front oil seal using suitable tool.
CAUTION:
Do not damage front cover.

13. Remove chain tensioner cover using Tool (if necessary).

Tool number : KV10111100 (J-37228)

INSTALLATION

1. Install the front oil seal using suitable tool.
CAUTION:
Do not scratch or nick the oil seal.

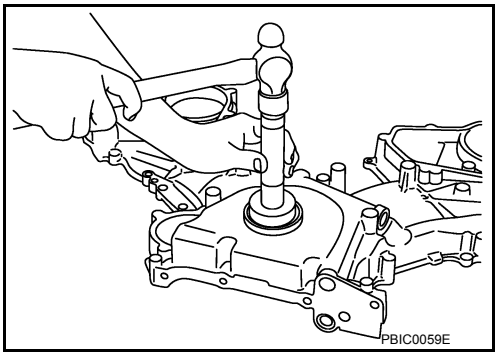

2. Install the chain tensioner cover (if removed).
- Apply liquid gasket as shown.
Use Genuine RTV Silicone Sealant or equivalent. Refer to GI-21, "Recommended Chemical Products and Sealants".
CAUTION:
- **The components must be installed within 5 minutes of the liquid gasket application.**
- **Then allow 30 minutes for the liquid gasket to set before operating the engine.**

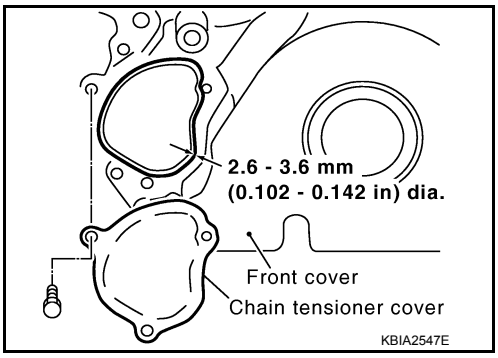

3. Install the front cover as follows:

a. Install a new O-ring on the cylinder block.
CAUTION:
Do not reuse O-ring.

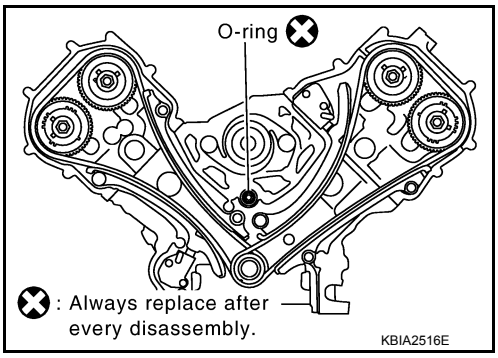

b. Apply liquid gasket as shown.
Use Genuine RTV Silicone Sealant or equivalent. Refer to GI-21, "Recommended Chemical Products and Sealants".
CAUTION:
- **The components must be installed within 5 minutes of the liquid gasket application.**
- **Then allow 30 minutes for the liquid gasket to set before operating the engine.**

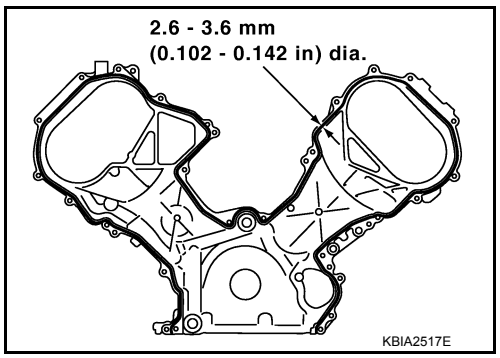

c. Check again that the timing alignment marks on the timing chain and on each sprocket are aligned. Then install the front cover.

d. Install the bolts in the numerical order as shown.

M6 × 50 mm (1.97 in) : No. 1, 20, 25, 26, 27
M6 × 80 mm (3.15 in) : No. 4, 5, 7
M6 × 20 mm (0.79 in) : All except the above

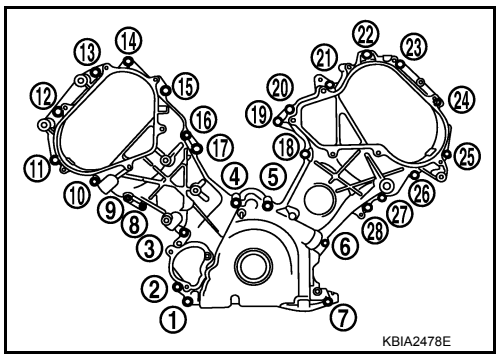

e. After tightening, re-tighten to the specified torque.
CAUTION:
Be sure to wipe off any excessive liquid gasket oozing from the cover.

4. Install the intake valve timing control solenoid valve cover (RH) (A) and intake valve timing control solenoid valve cover (LH) (B) as follows:
- *: Cross mark (C) that cannot be seen after assembly

a. Apply liquid gasket (D) as shown.

D : 2.6 - 3.6 mm (0.102 - 0.142 in) dia.

Use Genuine RTV Silicone Sealant or equivalent. Refer to GI-21, "Recommended Chemical Products and Sealants".
CAUTION:
- **The start and end of the liquid gasket application should be crossed at a position (C) that cannot be seen after attaching the cover.**
- **The components must be installed within 5 minutes of the liquid gasket application.**
- **Then allow 30 minutes for the liquid gasket to set before operating the engine.**

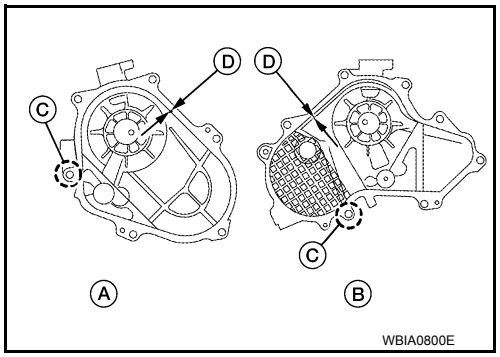

b. Install the bolts in the numerical order as shown.
- (A): Intake valve timing control solenoid valve cover (RH)
- (B): Intake valve timing control solenoid valve cover (LH)

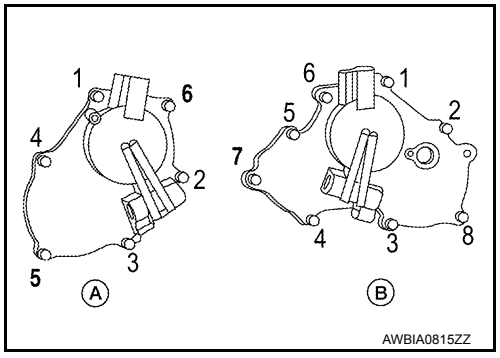

5. Install the crankshaft pulley.
- Install the key of the crankshaft.
- Insert the pulley by lightly tapping it.
CAUTION:
Do not tap pulley on the side surface where the belt is installed (outer circumference).

6. Tighten the crankshaft pulley bolt.

- Lock the crankshaft using tool (A), then tighten the bolt.

Tool number — (J-47245)

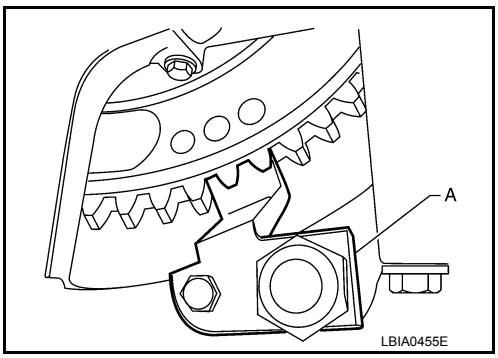

- Perform the following steps for angular tightening:

a. Apply engine oil onto the threaded parts of the bolt and seating area.

b. Select the one most visible notch of the four on the bolt flange. Put an alignment mark (such as paint) on the crankshaft pulley to correspond to the selected notch.

Crankshaft pulley bolt torque

Step 1 : 93.1 N·m (9.5 kg-m, 69 ft-lb)

Step 2 : additional 90° (angle tightening)

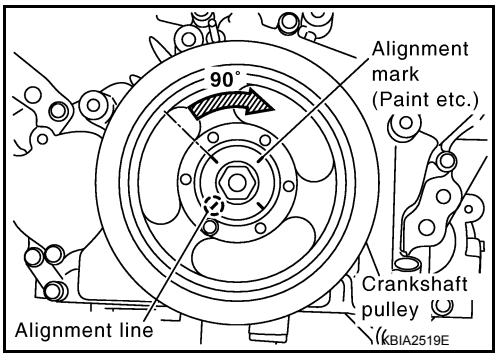

7. Rotate the crankshaft pulley in normal direction (clockwise when viewed from engine front) to check for parts interference.
8. Installation of the remaining components is in the reverse order of removal.

INSPECTION AFTER INSTALLATION

- Before starting engine, check oil/fluid levels including engine coolant and engine oil. If less than required quantity, fill to the specified level. Refer to MA-16, "FOR USA AND CANADA : Fluids and Lubricants" (United States and Canada) or MA-17, "FOR MEXICO : Fluids and Lubricants" (Mexico).
- Use procedure below to check for fuel leakage.
- Turn ignition switch ON (with engine stopped). With fuel pressure applied to fuel piping, check for fuel leakage at connection points.
- Start engine. With engine speed increased, check again for fuel leakage at connection points.
- Run engine to check for unusual noise and vibration.
  NOTE:
  If hydraulic pressure inside timing chain tensioner drops after removal and installation, slack in the guide may generate a pounding noise during and just after engine start. However, this is normal. Noise will stop after hydraulic pressure rises.
- Warm up engine thoroughly to make sure there is no leakage of fuel, exhaust gas, or any oils/fluids including engine oil and engine coolant.
- Bleed air from passages in lines and hoses, such as in cooling system.
- After cooling down engine, again check oil/fluid levels including engine oil and engine coolant. Refill to specified level, if necessary.
- Summary of the inspection items:

Item		Before starting engine	Engine running	After engine stopped
Engine coolant		Level	Leakage	Level
Engine oil		Level	Leakage	Level
Transmission/ transaxle fluid	A/T and CVT Models	Leakage	Level/Leakage	Leakage
	M/T Models	Level/Leakage	Leakage	Level/Leakage
Other oils and fluids*		Level	Leakage	Level
Fuel		Leakage	Leakage	Leakage
Exhaust gas		—	Leakage	—

*Power steering fluid, brake fluid, etc.

TIMING CHAIN

Exploded View

INFOID:0000000009824942

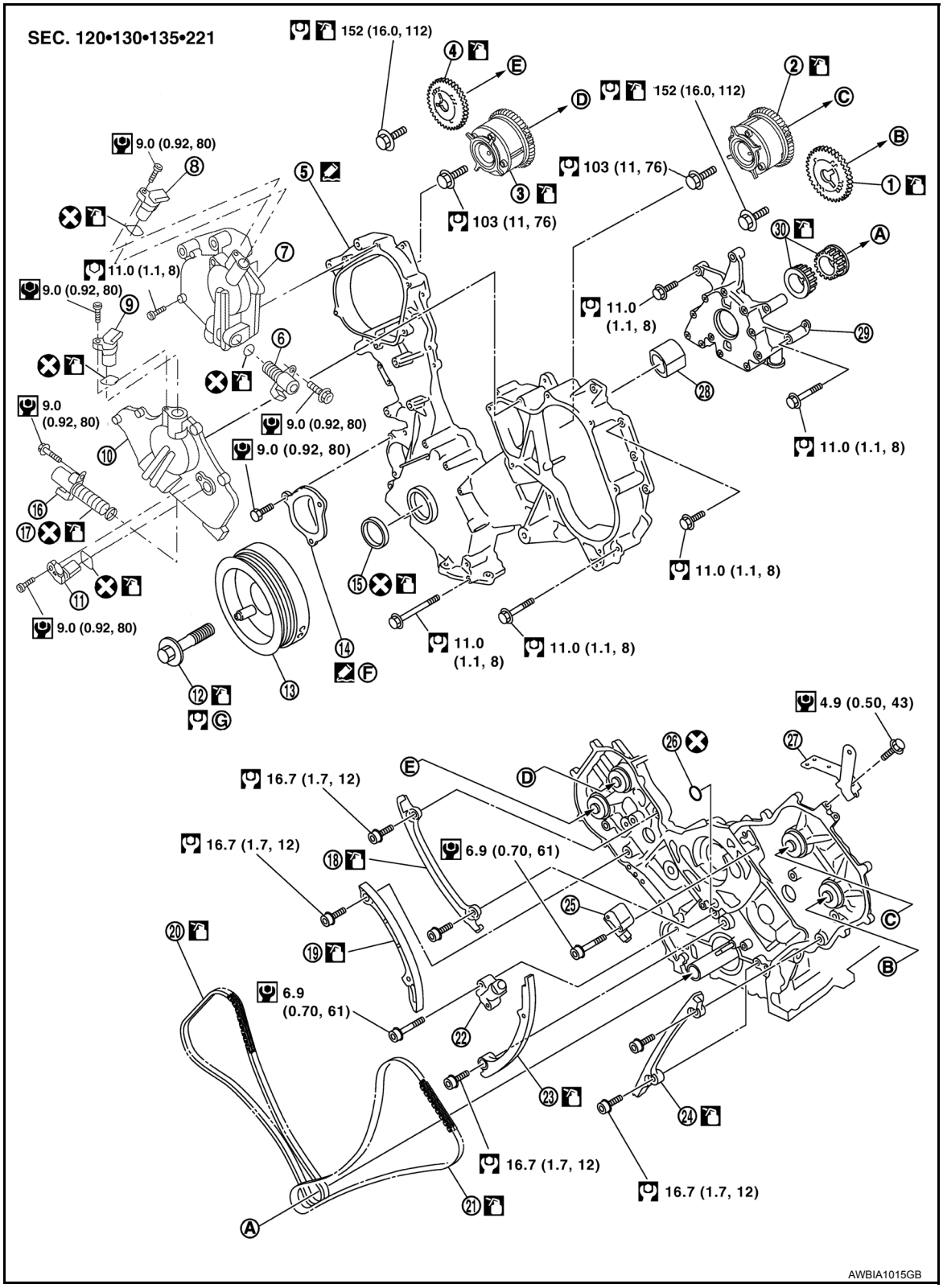

1. Camshaft sprocket (LH) bank EXH	2. Camshaft sprocket (LH) bank INT (valve timing control)	3. Camshaft sprocket (RH) bank INT (valve timing control)
4. Camshaft sprocket (RH) bank EXH	5. Front cover	6. Intake valve timing control solenoid valve (RH)
7. Intake valve timing control solenoid valve cover (RH)	8. Intake valve timing control position sensor (RH)	9. Intake valve timing control position sensor (LH)
10. Intake valve timing control solenoid valve cover (LH)	11. Camshaft position sensor (PHASE)	12 Crankshaft pulley bolt
13. Crankshaft pulley	14. Chain tensioner cover	15. Front oil seal
16. Intake valve timing control solenoid valve (RH)	17. O-ring	18. Timing chain tension guide (RH) bank
19. Timing chain slack guide (RH)	20. Timing chain (RH) bank	21. Timing chain (LH) bank
22. Chain tensioner (RH)	23. Timing chain slack guide (LH) bank	24. Timing chain tension guide (LH) bank
25. Chain tensioner (LH)	26. O-ring	27. Bracket
28. Oil pump drive spacer	29. Oil pump assembly	30. Crankshaft sprocket
A. To crankshaft	B. To camshaft (LH) bank EXH	C. To camshaft (LH) bank INT (valve timing control)
D. To camshaft (RH) bank INT (valve timing control)	E. To camshaft (RH) bank EXH	F. Apply sealant to mating side
G. Refer to EM-57		

Removal and Installation

INFOID:0000000009824943

NOTE:
- To remove timing chain and associated parts, start with those on the (LH) bank. The procedure for removing parts on the (RH) bank is omitted because it is the same as that for removal on the (LH) bank.
- To install timing chain and associated parts, start with those on the (RH) bank. The procedure for installing parts on the (LH) bank is omitted because it is the same as that for installation on the (RH) bank.

REMOVAL

1. Remove the timing chain cover. Refer to EM-50, "Removal and Installation".
2. Without removing them, loosen the camshaft sprocket bolts.
3. Remove the oil pump drive spacer.
   - Hold and remove the flat space of the oil pump drive spacer by pulling it forward.

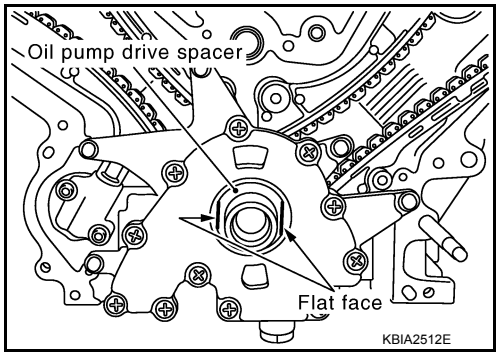

4. Remove the oil pump. Refer to LU-14, "Removal and Installation".
5. Remove the chain tensioner on the (LH) bank using the following steps.

a. Squeeze the return-proof clip ends using suitable tool and push the plunger into the tensioner body.

b. Secure the plunger using stopper pin.
   - Stopper pin is made from hard wire approximately 1 mm (0.04 in) in diameter.

c. Remove the bolts and chain tensioner.

WARNING:
Plunger, spring, and spring seat pop out when (squeezing) return-proof clip without holding plunger head. It may cause serious injuries. Always hold plunger head when removing.

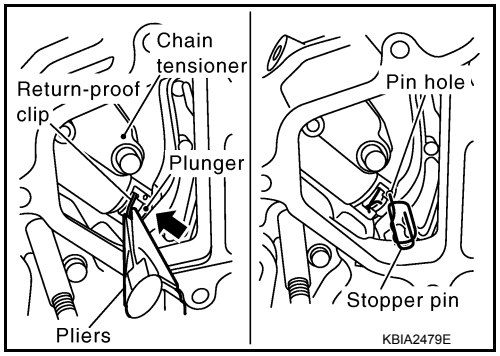

NOTE:

- Stop the plunger in the fully extended position by using the return-proof clip (1) if the stopper pin is removed.
- Push the plunger (2) into the tensioner body while squeezing the return-proof clip (1). Secure it using stopper pin (3).

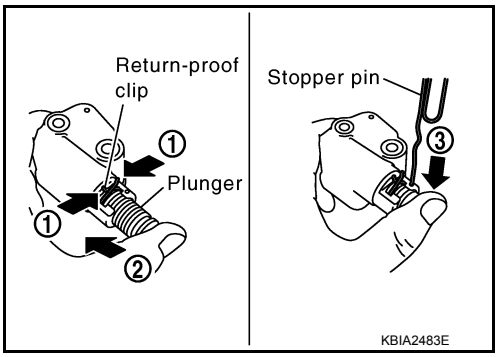

6. Remove the timing chain tension guide and timing chain slack guide.
7. Remove the timing chain and crankshaft sprocket.
8. Loosen the camshaft sprocket bolts using suitable tools as shown (A) and remove the camshaft sprockets as shown.
   CAUTION:
   To avoid interference between valves and pistons, do not turn crankshaft or camshaft when timing chain is disconnected.
9. Repeat the same procedure to remove the (RH) timing chain and associated parts.

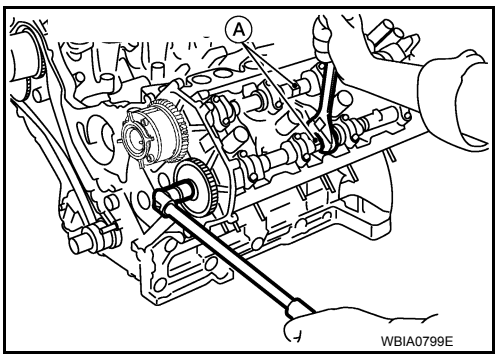

INSPECTION AFTER REMOVAL

Check for cracks and any excessive wear at link plates. Replace chain if necessary.

- In the same way as for the (LH) bank, inspect the timing chain and associated parts on the (RH) bank.

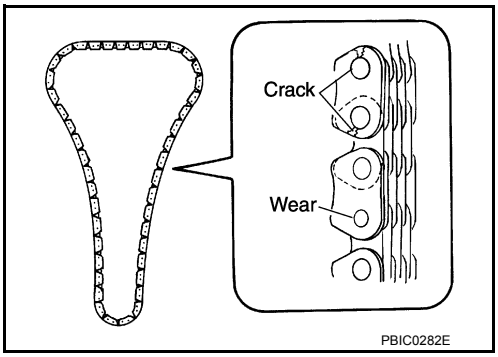

INSTALLATION

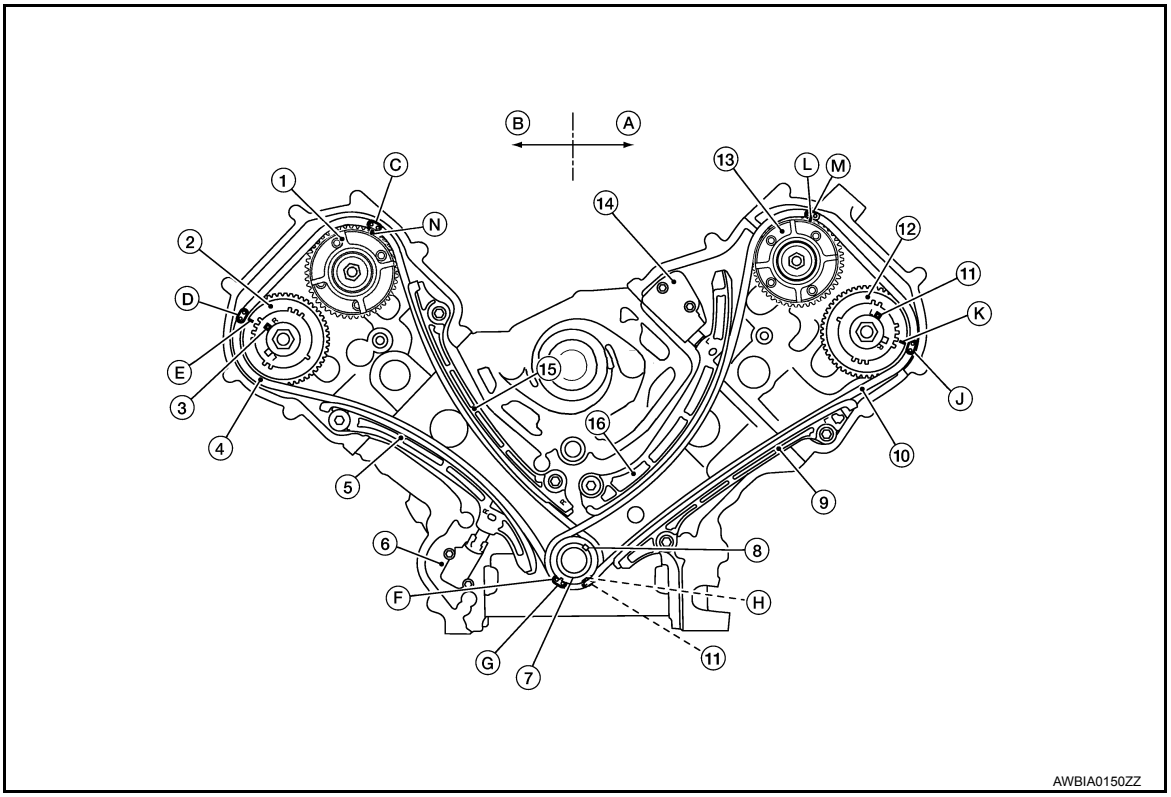

1. Camshaft sprocket (RH) bank INT (valve timing control)	2. Camshaft sprocket (RH) bank EXH	3. Camshaft dowel pin (RH) bank
4. Timing chain (RH) bank	5. Timing chain slack guide (RH) bank	6. Chain tensioner (RH)
7. Crankshaft sprocket	8. Crankshaft key	9. Timing chain tension guide (LH) bank
10. Timing chain (LH) bank	11. Camshaft dowel pin (LH) bank	12. Camshaft sprocket (LH) bank EXH
13. Camshaft sprocket (LH) bank INT (valve timing control)	14. Chain tensioner (LH)	15. Timing chain tension guide (RH) bank
16. Timing chain slack guide (LH) bank	A. (LH) bank	B. (RH) bank
C. Alignment mark (Link color: copper)	D. Alignment mark (Link color: copper)	E. Alignment mark (Identification mark)
F. Alignment mark for (LH) bank (Notch)	G. Alignment mark for (LH) bank (Link color: zinc yellow)	H. Alignment mark for (RH) bank (Link color: zinc yellow)
J. Alignment mark (Link color: copper)	K. Alignment mark (Identification mark)	L. Alignment mark (Identification mark)
M Alignment mark (Link color: copper)	N. Alignment mark (Identification mark)	

NOTE:
- The illustration above shows the relationship between the mating mark on each timing chain and that of the corresponding sprocket, with the components installed.
- To install the timing chain and associated parts, start with those on the (RH) bank. The procedure for installing parts on the (LH) bank is omitted because it is the same as that for installation on the (RH) bank.

1. Make sure the crankshaft key and (RH) bank camshaft dowel pin and (LH) bank camshaft dowel pin are facing in the direction shown.

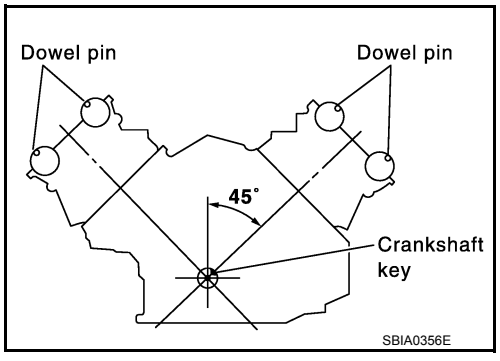

2. Install the camshaft sprockets.
   - Install the camshaft sprocket INT (valve timing control) (A) and camshaft sprockets EXH (B) by selectively using the groove of the dowel pin according to the bank. (Common part used for both exhaust banks.)
     NOTE:
     Use the groove marked (R) for (RH) bank and (L) for (LH) bank.
   - Lock the hexagonal part of the camshaft in the same way as for removal, and tighten the bolts.

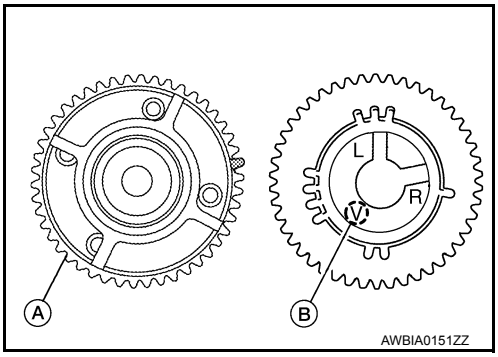

3. Install the crankshaft sprockets for both banks.
   - Install (LH) bank crankshaft sprocket (B) and (RH) bank crankshaft sprocket (C) so that their flange side (A) (the larger diameter side without teeth) faces in the direction shown.
     NOTE:
     The same parts are used but facing directions are different.

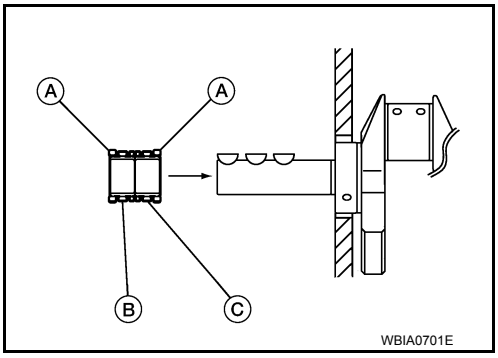

4. Install the timing chains and associated parts.
   - Align the alignment mark on each sprocket and the timing chain for installation.
     CAUTION:
     - **Before installing timing chain tensioner, it is possible to change the position of alignment mark on timing chain and each sprocket. After the alignment marks are aligned, keep them aligned by holding them by hand.**
   - Install the slack guides and tension guides onto the correct side by checking the identification mark on the surface.
   - Install the timing chain tensioner with the plunger locked in with the stopper pin.
     CAUTION:
     - **Before and after the installation of the timing chain tensioner, make sure that the alignment mark on the timing chain is not out of alignment.**
     - **After installing the timing chain tensioner, remove the stopper pin to release the tensioner. Make sure the tensioner is released.**
     - **To avoid chain-link skipping of the timing chain, do not move crankshaft or camshafts until the front cover is installed.**
5. In the same way as for the (RH) bank, install the timing chain and associated parts on the (LH) bank.
6. Install the oil pump.
7. Install the oil pump drive spacer as follows:
   - Install so that the front mark on the front edge of the oil pump drive spacer faces the front of the engine.
   - Insert the oil pump drive spacer according to the directions of the crankshaft key and the two flat surfaces of the oil pump inner rotor.
   - If the positional relationship does not allow the insertion, rotate the oil pump inner rotor to allow the oil pump drive spacer to be inserted.

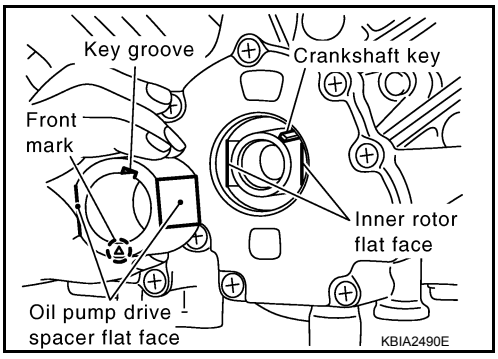

8. Installation of the remaining components is in the reverse order of removal. Refer to EM-50, "Removal and Installation".

INSPECTION AFTER INSTALLATION

- Before starting engine, check oil/fluid levels including engine coolant and engine oil. If less than required quantity, fill to the specified level. Refer to MA-16, "FOR USA AND CANADA : Fluids and Lubricants" (United States and Canada) or MA-17, "FOR MEXICO : Fluids and Lubricants" (Mexico).
- Use procedure below to check for fuel leakage.
- Turn ignition switch ON (with engine stopped). With fuel pressure applied to fuel piping, check for fuel leakage at connection points.
- Start engine. With engine speed increased, check again for fuel leakage at connection points.
- Run engine to check for unusual noise and vibration.
  NOTE:
  If hydraulic pressure inside timing chain tensioner drops after removal and installation, slack in the guide may generate a pounding noise during and just after engine start. However, this is normal. Noise will stop after hydraulic pressure rises.
- Warm up engine thoroughly to make sure there is no leakage of fuel, exhaust gas, or any oils/fluids including engine oil and engine coolant.
- Bleed air from passages in lines and hoses, such as in cooling system.
- After cooling down engine, again check oil/fluid levels including engine oil and engine coolant. Refill to specified level, if necessary.
- Summary of the inspection items:

Item		Before starting engine	Engine running	After engine stopped
Engine coolant		Level	Leakage	Level
Engine oil		Level	Leakage	Level
Transmission/ transaxle fluid	A/T and CVT Models	Leakage	Level/Leakage	Leakage
	M/T Models	Level/Leakage	Leakage	Level/Leakage
Other oils and fluids*		Level	Leakage	Level
Fuel		Leakage	Leakage	Leakage
Exhaust gas		—	Leakage	—

*Power steering fluid, brake fluid, etc.

CAMSHAFT

Exploded View

INFOID:0000000009824944

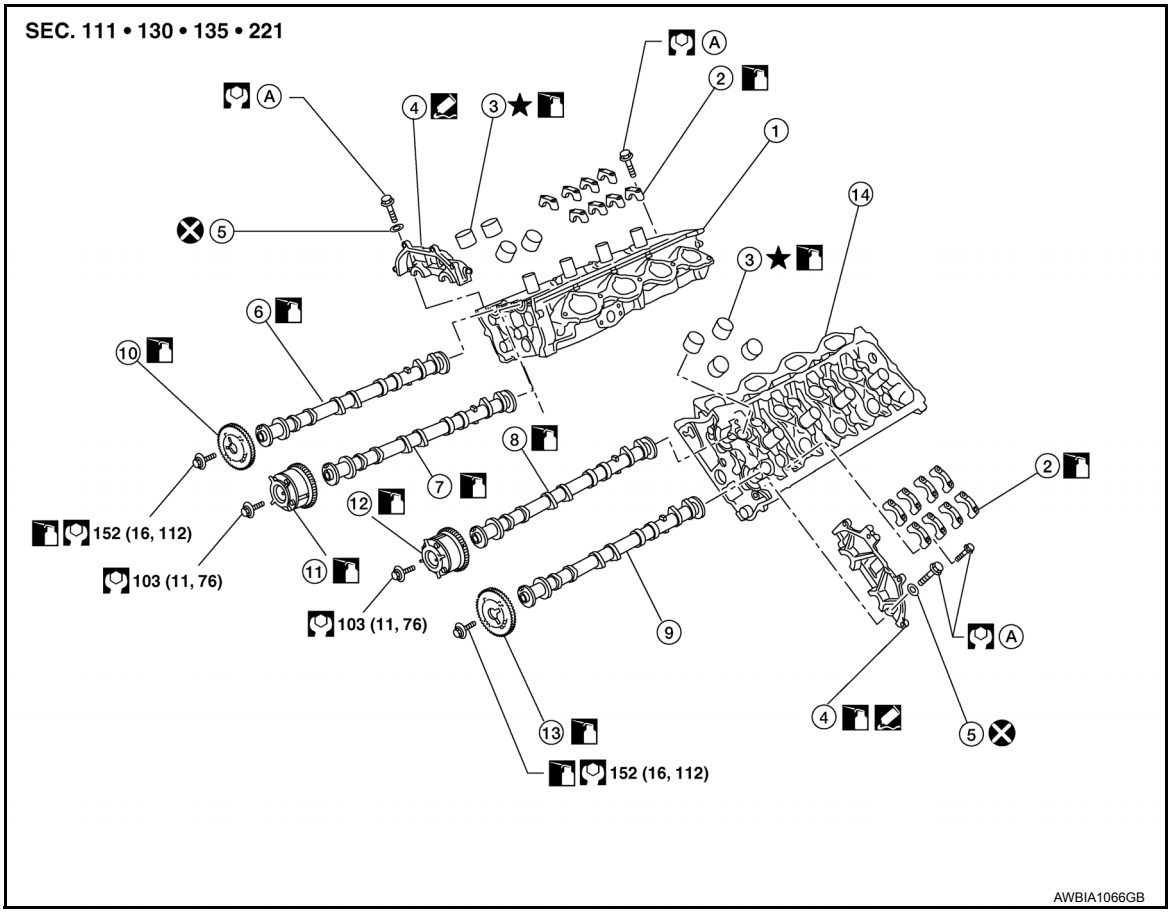

1. Cylinder head (RH) bank
2. Camshaft bracket (No. 2, 3, 4, 5)
3. Valve lifter
4. Camshaft bracket (No. 1)
5. Seal washer
6. Camshaft (RH) bank EXH
7. Camshaft (RH) bank INT
8. Camshaft (LH) bank INT
9. Camshaft (LH) bank EXH
10. Camshaft sprocket (RH) bank EXH
11. Camshaft sprocket (RH) bank INT (valve timing control)
12. Camshaft sprocket (LH) bank INT (valve timing control)
13. Camshaft sprocket (LH) bank EXH
14. Cylinder head (LH) bank
A. Refer to INSTALLATION

Removal and Installation

INFOID:0000000009824945

NOTE:
Do not remove the engine assembly to perform this procedure.

REMOVAL

1. Remove the power steering fluid reservoir tank bolts and position the power steering fluid reservoir tank aside.
2. Remove the (RH) bank and (LH) bank rocker covers. Refer to EM-41, "Removal and Installation".
3. Remove the spark plugs. Refer to EM-17, "Removal and Installation".
4. Remove the drive belt. Refer to EM-14, "Removal and Installation".

5. Obtain compression TDC of No. 1 cylinder as follows:

a. Turn the crankshaft pulley clockwise to align the TDC identification notch (without paint mark) with the timing indicator on the front cover.

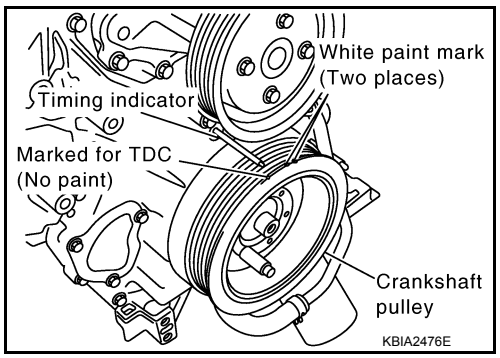

b. At this time, make sure both intake and exhaust cam lobes of No. 1 cylinder (top front on LH bank) point outside.
- If they do not point outside, turn crankshaft pulley once more.

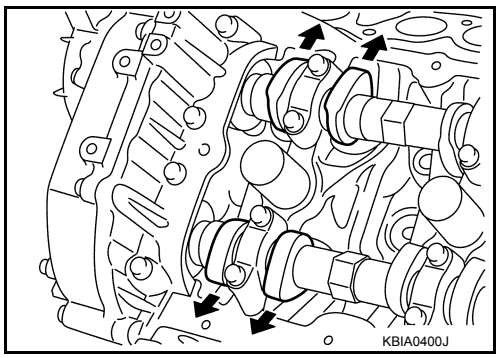

6. Disconnect and remove the camshaft position sensor. Refer to EM-56, "Exploded View".
7. Disconnect and remove the intake valve timing control position sensor (RH and LH). Refer to EM-56, "Exploded View".
8. Disconnect and remove the intake valve timing control solenoid valve (RH and LH). Refer to EM-56, "Exploded View".
9. Remove the intake valve timing control solenoid cover RH bank (A) and intake valve timing control solenoid cover (LH) bank (B) as follows:

a. Loosen and remove the bolts in reverse order as shown.

b. Cut the liquid gasket and remove the covers using Tool.

Tool number : KV10111100 (J-37228)

CAUTION:
Do not damage mating surfaces.

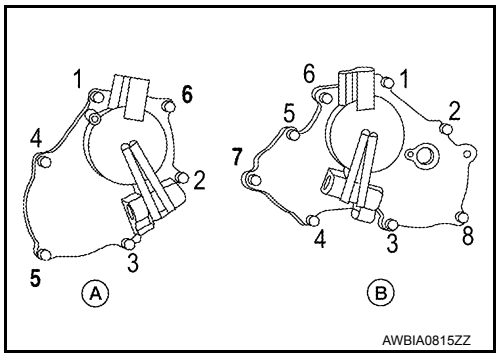

10. Paint alignment marks on the (RH) bank (A) timing chain links (C) and (LH) bank (B) timing chain links (D) and align with the camshaft sprocket alignment marks (E) and (F).

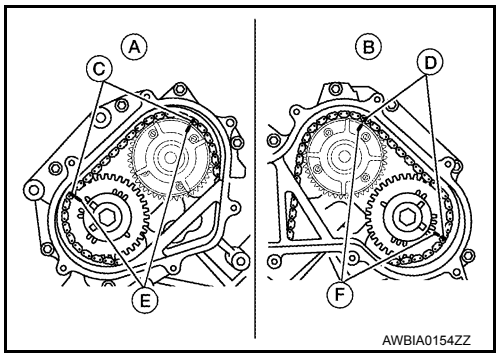

11. Remove the chain tensioner (LH) using the following steps.

WARNING:
Plunger, spring, and spring seat pop out when squeezing return-proof clip without holding plunger head. It may cause serious injuries. Always hold plunger head when removing.

a. Squeeze return-proof clip ends using suitable tool and push the plunger into the tensioner body.
b. Secure plunger using stopper pin.
   • Stopper pin is made from hard wire approximately 1 mm (0.04 in) in diameter.
c. Remove the bolts and the timing chain tensioner.

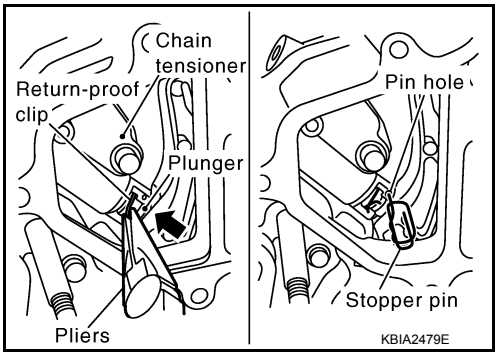

NOTE:
- Stop plunger in the fully extended position using return-proof clip (1) if stopper pin is removed.
- Push the plunger (2) into the tensioner body while squeezing the return-proof clip (1). Secure it using stopper pin (3).

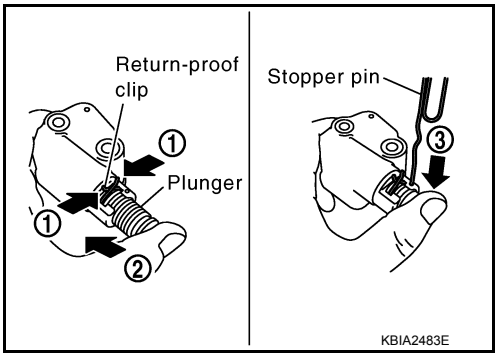

12. Remove the chain tensioner cover from the front cover using Tool.

Tool number : KV10111100 (J-37228)

CAUTION:
Do not damage mating surfaces.

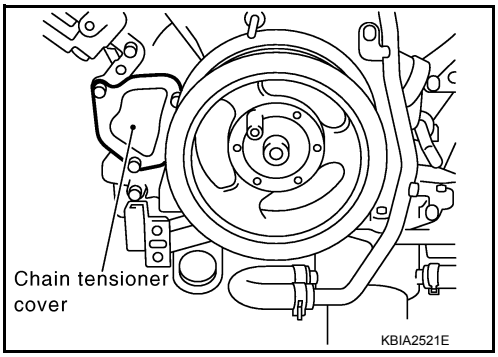

13. Remove the chain tensioner (RH) using the following steps.

WARNING:
Plunger, spring, and spring seat pop out when squeezing return-proof clip without holding plunger head. It may cause serious injuries. Always hold plunger head when removing.

a. Squeeze return-proof clip ends using suitable tool and push the plunger into the tensioner body.
b. Secure plunger using stopper pin.
   • Stopper pin is made from hard wire approximately 1 mm (0.04 in) in diameter.

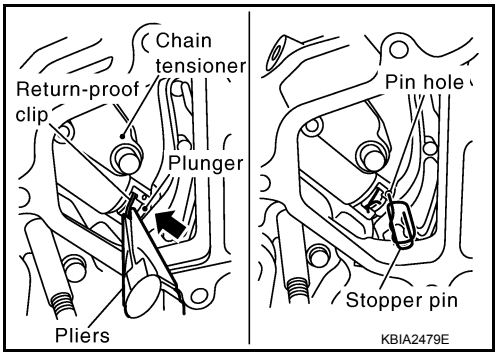

c. Remove the bolts and the chain tensioner (RH) (A).
NOTE:
If it is difficult to push plunger on chain tensioner (RH) (A), remove the plunger under extended condition.

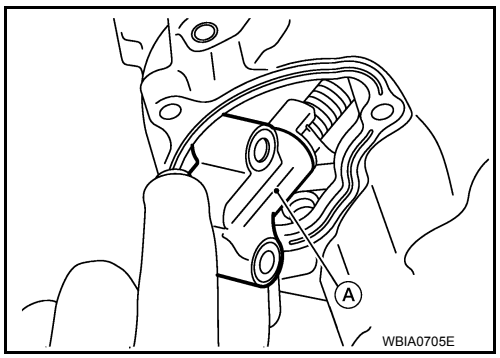

14. Loosen camshaft sprocket bolts as shown and remove camshaft sprockets.
CAUTION:
To avoid interference between valves and pistons, do not turn crankshaft or camshaft with timing chain disconnected.

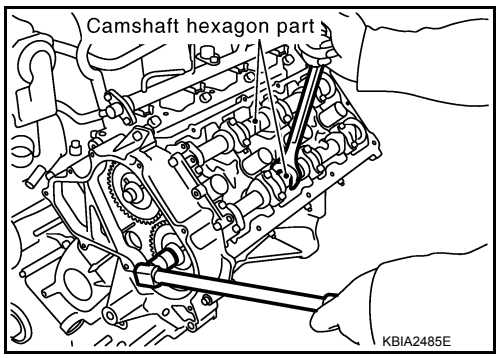

15. Remove the (RH) (A) front cover bolts and (LH) (B) front cover bolts.

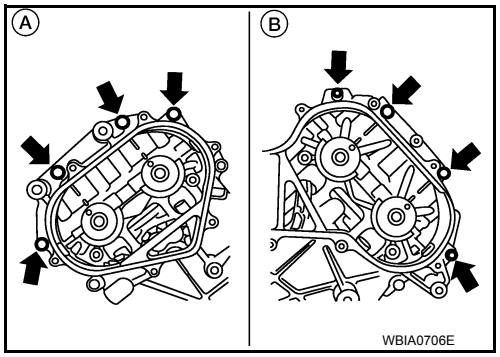

16. Remove (RH) (A) camshaft bracket bolts and (LH) (C) camshaft bracket bolts in the reverse of order shown to remove camshaft brackets.
- Remove No. 1 camshaft bracket.
NOTE:
The bottom and front surface of bracket will be stuck because of liquid gasket.

⇦ : Engine front
(B) : Exhaust side
(D) : Intake side

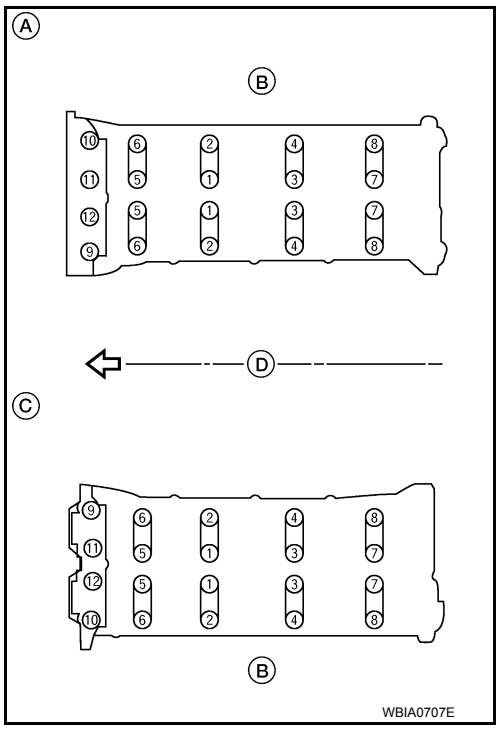

17. Remove the camshaft.
18. Remove the valve lifters if necessary.
    - Correctly identify location where each part is removed from. Keep parts organized to avoid mixing them up.

INSPECTION AFTER REMOVAL

Camshaft Runout

1. Put V block on precise flat work bench, and support No. 1 and No. 5 journals of the camshaft.
2. Set dial indicator vertically to No. 3 journal.
3. Turn the camshaft to one direction, and measure the camshaft runout on dial indicator (total indicator reading).

Camshaft runout : Less than 0.02 mm (0.0008 in)

- If measurement exceeds specification, replace the camshaft.

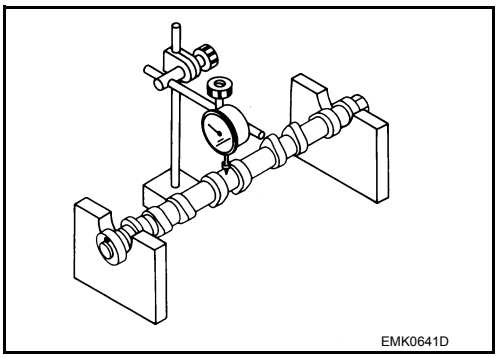

Camshaft Cam Height

- Measure the camshaft cam height.

Standard cam height (intake)	**: 44.865 - 45.055 mm (1.7663 - 1.7738 in)**
Standard cam height (exhaust)	**: 45.075 - 45.265 mm (1.7746 - 1.7821 in)**
Cam wear limit (intake & exhaust)	**: 0.02 mm (0.0008 in)**

- If measurement is not within the specifications, replace the camshaft.

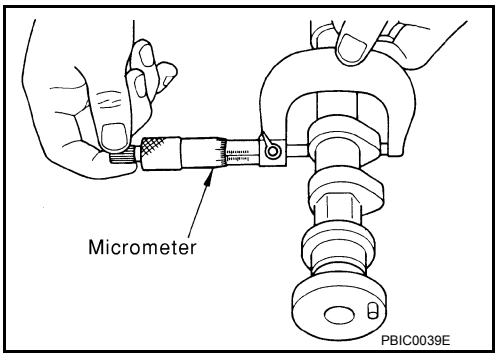

Camshaft Journal Clearance

Camshaft Journal Diameter

- Measure the diameter of the camshaft journal.

Standard diameter : 25.950 - 25.970 mm (1.0217 - 1.0224 in)

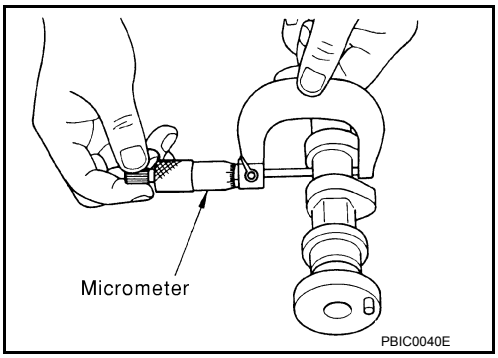

Camshaft Bracket Inner Diameter

- Tighten the camshaft bracket bolt to the specified torque.
- Measure the inner diameter of the camshaft bracket.

Standard : 26.000 - 26.021 mm (1.0236 - 1.0244 in)

Calculation of Camshaft Journal Clearance

(Journal clearance) = (camshaft bracket inner diameter) – (camshaft journal diameter)

Standard : 0.030 - 0.071 mm (0.0012 - 0.0028 in)

- If measurement is not within specification, replace either or both camshaft and cylinder head.

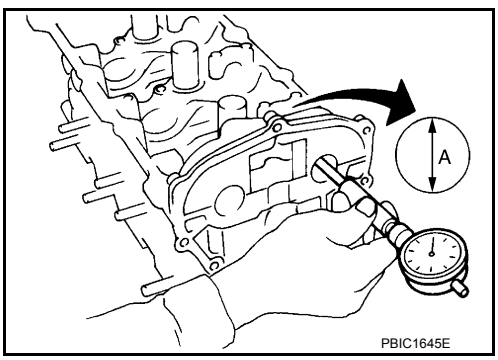

NOTE:
The inner diameter of the camshaft bracket is manufactured together with the cylinder head. Replace the whole cylinder head as an assembly.

Camshaft End Play

- Install dial gauge in the thrust direction on the front end of the camshaft. Measure the end play when the camshaft is moved forward/backward (in direction to axis).

Standard : 0.115 - 0.188 mm (0.0045 - 0.0074 in)

- If measurement is out of the specified range, replace the camshaft and measure again.
- If measurement is still out of the specified range, replace the cylinder head.

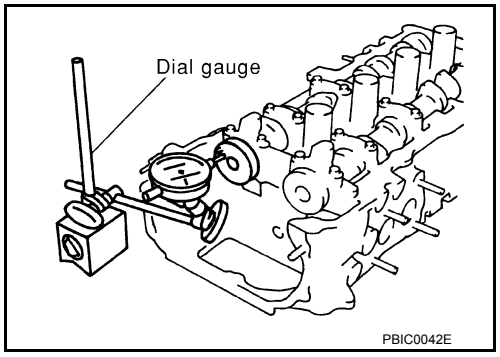

- Measure the following parts if end play is outside the specified value.

- Dimension (A) for camshaft No. 1 journal

Standard : 30.500 - 30.548 mm (1.2008-1.2027 in)

- Dimension (B) for cylinder head No. 1 journal

Standard : 30.360 - 30.385 mm (1.1953-1.1963 in)

- If measurements are not within specification, replace the camshaft and/or cylinder head.

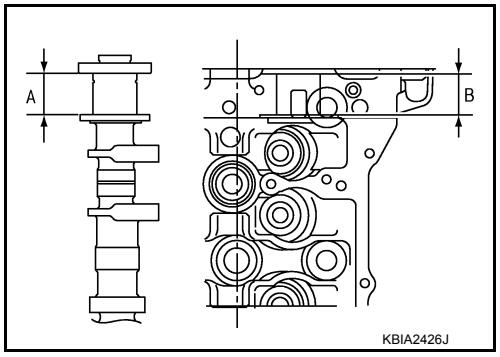

Camshaft Sprocket Runout

1. Install the camshaft in the cylinder head.
2. Install the camshaft sprocket to the camshaft.
3. Measure the camshaft sprocket runout.

Runout : Less than 0.15 mm (0.0059 in)

- If measurement exceeds the specification, replace the camshaft sprocket.

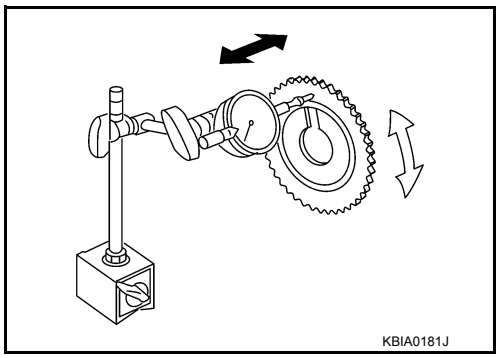

Valve Lifter

Check if the surface of the valve lifter has any wear or cracks.

- If any damage is found, replace the valve lifter.
- Select the thickness of the head so that the valve clearance is within the standard when replacing. Refer to EM-19, "Valve Clearance".

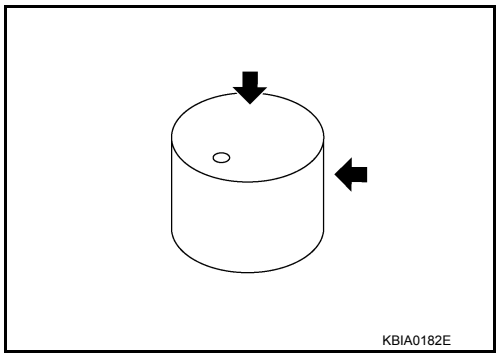

Valve Lifter Clearance

Valve Lifter Diameter

- Measure the diameter of the valve lifter.

Standard : 33.977 - 33.987 mm (1.3377 - 1.3381 in)

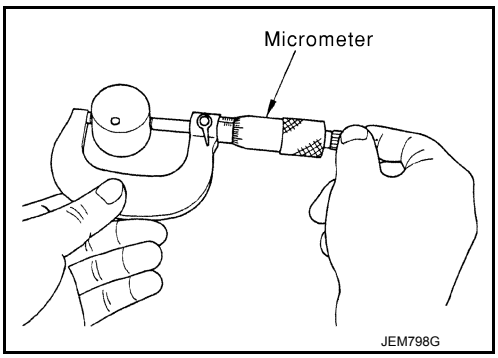

Valve Lifter Hole Diameter

- Measure the diameter of the valve lifter hole of the cylinder head, using suitable tool.

Standard : 34.000 - 34.016 mm (1.3386 - 1.3392 in)

Calculation of Valve Lifter Clearance

(Valve lifter clearance) = (valve lifter hole diameter) – (valve lifter diameter)

Standard : 0.013 - 0.039 mm (0.0005 - 0.0015 in)

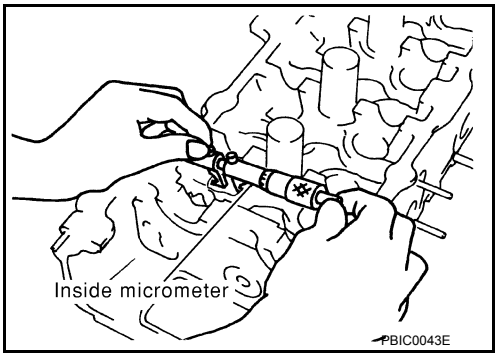

- If the measurement is not within specification, referring to each specification of the valve lifter diameter and hole diameter, replace either or both the valve lifter and cylinder head.

INSTALLATION

1. Install the valve lifters if removed.
   - Install removed parts in their original locations.
2. Install the camshafts. Refer to the table below for identification of the (RH) and (LH), and intake and exhaust.

Bank	INT EXH	Identification paint (front)	Identification paint (rear)	Identification rib
(RH)	INT	Pink	—	Yes
	EXH	—	Orange	Yes
(LH)	INT	Pink	—	No
	EXH	—	Orange	No

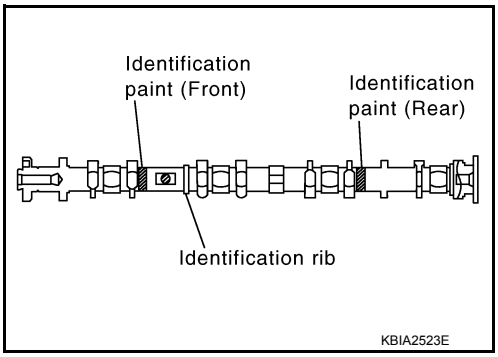

- Install so that the (RH) bank (B) dowel pins (A) and (LH) bank (C) dowel pins (A) at the front of the camshaft face are in the direction shown.

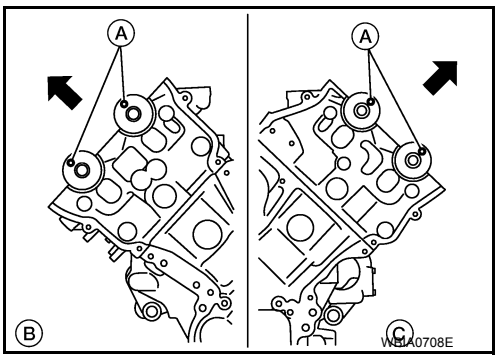

3. Install the (RH) bank (B) and (LH) bank (D) camshaft brackets (A).
   - Install by referring to the installation location mark (E) on the upper surface.
   - Install so that the installation location mark (E) can be correctly read when viewed from the intake manifold side (C).
   - Install No. 1 camshaft bracket using the following procedure:

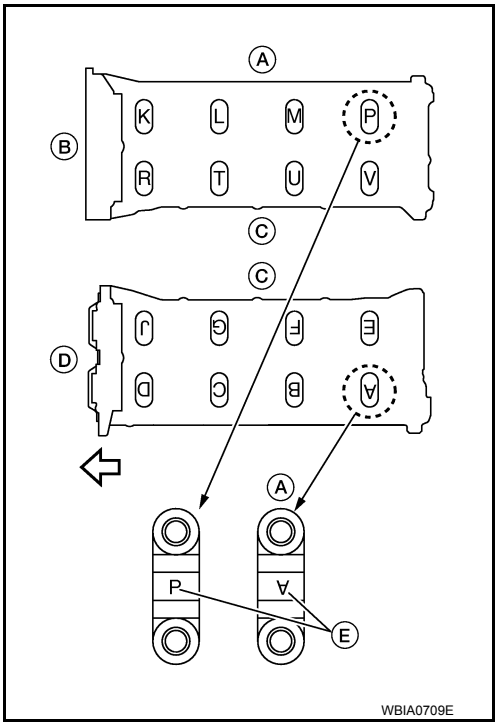

⇦ : Engine front

- Apply liquid gasket to No. 1 camshaft bracket (A) and (B) as shown.

(C) : 11 mm (0.43)
(D) : 2.0 - 3.0 (0.079 - 0.118 in) dia.

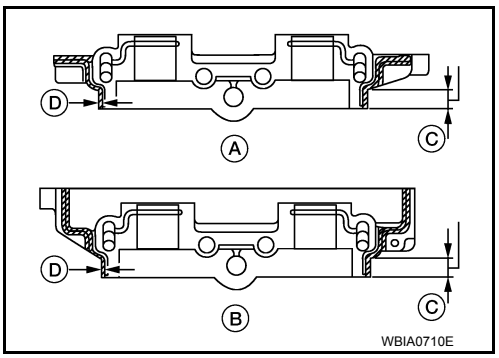

Use Genuine RTV Silicone Sealant or equivalent. Refer to GI-21, "Recommended Chemical Products and Sealants".
CAUTION:
- **After installation, be sure to wipe off excess liquid gasket oozing from part (C) and (D) both on (RH) and (LH) sides.**
- **Remove completely excess of liquid gasket inside bracket.**
- **The components must be installed within 5 minutes of the liquid gasket application.**
- **Then allow 30 minutes for the liquid gasket to set before filling the engine with oil or coolant.**

- Apply liquid gasket (C) to the back side of the (LH) (A) bank front cover and (RH) (B) bank front cover as shown.
Use Genuine RTV Silicone Sealant or equivalent. Refer to GI-21, "Recommended Chemical Products and Sealants".
CAUTION:
- **The components must be installed within 5 minutes of the liquid gasket application.**
- **Then allow 30 minutes for the liquid gasket to set before filling the engine with oil or coolant.**
- (C): 2.6 - 3.6 mm (0.102 - 0.142 in) dia.

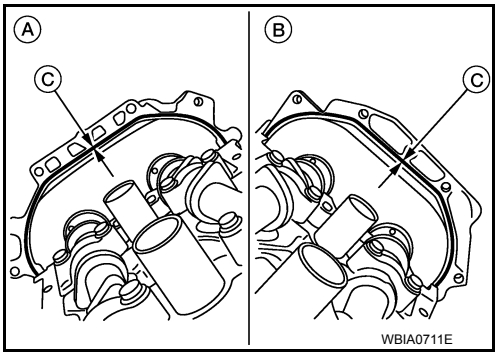

- Position No. 1 camshaft bracket close to the mounting position, and then install it to prevent from touching liquid gasket applied to each surface.

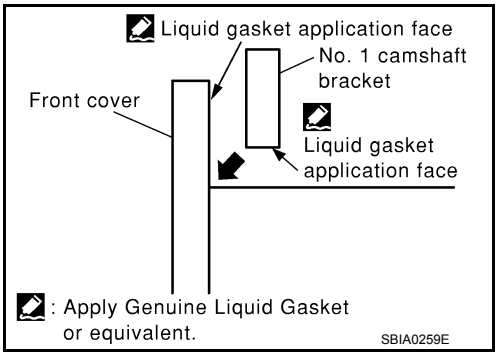

- Temporarily tighten the (RH) (A) and (LH) (B) front cover bolts (4 for each bank) as shown.

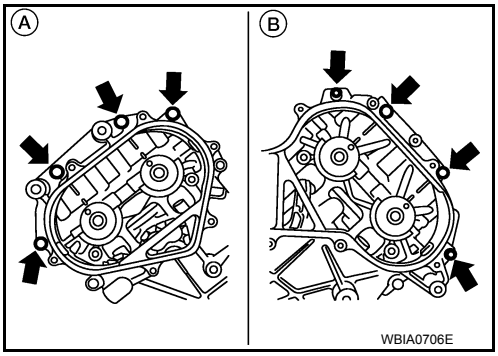

4. Tighten the camshaft bracket bolts as follows:

Camshaft bracket bolts

Step 1 (bolts 9 - 12) : 1.96 N·m (0.2 kg-m, 17 in-lb)
Step 2 (bolts 1 - 8) : 1.96 N·m (0.2 kg-m, 17 in-lb)
Step 3 (all bolts) : 5.88 N·m (0.6 kg-m, 52 in-lb)
Step 4 (all bolts) : 10.4 N·m (1.1 kg-m, 92 in-lb)

CAUTION:
After tightening the camshaft bracket bolts, be sure to wipe off excess liquid gasket from the parts listed below.
- **Mating surface of rocker cover**
- **Mating surface of front cover**

(A) : (RH) bank
(B) : Exhaust side
(C) : (LH) bank
(D) : Intake side
⇦ : Engine front

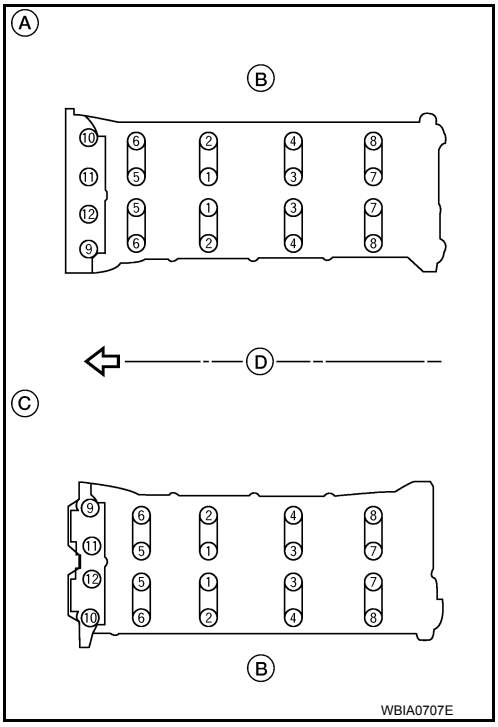

a. Tighten the (RH) (A) and (LH) (B) front cover bolts (4 for each bank) as shown to the specified torque.

Front cover bolts : 11.0 N·m (1.1 kg-m, 8 ft-lb)

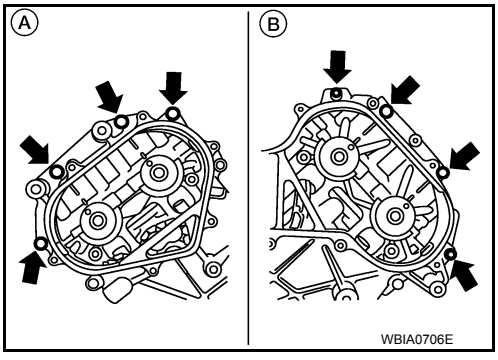

5. Install the camshaft sprockets using the following procedure:
   • (A): (LH) bank shown

a. Install the camshaft sprockets aligning them with the matching marks painted on the timing chain (B) and the camshaft sprockets (C) before removal. Align the camshaft sprocket key groove with the dowel pin on the camshaft front edge at the same time. Then temporarily tighten camshaft sprocket bolts.

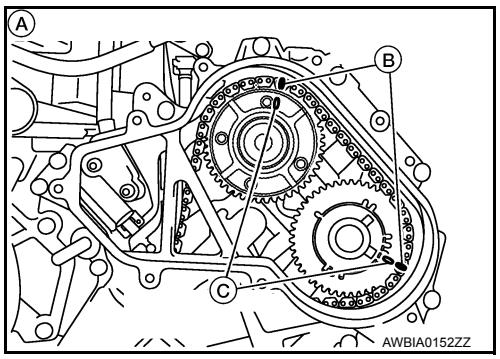

   • Install the intake (valve timing control) (A) and exhaust (B) side camshaft sprockets by selectively using the groove of the dowel pin according to the bank for the exhaust (B) side camshaft sprockets. (Common part used for both exhaust banks.)
   NOTE:
   Use the groove marked (R) for (RH) bank and (L) for (LH) bank.

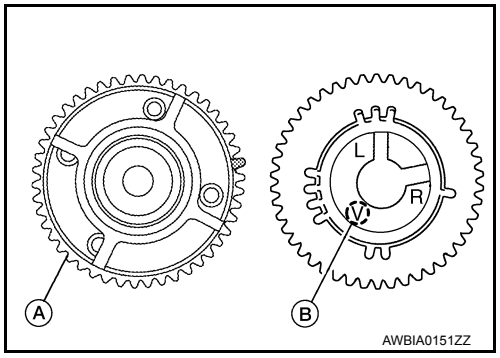

b. Lock the hexagonal part of the camshaft in the same way as for removal, and tighten the camshaft sprocket bolts.

c. Check again that the timing alignment mark on the timing chain and on each sprocket are aligned.

6. Install the chain tensioner using the following procedure:
   NOTE:
   (LH) is shown.

a. Install the chain tensioner.
   • Compress the plunger and hold it using a stopper pin when installing.
   • Loosen the slack guide side timing chain by rotating the camshaft hexagonal part if mounting space is small.

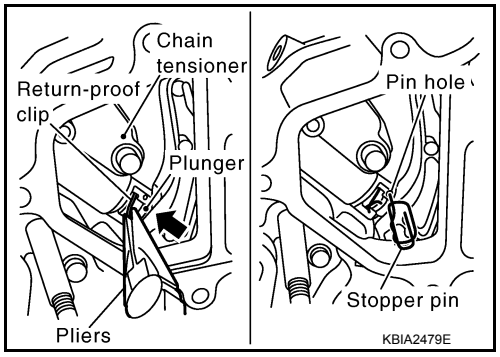

Chain tensioner bolts : 6.9 N·m (0.70 kg-m, 61 in-lb)

b. Remove the stopper pin and release the plunger, and then apply tension to the timing chain.

c. Install the chain tensioner cover onto the front cover.
   • Apply liquid gasket as shown.
   Use Genuine RTV Silicone Sealant or equivalent. Refer to GI-21, "Recommended Chemical Products and Sealants".

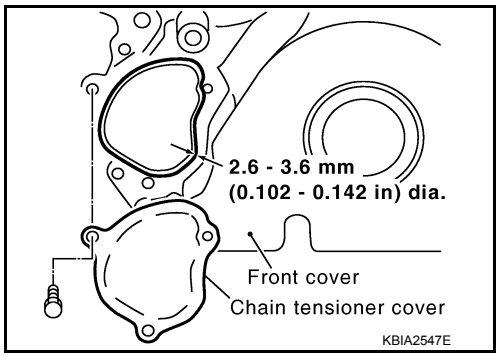

Chain tensioner cover bolts : 9.0 N·m (0.92 kg-m, 80 in-lb)

7. Check and adjust valve clearances. Refer to EM-19, "Valve Clearance".

8. Installation of the remaining components is in the reverse order of removal.

Inspection after Installation

INFOID:0000000009824946

INSPECTION OF CAMSHAFT SPROCKET (INT) OIL GROOVE

CAUTION:
Perform this inspection only when DTC P0011 is detected in self-diagnostic results of CONSULT and it is directed according to inspection procedure of EC section. Refer to EC-111, "Trouble Diagnosis Introduction".

WARNING:

Check when engine is cold so as to prevent burns from any splashing engine oil.

1. Check engine oil level. Refer to LU-8, "Inspection".
2. Perform the following procedure so as to prevent the engine from being unintentionally started while checking.

a. Release fuel pressure. Refer to EC-494, "Fuel Pressure Check".

b. Disconnect ignition coil and injector harness connectors if practical.

3. Remove intake valve timing control solenoid valve.
4. Crank engine, and then make sure that engine oil comes out from intake valve timing control cover oil hole. End cranking after checking.

WARNING:
Be careful not to touch rotating parts (drive belts, idler pulley, and crankshaft pulley, etc.).
CAUTION:
- **Engine oil may squirt from intake valve timing control solenoid valve installation hole during cranking. Use a shop cloth to prevent engine oil from splashing on worker, engine components and vehicle.**
- **Do not allow engine oil to get on rubber components such as drive belts or engine mount insulators. Immediately wipe off any splashed engine oil.**

5. Clean oil groove between oil strainer and intake valve timing control solenoid valve if engine oil does not come out from intake valve timing control valve cover oil hole. Refer to LU-7, "Schematic".
6. Remove components between intake valve timing control solenoid valve and camshaft sprocket (INT), and then check each oil groove for clogging.
   - Clean oil groove if necessary.
7. After inspection, installation of the remaining components is in the reverse order of removal.

OIL SEAL

Removal and Installation of Valve Oil Seal

INFOID:0000000009824947

REMOVAL

1. Turn the crankshaft until the cylinder requiring new oil seals is at TDC. This will prevent the valve from dropping into the cylinder.
2. Remove the camshaft relating to the valve oil seal to be removed. Refer to EM-62, "Removal and Installation".
3. Remove the valve lifters. Refer to EM-80, "Exploded View".
   - Correctly identify the location where each part is removed from. Keep parts organized to avoid mixing them up.
4. Remove the valve collet using Tool.

Tool number : KV10116200 (J-26336-B)
: KV10115900 (J-26336-20)
: KV10109220 (—)

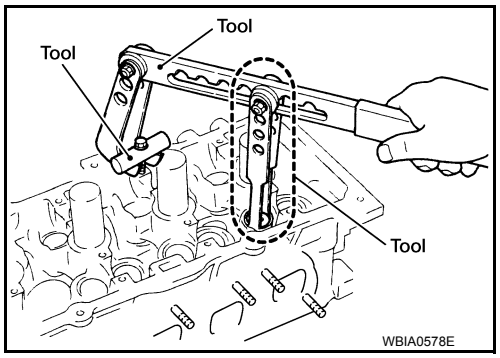

CAUTION:
Do not damage the valve lifter holes.

5. Remove the valve spring retainer and valve spring.

CAUTION:
Do not remove the valve spring seat from the valve spring.

6. Remove the valve oil seal using Tool.

Tool number : KV10107902 (J-38959)

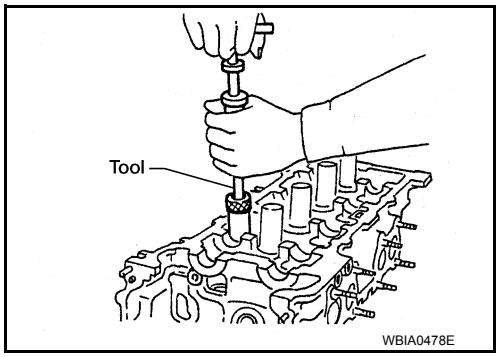

INSTALLATION

Installation is in the reverse order of removal.

- Install the valve oil seal using Tool.

Tool number : KV10115600 (J-38958)

- Apply new engine oil on the new valve oil seal joint and seal lip.
- Install the valve oil seal to the specified height (H).

Height (H) (without valve spring installed)
Intake and exhaust : 14.300 - 14.900 mm (0.5630 - 0.5870 in)

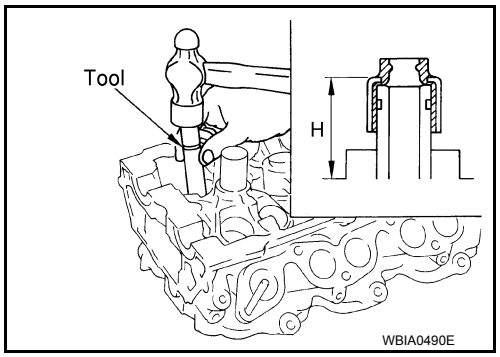

Removal and Installation of Front Oil Seal

INFOID:0000000009824948

REMOVAL

1. Remove the drive belt. Refer to EM-14, "Removal and Installation".
2. Remove radiator. Refer to CO-16, "Removal and Installation".
3. Remove drive plate cover.

4. Lock crankshaft using Tool (A).

Tool number : — (J-47245)

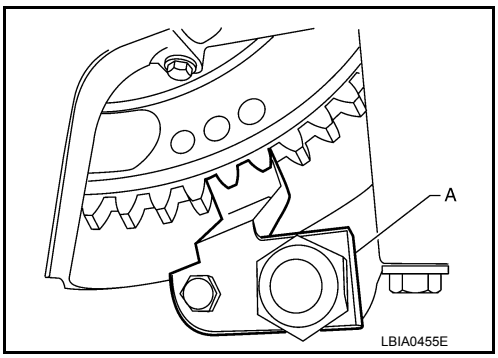

5. Match mark crankshaft pulley bolt flange and crankshaft pulley for installation.
6. Remove the crankshaft pulley bolt and crankshaft pulley from the crankshaft using suitable tool.

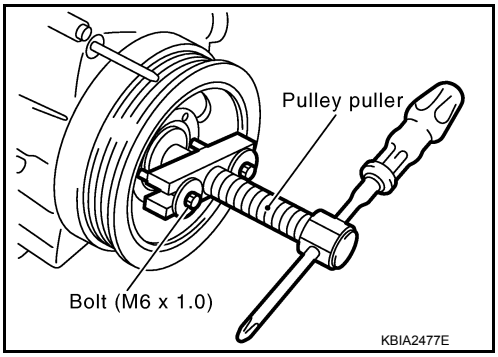

7. Remove the front oil seal using suitable tool.
CAUTION:
Do not damage front cover and oil pump drive spacer.

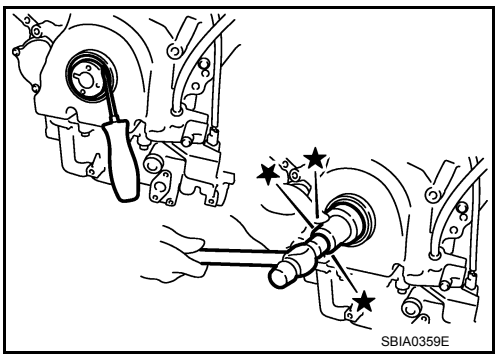

INSTALLATION

1. Apply new engine oil to both the oil seal lip and dust seal lip of the new front oil seal.
2. Install the front oil seal.
   - Install the front oil seal so that each seal lip is oriented as shown.

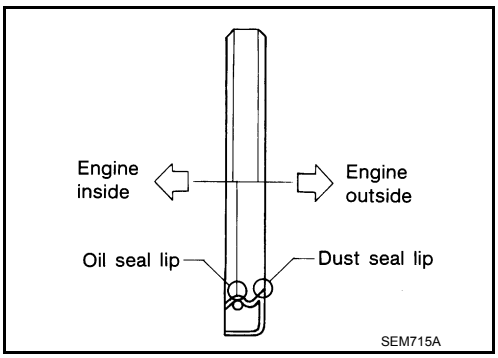

- Press-fit until the height of the front oil seal is level with the mounting surface using suitable tool.

CAUTION:

- **Do not damage front timing chain case and crankshaft.**
- **Press-fit straight and avoid causing burrs or tilting of the oil seal.**

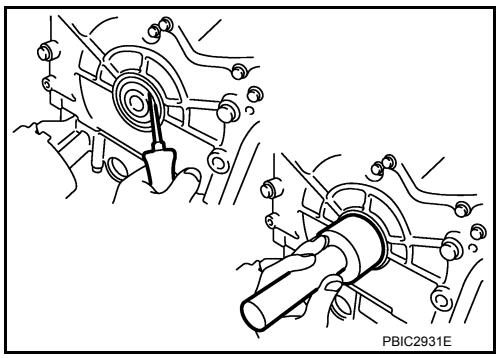

3. Apply engine oil onto the threaded parts of the crankshaft pulley bolt and seating area.
4. Align the match mark on the crankshaft pulley bolt flange and the crankshaft pulley, install crankshaft pulley and tighten bolt to specifications using Tool.

Crankshaft pulley bolt torque

Step 1 : 93.1 N·m (9.5 kg-m, 69 ft-lb)

Step 2 : additional 90° (angle tightening)

Tool number : KV10112100 (BT-8653-A)

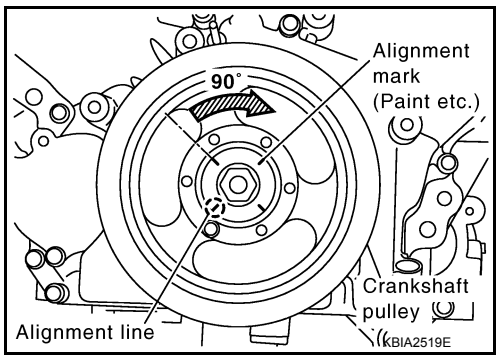

5. Remove Tool (A).

Tool number : — (J-47245)

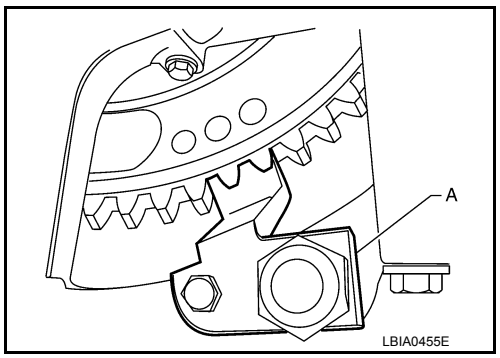

6. Installation of the remaining components is in the reverse order of removal.

Removal and Installation of Rear Oil Seal

INFOID:0000000009824949

REMOVAL

1. Remove the transmission assembly. Refer to TM-194, "Removal and Installation (2WD)" or TM-196, "Removal and Installation (4WD)".
2. Before removing the drive plate, put a match mark (A) on the crankshaft and drive plate for alignment during installation

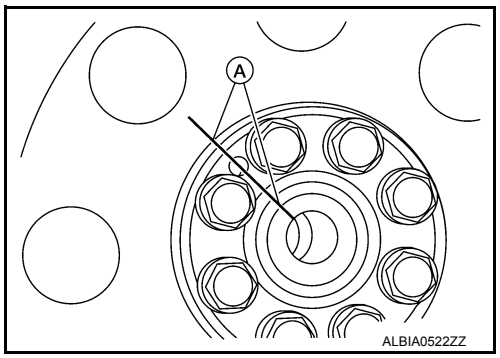

3. Remove the drive plate.

- Holding the crankshaft pulley bolt, lock the crankshaft to remove the drive plate bolts.
- Remove drive plate bolts diagonally.

CAUTION:

- **Do not damage the drive plate. Especially, avoid deforming and damaging the signal plate teeth (circumference position).**
- **Keep magnetic materials away from signal plate.**
- **Place the drive plate with the signal plate surface facing upward.**

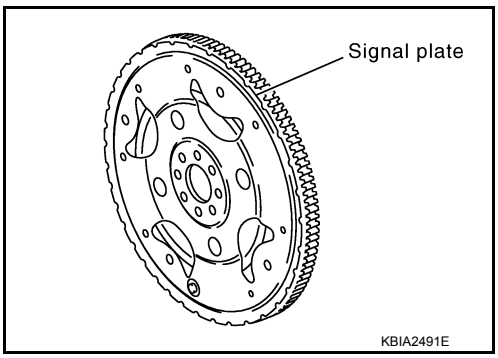

4. Remove the rear oil seal using suitable tool.

CAUTION:

Do not damage crankshaft or oil seal retainer surface.

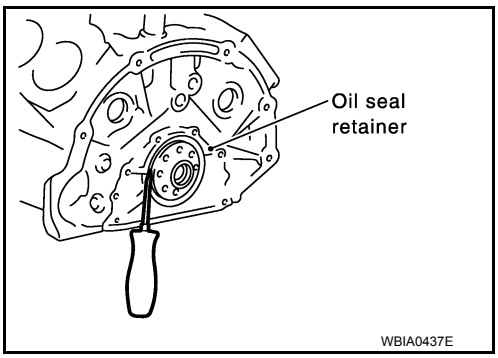

INSTALLATION

1. Apply new engine oil to both the oil seal lip and dust seal lip of the new rear oil seal.
2. Install the rear oil seal.
   - Install the rear oil seal so that each seal lip is oriented as shown.
   - (A): Oil seal lip
   - (B): Dust seal lip
   - ⇦: Engine inside
   - ⬅: Engine outside

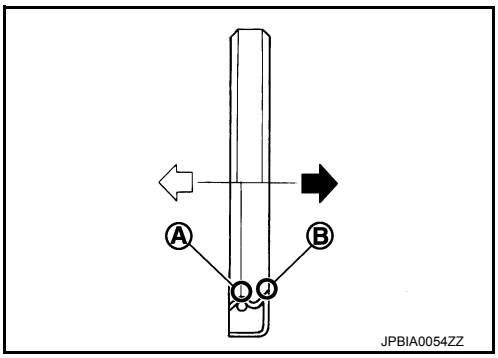

   - Press in rear oil seal (1) to the position as shown.

     (a) : 0 - 0.5 mm (0 - 0.020 in)

   - (B): Rear oil seal retainer rear end face

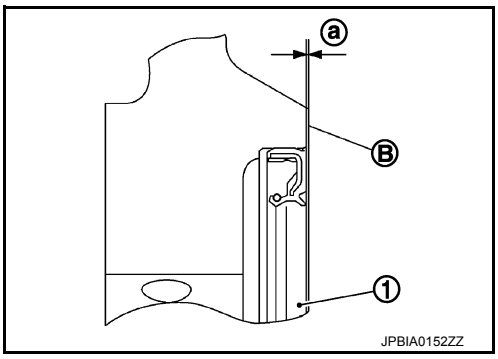

- Press-fit the rear oil seal using suitable tool.
  CAUTION:
  - **Do not damage the crankshaft or cylinder block.**
  - **Press-fit the oil seal straight to avoid causing burrs or tilting.**
  - **Do not touch grease applied onto the oil seal lip.**
  - **Do not damage or scratch the outer circumference of the rear oil seal.**
- Tap until flattened with the front edge of the oil seal retainer.

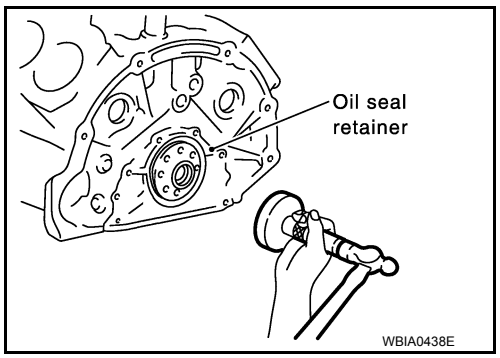

3. Installation of the remaining components is in the reverse order of removal. Refer to EM-93, "Disassembly and Assembly", TM-194, "Removal and Installation (2WD)", TM-196, "Removal and Installation (4WD)".
   CAUTION:
   - **When replacing an engine or transmission you must make sure the dowels are installed correctly during re-assembly.**
   - **Improper alignment caused by missing dowels may cause vibration, oil leaks or breakage of drivetrain components.**

CYLINDER HEAD

Exploded View

INFOID:0000000009824950

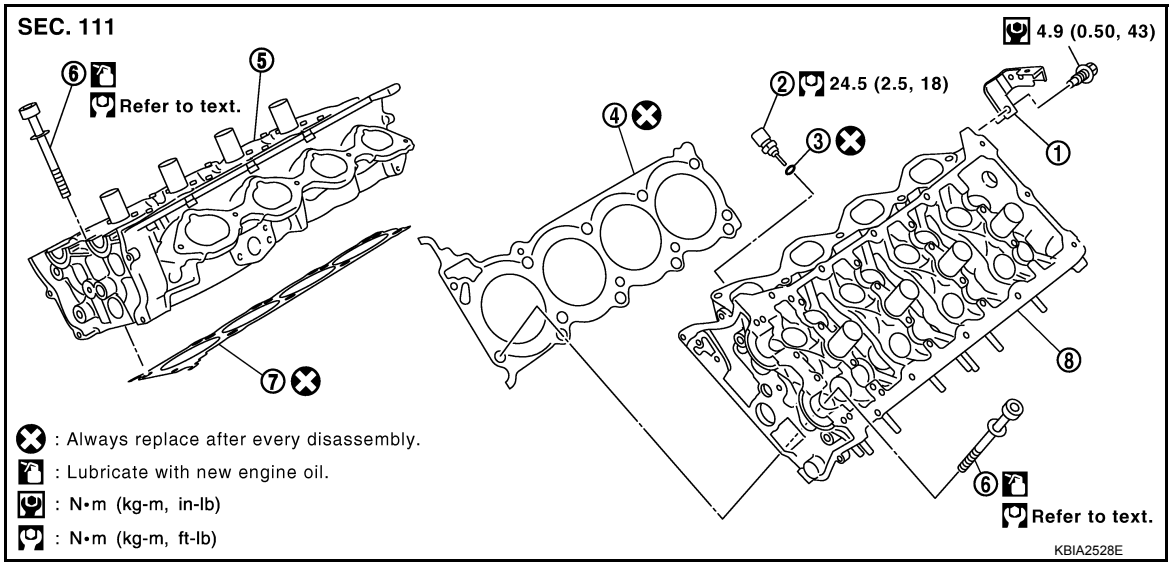

1. Harness bracket
2. Engine coolant temperature sensor
3. Washer
4. Cylinder head gasket (LH)
5. Cylinder head (RH)
6. Cylinder head bolt
7. Cylinder head gasket (RH)
8. Cylinder head (LH)

Removal and Installation

INFOID:0000000009824951

REMOVAL

1. Remove the engine assembly from the vehicle. Refer to EM-88, "Removal and Installation".
2. Remove the following components and related parts:
   - Drive belt auto-tensioner, drive belt and idler pulley. Refer to EM-15, "Drive Belt Auto-Tensioner and Idler Pulley".
   - Generator assembly and bracket. Refer to CHG-28, "Removal and Installation".
   - Thermostat housing and hose. Refer to CO-23, "Removal and Installation".
   - Oil pan and oil strainer. Refer to EM-35, "Removal and Installation".
   - Fuel tube and fuel injector assembly. Refer to EM-43, "Removal and Installation".
   - Intake manifold. Refer to EM-27, "Removal and Installation".
   - Rocker cover. Refer to EM-41, "Removal and Installation".
   - Starter. Refer to STR-20, "Removal and Installation".
   - Knock sensors. Refer to EM-92, "Exploded View".
   - Engine coolant temperature sensor (if necessary).
3. Remove the crankshaft pulley, front cover, oil pump, and timing chain. Refer to EM-57, "Removal and Installation".
4. Remove the camshaft sprockets and camshafts. Refer to EM-62, "Removal and Installation".
5. Remove the cylinder head bolts in reverse of order shown using Tool.

Tool number : — (J-45816)

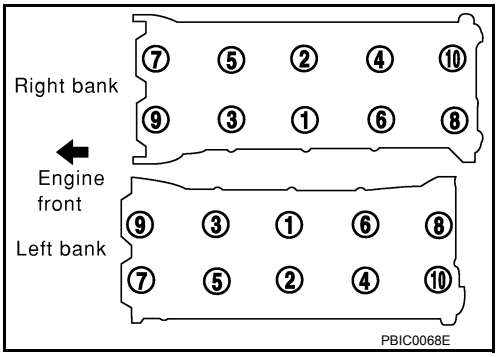

6. Remove the cylinder heads.
7. Remove the cylinder head gaskets.

INSPECTION AFTER REMOVAL

Cylinder Head Bolts Diameter

- Cylinder head bolts are tightened by plastic zone tightening method. Whenever the size difference between d1 and d2 exceeds the limit, replace the bolt with a new one.

Limit (d1 - d2) : 0.23 mm (0.0091 in)

- If reduction of diameter appears in a position other than d2, use it as d2 point.

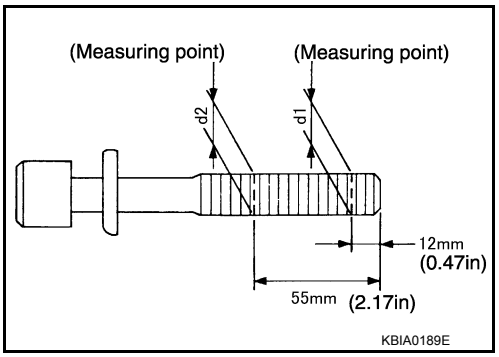

INSTALLATION

1. Install a new cylinder head gasket.
   CAUTION:
   Do not reuse head gasket.
2. Install the cylinder head. Follow the steps below to tighten the bolts in the numerical order shown.
   CAUTION:
   - **If cylinder head bolts are re-used, check their diameters before installation. Follow the "Cylinder Head Bolts Diameter" procedure.**

a. Apply engine oil to threads and seating surface of the bolts.

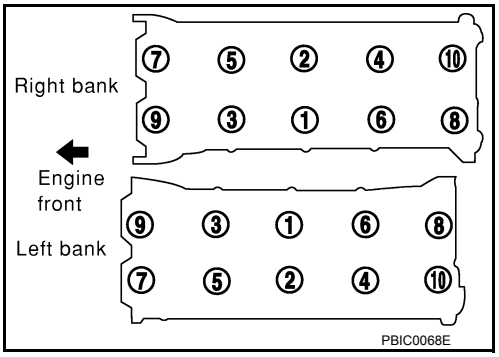

b. Measure the tightening angle using Tool.
   CAUTION:
   Measure the tightening angle using Tool. Do not measure visually.

Step a : 44.1 N·m (4.5 kg-m, 33 ft-lb) in order (1-10)
Step b : 70° clockwise in order (1-10)
Step c : Loosen to 0 N·m (0 kg-m, 0 ft-lb) in reverse order (10-1).
Step d : 44.1 N·m (4.5 kg-m, 33 ft-lb) in order (1-10)
Step e : 60° clockwise in order (1-10)
Step f : 60° clockwise in order (1-10)

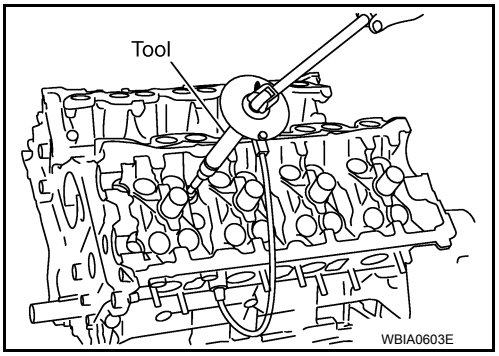

Tool number : KV10112100 (BT-8653-A)

3. Installation of the remaining components is in the reverse order of removal.

INSPECTION AFTER INSTALLATION

- Before starting engine, check oil/fluid levels including engine coolant and engine oil. If less than required quantity, fill to the specified level. Refer to MA-16, "FOR USA AND CANADA : Fluids and Lubricants" (United States and Canada) or MA-17, "FOR MEXICO : Fluids and Lubricants" (Mexico).
- Use procedure below to check for fuel leakage.
- Turn ignition switch ON (with engine stopped). With fuel pressure applied to fuel piping, check for fuel leakage at connection points.
- Start engine. With engine speed increased, check again for fuel leakage at connection points.
- Run engine to check for unusual noise and vibration.

- Warm up engine thoroughly to make sure there is no leakage of fuel, exhaust gas, or any oils/fluids including engine oil and engine coolant.
- Bleed air from passages in lines and hoses, such as in cooling system.
- After cooling down engine, again check oils/fluids including engine oil and engine coolant. Refill to specified level, if necessary.
- Summary of the inspection items:

Item		Before starting engine	Engine running	After engine stopped
Engine coolant		Level	Leakage	Level
Engine oil		Level	Leakage	Level
Transmission/ transaxle fluid	A/T and CVT Models	Leakage	Level/Leakage	Leakage
	M/T Models	Level/Leakage	Leakage	Level/Leakage
Other oils and fluids*		Level	Leakage	Level
Fuel		Leakage	Leakage	Leakage
Exhaust gas		—	Leakage	—

*Power steering fluid, brake fluid, etc.

Exploded View

INFOID:0000000009824952

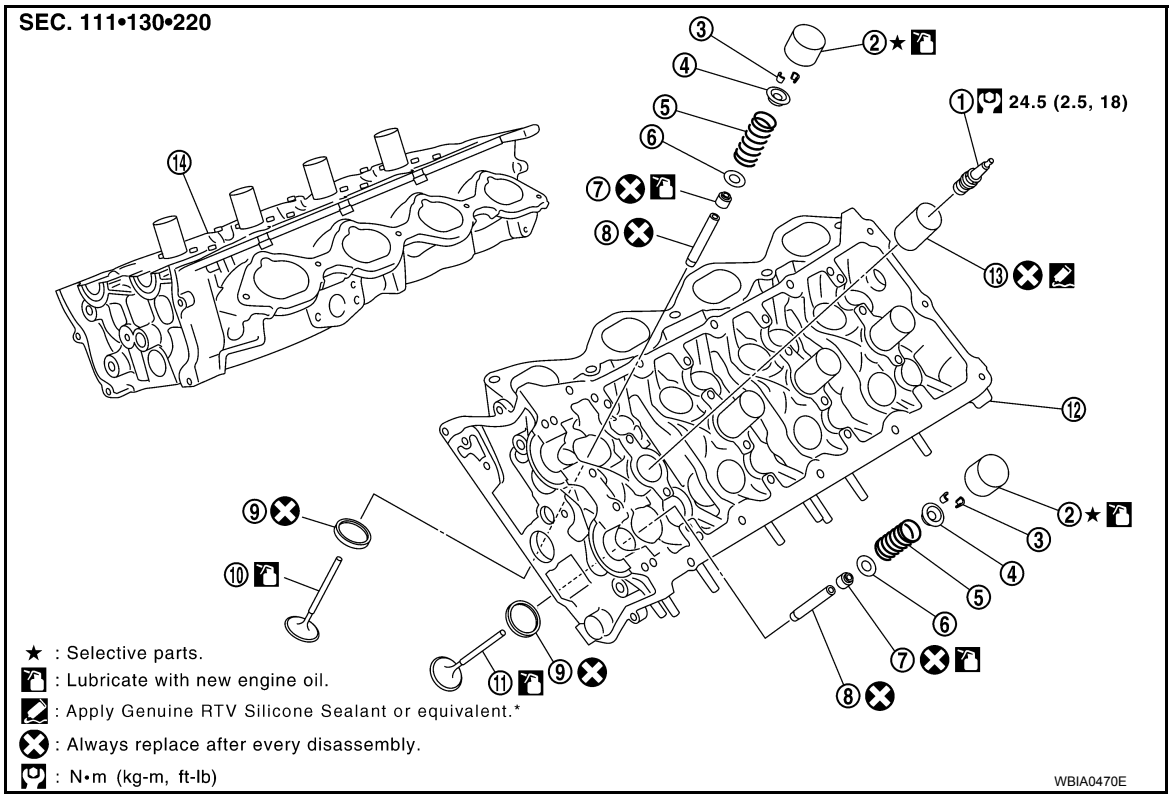

1. Spark plug
2. Valve lifter
3. Valve collet
4. Valve spring retainer
5. Valve spring
6. Valve spring seat
7. Valve oil seal
8. Valve guide
9. Valve seat
10. Valve (INT)
11. Valve (EXH)
12. Cylinder head (LH bank)
13. Spark plug tube
14. Cylinder head (RH bank)

Disassembly and Assembly

INFOID:0000000009824953

DISASSEMBLY

1. Remove the spark plug. Refer to EM-17, "Removal and Installation".

2. Remove the valve lifter.
   • Identify the installation positions, and store them without mixing them up.
3. Remove the valve collet using Tools.

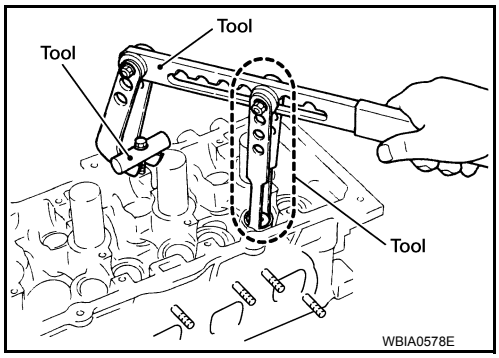

Tool number : KV10116200 (J-26336-B)
: KV10115900 (J-26336-20)
: KV10109220 (—)

CAUTION:
When working, take care not to damage valve lifter holes.

4. Remove the valve spring retainer, valve spring and valve spring seat.
5. Inspect the valve guide clearance. Refer to EM-82, "Inspection After Disassembly".
6. Push the valve stem to the combustion chamber side, and remove the valve.
   • Identify the installation positions, and store them without mixing them up.
7. Remove the valve oil seal using Tool.

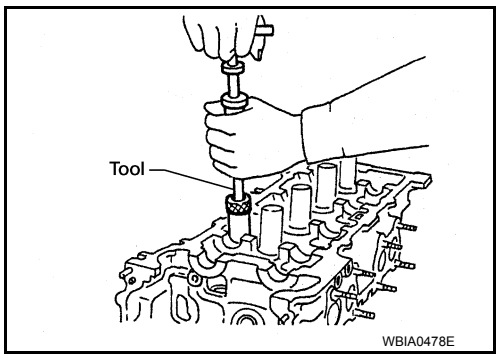

Tool number : KV10107902 (J-38959)

8. Replace the valve seat if necessary. Refer to EM-82, "Inspection After Disassembly".
9. Replace the valve guide if necessary. Refer to EM-82, "Inspection After Disassembly".
10. Remove the spark plug tube, as necessary.
    • Remove the spark plug tube out of the cylinder head using suitable tool.
    CAUTION:
    • **Do not damage the cylinder head.**
    • **Do not remove the spark plug tube unless absolutely necessary. Once removed, the spark plug tube will be deformed and cannot be reused.**

ASSEMBLY

1. Install the valve guide if necessary. Refer to EM-82, "Inspection After Disassembly".
2. Install the valve seat if necessary. Refer to EM-82, "Inspection After Disassembly".
3. Install the valve oil seal using Tool.

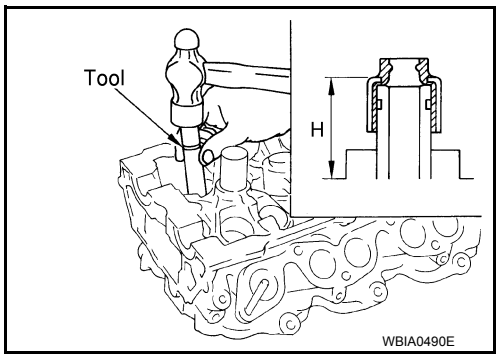

Tool number : KV10115600 (J-38958)

• Apply new engine oil on the new valve oil seal joint and seal lip.
• Install the valve oil seal to the specified height (H).

Height (H) (without valve spring installed)
Intake and exhaust : 14.300 - 14.900 mm (0.5630 - 0.5870 in)

4. Install the valves in their original position.
5. Install the valve spring seats.

6. Install the valve springs.
   - Install the narrow pitch end (paint mark side) to the cylinder head side.
7. Install the valve spring retainers.

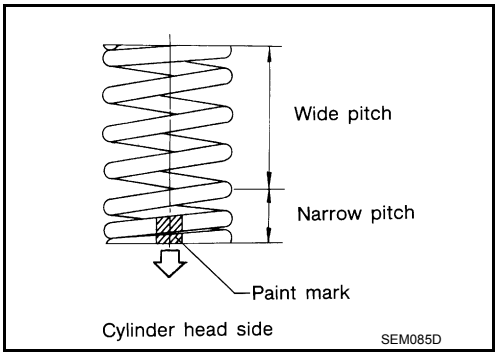

8. Install the valve collet using Tools.

Tool number : KV10116200 (J-26336-B)
: KV10115900 (J-26336-20)
: KV10109220 (—)

CAUTION:
When working, take care not to damage valve lifter holes.

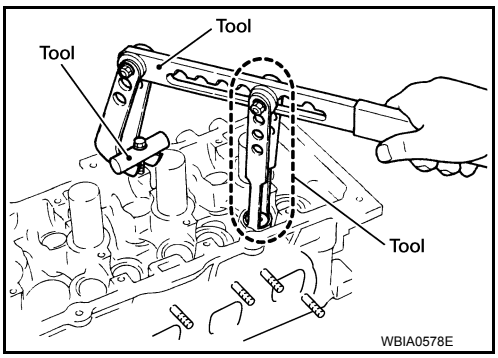

9. Install the valve lifters.
   - Install the removed parts in their original locations.
   - If installing new lifters, select the correct size lifter for proper valve clearance. Refer to EM-19, "Valve Clearance".
10. Install the spark plug tube if necessary, following the procedure below.

a. Remove any old liquid gasket adhering to the cylinder-head spark plug tube hole.

b. Apply liquid gasket to area within approximately 12 mm (0.47 in) from the edge of the spark plug tube press-fit side.
Use Genuine RTV Silicone Sealant or equivalent. Refer to GI-21, "Recommended Chemical Products and Sealants".

c. Press-fit the spark plug tube to the specified height (H) using suitable tool.

Standard press-fit height (H) : 38.400 - 39.400 mm (1.512 - 1.551 in)

CAUTION:
- **When press-fitting, take care not to deform the spark plug tube.**
- **After press-fitting, wipe off any liquid gasket protruding onto the cylinder-head upper face.**

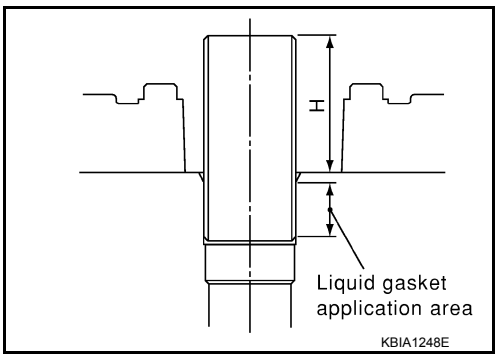

11. Install the spark plugs. Refer to EM-17, "Removal and Installation".

Inspection After Disassembly

INFOID:0000000009824954

CYLINDER HEAD DISTORTION

1. Remove any oil, scale, gasket, sealant and carbon deposits from the cylinder head surface.
CAUTION:
Do not allow any debris to enter the oil or coolant passages.

2. Measure the bottom surface of the cylinder head for distortion in six directions as shown, using suitable tools.

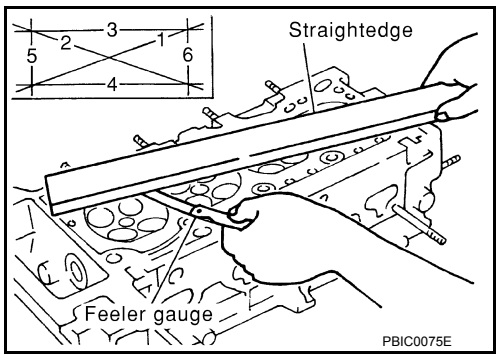

Standard : 0.03 mm (0.0012 in)
Limit : 0.1 mm (0.004 in)

- If measurement exceeds the limit, replace the cylinder head.

VALVE DIMENSIONS

- Check the dimensions of each valve. Refer to EM-118, "Standard and Limit".
- If the dimensions are out of the standard, replace the valve.

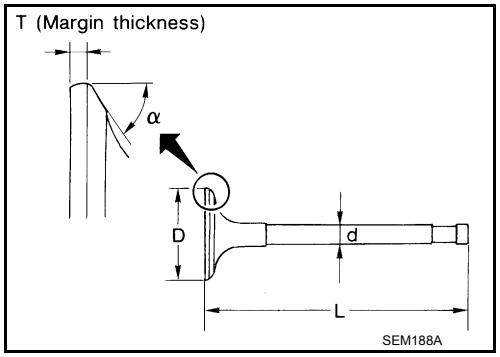

VALVE GUIDE CLEARANCE

Valve Stem Diameter

Measure the diameter of the valve stem using suitable tool.

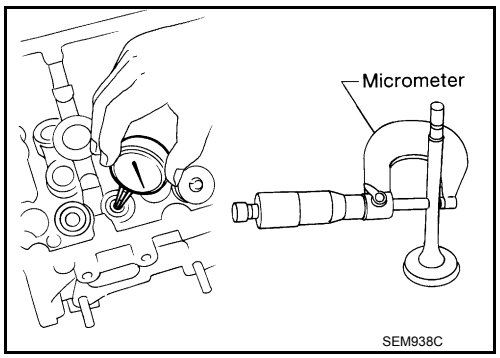

Standard
Intake : 5.965 - 5.980 mm (0.2348 - 0.2354 in)
Exhaust : 5.955 - 5.970 mm (0.2344 - 0.2350 in)

Valve Guide Inside Diameter

Measure the inside diameter of the valve guide using suitable tool.

Standard
Intake and Exhaust : 6.000 - 6.018 mm (0.2362 - 0.2369 in)

Valve Guide Clearance

- (Valve guide clearance) = (Valve guide inside diameter) – (Valve stem diameter).

Valve guide clearance:
Standard
Intake : 0.020 - 0.053 mm (0.0008 - 0.0021 in)
Exhaust : 0.030 - 0.063 mm (0.0012 - 0.0025 in)
Limit
Intake : 0.08 mm (0.0031 in)
Exhaust : 0.09 mm (0.0035 in)

- If the calculated value exceeds the limit, replace valve and/or valve guide. When the valve guide must be replaced, follow the valve guide replacement procedure.

VALVE GUIDE REPLACEMENT

When the valve guide is removed, replace it with an oversized (0.2 mm, 0.008 in) valve guide.

1. To remove the valve guide, heat the cylinder head to 110° to 130°C (230° to 266°F) by soaking it in heated oil.

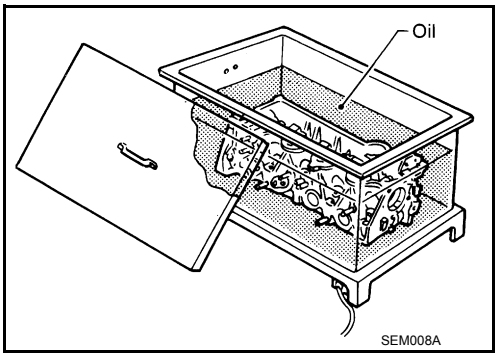

2. Remove the valve guide using suitable tool.

WARNING:

Cylinder head contains heat. When working, wear protective equipment to avoid getting burned.

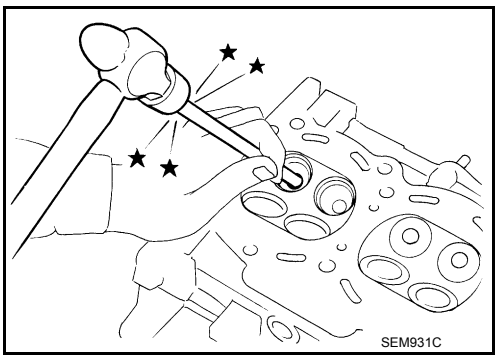

3. Ream the cylinder head valve guide hole using suitable tool.

Valve guide hole diameter:

Standard

Intake and exhaust : 9.975 - 9.996 mm (0.3927 - 0.3935 in)

Oversize (service)

Intake and exhaust : 10.175 - 10.196 mm (0.4006 - 0.4014 in)

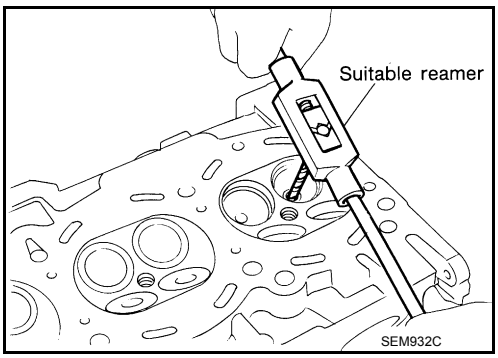

4. Heat the cylinder head to 110° to 130°C (230° to 266°F) by soaking it in heated oil.

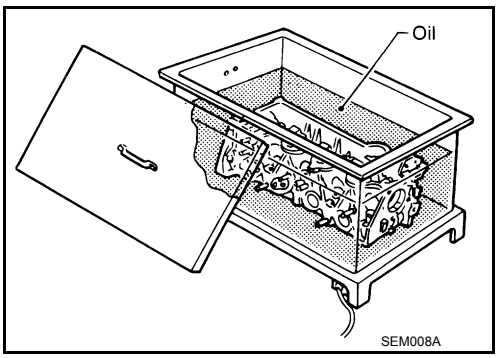

5. Press the valve guide from the camshaft side to the dimensions as shown.

WARNING:
Cylinder head contains heat. When working, wear protective equipment to avoid getting burned.

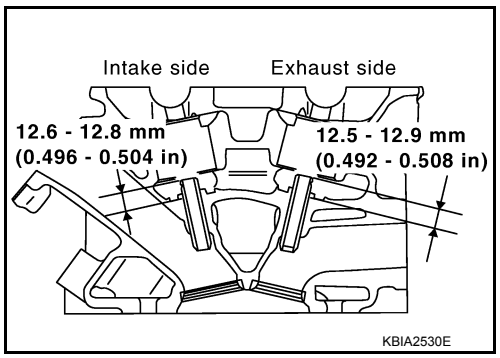

6. Ream the cylinder head valve guide using suitable tool.

Valve guide inside diameter:
Intake and exhaust : 6.000 - 6.018 mm (0.2362 - 0.2369 in)

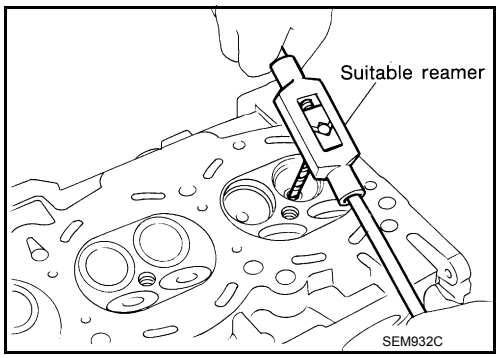

VALVE SEAT CONTACT

- After confirming that the dimensions of the valve guides and valves are within specifications, perform this procedure.
- Apply prussian blue (or white lead) onto the contacting surface of the valve seat to check the condition of the valve contact on the surface.
- Check if the contact area band is continuous all around the circumference.
- If not, grind to adjust the valve fit and check again. If the contacting surface still has NG conditions even after the re-check, replace the valve seat.

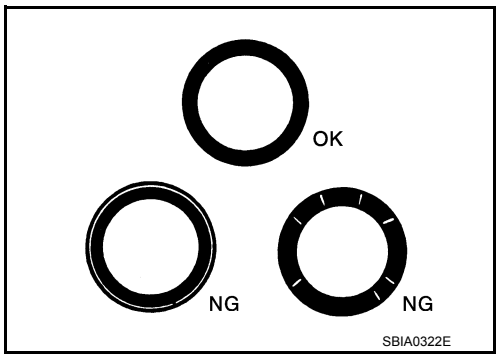

VALVE SEAT REPLACEMENT

When the valve seat is removed, replace it with oversized (0.5 mm, 0.020 in) valve seat.

1. Bore out the old seat until it collapses. Boring should not continue beyond the bottom face of the seat recess in the cylinder head. Set the machine depth stop to ensure this.
2. Ream the cylinder head recess diameter for service valve seat.

Oversize [0.5 mm (0.020 in)] (Service):
Intake : 38.500 - 38.516 mm (1.5157 - 1.5164 in)
Exhaust : 32.700 - 32.716 mm (1.2874 - 1.2880 in)

- Be sure to ream in circles concentric to the valve guide center.
- This will enable valve seat to fit correctly.

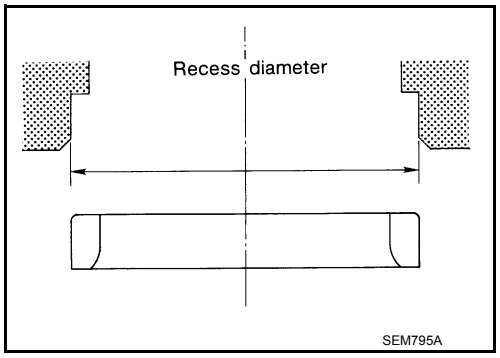

3. Heat the cylinder head to 110° to 130°C (230° to 266°F) by soaking it in heated oil.

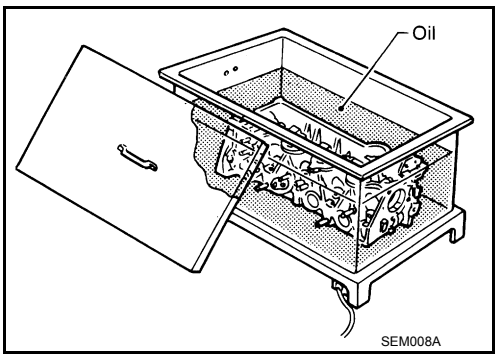

4. Cool the valve seats well with dry ice. Force fit the valve seat into the cylinder head.

WARNING:

- **Avoid directly touching cold valve seats.**
- **Cylinder head contains heat. When working, wear protective equipment to avoid getting burned.**

5. Finish the seat to the specified dimensions using suitable tool. Refer to EM-118, "Standard and Limit".

CAUTION:

When using valve seat cutter, firmly grip the cutter handle with both hands. Then, press on the contacting surface all around the circumference to cut in a single drive. Improper pressure on the cutter or cutting many different times may result in stage valve seat.

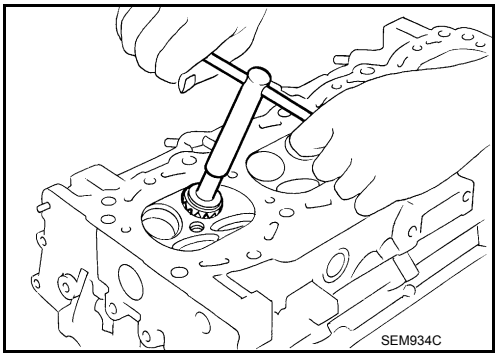

6. Grind to obtain the dimensions indicated as shown.
   - Using compound, grind to adjust valve fitting.

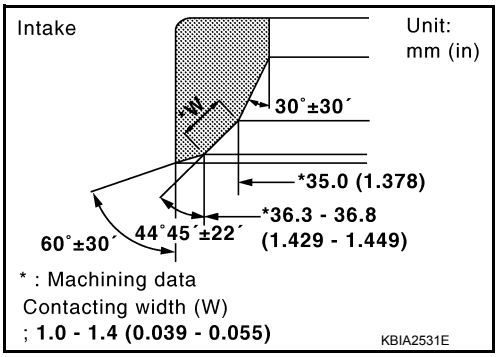

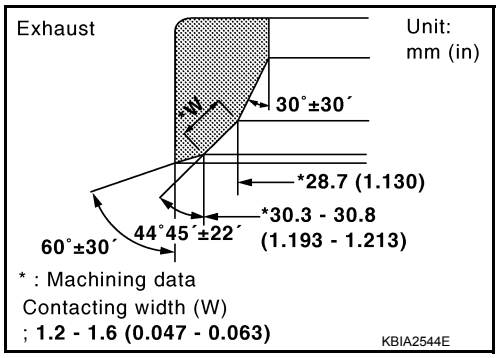

7. Check again for normal contact.

VALVE SPRING SQUARENESS

- Set try square along the side of valve spring and rotate the spring. Measure the maximum clearance between the top face of spring and try square.

Limit : Less than 2.2 mm (0.087 in)

- If measurement is not within specifications, replace the valve spring.

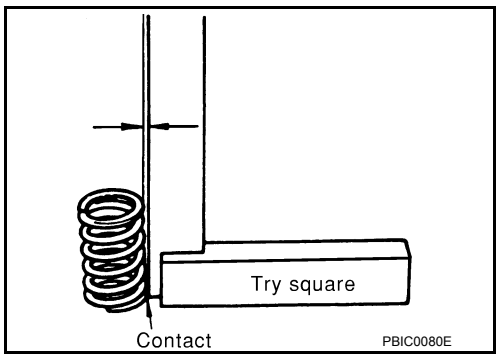

VALVE SPRING DIMENSIONS AND VALVE SPRING PRESSURE LOAD

- Check the valve spring pressure at the specified spring height.

Standard:

Intake and exhaust

Free height:	**50.58 mm (1.9913 in)**
Installation height:	**37.0 mm (1.457 in)**
Installation pressure:	**165.8 - 187.0 N (16.9 - 19.1 kg, 37- 42 lb)**
Height during valve open:	**28.2 mm (1.110 in)**
Load with valve open:	**314.8 - 355.0 N (32.1 - 36.2 kg, 71 - 80 lb)**

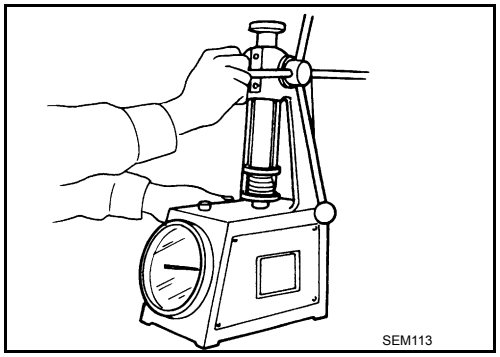

- If measurement is not within specifications, replace the valve spring.

UNIT REMOVAL AND INSTALLATION

ENGINE ASSEMBLY

Exploded View

INFOID:0000000009824955

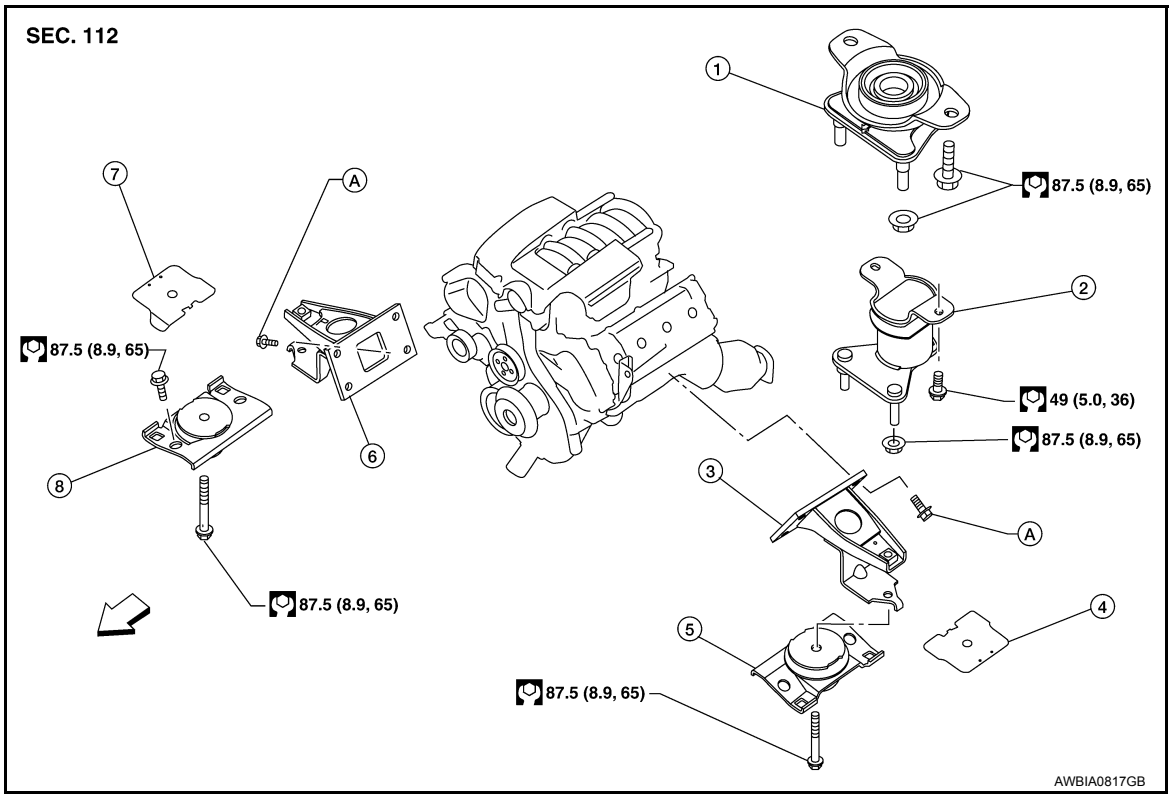

1. Rear engine mounting insulator 4WD
2. Rear engine mounting insulator 2WD
3. (LH) engine mounting bracket
4. (LH) heat shield plate
5. (LH) engine mounting insulator
6. (RH) engine mounting bracket
7. (RH) heat shield plate
8. (RH) engine mounting insulator
A. Refer to INSTALLATION

⇦ Front

Removal and Installation

INFOID:0000000009824956

WARNING:
- **Situate vehicle on a flat and solid surface.**
- **Place chocks at front and back of rear wheels.**
- **For engines not equipped with engine slingers, attach proper slingers and bolts described in PARTS CATALOG.**

CAUTION:
- **Always be careful to work safely, avoid forceful or uninstructed operations.**
- **Do not start working until exhaust system and engine coolant are cooled sufficiently.**
- **If items or work required are not covered by the engine section, refer to the applicable sections.**
- **Always use the support point specified for lifting.**
- **Use either 2-point lift type or separate type lift. If board-on type is used for unavoidable reasons, support at the rear axle jacking point with transmission jack or similar tool before starting work, in preparation for the backward shift of center of gravity.**
- **For supporting points for lifting and jacking point at rear axle, refer to GI-33, "Garage Jack and Safety Stand".**

NOTE:
When removing components such as hoses, tubes/lines, etc., cap or plug openings to prevent fluid from spilling.

REMOVAL

Preparation

1. Release the fuel pressure. Refer to EC-494, "Fuel Pressure Check".
2. Disconnect the battery negative and positive terminal. Refer to PG-77, "Removal and Installation".
3. Remove engine under cover (front and rear) and transfer case under cover. Refer to EXT-15, "Removal and Installation".
4. Drain the engine coolant. Refer to CO-11, "Changing Engine Coolant".
5. Remove the hood assembly. Refer to DLK-227, "Removal and Installation of Hood Assembly".
6. Remove the cowl extension. Refer to EXT-24, "Removal and Installation".
7. Remove the engine room cover using power tools.

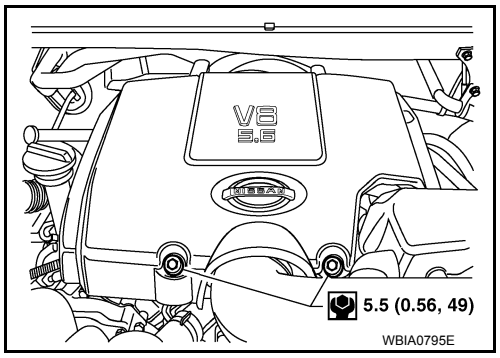

8. Remove the air duct and air cleaner case assembly. Refer to EM-26, "Removal and Installation".
9. Remove the radiator assembly and hoses. Refer to CO-16, "Removal and Installation".
10. Remove the drive belt. Refer to EM-14, "Removal and Installation".
11. Remove the fan blade. Refer to CO-19, "Removal and Installation (Crankshaft Driven Type)".
12. Disconnect the engine room harness from the fuse box and set it aside.
13. Disconnect the ECM.
14. Disconnect the engine room harness from the engine side and set it aside.
15. Disconnect the engine harness grounds.
16. Disconnect the power steering reservoir tank from the engine and move it aside.
17. Disconnect the power steering oil pump from the engine. Move it aside and secure it. Refer to ST-20, "Removal and Installation"
18. Remove the A/C compressor bolts and set the compressor aside. Refer to HA-31, "Removal and Installation" (ATC).
19. Disconnect the brake booster vacuum line.
20. Disconnect the EVAP line.
21. Disconnect the fuel hose at the engine side connection. Refer to EM-43, "Removal and Installation".
22. Disconnect the heater hoses at the cowl, and install plugs to avoid leakage of engine coolant.
23. Remove the A/T oil level indicator and indicator tube upper bolts.
24. Remove the front final drive assembly (4WD only). Refer to DLN-213, "Removal and Installation".
25. Remove the exhaust manifolds. Refer to EM-32, "Removal and Installation".
26. Install the engine slingers into the left bank cylinder head and right bank cylinder head.

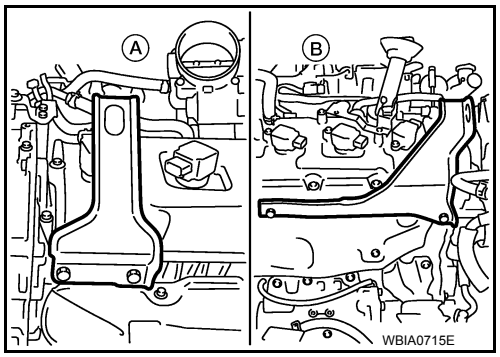

Engine slinger torque: 45.0 N·m (4.6 kg-m, 33 ft-lb)

27. Disconnect and remove the crankshaft position sensor (POS). Refer to EM-92, "Exploded View".
28. Remove the A/T. Refer to TM-194, "Removal and Installation (2WD)" or TM-196, "Removal and Installation (4WD)".
29. Lift using a hoist and secure the engine in position.
30. Remove the engine assembly from the vehicle, avoid interference with the vehicle body.

CAUTION:

- **Before and during lifting, always check if any harnesses are left connected.**

31. Remove the parts that may restrict installation of the engine to the engine stand.
NOTE:
This procedure is described assuming that you use an engine stand mounting to the surface to which the transmission mounts.

a. Before removing the drive plate, put a match mark (A) on the crankshaft and drive plate for alignment during installation.

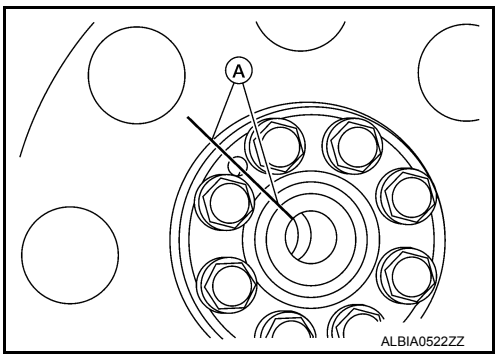

b. Remove the drive plate.
- Holding the crankshaft pulley bolt, lock the crankshaft to remove the drive plate bolts.
- Loosen the bolts diagonally.

CAUTION:
- **Be careful not to damage the drive plate. Especially avoid deforming and damaging of the signal plate teeth (circumference position).**
- **Place the drive plate with the signal plate surface facing other than downward.**
- **Keep magnetic materials away from the signal plate.**

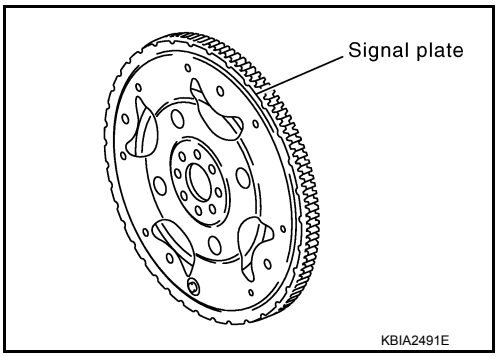

CAUTION:
Use an engine stand that has a load capacity [approximately 240kg (529 lb) or more] large enough for supporting the engine weight.
- **If the load capacity of the stand is not adequate, remove the following parts beforehand to reduce the potential risk of overturning the stand.**

- **Remove the fuel tube and fuel injector assembly. Refer to EM-43, "Removal and Installation".**
- **Remove the intake manifold. Refer to EM-27, "Removal and Installation".**
- **Remove the ignition coil. Refer to EM-40, "Removal and Installation".**
- **Remove the rocker cover. Refer to EM-41, "Removal and Installation".**
- **Other removable brackets.**

CAUTION:
Before removing the hanging chains, make sure the engine stand is stable and there is no risk of overturning.

32. Remove the generator, if necessary. Refer to CHG-28, "Removal and Installation".
33. Remove the engine mounting insulator and bracket using power tool, if necessary.

INSTALLATION

Installation is in the reverse order of removal.

- Tighten engine mounting bracket bolts in numerical order as shown.

Engine mounting bracket bolts : **100 N·m (10.0 kg-m, 74 ft-lb)**

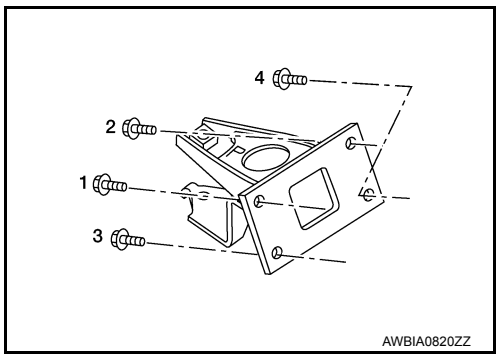

CAUTION:
- **When replacing an engine or transmission you must make sure the dowels are installed correctly during re-assembly.**
- **Improper alignment caused by missing dowels may cause vibration, oil leaks or breakage of drivetrain components.**

INSPECTION AFTER INSTALLATION

- Before starting engine, check oil/fluid levels including engine coolant and engine oil. If less than required quantity, fill to the specified level. Refer to MA-16, "FOR USA AND CANADA : Fluids and Lubricants" (United States and Canada) or MA-17, "FOR MEXICO : Fluids and Lubricants" (Mexico).
- Use procedure below to check for fuel leakage.
- Turn ignition switch ON (with engine stopped). With fuel pressure applied to fuel piping, check for fuel leakage at connection points.
- Start engine. With engine speed increased, check again for fuel leakage at connection points.
- Run engine to check for unusual noise and vibration.
  NOTE:
  If hydraulic pressure inside timing chain tensioner drops after removal and installation, slack in the guide may generate a pounding noise during and just after engine start. However, this is normal. Noise will stop after hydraulic pressure rises.
- Warm up engine thoroughly to make sure there is no leakage of fuel, exhaust gas, or any oils/fluids including engine oil and engine coolant.
- Bleed air from passages in lines and hoses, such as in cooling system.
- After cooling down engine, again check oil/fluid levels including engine oil and engine coolant. Refill to specified level, if necessary.
- Summary of the inspection items:

Item		Before starting engine	Engine running	After engine stopped
Engine coolant		Level	Leakage	Level
Engine oil		Level	Leakage	Level
Transmission/ transaxle fluid	A/T and CVT Models	Leakage	Level/Leakage	Leakage
	M/T Models	Level/Leakage	Leakage	Level/Leakage
Other oils and fluids*		Level	Leakage	Level
Fuel		Leakage	Leakage	Leakage
Exhaust gas		—	Leakage	—

*Power steering fluid, brake fluid, etc.

UNIT DISASSEMBLY AND ASSEMBLY

ENGINE UNIT

Exploded View

INFOID:0000000009824957

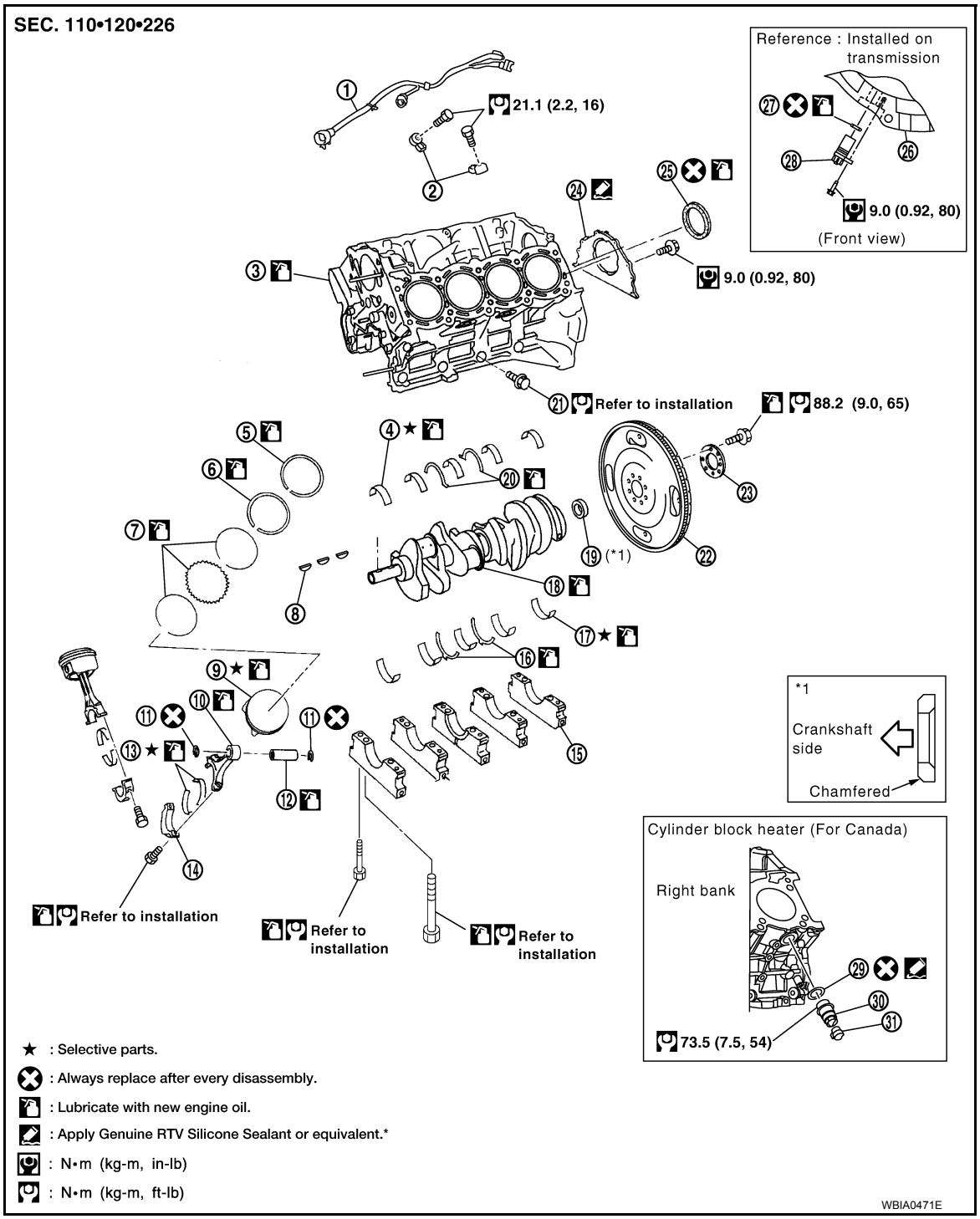

1. Knock sensor sub-harness	2. Knock sensor	3. Cylinder block
4. Main bearing upper	5. Top ring	6. Second ring
7. Oil ring	8. Crankshaft key	9. Piston
10. Connecting rod	11. Snap ring	12. Piston pin
13. Connecting rod bearing	14. Connecting rod bearing cap	15. Main bearing cap

16. Thrust bearing lower
17. Main bearing lower
18. Crankshaft
19. Pilot converter
20. Thrust bearing upper
21. Side bolt
22. Drive plate
23. Reinforcement plate
24. Rear oil seal retainer
25. Rear oil seal
26. Transmission
27. O-ring
28. Crankshaft position sensor (POS)
29. Gasket (for Canada)
30. Cylinder block heater (for Canada)
31. Connector cap (for Canada)

Disassembly and Assembly

INFOID:0000000009824958

DISASSEMBLY

NOTE:
Explained here is how to disassemble with engine stand supporting transmission surface. When using different type of engine stand, some steps may be different.

1. Remove engine assembly and mount to engine stand. Refer to EM-88, "Removal and Installation".
   CAUTION:
   Before removing the hanging chains, make sure engine stand is stable and there is no risk of overturning.
2. Drain engine oil. Refer to LU-9, "Changing Engine Oil".
3. Drain engine coolant by removing the cylinder block drain plugs (A), (B), (C) and (D) as shown.
   NOTE:
   For cylinder block heater equipped engines, water drain plug (C) shown is not a water drain plug but a cylinder block heater.

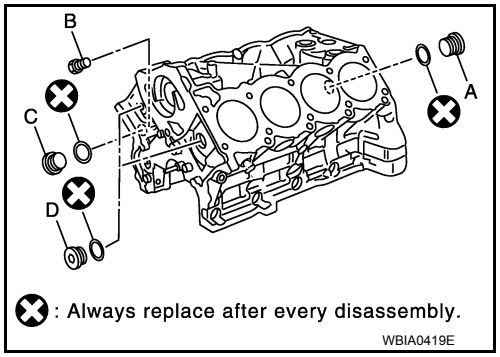

4. Remove the following components and associated parts (the parts referred to in step 1 are not included here).
   - Oil pan (upper and lower) and oil strainer. Refer to EM-35, "Removal and Installation".
   - Crankshaft pulley, front cover and timing chain. Refer to EM-57, "Removal and Installation".
   - Camshaft. Refer to EM-62, "Removal and Installation".
   - Cylinder head. Refer to EM-78, "Removal and Installation".
5. Remove knock sensor and sub harness.
   CAUTION:
   Carefully handle sensor, avoiding shocks.

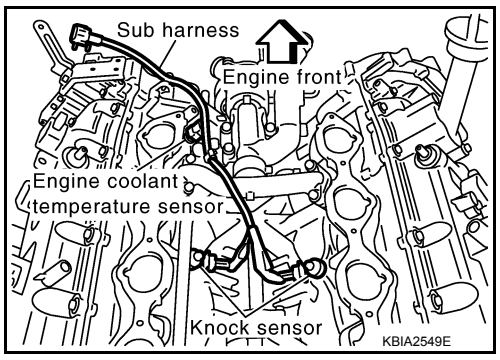

6. Remove cylinder block heater (if equipped).
7. Check connecting rod side clearance. Refer to EM-101, "Inspection After Disassembly".
8. Remove piston and connecting rod assembly as follows.

a. Position the crankshaft pin corresponding to the connecting rod to be removed onto bottom dead center.
b. Remove connecting rod cap.

c. Push the piston and connecting rod assembly out to the cylinder head side using suitable tool.

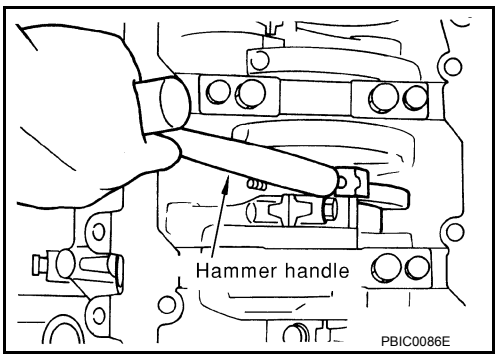

9. Remove connecting rod bearings.
CAUTION:
When removing them, note the installation position. Keep them in the correct order.
10. Check piston ring side clearance. Refer to EM-101, "Inspection After Disassembly".

11. Remove piston rings from piston using suitable tool.
CAUTION:
- **Do not damage piston.**
- **Do not damage piston rings by expanding them excessively.**

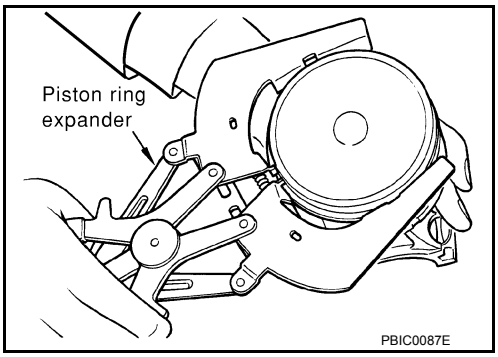

12. Remove piston from connecting rod as follows.
a. Remove snap ring using suitable tool.

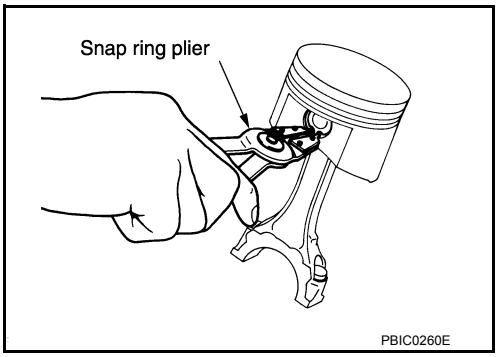

b. Heat piston to 60° to 70°C (140° to 158°F) using suitable tool.

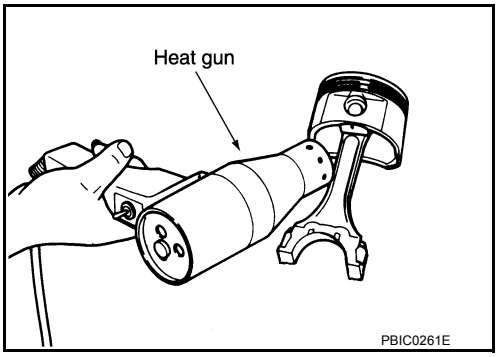

c. Push out piston pin using suitable tool.

WARNING:
Piston contains heat. When working, wear protective equipment to avoid getting burned.

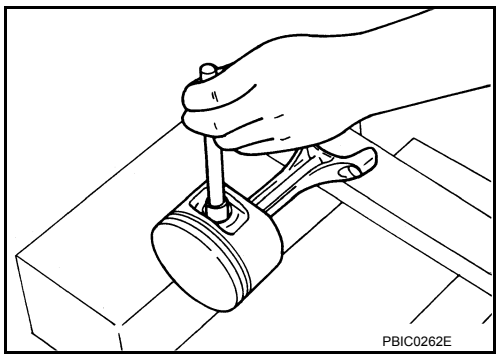

13. Separate and remove rear oil seal retainer from cylinder block.
CAUTION:
Do not damage mating surface.
14. Remove rear oil seal from rear oil seal retainer.
15. Measure the crankshaft side clearance. Refer to EM-101, "Inspection After Disassembly".
16. Remove main bearing caps as follows:
• Loosen bolts in several different steps.

a. Loosen side bolts (M10) starting from 30 to 21 to remove.
b. Loosen main bearing cap sub bolts (M9) starting from 20 to 11 to remove.
c. Loosen main bearing cap bolts (M12) starting from 10 to 1 to remove.

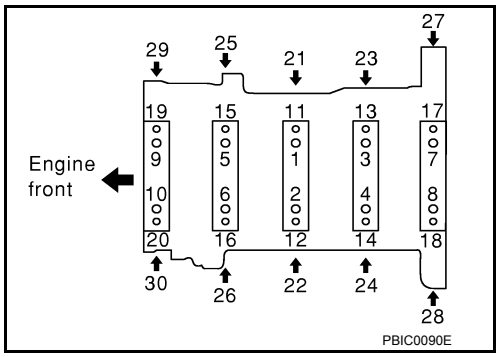

d. Remove main bearing cap.
• Insert bolts (2) into bolt holes, and then remove main bearing cap by lifting up and shaking forward and backward.

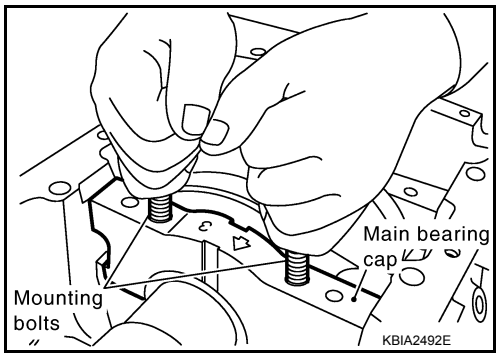

17. Remove crankshaft.
18. Remove the main bearings and thrust bearings from the cylinder block and main bearing caps.
• When removing them, note the installation position. Keep them in the correct order.
19. Remove pilot converter using Tool if necessary.

Tool number : ST16610001 (J-23907)

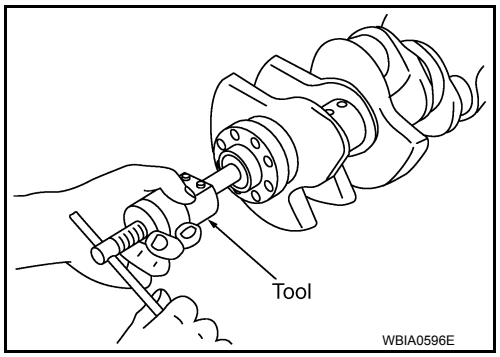

ASSEMBLY

1. Fully air-blow the coolant and oil passages in the cylinder block, cylinder bore, and crankcase to remove any foreign material.

   WARNING:
   Use goggles to protect your eyes.

2. Install each plug to the cylinder block (only screw-type plugs are shown).
   - Apply liquid gasket.
     Use Genuine Thread Sealant or equivalent. Refer to GI-21, "Recommended Chemical Products and Sealants".
   - Tighten each plug as specified below.
     CAUTION:
     Do not reuse copper sealing washers.
     NOTE:
     For cylinder block heater equipped engines, water drain plug (C) shown is not a water drain plug but a cylinder block heater.

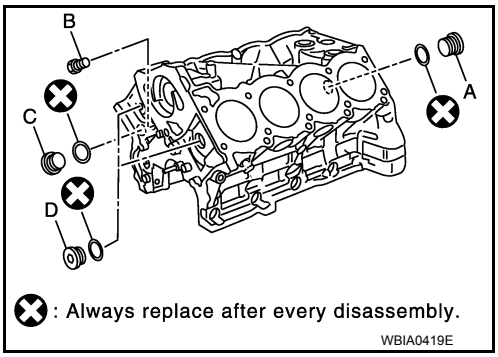

Part	Washer	Tightening torque
A	Yes	53.9 N·m (5.5 kg-m, 40 ft-lb)
B	No	19.6 N·m (2.0 kg-m, 15 ft-lb)
C	Yes	62.7 N·m (6.4 kg-m, 46 ft-lb)
D	Yes	62.7 N·m (6.4 kg-m, 46 ft-lb)
Cylinder block heater	Yes	73.5 N·m (7.5 kg-m, 54 ft-lb)

3. Install main bearings and thrust bearings.

a. Remove any dust, dirt, and oil on the bearing mating surfaces of the cylinder block and main bearing caps.

b. Install thrust bearings to both sides of the No. 3 journal housing on the cylinder block and main bearing caps
   - Install thrust bearings with the oil groove facing the crankshaft arm (outside).
   - Install thrust bearings with a protrusion in the center on the main bearing caps.

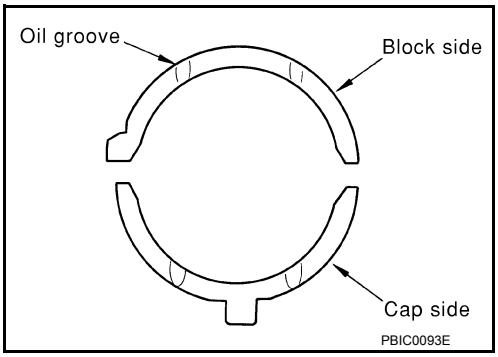

c. Install main bearings paying attention to the direction.
   - Install the one with oil holes onto the cylinder block and the one without oil holes onto the main bearing cap.
   - Before installing bearings, apply engine oil to bearing surface (inside). Do not apply oil to the back surface, but thoroughly clean it.
   - When installing, align the bearing stopper to the notch.
   - Ensure the oil holes on the cylinder block and those on the corresponding bearing are aligned.

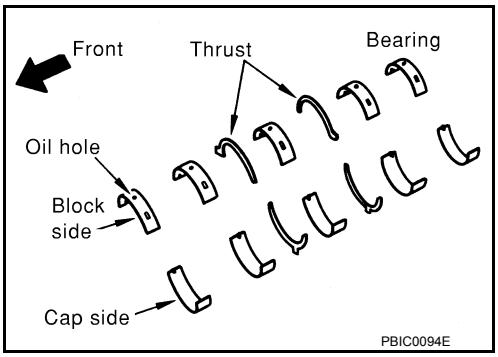

4. Install pilot converter to the crankshaft using suitable tool.
5. Install crankshaft to the cylinder block.
   • While turning crankshaft by hand, make sure it turns smoothly.

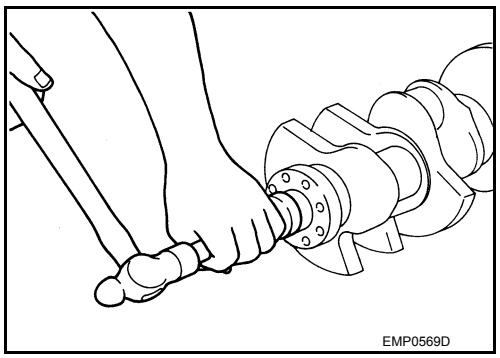

6. Install main bearing caps.
   • Align the identification number to the journal position to install.
   • Install it with the front mark (indicated by the arrow) facing the front of engine.
   • Tap caps lightly to seat them in the installation position.

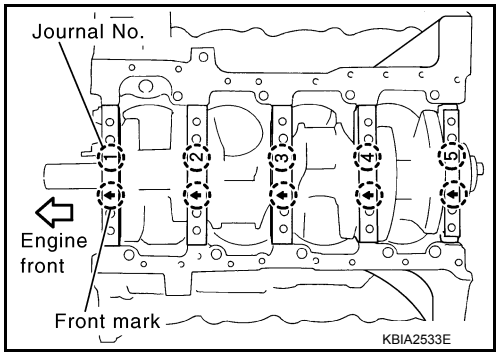

7. Follow the steps below to tighten each main bearing cap bolt.

a. Apply engine oil to threads and seating surfaces of bolts, and tighten all bolts temporarily.

Main bearing cap bolts in order of 1 to 10 : **39.2 N·m (4.0 kg-m, 29 ft.-lb)**

Main bearing cap sub bolts in order of 11 to 20 : **29.4 N·m (3.0 kg-m, 22 ft-lb)**

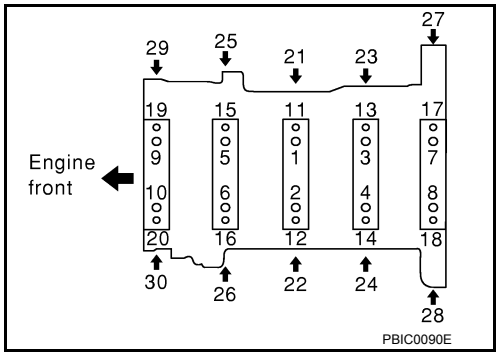

b. Measure tightening angle using Tool.

Tool number : **KV10112100 (BT-8653-A)**

CAUTION:
Measure tightening angle using Tool. Do not measure visually.

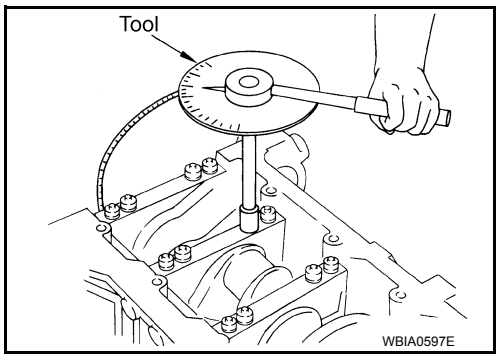

Main bearing cap bolts in order of 1 to 10 : **40°**

Main bearing cap sub bolts in order of 11 to 20 : **30°**

Side bolts in order of 21 to 30 : **49 N·m (5.0 kg-m, 36 ft-lb)**

- Rotate crankshaft by hand after bolts are tightened. Check if it rotates smoothly.
- Check crankshaft side clearance. Refer to EM-101, "Inspection After Disassembly".

8. Install the rear oil seal.

- Install the rear oil seal so that each seal lip is oriented as shown.
- (A): Oil seal lip
- (B): Dust seal lip
- ⇦: Engine inside
- ⬅: Engine outside

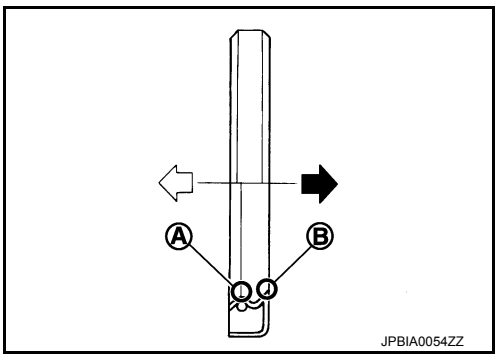

- Press in rear oil seal (1) to the position as shown.

(a) : 0 - 0.5 mm (0 - 0.020 in)

- (B): Rear oil seal retainer rear end face

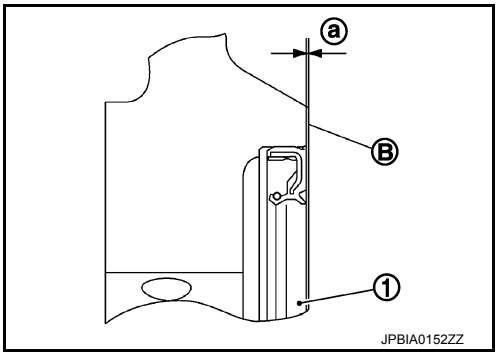

- Press-fit the rear oil seal using suitable tool.

CAUTION:
- **Do not damage the crankshaft or cylinder block.**
- **Press-fit the oil seal straight to avoid causing burrs or tilting.**
- **Do not touch grease applied onto the oil seal lip.**
- **Do not damage or scratch the outer circumference of the rear oil seal.**
- Tap until flattened with the front edge of the oil seal retainer.

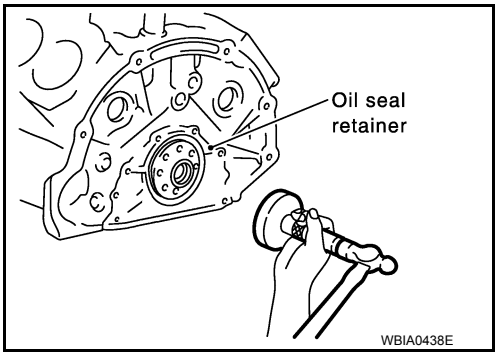

9. Install rear oil seal retainer.
- Apply liquid gasket thoroughly to rear oil seal retainer as shown.
Use Genuine RTV Silicone Sealant or equivalent. Refer to **GI-21, "Recommended Chemical Products and Sealants"**.
- Apply new engine oil on the lips of rear oil seal. Do not touch.

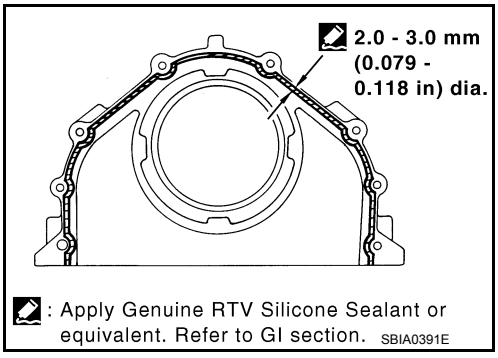

10. Install the piston to the connecting rod.

a. Install the snap ring to the grooves of the piston rear side.
- Insert it fully into the groove to install.

b. Install the piston to the connecting rod.
- Heat piston until piston pin can be pushed in by hand without excess force [approx. 60° to 70 C° (140° to 158 °F)]. From the front to the rear, insert the piston pin into the piston and the connecting rod.

- Assemble so that the front mark on the piston crown and the oil holes and cylinder No. on the connecting rod are positioned as shown.

WARNING:
Piston contains heat. When working, wear protective equipment to avoid getting burned.

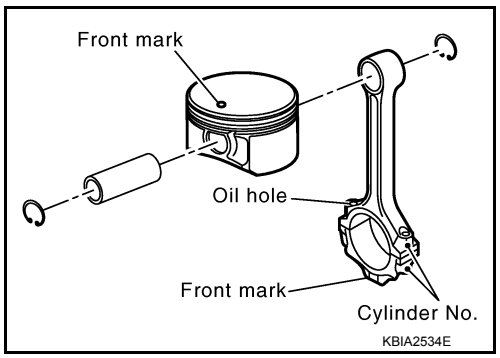

c. Install the snap ring to the grooves of the piston front side.
- Insert it fully into the groove to install.
- After installing, make sure connecting rod moves smoothly.

11. Install piston rings.

CAUTION:
Do not damage piston.
- Position each ring with the gap as shown, referring to the piston front mark.
- Install the second ring with the stamped surface facing upward.

Stamped mark Second ring : 2N

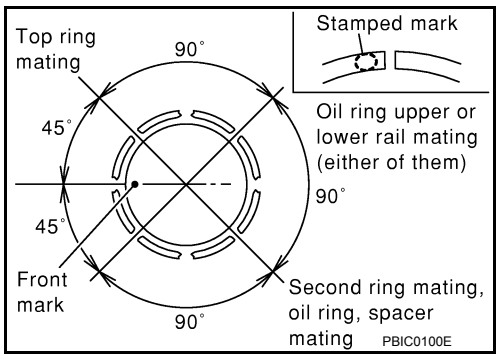

12. Install the connecting rod bearings to the connecting rod and connecting rod cap.
- When installing the connecting rod bearings, apply engine oil to the bearing surface (inside). Do not apply oil to the back surface, but thoroughly clean it.
- When installing, align the connecting rod bearing stopper protrusion with the cutout of the connecting rod to install.
- Check that the oil holes on the connecting rod and those on the corresponding bearing are aligned.

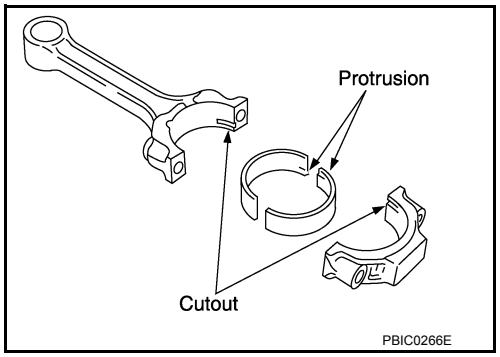

13. Install the piston and connecting rod assembly to the crankshaft using Tool.

Tool number : EM03470000 (J-8037)

- Position the crankshaft pin corresponding to the connecting rod to be installed onto bottom dead center.
- Apply engine oil sufficiently to the cylinder bore, piston, and crankshaft pin.
- Match the cylinder position with the cylinder No. on the connecting rod to install.
- Install the piston with the front mark on the piston crown facing the front of the engine.

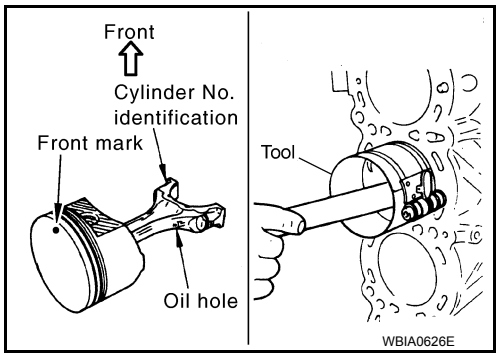

CAUTION:
Be careful not to damage the crankshaft pin, resulting from an interference of the connecting rod big end.

14. Install connecting rod cap.
    - Match the stamped cylinder number marks on the connecting rod with those on the cylinder cap to install.

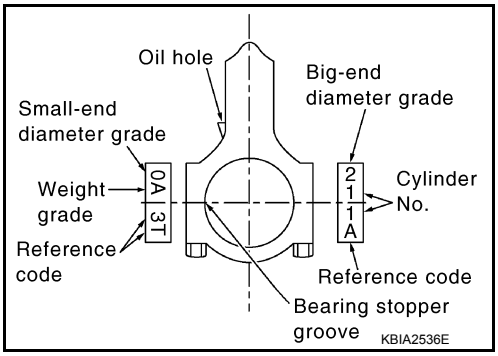

15. Tighten connecting rod bolts using Tool.

Tool number : KV10112100 (BT-8653-A)

Connecting rod bolts

Step 1	**: 29.4 N·m (3.0 kg-m, 22 ft-lb)**
Step 2	**: Loosen to 0 N·m**
Step 3	**: 19.6 N·m (1.5 kg-m, 11 ft-lb)**
Step 4	**: 90° clockwise**

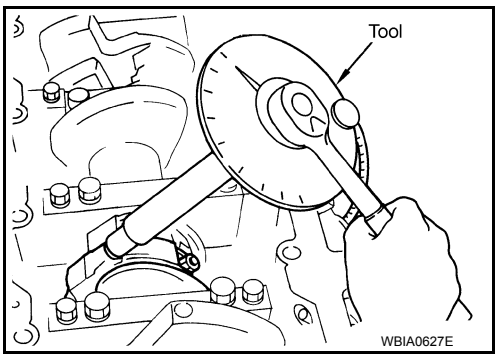

- Apply engine oil to threads and seats of connecting rod bolts.
- After tightening bolts, make sure the crankshaft rotates smoothly.
- Check connecting rod side clearance. Refer to EM-101, "Inspection After Disassembly".

16. Install knock sensors.

CAUTION:

If knock sensor is dropped, replace it with a new one.

- Make sure that there is no foreign material on the cylinder block mating surface and the back surface of knock sensor.
- Install it with its connector facing the center of the cylinder block side.
- Do not tighten knock sensor bolts while holding connector.
- Make sure knock sensor does not interfere with other parts.

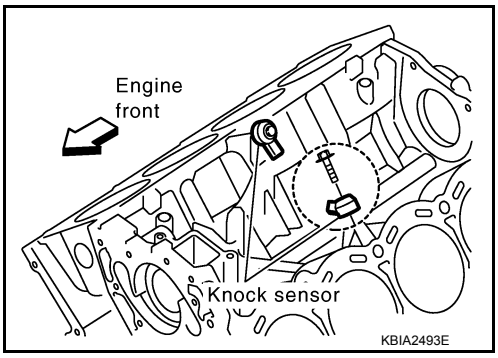

- Position the sub-harness as shown before installing intake manifold.

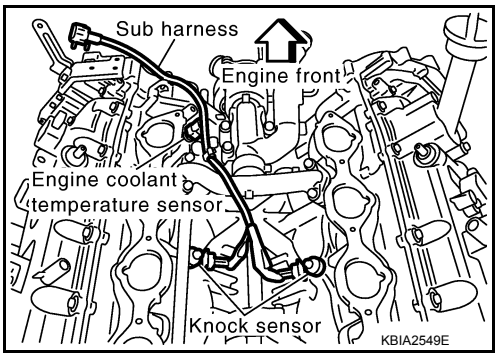

17. Installation of the remaining components is in the reverse order of removal.
18. Remove engine assembly from engine stand.

19. Install drive plate.
    - Align dowel pin of crankshaft rear end with pin holes of each part to install.

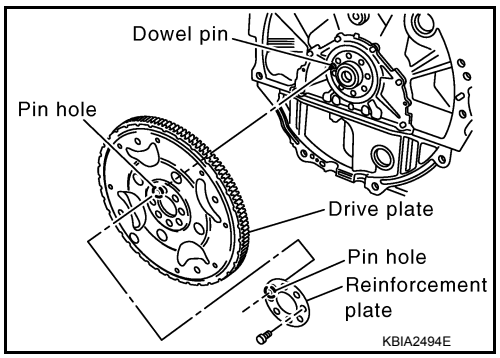

    - Install drive plate, reinforcement plate and pilot converter (if not installed in step 4) as shown.
    - Face the chamfered or rounded edge side to the crankshaft.

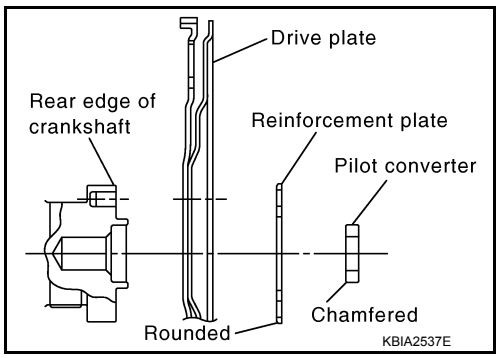

Inspection After Disassembly

INFOID:0000000009824959

CRANKSHAFT END PLAY

- Move the crankshaft fully forward and backward and measure the clearance between the thrust bearings and crankshaft arm using suitable tool.

Standard : 0.10 - 0.26 mm (0.0039 - 0.0102 in)
Limit : 0.30 mm (0.0118 in)

- If measured value exceeds the repair limit, replace the thrust bearings, and measure again. If it still exceeds the repair limit, replace crankshaft also.

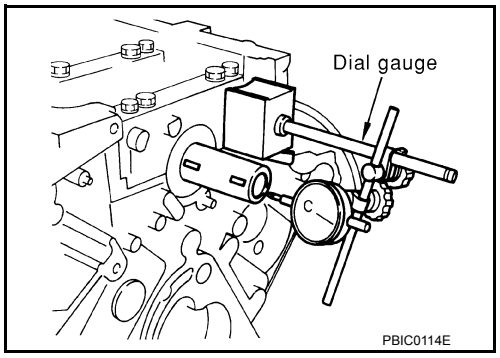

CONNECTING ROD SIDE CLEARANCE

- Measure side clearance between the connecting rod and crankshaft arm using suitable tool.

Standard : 0.20 - 0.40 mm (0.0079 - 0.0157 in)
Limit : 0.40 mm (0.0157 in)

- If measured value exceeds the repair limit, replace the connecting rod bearings, and measure again. If it still exceeds the repair limit, replace the crankshaft also.

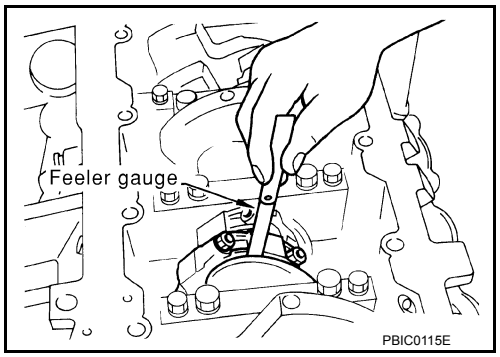

PISTON AND PISTON PIN CLEARANCE

Piston Pin Hole Diameter

- Measure diameter of piston pin hole using suitable tool.

Standard : 21.993 - 21.999 mm (0.8659 - 0.8661 in)

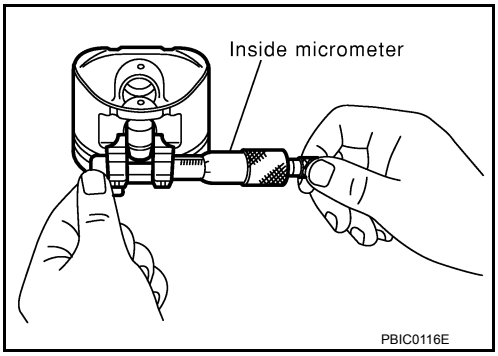

Piston Pin Diameter

- Measure diameter of piston pin using suitable tool.

Standard : 21.989 - 21.995 mm (0.8657 - 0.8659 in)

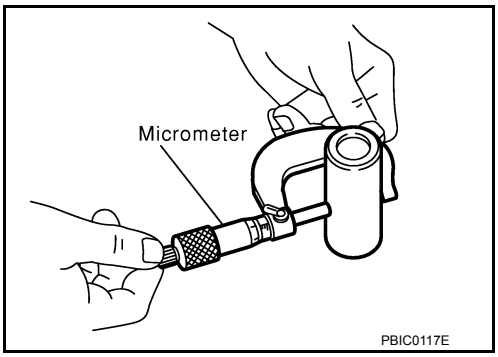

Piston and Piston Pin Clearance

(Piston pin clearance) = (Piston pin hole diameter) – (Piston pin diameter)

Standard : 0.002 - 0.006 mm (0.0001 - 0.0002 in)

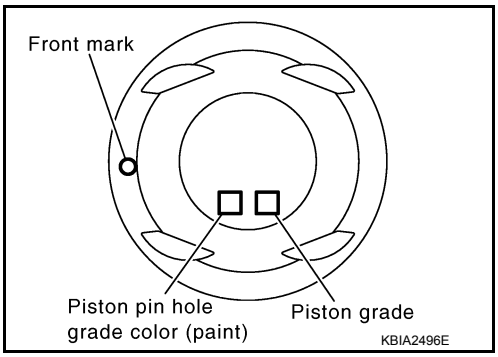

- If clearance exceeds specification, replace either or both the piston/piston pin assembly and the connecting rod assembly with reference to the specification of each part.
- Use the piston selection table to replace piston/piston pin assembly. Refer to EM-111, "How to Select Piston and Bearing".
- Use the connecting rod bearing selection table to replace connecting rod. Refer to EM-111, "How to Select Piston and Bearing".

NOTE:

The connecting rod small end grade and piston pin hole (piston pin) grade are provided only for the parts installed at the plant. For service parts, no grades can be selected (only 0 grade is available).

- Follow "Connecting Rod Bushing Oil Clearance (Small End)" for the values for each grade at the plant.

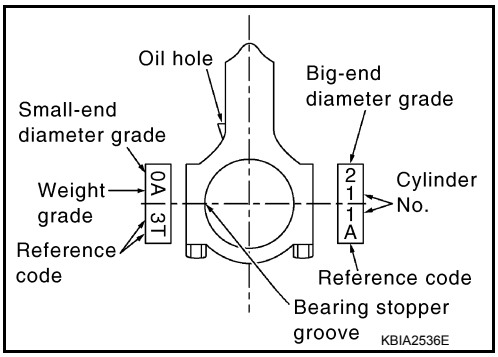

PISTON RING SIDE CLEARANCE

- Measure side clearance of the piston ring and piston ring groove using suitable tool.

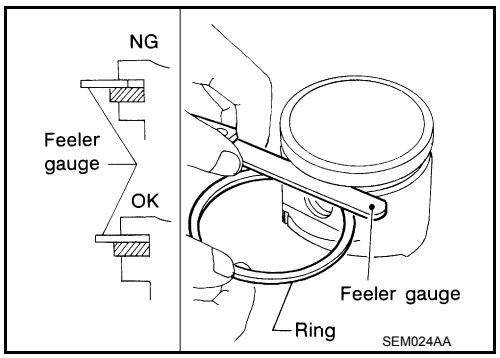

Standard:

Top ring	**: 0.035 - 0.085 mm (0.0014 - 0.0033 in)**
2nd ring	**: 0.030 - 0.070 mm (0.0012 - 0.0028 in)**
Oil ring	**: 0.015 - 0.185 mm (0.0006 - 0.0073 in)**

Limit:

Top ring	**: 0.11 mm (0.0043 in)**
2nd ring	**: 0.10 mm (0.0039 in)**

- If out of specification, replace piston and/or piston ring assembly.

PISTON RING END GAP

- Check if the diameter of the cylinder bore is within specification. Refer to EM-118, "Standard and Limit".
- Insert the piston ring into the middle of the cylinder using the piston, and measure the gap.

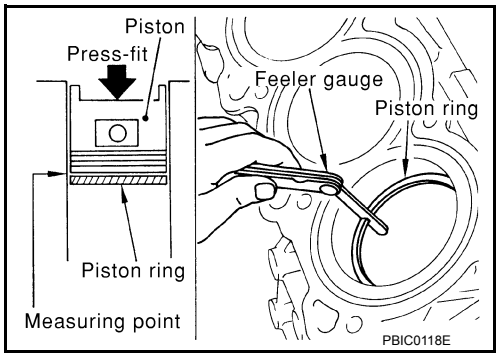

Standard

Top ring	**: 0.23 - 0.33 mm (0.0091 - 0.0130 in)**
2nd ring	**: 0.25 - 0.40 mm (0.0098 - 0.0157 in)**
Oil ring	**: 0.20 - 0.60 mm (0.0079 - 0.0236 in)**

Limit:

Top ring	**: 0.56 mm (0.0220 in)**
2nd ring	**: 0.52 mm (0.0205 in)**
Oil ring	**: 0.96 mm (0.0378 in)**

- If out of specification, replace piston ring.

CONNECTING ROD BEND AND TORSION

- Check connecting rod alignment using suitable tool.

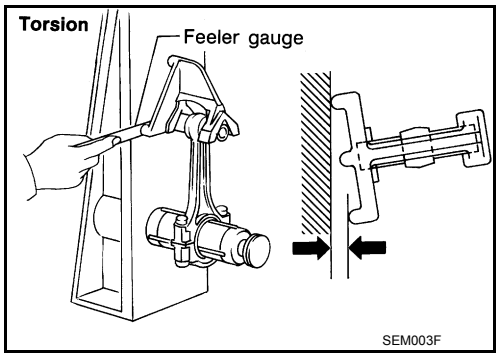

Limit:

Bend

: 0.15 mm (0.0059 in) per 100 mm (3.94 in) length

Torsion

: 0.30 mm (0.0118 in) per 100 mm (3.94 in) length

- If measurement exceeds the limit, replace connecting rod assembly.

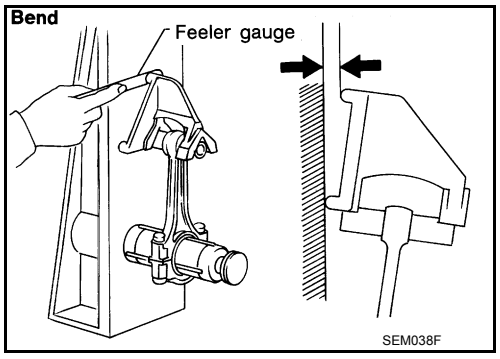

CONNECTING ROD BEARING (BIG END)

- Install the connecting rod cap without the connecting rod bearing installed. After tightening the connecting rod bolt to the specified torque, measure the connecting rod large end inside diameter. Refer to EM-93, "Disassembly and Assembly".

Standard : 57.000 - 57.013 mm (2.2441 - 2.2446 in)

- If measurement exceeds the standard, replace connecting rod.

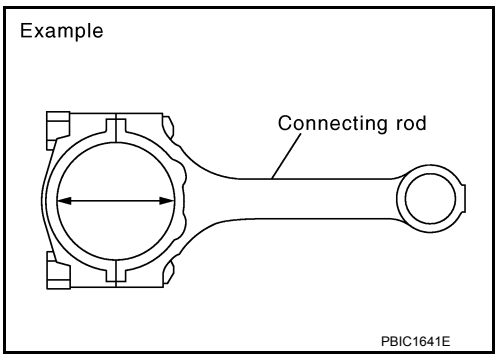

CONNECTING ROD BUSHING OIL CLEARANCE (SMALL END)

Connecting Rod Inside Diameter (Small End)

- Measure inside diameter of bushing using suitable tool.

Standard : 22.000 - 22.006 mm (0.8661 - 0.8664 in)

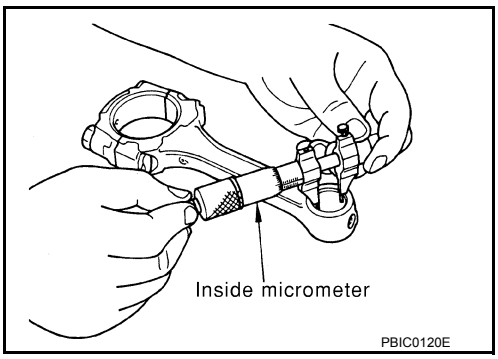

Piston Pin Diameter

- Measure diameter of piston pin using suitable tool.

Standard : 21.989 - 21.995 mm (0.8657 - 0.8659 in)

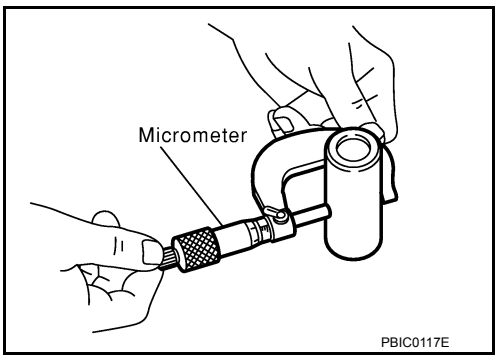

Connecting Rod Bushing Oil Clearance (Small End)

(Connecting rod small end oil clearance) = (Inside diameter of connecting rod small end) – (Piston pin diameter)

Standard : 0.005 - 0.017 mm (0.0002 - 0.0007 in)

- If measured value exceeds the standard, replace the connecting rod assembly and/or piston and piston pin assembly.
- If replacing the piston and piston pin assembly, use the Table for Selective Fitting for Piston to select the piston corresponding to the applicable bore grade of the cylinder block to be used. Refer to EM-111, "How to Select Piston and Bearing".

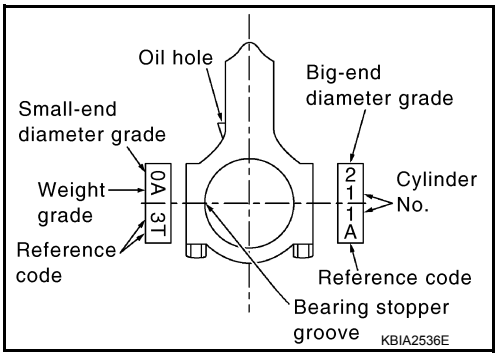

Factory installed parts grading:
- Only grade 0 is available.

Unit: mm (in)

Grade	0
Connecting rod bushing inside diameter	22.000 - 22.006 (0.8661 - 0.8664)
Piston pin diameter	21.989 - 21.995 (0.8657 - 0.8659)
Piston pin hole diameter	21.993 - 21.999 (0.8659 - 0.8661)

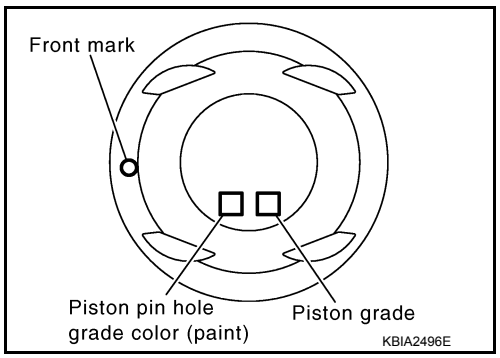

CYLINDER BLOCK DISTORTION

- Remove any oil, scale, gasket, sealant and carbon deposits from the cylinder block surface.
  CAUTION:
  Do not allow any debris to enter the oil or coolant passages.
- Measure block upper face for distortion in six directions as shown.

Standard : 0.03 mm (0.0012 in)
Limit : 0.1 mm (0.004 in)

- If measurement exceeds the limit, replace cylinder block.

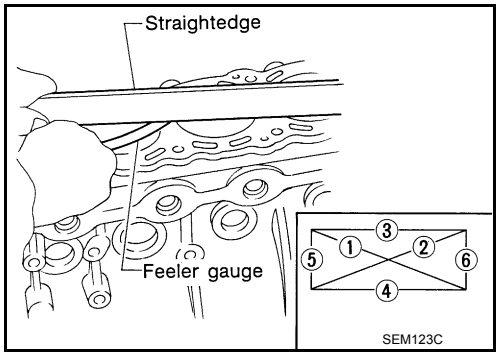

MAIN BEARING HOUSING INSIDE DIAMETER

- Install the main bearing caps with the main bearings removed, and tighten the bolts to the specified torque. Refer to EM-93, "Disassembly and Assembly".
- Measure inside diameter of main bearing housing.

Standard : 68.944 - 68.968 mm (2.7143 - 2.7153 in)

- If out of the standard, replace cylinder block and main bearing caps as an assembly.
  NOTE:
  These components must be replaced as a single unit, because they were processed together.

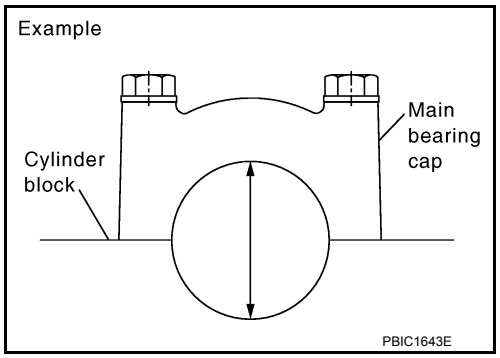

PISTON TO CYLINDER BORE CLEARANCE

Cylinder Bore Diameter

- Measure the cylinder bore for wear, out-of-round and taper at six different points on each cylinder (″X″ and ″Y″ directions at ″A″, ″B″ and ″C″).
  NOTE:
  When determining cylinder bore grade, measure cylinder bore at (B) position.

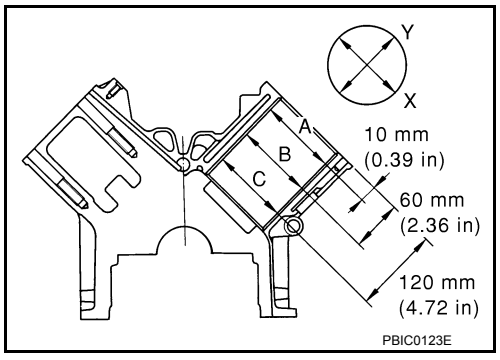

Standard diameter:

98.000 - 98.030 mm (3.8583 - 3.8594 in)

Wear limit:

0.20 mm (0.0079 in)

Out-of-round [Difference between (X) and (Y)]:

Limit: 0.015 mm (0.0006 in)

Taper limit [Difference between (A) and (C)]:

Limit: 0.010 mm (0.0004 in)

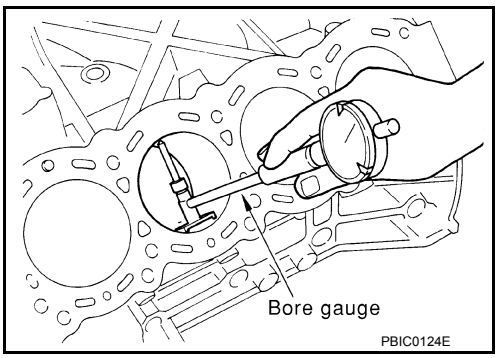

- If measured value exceeds the repair limit, or if there are scratches and/or seizure on the cylinder inner wall, hone or bore the inner wall.

Piston Skirt Diameter

- Measure piston skirt diameter using suitable tool.

Standard : 97. 980 - 98. 010 mm (3.8575 - 3.8587 in)

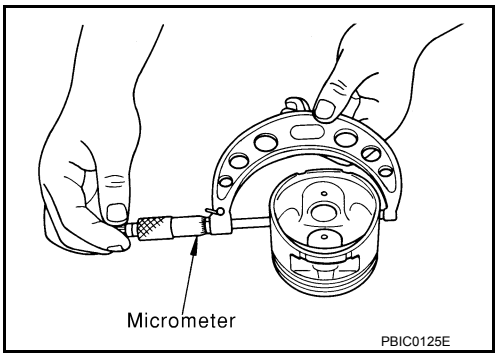

- Measure point (H).

Distance from the top : 39 mm (1.54 in)

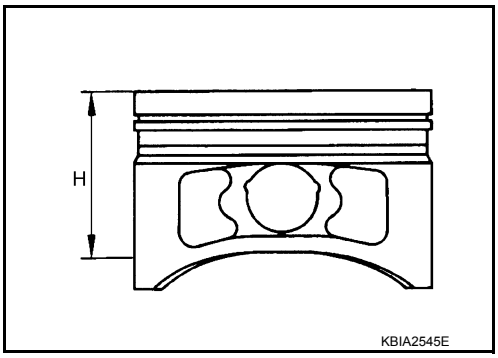

Piston to Cylinder Bore Clearance

- Calculate by using diameter of the piston skirt and the cylinder bore diameter (direction X, position B).
  (Clearance) = (Cylinder bore diameter) – (piston skirt diameter)

Standard : 0.010 - 0.030 mm (0.0004 - 0.0012 in)

Limit : 0.08 mm (0.0031 in)

- If calculation exceeds the limit, replace piston/piston pin assembly.

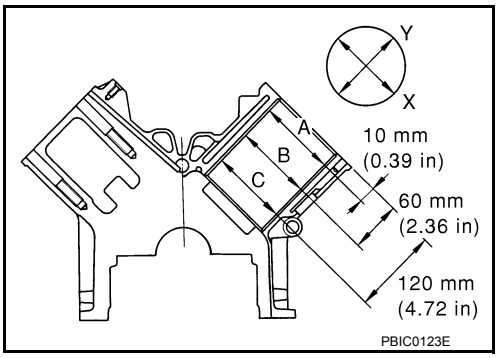

Reboring Cylinder Bore

1. Cylinder bore size is determined by adding piston-to-bore clearance to piston diameter.

Rebored size calculation: D = A +B - C

where,

D: Bored diameter

A: Piston diameter as measured

B: Piston - to - bore clearance (standard value)

C: Honing allowance 0.02 mm (0.0008 in)

2. Install main bearing caps, and tighten them to the specified torque. Otherwise, cylinder bores may be distorted in final assembly.
3. Cut the cylinder bores.
   NOTE:
   - When any cylinder needs boring, all other cylinders must also be bored.
   - Do not cut too much out of cylinder bore at one time. Cut only 0.05 mm (0.0020 in) or so in diameter at a time.
4. Hone cylinders to obtain the specified piston-to-bore clearance.
5. Measure finished cylinder bore for out-of-round and taper.
   NOTE:
   Measurement should be done after cylinder bore cools down.

CRANKSHAFT JOURNAL DIAMETER

- Measure diameter of crankshaft journals.

Standard : 63.940 - 63.964 mm (2.5173 - 2.5183 in)

- If measurement is out of standard, measure the main bearing oil clearance. Then use the undersize bearing.

CRANKSHAFT PIN DIAMETER

- Measure diameter of crankshaft pin using suitable tool.

Standard : 53.956 - 53.974 mm (2.1243 - 2.1250 in)

- If measurement is out of standard, measure connecting rod bearing oil clearance. Then use undersize bearing.

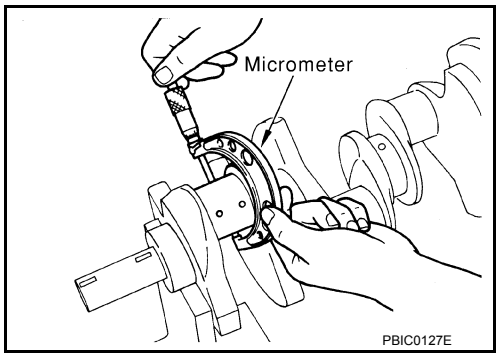

OUT-OF-ROUND AND TAPER OF CRANKSHAFT

- Measure dimensions at four different points as shown on each journal and pin.
- Out-of-roundness is indicated by the difference in dimension between ″X″ and ″Y″ at ″A″ and ″B″.
- Taper is indicated by the difference in dimension between ″A″ and ″B″ at ″X″ and ″Y″.

Limit

Out-of-round [Difference between (X) and (Y)]

: 0.002 mm (0.0001 in)

Taper [Difference between (A) and (B)]

: 0.002 mm (0.0001 in)

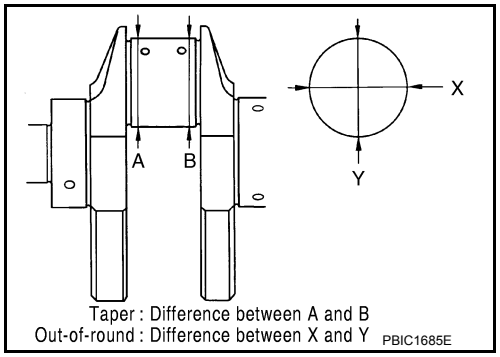

- If measured value exceeds the standard, correct or replace crankshaft.
- If corrected, measure the bearing oil clearance of the corrected journal or pin. Then select the main bearing or connecting rod bearing.

CRANKSHAFT RUNOUT

- Place a V-block on a precise flat table to support the journals on both ends of the crankshaft.
- Measure at No. 3 journal using suitable tool.
- While rotating crankshaft, read the movement of the pointer.
- Half of the movement shows the runout.

Limit : Less than 0.05 mm (0.002 in)

- If measurement exceeds the limit, replace crankshaft.

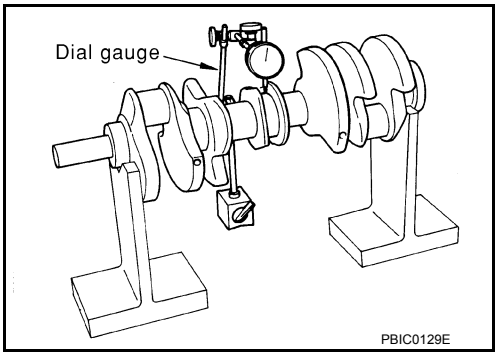

CONNECTING ROD BEARING OIL CLEARANCE

Method of Measurement

- Install connecting rod bearings to the connecting rod and cap. Tighten connecting rod bolts to the specified torque. Refer to EM-93, "Disassembly and Assembly".
  Measure inside diameter of connecting rod bearing.
  (Oil clearance) = (Inside diameter of connecting rod bearing) – (Crankshaft pin diameter)

Standard : 0.020 - 0.039 mm (0.0008 - 0.0015 in)
Limit : 0.055 mm (0.0022 in)

- If clearance cannot be adjusted within the standard, grind crankshaft pin and use undersized bearing. Refer to EM-111, "How to Select Piston and Bearing".

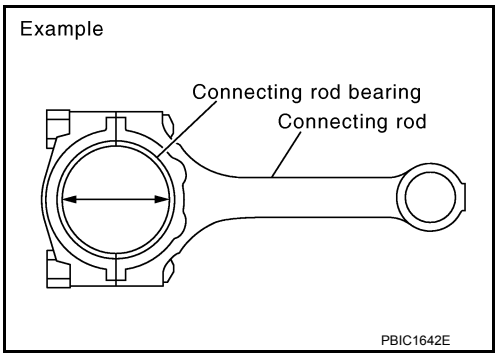

Method of Using Plastigage

- Remove oil and dust on the crankshaft pin and surfaces of each bearing completely.
- Cut a plastigage slightly shorter than the bearing width, and place it in the crankshaft axial direction, avoiding oil holes.
- Install the connecting rod bearings to the connecting rod and connecting rod bearing cap, and tighten the connecting rod bolts to the specified torque.
  CAUTION:
  Do not rotate crankshaft with plastigage installed.
- Remove the connecting rod bearing cap and bearings. Measure the plastigage width using the scale on the plastigage bag.
  NOTE:
  The procedure when the measured value exceeds the repair limit is the same as that described in “Method of Measurement”.

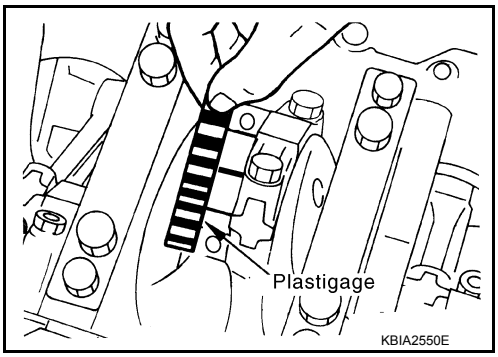

MAIN BEARING OIL CLEARANCE

Method of Measurement

- Install the main bearings to the cylinder block and main bearing cap. Measure the main bearing inside diameter with the bearing cap bolts tightened to the specified torque. Refer to EM-93, "Disassembly and Assembly".
  (Oil clearance) = (Inside diameter of main bearing) – (Crankshaft journal diameter)

Standard:
No. 1 and 5 journals
: 0.001 - 0.011 mm (0.00004 - 0.0004 in)
No. 2, 3 and 4 journals
: 0.007 - 0.017 mm (0.0003 - 0.0007 in)

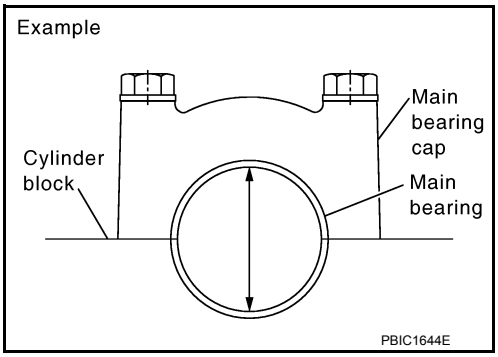

Limit:

No.1 and 5 journals

: 0.021 mm (0.0008 in)

No. 2, 3 and 4 journals

: 0.027 mm (0.0011 in)

- If measured value exceeds the repair limit, select main bearings referring to the main bearing inside diameter and crankshaft journal diameter, so that the oil clearance satisfies the standard. Refer to EM-111, "How to Select Piston and Bearing".

Method of Using Plastigage

- Remove oil and dust on the crankshaft journal and surfaces of each bearing completely.
- Cut a plastigage slightly shorter than the bearing width, and place it in crankshaft axial direction, avoiding oil holes.
- Install the main bearings to the cylinder block and main bearing cap, and tighten the main bearing bolts to the specified torque.

CAUTION:

Do not rotate crankshaft with plastigage installed.

- Remove bearing cap and bearings. Measure plastigage width using the scale on the plastigage bag.

NOTE:

The procedure when the measured value exceeds the repair limit is the same as that described in “Method of Measurement”.

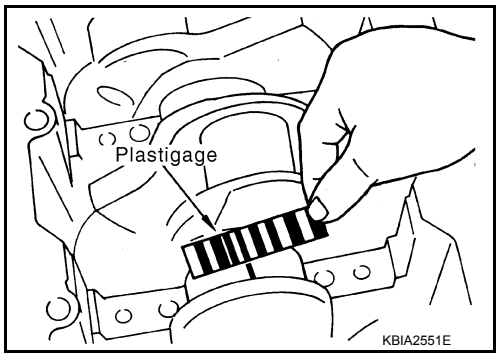

CRUSH HEIGHT OF MAIN BEARING

- When the bearing cap is removed after being tightened to the specified torque with main bearings installed, the tip end of the bearing must protrude. Refer to EM-93, "Disassembly and Assembly" for the tightening procedure.

Standard : There must be crush height

- If standard is not met, replace main bearings.

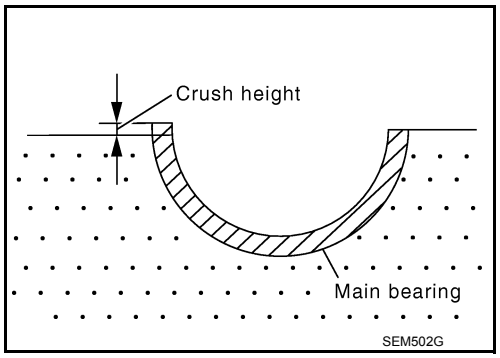

CRUSH HEIGHT OF CONNECTING ROD BEARING

- When connecting rod bearing cap is removed after being tightened to the specified torque with the connecting rod bearings installed, the tip end of the bearing must protrude. Refer to EM-93, "Disassembly and Assembly" for tightening procedure.

Standard : There must be crush height.

- If standard is not met, replace connecting rod bearings.

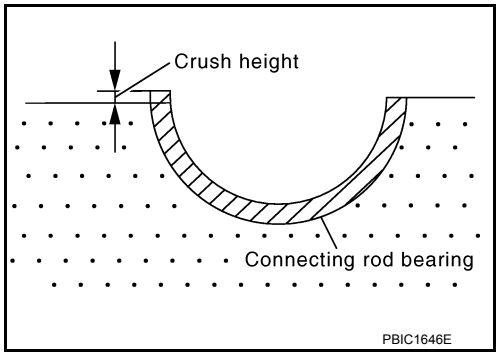

MAIN BEARING CAP BOLT DIAMETER

- Check for bolts (M9 and M12) installed from lower side using the following procedure.
  NOTE:
  - Side bolt (M10) is outside the target.
  - Figure shows M12 bolt.
- Measure bolt diameter (d1″ from tip of the bolt to dimension (a).
- Measure bolt diameter ″d2)″ from the dimension between tip of the bolt and dimension ″b″ as base station to dimension ″c″.
  NOTE:
  If a narrower part in the threads is determined by visual check, measure ″d2″ at that point.
- Calculate the difference between ″d1″ and ″d2″.

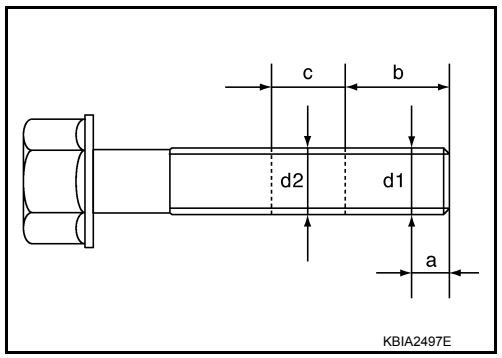

M9 bolt

Dimension (a) : 9 mm (0.35 in)
Dimension (b) : 15 mm (0.59 in)
Dimension (c) : 20 mm (0.79 in)
Limit : 0.15 mm (0.0059 in)

M12 bolt

Dimension (a) : 12 mm (0.47 in)
Dimension (b) : 55 mm (2.17 in)
Dimension (c) : 20 mm (0.79 in)
Limit : 0.15 mm (0.0059 in)

- Replace applicable bolts if outside the limit.

CONNECTING ROD BOLT DIAMETER

- Measure diameter ″d″ at position shown.
- When “d” is out of specifications (when it becomes thinner), replace bolt with a new one.

Limit : 7.75 mm (0.3051 in) or less.

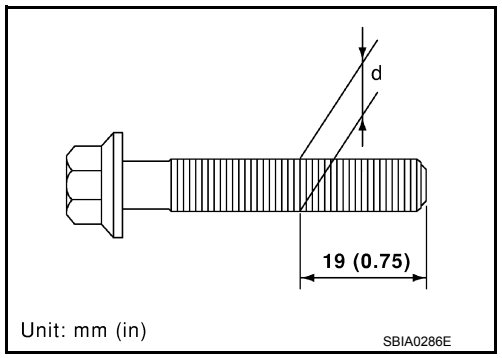

HOW TO SELECT PISTON AND BEARING

How to Select Piston and Bearing

INFOID:0000000009824960

DESCRIPTION

Connecting points	Connecting parts	Selection items	Selection methods
Between cylinder block to crankshaft	Main bearing	Main bearing grade (bearing thickness)	Determined by match of cylinder block bearing housing grade (Housing inside diameter) and crankshaft journal grade (journal outside diameter)
Between crankshaft to connecting rod	Connecting rod bearing	Connecting rod bearing grade (bearing thickness)	Connecting rod bearing grade = crankshaft pin grade (pin diameter). No grade exists for inside diameter of connecting rod large end.
Between cylinder block to piston	Piston and piston pin assembly. The piston is available together with piston pin as an assembly.	Piston grade (piston diameter)	Piston grade = cylinder bore grade (diameter of bore)
*Between piston to connecting rod	—	—	—

*For the service parts, the grade for fitting cannot be selected between a piston pin and a connecting rod. (Only 0 grade is available.) The information at the shipment from the plant is described as a reference.

- The identification grade stamped on each part is the grade for the dimension measured in new condition. This grade cannot apply to reused parts.
- For reused or repaired parts, measure the dimension accurately. Determine the grade by comparing the measurement with the values of each selection table.
- For details of the measurement method of each part, the reuse standards, and the selection method of the selective fitting parts, follow the applicable procedure.

HOW TO SELECT PISTON

Piston Selective Fitting When New Cylinder Block is Used:

- Check the cylinder bore grade on the bottom face of the cylinder block, and select the piston of the same grade.

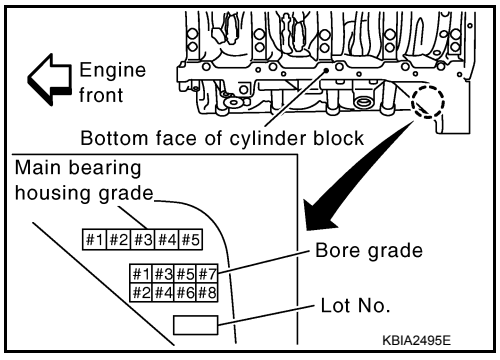

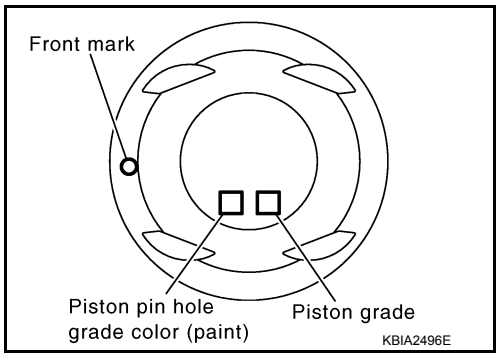

When Cylinder Block is Reused

1. Measure cylinder block bore diameter.
2. Determine the bore grade by comparing the measurement with the values under the “Cylinder bore diameter” of the piston selection table.

Piston Selection Table

Unit: mm (in)

Grade number (Mark)	1	2	3
Cylinder bore diameter	98.000-98.010 (3.8583-3.8587)	98.010-98.020 (3.8587-3.8590)	98.020-98.030 (3.8590-3.8594)
Piston diameter	97.980-97.990 (3.8575-3.8579)	97.990-98.000 (3.8579-3.8583)	98.000-98.010 (3.8583-3.8587)

NOTE:
- The piston is available together with piston pin as an assembly.
- The piston pin (piston pin bore) grade is provided only for the parts installed at the plant. For service parts, no grades can be selected (only 0 grade is available).

HOW TO SELECT CONNECTING ROD BEARING

When New Connecting Rod and Crankshaft are Used

1. Apply the big end inside diameter grade stamped on the connecting rod side face to the row in the “Connecting Rod Bearing Selection Table”.

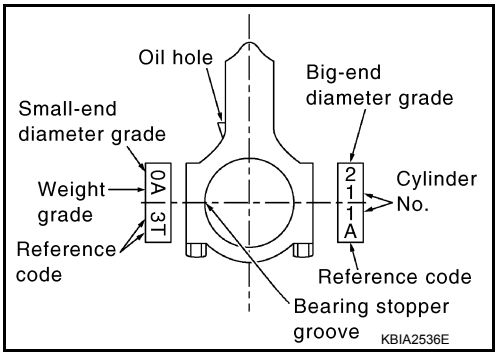

2. Apply the pin diameter grade stamped on the crankshaft front side to the column in the “Connecting Rod Bearing Selection Table”.
3. Read the symbol at the cross point of the selected row and column in the “Connecting Rod Bearing Selection Table".
4. Apply the symbol obtained to the "Connecting Rod Bearing Grade Table" to select.

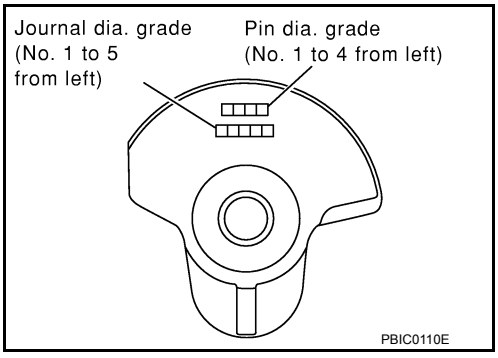

When Crankshaft and Connecting Rod are Reused

1. Measure dimensions of the big end inside diameter of the connecting rod and diameter of the crankshaft pin individually.
2. Apply the measured dimension to the “Connecting Rod Bearing Selection Table”.
3. The following steps are the same as in “When New Connecting Rod and Crankshaft are Used”.

Connecting Rod Bearing Selection Table

Connecting rod big end. inner diameter / Crankshaft pin outer diameter	Mark	0	1	2	3	4	5	6	7	8	9	A	B	C
	Inner diameter Unit: mm (in)	57.000 – 57.001 (2.2441 – 2.2441)	57.001 – 57.002 (2.2441 – 2.2442)	57.002 – 57.003 (2.2442 – 2.2442)	57.003 – 57.004 (2.2442 – 2.2443)	57.004 – 57.005 (2.2443 – 2.2443)	57.005 – 57.006 (2.2443 – 2.2443)	57.006 – 57.007 (2.2443 – 2.2444)	57.007 – 57.008 (2.2444 – 2.2444)	57.008 – 57.009 (2.2444 – 2.2444)	57.009 – 57.010 (2.2444 – 2.2445)	57.010 – 57.011 (2.2445 – 2.2445)	57.011 – 57.012 (2.2445 – 2.2446)	57.012 – 57.013 (2.2446 – 2.2446)
Mark	Outer diameter Unit: mm (in)													
0	53.968 – 53.974 (2.1247 – 2.1250)	0	0	0	0	0	0	1	1	1	1	1	1	2
1	53.962 – 53.968 (2.1245 – 2.1247)	1	1	1	1	1	1	2	2	2	2	2	2	3
2	53.956 – 53.962 (2.1243 – 2.1245)	2	2	2	2	2	2	3	3	3	3	3	3	3

KBIA2538E

Connecting Rod Bearing Grade Table.

Grade number	Thickness “T” mm (in)	Identification color (mark)
0	1.500 - 1.503 (0.0591 - 0.0592)	Black
1	1.503 - 1.506 (0.0592 - 0.0593)	Brown
2	1.506 - 1.509 (0.0593 - 0.0594)	Green
3	1.509 - 1.512 (0.0594 - 0.0595)	Yellow

Undersize Bearings Usage Guide

- When the specified oil clearance is not obtained with standard size connecting rod bearings, use undersize (US) bearings.
- When using undersize bearing, measure the bearing inside diameter with the bearing installed, and grind the crankshaft pin so that the oil clearance satisfies the standard.

Bearing undersize table

Unit: mm (in)

Undersize	Thickness
0.25 (0.0098)	1.627 - 1.635 (0.0641 - 0.0644)

CAUTION:

In grinding the crankshaft pin to use undersize bearings, keep the fillet R (All crankshaft pins).

Fillet R : 1.5 - 1.7 mm (0.059 - 0.067 in)

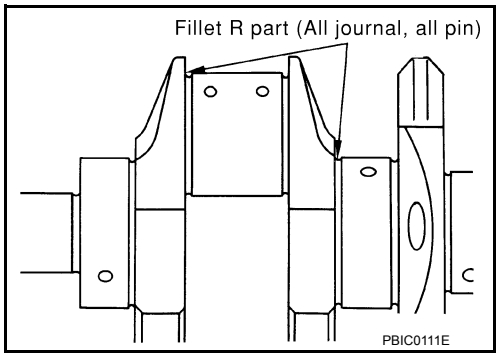

HOW TO SELECT MAIN BEARING

When New Cylinder Block and Crankshaft are Used

1. Apply the main bearing housing grade on the bottom face of the cylinder block to the row in "Main Bearings Selection Table".

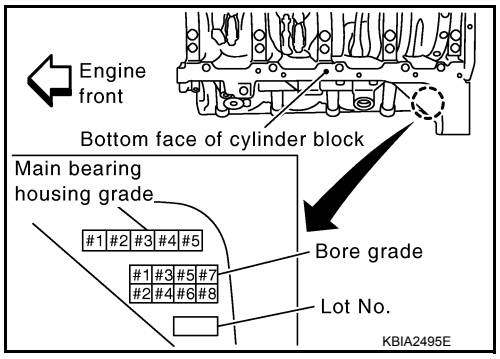

2. Apply the journal diameter grade on the crankshaft front to the column in "Main Bearings Selection Table".

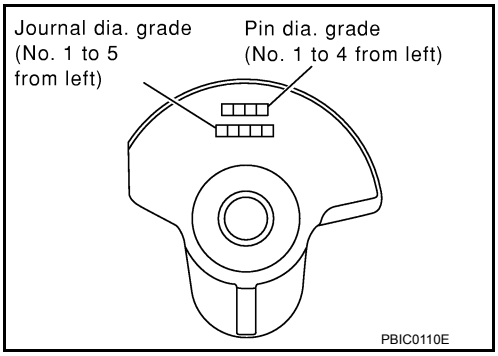

3. Read the symbol at the cross point of the selected row and column in the "Main Bearings Selection Table".
   CAUTION:
   - **Initial clearance for No. 1, 5 journal and No. 2, 3, 4 journal is different. Use two different selection lists for each part.**
   - **No. 1, 5 journal and No. 2, 3, 4 journal have the same signs but different measures. Do not confuse them.**

4. Apply the symbol to the "Main Bearings Grade Table" to select.
   NOTE:
   - Grade list applies to all journals.
   - Service parts are available as a set of both upper and lower.

When Cylinder Block and Crankshaft are Reused

1. Measure the inside diameter of the cylinder block main bearings housing and the outside diameter of the crankshaft journal.
2. Apply measurement in above step 1 to "Main Bearings Selection Table".
3. The following steps are same as in “When New Cylinder Block and Crankshaft are Used”.

Main Bearings Selection Table (No. 1 and No. 5 journal)

Cylinder block main bearing housing inner diameter / Crankshaft journal outer diameter	I.D. mark	A	B	C	D	E	F	G	H	J	K	L	M	N	P	R	S	T	U	V	W	X	Y	4	7
	Inner diameter Unit: mm (in)	68.944 – 68.945 (2.7143 – 2.7144)	68.945 – 68.946 (2.7144 – 2.7144)	68.946 – 68.947 (2.7144 – 2.7144)	68.947 – 68.948 (2.7144 – 2.7145)	68.948 – 68.949 (2.7145 – 2.7145)	68.949 – 68.950 (2.7145 – 2.7146)	68.950 – 68.951 (2.7146 – 2.7146)	68.951 – 68.952 (2.7146 – 2.7146)	68.952 – 68.953 (2.7146 – 2.7147)	68.953 – 68.954 (2.7147 – 2.7147)	68.954 – 68.955 (2.7147 – 2.7148)	68.955 – 68.956 (2.7148 – 2.7148)	68.956 – 68.957 (2.7148 – 2.7148)	68.957 – 68.958 (2.7148 – 2.7149)	68.958 – 68.959 (2.7149 – 2.7149)	68.959 – 68.960 (2.7149 – 2.7150)	68.960 – 68.961 (2.7150 – 2.7150)	68.961 – 68.962 (2.7150 – 2.7150)	68.962 – 68.963 (2.7150 – 2.7151)	68.963 – 68.964 (2.7151 – 2.7151)	68.964 – 68.965 (2.7151 – 2.7152)	68.965 – 68.966 (2.7152 – 2.7152)	68.966 – 68.967 (2.7152 – 2.7152)	68.967 – 68.968 (2.7152 – 2.7153)
I.D. mark	Outer diameter Unit: mm (in)																								
G	63.964 – 63.963 (2.5183 – 2.5182)	1	1	12	12	12	2	2	2	23	23	23	3	3	3	34	34	34	4	4	4	45	45	45	5
H	63.963 – 63.962 (2.5182 – 2.5182)	1	12	12	12	2	2	2	23	23	23	3	3	3	34	34	34	4	4	4	45	45	45	5	5
J	63.962 – 63.961 (2.5182 – 2.5181)	12	12	12	2	2	2	23	23	23	3	3	3	34	34	34	4	4	4	45	45	45	5	5	5
K	63.961 – 63.960 (2.5181 – 2.5181)	12	12	2	2	2	23	23	23	3	3	3	34	34	34	4	4	4	45	45	45	5	5	5	56
L	63.960 – 63.959 (2.5181 – 2.5181)	12	2	2	2	23	23	23	3	3	3	34	34	34	4	4	4	45	45	45	5	5	5	56	56
M	63.959 – 63.958 (2.5181 – 2.5180)	2	2	2	23	23	23	3	3	3	34	34	34	4	4	4	45	45	45	5	5	5	56	56	56
N	63.958 – 63.957 (2.5180 – 2.5180)	2	2	23	23	23	3	3	3	34	34	34	4	4	4	45	45	45	5	5	5	56	56	56	6
P	63.957 – 63.956 (2.5180 – 2.5179)	2	23	23	23	3	3	3	34	34	34	4	4	4	45	45	45	5	5	5	56	56	56	6	6
R	63.956 – 63.955 (2.5179 – 2.5179)	23	23	23	3	3	3	34	34	34	4	4	4	45	45	45	5	5	5	56	56	56	6	6	6
S	63.955 – 63.954 (2.5179 – 2.5179)	23	23	3	3	3	34	34	34	4	4	4	45	45	45	5	5	5	56	56	56	6	6	6	67
T	63.954 – 63.953 (2.5179 – 2.5178)	23	3	3	3	34	34	34	4	4	4	45	45	45	5	5	5	56	56	56	6	6	6	67	67
U	63.953 – 63.952 (2.5178 – 2.5178)	3	3	3	34	34	34	4	4	4	45	45	45	5	5	5	56	56	56	6	6	6	67	67	67
V	63.952 – 63.951 (2.5178 – 2.5178)	3	3	34	34	34	4	4	4	45	45	45	5	5	5	56	56	56	6	6	6	67	67	67	7
W	63.951 – 63.950 (2.5178 – 2.5177)	3	34	34	34	4	4	4	45	45	45	5	5	5	56	56	56	6	6	6	67	67	67	7	7
X	63.950 – 63.949 (2.5177 – 2.5177)	34	34	34	4	4	4	45	45	45	5	5	5	56	56	56	6	6	6	67	67	67	7	7	7
Y	63.949 – 63.948 (2.5177 – 2.5176)	34	34	4	4	4	45	45	45	5	5	5	56	56	56	6	6	6	67	67	67	7	7	7	78
1	63.948 – 63.947 (2.5176 – 2.5176)	34	4	4	4	45	45	45	5	5	5	56	56	56	6	6	6	67	67	67	7	7	7	78	78
2	63.947 – 63.946 (2.5176 – 2.5176)	4	4	4	45	45	45	5	5	5	56	56	56	6	6	6	67	67	67	7	7	7	78	78	78
3	63.946 – 63.945 (2.5176 – 2.5175)	4	4	45	45	45	5	5	5	56	56	56	6	6	6	67	67	67	7	7	7	78	78	78	8
4	63.945 – 63.944 (2.5175 – 2.5175)	4	45	45	45	5	5	5	56	56	56	6	6	6	67	67	67	7	7	7	78	78	78	8	8
5	63.944 – 63.943 (2.5175 – 2.5174)	45	45	45	5	5	5	56	56	56	6	6	6	67	67	67	7	7	7	78	78	78	8	8	8
6	63.943 – 63.942 (2.5174 – 2.5174)	45	45	5	5	5	56	56	56	6	6	6	67	67	67	7	7	7	78	78	78	8	8	8	8
7	63.942 – 63.941 (2.5174 – 2.5174)	45	5	5	5	56	56	56	6	6	6	67	67	67	7	7	7	78	78	78	8	8	8	8	8
9	63.941 – 63.940 (2.5174 – 2.5173)	5	5	5	56	56	56	6	6	6	67	67	67	7	7	7	78	78	78	8	8	8	8	8	8

WBIA0608E

Main Bearings Selection Table (No. 2, 3 and 4 journal)

Cylinder block main bearing housing inner diameter / Crankshaft journal outer diameter		I.D. mark	A	B	C	D	E	F	G	H	J	K	L	M	N	P	R	S	T	U	V	W	X	Y	4	7
		Inner diameter Unit: mm (in)	68.944 – 68.945 (2.7143 – 2.7144)	68.945 – 68.946 (2.7144 – 2.7144)	68.946 – 68.947 (2.7144 – 2.7144)	68.947 – 68.948 (2.7144 – 2.7145)	68.948 – 68.949 (2.7145 – 2.7145)	68.949 – 68.950 (2.7145 – 2.7146)	68.950 – 68.951 (2.7146 – 2.7146)	68.951 – 68.952 (2.7146 – 2.7146)	68.952 – 68.953 (2.7146 – 2.7147)	68.953 – 68.954 (2.7147 – 2.7147)	68.954 – 68.955 (2.7147 – 2.7148)	68.955 – 68.956 (2.7148 – 2.7148)	68.956 – 68.957 (2.7148 – 2.7148)	68.957 – 68.958 (2.7148 – 2.7149)	68.958 – 68.959 (2.7149 – 2.7149)	68.959 – 68.960 (2.7149 – 2.7150)	68.960 – 68.961 (2.7150 – 2.7150)	68.961 – 68.962 (2.7150 – 2.7150)	68.962 – 68.963 (2.7150 – 2.7151)	68.963 – 68.964 (2.7151 – 2.7151)	68.964 – 68.965 (2.7151 – 2.7152)	68.965 – 68.966 (2.7152 – 2.7152)	68.966 – 68.967 (2.7152 – 2.7152)	68.967 – 68.968 (2.7152 – 2.7153)
I.D. mark	Outer diameter Unit: mm (in)																									
A	63.964 – 63.963 (2.5183 – 2.5182)		0	0	01	01	01	1	1	1	12	12	12	2	2	2	23	23	23	3	3	3	34	34	34	4
B	63.963 – 63.962 (2.5182 – 2.5182)		0	01	01	01	1	1	1	12	12	12	2	2	2	23	23	23	3	3	3	34	34	34	4	4
C	63.962 – 63.961 (2.5182 – 2.5181)		01	01	01	1	1	1	12	12	12	2	2	2	23	23	23	3	3	3	34	34	34	4	4	4
D	63.961 – 63.960 (2.5181 – 2.5181)		01	01	1	1	1	12	12	12	2	2	2	23	23	23	3	3	3	34	34	34	4	4	4	45
E	63.960 – 63.959 (2.5181 – 2.5181)		01	1	1	1	12	12	12	2	2	2	23	23	23	3	3	3	34	34	34	4	4	4	45	45
F	63.959 – 63.958 (2.5181 – 2.5180)		1	1	1	12	12	12	2	2	2	23	23	23	3	3	3	34	34	34	4	4	4	45	45	45
G	63.958 – 63.957 (2.5180 – 2.5180)		1	1	12	12	12	2	2	2	23	23	23	3	3	3	34	34	34	4	4	4	45	45	45	5
H	63.957 – 63.956 (2.5180 – 2.5179)		1	12	12	12	2	2	2	23	23	23	3	3	3	34	34	34	4	4	4	45	45	45	5	5
J	63.956 – 63.955 (2.5179 – 2.5179)		12	12	12	2	2	2	23	23	23	3	3	3	34	34	34	4	4	4	45	45	45	5	5	5
K	63.955 – 63.954 (2.5179 – 2.5179)		12	12	2	2	2	23	23	23	3	3	3	34	34	34	4	4	4	45	45	45	5	5	5	56
L	63.954 – 63.953 (2.5179 – 2.5178)		12	2	2	2	23	23	23	3	3	3	34	34	34	4	4	4	45	45	45	5	5	5	56	56
M	63.953 – 63.952 (2.5178 – 2.5178)		2	2	2	23	23	23	3	3	3	34	34	34	4	4	4	45	45	45	5	5	5	56	56	56
N	63.952 – 63.951 (2.5178 – 2.5178)		2	2	23	23	23	3	3	3	34	34	34	4	4	4	45	45	45	5	5	5	56	56	56	6
P	63.951 – 63.950 (2.5178 – 2.5177)		2	23	23	23	3	3	3	34	34	34	4	4	4	45	45	45	5	5	5	56	56	56	6	6
R	63.950 – 63.949 (2.5177 – 2.5177)		23	23	23	3	3	3	34	34	34	4	4	4	45	45	45	5	5	5	56	56	56	6	6	6
S	63.949 – 63.948 (2.5177 – 2.5176)		23	23	3	3	3	34	34	34	4	4	4	45	45	45	5	5	5	56	56	56	6	6	6	67
T	63.948 – 63.947 (2.5176 – 2.5176)		23	3	3	3	34	34	34	4	4	4	45	45	45	5	5	5	56	56	56	6	6	6	67	67
U	63.947 – 63.946 (2.5176 – 2.5176)		3	3	3	34	34	34	4	4	4	45	45	45	5	5	5	56	56	56	6	6	6	67	67	67
V	63.946 – 63.945 (2.5176 – 2.5175)		3	3	34	34	34	4	4	4	45	45	45	5	5	5	56	56	56	6	6	6	67	67	67	7
W	63.945 – 63.944 (2.5175 – 2.5175)		3	34	34	34	4	4	4	45	45	45	5	5	5	56	56	56	6	6	6	67	67	67	7	7
X	63.944 – 63.943 (2.5175 – 2.5174)		34	34	34	4	4	4	45	45	45	5	5	5	56	56	56	6	6	6	67	67	67	7	7	7
Y	63.943 – 63.942 (2.5174 – 2.5174)		34	34	4	4	4	45	45	45	5	5	5	56	56	56	6	6	6	67	67	67	7	7	7	78
1	63.942 – 63.941 (2.5174 – 2.5174)		34	4	4	4	45	45	45	5	5	5	56	56	56	6	6	6	67	67	67	7	7	7	78	78
2	63.941 – 63.940 (2.5174 – 2.5173)		4	4	4	45	45	45	5	5	5	56	56	56	6	6	6	67	67	67	7	7	7	78	78	78

WBIA0609E

Main Bearings Grade Table (All Journals)

Unit: mm (in)

Grade number	UPR/LWR	Thickness	Identification color	Remarks
0	—	2.483 - 2.486 (0.0978 - 0.0979)	Black	Grade is the same for upper and lower bearings.
1	—	2.486 - 2.489 (0.0979 - 0.0980)	Brown	
2	—	2.489 - 2.492 (0.0980 - 0.0981)	Green	
3	—	2.492 - 2.495 (0.0981 - 0.0982)	Yellow	
4	—	2.495 - 2.498 (0.0982 - 0.0983)	Blue	
5	—	2.498 - 2.501 (0.0983 - 0.0985)	Pink	
6	—	2.501 - 2.504 (0.0985 - 0.0986)	Purple	
7	—	2.504 - 2.507 (0.0986 - 0.0987)	White	
8	—	2.507 - 2.510 (0.0987 - 0.0988)	Red	

01	UPR	2.483 - 2.486 (0.0978 - 0.0979)	Black	Grade and color are different for upper and lower bearings.
	LWR	2.486 - 2.489 (0.0979 - 0.0980)	Brown	
12	UPR	2.486 - 2.489 (0.0979 - 0.0980)	Brown	
	LWR	2.489 - 2.492 (0.0980 - 0.0981)	Green	
23	UPR	2.489 - 2.492 (0.0980 - 0.0981)	Green	
	LWR	2.492 - 2.495 (0.0981 - 0.0982)	Yellow	
34	UPR	2.492 - 2.495 (0.0981 - 0.0982)	Yellow	
	LWR	2.495 - 2.498 (0.0982 - 0.0983)	Blue	
45	UPR	2.495 - 2.498 (0.0982 - 0.0983)	Blue	
	LWR	2.498 - 2.501 (0.0983 - 0.0985)	Pink	
56	UPR	2.498 - 2.501 (0.0983 - 0.0985)	Pink	
	LWR	2.501 - 2.504 (0.0985 - 0.0986)	Purple	
67	UPR	2.501 - 2.504 (0.0985 - 0.0986)	Purple	
	LWR	2.504 - 2.507 (0.0986 - 0.0987)	White	
78	UPR	2.504 - 2.507 (0.0986 - 0.0987)	White	
	LWR	2.507 - 2.510 (0.0987 - 0.0988)	Red	

Use Undersize Bearing Usage Guide

- Use undersize (US) bearing when the oil clearance with standard size main bearing is not within specification.
- When using undersize (US) bearing, measure the inside diameter of the bearing installed and grind the journal until the oil clearance falls within specification.

Bearing undersize table

Unit: mm (in)

Undersize	Thickness
0.25 (0.0098)	2.618 - 2.626 (0.1031 - 0.1034)

CAUTION:

Do not damage fillet R when grinding crankshaft journal in order to use undersized bearing (All journals).

Fillet R : 1.5 - 1.7 mm (0.059 - 0.067 in)

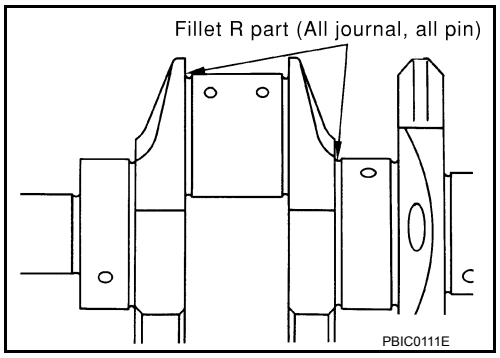

SERVICE DATA AND SPECIFICATIONS (SDS)

SERVICE DATA AND SPECIFICATIONS (SDS)

Standard and Limit

INFOID:0000000009824961

GENERAL SPECIFICATIONS

Cylinder arrangement		V-8
Displacement cm^3 (in^3)		5,552 (338.80)
Bore and stroke mm (in)		98 x 92 (3.86 x 3.62)
Valve arrangement		DOHC
Firing order		1-8-7-3-6-5-4-2
Number of piston rings	Compression	2
	Oil	1
Number of main bearings		5
Compression ratio		9.8:1
Compression pressure kPa (kg/cm^2, psi)/rpm	Standard	1,520 (15.5, 220)/200
	Minimum	1,324 (13.5, 192)/200
	Differential limit between cylinders	98 (1.0, 14)/200
Cylinder number	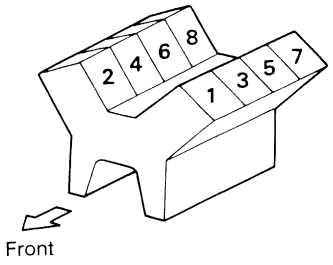 SEM957C	
Valve timing	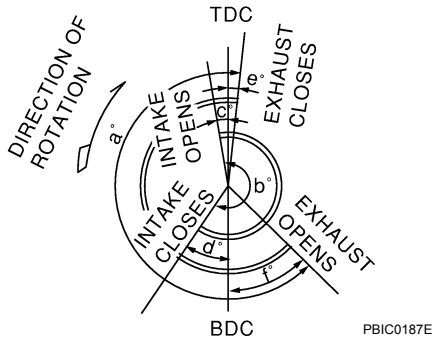 PBIC0187E	

Unit: degree

a	b	c	d	e	f
244°	232°	-8°	60°	10°	54°

DRIVE BELTS

Tension of drive belts	Auto adjustment by auto-tensioner

EXHAUST MANIFOLD

Unit: mm (in)

Items		Limit
Surface distortion	Exhaust manifold	0.3 (0.012)

SPARK PLUG

Unit: mm (in)

Make	NGK	
Model	Standard model	FFV model
Standard type*	DILFR5A-11	DILFR5A-11D
Gap (Nominal)	1.1 (0.043)	1.1 (0.043)

*: Always check with the Parts Department for the latest parts information.

CAMSHAFT AND CAMSHAFT BEARING

Unit: mm (in)

Items	Standard
Camshaft runout [TIR*]	Less than 0.02 (0.0008)

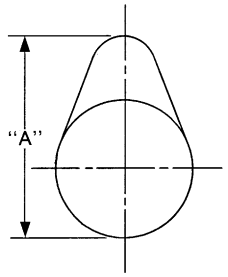

SEM671

Camshaft cam height “A”	Intake	44.865 - 45.055 (1.7663 - 1.7738)
	Exhaust	45.075 - 45.265 (1.7746 - 1.7821)
	Cam wear limit	0.02 (0.0008)
Outside diameter of camshaft journal		25.950 - 25.970 (1.0217 - 1.0224)
Camshaft bracket inside diameter		26.000 - 26.021 (1.0236 - 1.0244)
Camshaft journal clearance		0.030 - 0.071 (0.0012 - 0.0028)
Camshaft end play		0.115 - 0.188 (0.0045 - 0.0074)
Camshaft dimension "A" for #1 journal		30.500 - 30.548 (1.2008 - 1.2027)
Cylinder head dimension "B" for #1 journal		30.360 - 30.385 (1.1953 - 1.1963)
Camshaft sprocket runout [TIR*]		Less than 0.15 (0.0059)

*: Total indicator reading

Valve Oil Seal

Unit: mm (in)

Items	Standard
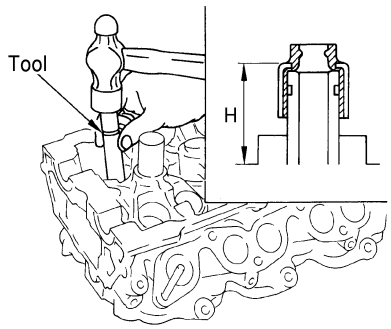 WBIA0490E	
Height (H) (without valve spring installed)	14.300 - 14.900 (0.5630 - 0.5870)

Valve Lifter

Unit: mm (in)

Items	Standard
Valve lifter diameter	33.977 - 33.987 (1.3377 - 1.3381)
Valve lifter hole diameter	34.000 - 34.016 (1.3386 - 1.3392)
Clearance between lifter and lifter guide	0.013 - 0.039 (0.0005 - 0.0015)

Valve Clearance

Unit: mm (in)

Items	Hot*	Cold
Intake	0.304 - 0.416 (0.012 - 0.016)	0.26 - 0.34 (0.010 - 0.013)
Exhaust	0.308 - 0.432 (0.012 - 0.017)	0.29 - 0.37 (0.011 - 0.015)

*: Approximately 80°C (176°F)

Available Valve Lifter

Unit: mm (in)

Identification (stamped) Mark*	Thickness
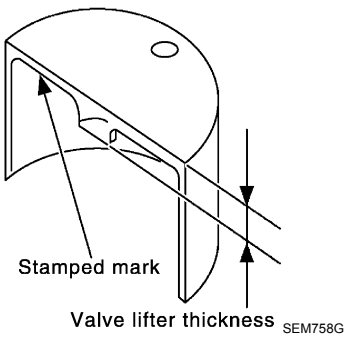 SEM758G	
N788	7.88 (0.3102)
N790	7.90 (0.3110)
N792	7.92 (0.3118)
N794	7.94 (0.3126)
N796	7.96 (0.3134)
N798	7.98 (0.3142)
N800	8.00 (0.3150)
N802	8.02 (03.157)
N804	8.04 (0.3165)

Identification (stamped) Mark*	Thickness
N806	8.06 (0.3173)
N808	8.08 (0.3181)
N810	8.10 (0.3189)
N812	8.12 (0.3197)
N814	8.14 (0.3205)
N816	8.16 (0.3213)
N818	8.18 (0.3220)
N820	8.20 (0.3228)
N822	8.22 (0.3236)
N824	8.24 (0.3244)
N826	8.26 (0.3252)
N828	8.28 (0.3260)
N830	8.30 (0.3268)
N832	8.32 (0.3276)
N834	8.34 (0.3283)
N836	8.36 (0.3291)

* : Always check with the Parts Department for the latest parts information.

CYLINDER HEAD

Unit: mm (in)

Items	Standard	Limit
Head surface distortion	0.03 (0.0012)	0.1 (0.004)
Nominal cylinder head height “H”	126.3 (4.97)	

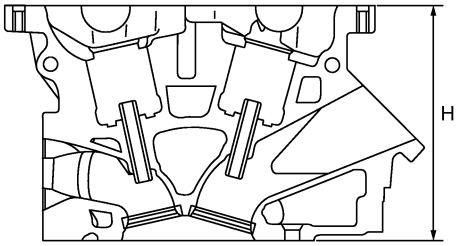

KBIA2554E

Spark Plug Tube

Unit: mm (in)

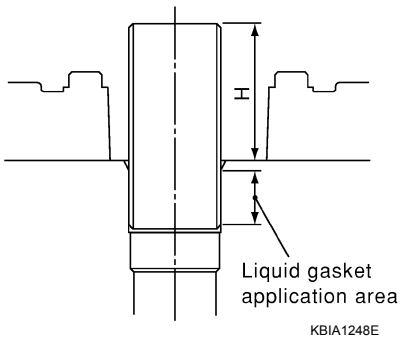

KBIA1248E

Items	Standard
Press fit height "H"	38.400 - 39.400 (1.512 - 1.551)

Valve Dimensions

Unit: mm (in)

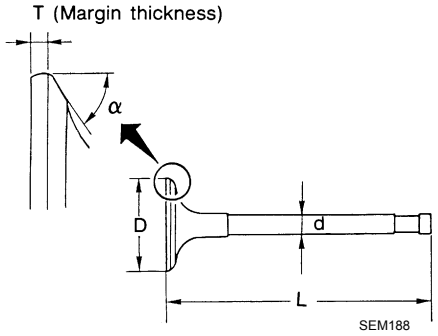

		Standard model	FFV model
Valve head diameter “D”	Intake	37.0 - 37.3 (1.457 - 1.469)	
	Exhaust	31.2 - 31.5 (1.228 - 1.240)	
Valve length “L”	Intake	96.21- 96.71 (3.7878 - 3.8075)	
	Exhaust	93.74 - 94.24 (3.6905 - 3.7102)	
Valve stem diameter “d”	Intake	5.965 - 5.980 (0.2348 - 0.2354)	
	Exhaust	5.955 - 5.970 (0.2344 - 0.2350)	
Valve seat angle “α”	Intake	45°15′ - 45°45′	
	Exhaust		
Valve margin “T”	Intake	1.1 (0.043)	0.6 (0.024)
	Exhaust	1.3 (0.051)	

Valve Guide

Unit: mm (in)

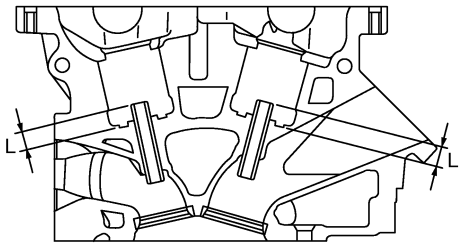

Items		Standard	Oversize [0.2 (0.008)] (service)
Valve guide	Outside diameter	10.023 - 10.034 (0.3946 - 0.3950)	10.223 - 10.234 (0.4025 - 0.4029)
	Inside diameter (Finished size)	6.000 - 6.018 (0.2362 - 0.2369)	—
Cylinder head valve guide hole diameter		9.975 - 9.996 (0.3927 - 0.3935)	10.175 - 10.196 (0.4006 - 0.4014)
Interference fit of valve guide		0.027 - 0.059 (0.0011 - 0.0023)	
Items		Standard	Limit
Stem to guide clearance	Intake	0.020 - 0.053 (0.0008 - 0.0021)	0.08 (0.0031)
	Exhaust	0.030 - 0.063 (0.0012 - 0.0025)	0.09 (0.0035)
Projection length “L”	Intake	12.6 - 12.8 (0.496 - 0.504)	
	Exhaust	12.5 - 12.9 (0.492 - 0.508)	

Valve Seat

Unit: mm (in)

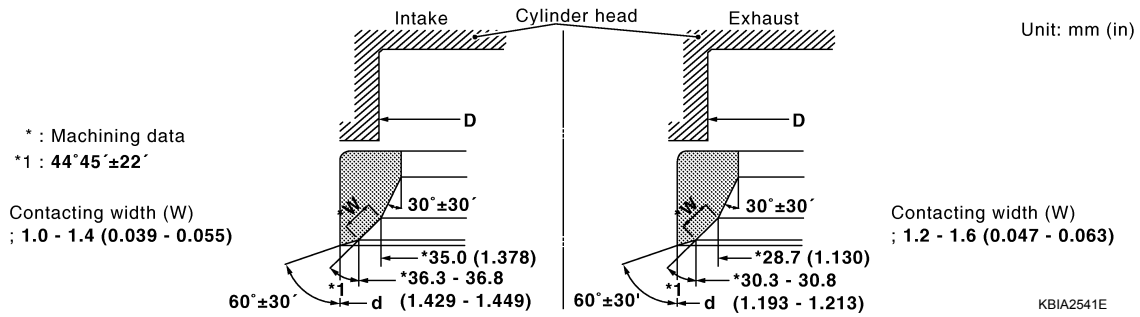

Items		Standard	Oversize [0.5 (0.020)] (Service)
Cylinder head seat recess diameter (D)	Intake	38.000 - 38.016 (1.4961 - 1.4967)	38.500 - 38.516 (1.5157 - 1.5164)
	Exhaust	32.200 - 32.216 (1.2677 - 1.2683)	32.700 - 32.716 (1.2874 - 1.2880)
Valve seat interference fit	Intake	0.081 - 0.113 (0.0032 - 0.0044)	
	Exhaust	0.064 - 0.096 (0.0025 - 0.0038)	
Valve seat diameter (d)	Intake	38.097 - 38.113 (1.4999 - 1.5005)	38.597 - 38.613 (1.5196 - 1.5202)
	Exhaust	32.280 - 32.296 (1.2709 - 1.2715)	32.780 - 32.796 (1.2905 - 1.2912)

Valve Spring

Free height mm (in)		50.58 (1.9913)
Pressure N (kg, lb) at height mm (in)	Installation	165.8 - 187.0 (16.9 - 19.1, 37 - 42) at 37.0 (1.457)
	Valve open	314.8 - 355.0 (32.1 - 36.2, 71 - 80) at 28.2 (1.110)
Out-of-square mm (in)		Less than 2.2 (0.087)

CYLINDER BLOCK

Unit: mm (in)

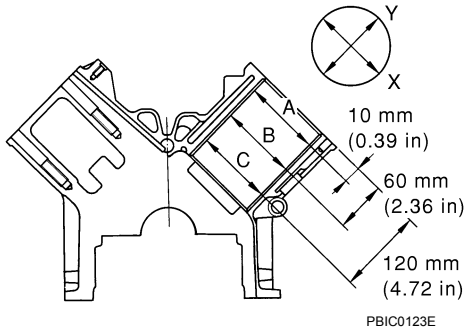

Surface flatness	Standard		0.03 (0.0012)
	LImit		0.1 (0.004)
Main bearing housing inside diameter	Standard		68.944 - 68.968 (2.7143 - 2.7153)
Cylinder bore diameter	Standard	Grade No. 1	98.000 - 98.010 (3.8583 - 3.8587)
		Grade No. 2	98.010 - 98.020 (3.8587 - 3.8590)
		Grade No. 3	98.020 - 98.030 (3.8590 - 3.8594)
	Wear limit		0.20 (0.0079)
Out-of-round (Difference between X and Y)	Limit		0.015 (0.0006)
Taper (Difference between A and C)			0.010 (0.0004)

Main journal inside diameter grade (Without bearing)*		Grade No. A	68.944 - 68.945 (2.7143 - 2.7144)
		Grade No. B	68.945 - 68.946 (2.7144 - 2.7144)
		Grade No. C	68.946 - 68.947 (2.7144 - 2.7144)
		Grade No. D	68.947 - 68.948 (2.7144 - 2.7145)
		Grade No. E	68.948 - 68.949 (2.7145 - 2.7145)
		Grade No. F	68.949 - 68.950 (2.7145 - 2.7146)
		Grade No. G	68.950 - 68.951 (2.7146 - 2.7146)
		Grade No. H	68.951 - 68.952 (2.7146 - 2.7146)
		Grade No. J	68.952 - 68.953 (2.7146 - 2.7147)
		Grade No. K	68.953 - 68.954 (2.7147 - 2.7147)
		Grade No. L	68.954 - 68.955 (2.7147 - 2.7148)
		Grade No. M	68.955 - 68.956 (2.7148 - 2.7148)
		Grade No. N	68.956 - 68.957 (2.7148 - 2.7148)
		Grade No. P	68.957 - 68.958 (2.7148 - 2.7149)
		Grade No. R	68.958 - 68.959 (2.7149 - 2.7149)
		Grade No. S	68.959 - 68.960 (2.7149 - 2.7150)
		Grade No. T	68.960 - 68.961 (2.7150 - 2.7150)
		Grade No. U	68.961 - 68.962 (2.7150 - 2.7150)
		Grade No. V	68.962 - 68.963 (2.7150 - 2.7151)
		Grade No. W	68.963 - 68.964 (2.7151 - 2.7151)
		Grade No. X	68.964 - 68.965 (2.7151 - 2.7152)
		Grade No. Y	68.965 - 68.966 (2.7152 - 2.7152)
		Grade No. 4	68.966 - 68.967 (2.7152 - 2.7152)
		Grade No. 7	68.967 - 68.968 (2.7152 - 2.7153)
Difference in bore diameter between cylinders	Standard		Less than 0.03 (0.0012)

* : Always check with the Parts Department for the latest parts information.

PISTON, PISTON RING AND PISTON PIN

Available Piston

Unit: mm (in)

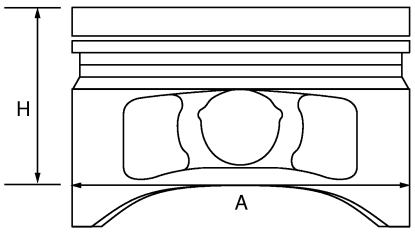

PBIC0188E

Items	Grade*	Standard	Limit
Piston skirt diameter “A”	Grade No. 1	97.980 - 97.990 (3.8575 - 3.8579)	—
	Grade No. 2	97.990 - 98.000 (3.8579 - 3.8583)	—
	Grade No. 3	98.000 - 98.010 (3.8583 - 3.8587)	—
“H” dimension		39 (1.54)	—
Piston pin hole diameter	Grade No. 0	21.993 - 21.999 (0.8659 - 0.8661)	—
Piston to cylinder bore clearance		0.010 - 0.030 (0.0004 - 0.0012)	0.08 (0.0031)

* : Always check with the Parts Department for the latest parts information.

Piston Ring

Unit: mm (in)

Items		Standard	Limit
Side clearance	Top	0.035 - 0.085 (0.0014 - 0.0033)	0.11 (0.0043)
	2nd	0.030 - 0.070 (0.0012 - 0.0028)	0.10 (0.0039)
	Oil ring	0.015 - 0.185 (0.0006 - 0.0073)	—

End gap	Top	0.23 - 0.33 (0.0091 - 0.0130)	0.56 (0.0220)
	2nd	0.25 - 0.40 (0.0098 - 0.0157)	0.52 (0.0205)
	Oil ring	0.20 - 0.60 (0.0079 - 0.0236)	0.96 (0.0378)

Piston Pin

Unit: mm (in)

Items		Standard
Piston pin diameter	Grade No. 0	21.989 - 21.995 (0.8657 - 0.8659)
Piston to piston pin clearance		0.002 - 0.006 (0.0001 - 0.0002)
Connecting rod bushing oil clearance		0.005 - 0.017 (0.0002 - 0.0007)

CONNECTING ROD

Unit: mm (in)

Items	Grade*1	Standard	Limit
Center distance		154.45 - 154.55 (6.08 - 6.08)	—
Bend [per 100 (3.94)]		—	0.15 (0.0059)
Torsion [per 100 (3.94)]		—	0.30 (0.0118)
Connecting rod bushing inside diameter*2 (small end)	Grade No. 0	22.000 - 22.006 (0.8661 - 0.8664)	—
Connecting rod big end inside diameter (without bearing)		57.000 - 57.013 (2.2441 - 2.2446)	—
Connecting rod side clearance		0.20 - 0.40 (0.0079 - 0.0157)	0.40 (0.0157)
Connecting rod bearing housing	Grade No. 0	57.000 - 57.001 (2.2441 - 2.2441)	
	Grade No. 1	57.001 - 57.002 (2.2441 - 2.2442)	
	Grade No. 2	57.002 - 57.003 (2.2442 - 2.2442)	
	Grade No. 3	57.003 - 57.004 (2.2442 - 2.2443)	
	Grade No. 4	57.004 - 57.005 (2.2443 - 2.2443)	
	Grade No. 5	57.005 - 57.006 (2.2443 - 2.2443)	
	Grade No. 6	57.006 - 57.007 (2.2443 - 2.2444)	
	Grade No. 7	57.007 - 57.008 (2.2444 - 2.2444)	
	Grade No. 8	57.008 - 57.009 (2.2444 - 2.2444)	
	Grade No. 9	57.009 - 57.010 (2.2444 - 2.2445)	
	Grade No. A	57.010 - 57.011 (2.2445 - 2.2445)	
	Grade No. B	57.011 - 57.012 (2.2445 - 2.2446)	
	Grade No. C	57.012 - 57.013 (2.2446 - 2.2446)	

*1 : Always check with the Parts Department for the latest parts information.

*2: After installing in connecting rod.

CRANKSHAFT

Unit: mm (in)

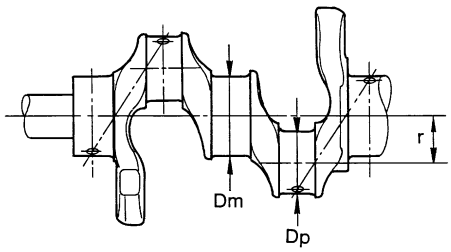

SEM645

Out-of-round : Diffenrence between X and Y.
Taper : Diffenrence between A and B.

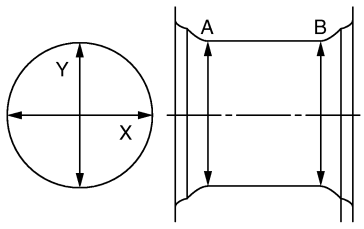

PBIC1686E

		Grade*1	Dimension

Main journal dia. “Dm” grade (No. 1 and 5)	Standard	Grade No. G	63.963 - 63.964 (2.5182 - 2.5183)
		Grade No. H	63.962 - 63.963 (2.5182 - 2.5182)
		Grade No. J	63.961 - 63.962 (2.5181 - 2.5182)
		Grade No. K	63.960 - 63.961 (2.5181 - 2.5181)
		Grade No. L	63.959 - 63.960 (2.5181 - 2.5181)
		Grade No. M	63.958 - 63.959 (2.5180 - 2.5181)
		Grade No. N	63.957 - 63.958 (2.5180 - 2.5180)
		Grade No. P	63.956 - 63.957 (2.5179 - 2.5180)
		Grade No. R	63.955 - 63.956 (2.5179 - 2.5179)
		Grade No. S	63.954 - 63.955 (2.5179 - 2.5179)
		Grade No. T	63.953 - 63.954 (2.5178 - 2.5179)
		Grade No. U	63.952 - 63.953 (2.5178 - 2.5178)
		Grade No. V	63.951 - 63.952 (2.5178 - 2.5178)
		Grade No. W	63.950 - 63.951 (2.5177 - 2.5178)
		Grade No. X	63.949 - 63.950 (2.5177 - 2.5177)
		Grade No. Y	63.948 - 63.949 (2.5176 - 2.5177)
		Grade No. 1	63.947 - 63.948 (2.5176 - 2.5176)
		Grade No. 2	63.946 - 63.947 (2.5176 - 2.5176)
		Grade No. 3	63.945 - 63.946 (2.5175 - 2.5176)
		Grade No. 4	63.944 - 63.945 (2.5175 - 2.5175)
		Grade No. 5	63.943 - 63.944 (2.5174 - 2.5175)
		Grade No. 6	63.942 - 63.943 (2.5174 - 2.5174)
		Grade No. 7	63.941 - 63.942 (2.5174 - 2.5174)
		Grade No. 9	63.940 - 63.941 (2.5173 - 2.5174)
Main journal dia. “Dm” grade (No. 2, 3 and 4)	Standard	Grade No. A	63.963 - 63.964 (2.5182 - 2.5183)
		Grade No. B	63.962 - 63.963 (2.5182 - 2.5182)
		Grade No. C	63.961 - 63.962 (2.5181 - 2.5182)
		Grade No. D	63.960 - 63.961 (2.5181 - 2.5181)
		Grade No. E	63.959 - 63.960 (2.5181 - 2.5181)
		Grade No. F	63.958 - 63.959 (2.5180 - 2.5181)
		Grade No. G	63.957 - 63.958 (2.5180 - 2.5180)
		Grade No. H	63.956 - 63.957 (2.5179 - 2.5180)
		Grade No. J	63.955 - 63.956 (2.5179 - 2.5179)
		Grade No. K	63.954 - 63.955 (2.5179 - 2.5179)
		Grade No. L	63.953 - 63.954 (2.5178 - 2.5179)
		Grade No. M	63.952 - 63.953 (2.5178 - 2.5178)
		Grade No. N	63.951 - 63.952 (2.5178 - 2.5178)
		Grade No. P	63.950 - 63.951 (2.5177 - 2.5178)
		Grade No. R	63.949 - 63.950 (2.5177 - 2.5177)
		Grade No. S	63.948 - 63.949 (2.5176 - 2.5177)
		Grade No. T	63.947 - 63.948 (2.5176 - 2.5176)
		Grade No. U	63.946 - 63.947 (2.5176 - 2.5176)
		Grade No. V	63.945 - 63.946 (2.5175 - 2.5176)
		Grade No. W	63.944 - 63.945 (2.5175 - 2.5175)
		Grade No. X	63.943 - 63.944 (2.5174 - 2.5175)
		Grade No. Y	63.942 - 63.943 (2.5174 - 2.5174)
		Grade No. 1	63.941 - 63.942 (2.5174 - 2.5174)
		Grade No. 2	63.940 - 63.941 (2.5173 - 2.5174)
Pin journal dia. “Dp”	Standard	Grade No. 0	53.968 - 53.974 (2.1247 - 2.1250)
		Grade No. 1	53.962 - 53.968 (2.1245 - 2.1247)
		Grade No. 2	53.956 - 53.962 (2.1243 - 2.1245)
Center distance “r”			45.96 - 46.04 (1.8094 - 1.8126)
Out-of-round (Difference between X and Y)	Limit		0.002 (0.0001)
Taper (Difference between A and B)			0.002 (0.0001)
Runout [TIR*2]			Less than 0.05 (0.002)
Crankshaft end play	Standard		0.10 - 0.26 (0.0039 - 0.0102)
	Limit		0.30 (0.0118)

*1 : Always check with the Parts Department for the latest parts information.

*2 : Total indicator reading

MAIN BEARING

Unit: mm (in)

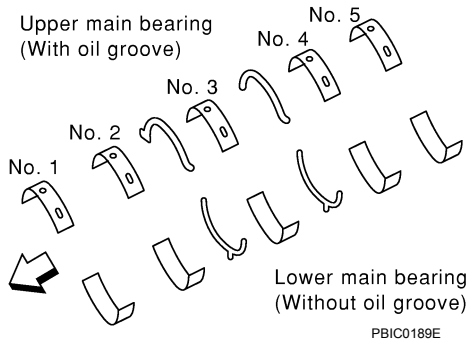

Grade number*	UPR/LWR	Thickness	Identification color	Remarks
0	—	2.483 - 2.486 (0.0978 - 0.0979)	Black	Grade is the same for upper and lower bearings
1	—	2.486 - 2.489 (0.0979 - 0.0980)	Brown	
2	—	2.489 - 2.492 (0.0980 - 0.0981)	Green	
3	—	2.492 - 2.495 (0.0981 - 0.0982)	Yellow	
4	—	2.495 - 2.498 (0.0982 - 0.0983)	Blue	
5	—	2.498 - 2.501 (0.0983 - 0.0985)	Pink	
6	—	2.501 - 2.504 (0.0985 - 0.0986)	Purple	
7	—	2.504 - 2.507 (0.0986 - 0.0987)	White	
8	—	2.507 - 2.510 (0.0987 - 0.0988)	Red	
01	UPR	2.483 - 2.486 (0.0978 - 0.0979)	Black	Grade is different for upper and lower bearings.
	LWR	2.486 - 2.489 (0.0979 - 0.0980)	Brown	
12	UPR	2.486 - 2.489 (0.0979 - 0.0980)	Brown	
	LWR	2.489 - 2.492 (0.0980 - 0.0981)	Green	
23	UPR	2.489 - 2.492 (0.0980 - 0.0981)	Green	
	LWR	2.492 - 2.495 (0.0981 - 0.0982)	Yellow	
34	UPR	2.492 - 2.495 (0.0981 - 0.0982)	Yellow	
	LWR	2.495 - 2.498 (0.0982 - 0.0983)	Blue	
45	UPR	2.495 - 2.498 (0.0982 - 0.0983)	Blue	
	LWR	2.498 - 2.501 (0.0983 - 0.0985)	Pink	
56	UPR	2.498 - 2.501 (0.0983 - 0.0985)	Pink	
	LWR	2.501 - 2.504 (0.0985 - 0.0986)	Purple	
67	UPR	2.501 - 2.504 (0.0985 - 0.0986)	Purple	
	LWR	2.504 - 2.507 (0.0986 - 0.0987)	White	
78	UPR	2.504 - 2.507 (0.0986 - 0.0987)	White	
	LWR	2.507 - 2.510 (0.0987 - 0.0988)	Red	

* : Always check with the Parts Department for the latest parts information.

Undersize

Unit: mm (in)

Undersize	Thickness	Main journal diameter
0.25 (0.0098)	2.618 - 2.626 (0.1031 - 0.1034)	Grind so that bearing clearance is the specified value.

Main Bearing Oil Clearance

Unit: mm (in)

Items	Standard	Limit

Main bearing oil clearance	No.1 and 5	0.001 - 0.011 (0.00004 - 0.0004)	0.021 (0.0008)
	No.2, 3 and 4	0.007 - 0.017 (0.0003 - 0.0007)	0.027 (0.0011)

Connecting Rod Bearing

Grade number*	Thickness “T” mm (in)	Identification color (mark)
0	1.500 - 1.503 (0.0591 - 0.0592)	Black
1	1.503 - 1.506 (0.0592 - 0.0593)	Brown
2	1.506 - 1.509 (0.0593 - 0.0594)	Green
3	1.509 - 1.512 (0.0594 - 0.0595)	Yellow

* : Always check with the Parts Department for the latest parts information.

Undersize

Unit: mm (in)

Undersize	Thickness	Crank pin journal diameter “Dp”
0.25 (0.0098)	1.627 - 1.635 (0.0641 - 0.0644)	Grind so that bearing clearance is the specified value.

Connecting Rod Bearing Oil Clearance

Unit: mm (in)

Items	Standard	Limit
Connecting rod bearing oil clearance	0.020 - 0.039 (0.0008 - 0.0015)	0.055 (0.0022)