SECTION EC
ENGINE CONTROL SYSTEM

CONTENTS

VK56DE

PRECAUTION

PRECAUTIONS

Precaution for Supplemental Restraint System (SRS) "AIR BAG" and "SEAT BELT PRE-TENSIONER"

INFOID:0000000011564855

The Supplemental Restraint System such as “AIR BAG” and “SEAT BELT PRE-TENSIONER”, used along with a front seat belt, helps to reduce the risk or severity of injury to the driver and front passenger for certain types of collision. This system includes seat belt switch inputs and dual stage front air bag modules. The SRS system uses the seat belt switches to determine the front air bag deployment, and may only deploy one front air bag, depending on the severity of a collision and whether the front occupants are belted or unbelted.
Information necessary to service the system safely is included in the SR and SB section of this Service Manual.

WARNING:

- **To avoid rendering the SRS inoperative, which could increase the risk of personal injury or death in the event of a collision which would result in air bag inflation, all maintenance must be performed by an authorized NISSAN/INFINITI dealer.**
- **Improper maintenance, including incorrect removal and installation of the SRS, can lead to personal injury caused by unintentional activation of the system. For removal of Spiral Cable and Air Bag Module, see the SR section.**
- **Do not use electrical test equipment on any circuit related to the SRS unless instructed to in this Service Manual. SRS wiring harnesses can be identified by yellow and/or orange harnesses or harness connectors.**

PRECAUTIONS WHEN USING POWER TOOLS (AIR OR ELECTRIC) AND HAMMERS

WARNING:

- **When working near the Airbag Diagnosis Sensor Unit or other Airbag System sensors with the Ignition ON or engine running, DO NOT use air or electric power tools or strike near the sensor(s) with a hammer. Heavy vibration could activate the sensor(s) and deploy the air bag(s), possibly causing serious injury.**
- **When using air or electric power tools or hammers, always switch the Ignition OFF, disconnect the battery and wait at least three minutes before performing any service.**

On Board Diagnosis (OBD) System of Engine and A/T

INFOID:0000000011291588

The ECM has an on board diagnostic system. It will light up the malfunction indicator lamp (MIL) to warn the driver of a malfunction causing emission deterioration.

CAUTION:

- **Be sure to turn the ignition switch OFF and disconnect the negative battery cable before any repair or inspection work. The open/short circuit of related switches, sensors, solenoid valves, etc. will cause the MIL to light up.**
- **Be sure to connect and lock the connectors securely after work. A loose (unlocked) connector will cause the MIL to light up due to the open circuit. (Be sure the connector is free from water, grease, dirt, bent terminals, etc.)**
- **Certain systems and components, especially those related to OBD, may use a new style slide-locking type harness connector. For description and how to disconnect, refer to PG-8, "Harness Connector".**
- **Be sure to route and secure the harnesses properly after work. The interference of the harness with a bracket, etc. may cause the MIL to light up due to the short circuit.**
- **Be sure to connect rubber tubes properly after work. A misconnected or disconnected rubber tube may cause the MIL to light up due to the malfunction of the EVAP system or fuel injection system, etc.**
- **Be sure to erase the unnecessary malfunction information (repairs completed) from the ECM and TCM (Transmission control module) before returning the vehicle to the customer.**

Precaution

INFOID:0000000011291589

- **Always use a 12 volt battery as power source.**
- **Do not attempt to disconnect battery cables while engine is running.**
- **Before connecting or disconnecting the ECM harness connector, turn ignition switch OFF and disconnect negative battery cable. Failure to do so may damage the ECM because battery voltage is applied to ECM even if ignition switch is turned OFF.**
- **Before removing parts, turn ignition switch OFF and then disconnect negative battery cable.**

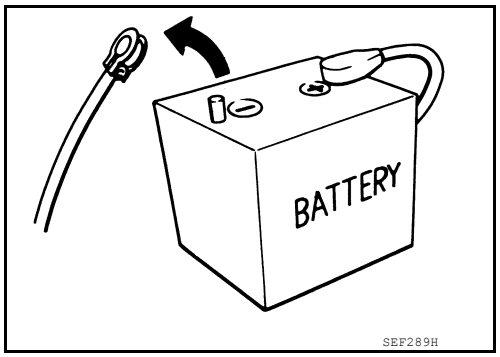

- **Do not disassemble ECM.**
- **If a battery cable is disconnected, the memory will return to the ECM value.**
  The ECM will now start to self-control at its initial value. Engine operation can vary slightly when the terminal is disconnected. However, this is not an indication of a malfunction. Do not replace parts because of a slight variation.
- **If the battery is disconnected, the following emission-related diagnostic information will be lost within 24 hours.**
- **Diagnostic trouble codes**
- **1st trip diagnostic trouble codes**
- **Freeze frame data**
- **1st trip freeze frame data**
- **System readiness test (SRT) codes**
- **Test values**
- **<Flexible Fuel Vehicle>**
  Presumed ethanol mixture ratio
- **When connecting ECM harness connector, fasten it securely with a lever as far as it will go as shown in the figure.**

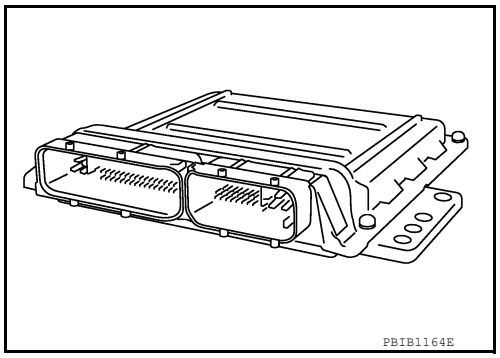

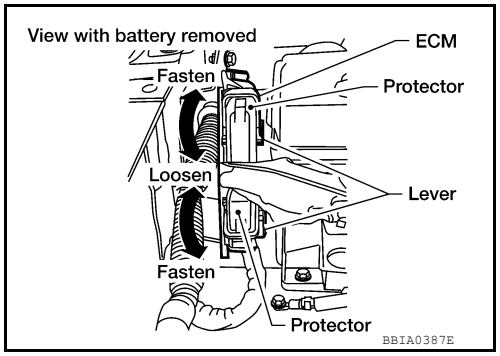

- **When connecting or disconnecting pin connectors into or from ECM, take care not to damage pin terminals (bend or break).**
  Make sure that there are not any bends or breaks on ECM pin terminal, when connecting pin connectors.
- **Securely connect ECM harness connectors.**
  A poor connection can cause an extremely high (surge) voltage to develop in coil and condenser, thus resulting in damage to ICs.
- **Keep engine control system harness at least 10 cm (4 in) away from adjacent harness, to prevent engine control system malfunctions due to receiving external noise, degraded operation of ICs, etc.**
- **Keep engine control system parts and harness dry.**

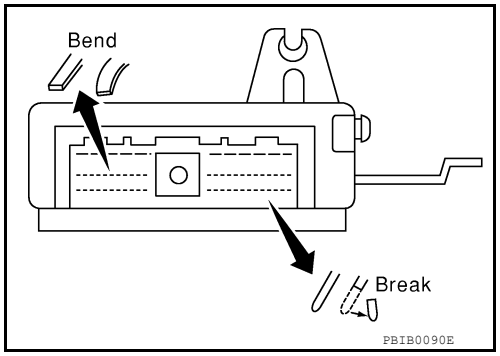

- **Before replacing ECM, perform ECM Terminals and Reference Value inspection and make sure ECM functions properly. Refer to EC-65, "ECM Terminal and Reference Value".**
- **Handle mass air flow sensor carefully to avoid damage.**
- **Do not disassemble mass air flow sensor.**
- **Do not clean mass air flow sensor with any type of detergent.**
- **Do not disassemble electric throttle control actuator.**
- **Even a slight leak in the air intake system can cause serious incidents.**
- **Do not shock or jar the camshaft position sensor (PHASE), crankshaft position sensor (POS).**

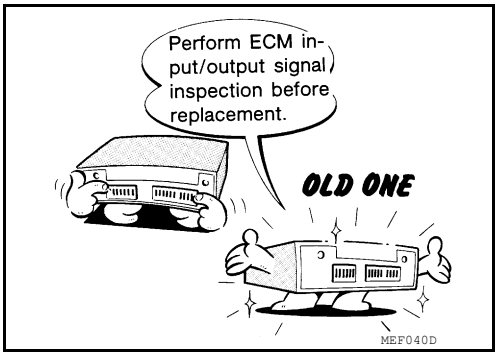

- **After performing each TROUBLE DIAGNOSIS, perform DTC Confirmation Procedure or Overall Function Check.**
  The DTC should not be displayed in the DTC Confirmation Procedure if the repair is completed. The Overall Function Check should be a good result if the repair is completed.

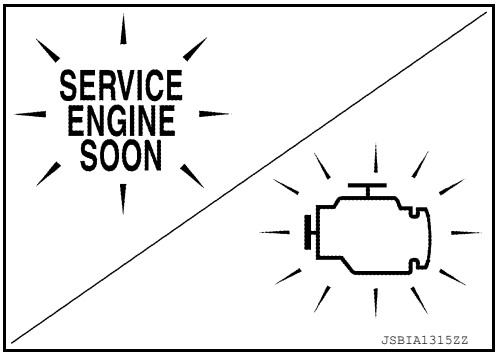

- **When measuring ECM signals with a circuit tester, never allow the two tester probes to contact.**
  Accidental contact of probes will cause a short circuit and damage the ECM power transistor.
- **Do not use ECM ground terminals when measuring input/output voltage. Doing so may result in damage to the ECM's transistor. Use a ground other than ECM terminals, such as the ground.**

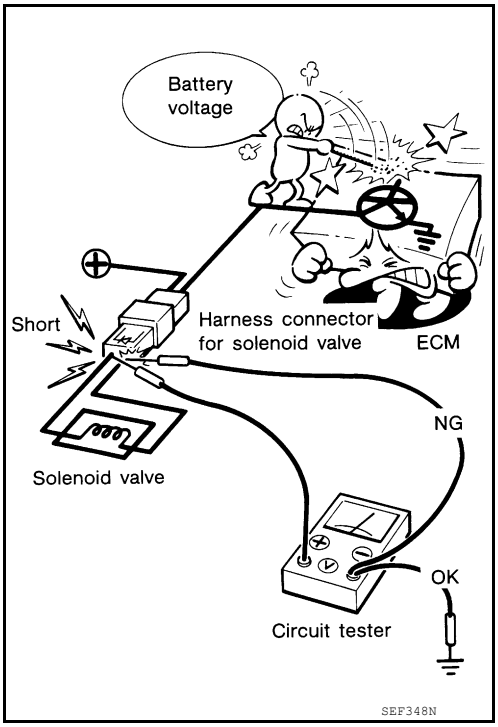

- **B1 indicates the bank 1, B2 indicates the bank 2 as shown in the figure.**

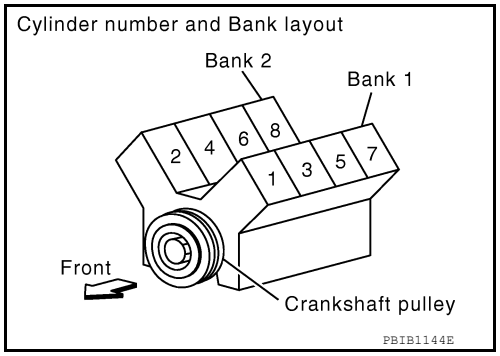

- **Do not operate fuel pump when there is no fuel in lines.**
- **Tighten fuel hose clamps to the specified torque.**

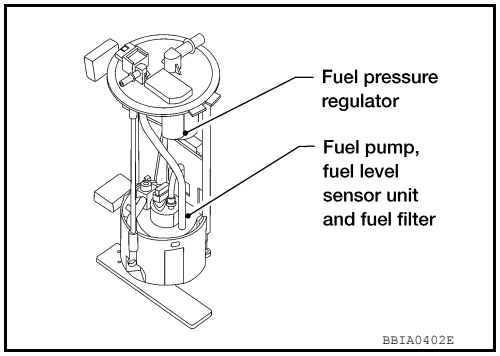

- **Do not depress accelerator pedal when starting.**
- **Immediately after starting, do not rev up engine unnecessarily.**
- **Do not rev up engine just prior to shutdown.**

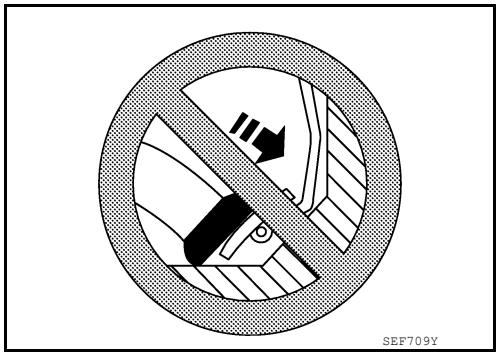

- **When installing C.B. ham radio or a mobile phone, be sure to observe the following as it may adversely affect electronic control systems depending on installation location.**
  - **Keep the antenna as far as possible from the electronic control units.**
  - **Keep the antenna feeder line more than 20 cm (8 in) away from the harness of electronic controls.**
    Do not let them run parallel for a long distance.
  - **Adjust the antenna and feeder line so that the standing-wave radio can be kept smaller.**
  - **Be sure to ground the radio to vehicle body.**

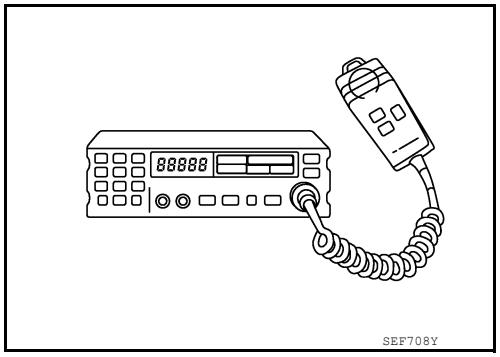

- **<Flexible Fuel Vehicle>**
  When replacing the ECM, there is a small possibility that engine does not start under cold weather. This is caused by the large difference between the actual and the presumed ethanol mixture ratio. In such a case, perform EC-128, "Ethanol Mixture Ratio Adaptation (Flexible Fuel Vehicle)".

PREPARATION

PREPARATION

Special Service Tool

INFOID:0000000011291590

The actual shapes of Kent-Moore tools may differ from those of special service tools illustrated here.

Tool number (Kent-Moore No.) Tool name	Description	
EG17650301 (J-33984-A) Radiator cap tester adapter	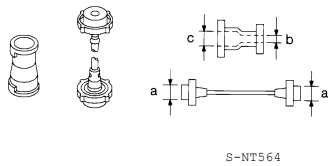	Adapting radiator cap tester to radiator cap and radiator filler neck **a: 28 (1.10) dia.** **b: 31.4 (1.236) dia.** **c: 41.3 (1.626) dia.** Unit: mm (in)
KV10117100 (J-36471-A) Heated oxygen sensor wrench	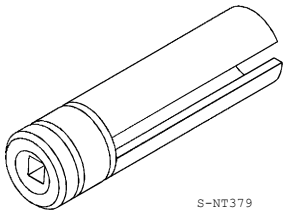	Loosening or tightening heated oxygen sensors with 22 mm (0.87 in) hexagon nut
KV10114400 (J-38365) Heated oxygen sensor wrench	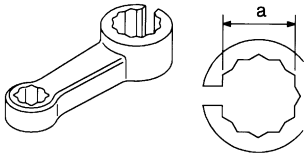	Loosening or tightening heated oxygen sensors **a: 22 mm (0.87 in)**
(J-44626) Air fuel ratio (A/F) sensor wrench	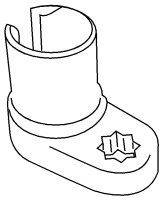	Loosening or tightening air fuel ratio (A/F) sensor 1
(J-44321) Fuel pressure gauge kit	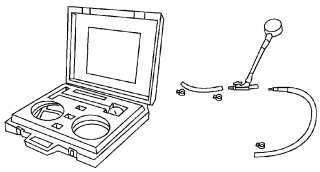	Checking fuel pressure
(J-44321-6) Fuel pressure adapter	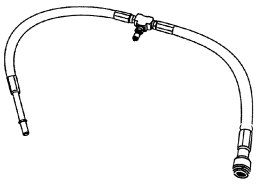	Connecting fuel pressure gauge to quick connector type fuel lines.

Tool number (Kent-Moore No.) Tool name	Description	
(J-45488) Quick connector release	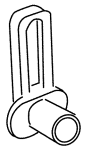 PBIC0198E	Remove fuel tube quick connectors in engine room.
(J-23688) Engine coolant refractometer	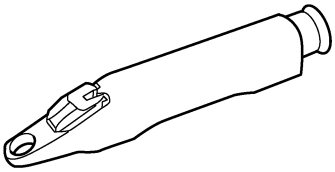 WBIA0539E	Checking concentration of ethylene glycol in engine coolant

Commercial Service Tool

INFOID:0000000011291591

Tool name (Kent-Moore No.)	Description	
Leak detector i.e.: (J-41416)	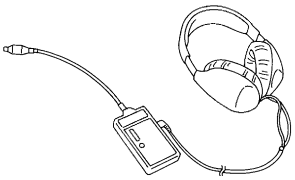 S-NT703	Locating the EVAP leak
EVAP service port adapter i.e.: (J-41413-OBD)	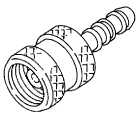 S-NT704	Applying positive pressure through EVAP service port
Fuel filler cap adapter i.e.: (MLR-8382)	 S-NT815	Checking fuel tank vacuum relief valve opening pressure
Socket wrench	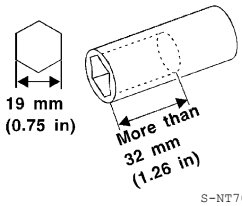 S-NT705	Removing and installing engine coolant temperature sensor

Tool name (Kent-Moore No.)	Description	
Oxygen sensor thread cleaner i.e.: (J-43897-18) (J-43897-12)	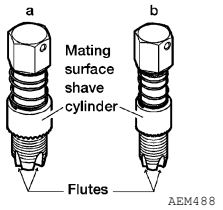	Reconditioning the exhaust system threads before installing a new oxygen sensor. Use with anti-seize lubricant shown below. **a: 18 mm diameter with pitch 1.5 mm for Zirconia Oxygen Sensor** **b: 12 mm diameter with pitch 1.25 mm for Titania Oxygen Sensor**
Anti-seize lubricant i.e.: (Permatex™ 133AR or equivalent meeting MIL specification MIL-A-907)		Lubricating oxygen sensor thread cleaning tool when reconditioning exhaust system threads.

SYSTEM DESCRIPTION

ENGINE CONTROL SYSTEM

System Diagram

INFOID:0000000011291592

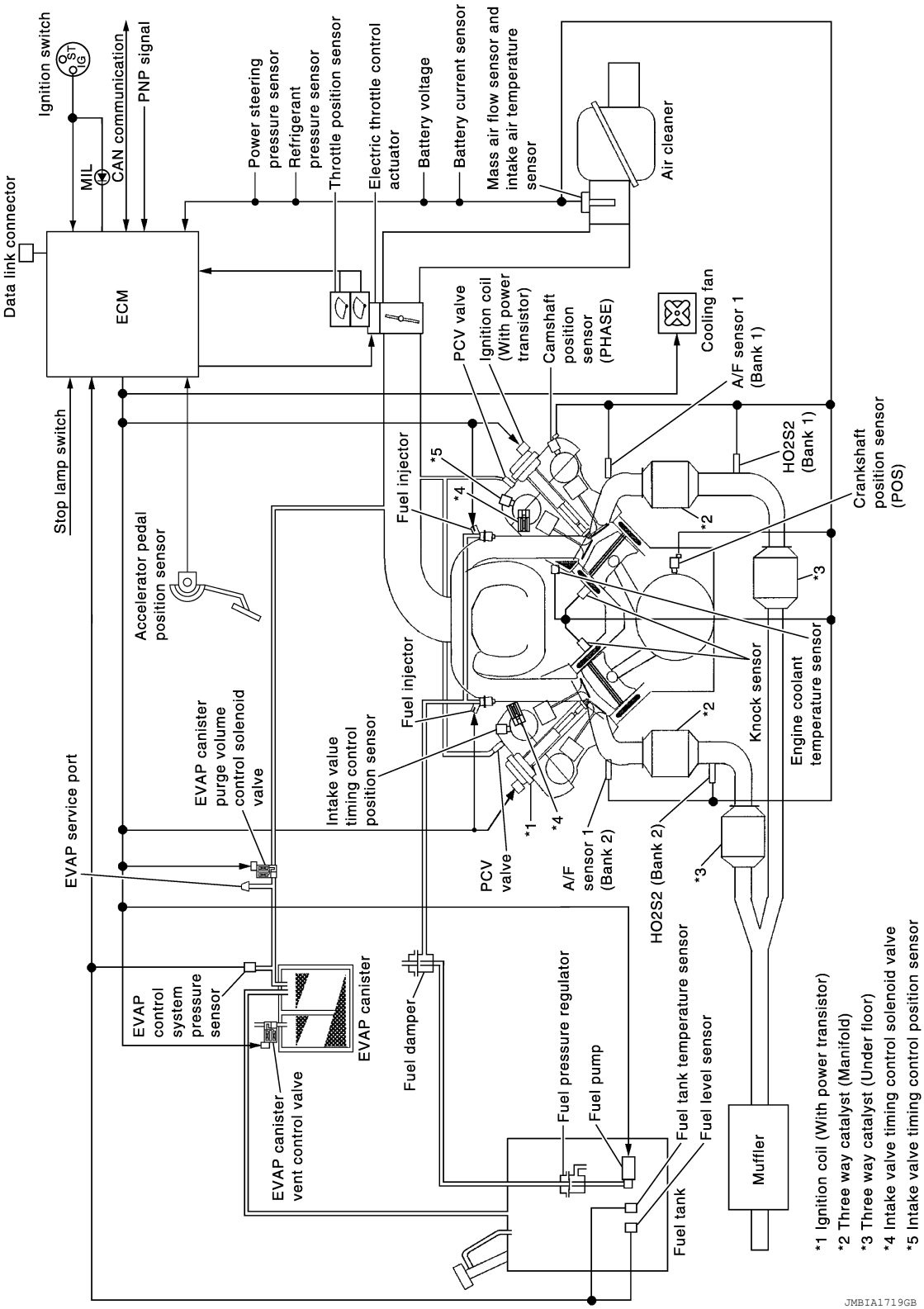

Engine Control Component Parts Location

INFOID:0000000011291593

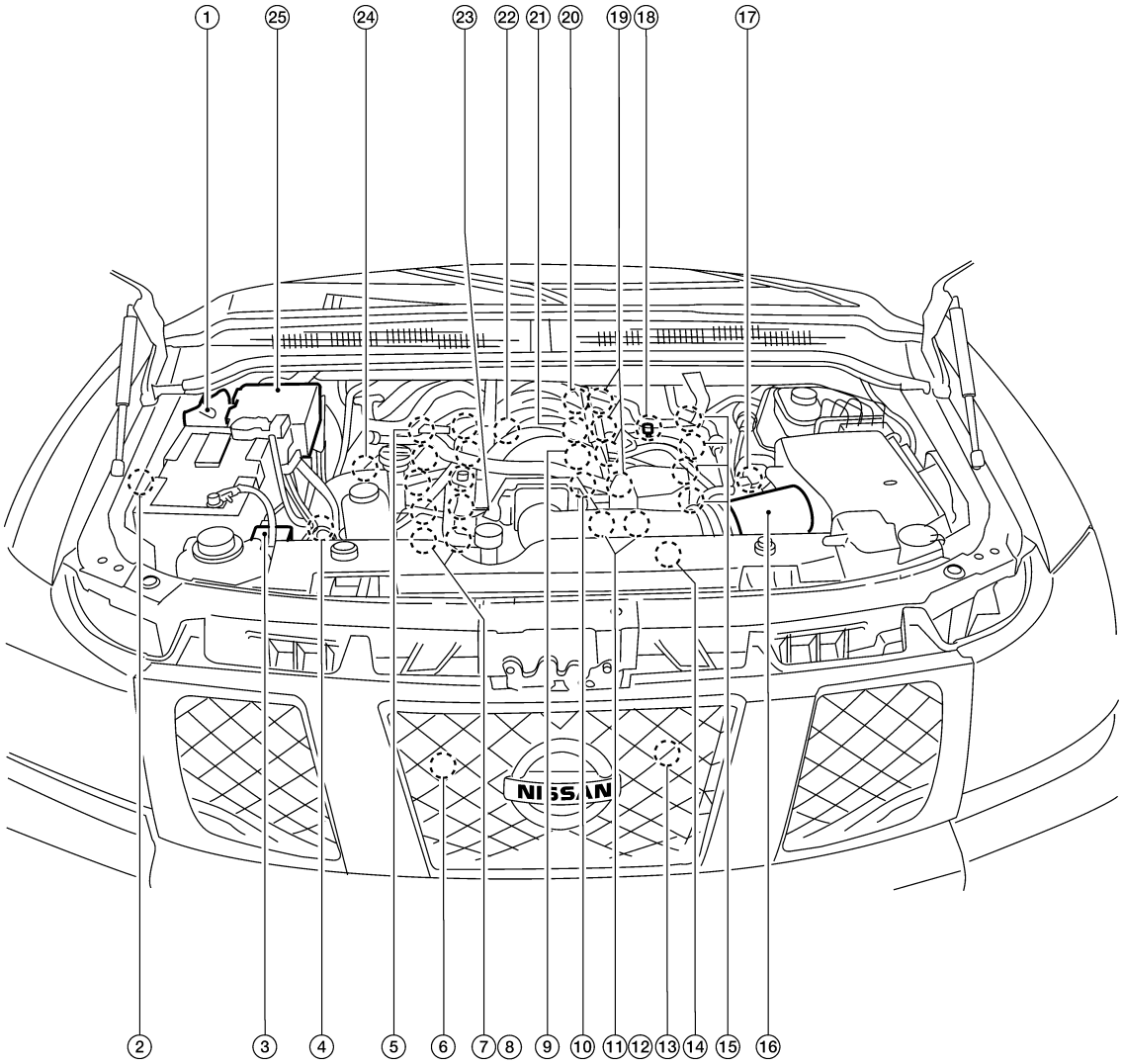

BBIA0772E

1. ECM	2. Dropping resistor (FFV models only)	3. Battery current sensor
4. Power steering pressure sensor	5. Ignition coil (with power transistor) and spark plug (bank 2)	6. Refrigerant pressure sensor
7. Intake valve timing control position sensor (bank 2)	8. Intake valve timing control solenoid valve (bank 2)	9. Engine coolant temperature sensor
10. Electric throttle control actuator	11. Intake valve timing control position sensor (bank 1)	12. Intake valve timing control solenoid valve (bank 1)
13. Cooling fan motor	14. Camshaft position sensor (PHASE)	15. Ignition coil (with power transistor) and spark plug (bank 1)
16. Mass air flow sensor (with intake air temperature sensor)	17. A/F sensor 1 (bank 1)	18. EVAP service port
19. Fuel injector (bank 1)	20. Knock sensor (bank 1)	21. EVAP canister purge volume control solenoid valve
22. Knock sensor (bank 2)	23. Fuel injector (bank 2)	24. A/F sensor 1 (bank 2)
25. IPDM E/R		

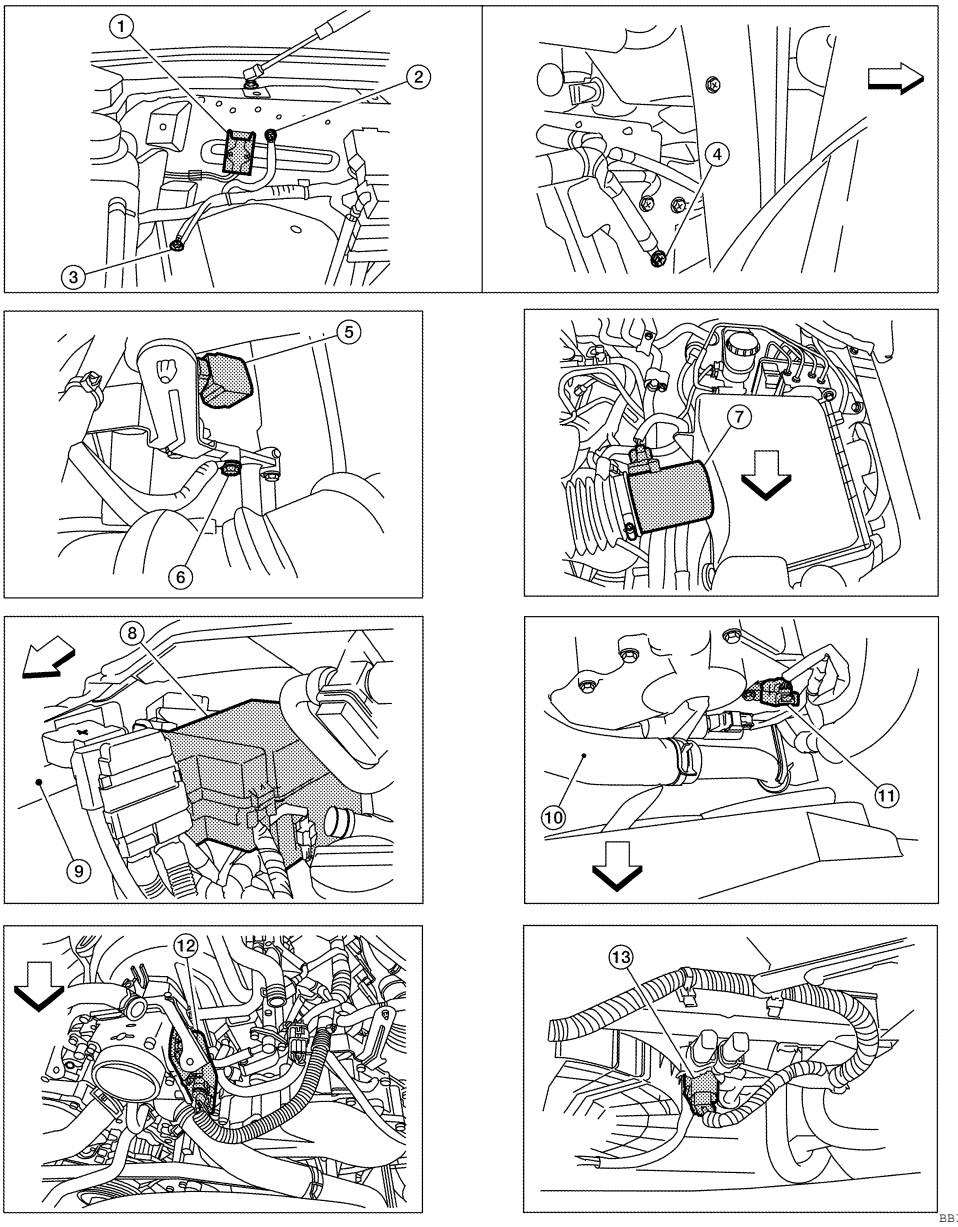

1. Dropping resistor (FFV models only) (view with battery removed)
2. Body ground (view with battery removed)
3. Body ground (view with battery removed)
4. Body ground
5. No.1 ignition coil
6. Engine ground
7. Mass air flow sensor (with intake air temperature sensor)
8. IPDM E/R
9. Battery
10. Radiator hose
11. Camshaft position sensor (PHASE)
12. Electric throttle control actuator (view with intake air duct removed)
13. Cooling fan motor harness connector

⇦ : Vehicle front

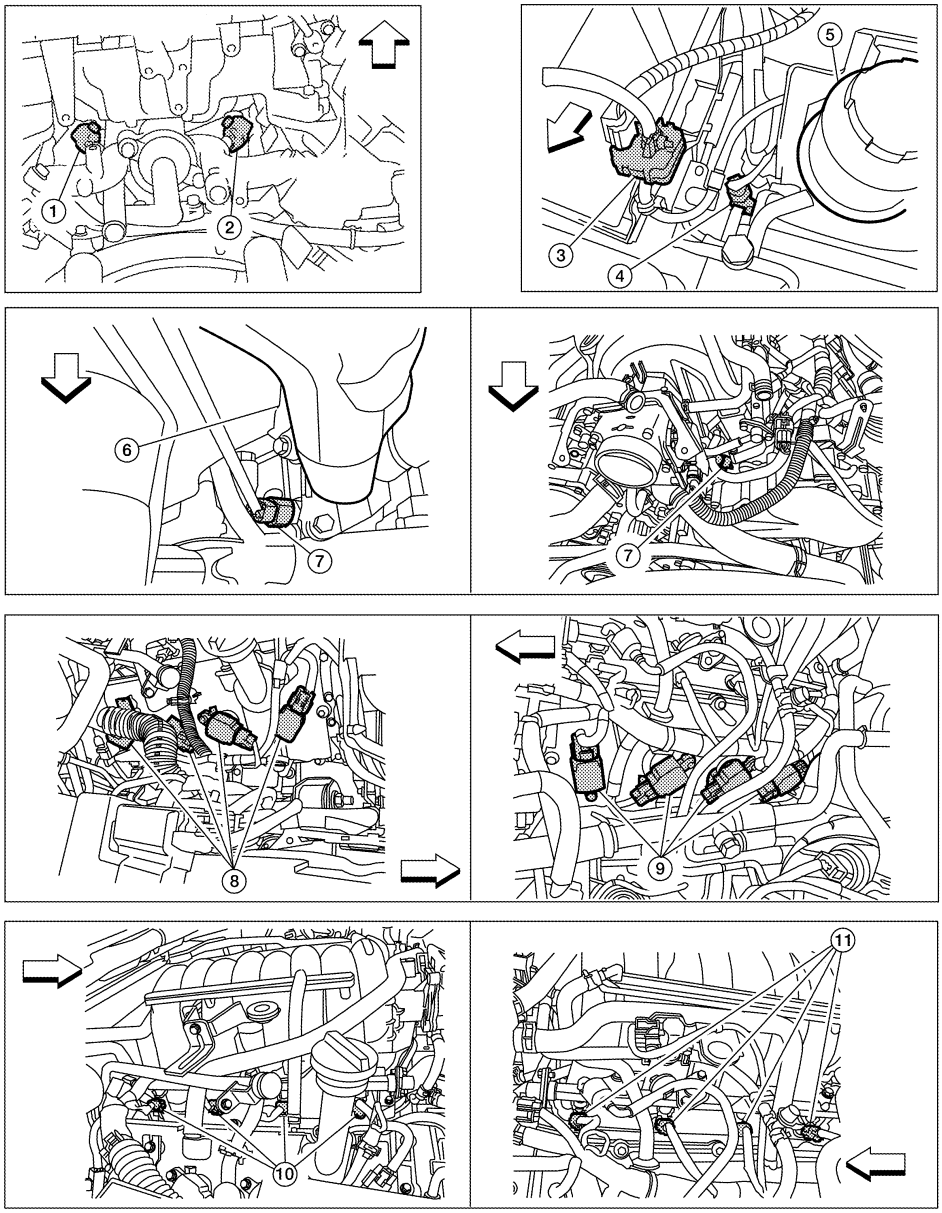

BBIA0774E

1. Knock sensor (bank 1) (view with engine removed)
2. Knock sensor (bank 2) (view with engine removed)
3. Battery current sensor
4. Power steering pressure sensor
5. Power steering fluid reservoir
6. Intake manifold
7. Engine coolant temperature sensor
8. Ignition coils (with power transistor)
9. Ignition coil (with power transistor)
10. Injector harness connectors (bank 2)
11. Injector harness connectors (bank 1)

⇦ : Vehicle front

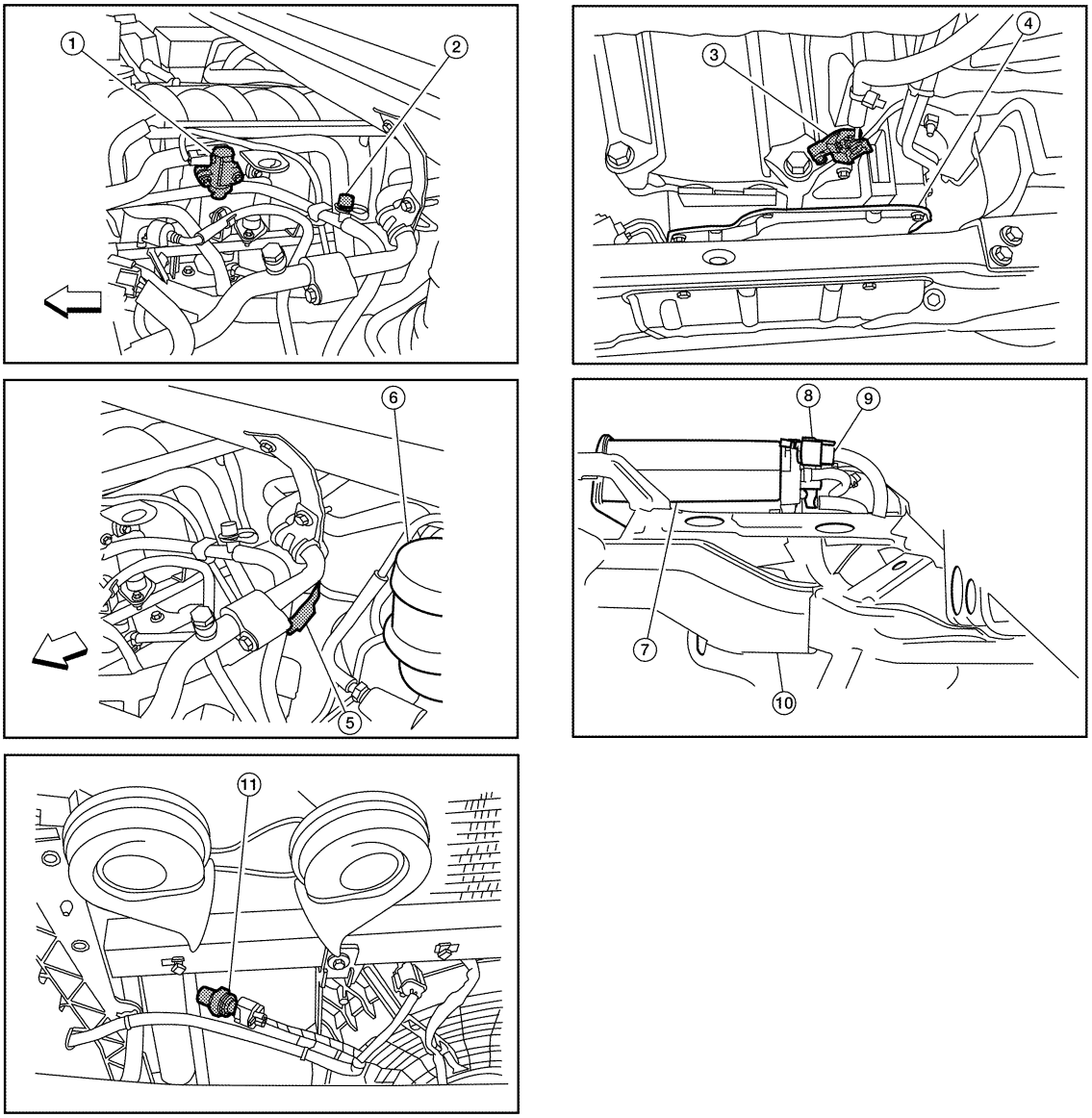

1. EVAP canister purge volume control solenoid valve (view with engine cover removed)
2. EVAP service port (view with engine cover removed)
3. Crankshaft position sensor (POS) (view from under the vehicle)
4. Engine oil pan (view from under the vehicle)
5. Condenser-1
6. Brake fluid reservoir
7. EVAP canister (view with fuel tank removed)
8. EVAP control system pressure sensor (view with fuel tank removed)
9. EVAP canister vent control valve (view with fuel tank removed)
10. Rear suspension member (view with fuel tank removed)
11. Refrigerant pressure sensor (view with front grille removed)

⇦ : Vehicle front

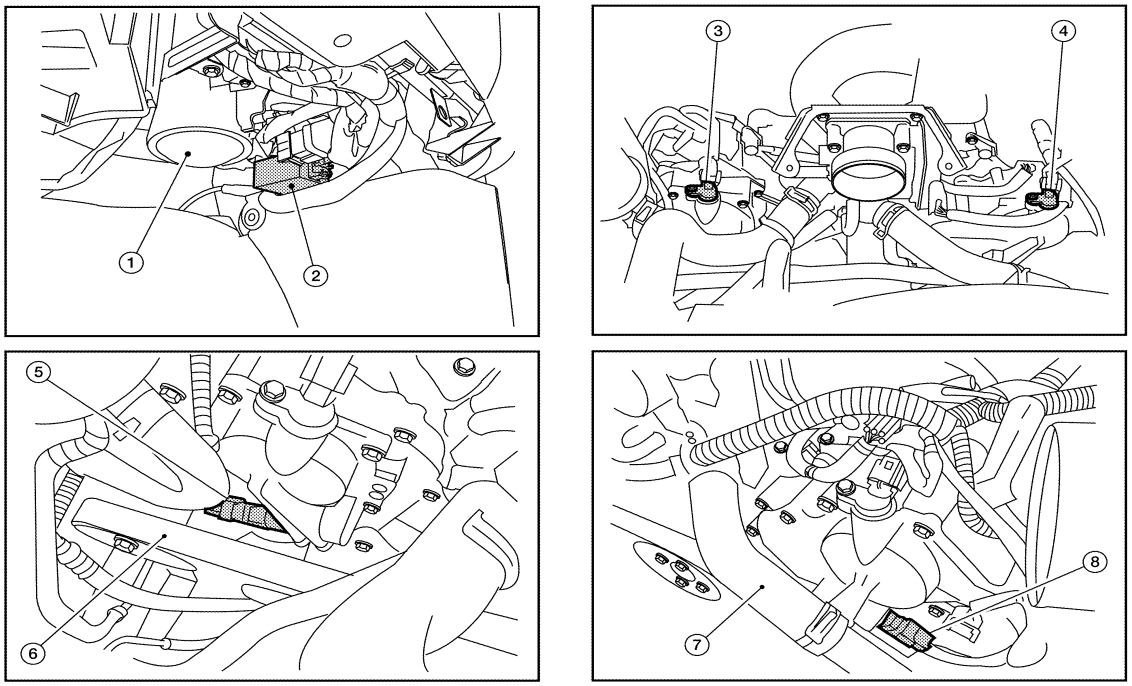

BBIA0779E

1. Fuel pump control module (FFV models only)
2. Blower motor
3. Intake valve timing control position sensor (bank 2) (view with engine cover and intake air duct removed)
4. Intake valve timing control position sensor (bank 1) (view with engine cover and intake air duct removed)
5. Intake valve timing control solenoid valve (bank 2) (view with engine cover and intake air duct removed)
6 Drive belt (view with engine cover and intake air duct removed)
7. Radiator hose (view with engine cover and intake air duct removed)
8. Intake valve timing control solenoid valve (bank 1) (view with engine cover and intake air duct removed)

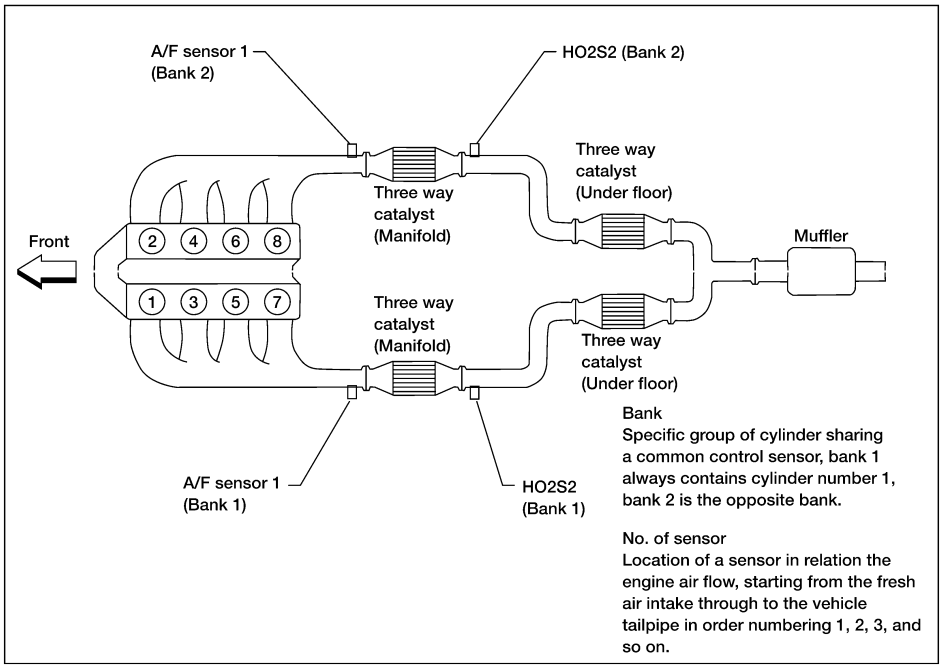
A/F sensor 1
(Bank 2)
HO2S2 (Bank 2)
Three way
catalyst
(Under floor)
Three way
catalyst
(Manifold)
Front
2 4 6 8
1 3 5 7
Muffler
Three way
catalyst
(Manifold)
Three way
catalyst
(Under floor)
Bank
Specific group of cylinder sharing a common control sensor, bank 1 always contains cylinder number 1, bank 2 is the opposite bank.
A/F sensor 1
(Bank 1)
HO2S2
(Bank 1)
No. of sensor
Location of a sensor in relation the engine air flow, starting from the fresh air intake through to the vehicle tailpipe in order numbering 1, 2, 3, and so on.

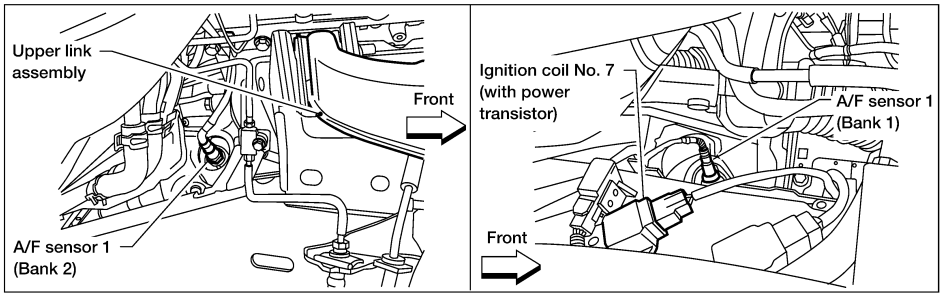
Upper link
assembly
Front
A/F sensor 1
(Bank 2)
Ignition coil No. 7
(with power
transistor)
A/F sensor 1
(Bank 1)
Front

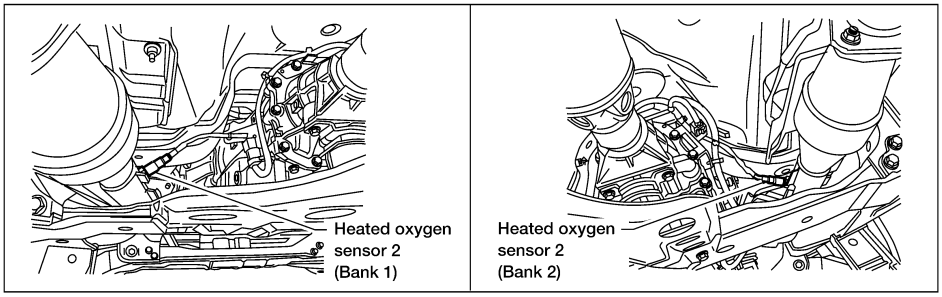
Heated oxygen
sensor 2
(Bank 1)
Heated oxygen
sensor 2
(Bank 2)

BBIA0384E

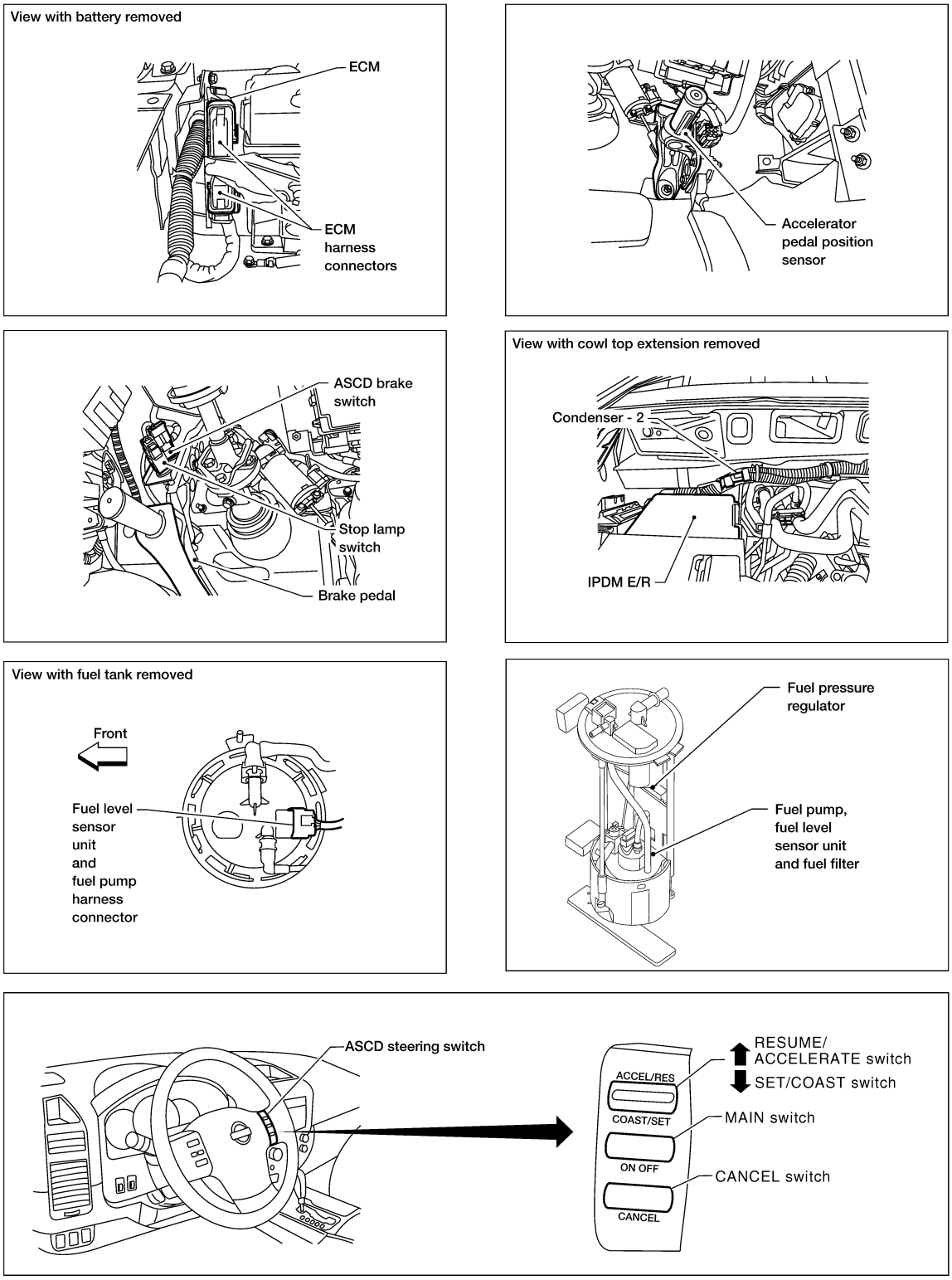
View with battery removed
ECM
ECM harness connectors
Accelerator pedal position sensor
ASCD brake switch
Stop lamp switch
Brake pedal
View with cowl top extension removed
Condenser - 2
IPDM E/R
View with fuel tank removed
Front
Fuel level sensor unit and fuel pump harness connector
Fuel pressure regulator
Fuel pump, fuel level sensor unit and fuel filter
ASCD steering switch
ACCEL/RES
COAST/SET
ON OFF
CANCEL
RESUME/ ACCELERATE switch
SET/COAST switch
MAIN switch
CANCEL switch

PBIB2637E

MULTIPORT FUEL INJECTION SYSTEM

System Description

INFOID:0000000011291594

INPUT/OUTPUT SIGNAL CHART

Sensor	Input signal to ECM	ECM function	Actuator
Crankshaft position sensor (POS)	Engine speed*3 Piston position	Fuel injection & mixture ratio control	Fuel injector
Camshaft position sensor (PHASE)			
Mass air flow sensor	Amount of intake air		
Engine coolant temperature sensor	Engine coolant temperature		
Air fuel ratio (A/F) sensor 1	Density of oxygen in exhaust gas		
Throttle position sensor	Throttle position		
Accelerator pedal position sensor	Accelerator pedal position		
TCM	Gear position		
Knock sensor	Engine knocking condition		
Battery	Battery voltage*3		
Power steering pressure sensor	Power steering operation		
Heated oxygen sensor 2*1	Density of oxygen in exhaust gas		
ABS actuator and electric unit (control unit)	VDC/TCS operation command*2		
Air conditioner switch	Air conditioner operation*2		
Wheel sensor	Vehicle speed*2		

*1: This sensor is not used to control the engine system. This is used only for the on board diagnosis.

*2: This signal is sent to the ECM through CAN communication line.

*3: ECM determines the start signal status by the signals of engine speed and battery voltage.

SYSTEM DESCRIPTION

The amount of fuel injected from the fuel injector is determined by the ECM. The ECM controls the length of time the valve remains open (injection pulse duration). The amount of fuel injected is a program value in the ECM memory. The program value is preset by engine operating conditions. These conditions are determined by input signals (for engine speed and intake air) from both the crankshaft position sensor and the mass air flow sensor.

VARIOUS FUEL INJECTION INCREASE/DECREASE COMPENSATION

In addition, the amount of fuel injected is compensated to improve engine performance under various operating conditions as listed below.

<Fuel increase>
- During warm-up
- When starting the engine
- During acceleration
- Hot-engine operation
- When selector lever is changed from N to D
- High-load, high-speed operation

<Fuel decrease>
- During deceleration
- During high engine speed operation

MIXTURE RATIO FEEDBACK CONTROL (CLOSED LOOP CONTROL)

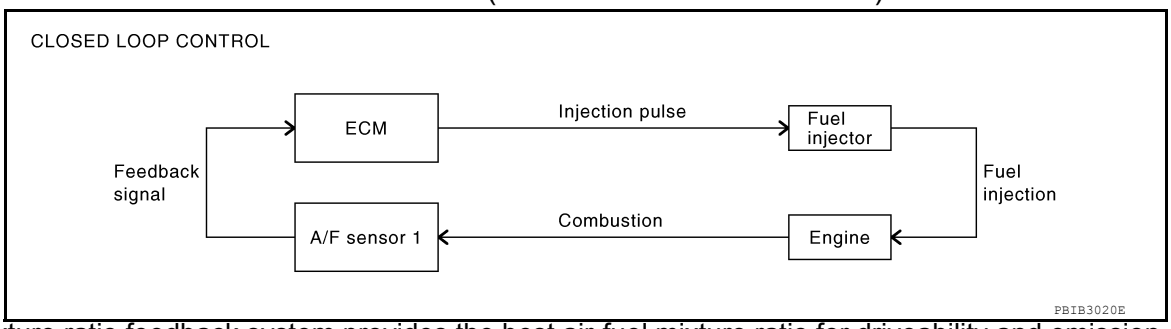

The mixture ratio feedback system provides the best air-fuel mixture ratio for driveability and emission control. The three way catalyst (manifold) can then better reduce CO, HC and NOx emissions. This system uses air fuel ratio (A/F) sensor 1 in the exhaust manifold to monitor whether the engine operation is rich or lean. The ECM adjusts the injection pulse width according to the sensor voltage signal. For more information about air fuel ratio (A/F) sensor 1, refer to EC-206. This maintains the mixture ratio within the range of stoichiometric (ideal air-fuel mixture).
This stage is referred to as the closed loop control condition.
Heated oxygen sensor 2 is located downstream of the three way catalyst (manifold). Even if the switching characteristics of air fuel ratio (A/F) sensor 1 shift, the air-fuel ratio is controlled to stoichiometric by the signal from heated oxygen sensor 2.

Open Loop Control

The open loop system condition refers to when the ECM detects any of the following conditions. Feedback control stops in order to maintain stabilized fuel combustion.
- Deceleration and acceleration
- High-load, high-speed operation
- Malfunction of A/F sensor 1 or its circuit
- Insufficient activation of A/F sensor 1 at low engine coolant temperature
- High engine coolant temperature
- During warm-up
- After shifting from N to D
- When starting the engine

MIXTURE RATIO SELF-LEARNING CONTROL

The mixture ratio feedback control system monitors the mixture ratio signal transmitted from A/F sensor 1. This feedback signal is then sent to the ECM. The ECM controls the basic mixture ratio as close to the theoretical mixture ratio as possible. However, the basic mixture ratio is not necessarily controlled as originally designed. Both manufacturing differences (i.e., mass air flow sensor hot wire) and characteristic changes during operation (i.e., injector clogging) directly affect mixture ratio.
Accordingly, the difference between the basic and theoretical mixture ratios is monitored in this system. This is then computed in terms of “injection pulse duration” to automatically compensate for the difference between the two ratios.
“Fuel trim” refers to the feedback compensation value compared against the basic injection duration. Fuel trim includes short term fuel trim and long term fuel trim.
“Short term fuel trim” is the short-term fuel compensation used to maintain the mixture ratio at its theoretical value. The signal from A/F sensor 1 indicates whether the mixture ratio is RICH or LEAN compared to the theoretical value. The signal then triggers a reduction in fuel volume if the mixture ratio is rich, and an increase in fuel volume if it is lean.
“Long term fuel trim” is overall fuel compensation carried out long-term to compensate for continual deviation of the short term fuel trim from the central value. Such deviation will occur due to individual engine differences, wear over time and changes in the usage environment.
<Flexible Fuel Vehicle>
The ECM also presumes the ethanol mixture ratio using the feedback signal from the A/F sensor 1 during the vehicle is driving. Then the ECM controls the amount of fuel injected according to the presumed ethanol mixture ratio.

FUEL INJECTION TIMING

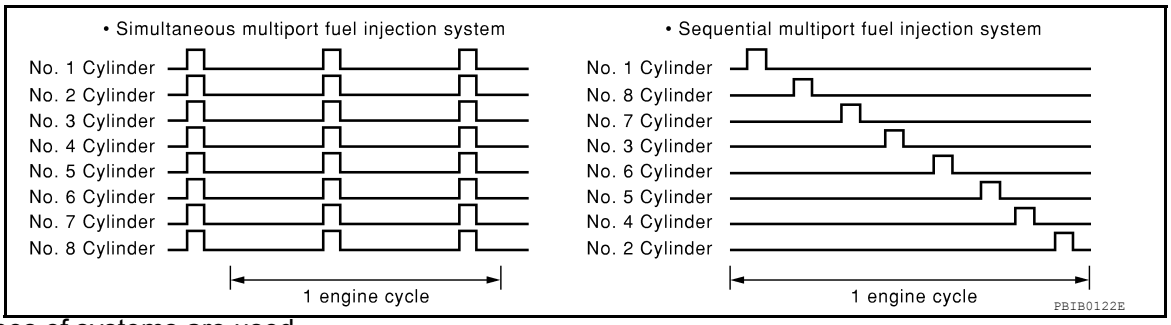

Two types of systems are used.

Sequential Multiport Fuel Injection System

Fuel is injected into each cylinder during each engine cycle according to the firing order. This system is used when the engine is running.

Simultaneous Multiport Fuel Injection System

Fuel is injected simultaneously into all eight cylinders twice each engine cycle. In other words, pulse signals of the same width are simultaneously transmitted from the ECM.
The eight fuel injectors will then receive the signals two times for each engine cycle.
This system is used when the engine is being started and/or if the fail-safe system (CPU) is operating.

FUEL SHUT-OFF

Fuel to each cylinder is cut off during deceleration, operation of the engine at excessively high speeds or operation of the vehicle at excessively high speed.

ELECTRIC IGNITION SYSTEM

System Description

INFOID:0000000011291595

INPUT/OUTPUT SIGNAL CHART

Sensor	Input signal to ECM	ECM function	Actuator
Crankshaft position sensor (POS)	Engine speed*2 Piston position	Ignition timing control	Power transistor
Camshaft position sensor (PHASE)			
Mass air flow sensor	Amount of intake air		
Engine coolant temperature sensor	Engine coolant temperature		
Throttle position sensor	Throttle position		
Accelerator pedal position sensor	Accelerator pedal position		
Knock sensor	Engine knocking		
TCM	Gear position		
Battery	Battery voltage*2		
Wheel sensor	Vehicle speed*1		

*1: This signal is sent to the ECM through CAN communication line.

*2: ECM determines the start signal status by the signals of engine speed and battery voltage.

SYSTEM DESCRIPTION

Firing order: 1 - 8 - 7 - 3 - 6 - 5 - 4 -2

The ignition timing is controlled by the ECM to maintain the best air-fuel ratio for every running condition of the engine. The ignition timing data is stored in the ECM.

The ECM receives information such as the injection pulse width and camshaft position sensor signal. Computing this information, ignition signals are transmitted to the power transistor.

During the following conditions, the ignition timing is revised by the ECM according to the other data stored in the ECM.

- At starting
- During warm-up
- At idle
- At low battery voltage
- During acceleration

The knock sensor retard system is designed only for emergencies. The basic ignition timing is programmed within the anti-knocking zone, if recommended fuel is used under dry conditions. The retard system does not operate under normal driving conditions. If engine knocking occurs, the knock sensor monitors the condition. The signal is transmitted to the ECM. The ECM retards the ignition timing to eliminate the knocking condition.

AIR CONDITIONING CUT CONTROL

Input/Output Signal Chart

INFOID:0000000011291596

Sensor	Input Signal to ECM	ECM function	Actuator
Air conditioner switch	Air conditioner ON signal*1	Air conditioner cut control	Air conditioner relay
Accelerator pedal position sensor	Accelerator pedal position		
Crankshaft position sensor (POS) Camshaft position sensor (PHASE)	Engine speed*2		
Engine coolant temperature sensor	Engine coolant temperature		
Battery	Battery voltage*2		
Refrigerant pressure sensor	Refrigerant pressure		
Power steering pressure sensor	Power steering operation		
Wheel sensor	Vehicle speed*1		

*1: This signal is sent to the ECM through CAN communication line.

*2: ECM determines the start signal status by the signals of engine speed and battery voltage.

System Description

INFOID:0000000011291597

This system improves engine operation when the air conditioner is used.
Under the following conditions, the air conditioner is turned OFF.
- When the accelerator pedal is fully depressed.
- When cranking the engine.
- At high engine speeds.
- When the engine coolant temperature becomes excessively high.
- When operating power steering during low engine speed or low vehicle speed.
- When engine speed is excessively low.
- When refrigerant pressure is excessively low or high.

AUTOMATIC SPEED CONTROL DEVICE (ASCD)

System Description

INFOID:0000000011291598

INPUT/OUTPUT SIGNAL CHART

Sensor	Input signal to ECM	ECM function	Actuator
ASCD brake switch	Brake pedal operation	ASCD vehicle speed control	Electric throttle control actuator
Stop lamp switch	Brake pedal operation		
ASCD steering switch	ASCD steering switch operation		
Wheel sensor	Vehicle speed*		
TCM	Gear position		
	Powertrain revolution*		

*: This signal is sent to the ECM through CAN communication line

BASIC ASCD SYSTEM

Refer to Owner's Manual for ASCD operating instructions.
Automatic Speed Control Device (ASCD) allows a driver to keep vehicle at predetermined constant speed without depressing accelerator pedal. Driver can set vehicle speed in advance between approximately 40 km/h (25 MPH) and 144 km/h (89 MPH).
ECM controls throttle angle of electric throttle control actuator to regulate engine speed.
The ASCD operation status is indicated by two indicators (CRUISE and SET on the information display) on the combination meter. If any malfunction occurs in the ASCD system, SET indicator blink and ASCD control is deactivated.
NOTE:
Always drive vehicle in safe manner according to traffic conditions and obey all traffic laws.

SET OPERATION

Press MAIN switch. (CRUISE is indicator on the information display.)
When vehicle speed reaches a desired speed between approximately 40 km/h (25 MPH) and 144 km/h (89 MPH), press SET/COAST switch. (Then SET is indicator on the information display, and the set speed is also displayed.)

ACCELERATE OPERATION

If the RESUME/ACCELERATE switch is pressed during cruise control driving, increase the vehicle speed until the switch is released or vehicle speed reaches maximum speed controlled by the system.
And then ASCD will keep the new set speed.

CANCEL OPERATION

When any of following conditions exist, cruise operation will be canceled.
- CANCEL switch is pressed
- More than 2 switches at ASCD steering switch are pressed at the same time (Set speed will be cleared)
- Brake pedal is depressed
- Selector lever is changed to N, P, R position
- Vehicle speed decreased to 13 km/h (8 MPH) lower than the set speed
- VDC system is operated

When the ECM detects any of the following conditions, the ECM will cancel the cruise operation and inform the driver by blinking indicator lamp.
- Engine coolant temperature is slightly higher than the normal operating temperature, CRUISE indicator may blink slowly.
  When the engine coolant temperature decreases to the normal operating temperature, CRUISE indicator will stop blinking and the cruise operation will be able to work by pressing SET/COAST switch or RESUME/ACCELERATE switch.
- Malfunction for some self-diagnoses regarding ASCD control: SET lamp will blink quickly.

If MAIN switch is turned to OFF during ASCD is activated, all of ASCD operations will be canceled and vehicle speed memory will be erased.

COAST OPERATION

When the SET/COAST switch is pressed during cruise control driving, decrease vehicle set speed until the switch is released. And then ASCD will keep the new set speed.

RESUME OPERATION

When the RESUME/ACCELERATE switch is pressed after cancel operation other than pressing MAIN switch is performed, vehicle speed will return to last set speed. To resume vehicle set speed, vehicle condition must meet following conditions.

- Brake pedal is released
- A/T selector lever is in other than P and N positions
- Vehicle speed is greater than 40 km/h (25 MPH) and less than 144 km/h (89 MPH)

Component Description

INFOID:0000000011291599

ASCD STEERING SWITCH

Refer to EC-416.

ASCD BRAKE SWITCH

Refer to EC-420, and EC-467.

STOP LAMP SWITCH

Refer to EC-420, EC-427 and EC-467.

ELECTRIC THROTTLE CONTROL ACTUATOR

Refer to EC-436, EC-439, EC-443 and EC-445.

ASCD INDICATOR

Refer to EC-470.

CAN COMMUNICATION

System Description

INFOID:0000000011291600

CAN (Controller Area Network) is a serial communication line for real time application. It is an on-vehicle multiplex communication line with high data communication speed and excellent error detection ability. Many electronic control units are equipped onto a vehicle, and each control unit shares information and links with other control units during operation (not independent). In CAN communication, control units are connected with 2 communication lines (CAN H line, CAN L line) allowing a high rate of information transmission with less wiring. Each control unit transmits/receives data but selectively reads required data only.
Refer to LAN-46, "CAN Communication Signal Chart", about CAN communication for detail.

COOLING FAN CONTROL

Description

INFOID:0000000011291601

SYSTEM DESCRIPTION

Cooling Fan Control

Sensor	Input signal to ECM	ECM function	Actuator
Crankshaft position sensor (POS) Camshaft position sensor (PHASE)	Engine speed*1	Cooling fan control	IPDM E/R (Cooling fan relay)
Battery	Battery voltage*1		
Wheel sensor*2	Vehicle speed		
Engine coolant temperature sensor	Engine coolant temperature		
Air conditioner switch	Air conditioner ON signal*2		
Refrigerant pressure sensor	Refrigerant pressure		

*1: The ECM determines the start signal status by the signals of engine speed and battery voltage.

*2: This signal is sent to ECM through CAN communication line.

The ECM controls the cooling fan corresponding to the vehicle speed, engine coolant temperature, refrigerant pressure, and air conditioner ON signal. The control system has 2-step control [HI/OFF].

Cooling Fan Operation

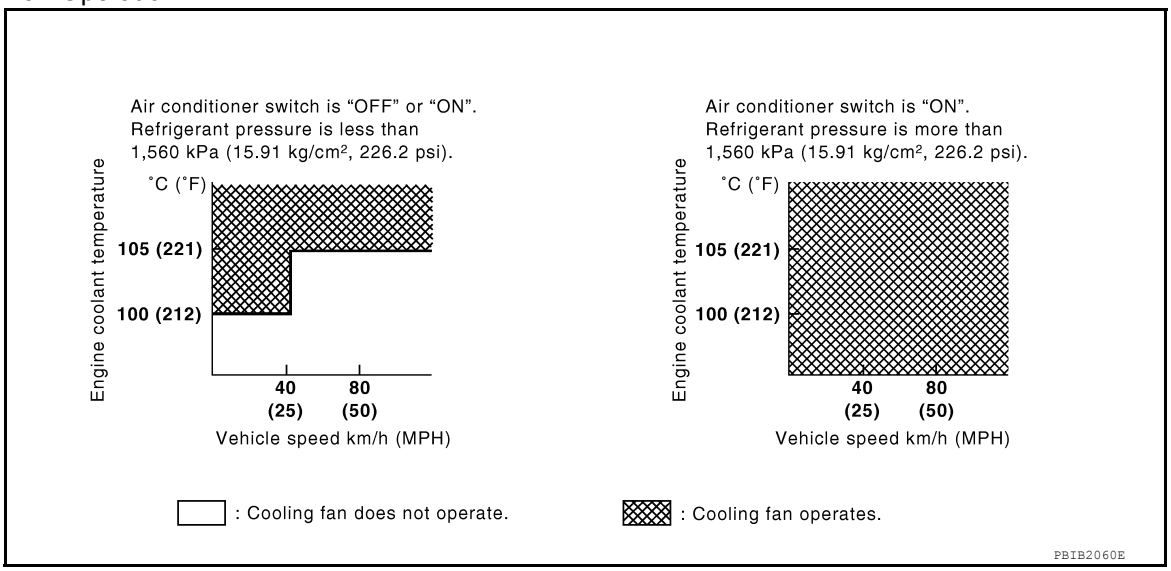

EVAPORATIVE EMISSION SYSTEM

Description

INFOID:0000000011291602

SYSTEM DESCRIPTION

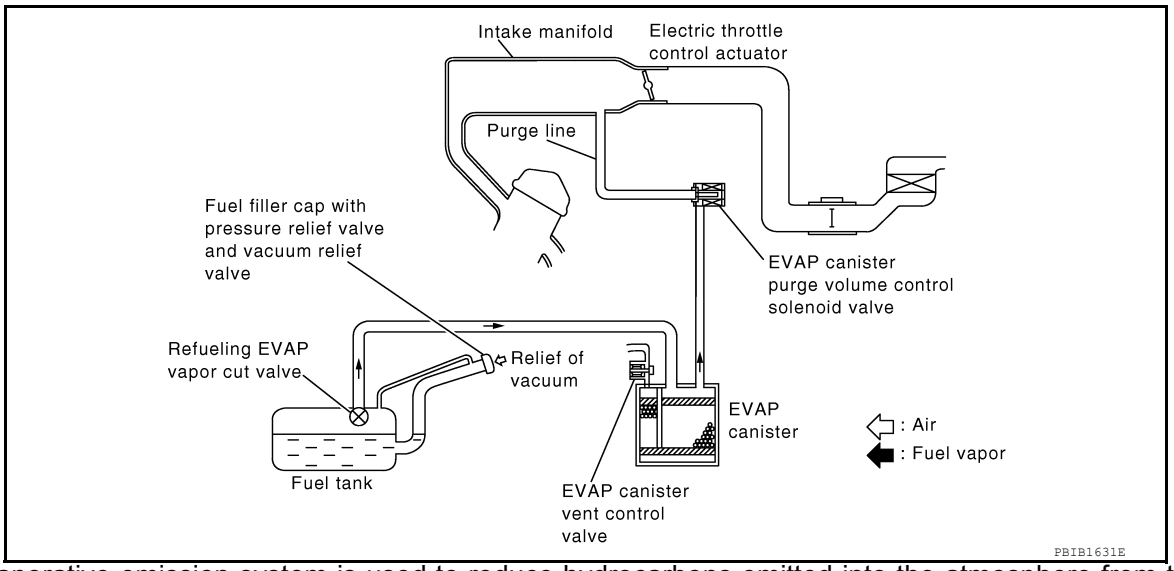

The evaporative emission system is used to reduce hydrocarbons emitted into the atmosphere from the fuel system. This reduction of hydrocarbons is accomplished by activated charcoals in the EVAP canister.
The fuel vapor in the sealed fuel tank is led into the EVAP canister which contains activated carbon and the vapor is stored there when the engine is not operating or when refueling to the fuel tank.
The vapor in the EVAP canister is purged by the air through the purge line to the intake manifold when the engine is operating. EVAP canister purge volume control solenoid valve is controlled by ECM. When the engine operates, the flow rate of vapor controlled by EVAP canister purge volume control solenoid valve is proportionally regulated as the air flow increases.
EVAP canister purge volume control solenoid valve also shuts off the vapor purge line during decelerating and idling.

EVAPORATIVE EMISSION LINE DRAWING

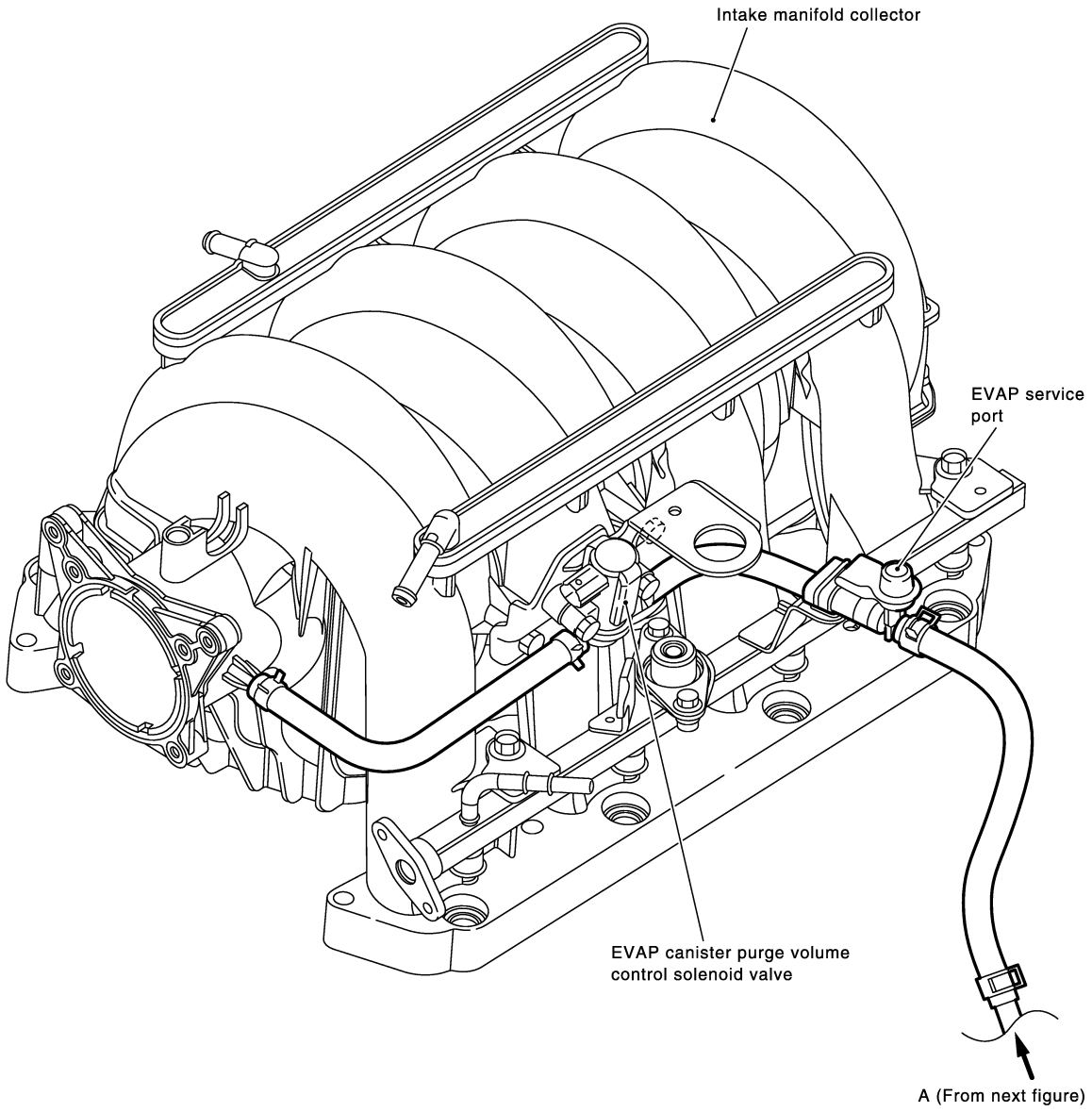

NOTE:
Do not use soapy water or any type of solvent while installing vacuum hoses or purge hoses.

JMBIA1703GB

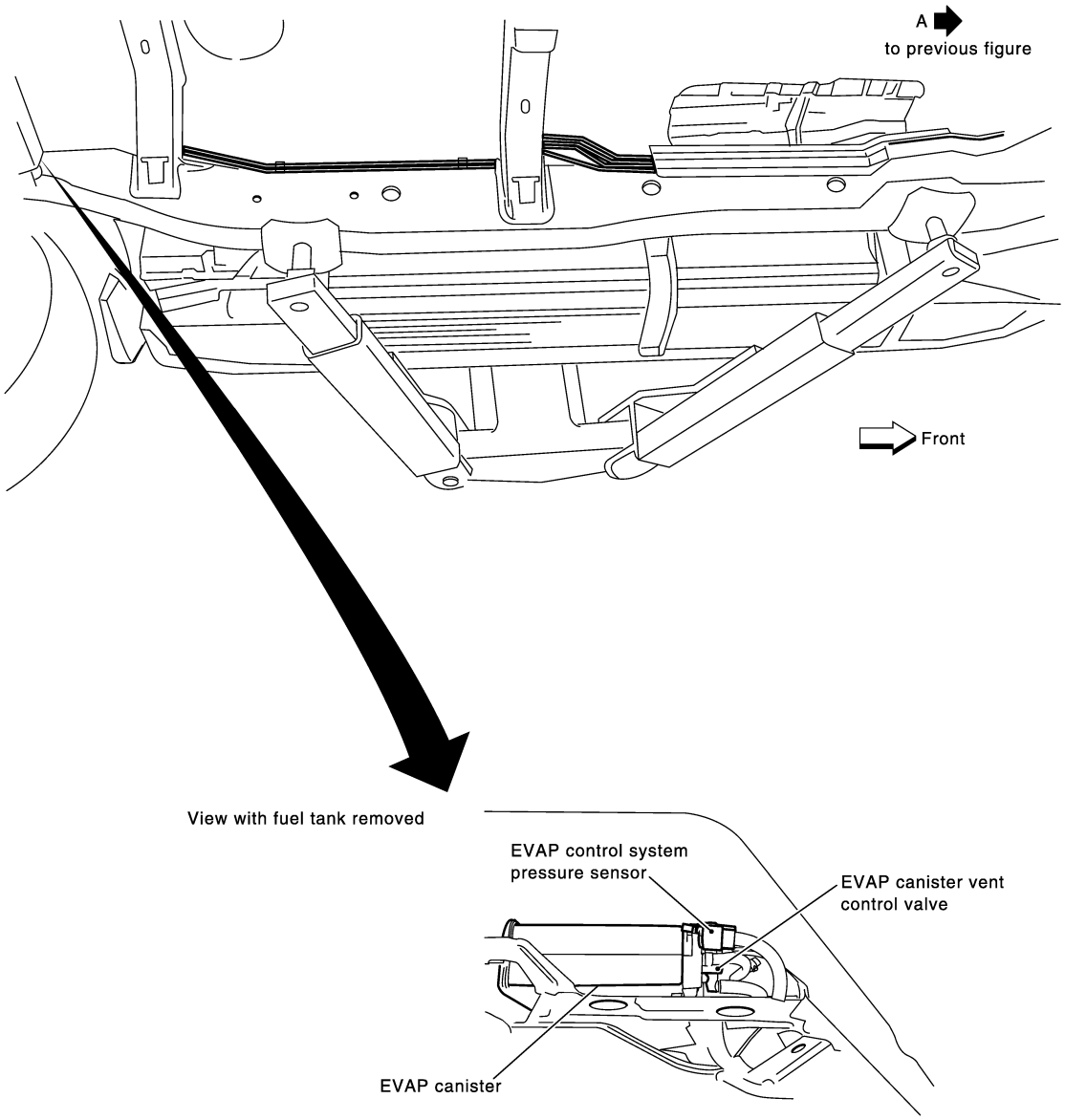

JMBIA1702GB

INTAKE VALVE TIMING CONTROL

Description

INFOID:0000000011291603

SYSTEM DESCRIPTION

Sensor	Input signal to ECM function	ECM	Actuator
Crankshaft position sensor (POS) Camshaft position sensor (PHASE)	Engine speed	Intake valve timing control	Intake valve timing control solenoid valve
Intake valve timing control position sensor	Intake valve timing signal		
Engine coolant temperature sensor	Engine coolant temperature		
Wheel sensor	Vehicle speed*		

*: This signal is sent to the ECM through CAN communication line

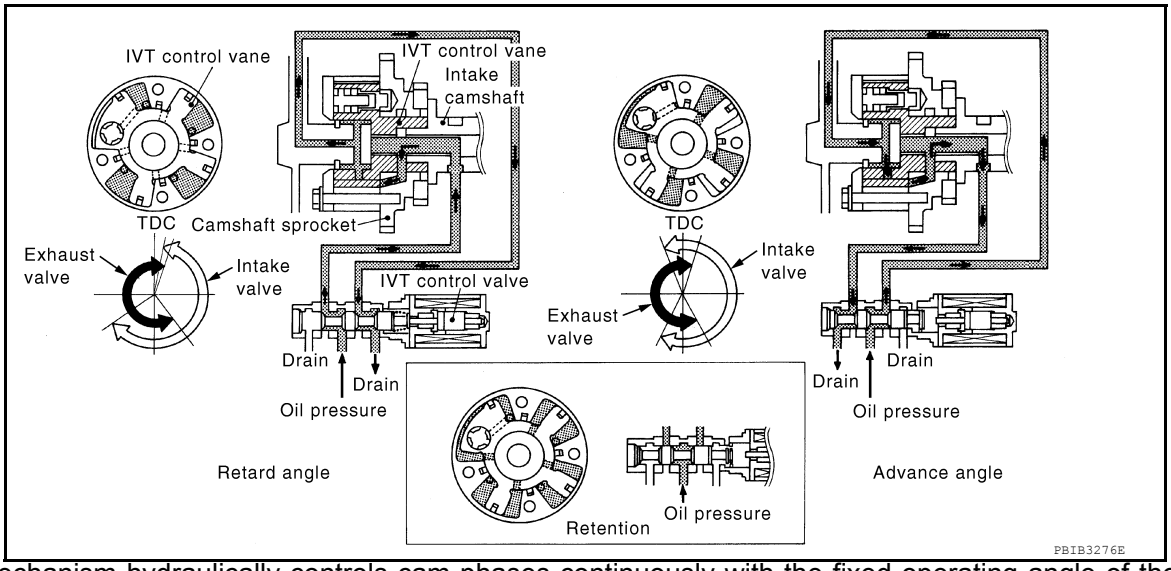

This mechanism hydraulically controls cam phases continuously with the fixed operating angle of the intake valve.

The ECM receives signals such as crankshaft position, camshaft position, engine speed, and engine coolant temperature. Then, the ECM sends ON/OFF pulse duty signals to the intake valve timing (IVT) control solenoid valve depending on driving status. This makes it possible to control the shut/open timing of the intake valve to increase engine torque in low/mid speed range and output in high-speed range.

FUEL FILLER CAP WARNING SYSTEM

System Diagram

INFOID:0000000011291604

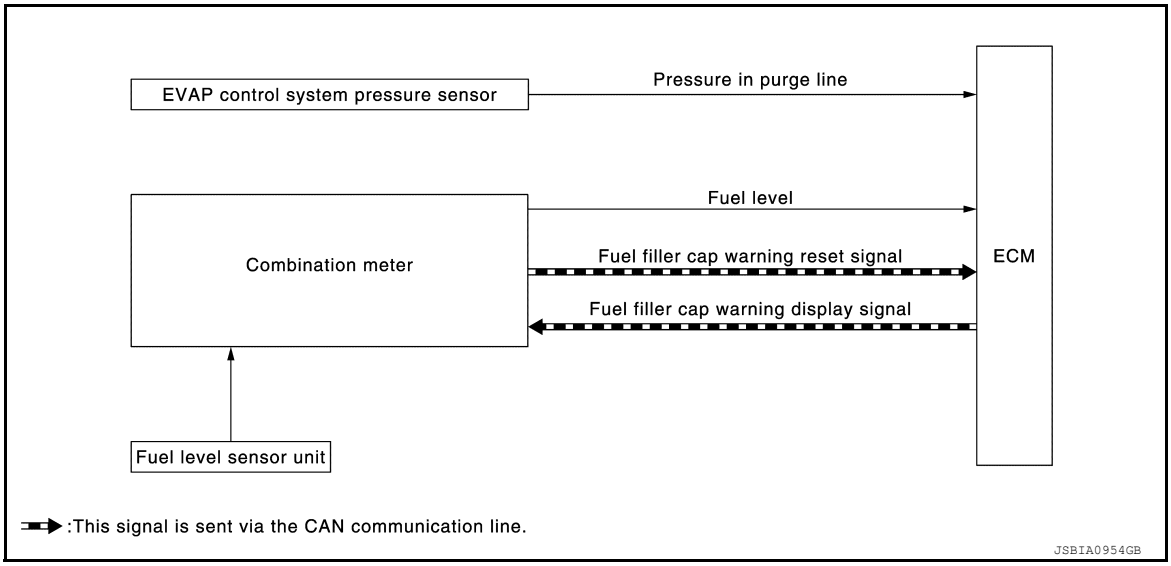

System Description

INFOID:0000000011291605

INPUT/OUTPUT SIGNAL CHART

Input

Unit/Sensor	Input signal to ECM	ECM function
EVAP control system pressure sensor	Pressure in purge line	Fuel filler cap warning control
Combination meter	Fuel level	
	Fuel filler cap warning reset signal*	

*: This signal is sent to the ECM via the CAN communication line.

Output

Unit	Output signal	Actuator
ECM	Fuel filler cap warning display signal*	Combination meter

*: This signal is sent to the combination meter via the CAN communication line.

SYSTEM DESCRIPTION

The fuel filler cap warning system alerts the driver to the prevention of the fuel filler being left uncapped and malfunction occurrences after refueling, by turning ON the fuel filler cap warning display on the combination meter.
ECM judges a refueled state, based on a fuel level signal transmitted from the combination meter.
When a very small leak is detected through the EVAP leak diagnosis performed after judging the refueled state, ECM transmits a fuel filler cap warning display signal (request for display ON) to the combination meter via CAN communication.
When receiving the signal, the combination meter turns ON the fuel filler cap warning display.

CAUTION:

Check fuel filler cap installation condition when the fuel filler cap warning display turns ON.

Reset Operation

The fuel filler cap warning lamp tunes OFF, according to any condition listed below:

- Reset operation is performed by operating the INFO switch on the combination meter.
  - When the reset operation is performed, the combination meter transmits a fuel filler cap warning reset signal to ECM via CAN communication. ECM transmits a fuel filler cap warning display signal (request for display OFF) to the combination meter via CAN communication. When receiving the signal, the combination meter turns OFF the fuel filler cap warning display.
- EVAP leak diagnosis result is normal.
- Fuel refilled.

- DTC erased by using CONSULT.

NOTE:
MIL turns ON if a malfunction is detected in leak diagnosis results again at the trip after the fuel filler cap warning display turns ON/OFF.

ON BOARD DIAGNOSTIC (OBD) SYSTEM

Diagnosis Description

INFOID:0000000011291606

This system is an on board diagnostic system that records exhaust emission-related diagnostic information and detects a sensors/actuator-related malfunction. A malfunction is indicated by the malfunction indicator lamp (MIL) and stored in control module memory as a DTC. The diagnostic information can be obtained with the diagnostic tool (GST: Generic Scan Tool).

GST (Generic Scan Tool)

INFOID:0000000011291607

When GST is connected with a data link connector equipped on the vehicle side, it will communicate with the control module equipped in the vehicle and then enable various kinds of diagnostic tests. Refer to EC-38, "Diagnosis Description".

NOTE:
Service $0A is not applied for regions where it is not mandated.

DIAGNOSIS SYSTEM (ECM)

DIAGNOSIS DESCRIPTION

DIAGNOSIS DESCRIPTION : 1st Trip Detection Logic and Two Trip Detection Logic

INFOID:0000000011291608

When a malfunction is detected for the first time, 1st trip DTC and 1st trip Freeze Frame data are stored in the ECM memory. The MIL will not illuminate at this stage. <1st trip>
If the same malfunction is detected again during the next drive, the DTC and Freeze Frame data are stored in the ECM memory, and the MIL illuminates. The MIL illuminates at the same time when the DTC is stored. <2nd trip> The “trip” in the “Two Trip Detection Logic” means a driving mode in which self-diagnosis is performed during vehicle operation. Specific on board diagnostic items will cause the ECM to illuminate or blink the MIL, and store DTC and Freeze Frame data, even in the 1st trip, as shown below.

×: Applicable —: Not applicable

Items	MIL				DTC		1st trip DTC	
	1st trip		2nd trip		1st trip displaying	2nd trip displaying	1st trip displaying	2nd trip displaying
	Blinking	Illuminate	Blinking	Illuminate				
Misfire (Possible three way catalyst damage) — DTC: P0300 - P0308 is being detected	×	—	—	—	—	—	×	—
Misfire (Possible three way catalyst damage) — DTC: P0300 - P0308 is being detected	—	—	×	—	—	×	—	—
One trip detection diagnoses (Refer to EC-77, "DTC Index".)	—	×	—	—	×	—	—	—
Except above	—	—	—	×	—	×	×	—

DIAGNOSIS DESCRIPTION : DTC and Freeze Frame Data

INFOID:0000000011291609

DTC AND 1ST TRIP DTC

The 1st trip DTC (whose number is the same as the DTC number) is displayed for the latest self-diagnostic result obtained. If the ECM memory was cleared previously, and the 1st trip DTC did not recur, the 1st trip DTC will not be displayed.
If a malfunction is detected during the 1st trip, the 1st trip DTC is saved in the ECM memory. The MIL will not light up (two trip detection logic). If the same malfunction is not detected in the 2nd trip (meeting the required driving pattern), the 1st trip DTC is cleared from the ECM memory. If the same malfunction is detected in the 2nd trip, both the 1st trip DTC and DTC are saved in the ECM memory and the MIL lights up. In other words, the DTC is stored in the ECM memory and the MIL lights up when the same malfunction occurs in two consecutive trips. If a 1st trip DTC is stored and a non-diagnostic operation is performed between the 1st and 2nd trips, only the 1st trip DTC will continue to be stored. For malfunctions that blink or light up the MIL during the 1st trip, the DTC and 1st trip DTC are stored in the ECM memory.
For malfunctions in which 1st trip DTCs are displayed, refer to EC-77, "DTC Index". These items are required by legal regulations to continuously monitor the system/component. In addition, the items monitored non-continuously are also displayed on CONSULT.
1st trip DTC is specified in Service $07 of SAE J1979/ISO 15031-5. 1st trip DTC detection occurs without illuminating the MIL and therefore does not warn the driver of a malfunction.
When a 1st trip DTC is detected, check, print out or write down and erase (1st trip) DTC and Freeze Frame data as specified in Work Flow procedure Step 2, refer to EC-112, "Trouble Diagnosis Introduction". Then perform DTC Confirmation Procedure or Component Function Check to try to duplicate the malfunction. If the malfunction is duplicated, the item requires repair.

FREEZE FRAME DATA AND 1ST TRIP FREEZE FRAME DATA

The ECM records the driving conditions such as fuel system status, calculated load value, engine coolant temperature, short term fuel trim, long term fuel trim, engine speed, vehicle speed, absolute throttle position, base fuel schedule and intake air temperature at the moment a malfunction is detected.
Data which are stored in the ECM memory, along with the 1st trip DTC, are called 1st trip freeze frame data. The data, stored together with the DTC data, are called freeze frame data and displayed on CONSULT or GST. The 1st trip freeze frame data can only be displayed on the CONSULT screen.

Only one set of freeze frame data (either 1st trip freeze frame data or freeze frame data) can be stored in the ECM. 1st trip freeze frame data is stored in the ECM memory along with the 1st trip DTC. There is no priority for 1st trip freeze frame data and it is updated each time a different 1st trip DTC is detected. However, once freeze frame data (2nd trip detection/MIL on) is stored in the ECM memory, 1st trip freeze frame data is no longer stored. Remember, only one set of freeze frame data can be stored in the ECM. The ECM has the following priorities to update the data.

Priority	Items	
1	Freeze frame data	Misfire — DTC: P0300 - P0308 Fuel Injection System Function — DTC: P0171, P0172, P0174, P0175
2		Except the above items
3	1st trip freeze frame data	

For example, the EGR malfunction (Priority: 2) was detected and the freeze frame data was saved in the 2nd trip. After that when the misfire (Priority: 1) is detected in another trip, the freeze frame data will be updated from the EGR malfunction to the misfire. The 1st trip freeze frame data is updated each time a different malfunction is detected. There is no priority for 1st trip freeze frame data. However, once freeze frame data is stored in the ECM memory, 1st trip freeze data is no longer stored (because only one freeze frame data or 1st trip freeze frame data can be stored in the ECM). If freeze frame data is stored in the ECM memory and freeze frame data with the same priority occurs later, the first (original) freeze frame data remains unchanged in the ECM memory.
Both 1st trip freeze frame data and freeze frame data (along with the DTCs) are cleared when the ECM memory is erased.

DIAGNOSIS DESCRIPTION : Counter System

INFOID:0000000011291610

RELATIONSHIP BETWEEN MIL, 1ST TRIP DTC, DTC, AND DETECTABLE ITEMS

- When a malfunction is detected for the first time, the 1st trip DTC and the 1st trip freeze frame data are stored in the ECM memory.
- When the same malfunction is detected in two consecutive trips, the DTC and the freeze frame data are stored in the ECM memory, and the MIL will come on.
- The MIL will turn OFF after the vehicle is driven 3 times (driving pattern B) with no malfunction. The drive is counted only when the recorded driving pattern is met (as stored in the ECM). If another malfunction occurs while counting, the counter will reset.
- The DTC and the freeze frame data will be stored until the vehicle is driven 40 times (driving pattern A) without the same malfunction recurring (except for Misfire and Fuel Injection System). For Misfire and Fuel Injection System, the DTC and freeze frame data will be stored until the vehicle is driven 80 times (driving pattern C) without the same malfunction recurring. The “TIME” in “SELF-DIAGNOSTIC RESULTS” mode of CONSULT will count the number of times the vehicle is driven.
- The 1st trip DTC is not displayed when the self-diagnosis results in OK for the 2nd trip.

COUNTER SYSTEM CHART

Items	Fuel Injection System	Misfire	Other
MIL (turns OFF)	3 (pattern B)	3 (pattern B)	3 (pattern B)
DTC, Freeze Frame Data (no display)	80 (pattern C)	80 (pattern C)	40 (pattern A)
1st Trip DTC (clear)	1 (pattern C), *1	1 (pattern C), *1	1 (pattern B)
1st Trip Freeze Frame Data (clear)	*1, *2	*1, *2	1 (pattern B)

For details about patterns B and C under “Fuel Injection System” and “Misfire”, see “EXPLANATION FOR DRIVING PATTERNS FOR “MISFIRE <EXHAUST QUALITY DETERIORATION>”, “FUEL INJECTION SYSTEM”.
For details about patterns A and B under Other, see “EXPLANATION FOR DRIVING PATTERNS FOR “MISFIRE <EXHAUST QUALITY DETERIORATION>”, “FUEL INJECTION SYSTEM”.
- *1: Clear timing is at the moment OK is detected.
- *2: Clear timing is when the same malfunction is detected in the 2nd trip.

Relationship Between MIL, DTC, 1st Trip DTC and Driving Patterns for “Misfire <Exhaust Quality Deterioration>”, “Fuel Injection System”

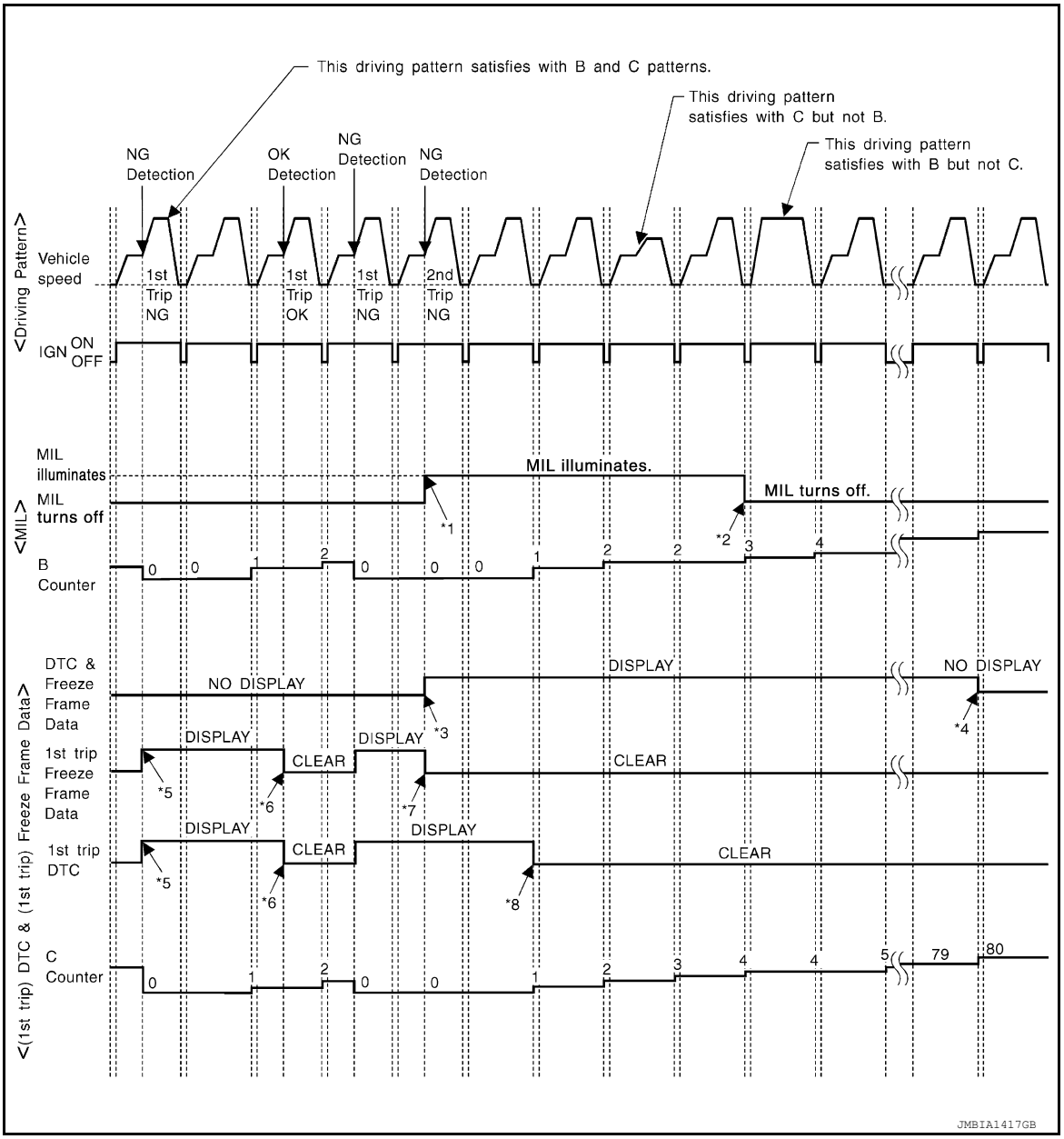

*1: When the same malfunction is detected in two consecutive trips, MIL will light up.

*2: MIL will turn OFF after vehicle is driven 3 times (pattern B) without any malfunctions.

*3: When the same malfunction is detected in two consecutive trips, the DTC and the freeze frame data will be stored in ECM.

*4: The DTC and the freeze frame data will not be displayed any longer after vehicle is driven 80 times (pattern C) without the same malfunction. (The DTC and the freeze frame data still remain in ECM.)

*5: When a malfunction is detected for the first time, the 1st trip DTC and the 1st trip freeze frame data will be stored in ECM.

*6: The 1st trip DTC and the 1st trip freeze frame data will be cleared at the moment OK is detected.

*7: When the same malfunction is detected in the 2nd trip, the 1st trip freeze frame data will be cleared.

*8: 1st trip DTC will be cleared when vehicle is driven once (pattern C) without the same malfunction after DTC is stored in ECM.

Explanation for Driving Patterns for “Misfire <Exhaust Quality Deterioration>”, “Fuel Injection System”

Driving Pattern B

Refer to EC-43, "DIAGNOSIS DESCRIPTION : Driving Pattern".

Driving Pattern C

Refer to EC-43, "DIAGNOSIS DESCRIPTION : Driving Pattern".

Example:

If the stored freeze frame data is as per the following:

Engine speed: 850 rpm, Calculated load value: 30%, Engine coolant temperature: 80°C (176°F)

To be satisfied with driving pattern C, the vehicle should run under the following conditions:

Engine speed: 475 – 1,225 rpm, Calculated load value: 27 – 33%, Engine coolant temperature: more than 70°C (158°F)

Relationship Between MIL, DTC, 1st Trip DTC and Driving Patterns Except For “Misfire <Exhaust Quality Deterioration>”, “Fuel Injection System”

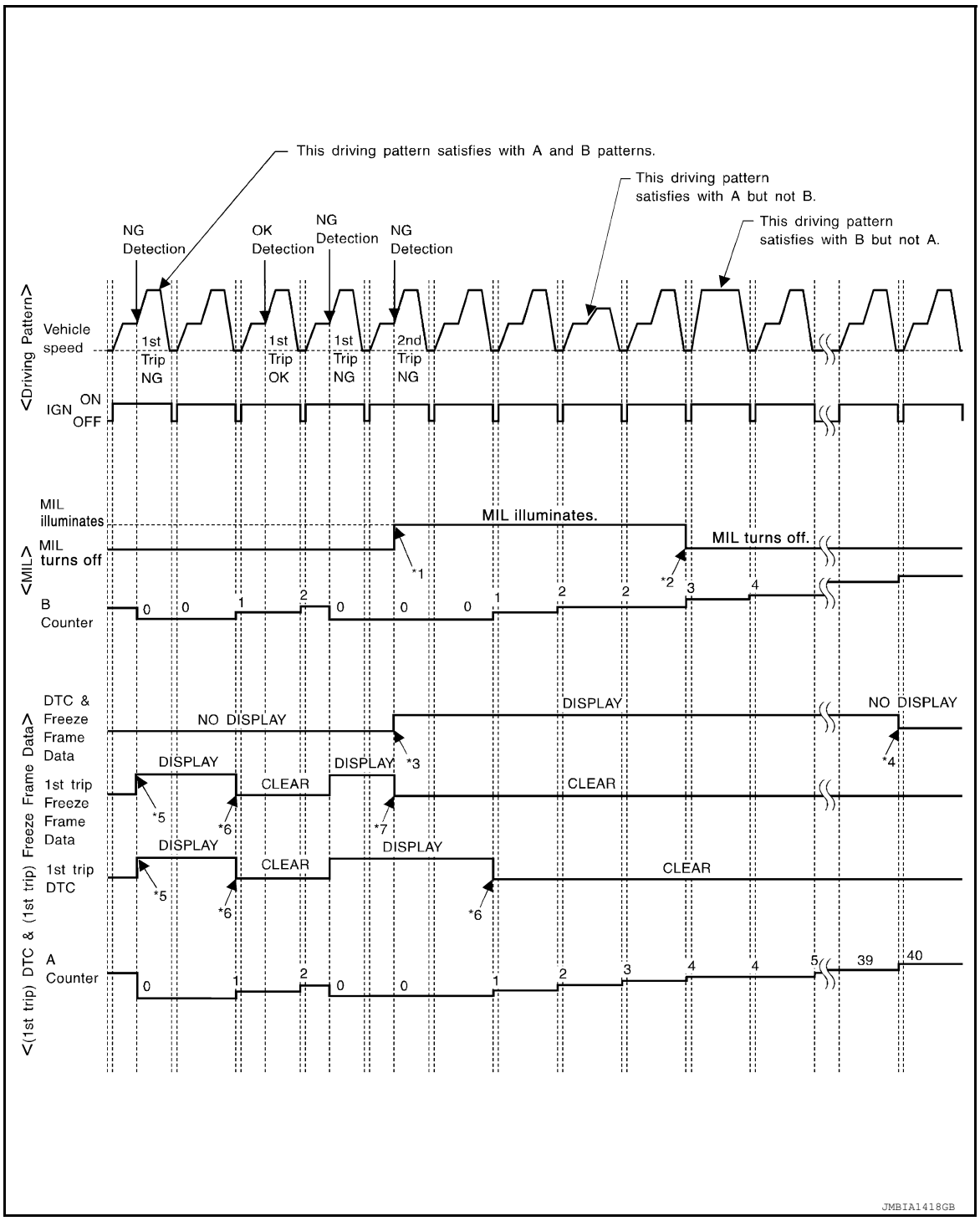

*1: When the same malfunction is detected in two consecutive trips, MIL will light up.

*2: MIL will turn OFF after vehicle is driven 3 times (pattern B) without any malfunctions.

*3: When the same malfunction is detected in two consecutive trips, the DTC and the freeze frame data will be stored in ECM.

*4: The DTC and the freeze frame data will not be displayed any longer after vehicle is driven 40 times (pattern A) without the same malfunction. (The DTC and the freeze frame data still remain in ECM.)

*5: When a malfunction is detected for the first time, the 1st trip DTC and the 1st trip freeze frame data will be stored in ECM.

*6: 1st trip DTC will be cleared after vehicle is driven once (pattern B) without the same malfunction.

*7: When the same malfunction is detected in the 2nd trip, the 1st trip freeze frame data will be cleared.

Explanation for Driving Patterns Except for “Misfire <Exhaust Quality Deterioration>”, “Fuel Injection System”

Driving Pattern A
Refer to EC-43, "DIAGNOSIS DESCRIPTION : Driving Pattern".

Driving Pattern B
Refer to EC-43, "DIAGNOSIS DESCRIPTION : Driving Pattern".

DIAGNOSIS DESCRIPTION : Driving Pattern

INFOID:0000000011291611

CAUTION:
Always drive at a safe speed.

DRIVING PATTERN A

Driving pattern A means a trip satisfying the following conditions.
- Engine speed reaches 400 rpm or more.
- Engine coolant temperature rises by 20°C (36°F) or more after starting the engine.
- Engine coolant temperature reaches 70°C (158°F) or more.
- The ignition switch is turned from ON to OFF.

NOTE:
- When the same malfunction is detected regardless of driving conditions, reset the counter of driving pattern A.
- When the above conditions are satisfied without detecting the same malfunction, reset the counter of driving pattern A.

DRIVING PATTERN B

Driving pattern B means a trip satisfying the following conditions.
- Engine speed reaches 400 rpm or more.
- Engine coolant temperature reaches 70°C (158°F) or more.
- Vehicle speed of 70 – 120 km/h (44 – 75 MPH) is maintained for 60 seconds or more under the control of closed loop.
- Vehicle speed of 30 – 60 km/h (19 – 37 MPH) is maintained for 10 seconds or more under the control of closed loop.
- Under the closed loop control condition, the following state reaches 12 seconds or more in total: Vehicle speed of 4 km/h (2 MPH) or less with idling condition.
- The state of driving at 10 km/h (7 MPH) or more reaches 10 minutes or more in total.
- A lapse of 22 minutes or more after engine start.

NOTE:
- Drive the vehicle at a constant velocity.
- When the same malfunction is detected regardless of driving conditions, reset the counter of driving pattern B.
- When the above conditions are satisfied without detecting the same malfunction, reset the counter of driving pattern B.

DRIVING PATTERN C

Driving pattern C means operating vehicle as per the following:
The following conditions should be satisfied at the same time:
Engine speed: (Engine speed in the freeze frame data) ±375 rpm

Calculated load value: (Calculated load value in the freeze frame data) x (1±0.1) [%]
Engine coolant temperature condition:
- When the freeze frame data shows lower than 70°C (158°F), engine coolant temperature should be lower than 70°C (158°F).
- When the freeze frame data shows higher than or equal to 70°C (158°F), engine coolant temperature should be higher than or equal to 70°C (158°F).

NOTE:
- When the same malfunction is detected regardless of the above vehicle conditions, reset the counter of driving pattern C.
- When the above conditions are satisfied without detecting the same malfunction, reset the counter of driving pattern C.
- The 1st trip DTC will be cleared when C counter is counted once without the same malfunction after DTC is stored in ECM.

DRIVING PATTERN D

Driving pattern D means a trip satisfying the following conditions.
- The state of driving at 40 km/h (25 MPH) reaches 300 seconds or more in total.
- Idle speed lasts 30 seconds or more.
- A lapse of 600 seconds or more after engine start.

NOTE:
- When the same malfunction is detected regardless of driving conditions, reset the counter of driving pattern D.
- When the above conditions are satisfied without detecting the same malfunction, reset the counter of driving pattern D.

DIAGNOSIS DESCRIPTION : System Readiness Test (SRT) Code

INFOID:0000000011291612

System Readiness Test (SRT) code is specified in Service $01 of SAE J1979/ISO 15031-5.
As part of an enhanced emissions test for Inspection & Maintenance (I/M), certain states require the status of SRT be used to indicate whether the ECM has completed self-diagnosis of major emission systems and components. Completion must be verified in order for the emissions inspection to proceed.
If a vehicle is rejected for a State emissions inspection due to one or more SRT items indicating “INCMP”, use the information in this Service Manual to set the SRT to “CMPLT”.
In most cases the ECM will automatically complete its self-diagnosis cycle during normal usage, and the SRT status will indicate “CMPLT” for each application system. Once set as “CMPLT”, the SRT status remains “CMPLT” until the self-diagnosis memory is erased.
Occasionally, certain portions of the self-diagnostic test may not be completed as a result of the customer's normal driving pattern; the SRT will indicate “INCMP” for these items.

NOTE:
The SRT will also indicate “INCMP” if the self-diagnosis memory is erased for any reason or if the ECM memory power supply is interrupted for several hours.
If, during the state emissions inspection, the SRT indicates “CMPLT” for all test items, the inspector will continue with the emissions test. However, if the SRT indicates “INCMP” for one or more of the SRT items the vehicle is returned to the customer untested.

NOTE:
If permanent DTC is stored or MIL illuminates during the state emissions inspection, the vehicle is also returned to the customer untested even though the SRT indicates “CMPLT” for all test items. Therefore, it is important to check SRT (“CMPLT”), DTC (No DTCs) and permanent DTC (NO permanent DTCs) before the inspection.

SRT SET TIMING

SRT is set as “CMPLT” after self-diagnosis has been performed one or more times. Completion of SRT is done regardless of whether the result is OK or NG. The set timing is different between OK and NG results and is shown in the table below.

Self-diagnosis result		Example				
		Diagnosis	Ignition cycle ← ON → OFF	← ON → OFF	← ON → OFF	← ON →
All OK	Case 1	P0400	OK (1)	— (1)	OK (2)	— (2)
		P0402	OK (1)	— (1)	— (1)	OK (2)
		P1402	OK (1)	OK (2)	— (2)	— (2)
		SRT of EGR	“CMPLT”	“CMPLT”	“CMPLT”	“CMPLT”
	Case 2	P0400	OK (1)	— (1)	— (1)	— (1)
		P0402	— (0)	— (0)	OK (1)	— (1)
		P1402	OK (1)	OK (2)	— (2)	— (2)
		SRT of EGR	“INCMP”	“INCMP”	“CMPLT”	“CMPLT”
NG exists	Case 3	P0400	OK	OK	—	—
		P0402	—	—	—	—
		P1402	NG	—	NG	NG (Consecutive NG)
		(1st trip) DTC	1st trip DTC	—	1st trip DTC	DTC (= MIL ON)
		SRT of EGR	“INCMP”	“INCMP”	“INCMP”	“CMPLT”

OK: Self-diagnosis is carried out and the result is OK.

NG: Self-diagnosis is carried out and the result is NG.

—: Self-diagnosis is not carried out.

When all SRT related self-diagnoses show OK results in a single cycle (Ignition OFF-ON-OFF), the SRT will indicate “CMPLT”. → Case 1 above

When all SRT related self-diagnoses show OK results through several different cycles, the SRT will indicate “CMPLT” at the time the respective self-diagnoses have at least one OK result. → Case 2 above

If one or more SRT related self-diagnoses show NG results in 2 consecutive cycles, the SRT will also indicate “CMPLT”. → Case 3 above

The table above shows that the minimum number of cycles for setting SRT as “INCMP” is the number one (1) for each self-diagnosis (Case 1 & 2) or the number two (2) for one of self-diagnoses (Case 3). However, in preparation for the state emissions inspection, it is unnecessary for each self-diagnosis to be executed twice (Case 3) for the following reasons:

- The SRT will indicate “CMPLT” at the time the respective self-diagnoses have one (1) OK result.
- The emissions inspection requires “CMPLT” of the SRT only with OK self-diagnosis results.
- During SRT driving pattern, the 1st trip DTC (NG) is detected prior to “CMPLT” of SRT and the self-diagnosis memory must be erased from the ECM after repair.
- If the 1st trip DTC is erased, all the SRT will indicate “INCMP”.

  NOTE:

  SRT can be set as “CMPLT” together with the DTC(s). Therefore, DTC check must always be carried out prior to the state emission inspection even though the SRT indicates “CMPLT”.

DIAGNOSIS DESCRIPTION : Permanent Diagnostic Trouble Code (Permanent DTC)

INFOID:0000000011291613

Permanent DTC is defined in SAE J1979/ISO 15031-5 Service $0A.

ECM stores a DTC issuing a command of turning on MIL as a permanent DTC and keeps storing the DTC as a permanent DTC until ECM judges that there is no presence of malfunction.

Permanent DTCs cannot be erased by using the erase function of CONSULT or Generic Scan Tool (GST) and by disconnecting the battery to shut off power to ECM. This prevents a vehicle from passing the in-use inspection without repairing a malfunctioning part.

When not passing the in-use inspection due to more than one permanent DTC, permanent DTCs should be erased, referring to this manual.

NOTE:

- The important items in in-use inspection are that MIL is not ON, SRT test items are set, and permanent DTCs are not included.
- Permanent DTCs do not apply for regions that permanent DTCs are not regulated by law.

PERMANENT DTC SET TIMING

The setting timing of permanent DTC is stored in ECM with the lighting of MIL when a DTC is confirmed.

DIAGNOSIS DESCRIPTION : Malfunction Indicator Lamp (MIL)

INFOID:0000000011291614

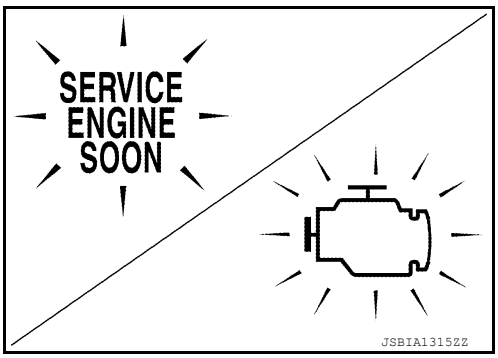

When emission related ECU detects a malfunction in the emission control systems components and/or the powertrain control components (which affect vehicle emissions), it turns on/blinks MIL to inform the driver that a malfunction has been detected.

1. The MIL illuminates when ignition switch is turned ON (engine is not running).
   NOTE:
   Check the MIL circuit if MIL does not illuminate. Refer to EC-490, "Component Function Check".
2. When the engine is started, the MIL should go off.
   NOTE:
   If MIL continues to illuminate/blink, perform self-diagnoses and inspect/repair accordingly because an emission related ECU has detected a malfunction in the emission control systems components and/or the powertrain control components (which affect vehicle emissions).

On Board Diagnosis Function

INFOID:0000000011291615

ON BOARD DIAGNOSIS ITEM

The on board diagnostic system has the following functions.

Diagnostic test mode	Function
Bulb check	MIL can be checked.
SRT status	ECM can read if SRT codes are set.
Malfunction warning	If ECM detects a malfunction, it illuminates or blinks MIL to inform the driver that a malfunction has been detected.
Self-diagnostic results	DTCs or 1st trip DTCs stored in ECM can be read.
Accelerator pedal released position learning	ECM can learn the accelerator pedal released position. Refer to EC-128, "Accelerator Pedal Released Position Learning".
Throttle valve closed position learning	ECM can learn the throttle valve closed position. Refer to EC-128, "Throttle Valve Closed Position Learning".
Idle air volume learning	ECM can learn the idle air volume. Refer to EC-129, "Idle Air Volume Learning".

BLUB CHECK MODE

Description

This function allows damage inspection in the MIL bulb (blown, open circuit, etc.).

Operation Procedure

1. Turn ignition switch ON.
2. The MIL on the instrument panel should stay ON.
   If it remains OFF, check MIL circuit. Refer to EC-490, "Diagnosis Procedure".

SRT STATUS MODE

Description

This function allows to read if ECM has completed the self-diagnoses of major emission control systems and components. For SRT, refer to EC-131, "Description".

Operation Procedure

1. Turn ignition switch ON and wait 20 seconds.
2. SRT status is indicated as shown blow.
   - ECM continues to illuminate MIL if all SRT codes are set.

- ECM blinks MIL for about 10 seconds if all SRT codes are not set.

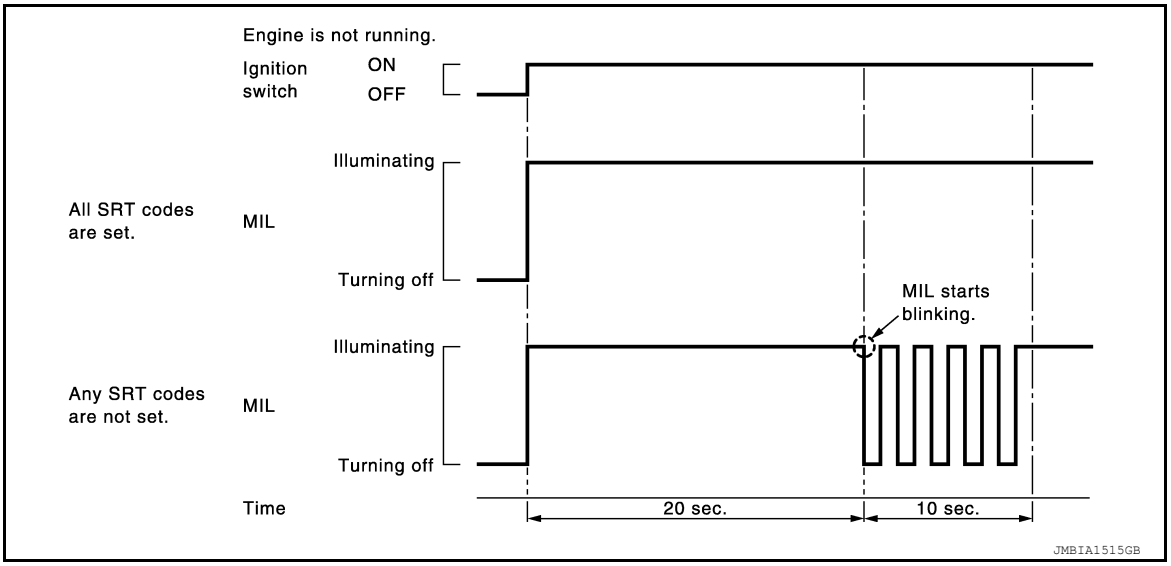

MALFUNCTION WARNING MODE

Description

In this function ECM turns on or blinks MIL when it detects a malfunction in the emission control system components and/or the powertrain control components (which affect vehicle emissions) to inform the driver that a malfunction has been detected.

Operation Procedure

1. Turn ignition switch ON.
2. Check that MIL illuminates.
   If it remains OFF, check MIL circuit. Refer to EC-490, "Diagnosis Procedure".
3. Start engine and let it idle.
   - For two trip detection logic diagnoses, ECM turns on MIL when it detects the same malfunction twice in the two consecutive driving cycles.
   - For 1st trip detection logic diagnoses, ECM turns on MIL when it detects a malfunction in one driving cycle.
   - ECM blinks MIL when it detects a malfunction that may damage the three way catalyst (misfire).

SELF-DIAGNOSTIC RESULTS MODE

Description

This function allows to indicate DTCs or 1st trip DTCs stored in ECM according to the number of times MIL is blinking.

How to Set Self-diagnostic Results Mode

NOTE:
- It is better to count the time accurately with a clock.
- It is impossible to switch the diagnostic mode when an accelerator pedal position sensor circuit has a malfunction.
- After ignition switch is turned off, ECM is always released from the “Self-diagnostic results” mode.

1. Confirm that accelerator pedal is fully released, turn ignition switch ON and wait 3 seconds.
2. Repeat the following procedure quickly five times within 5 seconds.
   - Fully depress the accelerator pedal.
   - Fully release the accelerator pedal.
3. Wait 7 seconds, fully depress the accelerator pedal and keep it depressed for approx. 10 seconds until the MIL starts blinking.
   NOTE:
   Do not release the accelerator pedal for 10 seconds if MIL starts blinking during this period. This blinking is displaying SRT status and is continued for another 10 seconds.
4. Fully release the accelerator pedal.
   ECM has entered to Self-diagnostic results mode.

NOTE:
Wait until the same DTC (or 1st trip DTC) appears to completely confirm all DTCs.

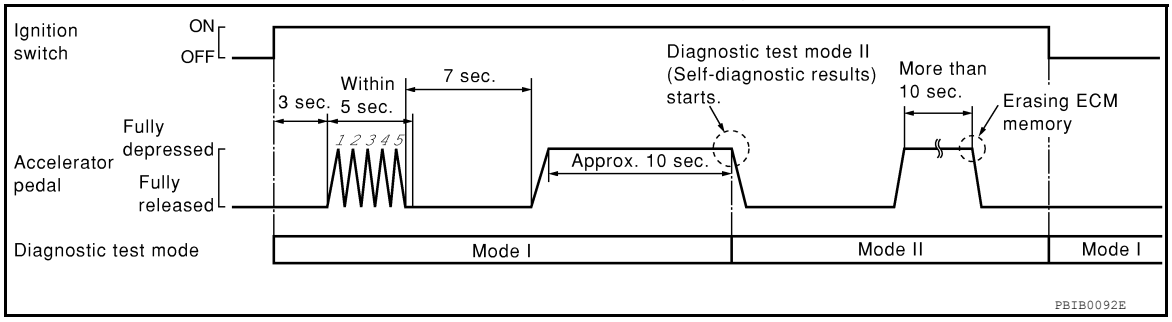

How to Read Self-diagnostic Results

The DTC and 1st trip DTC are indicated by the number of blinks of the MIL as shown below.

The DTC and 1st trip DTC are displayed at the same time. If the MIL does not illuminate in diagnostic test mode I (Malfunction warning), all displayed items are 1st trip DTCs. If only one code is displayed when the MIL illuminates in “malfunction warning” mode, it is a DTC; if two or more codes are displayed, they may be either DTCs or 1st trip DTCs. DTC No. is same as that of 1st trip DTC. These unidentified codes can be identified by using the CONSULT or GST. A DTC will be used as an example for how to read a code.

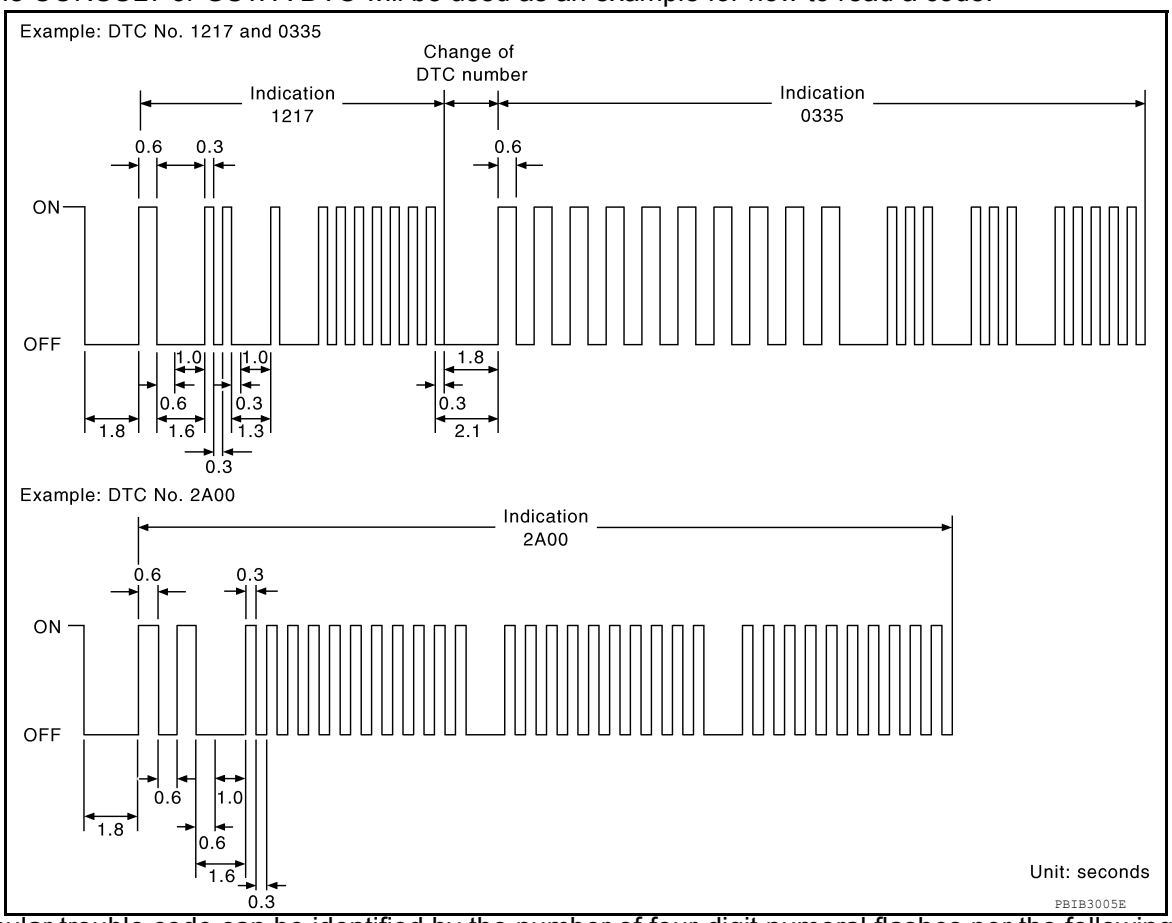

A particular trouble code can be identified by the number of four-digit numeral flashes per the following.

Number	0	1	2	3	4	5	6	7	8	9	A	B	C	D	E	F
Flashes	10	1	2	3	4	5	6	7	8	9	11	12	13	14	15	16

The length of time the 1,000th-digit numeral flashes on and off is 1.2 seconds consisting of an ON (0.6-seconds) - OFF (0.6-seconds) cycle.

The 100th-digit numeral and lower digit numerals consist of a 0.3-seconds ON and 0.3-seconds OFF cycle.

A change from one digit numeral to another occurs at an interval of 1.0-second OFF. In other words, the later numeral appears on the display 1.3 seconds after the former numeral has disappeared.

A change from one trouble code to another occurs at an interval of 1.8-seconds OFF.

In this way, all the detected malfunctions are classified by their DTC numbers. The DTC 0000 refers to no malfunction. Refer to EC-77, "DTC Index".

How to Erase Self-diagnostic Results

By performing this procedure, ECM memory is erased and the following diagnostic information is erased as well.

- Diagnostic trouble codes
- 1st trip diagnostic trouble codes
- Freeze frame data
- 1st trip freeze frame data
- System readiness test (SRT) codes
- Test values

NOTE:

Also, if a battery terminal is disconnected, ECM memory is erased and the diagnostic information as listed above is erased. (The amount of time required for erasing may vary from a few seconds to several hours.)

1. Turn ignition switch OFF and wait at least 10 seconds.
2. Turn ignition switch ON.
3. Turn ignition switch OFF and wait at least 10 seconds.
4. Turn ignition switch ON.
5. Set ECM in “Self-diagnostic results”.
6. The diagnostic information has been erased from the backup memory in the ECM.
   Fully depress the accelerator pedal and keep it depressed for more than 10 seconds.
7. Fully release the accelerator pedal, and confirm the DTC 0000 is displayed.

CONSULT Function

INFOID:0000000011291616

FUNCTION

Diagnostic test mode	Function
Self Diagnostic Result	Self-diagnostic results such as 1st trip DTC, DTCs and 1st trip freeze frame data or freeze frame data can be read and erased quickly.*
Data Monitor	Input/Output data in the ECM can be read.
Work support	This mode enables a technician to adjust some devices faster and more accurately by following the indications on the CONSULT unit.
Active Test	Diagnostic Test Mode in which CONSULT drives some actuators apart from the ECMs and also shifts some parameters in a specified range.
Ecu Identification	ECM part number can be read.
DTC Work Support	The status of system monitoring tests and the self-diagnosis status/result can be confirmed.

*: The following emission-related diagnostic information is cleared when the ECM memory is erased.

- Diagnostic trouble codes
- 1st trip diagnostic trouble codes
- Freeze frame data
- 1st trip freeze frame data
- System readiness test (SRT) codes
- Test values

SELF DIAGNOSTIC RESULTS MODE

Self Diagnostic Item

Regarding items of DTC and 1st trip DTC, refer to EC-77, "DTC Index".

How to Read DTC and 1st Trip DTC

DTCs and 1st trip DTCs related to the malfunction are displayed in “Self-diag results”.

- When ECM detects a 1st trip DTC, “1t” is displayed for “TIME”.
- When ECM has detected a current DTC, “0” is displayed for “TIME”.
- If “TIME” is neither “0” nor “1t”, the DTC occurred in the past and ECM shows the number of times the vehicle has been driven since the last detection of the DTC.

How to Erase DTC and 1st Trip DTC

NOTE:

- If the ignition switch stays ON after repair work, be sure to turn ignition switch OFF once. Wait at least 10 seconds and then turn it ON (engine stopped) again.
- If the DTC is not for A/T related items (see EC-77, "DTC Index"), skip step 1.

1. Erase DTC in TCM. Refer to TM-34, "CONSULT Function (TRANSMISSION)".
2. Select “ENGINE” with CONSULT.
3. Select “SELF-DIAG RESULTS”.
4. Touch “ERASE”. (DTC in ECM will be erased.)

Freeze Frame Data and 1st Trip Freeze Frame Data

Freeze frame data item*	Description
DIAG TROUBLE CODE [PXXXX]	• The engine control component part/control system has a trouble code, it is displayed as PXXXX. (Refer to EC-77, "DTC Index".)
FUEL SYS-B1	• “Fuel injection system status” at the moment a malfunction is detected is displayed. • One mode in the following is displayed. Mode2: Open loop due to detected system malfunction Mode3: Open loop due to driving conditions (power enrichment, deceleration enleanment) Mode4: Closed loop - using oxygen sensor(s) as feedback for fuel control Mode5: Open loop - has not yet satisfied condition to go to closed loop
FUEL SYS-B2	
COMBUST CONDITION	• Always a certain value is displayed. • These items are not efficient for TA60 models.
CAL/LD VALUE [%]	• The calculated load value at the moment a malfunction is detected is displayed.
COOLANT TEMP [°C] or [°F]	• The engine coolant temperature at the moment a malfunction is detected is displayed.
L-FUEL TRM-B1 [%]	• “Long-term fuel trim” at the moment a malfunction is detected is displayed. • The long-term fuel trim indicates much more gradual feedback compensation to the base fuel schedule than short-term fuel trim.
L-FUEL TRM-B2 [%]	
S-FUEL TRM-B1 [%]	• “Short-term fuel trim” at the moment a malfunction is detected is displayed. • The short-term fuel trim indicates dynamic or instantaneous feedback compensation to the base fuel schedule.
S-FUEL TRM-B2 [%]	
ENGINE SPEED [rpm]	• The engine speed at the moment a malfunction is detected is displayed.
VEHICL SPEED [km/h] or [mph]	• The vehicle speed at the moment a malfunction is detected is displayed.
INT MANI PRES [kPa] or [psi]	• Always a certain value is displayed. • These items are not efficient for TA60 models.
ABSOL TH-P/S [%]	• The throttle valve opening at the moment a malfunction is detected is displayed.
B/FUEL SCHDL [msec]	• The base fuel schedule at the moment a malfunction is detected is displayed.
INT/A TEMP SE [°C] or [°F]	• The intake air temperature at the moment a malfunction is detected is displayed.

*: The item is the same as that of 1st trip freeze frame data.

DATA MONITOR MODE

NOTE:

The following table includes information (items) inapplicable to this vehicle. For information (items) applicable to this vehicle, refer to CONSULT display items.

Monitored Item

For reference values of the following items, refer to EC-61, "CONSULT Reference Value in Data Monitor Mode".

×: Applicable

Monitored item [Unit]	DTC&SRT CONFIRMATION	ECM INPUT SIGNALS	MAIN SIGNALS	Description	Remarks
ENG SPEED [rpm]	×	×	×	• Indicates the engine speed computed from the signal of the crankshaft position sensor (POS) and camshaft position sensor (PHASE).	• Accuracy becomes poor if engine speed drops below the idle rpm. • If the signal is interrupted while the engine is running, an abnormal value may be indicated.
MAS A/F SE-B1 [V]	×	×	×	• The signal voltage of the mass air flow sensor is displayed.	• When the engine is stopped, a certain value is indicated. • When engine is running specification range is indicated in “SPEC”.
B/FUEL SCHDL [ms]	×		×	• Base fuel schedule indicates the fuel injection pulse width programmed into ECM, prior to any learned on board correction.	• When engine is running specification range is indicated in “SPEC”.
A/F ALPHA-B1 [%]	×		×	• The mean value of the air-fuel ratio feedback correction factor per cycle is indicated.	• When the engine is stopped, a certain value is indicated. • When engine is running specification range is indicated in “SPEC”. • This data also includes the data for the air-fuel ratio learning control.
A/F ALPHA-B2 [%]	×		×		
COOLANT TEMP/S [°C] or [°F]	×	×	×	• The engine coolant temperature (determined by the signal voltage of the engine coolant temperature sensor) is displayed.	• When the engine coolant temperature sensor is open or short-circuited, ECM enters fail-safe mode. The engine coolant temperature determined by the ECM is displayed.
A/F SEN1 (B1) [V]	×	×	×	• The A/F signal computed from the input signal of the A/F sensor 1 is displayed.	
HO2S2 (B1) [V]	×	×	×	• The signal voltage of the heated oxygen sensor 2 is displayed.	
HO2S2 (B2) [V]	×	×	×		
HO2S2 MNTR(B1) [RICH/LEAN]	×		×	• Display of heated oxygen sensor 2 signal: RICH: means the amount of oxygen after three way catalyst is relatively small. LEAN: means the amount of oxygen after three way catalyst is relatively large.	• When the engine is stopped, a certain value is indicated.
HO2S2 MNTR(B2) [RICH/LEAN]	×		×		
VHCL SPEED SE [km/h] or [mph]	×	×	×	• The vehicle speed computed from the vehicle speed signal sent from combination meter is displayed.	
BATTERY VOLT [V]	×	×	×	• The power supply voltage of ECM is displayed.	
ACCEL SEN 1 [V]	×	×	×	• The accelerator pedal position sensor signal voltage is displayed.	• ACCEL SEN 2 signal is converted by ECM internally. Thus, it differs from ECM terminal voltage signal.
ACCEL SEN 2 [V]		×			

Monitored item [Unit]	DTC&SRT CONFIRMATION	ECM INPUT SIGNALS	MAIN SIGNALS	Description	Remarks
TP SEN 1-B1 [V]	×	×	×	• The throttle position sensor signal voltage is displayed.	• TP SEN 2-B1 [V] signal is converted by ECM internally. Thus, it differs from ECM terminal voltage signal.
TP SEN 2-B1 [V]	×	×	×		
FUEL T/TMP SE [°C] or [°F]		×		• The fuel temperature (determined by the signal voltage of the fuel tank temperature sensor) is displayed.	
EVAP SYS PRES [V]		×		• The signal voltage of EVAP control system pressure sensor is displayed.	
FUEL LEVEL SE [V]		×		• The signal voltage of the fuel level sensor is displayed.	
START SIGNAL [ON/OFF]	×	×	×	• Indicates start signal status [ON/OFF] computed by the ECM according to the signals of engine speed and battery voltage.	• After starting the engine, [OFF] is displayed regardless of the starter signal.
CLSD THL POS [ON/OFF]	×	×	×	• Indicates idle position [ON/OFF] computed by ECM according to the accelerator pedal position sensor signal.	
AIR COND SIG [ON/OFF]	×	×	×	• Indicates [ON/OFF] condition of the air conditioner switch as determined by the air conditioner signal.	
PW/ST SIGNAL [ON/OFF]	×	×	×	• [ON/OFF] condition of the power steering system (determined by the signal voltage of the power steering pressure sensor signal) is indicated.	
LOAD SIGNAL [ON/OFF]	×	×	×	• Indicates [ON/OFF] condition from the electrical load signal. ON: Rear window defogger switch is ON and/or lighting switch is in 2nd position. OFF: Both rear window defogger switch and lighting switch are OFF.	
IGNITION SW [ON/OFF]	×	×	×	• Indicates [ON/OFF] condition from ignition switch signal.	
HEATER FAN SW [ON/OFF]		×		• Indicates [ON/OFF] condition from heater fan switch signal.	
BRAKE SW [ON/OFF]		×		• Indicates [ON/OFF] condition from the stop lamp switch signal.	
INJ PULSE-B1 [msec]	×		×	• Indicates the actual fuel injection pulse width compensated by ECM according to the input signals.	• When the engine is stopped, a certain computed value is indicated.
INJ PULSE-B2 [msec]					
IGN TIMING [BTDC]				• Indicates the ignition timing computed by ECM according to the input signals.	• When the engine is stopped, a certain value is indicated.
CAL/LD VALUE [%]		×		• “Calculated load value” indicates the value of the current air flow divided by peak air flow.	
MASS AIRFLOW [g/s]				• Indicates the mass air flow computed by ECM according to the signal voltage of the mass air flow sensor.	

Monitored item [Unit]	DTC&SRT CONFIRMATION	ECM INPUT SIGNALS	MAIN SIGNALS	Description	Remarks
PURG VOL C/V [%]				• Indicates the EVAP canister purge volume control solenoid valve control value computed by the ECM according to the input signals. • The opening becomes larger as the value increases.	
INT/V TIM(B1) [°CA]		×		• Indicates [°CA] of intake camshaft advanced angle.	
INT/V TIM(B2) [°CA]	×	×	×		
INT/V SOL(B1) [%]	×		×	• The control value of the intake valve timing control solenoid valve (determined by ECM according to the input signals) is indicated. • The advance angle becomes larger as the value increases.	
INT/V SOL(B2) [%]	×		×		
AIR COND RLY [ON/OFF]	×		×	• The air conditioner relay control condition (determined by ECM according to the input signals) is indicated.	
FUEL PUMP RLY [ON/OFF]	×		×	• Indicates the fuel pump relay control condition determined by ECM according to the input signals.	
FPCM [HI/LOW]*1	×		×	• The control condition of the fuel pump control module (FPCM) (determined by the ECM according to the input signals) is indicated.	
VENT CONT/V [ON/OFF]				• The control condition of the EVAP canister vent control valve (determined by ECM according to the input signals) is indicated. ON: Closed OFF: Open	
THRTL RELAY [ON/OFF]	×		×	• Indicates the throttle control motor relay control condition determined by the ECM according to the input signals.	
A/F S1 HTR(B2) [%]	×		×	• A/F sensor 1 heater control value computed by ECM according to the input signals. • The current flow to the heater becomes larger as the value increases.	
COOLING FAN [HI/OFF]	×		×	• The control condition of the cooling fan (determined by ECM according to the input signals) is indicated. HI: High speed operation OFF: Stop	
HO2S2 HTR (B1) [ON/OFF]				• Indicates [ON/OFF] condition of heated oxygen sensor 2 heater determined by ECM according to the input signals.	
HO2S2 HTR (B2) [ON/OFF]					

Monitored item [Unit]	DTC&SRT CONFIRMATION	ECM INPUT SIGNALS	MAIN SIGNALS	Description	Remarks
ALT DUTY SIG [ON/OFF]				• The control condition of the power generation voltage variable control (determined by ECM according to the input signals) is indicated. ON: Power generation voltage variable control is active. OFF: Power generation voltage variable control is inactive.	
I/P PULLY SPD [rpm]	×	×		• Indicates the engine speed computed from the Input speed sensor signal.	
VEHICLE SPEED [km/h] or [mph]	×	×		• Indicates the vehicle speed computed from the revolution sensor signal.	
IDL A/V LEARN [YET/CMPLT]				• Display the condition of idle air volume learning YET: Idle Air Volume Learning has not been performed yet. CMPLT: Idle Air Volume Learning has already been performed successfully.	
TRVL AFTER MIL [km] or [mile]				• Distance traveled while MIL is activated.	
A/F S1 HTR(B1) [%]	×		×	• A/F sensor 1 heater control value computed by ECM according to the input signals. • The current flow to the heater becomes larger as the value increases.	
SET VHCL SPD [km/h] or [mph]		×		• The preset vehicle speed is displayed.	
MAIN SW [ON/OFF]		×		• Indicates [ON/OFF] condition from MAIN switch signal.	
CANCEL SW [ON/OFF]		×		• Indicates [ON/OFF] condition from CANCEL switch signal.	
RESUME/ACC SW [ON/OFF]		×		• Indicates [ON/OFF] condition from RESUME/ACCELERATE switch signal.	
SET SW [ON/OFF]		×		• Indicates [ON/OFF] condition from SET/COAST switch signal.	
BRAKE SW1 [ON/OFF]		×		• Indicates [ON/OFF] condition from ASCD brake switch signal.	
BRAKE SW2 [ON/OFF]		×		• Indicates [ON/OFF] condition of stop lamp switch signal.	
VHCL SPD CUT [NON/CUT]				• Indicates the vehicle cruise condition. NON: Vehicle speed is maintained at the ASCD set speed. CUT: Vehicle speed increased to excessively high compared with the ASCD set speed, and ASCD operation is cut off.	
LO SPEED CUT [NON/CUT]				• Indicates the vehicle cruise condition. NON: Vehicle speed is maintained at the ASCD set speed. CUT: Vehicle speed decreased to excessively low compared with the ASCD set speed, and ASCD operation is cut off.	
AT OD MONITOR [ON/OFF]				• Indicates [ON/OFF] condition of A/T O/D according to the input signal from the TCM.	

Monitored item [Unit]	DTC&SRT CONFIRMATION	ECM INPUT SIGNALS	MAIN SIGNALS	Description	Remarks
AT OD CANCEL [ON/OFF]				• Indicates [ON/OFF] condition of A/T O/D cancel signal sent from the TCM.	
CRUISE LAMP [ON/OFF]				• Indicates [ON/OFF] condition of CRUISE lamp determined by the ECM according to the input signals.	
SET LAMP [ON/OFF]				• Indicates [ON/OFF] condition of SET lamp determined by the ECM according to the input signals.	
ETHANOL M/R [%]*1				• Ethanol mixture ratio presumed by the ECM according to the input signals is displayed.	
ALT DUTY [%]				• Indicates the duty ratio of the power generation command value. The ratio is calculated by ECM based on the battery current sensor signal.	
BAT CUR SEN [mV]		×		• The signal voltage of battery current sensor is displayed.	
A/F ADJ-B1				• Indicates the correction factor stored in ECM. The factor is calculated from the difference between the target air/fuel ratio stored in ECM and the air-fuel ratio calculated from air fuel ratio (A/F) sensor 1 signal.	
A/F ADJ-B2					
P/N POSI SW [ON/OFF]	×	×	×	• Indicates [ON/OFF] condition from the park/neutral position (PNP) switch signal.	
INT/A TEMP SE [°C] or [°F]	×	×	×	• The intake air temperature (determined by the signal voltage of the intake air temperature sensor) is indicated.	
AC PRESS SEN [V]		×		• The signal voltage from the refrigerant pressure sensor is displayed.	
A/F SEN1 (B2) [V]	×	×	×	• The A/F signal computed from the input signal of the A/F sensor 1 is displayed.	
VTC DTY EX B2 [%]				—	
FPCM DR VOLT [V]*1				• The voltage between fuel pump and FPCM is displayed.	
THRTL STK CNT B1*2				—	
HO2 S2 DIAG2 (B1) [INCMP/CMPLT]				• Indicates DTC P0139 self-diagnosis (slow response) condition. INCMP: Self-diagnosis is incomplete. CMPLT: Self-diagnosis is complete.	
HO2 S2 DIAG2 (B2) [INCMP/CMPLT]				• Indicates DTC P0159 self-diagnosis (slow response) condition. INCMP: Self-diagnosis is incomplete. CMPLT: Self-diagnosis is complete.	
A/F SEN1 DIAG1 (B1) [INCMP/CMPLT]				• Indicates DTC P015A or P015B self-diagnosis condition. INCMP: Self-diagnosis is incomplete. CMPLT: Self-diagnosis is complete.	

Monitored item [Unit]	DTC&SRT CONFIRMATION	ECM INPUT SIGNALS	MAIN SIGNALS	Description	Remarks
A/F SEN1 DIAG1 (B2) [INCMP/CMPLT]				• Indicates DTC P015C or P015D self-diagnosis condition. INCMP: Self-diagnosis is incomplete. CMPLT: Self-diagnosis is complete.	
A/F SEN1 DIAG2 (B1) [INCMP/CMPLT]				• Indicates DTC P014C or P014D self-diagnosis condition. INCMP: Self-diagnosis is incomplete. CMPLT: Self-diagnosis is complete.	
A/F SEN1 DIAG2 (B2) [INCMP/CMPLT]				• Indicates DTC P014E or P014F self-diagnosis condition. INCMP: Self-diagnosis is incomplete. CMPLT: Self-diagnosis is complete.	
A/F SEN1 DIAG3 (B1) [ABSNT/PRSNT]				• Indicates DTC P014C, P014D, P015A or P015B self-diagnosis condition. ABSNT: The vehicle condition is not within the diagnosis range. PRSNT: The vehicle condition is within the diagnosis range.	
A/F SEN1 DIAG3 (B2) [ABSNT/PRSNT]				• Indicates DTC P014E, P014F, P015C or P015D self-diagnosis condition. ABSNT: The vehicle condition is not within the diagnosis range. PRSNT: The vehicle condition is within the diagnosis range.	
A/F-S ATMSPHRC CRCT B1				Displays a determined value of atmospheric correction factor necessary for correcting an A/F sensor signal input to ECM. The signal used for the correction is an A/F sensor signal transmitted while driving under atmospheric pressure.	
A/F-S ATMSPHRC CRCT B2				Displays a determined value of atmospheric correction factor necessary for correcting an A/F sensor signal input to ECM. The signal used for the correction is an A/F sensor signal transmitted while driving under atmospheric pressure.	
A/F-S ATMSPHRC CRCT UP B1 [count]				Displays the number of updates of the A/F sensor atmospheric correction factor.	
A/F-S ATMSPHRC CRCT UP B2 [count]				Displays the number of updates of the A/F sensor atmospheric correction factor.	
EVAP LEAK DIAG				• Indicates the condition of EVAP leak diagnosis. YET: EVAP leak diagnosis has not been performed yet. CMPLT: EVAP leak diagnosis has been performed successfully.	
EVAP DIAG READY				• Indicates the ready condition of EVAP leak diagnosis. ON: Diagnosis has been ready condition. OFF: Diagnosis has not been ready condition.	
SYSTEM 1 DIAGNOSIS A B2 [INCMP/CMPLT]				• Indicates DTC P219B self-diagnosis condition. - INCMP: Self-diagnosis is incomplete. - CMPLT: Self-diagnosis is complete.	

Monitored item [Unit]	DTC&SRT CONFIRMATION	ECM INPUT SIGNALS	MAIN SIGNALS	Description	Remarks
SYSTEM 1 DIAGNOSIS A B1 [INCMP/CMPLT]				• Indicates DTC P219A self-diagnosis condition. - INCMP: Self-diagnosis is incomplete. - CMPLT: Self-diagnosis is complete.	
SYSTEM 1 DIAGNOSIS B B2 [ABSNT/PRSNT]				• Indicates DTC P219B self-diagnosis condition. - ABSNT: Self-diagnosis standby - PRSNT: Under self-diagnosis	
SYSTEM 1 DIAGNOSIS B B1 [ABSNT/PRSNT]				• Indicates DTC P219A self-diagnosis condition. - ABSNT: Self-diagnosis standby - PRSNT: Under self-diagnosis	

*1: For Flexible Fuel Vehicle

*2: The item is indicated, but not used.

NOTE:

Any monitored item that does not match the vehicle being diagnosed is deleted from the display automatically.

WORK SUPPORT MODE

Work Item

WORK ITEM	CONDITION	USAGE
IDLE AIR VOL LEARN	• THE IDLE AIR VOLUME THAT KEEPS THE ENGINE WITHIN THE SPECIFIED RANGE IS MEMORIZED IN ECM.	When learning the idle air volume
EVAP SYSTEM CLOSE	CLOSE THE EVAP CANISTER VENT CONTROL VALVE IN ORDER TO MAKE EVAP SYSTEM CLOSE UNDER THE FOLLOWING CONDITIONS. • IGN SW ON • ENGINE NOT RUNNING • AMBIENT TEMPERATURE IS ABOVE 0°C (32°F). • NO VACUUM AND NO HIGH PRESSURE IN EVAP SYSTEM • FUEL TANK TEMP. IS MORE THAN 0°C (32°F). • WITHIN 10 MINUTES AFTER STARTING “EVAP SYSTEM CLOSE” • WHEN TRYING TO EXECUTE “EVAP SYSTEM CLOSE” UNDER THE CONDITION EXCEPT ABOVE, CONSULT WILL DISCONTINUE IT AND DISPLAY APPROPRIATE INSTRUCTION. **NOTE:** **WHEN STARTING ENGINE, CONSULT MAY DISPLAY “BATTERY VOLTAGE IS LOW. CHARGE BATTERY”, EVEN IN USING CHARGED BATTERY.**	When detecting EVAP vapor leak point of EVAP system
FUEL PRESSURE RELEASE	• FUEL PUMP WILL STOP BY TOUCHING “START” DURING IDLING. CRANK A FEW TIMES AFTER ENGINE STALLS.	When releasing fuel pressure from fuel line
SELF-LEARNING CONT	• THE COEFFICIENT OF SELF-LEARNING CONTROL MIXTURE RATIO RETURNS TO THE ORIGINAL COEFFICIENT.	When clearing the coefficient of self-learning control value
TARGET IDLE RPM ADJ*	• IDLE CONDITION	When setting target idle speed
ETHANOL M/R ADJ*2	• THIS FUNCTION ALLOWS THE ETHANOL MIXTURE RATIO THAT THE ECM ESTIMATED TO BE CHANGED. IMPROPER USAGE OF THIS FUNCTION MAY CAUSE POOR DRIVEABILITY OR DECREASING FUEL ECONOMY. FOLLOW THE INSTRUCTION OF SERVICE MANUAL.	When adjusting the ethanol mixture ratio to the specified value.

WORK ITEM	CONDITION	USAGE
VIN REGISTRATION	• IN THIS MODE, VIN IS REGISTERED IN ECM	When registering VIN in ECM
TARGET IGN TIM ADJ*	• IDLE CONDITION	When adjusting target ignition timing
CLSD THL POS LEARN	• Ignition on and engine stopped.	When learning the throttle valve closed position
SAVING DATA FOR REPLC CPU	In this mode, save data that is in ECM.	When ECM is replaced.
WRITING DATA FOR REPLC CPU	In this mode, write data stored by “SAVE DATA FOR CPU REPLC” in work support mode to ECM.	When ECM is replaced.

*1: This function is not necessary in the usual service procedure.

*2: For Flexible Fuel Vehicle

ACTIVE TEST MODE

Test Item

TEST ITEM	CONDITION	JUDGEMENT	CHECK ITEM (REMEDY)
FUEL INJECTION	• Engine: Return to the original trouble condition • Change the amount of fuel injection using CONSULT.	If trouble symptom disappears, see CHECK ITEM.	• Harness and connectors • Fuel injector • Air fuel ratio (A/F) sensor 1
ENG COOLANT TEMP	• Engine: Return to the original trouble condition • Change the engine coolant temperature using CONSULT.	If trouble symptom disappears, see CHECK ITEM.	• Harness and connectors • Engine coolant temperature sensor • Fuel injector
PURG VOL CONT/V	• Engine: After warming up, run engine at 1,500 rpm. • Change the EVAP canister purge volume control solenoid valve opening percent using CONSULT.	Engine speed changes according to the opening percent.	• Harness and connectors • Solenoid valve
FUEL/T TEMP SEN	• Change the fuel tank temperature using CONSULT.		
ALTERNATOR DUTY	• Engine: Idle • Change duty ratio using CONSULT.	Battery voltage changes.	• Harness and connectors • IPDM E/R • Alternator
FUEL PUMP RELAY	• Ignition switch: ON (Engine stopped) • Turn the fuel pump relay ON and OFF using CONSULT and listen to operating sound.	Fuel pump relay makes the operating sound.	• Harness and connectors • Fuel pump relay
COOLING FAN*	• Ignition switch: ON • Turn the cooling fan HI and OFF using CONSULT.	Cooling fan moves and stops.	• Harness and connectors • Cooling fan motor • IPDM E/R
IGNITION TIMING	• Engine: Return to the original trouble condition • Timing light: Set • Retard the ignition timing using CONSULT.	If trouble symptom disappears, see CHECK ITEM.	• Perform Idle Air Volume Learning.
POWER BALANCE	• Engine: After warming up, idle the engine. • A/C switch: OFF • Selector lever: P or N • Cut off each fuel injector signal one at a time using CONSULT.	Engine runs rough or dies.	• Harness and connectors • Compression • Fuel injector • Power transistor • Spark plug • Ignition coil

TEST ITEM	CONDITION	JUDGEMENT	CHECK ITEM (REMEDY)
VENT CONTROL/V	• Ignition switch: ON (Engine stopped) • Turn solenoid valve ON and OFF with the CONSULT and listen to operating sound.	Solenoid valve makes an operating sound.	• Harness and connectors • Solenoid valve
V/T ASSIGN ANGLE	• Engine: Return to the original trouble condition • Change intake valve timing using CONSULT.	If trouble symptom disappears, see CHECK ITEM.	• Harness and connectors • Intake valve timing control solenoid valve
FPCM	• Engine: Returns to the original trouble condition • Select “LOW” and “HI” with CONSULT.	If trouble symptom disappears, see CHECK ITEM.	• Harness and connectors • FPCM

*: Leaving cooling fan OFF with CONSULT while engine is running may cause the engine to overheat.

DTC WORK SUPPORT MODE

Test Item

Test mode	Test item	Corresponding DTC No.	Reference page
A/F SEN1	A/F SEN1 (B1) P1278/P1279	P0133	EC-218
	A/F SEN1 (B1) P1276	P0130	EC-206
	A/F SEN1 (B2) P1288/P1289	P0153	EC-218
	A/F SEN1 (B2) P1286	P0150	EC-206
EVAPORATIVE SYSTEM	EVP V/S LEAK P0456/P1456*	P0442	EC-298
		P0456	EC-342
	PURG FLOW P0441	P0441	EC-293
	PURG VOL CN/V P1444	P0443	EC-305
HO2S2	HO2S2 (B1) P1146	P0138	EC-229
	HO2S2 (B1) P1147	P0137	EC-224
	HO2S2 (B1) P0139	P0139	EC-236
	HO2S2 (B2) P1166	P0158	EC-229
	HO2S2 (B2) P1167	P0157	EC-224
	HO2S2 (B2) P0159	P0159	EC-236

*: DTC P1442 and P1456 does not apply to TA60 models but appears in DTC Work Support Mode screens.

SRT & P-DTC MODE

SRT STATUS Mode

- For items whose SRT codes are set, “CMPLT” is displayed on the CONSULT screen; for items whose SRT codes are not set, “INCMP” is displayed.
- “SRT STATUS” provides the presence or absence of permanent DTCs stored in ECM memory.

PERMANENT DTC STATUS Mode

How to display permanent DTC status

1. Turn ignition switch OFF and wait at least 10 seconds.
2. Turn ignition switch ON.
3. Turn ignition switch OFF and wait at least 10 seconds.
4. Turn ignition switch ON.
5. Select “PERMANENT DTC STATUS” in “DTC & SRT CONFIRMATION” mode with CONSULT.
   NOTE:
   Permanent DTCs stored in ECM memory are displayed on the CONSULT screen to show if a driving pattern required for erasing permanent DTCs is complete (CMPLT) or incomplete (INCMP).
   CAUTION:

Since the "PERMANENT DTC STATUS" screen displays the previous trip information, repeat the following twice to update the information: "Ignition switch OFF", "Wait for more than 10 seconds" and "Ignition switch ON".

PERMANENT DTC & SRT CONFIRMATION : PERMANENT DTC STATUS

CAUTION:
Turn ignition switch from ON to OFF twice to update the information on the status screen.

PERMANENT DTC	DRIVING PATTERN B	DRIVING PATTERN D
XXXX	INCMP	INCMP
XXXX	CMPLT	INCMP
XXXX	INCMP	CMPLT
XXXX	CMPLT	INCMP
XXXX	INCMP	INCMP
XXXX	INCMP	INCMP

The previous trip information is displayed.

JSBIA0062GB

NOTE:
This mode is not used in regions that permanent DTCs are not regulated by law.

SRT WORK SUPPORT Mode
This mode enables a technician to drive a vehicle to set the SRT while monitoring the SRT status.

PERMANENT DTC WORK SUPPORT Mode
This mode enables a technician to drive a vehicle to complete the driving pattern that is required for erasing permanent DTC.
NOTE:
This mode is not used in regions that permanent DTCs are not regulated by law.

ECU DIAGNOSIS INFORMATION

ECM

CONSULT Reference Value in Data Monitor Mode

INFOID:0000000011291617

NOTE:
- The following table includes information (items) inapplicable to this vehicle. For information (items) applicable to this vehicle, refer to CONSULT display items.
- Numerical values in the following table are reference values.
- These values are input/output values that ECM receives/transmits and may differ from actual operations.
  Example:
  The ignition timing shown by the timing light may differ from the ignition timing displayed on the data monitor. This occurs because the timing light shows a value calculated by ECM according to signals received from the cam shaft position sensor and other sensors related to ignition timing.

For outlines of following items, refer to EC-49, "CONSULT Function".

MONITOR ITEM	CONDITION		SPECIFICATION
ENG SPEED	• Run engine and compare CONSULT value with the tachometer indication.		Almost the same speed as the tachometer indication.
MAS A/F SE-B1	See EC-143.		
B/FUEL SCHDL	See EC-143.		
A/F ALPHA-B1 A/F ALPHA-B2	See EC-143.		
COOLANT TEMP/S	• Engine: After warming up		More than 70°C (158°F)
A/F SEN1 (B1)	• Engine: After warming up	Maintaining engine speed at 2,000 rpm	Fluctuates around 2.2 V
HO2S2 (B1) HO2S2 (B2)	• Revving engine from idle to 3,000 rpm quickly after the following conditions are met. - Engine: After warming up - Keeping engine speed between 3,500 and 4,000 rpm for 1 minute and at idle for 1 minute under no load		0 - 0.3V ←→ Approx. 0.6 - 1.0V
HO2S2 MNTR (B1) HO2S2 MNTR (B2)	• Revving engine from idle to 3,000 rpm quickly after the following conditions are met. - Engine: After warming-up - Keeping engine speed between 3,500 and 4,000 rpm for 1 minute and at idle for 1 minute under no load		LEAN ←→ RICH
VHCL SPEED SE	• Turn drive wheels and compare CONSULT value with the speedometer indication.		Almost the same speed as the speedometer indication
BATTERY VOLT	• Ignition switch: ON (Engine stopped)		11 - 14V
ACCEL SEN 1	• Ignition switch: ON (Engine stopped)	Accelerator pedal: Fully released	0.5 - 1.0V
		Accelerator pedal: Fully depressed	4.2 - 4.8V
ACCEL SEN 2*1	• Ignition switch: ON (Engine stopped)	Accelerator pedal: Fully released	0.5 - 1.0V
		Accelerator pedal: Fully depressed	4.2 - 4.8V
TP SEN 1-B1 TP SEN 2-B1	• Ignition switch: ON (Engine stopped) • Selector lever: D	Accelerator pedal: Fully released	More than 0.36V
		Accelerator pedal: Fully depressed	Less than 4.75V
FUEL T/TMP SE	• Ignition switch: ON		Indicates fuel tank temperature.
EVAP SYS PRES	• Ignition switch: ON		Approx. 1.8 - 4.8V
FUEL LEVEL SE	• Ignition switch: ON		Depending on fuel level of fuel tank.
START SIGNAL	• Ignition switch: ON → START → ON		OFF → ON → OFF
CLSD THL POS	• Ignition switch: ON (Engine stopped)	Accelerator pedal: Fully released	ON
		Accelerator pedal: Slightly depressed	OFF

MONITOR ITEM	CONDITION		SPECIFICATION
AIR COND SIG	• Engine: After warming up, idle the engine	Air conditioner switch: OFF	OFF
		Air conditioner switch: ON (Compressor: Operates)	ON
PW/ST SIGNAL	• Engine: After warming up, idle the engine	Steering wheel: Not being turned (Forward direction)	OFF
		Steering wheel: Being turned	ON
LOAD SIGNAL	• Ignition switch: ON	Rear window defogger switch is ON and/or lighting switch is in 2nd.	ON
		Rear window defogger switch is OFF and lighting switch is OFF.	OFF
IGNITION SW	• Ignition switch: ON → OFF → ON		ON → OFF → ON
HEATER FAN SW	• Engine: After warming up, idle the engine	Heater fan control switch: ON	ON
		Heater fan control switch: OFF	OFF
BRAKE SW	• Ignition switch: ON	Brake pedal: Fully released	OFF
		Brake pedal: Slightly depressed	ON
INJ PULSE-B1 INJ PULSE-B2	• Engine: After warming up • Selector lever: P or N • Air conditioner switch: OFF • No load	Idle	2.0 - 2.8 msec
		2,000 rpm	1.9 - 2.9 msec
IGN TIMING	• Engine: After warming up • Selector lever: P or N • Air conditioner switch: OFF • No load	Idle	10° - 20° BTDC
		2,000 rpm	25° - 45° BTDC
CAL/LD VALUE	• Engine: After warming up • Selector lever: P or N • Air conditioner switch: OFF • No load	Idle	14% - 33%
		2,500 rpm	12% - 25%
MASS AIRFLOW	• Engine: After warming up • Selector lever: P or N • Air conditioner switch: OFF • No load	Idle	3.0 - 9.0 g/s
		2,500 rpm	9.0 - 28.0 g/s
PURG VOL C/V	• Engine: After warming up • Selector lever: P or N • Air conditioner switch: OFF • No load	Idle (Accelerator pedal: Not depressed even slightly, after engine starting.)	0%
		2,000 rpm	—
INT/V TIM(B1) INT/V TIM(B2)	• Engine: After warming up • Selector lever: P or N • Air conditioner switch: OFF • No load	Idle	–5)° - (+5)°CA
		2,000 rpm	Approx. 0° - 20°CA
INT/V SOL (B1) INT/V SOL (B2)	• Engine: After warming up • Selector lever: P or N • Air conditioner switch: OFF • No load	Idle	0% - 2%
		2,000 rpm	Approx. 25% - 50%
AIR COND RLY	• Engine: After warming up, idle the engine	Air conditioner switch: OFF	OFF
		Air conditioner switch: ON (Compressor: Operates)	ON
FUEL PUMP RLY	• For 1 second after turning ignition switch ON • Engine running or cranking		ON
	• Except above conditions		OFF
FPCM*2	• Engine: Cranking		HI
	• Engine: Idle • Engine coolant temperature: More than 10°C (50°F)		LOW
VENT CONT/V	• Ignition switch: ON		OFF

MONITOR ITEM	CONDITION		SPECIFICATION
THRTL RELAY	• Ignition switch: ON		ON
A/F S1 HTR(B2)	• Engine: After warming up, idle the engine		4 - 100%
COOLING FAN	• Engine: After warming up, idle the engine • Air conditioner switch: OFF	Engine coolant temperature: 99°C (210°F) or less	OFF
		Engine coolant temperature: 100°C (212°F) or more	HI
HO2S2 HTR (B1) HO2S2 HTR (B2)	• Engine speed: Below 3,600 rpm after the following conditions are met. - Engine: After warming up - Keeping the engine speed between 3,500 and 4,000 rpm for 1 minute and at idle for 1 minute under no load		ON
	• Engine speed: Above 3,600 rpm		OFF
ALT DUTY SIG	• Power generation voltage variable control: Operating		ON
	• Power generation voltage variable control: Not operating		OFF
I/P PULLY SPD	• Vehicle speed: More than 20 km/h (12 MPH)		Almost the same speed as the tachometer indication
VEHICLE SPEED	• Turn drive wheels and compare CONSULT value with the speedometer indication.		Almost the same speed as the speedometer indication
IDL A/V LEARN	• Engine: Running	Idle air volume learning has not been performed yet.	YET
		Idle air volume learning has already been performed successfully.	CMPLT
TRVL AFTER MIL	• Ignition switch: ON	Vehicle has traveled after MIL has turned ON.	0 - 65,535 km (0 - 40,723 mile)
A/F S1 HTR(B1)	• Engine: After warming up, idle the engine		4 - 100%
VHCL SPEED SE	• Turn drive wheels and compare CONSULT value with the speedometer indication.		Almost the same speed as the speedometer indication
SET VHCL SPD	• Engine: Running	ASCD: Operating.	The preset vehicle speed is displayed.
MAIN SW	• Ignition switch: ON	MAIN switch: Pressed	ON
		MAIN switch: Released	OFF
CANCEL SW	• Ignition switch: ON	CANCEL switch: Pressed	ON
		CANCEL switch: Released	OFF
RESUME/ACC SW	• Ignition switch: ON	RESUME/ACCELERATE switch: Pressed	ON
		RESUME/ACCELERATE switch: Released	OFF
SET SW	• Ignition switch: ON	SET/COAST switch: Pressed	ON
		SET/COAST switch: Released	OFF
BRAKE SW1	• Ignition switch: ON	Brake pedal: Fully released	ON
		Brake pedal: Slightly depressed	OFF
BRAKE SW2	• Ignition switch: ON	Brake pedal: Fully released	OFF
		Brake pedal: Slightly depressed	ON
VHCL SPD CUT	• Ignition switch: ON		NON
LO SPEED CUT	• Ignition switch: ON		NON
AT OD MONITOR	• Ignition switch: ON		OFF
AT OD CANCEL	• Ignition switch: ON		OFF
CRUISE LAMP	• Ignition switch: ON	MAIN switch: Pressed at the 1st time → at the 2nd time	ON → OFF

MONITOR ITEM	CONDITION		SPECIFICATION
SET LAMP	• MAIN switch: ON • Vehicle speed: Between 40 km/h (25 MPH) and 144 km/h (89 MPH)	ASCD: Operating	ON
		ASCD: Not operating	OFF
ETHANOL M/R*2	• Ignition switch: ON		0 - 85%
ALT DUTY	• Engine: Idle		0 - 80%
BAT CUR SEN	• Engine speed: Idle • Battery: Fully charged*3 • Selector lever: P or N • Air conditioner switch: OFF • No load		Approx. 2,600 - 3,500mV
A/F ADJ-B1	• Engine: Running		(–0.330) - (+0.330)
A/F ADJ-B2	• Engine: Running		(–0.330) - (+0.330)
P/N POSI SW	• Ignition switch: ON	Selector lever: P or N	ON
		Selector lever: Except above	OFF
INT/A TEMP SE	• Ignition switch: ON		Indicates intake air temperature.
AC PRESS SEN	• Engine: Idle • Both A/C switch and blower fan switch: ON (Compressor operates.)		1.0 - 4.0V
A/F SEN1 (B2)	• Engine: After warming up	Maintaining engine speed at 2,000 rpm	Fluctuates around 2.2 V
VTC DTY EX B2	—		—
FPCM DR VOLT	• Not used.		—
THRTL STK CNT B1	**NOTE:** The item is indicated, but not used.		—
HO2 S2 DIAG2 (B1)	DTC P0139 self-diagnosis (slow response) is incomplete.		INCMP
	DTC P0139 self-diagnosis (slow response) is complete.		CMPLT
HO2 S2 DIAG2 (B2)	DTC P0159 self-diagnosis (slow response) is incomplete.		INCMP
	DTC P0159 self-diagnosis (slow response) is complete.		CMPLT
A/F SEN1 DIAG1 (B1)	DTC P015A and P015B self-diagnosis incomplete.		INCMP
	DTC P015A and P015B self-diagnosis is complete.		CMPLT
A/F SEN1 DIAG1 (B2)	DTC P015C and P015D self-diagnosis incomplete.		INCMP
	DTC P015C and P015D self-diagnosis is complete.		CMPLT
A/F SEN1 DIAG2 (B1)	DTC P014C and P014D self-diagnosis incomplete.		INCMP
	DTC P014C and P014D self-diagnosis is complete.		CMPLT
A/F SEN1 DIAG2 (B2)	DTC P014E and P014F self-diagnosis incomplete.		INCMP
	DTC P014E and P014F self-diagnosis is complete.		CMPLT
A/F SEN1 DIAG3 (B1)	The vehicle condition is not within the diagnosis range of DTC P014C, P014D, P015A or P015B.		ABSNT
	The vehicle condition is within the diagnosis range of DTC P014C, P014D, P015A or P015B.		PRSNT
A/F SEN1 DIAG3 (B2)	The vehicle condition is not within the diagnosis range of DTC P014E, P014F, P015C or P015D.		ABSNT
	The vehicle condition is within the diagnosis range of DTC P014E, P014F, P015C or P015D.		PRSNT
A/F-S ATMSPHRC CRCT B1	Engine: After warming up, idle the engine		Varies depending on vehicle environment.
A/F-S ATMSPHRC CRCT B2	Engine: After warming up, idle the engine		Varies depending on vehicle environment.

MONITOR ITEM	CONDITION	SPECIFICATION
A/F-S ATMSPHRC CRCT UP B1	Engine: Running	Varies depending on the number of updates.
A/F-S ATMSPHRC CRCT UP B2	Engine: Running	Varies depending on the number of updates.
EVAP LEAK DIAG	• Ignition switch: ON	Indicates the condition of EVAP leak diagnosis.
EVAP DIAG READY	• Ignition switch: ON	Indicates the ready condition of EVAP leak diagnosis.
SYSTEM 1 DIAGNOSIS A B1	DTC P219A self-diagnosis is incomplete.	INCMP
	DTC P219A self-diagnosis is incomplete.	CMPLT
SYSTEM 1 DIAGNOSIS A B2	DTC P219B self-diagnosis is incomplete.	INCMP
	DTC P219B self-diagnosis is incomplete.	CMPLT
SYSTEM 1 DIAGNOSIS B B1	DTC P219A self-diagnosis is on standby.	ABSENT
	DTC P219A self-diagnosis is under diagnosis.	PRSENT
SYSTEM 1 DIAGNOSIS B B2	DTC P219B self-diagnosis is on standby.	ABSENT
	DTC P219B self-diagnosis is under diagnosis.	PRSENT

*1: Accelerator pedal position sensor 2 signal and throttle position sensor 2 signal are converted by ECM internally. Thus, they differ from ECM terminals voltage signal.

*2: For Flexible Fuel Vehicle

*3: Before measuring the terminal voltage, confirm the battery is fully charged. Refer to PG-72, "How to Handle Battery".

ECM Harness Connector Terminal Layout

INFOID:0000000011291618

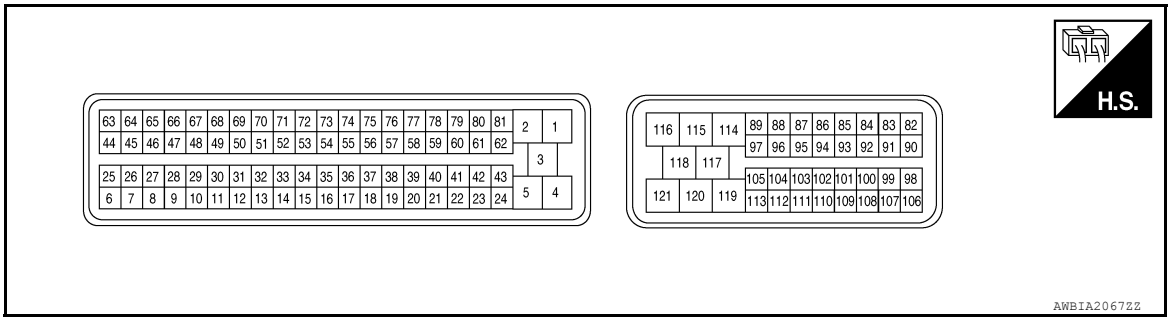

ECM Terminal and Reference Value

INFOID:0000000011291619

PREPARATION

ECM is located in the engine room passenger side behind battery.

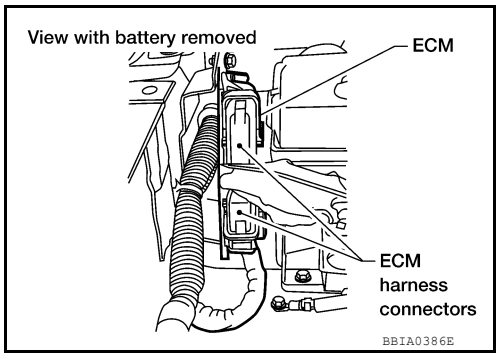

ECM INSPECTION TABLE

Specification data are reference values and are measured between each terminal and ground.
Pulse signal is measured by CONSULT.

CAUTION:

Do not use ECM ground terminals when measuring input/output voltage. Doing so may result in damage to the ECMs transistor. Use a ground other than ECM terminals, such as the ground.

TERMINAL NO.	WIRE COLOR	ITEM	CONDITION	DATA (DC Voltage)
1	B	ECM ground	**[Engine is running]** • Idle speed	Body ground
2	LG/B	A/F sensor 1 heater (bank 1)	**[Engine is running]** • **Warm-up condition** • Idle speed (More than 140 seconds after starting engine)	Approximately 2.9 - 8.8V★ 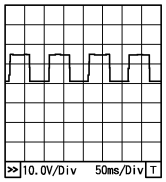 PBIA8148J
3	L	Throttle control motor relay power supply	**[Ignition switch: ON]**	BATTERY VOLTAGE (11 - 14V)
4	L/W	Throttle control motor (Close)	**[Ignition switch: ON]** • Engine: Stopped • Selector lever: D • Accelerator pedal: Fully released	0 - 14V★ 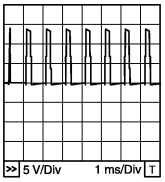 PBIB1104E
5	L/B	Throttle control motor (Open)	**[Ignition switch: ON]** • Engine: Stopped • Selector lever: D • Accelerator pedal: Fully depressed	0 - 14V★ 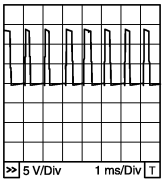 PBIB1105E
6	GR	Heated oxygen sensor 2 heater (bank 1)	**[Engine is running]** • Engine speed: Below 3,600 rpm after the following conditions are met. - Engine: After warming up - Keeping the engine speed between 3,500 and 4,000 rpm for 1 minute and at idle for 1 minute under no load	0 - 1.0V
			[Ignition switch: ON] • Engine: Stopped **[Engine is running]** • Engine speed: Above 3,600 rpm	BATTERY VOLTAGE (11 - 14V)
10	W	Intake valve timing control solenoid valve (bank 1)	**[Engine is running]** • **Warm-up condition** • Idle speed	BATTERY VOLTAGE (11 - 14V)
			[Engine is running] • **Warm-up condition** • Engine speed: 2,000rpm	7 - 12V★ 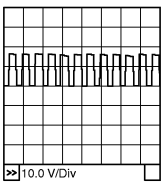 PBIB1790E

TERMINAL NO.	WIRE COLOR	ITEM	CONDITION	DATA (DC Voltage)
11	LG	Intake valve timing control solenoid valve (bank 2)	**[Engine is running]** • **Warm-up condition** • Idle speed	BATTERY VOLTAGE (11 - 14V)
			[Engine is running] • **Warm-up condition** • Engine speed: 2,000rpm	7 - 12V★ 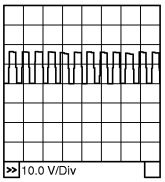 PBIB1790E
12	R	Power steering pressure sensor	**[Engine is running]** • Steering wheel: Being turned	0.5 - 4.5V
			[Engine is running] • Steering wheel: Not being turned	0.4 - 0.8V
13	O	Crankshaft position sensor (POS)	**[Engine is running]** • **Warm-up condition** • Idle speed **NOTE:** The pulse cycle changes depending on rpm at idle	Approximately 10V★ 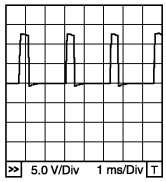 PBIB1041E
			[Engine is running] • Engine speed: 2,000 rpm	Approximately 10V★ 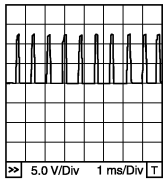 PBIB1042E
14	Y	Camshaft position sensor (PHASE)	**[Engine is running]** • **Warm-up condition** • Idle speed **NOTE:** The pulse cycle changes depending on rpm at idle	1.0 - 4.0V★ 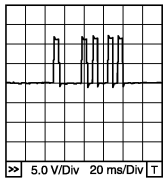 PBIB1039E
			[Engine is running] • Engine speed: 2,000 rpm	1.0 - 4.0V★ 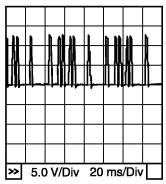 PBIB1040E
15	W	Knock sensor (bank 1)	**[Engine is running]** • Idle speed	Approximately 2.5V
16	G	A/F sensor 1 (bank 2)	**[Engine is running]** • **Warm-up condition** • Engine speed: 2,000 rpm	Approximately 1.8V Output voltage varies with air fuel ratio.

TERMINAL NO.	WIRE COLOR	ITEM	CONDITION	DATA (DC Voltage)
21 22 23 44	O/L BR GR/W O	Fuel injector No. 5 Fuel injector No. 3 Fuel injector No. 1 Fuel injector No. 7	**[Engine is running]** • **Warm-up condition** • Idle speed **NOTE:** The pulse cycle changes depending on rpm at idle	BATTERY VOLTAGE (11 - 14V)★ 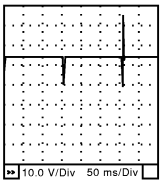 SEC984C
			[Engine is running] • **Warm-up condition** • Engine speed: 2,000 rpm	BATTERY VOLTAGE (11 - 14V)★ 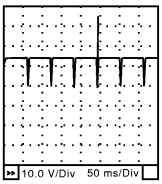 SEC985C
24 43	GR/G GR/G	A/F sensor 1 heater (bank 2)	**[Engine is running]** • **Warm-up condition** • Idle speed (More than 140 seconds after starting engine)	Approximately 2.9 - 8.8V★ 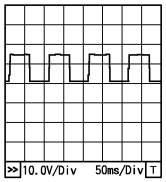 PBIA8148J
25	O/G	Heated oxygen sensor 2 heater (bank 2)	**[Engine is running]** • Engine speed: Below 3,600 rpm after the following conditions are met. - Engine: After warming up - Keeping the engine speed between 3,500 and 4,000 rpm for 1 minute and at idle for 1 minute under no load	0 - 1.0V
			[Ignition switch: ON] • Engine: Stopped **[Engine is running]** • Engine speed: Above 3,600 rpm	BATTERY VOLTAGE (11 - 14V)
32	L	EVAP control system pressure sensor	**[Ignition switch: ON]**	Approximately 1.8 - 4.8V
34	R/B	Intake air temperature sensor	**[Engine is running]**	Approximately 0 - 4.8V Output voltage varies with intake air temperature.
35	O	A/F sensor 1 (bank 1)	**[Engine is running]** • **Warm-up condition** • Engine speed: 2,000 rpm	Approximately 1.8V Output voltage varies with air fuel ratio.
36	W	Knock sensor (bank 2)	**[Engine is running]** • Idle speed	Approximately 2.5V

TERMINAL NO.	WIRE COLOR	ITEM	CONDITION	DATA (DC Voltage)
38	L	Fuel pump control module (FPCM) check	**[Ignition switch: ON]** • More than a few seconds after turning ignition switch ON	Approximately 0V
			[Ignition switch: ON] • For a few seconds after turning ignition switch ON **[Engine is running]** • **Warm-up condition** • Idle speed	4 - 6V
39	L/Y	Fuel pump control module (FPCM)	**[When cranking engine]**	0 - 0.5V
			[Engine is running] • **Warm-up condition** • Idle speed	8 - 12V
40 41 42 63	Y/G P L G	Fuel injector No. 6 Fuel injector No. 4 Fuel injector No. 2 Fuel injector No. 8	**[Engine is running]** • **Warm-up condition** • Idle speed **NOTE:** The pulse cycle changes depending on rpm at idle	BATTERY VOLTAGE (11 - 14V)★ 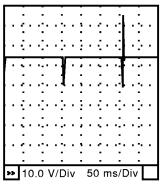 SEC984C
			[Engine is running] • **Warm-up condition** • Engine speed: 2,000 rpm	BATTERY VOLTAGE (11 - 14V)★ 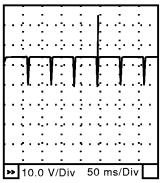 SEC985C
45	L/Y	EVAP canister purge volume control solenoid valve	**[Engine is running]** • Idle speed • Accelerator pedal: Not depressed even slightly, after engine starting	BATTERY VOLTAGE (11 - 14V)★ 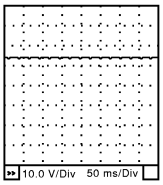 SEC990C
			[Engine is running] • Engine speed: About 2,000 rpm (More than 100 seconds after starting engine)	BATTERY VOLTAGE (11 - 14V)★ 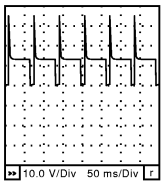 SEC991C

TERMINAL NO.	WIRE COLOR	ITEM	CONDITION	DATA (DC Voltage)
46 60 61 62	L/R GR/R O/W Y/R	Ignition signal No. 7 Ignition signal No. 5 Ignition signal No. 3 Ignition signal No. 1	**[Engine is running]** • **Warm-up condition** • Idle speed **NOTE:** The pulse cycle changes depending on rpm at idle	0 - 0.3V★ 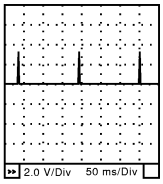 SEC986C
			[Engine is running] • **Warm-up condition** • Engine speed: 2,500 rpm	0.1 - 0.6V★ 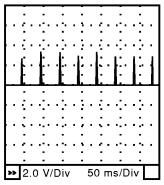 SEC987C
47	G	Sensor power supply (Throttle position sensor)	**[Ignition switch: ON]**	Approximately 5V
48	SB	Sensor power supply (EVAP control system pressure sensor)	**[Ignition switch: ON]**	Approximately 5V
49	R/Y	Sensor power supply (Refrigerant pressure sensor)	**[Ignition switch: ON]**	Approximately 5V
50	B	Throttle position sensor 1	**[Ignition switch: ON]** • Engine: Stopped • Selector lever: D • Accelerator pedal: Fully released	More than 0.36V
			[Ignition switch: ON] • Engine: Stopped • Selector lever: D • Accelerator pedal: Fully depressed	Less than 4.75V
51	W	Mass air flow sensor	**[Engine is running]** • **Warm-up condition** • Idle speed	0.9 - 1.3V
			[Engine is running] • **Warm-up condition** • Engine speed: 2,500 rpm	1.7 - 2.1V
53	L	Intake valve timing control position sensor (Bank 2)	**[Engine is running]** • **Warm-up condition** • Idle speed	0 - 1.0V
			[Engine is running] • Engine speed: 2,000 rpm	0 - 1.0V★ 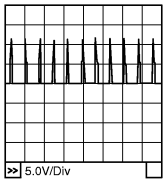 PBIB2046E

TERMINAL NO.	WIRE COLOR	ITEM	CONDITION	DATA (DC Voltage)
55	R	Heated oxygen sensor 2 (bank 1)	**[Engine is running]** • Revving engine from idle to 3,000 rpm quickly after the following conditions are met. - Engine: After warming up - Keeping the engine speed between 3,500 and 4,000 rpm for 1 minute and at idle for 1 minute under no load	0 - Approximately 1.0V
56	W	A/F sensor 1 (bank 1)	**[Ignition switch: ON]**	Approximately 2.2V
65 79 80 81	G/R V/W W/R W/G	Ignition signal No. 8 Ignition signal No. 6 Ignition signal No. 4 Ignition signal No. 2	**[Engine is running]** • **Warm-up condition** • Idle speed **NOTE:** The pulse cycle changes depending on rpm at idle	0 - 0.3V★ 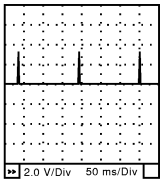 SEC986C
			[Engine is running] • **Warm-up condition** • Engine speed: 2,500 rpm	0.1 - 0.6V★ 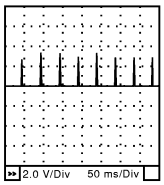 SEC987C
66	R	Sensor ground (Throttle position sensor)	**[Engine is running]** • **Warm-up condition** • Idle speed	Approximately 0V
67	B	Sensor ground	**[Engine is running]** • **Warm-up condition** • Idle speed	Approximately 0V
68	W/L	Sensor power supply (PSP sensor)	**[Ignition switch: ON]**	Approximately 5V
69	W	Throttle position sensor 2	**[Ignition switch: ON]** • Engine: Stopped • Selector lever: D • Accelerator pedal: Fully released	Less than 4.75V
			[Ignition switch: ON] • Engine: Stopped • Selector lever: D • Accelerator pedal: Fully depressed	More than 0.36V
70	B/W	Refrigerant pressure sensor	**[Engine is running]** • **Warm-up condition** • Both A/C switch and blower fan switch: ON (Compressor operates.)	1.0 - 4.0V
71	R	Battery current sensor	**[Engine is running]** • Battery: Fully charged* • Idle speed	Approximately 2.6 - 3.5V

TERMINAL NO.	WIRE COLOR	ITEM	CONDITION	DATA (DC Voltage)
72	Y	Intake valve timing control position sensor (Bank 1)	**[Engine is running]** • **Warm-up condition** • Idle speed	0 - 1.0V
			[Engine is running] • Engine speed: 2,000 rpm	0 - 1.0V★ 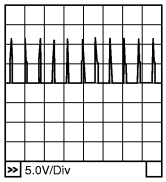
73	Y/B	Engine coolant temperature sensor	**[Engine is running]**	Approximately 0 - 4.8V Output voltage varies with engine coolant temperature.
74	L	Heated oxygen sensor 2 (bank 2)	**[Engine is running]** • Revving engine from idle to 3,000 rpm quickly after the following conditions are met. - Engine: After warming up - Keeping the engine speed between 3,500 and 4,000 rpm for 1 minute and at idle for 1 minute under no load	0 - Approximately 1.0V
75	L	A/F sensor 1 (bank 2)	**[Ignition switch: ON]**	Approximately 2.2V
78	B/W	Sensor ground (Heated oxygen sensor 2)	**[Engine is running]** • **Warm-up condition** • Idle speed	Approximately 0V
82	B/R	Sensor ground (APP sensor 1)	**[Engine is running]** • **Warm-up condition** • Idle speed	Approximately 0V
83	G/W	Sensor ground (APP sensor 2)	**[Engine is running]** • **Warm-up condition** • Idle speed	Approximately 0V
86	P	CAN communication line	—	—
90	L	Sensor power supply (APP sensor 1)	**[Ignition switch: ON]**	Approximately 5V
91	W/R	Sensor power supply (APP sensor 2)	**[Ignition switch: ON]**	Approximately 5V
94	L	CAN communication line	—	—
98	G/R	Accelerator pedal position sensor 2	**[Ignition switch: ON]** • Engine: Stopped • Accelerator pedal: Fully released	0.25 - 0.50V
			[Ignition switch: ON] • Engine: Stopped • Accelerator pedal: Fully depressed	2.0 - 2.5V

TERMINAL NO.	WIRE COLOR	ITEM	CONDITION	DATA (DC Voltage)
99	G/Y	ASCD steering switch	**[Ignition switch: ON]** • ASCD steering switch: OFF	Approximately 4V
			[Ignition switch: ON] • MAIN switch: Pressed	Approximately 0V
			[Ignition switch: ON] • CANCEL switch: Pressed	Approximately 1V
			[Ignition switch: ON] • RESUME/ACCELERATE switch: Pressed	Approximately 3V
			[Ignition switch: ON] • SET/COAST switch: Pressed	Approximately 2V
101	R/W	Stop lamp switch	**[Ignition switch: OFF]** • Brake pedal: Fully released	Approximately 0V
			[Ignition switch: OFF] • Brake pedal: Slightly depressed	BATTERY VOLTAGE (11 - 14V)
102	GR/R	PNP signal	**[Ignition switch: ON]** • Selector lever: P or N	Approximately 0V
			[Ignition switch: ON] • Except the above gear position	BATTERY VOLTAGE (11 - 14V)
104	O	Throttle control motor relay	**[Ignition switch: OFF]**	BATTERY VOLTAGE (11 - 14V)
			[Ignition switch: ON]	0 - 1.0V
106	BR/W	Accelerator pedal position sensor 1	**[Ignition switch: ON]** • Engine: Stopped • Accelerator pedal: Fully released	0.5 - 1.0V
			[Ignition switch: ON] • Engine: Stopped • Accelerator pedal: Fully depressed	4.2 - 4.8V
107	V/R	Fuel tank temperature sensor	**[Engine is running]**	Approximately 0 - 4.8V Output voltage varies with fuel tank temperature.
108	BR/W	ASCD brake switch	**[Ignition switch: ON]** • Brake pedal: Slightly depressed	Approximately 0V
			[Ignition switch: ON] • Brake pedal: Fully released	BATTERY VOLTAGE (11 - 14V)
109	L/W	Ignition switch	**[Ignition switch: OFF]**	0V
			[Ignition switch: ON]	BATTERY VOLTAGE (11 - 14V)
111	W/B	ECM relay (Self shut-off)	**[Engine is running]** **[Ignition switch: OFF]** • For a few seconds after turning ignition switch OFF	0 - 1.5V
			[Ignition switch: OFF] • More than a few seconds after turning ignition switch OFF	BATTERY VOLTAGE (11 - 14V)
113	GR	Fuel pump relay	**[Ignition switch: ON]** • For 1 second after turning ignition switch ON **[Engine is running]**	0 - 1.5V
			[Ignition switch: ON] • More than 1 second after turning ignition switch ON	BATTERY VOLTAGE (11 - 14V)

TER-MI-NAL NO.	WIRE COLOR	ITEM	CONDITION	DATA (DC Voltage)
115 116	B B/W	ECM ground	**[Engine is running]** • Idle speed	Body ground
117	L/Y	EVAP canister vent control valve	**[Ignition switch: ON]**	BATTERY VOLTAGE (11 - 14V)
119 120	BR BR	Power supply for ECM	**[Ignition switch: ON]**	BATTERY VOLTAGE (11 - 14V)
121	W	Power supply for ECM (Back-up)	**[Ignition switch: OFF]**	BATTERY VOLTAGE (11 - 14V)

★: Average voltage for pulse signal (Actual pulse signal can be confirmed by oscilloscope.)

*: Before measuring the terminal voltage, confirm that the battery is fully charged. Refer to PG-72, "How to Handle Battery".

Fail-Safe Chart

INFOID:0000000011291620

When the DTC listed below is detected, the ECM enters fail-safe mode and the MIL lights up.

DTC No.	Detected items	Engine operating condition in fail-safe mode
P0101 P0102 P0103	Mass air flow sensor circuit	Engine speed will not rise more than 2,400 rpm due to the fuel cut.
P0117 P0118	Engine coolant temperature sensor circuit	Engine coolant temperature will be determined by ECM based on the following condition. CONSULT displays the engine coolant temperature decided by ECM. Condition: Engine coolant temperature decided (CONSULT display) Just as ignition switch is turned ON or START: 40°C (104°F) Approx. 4 minutes or more after engine starting: 80°C (176°F) Except as shown above: 40 - 80°C (104 - 176°F) (Depends on the time) When the fail-safe system for engine coolant temperature sensor is activated, the cooling fan operates while engine is running.
P0122 P0123 P0222 P0223 P2135	Throttle position sensor	The ECM controls the electric throttle control actuator in regulating the throttle opening in order for the idle position to be within +10 degrees. The ECM regulates the opening speed of the throttle valve to be slower than the normal condition. So, the acceleration will be poor.
P0500	Vehicle speed sensor	The cooling fan operates (Highest) while engine is running.
P0603 P0607	ECM	Engine torque may be limited.
P0604	ECM	• ECM stops the electric throttle control actuator control, throttle valve is maintained at a fixed opening (Approx. 5 decrees) by the return spring. • The position of the following components are fixed. - Intake valve timing control solenoid valve • ASCD operation may be deactivated.
P0605 P0606 P060B	ECM	**NOTE:** Fail-safe may not occur depending on malfunction type. • ECM stops the electric throttle control actuator control, throttle valve is maintained at a fixed opening (Approx. 5 decrees) by the return spring. • The position of the following components are fixed. - Intake valve timing control solenoid valve • ASCD operation may be deactivated.

DTC No.	Detected items	Engine operating condition in fail-safe mode
P060A	ECM	**NOTE:** Fail-safe may not occur depending on malfunction type. • ECM stops the electric throttle control actuator control, throttle valve is maintained at a fixed opening (Approx. 5 decrees) by the return spring. • The position of the following components are fixed. - Intake valve timing control solenoid valve • Engine torque may be limited. • ASCD operation may be deactivated.
P0643	ECM	• ECM stops the electric throttle control actuator control, throttle valve is maintained at a fixed opening (Approx. 5 decrees) by the return spring. • The position of the following components are fixed. - Intake valve timing control solenoid valve
P0643	Sensor power supply	ECM stops the electric throttle control actuator control, throttle valve is maintained at a fixed opening (approx. 5 degrees) by the return spring.
P2100 P2103	Throttle control motor relay	ECM stops the electric throttle control actuator control, throttle valve is maintained at a fixed opening (approx. 5 degrees) by the return spring.
P2101	Electric throttle control function	ECM stops the electric throttle control actuator control, throttle valve is maintained at a fixed opening (approx. 5 degrees) by the return spring.
P2118	Throttle control motor	ECM stops the electric throttle control actuator control, throttle valve is maintained at a fixed opening (approx. 5 degrees) by the return spring.
P2119	Electric throttle control actuator	(When electric throttle control actuator does not function properly due to the return spring malfunction:) ECM controls the electric throttle actuator by regulating the throttle opening around the idle position. The engine speed will not rise more than 2,000 rpm.
		(When throttle valve opening angle in fail-safe mode is not in specified range:) ECM controls the electric throttle control actuator by regulating the throttle opening to 20 degrees or less.
		(When ECM detects the throttle valve is stuck open:) While the vehicle is driving, it slows down gradually by fuel cut. After the vehicle stops, the engine stalls. The engine can restart in N or P position, and engine speed will not exceed 1,000 rpm or more.
P2122 P2123 P2127 P2128 P2138	Accelerator pedal position sensor	The ECM controls the electric throttle control actuator in regulating the throttle opening in order for the idle position to be within +10 degrees. The ECM regulates the opening speed of the throttle valve to be slower than the normal condition. So, the acceleration will be poor.

- When there is an open circuit on MIL circuit, the ECM cannot warn the driver by lighting up MIL when there is malfunction on engine control system.
  Therefore, when electrical controlled throttle and part of ECM related diagnoses are continuously detected as NG for 5 trips, ECM warns the driver that engine control system malfunctions and MIL circuit is open by means of operating fail-safe function.
  The fail-safe function also operates when above diagnoses except MIL circuit are detected and demands the driver to repair the malfunction.

Engine operating condition in fail-safe mode	Engine speed will not rise more than 2,500 rpm due to the fuel cut

DTC Inspection Priority Chart

INFOID:0000000011291621

If some DTCs are displayed at the same time, perform inspections one by one based on the following priority chart.

Priority	Detected items (DTC)
1	• U0100 U0101 U1001 CAN communication line • P0101 P0102 P0103 Mass air flow sensor • P0112 P0113 P0127 Intake air temperature sensor • P0116 P0117 P0118 P0125 Engine coolant temperature sensor • P0122 P0123 P0222 P0223 P1225 P1226 P2135 Throttle position sensor • P0128 Thermostat function • P0181 P0182 P0183 Fuel tank temperature sensor • P0327 P0328 P0332 P0333 Knock sensor • P0335 Crankshaft position sensor (POS) • P0340 Camshaft position sensor (PHASE) • P0460 P0461 P0462 P0463 Fuel level sensor • P0500 Vehicle speed sensor • P0603 P0604 P0605 P0606 P0607 P060A P060B ECM • P0643 Sensor power supply • P0700 TCM • P0705 Park/neutral position (PNP) switch • P0850 Park/neutral position (PNP) switch • P1550 P1551 P1552 P1553 P1554 Battery current sensor • P1610 - P1615 NATS • P2122 P2123 P2127 P2128 P2138 Accelerator pedal position sensor
2	• P0031 P0032 P0051 P0052 Air fuel ratio (A/F) sensor 1 heater • P0037 P0038 P0057 P0058 Heated oxygen sensor 2 heater • P0075 P0081 Intake valve timing control solenoid valve • P0130 P0131 P0132 P0133 P014C P014D P014E P014E P0150 P0151 P0152 P0153 P015A P015B P015C P015D P2096 P2097 P2098 P2099 Air fuel ratio (A/F) sensor 1 • P0137 P0138 P0139 P0157 P0158 P0159 Heated oxygen sensor 2 • P0441 EVAP control system purge flow monitoring • P0443 P0444 P0445 EVAP canister purge volume control solenoid valve • P0447 P0448 EVAP canister vent control valve • P0451 P0452 P0453 EVAP control system pressure sensor • P0550 Power steering pressure sensor • P0710 P0717 P0720 P0731 P0732 P0733 P0734 P0735 P0740 P0744 P0745 P1730 P1752 P1754 P1757 P1759 P1762 P1767 P1772 P1774 A/T related sensors, solenoid valves and switches • P1217 Engine over temperature (OVERHEAT) • P1220 Fuel pump control module (FPCM) • P1140 P1145 Intake valve timing control position sensor • P1805 Brake switch • P2100 P2103 P2118 Electric throttle control actuator • P2101 Electric throttle control function
3	• P0011 P0021 Intake valve timing control • P0171 P0172 P0174 P0175 Fuel injection system function • P0300 - P0308 Misfire • P0420 P0430 Three way catalyst function • P0442 EVAP control system (SMALL LEAK) • P0455 EVAP control system (GROSS LEAK) • P0456 EVAP control system (VERY SMALL LEAK) • P0506 P0507 Idle speed control system • P050A P050B P050E Cold start control • P1148 P1168 Closed loop control • P1211 TCS control unit • P1212 TCS communication line • P1564 ASCD steering switch • P1572 ASCD brake switch • P1574 ASCD vehicle speed sensor • P2119 Electric throttle control actuator • P219A P219B Air fuel ratio (A/F) sensor 1

DTC Index

INFOID:0000000011291622

×:Applicable —: Not applicable

Items (CONSULT screen terms)	DTC*1		SRT code	Test value/ Test limit (GST only)	Trip	MIL	Perma-nent DTC group*12	Reference page
	CONSULT GST*2	ECM*3						
LOST COMM (ECM A)	U0100	0100*5	—	—	1	×	B	TM-42
LOST COMM (TCM)	U0101	0101*5	—	—	1	×	B	EC-155
CAN COMM CIRCUIT	U1000	1000*5	—	—	1	—	—	EC-156
NO DTC IS DETECTED. FURTHER TESTING MAY BE REQUIRED.	**P0000**	**0000**	—	—	—	**Blink-ing*7**	—	—
INT/V TIM CONT-B1	P0011	0011	—	—	2	×	B	EC-157
INT/V TIM CONT-B2	P0021	0021	—	—	2	×	B	EC-157
A/F SEN1 HTR (B1)	P0031	0031	—	×	2	×	B	EC-164
A/F SEN1 HTR (B1)	P0032	0032	—	×	2	×	B	EC-164
HO2S2 HTR (B1)	P0037	0037	—	×	2	×	B	EC-167
HO2S2 HTR (B1)	P0038	0038	—	×	2	×	B	EC-167
A/F SEN1 HTR (B2)	P0051	0051	—	×	2	×	B	EC-164
A/F SEN1 HTR (B2)	P0052	0052	—	×	2	×	B	EC-164
HO2S2 HTR (B2)	P0057	0057	—	×	2	×	B	EC-167
HO2S2 HTR (B2)	P0058	0058	—	×	2	×	B	EC-167
INT/V TIM V/CIR-B1	P0075	0075	—	—	2	×	B	EC-170
INT/V TIM V/CIR-B2	P0081	0081	—	—	2	×	B	EC-170
MAF SEN/CIRCUIT-B1	P0101	0101	—	—	2	×	B	EC-173
MAF SEN/CIRCUIT-B1	P0102	0102	—	—	1	×	B	EC-177
MAF SEN/CIRCUIT-B1	P0103	0103	—	—	1	×	B	EC-177
IAT SENSOR 1 B1	P0111	0111	—	—	2	×	A	EC-182
IAT SEN/CIRCUIT-B1	P0112	0112	—	—	2	×	B	EC-184
IAT SEN/CIRCUIT-B1	P0113	0113	—	—	2	×	B	EC-184
ECT SEN/CIRC	P0116	0116	—	—	2	×	A	EC-187
ECT SEN/CIRC	P0117	0117	—	—	1	×	B	EC-190
ECT SEN/CIRC	P0118	0118	—	—	1	×	B	EC-190
TP SEN 2/CIRC-B1	P0122	0122	—	—	1	×	B	EC-194
TP SEN 2/CIRC-B1	P0123	0123	—	—	1	×	B	EC-194
ECT SENSOR	P0125	0125	—	—	2	×	B	EC-198
IAT SENSOR-B1	P0127	0127	—	—	2	×	B	EC-201
THERMSTAT FNCTN	P0128	0128	—	—	2	×	B	EC-204
A/F SENSOR1 (B1)	P0130	0130	—	×	2	×	A	EC-206
A/F SENSOR1 (B1)	P0131	0131	—	×	2	×	B	EC-210
A/F SENSOR1 (B1)	P0132	0132	—	—	2	×	B	EC-214
A/F SENSOR1 (B1)	P0133	0133	×	×	2	×	A	EC-218
HO2S2 (B1)	P0137	0137	×	×	2	×	A	EC-224
HO2S2 (B1)	P0138	0138	×	×	2	×	A	EC-229
HO2S2 (B1)	P0139	0139	×	×	2	×	A	EC-236
A/F SENSOR1 (B1)	P014C	014C	×	×	2	×	A	EC-243

Items (CONSULT screen terms)	DTC*1		SRT code	Test value/ Test limit (GST only)	Trip	MIL	Perma-nent DTC group*12	Reference page
	CONSULT GST*2	ECM*3						
A/F SENSOR1 (B1)	P014D	014D	×	×	2	×	A	EC-243
A/F SENSOR1 (B2)	P014E	014E	×	×	2	×	A	EC-243
A/F SENSOR1 (B2)	P014F	014F	×	×	2	×	A	EC-243
A/F SENSOR1 (B2)	P0150	0150	—	×	2	×	A	EC-206
A/F SENSOR1 (B2)	P0151	0151	—	×	2	×	B	EC-210
A/F SENSOR1 (B2)	P0152	0152	—	—	2	×	B	EC-214
A/F SENSOR1 (B2)	P0153	0153	×	×	2	×	A	EC-218
HO2S2 (B2)	P0157	0157	×	×	2	×	A	EC-224
HO2S2 (B2)	P0158	0158	×	×	2	×	A	EC-229
HO2S2 (B2)	P0159	0159	×	×	2	×	A	EC-236
A/F SENSOR1 (B1)	P015A	015A	×	×	2	×	A	EC-243
A/F SENSOR1 (B1)	P015B	015B	×	×	2	×	A	EC-243
A/F SENSOR1 (B2)	P015C	015C	×	×	2	×	A	EC-243
A/F SENSOR1 (B1)	P015D	015D	×	×	2	×	A	EC-243
FUEL SYS-LEAN-B1	P0171	0171	—	×	2	×	B	EC-249
FUEL SYS-RICH-B1	P0172	0172	—	×	2	×	B	EC-254
FUEL SYS-LEAN-B2	P0174	0174	—	×	2	×	B	EC-249
FUEL SYS-RICH-B2	P0175	0175	—	×	2	×	B	EC-254
FTT SENSOR	P0181	0181	—	—	2	×	A and B	EC-259
FTT SEN/CIRCUIT	P0182	0182	—	—	2	×	B	EC-264
FTT SEN/CIRCUIT	P0183	0183	—	—	2	×	B	EC-264
TP SEN 1/CIRC-B1	P0222	0222	—	—	1	×	B	EC-267
TP SEN 1/CIRC-B2	P0223	0223	—	—	1	×	B	EC-267
MULTI CYL MISFIRE	P0300	0300	—	×	1 or 2	×	B	EC-271
CYL 1 MISFIRE	P0301	0301	—	×	1 or 2	×	B	EC-271
CYL 2 MISFIRE	P0302	0302	—	×	1 or 2	×	B	EC-271
CYL 3 MISFIRE	P0303	0303	—	×	1 or 2	×	B	EC-271
CYL 4 MISFIRE	P0304	0304	—	×	1 or 2	×	B	EC-271
CYL 5 MISFIRE	P0305	0305	—	×	1 or 2	×	B	EC-271
CYL 6 MISFIRE	P0306	0306	—	×	1 or 2	×	B	EC-271
CYL 7 MISFIRE	P0307	0307	—	×	1 or 2	×	B	EC-271
CYL 8 MISFIRE	P0308	0308	—	×	1 or 2	×	B	EC-271
KNOCK SEN/CIRC-B1	P0327	0327	—	—	2	—	—	EC-278
KNOCK SEN/CIRC-B1	P0328	0328	—	—	2	—	—	EC-278
KNOCK SEN/CIRC-B2	P0332	0332	—	—	2	—	—	EC-278
KNOCK SEN/CIRC-B2	P0333	0333	—	—	2	—	—	EC-278
CKP SEN/CIRCUIT	P0335	0335	—	—	2	×	B	EC-281
CMP SEN/CIRC-B1	P0340	0340	—	—	2	×	B	EC-285
TW CATALYST SYS-B1	P0420	0420	×	×	2	×	A	EC-289
TW CATALYST SYS-B2	P0430	0430	×	×	2	×	A	EC-289
EVAP PURG FLOW/MON	P0441	0441	×	×	2	×	A	EC-293
EVAP SMALL LEAK	P0442	0442	×	×	2	×	A	EC-298

Items (CONSULT screen terms)	DTC*1		SRT code	Test value/ Test limit (GST only)	Trip	MIL	Perma-nent DTC group*12	Reference page
	CONSULT GST*2	ECM*3						
PURG VOLUME CONT/V	P0443	0443	—	—	2	×	B	EC-305
PURG VOLUME CONT/V	P0444	0444	—	—	2	×	B	EC-311
PURG VOLUME CONT/V	P0445	0445	—	—	2	×	B	EC-311
VENT CONTROL VALVE	P0447	0447	—	—	2	×	B	EC-314
VENT CONTROL VALVE	P0448	0448	—	—	2	×	A	EC-318
EVAP SYS PRES SEN	P0451	0451	—	—	2	×	B	EC-322
EVAP SYS PRES SEN	P0452	0452	—	—	2	×	B	EC-326
EVAP SYS PRES SEN	P0453	0453	—	—	2	×	B	EC-330
EVAP GROSS LEAK	P0455	0455	—	×	2	×	A	EC-335
EVAP VERY SML LEAK	P0456	0456	×*4	×	2	×	A	EC-342
FUEL LEV SEN SLOSH	P0460	0460	—	—	2	×	A	EC-350
FUEL LEVEL SENSOR	P0461	0461	—	—	2	×	B	EC-352
FUEL LEVL SEN/CIRC	P0462	0462	—	—	2	×	B	EC-354
FUEL LEVL SEN/CIRC	P0463	0463	—	—	2	×	B	EC-354
VEH SPEED SEN/CIRC*6	P0500	0500	—	—	2	×	B	EC-356
ISC SYSTEM	P0506	0506	—	—	2	×	B	EC-358
ISC SYSTEM	P0507	0507	—	—	2	×	B	EC-360
COLD START CONTROL	P050A	050A	—	—	2	×	A	EC-362
COLD START CONTROL	P050B	050B	—	—	2	×	A	EC-362
COLD START CONTROL	P050E	050E	—	—	2	×	A	EC-362
PW ST P SEN/CIRC	P0550	0550	—	—	2	—	—	EC-364
ECM BACK UP CIRCUIT	P0603	0603	—	—	2	× or —	B	EC-367
ECM	P0604	0604	—	—	1	×	B	EC-368
ECM	P0605	0605	—	—	1 or 2	× or —	B	EC-369
CONTROL MODULE	P0606	0606	—	—	1	× or —	B	EC-370
ECM	P0607	0607	—	—	1 or 2	× or —	B	EC-371
CONTROL MODULE	P060A	060A	—	—	1 or 2	×	B	EC-372
CONTROL MODULE	P060B	060B	—	—	1	×	B	EC-373
SENSOR POWER/CIRC	P0643	0643	—	—	1	×	B	EC-374
TRANSMISSION CONT	P0700	0700	—	—	1	×	B	TM-47
T/M RANGE SENSOR A	P0705	0705	—	—	2	×	B	TM-48
FLUID TEMP SENSOR A	P0710	0710	—	—	2	×	B	TM-76
INPUT SPEED SENSOR A	P0717	0717	—	—	2	×	B	TM-51
OUTPUT SPEED SEN-SOR*6	P0720	0720	—	—	2	×	B	TM-53
1GR INCORRECT RATIO	P0731	0731	—	—	2	×	B	TM-58
2GR INCORRECT RATIO	P0732	0732	—	—	2	×	B	TM-60
3GR INCORRECT RATIO	P0733	0733	—	—	2	×	B	TM-62
4GR INCORRECT RATIO	P0734	0734	—	—	2	×	B	TM-64
5GR INCORRECT RATIO	P0735	0735	—	—	2	×	B	TM-66
TORQUE CONVERTER	P0740	0740	—	—	2	×	B	TM-68
TORQUE CONVERTER	P0744	0744	—	—	2	×	B	TM-70

Items (CONSULT screen terms)	DTC*1		SRT code	Test value/ Test limit (GST only)	Trip	MIL	Perma-nent DTC group*12	Reference page
	CONSULT GST*2	ECM*3						
PC SOLENOID A	P0745	0745	—	—	2	×	B	TM-72
P-N POS SW/CIRCUIT	P0850	0850	—	—	2	×	B	EC-377
INTK TIM S/CIRC-B1	P1140	1140	—	—	2	×	B	EC-380
INTK TIM S/CIRC-B2	P1145	1145	—	—	2	×	B	EC-380
CLOSED LOOP-B1	P1148	1148	—	—	1	×	A	EC-384
CLOSED LOOP-B2	P1168	1168	—	—	1	×	A	EC-384
TCS/CIRC	P1212	1212	—	—	2	—	—	EC-386
ENG OVER TEMP	P1217	1217	—	—	1	×	B	EC-387
FPCM/CIRCUIT*9	P1220	1220	—	—	2	—	—	EC-391
CTP LEARNING-B1	P1225	1225	—	—	2	—	—	EC-396
CTP LEARNING-B2	P1226	1226	—	—	2	—	—	EC-398
BAT CURRENT SENSOR	P1550	1550	—	—	2	—	—	EC-400
BAT CURRENT SENSOR	P1551	1551	—	—	2	—	—	EC-404
BAT CURRENT SENSOR	P1552	1552	—	—	2	—	—	EC-404
BAT CURRENT SENSOR	P1553	1553	—	—	2	—	—	EC-408
BAT CURRENT SENSOR	P1554	1554	—	—	2	—	—	EC-412
ASCD SW	P1564	1564	—	—	1	—	—	EC-416
ASCD BRAKE SW	P1572	1572	—	—	1	—	—	EC-420
ASCD VHL SPD SEN*8	P1574	1574	—	—	1	—	—	EC-425
LOCK MODE	P1610	1610	—	—	2	—	—	SEC-43*10 SEC-150*11
ID DISCARD IMM-ECM	P1611	1611	—	—	2	—	—	SEC-37*10 SEC-147*11
CHAIN OF ECM-IMMU	P1612	1612	—	—	2	—	—	SEC-39*10 SEC-149*11
CHAIN OF IMMU-KEY	P1614	1614	—	—	2	—	—	SEC-37*10 SEC-143*11
DIFFERENCE OF KEY	P1615	1615	—	—	2	—	—	SEC-37*10 SEC-146*11
INTERLOCK	P1730	1730	—	—	1	×	B	TM-81
INPUT CLUTCH SOL	P1752	1752	—	—	1	×	B	TM-85
FR BRAKE SOLENOID	P1757	1757	—	—	1	×	B	TM-87
DRCT CLUTCH SOL	P1762	1762	—	—	1	×	B	TM-89
HLR CLUTCH SOLE-NOID	P1767	1767	—	—	1	×	B	TM-91
L C BRAKE SOLENOID	P1772	1772	—	—	1	×	B	TM-93
L C BRAKE SOLENOID	P1774	1774	—	—	1	×	B	TM-95
BRAKE SW/CIRCUIT	P1805	1805	—	—	2	—	—	EC-427
POST CAT FUEL TRIM SYS B1	P2096	2096	—	—	2	×	A	EC-430
POST CAT FUEL TRIM SYS B1	P2097	2097	—	—	2	×	A	EC-430

Items (CONSULT screen terms)	DTC*1		SRT code	Test value/ Test limit (GST only)	Trip	MIL	Perma-nent DTC group*12	Reference page
	CONSULT GST*2	ECM*3						
POST CAT FUEL TRIM SYS B2	P2098	2098	—	—	2	×	A	EC-430
POST CAT FUEL TRIM SYS B2	P2099	2099	—	—	2	×	A	EC-430
ETC MOT PWR-B1	P2100	2100	—	—	1	×	B	EC-436
ETC MOT PWR-B1	P2101	2101	—	—	1	×	B	EC-439
ETC MOT PWR	P2103	2103	—	—	1	×	B	EC-436
ETC MOT-B1	P2118	2118	—	—	1	×	B	EC-443
ETC ACTR-B1	P2119	2119	—	—	1	×	B	EC-445
APP SEN 1/CIRC	P2122	2122	—	—	1	×	B	EC-447
APP SEN 1/CIRC	P2123	2123	—	—	1	×	B	EC-447
APP SEN 2/CIRC	P2127	2127	—	—	1	×	B	EC-450
APP SEN 2/CIRC	P2128	2128	—	—	1	×	B	EC-450
TP SENSOR-B1	P2135	2135	—	—	1	×	B	EC-454
APP SENSOR	P2138	2138	—	—	1	×	B	EC-458
AIR FUEL RATIO IMBAL-ANCE B1	P219A	219A	×	×	2	×	A	EC-462
AIR FUEL RATIO IMBAL-ANCE B2	P219B	219B	×	×	2	×	A	EC-462

*1: 1st trip DTC No. is the same as DTC No.
*2: This number is prescribed by SAE J2012.
*3: In Diagnostic Test Mode II (Self-diagnostic results), this number is controlled by NISSAN.
*4: SRT code will not be set if the self-diagnostic result is NG.
*5: The troubleshooting for this DTC needs CONSULT.
*6: When the fail-safe operations for both self-diagnoses occur, the MIL illuminates.
*7: When the ECM is in the mode of displaying SRT status, MIL may flash. For the details, refer to “How to Display SRT Status”.
*8: 2WD models
*9: Flexible fuel vehicle (FFV)
*10: With intelligent key system
*11: Without intelligent key system
*12: When erasing this DTC, always use CONSULT or GST.

Test Value and Test Limit

INFOID:0000000011551311

The following is the information specified in Service $06 of SAE J1979/ISO 15031-5.
The test value is a parameter used to determine whether a system/circuit diagnostic test is OK or NG while being monitored by the ECM during self-diagnosis. The test limit is a reference value which is specified as the maximum or minimum value and is compared with the test value being monitored.
These data (test value and test limit) are specified by On Board Monitor ID (OBDMID), Test ID (TID), Unit and Scaling ID and can be displayed on the GST screen.
The items of the test value and test limit will be displayed with GST screen which items are provided by the ECM. (e.g., if bank 2 is not applied on this vehicle, only the items of bank 1 are displayed)

Item	OBD-MID	Self-diagnostic test item	DTC	Test value and Test limit (GST display)		Description
				TID	Unit and Scaling ID	
HO2S	01H	Air fuel ratio (A/F) sensor 1 (Bank 1)	P0131	83H	0BH	Minimum sensor output voltage for test cycle
			P0131	84H	0BH	Maximum sensor output voltage for test cycle
			P0130	85H	0BH	Minimum sensor output voltage for test cycle
			P0130	86H	0BH	Maximum sensor output voltage for test cycle
			P0133	87H	04H	Response rate: Response ratio (lean to rich)
			P0133	88H	04H	Response rate: Response ratio (rich to lean)
			P2A00 or P2096	89H	84H	The amount of shift in air fuel ratio (too lean)
			P2A00 or P2097	8AH	84H	The amount of shift in air fuel ratio (too rich)
			P0130	8BH	0BH	Difference in sensor output voltage
			P0133	8CH	83H	Response gain at the limited frequency
			P014C	8DH	04H	O2 sensor slow response - Rich to lean bank 1 sensor 1
			P014C	8EH	04H	O2 sensor slow response - Rich to lean bank 1 sensor 1
			P014D	8FH	84H	O2 sensor slow response - Lean to rich bank 1 sensor 1
			P014D	90H	84H	O2 sensor slow response - Lean to rich bank 1 sensor 1
			P015A	91H	01H	O2 sensor delayed response - Rich to lean bank 1 sensor 1
			P015A	92H	01H	O2 sensor delayed response - Rich to lean bank 1 sensor 1
			P015B	93H	01H	O2 sensor delayed response - Lean to rich bank 1 sensor 1
			P015B	94H	01H	O2 sensor delayed response - Lean to rich bank 1 sensor 1
			P0133	95H	04H	Response rate: Response ratio (lean to rich)
			P0133	96H	84H	Response rate: Response ratio (rich to lean)

Item	OBD-MID	Self-diagnostic test item	DTC	Test value and Test limit (GST display)		Description
				TID	Unit and Scaling ID	
HO2S	02H	Heated oxygen sensor 2 (Bank 1)	P0138	07H	0CH	Minimum sensor output voltage for test cycle
			P0137	08H	0CH	Maximum sensor output voltage for test cycle
			P0138	80H	0CH	Sensor output voltage
			P0139	81H	0CH	Difference in sensor output voltage
			P0139	82H	11H	Rear O2 sensor delay response diagnosis
	03H	Heated oxygen sensor 3 (Bank 1)	P0143	07H	0CH	Minimum sensor output voltage for test cycle
			P0144	08H	0CH	Maximum sensor output voltage for test cycle
			P0146	80H	0CH	Sensor output voltage
			P0145	81H	0CH	Difference in sensor output voltage
	05H	Air fuel ratio (A/F) sensor 1 (Bank 2)	P0151	83H	0BH	Minimum sensor output voltage for test cycle
			P0151	84H	0BH	Maximum sensor output voltage for test cycle
			P0150	85H	0BH	Minimum sensor output voltage for test cycle
			P0150	86H	0BH	Maximum sensor output voltage for test cycle
			P0153	87H	04H	Response rate: Response ratio (lean to rich)
			P0153	88H	04H	Response rate: Response ratio (rich to lean)
			P2A03 or P2098	89H	84H	The amount of shift in air fuel ratio (too lean)
			P2A03 or P2099	8AH	84H	The amount of shift in air fuel ratio (too rich)
			P0150	8BH	0BH	Difference in sensor output voltage
			P0153	8CH	83H	Response gain at the limited frequency
			P014E	8DH	04H	O2 sensor slow response - Rich to lean bank 2 sensor 1
			P014E	8EH	04H	O2 sensor slow response - Rich to lean bank 2 sensor 1
			P014F	8FH	84H	O2 sensor slow response - Lean to rich bank 2 sensor 1
			P014F	90H	84H	O2 sensor slow response - Lean to rich bank 2 sensor 1
			P015C	91H	01H	O2 sensor delayed response - Rich to lean bank 2 sensor 1
			P015C	92H	01H	O2 sensor delayed response - Rich to lean bank 2 sensor 1
			P015D	93H	01H	O2 sensor delayed response - Lean to rich bank 2 sensor 1

Item	OBD-MID	Self-diagnostic test item	DTC	Test value and Test limit (GST display)		Description
				TID	Unit and Scaling ID	
HO2S	05H	Air fuel ratio (A/F) sensor 1 (Bank 2)	P015D	94H	01H	O2 sensor delayed response - Lean to rich bank 2 sensor 1
			P0153	95H	04H	Response rate: Response ratio (lean to rich)
			P0153	96H	84H	Response rate: Response ratio (rich to lean)
	06H	Heated oxygen sensor 2 (Bank 2)	P0158	07H	0CH	Minimum sensor output voltage for test cycle
			P0157	08H	0CH	Maximum sensor output voltage for test cycle
			P0158	80H	0CH	Sensor output voltage
			P0159	81H	0CH	Difference in sensor output voltage
			P0159	82H	11H	Rear O2 sensor delay response diagnosis
	07H	Heated oxygen sensor 3 (Bank2)	P0163	07H	0CH	Minimum sensor output voltage for test cycle
			P0164	08H	0CH	Maximum sensor output voltage for test cycle
			P0166	80H	0CH	Sensor output voltage
			P0165	81H	0CH	Difference in sensor output voltage
CATALYST	21H	Three way catalyst function (Bank1)	P0420	80H	01H	O2 storage index
			P0420	82H	01H	Switching time lag engine exhaust index value
			P2423	83H	0CH	Difference in 3rd O2 sensor output voltage
			P2423	84H	84H	O2 storage index in HC trap catalyst
	22H	Three way catalyst function (Bank2)	P0430	80H	01H	O2 storage index
			P0430	82H	01H	Switching time lag engine exhaust index value
			P2424	83H	0CH	Difference in 3rd O2 sensor output voltage
			P2424	84H	84H	O2 storage index in HC trap catalyst
EGR SYSTEM	31H	EGR function	P0400	80H	96H	Low flow faults: EGR temp change rate (short term)
			P0400	81H	96H	Low flow faults: EGR temp change rate (long term)
			P0400	82H	96H	Low flow faults: Difference between max EGR temp and EGR temp under idling condition
			P0400	83H	96H	Low flow faults: Max EGR temp
			P1402	84H	96H	High Flow Faults: EGR temp increase rate
			P0402	85H	FCH	EGR differential pressure high flow
			P0401	86H	37H	EGR differential pressure low flow
			P2457	87H	96H	EGR temperature

Item	OBD-MID	Self-diagnostic test item	DTC	Test value and Test limit (GST display)		Description
				TID	Unit and Scaling ID	
VVT SYSTEM	35H	VVT Monitor (Bank1)	P0011	80H	9DH	VTC intake function diagnosis (VTC alignment check diagnosis)
			P0014	81H	9DH	VTC exhaust function diagnosis (VTC alignment check diagnosis)
			P0011	82H	9DH	VTC intake function diagnosis (VTC drive failure diagnosis)
			P0014	83H	9DH	VTC exhaust function diagnosis (VTC drive failure diagnosis)
			P100A	84H	10H	VEL slow response diagnosis
			P1090	85H	10H	VEL servo system diagnosis
			P0011	86H	9DH	VTC intake intermediate lock function diagnosis (VTC intermediate position alignment check diagnosis)
			Advanced: P052A Retarded: P052B	87H	9DH	VTC intake intermediate lock system diagnosis (VTC intermediate lock position check diagnosis)
	36H	VVT Monitor (Bank2)	P0021	80H	9DH	VTC intake function diagnosis (VTC alignment check diagnosis)
			P0024	81H	9DH	VTC exhaust function diagnosis (VTC alignment check diagnosis)
			P0021	82H	9DH	VTC intake function diagnosis (VTC drive failure diagnosis)
			P0024	83H	9DH	VTC exhaust function diagnosis (VTC drive failure diagnosis)
			P100B	84H	10H	VEL slow response diagnosis
			P1093	85H	10H	VEL servo system diagnosis
			P0021	86H	9DH	VTC intake intermediate lock function diagnosis (VTC intermediate position alignment check diagnosis)
			Advanced: P052C Retarded: P052D	87H	9DH	VTC intake intermediate lock system diagnosis (VTC intermediate lock position check diagnosis)
EVAP SYSTEM	39H	EVAP control system leak (Cap Off)	P0455	80H	0CH	Difference in pressure sensor output voltage before and after pull down
	3BH	EVAP control system leak (Small leak)	P0442	80H	05H	Leak area index (for more than 0.04 inch)
	3CH	EVAP control system leak (Very small leak)	P0456	80H	05H	Leak area index (for more than 0.02 inch)
			P0456	81H	FDH	Maximum internal pressure of EVAP system during monitoring
			P0456	82H	FDH	Internal pressure of EVAP system at the end of monitoring
	3DH	Purge flow system	P0441	83H	0CH	Difference in pressure sensor output voltage before and after vent control valve close

Item	OBD-MID	Self-diagnostic test item	DTC	Test value and Test limit (GST display)		Description
				TID	Unit and Scaling ID	
O2 SENSOR HEATER	41H	A/F sensor 1 heater (Bank 1)	Low Input: P0031 High Input: P0032	81H	0BH	Converted value of heater electric current to voltage
			P0030	83H	0BH	A/F sensor heater circuit malfunction
	42H	Heated oxygen sensor 2 heater (Bank 1)	Low Input: P0037 High Input: P0038	80H	0CH	Converted value of heater electric current to voltage
			P0141	81H	14H	Rear O2 sensor internal impedance
	43H	Heated oxygen sensor 3 heater (Bank 1)	P0043	80H	0CH	Converted value of heater electric current to voltage
	45H	A/F sensor 1 heater (Bank 2)	Low Input: P0051 High Input: P0052	81H	0BH	Converted value of heater electric current to voltage
			P0036	83H	0BH	A/F sensor heater circuit malfunction
	46H	Heated oxygen sensor 2 heater (Bank 2)	Low Input: P0057 High Input: P0058	80H	0CH	Converted value of heater electric current to voltage
			P0161	81H	14CH	Rear O2 sensor internal impedance
	47H	Heated oxygen sensor 3 heater (Bank 2)	P0063	80H	0CH	Converted value of heater electric current to voltage
SECONDARY AIR	71H	Secondary air system	P0411	80H	01H	Secondary air injection system incorrect flow detected
			Bank1: P0491 Bank2: P0492	81H	01H	Secondary air injection system insufficient flow
			P2445	82H	01H	Secondary air injection system pump stuck off
			P2448	83H	01H	Secondary air injection system high airflow
			Bank1: P2440 Bank2: P2442	84H	01H	Secondary air injection system switching valve stuck open
			P2440	85H	01H	Secondary air injection system switching valve stuck open
			P2444	86H	01H	Secondary air injection system pump stuck on
FUEL SYSTEM	81H	Fuel injection system function (Bank 1)	P0171 or P0172	80H	2FH	Long term fuel trim
			P0171 or P0172	81H	24H	The number of lambda control clamped
			P117A / P219A	82H	03H	Cylinder A/F imbalance monitoring
	82H	Fuel injection system function (Bank 2)	P0174 or P0175	80H	2FH	Long term fuel trim
			P0174 or P0175	81H	24H	The number of lambda control clamped
			P117B / P219B	82H	03H	Cylinder A/F imbalance monitoring

Item	OBD-MID	Self-diagnostic test item	DTC	Test value and Test limit (GST display)		Description
				TID	Unit and Scaling ID	
MISFIRE	A1H	Multiple cylinder misfires	P0301	80H	24H	Misfiring counter at 1000 revolution of the first cylinder
			P0302	81H	24H	Misfiring counter at 1000 revolution of the second cylinder
			P0303	82H	24H	Misfiring counter at 1000 revolution of the third cylinder
			P0304	83H	24H	Misfiring counter at 1000 revolution of the fourth cylinder
			P0305	84H	24H	Misfiring counter at 1000 revolution of the fifth cylinder
			P0306	85H	24H	Misfiring counter at 1000 revolution of the sixth cylinder
			P0307	86H	24H	Misfiring counter at 1000 revolution of the seventh cylinder
			P0308	87H	24H	Misfiring counter at 1000 revolution of the eighth cylinder
			P0300	88H	24H	Misfiring counter at 1000 revolution of the multiple cylinders
			P0301	89H	24H	Misfiring counter at 200 revolution of the first cylinder
			P0302	8AH	24H	Misfiring counter at 200 revolution of the second cylinder
			P0303	8BH	24H	Misfiring counter at 200 revolution of the third cylinder
			P0304	8CH	24H	Misfiring counter at 200 revolution of the fourth cylinder
			P0305	8DH	24H	Misfiring counter at 200 revolution of the fifth cylinder
			P0306	8EH	24H	Misfiring counter at 200 revolution of the sixth cylinder
			P0307	8FH	24H	Misfiring counter at 200 revolution of the seventh cylinder
			P0308	90H	24H	Misfiring counter at 200 revolution of the eighth cylinder
			P0300	91H	24H	Misfiring counter at 1000 revolution of the single cylinder
			P0300	92H	24H	Misfiring counter at 200 revolution of the single cylinder
			P0300	93H	24H	Misfiring counter at 200 revolution of the multiple cylinders

Item	OBD-MID	Self-diagnostic test item	DTC	Test value and Test limit (GST display)		Description
				TID	Unit and Scaling ID	
MISFIRE	A2H	No. 1 cylinder misfire	P0301	0BH	24H	EWMA (Exponential Weighted Moving Average) misfire counts for last 10 driving cycles
			P0301	0CH	24H	Misfire counts for last/current driving cycles
	A3H	No. 2 cylinder misfire	P0302	0BH	24H	EWMA (Exponential Weighted Moving Average) misfire counts for last 10 driving cycles
			P0302	0CH	24H	Misfire counts for last/current driving cycles
	A4H	No. 3 cylinder misfire	P0303	0BH	24H	EWMA (Exponential Weighted Moving Average) misfire counts for last 10 driving cycles
			P0303	0CH	24H	Misfire counts for last/current driving cycles
	A5H	No. 4 cylinder misfire	P0304	0BH	24H	EWMA (Exponential Weighted Moving Average) misfire counts for last 10 driving cycles
			P0304	0CH	24H	Misfire counts for last/current driving cycles
	A6H	No. 5 cylinder misfire	P0305	0BH	24H	EWMA (Exponential Weighted Moving Average) misfire counts for last 10 driving cycles
			P0305	0CH	24H	Misfire counts for last/current driving cycles
	A7H	No. 6 cylinder misfire	P0306	0BH	24H	EWMA (Exponential Weighted Moving Average) misfire counts for last 10 driving cycles
			P0306	0CH	24H	Misfire counts for last/current driving cycles
	A8H	No. 7 cylinder misfire	P0307	0BH	24H	EWMA (Exponential Weighted Moving Average) misfire counts for last 10 driving cycles
			P0307	0CH	24H	Misfire counts for last/current driving cycles
	A9H	No. 8 cylinder misfire	P0308	0BH	24H	EWMA (Exponential Weighted Moving Average) misfire counts for last 10 driving cycles
			P0308	0CH	24H	Misfire counts for last/current driving cycles

WIRING DIAGRAM

ENGINE CONTROL SYSTEM

Wiring Diagram

INFOID:0000000011291624

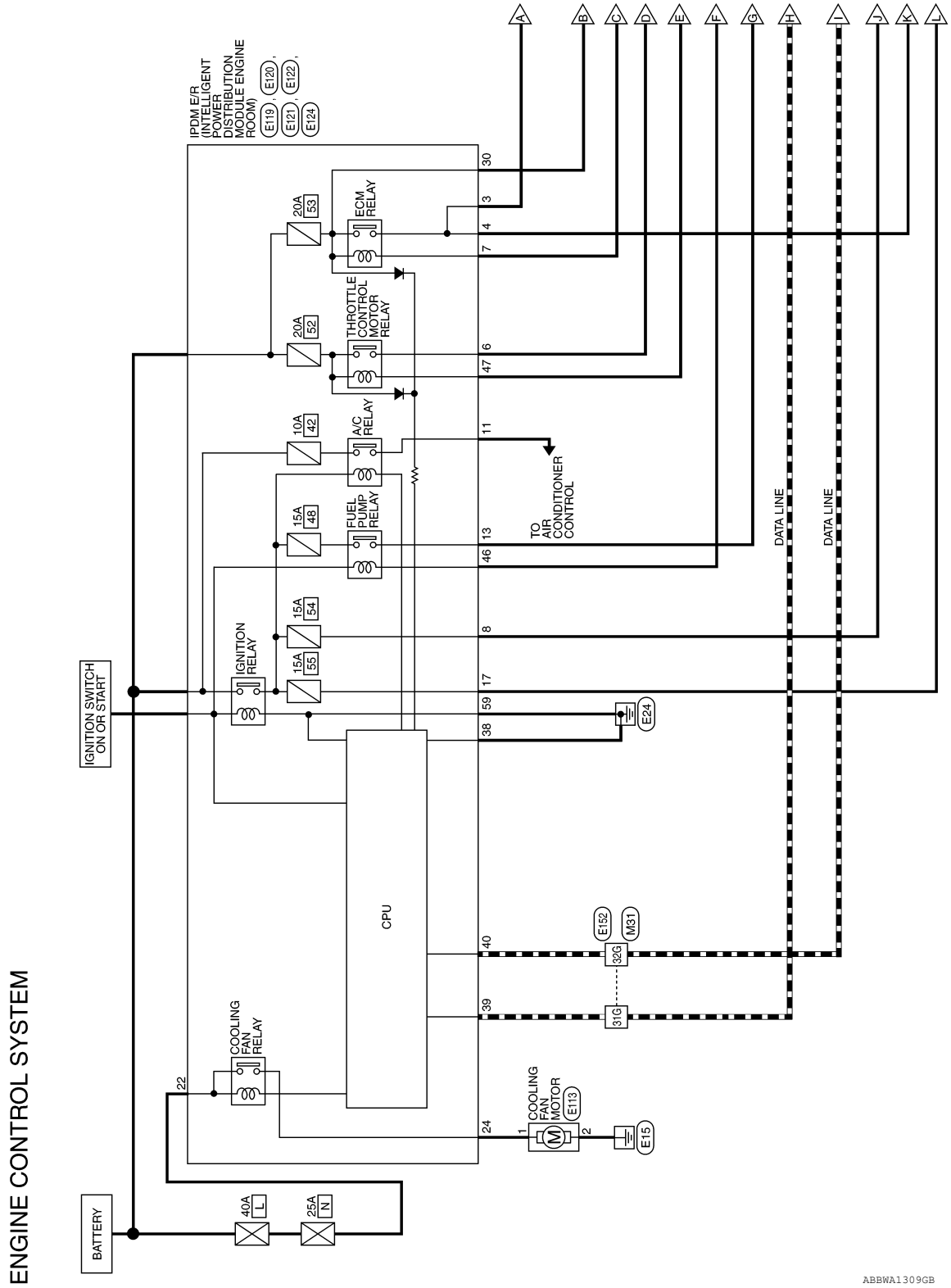

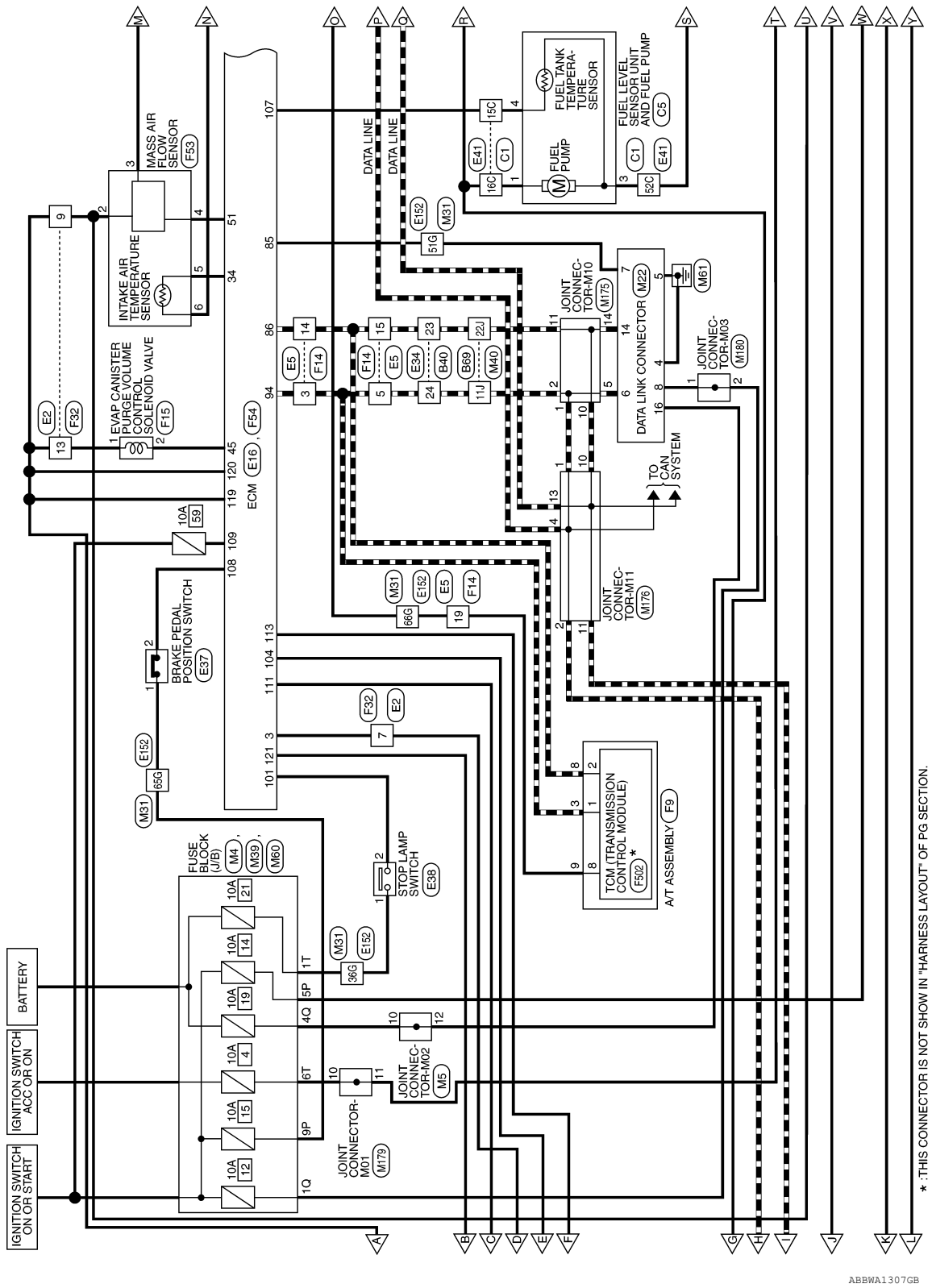
MASS AIR FLOW SENSOR
F53
INTAKE AIR TEMPERATURE SENSOR
EVAP CANISTER PURGE VOLUME CONTROL SOLENOID VALVE
F15
E2
F32
ECM
E16
F54
BRAKE PEDAL POSITION SWITCH
E37
E152
65G
M31
FUSE BLOCK (J/B)
M4
M39
M60
BATTERY
IGNITION SWITCH ACC OR ON
IGNITION SWITCH ON OR START
STOP LAMP SWITCH
E38
36G
JOINT CONNECTOR-M01
M179
JOINT CONNECTOR-M02
M5
DATA LINE
DATA LINE
E41
C1
16C
15C
FUEL PUMP
FUEL TANK TEMPERATURE SENSOR
FUEL LEVEL SENSOR UNIT AND FUEL PUMP
C5
52C
51G
JOINT CONNECTOR-M10
M175
DATA LINK CONNECTOR
M22
M61
JOINT CONNECTOR-M03
M180
TO CAN SYSTEM
JOINT CONNECTOR-M11
M176
66G
19
TCM (TRANSMISSION CONTROL MODULE)
F502 *
A/T ASSEMBLY
F9
* :THIS CONNECTOR IS NOT SHOW IN "HARNESS LAYOUT" OF PG SECTION.
ABBWA1307GB

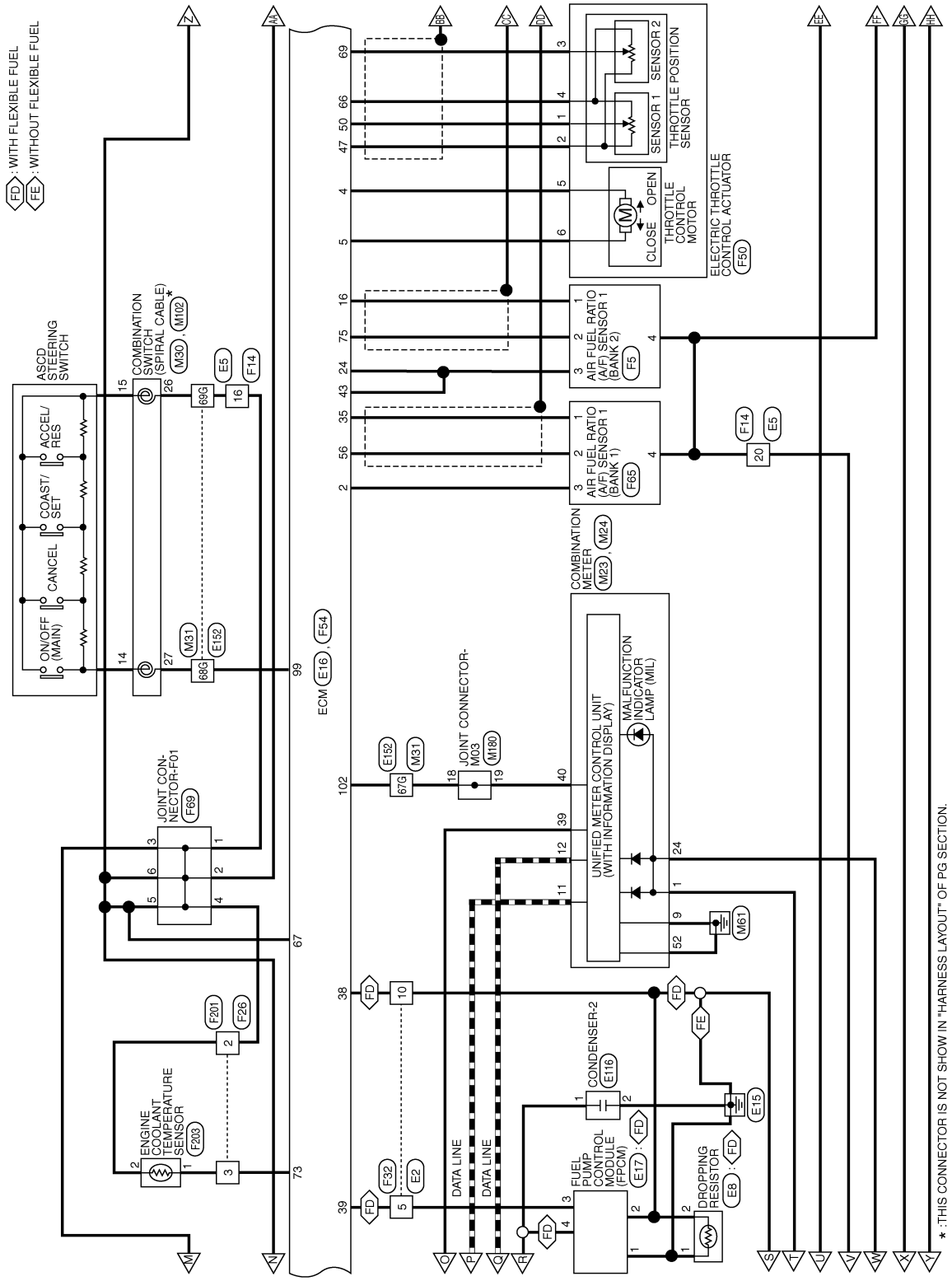
FD : WITH FLEXIBLE FUEL
FE : WITHOUT FLEXIBLE FUEL
ASCD STEERING SWITCH
ON/OFF (MAIN)
CANCEL
COAST/ SET
ACCEL/ RES
COMBINATION SWITCH (SPIRAL CABLE)*
M30, M102
89G
88G
M31
E152
E5
F14
16
14
15
26
27
99
ECM E16, F54
JOINT CON-NECTOR-F01
F69
3
6
5
1
2
4
67
F201
F26
2
ENGINE COOLANT TEMPERATURE SENSOR
F203
3
73
102
67G
E152
M31
JOINT CONNECTOR-M03
M180
18
19
40
39
12
11
38
FD
10
F32
E2
5
DATA LINE
DATA LINE
UNIFIED METER CONTROL UNIT (WITH INFORMATION DISPLAY)
MALFUNCTION INDICATOR LAMP (MIL)
COMBINATION METER
M23, M24
24
9
52
M61
CONDENSER-2
E116
FE
E15
FUEL PUMP CONTROL MODULE (FPCM)
E17
DROPPING RESISTOR
E8
69
66
50
47
4
5
16
75
24
43
35
56
2
AIR FUEL RATIO (A/F) SENSOR 1 (BANK 2)
F5
AIR FUEL RATIO (A/F) SENSOR 1 (BANK 1)
F65
20
THROTTLE POSITION SENSOR
SENSOR 1
SENSOR 2
THROTTLE CONTROL MOTOR
CLOSE
OPEN
ELECTRIC THROTTLE CONTROL ACTUATOR
F50
* : THIS CONNECTOR IS NOT SHOW IN "HARNESS LAYOUT" OF PG SECTION.
ABBWA1418GB

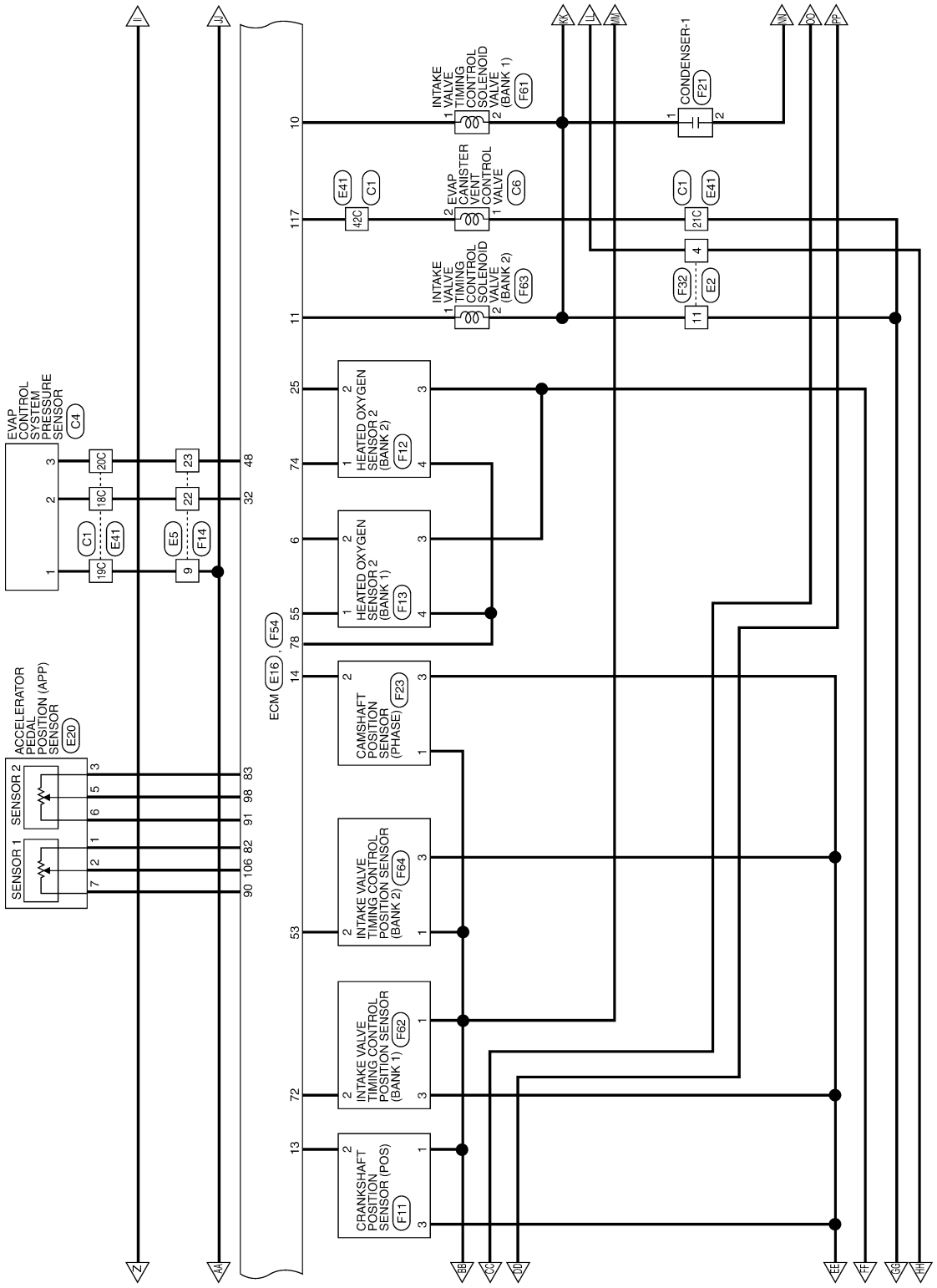
EVAP CONTROL SYSTEM PRESSURE SENSOR
C4
ACCELERATOR PEDAL POSITION (APP) SENSOR
E20
SENSOR 1
SENSOR 2
ECM
E16
F54
CRANKSHAFT POSITION SENSOR (POS)
F11
INTAKE VALVE TIMING CONTROL POSITION SENSOR (BANK 1)
F62
INTAKE VALVE TIMING CONTROL POSITION SENSOR (BANK 2)
F64
CAMSHAFT POSITION SENSOR (PHASE)
F23
HEATED OXYGEN SENSOR 2 (BANK 1)
F13
HEATED OXYGEN SENSOR 2 (BANK 2)
F12
INTAKE VALVE TIMING CONTROL SOLENOID VALVE (BANK 2)
F63
EVAP CANISTER VENT CONTROL VALVE
C6
INTAKE VALVE TIMING CONTROL SOLENOID VALVE (BANK 1)
F61
CONDENSER-1
F21
ABBWA0916GB

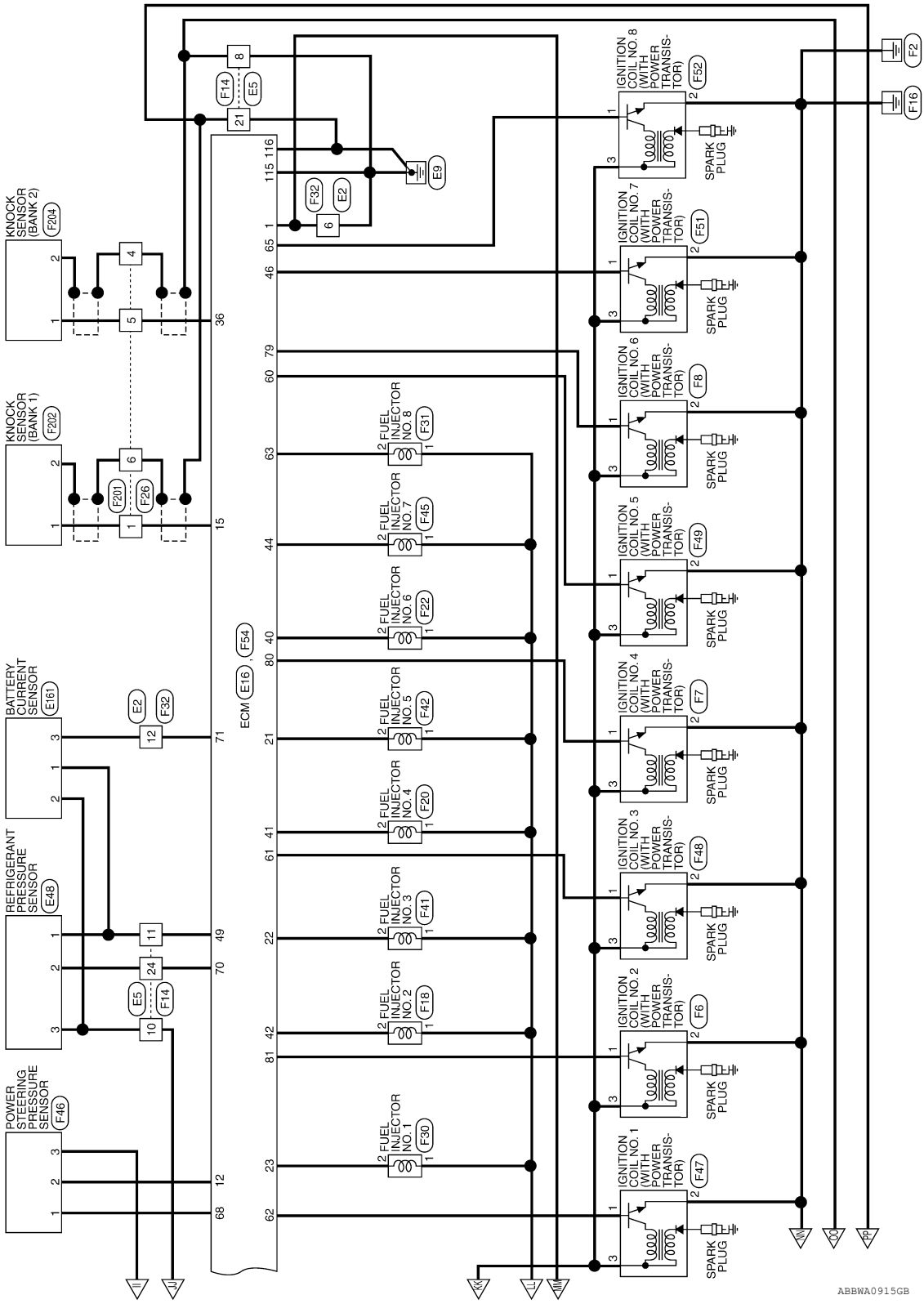
KNOCK SENSOR (BANK 2)
F204
KNOCK SENSOR (BANK 1)
F202
BATTERY CURRENT SENSOR
E161
REFRIGERANT PRESSURE SENSOR
E48
POWER STEERING PRESSURE SENSOR
F46
ECM E16, F54
2 FUEL INJECTOR NO. 1 F30
2 FUEL INJECTOR NO. 2 F18
2 FUEL INJECTOR NO. 3 F41
2 FUEL INJECTOR NO. 4 F20
2 FUEL INJECTOR NO. 5 F42
2 FUEL INJECTOR NO. 6 F22
2 FUEL INJECTOR NO. 7 F45
2 FUEL INJECTOR NO. 8 F31
IGNITION COIL NO. 1 (WITH POWER TRANSIS-TOR) F47
IGNITION COIL NO. 2 (WITH POWER TRANSIS-TOR) F6
IGNITION COIL NO. 3 (WITH POWER TRANSIS-TOR) F48
IGNITION COIL NO. 4 (WITH POWER TRANSIS-TOR) F7
IGNITION COIL NO. 5 (WITH POWER TRANSIS-TOR) F49
IGNITION COIL NO. 6 (WITH POWER TRANSIS-TOR) F8
IGNITION COIL NO. 7 (WITH POWER TRANSIS-TOR) F51
IGNITION COIL NO. 8 (WITH POWER TRANSIS-TOR) F52
SPARK PLUG
F2
F16
E9
ABBWA0915GB

ENGINE CONTROL SYSTEM CONNECTORS

Connector No.	M4
Connector Name	FUSE BLOCK (J/B)
Connector Color	WHITE

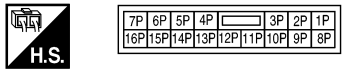

Terminal No.	Color of Wire	Signal Name
5P	O/L	–
9P	R/B	–

Connector No.	M5
Connector Name	JOINT CONNECTOR-M02
Connector Color	BLUE

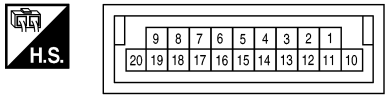

Terminal No.	Color of Wire	Signal Name
10	Y/R	–
12	Y/R	–

Connector No.	M22
Connector Name	DATA LINK CONNECTOR
Connector Color	WHITE

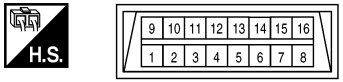

Terminal No.	Color of Wire	Signal Name
4	B	–
5	B	–
6	L	–
7	G/W	–
8	G/R	–
14	P	–
16	Y/R	–

Connector No.	M23
Connector Name	COMBINATION METER
Connector Color	WHITE

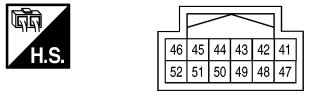

Terminal No.	Color of Wire	Signal Name
52	B	ILL GND

Connector No.	M24
Connector Name	COMBINATION METER
Connector Color	WHITE

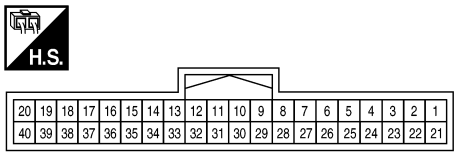

Terminal No.	Color of Wire	Signal Name
1	O	ACCESSORY
9	B	GND
11	L	CAN-H
12	P	CAN-L
24	O/L	RUN/START
39	B/R	PN ATCU
40	GR/R	PN REVERSE

ABBIA2317GB

Terminal No.	Color of Wire	Signal Name
31G	L	–
32G	P	–
36G	R/Y	–
51G	G/W	–
65G	R/B	–
66G	B/R	–
67G	GR/R	–
68G	G/Y	–
69G	B	–

Connector No.	M31
Connector Name	WIRE TO WIRE
Connector Color	WHITE

H.S.

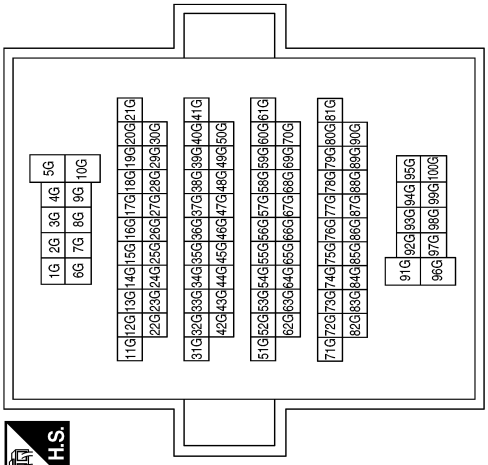

Connector No.	M30
Connector Name	COMBINATION SWITCH (SPIRAL CABLE)
Connector Color	GRAY

H.S.

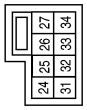

Terminal No.	Color of Wire	Signal Name
26	B	–
27	G/Y	–

Connector No.	M39
Connector Name	FUSE BLOCK (J/B)
Connector Color	WHITE

H.S.

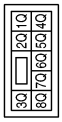

Terminal No.	Color of Wire	Signal Name
1Q	G/R	–
4Q	Y/R	–

ABBIA2318GB

Connector No.	M40
Connector Name	WIRE TO WIRE
Connector Color	WHITE

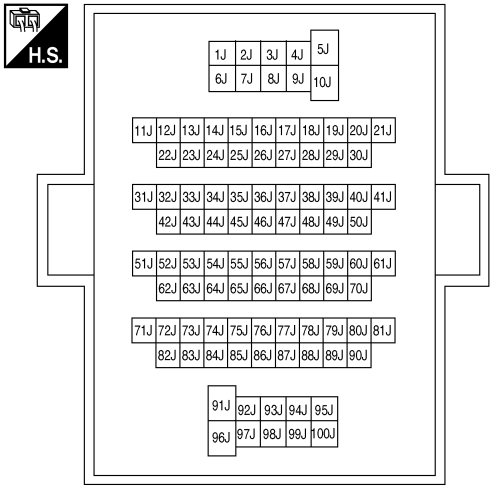

Terminal No.	Color of Wire	Signal Name
11J	L	–
22J	P	–

Connector No.	M60
Connector Name	FUSE BLOCK (J/B)
Connector Color	WHITE

Terminal No.	Color of Wire	Signal Name
1T	R/Y	–
6T	O	–

Connector No.	M102
Connector Name	COMBINATION SWITCH (SPIRAL CABLE)
Connector Color	GRAY

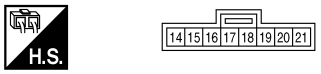

Terminal No.	Color of Wire	Signal Name
14	Y	–
15	B	–

Connector No.	M175
Connector Name	JOINT CONNECTOR-M10
Connector Color	BLUE

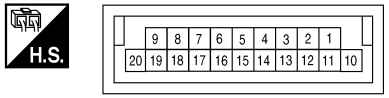

Terminal No.	Color of Wire	Signal Name
1	L	–
2	L	–
5	L	–
10	P	–
11	P	–
14	P	–

Connector No.	M176
Connector Name	JOINT CONNECTOR-M11
Connector Color	BLUE

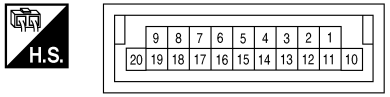

Terminal No.	Color of Wire	Signal Name
1	L	–
2	L	–
4	L	–
10	P	–
11	P	–
13	P	–

ABBIA2567GB

Connector No.	M179
Connector Name	JOINT CONNECTOR-M01
Connector Color	GREEN

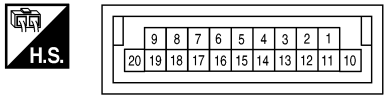

Terminal No.	Color of Wire	Signal Name
10	O	–
11	O	–

Connector No.	M180
Connector Name	JOINT CONNECTOR-M03
Connector Color	BLUE

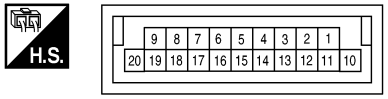

Terminal No.	Color of Wire	Signal Name
1	G/R	–
2	G/R	–
18	GR/R	–
19	GR/R	–

Connector No.	E2
Connector Name	WIRE TO WIRE
Connector Color	WHITE

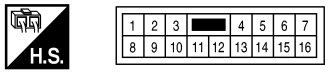

Terminal No.	Color of Wire	Signal Name
4	W	–
5	L/Y	–
6	B	–
7	L	–
9	BR	–
10	L	–
11	W/L	–
12	R	–
13	BR	–

Connector No.	E5
Connector Name	WIRE TO WIRE
Connector Color	WHITE

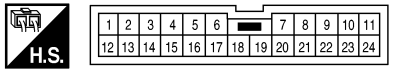

Terminal No.	Color of Wire	Signal Name
3	L	–
5	L	–

Terminal No.	Color of Wire	Signal Name
8	B	–
9	B	–
10	B	–
11	R/Y	–
14	P	–
15	P	–
16	B	–
19	B/R	–
20	R/B	–
21	B/W	–
22	L	–
23	SB	–
24	B/W	–

Connector No.	E8
Connector Name	DROPPING RESISTOR
Connector Color	GRAY

Terminal No.	Color of Wire	Signal Name
1	B	–
2	L	–

ABBIA2304GB

Connector No.	E16
Connector Name	ECM
Connector Color	BLACK

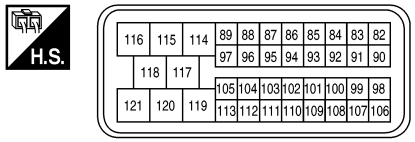

Terminal No.	Color of Wire	Signal Name
82	B/R	GND-A
83	G/W	GND-A2
84	–	–
85	G/W	KLINE
86	P	CAN-L
87	–	–
88	–	–
89	–	–

Terminal No.	Color of Wire	Signal Name
90	L	AVCC
91	W/R	AVCC2
92	–	–
93	–	–
94	L	CAN-H
95	–	–
96	–	–
97	–	–
98	G/R	APS2
99	G/Y	ASCDSW
100	–	–
101	R/W	BRAKE
102	GR/R	NEUT
103	–	–
104	O	MOTRLY
105	–	–
106	BR/W	APSI

Terminal No.	Color of Wire	Signal Name
107	V/R	TF
108	BR/W	BNCSW
109	L/W	IGNSW
110	–	–
111	W/B	SSOFF
112	–	–
113	GR	FPR
114	–	–
115	B	GND
116	B/W	GND
117	L/Y	CDCV
118	–	–
119	BR	VB
120	BR	VB
121	W	BATT

Connector No.	E17
Connector Name	FUEL PUMP CONTROL MODULE (FPCM)
Connector Color	WHITE

Terminal No.	Color of Wire	Signal Name
1	B	–
2	L	–
3	L/Y	–
4	B/Y	–

Connector No.	E20
Connector Name	ACCELERATOR PEDAL POSITION (APP) SENSOR
Connector Color	BLACK

Terminal No.	Color of Wire	Signal Name
1	B/R	–
2	BR/W	–
3	G/W	–
5	G/R	–
6	W/R	–
7	L	–

Connector No.	E34
Connector Name	WIRE TO WIRE
Connector Color	WHITE

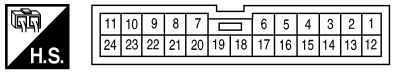

Terminal No.	Color of Wire	Signal Name
23	P	–
24	L	–

ABBIA2305GB

Connector No.	E37
Connector Name	BRAKE PEDAL POSITION SWITCH
Connector Color	BROWN

Terminal No.	Color of Wire	Signal Name
1	R/B	–
2	BR/W	–

Connector No.	E38
Connector Name	STOP LAMP SWITCH
Connector Color	BLACK

Terminal No.	Color of Wire	Signal Name
1	R/Y	–
2	R/G	–

Connector No.	E41
Connector Name	WIRE TO WIRE
Connector Color	GRAY

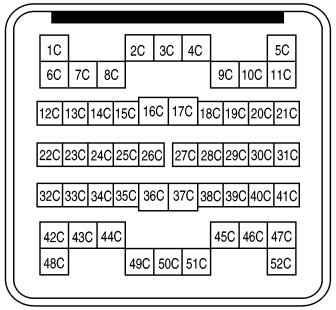

Terminal No.	Color of Wire	Signal Name
15C	V/R	–
16C	B/Y	–
18C	L	–
19C	B	–
20C	SB	–
21C	W/L	–
42C	L/Y	–
52C	B	– (WITHOUT FFV)
52C	L	– (WITH FFV)

Connector No.	E48
Connector Name	REFRIGERANT PRESSURE SENSOR
Connector Color	BLACK

Terminal No.	Color of Wire	Signal Name
1	R/Y	–
2	B/W	–
3	B	–

ABBIA2306GB

Connector No.	E113
Connector Name	COOLING FAN MOTOR
Connector Color	WHITE

Terminal No.	Color of Wire	Signal Name
1	L	–
2	B	–

Connector No.	E116
Connector Name	CONDENSER-2
Connector Color	WHITE

Terminal No.	Color of Wire	Signal Name
1	B/Y	–
2	B	–

Connector No.	E119
Connector Name	IPDM E/R (INTELLIGENT POWER DISTRIBUTION MODULE ENGINE ROOM)
Connector Color	WHITE

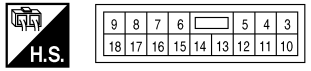

Terminal No.	Color of Wire	Signal Name
3	BR	IGN COIL
4	W/L	ECM
6	L	ETC
7	W/B	ECM RLY CONT
8	R/B	O2 SENSOR
11	Y/B	A/C COMPRESSOR
13	B/Y	FUEL PUMP
17	W	INJECTOR

Connector No.	E120
Connector Name	IPDM E/R (INTELLIGENT POWER DISTRIBUTION MODULE ENGINE ROOM)
Connector Color	WHITE

Terminal No.	Color of Wire	Signal Name
22	G	F/L MOTOR FAN
24	L	MOTOR FAN 2

Connector No.	E121
Connector Name	IPDM E/R (INTELLIGENT POWER DISTRIBUTION MODULE ENGINE ROOM)
Connector Color	BROWN

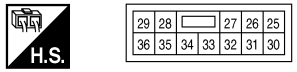

Terminal No.	Color of Wire	Signal Name
30	W	ECM BAT

Connector No.	E122
Connector Name	IPDM E/R (INTELLIGENT POWER DISTRIBUTION MODULE ENGINE ROOM)
Connector Color	WHITE

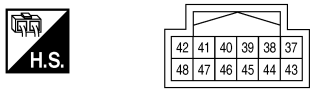

Terminal No.	Color of Wire	Signal Name
38	B	GND (SIGNAL)
39	L	CAN-H
40	P	CAN-L
46	GR	FUEL PUMP RLY CONT
47	O	ETC RLY CONT

ABBIA2566GB

Connector No.	E124
Connector Name	IPDM E/R (INTELLIGENT POWER DISTRIBUTION MODULE ENGINE ROOM)
Connector Color	BLACK

Terminal No.	Color of Wire	Signal Name
59	B	GND (POWER)

Connector No.	E152
Connector Name	WIRE TO WIRE
Connector Color	WHITE

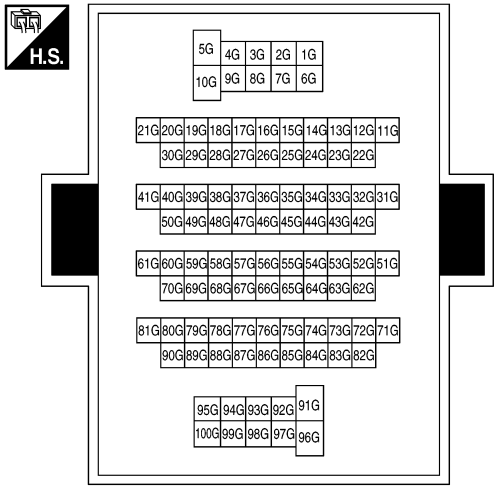

Terminal No.	Color of Wire	Signal Name
31G	L	–
32G	P	–
36G	R/Y	–
51G	G/W	–
65G	R/B	–
66G	B/R	–
67G	GR/R	–
68G	G/Y	–
69G	B	–

Connector No.	E161
Connector Name	BATTERY CURRENT SENSOR
Connector Color	BLACK

Terminal No.	Color of Wire	Signal Name
1	R/Y	–
2	B	–
3	R	–

Connector No.	F5
Connector Name	AIR FUEL RATIO (A/F) SENSOR 1 (BANK 2)
Connector Color	BROWN

Terminal No.	Color of Wire	Signal Name
1	G	–
2	L	–
3	GR/G	–
4	R/B	–

Connector No.	F6
Connector Name	IGNITION COIL NO. 2 (WITH POWER TRANSISTOR)
Connector Color	GRAY

Terminal No.	Color of Wire	Signal Name
1	W/G	–
2	B	–
3	W/L	–

ABBIA2308GB

Connector No.	F7
Connector Name	IGNITION COIL NO. 4 (WITH POWER TRANSISTOR)
Connector Color	GRAY

Terminal No.	Color of Wire	Signal Name
1	W/R	–
2	B	–
3	W/L	–

Connector No.	F8
Connector Name	IGNITION COIL NO. 6 (WITH POWER TRANSISTOR)
Connector Color	GRAY

Terminal No.	Color of Wire	Signal Name
1	V/W	–
2	B	–
3	W/L	–

Connector No.	F9
Connector Name	A/T ASSEMBLY
Connector Color	GREEN

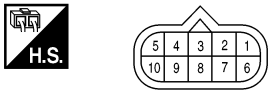

Terminal No.	Color of Wire	Signal Name
3	L	–
8	P	–
9	B/R	–

Connector No.	F11
Connector Name	CRANKSHAFT POSITION SENSOR (POS)
Connector Color	BLACK

Terminal No.	Color of Wire	Signal Name
1	B	–
2	O	–
3	BR	–

Connector No.	F12
Connector Name	HEATED OXYGEN SENSOR 2 (BANK2)
Connector Color	GREEN

Terminal No.	Color of Wire	Signal Name
1	L	–
2	O/G	–
3	R/B	–
4	B/W	–

Connector No.	F13
Connector Name	HEATED OXYGEN SENSOR 2 (BANK1)
Connector Color	GREEN

Terminal No.	Color of Wire	Signal Name
1	R	–
2	GR	–
3	R/B	–
4	B	–

ABBIA2309GB

Connector No.	F14
Connector Name	WIRE TO WIRE
Connector Color	WHITE

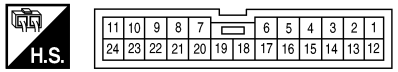

Terminal No.	Color of Wire	Signal Name
3	L	–
5	L	–
8	B	–
9	B	–
10	B	–
11	R/Y	–
14	P	–
15	P	–
16	B	–
19	B/R	–
20	R/B	–
21	B	–
22	L	–
23	SB	–
24	B/W	–

Connector No.	F15
Connector Name	EVAP CANISTER PURGE VOLUME CONTROL SOLENOID VALVE
Connector Color	GRAY

Terminal No.	Color of Wire	Signal Name
1	BR	–
2	L/Y	–

Connector No.	F18
Connector Name	FUEL INJECTOR NO. 2
Connector Color	GRAY

Terminal No.	Color of Wire	Signal Name
1	W	–
2	L	–

Connector No.	F20
Connector Name	FUEL INJECTOR NO. 4
Connector Color	GRAY

Terminal No.	Color of Wire	Signal Name
1	W	–
2	P	–

Connector No.	F21
Connector Name	CONDENSER-1
Connector Color	WHITE

Terminal No.	Color of Wire	Signal Name
1	W/L	–
2	B	–

ABBIA2310GB

Connector No.	F22
Connector Name	FUEL INJECTOR NO. 6
Connector Color	GRAY

Terminal No.	Color of Wire	Signal Name
1	W	–
2	Y/G	–

Connector No.	F23
Connector Name	CAMSHAFT POSITION SENSOR (PHASE)
Connector Color	BLACK

Terminal No.	Color of Wire	Signal Name
1	B	–
2	Y	–
3	BR	–

Connector No.	F26
Connector Name	WIRE TO WIRE
Connector Color	BLACK

Terminal No.	Color of Wire	Signal Name
1	W	–
2	B	–
3	Y/B	–
4	B	–
5	W	–
6	B	–

Connector No.	F30
Connector Name	FUEL INJECTOR NO. 1
Connector Color	GRAY

Terminal No.	Color of Wire	Signal Name
1	W	–
2	GR/W	–

Connector No.	F31
Connector Name	FUEL INJECTOR NO. 8
Connector Color	GRAY

Terminal No.	Color of Wire	Signal Name
1	W	–
2	G	–

Connector No.	F32
Connector Name	WIRE TO WIRE
Connector Color	WHITE

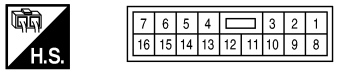

Terminal No.	Color of Wire	Signal Name
4	W	–
5	L/Y	–
6	B	–
7	L	–
9	BR	–
10	L	–
11	W/L	–
12	R	–
13	BR	–

ABBIA2311GB

Connector No.	F41
Connector Name	FUEL INJECTOR NO. 3
Connector Color	GRAY

Terminal No.	Color of Wire	Signal Name
1	W	–
2	BR	–

Connector No.	F42
Connector Name	FUEL INJECTOR NO. 5
Connector Color	GRAY

Terminal No.	Color of Wire	Signal Name
1	W	–
2	O/L	–

Connector No.	F45
Connector Name	FUEL INJECTOR NO. 7
Connector Color	GRAY

Terminal No.	Color of Wire	Signal Name
1	W	–
2	O	–

Connector No.	F46
Connector Name	POWER STEERING PRESSURE SENSOR
Connector Color	BLACK

Terminal No.	Color of Wire	Signal Name
1	W/L	–
2	R	–
3	B	–

Connector No.	F47
Connector Name	IGNITION COIL NO. 1 (WITH POWER TRANSISTOR)
Connector Color	GRAY

Terminal No.	Color of Wire	Signal Name
1	Y/R	–
2	B	–
3	W/L	–

Connector No.	F48
Connector Name	IGNITION COIL NO. 3 (WITH POWER TRANSISTOR)
Connector Color	GRAY

Terminal No.	Color of Wire	Signal Name
1	O/W	–
2	B	–
3	W/L	–

ABBIA2312GB

Connector No.	F49
Connector Name	IGNITION COIL NO. 5 (WITH POWER TRANSISTOR)
Connector Color	GRAY

Terminal No.	Color of Wire	Signal Name
1	GR/R	–
2	B	–
3	W/L	–

Connector No.	F50
Connector Name	ELECTRIC THROTTLE CONTROL ACTUATOR
Connector Color	WHITE

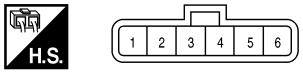

Terminal No.	Color of Wire	Signal Name
1	B	–
2	G	–
3	W	–
4	R	–
5	L/W	–
6	L/B	–

Connector No.	F51
Connector Name	IGNITION COIL NO. 7 (WITH POWER TRANSISTOR)
Connector Color	GRAY

Terminal No.	Color of Wire	Signal Name
1	L/R	–
2	B	–
3	W/L	–

Connector No.	F52
Connector Name	IGNITION COIL NO. 8 (WITH POWER TRANSISTOR)
Connector Color	GRAY

Terminal No.	Color of Wire	Signal Name
1	G/R	–
2	B	–
3	W/L	–

Connector No.	F53
Connector Name	MASS AIR FLOW SENSOR
Connector Color	BLACK

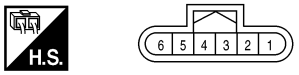

Terminal No.	Color of Wire	Signal Name
2	BR	–
3	B	–
4	W	–
5	R/B	–
6	B	–

ABBIA2313GB

Connector No.	F54
Connector Name	ECM
Connector Color	BLACK

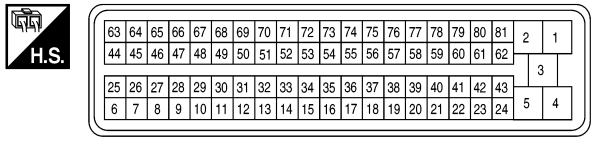

Terminal No.	Color of Wire	Signal Name
1	B	GND
2	LG/B	AF-H1
3	L	VMOT
4	L/W	MOTOR 2
5	L/B	MOTOR 1
6	GR	O2HRL
7	–	–
8	–	–
9	–	–
10	W	C-VTC (L)
11	LG	C-VTC (R)
12	R	PS-PRESS
13	O	POS
14	Y	PHASE
15	W	KNK1
16	G	A/F+2
17	–	–
18	–	–
19	–	–
20	–	–
21	O/L	INJ#5

Terminal No.	Color of Wire	Signal Name
22	BR	INJ#3
23	GR/W	INJ#1
24	GR/G	AF-H2
25	O/G	O2HRR
26	–	–
27	–	–
28	–	–
29	–	–
30	–	–
31	–	–
32	L	FTPRS
33	–	–
34	R/B	TA
35	O	A/F+1
36	W	KNK2
37	–	–
38	L	FPCMCK
39	L/Y	FPCM
40	Y/G	INJ#6
41	P	INJ#4
42	L	INJ#2
43	GR/G	AF-H2
44	O	INJ#7
45	L/Y	EVAP
46	L/R	IGN#7
47	G	AVCC2
48	SB	AVCC
49	R/Y	AVCC (PDPRES)
50	B	TPS1
51	W	QA+
52	–	–

Terminal No.	Color of Wire	Signal Name
53	L	VTC PUS (R)
54	–	–
55	R	O2SRL
56	W	A/F-1
57	–	–
58	–	–
59	–	–
60	GR/R	IGN#5
61	O/W	IGN#3
62	Y/R	IGN#1
63	G	INJ#8
64	–	–
65	G/R	IGN#8
66	R	GND-A2
67	B	GND-A
68	W/L	AVCC (PSPRES)
69	W	TPS2
70	B/W	PD PRESS
71	R	CURSEN
72	Y	VTS PUS (L)
73	Y/B	TW
74	L	O2SRR
75	L	A/F-2
76	–	–
77	–	–
78	B/W	GND_O2
79	V/W	IGN#6
80	W/R	IGN#4
81	W/G	IGN#2

ABBIA2314GB

Connector No.	F61
Connector Name	INTAKE VALVE TIMING CONTROL SOLENOID VALVE (BANK 1)
Connector Color	GREEN

Terminal No.	Color of Wire	Signal Name
1	W	–
2	W/L	–

Connector No.	F62
Connector Name	INTAKE VALVE TIMING CONTROL POSITION SENSOR (BANK 1)
Connector Color	BLACK

Terminal No.	Color of Wire	Signal Name
1	B	–
2	Y	–
3	BR	–

Connector No.	F63
Connector Name	INTAKE VALVE TIMING CONTROL SOLENOID VALVE (BANK 2)
Connector Color	GREEN

Terminal No.	Color of Wire	Signal Name
1	LG	–
2	W/L	–

Connector No.	F64
Connector Name	INTAKE VALVE TIMING CONTROL POSITION SENSOR (BANK 2)
Connector Color	BLACK

Terminal No.	Color of Wire	Signal Name
1	B	–
2	L	–
3	BR	–

Connector No.	F65
Connector Name	AIR FUEL RATIO (A/F) SENSOR 1 (BANK 1)
Connector Color	BROWN

Terminal No.	Color of Wire	Signal Name
1	O	–
2	W	–
3	LG/B	–
4	R/B	–

Connector No.	F69
Connector Name	JOINT CONNECTOR-F01
Connector Color	GRAY

Terminal No.	Color of Wire	Signal Name
1	B	–
2	B	–
3	B	–
4	B	–
5	B	–
6	B	–

ABBIA2315GB

Connector No.	F201
Connector Name	WIRE TO WIRE
Connector Color	BLACK

H.S.

Terminal No.	Color of Wire	Signal Name
1	W	–
2	B	–
3	Y/B	–
4	B	–
5	W	–
6	B	–

Connector No.	F202
Connector Name	KNOCK SENSOR (BANK 1)
Connector Color	BLACK

H.S.

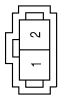

Terminal No.	Color of Wire	Signal Name
1	W	–
2	B	–

Connector No.	F203
Connector Name	ENGINE COOLANT TEMPERATURE SENSOR
Connector Color	GRAY

H.S.

Terminal No.	Color of Wire	Signal Name
1	Y/B	–
2	B	–

Connector No.	F204
Connector Name	KNOCK SENSOR (BANK 2)
Connector Color	BLACK

H.S.

Terminal No.	Color of Wire	Signal Name
1	W	–
2	B	–

Connector No.	F502
Connector Name	TCM (TRANSMISSION CONTROL MODULE)
Connector Color	GRAY

H.S.

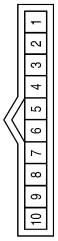

Terminal No.	Color of Wire	Signal Name
1	BR	CAN-H
2	L/Y	CAN-L
8	G	START-RLY

ABBIA1398GB

Connector No.	C1
Connector Name	WIRE TO WIRE
Connector Color	GRAY

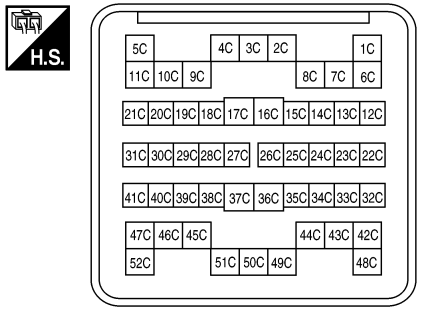

Terminal No.	Color of Wire	Signal Name
15C	V/R	–
16C	B/Y	–
18C	L	–
19C	B	–
20C	SB	–
21C	W/L	–
42C	L/Y	–
52C	B	– (WITHOUT FFV)
52C	L	– (WITH FFV)

Connector No.	C4
Connector Name	EVAP CONTROL SYSTEM PRESSURE SENSOR
Connector Color	GRAY

Terminal No.	Color of Wire	Signal Name
1	B	–
2	L	–
3	SB	–

Connector No.	C5
Connector Name	FUEL LEVEL SENSOR UNIT AND FUEL PUMP
Connector Color	GRAY

Terminal No.	Color of Wire	Signal Name
1	B/Y	–
3	B	– (WITHOUT FFV)
3	L	– (WITH FFV)
4	V/R	–

Connector No.	C6
Connector Name	EVAP CANISTER VENT CONTROL VALVE
Connector Color	BLACK

Terminal No.	Color of Wire	Signal Name
1	W/L	–
2	L/Y	–

Connector No.	B40
Connector Name	WIRE TO WIRE
Connector Color	WHITE

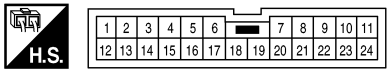

Terminal No.	Color of Wire	Signal Name
23	P	–
24	L	–

ABBIA2316GB

Connector No.	B69
Connector Name	WIRE TO WIRE
Connector Color	WHITE

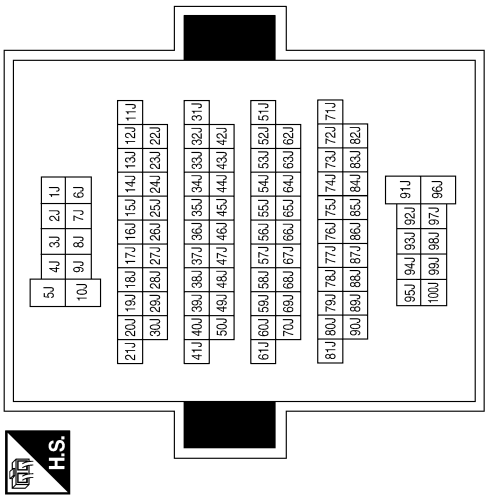

Terminal No.	Color of Wire	Signal Name
11J	L	–
22J	P	–

ABBIA1396GB

BASIC INSPECTION

DIAGNOSIS AND REPAIR WORKFLOW

Trouble Diagnosis Introduction

INFOID:0000000011291625

INTRODUCTION

The engine has an ECM to control major systems such as fuel control, ignition control, idle air control system, etc. The ECM accepts input signals from sensors and instantly drives actuators. It is essential that both input and output signals are proper and stable. At the same time, it is important that there are no malfunctions such as vacuum leaks, fouled spark plugs, or other malfunctions with the engine.

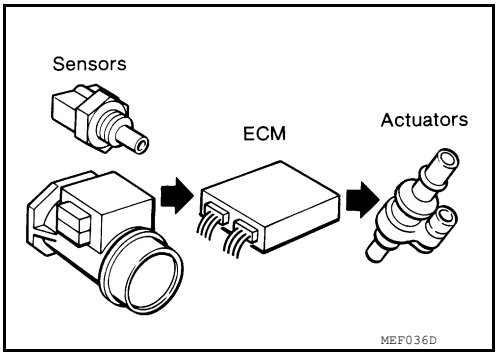

It is much more difficult to diagnose an incident that occurs intermittently rather than continuously. Most intermittent incidents are caused by poor electric connections or improper wiring. In this case, careful checking of suspected circuits may help prevent the replacement of good parts.

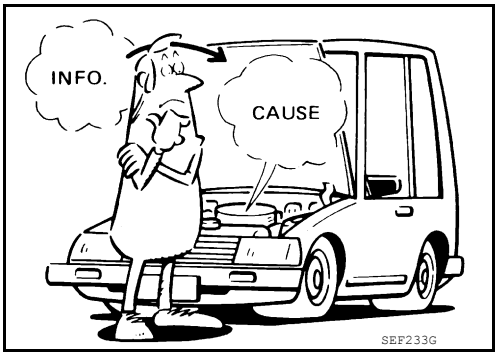

A visual check only may not find the cause of the incidents. A road test with CONSULT (or GST) or a circuit tester connected should be performed. Follow the Work Flow on “WORK FLOW”.
Before undertaking actual checks, take a few minutes to talk with a customer who approaches with a driveability complaint. The customer can supply good information about such incidents, especially intermittent ones. Find out what symptoms are present and under what conditions they occur. A Diagnostic Worksheet like the example on “Worksheet Sample” should be used.
Start your diagnosis by looking for conventional malfunctions first. This will help troubleshoot driveability malfunctions on an electronically controlled engine vehicle.

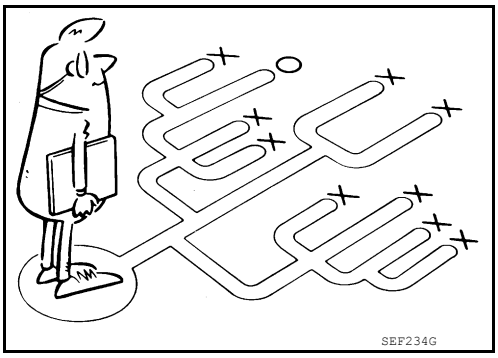

WORK FLOW

Overall Sequence

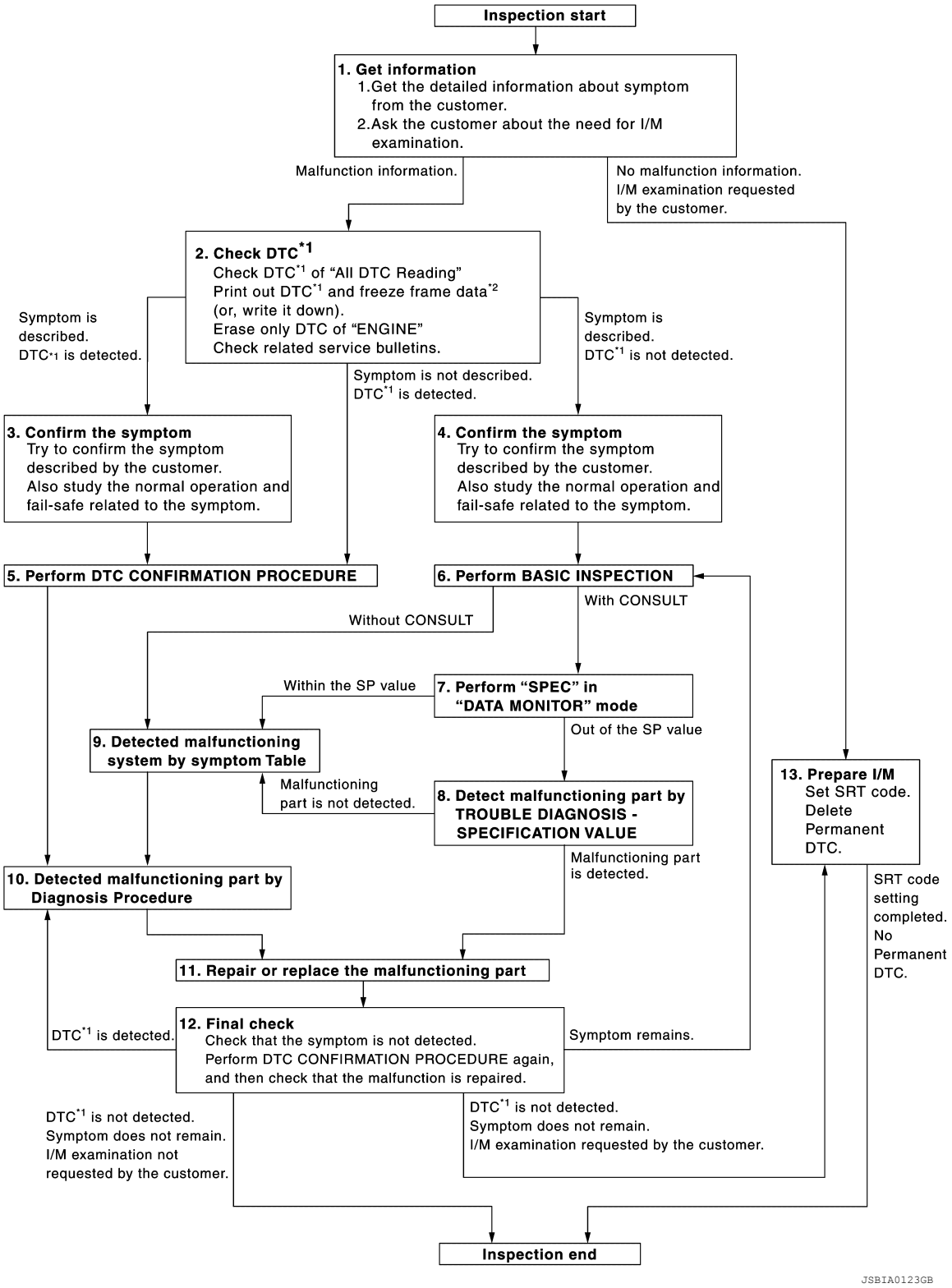

*1: Include 1st trip DTC.

*2: Include 1st trip freeze frame data.

Detailed Flow

1. GET INFORMATION FOR SYMPTOM

1. Get the detailed information from the customer about the symptom (the condition and the environment when the incident/malfunction occurred) using the "Diagnostic Work Sheet".

2. Ask if the customer requests I/M examination.

Malfunction information, obtained>>GO TO 2.
No malfunction information, but a request for I/M examination>>GO TO 13.

2.CHECK DTC

1. Check DTC.
2. Perform the following procedure if DTC is displayed.
- Record DTC and freeze frame data. (Print them out with CONSULT or GST.)
- Erase DTC.
- Study the relationship between the cause detected by DTC and the symptom described by the customer. (Symptom Matrix Chart is useful. Refer to EC-501, "Symptom Matrix Chart".)
3. Check related service bulletins for information.

Are any symptoms described and any DTCs detected?

Symptom is described, DTC is detected>>GO TO 3.
Symptom is described, DTC is not detected>>GO TO 4.
Symptom is not described, DTC is detected>>GO TO 5.

3.CONFIRM THE SYMPTOM

Try to confirm the symptom described by the customer (except MIL ON).
Also study the normal operation and fail-safe related to the symptom. Refer to EC-505, "Fuel Cut Control (at No Load and High Engine Speed)" and EC-74, "Fail-Safe Chart".
Diagnosis Work Sheet is useful to verify the incident.
Verify relation between the symptom and the condition when the symptom is detected.

>> GO TO 5.

4.CONFIRM THE SYMPTOM

Try to confirm the symptom described by the customer.
Also study the normal operation and fail-safe related to the symptom. Refer to Refer to EC-505, "Fuel Cut Control (at No Load and High Engine Speed)" and EC-74, "Fail-Safe Chart".
Diagnosis Work Sheet is useful to verify the incident.
Verify relation between the symptom and the condition when the symptom is detected.

>> GO TO 6.

5.PERFORM DTC CONFIRMATION PROCEDURE

Perform DTC CONFIRMATION PROCEDURE for the displayed DTC, and then check that DTC is detected again.
If two or more DTCs are detected, refer to EC-75, "DTC Inspection Priority Chart" and determine trouble diagnosis order.

NOTE:
- Freeze frame data is useful if the DTC is not detected.
- Perform Component Function Check if DTC CONFIRMATION PROCEDURE is not included on Service Manual. This simplified check procedure is an effective alternative though DTC cannot be detected during this check.
  If the result of Component Function Check is NG, it is the same as the detection of DTC by DTC CONFIRMATION PROCEDURE.

Is DTC detected?

YES >> GO TO 10.
NO >> Check according to GI-43, "Intermittent Incident".

6.PERFORM BASIC INSPECTION

Perform EC-117, "Basic Inspection".

Will CONSULT be used?

YES >> GO TO 7.
NO >> GO TO 9.

7. PERFORM SPEC IN DATA MONITOR MODE

With CONSULT
Check that “MAS A/F SE-B1”, “MAS A/F SE-B2”, “B/FUEL SCHDL”, “A/F ALPHA-B1” and “A/F ALPHA-B2” are within the SP value using “SPEC” in “DATA MONITOR” mode with CONSULT. Refer to EC-143, "Testing Condition", EC-143, "Inspection Procedure".

Is the measurement value within the SP value?

YES >> GO TO 9.
NO >> GO TO 8.

8. DETECT MALFUNCTIONING PART BY TROUBLE DIAGNOSIS - SPECIFICATION VALUE

Detect malfunctioning part according to EC-144, "Diagnosis Procedure".

Is a malfunctioning part detected?

YES >> GO TO 11.
NO >> GO TO 9.

9. DETECT MALFUNCTIONING SYSTEM BY SYMPTOM TABLE

Detect malfunctioning system according to EC-501, "Symptom Matrix Chart" based on the confirmed symptom in step 4, and determine the trouble diagnosis order based on possible causes and symptoms.

>> GO TO 10.

10. DETECT MALFUNCTIONING PART BY DIAGNOSIS PROCEDURE

Inspect according to Diagnosis Procedure of the system.
NOTE:
The Diagnosis Procedure in EC section described based on open circuit inspection. A short circuit inspection is also required for the circuit check in the Diagnosis Procedure. For details, refer to GI-45, "Circuit Inspection".

Is a malfunctioning part detected?

YES >> GO TO 11.
NO >> Monitor input data from related sensors or check voltage of related ECM terminals using CONSULT. Refer to EC-61, "CONSULT Reference Value in Data Monitor Mode", EC-65, "ECM Terminal and Reference Value".

11. REPAIR OR REPLACE THE MALFUNCTIONING PART

1. Repair or replace the malfunctioning part.
2. Reconnect parts or connectors disconnected during Diagnosis Procedure again after repair and replacement.
3. Check DTC. If DTC is displayed, erase it.

>> GO TO 12.

12. FINAL CHECK

When DTC was detected in step 2, perform DTC CONFIRMATION PROCEDURE or Component Function Check again, and then check that the malfunction have been completely repaired.
When symptom was described from the customer, refer to confirmed symptom in step 3 or 4, and check that the symptom is not detected.

Is DTC detected and does symptom remain?

YES-1 >> DTC is detected: GO TO 10.
YES-2 >> Symptom remains: GO TO 6.
NO-1 >> Before returning the vehicle to the customer, always erase unnecessary DTC in ECM and TCM (Transmission Control Module). If the completion of SRT is needed, drive vehicle under the specific driving pattern. Refer to EC-131, "Description".
NO-2 >> I/M examination, requested from the customer: GO TO 13.

13. PREPARE FOR I/M EXAMINATION

1. Set SRT codes. Refer to EC-131, "Description".
2. Erase permanent DTCs. Refer to EC-137, "Description".

>> INSPECTION END

DIAGNOSTIC WORKSHEET

Description

There are many operating conditions that lead to the malfunction of engine components. A good grasp of such conditions can make troubleshooting faster and more accurate.

In general, each customer feels differently about a incident. It is important to fully understand the symptoms or conditions for a customer complaint.

Utilize a diagnostic worksheet like the one on the next page in order to organize all the information for troubleshooting.

Some conditions may cause the MIL to come on steady or blink and DTC to be detected. Examples:

- Vehicle ran out of fuel, which caused the engine to misfire.
- Fuel filler cap was left off or incorrectly screwed on, allowing fuel to evaporate into the atmosphere.

KEY POINTS

WHAT ..... Vehicle & engine model
WHEN ..... Date, Frequencies
WHERE..... Road conditions
HOW ..... Operating conditions, Weather conditions, Symptoms

SEF907L

Worksheet Sample

Customer name MR/MS		Model & Year	VIN
Engine #		Trans.	Mileage
Incident Date		Manuf. Date	In Service Date
Fuel and fuel filler cap		☐ Vehicle ran out of fuel causing misfire ☐ Fuel filler cap was left off or incorrectly screwed on.	
Symptoms	☐ Startability	☐ Impossible to start ☐ No combustion ☐ Partial combustion ☐ Partial combustion affected by throttle position ☐ Partial combustion NOT affected by throttle position ☐ Possible but hard to start ☐ Others [ ]	
	☐ Idling	☐ No fast idle ☐ Unstable ☐ High idle ☐ Low idle ☐ Others [ ]	
	☐ Driveability	☐ Stumble ☐ Surge ☐ Knock ☐ Lack of power ☐ Intake backfire ☐ Exhaust backfire ☐ Others [ ]	
	☐ Engine stall	☐ At the time of start ☐ While idling ☐ While accelerating ☐ While decelerating ☐ Just after stopping ☐ While loading	
Incident occurrence		☐ Just after delivery ☐ Recently ☐ In the morning ☐ At night ☐ In the daytime	
Frequency		☐ All the time ☐ Under certain conditions ☐ Sometimes	
Weather conditions		☐ Not affected	
	Weather	☐ Fine ☐ Raining ☐ Snowing ☐ Others [ ]	
	Temperature	☐ Hot ☐ Warm ☐ Cool ☐ Cold ☐ Humid °F	
Engine conditions		☐ Cold ☐ During warm-up ☐ After warm-up Engine speed 0 2,000 4,000 6,000 8,000 rpm	
Road conditions		☐ In town ☐ In suburbs ☐ Highway ☐ Off road (up/down)	
Driving conditions		☐ Not affected ☐ At starting ☐ While idling ☐ At racing ☐ While accelerating ☐ While cruising ☐ While decelerating ☐ While turning (RH/LH) Vehicle speed 0 10 20 30 40 50 60 MPH	
Malfunction indicator lamp		☐ Turned on ☐ Not turned on	

MTBL0017

INSPECTION AND ADJUSTMENT

Basic Inspection

INFOID:0000000011291626

EXCEPT FLEXIBLE FUEL VEHICLE

1. INSPECTION START

1. Check service records for any recent repairs that may indicate a related malfunction, or a current need for scheduled maintenance.
2. Open engine hood and check the following:
- Harness connectors for improper connections
- Wiring harness for improper connections, pinches and cut
- Vacuum hoses for splits, kinks and improper connections
- Hoses and ducts for leaks
- Air cleaner clogging
- Gasket
3. Confirm that electrical or mechanical loads are not applied.
- Headlamp switch is OFF.
- Air conditioner switch is OFF.
- Rear window defogger switch is OFF.
- Steering wheel is in the straight-ahead position, etc.
4. Start engine and warm it up until engine coolant temperature indicator points the middle of gauge.
   Ensure engine stays below 1,000 rpm.

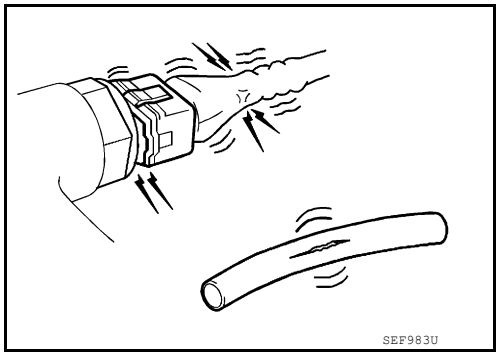

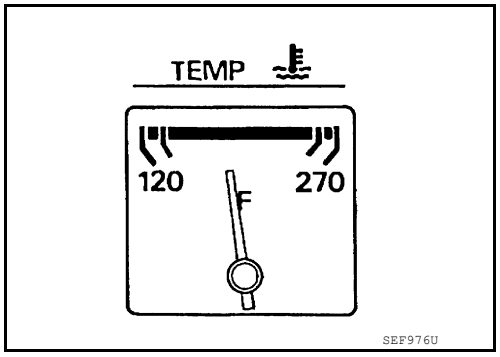

5. Run engine at about 2,000 rpm for about 2 minutes under no load.
6. Make sure that no DTC is displayed with CONSULT or GST.

OK or NG

OK >> GO TO 3.
NG >> GO TO 2.

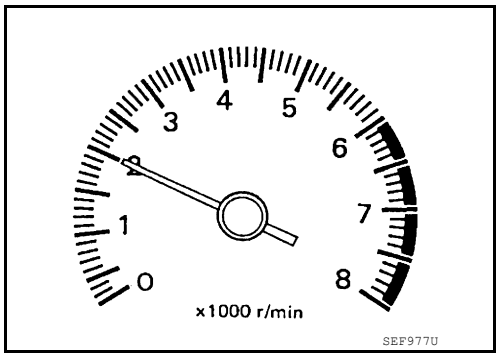

2. REPAIR OR REPLACE

Repair or replace components as necessary according to corresponding Diagnostic Procedure.

>> GO TO 3.

3. CHECK TARGET IDLE SPEED

With CONSULT

1. Run engine at about 2,000 rpm for about 2 minutes under no load.

2. Rev engine (2,000 to 3,000 rpm) two or three times under no load, then run engine at idle speed for about 1 minute.
3. Read idle speed in “DATA MONITOR” mode with CONSULT. Refer to EC-125, "Idle Speed and Ignition Timing Check".

650 ± 50 rpm (in P or N position)

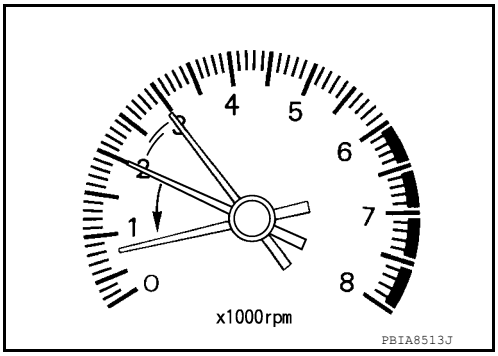

Without CONSULT
1. Run engine at about 2,000 rpm for about 2 minutes under no load.
2. Rev engine (2,000 to 3,000 rpm) two or three times under no load, then run engine at idle speed for about 1 minute.
3. Check idle speed.
   Refer to EC-125, "Idle Speed and Ignition Timing Check".

650 ± 50 rpm (in P or N position)

OK or NG

OK >> GO TO 10.
NG >> GO TO 4.

4. PERFORM ACCELERATOR PEDAL RELEASED POSITION LEARNING

1. Stop engine.
2. Perform EC-128, "Accelerator Pedal Released Position Learning".

>> GO TO 5.

5. PERFORM THROTTLE VALVE CLOSED POSITION LEARNING

Perform EC-128, "Throttle Valve Closed Position Learning".

>> GO TO 6.

6. PERFORM IDLE AIR VOLUME LEARNING

Refer to EC-129, "Idle Air Volume Learning".
Is Idle Air Volume Learning carried out successfully?

Yes or No

Yes >> GO TO 7.
No >> 1. Follow the instruction of Idle Air Volume Learning.
2. GO TO 4.

7. CHECK TARGET IDLE SPEED AGAIN

With CONSULT
1. Start engine and warm it up to normal operating temperature.
2. Read idle speed in “DATA MONITOR” mode with CONSULT.
   Refer to EC-125, "Idle Speed and Ignition Timing Check".

650 ± 50 rpm (in P or N position)

Without CONSULT
1. Start engine and warm it up to normal operating temperature.
2. Check idle speed.
   Refer to EC-125, "Idle Speed and Ignition Timing Check".

650 ± 50 rpm (in P or N position)

OK or NG

OK >> GO TO 10.
NG >> GO TO 8.

8. DETECT MALFUNCTIONING PART

Check the following.
- Check camshaft position sensor (PHASE) and circuit. Refer to EC-285.
- Check crankshaft position sensor (POS) and circuit. Refer to EC-281.

OK or NG

OK >> GO TO 9.
NG >> 1. Repair or replace.
2. GO TO 4.

9. CHECK ECM FUNCTION

1. Substitute another known-good ECM to check ECM function. (ECM may be the cause of an incident, but this is a rare case.)
2. Perform initialization of NVIS(NATS) system and registration of all NVIS(NATS) ignition key IDs. Refer to SEC-10, "ECM RE-COMMUNICATING FUNCTION : Special Repair Requirement" (With intelligent key system) or SEC-131, "ECM RE-COMMUNICATING FUNCTION : Special Repair Requirement" (Without intelligent key system).

>> GO TO 4.

10. CHECK IGNITION TIMING

1. Run engine at idle.
2. Check ignition timing with a timing light.
Refer to EC-125, "Idle Speed and Ignition Timing Check".

15 ± 5° BTDC (in P or N position)

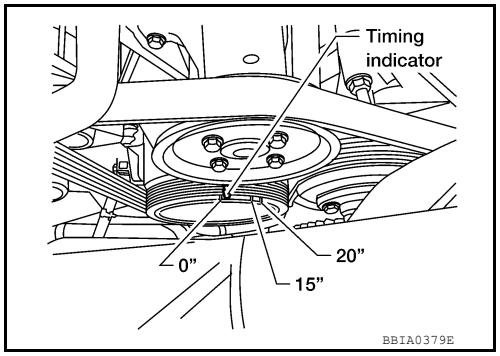

OK or NG

OK >> GO TO 19.
NG >> GO TO 11.

11. PERFORM ACCELERATOR PEDAL RELEASED POSITION LEARNING

1. Stop engine.
2. Perform EC-128, "Accelerator Pedal Released Position Learning".

>> GO TO 12.

12. PERFORM THROTTLE VALVE CLOSED POSITION LEARNING

Perform EC-128, "Throttle Valve Closed Position Learning".

>> GO TO 13.

13. PERFORM IDLE AIR VOLUME LEARNING

Refer to EC-129, "Idle Air Volume Learning".
Is Idle Air Volume Learning carried out successfully?

Yes or No

Yes >> GO TO 14.
No >> 1. Follow the instruction of Idle Air Volume Learning.
2. GO TO 4.

14. CHECK TARGET IDLE SPEED AGAIN

With CONSULT
1. Start engine and warm it up to normal operating temperature.

2. Read idle speed in “DATA MONITOR” mode with CONSULT.
   Refer to EC-125, "Idle Speed and Ignition Timing Check".

650 ± 50 rpm (in P or N position)

Without CONSULT

1. Start engine and warm it up to normal operating temperature.
2. Check idle speed.
   Refer to EC-125, "Idle Speed and Ignition Timing Check".

650 ± 50 rpm (in P or N position)

OK or NG

OK >> GO TO 15.
NG >> GO TO 17.

15. CHECK IGNITION TIMING AGAIN

1. Run engine at idle.
2. Check ignition timing with a timing light.
   Refer to EC-125, "Idle Speed and Ignition Timing Check".

15 ± 5° BTDC (in P or N position)

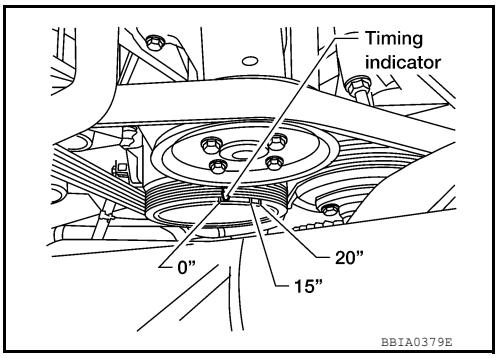

OK or NG

OK >> GO TO 19.
NG >> GO TO 16.

16. CHECK TIMING CHAIN INSTALLATION

Check timing chain installation. Refer to EM-56, "Removal and Installation".

OK or NG

OK >> GO TO 17.
NG >> 1. Repair the timing chain installation. Refer to EM-56.
2. GO TO 4.

17. DETECT MALFUNCTIONING PART

Check the following.

- Check camshaft position sensor (PHASE) and circuit. Refer to EC-285.
- Check crankshaft position sensor (POS) and circuit. Refer to EC-281.

OK or NG

OK >> GO TO 18.
NG >> 1. Repair or replace.
2. GO TO 4.

18. CHECK ECM FUNCTION

1. Substitute another known-good ECM to check ECM function. (ECM may be the cause of an incident, but this is a rare case.)
2. Perform initialization of NVIS (NATS) system and registration of all NVIS (NATS) ignition key IDs. Refer to SEC-10, "ECM RE-COMMUNICATING FUNCTION : Description".

>> GO TO 4.

19. INSPECTION END

Did you replace ECM, referring this Basic Inspection procedure?

Yes or No

Yes >> 1. Perform EC-127, "VIN Registration".
2. **INSPECTION END**

No >> **INSPECTION END**

FLEXIBLE FUEL VEHICLE

1. INSPECTION START

1. Check service records for any recent repairs that may indicate a related malfunction, or a current need for scheduled maintenance.
2. Open engine hood and check the following:
- Harness connectors for improper connections
- Wiring harness for improper connections, pinches and cut
- Vacuum hoses for splits, kinks and improper connections
- Hoses and ducts for leaks
- Air cleaner clogging
- Gasket
3. Confirm that electrical or mechanical loads are not applied.
- Headlamp switch is OFF.
- Air conditioner switch is OFF.
- Rear window defogger switch is OFF.
- Steering wheel is in the straight-ahead position, etc.
4. Start engine and warm it up until engine coolant temperature indicator points the middle of gauge.
   Ensure engine stays below 1,000 rpm.

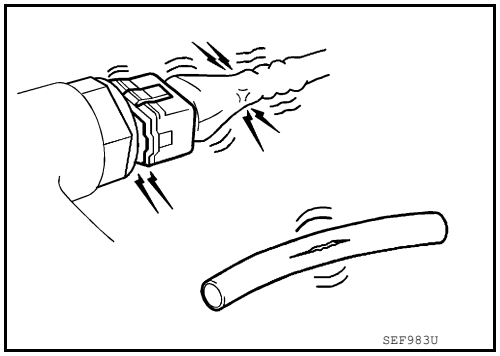

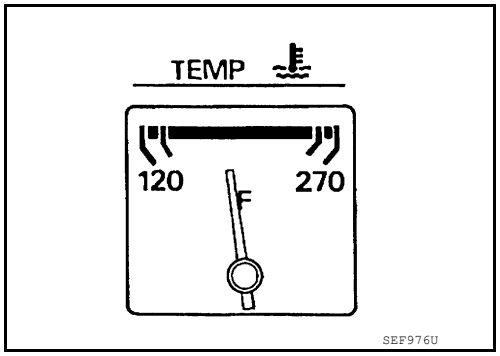

5. Run engine at about 2,000 rpm for about 2 minutes under no load.
6. Make sure that no DTC is displayed with CONSULT or GST.

OK or NG

OK >> GO TO 3.
NG >> GO TO 2.

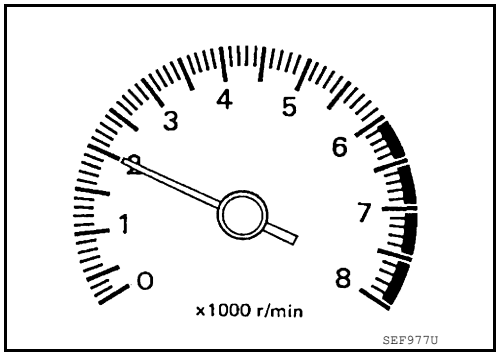

2. REPAIR OR REPLACE

Repair or replace components as necessary according to corresponding Diagnostic Procedure.

>> GO TO 3.

3. CHECK TARGET IDLE SPEED

With CONSULT

1. Run engine at about 2,000 rpm for about 2 minutes under no load.

2. Rev engine (2,000 to 3,000 rpm) two or three times under no load, then run engine at idle speed for about 1 minute.
3. Read idle speed in “DATA MONITOR” mode with CONSULT. Refer to EC-125, "Idle Speed and Ignition Timing Check".

650 ± 50 rpm (in P or N position)

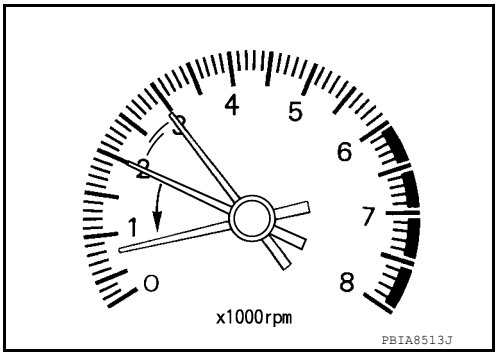

Without CONSULT
1. Run engine at about 2,000 rpm for about 2 minutes under no load.
2. Rev engine (2,000 to 3,000 rpm) two or three times under no load, then run engine at idle speed for about 1 minute.
3. Check idle speed.
   Refer to EC-125, "Idle Speed and Ignition Timing Check".

650 ± 50 rpm (in P or N position)

OK or NG

OK >> GO TO 11.
NG >> GO TO 4.

4. PERFORM ACCELERATOR PEDAL RELEASED POSITION LEARNING

1. Stop engine.
2. Perform EC-128, "Accelerator Pedal Released Position Learning".

>> GO TO 5.

5. PERFORM THROTTLE VALVE CLOSED POSITION LEARNING

Perform EC-128, "Throttle Valve Closed Position Learning".

ECM is displayed referring this procedure>>GO TO 6.
ECM is not displayed>>GO TO 7.

6. PERFORM ETHANOL MIXTURE RATIO ADAPTATION

Perform EC-128, "Ethanol Mixture Ratio Adaptation (Flexible Fuel Vehicle)".

>> GO TO 7.

7. PERFORM IDLE AIR VOLUME LEARNING

Refer to EC-129, "Idle Air Volume Learning".
Is Idle Air Volume Learning carried out successfully?

Yes or No

Yes >> GO TO 8.
No >> 1. Follow the instruction of Idle Air Volume Learning.
2. GO TO 4.

8. CHECK TARGET IDLE SPEED AGAIN

With CONSULT
1. Start engine and warm it up to normal operating temperature.
2. Read idle speed in “DATA MONITOR” mode with CONSULT.
   Refer to EC-125, "Idle Speed and Ignition Timing Check".

650 ± 50 rpm (in P or N position)

Without CONSULT

1. Start engine and warm it up to normal operating temperature.
2. Check idle speed.
   Refer to EC-125, "Idle Speed and Ignition Timing Check".

650 ± 50 rpm (in P or N position)

OK or NG

OK >> GO TO 11.
NG >> GO TO 9.

9. DETECT MALFUNCTIONING PART

Check the following.
- Check camshaft position sensor (PHASE) and circuit. Refer to EC-285.
- Check crankshaft position sensor (POS) and circuit. Refer to EC-281.

OK or NG

OK >> GO TO 10.
NG >> 1. Repair or replace.
2. GO TO 4.

10. CHECK ECM FUNCTION

1. Substitute another known-good ECM to check ECM function. (ECM may be the cause of an incident, but this is a rare case.)
2. Perform initialization of NVIS(NATS) system and registration of all NVIS(NATS) ignition key IDs. Refer to SEC-10, "ECM RE-COMMUNICATING FUNCTION : Special Repair Requirement" (With intelligent key system) or SEC-131, "ECM RE-COMMUNICATING FUNCTION : Special Repair Requirement" (Without intelligent key system).

>> GO TO 4.

11. CHECK IGNITION TIMING

1. Run engine at idle.
2. Check ignition timing with a timing light.
   Refer to EC-125, "Idle Speed and Ignition Timing Check".

15 ± 5° BTDC (in P or N position)

OK or NG

OK >> GO TO 21.
NG >> GO TO 12.

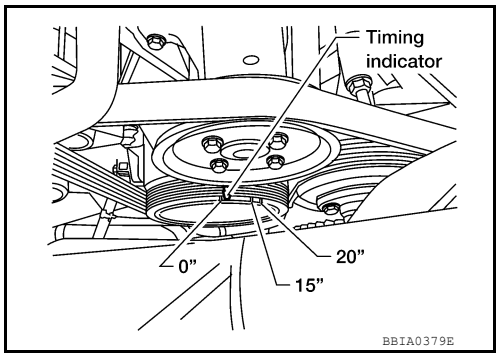

12. PERFORM ACCELERATOR PEDAL RELEASED POSITION LEARNING

1. Stop engine.
2. Perform EC-128, "Accelerator Pedal Released Position Learning".

>> GO TO 13.

13. PERFORM THROTTLE VALVE CLOSED POSITION LEARNING

Perform EC-128, "Throttle Valve Closed Position Learning".

ECM is displayed referring this procedure>>GO TO 14.
ECM is not displayed>>GO TO 15.

14. PERFORM ETHANOL MIXTURE RATIO ADAPTATION

Perform EC-128, "Ethanol Mixture Ratio Adaptation (Flexible Fuel Vehicle)".

>> GO TO 15.

15. PERFORM IDLE AIR VOLUME LEARNING

Refer to EC-129, "Idle Air Volume Learning".

Is Idle Air Volume Learning carried out successfully?

Yes or No

Yes >> GO TO 16.
No >> 1. Follow the instruction of Idle Air Volume Learning.
2. GO TO 4.

16. CHECK TARGET IDLE SPEED AGAIN

With CONSULT

1. Start engine and warm it up to normal operating temperature.
2. Read idle speed in “DATA MONITOR” mode with CONSULT.
Refer to EC-125, "Idle Speed and Ignition Timing Check".

650 ± 50 rpm (in P or N position)

Without CONSULT

1. Start engine and warm it up to normal operating temperature.
2. Check idle speed.
Refer to EC-125, "Idle Speed and Ignition Timing Check".

650 ± 50 rpm (in P or N position)

OK or NG

OK >> GO TO 17.
NG >> GO TO 19.

17. CHECK IGNITION TIMING AGAIN

1. Run engine at idle.
2. Check ignition timing with a timing light.
Refer to EC-125, "Idle Speed and Ignition Timing Check".

15 ± 5° BTDC (in P or N position)

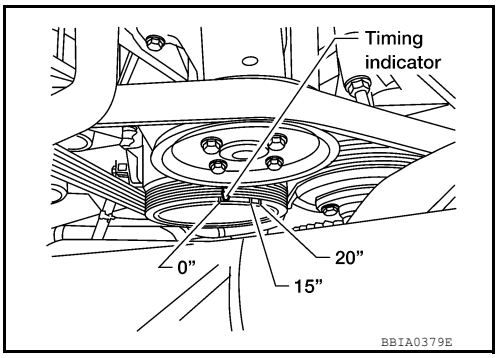

OK or NG

OK >> GO TO 21.
NG >> GO TO 18.

18. CHECK TIMING CHAIN INSTALLATION

Check timing chain installation. Refer to EM-56, "Removal and Installation".

OK or NG

OK >> GO TO 19.
NG >> 1. Repair the timing chain installation. Refer to EM-56.
2. GO TO 4.

19. DETECT MALFUNCTIONING PART

Check the following.

- Check camshaft position sensor (PHASE) and circuit. Refer to EC-285.
- Check crankshaft position sensor (POS) and circuit. Refer to EC-281.

OK or NG

OK >> GO TO 20.
NG >> 1. Repair or replace.
2. GO TO 4.

20. CHECK ECM FUNCTION

1. Substitute another known-good ECM to check ECM function. (ECM may be the cause of an incident, but this is a rare case.)
2. Perform initialization of NVIS(NATS) system and registration of all NVIS(NATS) ignition key IDs. Refer to SEC-10, "ECM RE-COMMUNICATING FUNCTION : Special Repair Requirement" (With intelligent key system) or SEC-131, "ECM RE-COMMUNICATING FUNCTION : Special Repair Requirement" (Without intelligent key system).

>> GO TO 4.

21. INSPECTION END

Did you replace ECM, referring this Basic Inspection procedure?

Yes or No

Yes >> 1. Perform EC-127, "VIN Registration".
2. **INSPECTION END**

No >> **INSPECTION END**

Idle Speed and Ignition Timing Check

INFOID:0000000011291627

IDLE SPEED

With CONSULT

Check idle speed in “DATA MONITOR” mode with CONSULT.

With GST

Check idle speed with GST.

IGNITION TIMING

1. Attach timing light to loop wire as shown.

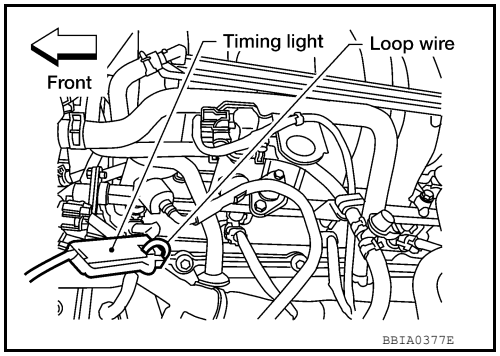

2. Check ignition timing.

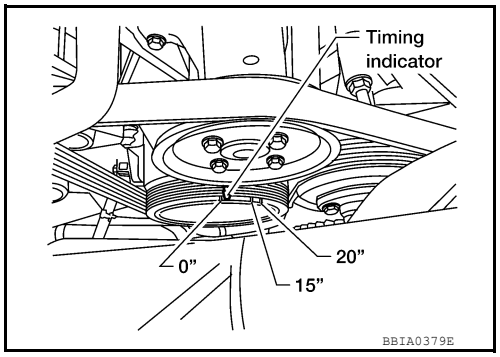

Procedure After Replacing ECM

INFOID:0000000011291628

DESCRIPTION

When replacing ECM, the following procedure must be performed.

PROGRAMMING OPERATION

NOTE:

After replacing with a blank ECM, programming is required to write ECM information. Be sure to follow the procedure to perform the programming.

OPERATION PROCEDURE

1. SAVE ECM DATA

With CONSULT
1. Turn ignition switch OFF.
2. Reconnect all harness connectors disconnected.
3. Turn ignition switch ON.
4. Select “SAVING DATA FOR REPLC CPU” in “WORK SUPPORT” mode of “ENGINE” using CONSULT.
5. Follow the instruction of CONSULT display.

NOTE:
- Necessary data in ECM is copied and saved to CONSULT.
- Go to Step 2 regardless of with or without success in saving data.

>> GO TO 2.

2. CHECK ECM PART NUMBER

Check ECM part number to see whether it is blank ECM or not.

NOTE:
- Part number of blank ECM is 23703 - ×××××.
- Check part number when ordering ECM or the one included in the label on the container box.

Is the ECM a blank ECM?

YES >> GO TO 3.
NO >> GO TO 5.

3. SAVE ECM PART NUMBER

Read out the part number from the old ECM and save the number, following the programming instructions. Refer to CONSULT Operation Manual.

NOTE:
- The ECM part number is saved in CONSULT.
- Even when ECM part number is not saved in CONSULT, go to 4.

>> GO TO 4.

4. PERFORM ECM PROGRAMMING

After replacing ECM, perform the ECM programming. Refer to CONSULT Operation Manual.

NOTE:
- During programming, maintain the following conditions:
- Ignition switch: ON
- Electric load: OFF
- Brake pedal: Not depressed
- Battery voltage: 12 – 13.5 V (Be sure to check the value of battery voltage by selecting “BATTERY VOLT” in “Data monitor” of CONSULT.)

>> GO TO 6.

5. REPLACE ECM

Replace ECM.

>> GO TO 6.

6. PERFORM INITIALIZATION OF IVIS (NATS) SYSTEM AND REGISTRATION OF ALL IVIS (NATS) IGNITION KEY IDS

Refer to SEC-10, "ECM RE-COMMUNICATING FUNCTION : Special Repair Requirement" (With intelligent key system) or SEC-131, "ECM RE-COMMUNICATING FUNCTION : Special Repair Requirement" (Without intelligent key system).

>> GO TO 7.

7. CHECK ECM DATA STATUS

Check if the data is successfully copied from the ECM at Step 1 (before replacement) and saved in CONSULT.

Is the data saved successfully?

YES >> GO TO 8.
NO >> GO TO 9.

8. WRITE ECM DATA

With CONSULT

1. Select “WRITING DATA FOR REPLC CPU” in “WORK SUPPORT” mode of “ENGINE” using CONSULT.
2. Follow the instruction of CONSULT display.

NOTE:
The data saved by “SAVING DATA FOR REPLC CPU” is written to ECM.

>> GO TO 10.

9. PERFORM VIN REGISTRATION

Refer to EC-127, "VIN Registration".

>> GO TO 10.

10. PERFORM ACCELERATOR PEDAL RELEASED POSITION LEARNING

Perform Accelerator Pedal Released Position Learning. Refer to EC-128, "Accelerator Pedal Released Position Learning".

>> GO TO 11.

11. PERFORM THROTTLE VALVE CLOSED POSITION LEARNING

Perform Throttle Valve Closed Position Learning. Refer to EC-128, "Throttle Valve Closed Position Learning".

>> GO TO 12.

12. CHECK THE VEHICLE’S FUEL TYPE

Check the vehicle information. Refer to GI-22, "Model Variation".

Is the vehicle a Flexible Fuel Vehicle?

YES >> GO TO 13.
NO >> GO TO 14.

13. PERFORM ETHANOL MIXTURE RATIO ADAPTATION

Perform EC-128, "Ethanol Mixture Ratio Adaptation (Flexible Fuel Vehicle)".

>> GO TO 14.

14. PERFORM IDLE AIR VOLUME LEARNING

Perform Idle Air Volume Learning. Refer to EC-129, "Idle Air Volume Learning".

>> END

VIN Registration

INFOID:0000000011291629

DESCRIPTION

VIN Registration is an operation to registering VIN in ECM. It must be performed each time ECM is replaced.

NOTE:
Accurate VIN which is registered in ECM may be required for Inspection & Maintenance (I/M).

OPERATION PROCEDURE

With CONSULT

1. Check the VIN of the vehicle and note it. Refer to GI-23, "Identification Number".
2. Turn ignition switch ON and engine stopped.
3. Select “VIN REGISTRATION” in “WORK SUPPORT” mode of “ENGINE”.
4. Follow the instruction of CONSULT display.

Accelerator Pedal Released Position Learning

INFOID:0000000011291630

DESCRIPTION

Accelerator Pedal Released Position Learning is an operation to learn the fully released position of the accelerator pedal by monitoring the accelerator pedal position sensor output signal. It must be performed each time harness connector of accelerator pedal position sensor or ECM is disconnected.

OPERATION PROCEDURE

1. Make sure that accelerator pedal is fully released.
2. Turn ignition switch ON and wait at least 2 seconds.
3. Turn ignition switch OFF and wait at least 10 seconds.
4. Turn ignition switch ON and wait at least 2 seconds.
5. Turn ignition switch OFF and wait at least 10 seconds.

Throttle Valve Closed Position Learning

INFOID:0000000011291631

DESCRIPTION

Throttle Valve Closed Position Learning is a function of ECM to learn the fully closed position of the throttle valve by monitoring the throttle position sensor output signal. It must be performed each time the harness connector of the electric throttle control actuator or ECM is disconnected or electric throttle control actuator inside is cleaned.

OPERATION PROCEDURE

With CONSULT

1. Turn ignition switch ON.
2. Select “CLSD THL POS LEARN” in “WORK SUPPORT” mode of “ENGINE” using CONSULT.
3. Follow the instructions on the CONSULT display.
4. Turn ignition switch OFF and wait at least 10 seconds.
   Check that throttle valve moves during the above 10 seconds by confirming the operating sound.

Without CONSULT

1. Start the engine.
   NOTE:
   Engine coolant temperature is 25°C (77°F) or less before engine starts.
2. Warm up the engine.
   NOTE:
   Raise engine coolant temperature until it reaches 65°C (149°F) or more.
3. Turn ignition switch OFF and wait at least 10 seconds.
   Check that throttle valve moves during the above 10 seconds by confirming the operating sound.

Ethanol Mixture Ratio Adaptation (Flexible Fuel Vehicle)

INFOID:0000000011291632

DESCRIPTION

Ethanol mixture ratio adaptation is an operation to change the ethanol mixture ratio presumed by ECM. It must be performed when engine does not start after replacing ECM. It is not necessary to be performed when engine can start.

OPERATION PROCEDURE

With CONSULT

1. Turn ignition switch ON.
2. Select “ETHANOL M/R ADJ” in “WORK SUPPORT” mode with CONSULT, then touch “START”.
3. Select “E35” and then touch “UPDATE”.
4. Crank engine and make sure that engine starts.
   If NG, go to next step.

5. Select “E70” and then touch “UPDATE”.
6. Crank engine and make sure that engine starts.

Without CONSULT

1. Turn ignition switch ON.
2. Fully depress the accelerator pedal.
3. Repeat the following procedure quickly for 50 times.
a. Turn ignition switch to START position and immediately return to ON position.
4. Wait 7 seconds, fully depress the accelerator pedal and keep it for approx. 20 seconds until the MIL stops blinking and turned ON.
5. Fully release the accelerator pedal.
6. Crank engine and make sure that engine starts.

Idle Air Volume Learning

INFOID:0000000011291633

DESCRIPTION

Idle Air Volume Learning is an operation to learn the idle air volume that keeps each engine within the specific range. It must be performed under any of the following conditions:
- Each time electric throttle control actuator or ECM is replaced.
- Idle speed or ignition timing is out of specification.

PREPARATION

Before performing Idle Air Volume Learning, make sure that all of the following conditions are satisfied.
Learning will be cancelled if any of the following conditions are missed for even a moment.
- Battery voltage: More than 12.9V (At idle)
- Engine coolant temperature: 70 - 100°C (158 - 212°F)
- Select lever: P or N
- Electric load switch: OFF
  (Air conditioner, headlamp, rear window defogger)
  On vehicles equipped with daytime light systems, if the parking brake is applied before the engine is start the headlamp will not be illuminated.
- Steering wheel: Neutral (Straight-ahead position)
- Vehicle speed: Stopped
- Transmission: Warmed-up
- With CONSULT: Drive vehicle until “ATF TEMP SE 1” in “DATA MONITOR” mode of “A/T” system indicates less than 0.9V.
- Without CONSULT: Drive vehicle for 10 minutes.

OPERATION PROCEDURE

With CONSULT

1. Perform EC-128, "Accelerator Pedal Released Position Learning".
2. Perform EC-128, "Throttle Valve Closed Position Learning".
3. Start engine and warm it up to normal operating temperature.
4. Check that all items listed under the topic PREPARATION (previously mentioned) are in good order.
5. Select “IDLE AIR VOL LEARN” in “WORK SUPPORT” mode.
6. Touch “START” and wait 20 seconds.
7. Make sure that “CMPLT” is displayed on CONSULT screen. If “CMPLT” is not displayed, Idle Air Volume Learning will not be carried out successfully. In this case, find the cause of the incident by referring to the DIAGNOSTIC PROCEDURE below.
8. Rev up the engine two or three times and make sure that idle speed and ignition timing are within the specifications.

ITEM	SPECIFICATION
Idle speed	650 ± 50 rpm (in P or N position)
Ignition timing	15 ± 5° BTDC (in P or N position)

Without CONSULT

NOTE:

- **It is better to count the time accurately with a clock.**
- **It is impossible to switch the diagnostic mode when an accelerator pedal position sensor circuit has a malfunction.**

1. Perform EC-128, "Accelerator Pedal Released Position Learning".
2. Perform EC-128, "Throttle Valve Closed Position Learning".
3. Start engine and warm it up to normal operating temperature.
4. Check that all items listed under the topic PREPARATION (previously mentioned) are in good order.
5. Turn ignition switch OFF and wait at least 10 seconds.
6. Confirm that accelerator pedal is fully released, turn ignition switch ON and wait 3 seconds.
7. Repeat the following procedure quickly five times within 5 seconds.

a. Fully depress the accelerator pedal.

b. Fully release the accelerator pedal.

8. Wait 7 seconds, fully depress the accelerator pedal and keep it for approx. 20 seconds until the MIL stops blinking and turned ON.
9. Fully release the accelerator pedal within 3 seconds after the MIL turned ON.
10. Start engine and let it idle.
11. Wait 20 seconds.

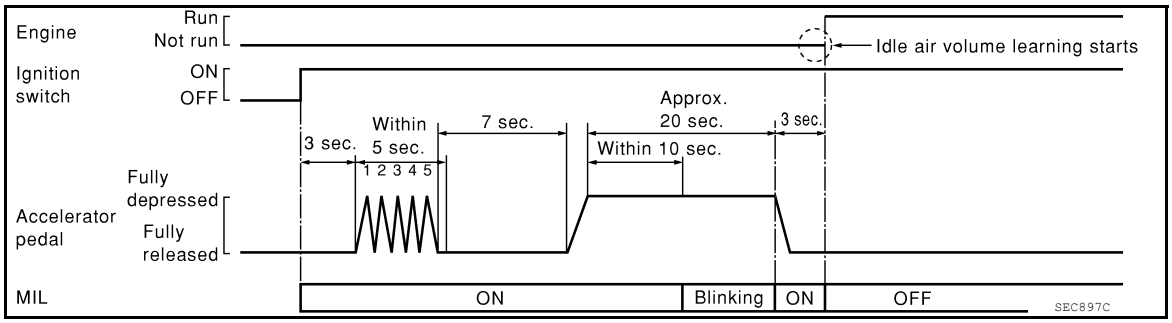

12. Rev up the engine two or three times and make sure that idle speed and ignition timing are within the specifications.

ITEM	SPECIFICATION
Idle speed	650 ± 50 rpm (in P or N position)
Ignition timing	15 ± 5° BTDC (in P or N position)

13. If idle speed and ignition timing are not within the specification, Idle Air Volume Learning will not be carried out successfully. In this case, find the cause of the incident by referring to the DIAGNOSTIC PROCEDURE below.

DIAGNOSTIC PROCEDURE

If Idle Air Volume Learning cannot be performed successfully, proceed as follows:

1. **Check that throttle valve is fully closed.**
2. **Check PCV valve operation.**
3. **Check that downstream of throttle valve is free from air leakage.**
4. **When the above three items check out OK, engine component parts and their installation condition are questionable. Check and eliminate the cause of the incident.**
   It is useful to perform EC-143.
5. **If any of the following conditions occur after the engine has started, eliminate the cause of the incident and perform Idle Air Volume Learning all over again:**
   - **Engine stalls.**
   - **Erroneous idle.**

HOW TO SET SRT CODE

Description

INFOID:0000000011291634

OUTLINE

In order to set all SRTs, the self-diagnoses as in the “SRT ITEM” table must have been performed at least once. Each diagnosis may require actual driving for a long period of time under various conditions.

SRT ITEM

The table below shows required self-diagnostic items to set the SRT to “CMPLT”.

SRT item (CONSULT indication)	Performance Priority*	Required self-diagnostic items to set the SRT to “CMPLT”	Corresponding DTC No.
CATALYST	2	Three way catalyst function	P0420, P0430
EVAP SYSTEM	2	EVAP control system purge flow monitoring	P0441
	1	EVAP control system	P0442
	2	EVAP control system	P0456
HO2S	2	Air fuel ratio (A/F) sensor 1	P0133,P014C, P014D, P014E, P014F, P0153, P015A, P015B, P015C, P015D
		Heated oxygen sensor 2	P0137, P0157
		Heated oxygen sensor 2	P0138, P0158
		Heated oxygen sensor 2	P0139, P0159

*: If completion of several SRTs is required, perform driving patterns (DTC confirmation procedure), one by one based on the priority for models with CONSULT.

SRT SERVICE PROCEDURE

If a vehicle has failed the state emissions inspection due to one or more SRT items indicating “INCMP”, review the flowchart diagnostic sequence, referring to the following flowchart.

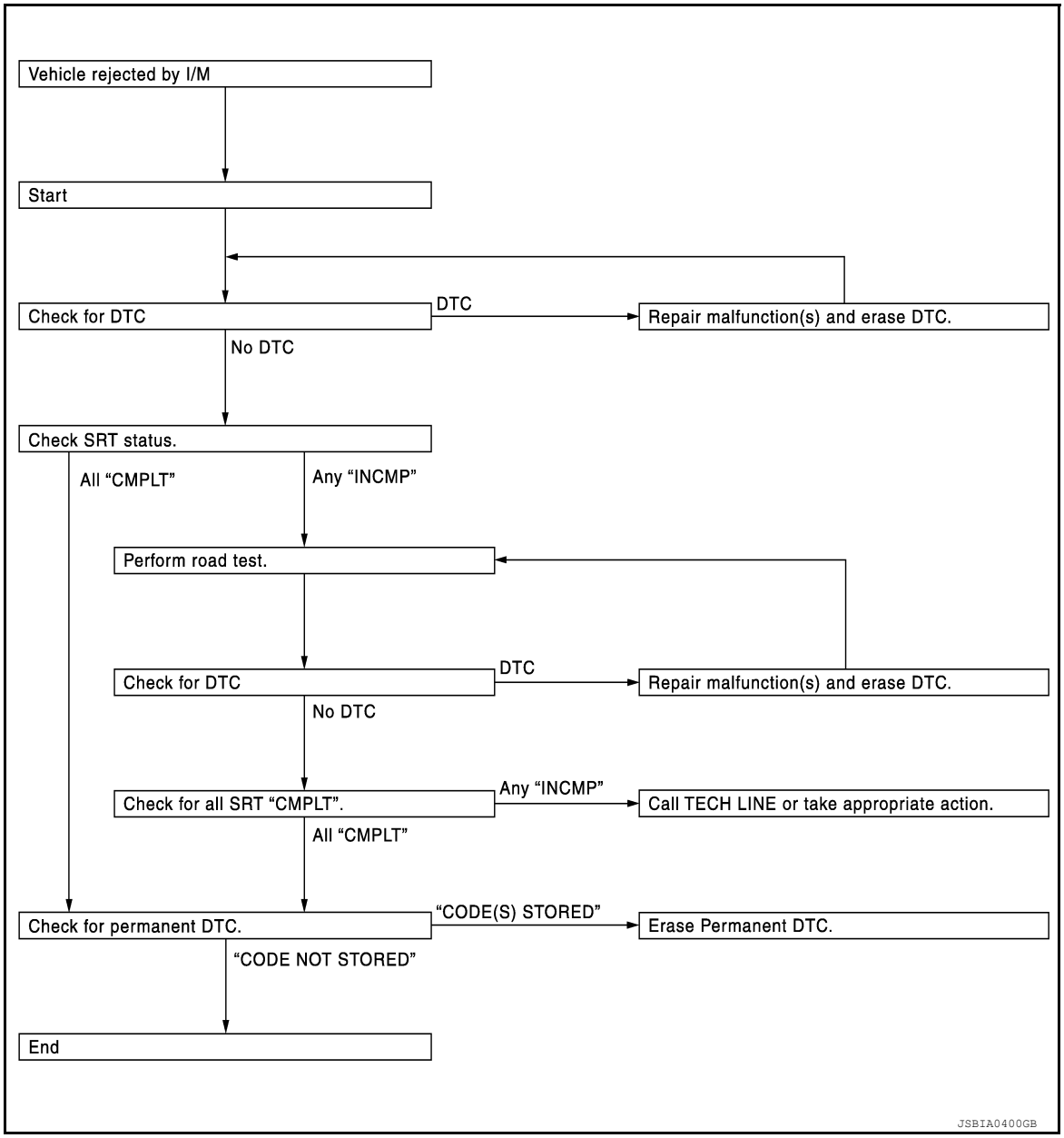

SRT Set Driving Pattern

INFOID:0000000011291635

CAUTION:

Always drive the vehicle in safe manner according to traffic conditions and obey all traffic laws.

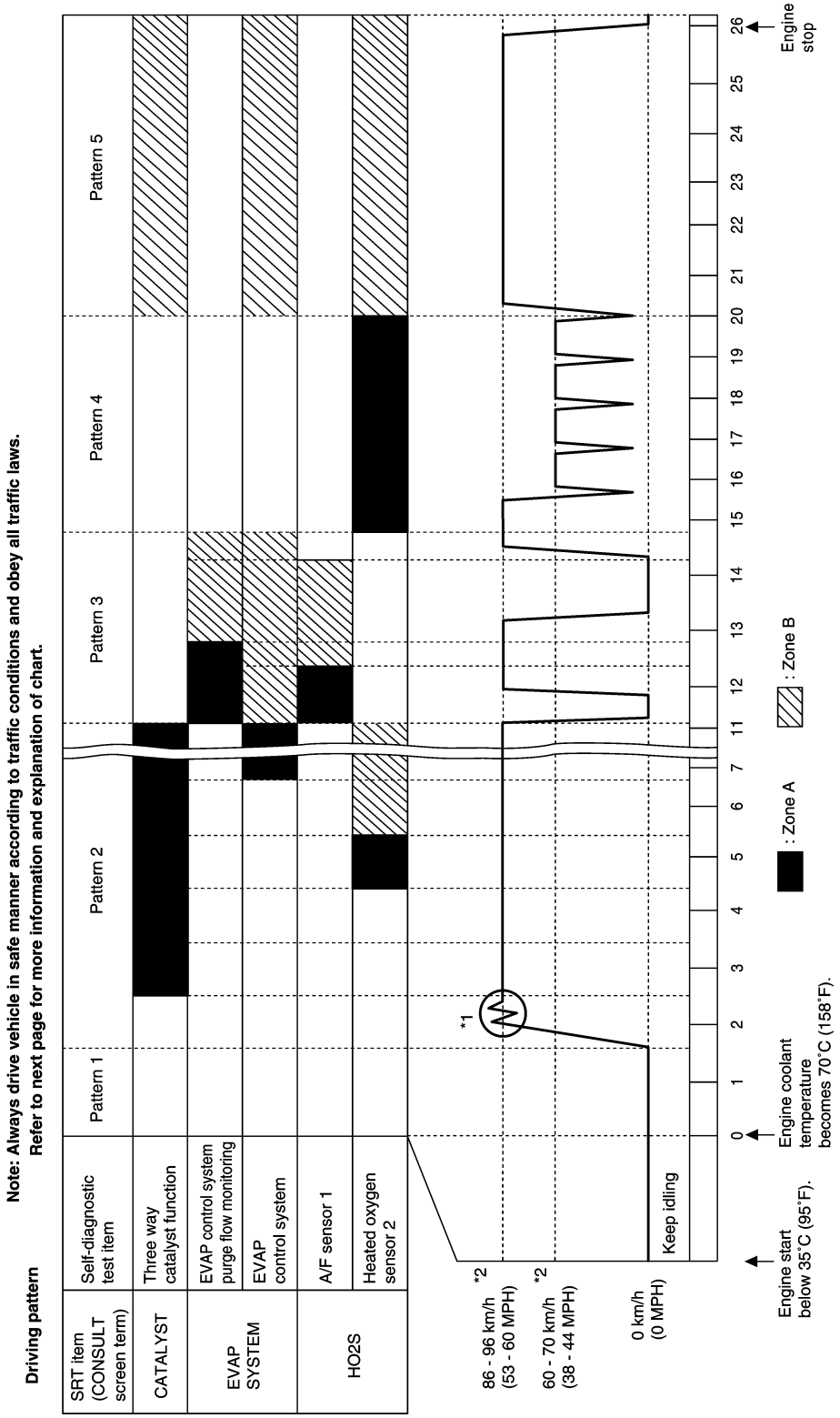

*1: Depress the accelerator pedal until vehicle speed is 90 km/h (56 MPH), then release the accelerator pedal and keep it released for more than 10 seconds. Depress the accelerator pedal until vehicle speed is 90 km/h (56 MPH) again.

*2: Checking the vehicle speed with GST is advised.

- The time required for each diagnosis varies with road surface conditions, weather, altitude, individual driving habits, etc.
  Zone A refers to the range where the time, required for the diagnosis under normal conditions*, is the shortest.

Zone B refers to the range where the diagnosis can still be performed if the diagnosis is not completed within zone A.

*: Normal conditions refer to the following:

- Sea level
- Flat road
- Ambient air temperature: 20 - 30°C (68 - 86°F)
- Diagnosis is performed as quickly as possible under normal conditions.
  Under different conditions [For example: ambient air temperature other than 20 - 30°C (68 - 86°F)], diagnosis may also be performed.

Work Procedure

INFOID:0000000011291636

1. CHECK DTC

Check DTC.

Is any DTC detected?

YES >> Repair malfunction(s) and erase DTC. Refer to EC-77, "DTC Index".
NO >> GO TO 2.

2. CHECK SRT STATUS

WITH CONSULT
Select “SRT STATUS” in “DTC & SRT CONFIRMATION” mode with CONSULT.

WITHOUT CONSULT
Perform “SRT status” mode with EC-46, "On Board Diagnosis Function".

WITH GST
Select Service $01 with GST.

Is SRT code(s) set?

YES >> GO TO 11.
NO-1 >> With CONSULT: GO TO 3.
NO-2 >> Without CONSULT: GO TO 4.

3. DTC CONFIRMATION PROCEDURE

1. Select “SRT WORK SUPPORT” in “DTC & SRT CONFIRMATION” mode with CONSULT.
2. For SRT(s) that is not set, perform the corresponding “DTC CONFIRMATION PROCEDURE” according to the “Performance Priority” in the “SRT ITEM” table. Refer to EC-131, "Description".
3. Check DTC.

Is any DTC detected?

YES >> Repair malfunction(s) and erase DTC. Refer to EC-77, "DTC Index".
NO >> GO TO 10.

4. PERFORM ROAD TEST

- Check the “Performance Priority” in the “SRT ITEM” table. Refer to EC-131, "Description".
- Perform the most efficient SRT set driving pattern to set the SRT properly. Refer to EC-132, "SRT Set Driving Pattern".
  In order to set all SRTs, the SRT set driving pattern must be performed at least once.

>> GO TO 5.

5. PATTERN 1

1. Check the vehicle condition;
- Engine coolant temperature is –10 to 35°C (14 to 95°F).
- Fuel tank temperature is more than 0°C (32°F).
2. Start the engine.
3. Keep engine idling until the engine coolant temperature is greater than 70°C (158°F)

NOTE:
ECM terminal voltage is follows;

- Engine coolant temperature
- –10 to 35°C (14 to 95°F): 3.0 - 4.3 V
- 70°(158°F): Less than 1.4 V

- Fuel tank temperature: Less than 4.1 V

Refer to EC-65, "ECM Terminal and Reference Value".

>> GO TO 6.

6. PATTERN 2

1. Drive the vehicle. And depress the accelerator pedal until vehicle speed is 90 km/h (56 MPH), then release the accelerator pedal and keep it released for more than 10 seconds.
2. Depress the accelerator pedal until vehicle speed is 90 km/h (56 MPH) again

NOTE:
- Checking the vehicle speed with GST is advised.
- When steady-state driving is performed again even after it is interrupted, each diagnosis can be conducted. In this case, the time required for diagnosis may be extended.

>> GO TO 7.

7. PATTERN 3

- Operate vehicle following the driving pattern shown in the figure.
- Release the accelerator pedal during deceleration of vehicle speed from 90 km/h (56 MPH) to 0 km/h (0 MPH).

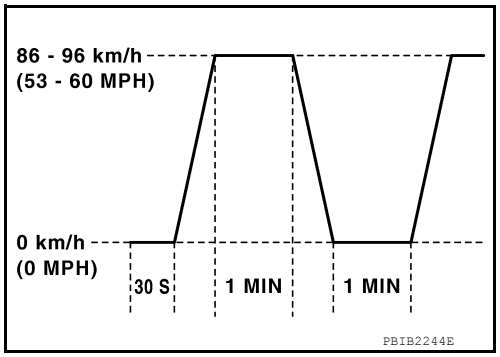

>> GO TO 8.

8. PATTERN 4

- Operate vehicle following the driving pattern shown in the figure.
- Drive the vehicle in a proper gear at 60 km/h (38 MPH) and maintainthe speed.
- Release the accelerator pedal fully at least 5 seconds.
- Repeat the above two steps at least 5 times.

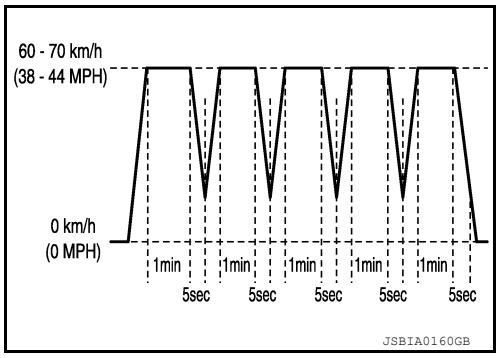

>> GO TO 9.

9. PATTERN 5

- The accelerator pedal must be held very steady during steady-state driving.
- If the accelerator pedal is moved, the test must be conducted again.

>> GO TO 10.

10. CHECK SRT STATUS

WITH CONSULT
Select “SRT STATUS” in “DTC & SRT CONFIRMATION” mode with CONSULT.
WITHOUT CONSULT
Perform “SRT status” mode with EC-46, "On Board Diagnosis Function".
WITH GST
Select Service $01 with GST.

Is SRT(s) set?

YES >> GO TO 11.
NO >> Call TECH LINE or take appropriate action.

11. CHECK PERMANENT DTC

NOTE:
Permanent DTC cannot be checked with a tool other than CONSULT or GST.

With CONSULT
Select “SRT STATUS” in “DTC & SRT CONFIRMATION” mode with CONSULT.

With GST
Select Service $0A with GST.

Is permanent DTC(s) detected?

YES >> Refer to EC-137, "Description".
NO >> END

HOW TO ERASE PERMANENT DTC

Description

INFOID:0000000011291637

OUTLINE

When a DTC is stored in ECM
When a DTC is stored in ECM and MIL is ON, a permanent DTC is erased with MIL shutoff if the same malfunction is not detected after performing the driving pattern for MIL shutoff three times in a raw.

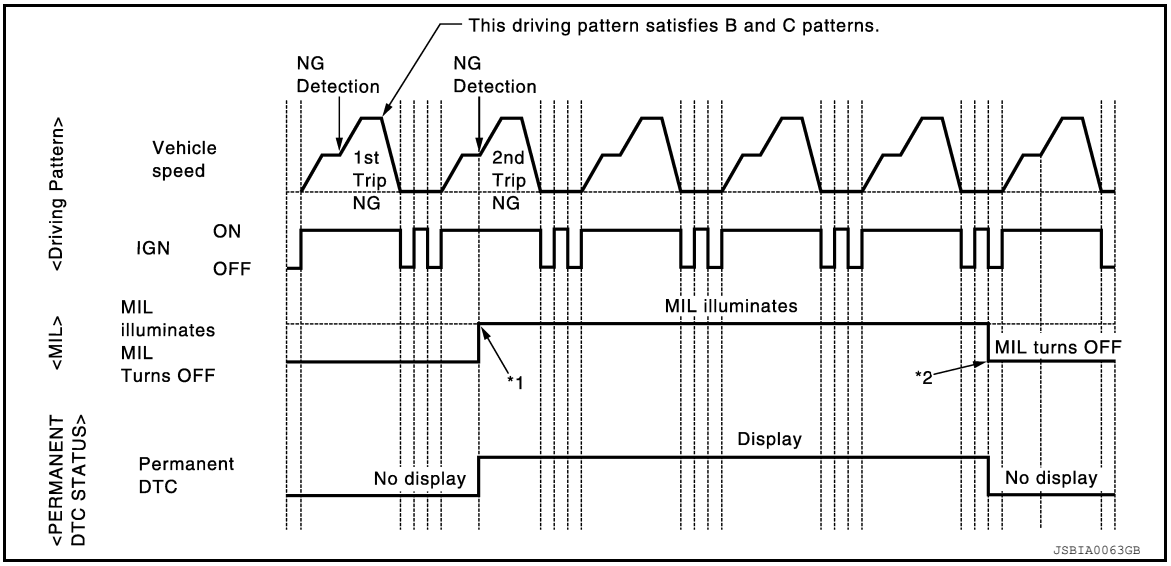

*1: When the same malfunction is detected in two consecutive trips, MIL will illuminate.

*2: MIL will turn off after vehicle is driven 3 times (driving pattern B) without any malfunctions.

When a DTC is not stored in ECM
The erasing method depends on a permanent DTC stored in ECM. Refer to the following table.
NOTE:
If the applicable permanent DTC includes multiple groups, perform the procedure of Group B first. If the permanent DTC is not erased, perform the procedure of Group A.

×: Applicable —: Not applicable

Group*	Perform "DTC CONFIRMATION PROCEDURE" for applicable DTCs.	Driving pattern		Reference
		B	D	
A	×	—	—	EC-138
B	—	×	×	EC-140

*: For group, refer to EC-77, "DTC Index".

PERMANENT DTC ITEM

For permanent DTC items, MIL turns ON. Refer to EC-77, "DTC Index".

PERMANENT DTC SERVICE PROCEDURE

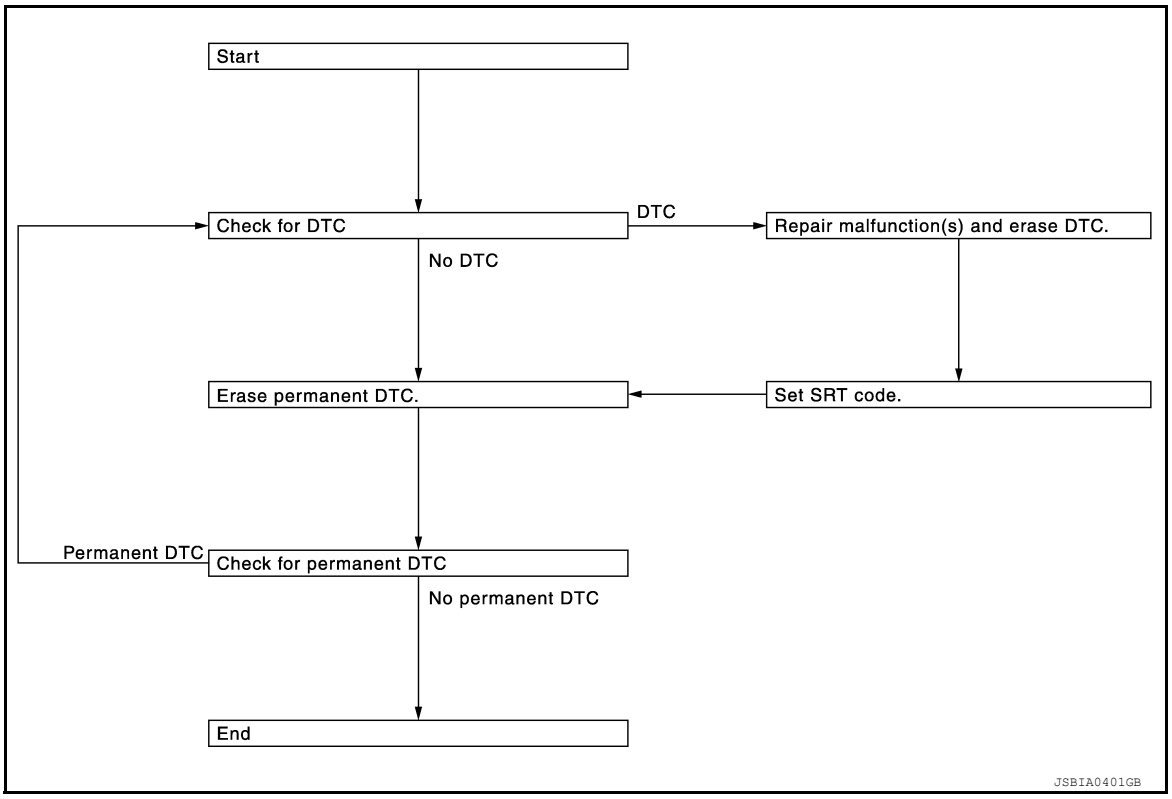

Work Procedure (Group A)

INFOID:0000000011291638

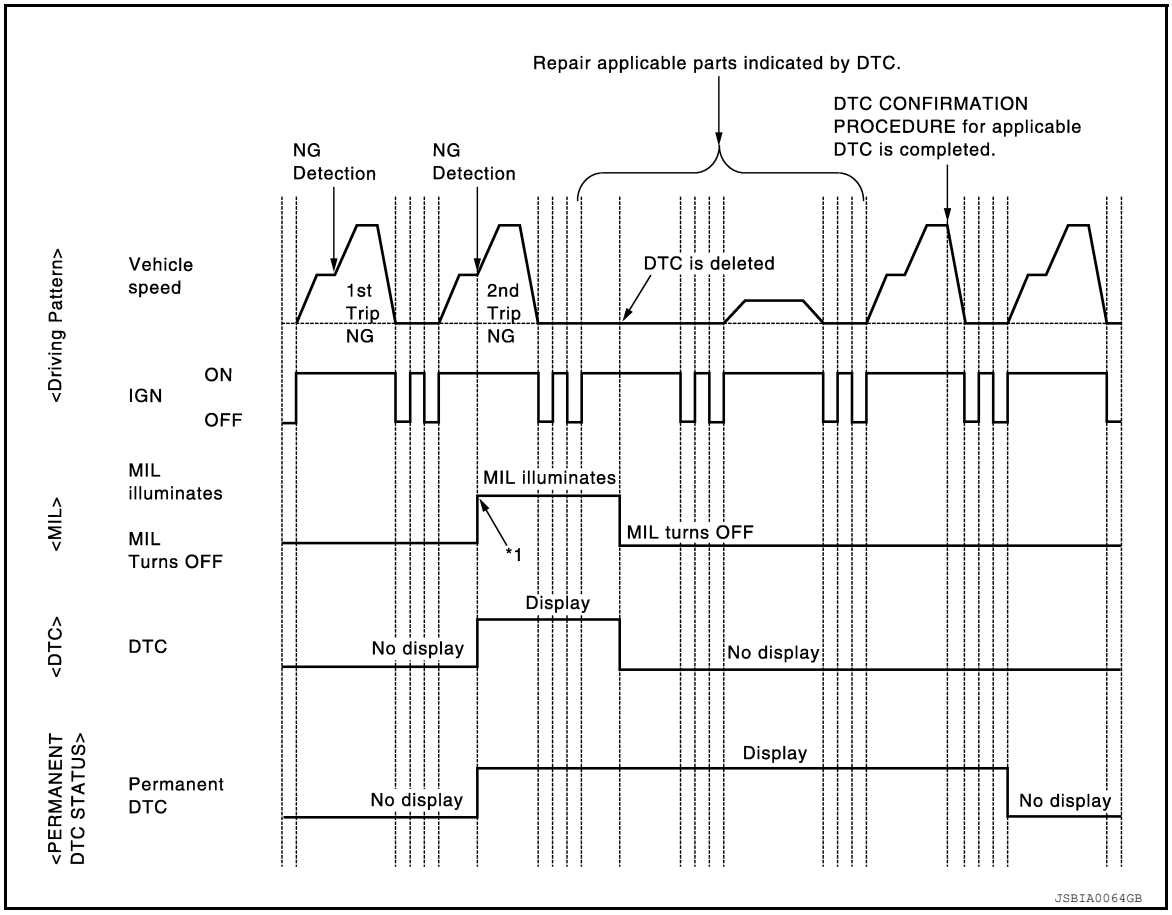

*1: When the same malfunction is detected in two consecutive trips, MIL will illuminate.

1. CHECK DTC

Check DTC.

Is any DTC detected?

YES >> Repair malfunction(s) and erase DTC. Refer to EC-49, "CONSULT Function", EC-46, "On Board Diagnosis Function".

NO >> GO TO 2.

2. CHECK PERMANENT DTC

With CONSULT

1. Turn ignition switch OFF and wait at least 10 seconds.
2. Turn ignition switch ON.
3. Turn ignition switch OFF and wait at least 10 seconds.
4. Turn ignition switch ON.
5. Select “PERMANENT DTC STATUS” mode with CONSULT.

With GST

1. Turn ignition switch OFF and wait at least 10 seconds.
2. Turn ignition switch ON.
3. Turn ignition switch OFF and wait at least 10 seconds.
4. Turn ignition switch ON.
5. Select Service $0A with GST.

Is any permanent DTC detected?

YES >> GO TO 3.

NO >> END

3. PERFORM DTC CONFIRMATION PROCEDURE

Perform “DTC CONFIRMATION PROCEDURE” for DTCs which are the same as permanent DTCs stored in ECM. Refer to EC-49, "CONSULT Function", EC-46, "On Board Diagnosis Function".

>> GO TO 4.

4. CHECK PERMANENT DTC

With CONSULT

1. Turn ignition switch OFF and wait at least 10 seconds.
2. Turn ignition switch ON.
3. Turn ignition switch OFF and wait at least 10 seconds.
4. Turn ignition switch ON.
5. Select “PERMANENT DTC STATUS” mode with CONSULT.

With GST

1. Turn ignition switch OFF and wait at least 10 seconds.
2. Turn ignition switch ON.
3. Turn ignition switch OFF and wait at least 10 seconds.
4. Turn ignition switch ON.
5. Select Service $0A with GST.

Is any permanent DTC detected?

YES >> GO TO 1.

NO >> END

Work Procedure (Group B)

INFOID:0000000011291639

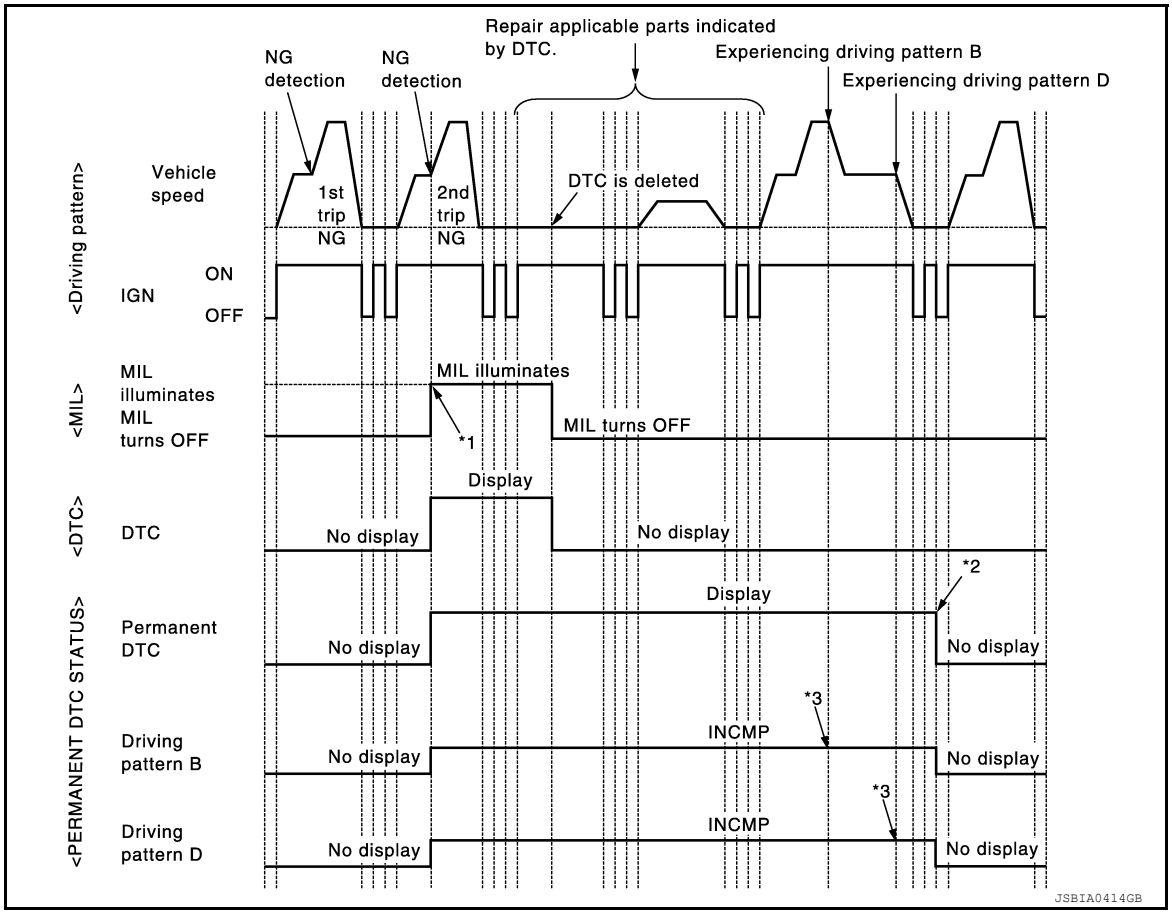

*1: When the same malfunction is detected in two consecutive trips, MIL will illuminate.

*2: After experiencing driving pattern B and D, permanent DTC is erased.

*3: Indication does not change unless the ignition switch is turned from ON to OFF twice even after experiencing driving pattern B or D.

NOTE:
Drive the vehicle according to only driving patterns indicating “INCMP” in driving patterns B and D on the “PERMANENT DTC STATUS” screen.

1. CHECK DTC

Check DTC.

Is any DTC detected?

YES >> Repair malfunction(s) and erase DTC. Refer to EC-49, "CONSULT Function", EC-46, "On Board Diagnosis Function".

NO >> GO TO 2.

2. CHECK PERMANENT DTC

With CONSULT

1. Turn ignition switch OFF and wait at least 10 seconds.
2. Turn ignition switch ON.
3. Turn ignition switch OFF and wait at least 10 seconds.
4. Turn ignition switch ON.
5. Select “PERMANENT DTC STATUS” mode with CONSULT.

With GST

1. Turn ignition switch OFF and wait at least 10 seconds.
2. Turn ignition switch ON.
3. Turn ignition switch OFF and wait at least 10 seconds.

4. Turn ignition switch ON.
5. Select Service $0A with GST.

Is any permanent DTC detected?

YES >> GO TO 3.
NO >> END

3. DRIVE DRIVING PATTERN B

CAUTION:
- **Always drive at a safe speed.**
- **Never erase self-diagnosis results.**
- **If self-diagnosis results are erased during the trip of driving pattern B or D, the counter of driving pattern B and D is reset.**

With CONSULT
1. Start engine and warm it up to normal operating temperature.
2. Use “PERMANENT DTC WORK SUPPORT” mode with CONSULT to drive the vehicle according to driving pattern B. Refer to EC-49, "CONSULT Function", EC-43, "DIAGNOSIS DESCRIPTION : Driving Pattern".

With GST
1. Start engine and warm it up to normal operating temperature.
2. Drive the vehicle according to driving pattern B. Refer to EC-43, "DIAGNOSIS DESCRIPTION : Driving Pattern".

>> GO TO 4.

4. CHECK PERMANENT DTC

With CONSULT
1. Turn ignition switch OFF and wait at least 10 seconds.
2. Turn ignition switch ON.
3. Turn ignition switch OFF and wait at least 10 seconds.
4. Turn ignition switch ON.
5. Select “PERMANENT DTC STATUS” mode with CONSULT.

With GST
1. Turn ignition switch OFF and wait at least 10 seconds.
2. Turn ignition switch ON.
3. Turn ignition switch OFF and wait at least 10 seconds.
4. Turn ignition switch ON.
5. Select Service $0A with GST.

Is any permanent DTC detected?

YES >> GO TO 5.
NO >> END

5. DRIVE DRIVING PATTERN D

CAUTION:
- **Always drive at a safe speed.**
- **Never erase self-diagnosis results.**
- **If self-diagnosis results are erased during the trip of driving pattern B or D, the counter of driving pattern B and D is reset.**

Drive the vehicle according to driving pattern D. Refer to EC-43, "DIAGNOSIS DESCRIPTION : Driving Pattern".

>> GO TO 6.

6. CHECK PERMANENT DTC

With CONSULT
1. Turn ignition switch OFF and wait at least 10 seconds.
2. Turn ignition switch ON.
3. Turn ignition switch OFF and wait at least 10 seconds.
4. Turn ignition switch ON.

5. Select “PERMANENT DTC STATUS” mode with CONSULT.

With GST

1. Turn ignition switch OFF and wait at least 10 seconds.
2. Turn ignition switch ON.
3. Turn ignition switch OFF and wait at least 10 seconds.
4. Turn ignition switch ON.
5. Select Service $0A with GST.

Is any permanent DTC detected?

YES >> GO TO 1.
NO >> END

DTC/CIRCUIT DIAGNOSIS

TROUBLE DIAGNOSIS - SPECIFICATION VALUE

Description

INFOID:0000000011291640

The specification (SP) value indicates the tolerance of the value that is displayed in “SPEC” of “DATA MONITOR” mode with CONSULT during normal operation of the Engine Control System. When the value in “SPEC” of “DATA MONITOR” mode is within the SP value, the Engine Control System is confirmed OK. When the value in “SPEC” of “DATA MONITOR” mode is NOT within the SP value, the Engine Control System may have one or more malfunctions.
The SP value is used to detect malfunctions that may affect the Engine Control System, but will not light the MIL.
The SP value will be displayed for the following three items:
- B/FUEL SCHDL (The fuel injection pulse width programmed into ECM prior to any learned on board correction)
- A/F ALPHA-B1/B2 (The mean value of air-fuel ratio feedback correction factor per cycle)
- MAS A/F SE-B1 (The signal voltage of the mass air flow sensor)

Testing Condition

INFOID:0000000011291641

- Vehicle driven distance: More than 5,000 km (3,107 miles)
- Barometric pressure: 98.3 - 104.3 kPa (1.003 - 1.064 kg/cm^2, 14.25 - 15.12 psi)
- Atmospheric temperature: 20 - 30°C (68 - 86°F)
- Engine coolant temperature: 75 - 95°C (167 - 203°F)
- Engine speed: Idle
- Transmission: Warmed-up
  - After the engine is warmed up to normal operating temperature, drive vehicle until “ATF TEMP SE 1” (A/T fluid temperature sensor signal) indicates more than 60°C (140°F).
- Electrical load: Not applied
  - Rear window defogger switch, air conditioner switch, lighting switch are OFF. Steering wheel is straight ahead.

Inspection Procedure

INFOID:0000000011291642

NOTE:
Perform “SPEC” in “DATA MONITOR” mode in maximum scale display.

1. Perform EC-117, "Basic Inspection".
2. Confirm that the testing conditions indicated above are met.
3. Select “B/FUEL SCHDL”, “A/F ALPHA-B1”, “A/F ALPHA-B2” and “MAS A/F SE-B1” in “SPEC” of “DATA MONITOR” mode with CONSULT.
4. Make sure that monitor items are within the SP value.
5. If NG, go to EC-144, "Diagnosis Procedure".

Diagnosis Procedure

INFOID:0000000011291643

OVERALL SEQUENCE

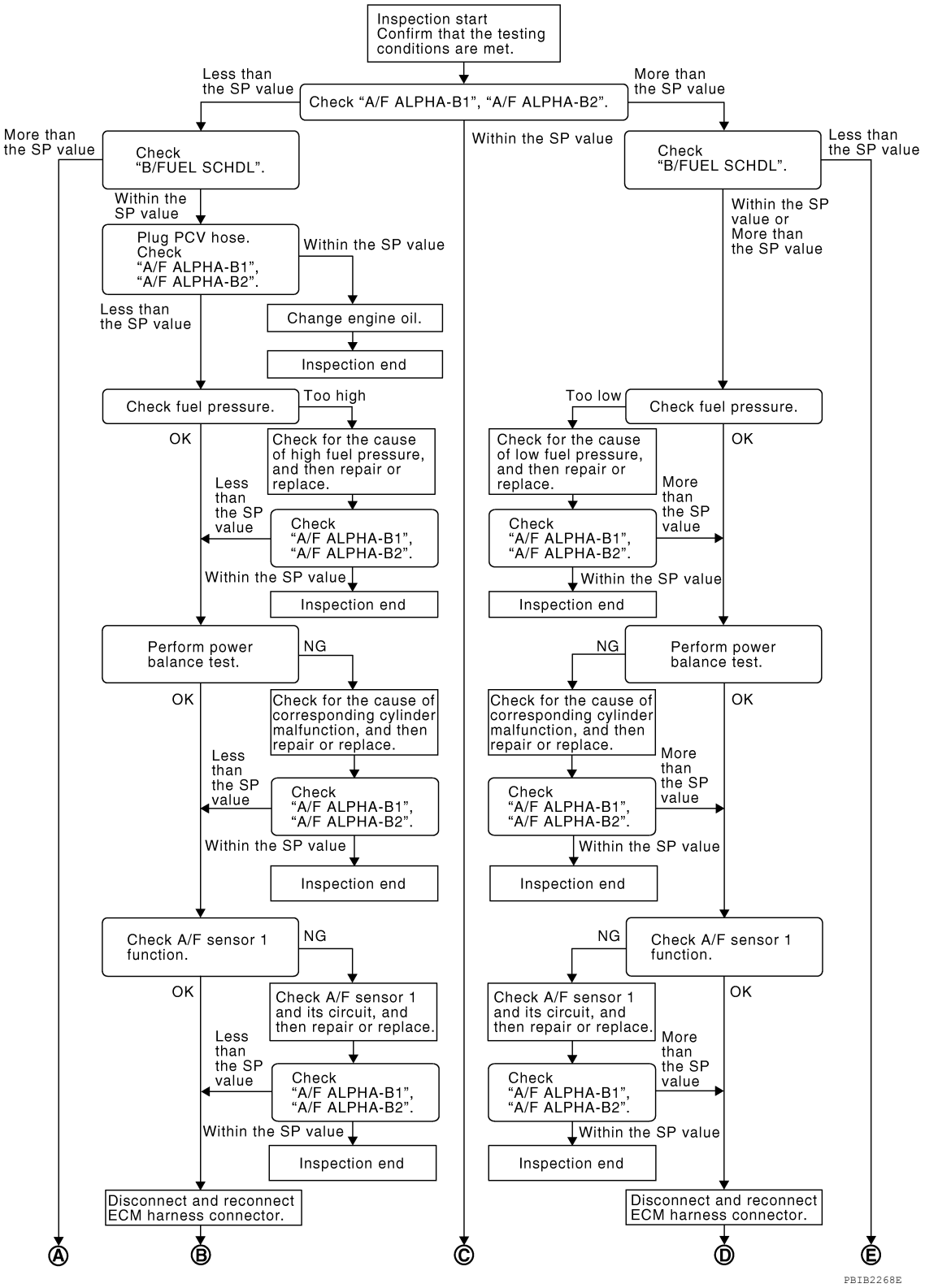

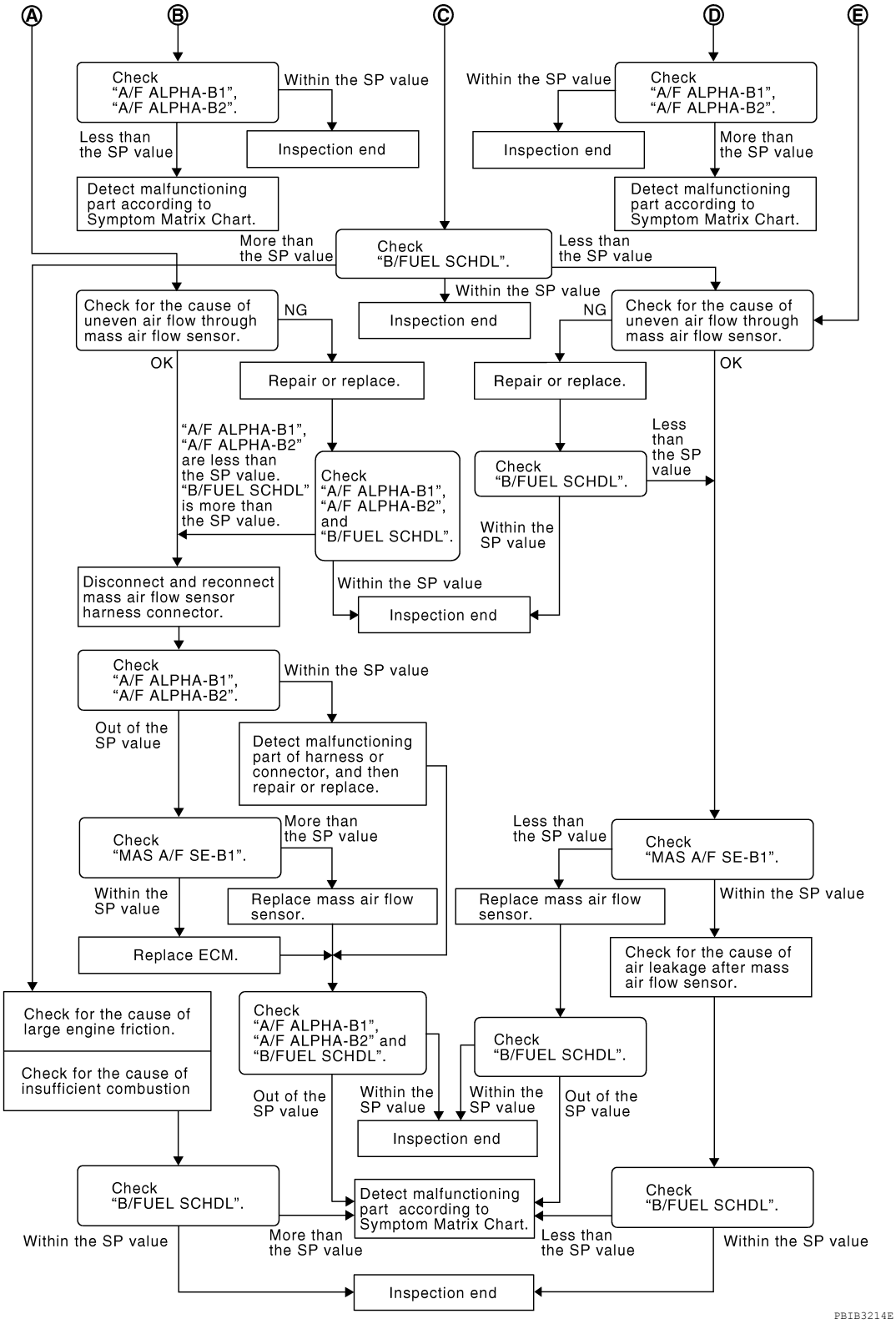

DETAILED PROCEDURE

1. CHECK "A/F ALPHA-B1", "A/F ALPHA-B2"

1. Start engine.
2. Confirm that the testing conditions are met. Refer to EC-143, "Testing Condition".
3. Select "A/F ALPHA-B1", "A/F ALPHA-B2" in "SPEC" of "DATA MONITOR" mode, and make sure that the each indication is within the SP value.
   NOTE:

Check “A/F ALPHA-B1”, “A/F ALPHA-B2” for approximately 1 minute because they may fluctuate. It is NG if the indication is out of the SP value even a little.

OK or NG

OK >> GO TO 17.
NG (Less than the SP value)>>GO TO 2.
NG (More than the SP value)>>GO TO 3.

2. CHECK “B/FUEL SCHDL”

Select “B/FUEL SCHDL” in “SPEC” of “DATA MONITOR” mode, and make sure that the indication is within the SP value.

OK or NG

OK >> GO TO 4.
NG (More than the SP value)>>GO TO 19.

3. CHECK “B/FUEL SCHDL”

Select “B/FUEL SCHDL” in “SPEC” of “DATA MONITOR” mode, and make sure that the indication is within the SP value.

OK or NG

OK >> GO TO 6.
NG (More than the SP value)>>GO TO 6.
NG (Less than the SP value)>>GO TO 25.

4. CHECK “A/F ALPHA-B1”, “A/F ALPHA-B2”

1. Stop the engine.
2. Disconnect PCV hose, and then plug it.
3. Start engine.
4. Select “A/F ALPHA-B1”, “A/F ALPHA-B2” in “SPEC” of “DATA MONITOR” mode, and make sure that the each indication is within the SP value.

OK or NG

OK >> GO TO 5.
NG >> GO TO 6.

5. CHANGE ENGINE OIL

1. Stop the engine.
2. Change engine oil.
   NOTE:
   This symptom may occur when a large amount of gasoline is mixed with engine oil because of driving conditions (such as when engine oil temperature does not rise enough since a journey distance is too short during winter). The symptom will not be detected after changing engine oil or changing driving condition.

>> **INSPECTION END**

6. CHECK FUEL PRESSURE

Check fuel pressure. (Refer to EC-506, "Fuel Pressure Check".)

OK or NG

OK >> GO TO 9.
NG (Fuel pressure is too high)>>Replace fuel pressure regulator, refer to EC-506, "Fuel Pressure Check". GO TO 8.
NG (Fuel pressure is too low)>>GO TO 7.

7. DETECT MALFUNCTIONING PART

1. Check the following.
- Clogged and bent fuel hose and fuel tube
- Clogged fuel filter
- Fuel pump and its circuit (Refer to EC-478.)
2. If NG, repair or replace the malfunctioning part. (Refer to EC-506, "Fuel Pressure Check".)
   If OK, replace fuel pressure regulator. Refer to EC-506, "Fuel Pressure Check".

>> GO TO 8.

8. CHECK “A/F ALPHA-B1”, “A/F ALPHA-B2”

1. Start engine.
2. Select “A/F ALPHA-B1”, “A/F ALPHA-B2” in “SPEC” of “DATA MONITOR” mode, and make sure that the each indication is within the SP value.

OK or NG

OK >> **INSPECTION END**
NG >> GO TO 9.

9. PERFORM POWER BALANCE TEST

1. Perform “POWER BALANCE” in “ACTIVE TEST” mode.
2. Make sure that the each cylinder produces a momentary engine speed drop.

OK or NG

OK >> GO TO 12.
NG >> GO TO 10.

10. DETECT MALFUNCTIONING PART

1. Check the following.
- Ignition coil and its circuit (Refer to EC-485.)
- Fuel injector and its circuit (Refer to EC-475.)
- Intake air leakage
- Low compression pressure (Refer to EM-23, "Checking Compression Pressure".)
2. If NG, repair or replace the malfunctioning part.
   If OK, replace fuel injector. (It may be caused by leakage from fuel injector or clogging.) Refer to EM-42, "Removal and Installation".

>> GO TO 11.

11. CHECK “A/F ALPHA-B1”, “A/F ALPHA-B2”

1. Start engine.
2. Select “A/F ALPHA-B1”, “A/F ALPHA-B2” in “SPEC” of “DATA MONITOR” mode, and make sure that the each indication is within the SP value.

OK or NG

OK >> **INSPECTION END**
NG >> GO TO 12.

12. CHECK A/F SENSOR 1 FUNCTION

Perform all DTC Confirmation Procedure related with A/F sensor 1.
- For DTC P0130, P0150, refer to EC-206, "DTC Confirmation Procedure".
- For DTC P0131, P0151, refer to EC-210, "DTC Confirmation Procedure".
- For DTC P0132, P0152, refer to EC-214, "DTC Confirmation Procedure".
- For DTC P0133, P0153, refer to EC-218, "DTC Confirmation Procedure". (For Mexico).
- For DTC P014C, P014D, P014E, P014F, P015A, P015B, P015C, P015D, refer to EC-243, "DTC Logic". (For America and Canada)
- For DTC P2096, P2097, P2098, P2099 refer to EC-430, "DTC Confirmation Procedure".

OK or NG

OK >> GO TO 15.
NG >> GO TO 13.

13. CHECK A/F SENSOR 1 CIRCUIT

Perform Diagnostic Procedure according to corresponding DTC.

>> GO TO 14.

14. CHECK “A/F ALPHA-B1”, “A/F ALPHA-B2”

1. Start engine.

2. Select “A/F ALPHA-B1”, “A/F ALPHA-B2” in “SPEC” of “DATA MONITOR” mode, and make sure that the each indication is within the SP value.

OK or NG

OK >> **INSPECTION END**
NG >> GO TO 15.

15. DISCONNECT AND RECONNECT ECM HARNESS CONNECTOR

1. Stop the engine.
2. Disconnect ECM harness connector. Check pin terminal and connector for damage, and then reconnect it.

>> GO TO 16.

16. CHECK “A/F ALPHA-B1”, “A/F ALPHA-B2”

1. Start engine.
2. Select “A/F ALPHA-B1”, “A/F ALPHA-B2” in “SPEC” of “DATA MONITOR” mode, and make sure that the each indication is within the SP value.

OK or NG

OK >> **INSPECTION END**
NG >> Detect malfunctioning part according to EC-501, "Symptom Matrix Chart".

17. CHECK “B/FUEL SCHDL”

Select “B/FUEL SCHDL” in “SPEC” of “DATA MONITOR” mode, and make sure that the indication is within the SP value.

OK or NG

OK >> **INSPECTION END**
NG (More than the SP value)>>GO TO 18.
NG (Less than the SP value)>>GO TO 25.

18. DETECT MALFUNCTIONING PART

1. Check for the cause of large engine friction. Refer to the following.
- Engine oil level is too high
- Engine oil viscosity
- Belt tension of power steering, alternator, A/C compressor, etc. is excessive
- Noise from engine
- Noise from transmission, etc.
2. Check for the cause of insufficient combustion. Refer to the following.
- Valve clearance malfunction
- Intake valve timing control function malfunction
- Camshaft sprocket installation malfunction, etc.

>> Repair or replace malfunctioning part, and then GO TO 30.

19. CHECK INTAKE SYSTEM

Check for the cause of uneven air flow through mass air flow sensor. Refer to the following.
- Crushed air ducts
- Malfunctioning seal of air cleaner element
- Uneven dirt of air cleaner element
- Improper specification of intake air system

OK or NG

OK >> GO TO 21.
NG >> Repair or replace malfunctioning part, and then GO TO 20.

20. CHECK “A/F ALPHA-B1”, “A/F ALPHA-B2”, AND “B/FUEL SCHDL”

Select “A/F ALPHA-B1”, “A/F ALPHA-B2”, and “B/FUEL SCHDL” in “SPEC” of “DATA MONITOR” mode, and make sure that the each indication is within the SP value.

OK or NG

OK >> **INSPECTION END**
NG (“B/FUEL SCHDL” is more, “A/F ALPHA-B1”, “A/F ALPHA-B2” are less than the SP value)>>GO TO 21.

21. DISCONNECT AND RECONNECT MASS AIR FLOW SENSOR HARNESS CONNECTOR

1. Stop the engine.
2. Disconnect mass air flow sensor harness connector. Check pin terminal and connector for damage and then reconnect it again.

>> GO TO 22.

22. CHECK “A/F ALPHA-B1”, “A/F ALPHA-B2”

1. Start engine.
2. Select “A/F ALPHA-B1”, “A/F ALPHA-B2” in “SPEC” of “DATA MONITOR” mode, and make sure that the each indication is within the SP value.

OK or NG

OK >> 1. Detect malfunctioning part of mass air flow sensor circuit and repair it. Refer to EC-177.
2. GO TO 29.

NG >> GO TO 23.

23. CHECK “MAS A/F SE-B1”

Select “MAS A/F SE-B1” in “SPEC” of “DATA MONITOR” mode, and make sure that the indication is within the SP value.

OK or NG

OK >> GO TO 24.

NG (More than the SP value)>>Replace mass air flow sensor, and then GO TO 29. Refer to EM-25, "Removal and Installation".

24. REPLACE ECM

1. Replace ECM.
2. Perform initialization of NVIS(NATS) system and registration of all NVIS(NATS) ignition key IDs. Refer to SEC-10, "ECM RE-COMMUNICATING FUNCTION : Special Repair Requirement" (With intelligent key system) or SEC-131, "ECM RE-COMMUNICATING FUNCTION : Special Repair Requirement" (Without intelligent key system).
3. Perform EC-127, "VIN Registration".
4. Perform EC-128, "Accelerator Pedal Released Position Learning".
5. Perform EC-128, "Throttle Valve Closed Position Learning".
6. **<Flexible Fuel Vehicle>**
   Perform EC-128, "Ethanol Mixture Ratio Adaptation (Flexible Fuel Vehicle)".
7. Perform EC-129, "Idle Air Volume Learning".

>> GO TO 29.

25. CHECK INTAKE SYSTEM

Check for the cause of uneven air flow through mass air flow sensor. Refer to the following.
- Crushed air ducts
- Malfunctioning seal of air cleaner element
- Uneven dirt of air cleaner element
- Improper specification of intake air system

OK or NG

OK >> GO TO 27.

NG >> Repair or replace malfunctioning part, and then GO TO 26.

26. CHECK “B/FUEL SCHDL”

Select “B/FUEL SCHDL” in “SPEC” of “DATA MONITOR” mode, and make sure that the indication is within the SP value.

OK or NG

OK >> **INSPECTION END**

NG (Less than the SP value)>>GO TO 27.

27. CHECK “MAS A/F SE-B1”

Select “MAS A/F SE-B1” in “SPEC” of “DATA MONITOR” mode, and make sure that the indication is within the SP value.

OK or NG

OK >> GO TO 28.
NG (Less than the SP value)>>Replace mass air flow sensor, and then GO TO 30. Refer to EM-25, "Removal and Installation".

28. CHECK INTAKE SYSTEM

Check for the cause of air leak after the mass air flow sensor. Refer to the following.
- Disconnection, looseness, and cracks in air duct
- Looseness of oil filler cap
- Disconnection of oil level gauge
- Open stuck, breakage, hose disconnection, or cracks of PCV valve
- Disconnection or cracks of EVAP purge hose, open stuck of EVAP canister purge volume control solenoid valve
- Malfunctioning seal of rocker cover gasket
- Disconnection, looseness, or cracks of hoses, such as vacuum hose, connecting to intake air system parts
- Malfunctioning seal of intake air system, etc.

>> GO TO 30.

29. CHECK “A/F ALPHA-B1”, “A/F ALPHA-B2”, AND “B/FUEL SCHDL”

Select “A/F ALPHA-B1”, “A/F ALPHA-B2”, and “B/FUEL SCHDL” in “SPEC” of “DATA MONITOR” mode, and make sure that the each indication is within the SP value.

OK or NG

OK >> **INSPECTION END**
NG >> Detect malfunctioning part according to EC-501, "Symptom Matrix Chart".

30. CHECK “B/FUEL SCHDL”

Select “B/FUEL SCHDL” in “SPEC” of “DATA MONITOR” mode, and then make sure that the indication is within the SP value.

OK or NG

OK >> **INSPECTION END**
NG >> Detect malfunctioning part according to EC-501, "Symptom Matrix Chart".

POWER SUPPLY AND GROUND CIRCUIT

Diagnosis Procedure

INFOID:0000000011291644

1. INSPECTION START

Start engine.
Is engine running?

Yes or No

Yes >> GO TO 8.
No >> GO TO 2.

2. CHECK ECM POWER SUPPLY CIRCUIT-I

1. Turn ignition switch OFF and then ON.
2. Check voltage between ECM terminal 109 and ground with CONSULT or tester.

Voltage: Battery voltage

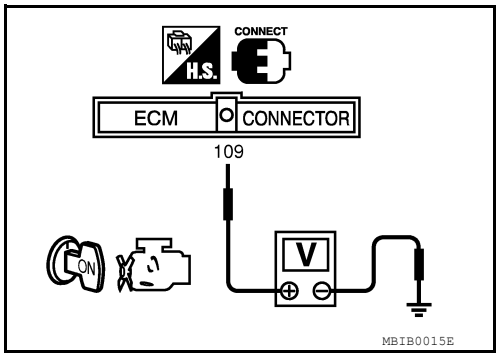

OK or NG

OK >> GO TO 4.
NG >> GO TO 3.

3. DETECT MALFUNCTIONING PART

Check the following.
- 10 A fuse (No. 59)
- Harness for open or short between ECM and fuse

>> Repair harness or connectors.

4. CHECK GROUND CONNECTIONS

1. Turn ignition switch OFF.
2. Loosen and retighten three ground screws on the body.
Refer to EC-154, "Ground Inspection".

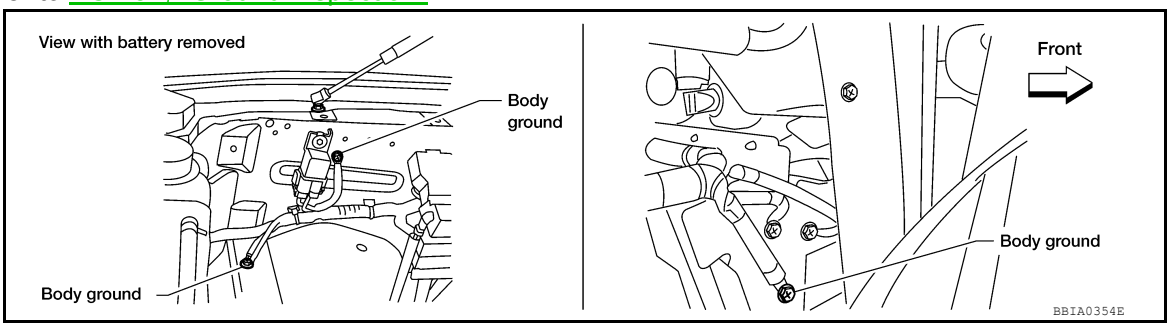

OK or NG

OK >> GO TO 5.
NG >> Repair or replace ground connections.

5. CHECK ECM GROUND CIRCUIT FOR OPEN AND SHORT-I

1. Disconnect ECM harness connector.
2. Check harness continuity between ECM terminals 1, 115, 116 and ground.
Refer to Wiring Diagram.

Continuity should exist.

3. Also check harness for short to power.

OK or NG

OK >> GO TO 7.
NG >> GO TO 6.

6. DETECT MALFUNCTIONING PART

Check the following.
- Harness connectors F32, E2
- Harness for open or short between ECM and ground

>> Repair open circuit or short to power in harness or connectors.

7. CHECK ECM POWER SUPPLY CIRCUIT-II

1. Reconnect ECM harness connector.
2. Turn ignition switch ON.
3. Check voltage between IPDM E/R terminal 4 and ground with CONSULT or tester.

Voltage: Battery voltage

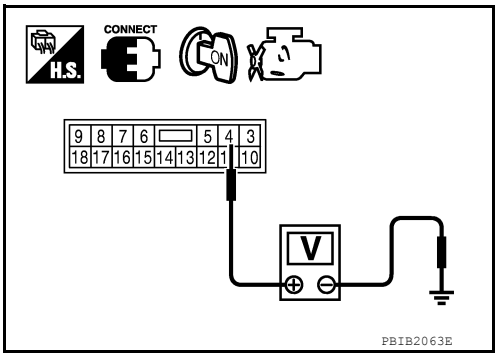

OK or NG

OK >> Go to EC-485.
NG >> GO TO 8.

8. CHECK ECM POWER SUPPLY CIRCUIT-III

1. Turn ignition switch OFF and wait at least 10 seconds.
2. Turn ignition switch ON and then OFF.
3. Check voltage between ECM terminals 119, 120 and ground with CONSULT or tester.

Voltage: After turning ignition switch OFF, battery voltage will exist for a few seconds, then drop approximately 0 V.

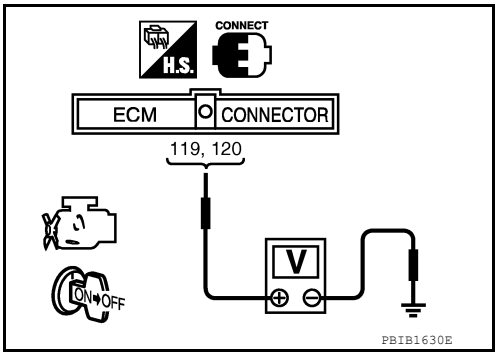

OK or NG

OK >> GO TO 13.
NG (Battery voltage does not exist.)>>GO TO 9.
NG (Battery voltage exists for more than a few seconds.)>>GO TO 11.

9. CHECK ECM POWER SUPPLY CIRCUIT-IV

1. Turn ignition switch OFF and wait at least 10 seconds.
2. Check voltage between ECM terminal 111 and ground with CONSULT or tester.

Voltage: Battery voltage

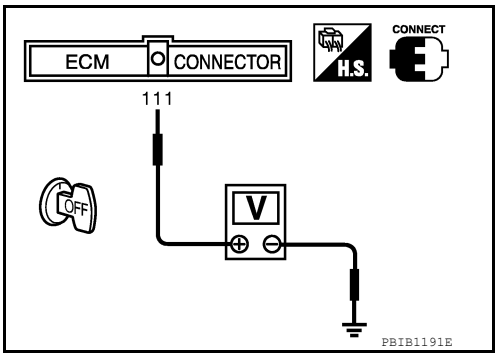

OK or NG

OK >> GO TO 10.
NG >> GO TO 11.

10. CHECK ECM POWER SUPPLY CIRCUIT-V

1. Disconnect ECM harness connector.
2. Disconnect IPDM E/R harness connector E119.
3. Check harness continuity between ECM terminals 119, 120 and IPDM E/R terminal 3.

Refer to Wiring Diagram.

Continuity should exist.

4. Also check harness for short to ground and short to power.

OK or NG

OK >> GO TO 13.
NG >> Repair open circuit or short to ground or short to power in harness or connectors.

11. CHECK ECM POWER SUPPLY CIRCUIT-VI

1. Disconnect ECM harness connector.
2. Disconnect IPDM E/R harness connector E119.
3. Check harness continuity between ECM terminal 111 and IPDM E/R terminal 7.
   Refer to Wiring Diagram.

Continuity should exist.

4. Also check harness for short to ground and short to power.

OK or NG

OK >> GO TO 12.
NG >> Repair open circuit or short to ground or short to power in harness or connectors.

12. CHECK 20A FUSE

1. Disconnect 20 A fuse from IPDM E/R.
2. Check 20 A fuse (No. 53).

OK or NG

OK >> GO TO 16.
NG >> Replace 20 A fuse.

13. CHECK GROUND CONNECTIONS

1. Turn ignition switch OFF.
2. Loosen and retighten three ground screws on the body.
   Refer to EC-154, "Ground Inspection".

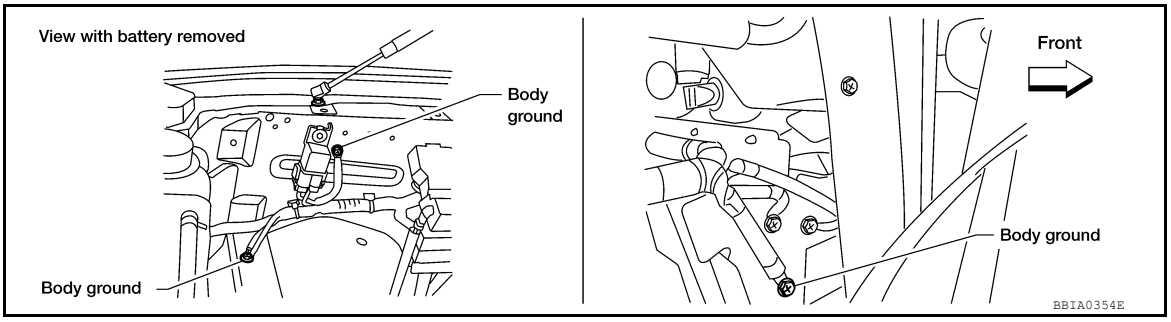

OK or NG

OK >> GO TO 14.
NG >> Repair or replace ground connections.

14. CHECK ECM GROUND CIRCUIT FOR OPEN AND SHORT-II

1. Disconnect ECM harness connector.
2. Check harness continuity between ECM terminals 1, 115, 116 and ground.
   Refer to Wiring Diagram.

Continuity should exist.

3. Also check harness for short to power.

OK or NG

OK >> GO TO 16.
NG >> GO TO 15.

15. DETECT MALFUNCTIONING PART

Check the following.
- Harness connectors F32, E2
- Harness for open or short between ECM and ground

>> Repair open circuit or short to power in harness or connectors.

16. CHECK INTERMITTENT INCIDENT

Refer to GI-40, "How to Check Terminal" and GI-43, "Intermittent Incident".

OK or NG

OK >> Replace IPDM E/R. Refer to PCS-31, "Removal and Installation of IPDM E/R".
NG >> Repair open circuit or short to power in harness or connectors.

Ground Inspection

INFOID:0000000011291645

Ground connections are very important to the proper operation of electrical and electronic circuits. Ground connections are often exposed to moisture, dirt and other corrosive elements. The corrosion (rust) can become an unwanted resistance. This unwanted resistance can change the way a circuit works.
Electronically controlled circuits are very sensitive to proper grounding. A loose or corroded ground can drastically affect an electronically controlled circuit. A poor or corroded ground can easily affect the circuit. Even when the ground connection looks clean, there can be a thin film of rust on the surface.
When inspecting a ground connection follow these rules:
- Remove the ground bolt or screw.
- Inspect all mating surfaces for tarnish, dirt, rust, etc.
- Clean as required to assure good contact.
- Reinstall bolt or screw securely.
- Inspect for “add-on” accessories which may be interfering with the ground circuit.
- If several wires are crimped into one ground eyelet terminal, check for proper crimps. Make sure all of the wires are clean, securely fastened and providing a good ground path. If multiple wires are cased in one eyelet make sure no ground wires have excess wire insulation.

For detailed ground distribution information, refer to “Ground Distribution” in PG section.

Ground Inspection

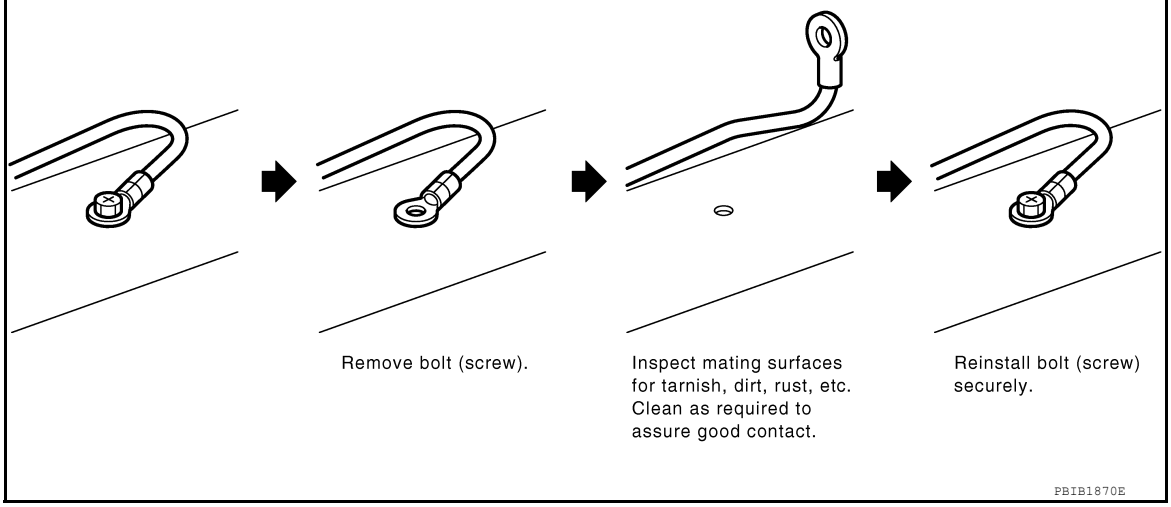

U0101 CAN COMM CIRCUIT

Description

INFOID:0000000011291646

CAN (Controller Area Network) is a serial communication line for real time application. It is an on-vehicle multiplex communication line with high data communication speed and excellent error detection ability. Many electronic control units are equipped onto a vehicle, and each control unit shares information and links with other control units during operation (not independent). In CAN communication, control units are connected with 2 communication lines (CAN H line, CAN L line) allowing a high rate of information transmission with less wiring. Each control unit transmits/receives data but selectively reads required data only.

On Board Diagnosis Logic

INFOID:0000000011291647

This self-diagnosis has the one trip detection logic.

DTC No.	Trouble diagnosis name	DTC detecting condition	Possible cause
U0101 0101	Lost communication with TCM	When ECM is not transmitting or receiving CAN communication signal of OBD (emission-related diagnosis) with TCM for 2 seconds or more.	• CAN communication line between TCM and ECM • CAN communication line is open or shorted

DTC Confirmation Procedure

INFOID:0000000011291648

1. Turn ignition switch ON and wait at least 3 seconds.
2. Check DTC.
3. If DTC is detected, go to EC-155, "Diagnosis Procedure".

Diagnosis Procedure

INFOID:0000000011291649

Go to LAN-46, "CAN Communication Signal Chart".

U1001 CAN COMM CIRCUIT

Description

INFOID:0000000011291650

CAN (Controller Area Network) is a serial communication line for real time application. It is an on-vehicle multiplex communication line with high data communication speed and excellent error detection ability. Many electronic control units are equipped onto a vehicle, and each control unit shares information and links with other control units during operation (not independent). In CAN communication, control units are connected with 2 communication lines (CAN H line, CAN L line) allowing a high rate of information transmission with less wiring. Each control unit transmits/receives data but selectively reads required data only.

On Board Diagnosis Logic

INFOID:0000000011291651

The MIL will not light up for this self-diagnosis.

DTC No.	Trouble diagnosis name	DTC detecting condition	Possible cause
U1001 1001	CAN communication line	When ECM is not transmitting or receiving CAN communication signal other than OBD (emission-related diagnosis) for 2 seconds or more.	• Harness or connectors (CAN communication line is open or shorted)

DTC Confirmation Procedure

INFOID:0000000011291652

1. Turn ignition switch ON and wait at least 3 seconds.
2. Check 1st trip DTC.
3. If 1st trip DTC is detected, go to EC-156, "Diagnosis Procedure".

Diagnosis Procedure

INFOID:0000000011291653

Go to LAN-14, "Trouble Diagnosis Flow Chart".

P0011, P0021 IVT CONTROL

On Board Diagnosis Logic

INFOID:0000000011291654

NOTE:
- **If DTC P0011 or P0021 is displayed with DTC P0075 or P0081, first perform the trouble diagnosis for DTC P0075, P0081. Refer to EC-170, "DTC Confirmation Procedure".**
- **If DTC P0011 or P0021 is displayed with DTC P1140 or P1145, first perform the trouble diagnosis for DTC P1140, P1145. Refer to EC-380, "DTC Confirmation Procedure".**

DTC No.	Trouble diagnosis name	Detecting condition		Possible cause
P0011 0011 (Bank 1)	Intake valve timing control performance	A	The alignment of the intake valve timing control has been misresistered.	• Harness or connectors (Intake valve timing control solenoid valve circuit is open or shorted.) • Harness or connectors (Intake valve timing control position sensor circuit is open or shorted.) • Intake valve timing control solenoid valve • Intake valve timing control position sensor • Crankshaft position sensor (POS) • Camshaft position sensor (PHASE) • Accumulation of debris to the signal pick-up portion of the camshaft sprocket • Timing chain installation • Foreign matter caught in the oil groove for intake valve timing control
P0021 0021 (Bank 2)		B	There is a gap between angle of target and phase-control angle degree.	

FAIL-SAFE MODE

When the malfunction is detected, the ECM enters fail-safe mode.

Detected items	Engine operating condition in fail-safe mode
Intake valve timing control	The signal is not energized to the solenoid valve and the valve control does not function

DTC Confirmation Procedure

INFOID:0000000011291655

CAUTION:
Always drive at a safe speed.
NOTE:
If DTC Confirmation Procedure has been previously conducted, always perform the following before conducting the next step.

1. Turn ignition switch OFF and wait at least 10 seconds.
2. Turn ignition switch ON.
3. Turn ignition switch OFF and wait at least 10 seconds.

TESTING CONDITION:
Before performing the following procedure, confirm that battery voltage is between 10 V and 16 V at idle.

PROCEDURE FOR MALFUNCTION A

With CONSULT

1. Turn ignition switch ON.
2. Select “DATA MONITOR” mode with CONSULT.
3. Maintain the following conditions for at least 10 consecutive seconds.

ENG SPEED	More than 2,000 rpm (A constant rotation is maintained.)
COOLAN TEMP/S	More than 70°C (158°F)

Selector lever	1st or 2nd position
Driving location uphill	Driving vehicle uphill (Increased engine load will help maintain the driving conditions required for this test.)

4. Maintain the following conditions for at least 20 consecutive seconds.

ENG SPEED	Idle
COOLAN TEMP/S	More than 70°C (158°F)
Selector lever	P or N position

5. Check 1st trip DTC.
6. If 1st trip DTC is detected, go to EC-158, "Diagnosis Procedure".

With GST
Follow the procedure “With CONSULT” above.

PROCEDURE FOR MALFUNCTION B

With CONSULT
1. Turn ignition switch ON.
2. Select “DATA MONITOR” mode with CONSULT.
3. Maintain the following conditions for at least 10 consecutive seconds.

ENG SPEED	1,700 - 3,175 rpm (A constant rotation is maintained.)
COOLAN TEMP/S	More than 70°C (158°F)
Selector lever	1st or 2nd position
Driving location uphill	Driving vehicle uphill (Increased engine load will help maintain the driving conditions required for this test.)

4. Check 1st trip DTC.
5. If 1st trip DTC is detected, go to EC-158, "Diagnosis Procedure".

With GST
Follow the procedure “With CONSULT” above.

Diagnosis Procedure

INFOID:0000000011291656

1. CHECK OIL PRESSURE WARNING LAMP

1. Start engine.
2. Check oil pressure warning lamp and confirm it is not illuminated.

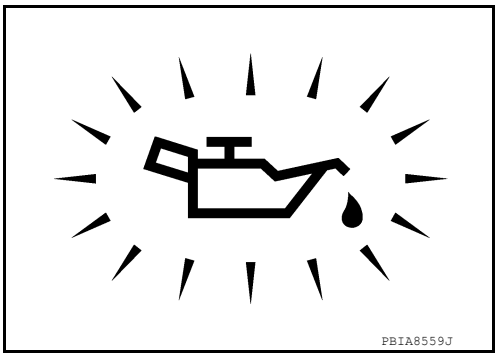

OK or NG

OK >> GO TO 2.
NG >> Go to LU-8, "Inspection".

2. CHECK GROUND CONNECTIONS

1. Turn ignition switch OFF.
2. Loosen and retighten three ground screws on the body.

Refer to EC-154, "Ground Inspection".

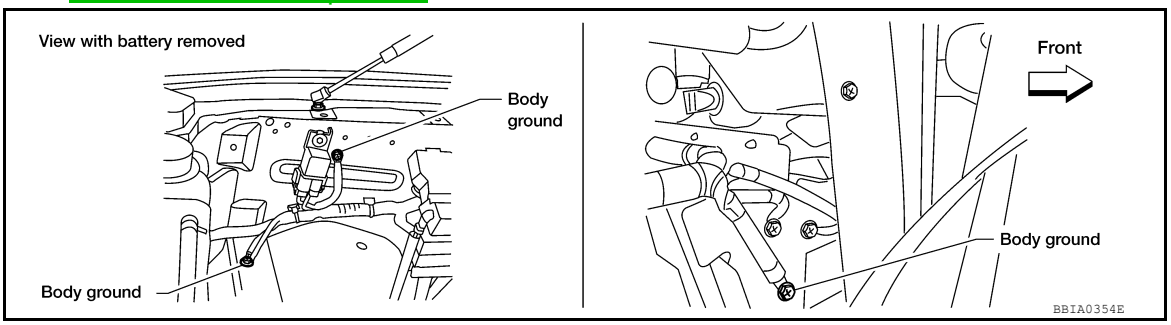

OK or NG

OK >> GO TO 3.
NG >> Repair or replace ground connections.

3. CHECK INTAKE VALVE TIMING CONTROL POSITION SENSOR POWER SUPPLY CIRCUIT

1. Disconnect intake valve timing control position sensor harness connector.

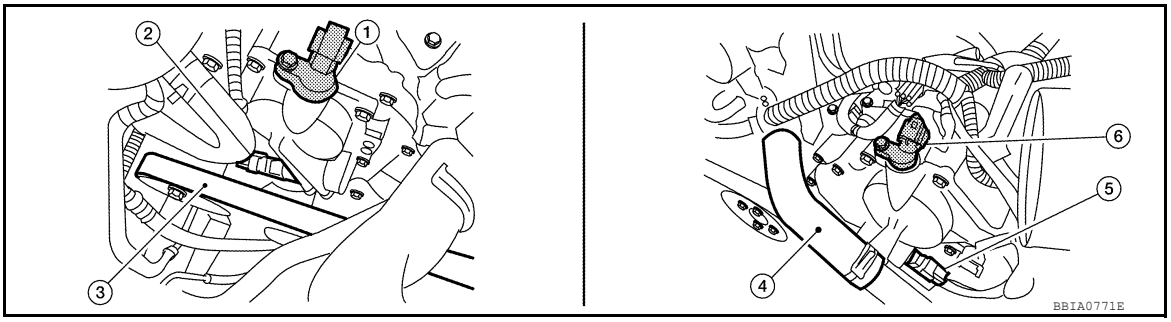

1.	Intake valve timing control position sensor (bank 2)	2.	Intake valve timing control solenoid valve (bank 2)	3.	Drive belt
4.	Radiator hose	5.	Intake valve timing control solenoid valve (bank 1)	6.	Intake valve timing control position sensor (bank 1)

2. Turn ignition switch ON.
3. Check voltage between intake valve timing control position sensor terminal 3 and ground with CONSULT or tester.

Voltage: Battery voltage

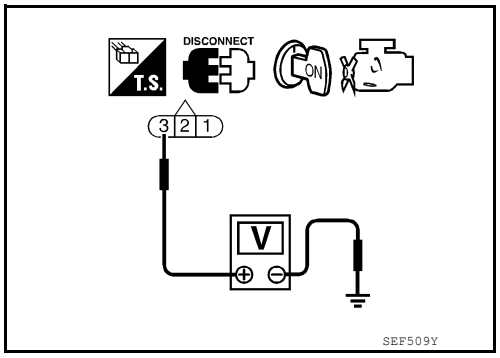

OK or NG

OK >> GO TO 5.
NG >> GO TO 4.

4. DETECT MALFUNCTIONING PART

Check the following.
- Harness connectors E2, F32
- Harness for open or short between intake valve timing control position sensor and ECM
- Harness for open or short between intake valve timing control position sensor and IPDM E/R

>> Repair open circuit or short to ground or short to power in harness or connectors.

5. CHECK INTAKE VALVE TIMING CONTROL POSITION SENSOR GROUND CIRCUIT FOR OPEN AND SHORT

1. Turn ignition switch OFF.
2. Check harness continuity between intake valve timing control position sensor terminal 1 and ground. Refer to Wiring Diagram.

Continuity should exist.

3. Also check harness for short to power.

OK or NG

OK >> GO TO 7.
NG >> GO TO 6.

6. DETECT MALFUNCTIONING PART

Check the following.
- Harness for open or short between intake valve timing control position sensor and ground

>> Repair open circuit or short to power in harness or connectors.

7. CHECK INTAKE VALVE TIMING CONTROL POSITION SENSOR INPUT SIGNAL CIRCUIT FOR OPEN AND SHORT

1. Disconnect ECM harness connector.
2. Check harness continuity between the following;
   ECM terminal 72 and intake valve timing control position sensor (Bank 1) terminal 2 or
   ECM terminal 53 and intake valve timing control position sensor (Bank 2) terminal 2.
   Refer to Wiring Diagram.

Continuity should exist.

3. Also check harness for short to ground and short to power.

OK or NG

OK >> GO TO 8.
NG >> Repair open circuit or short to ground or short to power in harness or connectors.

8. CHECK INTAKE VALVE TIMING CONTROL POSITION SENSOR

Refer to EC-162, "Component Inspection".

OK or NG

OK >> GO TO 9.
NG >> Replace malfunctioning intake valve timing control position sensor. Refer to EM-47.

9. CHECK INTAKE VALVE TIMING CONTROL SOLENOID VALVE POWER SUPPLY CIRCUIT

1. Reconnect ECM harness connector.
2. Disconnect intake valve timing control solenoid valve harness connector.

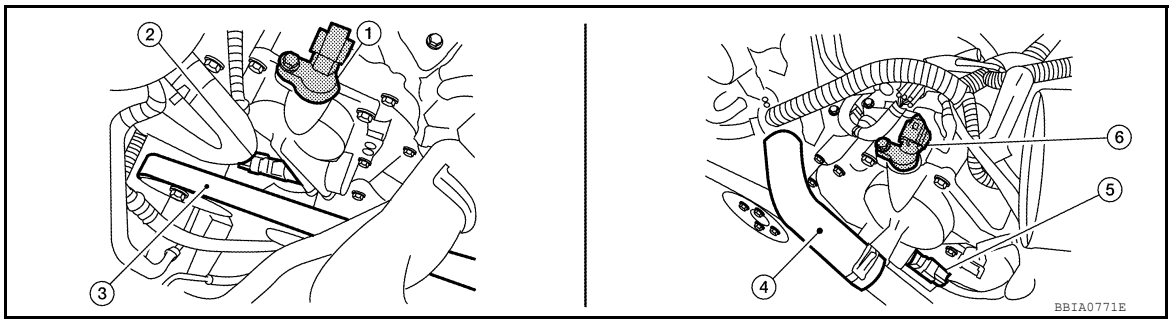

1. Intake valve timing control position sensor (bank 2)	2. Intake valve timing control solenoid valve (bank 2)	3. Drive belt
4. Radiator hose	5. Intake valve timing control solenoid valve (bank 1)	6. Intake valve timing control position sensor (bank 1)

3. Turn ignition switch ON.

4. Check voltage between intake valve timing control solenoid valve terminal 2 and ground with CONSULT or tester.

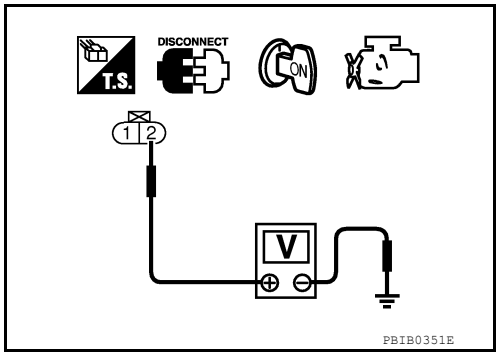

Voltage: Battery voltage

OK or NG

OK >> GO TO 11.
NG >> GO TO 10.

10. DETECT MALFUNCTIONING PART

Check the following.
- Harness connectors E2, F32
- Harness for open or short between intake valve timing control solenoid valve and IPDM E/R.

>> Repair open circuit or short to ground or short to power in harness or connectors.

11. CHECK INTAKE VALVE TIMING CONTROL SOLENOID VALVE OUTPUT SIGNAL CIRCUIT FOR OPEN AND SHORT

1. Turn ignition switch OFF.
2. Disconnect ECM harness connector.
3. Check harness continuity between the following;
   ECM terminal 10 and intake valve timing control solenoid valve (Bank 1) terminal 1 or
   ECM terminal 11 and intake valve timing control solenoid valve (Bank 2) terminal 1.
   Refer to Wiring Diagram.

Continuity should exist.

4. Also check harness for short to ground and short to power.

OK or NG

OK >> GO TO 12.
NG >> Repair open circuit or short to ground or short to power in harness or connectors.

12. CHECK INTAKE VALVE TIMING CONTROL SOLENOID VALVE

Refer to EC-162, "Component Inspection".

OK or NG

OK >> GO TO 13.
NG >> Replace malfunctioning intake valve timing control solenoid valve. Refer to EM-46.

13. CHECK CRANKSHAFT POSITION SENSOR (POS)

Refer to EC-283, "Component Inspection".

OK or NG

OK >> GO TO 14.
NG >> Replace crankshaft position sensor (POS). Refer to EM-77, "Exploded View".

14. CHECK CAMSHAFT POSITION SENSOR (PHASE)

Refer to EC-287, "Component Inspection".

OK or NG

OK >> GO TO 15.
NG >> Replace malfunctioning camshaft position sensor (PHASE). Refer to EM-47.

15. CHECK CAMSHAFT SPROCKET

Check accumulation of debris to the signal pick-up portion of the camshaft sprocket. Refer to EM-70, "Inspection after Installation".

OK or NG

OK >> GO TO 16.

NG >> Remove debris and clean the signal pick-up cutout of camshaft sprocket. Refer to EM-61, "Removal and Installation".

16. CHECK TIMING CHAIN INSTALLATION

Check service records for any recent repairs that may cause timing chain misaligned.
Are there any service records that may cause timing chain misaligned?

Yes or No

Yes >> Check timing chain installation. Refer to EM-56, "Removal and Installation".
No >> GO TO 17.

17. CHECK LUBRICATION CIRCUIT

Refer to EM-70, "Inspection after Installation".

OK or NG

OK >> GO TO 18.
NG >> Clean lubrication line.

18. CHECK INTERMITTENT INCIDENT

Refer to GI-40, "How to Check Terminal" and GI-43, "Intermittent Incident".

>> **INSPECTION END**

Component Inspection

INFOID:0000000011291657

INTAKE VALVE TIMING CONTROL POSITION SENSOR

1. Disconnect intake valve timing control position sensor harness connector.
2. Loosen the fixing bolt of the sensor.
3. Remove the sensor. Refer to EM-47.
4. Visually check the sensor for chipping.

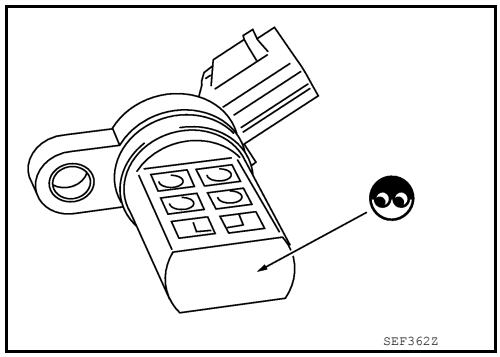

5. Check resistance as shown below.

Terminal No. (Polarity)	Resistance Ω [at 25°C (77°F)]
3 (+) - 1 (-)	Except 0 or ∞
2 (+) - 1 (-)	
3 (+) - 2 (-)	

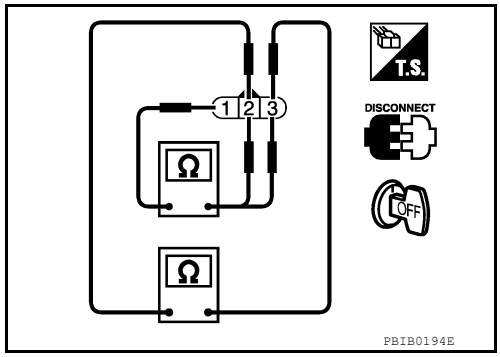

6. If NG, replace intake valve timing control position sensor. Refer to EM-47.

INTAKE VALVE TIMING CONTROL SOLENOID VALVE

1. Disconnect intake valve timing control solenoid valve harness connector.

2. Check resistance between intake valve timing control solenoid valve terminals as follows.

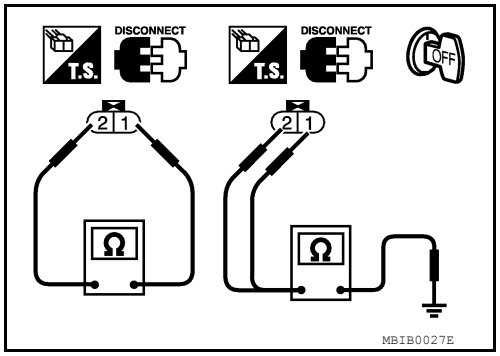

Terminals	Resistance
1 and 2	7.1 - 7.7 Ω [at 20°C (68°F)]
1 or 2 and ground	∞Ω (Continuity should not exist)

If NG, replace intake valve timing control solenoid valve. Refer to EM-46.
If OK, go to next step.

3. Remove intake valve timing control solenoid valve.

4. Provide 12 V DC between intake valve timing control solenoid valve terminals and then interrupt it. Make sure that the plunger moves as shown in the figure.

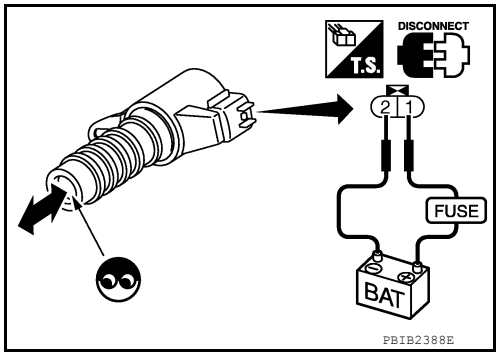

CAUTION:
Do not apply 12 V DC continuously for 5 seconds or more. Doing so may result in damage to the coil in intake valve timing control solenoid valve.
If NG, replace intake valve timing control solenoid valve. Refer to EM-46.
NOTE:
Always replace O-ring when intake valve timing control solenoid valve is removed.

P0031, P0032, P0051, P0052 A/F SENSOR 1 HEATER

Description

INFOID:0000000011291658

SYSTEM DESCRIPTION

Sensor	Input Signal to ECM	ECM function	Actuator
Camshaft position sensor (PHASE) Crankshaft position sensor (POS)	Engine speed	Air fuel ratio (A/F) sensor 1 heater control	Air fuel ratio (A/F) sensor 1 heater
Mass air flow sensor	Amount of intake air		

The ECM performs ON/OFF duty control of the A/F sensor 1 heater corresponding to the engine operating condition to keep the temperature of A/F sensor 1 element at the specified range.

On Board Diagnosis Logic

INFOID:0000000011291659

DTC No.	Trouble diagnosis name	DTC detecting condition	Possible cause
P0031 0031 (Bank 1) P0051 0051 (Bank 2)	Air fuel ratio (A/F) sensor 1 heater control circuit low	The current amperage in the air fuel ratio (A/F) sensor 1 heater circuit is out of the normal range. (An excessively low voltage signal is sent to ECM through the air fuel ratio (A/F) sensor 1 heater.)	• Harness or connectors (The A/F sensor 1 heater circuit is open or shorted.) • A/F sensor 1 heater
P0032 0032 (Bank 1) P0052 0052 (Bank 2)	Air fuel ratio (A/F) sensor 1 heater control circuit high	The current amperage in the air fuel ratio (A/F) sensor 1 heater circuit is out of the normal range. (An excessively high voltage signal is sent to ECM through the air fuel ratio (A/F) sensor 1 heater.)	• Harness or connectors (The A/F sensor 1 heater circuit is shorted.) • A/F sensor 1 heater

DTC Confirmation Procedure

INFOID:0000000011291660

NOTE:
If DTC Confirmation Procedure has been previously conducted, always perform the following before conducting the next step.

1. Turn ignition switch OFF and wait at least 10 seconds.
2. Turn ignition switch ON.
3. Turn ignition switch OFF and wait at least 10 seconds.

TESTING CONDITION:
Before performing the following procedure, confirm that battery voltage is between 10.5 V and 16 V at idle.

1. Start engine and let it idle for at least 10 seconds.
2. Check 1st trip DTC.
3. If 1st trip DTC is detected, go to EC-164, "Diagnosis Procedure".

Diagnosis Procedure

INFOID:0000000011291661

1. CHECK GROUND CONNECTIONS

1. Turn ignition switch OFF.
2. Loosen and retighten three ground screws on the body.

Refer to EC-154, "Ground Inspection".

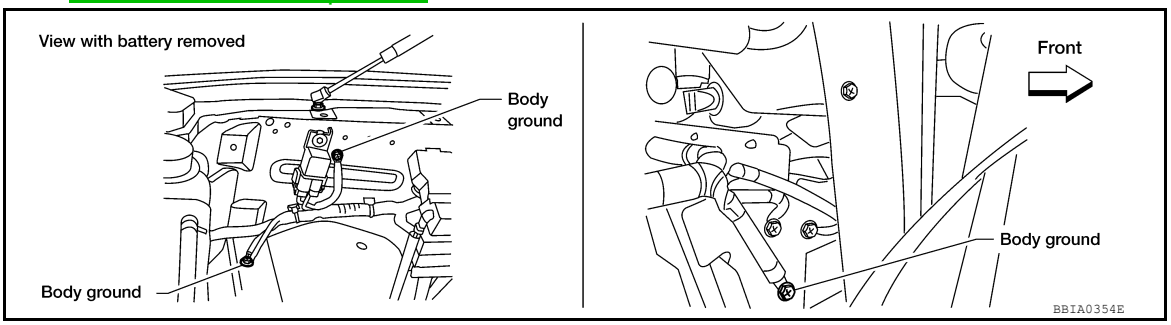

OK or NG

OK >> GO TO 2.
NG >> Repair or replace ground connections.

2. CHECK AIR FUEL RATIO (A/F) SENSOR 1 POWER SUPPLY CIRCUIT

1. Disconnect air fuel ratio (A/F) sensor 1 harness connector.

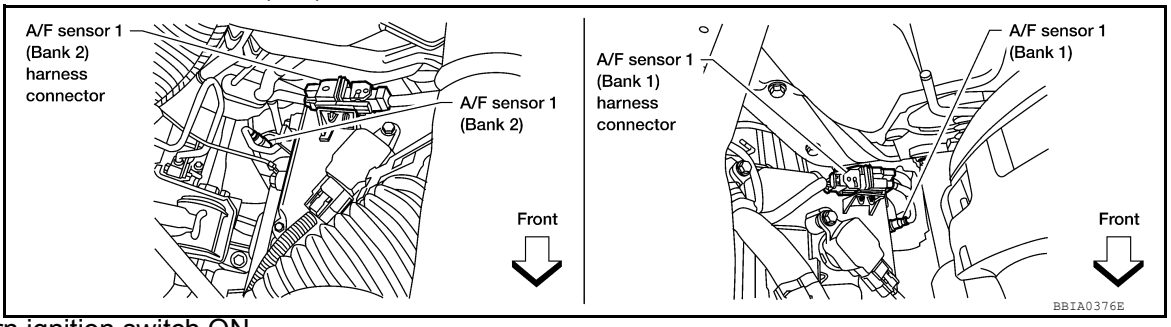

2. Turn ignition switch ON.
3. Check voltage between A/F sensor 1 terminal 4 and ground with CONSULT or tester.

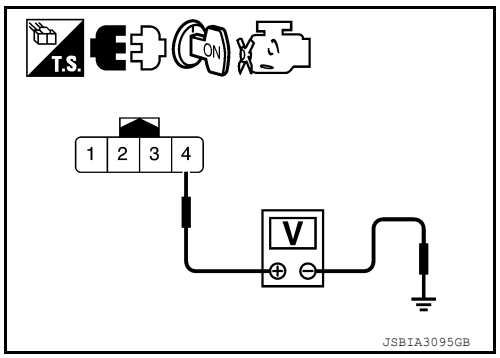

Voltage: Battery voltage

OK or NG

OK >> GO TO 4.
NG >> GO TO 3.

3. DETECT MALFUNCTIONING PART

Check the following.
- Harness connectors E5, F14
- IPDM E/R harness connector E119
- 15 A fuse (No. 54)
- Harness for open or short between A/F sensor 1 and fuse

>> Repair or replace harness or connectors.

4. CHECK A/F SENSOR 1 HEATER OUTPUT SIGNAL CIRCUIT

1. Turn ignition switch OFF.
2. Disconnect ECM harness connector.
3. Check harness continuity between ECM terminal 2 (bank 1) or 24, 43 (bank 2) and A/F sensor 1 terminal 3.
   Refer to Wiring Diagram.

Continuity should exist.

4. Also check harness for short to ground and short to power.

OK or NG

OK >> GO TO 5.
NG >> Repair open circuit or short to ground or short to power in harness or connectors.

5. CHECK A/F SENSOR 1 HEATER

Refer to EC-166, "Component Inspection".

OK or NG

OK >> GO TO 6.
NG >> Replace malfunctioning air fuel ratio (A/F) sensor 1. Refer to EM-31, "Exploded View".

6. CHECK INTERMITTENT INCIDENT

Refer to GI-40, "How to Check Terminal" and GI-43, "Intermittent Incident".

>> **INSPECTION END**

Component Inspection

INFOID:0000000011291662

AIR FUEL RATIO (A/F) SENSOR 1 HEATER

1. Check resistance between A/F sensor 1 terminals as follows.

Terminal No.	Resistance
3 and 4	Refer to EC-510, "A/F Sensor 1 Heater".
3 and 1, 2	∞ Ω (Continuity should not exist)
4 and 1, 2	

2. If NG, replace air fuel ratio (A/F) sensor 1. Refer to EM-31, "Exploded View".

CAUTION:

- **Discard any A/F sensor which has been dropped from a height of more than 0.5 m (19.7 in) onto a hard surface such as a concrete floor; use a new one.**
- **Before installing new A/F sensor, clean exhaust system threads using Heated Oxygen Sensor Thread Cleaner tool J-43897-18 or J-43897-12 and approved anti-seize lubricant.**

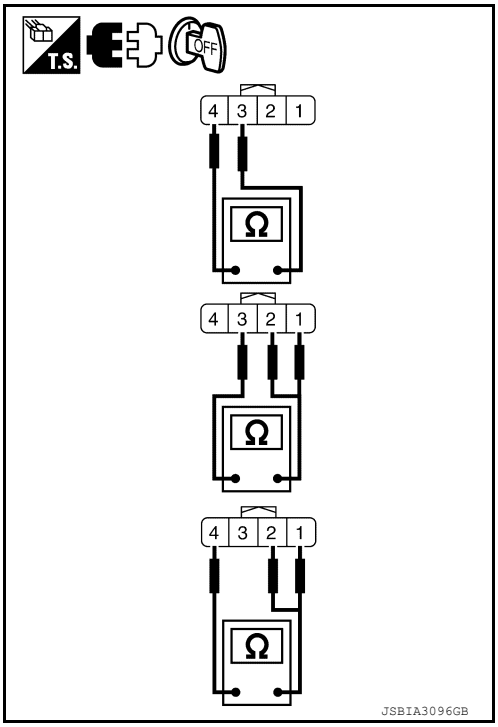

P0037, P0038, P0057, P0058 HO2S2 HEATER

Description

INFOID:0000000011291663

SYSTEM DESCRIPTION

Sensor	Input signal to ECM	ECM function	Actuator
Camshaft position sensor (PHASE) Crankshaft position sensor (POS)	Engine speed	Heated oxygen sensor 2 heater control	Heated oxygen sensor 2 heater
Engine coolant temperature sensor	Engine coolant temperature		
Mass air flow sensor	Amount of intake air		

The ECM performs ON/OFF control of the heated oxygen sensor 2 heater corresponding to the engine speed, amount of intake air and engine coolant temperature.

OPERATION

Engine speed (rpm)	Heated oxygen sensor 2 heater
Above 3,600	OFF
Below 3,600 rpm after the following conditions are met. • Engine: After warming up • Keeping the engine speed between 3,500 and 4,000 rpm for 1 minute and at idle for 1 minute under no load	ON

On Board Diagnosis Logic

INFOID:0000000011291664

DTC No.	Trouble diagnosis name	DTC detecting condition	Possible cause
P0037 0037 (Bank 1)	Heated oxygen sensor 2 heater control circuit low	The current amperage in the heated oxygen sensor 2 heater circuit is out of the normal range. (An excessively low voltage signal is sent to ECM through the heated oxygen sensor 2 heater.)	• Harness or connectors (The heated oxygen sensor 2 heater circuit is open or shorted.) • Heated oxygen sensor 2 heater
P0057 0057 (Bank 2)			
P0038 0038 (Bank 1)	Heated oxygen sensor 2 heater control circuit high	The current amperage in the heated oxygen sensor 2 heater circuit is out of the normal range. (An excessively high voltage signal is sent to ECM through the heated oxygen sensor 2 heater.)	• Harness or connectors (The heated oxygen sensor 2 heater circuit is shorted.) • Heated oxygen sensor 2 heater
P0058 0058 (Bank 2)			

DTC Confirmation Procedure

INFOID:0000000011291665

NOTE:
If DTC Confirmation Procedure has been previously conducted, always perform the following before conducting the next step.

1. Turn ignition switch OFF and wait at least 10 seconds.
2. Turn ignition switch ON.
3. Turn ignition switch OFF and wait at least 10 seconds.

TESTING CONDITION:
Before performing the following procedure, confirm that battery voltage is between 10.5 V and 16 V at idle.

1. Start engine and warm it up to the normal operating temperature.
2. Turn ignition switch OFF and wait at least 10 seconds.
3. Turn ignition switch ON.
4. Turn ignition switch OFF and wait at least 10 seconds.
5. Start the engine and keep the engine speed between 3,500 rpm and 4,000 rpm for at least 1 minute under no load.

6. Let engine idle for 1 minute.
7. Check 1st trip DTC.
8. If 1st trip DTC is detected, go to EC-168, "Diagnosis Procedure".

Diagnosis Procedure

INFOID:0000000011291666

1. CHECK GROUND CONNECTIONS

1. Turn ignition switch OFF.
2. Loosen and retighten three ground screws on the body.
   Refer to EC-154, "Ground Inspection".

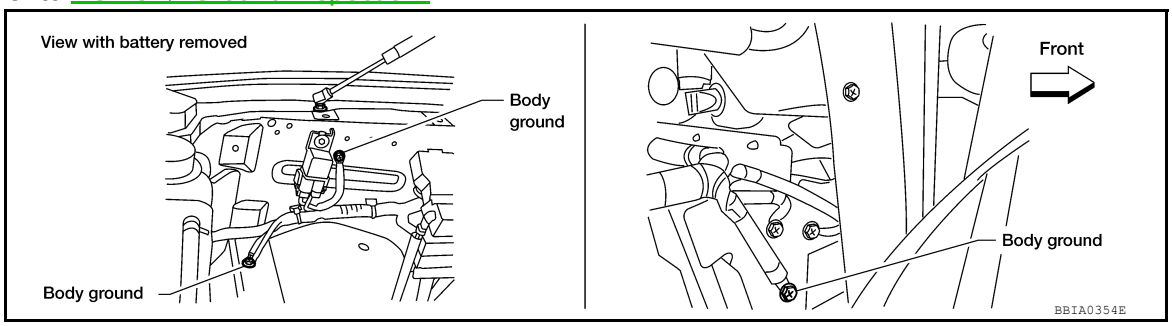

OK or NG

OK >> GO TO 2.
NG >> Repair or replace ground connections.

2. CHECK HO2S2 POWER SUPPLY CIRCUIT

1. Disconnect heated oxygen sensor 2 harness connector.

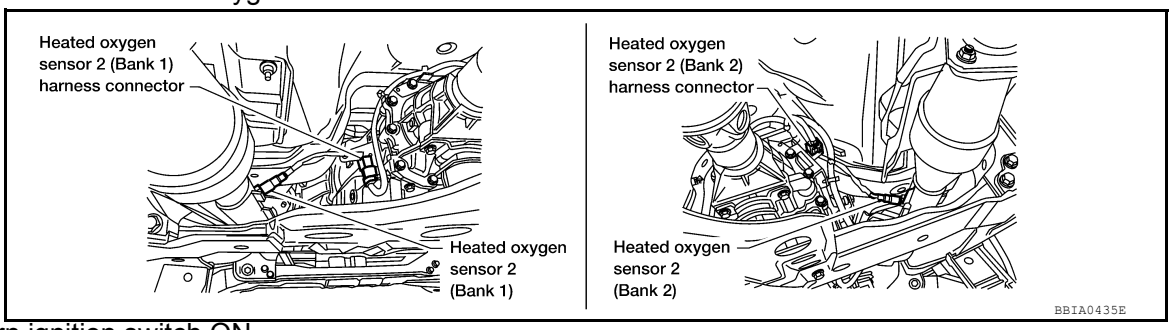

2. Turn ignition switch ON.
3. Check voltage between HO2S2 terminal 3 and ground with CONSULT or tester.

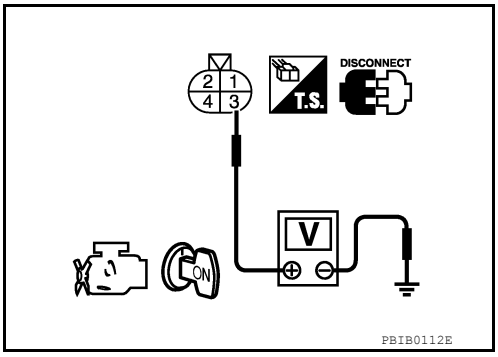

Voltage: Battery voltage

OK or NG

OK >> GO TO 4.
NG >> GO TO 3.

3. DETECT MALFUNCTIONING PART

Check the following.
- Harness connectors E5, F14
- IPDM E/R harness connector E119
- 15 A fuse (No. 54)
- Harness for open or short between heated oxygen sensor 2 and fuse

>> Repair harness or connectors.

4. CHECK HO2S2 HEATER OUTPUT SIGNAL CIRCUIT FOR OPEN AND SHORT

1. Turn ignition switch OFF.
2. Disconnect ECM harness connector.
3. Check harness continuity between ECM terminal and HO2S2 terminal as follows. Refer to Wiring Diagram.

DTC	Terminals		Bank
	ECM	Sensor	
P0037, P0038	6	2	1
P0057, P0058	25	2	2

Continuity should exist.

4. Also check harness for short to ground and short to power.

OK or NG

OK >> GO TO 5.
NG >> Repair open circuit or short to ground or short to power in harness or connectors.

5. CHECK HEATED OXYGEN SENSOR 2 HEATER

Refer to EC-169, "Component Inspection".

OK or NG

OK >> GO TO 6.
NG >> Replace malfunctioning heated oxygen sensor 2.

6. CHECK INTERMITTENT INCIDENT

Refer to GI-40, "How to Check Terminal" and GI-43, "Intermittent Incident".

>> **INSPECTION END**

Component Inspection

INFOID:0000000011291667

HEATED OXYGEN SENSOR 2 HEATER

1. Check resistance between HO2S2 terminals as follows.

Terminal No.	Resistance
2 and 3	8 - 10 Ω [at 25°C (77°F)]
1 and 2, 3, 4	∞ Ω (Continuity should not exist)
4 and 1, 2, 3	

2. If NG, replace heated oxygen sensor 2. Refer to EM-31.

CAUTION:

- **Discard any heated oxygen sensor which has been dropped from a height of more than 0.5 m (19.7 in) onto a hard surface such as a concrete floor; use a new one.**
- **Before installing new oxygen sensor, clean exhaust system threads using Oxygen Sensor Thread Cleaner tool J-43897-18 or J-43897-12 and approved anti-seize lubricant.**

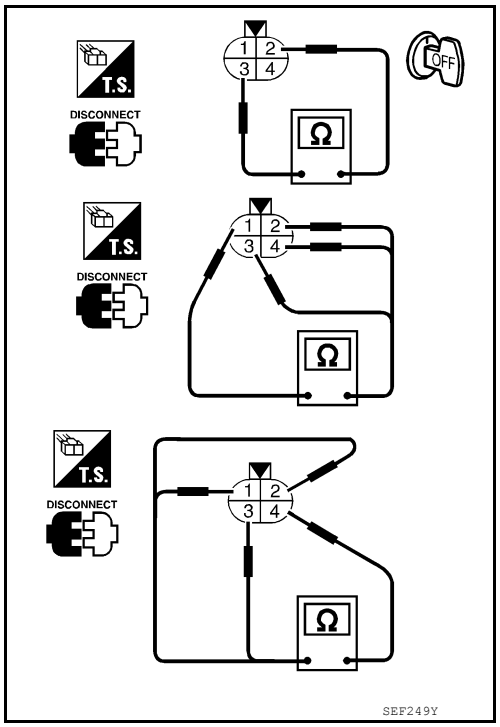

P0075, P0081 IVT CONTROL SOLENOID VALVE

Component Description

INFOID:0000000011291668

Intake valve timing control solenoid valve is activated by ON/OFF pulse duty (ratio) signals from the ECM.
The intake valve timing control solenoid valve changes the oil amount and direction of flow through intake valve timing control unit or stops oil flow.
The longer pulse width advances valve angle.
The shorter pulse width retards valve angle.
When ON and OFF pulse widths become equal, the solenoid valve stops oil pressure flow to fix the intake valve angle at the control position.

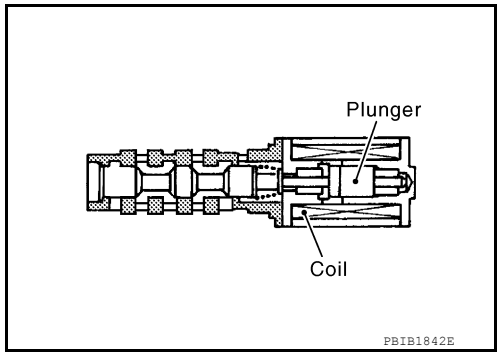

On Board Diagnosis Logic

INFOID:0000000011291669

DTC No.	Trouble diagnosis name	DTC detecting condition	Possible cause
P0075 0075 (Bank 1)	Intake valve timing control solenoid valve circuit	An improper voltage is sent to the ECM through intake valve timing control solenoid valve.	• Harness or connectors (Intake valve timing control solenoid valve circuit is open or shorted.) • Intake valve timing control solenoid valve
P0081 0081 (Bank 2)			

DTC Confirmation Procedure

INFOID:0000000011291670

1. If DTC Confirmation Procedure has been previously conducted, always perform the following before conducting the next step.
a. Turn ignition switch OFF and wait at least 10 seconds.
b. Turn ignition switch ON.
c. Turn ignition switch OFF and wait at least 10 seconds.
2. Start engine and let it idle for 5 seconds.
3. Check 1st trip DTC.
4. If 1st trip DTC is detected, go to EC-170, "Diagnosis Procedure".

Diagnosis Procedure

INFOID:0000000011291671

1. CHECK INTAKE VALVE TIMING CONTROL SOLENOID VALVE POWER SUPPLY CIRCUIT

1. Turn ignition switch OFF.
2. Disconnect intake valve timing control solenoid valve harness connector.

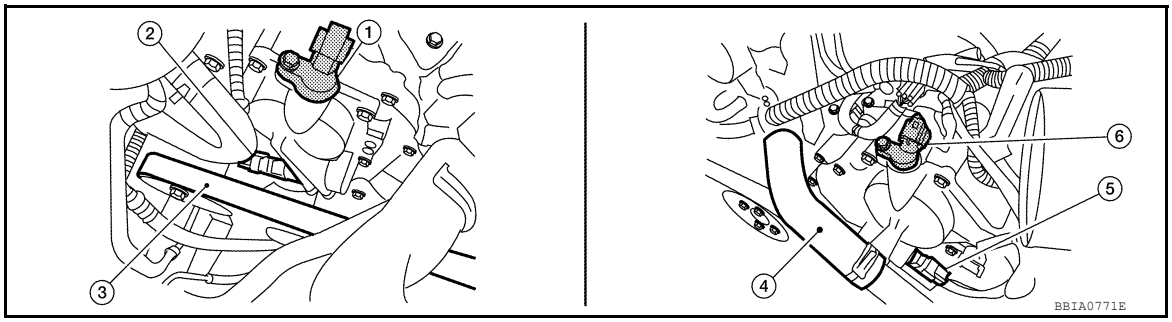

1. Intake valve timing control position sensor (bank 2)
2. Intake valve timing control solenoid valve (bank 2)
3. Drive belt
4. Radiator hose
5. Intake valve timing control solenoid valve (bank 1)
6. Intake valve timing control position sensor (bank 1)

3. Turn ignition switch ON.
4. Check voltage between intake valve timing control solenoid valve terminal 2 and ground with CONSULT or tester.

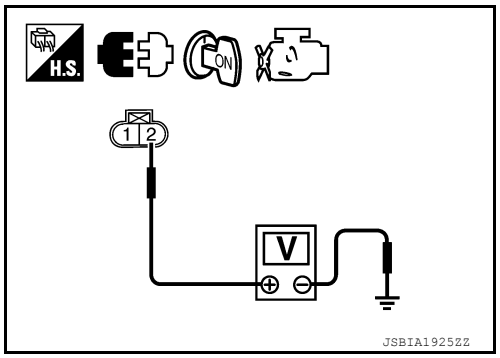

Voltage: Battery voltage

OK or NG

OK >> GO TO 3.
NG >> GO TO 2.

2. DETECT MALFUNCTIONING PART

Check the following.
- Harness connectors E2, F32
- IPDM E/R harness connector E119
- Harness for open or short between intake valve timing control solenoid valve and IPDM E/R

>> Repair open circuit or short to ground or short to power in harness or connectors.

3. CHECK INTAKE VALVE TIMING CONTROL SOLENOID VALVE OUTPUT SIGNAL CIRCUIT FOR OPEN AND SHORT

1. Turn ignition switch OFF.
2. Disconnect ECM harness connector.
3. Check harness continuity between the following;
   ECM terminal 10 and intake valve timing control solenoid valve (Bank 1) terminal 1 or
   ECM terminal 11 and intake valve timing control solenoid valve (Bank 2) terminal 1.
   Refer to Wiring Diagram.

Continuity should exist.

4. Also check harness for short to ground and short to power.

OK or NG

OK >> GO TO 4.
NG >> Repair open circuit or short to ground or short to power in harness or connectors.

4. CHECK INTAKE VALVE TIMING CONTROL SOLENOID VALVE

Refer to EC-171, "Component Inspection".

OK or NG

OK >> GO TO 5.
NG >> Replace malfunctioning intake valve timing control solenoid valve. Refer to EM-46.

5. CHECK INTERMITTENT INCIDENT

Refer to GI-40, "How to Check Terminal" and GI-43, "Intermittent Incident".

>> **INSPECTION END**

Component Inspection

INFOID:0000000011291672

INTAKE VALVE TIMING CONTROL SOLENOID VALVE

1. Disconnect intake valve timing control solenoid valve harness connector.

2. Check resistance between intake valve timing control solenoid valve terminals as follows.

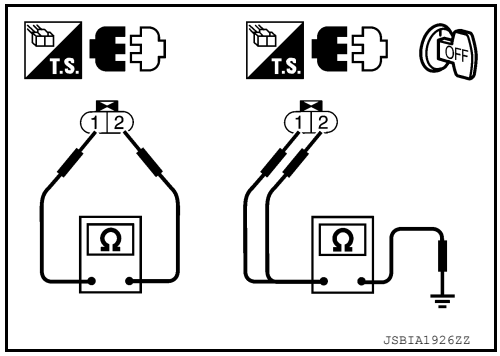

Terminals	Resistance
1 and 2	7.1 - 7.7 Ω [at 20°C (68°F)]
1 or 2 and ground	∞Ω (Continuity should not exist)

If NG, replace intake valve timing control solenoid valve. Refer to EM-46.
If OK, go to next step.

3. Remove intake valve timing control solenoid valve. Refer to EM-49, "Removal and Installation".

4. Provide 12 V DC between intake valve timing control solenoid valve terminals and then interrupt it. Make sure that the plunger moves as shown in the figure.

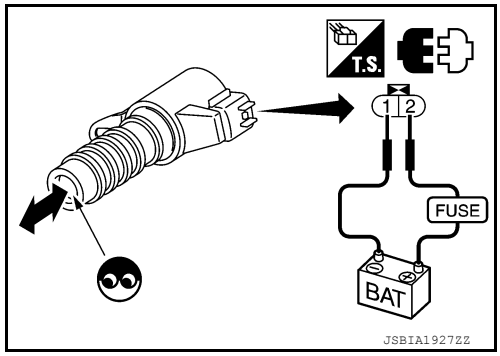

CAUTION:
Do not apply 12 V DC continuously for 5 seconds or more. Doing so may result in damage to the coil in intake valve timing control solenoid valve.
If NG, replace intake valve timing control solenoid valve. Refer to EM-46.
NOTE:
Always replace O-ring when intake valve timing control solenoid valve is removed.

P0101 MAF SENSOR

Component Description

INFOID:0000000011291673

The mass air flow sensor is placed in the stream of intake air. It measures the intake flow rate by measuring a part of the entire intake flow. The mass air flow sensor controls the temperature of the hot wire to a certain amount. The heat generated by the hot wire is reduced as the intake air flows around it. The more air, the greater the heat loss.
Therefore, the electric current supplied to the hot wire is changed to maintain the temperature of the hot wire as air flow increases. The ECM detects the air flow by means of this current change.

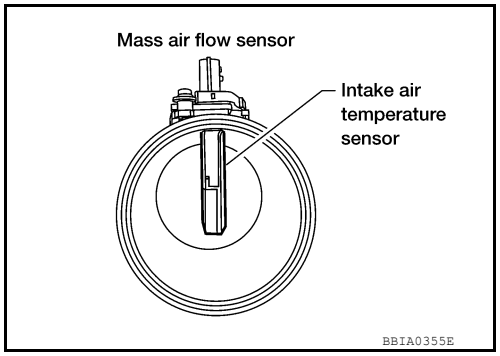

DTC Logic

INFOID:0000000011291674

DTC DETECTION LOGIC

NOTE:
If DTC P0101 is displayed with other DTC, first perform the trouble diagnosis for other DTC.

DTC No.	Trouble diagnosis (Trouble diagnosis content)	DTC detecting condition	Possible cause
P0101	MAF SEN/CIRCUIT-B1 [Mass air flow (MAF) sensor circuit range/performance]	• A high voltage from the sensor is sent to ECM under light load driving condition. • A low voltage from the sensor is sent to ECM under heavy load driving condition.	• Harness or connectors (The sensor circuit is open or shorted.) • Intake air leaks • MAF sensor • EVAP control system pressure sensor • Intake air temperature sensor

DTC CONFIRMATION PROCEDURE

1. PRECONDITIONING

If DTC CONFIRMATION PROCEDURE has been previously conducted, always perform the following procedure before conducting the next test.
1. Turn ignition switch OFF and wait at least 10 seconds.
2. Turn ignition switch ON.
3. Turn ignition switch OFF and wait at least 10 seconds.

>> GO TO 2.

2. PERFORM DTC CONFIRMATION PROCEDURE

1. Start engine and warm it up to normal operating temperature.
2. Drive the vehicle for at least 5 seconds under the following conditions:
   CAUTION:
   Always drive vehicle at safe speed.

Selector lever	Suitable position
Vehicle speed	40 km/h (25 MPH) or more

   NOTE:
   • The gear must be fixed while driving the vehicle.
   • Keep the accelerator pedal as steady as possible during cruising.
3. Check 1st trip DTC.

Is 1st trip DTC detected?

YES >> Proceed to EC-174, "Diagnosis Procedure".
NO >> INSPECTION END

Diagnosis Procedure

INFOID:0000000011291675

1. CHECK INTAKE SYSTEM

Check the following for connection.
- Air duct
- Vacuum hoses
- Intake air passage between air duct and intake manifold

Is the inspection result normal?

YES >> GO TO 2.
NO >> Reconnect the parts.

2. CHECK GROUND CONNECTION

1. Turn ignition switch OFF.
2. Check ground connection E9. Refer to Ground Inspection in EC-154, "Ground Inspection".

Is the inspection result normal?

YES >> GO TO 3.
NO >> Repair or replace ground connection.

3. CHECK MASS AIR FLOW (MAF) SENSOR POWER SUPPLY CIRCUIT

1. Disconnect MAF sensor harness connector.
2. Turn ignition switch ON.
3. Check the voltage between MAF sensor harness connector and ground.

MAF sensor		Ground	Voltage
Connector	Terminal		
F53	2	Ground	Battery voltage

Is the inspection result normal?

YES >> GO TO 5.
NO >> GO TO 4.

4. DETECT MALFUNCTIONING PART

Check the following.
- Harness connectors E2, F32
- Harness for open or short between mass air flow sensor and IPDM E/R

>> Repair open circuit or short to ground or short to power in harness or connectors.

5. CHECK MAF SENSOR GROUND CIRCUIT FOR OPEN AND SHORT

1. Turn ignition switch OFF.
2. Disconnect ECM harness connector.
3. Check the continuity between MAF sensor harness connector and ECM harness connector.

MAF sensor		ECM		Continuity
Connector	Terminal	Connector	Terminal	
F53	3	F54	67	Existed

4. Also check harness for short to ground and short to power.

Is the inspection result normal?

YES >> GO TO 6.
NO >> Repair open circuit or short to ground or short to power in harness or connectors.

6. CHECK MAF SENSOR INPUT SIGNAL CIRCUIT FOR OPEN AND SHORT

1. Check the continuity between MAF sensor harness connector and ECM harness connector.

MAF sensor		ECM		Continuity
Connector	Terminal	Connector	Terminal	
F53	4	F54	51	Existed

2. Also check harness for short to ground and short to power.

Is the inspection result normal?

YES >> GO TO 7.
NO >> Repair open circuit or short to ground or short to power in harness or connectors.

7. CHECK INTAKE AIR TEMPERATURE SENSOR

Check intake air temperature sensor. Refer to EC-186, "Component Inspection".

Is the inspection result normal?

YES >> GO TO 8.
NO >> Replace MAF sensor (with intake air temperature sensor). Refer to EM-25, "Removal and Installation".

8. CHECK EVAP CONTROL SYSTEM PRESSURE SENSOR

Check EVAP control system pressure sensor. Refer to EC-324, "Component Inspection".

Is the inspection result normal?

YES >> GO TO 9.
NO >> Replace EVAP control system pressure sensor. Refer to FL-16, "Removal and Installation".

9. CHECK MAF SENSOR

Check MAF sensor. Refer to EC-175, "Component Inspection".

Is the inspection result normal?

YES >> GO TO 10.
NO >> Replace MAF sensor. Refer to EM-25, "Exploded View".

10. CHECK INTERMITTENT INCIDENT

Check intermittent incident. Refer to GI-43, "Intermittent Incident".

>> INSPECTION END

Component Inspection

INFOID:0000000011291676

MASS AIR FLOW SENSOR

With CONSULT

1. Reconnect all harness connectors disconnected.
2. Start engine and warm it up to normal operating temperature.
3. Connect CONSULT and select “DATA MONITOR” mode.
4. Select “MAS A/F SE-B1” and check indication under the following conditions.

Condition	MAS A/F SE-B1 (V)
Ignition switch ON (Engine stopped.)	Approx. 0.4
Idle (Engine is warmed-up to normal operating temperature.)	0.9 - 1.3
2,500 rpm (Engine is warmed-up to normal operating temperature.)	1.7 - 2.1
Idle to about 4,000 rpm	0.9 - 1.3 to Approx. 2.4*

*: Check for linear voltage rise in response to engine being increased to about 4,000 rpm.

5. If the voltage is out of specification, proceed the following.

a. Check for the cause of uneven air flow through mass air flow sensor. Refer to following.
   - Crushed air ducts

- Malfunctioning seal of air cleaner element
- Uneven dirt of air cleaner element
- Improper specification of intake air system parts

b. If NG, repair or replace malfunctioning part and perform step 2 to 4 again.
If OK, go to next step.

6. Turn ignition switch OFF.
7. Disconnect mass air flow sensor harness connector and reconnect it again.
8. Perform step 2 to 4 again.
9. If NG, clean or replace mass air flow sensor. Refer to EM-25, "Removal and Installation".

Without CONSULT

1. Reconnect all harness connectors disconnected.
2. Start engine and warm it up to normal operating temperature.
3. Check voltage between ECM terminal 51 (Mass air flow sensor signal) and ground.

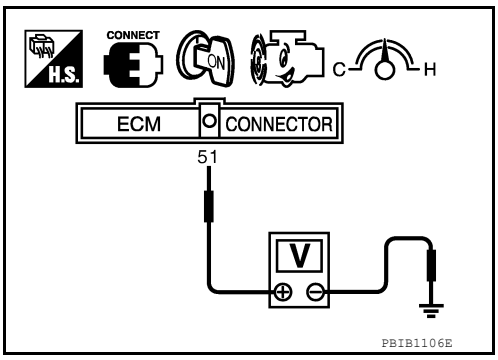

Condition	MAS A/F SE-B1 (V)
Ignition switch ON (Engine stopped.)	Approx. 0.4
Idle (Engine is warmed-up to normal operating temperature.)	0.9 - 1.3
2,500 rpm (Engine is warmed-up to normal operating temperature.)	1.7 - 2.1
Idle to about 4,000 rpm	0.9 - 1.3 to Approx. 2.4*

*: Check for linear voltage rise in response to engine being increased to about 4,000 rpm.

4. If the voltage is out of specification, proceed the following.

a. Check for the cause of uneven air flow through mass air flow sensor. Refer to following.
- Crushed air ducts
- Malfunctioning seal of air cleaner element
- Uneven dirt of air cleaner element
- Improper specification of intake air system parts

b. If NG, repair or replace malfunctioning part and perform step 2 and 3 again.
If OK, go to next step.

5. Turn ignition switch OFF.
6. Disconnect mass air flow sensor harness connector and reconnect it again.
7. Perform step 2 and 3 again.
8. If NG, clean or replace mass air flow sensor. Refer to EM-25, "Removal and Installation".

P0102, P0103 MAF SENSOR

Component Description

INFOID:0000000011291677

The mass air flow sensor is placed in the stream of intake air. It measures the intake flow rate by measuring a part of the entire intake flow. The mass air flow sensor controls the temperature of the hot wire to a certain amount. The heat generated by the hot wire is reduced as the intake air flows around it. The more air, the greater the heat loss.
Therefore, the electric current supplied to the hot wire is changed to maintain the temperature of the hot wire as air flow increases. The ECM detects the air flow by means of this current change.

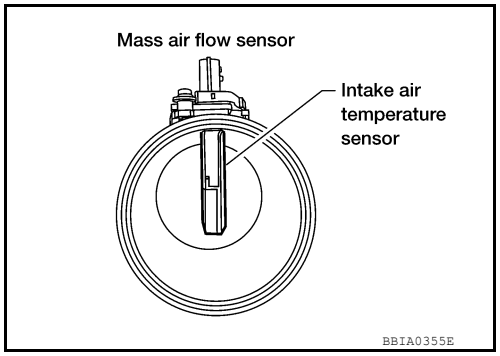

On Board Diagnosis Logic

INFOID:0000000011291678

These self-diagnoses have the one trip detection logic.

DTC No.	Trouble diagnosis name	DTC detecting condition	Possible cause
P0102 0102	Mass air flow sensor circuit low input	An excessively low voltage from the sensor is sent to ECM.	• Harness or connectors (The sensor circuit is open or shorted.) • Intake air leaks • Mass air flow sensor
P0103 0103	Mass air flow sensor circuit high input	An excessively high voltage from the sensor is sent to ECM.	• Harness or connectors (The sensor circuit is open or shorted.) • Mass air flow sensor

FAIL-SAFE MODE

When the malfunction is detected, the ECM enters fail-safe mode and the MIL lights up.

Detected items	Engine operating condition in fail-safe mode
Mass air flow sensor circuit	Engine speed will not rise more than 2,400 rpm due to the fuel cut.

DTC Confirmation Procedure

INFOID:0000000011291679

NOTE:
If DTC Confirmation Procedure has been previously conducted, always perform the following before conducting the next step.

1. Turn ignition switch OFF and wait at least 10 seconds.
2. Turn ignition switch ON.
3. Turn ignition switch OFF and wait at least 10 seconds.

PROCEDURE FOR DTC P0102

1. Start engine and wait at least 5 seconds.
2. Check DTC.
3. If DTC is detected, go to EC-178, "Diagnosis Procedure".

PROCEDURE FOR DTC P0103

1. Turn ignition switch ON.
2. Wait at least 5 seconds.
3. Check DTC.
4. If DTC is detected, go to EC-178, "Diagnosis Procedure".
   If DTC is not detected, go to next step.
5. Start engine and wait at least 5 seconds.
6. Check DTC.
7. If DTC is detected, go to EC-178, "Diagnosis Procedure".

Diagnosis Procedure

INFOID:0000000011291680

1. INSPECTION START

Which malfunction (P0102 or P0103) is duplicated?

P0102 or P0103

P0102 >> GO TO 2.
P0103 >> GO TO 3.

2. CHECK INTAKE SYSTEM

Check the following for connection.
- Air duct
- Vacuum hoses
- Intake air passage between air duct to intake manifold

OK or NG

OK >> GO TO 3.
NG >> Reconnect the parts.

3. RETIGHTEN GROUND SCREWS

1. Turn ignition switch OFF.
2. Loosen and retighten three ground screws on the body.
   Refer to EC-154, "Ground Inspection".

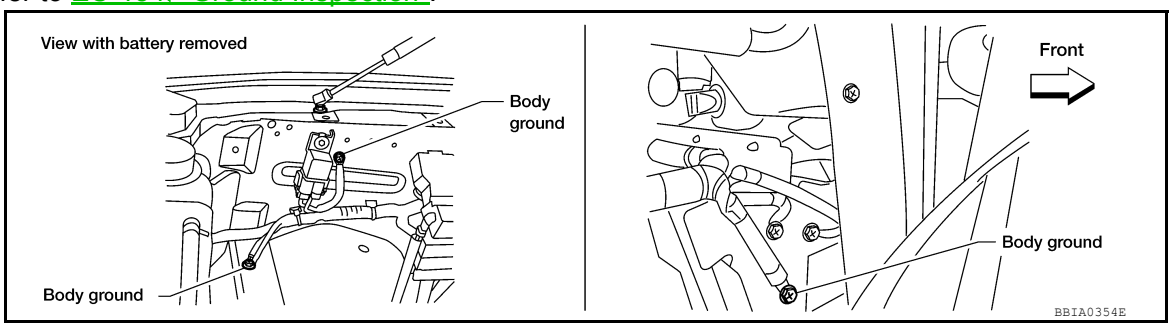

OK or NG

OK >> GO TO 4.
NG >> Repair or replace ground connections.

4. CHECK MAF SENSOR POWER SUPPLY CIRCUIT

1. Disconnect mass air flow (MAF) sensor harness connector.
2. Turn ignition switch ON.

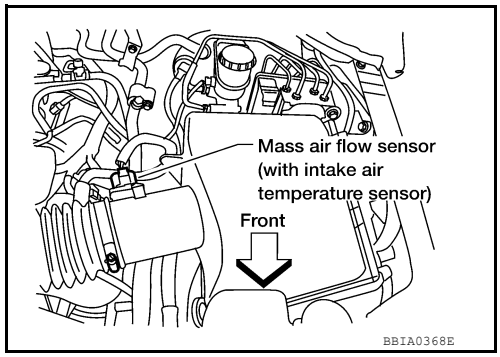

3. Check voltage between MAF sensor terminal 2 and ground with CONSULT or tester.

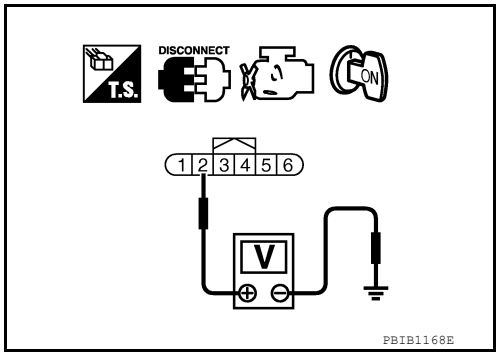

Voltage: Battery voltage

OK or NG

OK >> GO TO 6.
NG >> GO TO 5.

5. DETECT MALFUNCTIONING PART

Check the following.
- Harness connectors E2, F32
- Harness for open or short between IPDM E/R and mass air flow sensor
- Harness for open or short between mass air flow sensor and ECM

>> Repair harness or connectors.

6. CHECK MAF SENSOR GROUND CIRCUIT FOR OPEN AND SHORT

1. Turn ignition switch OFF.
2. Disconnect ECM harness connector.
3. Check harness continuity between MAF sensor terminal 3 and ECM terminal 67. Refer to Wiring Diagram.

Continuity should exist.

4. Also check harness for short to ground and short to power.

OK or NG

OK >> GO TO 7.
NG >> Repair open circuit or short to ground or short to power in harness or connectors.

7. CHECK MAF SENSOR INPUT SIGNAL CIRCUIT FOR OPEN AND SHORT

1. Check harness continuity between MAF sensor terminal 4 and ECM terminal 51. Refer to Wiring Diagram.

Continuity should exist.

2. Also check harness for short to ground and short to power.

OK or NG

OK >> GO TO 8.
NG >> Repair open circuit or short to ground or short to power in harness or connectors.

8. CHECK MASS AIR FLOW SENSOR

Refer to EC-179, "Component Inspection".

OK or NG

OK >> GO TO 9.
NG >> Replace mass air flow sensor. Refer to EM-25, "Removal and Installation".

9. CHECK INTERMITTENT INCIDENT

Refer to GI-40, "How to Check Terminal" and GI-43, "Intermittent Incident".

>> **INSPECTION END**

Component Inspection

INFOID:0000000011291681

MASS AIR FLOW SENSOR

With CONSULT

1. Reconnect all harness connectors disconnected.
2. Start engine and warm it up to normal operating temperature.
3. Connect CONSULT and select “DATA MONITOR” mode.
4. Select “MAS A/F SE-B1” and check indication under the following conditions.

Condition	MAS A/F SE-B1 (V)
Ignition switch ON (Engine stopped.)	Approx. 0.4
Idle (Engine is warmed-up to normal operating temperature.)	0.9 - 1.3
2,500 rpm (Engine is warmed-up to normal operating temperature.)	1.7 - 2.1
Idle to about 4,000 rpm	0.9 - 1.3 to Approx. 2.4*

*: Check for linear voltage rise in response to engine being increased to about 4,000 rpm.

5. If the voltage is out of specification, proceed the following.

a. Check for the cause of uneven air flow through mass air flow sensor. Refer to following.
   - Crushed air ducts
   - Malfunctioning seal of air cleaner element
   - Uneven dirt of air cleaner element
   - Improper specification of intake air system parts

b. If NG, repair or replace malfunctioning part and perform step 2 to 4 again.
   If OK, go to next step.

6. Turn ignition switch OFF.
7. Disconnect mass air flow sensor harness connector and reconnect it again.
8. Perform step 2 to 4 again.
9. If NG, clean or replace mass air flow sensor. Refer to EM-25, "Removal and Installation".

Without CONSULT

1. Reconnect all harness connectors disconnected.
2. Start engine and warm it up to normal operating temperature.
3. Check voltage between ECM terminal 51 (Mass air flow sensor signal) and ground.

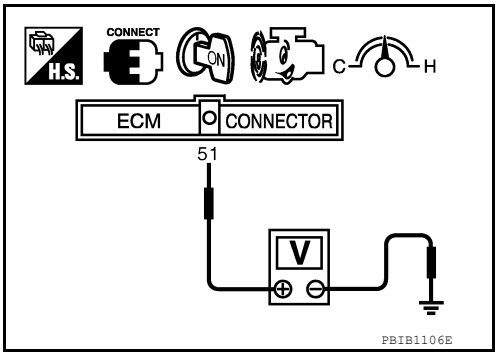

Condition	MAS A/F SE-B1 (V)
Ignition switch ON (Engine stopped.)	Approx. 0.4
Idle (Engine is warmed-up to normal operating temperature.)	0.9 - 1.3
2,500 rpm (Engine is warmed-up to normal operating temperature.)	1.7 - 2.1
Idle to about 4,000 rpm	0.9 - 1.3 to Approx. 2.4*

*: Check for linear voltage rise in response to engine being increased to about 4,000 rpm.

4. If the voltage is out of specification, proceed the following.

a. Check for the cause of uneven air flow through mass air flow sensor. Refer to following.
   - Crushed air ducts
   - Malfunctioning seal of air cleaner element
   - Uneven dirt of air cleaner element
   - Improper specification of intake air system parts

b. If NG, repair or replace malfunctioning part and perform step 2 and 3 again.
   If OK, go to next step.

5. Turn ignition switch OFF.
6. Disconnect mass air flow sensor harness connector and reconnect it again.
7. Perform step 2 and 3 again.

8. If NG, clean or replace mass air flow sensor. Refer to EM-25, "Removal and Installation".

P0111 IAT SENSOR

DTC Logic

INFOID:0000000011291682

DTC DETECTION LOGIC

DTC No.	Trouble diagnosis (Trouble diagnosis content)	DTC detecting condition	Possible cause
P0111	IAT SENSOR 1 B1 [Intake air temperature (IAT) sensor circuit range/performance]	The comparison result of signals transmitted to ECM from each temperature sensor (IAT sensor, ECT sensor, and FTT sensor) shows that the voltage signal of the IAT sensor is higher/lower than that of other temperature sensors when the engine is started with its cold state.	• Harness or connectors (High or low resistance in the IAT sensor circuit) • IAT sensor

DTC CONFIRMATION PROCEDURE

1.INSPECTION START

Is it necessary to erase permanent DTC?

YES >> GO TO 3.
NO >> GO TO 2.

2.PERFORM COMPONENT FUNCTION CHECK

Perform component function check. Refer to EC-183, "Component Function Check".

NOTE:
Use the component function check to check the overall function of the IAT sensor circut. During this check, a 1st trip DTC might not be confirmed.

Is the inspection result normal?

YES >> INSPECTION END
NO >> Proceed to EC-183, "Diagnosis Procedure".

3.PRECONDITIONING

If DTC CONFIRMATION PROCEDURE has been previously conducted, always perform the following procedure before conducting the next test.

1. Turn ignition switch OFF and wait at least 10 seconds.
2. Turn ignition switch ON.
3. Turn ignition switch OFF and wait at least 10 seconds.

TESTING CONDITION:

- **Before performing the following procedure, do not add fuel.**
- **Before performing the following procedure, check that fuel level is between 1/4 and 4/4.**
- **Before performing the following procedure, confirm that battery voltage is 11 V or more at idle.**

>> GO TO 4.

4.PERFORM DTC CONFIRMATION PROCEDURE

1. Start engine and let it idle for 60 minutes.
2. Move the vehicle to a cool place.
   NOTE:
   Cool the vehicle in an environment of ambient air temperature between –10°C (14°F) and 35°C (95°F).
3. Turn ignition switch OFF and soak the vehicle for 12 hours.
   CAUTION:
   Never turn ignition switch ON during soaking.
   NOTE:
   The vehicle must be cooled with the hood open.
4. Start engine and let it idle for 5 minutes or more.
   CAUTION:
   Never turn ignition switch OFF during idling.

5. Check 1st trip DTC.

Is 1st trip DTC detected?

YES >> Proceed to EC-183, "Diagnosis Procedure".
NO >> INSPECTION END

Component Function Check

INFOID:0000000011291683

1. CHECK INTAKE AIR TEMPERATURE (IAT) SENSOR

1. Turn ignition switch OFF.
2. Disconnect mass air flow sensorharness connector.
3. Check resistance between mass air flow sensorterminals as follows.

Terminals	Condition		Resistance (kΩ)
5 and 6	Temperature [°C (°F)]	25 (77)	1.800 – 2.200

Is the inspection result normal?

YES >> GO TO 2.
NO >> Proceed to EC-183, "Diagnosis Procedure".

2. CHECK INTERMITTENT INCIDENT

Check intermittent incident. Refer to GI-43, "Intermittent Incident".

Is the inspection result normal?

YES >> INSPECTION END
NO >> Proceed to EC-183, "Diagnosis Procedure".

Diagnosis Procedure

INFOID:0000000011291684

1. CHECK INTAKE AIR TEMPERATURE (IAT) SENSOR

Check intake air temperature sensor. Refer to EC-183, "Component Inspection".

Is the inspection result normal?

YES >> GO TO 2.
NO >> Replace mass air flow sensor (with intake air temperature sensor). Refer to EM-25, "Exploded View".

2. CHECK INTERMITTENT INCIDENT

Check intermittent incident. Refer to GI-43, "Intermittent Incident".

>> INSPECTION END

Component Inspection

INFOID:0000000011291685

1. CHECK INTAKE AIR TEMPERATURE (IAT) SENSOR

1. Turn ignition switch OFF.
2. Disconnect mass air flow sensor harness connector.
3. Check resistance between mass air flow sensorterminals as follows.

Terminals	Condition		Resistance (kΩ)
5 and 6	Temperature [°C (°F)]	25 (77)	1.800 – 2.200

Is the inspection result normal?

YES >> INSPECTION END
NO >> Replace mass air flow sensor (with intake air temperature sensor). Refer to EM-25, "Exploded View".

P0112, P0113 IAT SENSOR

Component Description

INFOID:0000000011291686

The intake air temperature sensor is built-into mass air flow sensor. The sensor detects intake air temperature and transmits a signal to the ECM.
The temperature sensing unit uses a thermistor which is sensitive to the change in temperature. Electrical resistance of the thermistor decreases in response to the temperature rise.

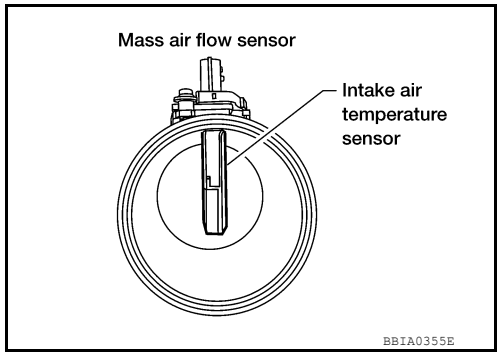

<Reference data>

Intake air temperature °C (°F)]	Voltage* (V)	Resistance (kΩ)
25 (77)	3.3	1.800 - 2.200
80 (176)	1.2	0.283 - 0.359

*: These data are reference values and are measured between ECM terminal 34 (Intake air temperature sensor) and ground.

CAUTION:
Do not use ECM ground terminals when measuring input/output voltage. Doing so may result in damage to the ECM's transistor. Use a ground other than ECM terminals, such as the ground.

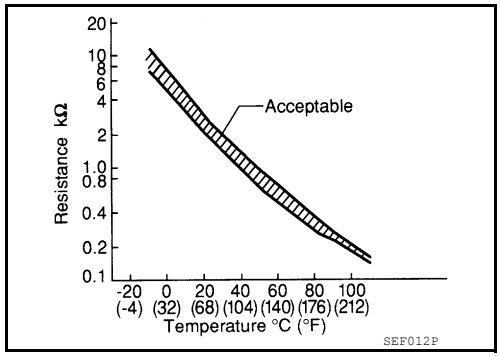

On Board Diagnosis Logic

INFOID:0000000011291687

DTC No.	Trouble diagnosis name	DTC detecting condition	Possible cause
P0112 0112	Intake air temperature sensor circuit low input	An excessively low voltage from the sensor is sent to ECM.	• Harness or connectors (The sensor circuit is open or shorted.) • Intake air temperature sensor
P0113 0113	Intake air temperature sensor circuit high input	An excessively high voltage from the sensor is sent to ECM.	

DTC Confirmation Procedure

INFOID:0000000011291688

1. If DTC Confirmation Procedure has been previously conducted, always perform the following before conducting the next step.
a. Turn ignition switch OFF and wait at least 10 seconds.
b. Turn ignition switch ON.
c. Turn ignition switch OFF and wait at least 10 seconds.
2. Turn ignition switch ON.
3. Wait at least 5 seconds.
4. Check 1st trip DTC.
5. If 1st trip DTC is detected, go to EC-184, "Diagnosis Procedure".

Diagnosis Procedure

INFOID:0000000011291689

1.CHECK GROUND CONNECTIONS

1. Turn ignition switch OFF.
2. Loosen and retighten three ground screws on the body.

Refer to EC-154, "Ground Inspection".

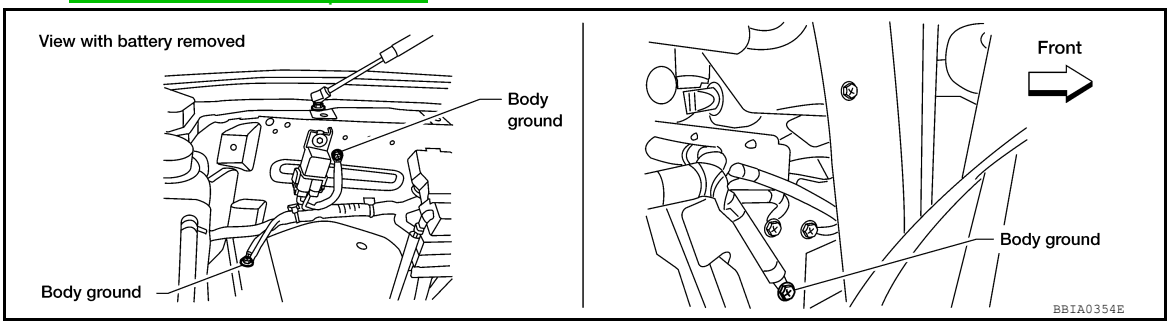

OK or NG

OK >> GO TO 2.
NG >> Repair or replace ground connections.

2. CHECK INTAKE AIR TEMPERATURE SENSOR POWER SUPPLY CIRCUIT

1. Disconnect mass air flow sensor (with intake air temperature sensor) harness connector.
2. Turn ignition switch ON.

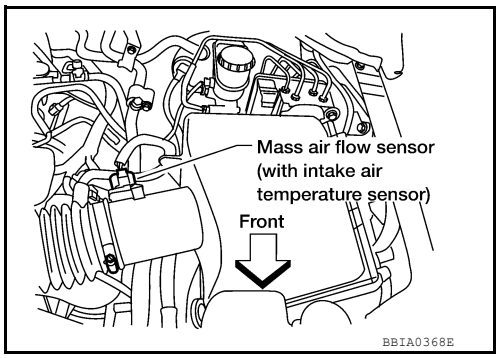

3. Check voltage between mass air flow sensor terminal 5 and ground.

Voltage: Approximately 5 V

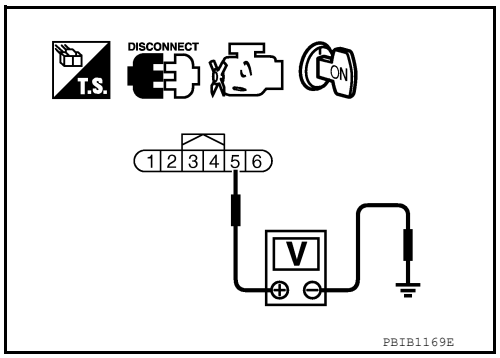

OK or NG

OK >> GO TO 3.
NG >> Repair harness or connectors.

3. CHECK INTAKE AIR TEMPERATURE SENSOR GROUND CIRCUIT FOR OPEN AND SHORT

1. Turn ignition switch OFF.
2. Disconnect ECM harness connector.
3. Check harness continuity between mass air flow sensor terminal 6 and ECM terminal 67. Refer to Wiring Diagram.

Continuity should exist.

4. Also check harness for short to ground and short to power.

OK or NG

OK >> GO TO 4.
NG >> Repair open circuit or short to ground or short to power in harness or connectors.

4. CHECK INTAKE AIR TEMPERATURE SENSOR

Refer to EC-186, "Component Inspection".

OK or NG

OK >> GO TO 5.
NG >> Replace mass air flow sensor (with intake air temperature sensor). Refer to EM-25, "Removal and Installation".

5. CHECK INTERMITTENT INCIDENT

Refer to GI-40, "How to Check Terminal" and GI-43, "Intermittent Incident".

>> **INSPECTION END**

Component Inspection

INFOID:0000000011291690

INTAKE AIR TEMPERATURE SENSOR

1. Check resistance between mass air flow sensor terminals 5 and 6 under the following conditions.

Intake air temperature °C (°F)]	Resistance (kΩ)
25 (77)	1.800 - 2.200

2. If NG, replace mass air flow sensor (with intake air temperature sensor). Refer to EM-25, "Removal and Installation".

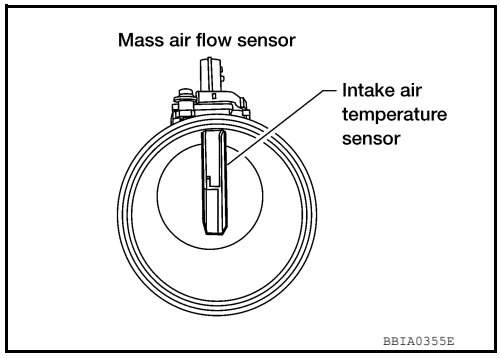

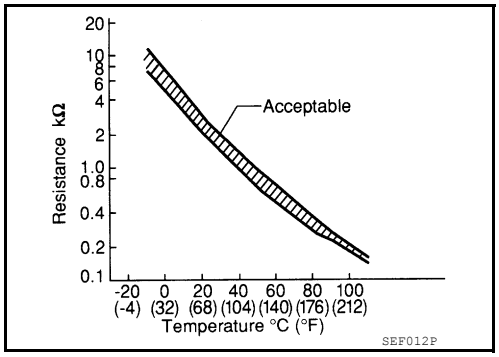

P0116 ECT SENSOR

Component Description

INFOID:0000000011291691

The engine coolant temperature sensor is used to detect the engine coolant temperature. The sensor modifies a voltage signal from the ECM. The modified signal returns to the ECM as the engine coolant temperature input. The sensor uses a thermistor which is sensitive to the change in temperature. The electrical resistance of the thermistor decreases as temperature increases.

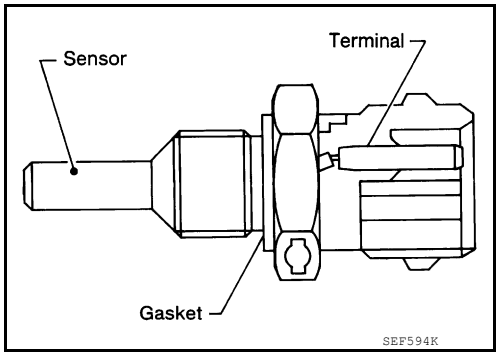

<Reference data>

Engine coolant temperature °C (°F)]	Voltage* (V)	Resistance (kΩ)
–10 (14)	4.4	7.0 - 11.4
20 (68)	3.5	2.1 - 2.9
50 (122)	2.2	0.68 - 1.00
90 (194)	0.9	0.236 - 0.260

*: This data is reference value and is measured between ECM terminal 73 (Engine coolant temperature sensor) and ground.

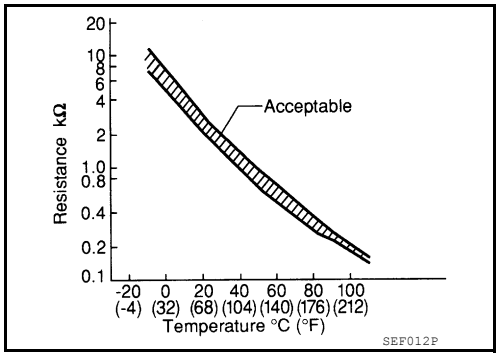

CAUTION:

Do not use ECM ground terminals when measuring input/output voltage. Doing so may result in damage to the ECM's transistor. Use a ground other than ECM terminals, such as the ground.

DTC Logic

INFOID:0000000011291692

DTC DETECTION LOGIC

DTC No.	Trouble diagnosis (Trouble diagnosis content)	DTC detecting condition	Possible cause
P0116	ECT SEN/CIRC [Engine coolant temperature (ECT) sensor circuit range/performance]	The comparison result of signals transmitted to ECM from each temperature sensor (IAT sensor, ECT sensor, and FTT sensor) shows that the voltage signal of the ECT sensor is higher/lower than that of other temperature sensors when the engine is started with its cold state.	• Harness or connectors (High or low resistance in the ECT sensor circuit) • ECT sensor

DTC CONFIRMATION PROCEDURE

1. INSPECTION START

Is it necessary to erase permanent DTC?

YES >> GO TO 3.
NO >> GO TO 2.

2. PERFORM COMPONENT FUNCTION CHECK

Perform component function check. Refer to EC-188, "Component Function Check".

NOTE:

Use the component function check to check the overall function of the ECT sensor circuit. During this check, a 1st trip DTC might not be confirmed.

Is the inspection result normal?

YES >> INSPECTION END
NO >> Proceed to EC-189, "Diagnosis Procedure".

3. PRECONDITIONING

If DTC CONFIRMATION PROCEDURE has been previously conducted, always perform the following procedure before conducting the next test.

1. Turn ignition switch OFF and wait at least 10 seconds.
2. Turn ignition switch ON.
3. Turn ignition switch OFF and wait at least 10 seconds.

TESTING CONDITION:

- **Before performing the following procedure, do not add fuel.**
- **Before performing the following procedure, check that fuel level is between 1/4 and 4/4.**
- **Before performing the following procedure, confirm that battery voltage is 11 V or more at idle.**

>> GO TO 4.

4. PERFORM DTC CONFIRMATION PROCEDURE

1. Start engine and let it idle for 60 minutes.
2. Move the vehicle to a cool place.
   NOTE:
   Cool the vehicle in an environment of ambient air temperature between –10°C (14°F) and 35°C (95°F).
3. Turn ignition switch OFF and soak the vehicle for 12 hours.
   CAUTION:
   Never turn ignition switch ON during soaking.
   NOTE:
   The vehicle must be cooled with the hood open.
4. Start engine and let it idle for 20 minutes or more.
   CAUTION:
   Never turn ignition switch OFF during idling.
5. Check 1st trip DTC.

Is 1st trip DTC detected?

YES >> Proceed to EC-189, "Diagnosis Procedure".
NO >> INSPECTION END

Component Function Check

INFOID:0000000011291693

1. CHECK ENGINE COOLANT TEMPERATURE (ECT) SENSOR

1. Turn ignition switch OFF.
2. Disconnect ECT sensor harness connector.
3. Remove ECT sensor. Refer to EM-77, "Exploded View".
4. Check resistance between ECT sensor terminals by heating with hot water as shown in the figure.

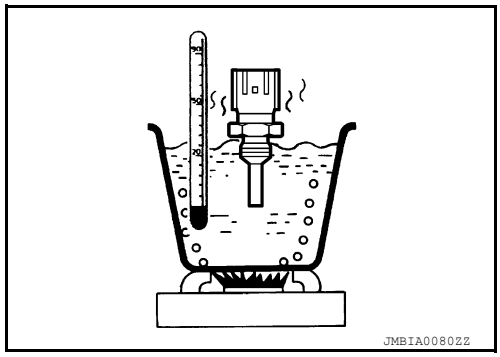

Terminals	Condition		Resistance (kΩ)
1 and 2	Temperature [°C (°F)]	20 (68)	2.1 – 2.9
		50 (122)	0.68 – 1.00
		90 (194)	0.236 – 0.260

Is the inspection result normal?

YES >> GO TO 2.
NO >> Proceed to EC-189, "Diagnosis Procedure".

2. CHECK INTERMITTENT INCIDENT

Check intermittent incident. Refer to GI-43, "Intermittent Incident".

Is the inspection result normal?

YES >> INSPECTION END
NO >> Proceed to EC-189, "Diagnosis Procedure".

Diagnosis Procedure

INFOID:0000000011291694

1. CHECK ENGINE COOLANT TEMPERATURE (ECT) SENSOR

Check ECT sensor. Refer to EC-189, "Component Inspection".

Is the inspection result normal?

YES >> GO TO 2.
NO >> Replace ECT sensor. Refer to EM-77, "Exploded View".

2. CHECK INTERMITTENT INCIDENT

Check intermittent incident. Refer to GI-43, "Intermittent Incident".

>> INSPECTION END

Component Inspection

INFOID:0000000011291695

1. CHECK ENGINE COOLANT TEMPERATURE (ECT) SENSOR

1. Turn ignition switch OFF.
2. Disconnect ECT sensor harness connector.
3. Remove ECT sensor. Refer to EM-77, "Exploded View".
4. Check resistance between ECT sensor terminals by heating with hot water as shown in the figure.

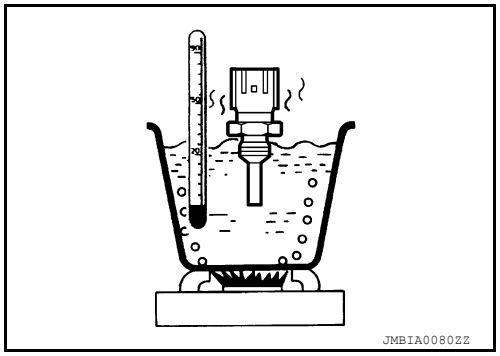

Terminals	Condition		Resistance (kΩ)
1 and 2	Temperature [°C (°F)]	20 (68)	2.1 – 2.9
		50 (122)	0.68 – 1.00
		90 (194)	0.236 – 0.260

Is the inspection result normal?

YES >> INSPECTION END
NO >> Replace ECT sensor. Refer to EM-77, "Exploded View".

P0117, P0118 ECT SENSOR

Component Description

INFOID:0000000011291696

The engine coolant temperature sensor is used to detect the engine coolant temperature. The sensor modifies a voltage signal from the ECM. The modified signal returns to the ECM as the engine coolant temperature input. The sensor uses a thermistor which is sensitive to the change in temperature. The electrical resistance of the thermistor decreases as temperature increases.

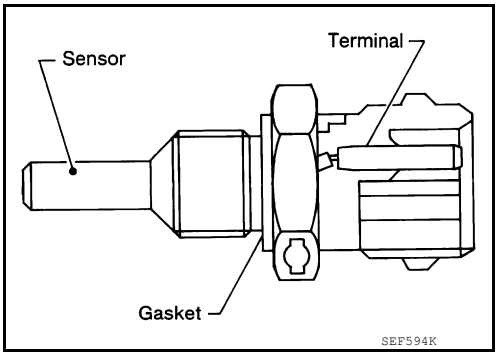

<Reference data>

Engine coolant temperature °C (°F)]	Voltage* (V)	Resistance (kΩ)
–10 (14)	4.4	7.0 - 11.4
20 (68)	3.5	2.1 - 2.9
50 (122)	2.2	0.68 - 1.00
90 (194)	0.9	0.236 - 0.260

*: These data are reference values and are measured between ECM terminal 73 (Engine coolant temperature sensor) and ground.

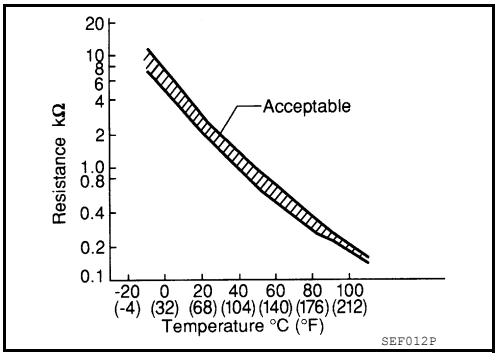

CAUTION:

Do not use ECM ground terminals when measuring input/output voltage. Doing so may result in damage to the ECM's transistor. Use a ground other than ECM terminals, such as the ground.

On Board Diagnosis Logic

INFOID:0000000011291697

These self-diagnoses have the one trip detection logic.

DTC No.	Trouble Diagnosis Name	DTC Detecting Condition	Possible Cause
P0117 0117	Engine coolant temperature sensor circuit low input	An excessively low voltage from the sensor is sent to ECM.	• Harness or connectors (The sensor circuit is open or shorted.) • Engine coolant temperature sensor
P0118 0118	Engine coolant temperature sensor circuit high input	An excessively high voltage from the sensor is sent to ECM.	

FAIL-SAFE MODE

When the malfunction is detected, the ECM enters fail-safe mode and the MIL lights up.

Detected items	Engine operating condition in fail-safe mode	
Engine coolant temperature sensor circuit	Engine coolant temperature will be determined by ECM based on the following condition. CONSULT displays the engine coolant temperature decided by ECM.	
	Condition	Engine coolant temperature decided (CONSULT display)
	Just as ignition switch is turned ON or START	40°C (104°F)
	Approx. 4 minutes or more after engine starting	80°C (176°F)
	Except as shown above	40 - 80°C (104 - 176°F) (Depends on the time)
	When the fail-safe system for engine coolant temperature sensor is activated, the cooling fan operates while engine is running.	

DTC Confirmation Procedure

INFOID:0000000011291698

1. If DTC Confirmation Procedure has been previously conducted, always perform the following before conducting the next step.

a. Turn ignition switch OFF and wait at least 10 seconds.
b. Turn ignition switch ON.
c. Turn ignition switch OFF and wait at least 10 seconds.

2. Turn ignition switch ON.
3. Wait at least 5 seconds.
4. Check DTC.
5. If DTC is detected, go to EC-191, "Diagnosis Procedure".

Diagnosis Procedure

INFOID:0000000011291699

1. CHECK GROUND CONNECTIONS

1. Turn ignition switch OFF.
2. Loosen and retighten three ground screws on the body.
   Refer to EC-154, "Ground Inspection".

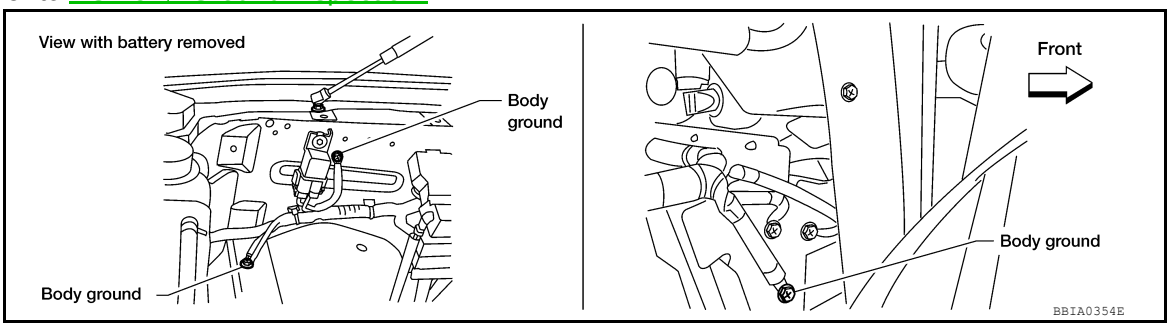

OK or NG

OK >> GO TO 2.
NG >> Repair or replace ground connections.

2. CHECK ECT SENSOR POWER SUPPLY CIRCUIT

1. Disconnect engine coolant temperature (ECT) sensor (1) harness connector.

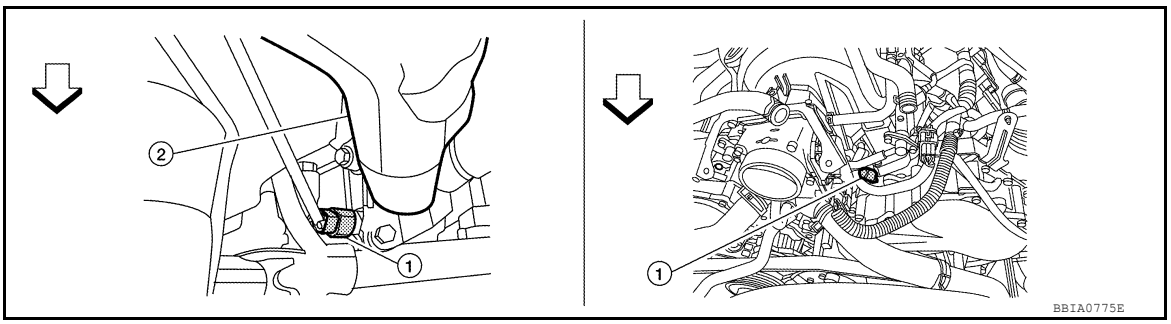

1. Engine coolant temperature (ETC) sensor
2. Intake manifold

2. Turn ignition switch ON.

3. Check voltage between ECT sensor (1) terminal 1 and ground with CONSULT or tester.

Voltage: Approximately 5 V

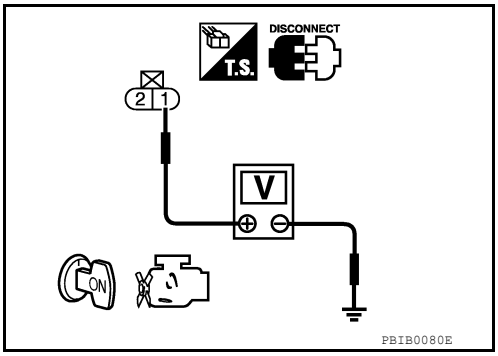

OK or NG

OK >> GO TO 4.
NG >> GO TO 3.

3. DETECT MALFUNCTIONING RART

Check the following.
- Harness connector F26, F201
- Harness for open or short between ECM and engine coolant temperature sensor

>> Repair open circuit or short to ground or short to power in harness or connectors.

4. CHECK ECT SENSOR GROUND CIRCUIT FOR OPEN AND SHORT

1. Turn ignition switch OFF.
2. Disconnect ECM harness connector.
3. Check harness continuity between ECT sensor terminal 2 and ECM terminal 67. Refer to Wiring Diagram.

Continuity should exist.

4. Also check harness for short to ground and short to power.

OK or NG

OK >> GO TO 6.
NG >> GO TO 5.

5. DETECT MALFUNCTIONING PART

Check the following.
- Harness connector F26, F201
- Harness for open and short between ECT sensor and ECM

>> Repair open circuit or short to ground or short to power in harness or connectors.

6. CHECK ENGINE COOLANT TEMPERATURE SENSOR

Refer to EC-192, "Component Inspection".

OK or NG

OK >> GO TO 7.
NG >> Replace engine coolant temperature sensor. Refer to CO-23, "Exploded View".

7. CHECK INTERMITTENT INCIDENT

Refer to GI-40, "How to Check Terminal" and GI-43, "Intermittent Incident".

>> **INSPECTION END**

Component Inspection

INFOID:0000000011291700

ENGINE COOLANT TEMPERATURE SENSOR

1. Check resistance between engine coolant temperature sensor terminals 1 and 2 as shown in the figure.

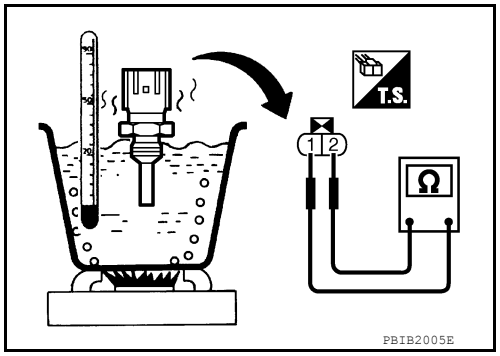

Engine coolant temperature °C (°F)]	Resistance (kΩ)
20 (68)	2.1 - 2.9
50 (122)	0.68 - 1.00
90 (194)	0.236 - 0.260

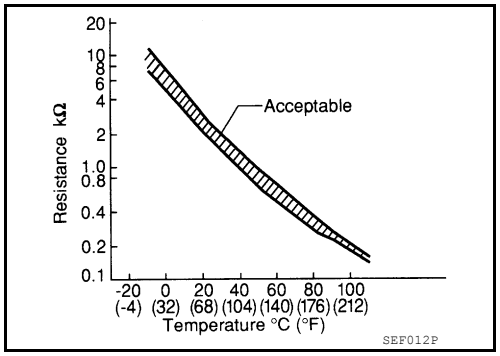

2. If NG, replace engine coolant temperature sensor. Refer to CO-23, "Exploded View".

P0122, P0123 TP SENSOR

Component Description

INFOID:0000000011291701

Electric throttle control actuator consists of throttle control motor, throttle position sensor, etc. The throttle position sensor responds to the throttle valve movement.
The throttle position sensor has the two sensors. These sensors are a kind of potentiometers which transform the throttle valve position into output voltage, and emit the voltage signal to the ECM. In addition, these sensors detect the opening and closing speed of the throttle valve and feed the voltage signals to the ECM. The ECM judges the current opening angle of the throttle valve from these signals and the ECM controls the throttle control motor to make the throttle valve opening angle properly in response to driving condition.

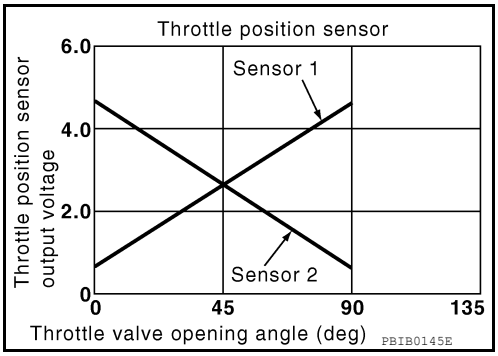

On Board Diagnosis Logic

INFOID:0000000011291702

These self-diagnoses have the one trip detection logic.

DTC No.	Trouble diagnosis name	DTC detecting condition	Possible cause
P0122 0122	Throttle position sensor 2 circuit low input	An excessively low voltage from the TP sensor 2 is sent to ECM.	• Harness or connectors (TP sensor 2 circuit is open or shorted.) (APP sensor 2 circuit is shorted.) • Electric throttle control actuator (TP sensor 2) • Accelerator pedal position sensor (APP sensor 2)
P0123 0123	Throttle position sensor 2 circuit high input	An excessively high voltage from the TP sensor 2 is sent to ECM.	

FAIL-SAFE MODE

When the malfunction is detected, ECM enters fail-safe mode and the MIL lights up.

Engine operation condition in fail-safe mode
The ECM controls the electric throttle control actuator in regulating the throttle opening in order for the idle position to be within +10 degrees. The ECM regulates the opening speed of the throttle valve to be slower than the normal condition. So, the acceleration will be poor.

DTC Confirmation Procedure

INFOID:0000000011291703

NOTE:
If DTC Confirmation Procedure has been previously conducted, always perform the following before conducting the next step.

1. Turn ignition switch OFF and wait at least 10 seconds.
2. Turn ignition switch ON.
3. Turn ignition switch OFF and wait at least 10 seconds.

TESTING CONDITION:
Before performing the following procedure, confirm that battery voltage is more than 8 V at idle.

1. Start engine and let it idle for 1 second.
2. Check DTC.
3. If DTC is detected, go to EC-194, "Diagnosis Procedure".

Diagnosis Procedure

INFOID:0000000011291704

1. CHECK GROUND CONNECTIONS

1. Turn ignition switch OFF.
2. Loosen and retighten three ground screws on the body.

Refer to EC-154, "Ground Inspection".

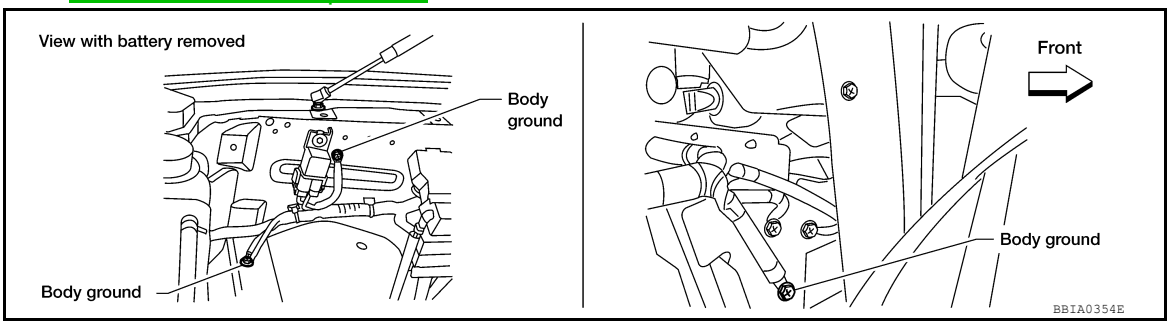

OK or NG

OK >> GO TO 2.
NG >> Repair or replace ground connections.

2. CHECK THROTTLE POSITION SENSOR 2 POWER SUPPLY CIRCUIT-I

1. Disconnect electric throttle control actuator harness connector.
2. Turn ignition switch ON.

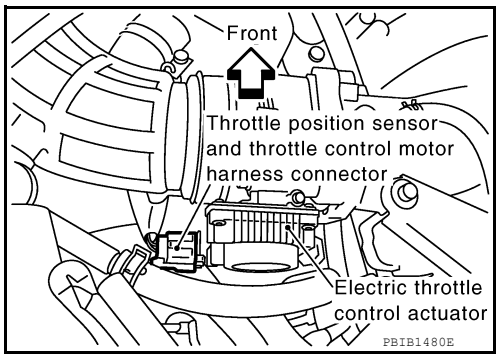

3. Check voltage between electric throttle control actuator terminal 2 and ground with CONSULT or tester.

Voltage: Approximately 5 V

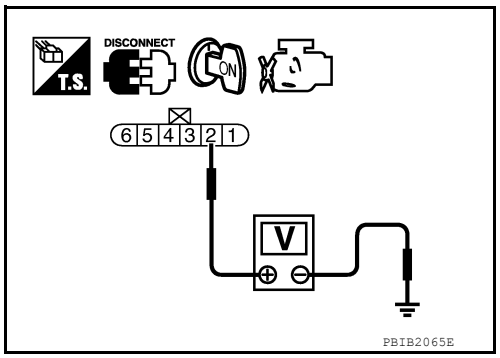

OK or NG

OK >> GO TO 7.
NG >> GO TO 3.

3. CHECK THROTTLE POSITION SENSOR 2 POWER SUPPLY CIRCUIT-II

1. Turn ignition switch OFF.
2. Disconnect ECM harness connector.
3. Check harness continuity between electric throttle control actuator terminal 2 and ECM terminal 47. Refer to Wiring Diagram.

Continuity should exist.

OK or NG

OK >> GO TO 4.
NG >> Repair open circuit.

4. CHECK THROTTLE POSITION SENSOR 2 POWER SUPPLY CIRCUIT-III

Check harness for short to power and short to ground, between the following terminals.

ECM terminal	Sensor terminal	Reference Wiring Diagram
47	Electric throttle control actuator terminal 2	EC-89, "Wiring Diagram"
91	APP sensor terminal 6	

OK or NG

OK >> GO TO 5.
NG >> Repair short to ground or short to power in harness or connectors.

5. CHECK ACCELERATOR PEDAL POSITION SENSOR

Refer to EC-461, "Component Inspection".

OK or NG

OK >> GO TO 11.
NG >> GO TO 6.

6. REPLACE ACCELERATOR PEDAL ASSEMBLY

1. Replace the accelerator pedal assembly. Refer to ACC-4, "Removal and Installation".
2. Perform EC-128, "Accelerator Pedal Released Position Learning".
3. Perform EC-128, "Throttle Valve Closed Position Learning".
4. Perform EC-129, "Idle Air Volume Learning".

>> **INSPECTION END**

7. CHECK THROTTLE POSITION SENSOR 2 GROUND CIRCUIT FOR OPEN AND SHORT

1. Turn ignition switch OFF.
2. Disconnect ECM harness connector.
3. Check harness continuity between electric throttle control actuator terminal 4 and ECM terminal 66. Refer to Wiring Diagram.

Continuity should exist.

4. Also check harness for short to ground and short to power.

OK or NG

OK >> GO TO 8.
NG >> Repair open circuit or short to ground or short to power in harness or connectors.

8. CHECK THROTTLE POSITION SENSOR 2 INPUT SIGNAL CIRCUIT FOR OPEN AND SHORT

1. Check harness continuity between ECM terminal 69 and electric throttle control actuator terminal 3. Refer to Wiring Diagram.

Continuity should exist.

2. Also check harness for short to ground and short to power.

OK or NG

OK >> GO TO 9.
NG >> Repair open circuit or short to ground or short to power in harness or connectors.

9. CHECK THROTTLE POSITION SENSOR

Refer to EC-197, "Component Inspection".

OK or NG

OK >> GO TO 11.
NG >> GO TO 10.

10. REPLACE ELECTRIC THROTTLE CONTROL ACTUATOR

1. Replace the electric throttle control actuator. Refer to EM-26, "Removal and Installation".
2. Perform EC-128, "Throttle Valve Closed Position Learning".
3. Perform EC-129, "Idle Air Volume Learning".

>> **INSPECTION END**

11. CHECK INTERMITTENT INCIDENT

Refer to GI-40, "How to Check Terminal" and GI-43, "Intermittent Incident".

>> **INSPECTION END**

Component Inspection

INFOID:0000000011291705

THROTTLE POSITION SENSOR

1. Reconnect all harness connectors disconnected.
2. Perform EC-128, "Throttle Valve Closed Position Learning".
3. Turn ignition switch ON
4. Set selector lever to D position.
5. Check voltage between ECM terminals 50 (TP sensor 1 signal), 69 (TP sensor 2 signal) and ground under the following conditions.

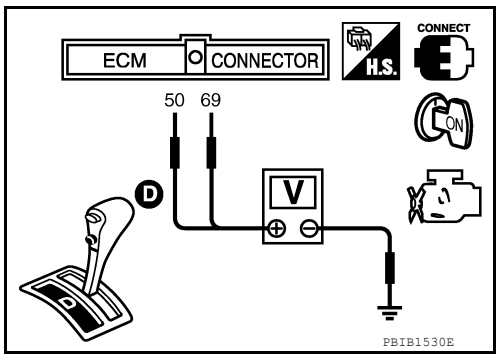

Terminal	Accelerator pedal	Voltage
50 (Throttle position sensor 1)	Fully released	More than 0.36 V
	Fully depressed	Less than 4.75 V
69 (Throttle position sensor 2)	Fully released	Less than 4.75 V
	Fully depressed	More than 0.36 V

6. If NG, replace electric throttle control actuator and go to the next step. Refer to EM-26, "Removal and Installation".
7. Perform EC-128, "Throttle Valve Closed Position Learning".
8. Perform EC-129, "Idle Air Volume Learning".

P0125 ECT SENSOR

Component Description

INFOID:0000000011291706

The engine coolant temperature sensor is used to detect the engine coolant temperature. The sensor modifies a voltage signal from the ECM. The modified signal returns to the ECM as the engine coolant temperature input. The sensor uses a thermistor which is sensitive to the change in temperature. The electrical resistance of the thermistor decreases as temperature increases.

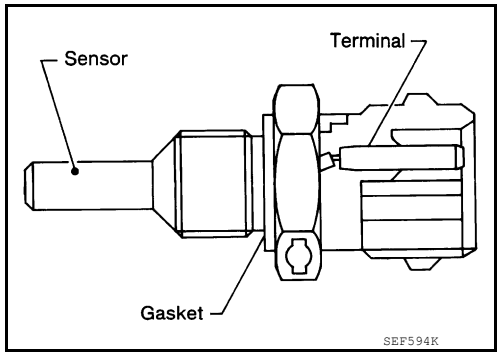

<Reference data>

Engine coolant temperature °C (°F)]	Voltage* (V)	Resistance (kΩ)
–10 (14)	4.4	7.0 - 11.4
20 (68)	3.5	2.1 - 2.9
50 (122)	2.2	0.68 - 1.00
90 (194)	0.9	0.236 - 0.260

*: These data are reference values and are measured between ECM terminal 73 (Engine coolant temperature sensor) and ground.

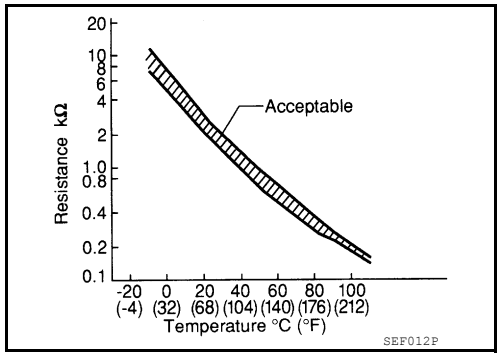

CAUTION:
Do not use ECM ground terminals when measuring input/output voltage. Doing so may result in damage to the ECM's transistor. Use a ground other than ECM terminals, such as the ground.

On Board Diagnosis Logic

INFOID:0000000011291707

NOTE:
- **If DTC P0125 is displayed with P0116, first perform the trouble diagnosis for DTC P0116. Refer to EC-187, "DTC Logic".**
- **If DTC P0125 is displayed with P0117 or P0118, first perform the trouble diagnosis for DTC P0117, P0118. Refer to EC-191, "DTC Confirmation Procedure".**

DTC No.	Trouble diagnosis name	DTC detecting condition	Possible cause
P0125 0125	Insufficient engine coolant temperature for closed loop fuel control	• Voltage sent to ECM from the sensor is not practical, even when some time has passed after starting the engine. • Engine coolant temperature is insufficient for closed loop fuel control.	• Harness or connectors (High resistance in the circuit) • Engine coolant temperature sensor • Thermostat

DTC Confirmation Procedure

INFOID:0000000011291708

CAUTION:
Be careful not to overheat engine.
NOTE:
If DTC Confirmation Procedure has been previously conducted, always perform the following before conducting the next step.
1. Turn ignition switch OFF and wait at least 10 seconds.
2. Turn ignition switch ON.
3. Turn ignition switch OFF and wait at least 10 seconds.

WITH CONSULT

1. Turn ignition switch ON.

2. Select “DATA MONITOR” mode with CONSULT.
3. Check that “COOLAN TEMP/S” is above 31°C (88°F).
   If it is above 31°C (88°F), the test result will be OK.
   If it is below 31°C (88°F), go to following step.
4. Start engine and run it for 65 minutes at idle speed.
   If “COOLAN TEMP/S” increases to more than 31°C (88°F) within 65 minutes, stop engine because the test result will be OK.
5. Check 1st trip DTC.
6. If 1st trip DTC is detected, go to EC-199, "Diagnosis Procedure".

WITH GST
Follow the procedure “WITH CONSULT” above.

Diagnosis Procedure

INFOID:0000000011291709

1. CHECK GROUND CONNECTIONS

1. Turn ignition switch OFF.
2. Loosen and retighten three ground screws on the body.
   Refer to EC-154, "Ground Inspection".

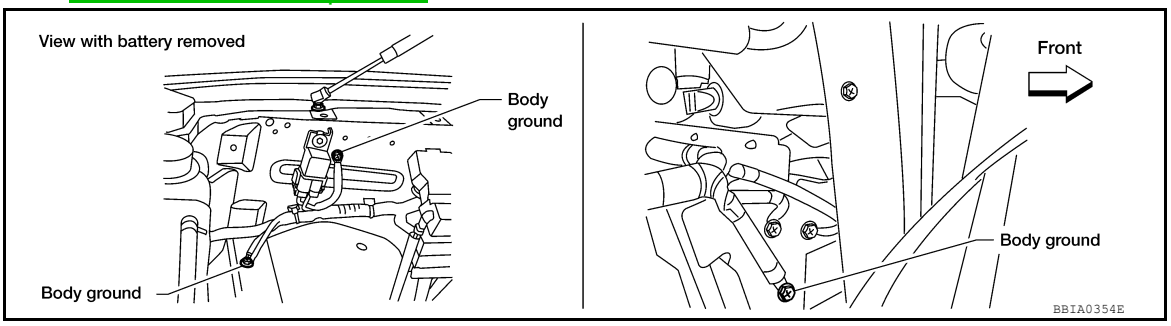

OK or NG

OK >> GO TO 2.
NG >> Repair or replace ground connections.

2. CHECK ENGINE COOLANT TEMPERATURE SENSOR

Refer to EC-199, "Component Inspection".

OK or NG

OK >> GO TO 3.
NG >> Replace engine coolant temperature sensor. Refer to CO-23, "Exploded View".

3. CHECK THERMOSTAT OPERATION

When the engine is cold [lower than 70°C (158°F)] condition, grasp lower radiator hose and confirm the engine coolant does not flow.

OK or NG

OK >> GO TO 4.
NG >> Repair or replace thermostat. Refer to CO-23, "Removal and Installation".

4. CHECK INTERMITTENT INCIDENT

Refer to GI-40, "How to Check Terminal" and GI-43, "Intermittent Incident".
For Wiring Diagram, refer to EC-89, "Wiring Diagram".

>> **INSPECTION END**

Component Inspection

INFOID:0000000011291710

ENGINE COOLANT TEMPERATURE SENSOR

1. Check resistance between engine coolant temperature sensor terminals 1 and 2 as shown in the figure.

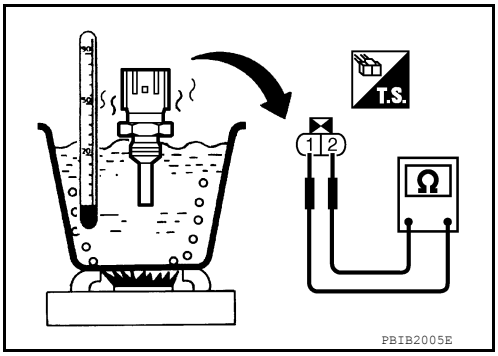

Engine coolant temperature °C (°F)]	Resistance (kΩ)
20 (68)	2.1 - 2.9
50 (122)	0.68 - 1.00
90 (194)	0.236 - 0.260

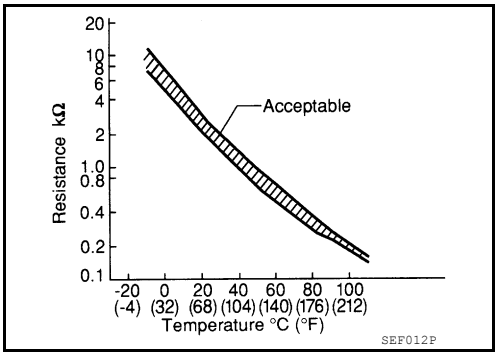

2. If NG, replace engine coolant temperature sensor. Refer to CO-23, "Exploded View".

P0127 IAT SENSOR

Component Description

INFOID:0000000011291711

The intake air temperature sensor is built into mass air flow sensor. The sensor detects intake air temperature and transmits a signal to the ECM.
The temperature sensing unit uses a thermistor which is sensitive to the change in temperature. Electrical resistance of the thermistor decreases in response to the temperature rise.

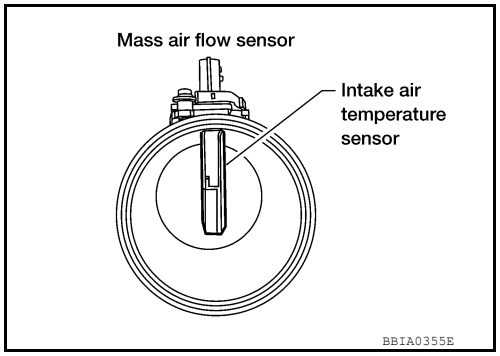

<Reference data>

Intake air temperature °C (°F)]	Voltage* (V)	Resistance (kΩ)
25 (77)	3.3	1.800 - 2.200
80 (176)	1.2	0.283 - 0.359

*: These data are reference values and are measured between ECM terminal 34 (Intake air temperature sensor) and ground.

CAUTION:
Do not use ECM ground terminals when measuring input/output voltage. Doing so may result in damage to the ECM's transistor. Use a ground other than ECM terminals, such as the ground.

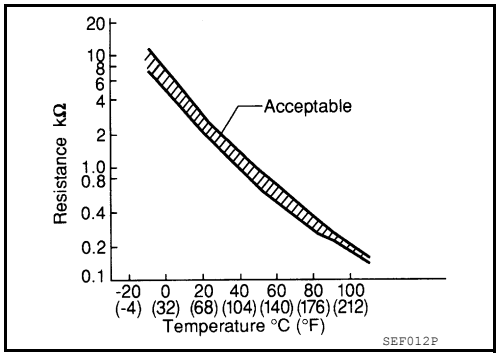

On Board Diagnosis Logic

INFOID:0000000011291712

DTC No.	Trouble diagnosis name	DTC detecting condition	Possible cause
P0127 0127	Intake air temperature too high	Rationally incorrect voltage from the sensor is sent to ECM, compared with the voltage signal from engine coolant temperature sensor.	• Harness or connectors (The sensor circuit is open or shorted) • Intake air temperature sensor

DTC Confirmation Procedure

INFOID:0000000011291713

NOTE:
If DTC Confirmation Procedure has been previously conducted, always perform the following before conducting the next step.
1. Turn ignition switch OFF and wait at least 10 seconds.
2. Turn ignition switch ON.
3. Turn ignition switch OFF and wait at least 10 seconds.

CAUTION:
Always drive vehicle at a safe speed.
TESTING CONDITION:
This test may be conducted with the drive wheels lifted in the shop or by driving the vehicle. If a road test is expected to be easier, it is unnecessary to lift the vehicle.

WITH CONSULT

1. Wait until engine coolant temperature is less than 90°C (194°F)

a. Turn ignition switch ON.
b. Select “DATA MONITOR” mode with CONSULT.
c. Check the engine coolant temperature.

d. If the engine coolant temperature is not less than 90°C (194°F), turn ignition switch OFF and cool down engine.
   • Perform the following steps before engine coolant temperature is above 90°C (194°F).
2. Turn ignition switch ON.
3. Select “DATA MONITOR” mode with CONSULT.
4. Start engine.
5. Hold vehicle speed at more than 70 km/h (43 MPH) for 100 consecutive seconds.
6. Check 1st trip DTC.
7. If 1st trip DTC is detected, go to EC-202, "Diagnosis Procedure".

WITH GST
Follow the procedure “WITH CONSULT” above.

Diagnosis Procedure

INFOID:0000000011291714

1. CHECK GROUND CONNECTIONS

1. Turn ignition switch OFF.
2. Loosen and retighten three ground screws on the body.
   Refer to EC-154, "Ground Inspection".

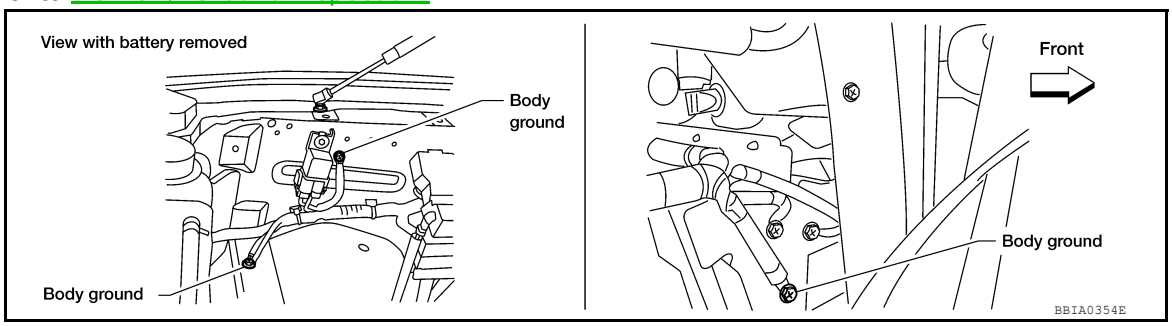

OK or NG

OK >> GO TO 2.
NG >> Repair or replace ground connections.

2. CHECK INTAKE AIR TEMPERATURE SENSOR

Refer to EC-202, "Component Inspection".

OK or NG

OK >> GO TO 3.
NG >> Replace mass air flow sensor (with intake air temperature sensor). Refer to EM-25, "Removal and Installation".

3. CHECK INTERMITTENT INCIDENT

Refer to GI-40, "How to Check Terminal" and GI-43, "Intermittent Incident".
For Wiring Diagram, refer to EC-89, "Wiring Diagram".

>> **INSPECTION END**

Component Inspection

INFOID:0000000011291715

INTAKE AIR TEMPERATURE SENSOR

1. Check resistance between intake air temperature sensor terminals 5 and 6 under the following conditions.

Intake air temperature °C (°F)]	Resistance (kΩ)
25 (77)	1.800 - 2.200

2. If NG, replace mass air flow sensor (with intake air temperature sensor). Refer to EM-25, "Removal and Installation".

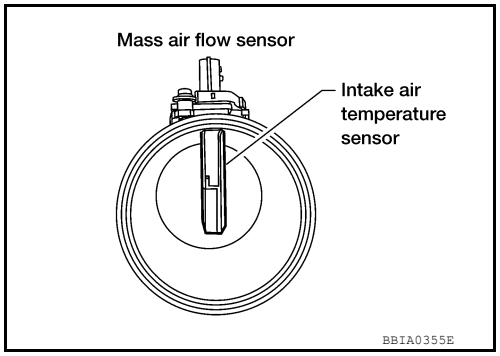

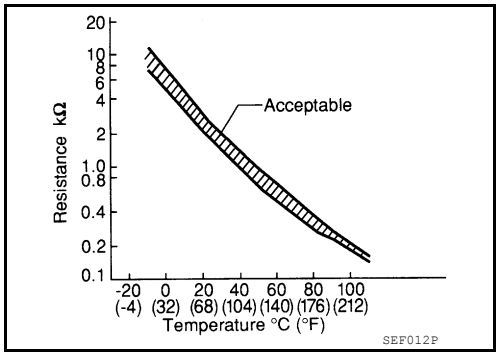

P0128 THERMOSTAT FUNCTION

On Board Diagnosis Logic

INFOID:0000000011291716

NOTE:
If DTC P0128 is displayed with DTC P0300, P0301, P0302, P0303, P0304, P0305, P0306, P0307 or P0308, first perform the trouble diagnosis for DTC P0300, P0301, P0302, P0303, P0304, P0305, P0306, P0307, P0308. Refer to EC-271, "DTC Confirmation Procedure".
Engine coolant temperature has not risen enough to open the thermostat even though the engine has run long enough.
This is due to a leak in the seal or the thermostat stuck open.

DTC No.	Trouble diagnosis name	DTC detecting condition	Possible cause
P0128 0128	Thermostat function	The engine coolant temperature does not reach to specified temperature even though the engine has run long enough.	• Thermostat • Leakage from sealing portion of thermostat • Engine coolant temperature sensor

DTC Confirmation Procedure

INFOID:0000000011291717

NOTE:
If DTC Confirmation Procedure has been previously conducted, always perform the following before conducting the next step.
1. Turn ignition switch OFF and wait at least 10 seconds.
2. Turn ignition switch ON.
3. Turn ignition switch OFF and wait at least 10 seconds.

WITH CONSULT
TESTING CONDITION:
- **For best results, perform at ambient temperature of –10°C (14°F) or higher.**
- **For best results, perform at engine coolant temperature of –10°C (14°F) to 56°C (133°F).**
- **Before performing the following procedure, do not fill with the fuel.**

1. Turn A/C switch OFF.
2. Turn blower fan switch OFF.
3. Turn ignition switch ON.
4. Select “COOLAN TEMP/S” in “DATA MONITOR” mode with CONSULT.
5. Check the indication of “COOLAN TEMP/S”.
   If it is below 56°C (133°F), go to following step.
   If it is above 56°C (133°F), cool down the engine to less than 56°C (133°F). Then go to next steps.
6. Start engine.
7. Drive vehicle for 10 consecutive minutes under the following conditions.

VHCL SPEED SE	More than 56 km/h (35 MPH)

   If “COOLAN TEMP/S” increases to more than 75°C (167°F) within 10 minutes, turn ignition switch OFF because the test result will be OK.
8. Check 1st trip DTC.
9. If 1st trip DTC is detected, go to EC-204, "Diagnosis Procedure".

WITH GST
Follow the procedure “WITH CONSULT” above.

Diagnosis Procedure

INFOID:0000000011291718

1. CHECK ENGINE COOLANT TEMPERATURE SENSOR

Refer to EC-205, "Component Inspection".

OK or NG

OK >> GO TO 2.
NG >> Replace engine coolant temperature sensor. Refer to CO-23, "Removal and Installation".

2. CHECK THERMOSTAT

Refer to CO-23, "Removal and Installation".

OK or NG

OK >> **INSPECTION END**
NG >> Replace thermostat. Refer to CO-23, "Removal and Installation".

Component Inspection

INFOID:0000000011291719

ENGINE COOLANT TEMPERATURE SENSOR

1. Check resistance between engine coolant temperature sensor terminals 1 and 2 as shown in the figure.

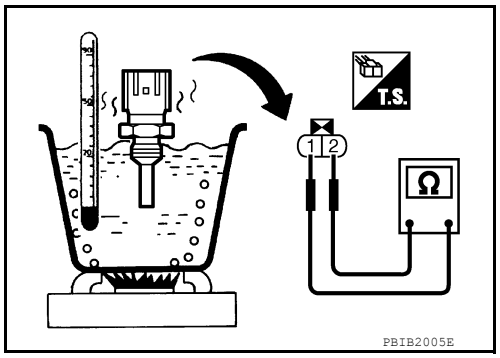

Engine coolant temperature °C (°F)]	Resistance (kΩ)
20 (68)	2.1 - 2.9
50 (122)	0.68 - 1.00
90 (194)	0.236 - 0.260

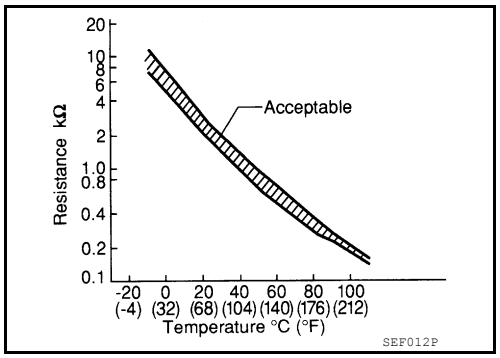

2. If NG, replace engine coolant temperature sensor. Refer to CO-23, "Removal and Installation".

P0130, P0150 A/F SENSOR 1

Component Description

INFOID:0000000011291720

The air fuel ratio (A/F) sensor 1 is a planar one-cell limit current sensor. The sensor element of the A/F sensor 1 is composed an electrode layer, which transports ions. It has a heater in the element.
The sensor is capable of precise measurement λ = 1, but also in the lean and rich range. Together with its control electronics, the sensor outputs a clear, continuous signal throughout a wide λ range.
The exhaust gas components diffuse through the diffusion layer at the sensor cell. An electrode layer is applied voltage, and this current relative oxygen density in lean. Also this current relative hydrocarbon density in rich.
Therefore, the A/F sensor 1 is able to indicate air fuel ratio by this electrode layer of current. In addition, a heater is integrated in the sensor to ensure the required operating temperature of about 800°C (1,472°F).

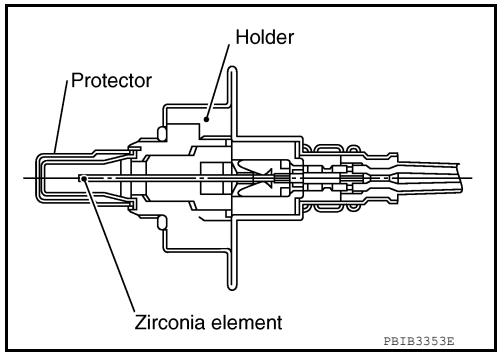

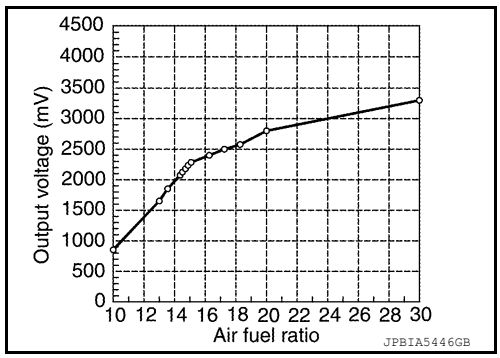

On Board Diagnosis Logic

INFOID:0000000011291721

To judge the malfunction, the diagnosis checks that the A/F signal computed by ECM from the A/F sensor 1 signal fluctuates according to fuel feedback control.

DTC No.	Trouble diagnosis name	DTC detecting condition		Possible Cause
P0130 0130 (Bank 1)	Air fuel ratio (A/F) sensor 1 circuit	A)	The A/F signal computed by ECM from the A/F sensor 1 signal is constantly in the range other than approx. 2.2 V.	• Harness or connectors (The A/F sensor 1 circuit is open or shorted.) • Air fuel ratio (A/F) sensor 1
P0150 0150 (Bank 2)		B)	The A/F signal computed by ECM from the A/F sensor 1 signal is constantly approx. 2.2 V.	

DTC Confirmation Procedure

INFOID:0000000011291722

Perform PROCEDURE FOR MALFUNCTION A first.
If the DTC cannot be confirmed, perform PROCEDURE FOR MALFUNCTION B.
NOTE:
If DTC Confirmation Procedure has been previously conducted, always perform the following before conducting the next step.

1. Turn ignition switch OFF and wait at least 10 seconds.
2. Turn ignition switch ON.
3. Turn ignition switch OFF and wait at least 10 seconds.

TESTING CONDITION:
Before performing the following procedure, confirm that battery voltage is more than 11 V at idle.

PROCEDURE FOR MALFUNCTION A

1. Start engine and warm it up to normal operating temperature.
2. Let engine idle for 2 minutes.
3. Check 1st trip DTC.
4. If 1st trip DTC is detected, go to EC-207, "Diagnosis Procedure".

PROCEDURE FOR MALFUNCTION B

CAUTION:
Always drive vehicle at a safe speed.

With CONSULT

1. Start engine and warm it up to normal operating temperature.
2. Select “A/F SEN1 (B1)” or “A/F SEN1 (B2)” in “DATA MONITOR” mode with CONSULT.
3. Check “A/F SEN1 (B1)” or “A/F SEN1 (B2)” indication.
   If the indication is constantly approx. 2.2 V and does not fluctuates, go to EC-207, "Diagnosis Procedure".
   If the indication fluctuates around 2.2 V, go to next step.
4. Select “A/F SEN1 (B1) P1276” (for DTC P0130) or “A/F SEN1 (B2) P1286” (for DTC P0150) of “A/F SEN1” in “DTC WORK SUPPORT” mode with CONSULT.
5. Touch “START”.
6. When the following conditions are met, “TESTING” will be displayed on the CONSULT screen.

ENG SPEED	850 - 3,200 rpm
VHCL SPEED SE	More than 64 km/h (40 MPH)
B/FUEL SCHDL	1.0 - 8.0 msec
Shift lever	D position

   If “TESTING” is not displayed after 20 seconds, retry from step 2.
7. Release accelerator pedal fully.
   NOTE:
   Never apply brake during releasing the accelerator pedal.
8. Make sure that “TESTING” changes to “COMPLETED”.
   If “TESTING” changed to “OUT OF CONDITION”, retry from step 6.
9. Make sure that “OK” is displayed after touching “SELF-DIAG RESULT”.
   If “NG” is displayed, go to EC-207, "Diagnosis Procedure".

Overall Function Check

INFOID:0000000011291723

PROCEDURE FOR MALFUNCTION B

Use this procedure to check the overall function of the A/F sensor 1 circuit. During this check, a 1st trip DTC might not be confirmed.

With GST

1. Start engine and warm it up to normal operating temperature.
2. Drive the vehicle at a speed of 80 km/h (50 MPH) for a few minutes in the suitable gear position.
3. Set shift lever to D position, then release the accelerator pedal fully until the vehicle speed decreases to 50 km/h (30 MPH).
   NOTE:
   Never apply brake during releasing the accelerator pedal.
4. Repeat steps 2 and 3 for five times.
5. Stop the vehicle and turn ignition switch OFF.
6. Wait at least 10 seconds and restart engine.
7. Repeat steps 2 and 3 for five times.
8. Stop the vehicle and connect GST to the vehicle.
9. Make sure that no 1st trip DTC is displayed.
   If the 1st trip DTC is displayed, go to EC-207, "Diagnosis Procedure".

Diagnosis Procedure

INFOID:0000000011291724

1. CHECK GROUND CONNECTIONS

1. Turn ignition switch OFF.
2. Loosen and retighten three ground screws on the body.

Refer to EC-154, "Ground Inspection".

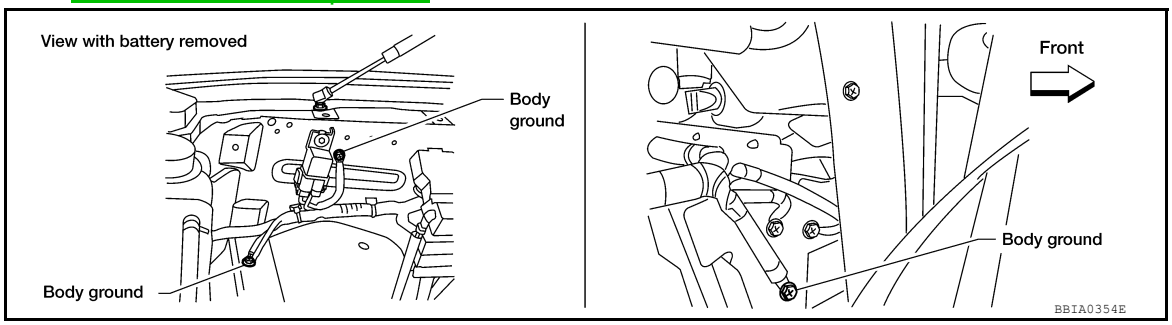

OK or NG

OK >> GO TO 2.
NG >> Repair or replace ground connections.

2. CHECK AIR FUEL RATIO (A/F) SENSOR 1 POWER SUPPLY CIRCUIT

1. Disconnect A/F sensor 1 harness connector.

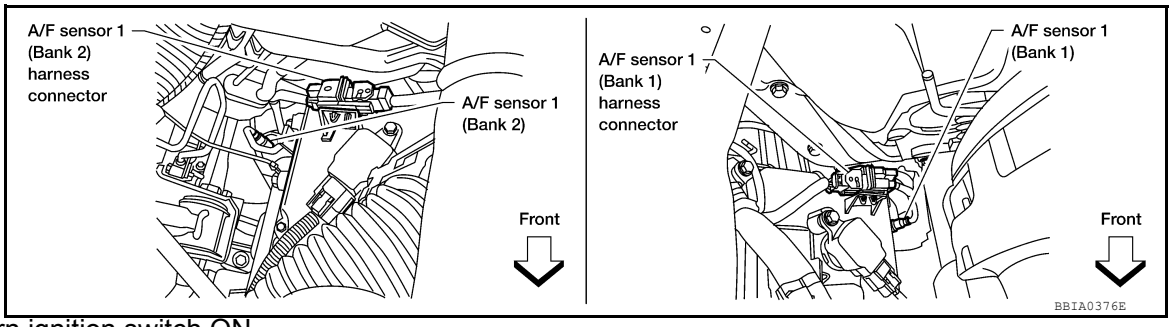

2. Turn ignition switch ON.

3. Check voltage between A/F sensor 1 terminal 4 and ground with CONSULT or tester.

Voltage: Battery voltage

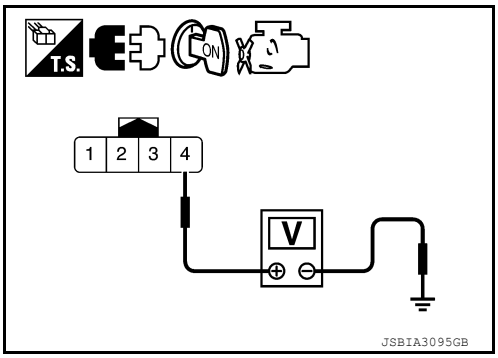

OK or NG

OK >> GO TO 4.
NG >> GO TO 3.

3. DETECT MALFUNCTIONING PART

Check the following.
- Harness connectors E5, F14
- IPDM E/R harness connector E119
- 15 A fuse (No. 54)
- Harness for open or short between A/F sensor 1 and fuse

>> Repair or replace harness or connectors.

4. CHECK A/F SENSOR 1 INPUT SIGNAL CIRCUIT FOR OPEN AND SHORT

1. Turn ignition switch OFF.
2. Disconnect ECM harness connector.
3. Check harness continuity between the following terminals. Refer to Wiring Diagram.

	A/F sensor 1 terminal	ECM terminal
Bank1	1	35
	2	56

Bank 2	1	16
	2	75

Continuity should exist.

4. Check harness continuity between the following terminals and ground.
Refer to Wiring Diagram.

Bank 1		Bank 2	
A/F sensor 1 terminal	ECM terminal	A/F sensor 1 terminal	ECM terminal
1	35	1	16
2	56	2	75

Continuity should not exist.

5. Also check harness for short to power.

OK or NG

OK >> GO TO 5.
NG >> Repair open circuit or short to ground or short to power in harness or connectors.

5. CHECK INTERMITTENT INCIDENT

Refer to GI-40, "How to Check Terminal" and GI-43, "Intermittent Incident".

OK or NG

OK >> GO TO 6.
NG >> Repair or replace.

6. REPLACE AIR FUEL RATIO (A/F) SENSOR 1

Replace malfunctioning air fuel ratio (A/F) sensor 1. Refer to EM-31.

CAUTION:

- **Discard any A/F sensor which has been dropped from a height of more than 0.5 m (1.6 ft) onto a hard surface such as a concrete floor; use a new one.**
- **Before installing new A/F sensor, clean exhaust system threads using Oxygen Sensor Thread Cleaner tool J-43897-18 or J-43897-12 and approved anti-seize lubricant.**

>> **INSPECTION END**

P0131, P0151 A/F SENSOR 1

Component Description

INFOID:0000000011291725

The air fuel ratio (A/F) sensor 1 is a planar one-cell limit current sensor. The sensor element of the A/F sensor 1 is composed an electrode layer, which transports ions. It has a heater in the element.
The sensor is capable of precise measurement λ = 1, but also in the lean and rich range. Together with its control electronics, the sensor outputs a clear, continuous signal throughout a wide λ range.
The exhaust gas components diffuse through the diffusion layer at the sensor cell. An electrode layer is applied voltage, and this current relative oxygen density in lean. Also this current relative hydrocarbon density in rich.
Therefore, the A/F sensor 1 is able to indicate air fuel ratio by this electrode layer of current. In addition, a heater is integrated in the sensor to ensure the required operating temperature of about 800°C (1,472°F).

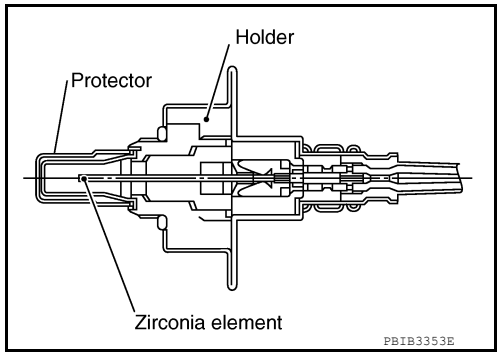

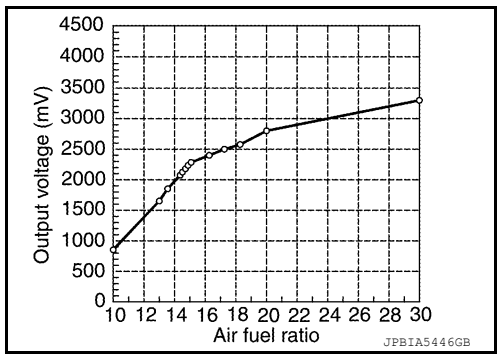

On Board Diagnosis Logic

INFOID:0000000011291726

To judge the malfunction, the diagnosis checks that the A/F signal computed by ECM from the A/F sensor 1 signal is not inordinately low.

DTC No.	Trouble diagnosis name	DTC detecting condition	Possible Cause
P0131 0131 (Bank 1)	Air fuel ratio (A/F) sensor 1 circuit low voltage	• The A/F signal computed by ECM from the A/F sensor 1 signal is constantly approx. 0 V.	• Harness or connectors (The A/F sensor 1 circuit is open or shorted.) • Air fuel ratio (A/F) sensor 1
P0151 0151 (Bank 2)			

DTC Confirmation Procedure

INFOID:0000000011291727

NOTE:
If DTC Confirmation Procedure has been previously conducted, always perform the following before conducting the next step.
1. Turn ignition switch OFF and wait at least 10 seconds.
2. Turn ignition switch ON.
3. Turn ignition switch OFF and wait at least 10 seconds.

TESTING CONDITION:
Before performing the following procedure, confirm that battery voltage is more than 10.5 V at idle.

WITH CONSULT

1. Start engine and warm it up to normal operating temperature.
2. Select “A/F SEN1 (B1)” or “A/F SEN1 (B2)” in “DATA MONITOR” mode with CONSULT.
3. Check “A/F SEN1 (B1)” or “A/F SEN1 (B2)” indication.
   If the indication is constantly approx. 0 V, go to EC-211, "Diagnosis Procedure".
   If the indication is not constantly approx. 0 V, go to next step.
4. Turn ignition switch OFF, wait at least 10 seconds and then restart engine.

5. Drive and accelerate vehicle to more than 40 km/h (25 MPH) within 20 seconds after restarting engine.
6. Maintain the following conditions for about 20 consecutive seconds.

ENG SPEED	1,000 - 3,200 rpm
VHCL SPEED SE	More than 40 km/h (25 MPH)
B/FUEL SCHDL	1.5 - 9.0 msec
Gear position	Suitable position

NOTE:
- **Keep the accelerator pedal as steady as possible during the cruising.**
- **If this procedure is not completed within 1 minute after restarting engine at step 4, return to step 4.**

7. Check 1st trip DTC.
8. If 1st trip DTC is displayed, go to EC-211, "Diagnosis Procedure".

WITH GST
Follow the procedure “WITH CONSULT” above.

Diagnosis Procedure

INFOID:0000000011291728

1. CHECK GROUND CONNECTIONS

1. Turn ignition switch OFF.
2. Loosen and retighten three ground screws on the body.
   Refer to EC-154, "Ground Inspection".

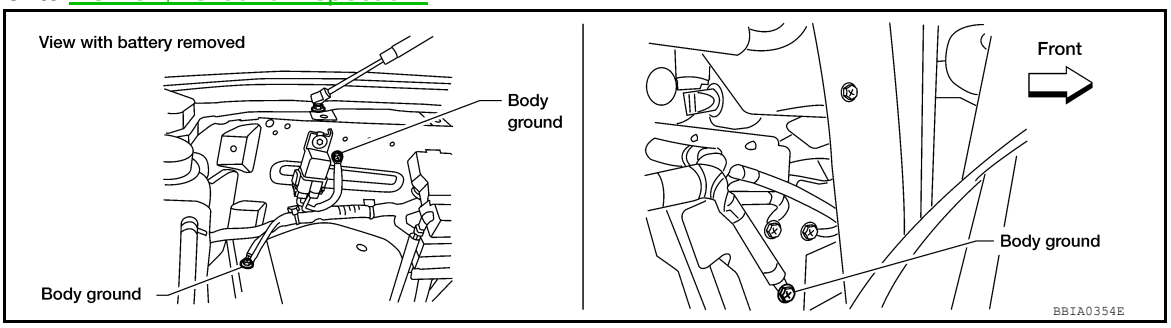

OK or NG

OK >> GO TO 2.
NG >> Repair or replace ground connections.

2. CHECK AIR FUEL RATIO (A/F) SENSOR 1 POWER SUPPLY CIRCUIT

1. Disconnect A/F sensor 1 harness connector.

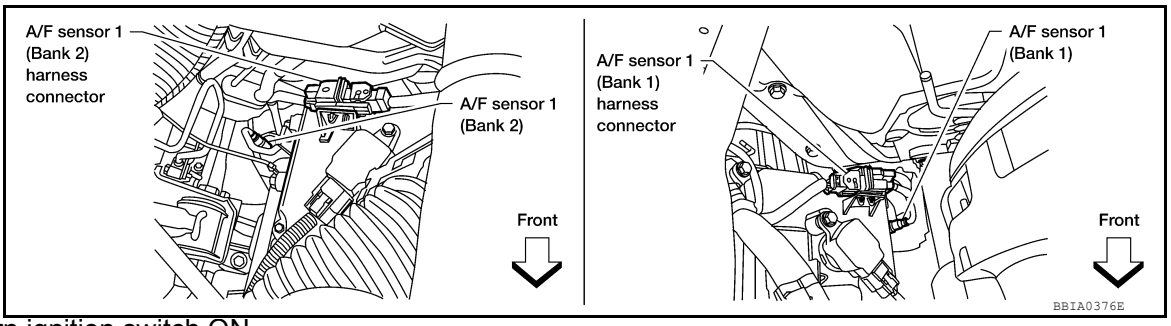

2. Turn ignition switch ON.

3. Check voltage between A/F sensor 1 terminal 4 and ground with CONSULT or tester.

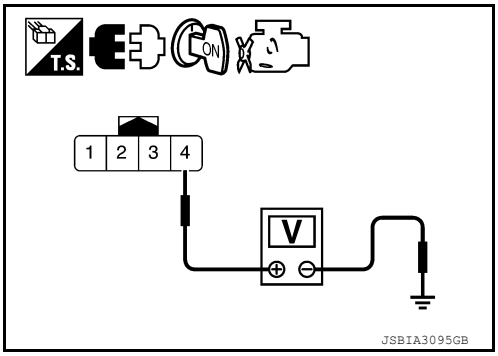

Voltage: Battery voltage

OK or NG

OK >> GO TO 4.
NG >> GO TO 3.

3. DETECT MALFUNCTIONING PART

Check the following.
- Harness connectors E5, F14
- IPDM E/R harness connector E119
- 15 A fuse (No. 54)
- Harness for open or short between A/F sensor 1 and fuse

>> Repair or replace harness or connectors.

4. CHECK A/F SENSOR 1 INPUT SIGNAL CIRCUIT FOR OPEN AND SHORT

1. Turn ignition switch OFF.
2. Disconnect ECM harness connector.
3. Check harness continuity between A/F sensor 1 terminal and ECM terminal as follows. Refer to Wiring Diagram.

	A/F sensor 1 terminal	ECM terminal
Bank1	1	35
	2	56
Bank 2	1	16
	2	75

Continuity should exist.

4. Check harness continuity between the following terminals and ground. Refer to Wiring Diagram.

Bank 1		Bank 2	
A/F sensor 1 terminal	ECM terminal	A/F sensor 1 terminal	ECM terminal
1	35	1	16
2	56	2	75

Continuity should not exist.

5. Also check harness for short to power.

OK or NG

OK >> GO TO 5.
NG >> Repair open circuit or short to ground or short to power in harness or connectors.

5. CHECK INTERMITTENT INCIDENT

Refer to GI-40, "How to Check Terminal" and GI-43, "Intermittent Incident".

OK or NG

OK >> GO TO 6.
NG >> Repair or replace.

6. REPLACE AIR FUEL RATIO (A/F) SENSOR 1

Replace malfunctioning air fuel ratio (A/F) sensor 1. Refer to EM-31.

CAUTION:

- **Discard any air fuel ratio (A/F) sensor which has been dropped from a height of more than 0.5 m (1.6 ft) onto a hard surface such as a concrete floor; use a new one.**
- **Before installing new air fuel ratio (A/F) sensor, clean exhaust system threads (using Oxygen Sensor Thread Cleaner tool J-43897-18 or J-43897-12) and approved anti-seize lubricant.**

>> **INSPECTION END**

P0132, P0152 A/F SENSOR 1

Component Description

INFOID:0000000011291729

The air fuel ratio (A/F) sensor 1 is a planar one-cell limit current sensor. The sensor element of the A/F sensor 1 is composed an electrode layer, which transports ions. It has a heater in the element.
The sensor is capable of precise measurement λ = 1, but also in the lean and rich range. Together with its control electronics, the sensor outputs a clear, continuous signal throughout a wide λ range.
The exhaust gas components diffuse through the diffusion layer at the sensor cell. An electrode layer is applied voltage, and this current relative oxygen density in lean. Also this current relative hydrocarbon density in rich.
Therefore, the A/F sensor 1 is able to indicate air fuel ratio by this electrode layer of current. In addition, a heater is integrated in the sensor to ensure the required operating temperature of about 800°C (1,472°F).

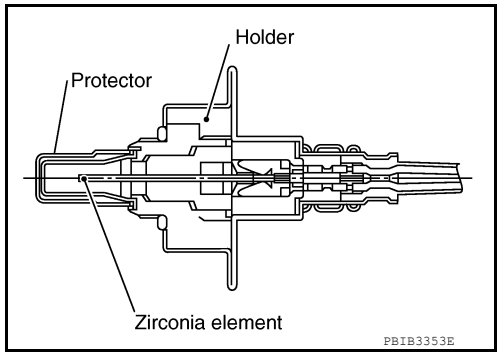

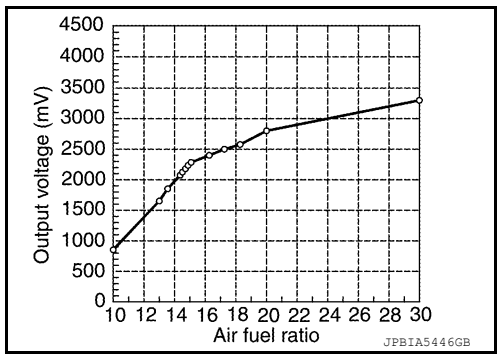

On Board Diagnosis Logic

INFOID:0000000011291730

To judge the malfunction, the diagnosis checks that the A/F signal computed by ECM from the A/F sensor 1 signal is not inordinately high.

DTC No.	Trouble diagnosis name	DTC detecting condition	Possible Cause
P0132 0132 (Bank 1)	Air fuel ratio (A/F) sensor 1 circuit high voltage	• The A/F signal computed by ECM from the A/F sensor 1 signal is constantly approx. 5 V.	• Harness or connectors (The A/F sensor 1 circuit is open or shorted.) • Air fuel ratio (A/F) sensor 1
P0152 0152 (Bank 2)			

DTC Confirmation Procedure

INFOID:0000000011291731

NOTE:
If DTC Confirmation Procedure has been previously conducted, always perform the following before conducting the next step.
1. Turn ignition switch OFF and wait at least 10 seconds.
2. Turn ignition switch ON.
3. Turn ignition switch OFF and wait at least 10 seconds.

TESTING CONDITION:
Before performing the following procedure, confirm that battery voltage is more than 10.5 V at idle.

WITH CONSULT

1. Start engine and warm it up to normal operating temperature.
2. Select “A/F SEN1 (B1)” or “A/F SEN1 (B2)” in “DATA MONITOR” mode with CONSULT.
3. Check “A/F SEN1 (B1)” or “A/F SEN1 (B2)” indication.
   If the indication is constantly approx. 5 V, go to EC-215, "Diagnosis Procedure".
   If the indication is not constantly approx. 5 V, go to next step.
4. Turn ignition switch OFF, wait at least 10 seconds and then restart engine.

5. Drive and accelerate vehicle to more than 40 km/h (25 MPH) within 20 seconds after restarting engine.
6. Maintain the following conditions for about 20 consecutive seconds.

ENG SPEED	1,000 - 3,200 rpm
VHCL SPEED SE	More than 40 km/h (25 MPH)
B/FUEL SCHDL	1.5 - 9.0 msec
Gear position	Suitable position

NOTE:
- **Keep the accelerator pedal as steady as possible during the cruising.**
- **If this procedure is not completed within 1 minute after restarting engine at step 4, return to step 4.**

7. Check 1st trip DTC.
8. If 1st trip DTC is displayed, go to EC-215, "Diagnosis Procedure".

WITH GST
Follow the procedure “WITH CONSULT” above.

Diagnosis Procedure

INFOID:0000000011291732

1. CHECK GROUND CONNECTIONS

1. Turn ignition switch OFF.
2. Loosen and retighten three ground screws on the body.
   Refer to EC-154, "Ground Inspection".

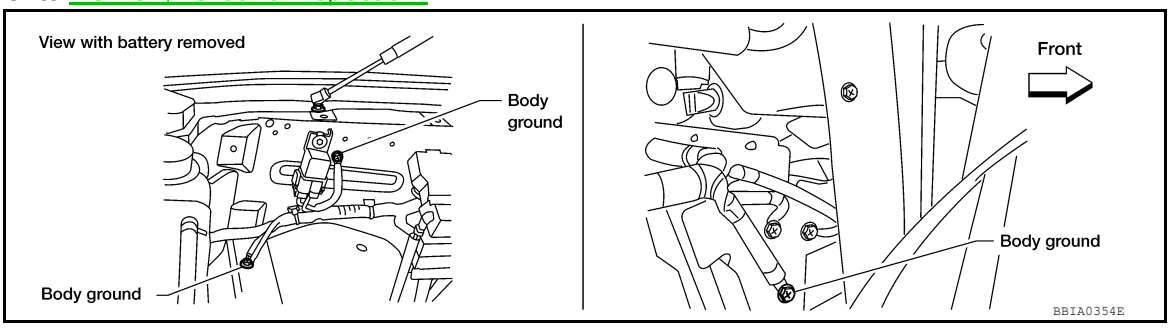

OK or NG

OK >> GO TO 2.
NG >> Repair or replace ground connections.

2. CHECK AIR FUEL RATIO (A/F) SENSOR 1 POWER SUPPLY CIRCUIT

1. Disconnect A/F sensor 1 harness connector.

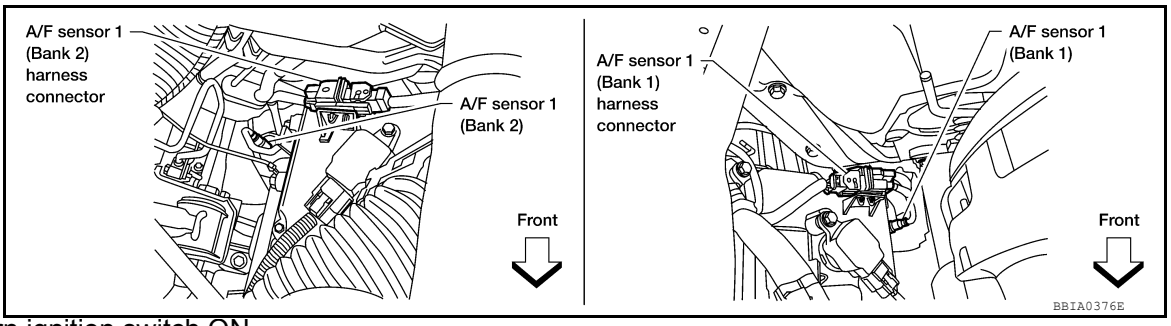

2. Turn ignition switch ON.

3. Check voltage between A/F sensor 1 terminal 4 and ground with CONSULT or tester.

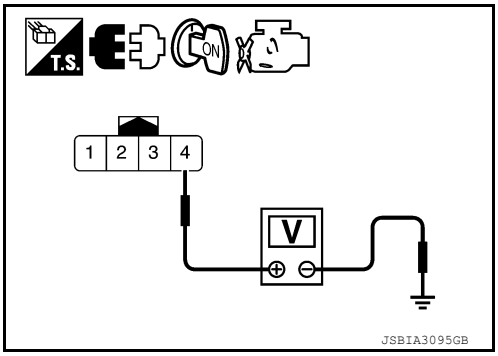

Voltage: Battery voltage

OK or NG

OK >> GO TO 4.
NG >> GO TO 3.

3. DETECT MALFUNCTIONING PART

Check the following.
- Harness connectors E5, F14
- IPDM E/R harness connector E119
- 15 A fuse (No. 54)
- Harness for open or short between A/F sensor 1 and fuse

>> Repair or replace harness or connectors.

4. CHECK A/F SENSOR 1 INPUT SIGNAL CIRCUIT FOR OPEN AND SHORT

1. Turn ignition switch OFF.
2. Disconnect ECM harness connector.
3. Check harness continuity between A/F sensor 1 terminal and ECM terminal as follows. Refer to Wiring Diagram.

	A/F sensor 1 terminal	ECM terminal
Bank1	1	35
	2	56
Bank 2	1	16
	2	75

Continuity should exist.

4. Check harness continuity between the following terminals and ground. Refer to Wiring Diagram.

Bank 1		Bank 2	
A/F sensor 1 terminal	ECM terminal	A/F sensor 1 terminal	ECM terminal
1	35	1	16
2	56	2	75

Continuity should not exist.

5. Also check harness for short to power.

OK or NG

OK >> GO TO 5.
NG >> Repair open circuit or short to ground or short to power in harness or connectors.

5. CHECK INTERMITTENT INCIDENT

Refer to GI-40, "How to Check Terminal" and GI-43, "Intermittent Incident".

OK or NG

OK >> GO TO 6.
NG >> Repair or replace.

6. REPLACE AIR FUEL RATIO (A/F) SENSOR 1

Replace malfunctioning air fuel ratio (A/F) sensor 1. Refer to EM-31.

CAUTION:

- **Discard any air fuel ratio (A/F) sensor which has been dropped from a height of more than 0.5 m (1.6 ft) onto a hard surface such as a concrete floor; use a new one.**
- **Before installing new air fuel ratio (A/F) sensor, clean exhaust system threads (using Oxygen Sensor Thread Cleaner tool J-43897-18 or J-43897-12) and approved anti-seize lubricant.**

>> **INSPECTION END**

P0133, P0153 A/F SENSOR 1

Component Description

INFOID:0000000011291733

The air fuel ratio (A/F) sensor 1 is a planar one-cell limit current sensor. The sensor element of the A/F sensor 1 is composed an electrode layer, which transports ions. It has a heater in the element.

The sensor is capable of precise measurement λ = 1, but also in the lean and rich range. Together with its control electronics, the sensor outputs a clear, continuous signal throughout a wide λ range.

The exhaust gas components diffuse through the diffusion layer at the sensor cell. An electrode layer is applied voltage, and this current relative oxygen density in lean. Also this current relative hydrocarbon density in rich.

Therefore, the A/F sensor 1 is able to indicate air fuel ratio by this electrode layer of current. In addition, a heater is integrated in the sensor to ensure the required operating temperature of about 800°C (1,472°F).

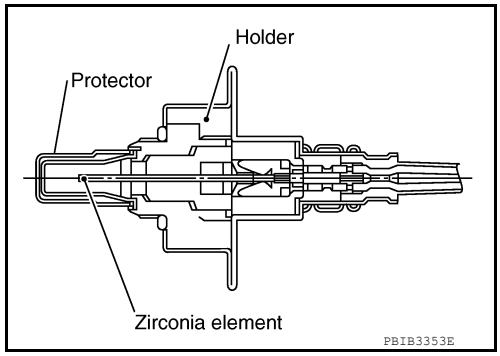

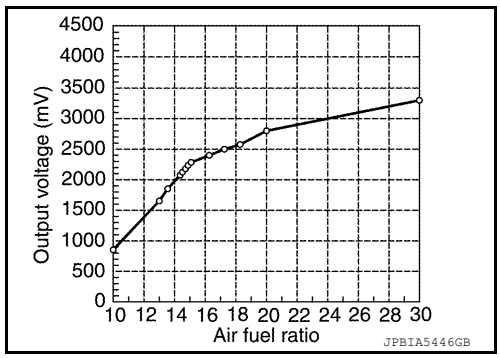

On Board Diagnosis Logic

INFOID:0000000011291734

To judge the malfunction of A/F sensor 1, this diagnosis measures response time of the A/F signal computed by ECM from the A/F sensor 1 signal. The time is compensated by engine operating (speed and load), fuel feedback control constant, and the A/F sensor 1 temperature index. Judgment is based on whether the compensated time (the A/F signal cycling time index) is inordinately long or not.

DTC No.	Trouble diagnosis name	DTC detecting condition	Possible Cause
P0133 0133 (Bank 1)	Air fuel ratio (A/F) sensor 1 circuit slow response	• The response of the A/F signal computed by ECM from A/F sensor 1 signal takes more than the specified time.	• Harness or connectors (The A/F sensor 1 circuit is open or shorted.) • A/F sensor 1 • A/F sensor 1 heater • Fuel pressure • Fuel injector • Intake air leaks • Exhaust gas leaks • PCV • Mass air flow sensor
P0153 0153 (Bank 2)			

DTC Confirmation Procedure

INFOID:0000000011291735

NOTE:
If DTC Confirmation Procedure has been previously conducted, always perform the following before conducting the next step.

1. Turn ignition switch OFF and wait at least 10 seconds.
2. Turn ignition switch ON.
3. Turn ignition switch OFF and wait at least 10 seconds.

TESTING CONDITION:
Before performing the following procedure, confirm that battery voltage is more than 11 V at idle.

WITH CONSULT

1. Start engine and warm it up to normal operating temperature.
2. Turn ignition switch OFF and wait at least 10 seconds.
3. Start engine and keep the engine speed between 3,500 and 4,000 rpm for at least 1minute under no load.
4. Let engine idle for 1 minute.
5. Select “A/F SEN1(B1) P1278/P1279” (for DTC P0133) or “A/F SEN1(B2) P1288/P1289” (for DTC P0153) of “A/F SEN1” in “DTC WORK SUPPORT” mode with CONSULT.
6. Touch “START”.
   If “COMPLETED” appears on CONSULT screen, go to step 10.
   If “COMPLETED” does not appear on CONSULT screen, go to the following step.
7. After perform the following procedure, “TESTING” will be displayed on the CONSULT screen.

a. Increase the engine speed up to 4,000 to 5,000 rpm and keep it for 10 seconds.
b. Fully release accelerator pedal and then let engine idle for about 10 seconds.
   If “TESTING” is not displayed after 10 seconds, refer to EC-510.

8. Wait for about 20 seconds at idle at under the condition that “TESTING” is displayed on the CONSULT screen.
9. Make sure that “TESTING” changes to “COMPLETED”.
   If “TESTING” changed to “OUT OF CONDITION”, refer to EC-510.
10. Make sure that “OK” is displayed after touching “SELF-DIAG RESULT”.
    If “NG” is displayed, go to EC-219, "Diagnosis Procedure".

WITH GST

1. Start engine and warm it up to normal operating temperature.
2. Select Service $01 with GST.
3. Calculate the total value of “Short term fuel trim” and “Long term fuel trim” indications.
   Make sure that the total percentage should be within ±15%.
   If OK, go to the following step.
   If NG, check the following.
   - Intake air leaks
   - Exhaust gas leaks
   - Incorrect fuel pressure
   - Lack of fuel
   - Fuel injector
   - Incorrect PCV hose connection
   - PCV valve
   - Mass air flow sensor
4. Turn ignition switch OFF and wait at least 10 seconds.
5. Start engine and keep the engine speed between 3,500 and 4,000 rpm for at least 1minute under no load.
6. Let engine idle for 1 minute.
7. Increase the engine speed up to 4,000 to 5,000 rpm and keep it for 10 seconds.
8. Fully release accelerator pedal and then let engine idle for about 1 minute.
9. Select Service $07 with GST.
   If the 1st trip DTC is displayed, go to EC-219, "Diagnosis Procedure".

Diagnosis Procedure

INFOID:0000000011291736

1. CHECK GROUND CONNECTIONS

1. Turn ignition switch OFF.
2. Loosen and retighten three ground screws on the body.

Refer to EC-154, "Ground Inspection".

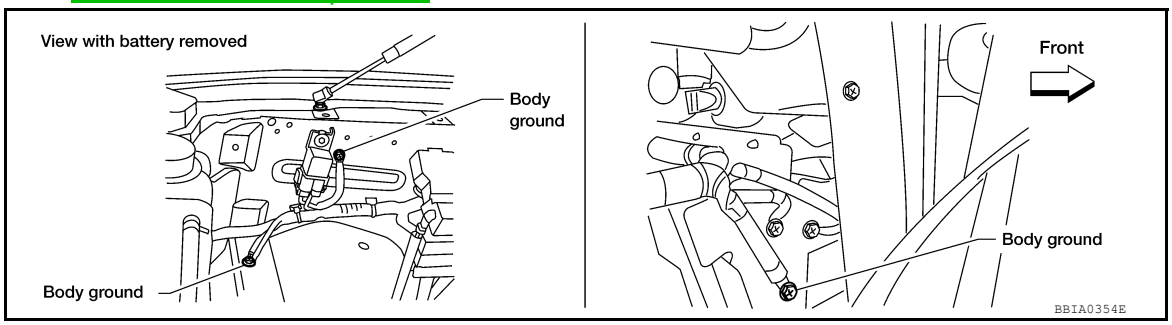

OK or NG

OK >> GO TO 2.
NG >> Repair or replace ground connections.

2. RETIGHTEN A/F SENSOR 1

Loosen and retighten the A/F sensor 1.

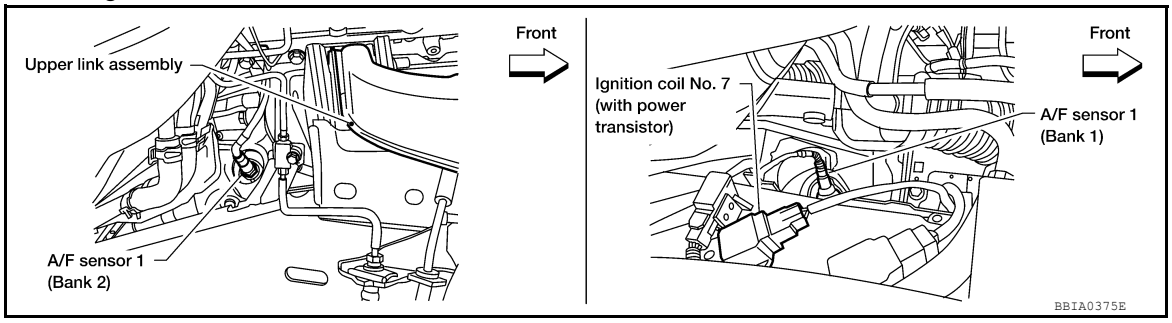

Tightening torque: 50 N-m (5.1 kg-m, 37 ft-lb)

>> GO TO 3.

3. CHECK EXHAUST GAS LEAK

1. Start engine and run it at idle.
2. Listen for an exhaust gas leak before three way catalyst (manifold).

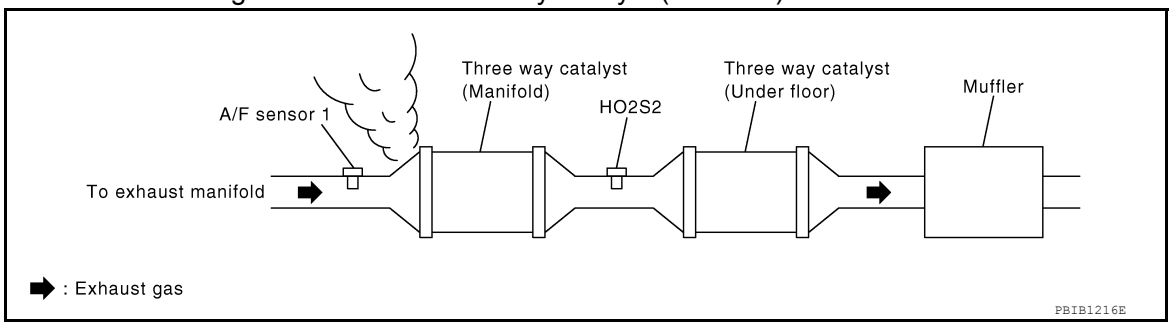

OK or NG

OK >> GO TO 4.
NG >> Repair or replace.

4. CHECK FOR INTAKE AIR LEAK

Listen for an intake air leak after the mass air flow sensor.

OK or NG

OK >> GO TO 5.
NG >> Repair or replace.

5. CLEAR THE SELF-LEARNING DATA

With CONSULT

1. Start engine and warm it up to normal operating temperature.

2. Select “SELF-LEARNING CONT” in “WORK SUPPORT” mode with CONSULT.
3. Clear the self-learning control coefficient by touching “CLEAR” or “START”.
4. Run engine for at least 10 minutes at idle speed.
   Is the 1st trip DTC P0171, P172, P0174 or P0175 detected? Is it difficult to start engine?

Without CONSULT

1. Start engine and warm it up to normal operating temperature.
2. Turn ignition switch OFF.
3. Disconnect mass air flow sensor harness connector.
4. Restart engine and let it idle for at least 5 seconds.
5. Stop engine and reconnect mass air flow sensor harness connector.
6. Make sure DTC P0102 is displayed.
7. Erase the DTC memory. Refer to EC-77, "DTC Index".
8. Make sure DTC P0000 is displayed.
9. Run engine for at least 10 minutes at idle speed.
   Is the 1st trip DTC P0171, P0172, P0174 or P0175 detected? Is it difficult to start engine?

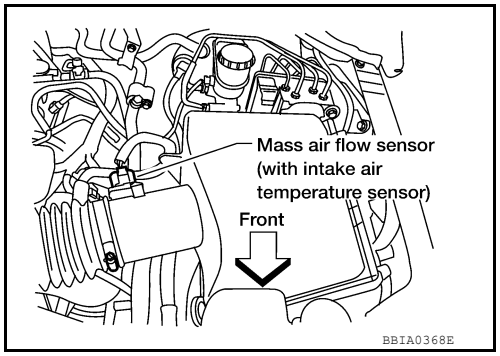

Yes or No

Yes >> Perform trouble diagnosis for DTC P0171, P0174 or P0172, P0175. Refer to EC-249 or EC-254.

No >> GO TO 6.

6. CHECK A/F SENSOR 1 POWER SUPPLY CIRCUIT

1. Turn ignition switch OFF.
2. Disconnect A/F sensor 1 harness connector.

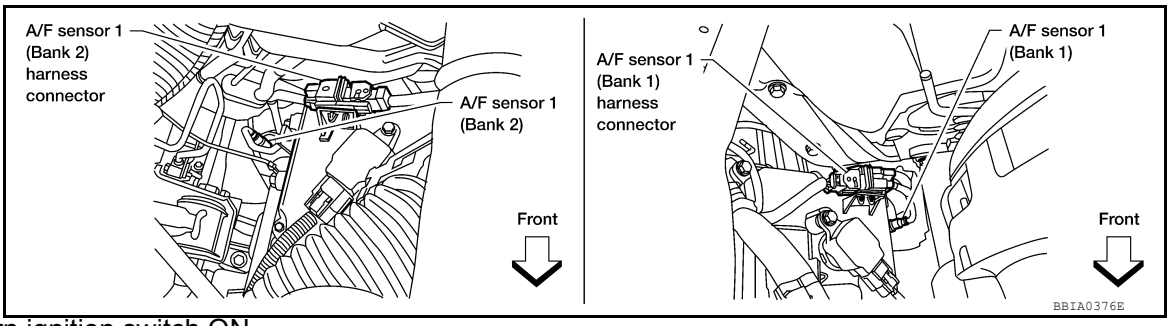

3. Turn ignition switch ON.
4. Check voltage between A/F sensor 1 terminal 4 and ground with CONSULT or tester.

Voltage: Battery voltage

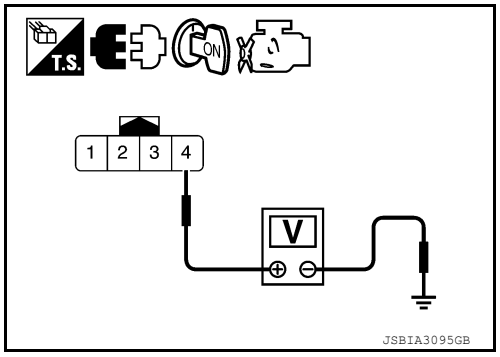

OK or NG

OK >> GO TO 8.

NG >> GO TO 7.

7. DETECT MALFUNCTIONING PART

Check the following.

- Harness connectors E5, F14
- IPDM E/R harness connector E119
- 15 A fuse (No. 54)
- Harness for open or short between A/F sensor 1 and fuse

>> Repair or replace harness or connectors.

8. CHECK A/F SENSOR 1 INPUT SIGNAL CIRCUIT FOR OPEN AND SHORT

1. Turn ignition switch OFF.

2. Disconnect ECM harness connector.
3. Check harness continuity between A/F sensor 1 terminal and ECM terminal as follows. Refer to Wiring Diagram.

	A/F sensor 1 terminal	ECM terminal
Bank1	1	35
	2	56
Bank 2	1	16
	2	75

Continuity should exist.

4. Check harness continuity between the following terminals and ground. Refer to Wiring Diagram.

Bank 1		Bank 2	
A/F sensor 1 terminal	ECM terminal	A/F sensor 1 terminal	ECM terminal
1	35	1	16
2	56	2	75

Continuity should not exist.

5. Also check harness for short to power.

OK or NG

OK >> GO TO 9.
NG >> Repair open circuit or short to ground or short to power in harness or connectors.

9. CHECK AIR FUEL RATIO (A/F) SENSOR 1 HEATER

Refer to EC-166, "Component Inspection".

OK or NG

OK >> GO TO 10.
NG >> GO TO 13.

10. CHECK MASS AIR FLOW SENSOR

Refer to EC-179, "Component Inspection".

OK or NG

OK >> GO TO 11.
NG >> Replace mass air flow sensor. Refer to EM-25, "Removal and Installation".

11. CHECK PCV VALVE

Refer to EC-496, "Component Inspection".

OK or NG

OK >> GO TO 12.
NG >> Repair or replace PCV valve. Refer to EM-40.

12. CHECK INTERMITTENT INCIDENT

Perform GI-40, "How to Check Terminal" and GI-43, "Intermittent Incident".

OK or NG

OK >> GO TO 13.
NG >> Repair or replace.

13. REPLACE AIR FUEL RATIO (A/F) SENSOR 1

Replace malfunctioning air fuel ratio (A/F) sensor 1. Refer to EM-31.

CAUTION:

- **Discard any air fuel ratio (A/F) sensor which has been dropped from a height of more than 0.5 m (1.6 ft) onto a hard surface such as a concrete floor; use a new one.**
- **Before installing new air fuel ratio (A/F) sensor, clean exhaust system threads (using Oxygen Sensor Thread Cleaner tool J-43897-18 or J-43897-12) and approved anti-seize lubricant.**

>> **INSPECTION END**

P0137, P0157 HO2S2

Component Description

INFOID:0000000011291737

The heated oxygen sensor 2, after three way catalyst (manifold), monitors the oxygen level in the exhaust gas on each bank.
Even if switching characteristics of the air fuel ratio (A/F) sensor 1 are shifted, the air-fuel ratio is controlled to stoichiometric, by the signal from the heated oxygen sensor 2.
This sensor is made of ceramic zirconia. The zirconia generates voltage from approximately 1V in richer conditions to 0V in leaner conditions.
Under normal conditions the heated oxygen sensor 2 is not used for engine control operation.

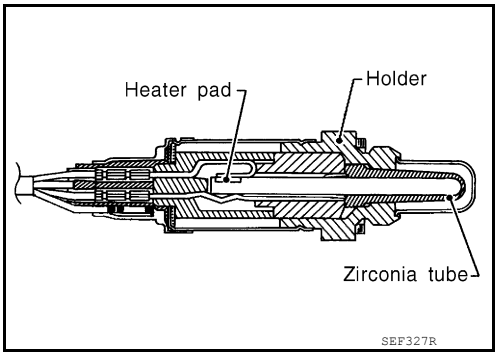

On Board Diagnosis Logic

INFOID:0000000011291738

The heated oxygen sensor 2 has a much longer switching time between rich and lean than the air fuel ratio (A/F) sensor 1. The oxygen storage capacity of the three way catalyst (manifold) causes the longer switching time. To judge the malfunctions of heated oxygen sensor 2, ECM monitors whether the maximum voltage of the sensor is sufficiently high during the various driving condition such as fuel-cut.

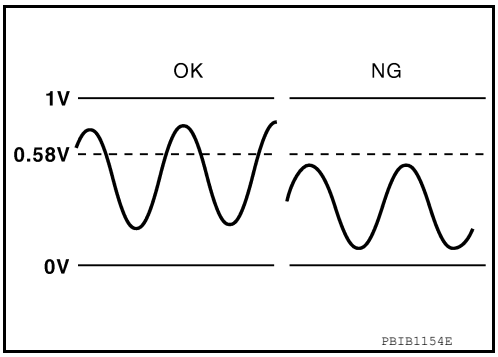

DTC No.	Trouble diagnosis name	DTC detecting condition	Possible cause
P0137 0137 (Bank 1)	Heated oxygen sensor 2 circuit low voltage	The maximum voltage from the sensor is not reached to the specified voltage.	• Harness or connectors (The sensor circuit is open or shorted) • Heated oxygen sensor 2 • Fuel pressure • Fuel injector • Intake air leaks
P0157 0157 (Bank 2)			

DTC Confirmation Procedure

INFOID:0000000011291739

NOTE:
If DTC confirmation Procedure has been previously conducted, always perform the following before conducting the next step.

1. Turn ignition switch OFF and wait at least 10 seconds.
2. Turn ignition switch ON.
3. Turn ignition switch OFF and wait at least 10 seconds.

WITH CONSULT

TESTING CONDITION:
For better results, perform “DTC WORK SUPPORT” at a temperature of 0 to 30 °C (32 to 86 °F).

1. Turn ignition switch ON and select “DATA MONITOR” mode with CONSULT.
2. Start engine and warm it up to the normal operating temperature.
3. Turn ignition switch OFF and wait at least 10 seconds.
4. Start engine and keep the engine speed between 3,500 and 4,000 rpm for at least 1 minute under no load.
5. Let engine idle for 1 minute.
6. Make sure that “COOLAN TEMP/S” indicates more than 70°C (158°F).

If not, warm up engine and go to next step when “COOLAN TEMP/S” indication reaches to 70°C (158°F).

7. Open engine hood.
8. Select “HO2S2 (B1) P1147” or “HO2S2 (B2) P1167” of “HO2S2” in “DTC WORK SUPPORT” mode with CONSULT.
9. Start engine and following the instruction of CONSULT.
   NOTE:
   It will take at most 10 minutes until “COMPLETED” is displayed.
10. Make sure that “OK” is displayed after touching “SELF-DIAG RESULTS”.
    If “NG” is displayed, refer to EC-225, "Diagnosis Procedure".
    If “CAN NOT BE DIAGNOSED” is displayed, perform the following.

a. Turn ignition switch OFF and leave the vehicle in a cool place (soak the vehicle).
b. Return to step 1.

Overall Function Check

INFOID:0000000011291740

Use this procedure to check the overall function of the heated oxygen sensor 2 circuit. During this check, a 1st trip DTC might not be confirmed.

WITH GST

1. Start engine and warm it up to the normal operating temperature.
2. Turn ignition switch OFF and wait at least 10 seconds.
3. Start engine and keep the engine speed between 3,500 and 4,000 rpm for at least 1 minute under no load.
4. Let engine idle for 1 minute.
5. Set voltmeter probes between ECM terminal 55 [HO2S2 (B1) signal] or 74 [HO2S2 (B2) signal] and ground.
6. Check the voltage when revving up to 4,000 rpm under no load at least 10 times.
   (Depress and release accelerator pedal as soon as possible.)
   The voltage should be above 0.58 V at least once during this procedure.
   If the voltage can be confirmed in step 6, step 7 is not necessary.
7. Keep vehicle at idling for 10 minutes, then check the voltage. Or check the voltage when coasting from 80 km/h (50 MPH) in D position.
   The voltage should be above 0.58 V at least once during this procedure.

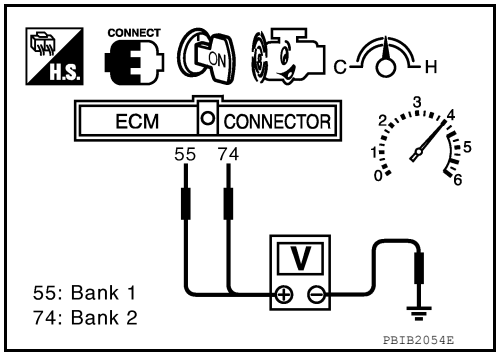

8. If NG, go to EC-225, "Diagnosis Procedure".

Diagnosis Procedure

INFOID:0000000011291741

1. CHECK GROUND CONNECTIONS

1. Turn ignition switch OFF.
2. Loosen and retighten three ground screws on the body.
   Refer to EC-154, "Ground Inspection".

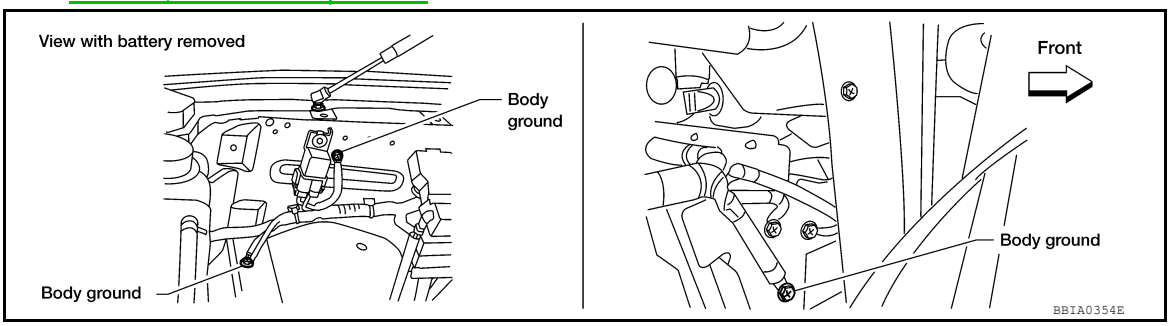

OK or NG

OK >> GO TO 2.

NG >> Repair or replace ground connections.

2. CLEAR THE SELF-LEARNING DATA

With CONSULT

1. Start engine and warm it up to normal operating temperature.
2. Select “SELF-LEARNING CONT” in “WORK SUPPORT” mode with CONSULT.
3. Clear the self-learning control coefficient by touching “CLEAR”.
4. Run engine for at least 10 minutes at idle speed.
   Is the 1st trip DTC P0171 or P0174 detected?
   Is it difficult to start engine?

Without CONSULT

1. Start engine and warm it up to normal operating temperature.
2. Turn ignition switch OFF.
3. Disconnect mass air flow sensor harness connector, and restart and run engine for at least 5 seconds at idle speed.
4. Stop engine and reconnect mass air flow sensor harness connector.
5. Make sure DTC P0102 is displayed.
6. Erase the DTC memory. Refer to EC-77, "DTC Index".
7. Make sure DTC P0000 is displayed.
8. Run engine for at least 10 minutes at idle speed.
   Is the 1st trip DTC P0171 or P0174 detected?
   Is it difficult to start engine?

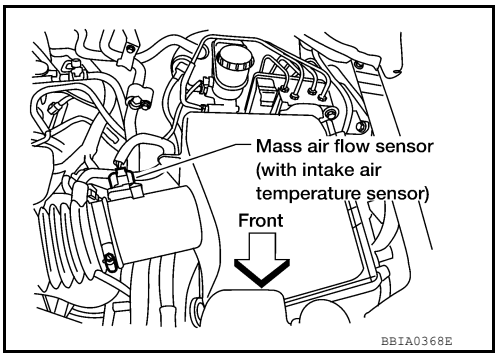

Yes or No

Yes >> Perform trouble diagnosis for DTC P0171or P0174. Refer to EC-249.

No >> GO TO 3.

3. CHECK HO2S2 GROUND CIRCUIT FOR OPEN AND SHORT

1. Turn ignition switch OFF.
2. Disconnect heated oxygen sensor 2 (HO2S2) harness connector.

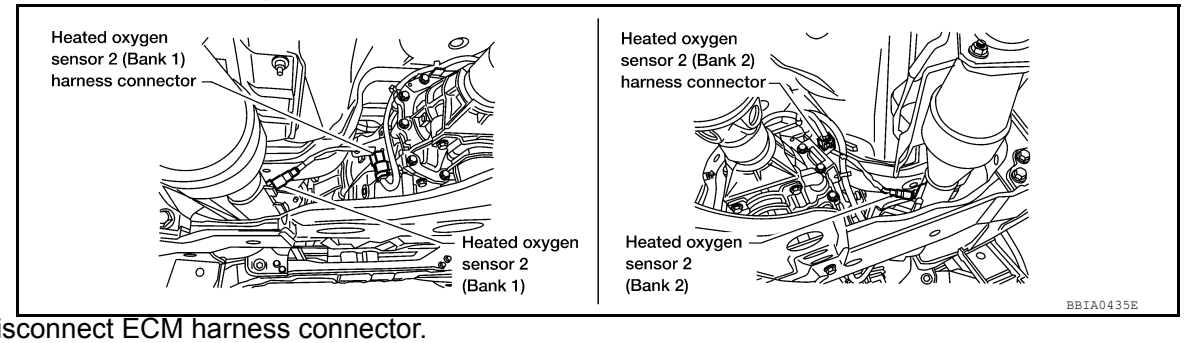

3. Disconnect ECM harness connector.
4. Check harness continuity between ECM terminal 78 and HO2S2 terminal 4.
   Refer to Wiring Diagram.

   Continuity should exist.

5. Also check harness for short to ground and short to power.

OK or NG

OK >> GO TO 4.

NG >> Repair open circuit or short to ground or short to power in harness or connectors.

4. CHECK HO2S2 INPUT SIGNAL CIRCUIT FOR OPEN AND SHORT

1. Check harness continuity between ECM terminal and HO2S2 terminal as follows.
   Refer to Wiring Diagram.

DTC	Terminals		Bank
	ECM	Sensor	
P0137	55	1	1
P0157	74	1	2

Continuity should exist.

2. Check harness continuity between the following terminals and ground.
Refer to Wiring Diagram.

DTC	Terminals		Bank
	ECM	Sensor	
P0137	55	1	1
P0157	74	1	2

Continuity should not exist.

3. Also check harness for short to power.

OK or NG

OK >> GO TO 5.
NG >> Repair open circuit or short to ground or short to power in harness or connectors.

5. CHECK HEATED OXYGEN SENSOR 2

Refer to EC-227, "Component Inspection".

OK or NG

OK >> GO TO 6.
NG >> Replace malfunctioning heated oxygen sensor 2. Refer to EX-6.

6. CHECK INTERMITTENT INCIDENT

Refer to GI-40, "How to Check Terminal" and GI-43, "Intermittent Incident".

>> **INSPECTION END**

Component Inspection

INFOID:0000000011291742

HEATED OXYGEN SENSOR 2

With CONSULT

1. Turn ignition switch ON and select “DATA MONITOR” mode with CONSULT.
2. Start engine and warm it up to the normal operating temperature.
3. Turn ignition switch OFF and wait at least 10 seconds.
4. Start engine and keep the engine speed between 3,500 and 4,000 rpm for at least 1 minute under no load.
5. Let engine idle for 1 minute.
6. Select “FUEL INJECTION” in “ACTIVE TEST” mode, and select “HO2S2 (B1)/(B2)” as the monitor item with CONSULT.

7. Check “HO2S2 (B1)/(B2)” at idle speed when adjusting “FUEL INJECTION” to ±25%.

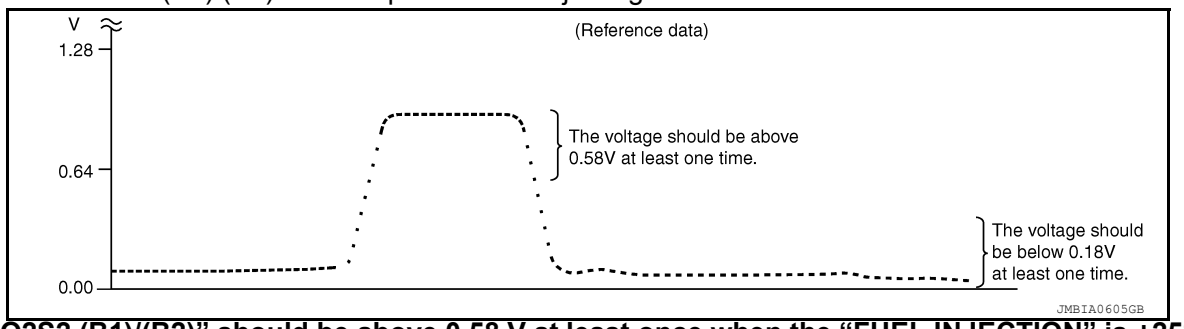

“HO2S2 (B1)/(B2)” should be above 0.58 V at least once when the “FUEL INJECTION” is +25%.
“HO2S2 (B1)/(B2)” should be below 0.18 V at least once when the “FUEL INJECTION” is –25%.

CAUTION:
- **Discard any heated oxygen sensor which has been dropped from a height of more than 0.5 m (1.6 ft) onto a hard surface such as a concrete floor; use a new one.**
- **Before installing new oxygen sensor, clean exhaust system threads using Oxygen Sensor Thread Cleaner tool J-43897-18 or J-43897-12 and approved anti-seize lubricant.**

Without CONSULT

1. Start engine and warm it up to the normal operating temperature.
2. Turn ignition switch OFF and wait at least 10 seconds.
3. Start engine and keep the engine speed between 3,500 and 4,000 rpm for at least 1 minute under no load.
4. Let engine idle for 1 minute.
5. Set voltmeter probes between ECM terminal 55 [HO2S2 (B1) signal] or 74 [HO2S2 (B2) signal] and ground.
6. Check the voltage when revving up to 4,000 rpm under no load at least 10 times.
   (Depress and release accelerator pedal as soon as possible.)
   The voltage should be above 0.58 V and below 0.18 V at least once during this procedure.
   If the voltage can be confirmed at step 6, step 7 is not necessary.
7. Keep vehicle at idling for 10 minutes, then check voltage. Or check the voltage when coasting from 80 km/h (50 MPH) in D position.
   The voltage should be above 0.58 V and below 0.18V at least once during this procedure.

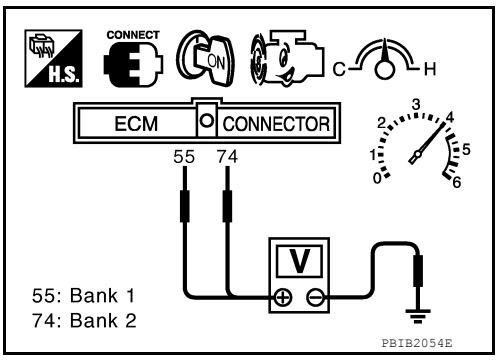

8. If NG, replace heated oxygen sensor 2. Refer to EX-6.

CAUTION:
- **Discard any heated oxygen sensor which has been dropped from a height of more than 0.5 m (1.6 ft) onto a hard surface such as a concrete floor; use a new one.**
- **Before installing new oxygen sensor, clean exhaust system threads using Oxygen Sensor Thread Cleaner tool J-43897-18 or J-43897-12 and approved anti-seize lubricant.**

P0138, P0158 HO2S2

Component Description

INFOID:0000000011291743

The heated oxygen sensor 2, after three way catalyst (manifold), monitors the oxygen level in the exhaust gas on each bank.
Even if switching characteristics of the air fuel ratio (A/F) sensor 1 are shifted, the air-fuel ratio is controlled to stoichiometric, by the signal from the heated oxygen sensor 2.
This sensor is made of ceramic zirconia. The zirconia generates voltage from approximately 1V in richer conditions to 0V in leaner conditions.
Under normal conditions the heated oxygen sensor 2 is not used for engine control operation.

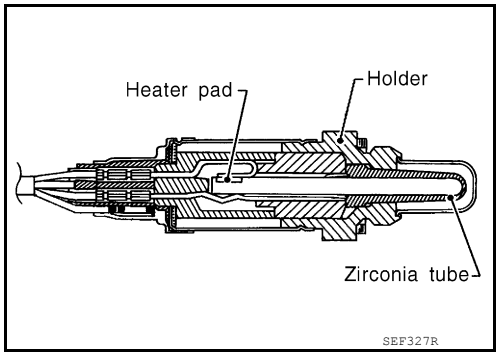

On Board Diagnosis Logic

INFOID:0000000011291744

The heated oxygen sensor 2 has a much longer switching time between rich and lean than the air fuel ratio (A/F) sensor 1. The oxygen storage capacity of the three way catalyst (manifold) causes the longer switching time.

MALFUNCTION A

To judge the malfunctions of heated oxygen sensor 2, ECM monitors whether the voltage is unusually high during the various driving condition such as fuel-cut.

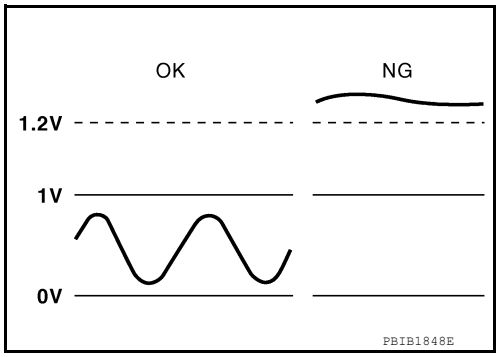

MALFUNCTION B

To judge the malfunctions of heated oxygen sensor 2, ECM monitors whether the minimum voltage of sensor is sufficiently low during the various driving condition such as fuel-cut.

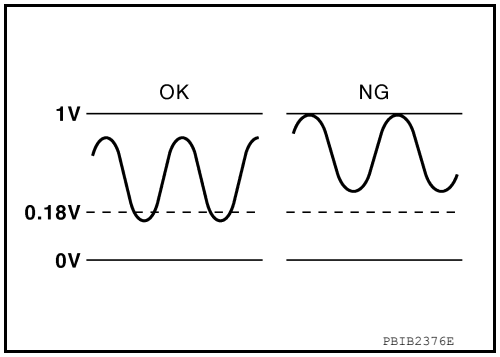

DTC No.	Trouble diagnosis name	DTC detecting condition		Possible cause
P0138 0138 (Bank 1)	Heated oxygen sensor 2 circuit high voltage	A)	An excessively high voltage from the sensor is sent to ECM.	• Harness or connectors (The sensor circuit is open or shorted) • Heated oxygen sensor 2
P0158 0158 (Bank 2)		B)	The minimum voltage from the sensor is not reached to the specified voltage.	• Harness or connectors (The sensor circuit is open or shorted) • Heated oxygen sensor 2 • Fuel pressure • Fuel injector

DTC Confirmation Procedure

INFOID:0000000011291745

Perform PROCEDURE FOR MALFUNCTION A first.

If DTC cannot be confirmed, perform PROCEDURE FOR MALFUNCTION B.
NOTE:
If DTC Confirmation Procedure has been previously conducted, always perform the following before conducting the next step.

1. Turn ignition switch OFF and wait at least 10 seconds.
2. Turn ignition switch ON.
3. Turn ignition switch OFF and wait at least 10 seconds.

PROCEDURE FOR MALFUNCTION A

1. Start engine and warm it up to the normal operating temperature.
2. Turn ignition switch OFF and wait at least 10 seconds.
3. Turn ignition switch ON.
4. Turn ignition switch OFF and wait at least 10 seconds.
5. Start engine and keep the engine speed between 3,500 and 4,000 rpm for at least 1 minute under no load.
6. Let engine idle for 2 minutes.
7. Check 1st trip DTC.
8. If 1st trip DTC is detected, go to EC-231, "Diagnosis Procedure".

PROCEDURE FOR MALFUNCTION B

With CONSULT
TESTING CONDITION:
For better results, perform “DTC WORK SUPPORT” at a temperature of 0 to 30 °C (32 to 86 °F).

1. Turn ignition switch ON and select “DATA MONITOR” mode with CONSULT.
2. Start engine and warm it up to the normal operating temperature.
3. Turn ignition switch OFF and wait at least 10 seconds.
4. Turn ignition switch ON.
5. Turn ignition switch OFF and wait at least 10 seconds.
6. Start engine and keep the engine speed between 3,500 and 4,000 rpm for at least 1 minute under no load.
7. Let engine idle for 1 minute.
8. Make sure that “COOLAN TEMP/S” indicates more than 70°C (158°F).
   If not, warm up engine and go to next step when “COOLAN TEMP/S” indication reaches to 70°C (158°F).
9. Open engine hood.
10. Select “HO2S2 (B1) P1146” (for DTC P0138) or “HO2S2 (B2) P1166” (for DTC P0158) of “HO2S2” in “DTC WORK SUPPORT” mode with CONSULT.
11. Start engine and following the instruction of CONSULT.
    NOTE:
    It will take at most 10 minutes until “COMPLETED” is displayed.
12. Make sure that “OK” is displayed after touching “SELF-DIAG RESULTS”.
    If “NG” is displayed, refer to EC-231, "Diagnosis Procedure".
    If “CAN NOT BE DIAGNOSED” is displayed, perform the following.

a. Turn ignition switch OFF and leave the vehicle in a cool place (soak the vehicle).
b. Return to step 1.

Overall Function Check

INFOID:0000000011291746

PROCEDURE FOR MALFUNCTION B
Use this procedure to check the overall function of the heated oxygen sensor 2 circuit. During this check, a 1st trip DTC might not be confirmed.

With GST

1. Start engine and warm it up to the normal operating temperature.
2. Turn ignition switch OFF and wait at least 10 seconds.
3. Turn ignition switch ON.
4. Turn ignition switch OFF and wait at least 10 seconds.

5. Start engine and keep the engine speed between 3,500 and 4,000 rpm for at least 1 minute under no load.
6. Let engine idle for 1 minute.
7. Set voltmeter probes between ECM terminal 55 [HO2S2 (B2) signal] or 74 [HO2S2 (B1) signal] and ground.
8. Check the voltage when revving up to 4,000 rpm under no load at least 10 times.
   (Depress and release accelerator pedal as soon as possible.)
   The voltage should be below 0.18V at least once during this procedure.
   If the voltage can be confirmed in step 6, step 7 is not necessary.
9. Keep vehicle at idling for 10 minutes, then check the voltage. Or check the voltage when coasting from 80 km/h (50 MPH) in D position.
   The voltage should be below 0.18V at least once during this procedure.
10. If NG, go to EC-231, "Diagnosis Procedure".

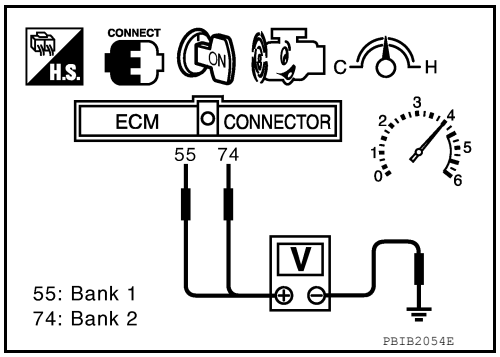

Diagnosis Procedure

INFOID:0000000011291747

PROCEDURE FOR MALFUNCTION A

1. CHECK GROUND CONNECTIONS

1. Turn ignition switch OFF.
2. Loosen and retighten two ground screws on the body.
   Refer to EC-154, "Ground Inspection".

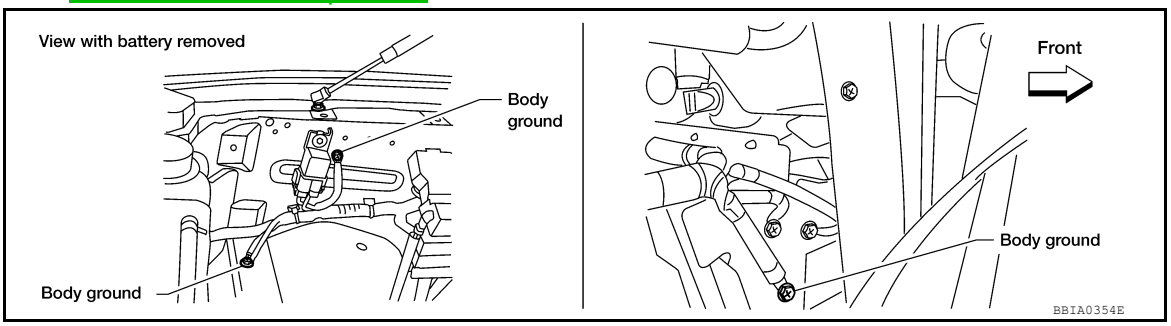

OK or NG

OK >> GO TO 2.
NG >> Repair or replace ground connections.

2. CHECK HO2S2 GROUND CIRCUIT FOR OPEN AND SHORT

1. Disconnect heated oxygen sensor 2 harness connector.

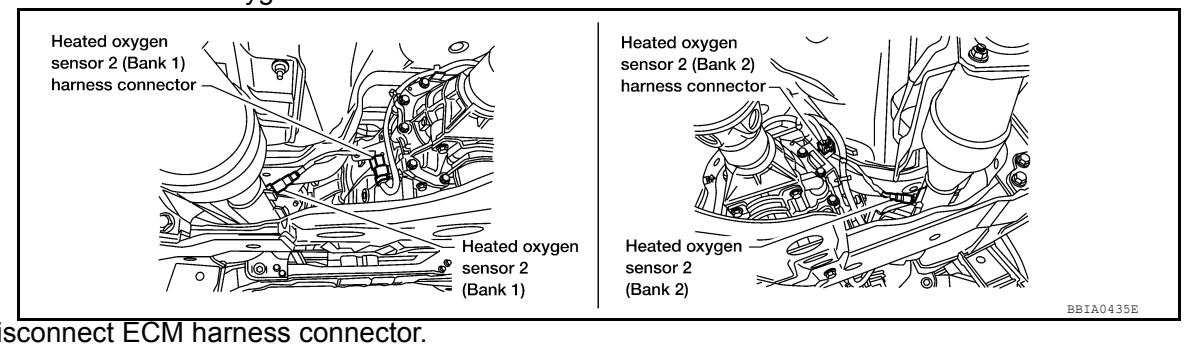

2. Disconnect ECM harness connector.
3. Check harness continuity between ECM terminal 78 and HO2S2 terminal 4.
   Refer to Wiring Diagram.

   Continuity should exist.

4. Also check harness for short to ground and short to power.

OK or NG

OK >> GO TO 3.
NG >> Repair open circuit or short to ground or short to power in harness or connectors.

3. CHECK HO2S2 INPUT SIGNAL CIRCUIT FOR OPEN AND SHORT

1. Check harness continuity between ECM terminal and HO2S2 terminal as follows.
Refer to Wiring Diagram.

DTC	Terminals		Bank
	ECM	Sensor	
P0138	55	1	1
P0158	74	1	2

Continuity should exist.

2. Check harness continuity between the following terminals and ground.
Refer to Wiring Diagram.

DTC	Terminals		Bank
	ECM	Sensor	
P0138	55	1	1
P0158	74	1	2

Continuity should not exist.

3. Also check harness for short to power.

OK or NG

OK >> GO TO 4.
NG >> Repair open circuit or short to ground or short to power in harness or connectors.

4. CHECK HO2S2 CONNECTOR FOR WATER

Check connectors for water.

Water should not exist.

OK or NG

OK >> GO TO 5.
NG >> Repair or replace harness or connectors.

5. CHECK HEATED OXYGEN SENSOR 2

Refer to EC-234, "Component Inspection".

OK or NG

OK >> GO TO 6.
NG >> Replace malfunctioning heated oxygen sensor 2. Refer to EX-6.

6. CHECK INTERMITTENT INCIDENT

Refer to GI-40, "How to Check Terminal" and GI-43, "Intermittent Incident".

>> **INSPECTION END**

PROCEDURE FOR MALFUNCTION B

1. CHECK GROUND CONNECTIONS

1. Turn ignition switch OFF.
2. Loosen and retighten two ground screws on the body.

Refer to EC-154, "Ground Inspection".

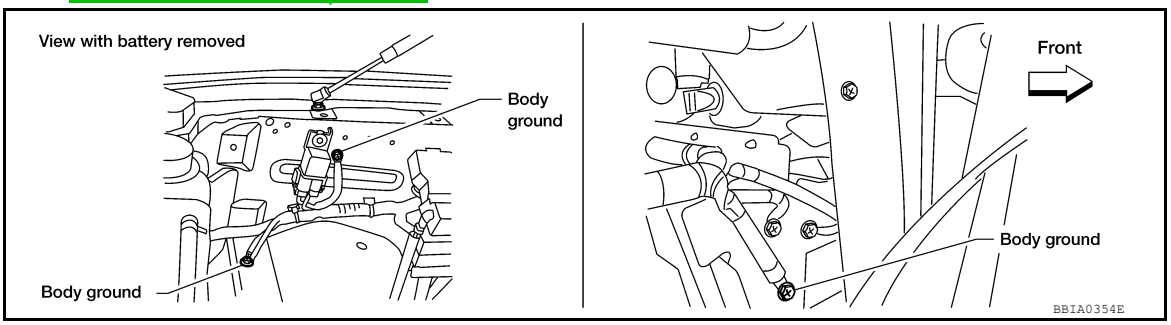

OK or NG

OK >> GO TO 2.
NG >> Repair or replace ground connections.

2. CLEAR THE SELF-LEARNING DATA

With CONSULT

1. Start engine and warm it up to normal operating temperature.
2. Select “SELF-LEARNING CONT” in “WORK SUPPORT” mode with CONSULT.
3. Clear the self-learning control coefficient by touching “CLEAR”.
4. Run engine for at least 10 minutes at idle speed.
   Is the 1st trip DTC P0172 or P0175 detected?
   Is it difficult to start engine?

Without CONSULT

1. Start engine and warm it up to normal operating temperature.
2. Turn ignition switch OFF.
3. Disconnect mass air flow sensor harness connector, and restart and run engine for at least 5 seconds at idle speed.
4. Stop engine and reconnect mass air flow sensor harness connector.
5. Make sure DTC P0102 is displayed.
6. Erase the DTC memory. Refer to EC-77, "DTC Index".
7. Make sure DTC P0000 is displayed.
8. Run engine for at least 10 minutes at idle speed.
   Is the 1st trip DTC P0172 or P0175 detected?
   Is it difficult to start engine?

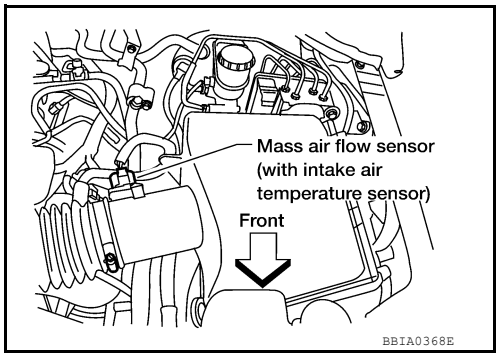

Yes or No

Yes >> Perform trouble diagnosis for DTC P0172, P0175. Refer to EC-254.
No >> GO TO 3.

3. CHECK HO2S2 GROUND CIRCUIT FOR OPEN AND SHORT

1. Turn ignition switch OFF.
2. Disconnect heated oxygen sensor 2 harness connector.

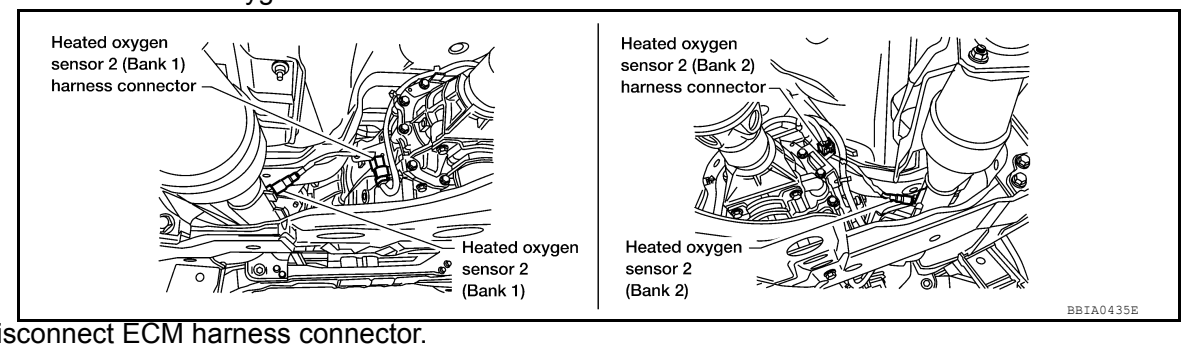

3. Disconnect ECM harness connector.
4. Check harness continuity between ECM terminal 78 and HO2S2 terminal 4.
   Refer to Wiring Diagram.

Continuity should exist.

5. Also check harness for short to ground and short to power.

OK or NG

OK >> GO TO 4.
NG >> Repair open circuit or short to ground or short to power in harness or connectors.

4. CHECK HO2S2 INPUT SIGNAL CIRCUIT FOR OPEN AND SHORT

1. Check harness continuity between ECM terminal and HO2S2 terminal as follows.
Refer to Wiring Diagram.

DTC	Terminals		Bank
	ECM	Sensor	
P0138	55	1	1
P0158	74	1	2

Continuity should exist.

2. Check harness continuity between the following terminals and ground.
Refer to Wiring Diagram.

DTC	Terminals		Bank
	ECM	Sensor	
P0138	55	1	1
P0158	74	1	2

Continuity should not exist.

3. Also check harness for short to power.

OK or NG

OK >> GO TO 5.
NG >> Repair open circuit or short to ground or short to power in harness or connectors.

5. CHECK HEATED OXYGEN SENSOR 2

Refer to EC-234, "Component Inspection".

OK or NG

OK >> GO TO 6.
NG >> Replace malfunctioning heated oxygen sensor 2. Refer to EX-6.

6. CHECK INTERMITTENT INCIDENT

Refer to GI-40, "How to Check Terminal" and GI-43, "Intermittent Incident".

>> **INSPECTION END**

Component Inspection

INFOID:0000000011291748

HEATED OXYGEN SENSOR 2

With CONSULT

1. Turn ignition switch ON and select “DATA MONITOR” mode with CONSULT.
2. Start engine and warm it up to the normal operating temperature.
3. Turn ignition switch OFF and wait at least 10 seconds.
4. Start engine and keep the engine speed between 3,500 and 4,000 rpm for at least 1 minute under no load.
5. Let engine idle for 1 minute.
6. Select “FUEL INJECTION” in “ACTIVE TEST” mode, and select “HO2S2 (B1)/(B2)” as the monitor item with CONSULT.

7. Check “HO2S2 (B1)/(B2)” at idle speed when adjusting “FUEL INJECTION” to ±25%.

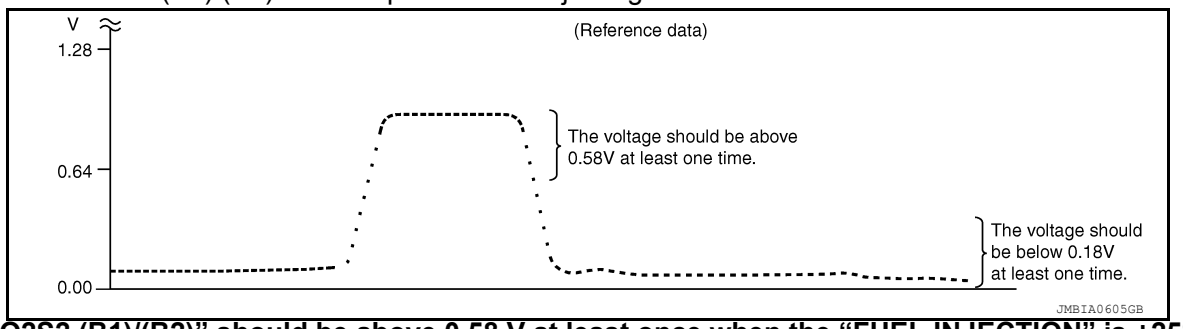

“HO2S2 (B1)/(B2)” should be above 0.58 V at least once when the “FUEL INJECTION” is +25%.
“HO2S2 (B1)/(B2)” should be below 0.18 V at least once when the “FUEL INJECTION” is –25%.

CAUTION:
- **Discard any heated oxygen sensor which has been dropped from a height of more than 0.5 m (1.6 ft) onto a hard surface such as a concrete floor; use a new one.**
- **Before installing new oxygen sensor, clean exhaust system threads using Oxygen Sensor Thread Cleaner tool J-43897-18 or J-43897-12 and approved anti-seize lubricant.**

Without CONSULT

1. Start engine and warm it up to the normal operating temperature.
2. Turn ignition switch OFF and wait at least 10 seconds.
3. Start engine and keep the engine speed between 3,500 and 4,000 rpm for at least 1 minute under no load.
4. Let engine idle for 1 minute.
5. Set voltmeter probes between ECM terminal 55 [HO2S2 (B1) signal] or 74 [HO2S2 (B2) signal] and ground.
6. Check the voltage when revving up to 4,000 rpm under no load at least 10 times.
   (Depress and release accelerator pedal as soon as possible.)
   The voltage should be above 0.58 V and below 0.18 V at least once during this procedure.
   If the voltage can be confirmed at step 6, step 7 is not necessary.
7. Keep vehicle at idling for 10 minutes, then check voltage. Or check the voltage when coasting from 80 km/h (50 MPH) in D position.
   The voltage should be above 0.58V and below 0.18V at least once during this procedure.

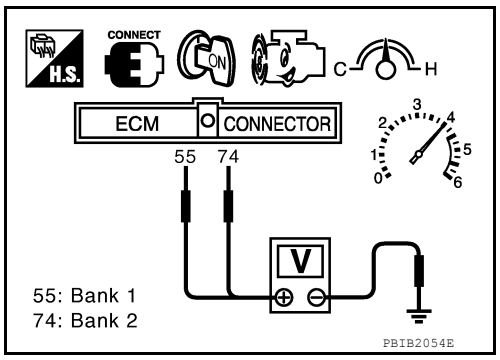

8. If NG, replace heated oxygen sensor 2. Refer to EX-6.

CAUTION:
- **Discard any heated oxygen sensor which has been dropped from a height of more than 0.5 m (1.6 ft) onto a hard surface such as a concrete floor; use a new one.**
- **Before installing new oxygen sensor, clean exhaust system threads using Oxygen Sensor Thread Cleaner tool J-43897-18 or J-43897-12 and approved anti-seize lubricant.**

P0139, P0159 HO2S2

Component Description

INFOID:0000000011291749

The heated oxygen sensor 2, after three way catalyst (manifold), monitors the oxygen level in the exhaust gas on each bank.
Even if switching characteristics of the air fuel ratio (A/F) sensor 1 are shifted, the air-fuel ratio is controlled to stoichiometric, by the signal from the heated oxygen sensor 2.
This sensor is made of ceramic zirconia. The zirconia generates voltage from approximately 1V in richer conditions to 0V in leaner conditions.
Under normal conditions the heated oxygen sensor 2 is not used for engine control operation.

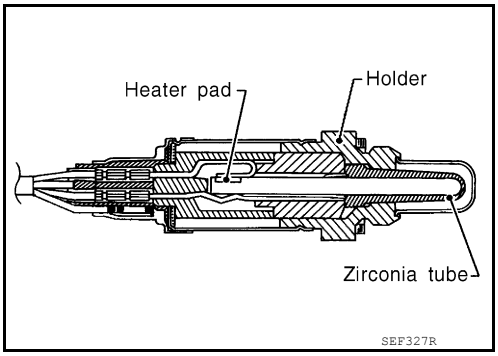

On Board Diagnosis Logic

INFOID:0000000011291750

The heated oxygen sensor 2 has a much longer switching time between rich and lean than the air fuel ratio (A/F) sensor 1. The oxygen storage capacity of the three way catalyst 1 causes the longer switching time. To judge the malfunctions of heated oxygen sensor 2, ECM monitors whether the switching response of the sensor's voltage is faster than specified during various driving conditions such as fuel cut.

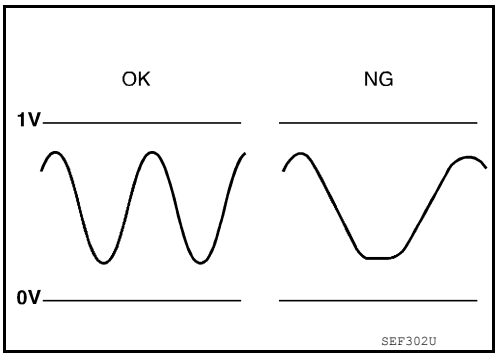

DTC No.	Trouble diagnosis name	DTC detecting condition	Possible cause
P0139	Heated oxygen sensor 2 (bank 1) circuit slow response	The switching time between rich and lean of a heated oxygen sensor 2 signal delays more than the specified time computed by ECM.	• Harness or connectors (The sensor circuit is open or shorted) • Heated oxygen sensor 2 • Fuel system • EVAP system • Intake air system
P0159	Heated oxygen sensor 2 (bank 2) circuit slow response		

DTC Confirmation Procedure

INFOID:0000000011291751

1. INSPECTION START

Do you have CONSULT?

Do you have CONSULT?

YES >> GO TO 2.
NO >> GO TO 7.

2. PRECONDITIONING

If DTC Confirmation Procedure has been previously conducted, always perform the following procedure before conducting the next test.

1. Turn ignition switch OFF and wait at least 10 seconds.
2. Turn ignition switch ON.
3. Turn ignition switch OFF and wait at least 10 seconds.

TESTING CONDITION:
For better results, perform “DTC WORK SUPPORT” at a temperature of 0 to 30°C (32 to 86°F).

>> GO TO 3.

3. PERFORM DTC CONFIRMATION PROCEDURE

With CONSULT

1. Turn ignition switch ON and select “DATA MONITOR” mode with CONSULT.
2. Start engine and warm it up to the normal operating temperature.
3. Turn ignition switch OFF and wait at least 10 seconds.
4. Turn ignition switch ON.
5. Turn ignition switch OFF and wait at least 10 seconds.
6. Start engine and keep the engine speed between 3,500 and 4,000 rpm for at least 1 minute under no load.
7. Let engine idle for 1 minute.
8. Make sure that “COOLAN TEMP/S” indicates more than 70°C (158°F).
9. Drive the vehicle in a proper gear at 60 km/h (38MPH) and maintain the speed.
   CAUTION:
   Always drive vehicle at a safe speed.
10. Release the accelerator pedal fully at least 5 seconds.
    CAUTION:
    - **Enable the engine brake.**
    - **Always drive carefully.**
    - **Never apply brake when releasing the accelerator pedal.**
11. Repeat step 9 and 10 at least 8 times.
12. Check the following item of “DATA MONITOR”.

DTC	Data monitor item	Status
P0139	HO2 S2 DIAG1 (B1)	CMPLT
	HO2 S2 DIAG2 (B1)	
P0159	HO2 S2 DIAG1 (B2)	
	HO2 S2 DIAG2 (B2)	

Is “CMPLT” displayed on CONSULT screen?

YES >> GO TO 6.
NO-1: “CMPLT” is not displayed on DIAG 1>>Perform DTC confirmation procedure again.
NO-2: “CMPLT” is not displayed on DIAG 2>>GO TO 4.

4. PERFORM DTC WORK SUPPORT

1. Open engine hood.
2. Select “HO2S2 (B1) P0139” or “HO2S2 (B2) P0159” of “HO2S2” in “DTC WORK SUPPORT” mode with CONSULT.
3. Start engine and follow the instruction of CONSULT display.
   NOTE:
   It will take at most 10 minutes until “COMPLETED” is displayed.

Is “COMPLETED” displayed on CONSULT screen?

YES >> GO TO 6.
NO >> GO TO 5.

5. PERFORM DTC CONFIRMATION PROCEDURE AGAIN

1. Turn ignition switch OFF and leave the vehicle in a cool place (soak the vehicle).
2. Perform DTC confirmation procedure again.

>> GO TO 3.

6. PERFORM SELF-DIAGNOSIS

With CONSULT

Perform ECM self-diagnosis.

Is DTC “P0139” or “P0159” detected?

YES >> Proceed to EC-239, "Diagnosis Procedure".
NO >> INSPECTION END

7. PERFORM COMPONENT FUNCTION CHECK

Perform component function check. Refer to EC-238, "Overall Function Check".

NOTE:

Use component function check to check the overall function of the heated oxygen sensor 2 circuit. During this check, a 1st trip DTC might not be confirmed.

Is the inspection result normal?

YES >> INSPECTION END
NO >> Proceed to EC-239, "Diagnosis Procedure".

Overall Function Check

INFOID:0000000011291752

1. PERFORM COMPONENT FUNCTION CHECK-I

Without CONSULT

1. Start engine and warm it up to the normal operating temperature.
2. Turn ignition switch OFF and wait at least 10 seconds.
3. Start engine and keep the engine speed between 3,500 and 4,000 rpm for at least 1 minute under no load.
4. Let engine idle for 1 minute.
5. Check the voltage between ECM harness connector terminals under the following condition.

DTC	ECM			Condition	Voltage
	Connector	Terminal			
		+	–		
P0139	F54	55	78	Revving up to 4,000 rpm under no load at least 10 times	A change of voltage should be more than 0.08 V for 1 second during this procedure.
P0159		74			

Is the inspection result normal?

YES >> INSPECTION END
NO >> GO TO 2.

2. PERFORM COMPONENT FUNCTION CHECK-II

Check the voltage between ECM harness connector terminals under the following condition.

DTC	ECM			Condition	Voltage
	Connector	Terminal			
		+	–		
P0139	F54	55	78	Keeping engine at idle for 10 minutes	A change of voltage should be more than 0.08 V for 1 second during this procedure.
P0159		74			

Is the inspection result normal?

YES >> INSPECTION END
NO >> GO TO 3.

3. PERFORM COMPONENT FUNCTION CHECK-III

Check the voltage between ECM harness connector terminals under the following condition.

DTC	ECM			Condition	Voltage
	Connector	+	–		
		Terminal	Terminal		
P0139	F54	55	78	Coasting from 80 km/h (50 MPH) on the suitable gear position	A change of voltage should be more than 0.08 V for 1 second during this procedure.
P0159		74			

Is the inspection result normal?

YES >> INSPECTION END
NO >> Proceed to EC-239, "Diagnosis Procedure".

Diagnosis Procedure

INFOID:0000000011291753

1. CHECK GROUND CONNECTION

1. Turn ignition switch OFF.
2. Check ground connection M95. Refer to Ground Inspection in GI-45, "Circuit Inspection".

Is the inspection result normal?

YES >> GO TO 2.
NO >> Repair or replace ground connection.

2. CLEAR THE MIXTURE RATIO SELF-LEARNING VALUE

1. Clear the mixture ratio self-learning value. Refer to EC-128, "Ethanol Mixture Ratio Adaptation (Flexible Fuel Vehicle)".
2. Run engine for at least 10 minutes at idle speed.

Is the 1st trip DTC P0171, P0172, P0174 or P0175 detected? Is it difficult to start engine?

YES >> Perform trouble diagnosis for DTC P0171, P0174 or P0172, P0175. Refer to EC-249, "On Board Diagnosis Logic" or EC-254, "On Board Diagnosis Logic".
NO >> GO TO 3.

3. CHECK HO2S2 GROUND CIRCUIT FOR OPEN AND SHORT

1. Turn ignition switch OFF.
2. Disconnect heated oxygen sensor 2 (HO2S2) harness connector.
3. Disconnect ECM harness connector.
4. Check the continuity between HO2S2 harness connector and ECM harness connector.

DTC	HO2S2			ECM		Continuity
	Bank	Connector	Terminal	Connector	Terminal	
P0139	1	F13	4	F54	78	Existed
P0159	2	F12	4			

5. Also check harness for short to ground and short to power.

Is the inspection result normal?

YES >> GO TO 4.
NO >> Repair open circuit, short to ground or short to power in harness or connectors.

4. CHECK HO2S2 INPUT SIGNAL CIRCUIT FOR OPEN AND SHORT

1. Check the continuity between HO2S2 harness connector and ECM harness connector.

DTC	HO2S2			ECM		Continuity
	Bank	Connector	Terminal	Connector	Terminal	
P0139	1	F13	1	F54	55	Existed
P0159	2	F12	1		74	

2. Check the continuity between HO2S2 harness connector and ground, or ECM harness connector and ground.

DTC	HO2S2			Ground	Continuity
	Bank	Connector	Terminal		
P0139	1	F13	1	Ground	Not existed
P0159	2	F12	1		

DTC	ECM			Ground	Continuity
	Bank	Connector	Terminal		
P0139	1	F54	55	Ground	Not existed
P0159	2		74		

3. Also check harness for short to power.

Is the inspection result normal?

YES >> GO TO 5.
NO >> Repair open circuit, short to ground or short to power in harness or connectors.

5. CHECK HEATED OXYGEN SENSOR 2

Refer to EC-240, "Component Inspection".

Is the inspection result normal?

YES >> GO TO 7.
NO >> GO TO 6.

6. REPLACE HEATED OXYGEN SENSOR 2

Replace malfunctioning heated oxygen sensor 2. Refer to EX-6.

CAUTION:

- **Discard any heated oxygen sensor which has been dropped from a height of more than 0.5 m (19.7 in) onto a hard surface such as a concrete floor; use a new one.**
- **Before installing new heated oxygen sensor, clean exhaust system threads using Oxygen Sensor Thread Cleaner [commercial service tool (J-43897-18 or J-43897-12)] and approved Anti-seize Lubricant (commercial service tool).**

>> INSPECTION END

7. CHECK INTERMITTENT INCIDENT

Refer to GI-43, "Intermittent Incident".

>> INSPECTION END

Component Inspection

INFOID:0000000011291754

1. INSPECTION START

Do you have CONSULT?

Do you have CONSULT?

YES >> GO TO 2.
NO >> GO TO 3.

2. CHECK HEATED OXYGEN SENSOR 2

With CONSULT

1. Turn ignition switch ON and select “DATA MONITOR” mode with CONSULT.
2. Start engine and warm it up to the normal operating temperature.
3. Turn ignition switch OFF and wait at least 10 seconds.
4. Start engine and keep the engine speed between 3,500 and 4,000 rpm for at least 1 minute under no load.
5. Let engine idle for 1 minute.
6. Select “FUEL INJECTION” in “ACTIVE TEST” mode, and select “HO2S2 (B1)/(B2)” as the monitor item with CONSULT.

7. Check “HO2S2 (B1) / (B2)” at idle speed when adjusting “FUEL INJECTION” to ±25%.

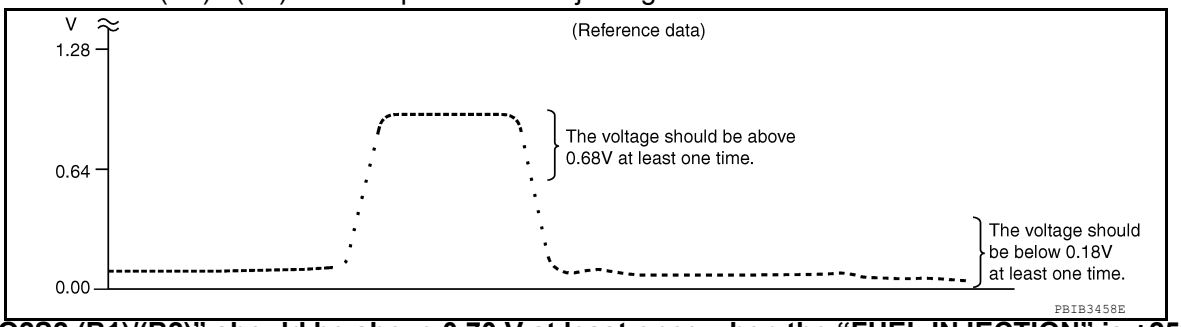

“HO2S2 (B1)/(B2)” should be above 0.70 V at least once when the “FUEL INJECTION” is +25%.
“HO2S2 (B1)/(B2)” should be below 0.18 V at least once when the “FUEL INJECTION” is –25%.

Is the inspection result normal?

YES >> INSPECTION END
NO >> GO TO 6.

3. CHECK HEATED OXYGEN SENSOR 2-I

Without CONSULT

1. Start engine and warm it up to the normal operating temperature.
2. Turn ignition switch OFF and wait at least 10 seconds.
3. Start engine and keep the engine speed between 3,500 and 4,000 rpm for at least 1 minute under no load.
4. Let engine idle for 1 minute.
5. Check the voltage between ECM harness connector terminals under the following condition.

ECM			Condition	Voltage
Connector	+	–		
	Terminal	Terminal		
F54	55 [HO2S2 (bank 1)]	78	Revving up to 4,000 rpm under no load at least 10 times	The voltage should be above 0.70 V at least once during this procedure. The voltage should be below 0.18 V at least once during this procedure.
	74 [HO2S2 (bank 2)]			

Is the inspection result normal?

YES >> INSPECTION END
NO >> GO TO 4.

4. CHECK HEATED OXYGEN SENSOR 2-II

Check the voltage between ECM harness connector terminals under the following condition.

ECM			Condition	Voltage
Connector	+	–		
	Terminal	Terminal		
F54	55 [HO2S2 (bank 1)]	78	Keeping engine at idle for 10 minutes	The voltage should be above 0.70 V at least once during this procedure. The voltage should be below 0.18 V at least once during this procedure.
	74 [HO2S2 (bank 2)]			

Is the inspection result normal?

YES >> INSPECTION END
NO >> GO TO 5.

5. CHECK HEATED OXYGEN SENSOR 2-III

Check the voltage between ECM harness connector terminals under the following condition.

ECM			Condition	Voltage
Connector	+	–		
	Terminal	Terminal		
F54	55 [HO2S2 (bank 1)]	78	Coasting from 80 km/h (50 MPH) on the suitable gear position	The voltage should be above 0.70 V at least once during this procedure. The voltage should be below 0.18 V at least once during this procedure.
	74 [HO2S2 (bank 2)]			

Is the inspection result normal?

YES >> INSPECTION END
NO >> GO TO 6.

6. REPLACE HEATED OXYGEN SENSOR 2

Replace malfunctioning heated oxygen sensor 2. Refer to EX-6.

CAUTION:

- **Discard any heated oxygen sensor which has been dropped from a height of more than 0.5 m (19.7 in) onto a hard surface such as a concrete floor; use a new one.**
- **Before installing new heated oxygen sensor, clean exhaust system threads using Oxygen Sensor Thread Cleaner [commercial service tool (J-43897-18 or J-43897-12)] and approved Anti-seize Lubricant (commercial service tool).**

>> INSPECTION END

P014C, P014D, P014E, P014F, P015A, P015B, P015C, P015D A/F SENSOR 1

DTC Logic

INFOID:0000000011545974

DTC DETECTION LOGIC

To judge malfunctions, this diagnosis measures response time of the A/F signal computed by ECM from the A/F sensor 1 signal. The time is compensated by engine operating (speed and load), fuel feedback control constant, and the A/F sensor 1 temperature index. Judgment is based on whether the compensated time (the A/F signal cycling time index) is inordinately long or not.

DTC No.	Trouble diagnosis name	DTC detecting condition	Possible Cause
P014C	Air fuel ratio (A/F) sensor 1 (bank 1) circuit slow response	• The response time of a A/F sensor 1 signal delays more than the specified time computed by ECM.	• Harness or connectors (The A/F sensor 1 circuit is open or shorted.) • A/F sensor 1
P014D			
P015A	Air fuel ratio (A/F) sensor 1 (bank 1) circuit delayed response		
P015B			
P014E	Air fuel ratio (A/F) sensor 1 (bank 2) circuit slow response		
P014F			
P015C	Air fuel ratio (A/F) sensor 1 (bank 2) circuit delayed response		
P015D			

DTC CONFIRMATION PROCEDURE

1.PRECONDITIONING

If DTC Confirmation Procedure has been previously conducted, always perform the following procedure before conducting the next test.

1. Turn ignition switch OFF and wait at least 10 seconds.
2. Turn ignition switch ON.
3. Turn ignition switch OFF and wait at least 10 seconds.

TESTING CONDITION:

Before performing the following procedure, confirm that battery voltage is more than 11 V at idle.

Do you have CONSULT?

YES >> GO TO 2.
NO >> GO TO 6.

2.PERFORM DTC CONFIRMATION PROCEDURE-1

With CONSULT

1. Start engine and warm it up to normal operating temperature.
2. Turn ignition switch OFF and wait at least 10 seconds.
3. Turn ignition switch ON.
4. Turn ignition switch OFF and wait at least 10 seconds.
5. Start engine and keep the engine speed between 3,500 and 4,000 rpm for at least 1minute under no load.
6. Let engine idle for 1 minute.
7. Increase the engine speed up to about 3,600 rpm and keep it for 10 seconds.
8. Fully release accelerator pedal and then let engine idle for about 1 minute.
9. Check the items status of “DATA MONITOR” as follows.

   NOTE:

   If “PRSNT” changed to “ABSNT”, refer to EC-207, "Overall Function Check".

DTC	Data monitor item	Status
• P014C • P014D • P015A • P015B	A/F SEN1 DIAG3 (B1)	PRSNT
• P014E • P014F • P015C • P015D	A/F SEN1 DIAG3 (B2)	

Is “PRSNT” displayed on CONSULT screen?

YES >> GO TO 4.
NO >> GO TO 3.

3. PERFORM DTC CONFIRMATION PROCEDURE-2

With CONSULT

Perform DTC confirmation procedure-1 again.

Is “PRSNT” displayed on CONSULT screen?

YES >> GO TO 4.
NO >> Refer to EC-207, "Overall Function Check".

4. PERFORM DTC CONFIRMATION PROCEDURE-2

With CONSULT

1. Wait for about 20 seconds at idle.
2. Check the items status of “DATA MONITOR” as follows.
   NOTE:
   If “CMPLT” changed to “INCMP”, refer to EC-207, "Overall Function Check".

DTC	Data monitor item	Status
• P014C • P014D • P015A • P015B	A/F SEN1 DIAG1 (B1)	CMPLT
	A/F SEN1 DIAG2 (B1)	
• P014E • P014F • P015C • P015D	A/F SEN1 DIAG1 (B2)	
	A/F SEN1 DIAG2 (B2)	

Is “CMPLT” displayed on CONSULT screen?

YES >> GO TO 5.
NO >> Refer to EC-207, "Overall Function Check".

5. PERFORM SELF-DIAGNOSIS

With CONSULT

Check the “SELF-DIAG RESULT”.

Is any DTC detected?

YES >> Proceed to EC-245, "Diagnosis Procedure".
NO >> INSPECTION END

6. CHECK AIR-FUEL RATIO SELF-LEARNING VALUE

With GST

1. Start engine and warm it up to normal operating temperature.
2. Select Service $01 with GST.
3. Calculate the total value of “Short term fuel trim” and “Long term fuel trim” indications.

Is the total percentage within ±15%?

YES >> GO TO 8.
NO >> GO TO 7.

7. DETECT MALFUNCTIONING PART

Check the following.
- Intake air leaks
- Exhaust gas leaks
- Incorrect fuel pressure
- Lack of fuel
- Fuel injector
- Incorrect PCV hose connection
- PCV valve
- Mass air flow sensor

>> Repair or replace malfunctioning part.

8. PERFORM DTC CONFIRMATION PROCEDURE

1. Turn ignition switch OFF and wait at least 10 seconds.
2. Turn ignition switch ON.
3. Turn ignition switch OFF and wait at least 10 seconds.
4. Start engine and keep the engine speed between 3,500 and 4,000 rpm for at least 1 minute under no load.
5. Let engine idle for 1 minute.
6. Increase the engine speed up to about 3,600 rpm and keep it for 10 seconds.
7. Fully release accelerator pedal and then let engine idle for about 1 minute.
8. Check 1st trip DTC.

Is 1st trip DTC detected?

YES >> Proceed to EC-245, "Diagnosis Procedure".
NO >> INSPECTION END

Diagnosis Procedure

INFOID:0000000011545975

1. RETIGHTEN AIR FUEL RATIO SENSOR 1

Loosen and retighten the air fuel ratio (A/F) sensor 1. Refer to EM-31, "Exploded View".

>> GO TO 2.

2. CHECK EXHAUST GAS LEAKAGE

1. Start engine and run it at idle.
2. Listen for an exhaust gas leakage before three way catalyst (manifold).

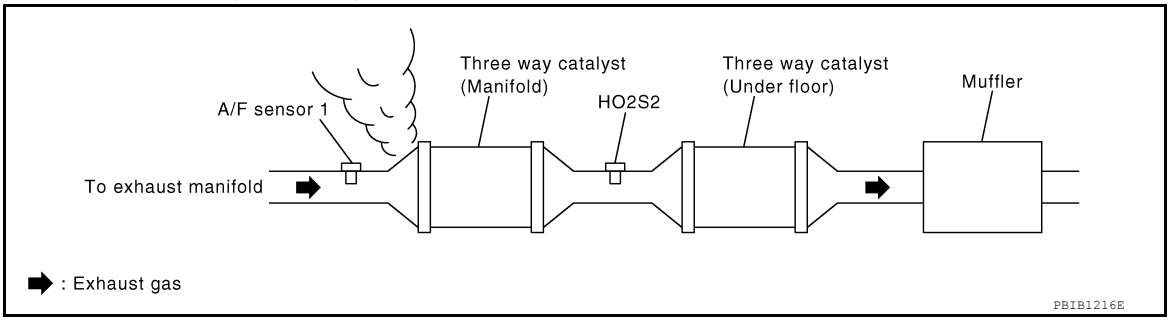

Is exhaust gas leakage detected?

YES >> Repair or replace malfunctioning part.
NO >> GO TO 3.

3. CHECK FOR INTAKE AIR LEAKAGE

Listen for an intake air leakage after the mass air flow sensor.

Is intake air leakage detected?

YES >> Repair or replace malfunctioning part.
NO >> GO TO 4.

4. CLEAR THE MIXTURE RATIO SELF-LEARNING VALUE

1. Clear the mixture ratio self-learning value. Refer to EC-128, "Ethanol Mixture Ratio Adaptation (Flexible Fuel Vehicle)".
2. Run engine for at least 10 minutes at idle speed.

Is the 1st trip DTC P0171, P172, P0174 or P0175 detected? Is it difficult to start engine?

YES >> Perform trouble diagnosis for DTC P0171, P0174 or P0172, P0175. Refer to EC-249, "On Board Diagnosis Logic" or EC-254, "On Board Diagnosis Logic".
NO >> GO TO 5.

5. CHECK AIR FUEL RATIO SENSOR 1 POWER SUPPLY

1. Turn ignition switch OFF.
2. Disconnect air fuel ratio (A/F) sensor 1 harness connector.
3. Turn ignition switch ON.
4. Check the voltage between A/F sensor 1 harness connector and ground.

DTC	A/F sensor 1			Ground	Voltage
	Bank	Connector	Terminal		
P014C P014D P015A P015B	1	F65	4	Ground	Battery voltage
P014E P014F P015C P015D	2	F5	4		

Is the inspection result normal?

YES >> GO TO 7.
NO >> GO TO 6.

6. CHECK AIR FUEL RATIO SENSOR 1 POWER SUPPLY CIRCUIT

1. Turn ignition switch OFF.
2. Disconnect IPDM E/R harness connector.
3. Check the continuity between A/F sensor 1 harness connector and IPDM E/R harness connector.

DTC	A/F sensor 1			IPDM E/R		Continuity
	Bank	Connector	Terminal	Connector	Terminal	
P014C P014D P015A P015B	1	F65	4	E119	8	Existed
P014E P014F P015C P015D	2	F5	4			

4. Also check harness for short to ground and short to power.

Is the inspection result normal?

YES >> Perform trouble diagnosis for power supply circuit.
NO >> Repair or replace malfunctioning part.

7. CHECK A/F SENSOR 1 INPUT SIGNAL CIRCUIT FOR OPEN AND SHORT

1. Turn ignition switch OFF.
2. Disconnect ECM harness connector.
3. Check the continuity between A/F sensor 1 harness connector and ECM harness connector.

DTC	A/F sensor 1			ECM		Continuity
	Bank	Connector	Terminal	Connector	Terminal	
P014C P014D P015A P015B	1	F65	1	F54	35	Existed
			2		56	
P014E P014F P015C P015D	2	F5	1	F54	16	
			2		75	

4. Check the continuity between A/F sensor 1 harness connector and ground, or ECM harness connector and ground.

DTC	A/F sensor 1			Ground	Continuity
	Bank	Connector	Terminal		
P014C P014D P015A P015B	1	F65	1	Ground	Not Existed
			2		
P014E P014F P015C P015D	2	F5	1		
			2		

DTC	ECM			Ground	Continuity
	Bank	Connector	Terminal		
P014C P014D P015A P015B	1	F54	35	Ground	Not Existed
			56		
P014E P014F P015C P015D	2	F54	16		
			75		

5. Also check harness for short to ground and short to power.

Is the inspection result normal?

YES >> GO TO 8.
NO >> Repair or replace malfunctioning part.

8. CHECK A/F SENSOR 1 HEATER

Refer to EC-166, "Component Inspection".

Is the inspection result normal?

YES >> GO TO 9.
NO >> GO TO 12.

9. CHECK MASS AIR FLOW SENSOR

Check mass air flow sensor.
Refer to EC-175, "Component Inspection".

Is the inspection result normal?

YES >> GO TO 10.
NO >> Replace malfunctioning mass air flow sensor. Refer to EM-25, "Removal and Installation".

10. CHECK PCV VALVE

Refer to EC-496, "Component Inspection".

Is the inspection result normal?

YES >> GO TO 11.
NO >> Repair or replace PCV valve.

11. CHECK INTERMITTENT INCIDENT

Perform GI-43, "Intermittent Incident".

Is the inspection result normal?

YES >> GO TO 12.
NO >> Repair or replace malfunctioning part.

12. REPLACE A/F SENSOR 1

Replace malfunctioning A/F sensor 1. Refer to EM-31, "Exploded View".

CAUTION:

- **Discard any A/F sensor which has been dropped from a height of more than 0.5 m (19.7 in) onto a hard surface such as a concrete floor; use a new one.**
- **Before installing new A/F sensor, clean exhaust system threads using Oxygen Sensor Thread Cleaner [commercial service tool (J-43897-18 or J-43897-12)] and approved anti-seize lubricant (commercial service tool).**

>> INSPECTION END

P0171, P0174 FUEL INJECTION SYSTEM FUNCTION

On Board Diagnosis Logic

INFOID:0000000011291755

With the Air/Fuel Mixture Ratio Self-Learning Control, the actual mixture ratio can be brought closely to the theoretical mixture ratio based on the mixture ratio feedback signal from the A/F sensors 1. The ECM calculates the necessary compensation to correct the offset between the actual and the theoretical ratios.
In case the amount of the compensation value is extremely large (The actual mixture ratio is too lean.), the ECM judges the condition as the fuel injection system malfunction and lights up the MIL (2 trip detection logic).

Sensor	Input signal to ECM	ECM function	Actuator
A/F sensor 1	Density of oxygen in exhaust gas (Mixture ratio feedback signal)	Fuel injection control	Fuel injector

DTC No.	Trouble diagnosis name	DTC detecting condition	Possible cause
P0171 0171 (Bank 1) P0174 0174 (Bank 2)	Fuel injection system too lean	• Fuel injection system does not operate properly. • The amount of mixture ratio compensation is too large. (The mixture ratio is too lean.)	• Intake air leaks • A/F sensor 1 • Fuel injector • Exhaust gas leaks • Incorrect fuel pressure • Lack of fuel • Mass air flow sensor • Incorrect PCV hose connection

DTC Confirmation Procedure

INFOID:0000000011291756

NOTE:
If DTC Confirmation Procedure has been previously conducted, always perform the following procedure before conducting the next step.

1. Turn ignition switch OFF and wait at least 10 seconds.
2. Turn ignition switch ON.
3. Turn ignition switch OFF and wait at least 10 seconds.

WITH CONSULT

1. Start engine and warm it up to normal operating temperature.
2. Turn ignition switch OFF and wait at least 10 seconds.
3. Turn ignition switch ON.
4. Turn ignition switch OFF and wait at least 10 seconds.
5. Turn ignition switch ON and select “SELF-LEARNING CONT” in “WORK SUPPORT” mode with CONSULT.
6. Clear the self-learning control coefficient by touching “CLEAR”.
7. Start engine.
   If it is difficult to start engine, the fuel injection system has a malfunction.
   Performing the following procedure is advised.

a. Crank engine while depressing accelerator pedal.
   NOTE:
   When depressing accelerator pedal three-fourths (3/4) or more, the control system does not start the engine. Do not depress accelerator pedal too much.

b. If engine starts, go to EC-250, "Diagnosis Procedure".
   If engine does not start, check exhaust and intake air leakage visually.

8. Keep engine at idle for least 5 minutes.
9. Check 1st trip DTC.
10. The 1st trip DTC P0171 or P0174 should be detected at this stage, if a malfunction exists. If so, go to EC-250, "Diagnosis Procedure".
    NOTE:
    If 1st trip DTC is not detected during above procedure, performing the following procedure is advised.

a. Turn ignition switch OFF and wait at least 10 seconds.
b. Start engine.
c. Maintain the following conditions for at least 10 consecutive minutes.
Hold the accelerator pedal as steady as possible.

VHCL SPEED SE	50 - 120 km/h (31 - 75 MPH)

CAUTION:
Always drive vehicle at a safe speed.

d. Check 1st trip DTC.
e. If 1st trip DTC is detected, go to EC-250, "Diagnosis Procedure".

WITH GST

1. Start engine and warm it up to normal operating temperature.
2. Turn ignition switch OFF and wait at least 10 seconds.
3. Turn ignition switch ON.
4. Turn ignition switch OFF and wait at least 10 seconds.
5. Disconnect mass air flow sensor harness connector.
6. Restart engine and let it idle for at least 5 seconds.
7. Stop engine and reconnect mass air flow sensor harness connector.
8. Select Service $03 with GST. Make sure DTC P0102 is detected.
9. Select Service $04 with GST and erase the DTC P0102.
10. Start engine.
If it is difficult to start engine, the fuel injection system has a malfunction.
Performing the following procedure is advised.

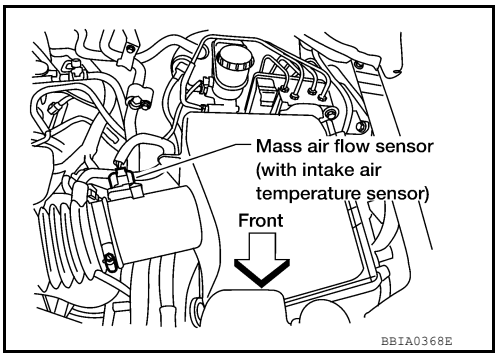

a. Crank engine while depressing accelerator pedal.
NOTE:
When depressing accelerator pedal three-fourths (3/4) or more, the control system does not start the engine. Do not depress accelerator pedal too much.
b. If engine starts, go to EC-250, "Diagnosis Procedure".
If engine does not start, check exhaust and intake air leakage visually.

11. Keep engine at idle for at least 5 minutes.
12. Check 1st trip DTC.
13. The 1st trip DTC P0171 or P0174 should be detected at this stage, if a malfunction exists. If so, go to EC-250, "Diagnosis Procedure".
NOTE:
If 1st trip DTC is not detected during above procedure, performing the following procedure is advised.

a. Turn ignition switch OFF and wait at least 10 seconds.
b. Start engine.
c. Maintain the following conditions for at least 10 consecutive minutes.
Hold the accelerator pedal as steady as possible.

VHCL SPEED SE	50 - 120 km/h (31 - 75 MPH)

CAUTION:
Always drive vehicle at a safe speed.

d. Check 1st trip DTC.
e. If 1st trip DTC is detected, go to EC-250, "Diagnosis Procedure".

Diagnosis Procedure

INFOID:0000000011291757

1. CHECK EXHAUST GAS LEAK

1. Start engine and run it at idle.
2. Listen for an exhaust gas leak before three way catalyst (manifold).

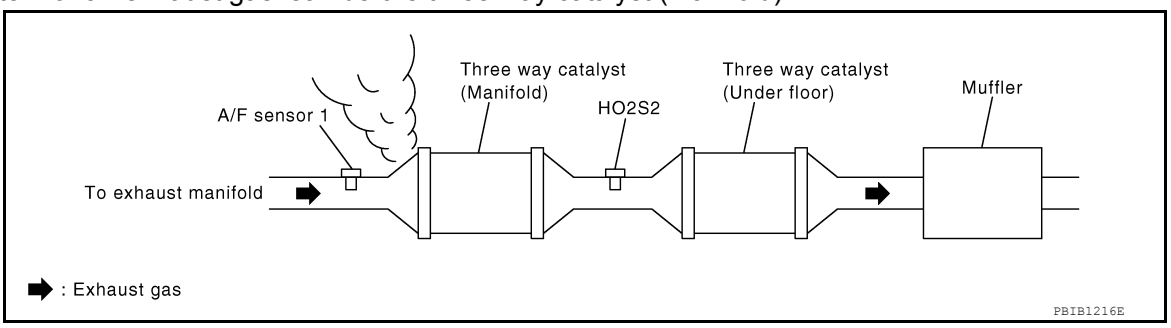

OK or NG

OK >> GO TO 2.
NG >> Repair or replace.

2. CHECK FOR INTAKE AIR LEAK

1. Listen for an intake air leak after the mass air flow sensor.
2. Check PCV hose connection.

OK or NG

OK >> GO TO 3.
NG >> Repair or replace.

3. CHECK A/F SENSOR 1 INPUT SIGNAL CIRCUIT

1. Turn ignition switch OFF.
2. Disconnect corresponding A/F sensor 1 harness connector.

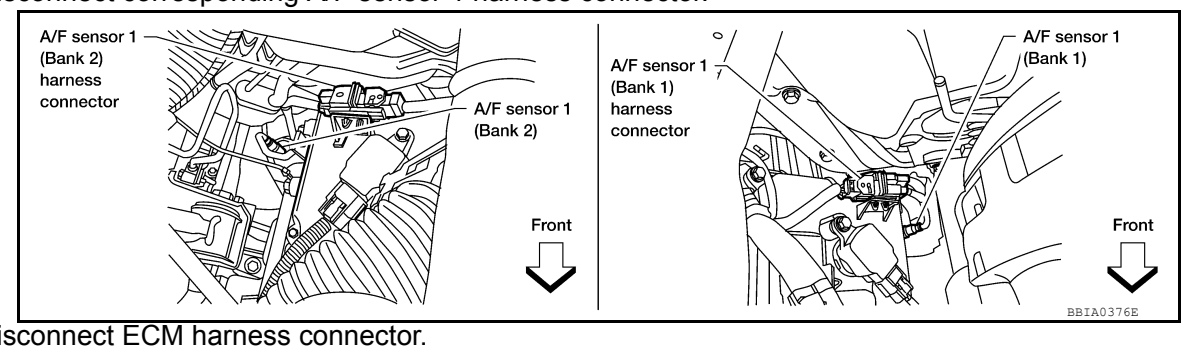

3. Disconnect ECM harness connector.
4. Check harness continuity between the following terminals.
   Refer to Wiring Diagram.

	A/F sensor 1 terminal	ECM terminal
Bank 1	1	35
	2	56
Bank 2	1	16
	2	75

Continuity should exist.

5. Check harness continuity between the following terminals and ground.
   Refer to Wiring Diagram.

Bank 1		Bank 2	
A/F sensor 1 terminal	ECM terminal	A/F sensor 1 terminal	ECM terminal
1	35	1	16
2	56	2	75

Continuity should not exist.

6. Also check harness for short to power.

OK or NG

OK >> GO TO 4.
NG >> Repair open circuit or short to ground or short to power in harness or connectors.

4. CHECK FUEL PRESSURE

1. Release fuel pressure to zero. Refer to EC-506, "Fuel Pressure Check".
2. Install fuel pressure gauge kit [SST (J-44321)] and check fuel pressure. Refer to EC-506, "Fuel Pressure Check".

At idling: Approximately 350 kPa (3.57 kg/cm^2, 51 psi)

OK or NG

OK >> GO TO 6.
NG >> GO TO 5.

5. DETECT MALFUNCTIONING PART

Check the following.
- Fuel pump and circuit (Refer to EC-478.)
- **<Flexible Fuel Vehicle>**
  FPCM and circuit (Refer to EC-391.)
- Fuel pressure regulator (Refer to EC-506, "Fuel Pressure Check".)
- Fuel lines
- Fuel filter for clogging

>> Repair or replace.

6. CHECK MASS AIR FLOW SENSOR

With CONSULT
1. Install all removed parts.
2. Check “MASS AIR FLOW” in “DATA MONITOR” mode with CONSULT.

3.0 - 9.0 g/s : at idling
9.0 - 28.0 g/s : at 2,500 rpm

With GST
1. Install all removed parts.
2. Check mass air flow sensor signal in Service $01 with GST.

3.0 - 9.0 g/s : at idling
9.0 - 28.0 g/s : at 2,500 rpm

OK or NG

OK >> GO TO 7.
NG >> Check connectors for rusted terminals or loose connections in the mass air flow sensor circuit or grounds. Refer to EC-173.

7. CHECK FUNCTION OF FUEL INJECTOR

With CONSULT
1. Start engine.
2. Perform “POWER BALANCE” in “ACTIVE TEST” mode with CONSULT.
3. Make sure that each circuit produces a momentary engine speed drop.

Without CONSULT
1. Start engine.

2. Listen to each fuel injector operating sound.

Clicking noise should be heard.

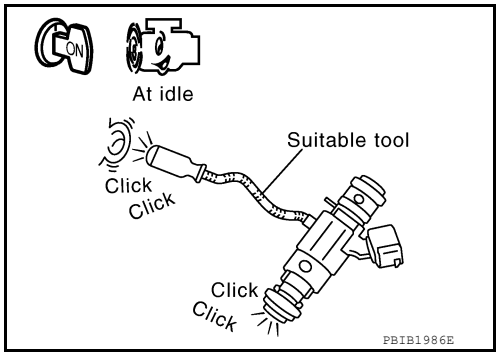

OK or NG

OK >> GO TO 8.
NG >> Perform trouble diagnosis for FUEL INJECTOR, refer to EC-475.

8. CHECK FUEL INJECTOR

1. Confirm that the engine is cooled down and there are no fire hazards near the vehicle.
2. Turn ignition switch OFF.
3. Disconnect all fuel injector harness connectors.
4. Remove fuel injector gallery assembly. Refer to EM-42, "Removal and Installation".
   Keep fuel hose and all fuel injectors connected to fuel injector gallery.
5. For DTC P0171, reconnect fuel injector harness connectors on bank 1.
   For DTC P0174, reconnect fuel injector harness connectors on bank 2.
6. Disconnect all ignition coil harness connectors.
7. Prepare pans or saucers under each fuel injector.
8. Crank engine for about 3 seconds.
   For DTC P0171, make sure that fuel sprays out from fuel injectors on bank 1.
   For DTC P0174, make sure that fuel sprays out from fuel injectors on bank 2.

Fuel should be sprayed evenly for each fuel injector.

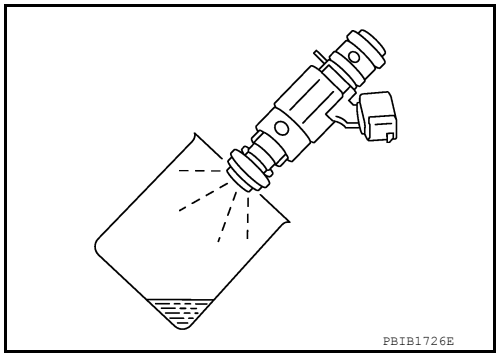

OK or NG

OK >> GO TO 9.
NG >> Replace fuel injectors from which fuel does not spray out. Refer to EM-42. Always replace O-ring with new ones.

9. CHECK INTERMITTENT INCIDENT

Refer to GI-40, "How to Check Terminal" and GI-43, "Intermittent Incident".

>> **INSPECTION END**

P0172, P0175 FUEL INJECTION SYSTEM FUNCTION

On Board Diagnosis Logic

INFOID:0000000011291758

With the Air/Fuel Mixture Ratio Self-Learning Control, the actual mixture ratio can be brought closely to the theoretical mixture ratio based on the mixture ratio feedback signal from the A/F sensors 1. The ECM calculates the necessary compensation to correct the offset between the actual and the theoretical ratios.
In case the amount of the compensation value is extremely large (The actual mixture ratio is too rich.), the ECM judges the condition as the fuel injection system malfunction and lights up the MIL (2 trip detection logic).

Sensor	Input signal to ECM	ECM function	Actuator
A/F sensor 1	Density of oxygen in exhaust gas (Mixture ratio feedback signal)	Fuel injection control	Fuel injector

DTC No.	Trouble diagnosis name	DTC detecting condition	Possible cause
P0172 0172 (Bank 1)	Fuel injection system too rich	• Fuel injection system does not operate properly. • The amount of mixture ratio compensation is too large. (The mixture ratio is too rich.)	• A/F sensor 1 • Fuel injector • Exhaust gas leaks • Incorrect fuel pressure • Mass air flow sensor
P0175 0175 (Bank 2)			

DTC Confirmation Procedure

INFOID:0000000011291759

NOTE:
If DTC Confirmation Procedure has been previously conducted, always perform the following procedure before conducting the next step.

1. Turn ignition switch OFF and wait at least 10 seconds.
2. Turn ignition switch ON.
3. Turn ignition switch OFF and wait at least 10 seconds.

WITH CONSULT

1. Start engine and warm it up to normal operating temperature.
2. Turn ignition switch OFF and wait at least 10 seconds.
3. Turn ignition switch ON.
4. Turn ignition switch OFF and wait at least 10 seconds.
5. Turn ignition switch ON and select “SELF-LEARNING CONT” in “WORK SUPPORT” mode with CONSULT.
6. Clear the self-learning control coefficient by touching “CLEAR”.
7. Start engine.
   If it is difficult to start engine, the fuel injection system has a malfunction.
   Performing the following procedure is advised.

a. Crank engine while depressing accelerator pedal.
   NOTE:
   When depressing accelerator pedal three-fourths (3/4) or more, the control system does not start the engine. Do not depress accelerator pedal too much.
b. If engine starts, go to EC-255, "Diagnosis Procedure".
   If engine does not start, check exhaust and intake air leakage visually.

8. Keep engine at idle for least 5 minutes.
9. Check 1st trip DTC.
10. The 1st trip DTC P0172 or P0175 should be detected at this stage, if a malfunction exists. If so, go to EC-255, "Diagnosis Procedure".
    NOTE:
    If 1st trip DTC is not detected during above procedure, performing the following procedure is advised.

a. Turn ignition switch OFF and wait at least 10 seconds.
b. Start engine.

c. Maintain the following conditions for at least 10 consecutive minutes.
Hold the accelerator pedal as steady as possible.

VHCL SPEED SE	50 - 120 km/h (31 - 75 MPH)

CAUTION:
Always drive vehicle at a safe speed.

d. Check 1st trip DTC.
e. If 1st trip DTC is detected, go to EC-255, "Diagnosis Procedure".

WITH GST

1. Start engine and warm it up to normal operating temperature.
2. Turn ignition switch OFF and wait at least 10 seconds.
3. Turn ignition switch ON.
4. Turn ignition switch OFF and wait at least 10 seconds.
5. Disconnect mass air flow sensor harness connector.
6. Restart engine and let it idle for at least 5 seconds.
7. Stop engine and reconnect mass air flow sensor harness connector.
8. Select Service $03 with GST. Make sure DTC P0102 is detected.
9. Select Service $04 with GST and erase the DTC P0102.
10. Start engine.
If it is difficult to start engine, the fuel injection system has a malfunction.
Performing the following procedure is advised.

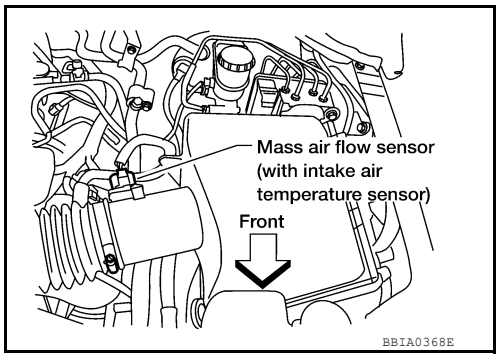

a. Crank engine while depressing accelerator pedal.
NOTE:
When depressing accelerator pedal three-fourths (3/4) or more, the control system does not start the engine. Do not depress accelerator pedal too much.
b. If engine starts, go to EC-255, "Diagnosis Procedure".
If engine does not start, check exhaust and intake air leakage visually.

11. Keep engine at idle for at least 5 minutes.
12. Check 1st trip DTC.
13. The 1st trip DTC P0172 or P0175 should be detected at this stage, if a malfunction exists. If so, go to EC-255, "Diagnosis Procedure".
NOTE:
If 1st trip DTC is not detected during above procedure, performing the following procedure is advised.

a. Turn ignition switch OFF and wait at least 10 seconds.
b. Start engine.
c. Maintain the following conditions for at least 10 consecutive minutes.
Hold the accelerator pedal as steady as possible.

VHCL SPEED SE	50 - 120 km/h (31 - 75 MPH)

CAUTION:
Always drive vehicle at a safe speed.

d. Check 1st trip DTC.
e. If 1st trip DTC is detected, go to EC-255, "Diagnosis Procedure".

Diagnosis Procedure

INFOID:0000000011291760

1. CHECK EXHAUST GAS LEAK

1. Start engine and run it at idle.

2. Listen for an exhaust gas leak before three way catalyst (manifold).

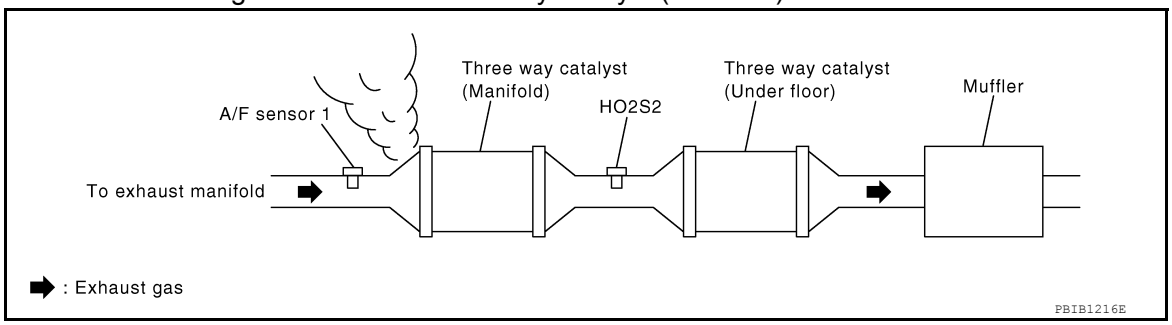

OK or NG

OK >> GO TO 2.
NG >> Repair or replace.

2. CHECK FOR INTAKE AIR LEAK

Listen for an intake air leak after the mass air flow sensor.

OK or NG

OK >> GO TO 3.
NG >> Repair or replace.

3. CHECK A/F SENSOR 1 INPUT SIGNAL CIRCUIT

1. Turn ignition switch OFF.
2. Disconnect corresponding A/F sensor 1 harness connector.

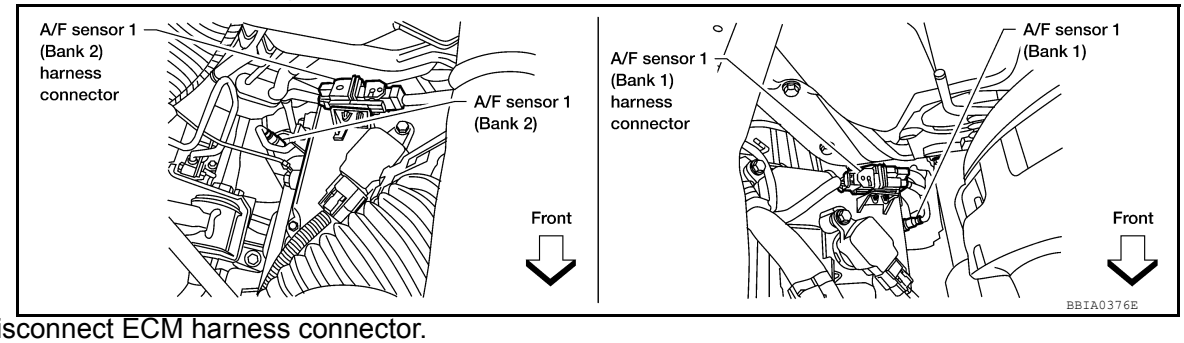

3. Disconnect ECM harness connector.
4. Check harness continuity between the following terminals.
   Refer to Wiring Diagram.

	A/F sensor 1 terminal	ECM terminal
Bank 1	1	35
	2	56
Bank 2	1	16
	2	75

Continuity should exist.

5. Check harness continuity between the following terminals and ground.
   Refer to Wiring Diagram.

Bank 1		Bank 2	
A/F sensor 1 terminal	ECM terminal	A/F sensor 1 terminal	ECM terminal
1	35	1	16
2	56	2	75

Continuity should not exist.

6. Also check harness for short to power.

OK or NG

OK >> GO TO 4.
NG >> Repair open circuit or short to ground or short to power in harness or connectors.

4. CHECK FUEL PRESSURE

1. Release fuel pressure to zero. Refer to EC-506, "Fuel Pressure Check".
2. Install fuel pressure gauge and check fuel pressure. Refer to EC-506, "Fuel Pressure Check".

At idling: Approximately 350 kPa (3.57 kg/cm^2, 51 psi)

OK or NG

OK >> GO TO 6.
NG >> GO TO 5.

5. DETECT MALFUNCTIONING PART

Check the following.
- Fuel pump and circuit (Refer to EC-478.)
- **<Flexible Fuel Vehicle>**
  FPCM and circuit (Refer to EC-391.)
- Fuel pressure regulator (Refer to EC-506, "Fuel Pressure Check".)

>> Repair or replace.

6. CHECK MASS AIR FLOW SENSOR

With CONSULT
1. Install all removed parts.
2. Check “MASS AIR FLOW” in “DATA MONITOR” mode with CONSULT.

3.0 - 9.0 g/s : at idling
9.0 - 28.0 g/s : at 2,500 rpm

With GST
1. Install all removed parts.
2. Check mass air flow sensor signal in Service $01 with GST.

3.0 - 9.0 g/s : at idling
9.0 - 28.0 g/s : at 2,500 rpm

OK or NG

OK >> GO TO 7.
NG >> Check connectors for rusted terminals or loose connections in the mass air flow sensor circuit or grounds. Refer to EC-173.

7. CHECK FUNCTION OF FUEL INJECTOR

With CONSULT
1. Start engine.
2. Perform “POWER BALANCE” in “ACTIVE TEST” mode with CONSULT.
3. Make sure that each circuit produces a momentary engine speed drop.

Without CONSULT
1. Start engine.

2. Listen to each fuel injector operating sound.

Clicking noise should be heard.

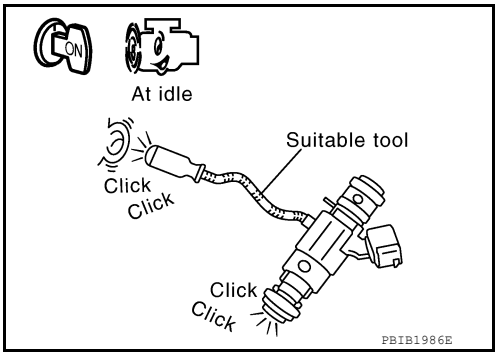

OK or NG

OK >> GO TO 8.
NG >> Perform trouble diagnosis for FUEL INJECTOR, refer to EC-475.

8. CHECK FUEL INJECTOR

1. Remove fuel injector assembly. Refer to EM-42, "Removal and Installation".
   Keep fuel hose and all fuel injectors connected to fuel injector gallery.
2. Confirm that the engine is cooled down and there are no fire hazards near the vehicle.
3. Disconnect all fuel injector harness connectors.
4. Disconnect all ignition coil harness connectors.
5. Prepare pans or saucers under each fuel injectors.
6. Crank engine for about 3 seconds.
   Make sure fuel does not drip from fuel injector.

OK or NG

OK (Does not drip.)>>GO TO 9.
NG (Drips.)>>Replace the fuel injectors from which fuel is dripping. Refer to EM-42. Always replace O-ring with new one.

9. CHECK INTERMITTENT INCIDENT

Refer to GI-40, "How to Check Terminal" and GI-43, "Intermittent Incident".

>> **INSPECTION END**

P0181 FTT SENSOR

Component Description

INFOID:0000000011291761

The fuel tank temperature sensor is used to detect the fuel temperature inside the fuel tank. The sensor modifies a voltage signal from the ECM. The modified signal returns to the ECM as the fuel temperature input. The sensor uses a thermistor which is sensitive to the change in temperature. The electrical resistance of the thermistor decreases as temperature increases.

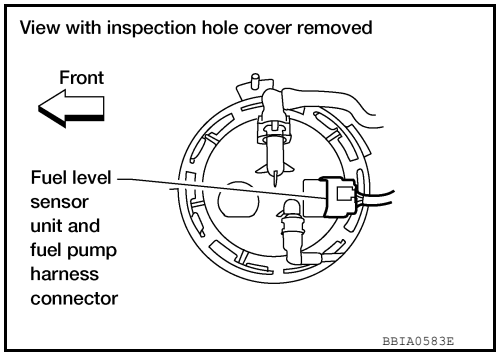

<Reference data>

Fluid temperature [°C (°F)]	Voltage* (V)	Resistance (kΩ)
20 (68)	3.5	2.3 - 2.7
50 (122)	2.2	0.79 - 0.90

*: These data are reference values and are measured between ECM terminal 107 (Fuel tank temperature sensor) and ground.

CAUTION:

Do not use ECM ground terminals when measuring input/output voltage. Doing so may result in damage to the ECM's transistor. Use a ground other than ECM terminals, such as the ground.

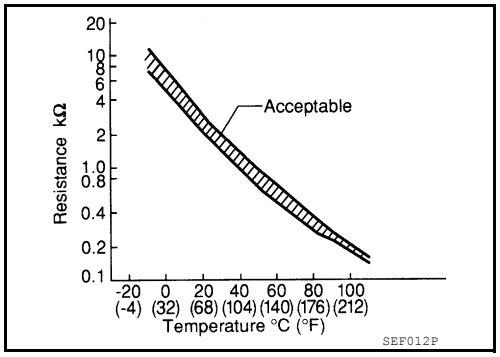

DTC Logic

INFOID:0000000011291762

DTC DETECTION LOGIC

DTC No.	Trouble diagnosis (Trouble diagnosis content)		DTC detecting condition	Possible cause
P0181	FTT SENSOR [Fuel tank temperature (FTT) sensor circuit range/performance]	A)	Rationally incorrect voltage from the sensor is sent to ECM, compared with the voltage signals from ECT sensor and intake air temperature sensor.	• Harness or connectors (The FTT sensor circuit is open or shorted) • FTT sensor
		B)	The comparison result of signals transmitted to ECM from each temperature sensor (IAT sensor, ECT sensor, and FTT sensor) shows that the voltage signal of the FTT sensor is higher/lower than that of other temperature sensors when the engine is started with its cold state.	• Harness or connectors (High or low resistance in the FTT sensor circuit) • FTT sensor

DTC CONFIRMATION PROCEDURE

1. INSPECTION START

Is it necessary to erase permanent DTC?

YES >> GO TO 7.
NO >> GO TO 2.

2. PRECONDITIONING

If DTC CONFIRMATION PROCEDURE has been previously conducted, always perform the following procedure before conducting the next test.

1. Turn ignition switch OFF and wait at least 10 seconds.
2. Turn ignition switch ON.
3. Turn ignition switch OFF and wait at least 10 seconds.

>> GO TO 3.

3. PERFORM DTC CONFIRMATION PROCEDURE FOR MALFUNCTION A-I

1. Turn ignition switch ON and wait at least 10 seconds.
2. Check 1st trip DTC.

Is 1st trip DTC detected?

YES >> Proceed to EC-261, "Diagnosis Procedure".
NO >> GO TO 4.

4. CHECK ENGINE COOLANT TEMPERATURE

With CONSULT
1. Select “COOLAN TEMP/S” in “DATA MONITOR” with CONSULT.
2. Check “COOLAN TEMP/S” value.

With GST
Follow the procedure “With CONSULT” above.

“COOLAN TEMP/S” less than 60°C (140°F)?

YES >> INSPECTION END
NO >> GO TO 5.

5. PERFORM DTC CONFIRMATION PROCEDURE FOR MALFUNCTION A-II

With CONSULT
1. Cool engine down until “COOLAN TEMP/S” is less than 60°C (140°F).
2. Wait at least 10 seconds.
3. Check 1st trip DTC.

With GST
Follow the procedure “With CONSULT” above.

Is 1st trip DTC detected?

YES >> Proceed to EC-261, "Diagnosis Procedure".
NO >> GO TO 6.

6. PERFORM COMPONENT FUNCTION CHECK (FOR MALFUNCTION B)

Perform component function check. Refer to EC-261, "Component Function Check".

NOTE:
Use the component function check to check the overall function of the FTT sensor circuit. During this check, a 1st trip DTC might not be confirmed.

Is the inspection result normal?

YES >> INSPECTION END
NO >> Proceed to EC-261, "Diagnosis Procedure".

7. PRECONDITIONING

If DTC CONFIRMATION PROCEDURE has been previously conducted, always perform the following procedure before conducting the next test.
1. Turn ignition switch OFF and wait at least 10 seconds.
2. Turn ignition switch ON.
3. Turn ignition switch OFF and wait at least 10 seconds.

TESTING CONDITION:
- **Before performing the following procedure, do not add fuel.**
- **Before performing the following procedure, check that fuel level is between 1/4 and 4/4.**
- **Before performing the following procedure, confirm that battery voltage is 11 V or more at idle.**

>> GO TO 8.

8. PERFORM DTC CONFIRMATION PROCEDURE B

1. Start engine and let it idle for 60 minutes.

2. Move the vehicle to a cool place.
   NOTE:
   Cool the vehicle in an environment of ambient air temperature between –10°C (14°F) and 35°C (95°F).
3. Turn ignition switch OFF and soak the vehicle for 12 hours.
   CAUTION:
   Never turn ignition switch ON during soaking.
   NOTE:
   The vehicle must be cooled with the hood open.
4. Start engine and let it idle for 5 minutes or more.
   CAUTION:
   Never turn ignition switch OFF during idling.
5. Check 1st trip DTC.

Is 1st trip DTC detected?

YES >> Proceed to EC-261, "Diagnosis Procedure".
NO >> INSPECTION END

Component Function Check

INFOID:0000000011291763

1. CHECK FUEL TANK TEMPERATURE (FTT) SENSOR

1. Turn ignition switch OFF.
2. Disconnect fuel level sensor unit and fuel pump harness connector.
3. Remove fuel level sensor unit. Refer to FL-12, "Removal and Installation".
4. Check resistance between fuel level sensor unit and fuel pump terminals by heating with hot water as shown in the figure.

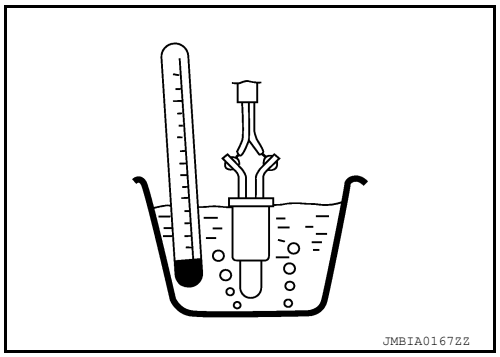

Terminals	Condition		Resistance (kΩ)
4 and 3	Temperature [°C (°F)]	20 (68)	2.3 – 2.7
		50 (122)	0.79 – 0.90

Is the inspection result normal?

YES >> GO TO 2.
NO >> Proceed to EC-261, "Diagnosis Procedure".

2. CHECK INTERMITTENT INCIDENT

Check intermittent incident. Refer to GI-43, "Intermittent Incident".

Is the inspection result normal?

YES >> INSPECTION END
NO >> Proceed to EC-261, "Diagnosis Procedure".

Diagnosis Procedure

INFOID:0000000011291764

1. INSPECTION START

Confirm the detected malfunction (A or B). Refer to EC-259, "DTC Logic".

Which malfunction is detected?

A >> GO TO 2.
B >> GO TO 6.

2. CHECK FUEL TANK TEMPERATURE (FTT) SENSOR POWER SUPPLY CIRCUIT

1. Turn ignition switch OFF.
2. Disconnect fuel level sensor unit and fuel pump harness connector.
3. Turn ignition switch ON.
4. Check the voltage between fuel level sensor unit and fuel pump harness connector and ground.

Fuel level sensor unit and fuel pump		Ground	Voltage (V)
Connector	Terminal		
C5	4	Ground	Approx. 5

Is the inspection result normal?

YES >> GO TO 4.
NO >> GO TO 3.

3. DETECT MALFUNCTIONING PART

Check the following.
- Harness for open or short between ECM and fuel level sensor unit and fuel pump
- Loose or poor connection for each connector and harness

>> Repair open circuit, short to ground or short to power in harness or connector.

4. CHECK FTT SENSOR GROUND CIRCUIT FOR OPEN AND SHORT

1. Turn ignition switch OFF.
2. Check the continuity between fuel level sensor unit and fuel pump harness connector and ground.

Fuel level sensor unit and fuel pump		Ground	Continuity
Connector	Terminal		
C5	3	Ground	Existed

3. Also check harness for short to ground and short to power.

Is the inspection result normal?

YES >> GO TO 6.
NO >> GO TO 5.

5. DETECT MALFUNCTIONING PART

Check the following.
- Harness for open or short between fuel level sensor unit and fuel pump and ground
- Loose or poor connection for each connector and harness

>> Repair open circuit, short to ground or short to power in harness or connector.

6. CHECK FTT SENSOR

Check FTT sensor. Refer to EC-262, "Component Inspection".

Is the inspection result normal?

YES >> GO TO 7.
NO >> Replace fuel level sensor unit and fuel pump. Refer to FL-12, "Removal and Installation".

7. CHECK INTERMITTENT INCIDENT

Check intermittent incident. Refer to GI-43, "Intermittent Incident".

>> INSPECTION END

Component Inspection

INFOID:0000000011291765

1. CHECK FUEL TANK TEMPERATURE (FTT) SENSOR

1. Turn ignition switch OFF.
2. Disconnect fuel level sensor unit and fuel pump harness connector.
3. Remove fuel level sensor unit. Refer to FL-12, "Removal and Installation".

4. Check resistance between fuel level sensor unit and fuel pump terminals by heating with hot water as shown in the figure.

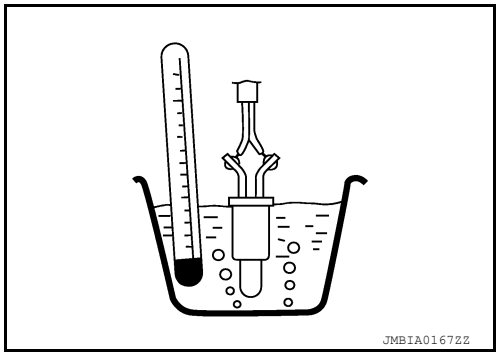

Terminals	Condition		Resistance (kΩ)
4 and 3	Temperature [°C (°F)]	20 (68)	2.3 – 2.7
		50 (122)	0.79 – 0.90

Is the inspection result normal?

YES >> INSPECTION END
NO >> Replace fuel level sensor unit and fuel pump. Refer to FL-12, "Removal and Installation".

P0182, P0183 FTT SENSOR

Component Description

INFOID:0000000011291766

The fuel tank temperature sensor is used to detect the fuel temperature inside the fuel tank. The sensor modifies a voltage signal from the ECM. The modified signal returns to the ECM as the fuel temperature input. The sensor uses a thermistor which is sensitive to the change in temperature. The electrical resistance of the thermistor decreases as temperature increases.

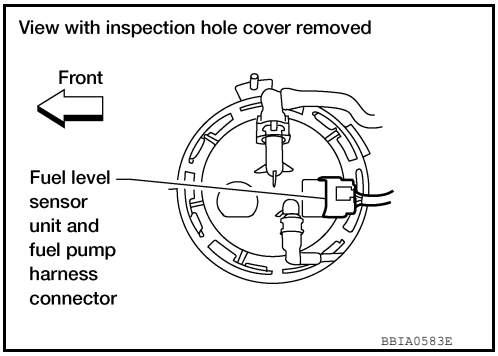

<Reference data>

Fluid temperature [°C (°F)]	Voltage* (V)	Resistance (kΩ)
20 (68)	3.5	2.3 - 2.7
50 (122)	2.2	0.79 - 0.90

*: These data are reference values and are measured between ECM terminal 107 (Fuel tank temperature sensor) and ground.

CAUTION:

Do not use ECM ground terminals when measuring input/output voltage. Doing so may result in damage to the ECM's transistor. Use a ground other than ECM terminals, such as the ground.

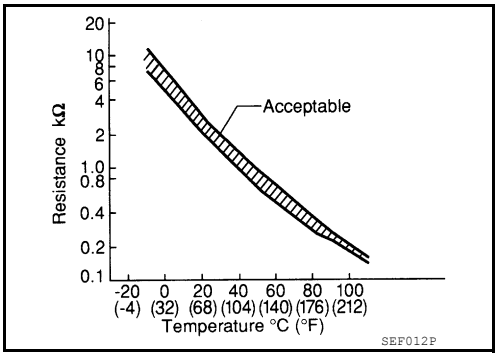

On Board Diagnosis Logic

INFOID:0000000011291767

DTC No.	Trouble diagnosis name	DTC detecting condition	Possible cause
P0182 0182	Fuel tank temperature sensor circuit low input	An excessively low voltage from the sensor is sent to ECM.	• Harness or connectors (The sensor circuit is open or shorted.) • Fuel tank temperature sensor
P0183 0183	Fuel tank temperature sensor circuit high input	An excessively high voltage from the sensor is sent to ECM.	

DTC Confirmation Procedure

INFOID:0000000011291768

1. If DTC Confirmation Procedure has been previously conducted, always perform the following before conducting the next step.

a. Turn ignition switch OFF and wait at least 10 seconds.
b. Turn ignition switch ON.
c. Turn ignition switch OFF and wait at least 10 seconds.

2. Turn ignition switch ON.
3. Wait at least 5 seconds.
4. Check 1st trip DTC.
5. If 1st trip DTC is detected, go to EC-264, "Diagnosis Procedure".

Diagnosis Procedure

INFOID:0000000011291769

1. CHECK FUEL TANK TEMPERATURE SENSOR POWER SUPPLY CIRCUIT

1. Turn ignition switch OFF.

2. Disconnect “fuel level sensor unit and fuel pump” harness connector.
3. Turn ignition switch ON.

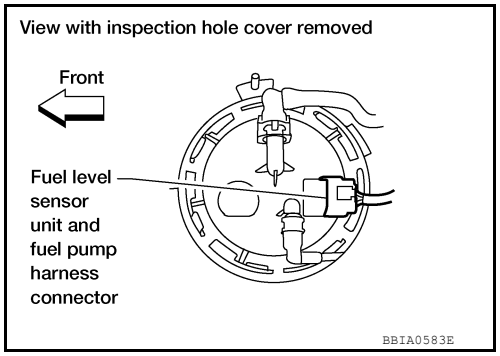

4. Check voltage between “fuel level sensor unit and fuel pump” terminal 4 and ground with CONSULT or tester.

Voltage: Approximately 5 V

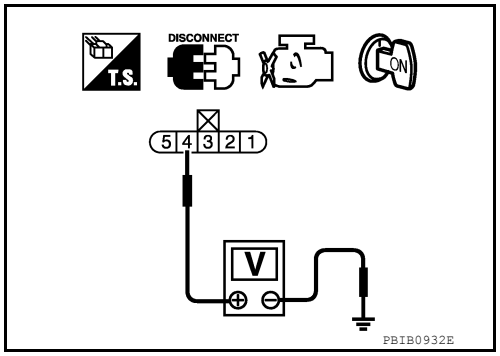

OK or NG

OK >> GO TO 3.
NG >> GO TO 2.

2. DETECT MALFUNCTIONING PART

Check the following.
- Harness connectors C1, E41
- Harness for open or short between ECM and “fuel level sensor unit and fuel pump”

>> Repair harness or connector.

3. CHECK FUEL TANK TEMPERATURE SENSOR GROUND CIRCUIT FOR OPEN AND SHORT

1. Turn ignition switch OFF.
2. Check harness continuity between “fuel level sensor unit and fuel pump” terminal 3 and ground. Refer to Wiring Diagram.

Continuity should exist.

3. Also check harness for short to power.

OK or NG

OK >> GO TO 5.
NG >> GO TO 4.

4. DETECT MALFUNCTIONING PART

Check the following.
- Harness connectors C1, E41
- Harness for open or short between “fuel level sensor unit and fuel pump” and ground

>> Repair open circuit or short to power in harness or connector.

5. CHECK FUEL TANK TEMPERATURE SENSOR

Refer to EC-266, "Component Inspection".

OK or NG

OK >> GO TO 6.
NG >> Replace “fuel level sensor unit and fuel pump”. Refer to FL-12, "Removal and Installation".

6. CHECK INTERMITTENT INCIDENT

Refer to GI-40, "How to Check Terminal" and GI-43, "Intermittent Incident".

>> **INSPECTION END**

Component Inspection

INFOID:0000000011291770

FUEL TANK TEMPERATURE SENSOR

1. Remove fuel level sensor unit. Refer to FL-12.
2. Check resistance between “fuel level sensor unit and fuel pump” terminals 3 and 4 by heating with hot water as shown in the figure.

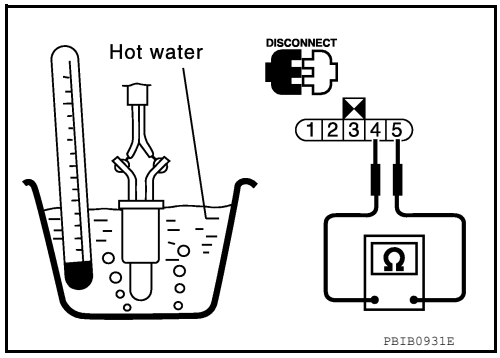

Temperature [°C (°F)]	Resistance (kΩ)
20 (68)	2.3 - 2.7
50 (122)	0.79 - 0.90

If NG, replace fuel level sensor unit. Refer to FL-12, "Removal and Installation".

P0222, P0223 APP SENSOR

Component Description

INFOID:0000000011291771

Electric throttle control actuator consists of throttle control motor, throttle position sensor, etc. The throttle position sensor responds to the throttle valve movement.
The throttle position sensor has the two sensors. These sensors are a kind of potentiometers which transform the throttle valve position into output voltage, and emit the voltage signal to the ECM. In addition, these sensors detect the opening and closing speed of the throttle valve and feed the voltage signals to the ECM. The ECM judges the current opening angle of the throttle valve from these signals and the ECM controls the throttle control motor to make the throttle valve opening angle properly in response to driving condition.

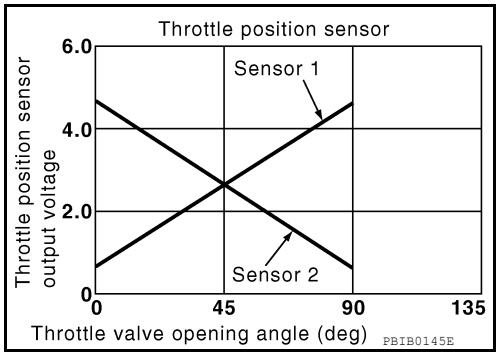

On Board Diagnosis Logic

INFOID:0000000011291772

These self-diagnoses have the one trip detection logic.

DTC No.	Trouble diagnosis name	DTC detecting condition	Possible cause
P0222 0222	Throttle position sensor 1 circuit low input	An excessively low voltage from the TP sensor 1 is sent to ECM.	• Harness or connectors (TP sensor 1 circuit is open or shorted.) (APP sensor 2 circuit is shorted.) • Electric throttle control actuator (TP sensor 1) • Accelerator pedal position sensor (APP sensor 2)
P0223 0223	Throttle position sensor 1 circuit high input	An excessively high voltage from the TP sensor 1 is sent to ECM.	

FAIL-SAFE MODE

When the malfunction is detected, ECM enters fail-safe mode and the MIL lights up.

Engine operation condition in fail-safe mode
The ECM controls the electric throttle control actuator in regulating the throttle opening in order for the idle position to be within +10 degrees. The ECM regulates the opening speed of the throttle valve to be slower than the normal condition. So, the acceleration will be poor.

DTC Confirmation Procedure

INFOID:0000000011291773

NOTE:
If DTC Confirmation Procedure has been previously conducted, always perform the following before conducting the next step.
1. Turn ignition switch OFF and wait at least 10 seconds.
2. Turn ignition switch ON.
3. Turn ignition switch OFF and wait at least 10 seconds.

TESTING CONDITION:
Before performing the following procedure, confirm that battery voltage is more than 8 V at idle.
1. Start engine and let it idle for 1 second.
2. Check DTC.
3. If DTC is detected, go to EC-267, "Diagnosis Procedure".

Diagnosis Procedure

INFOID:0000000011291774

1. CHECK GROUND CONNECTIONS

1. Turn ignition switch OFF.
2. Loosen and retighten three ground screws on the body.

Refer to EC-154, "Ground Inspection".

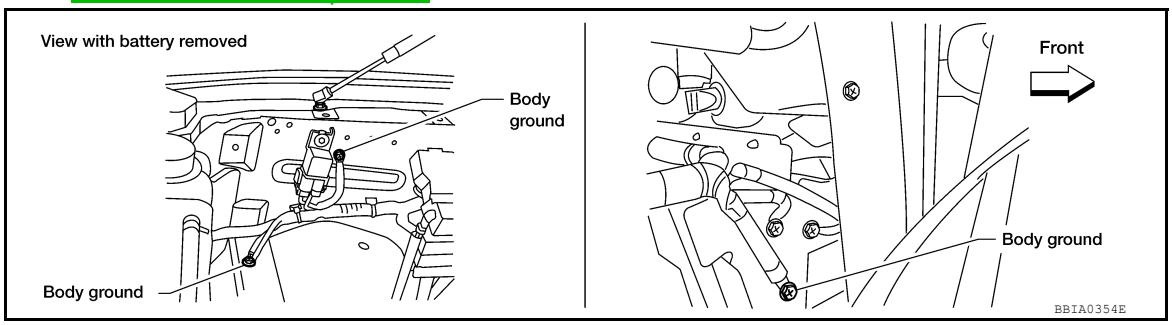

OK or NG

OK >> GO TO 2.
NG >> Repair or replace ground connections.

2. CHECK THROTTLE POSITION SENSOR 1 POWER SUPPLY CIRCUIT-I

1. Disconnect electric throttle control actuator harness connector.
2. Turn ignition switch ON.

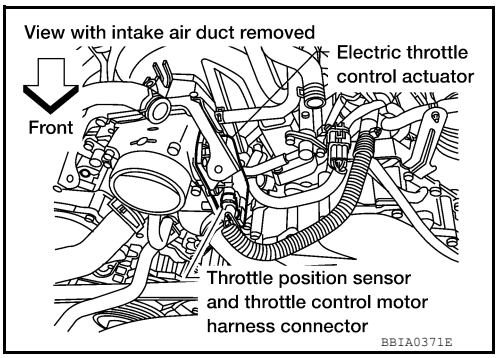

3. Check voltage between electric throttle control actuator terminal 2 and ground with CONSULT or tester.

Voltage: Approximately 5 V

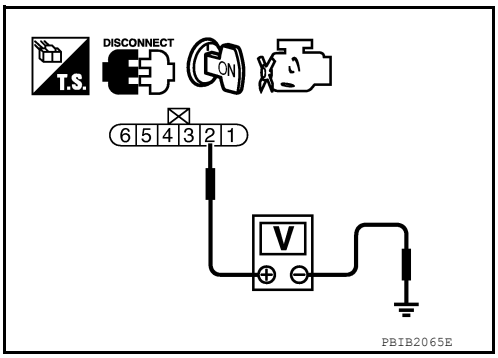

OK or NG

OK >> GO TO 7.
NG >> GO TO 3.

3. CHECK THROTTLE POSITION SENSOR 1 POWER SUPPLY CIRCUIT-II

1. Turn ignition switch OFF.
2. Disconnect ECM harness connector.
3. Check harness continuity between electric throttle control actuator terminal 2 and ECM terminal 47. Refer to Wiring Diagram.

Continuity should exist.

OK or NG

OK >> GO TO 4.
NG >> Repair open circuit.

4. CHECK THROTTLE POSITION SENSOR 1 POWER SUPPLY CIRCUIT-III

Check harness for short to power and short to ground, between the following terminals.

ECM terminal	Sensor terminal	Reference Wiring Diagram
47	Electric throttle control actuator terminal 2	EC-89, "Wiring Diagram"
91	APP sensor terminal 6	

OK or NG

OK >> GO TO 5.
NG >> Repair short to ground or short to power in harness or connectors.

5. CHECK ACCELERATOR PEDAL POSITION SENSOR

Refer to EC-461, "Component Inspection".

OK or NG

OK >> GO TO 11.
NG >> GO TO 6.

6. REPLACE ACCELERATOR PEDAL ASSEMBLY

1. Replace the accelerator pedal assembly. Refer to ACC-4, "Removal and Installation".
2. Perform EC-128, "Accelerator Pedal Released Position Learning".
3. Perform EC-128, "Throttle Valve Closed Position Learning".
4. Perform EC-129, "Idle Air Volume Learning".

>> **INSPECTION END**

7. CHECK THROTTLE POSITION SENSOR 1 GROUND CIRCUIT FOR OPEN AND SHORT

1. Turn ignition switch OFF.
2. Disconnect ECM harness connector.
3. Check harness continuity between electric throttle control actuator terminal 4 and ECM terminal 66. Refer to Wiring Diagram.

Continuity should exist.

4. Also check harness for short to ground and short to power.

OK or NG

OK >> GO TO 8.
NG >> Repair open circuit or short to ground or short to power in harness or connectors.

8. CHECK THROTTLE POSITION SENSOR 1 INPUT SIGNAL CIRCUIT FOR OPEN AND SHORT

1. Check harness continuity between ECM terminal 50 and electric throttle control actuator terminal 1. Refer to Wiring Diagram.

Continuity should exist.

2. Also check harness for short to ground and short to power.

OK or NG

OK >> GO TO 9.
NG >> Repair open circuit or short to ground or short to power in harness or connectors.

9. CHECK THROTTLE POSITION SENSOR

Refer to EC-270, "Component Inspection".

OK or NG

OK >> GO TO 11.
NG >> GO TO 10.

10. REPLACE ELECTRIC THROTTLE CONTROL ACTUATOR

1. Replace the electric throttle control actuator. Refer to EM-26, "Exploded View".
2. Perform EC-128, "Throttle Valve Closed Position Learning".
3. Perform EC-129, "Idle Air Volume Learning".

>> **INSPECTION END**

11. CHECK INTERMITTENT INCIDENT

Refer to GI-40, "How to Check Terminal" and GI-43, "Intermittent Incident".

>> **INSPECTION END**

Component Inspection

INFOID:0000000011291775

THROTTLE POSITION SENSOR

1. Reconnect all harness connectors disconnected.
2. Perform EC-128, "Throttle Valve Closed Position Learning".
3. Turn ignition switch ON.
4. Set selector lever to D position.
5. Check voltage between ECM terminals 50 (TP sensor 1 signal), 69 (TP sensor 2 signal) and ground under the following conditions.

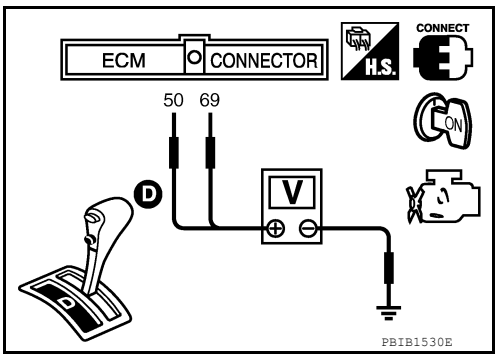

Terminal	Accelerator pedal	Voltage
50 (Throttle position sensor 1)	Fully released	More than 0.36 V
	Fully depressed	Less than 4.75 V
69 (Throttle position sensor 2)	Fully released	Less than 4.75 V
	Fully depressed	More than 0.36 V

6. If NG, replace electric throttle control actuator, refer to EM-26, "Removal and Installation", and go to the next step.
7. Perform EC-128, "Throttle Valve Closed Position Learning".
8. Perform EC-129, "Idle Air Volume Learning".

P0300, P0301, P0302, P0303, P0304, P0305, P0306, P0307, P0308 MISFIRE

On Board Diagnosis Logic

INFOID:0000000011291776

When a misfire occurs, engine speed will fluctuate. If the engine speed fluctuates enough to cause the crankshaft position (CKP) sensor (POS) signal to vary, ECM can determine that a misfire is occurring.

Sensor	Input signal to ECM	ECM function
Crankshaft position sensor (POS)	Engine speed	On board diagnosis of misfire

The misfire detection logic consists of the following two conditions.

1. One Trip Detection Logic (Three Way Catalyst Damage)
   On the 1st trip that a misfire condition occurs that can damage the three way catalyst (TWC) due to overheating, the MIL will blink.
   When a misfire condition occurs, the ECM monitors the CKP sensor signal every 200 engine revolutions for a change.
   When the misfire condition decreases to a level that will not damage the TWC, the MIL will turn off.
   If another misfire condition occurs that can damage the TWC on a second trip, the MIL will blink.
   When the misfire condition decreases to a level that will not damage the TWC, the MIL will remain on.
   If another misfire condition occurs that can damage the TWC, the MIL will begin to blink again.
2. Two Trip Detection Logic (Exhaust quality deterioration)
   For misfire conditions that will not damage the TWC (but will affect vehicle emissions), the MIL will only light when the misfire is detected on a second trip. During this condition, the ECM monitors the CKP sensor signal every 1,000 engine revolutions.
   A misfire malfunction can be detected on any one cylinder or on multiple cylinders.

DTC No.	Trouble diagnosis name	DTC detecting condition	Possible cause
P0300 0300	Multiple cylinder misfire detected	Multiple cylinder misfire.	• Improper spark plug • Insufficient compression • Incorrect fuel pressure • The fuel injector circuit is open or shorted • Fuel injector • Intake air leak • The ignition signal circuit is open or shorted • Lack of fuel • Signal plate • Air fuel ratio (A/F) sensor 1 • Incorrect PCV hose connection
P0301 0301	No.1 cylinder misfire detected	No. 1 cylinder misfires.	
P0302 0302	No. 2 cylinder misfire detected	No. 2 cylinder misfires.	
P0303 0303	No. 3 cylinder misfire detected	No. 3 cylinder misfires.	
P0304 0304	No. 4 cylinder misfire detected	No. 4 cylinder misfires.	
P0305 0305	No. 5 cylinder misfire detected	No. 5 cylinder misfires.	
P0306 0306	No. 6 cylinder misfire detected	No. 6 cylinder misfires.	
P0307 0307	No. 7 cylinder misfire detected	No. 7 cylinder misfires.	
P0308 0308	No. 8 cylinder misfire detected	No. 8 cylinder misfires.	

DTC Confirmation Procedure

INFOID:0000000011291777

CAUTION:
Always drive vehicle in safe manner according to traffic conditions and obey all traffic laws when driving.

1. If DTC Confirmation Procedure has been previously conducted, always perform the following before conducting the next step.

a. Turn ignition switch OFF and wait at least 10 seconds.
b. Turn ignition switch ON.

c. Turn ignition switch OFF and wait at least 10 seconds.
2. Start engine and warm it up to normal operating temperature.
3. Turn ignition switch OFF and wait at least 10 seconds.
4. Restart engine and let it idle for about 15 minutes.
5. Check 1st trip DTC.
6. If 1st trip DTC is detected, go to EC-272, "Diagnosis Procedure".
NOTE:
If 1st trip DTC is not detected during above procedure, performing the following procedure is advised.

a. Turn ignition switch OFF and wait at least 10 seconds.
b. Start engine and drive the vehicle under the similar conditions to (1st trip) Freeze Frame Data for a certain time. Refer to the table below.
Hold the accelerator pedal as steady as possible.

The similar conditions to (1st trip) Freeze Frame Data means the vehicle operation that the following conditions should be satisfied at the same time.

Engine speed	Engine speed in the freeze frame data ± 400 rpm
Vehicle speed	Vehicle speed in the freeze frame data ± 10 km/h (6 MPH)
Basic fuel schedule	Basic fuel schedule in freeze frame data × (1 ± 0.1)
Engine coolant temperature (T) condition	When the freeze frame data shows lower than 70 °C (158 °F), T should be lower than 70 °C (158 °F).
	When the freeze frame data shows higher than or equal to 70 °C (158 °F), T should be higher than or equal to 70 °C (158 °F).

The time to driving varies according to the engine speed in the freeze frame data.

Engine speed	Time
Around 1,000 rpm	Approximately 10 minutes
Around 2,000 rpm	Approximately 5 minutes
More than 3,000 rpm	Approximately 3.5 minutes

Diagnosis Procedure

INFOID:0000000011291778

1. CHECK FOR INTAKE AIR LEAK AND PCV HOSE

1. Start engine and run it at idle speed.
2. Listen for the sound of the intake air leak.
3. Check PCV hose connection.

OK or NG

OK >> GO TO 2.
NG >> Discover air leak location and repair.

2. CHECK FOR EXHAUST SYSTEM CLOGGING

Stop engine and visually check exhaust tube, three way catalyst and muffler for dents.

OK or NG

OK >> GO TO 3.
NG >> Repair or replace it.

3. PERFORM POWER BALANCE TEST

With CONSULT
1. Perform “POWER BALANCE” in “ACTIVE TEST” mode.
2. Is there any cylinder which does not produce a momentary engine speed drop?

Without CONSULT

When disconnecting each fuel injector harness connector one at a time, is there any cylinder which does not produce a momentary engine speed drop?

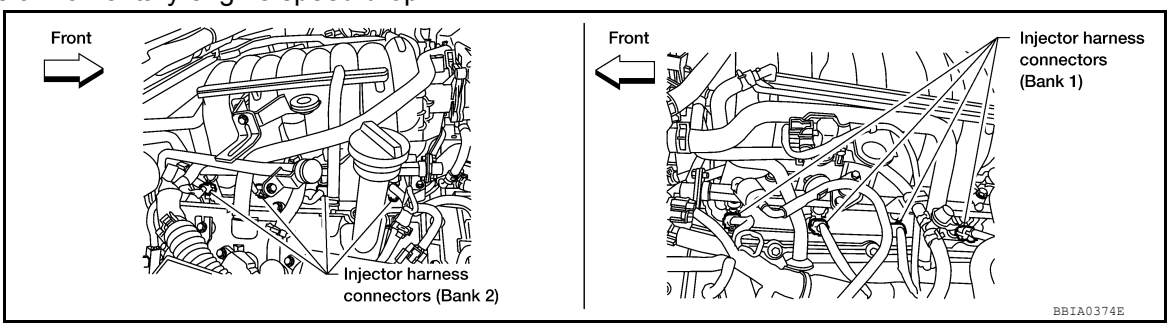

Yes or No

Yes >> GO TO 4.
No >> GO TO 7.

4. CHECK FUEL INJECTOR

Does each fuel injector make an operating sound at idle?

Yes or No

Yes >> GO TO 5.
No >> Check fuel injector(s) and circuit(s). Refer to EC-475.

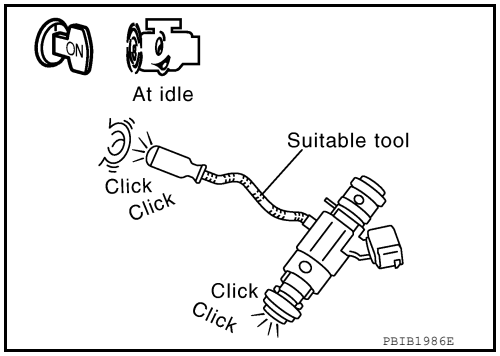

5. CHECK FUNCTION OF IGNITION COIL-I

CAUTION:

Do the following procedure in the place where ventilation is good without the combustible.

1. Turn ignition switch OFF.
2. Remove fuel pump fuse in IPDM E/R to release fuel pressure.
   NOTE:
   Do not use CONSULT to release fuel pressure, or fuel pressure applies again during the following procedure.
3. Start engine.
4. After engine stalls, crank it two or three times to release all fuel pressure.
5. Turn ignition switch OFF.
6. Remove all ignition coil harness connectors to avoid the electrical discharge from the ignition coils.
7. Remove ignition coil and spark plug of the cylinder to be checked. Refer to EM-39, "Removal and Installation".
8. Crank engine for 5 seconds or more to remove combustion gas in the cylinder.
9. Connect spark plug and harness connector to ignition coil.
10. Fix ignition coil using a rope etc. with gap of 13 - 17 mm (0.52 – 0.66 in) between the edge of the spark plug and grounded metal portion as shown in the figure.
11. Crank engine for about 3 seconds, and check whether spark is generated between the spark plug and the grounded metal portion.

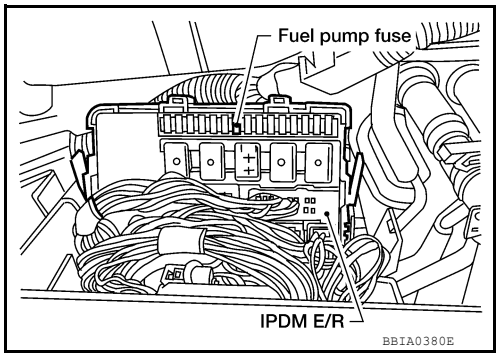

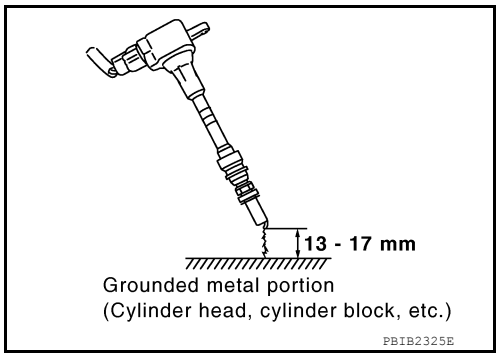

Spark should be generated.

CAUTION:

- **During the operation, always stay 0.5 m (1.6 ft) or more away from the spark plug and the ignition coil. Be careful**

not to get an electrical shock while checking, because the electrical discharge voltage becomes 20kV or more.

- **It might cause to damage the ignition coil if the gap of more than 17 mm (0.66 in) is taken.**

NOTE:
When the gap is less than 13 mm (0.52 in), the spark might be generated even if the coil is malfunctioning.

OK or NG

OK >> GO TO 9.
NG >> GO TO 6.

6. CHECK FUNCTION OF IGNITION COIL-II

1. Turn ignition switch OFF.
2. Disconnect spark plug and connect a known-good spark plug.
3. Crank engine for about 3 seconds, and recheck whether spark is generated between the spark plug and the grounded metal portion.

Spark should be generated.

OK or NG

OK >> GO TO 7.
NG >> Check ignition coil, power transistor and their circuits. Refer to EC-485.

7. CHECK SPARK PLUG

Check the initial spark plug for fouling, etc.

OK or NG

OK >> Replace malfunctioning spark plug(s) with standard type one(s). For spark plug type, refer to EM-16, "Removal and Installation".
NG >> 1. Repair or clean spark plug.
2. GO TO 8.

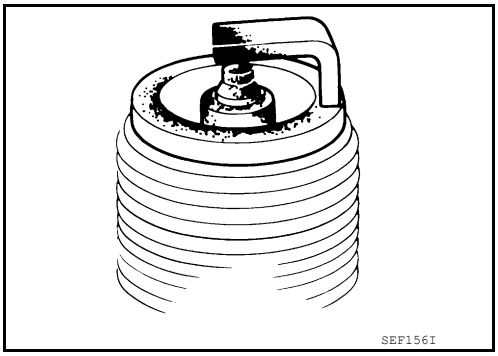

8. CHECK FUNCTION OF IGNITION COIL-III

1. Reconnect the initial spark plugs.
2. Crank engine for about 3 seconds, and recheck whether spark is generated between the spark plug and the grounded portion.

Spark should be generated.

OK or NG

OK >> **INSPECTION END**
NG >> Replace malfunctioning spark plug(s) with standard type one(s). For spark plug type, refer to EM-16, "Removal and Installation".

9. CHECK COMPRESSION PRESSURE

Check compression pressure. Refer to EM-23, "Checking Compression Pressure".

OK or NG

OK >> GO TO 10.
NG >> Check pistons, piston rings, valves, valve seats and cylinder head gaskets.

10. CHECK FUEL PRESSURE

1. Install all removed parts.
2. Release fuel pressure to zero. Refer to EC-506, "Fuel Pressure Check".
3. Install fuel pressure gauge and check fuel pressure. Refer to EC-506, "Fuel Pressure Check".

At idling: Approximately 350 kPa (3.57 kg/cm^2, 51 psi)

OK or NG

OK >> GO TO 12.
NG >> GO TO 11.

11. DETECT MALFUNCTIONING PART

Check the following.
- Fuel pump and circuit (Refer to EC-478, "Diagnosis Procedure".)
- **<Flexible Fuel Vehicle>**
  FPCM and circuit (Refer to EC-392, "Diagnosis Procedure".)
- Fuel pressure regulator (Refer to EC-506, "Fuel Pressure Check".)
- Fuel lines
- Fuel filter for clogging

>> Repair or replace.

12. CHECK IGNITION TIMING

Check the following items. Refer to EC-117, "Basic Inspection".

Items	Specifications
Target idle speed	650 ± 50 rpm (in P or N position)
Ignition timing	15 ± 5° BTDC (in P or N position)

OK or NG

OK >> GO TO 13.
NG >> Follow the EC-117, "Basic Inspection".

13. CHECK A/F SENSOR 1 INPUT SIGNAL

1. Turn ignition switch OFF.
2. Disconnect A/F sensor 1 harness connector.

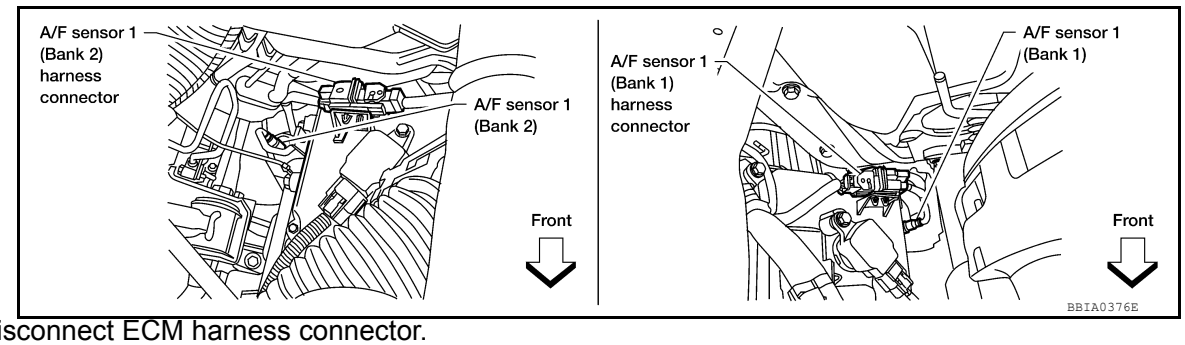

3. Disconnect ECM harness connector.
4. Check harness continuity between the following terminals.
   Refer to Wiring Diagram.

	A/F sensor 1 terminal	ECM terminal
Bank 1	1	35
	2	56
Bank 2	1	16
	2	75

Continuity should exist.

5. Check harness continuity between the following terminals and ground.
   Refer to Wiring Diagram.

Bank 1		Bank 2	
A/F sensor 1 terminal	ECM terminal	A/F sensor 1 terminal	ECM terminal
1	35	1	16
2	56	2	75

Continuity should not exist.

6. Also check harness for short to power.

OK or NG

OK >> GO TO 14.
NG >> Repair open circuit or short to ground or short to power in harness or connectors.

14. CHECK A/F SENSOR 1 HEATER

Refer to EC-166, "Component Inspection".

OK or NG

OK >> GO TO 16.
NG >> GO TO 15.

15. REPLACE AIR FUEL RATIO (A/F) SENSOR 1

Replace malfunctioning air fuel ratio (A/F) sensor 1. Refer to EM-31.

CAUTION:

- **Discard any air fuel ratio (A/F) sensor which has been dropped from a height of more than 0.5 m (1.6 ft) onto a hard surface such as a concrete floor; use a new one.**
- **Before installing new air fuel ratio (A/F) sensor, clean exhaust system threads (using Oxygen Sensor Thread Cleaner tool J-43897-18 or J-43897-12) and approved anti-seize lubricant.**

>> **INSPECTION END**

16. CHECK MASS AIR FLOW SENSOR

With CONSULT

Check mass air flow sensor signal in “DATA MONITOR” mode with CONSULT.

3.0 - 9.0 g/s : at idling
9.0 - 28.0 g/s : at 2,500 rpm

With GST

Check mass air flow sensor signal in Service $01 with GST.

3.0 - 9.0 g/s : at idling
9.0 - 28.0 g/s : at 2,500 rpm

OK or NG

OK >> GO TO 17.
NG >> Check connectors for rusted terminals or loose connections in the mass air flow sensor circuit or ground. Refer to EC-173.

17. CHECK SYMPTOM MATRIX CHART

Check items on the rough idle symptom in EC-501, "Symptom Matrix Chart".

OK or NG

OK >> GO TO 18.
NG >> Repair or replace.

18. ERASE THE 1ST TRIP DTC

Some tests may cause a 1st trip DTC to be set.
Erase the 1st trip DTC from the ECM memory after performing the tests. Refer to EC-77, "DTC Index".

>> GO TO 19.

19. CHECK INTERMITTENT INCIDENT

Refer to GI-40, "How to Check Terminal" and GI-43, "Intermittent Incident".

>> **INSPECTION END**

P0327, P0328, P0332, P0333 KS

Component Description

INFOID:0000000011291779

The knock sensor is attached to the cylinder block. It senses engine knocking using a piezoelectric element. A knocking vibration from the cylinder block is sensed as vibrational pressure. This pressure is converted into a voltage signal and sent to the ECM.

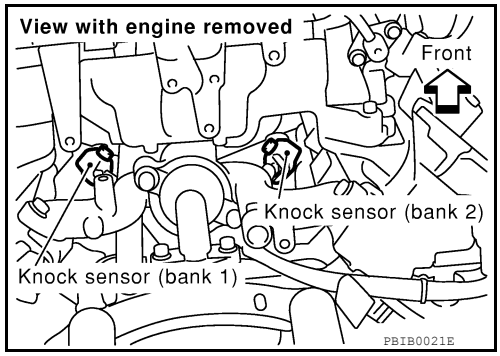

On Board Diagnosis Logic

INFOID:0000000011291780

The MIL will not light up for these self-diagnoses.

DTC No.	Trouble diagnosis name	DTC detecting condition	Possible cause
P0327 0327 (bank 1)	Knock sensor circuit low input	An excessively low voltage from the sensor is sent to ECM.	• Harness or connectors (The sensor circuit is open or shorted.) • Knock sensor
P0332 0332 (bank 2)			
P0328 0328 (bank 1)	Knock sensor circuit high input	An excessively high voltage from the sensor is sent to ECM.	
P0333 0333 (bank 2)			

DTC Confirmation Procedure

INFOID:0000000011291781

NOTE:
If DTC Confirmation Procedure has been previously conducted, always perform the following before conducting the next step.
1. Turn ignition switch OFF and wait at least 10 seconds.
2. Turn ignition switch ON.
3. Turn ignition switch OFF and wait at least 10 seconds.

TESTING CONDITION:
Before performing the following procedure, confirm that battery voltage is more than 10 V at idle.

1. Start engine and run it for at least 5 seconds at idle speed.
2. Check 1st trip DTC.
3. If 1st trip DTC is detected, go to EC-278, "Diagnosis Procedure".

Diagnosis Procedure

INFOID:0000000011291782

1. CHECK KNOCK SENSOR INPUT SIGNAL CIRCUIT FOR OPEN AND SHORT-I

1. Turn ignition switch OFF.
2. Disconnect ECM harness connector.
3. Check resistance between ECM terminals 15, 36 and ground. Refer to Wiring Diagram.
   NOTE:
   It is necessary to use an ohmmeter which can measure more than 10 MΩ.

   Resistance: Approximately 532 - 588 kΩ [at 20°C (68°F)]
4. Also check harness for short to ground and short to power.

OK or NG

OK >> GO TO 5.
NG >> GO TO 2.

2. CHECK KNOCK SENSOR INPUT SIGNAL CIRCUIT FOR OPEN AND SHORT-II

1. Disconnect knock sensor harness connector.
2. Check harness continuity between ECM terminal 15 and knock sensor (bank1) terminal 1, ECM terminal 36 and knock sensor (bank 2) terminal 1.
   Refer to Wiring Diagram.

   Continuity should exist.

3. Also check harness for short to ground and short to power.

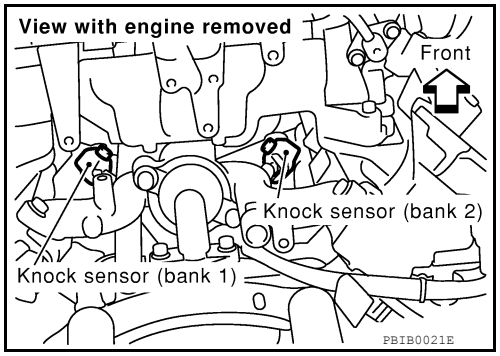

OK or NG

OK >> GO TO 4.
NG >> GO TO 3.

3. DETECT MALFUNCTIONING PART

Check the following.
- Harness connectors F26, F201
- Harness for open or short between ECM and knock sensor

>> Repair open circuit or short to ground or short to power in harness or connectors.

4. CHECK KNOCK SENSOR

Refer to EC-280, "Component Inspection".

OK or NG

OK >> GO TO 5.
NG >> Replace malfunctioning knock sensor. Refer to EM-91.

5. CHECK GROUND CONNECTIONS

1. Loosen and retighten three ground screws on the body.
   Refer to EC-154, "Ground Inspection".

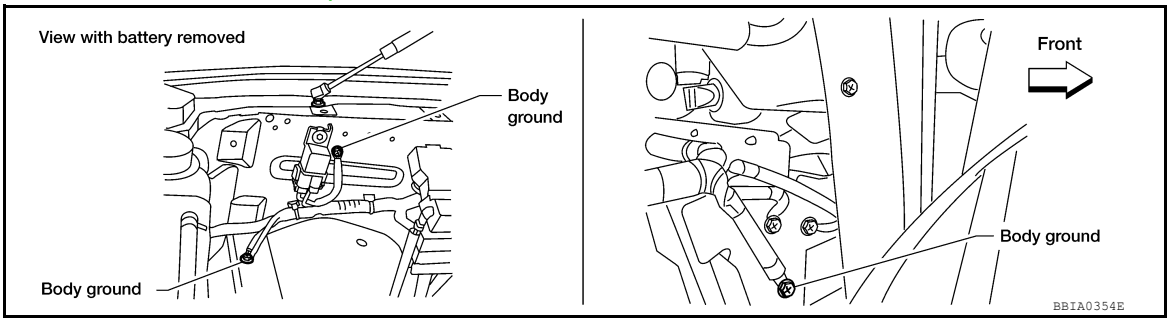

OK or NG

OK >> GO TO 6.
NG >> Repair or replace ground connections.

6. CHECK KNOCK SENSOR SHIELD CIRCUIT FOR OPEN AND SHORT

1. Disconnect knock sensor harness connector.
2. Check harness continuity between knock sensor terminal 2 and ground. Refer to Wiring Diagram.

   Continuity should exist.

3. Also check harness for short to power.

OK or NG

OK >> GO TO 8.
NG >> GO TO 7.

7. DETECT MALFUNCTIONING PART

Check the following.
- Harness connectors F26, F201
- Harness connectors F14, E5
- Harness for open or short between knock sensor terminal 2 and ground

>> Repair open circuit or short power in harness or connectors.

8. CHECK INTERMITTENT INCIDENT

Refer to GI-40, "How to Check Terminal" and GI-43, "Intermittent Incident".

>> **INSPECTION END**

Component Inspection

INFOID:0000000011291783

KNOCK SENSOR

Check resistance between knock sensor terminal 1 and ground.

NOTE:
It is necessary to use an ohmmeter which can measure more than 10 MΩ.

Resistance: Approximately 532 - 588 kΩ [at 20°C (68°F)]

CAUTION:
Do not use any knock sensors that have been dropped or physically damaged. Use only new ones.

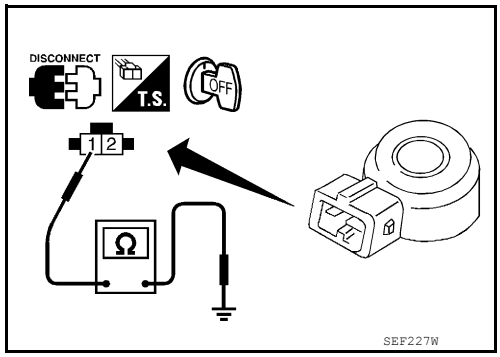

P0335 CKP SENSOR (POS)

Component Description

INFOID:0000000011291784

The crankshaft position sensor (POS) is located on the A/T assembly facing the gear teeth (cogs) of the signal plate. It detects the fluctuation of the engine revolution.
The sensor consists of a permanent magnet and Hall IC.
When the engine is running, the high and low parts of the teeth cause the gap with the sensor to change.
The changing gap causes the magnetic field near the sensor to change.
Due to the changing magnetic field, the voltage from the sensor changes.
The ECM receives the voltage signal and detects the fluctuation of the engine revolution.
ECM receives the signals as shown in the figure.

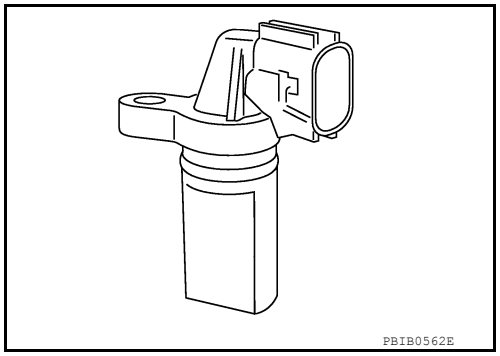

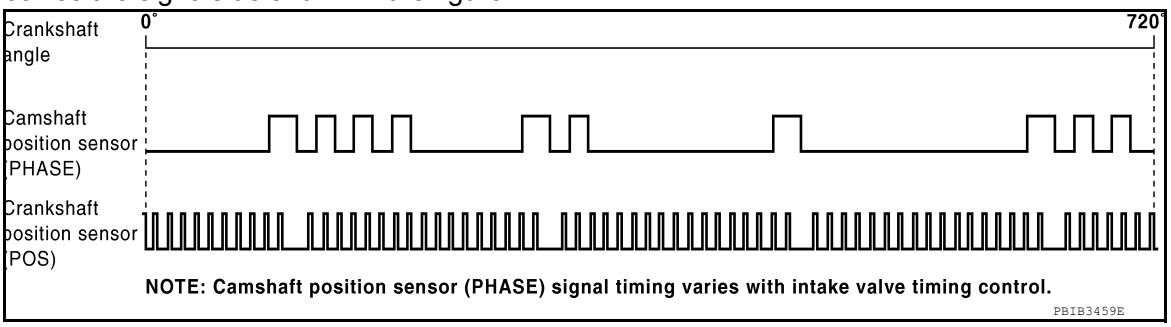

On Board Diagnosis Logic

INFOID:0000000011291785

DTC No.	Trouble diagnosis name	DTC detecting condition	Possible cause
P0335 0335	Crankshaft position sensor (POS) circuit	• The crankshaft position sensor (POS) signal is not detected by the ECM during the first few seconds of engine cranking. • The proper pulse signal from the crankshaft position sensor (POS) is not sent to ECM while the engine is running. • The crankshaft position sensor (POS) signal is not in the normal pattern during engine running.	• Harness or connectors (The sensor circuit is open or shorted) • Crankshaft position sensor (POS) • Signal plate

DTC Confirmation Procedure

INFOID:0000000011291786

NOTE:
If DTC Confirmation Procedure has been previously conducted, always perform the following before conducting the next step.
1. Turn ignition switch OFF and wait at least 10 seconds.
2. Turn ignition switch ON.
3. Turn ignition switch OFF and wait at least 10 seconds.

TESTING CONDITION:
Before performing the following procedure, confirm that battery voltage is more than 10.5 V with ignition switch ON.

1. Crank engine for at least 2 seconds and run it for at least 5 seconds at idle speed.
2. Check 1st trip DTC.
3. If 1st trip DTC is detected, go to EC-281, "Diagnosis Procedure".

Diagnosis Procedure

INFOID:0000000011291787

1. CHECK GROUND CONNECTIONS

1. Turn ignition switch OFF.
2. Loosen and retighten three ground screws on the body.
   Refer to EC-154, "Ground Inspection".

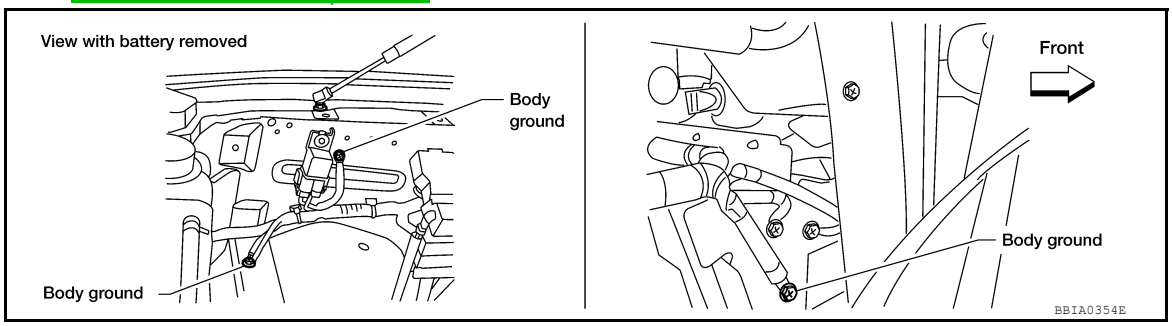

OK or NG

OK >> GO TO 2.
NG >> Repair or replace ground connections.

2. CHECK CRANKSHAFT POSITION (CKP) SENSOR (POS) POWER SUPPLY CIRCUIT

1. Disconnect crankshaft position (CKP) sensor (POS) harness connector.
2. Turn ignition switch ON.

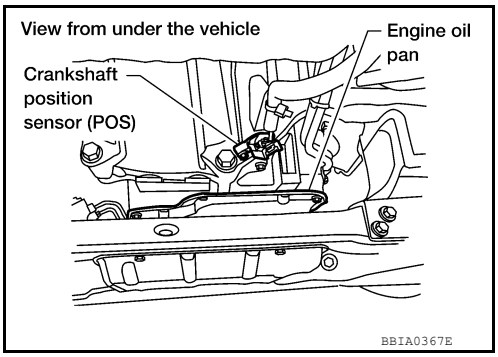

3. Check voltage between CKP sensor (POS) terminal 3 and ground with CONSULT or tester.

Voltage: Battery voltage

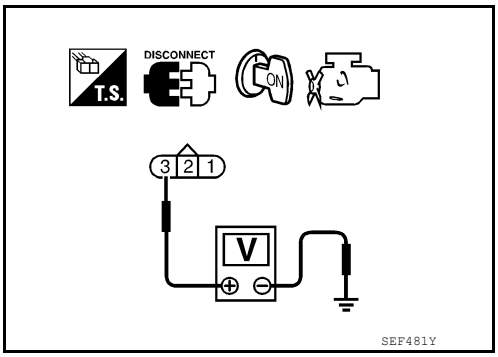

OK or NG

OK >> GO TO 4.
NG >> GO TO 3.

3. DETECT MALFUNCTIONING PART

Check the following.
- Harness connectors F32, E2
- Harness for open or short between crankshaft position sensor (POS) and ECM
- Harness for open or short between crankshaft position sensor (POS) and IPDM E/R

>> Repair open circuit or short to ground or short to power in harness or connectors.

4. CHECK CKP SENSOR (POS) GROUND CIRCUIT FOR OPEN AND SHORT

1. Turn ignition switch OFF.
2. Check harness continuity between CKP sensor (POS) terminal 1 and ground.
   Refer to Wiring Diagram.

Continuity should exist.

3. Also check harness for short to power.

OK or NG

OK >> GO TO 6.
NG >> GO TO 5.

5. DETECT MALFUNCTIONING PART

Check the following.
- Harness connectors F32, E2
- Harness for open or short between crankshaft position sensor (POS) and ground

>> Repair open circuit or short to power in harness or connectors.

6. CHECK CKP SENSOR (POS) INPUT SIGNAL CIRCUIT FOR OPEN AND SHORT

1. Disconnect ECM harness connector.
2. Check harness continuity between ECM terminal 13 and CKP sensor (POS) terminal 2. Refer to Wiring Diagram.

Continuity should exist.

3. Also check harness for short to ground and short to power.

OK or NG

OK >> GO TO 7.
NG >> Repair open circuit or short to ground or short to power in harness or connectors.

7. CHECK CRANKSHAFT POSITION SENSOR (POS)

Refer to EC-283, "Component Inspection".

OK or NG

OK >> GO TO 8.
NG >> Replace crankshaft position sensor (POS). Refer to EM-77, "Exploded View".

8. CHECK GEAR TOOTH

Visually check for chipping signal plate gear tooth.

OK or NG

OK >> GO TO 9.
NG >> Replace the signal plate. Refer to EM-80, "Disassembly and Assembly".

9. CHECK INTERMITTENT INCIDENT

Refer to GI-40, "How to Check Terminal" and GI-43, "Intermittent Incident".

>> **INSPECTION END**

Component Inspection

INFOID:0000000011291788

CRANKSHAFT POSITION SENSOR (POS)

1. Loosen the fixing bolt of the sensor.
2. Disconnect crankshaft position sensor (POS) harness connector.
3. Remove the sensor. Refer to EM-47.
4. Visually check the sensor for chipping.

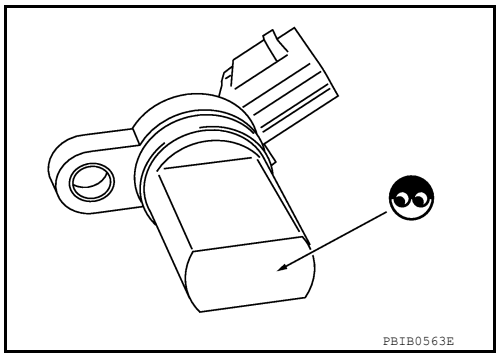

5. Check resistance as shown in the figure.

Terminal No. (Polarity)	Resistance Ω [at 25°C (77°F)]
1 (+) - 2 (-)	Except 0 or ∞
1 (+) - 3 (-)	
2 (+) - 3 (-)	

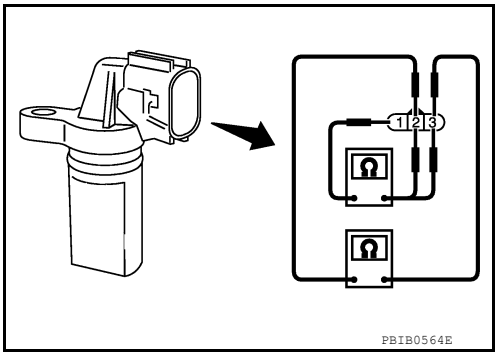

P0340 CMP SENSOR (PHASE)

Component Description

INFOID:0000000011291789

The camshaft position sensor (PHASE) senses the protrusion of exhaust valve cam sprocket to identify a particular cylinder. The camshaft position sensor (PHASE) senses the piston position.
When the crankshaft position sensor (POS) system becomes inoperative, the camshaft position sensor (PHASE) provides various controls of engine parts instead, utilizing timing of cylinder identification signals.
The sensor consists of a permanent magnet and Hall IC.
When engine is running, the high and low parts of the teeth cause the gap with the sensor to change.
The changing gap causes the magnetic field near the sensor to change.
Due to the changing magnetic field, the voltage from the sensor changes.
ECM receives the signals as shown in the figure.

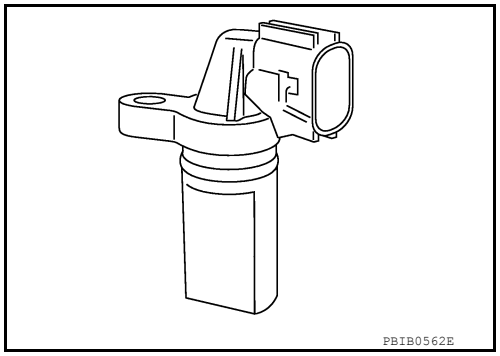

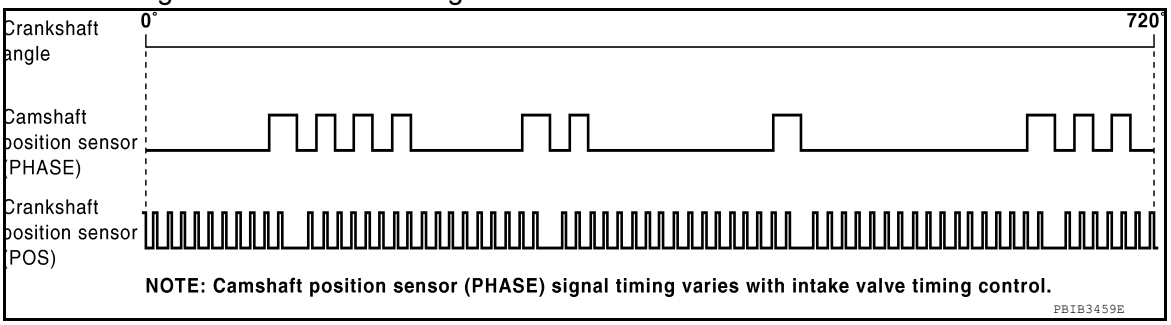

On Board Diagnosis Logic

INFOID:0000000011291790

DTC No.	Trouble diagnosis name	DTC detecting condition	Possible cause
P0340 0340	Camshaft position sensor (PHASE) circuit	• The cylinder No. signal is not sent to ECM for the first few seconds during engine cranking. • The cylinder No. signal is not sent to ECM during engine running. • The cylinder No. signal is not in the normal pattern during engine running.	• Harness or connectors (The sensor circuit is open or shorted) • Camshaft position sensor (PHASE) • Camshaft (Exhaust) • Starter motor (Refer to STR-11, "System Diagram".) • Starting system circuit (Refer to STR-11, "System Diagram".) • Dead (Weak) battery

DTC Confirmation Procedure

INFOID:0000000011291791

NOTE:
If DTC Confirmation Procedure has been previously conducted, always perform the following before conducting the next step.
1. Turn ignition switch OFF and wait at least 10 seconds.
2. Turn ignition switch ON.
3. Turn ignition switch OFF and wait at least 10 seconds.

TESTING CONDITION:
Before performing the following procedure, confirm that battery voltage is more than 10.5 V with ignition switch ON.

1. Turn ignition switch ON.
2. Crank engine for at least 2 seconds and run it for at least 5 seconds at idle speed.
3. Check 1st trip DTC.
4. If 1st trip DTC is detected, go to EC-286, "Diagnosis Procedure".
   If 1st trip DTC is not detected, go to next step.
5. Maintaining engine speed at more than 800 rpm for at least 5 seconds.

6. Check 1st trip DTC.
7. If 1st trip DTC is detected, go to EC-286, "Diagnosis Procedure".

Diagnosis Procedure

INFOID:0000000011291792

1. CHECK STARTING SYSTEM

Turn ignition switch to “START” position.

Does the engine turn over?

Does the starter motor operate?

Yes or No

Yes >> GO TO 2.
No >> Check starting system. (Refer to STR-11, "System Diagram".)

2. CHECK GROUND CONNECTIONS

1. Turn ignition switch OFF.
2. Loosen and retighten three ground screws on the body.
   Refer to EC-154, "Ground Inspection".

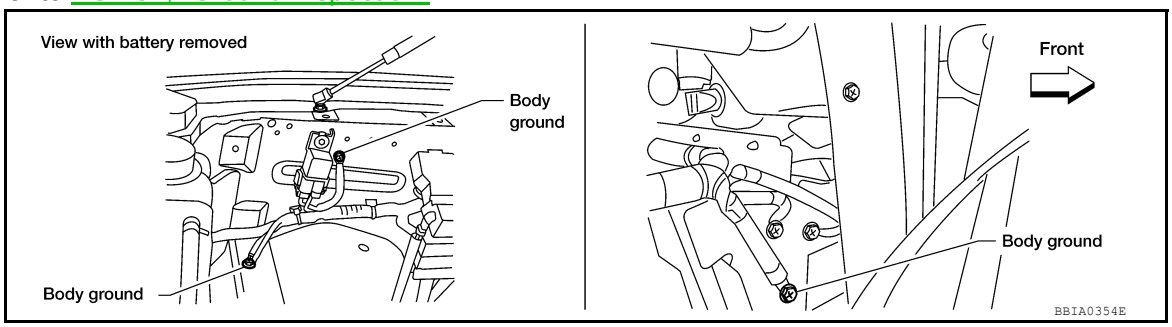

OK or NG

OK >> GO TO 3.
NG >> Repair or replace ground connections.

3. CHECK CAMSHAFT POSITION (CMP) SENSOR (PHASE) POWER SUPPLY CIRCUIT

1. Disconnect camshaft position (CMP) sensor (PHASE) (2) harness connector.
- Radiator hose (1)
2. Turn ignition switch ON.

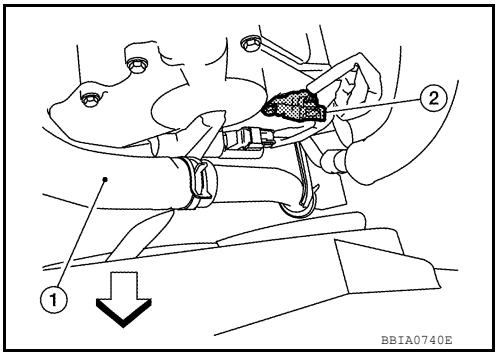

3. Check voltage between CMP sensor (PHASE) terminal 3 and ground with CONSULT or tester.

Voltage: Battery voltage

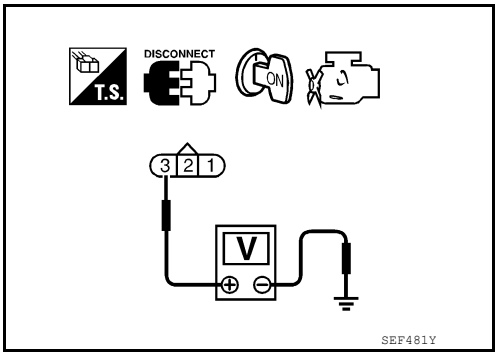

OK or NG

OK >> GO TO 5.
NG >> GO TO 4.

4. DETECT MALFUNCTIONING PART

Check the following.
- Harness connectors F32, E2
- Harness for open or short between camshaft position sensor (PHASE) and ECM
- Harness for open or short between camshaft position sensor (PHASE) and IPDM E/R

>> Repair open circuit or short to ground or short to power in harness or connectors.

5. CHECK CMP SENSOR (PHASE) GROUND CIRCUIT FOR OPEN AND SHORT

1. Turn ignition switch OFF.
2. Check harness continuity between CMP sensor (PHASE) terminal 1 and ground.
   Refer to Wiring Diagram.

Continuity should exist.

3. Also check harness for short to power.

OK or NG

OK >> GO TO 7.
NG >> GO TO 6.

6. DETECT MALFUNCTIONING PART

Check the following.
- Harness connectors F32, E2
- Harness for open or short between CMP sensor (PHASE) and ground

>> Repair open circuit or short to power in harness or connectors.

7. CHECK CMP SENSOR (PHASE) INPUT SIGNAL CIRCUIT FOR OPEN AND SHORT

1. Disconnect ECM harness connector.
2. Check harness continuity between ECM terminal 14 and CMP sensor (PHASE) terminal 2.
   Refer to Wiring Diagram.

Continuity should exist.

3. Also check harness for short to ground and short to power.

OK or NG

OK >> GO TO 8.
NG >> Repair open circuit or short to ground or short to power in harness or connectors.

8. CHECK CAMSHAFT POSITION SENSOR (PHASE)

Refer to EC-287, "Component Inspection".

OK or NG

OK >> GO TO 9.
NG >> Replace camshaft position sensor (PHASE). Refer to EM-47.

9. CHECK INTERMITTENT INCIDENT

Refer to GI-40, "How to Check Terminal" and GI-43, "Intermittent Incident".

>> **INSPECTION END**

Component Inspection

INFOID:0000000011291793

CAMSHAFT POSITION SENSOR (PHASE)

1. Loosen the fixing bolt of the sensor.
2. Disconnect camshaft position sensor (PHASE) harness connector.
3. Remove the sensor. Refer to EM-47.

4. Visually check the sensor for chipping.

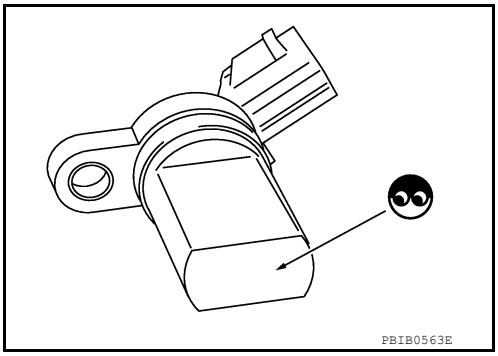

5. Check resistance as shown in the figure.

Terminal No. (Polarity)	Resistance Ω [at 25°C (77°F)]
3(+) - 1 (-)	Except 0 or ∞
2 (+) - 1 (-)	
3 (+) - 2 (-)	

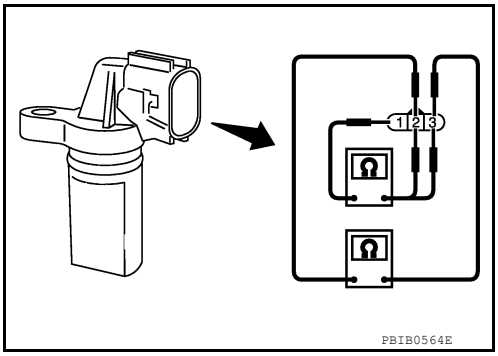

P0420, P0430 THREE WAY CATALYST FUNCTION

On Board Diagnosis Logic

INFOID:0000000011291794

The ECM monitors the switching frequency ratio of air fuel sensor (A/F) sensor 1 heated oxygen sensor 2.
A three way catalyst (manifold) with high oxygen storage capacity will indicate a low switching frequency of heated oxygen sensor 2. As oxygen storage capacity decreases, the heated oxygen sensor 2 switching frequency will increase.
When the frequency ratio of air fuel ratio (A/F) sensor 1 and heated oxygen sensor 2 approaches a specified limit value, the three way catalyst (manifold) malfunction is diagnosed.

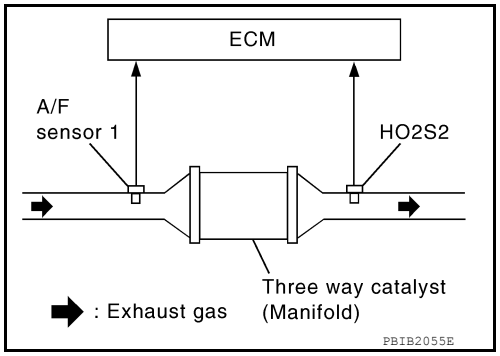

DTC No.	Trouble diagnosis name	DTC detecting condition	Possible cause
P0420 0420 (Bank 1)	Catalyst system efficiency below threshold	• Three way catalyst (manifold) does not operate properly. • Three way catalyst (manifold) does not have enough oxygen storage capacity.	• Three way catalyst (manifold) • Exhaust tube • Intake air leaks • Fuel injector • Fuel injector leaks • Spark plug • Improper ignition timing
P0430 0430 (Bank 2)			

DTC Confirmation Procedure

INFOID:0000000011291795

NOTE:
If DTC Confirmation Procedure has been previously conducted, always perform the following before conducting the next step.

1. Turn ignition switch OFF and wait at least 10 seconds.
2. Turn ignition switch ON.
3. Turn ignition switch OFF and wait at least 10 seconds.

WITH CONSULT

TESTING CONDITION:
Do not hold engine speed for more than the specified minutes below.

1. Turn ignition switch ON and select “DATA MONITOR” mode with CONSULT.
2. Start engine and warm it up to the normal operating temperature.
3. Turn ignition switch OFF and wait at least 10 seconds.
4. Start engine and keep the engine speed between 3,500 and 4,000 rpm for at least 1 minute under no load.
5. Let engine idle for 1 minute.
6. Make sure that “COOLAN TEMP/S” indicates more than 70°C (158°F).
   If not, warm up engine and go to next step when “COOLAN TEMP/S” indication reaches to 70°C (158°F).
7. Open engine hood.
8. Select “DTC & SRT CONFIRMATION” then “SRT WORK SUPPORT” mode with CONSULT.
9. Rev engine up to 2,000 to 3,000 rpm and hold it for 3 consecutive minutes then release the accelerator pedal completely.
   If “INCMP” of “CATALYST” changed to “CMPLT”, go to step 12.
10. Wait 5 seconds at idle.
11. Rev engine up to 2,000 to 3,000 rpm and maintain it until “INCMP” of “CATALYST” changes to “CMPLT” (It will take approximately 5 minutes).
    If not “CMPLT”, stop engine and cool it down to less than 70°C (158°F) and then retest from step 1.
12. Select “SELF-DIAG RESULTS” mode with CONSULT.
13. Confirm that the 1st trip DTC is not detected.

If the 1st trip DTC is detected, go to EC-290, "Diagnosis Procedure".

Overall Function Check

INFOID:0000000011291796

Use this procedure to check the overall function of the three way catalyst (manifold). During this check, a 1st trip DTC might not be confirmed.

WITH GST

1. Start engine and warm it up to the normal operating temperature.
2. Turn ignition switch OFF and wait at least 10 seconds.
3. Start engine and keep the engine speed between 3,500 and 4,000 rpm for at least 1 minute under no load.
4. Let engine idle for 1 minute.
5. Open engine hood.
6. Set voltmeter probes between ECM terminals ECM terminals 55 [HO2S2 (bank 1) signal], 74 [HO2S2 (bank 2) signal] and ground.
7. Keep engine speed at 2,500 rpm constant under no load.
8. Make sure that the voltage does not vary for more than 5 seconds.
   If the voltage fluctuation cycle takes less than 5 seconds, go to EC-290, "Diagnosis Procedure".
   - 1 cycle: 0.6 - 1.0 → 0 - 0.3 → 0.6 - 1.0

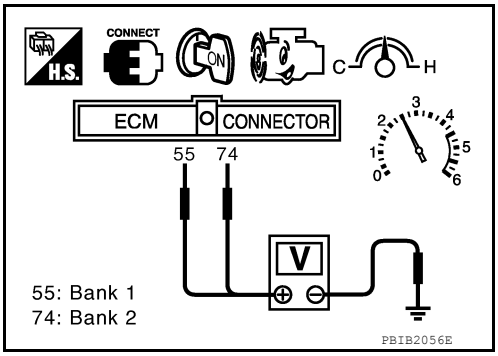

Diagnosis Procedure

INFOID:0000000011291797

1. CHECK EXHAUST SYSTEM

Visually check exhaust tubes and muffler for dent.

OK or NG

OK >> GO TO 2.
NG >> Repair or replace.

2. CHECK EXHAUST GAS LEAK

1. Start engine and run it at idle.
2. Listen for an exhaust gas leak before the three way catalyst (manifold).

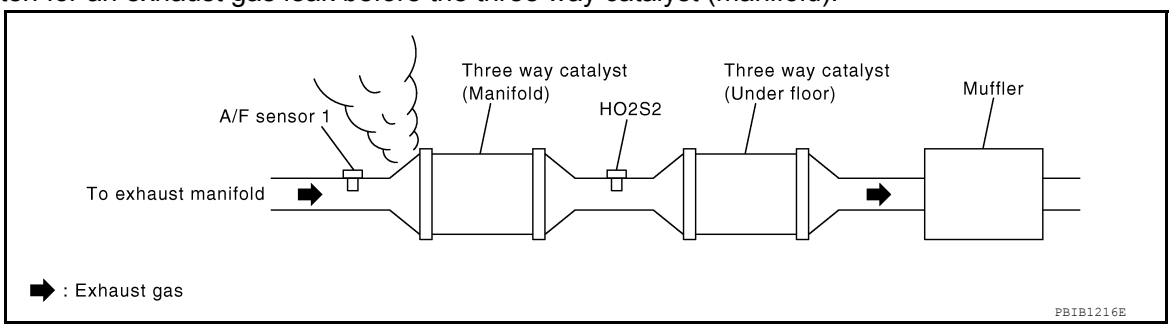

OK or NG

OK >> GO TO 3.
NG >> Repair or replace.

3. CHECK INTAKE AIR LEAK

Listen for an intake air leak after the mass air flow sensor.

OK or NG

OK >> GO TO 4.
NG >> Repair or replace.

4. CHECK IGNITION TIMING

Check the following items. Refer to EC-117, "Basic Inspection".

Items	Specifications
Target idle speed	650 ± 50 rpm (in P or N position)
Ignition timing	15 ± 5° BTDC (in P or N position)

OK or NG

OK >> GO TO 5.
NG >> Follow the EC-117, "Basic Inspection".

5. CHECK FUEL INJECTOR

1. Stop engine and then turn ignition switch ON.
2. Check voltage between ECM terminals 21, 22, 23, 40, 41, 42, 44, 63 and ground with CONSULT or tester.
   Refer to Wiring Diagram for fuel injector, EC-89, "Wiring Diagram".

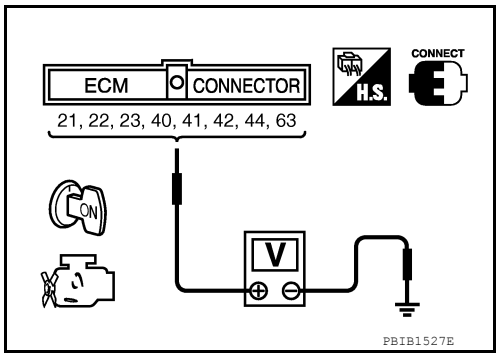

Battery voltage should exist.

OK or NG

OK >> GO TO 6.
NG >> Perform EC-475, "Diagnosis Procedure".

6. CHECK FUNCTION OF IGNITION COIL-I

CAUTION:
Do the following procedure in the place where ventilation is good without the combustible.

1. Turn ignition switch OFF.
2. Remove fuel pump fuse in IPDM E/R to release fuel pressure.
   NOTE:
   Do not use CONSULT to release fuel pressure, or fuel pressure applies again during the following procedure.
3. Start engine.
4. After engine stalls, crank it two or three times to release all fuel pressure.
5. Turn ignition switch OFF.
6. Remove all ignition coil harness connectors to avoid the electrical discharge from the ignition coils.
7. Remove ignition coil and spark plug of the cylinder to be checked. Refer to EM-39, "Removal and Installation" and .

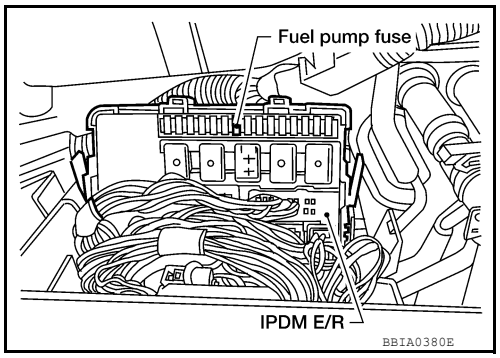

8. Crank engine for 5 seconds or more to remove combustion gas in the cylinder.
9. Connect spark plug and harness connector to ignition coil.
10. Fix ignition coil using a rope etc. with gap of 13 - 17 mm (0.52 – 0.66 in) between the edge of the spark plug and grounded metal portion as shown in the figure.
11. Crank engine for about 3 seconds, and check whether spark is generated between the spark plug and the grounded metal portion.

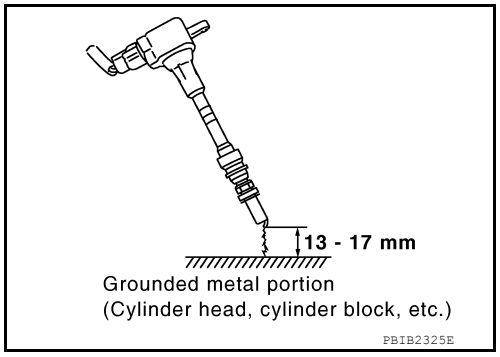

Spark should be generated.

CAUTION:
- **During the operation, always stay 0.5 m (1.6 ft) or more away from spark plug and the ignition coil. Be careful not to get an electrical shock while checking, because the electrical discharge voltage becomes 20 kV or more.**
- **It might cause to damage the ignition coil if the gap of more than 17 mm (0.66 in) is taken.**

NOTE:
When the gap is less than 13 mm (0.52 in), the spark might be generated even if the coil is malfunctioning.

OK or NG

OK >> GO TO 10.
NG >> GO TO 7.

7. CHECK FUNCTION OF IGNITION COIL-II

1. Turn ignition switch OFF.
2. Disconnect spark plug and connect a known-good spark plug.
3. Crank engine for about 3 seconds, and recheck whether spark is generated between the spark plug and the grounded metal portion.

Spark should be generated.

OK or NG

OK >> GO TO 8.
NG >> Check ignition coil, power transistor and their circuits. Refer to EC-89, "Wiring Diagram".

8. CHECK SPARK PLUG

Check the initial spark plug for fouling, etc.

OK or NG

OK >> Replace malfunctioning spark plug(s) with standard type one(s). For spark plug type, refer to EM-16, "Removal and Installation".
NG >> 1. Repair or clean spark plug.
2. GO TO 9.

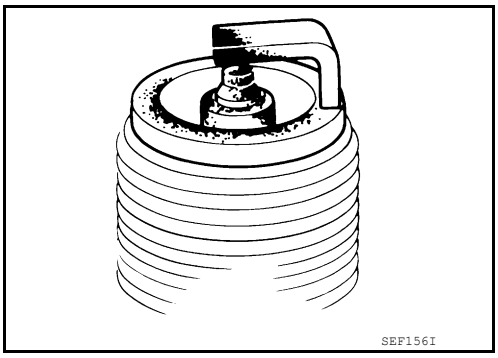

9. CHECK FUNCTION OF IGNITION COIL-III

1. Reconnect the initial spark plugs.
2. Crank engine for about 3 seconds, and recheck whether spark is generated between the spark plug and the grounded portion.

Spark should be generated.

OK or NG

OK >> **INSPECTION END**
NG >> Replace malfunctioning spark plug(s) with standard type one(s). For spark plug type, refer to EM-16, "Removal and Installation".

10. CHECK FUEL INJECTOR

1. Turn ignition switch OFF.
2. Remove fuel injector assembly. Refer to EM-42, "Removal and Installation".
   Refer to EM-42, "Removal and Installation".
   Keep fuel hose and all fuel injectors connected to fuel injector gallery.
3. Disconnect all ignition coil harness connectors.
4. Reconnect all fuel injector harness connectors disconnected.
5. Turn ignition switch ON.
   Make sure fuel does not drip from fuel injector.

OK or NG

OK (Does not drip.)>>GO TO 11.
NG (Drips.)>>Replace the fuel injector(s) from which fuel is dripping. Refer to EM-42.

11. CHECK INTERMITTENT INCIDENT

Refer to GI-40, "How to Check Terminal" and GI-43, "Intermittent Incident".

Trouble is fixed.>>**INSPECTION END**
Trouble is not fixed.>>Replace three way catalyst assembly. Refer to EM-31.

P0441 EVAP CONTROL SYSTEM

System Description

INFOID:0000000011291798

NOTE:
If DTC P0441 is displayed with other DTC such as P2122, P2123, P2127, P2128 or P2138, first perform trouble diagnosis for other DTC.

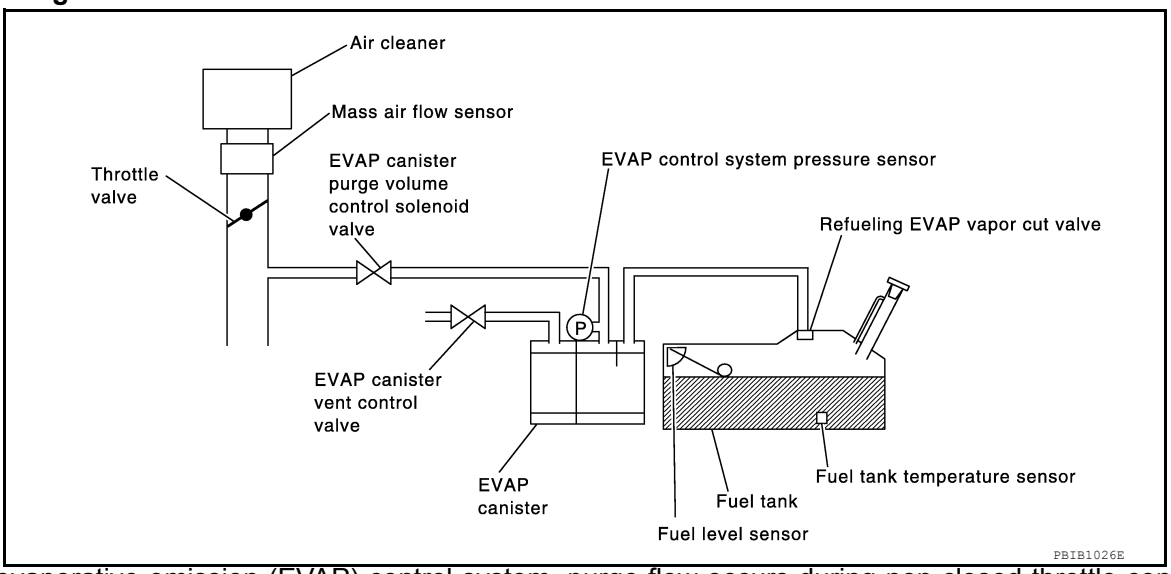

In this evaporative emission (EVAP) control system, purge flow occurs during non-closed throttle conditions. Purge volume is related to air intake volume. Under normal purge conditions (non-closed throttle), the EVAP canister purge volume control solenoid valve is open to admit purge flow. Purge flow exposes the EVAP control system pressure sensor to intake manifold vacuum.

On Board Diagnosis Logic

INFOID:0000000011291799

Under normal conditions (non-closed throttle), sensor output voltage indicates if pressure drop and purge flow are adequate. If not, a malfunction is determined.

DTC No.	Trouble diagnosis name	DTC detecting condition	Possible cause
P0441 0441	EVAP control system incorrect purge flow	EVAP control system does not operate properly, EVAP control system has a leak between intake manifold and EVAP control system pressure sensor.	• EVAP canister purge volume control solenoid valve stuck closed • EVAP control system pressure sensor and the circuit • Loose, disconnected or improper connection of rubber tube • Blocked rubber tube • Cracked EVAP canister • EVAP canister purge volume control solenoid valve circuit • Accelerator pedal position sensor • Blocked purge port • EVAP canister vent control valve

DTC Confirmation Procedure

INFOID:0000000011291800

CAUTION:
Always drive vehicle at a safe speed.
NOTE:
If DTC Confirmation Procedure has been previously conducted, always perform the following before conducting the next step.

1. Turn ignition switch OFF and wait at least 10 seconds.
2. Turn ignition switch ON.
3. Turn ignition switch OFF and wait at least 10 seconds.

TESTING CONDITION:
Always perform test at a temperature of 5°C (41°F) or more.

WITH CONSULT

1. Start engine and warm it up to normal operating temperature.
2. Turn ignition switch OFF and wait at least 10 seconds.
3. Start engine and let it idle for at least 70 seconds.
4. Select “PURG FLOW P0441” of “EVAPORATIVE SYSTEM” in “DTC WORK SUPPORT” mode with CONSULT.
5. Touch “START”.
   If “COMPLETED” is displayed, go to step 7.
6. When the following conditions are met, “TESTING” will be displayed on the CONSULT screen. Maintain the conditions continuously until “TESTING” changes to “COMPLETED”. (It will take at least 35 seconds.)

Selector lever	Suitable position
VHCL SPEED SE	32 - 120 km/h (20 - 75 MPH)
ENG SPEED	500 - 3,000 rpm
B/FUEL SCHDL	1.0 - 12.0 msec
COOLAN TEMP/S	More than 0°C

If “TESTING” is not changed for a long time, retry from step 2.

7. Make sure that “OK” is displayed after touching “SELF-DIAG RESULTS”. If “NG” is displayed, refer to EC-294, "Diagnosis Procedure".

Overall Function Check

INFOID:0000000011291801

Use this procedure to check the overall monitoring function of the EVAP control system purge flow monitoring. During this check, a 1st trip DTC might not be confirmed.

WITH GST

1. Lift up drive wheels.
2. Start engine (VDC switch OFF) and warm it up to normal operating temperature.
3. Turn ignition switch OFF, wait at least 10 seconds.
4. Start engine and wait at least 70 seconds.
5. Set voltmeter probes to ECM terminals 32 (EVAP control system pressure sensor signal) and ground.
6. Check EVAP control system pressure sensor value at idle speed and note it.
7. Establish and maintain the following conditions for at least 1 minute.

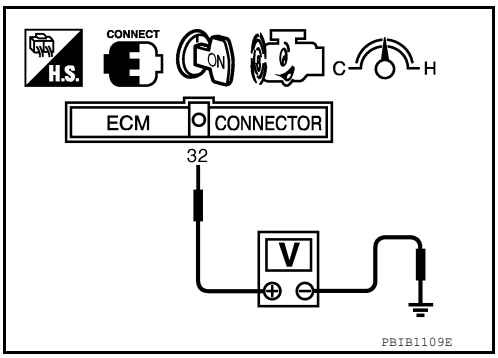

Air conditioner switch	ON
Headlamp switch	ON
Rear window defogger switch	ON
Engine speed	Approx. 3,000 rpm
Gear position	Any position other than P, N or R

8. Verify that EVAP control system pressure sensor value stays 0.1 V less than the value at idle speed (measured at step 6) for at least 1 second.
9. If NG, go to EC-294, "Diagnosis Procedure".

Diagnosis Procedure

INFOID:0000000011291802

1. CHECK EVAP CANISTER

1. Turn ignition switch OFF.
2. Check EVAP canister for cracks.

OK or NG

OK (With CONSULT)>>GO TO 2.
OK (Without CONSULT)>>GO TO 3.

NG >> Replace EVAP canister. Refer to FL-16.

2. CHECK PURGE FLOW

With CONSULT

1. Disconnect vacuum hose connected to EVAP canister purge volume control solenoid valve at EVAP service port and install vacuum gauge. For the location of EVAP service port, refer to EC-32, "Description".
2. Start engine and let it idle.
3. Select “PURG VOL CONT/V” in “ACTIVE TEST” mode with CONSULT.
4. Rev engine up to 2,000 rpm.
5. Touch “Qd” and “Qu” on CONSULT screen to adjust “PURG VOL CONT/V” opening and check vacuum existence.

PURG VOL CONT/V	Vacuum
100%	Should exist.
0%	Should not exist.

OK or NG

OK >> GO TO 7.
NG >> GO TO 4.

3. CHECK PURGE FLOW

Without CONSULT

1. Start engine and warm it up to normal operating temperature.
2. Stop engine.
3. Disconnect vacuum hose connected to EVAP canister purge volume control solenoid valve at EVAP service port and install vacuum gauge. For the location of EVAP service port, refer to EC-32, "Description".
4. Start engine and let it idle.
   Do not depress accelerator pedal even slightly.
5. Check vacuum gauge indication before 60 seconds passed after starting engine.

   Vacuum should not exist.

6. Revving engine up to 2,000 rpm after 100 seconds passed after starting engine.

   Vacuum should exist.

OK or NG

OK >> GO TO 7.
NG >> GO TO 4.

4. CHECK EVAP PURGE LINE

1. Turn ignition switch OFF.
2. Check EVAP purge line for improper connection or disconnection.
   Refer to EC-32, "Description".

OK or NG

OK >> GO TO 5.
NG >> Repair it.

5. CHECK EVAP PURGE HOSE AND PURGE PORT

1. Disconnect purge hoses connected to EVAP service port **A** and EVAP canister purge volume control solenoid valve **B**.
2. Blow air into each hose and EVAP purge port **C**.

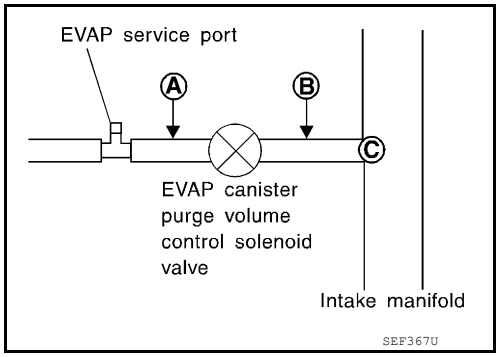

3. Check that air flows freely.

OK or NG

OK (With CONSULT)>>GO TO 6.
OK (Without CONSULT)>>GO TO 7.
NG >> Repair or clean hoses and/or purge port.

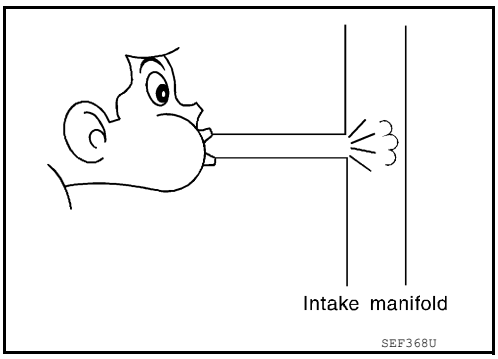

6. CHECK EVAP CANISTER PURGE VOLUME CONTROL SOLENOID VALVE

With CONSULT

1. Start engine.
2. Perform “PURG VOL CONT/V” in “ACTIVE TEST” mode with CONSULT. Check that engine speed varies according to the valve opening.

OK or NG

OK >> GO TO 8.
NG >> GO TO 7.

7. CHECK EVAP CANISTER PURGE VOLUME CONTROL SOLENOID VALVE

Refer to EC-313, "Component Inspection".

OK or NG

OK >> GO TO 8.
NG >> Replace EVAP canister purge volume control solenoid valve. Refer to EM-26.

8. CHECK EVAP CONTROL SYSTEM PRESSURE SENSOR CONNECTOR

1. Disconnect EVAP control system pressure sensor harness connector.
2. Check connectors for water.

Water should not exist.

OK or NG

OK >> GO TO 9.
NG >> Replace EVAP control system pressure sensor. Refer to FL-16.

9. CHECK EVAP CONTROL SYSTEM PRESSURE SENSOR FUNCTION

Refer to DTC Confirmation Procedure for DTC P0452, EC-326, "DTC Confirmation Procedure" and P0453, EC-330, "DTC Confirmation Procedure".

OK or NG

OK >> GO TO 10.
NG >> Replace EVAP control system pressure sensor. Refer to FL-16.

10. CHECK RUBBER TUBE FOR CLOGGING

1. Disconnect rubber tube connected to EVAP canister vent control valve.
2. Check the rubber tube for clogging.

OK or NG

OK >> GO TO 11.
NG >> Clean the rubber tube using an air blower.

11. CHECK EVAP CANISTER VENT CONTROL VALVE

Refer to EC-316, "Component Inspection".

OK or NG

OK >> GO TO 12.
NG >> Replace EVAP canister vent control valve. Refer to FL-16.

12. CHECK EVAP PURGE LINE

Inspect EVAP purge line (pipe and rubber tube). Check for evidence of leaks.
Refer to EC-32, "Description".

OK or NG

OK >> GO TO 13.
NG >> Replace it.

13. CLEAN EVAP PURGE LINE

Clean EVAP purge line (pipe and rubber tube) using air blower.

>> GO TO 14.

14. CHECK INTERMITTENT INCIDENT

Refer to GI-40, "How to Check Terminal" and GI-43, "Intermittent Incident".

>> **INSPECTION END**

P0442 EVAP CONTROL SYSTEM

On Board Diagnosis Logic

INFOID:0000000011291803

This diagnosis detects leaks in the EVAP purge line using engine intake manifold vacuum.
If pressure does not increase, the ECM will check for leaks in the line between the fuel tank and EVAP canister purge volume control solenoid valve, under the following “Vacuum test” conditions.
The EVAP canister vent control valve is closed to shut the EVAP purge line off. The EVAP canister purge volume control solenoid valve will then be opened to depressurize the EVAP purge line using intake manifold vacuum. After this occurs, the EVAP canister purge volume control solenoid valve will be closed.

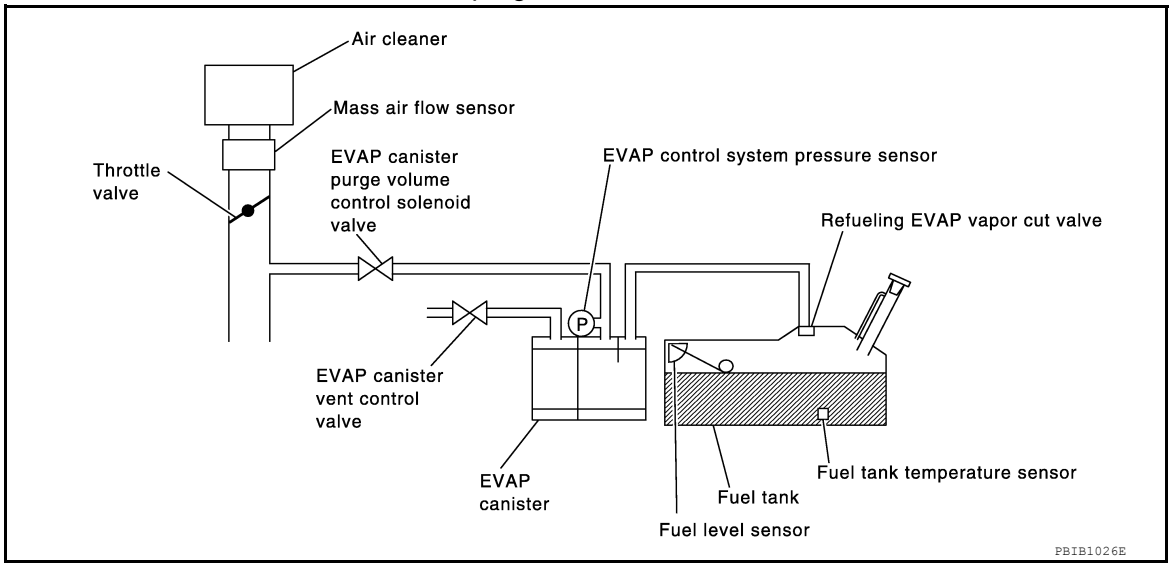

DTC No.	Trouble diagnosis name	DTC detecting condition	Possible cause
P0442 0442	EVAP control system small leak detected (negative pressure)	EVAP control system has a leak, EVAP control system does not operate properly.	• Incorrect fuel tank vacuum relief valve • Incorrect fuel filler cap used • Fuel filler cap remains open or fails to close. • Foreign matter caught in fuel filler cap. • Leak is in line between intake manifold and EVAP canister purge volume control solenoid valve. • Foreign matter caught in EVAP canister vent control valve. • EVAP canister or fuel tank leaks • EVAP purge line (pipe and rubber tube) leaks • EVAP purge line rubber tube bent • Loose or disconnected rubber tube • EVAP canister vent control valve and the circuit • EVAP canister purge volume control solenoid valve and the circuit • Fuel tank temperature sensor • O-ring of EVAP canister vent control valve is missing or damaged • EVAP canister is saturated with water • EVAP control system pressure sensor • Fuel level sensor and the circuit • Refueling EVAP vapor cut valve • ORVR system leaks

CAUTION:
- **Use only a genuine NISSAN fuel filler cap as a replacement. If an incorrect fuel filler cap is used, the MIL may come on.**
- **If the fuel filler cap is not tightened properly, the MIL may come on.**
- **Use only a genuine NISSAN rubber tube as a replacement.**

DTC Confirmation Procedure

INFOID:0000000011291804

NOTE:

- If DTC Confirmation Procedure has been previously conducted, always perform the following before conducting the next step.

1. Turn ignition switch OFF and wait at least 10 seconds.
2. Turn ignition switch ON.
3. Turn ignition switch OFF and wait at least 10 seconds.

TESTING CONDITION:

- **Perform "DTC WORK SUPPORT" when the fuel level is between 1/4 and 3/4 full, and vehicle is placed on flat level surface.**
- **Always perform test at a temperature of 0 to 30°C (32 to 86°F).**

WITH CONSULT

1. Turn ignition switch ON.
2. Turn ignition switch OFF and wait at least 10 seconds.
3. Turn ignition switch ON and select "DATA MONITOR" mode with CONSULT.
4. Make sure that the following conditions are met.
   COOLAN TEMP/S: 0 - 70°C (32 - 158°F)
   INT/A TEMP SE: 0 - 30°C (32 - 86°F)
5. Select "EVP V/S LEAK P0456/P1456" of "EVAPORATIVE SYSTEM" in "DTC WORK SUPPORT" mode with CONSULT.
   Follow the instruction displayed.
   NOTE:
   If the engine speed cannot be maintained within the range displayed on the CONSULT screen, go to EC-117, "Basic Inspection".
6. Make sure that "OK" is displayed.
   If "NG" is displayed, refer to EC-299, "Diagnosis Procedure".
   NOTE:
   Make sure that EVAP hoses are connected to EVAP canister purge volume control solenoid valve properly.

WITH GST

NOTE:
Be sure to read the explanation of EC-77, "DTC Index" before driving vehicle.

1. Start engine.
2. Drive vehicle according to EC-77, "DTC Index".
3. Stop vehicle.
4. Turn ignition switch OFF, wait at least 10 seconds and then turn ON.
5. Select Service $07 with GST.

- If P0442 is displayed on the screen, go to EC-299, "Diagnosis Procedure".
- If P0441 is displayed on the screen, go to EC-294, "Diagnosis Procedure".

Diagnosis Procedure

INFOID:0000000011291805

1. CHECK FUEL FILLER CAP DESIGN

1. Turn ignition switch OFF.
2. Check for genuine NISSAN fuel filler cap design.

OK or NG

OK >> GO TO 2.
NG >> Replace with genuine NISSAN fuel filler cap. Refer to FL-8.

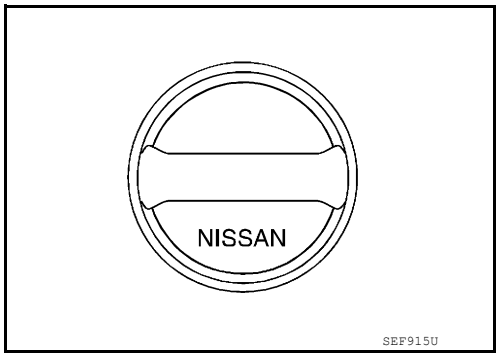

2. CHECK FUEL FILLER CAP INSTALLATION

Check that the cap is tightened properly by rotating the cap clockwise.

OK or NG

OK >> GO TO 3.
NG >> 1. Open fuel filler cap, then clean cap and fuel filler neck threads using air blower.
2. Retighten until ratcheting sound is heard.

3. CHECK FUEL FILLER CAP FUNCTION

Check for air releasing sound while opening the fuel filler cap.

OK or NG

OK >> GO TO 5.
NG >> GO TO 4.

4. CHECK FUEL TANK VACUUM RELIEF VALVE

Refer to EC-304, "Component Inspection".

OK or NG

OK >> GO TO 5.
NG >> Replace fuel filler cap with a genuine one. Refer to FL-8.

5. INSTALL THE PRESSURE PUMP

To locate the EVAP leak, install EVAP service port adapter (commercial service tool) and pressure pump to EVAP service port securely.

NOTE:

Improper installation of the EVAP service port adapter to the EVAP service port may cause leaking.

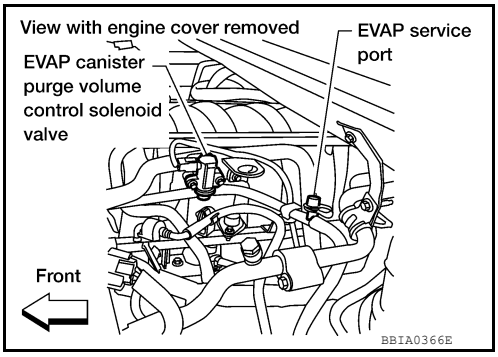

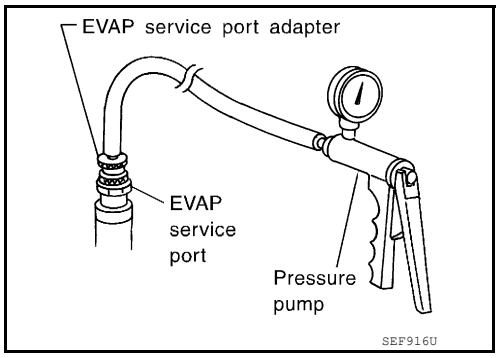

With CONSULT>>GO TO 6.
Without CONSULT>>GO TO 7.

6. CHECK FOR EVAP LEAK

With CONSULT

1. Turn ignition switch ON.
2. Select “EVAP SYSTEM CLOSE” of “WORK SUPPORT” mode with CONSULT.
3. Touch “START” and apply pressure into the EVAP line until the pressure indicator reaches the middle of the bar graph.

   CAUTION:
   - **Never use compressed air or a high pressure pump.**
   - **Do not exceed 4.12 kPa (0.042 kg/cm^2, 0.6 psi) of pressure in the system.**

4. Using EVAP leak detector, locate the EVAP leak. For the leak detector, refer to the instruction manual for more details. Refer to EC-32, "Description".

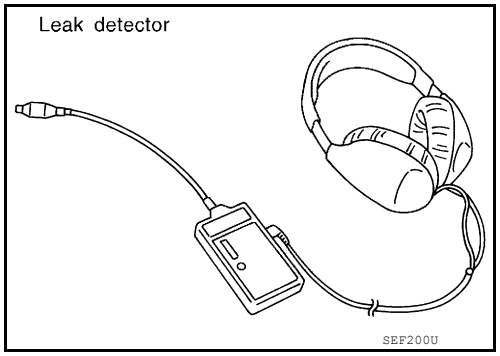

OK or NG

OK >> GO TO 8.
NG >> Repair or replace.

7. CHECK FOR EVAP LEAK

Without CONSULT

1. Turn ignition switch OFF.
2. Apply 12 volts DC to EVAP canister vent control valve. The valve will close. (Continue to apply 12 volts until the end of test.)

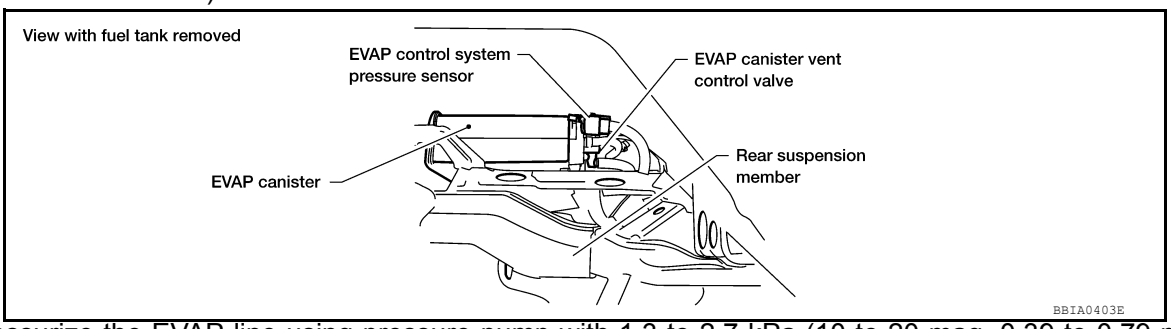

3. Pressurize the EVAP line using pressure pump with 1.3 to 2.7 kPa (10 to 20 mag, 0.39 to 0.79 mmHg), then remove pump and EVAP service port adapter.
   CAUTION:
   - **Never use compressed air or a high pressure pump.**
   - **Do not exceed 4.12 kPa (0.042 kg/cm^2, 0.6 psi) of pressure in the system.**
4. Using EVAP leak detector, locate the EVAP leak. For the leak detector, refer to the instruction manual for more details. Refer to EC-32, "Description".

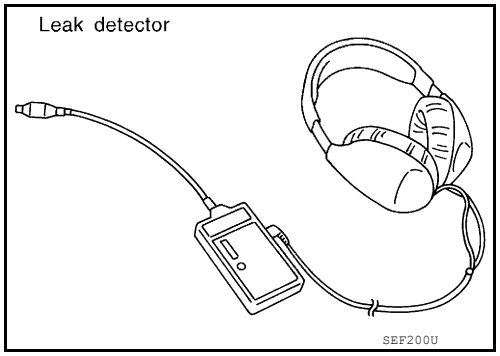

OK or NG

OK >> GO TO 8.
NG >> Repair or replace.

8. CHECK EVAP CANISTER VENT CONTROL VALVE

Check the following.
- EVAP canister vent control valve is installed properly.
  Refer to FL-16, "Removal and Installation".
- EVAP canister vent control valve.
  Refer to EC-316, "Component Inspection".

OK or NG

OK >> GO TO 9.
NG >> Repair or replace EVAP canister vent control valve and O-ring.

9. CHECK IF EVAP CANISTER SATURATED WITH WATER

1. Remove EVAP canister with EVAP canister vent control valve and EVAP control system pressure sensor attached. Refer to FL-16.

2. Does water drain from the EVAP canister?

Yes or No

Yes >> GO TO 10.
No (With CONSULT)>>GO TO 12.
No (Without CONSULT)>>GO TO 13.

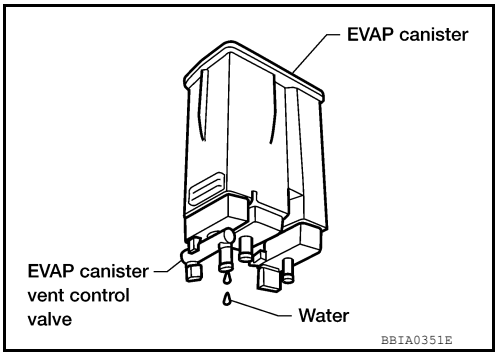

10. CHECK EVAP CANISTER

Weigh the EVAP canister with the EVAP canister vent control valve and EVAP control system pressure sensor attached.

The weight should be less than 2.5 kg (5.5 lb).

OK or NG

OK (With CONSULT)>>GO TO 12.
OK (Without CONSULT)>>GO TO 13.
NG >> GO TO 11.

11. DETECT MALFUNCTIONING PART

Check the following.
- EVAP canister for damage
- EVAP hose between EVAP canister and vehicle frame for clogging or poor connection

>> Repair hose or replace EVAP canister. Refer to FL-8, "Removal and Installation" or FL-16, "Removal and Installation".

12. CHECK EVAP CANISTER PURGE VOLUME CONTROL SOLENOID VALVE OPERATION

With CONSULT

1. Disconnect vacuum hose to EVAP canister purge volume control solenoid valve at EVAP service port.
2. Start engine.
3. Perform “PURG VOL CONT/V” in “ACTIVE TEST” mode.
4. Touch “Qu” on CONSULT screen to increase “PURG VOL CONT/V” opening to 100%.
5. Check vacuum hose for vacuum when revving engine up to 2,000 rpm.

Vacuum should exist.

OK or NG

OK >> GO TO 15.
NG >> GO TO 14.

13. CHECK EVAP CANISTER PURGE VOLUME CONTROL SOLENOID VALVE OPERATION

Without CONSULT

1. Start engine and warm it up to normal operating temperature.
2. Stop engine.
3. Disconnect vacuum hose to EVAP canister purge volume control solenoid valve at EVAP service port.
4. Start engine and let it idle for at least 80 seconds.
5. Check vacuum hose for vacuum when revving engine up to 2,000 rpm.

Vacuum should exist.

OK or NG

OK >> GO TO 16.
NG >> GO TO 14.

14. CHECK VACUUM HOSE

Check vacuum hoses for clogging or disconnection. Refer to EC-32, "Description".

OK or NG

OK >> GO TO 15.
NG >> Repair or reconnect the hose.

15. CHECK EVAP CANISTER PURGE VOLUME CONTROL SOLENOID VALVE

Refer to EC-313, "Component Inspection".

OK or NG

OK >> GO TO 16.
NG >> Replace EVAP canister purge volume control solenoid valve. Refer to EM-26.

16. CHECK FUEL TANK TEMPERATURE SENSOR

Refer to EC-262, "Component Inspection".

OK or NG

OK >> GO TO 17.
NG >> Replace fuel level sensor unit. Refer to FL-12.

17. CHECK EVAP CONTROL SYSTEM PRESSURE SENSOR

Refer to EC-324, "Component Inspection".

OK or NG

OK >> GO TO 18.
NG >> Replace EVAP control system pressure sensor. Refer to FL-16.

18. CHECK EVAP PURGE LINE

Check EVAP purge line (pipe, rubber tube, fuel tank and EVAP canister) for cracks or improper connection. Refer to EC-32, "Description".

OK or NG

OK >> GO TO 19.
NG >> Repair or reconnect the hose.

19. CLEAN EVAP PURGE LINE

Clean EVAP purge line (pipe and rubber tube) using air blower.

>> GO TO 20.

20. CHECK EVAP/ORVR LINE

Check EVAP/ORVR line between EVAP canister and fuel tank for clogging, kink, looseness and improper connection. For location, refer to EC-491.

OK or NG

OK >> GO TO 21.
NG >> Repair or replace hoses and tubes. Refer to FL-8.

21. CHECK RECIRCULATION LINE

Check recirculation line between filler neck tube and fuel tank for clogging, kink, cracks, looseness and improper connection.

OK or NG

OK >> GO TO 22.
NG >> Repair or replace hose, tube or filler neck tube. Refer to FL-8.

22. CHECK REFUELING EVAP VAPOR CUT VALVE

Refer to EC-493, "Component Inspection".

OK or NG

OK >> GO TO 23.
NG >> Replace refueling EVAP vapor cut valve with fuel tank. Refer to FL-8.

23. CHECK FUEL LEVEL SENSOR

Refer to MWI-37, "Component Inspection".

OK or NG

OK >> GO TO 24.
NG >> Replace fuel level sensor unit. Refer to FL-12.

24. CHECK INTERMITTENT INCIDENT

Refer to GI-40, "How to Check Terminal" and GI-43, "Intermittent Incident".

>> **INSPECTION END**

Component Inspection

INFOID:0000000011291806

FUEL TANK VACUUM RELIEF VALVE (BUILT INTO FUEL FILLER CAP)

1. Wipe clean valve housing.

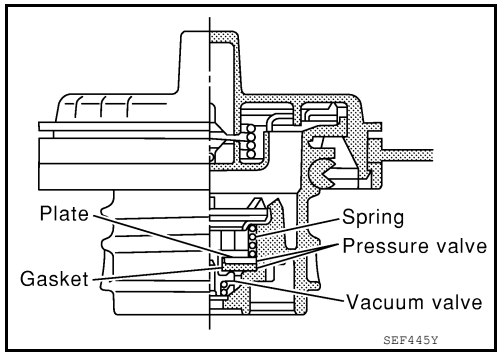

2. Check valve opening pressure and vacuum.

Pressure: **15.3 - 20.0 kPa (0.156 - 0.204 kg/cm^2, 2.22 - 2.90 psi)**

Vacuum: **−6.0 to −3.3 kPa (−0.061 to −0.034 kg/cm^2, −0.87 to −0.48 psi)**

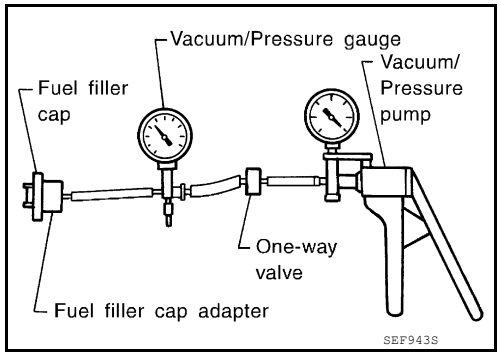

3. If out of specification, replace fuel filler cap as an assembly. Refer to FL-8.

CAUTION:
Use only a genuine fuel filler cap as a replacement. If an incorrect fuel filler cap is used, the MIL may come on.

P0443 EVAP CANISTER PURGE VOLUME CONTROL SOLENOID VALVE

Description

INFOID:0000000011291807

SYSTEM DESCRIPTION

Sensor	Input signal to ECM	ECM function	Actuator
Crankshaft position sensor (POS) Camshaft position sensor (PHASE)	Engine speed*1	EVAP canister purge flow control	EVAP canister purge volume control solenoid valve
Mass air flow sensor	Amount of intake air		
Engine coolant temperature sensor	Engine coolant temperature		
Battery	Battery voltage*1		
Throttle position sensor	Throttle position		
Accelerator pedal position sensor	Accelerator pedal position		
Air fuel ratio (A/F) sensor 1	Density of oxygen in exhaust gas (Mixture ratio feedback signal)		
Fuel tank temperature sensor	Fuel temperature in fuel tank		
Wheel sensor	Vehicle speed*2		

*1: ECM determines the start signal status by the signals of engine speed and battery voltage.

*2: This signal is sent to the ECM through CAN communication line.

This system controls flow rate of fuel vapor from the EVAP canister. The opening of the vapor by-pass passage in the EVAP canister purge volume control solenoid valve changes to control the flow rate. The EVAP canister purge volume control solenoid valve repeats ON/OFF operation according to the signal sent from the ECM. The opening of the valve varies for optimum engine control. The optimum value stored in the ECM is determined by considering various engine conditions. When the engine is operating, the flow rate of fuel vapor from the EVAP canister is regulated as the air flow changes.

COMPONENT DESCRIPTION

The EVAP canister purge volume control solenoid valve uses a ON/OFF duty to control the flow rate of fuel vapor from the EVAP canister. The EVAP canister purge volume control solenoid valve is moved by ON/OFF pulses from the ECM. The longer the ON pulse, the greater the amount of fuel vapor that will flow through the valve.

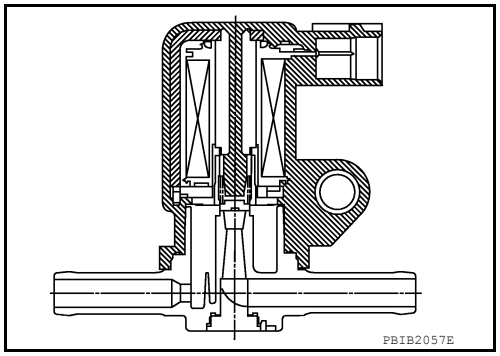

On Board Diagnosis Logic

INFOID:0000000011291808

DTC No.	Trouble diagnosis name		DTC detecting condition	Possible cause
P0443 0443	EVAP canister purge volume control solenoid valve	A)	The canister purge flow is detected during the vehicle is stopped while the the engine is running, even when EVAP canister purge volume control solenoid valve is completely closed.	• EVAP control system pressure sensor • EVAP canister purge volume control solenoid valve (The valve is stuck open.) • EVAP canister vent control valve • EVAP canister • Hoses (Hoses are connected incorrectly or clogged.)
		B)	The canister purge flow is detected during the specified driving conditions, even when EVAP canister purge volume control solenoid valve is completely closed.	

DTC Confirmation Procedure

INFOID:0000000011291809

Perform PROCEDURE FOR MALFUNCTION A first.
If the DTC cannot be confirmed, perform PROCEDURE FOR MALFUNCTION B.
NOTE:
If DTC Confirmation Procedure has been previously conducted, always perform the following before conducting the next step.

1. Turn ignition switch OFF and wait at least 10 seconds.
2. Turn ignition switch ON.
3. Turn ignition switch OFF and wait at least 10 seconds.

PROCEDURE FOR MALFUNCTION A

TESTING CONDITION:

- **Perform "DTC CONFIRMATION PROCEDURE" when the fuel level is between 1/4 and 3/4 full, and vehicle is placed on flat level surface.**
- **Always perform test at a temperature of 5 to 60°C (41°F).**
- **Cool the vehicle so that engine coolant temperature becomes same level as ambient temperature.**

With CONSULT

1. Turn ignition switch ON and select "DATA MONITOR" mode with CONSULT.
2. Check that the following condition are met.
   FUEL T/TMP SE: 0 – 35°C (32 – 95°F)
3. Start engine and wait at least 60 seconds.
4. Check 1st trip DTC.
5. If 1st trip DTC is detected, go to EC-307, "Diagnosis Procedure".

With GST

1. Turn ignition switch ON.
2. Set voltmeter probes to ECM terminal 107 (FTT sensor signal) and ground.
3. Check that the voltage is 3.1 – 4.2 V.
4. Start engine and wait at least 60 seconds.
5. Check 1st trip DTC.
6. If 1st trip DTC is detected, go to EC-307, "Diagnosis Procedure".

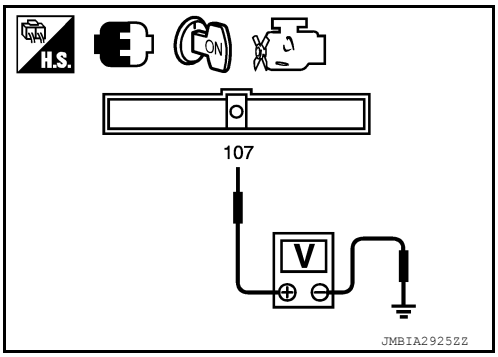

PROCEDURE FOR MALFUNCTION B

NOTE:
If DTC Confirmation Procedure has been previously conducted, always perform the following before conducting the next step.

1. Turn ignition switch OFF and wait at least 10 seconds.
2. Turn ignition switch ON.
3. Turn ignition switch OFF and wait at least 10 seconds.

TESTING CONDITION:
Always perform test at a temperature of 5°C (41°F) or more.

With CONSULT

1. Start engine and warm it up to normal operating temperature.
2. Turn ignition switch OFF and wait at least 10 seconds.
3. Turn ignition switch ON.
4. Turn ignition switch OFF and wait at least 10 seconds.
5. Turn ignition switch ON.
6. Select "PURG VOL CN/V P1444" of "EVAPORATIVE SYSTEM" in "DTC WORK SUPPORT" mode with CONSULT.
7. Touch "START".

8. Start engine and let it idle until “TESTING” on CONSULT changes to “COMPLETED”. (It will take approximately 10 seconds.)
   If “TESTING” is not displayed after 5 minutes, retry from step 2.
9. Make sure that “OK” is displayed after touching “SELF-DIAG RESULTS”. If “NG” is displayed, refer to EC-307, "Diagnosis Procedure".

With GST
1. Start engine and warm it up to normal operating temperature.
2. Turn ignition switch OFF and wait at least 10 seconds.
3. Turn ignition switch ON.
4. Turn ignition switch OFF and wait at least 10 seconds.
5. Start engine and let it idle for at least 20 seconds.
6. Select Service $07 with GST.
7. If 1st trip DTC is detected, go to EC-307, "Diagnosis Procedure".

Diagnosis Procedure

INFOID:0000000011291810

1. CHECK EVAP CANISTER PURGE VOLUME CONTROL SOLENOID VALVE POWER SUPPLY CIRCUIT

1. Turn ignition switch OFF.
2. Disconnect EVAP canister purge volume control solenoid valve harness connector.
3. Turn ignition switch ON.

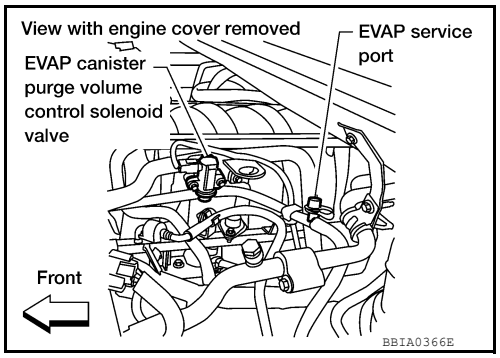

4. Check voltage between EVAP canister purge volume control solenoid valve terminal 1 and ground with CONSULT or tester.

Voltage: Battery voltage

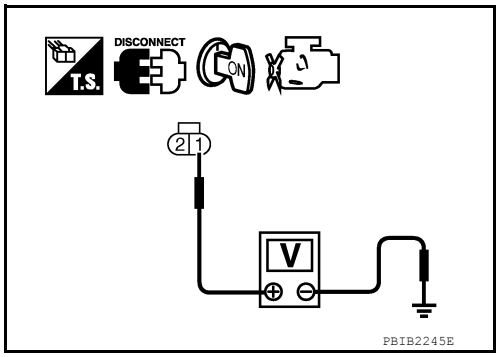

OK or NG

OK >> GO TO 3.
NG >> GO TO 2.

2. DETECT MALFUNCTIONING PART

Check the following.
- Harness connectors E2, F32
- Harness for open or short between EVAP canister purge volume control solenoid valve and IPDM E/R
- Harness for open or short between EVAP canister purge volume control solenoid valve and ECM

>> Repair harness or connectors.

3. CHECK EVAP CANISTER PURGE VOLUME CONTROL SOLENOID VALVE OUTPUT SIGNAL CIRCUIT FOR OPEN AND SHORT

1. Turn ignition switch OFF.
2. Disconnect ECM harness connector.
3. Check harness continuity between ECM terminal 45 and EVAP canister purge volume control solenoid valve terminal 2. Refer to Wiring Diagram.

Continuity should exist.

4. Also check harness for short to ground and short to power.

OK or NG

OK >> GO TO 4.
NG >> Repair open circuit or short to ground or short to power in harness or connectors.

4. CHECK EVAP CONTROL SYSTEM PRESSURE SENSOR CONNECTOR

1. Disconnect EVAP control system pressure sensor harness connector.
2. Check connectors for water.

Water should not exist.

OK or NG

OK >> GO TO 5.
NG >> Replace EVAP control system pressure sensor. Refer to FL-16.

5. CHECK EVAP CONTROL SYSTEM PRESSURE SENSOR

Refer to EC-324, "Component Inspection".

OK or NG

OK (With CONSULT)>>GO TO 6.
OK (Without CONSULT)>>GO TO 7.
NG >> Replace EVAP control system pressure sensor. Refer to FL-16.

6. CHECK EVAP CANISTER PURGE VOLUME CONTROL SOLENOID VALVE

With CONSULT

1. Turn ignition switch OFF.
2. Reconnect all harness connectors disconnected.
3. Start engine.
4. Perform “PURG VOL CONT/V” in “ACTIVE TEST” mode with CONSULT. Check that engine speed varies according to the valve opening.

OK or NG

OK >> GO TO 8.
NG >> GO TO 7.

7. CHECK EVAP CANISTER PURGE VOLUME CONTROL SOLENOID VALVE

Refer to EC-309, "Component Inspection".

OK or NG

OK >> GO TO 8.
NG >> Replace EVAP canister purge volume control solenoid valve. Refer to EM-26.

8. CHECK RUBBER TUBE FOR CLOGGING

1. Disconnect rubber tube connected to EVAP canister vent control valve.
2. Check the rubber tube for clogging.

OK or NG

OK >> GO TO 9.
NG >> Clean the rubber tube using an air blower.

9. CHECK EVAP CANISTER VENT CONTROL VALVE

Refer to EC-320, "Component Inspection".

OK or NG

OK >> GO TO 10.
NG >> Replace EVAP canister vent control valve. Refer to FL-16.

10. CHECK IF EVAP CANISTER SATURATED WITH WATER

1. Remove EVAP canister with EVAP canister vent control valve and EVAP control system pressure sensor attached. Refer to FL-16.

2. Check if water will drain from the EVAP canister.

Yes or No

Yes >> GO TO 11.
No >> GO TO 13.

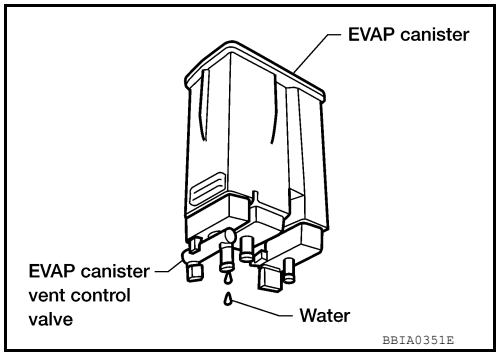

11. CHECK EVAP CANISTER

Weigh the EVAP canister with the EVAP canister vent control valve and EVAP control system pressure sensor attached.

The weight should be less than 2.5 kg (5.5 lb).

OK or NG

OK >> GO TO 13.
NG >> GO TO 12.

12. DETECT MALFUNCTIONING PART

Check the following.
- EVAP canister for damage
- EVAP hose between EVAP canister and vehicle frame for clogging or poor connection

>> Repair hose or replace EVAP canister. Refer to FL-8, "Removal and Installation" or FL-16, "Removal and Installation".

13. CHECK INTERMITTENT INCIDENT

Refer to GI-40, "How to Check Terminal" and GI-43, "Intermittent Incident".

>> **INSPECTION END**

Component Inspection

INFOID:0000000011291811

EVAP CANISTER PURGE VOLUME CONTROL SOLENOID VALVE

With CONSULT

Check air passage continuity of EVAP canister purge volume control solenoid valve under the following conditions.

Condition (PURG VOL CONT/V value)	Air passage continuity between A and B
100%	Yes
0%	No

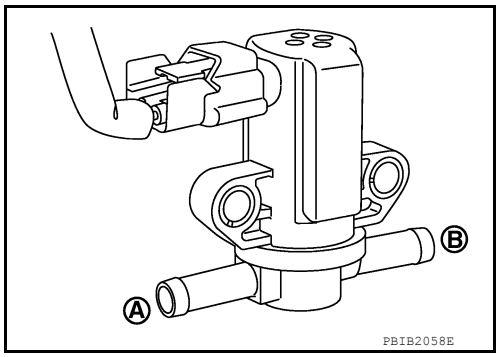

Without CONSULT

Check air passage continuity of EVAP canister purge volume control solenoid valve under the following conditions.

Condition	Air passage continuity between A and B
12V direct current supply between terminals 1 and 2	Yes
No supply	No

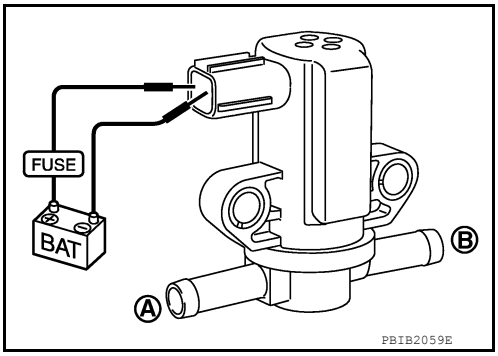

P0444, P0445 EVAP CANISTER PURGE VOLUME CONTROL SOLENOID VALVE

Description

INFOID:0000000011291812

SYSTEM DESCRIPTION

Sensor	Input signal to ECM	ECM function	Actuator
Crankshaft position sensor (POS) Camshaft position sensor (PHASE)	Engine speed*1	EVAP canister purge flow control	EVAP canister purge volume control solenoid valve
Mass air flow sensor	Amount of intake air		
Engine coolant temperature sensor	Engine coolant temperature		
Battery	Battery voltage*1		
Throttle position sensor	Throttle position		
Accelerator pedal position sensor	Accelerator pedal position		
Air fuel ratio (A/F) sensor 1	Density of oxygen in exhaust gas (Mixture ratio feedback signal)		
Fuel tank temperature sensor	Fuel temperature in fuel tank		
Wheel sensor	Vehicle speed*2		

*1: ECM determines the start signal status by the signals of engine speed and battery voltage.

*2: This signal is sent to the ECM through CAN communication line.

This system controls flow rate of fuel vapor from the EVAP canister. The opening of the vapor by-pass passage in the EVAP canister purge volume control solenoid valve changes to control the flow rate. The EVAP canister purge volume control solenoid valve repeats ON/OFF operation according to the signal sent from the ECM. The opening of the valve varies for optimum engine control. The optimum value stored in the ECM is determined by considering various engine conditions. When the engine is operating, the flow rate of fuel vapor from the EVAP canister is regulated as the air flow changes.

COMPONENT DESCRIPTION

The EVAP canister purge volume control solenoid valve uses a ON/OFF duty to control the flow rate of fuel vapor from the EVAP canister. The EVAP canister purge volume control solenoid valve is moved by ON/OFF pulses from the ECM. The longer the ON pulse, the greater the amount of fuel vapor that will flow through the valve.

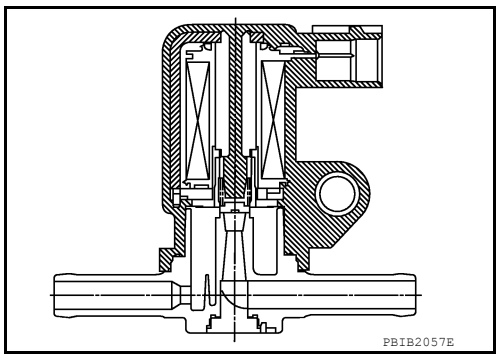

On Board Diagnosis Logic

INFOID:0000000011291813

DTC No.	Trouble diagnosis name	DTC detecting condition	Possible cause
P0444 0444	EVAP canister purge volume control solenoid valve circuit open	An excessively low voltage signal is sent to ECM through the valve	• Harness or connectors (The solenoid valve circuit is open or shorted.) • EVAP canister purge volume control solenoid valve
P0445 0445	EVAP canister purge volume control solenoid valve circuit shorted	An excessively high voltage signal is sent to ECM through the valve	• Harness or connectors (The solenoid valve circuit is shorted.) • EVAP canister purge volume control solenoid valve

DTC Confirmation Procedure

INFOID:0000000011291814

NOTE:
If DTC Confirmation Procedure has been previously conducted, always perform the following before conducting the next step.
1. Turn ignition switch OFF and wait at least 10 seconds.
2. Turn ignition switch ON.
3. Turn ignition switch OFF and wait at least 10 seconds.

TESTING CONDITION:
Before performing the following procedure, confirm battery voltage is more than 11 V at idle.
1. Start engine and let it idle for at least 13 seconds.
2. Check 1st trip DTC.
3. If 1st trip DTC is detected, go to EC-312, "Diagnosis Procedure".

Diagnosis Procedure

INFOID:0000000011291815

1. CHECK EVAP CANISTER PURGE VOLUME CONTROL SOLENOID VALVE POWER SUPPLY CIRCUIT

1. Turn ignition switch OFF.
2. Disconnect EVAP canister purge volume control solenoid valve harness connector.
3. Turn ignition switch ON.

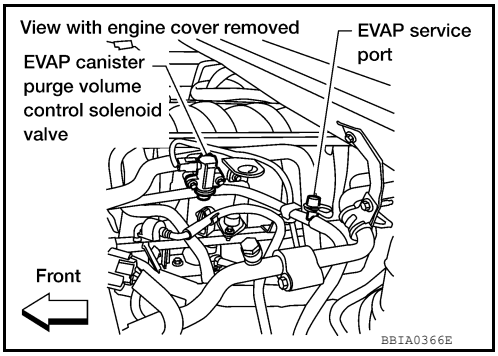

4. Check voltage between EVAP canister purge volume control solenoid valve terminal 1 and ground with CONSULT or tester.

Voltage: Battery voltage

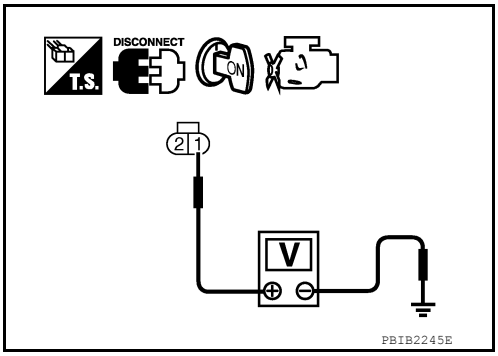

OK or NG

OK >> GO TO 3.
NG >> GO TO 2.

2. DETECT MALFUNCTIONING PART

Check the following.
- Harness connectors E2, F32
- Harness for open or short between EVAP canister purge volume control solenoid valve and IPDM E/R
- Harness for open or short between EVAP canister purge volume control solenoid valve and ECM

>> Repair harness or connectors.

3. CHECK EVAP CANISTER PURGE VOLUME CONTROL SOLENOID VALVE OUTPUT SIGNAL CIRCUIT FOR OPEN AND SHORT

1. Turn ignition switch OFF.
2. Disconnect ECM harness connector.
3. Check harness continuity between ECM terminal 45 and EVAP canister purge volume control solenoid valve terminal 2. Refer to Wiring Diagram.

Continuity should exist.

4. Also check harness for short to ground and short to power.

OK or NG

OK (With CONSULT)>>GO TO 4.
OK (Without CONSULT)>>GO TO 5.
NG >> Repair open circuit or short to ground or short to power in harness or connectors.

4. CHECK EVAP CANISTER PURGE VOLUME CONTROL SOLENOID VALVE OPERATION

With CONSULT

1. Reconnect all harness connectors disconnected.
2. Start engine.
3. Perform “PURG VOL CONT/V” in “ACTIVE TEST” mode with CONSULT. Check that engine speed varies according to the valve opening.

OK or NG

OK >> GO TO 6.
NG >> GO TO 5.

5. CHECK EVAP CANISTER PURGE VOLUME CONTROL SOLENOID VALVE

Refer to EC-313, "Component Inspection".

OK or NG

OK >> GO TO 6.
NG >> Replace EVAP canister purge volume control solenoid valve.

6. CHECK INTERMITTENT INCIDENT

Refer to GI-40, "How to Check Terminal" and GI-43, "Intermittent Incident".

>> **INSPECTION END**

Component Inspection

INFOID:0000000011291816

EVAP CANISTER PURGE VOLUME CONTROL SOLENOID VALVE

With CONSULT

Check air passage continuity of EVAP canister purge volume control solenoid valve under the following conditions.

Condition (PURG VOL CONT/V value)	Air passage continuity between A and B
100%	Yes
0%	No

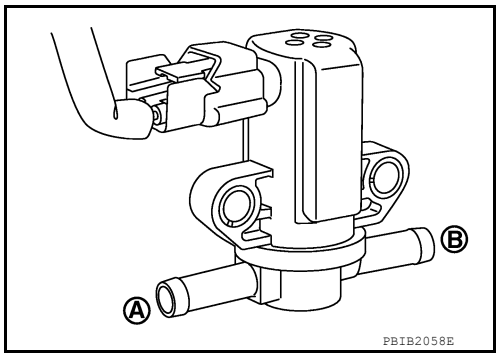

Without CONSULT

Check air passage continuity of EVAP canister purge volume control solenoid valve under the following conditions.

Condition	Air passage continuity between A and B
12 V direct current supply between terminals 1 and 2	Yes
No supply	No

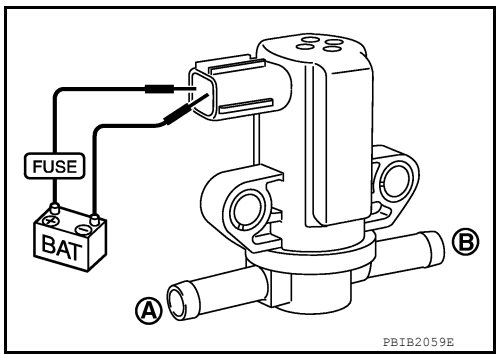

P0447 EVAP CANISTER VENT CONTROL VALVE

Component Description

INFOID:0000000011291817

The EVAP canister vent control valve is located on the EVAP canister and is used to seal the canister vent.
This solenoid valve responds to signals from the ECM. When the ECM sends an ON signal, the coil in the solenoid valve is energized. A plunger will then move to seal the canister vent. The ability to seal the vent is necessary for the on board diagnosis of other evaporative emission control system components.
This solenoid valve is used only for diagnosis, and usually remains opened.
When the vent is closed, under normal purge conditions, the evaporative emission control system is depressurized and allows EVAP Control System diagnosis.

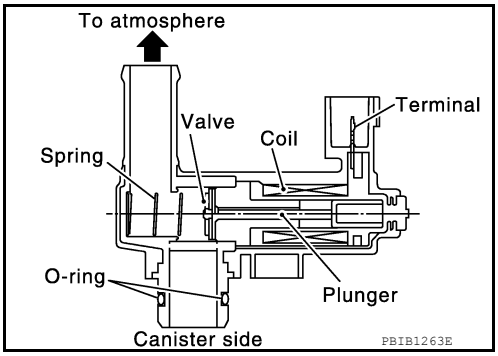

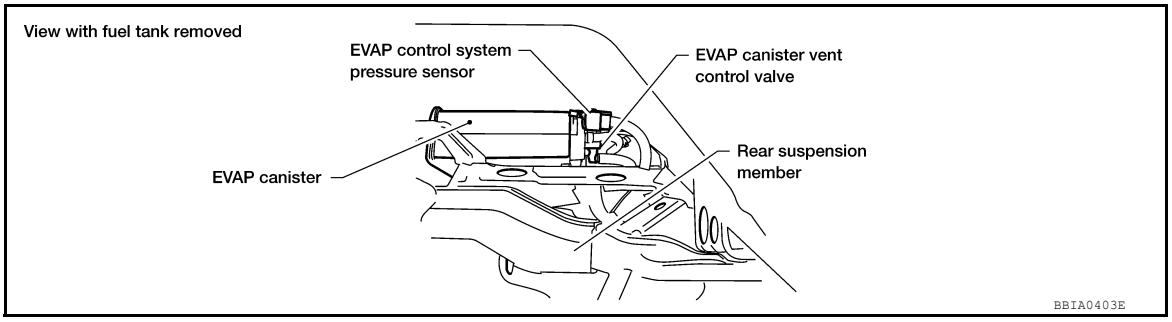

On Board Diagnosis Logic

INFOID:0000000011291818

DTC No.	Trouble diagnosis name	DTC detecting condition	Possible cause
P0447 0447	EVAP canister vent control valve circuit open	An improper voltage signal is sent to ECM through EVAP canister vent control valve.	• Harness or connectors (The valve circuit is open or shorted.) • EVAP canister vent control valve

DTC Confirmation Procedure

INFOID:0000000011291819

NOTE:
If DTC Confirmation Procedure has been previously conducted, always perform the following before conducting the next step.
1. Turn ignition switch OFF and wait at least 10 seconds.
2. Turn ignition switch ON.
3. Turn ignition switch OFF and wait at least 10 seconds.

TESTING CONDITION:
Before performing the following procedure, confirm battery voltage is more than 11 V at idle.
1. Start engine and wait at least 8 seconds.
2. Check 1st trip DTC.
3. If 1st trip DTC is detected, go to EC-314, "Diagnosis Procedure".

Diagnosis Procedure

INFOID:0000000011291820

1. INSPECTION START

Do you have CONSULT?

Yes or No

Yes >> GO TO 2.
No >> GO TO 3.

2. CHECK EVAP CANISTER VENT CONTROL VALVE CIRCUIT

With CONSULT

1. Turn ignition switch OFF and then turn ON.
2. Select “VENT CONTROL/V” in “ACTIVE TEST” mode with CONSULT.
3. Touch “ON/OFF” on CONSULT screen.
4. Check for operating sound of the valve.
   Clicking noise should be heard.

OK or NG

OK >> GO TO 7.
NG >> GO TO 3.

3. CHECK EVAP CANISTER VENT CONTROL VALVE POWER SUPPLY CIRCUIT

1. Turn ignition switch OFF.
2. Disconnect EVAP canister vent control valve harness connector.

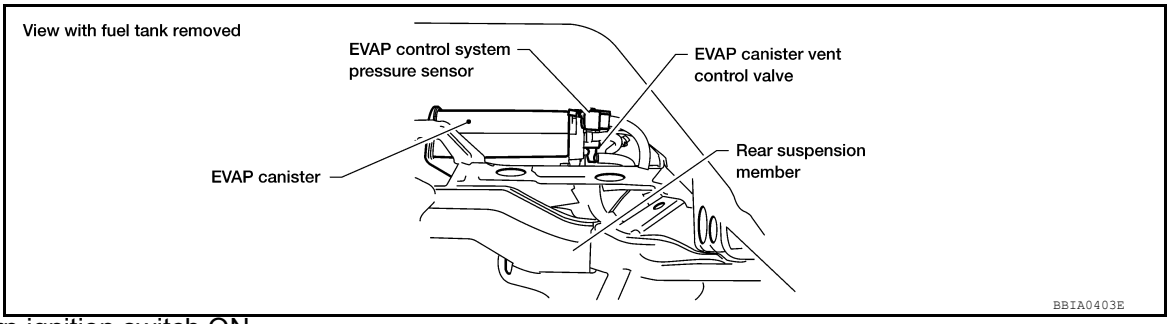

3. Turn ignition switch ON.
4. Check voltage between EVAP canister vent control valve terminal 2 and ground with CONSULT or tester.

Voltage: Battery voltage

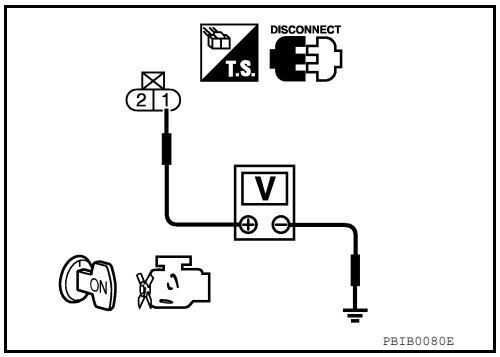

OK or NG

OK >> GO TO 5.
NG >> GO TO 4.

4. DETECT MALFUNCTIONING PART

Check the following.
- Harness connectors E41, C1
- Harness for open or short between EVAP canister vent control valve and IPDM E/R

>> Repair harness or connectors.

5. CHECK EVAP CANISTER VENT CONTROL VALVE OUTPUT SIGNAL CIRCUIT FOR OPEN AND SHORT

1. Turn ignition switch OFF.
2. Disconnect ECM harness connector.
3. Check harness continuity between ECM terminal 117 and EVAP canister vent control valve terminal 2. Refer to Wiring Diagram.

Continuity should exist.

4. Also check harness for short to ground and short to power.

OK or NG

OK >> GO TO 7.
NG >> GO TO 6.

6. DETECT MALFUNCTIONING PART

Check the following.
- Harness connectors E41, C1
- Harness for open or short between EVAP canister vent control valve and ECM

>> Repair open circuit or short to ground or short to power in harness or connectors.

7. CHECK RUBBER TUBE FOR CLOGGING

1. Disconnect rubber tube connected to EVAP canister vent control valve.
2. Check the rubber tube for clogging.

OK or NG

OK >> GO TO 8.
NG >> Clean the rubber tube using an air blower.

8. CHECK EVAP CANISTER VENT CONTROL VALVE

Refer to EC-316, "Component Inspection".

OK or NG

OK >> GO TO 9.
NG >> Replace EVAP canister vent control valve.

9. CHECK INTERMITTENT INCIDENT

Refer to GI-40, "How to Check Terminal" and GI-43, "Intermittent Incident".

>> **INSPECTION END**

Component Inspection

INFOID:0000000011291821

EVAP CANISTER VENT CONTROL VALVE

With CONSULT

1. Remove EVAP canister vent control valve from EVAP canister. Refer to FL-16.
2. Check portion **B** of EVAP canister vent control valve for being rusted.
   If NG, replace EVAP canister vent control valve. Refer to FL-16.
   If OK, go to next step.
3. Reconnect harness connectors disconnected.
4. Turn ignition switch ON.
5. Perform “VENT CONTROL/V” in “ACTIVE TEST” mode.
6. Check air passage continuity and operation delay time.
   Make sure new O-ring is installed properly.

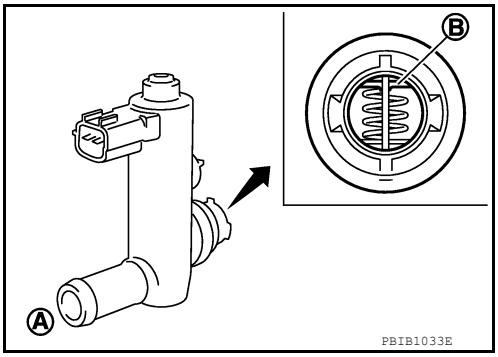

Condition VENT CONTROL/V	Air passage continuity between A and B
ON	No
OFF	Yes

Operation takes less than 1 second.
If NG, replace EVAP canister vent control valve. Refer to FL-16.
If OK, go to next step.

7. Clean the air passage (portion **A** to **B**) of EVAP canister vent control valve using an air blower.
8. Perform step 6 again.

Without CONSULT

1. Remove EVAP canister vent control valve from EVAP canister. Refer to FL-16.

2. Check portion **B** of EVAP canister vent control valve for being rusted.

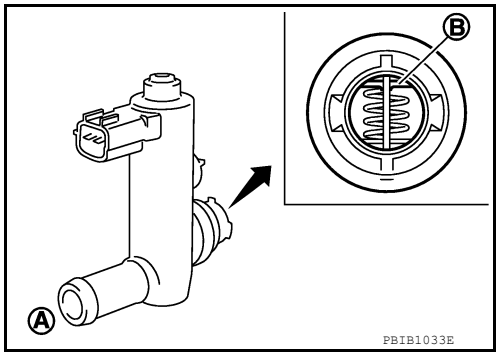

3. Check air passage continuity and operation delay time under the following conditions.
Make sure new O-ring is installed properly.

Condition	Air passage continuity between A and B
12 V direct current supply between terminals 1 and 2	No
OFF	Yes

Operation takes less than 1 second.

If NG, replace EVAP canister vent control valve. Refer to FL-16.
If OK, go to next step.

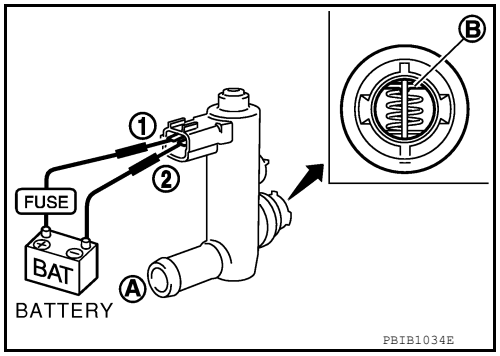

4. Clean the air passage (portion **A** to **B**) of EVAP canister vent control valve using an air blower.
5. Perform step 3 again.

P0448 EVAP CANISTER VENT CONTROL VALVE

Component Description

INFOID:0000000011291822

The EVAP canister vent control valve is located on the EVAP canister and is used to seal the canister vent.
This solenoid valve responds to signals from the ECM. When the ECM sends an ON signal, the coil in the solenoid valve is energized. A plunger will then move to seal the canister vent. The ability to seal the vent is necessary for the on board diagnosis of other evaporative emission control system components.
This solenoid valve is used only for diagnosis, and usually remains opened.
When the vent is closed, under normal purge conditions, the evaporative emission control system is depressurized and allows EVAP Control System diagnosis.

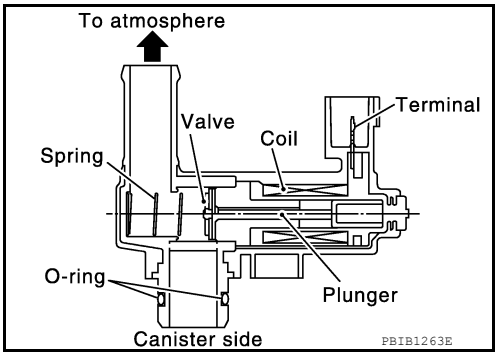

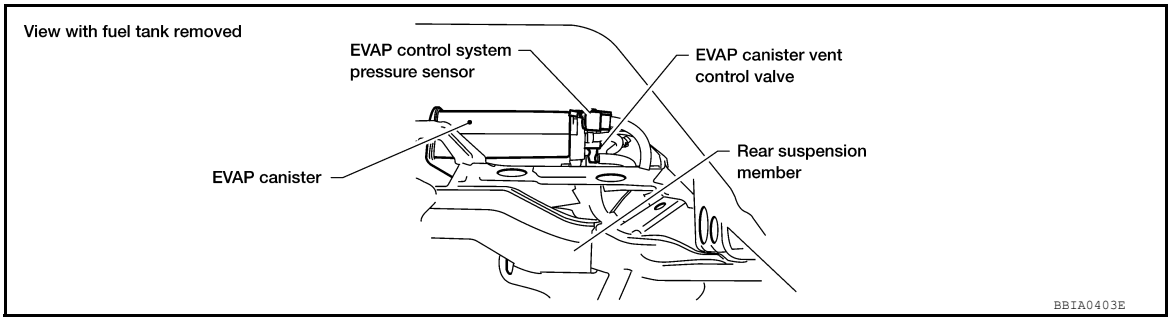

On Board Diagnosis Logic

INFOID:0000000011291823

DTC No.	Trouble diagnosis name	DTC detecting condition	Possible cause
P0448 0448	EVAP canister vent control valve close	EVAP canister vent control valve remains closed under specified driving conditions.	• EVAP canister vent control valve • EVAP control system pressure sensor and the circuit • Blocked rubber tube to EVAP canister vent control valve • EVAP canister is saturated with water

DTC Confirmation Procedure

INFOID:0000000011291824

1. If DTC Confirmation Procedure has been previously conducted, always perform the following before conducting the next step.

a. Turn ignition switch OFF and wait at least 10 seconds.
b. Turn ignition switch ON.
c. Turn ignition switch OFF and wait at least 10 seconds.

2. Turn ignition switch ON and wait at least 5 seconds.
3. Turn ignition switch OFF and wait at least 10 seconds.
4. Start engine and let it idle for at least 1 minute.
5. Repeat next procedures 3 times.

a. Increase the engine speed up to 3,000 to 3,500 rpm and keep it for 2 minutes and 50 seconds to 3 minutes.
Never exceed 3 minutes.
b. Fully released accelerator pedal and keep engine idle for about 5 seconds.

6. Check 1st trip DTC.
7. If 1st trip DTC is detected, go to EC-319, "Diagnosis Procedure".
If 1st trip DTC is not detected, go to the next step.
8. Repeat next procedure 20 times.

a. Quickly increase the engine speed up to 4,000 to 4,500 rpm or more and keep it for 25 to 30 seconds.
b. Fully released accelerator pedal and keep engine idle for at least 35 seconds.

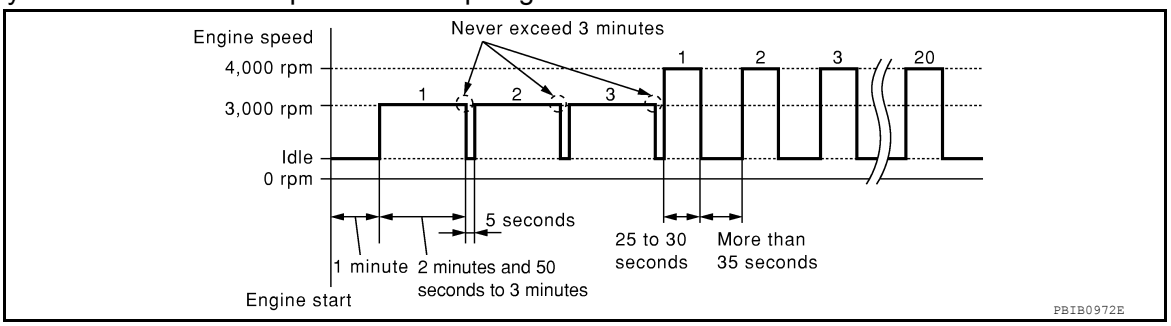

9. Check 1st trip DTC.
10. If 1st trip DTC is detected, go to EC-319, "Diagnosis Procedure".

Diagnosis Procedure

INFOID:0000000011291825

1. CHECK RUBBER TUBE

1. Turn ignition switch OFF.
2. Disconnect rubber tube connected to EVAP canister vent control valve.

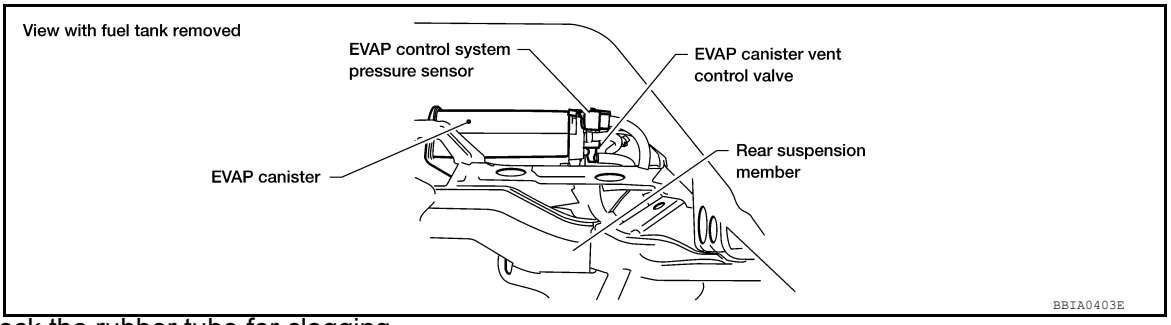

3. Check the rubber tube for clogging.

OK or NG

OK >> GO TO 2.
NG >> Clean rubber tube using an air blower.

2. CHECK EVAP CANISTER VENT CONTROL VALVE

Refer to EC-320, "Component Inspection".

OK or NG

OK >> GO TO 3.
NG >> Replace EVAP canister vent control valve. Refer to FL-16.

3. CHECK IF EVAP CANISTER SATURATED WITH WATER

1. Remove EVAP canister with EVAP canister vent control valve and EVAP control system pressure sensor attached. Refer to FL-16.
2. Check if water will drain from the EVAP canister.

Yes or No

Yes >> GO TO 4.
No >> GO TO 6.

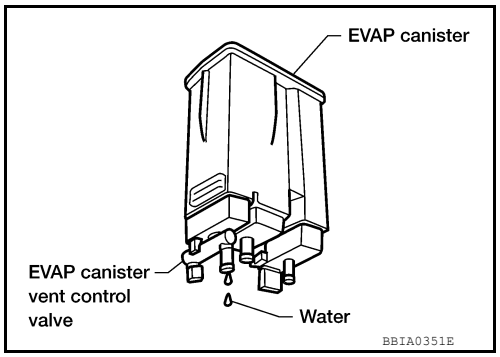

4. CHECK EVAP CANISTER

Weigh the EVAP canister with the EVAP canister vent control valve and EVAP control system pressure sensor attached.
The weight should be less than 2.5 kg (5.5 lb).

OK or NG

OK >> GO TO 6.
NG >> GO TO 5.

5. DETECT MALFUNCTIONING PART

Check the following.
- EVAP canister for damage
- EVAP hose between EVAP canister and vehicle frame for clogging or poor connection

>> Repair hose or replace EVAP canister. Refer to FL-8, "Removal and Installation" or FL-16, "Removal and Installation".

6. CHECK EVAP CONTROL SYSTEM PRESSURE SENSOR CONNECTOR

1. Disconnect EVAP control system pressure sensor harness connector.
2. Check connectors for water.

Water should not exist.

OK or NG

OK >> GO TO 7.
NG >> Replace EVAP control system pressure sensor. Refer to FL-16.

7. CHECK EVAP CONTROL SYSTEM PRESSURE SENSOR

Refer to EC-324, "Component Inspection".

OK or NG

OK >> GO TO 8.
NG >> Replace EVAP control system pressure sensor. Refer to FL-16.

8. CHECK INTERMITTENT INCIDENT

Refer to GI-40, "How to Check Terminal" and GI-43, "Intermittent Incident".

>> **INSPECTION END**

Component Inspection

INFOID:0000000011291826

EVAP CANISTER VENT CONTROL VALVE

With CONSULT

1. Remove EVAP canister vent control valve from EVAP canister. Refer to FL-16.
2. Check portion **B** of EVAP canister vent control valve for being rusted.
   If NG, replace EVAP canister vent control valve. Refer to FL-16.
   If OK, go to next step.
3. Reconnect harness connectors disconnected.
4. Turn ignition switch ON.
5. Perform “VENT CONTROL/V” in “ACTIVE TEST” mode.
6. Check air passage continuity and operation delay time.
   Make sure that new O-ring is installed properly.

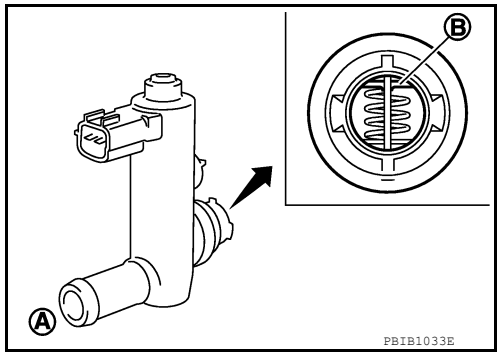

Condition VENT CONTROL/V	Air passage continuity between A and B
ON	No
OFF	Yes

Operation takes less than 1 second.

If NG, replace EVAP canister vent control valve. Refer to FL-16.
If OK, go to next step.

7. Clean the air passage (Portion **A** to **B**) of EVAP canister vent control valve using an air blower.
8. Perform step 6 again.

Without CONSULT

1. Remove EVAP canister vent control valve from EVAP canister. Refer to FL-16.
2. Check portion **B** of EVAP canister vent control valve for being rusted.

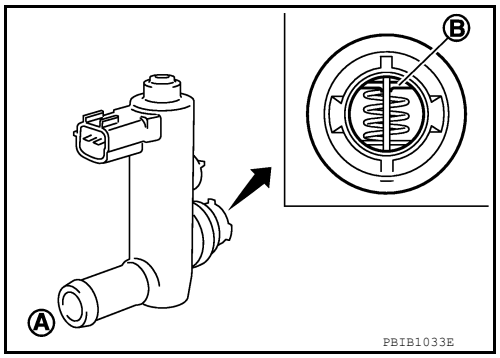

3. Check air passage continuity and operation delay time under the following conditions.
Make sure that new O-ring is installed properly.

Condition	Air passage continuity between A and B
12 V direct current supply between terminals 1 and 2	No
OFF	Yes

Operation takes less than 1 second.

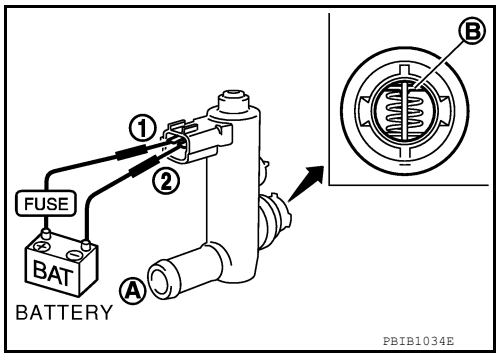

If NG, replace EVAP canister vent control valve. Refer to FL-16.
If OK, go to next step.

4. Clean the air passage (Portion **A** to **B**) of EVAP canister vent control valve using an air blower.
5. Perform step 3 again.

P0451 EVAP CONTROL SYSTEM PRESSURE SENSOR

Component Description

INFOID:0000000011291827

The EVAP control system pressure sensor detects pressure in the purge line. The sensor output voltage to the ECM increases as pressure increases.

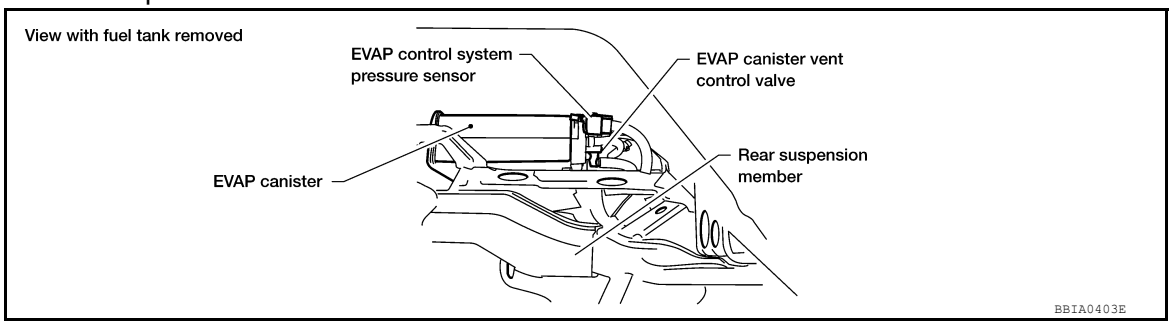

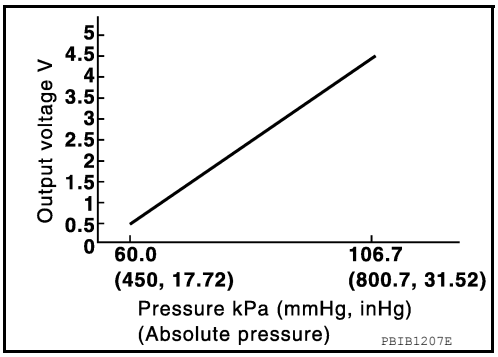

On Board Diagnosis Logic

INFOID:0000000011291828

NOTE:
If DTC P0451 is displayed with DTC P0643, first perform the trouble diagnosis for DTC P0643. Refer to EC-374.

DTC No.	Trouble diagnosis name	DTC detecting condition	Possible cause
P0451 0451	EVAP control system pressure sensor performance	ECM detects a sloshing signal from the EVAP control system pressure sensor	• Harness or connectors • EVAP control system pressure sensor

DTC Confirmation Procedure

INFOID:0000000011291829

NOTE:
Never remove fuel filler cap during DTC confirmation procedure.

1. PRECONDITIONING

If DTC Confirmation Procedure has been previously conducted, always perform the following procedure before conducting the next test.

1. Turn ignition switch OFF and wait at least 10 seconds.
2. Turn ignition switch ON.
3. Turn ignition switch OFF and wait at least 10 seconds.

With CONSULT>>GO TO 2.
Without CONSULT>>GO TO 5.

2. PERFORM DTC CONFIRMATION PROCEDURE-1

With CONSULT

1. Start engine and let it idle for least 40 seconds.
   NOTE:
   Do not depress accelerator pedal even slightly.

2. Check 1st trip DTC.

Is 1st trip DTC detected?

YES >> Proceed to EC-323, "Diagnosis Procedure".
NO >> GO TO 3.

3. PERFORM DTC CONFIRMATION PROCEDURE-2

With CONSULT
1. Select “EVAP DIAG READY” in “DATA MONITOR” mode of “ENGINE”.
2. Let it idle until “OFF” of “EVAP DIAG READY” changes to “ON”.
   NOTE:
   It will take at most 2 hours until “OFF” of “EVAP DIAG READY” changes to “ON”.
3. Turn ignition switch OFF and wait at least 90 minutes.
   NOTE:
   Never turn ignition switch ON during 90 minutes.
4. Turn ignition switch ON.
5. Select “EVAP LEAK DIAG” in “DATA MONITOR” mode of “ENGINE”.
6. Check that “EVAP LEAK DIAG” indication.

Which is displayed on CONSULT?

CMPLT >> GO TO 4.
YET >> 1. Perform DTC CONFIRMATION PROCEDURE again.
2. GO TO 1.

4. PERFORM DTC CONFIRMATION PROCEDURE-3

With CONSULT
Check 1st trip DTC.

Is 1st trip DTC detected?

YES >> Proceed to EC-323, "Diagnosis Procedure".
NO >> INSPECTION END

5. PERFORM DTC CONFIRMATION PROCEDURE-4

With GST
1. Start engine and let it idle for least 40 seconds.
   NOTE:
   Do not depress accelerator pedal even slightly.
2. Check 1st trip DTC.

Is 1st trip DTC detected?

YES >> Proceed to EC-323, "Diagnosis Procedure".
NO >> GO TO 6.

6. PERFORM DTC CONFIRMATION PROCEDURE-5

With GST
1. Let it idle for at least 2 hours.
2. Turn ignition switch OFF and wait at least 90 minutes.
   NOTE:
   Never turn ignition switch ON during 90 minutes.
3. Turn ignition switch ON.
4. Check 1st trip DTC.

Is 1st trip DTC detected?

YES >> Proceed to EC-323, "Diagnosis Procedure".
NO >> INSPECTION END

Diagnosis Procedure

INFOID:0000000011291830

1. CHECK GROUND CONNECTIONS

1. Turn ignition switch OFF.
2. Loosen and retighten three ground screws on the body.

Refer to EC-154, "Ground Inspection".

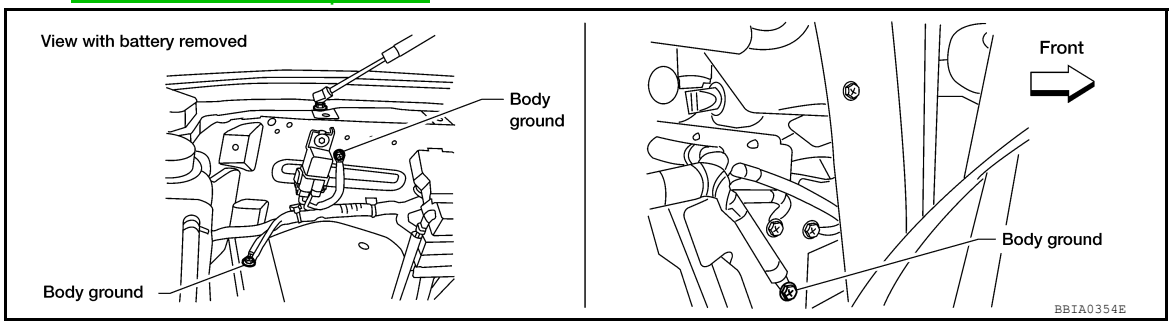

OK or NG

OK >> GO TO 2.
NG >> Repair or replace ground connections.

2. CHECK EVAP CONTROL SYSTEM PRESSURE SENSOR CONNECTOR FOR WATER

1. Disconnect EVAP control system pressure sensor harness connector.

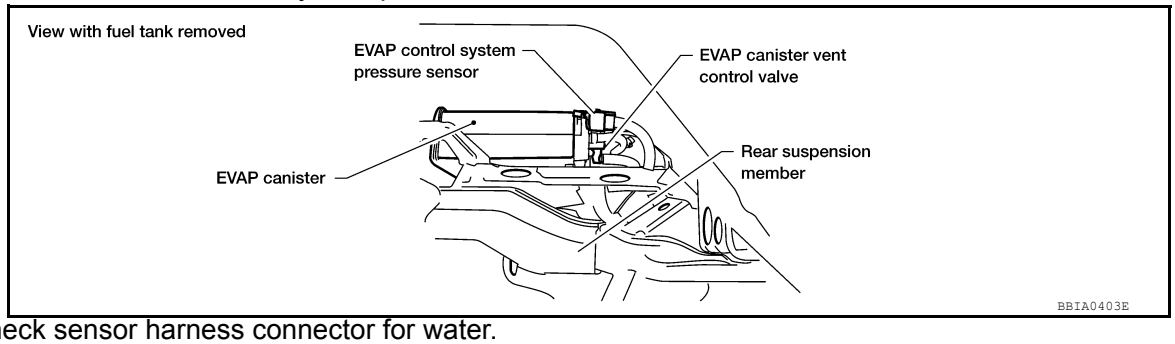

2. Check sensor harness connector for water.

Water should not exist.

OK or NG

OK >> GO TO 3.
NG >> Repair or replace harness connector.

3. CHECK EVAP CONTROL SYSTEM PRESSURE SENSOR

Refer to EC-324, "Component Inspection".

OK or NG

OK >> GO TO 4.
NG >> Replace EVAP control system pressure sensor. Refer to FL-16.

4. CHECK INTERMITTENT INCIDENT

Refer to GI-40, "How to Check Terminal" and GI-43, "Intermittent Incident".
For wiring diagram, refer to EC-89, "Wiring Diagram".

>> **INSPECTION END**

Component Inspection

INFOID:0000000011291831

EVAP CONTROL SYSTEM PRESSURE SENSOR

1. Remove EVAP control system pressure sensor with its harness connector connected from EVAP canister. Refer to FL-16.
   Always replace O-ring with a new one.
2. Install a vacuum pump to EVAP control system pressure sensor.

3. Turn ignition switch ON and check output voltage between ECM terminal 32 and ground under the following conditions.

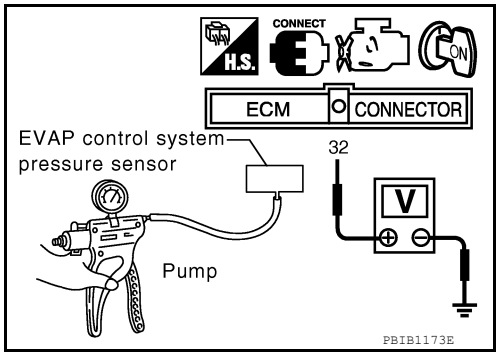

Applied vacuum kPa (mmHg, inHg)	Voltage (V)
Not applied	1.8 - 4.8
-26.7 (-200, -7.87)	2.1 to 2.5 V lower than above value

CAUTION:
- **Always calibrate the vacuum pump gauge when using it.**
- **Do not apply below -93.3 kPa (-700 mmHg, -27.56 inHg) or pressure over 101.3 kPa (760 mmHg, 29.92 inHg).**

4. If NG, replace EVAP control system pressure sensor. Refer to FL-16.

P0452 EVAP CONTROL SYSTEM PRESSURE SENSOR

Component Description

INFOID:0000000011291832

The EVAP control system pressure sensor detects pressure in the purge line. The sensor output voltage to the ECM increases as pressure increases.

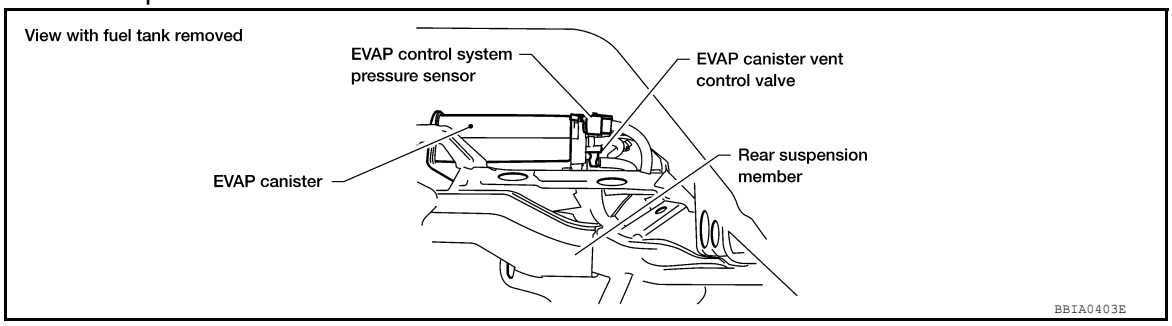

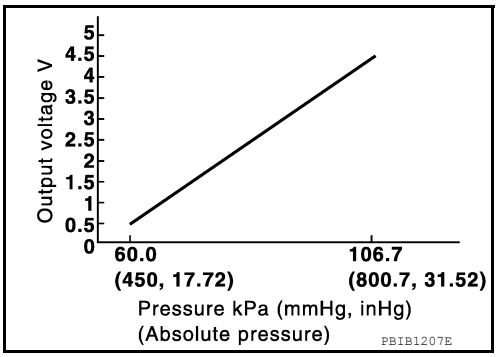

On Board Diagnosis Logic

INFOID:0000000011291833

NOTE:
If DTC P0452 is displayed with DTC P0643, first perform the trouble diagnosis for DTC P0643. Refer to EC-374.

DTC No.	Trouble diagnosis name	DTC detecting condition	Possible cause
P0452 0452	EVAP control system pressure sensor low input	An excessively low voltage from the sensor is sent to ECM.	• Harness or connectors (The sensor circuit is open or shorted.) • EVAP control system pressure sensor

DTC Confirmation Procedure

INFOID:0000000011291834

NOTE:
If DTC Confirmation Procedure has been previously conducted, always perform the following before conducting the next step.

1. Turn ignition switch OFF and wait at least 10 seconds.
2. Turn ignition switch ON.
3. Turn ignition switch OFF and wait at least 10 seconds.

TESTING CONDITION:
Always perform test at a temperature of 5°C (41°F) or more.

WITH CONSULT

1. Start engine and warm it up to normal operating temperature.
2. Turn ignition switch OFF and wait at least 10 seconds.
3. Turn ignition switch ON.
4. Select “DATA MONITOR” mode with CONSULT.
5. Make sure that “FUEL T/TMP SE” is more than 0°C (32°F).

6. Start engine and wait at least 20 seconds.
7. Check 1st trip DTC.
8. If 1st trip DTC is detected, go to EC-327, "Diagnosis Procedure".

WITH GST

1. Start engine and warm it up to normal operating temperature.
2. Check that voltage between ECM terminal 107 (Fuel tank temperature sensor signal) and ground is less than 4.2 V.
3. Turn ignition switch OFF and wait at least 10 seconds.
4. Start engine and wait at least 20 seconds.
5. Select Service $07 with GST.
   If 1st trip DTC is detected, go to EC-327, "Diagnosis Procedure".

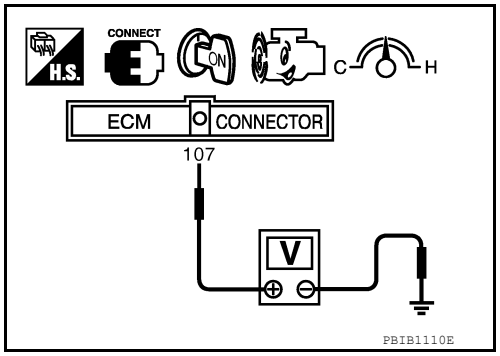

Diagnosis Procedure

INFOID:0000000011291835

1. CHECK GROUND CONNECTIONS

1. Turn ignition switch OFF.
2. Loosen and retighten three ground screws on the body.
   Refer to EC-154, "Ground Inspection".

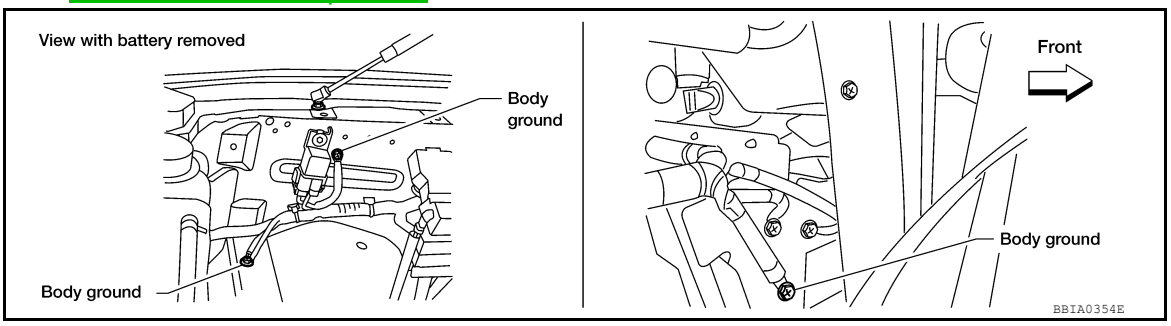

OK or NG

OK >> GO TO 2.
NG >> Repair or replace ground connections.

2. CHECK CONNECTOR

1. Disconnect EVAP control system pressure sensor harness connector.

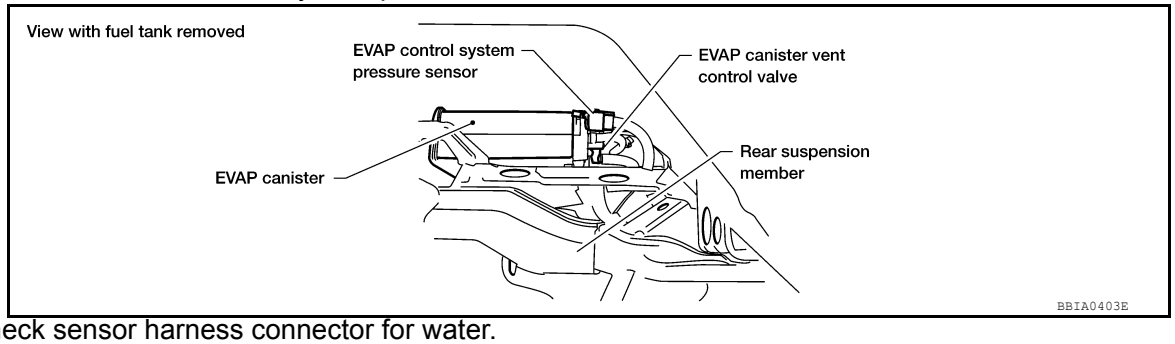

2. Check sensor harness connector for water.

Water should not exist.

OK or NG

OK >> GO TO 3.
NG >> Repair or replace harness connector.

3. CHECK EVAP CONTROL SYSTEM PRESSURE SENSOR POWER SUPPLY CIRCUIT

1. Turn ignition switch ON.
2. Check voltage between EVAP control system pressure sensor terminal 3 and ground with CONSULT or tester.

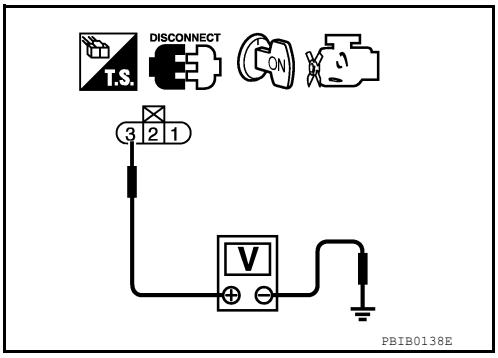

Voltage: Approximately 5 V

OK or NG

OK >> GO TO 5.
NG >> GO TO 4.

4. DETECT MALFUNCTIONING PART

Check the following.
- Harness connectors C1, E41
- Harness connectors E5, F14
- Harness for open or short between EVAP control system pressure sensor and ECM

>> Repair open circuit or short to ground or short to power in harness or connectors.

5. CHECK EVAP CONTROL SYSTEM PRESSURE SENSOR GROUND CIRCUIT FOR OPEN AND SHORT

1. Turn ignition switch OFF.
2. Disconnect ECM harness connector.
3. Check harness continuity between EVAP control system pressure sensor terminal 1 and ECM terminal 67.
   Refer to Wiring Diagram.

Continuity should exist.

4. Also check harness for short to ground and short to power.

OK or NG

OK >> GO TO 7.
NG >> GO TO 6.

6. DETECT MALFUNCTIONING PART

Check the following.
- Harness connectors C1, E41
- Harness connectors E5, F14
- Harness for open or short between EVAP control system pressure sensor and ECM

>> Repair open circuit or short to ground or short to power in harness or connectors.

7. CHECK EVAP CONTROL SYSTEM PRESSURE SENSOR INPUT SIGNAL CIRCUIT FOR OPEN AND SHORT

1. Check harness continuity between ECM terminal 32 and EVAP control system pressure sensor terminal 2.
   Refer to Wiring Diagram.

Continuity should exist.

2. Also check harness for short to ground and short to power.

OK or NG

OK >> GO TO 9.
NG >> GO TO 8.

8. DETECT MALFUNCTIONING PART

Check the following.
- Harness connectors C1, E41
- Harness connectors E5, F14
- Harness for open or short between EVAP control system pressure sensor and ECM

>> Repair open circuit or short to ground or short to power in harness or connectors.

9. CHECK EVAP CONTROL SYSTEM PRESSURE SENSOR

Refer to EC-329, "Component Inspection".

OK or NG

OK >> GO TO 10.
NG >> Replace EVAP control system pressure sensor. Refer to FL-16.

10. CHECK INTERMITTENT INCIDENT

Refer to GI-40, "How to Check Terminal" and GI-43, "Intermittent Incident".

>> **INSPECTION END**

Component Inspection

INFOID:0000000011291836

EVAP CONTROL SYSTEM PRESSURE SENSOR

1. Remove EVAP control system pressure sensor with its harness connector connected from EVAP canister. Refer to FL-16.
   Always replace O-ring with a new one.
2. Install a vacuum pump to EVAP control system pressure sensor.
3. Turn ignition switch ON and check output voltage between ECM terminal 32 and ground under the following conditions.

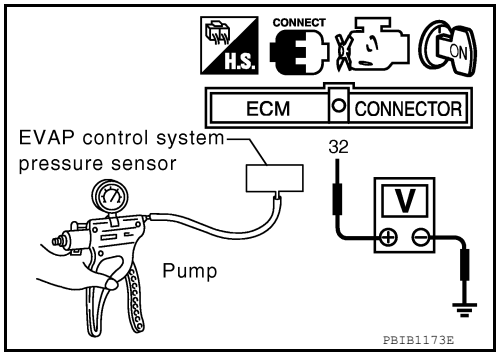

Applied vacuum [kPa (mmHg, inHg)]	Voltage (V)
Not applied	1.8 - 4.8
-26.7 (-200, -7.87)	2.1 to 2.5 lower than above value

CAUTION:
- **Always calibrate the vacuum pump gauge when using it.**
- **Do not apply below -93.3 kPa (-700 mmHg, -27.56 inHg) or pressure over 101.3 kPa (760 mmHg, 29.92 inHg).**

4. If NG, replace EVAP control system pressure sensor. Refer to FL-16.

P0453 EVAP CONTROL SYSTEM PRESSURE SENSOR

Component Description

INFOID:0000000011291837

The EVAP control system pressure sensor detects pressure in the purge line. The sensor output voltage to the ECM increases as pressure increases.

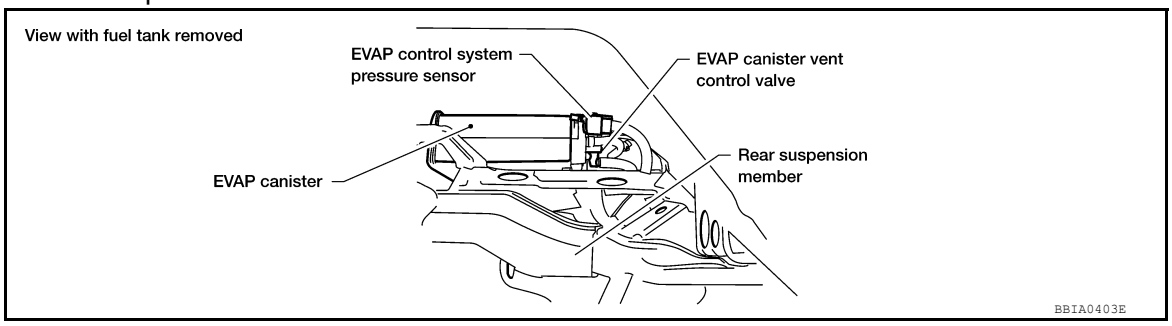

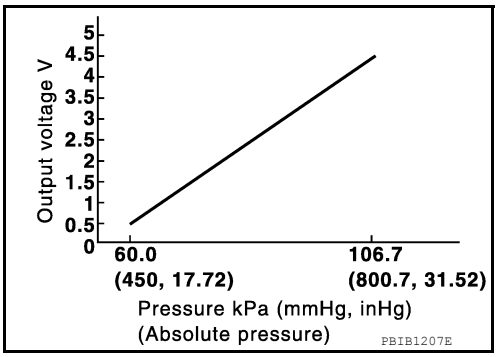

On Board Diagnosis Logic

INFOID:0000000011291838

NOTE:
If DTC P0451 is displayed with DTC P0643, first perform the trouble diagnosis for DTC P0643. Refer to EC-374.

DTC No.	Trouble diagnosis name	DTC detecting condition	Possible cause
P0453 0453	EVAP control system pressure sensor high input	An excessively high voltage from the sensor is sent to ECM.	• Harness or connectors (The sensor circuit is open or shorted.) • EVAP control system pressure sensor • EVAP canister vent control valve • EVAP canister • Rubber hose from EVAP canister vent control valve to vehicle frame

DTC Confirmation Procedure

INFOID:0000000011291839

NOTE:
If DTC Confirmation Procedure has been previously conducted, always perform the following before conducting the next step.

1. Turn ignition switch OFF and wait at least 10 seconds.
2. Turn ignition switch ON.
3. Turn ignition switch OFF and wait at least 10 seconds.

TESTING CONDITION:
Always perform test at a temperature of 5°C (41°F) or more.

With CONSULT

1. Start engine and warm it up to normal operating temperature.
2. Turn ignition switch OFF and wait at least 10 seconds.

3. Turn ignition switch ON.
4. Select “DATA MONITOR” mode with CONSULT.
5. Make sure that “FUEL T/TMP SE” is more than 0°C (32°F).
6. Start engine and wait at least 20 seconds.
7. Check 1st trip DTC.
8. If 1st trip DTC is detected, go to EC-331, "Diagnosis Procedure".

With GST

1. Start engine and warm it up to normal operating temperature.
2. Check that voltage between ECM terminal 107 (Fuel tank temperature sensor signal) and ground is less than 4.2 V.
3. Turn ignition switch OFF and wait at least 10 seconds.
4. Start engine and wait at least 20 seconds.
5. Select Service $07 with GST.
   If 1st trip DTC is detected, go to EC-331, "Diagnosis Procedure".

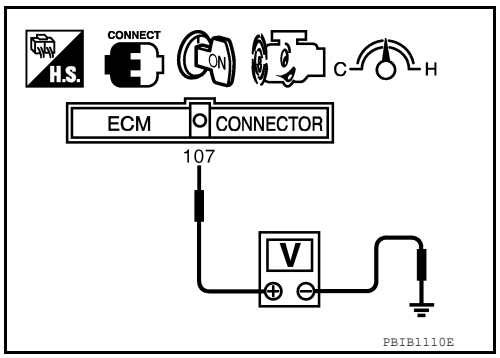

Diagnosis Procedure

INFOID:0000000011291840

1. CHECK GROUND CONNECTIONS

1. Turn ignition switch OFF.
2. Loosen and retighten three ground screws on the body.
   Refer to EC-154, "Ground Inspection".

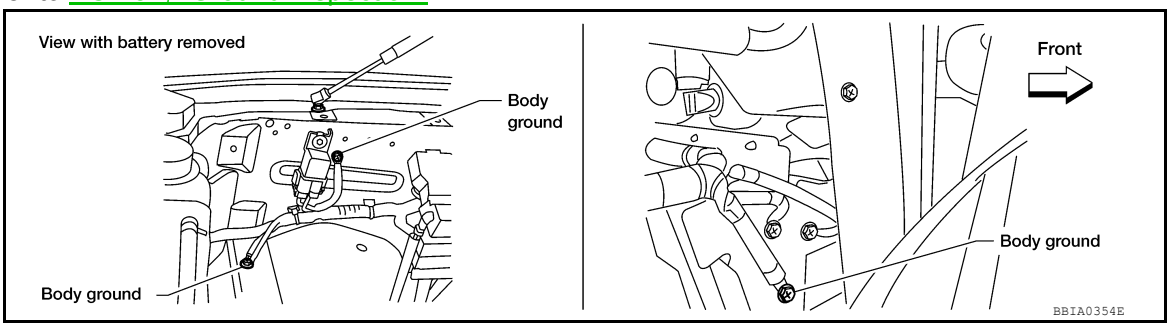

OK or NG

OK >> GO TO 2.
NG >> Repair or replace ground connections.

2. CHECK CONNECTOR

1. Disconnect EVAP control system pressure sensor harness connector.

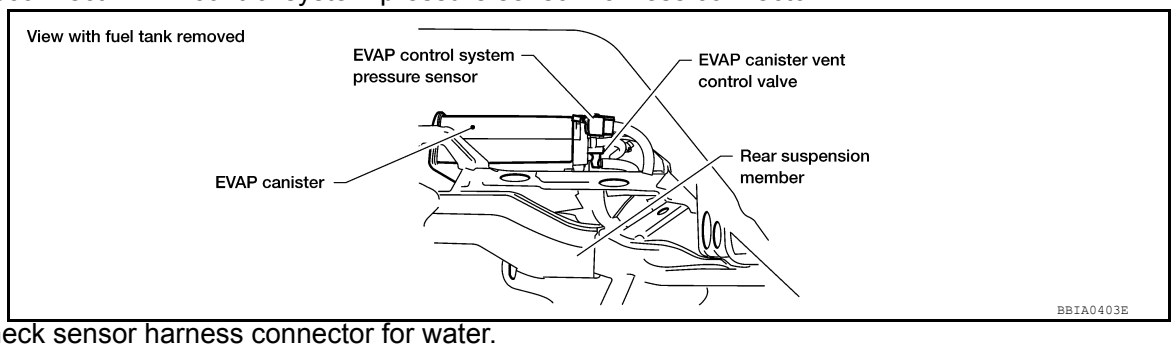

2. Check sensor harness connector for water.

Water should not exist.

OK or NG

OK >> GO TO 3.
NG >> Repair or replace harness connector.

3. CHECK EVAP CONTROL SYSTEM PRESSURE SENSOR POWER SUPPLY CIRCUIT

1. Turn ignition switch ON.
2. Check voltage between EVAP control system pressure sensor terminal 3 and ground with CONSULT or tester.

Voltage: Approximately 5 V

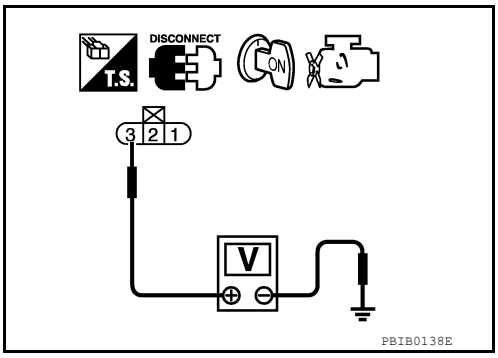

OK or NG

OK >> GO TO 5.
NG >> GO TO 4.

4. DETECT MALFUNCTIONING PART

Check the following.
- Harness connectors C1, E41
- Harness connectors E5, F14
- Harness for open or short between EVAP control system pressure sensor and ECM

>> Repair open circuit or short to ground or short to power in harness or connectors.

5. CHECK EVAP CONTROL SYSTEM PRESSURE SENSOR GROUND CIRCUIT FOR OPEN AND SHORT

1. Turn ignition switch OFF.
2. Disconnect ECM harness connector.
3. Check harness continuity between EVAP control system pressure sensor terminal 1 and ECM terminal 67.
   Refer to Wiring Diagram.

Continuity should exist.

4. Also check harness for short to ground and short to power.

OK or NG

OK >> GO TO 7.
NG >> GO TO 6.

6. DETECT MALFUNCTIONING PART

Check the following.
- Harness connectors C1, E41
- Harness connectors E5, F14
- Harness for open or short between EVAP control system pressure sensor and ECM

>> Repair open circuit or short to ground or short to power in harness or connectors.

7. CHECK EVAP CONTROL SYSTEM PRESSURE SENSOR INPUT SIGNAL CIRCUIT FOR OPEN AND SHORT

1. Check harness continuity between ECM terminal 32 and EVAP control system pressure sensor terminal 2.
   Refer to Wiring Diagram.

Continuity should exist.

2. Also check harness for short to ground and short to power.

OK or NG

OK >> GO TO 9.
NG >> GO TO 8.

8. DETECT MALFUNCTIONING PART

Check the following.
- Harness connectors C1, E41
- Harness connectors E5, F14
- Harness for open or short between EVAP control system pressure sensor and ECM

>> Repair open circuit or short to ground or short to power in harness or connectors.

9. CHECK RUBBER TUBE

1. Disconnect rubber tube connected to EVAP canister vent control valve.
2. Check the rubber tube for clogging, vent or kinked.

OK or NG

OK >> GO TO 10.
NG >> Clean the rubber tube using an air blower, repair or replace rubber tube.

10. CHECK EVAP CANISTER VENT CONTROL VALVE

Refer to EC-316, "Component Inspection".

OK or NG

OK >> GO TO 11.
NG >> Replace EVAP canister vent control valve. Refer to FL-16.

11. CHECK EVAP CONTROL SYSTEM PRESSURE SENSOR

Refer to EC-334, "Component Inspection".

OK or NG

OK >> GO TO 12.
NG >> Replace EVAP control system pressure sensor. Refer to FL-16.

12. CHECK IF EVAP CANISTER SATURATED WITH WATER

1. Remove EVAP canister with EVAP canister vent control valve and EVAP control system pressure sensor attached. Refer to FL-16.
2. Check if water will drain from the EVAP canister.

Yes or No

Yes >> GO TO 13.
No >> GO TO 15.

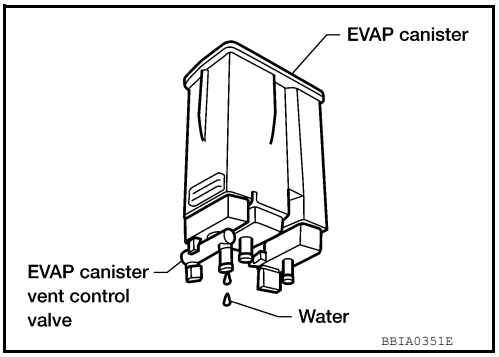

13. CHECK EVAP CANISTER

Weigh the EVAP canister with the EVAP canister vent control valve and EVAP control system pressure sensor attached.

The weight should be less than 2.5 kg (5.5 lb).

OK or NG

OK >> GO TO 15.
NG >> GO TO 14.

14. DETECT MALFUNCTIONING PART

Check the following.
- EVAP canister for damage
- EVAP hose between EVAP canister and vehicle frame for clogging or poor connection

>> Repair hose or replace EVAP canister. Refer to FL-8, "Removal and Installation" or FL-16, "Removal and Installation".

15. CHECK INTERMITTENT INCIDENT

Refer to GI-40, "How to Check Terminal" and GI-43, "Intermittent Incident".

>> **INSPECTION END**

Component Inspection

INFOID:0000000011291841

EVAP CONTROL PRESSURE SENSOR

1. Remove EVAP control system pressure sensor with its harness connector connected from EVAP canister. Refer to FL-16.
   Always replace O-ring with a new one.
2. Install a vacuum pump to EVAP control system pressure sensor.
3. Turn ignition switch ON and check output voltage between ECM terminal 32 and ground under the following conditions.

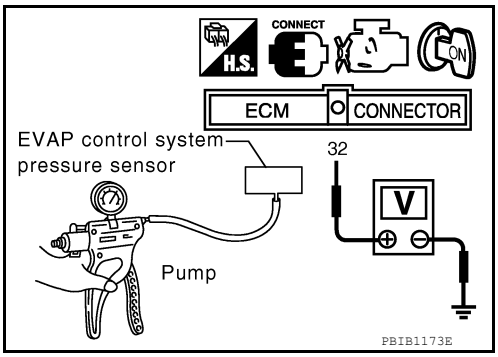

Applied vacuum [kPa (mmHg, inHg)]	Voltage (V)
Not applied	1.8 - 4.8
-26.7 (-200, -7.87)	2.1 to 2.5 lower than above value

CAUTION:
- **Always calibrate the vacuum pump gauge when using it.**
- **Do not apply below -93.3 kPa (-700 mmHg, -27.56 inHg) or pressure over 101.3 kPa (760 mmHg, 29.92 inHg).**

4. If NG, replace EVAP control system pressure sensor. Refer to FL-16.

P0455 EVAP CONTROL SYSTEM

On Board Diagnosis Logic

INFOID:0000000011291842

This diagnosis detects a very large leak (fuel filler cap fell off etc.) in EVAP system between the fuel tank and EVAP canister purge volume control solenoid valve.

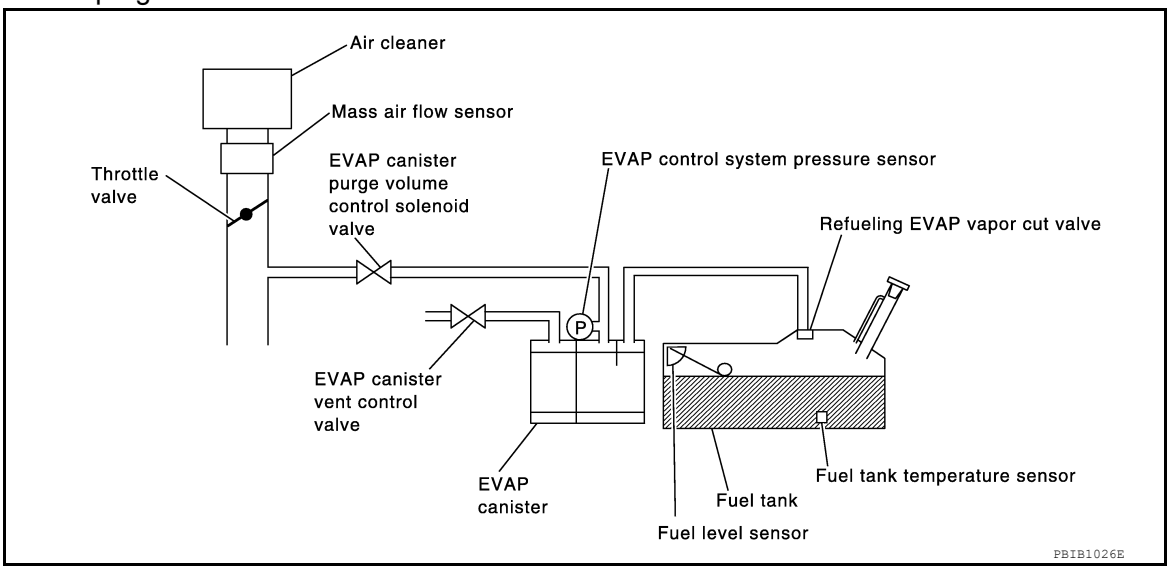

DTC No.	Trouble diagnosis name	DTC detecting condition	Possible cause
P0455 0455	EVAP control system gross leak detected	EVAP control system has a very large leak such as fuel filler cap fell off, EVAP control system does not operate properly.	• Fuel filler cap remains open or fails to close. • Incorrect fuel tank vacuum relief valve • Incorrect fuel filler cap used • Foreign matter caught in fuel filler cap. • Leak is in line between intake manifold and EVAP canister purge volume control solenoid valve. • Foreign matter caught in EVAP canister vent control valve. • EVAP canister or fuel tank leaks • EVAP purge line (pipe and rubber tube) leaks • EVAP purge line rubber tube bent. • Loose or disconnected rubber tube • EVAP canister vent control valve and the circuit • EVAP canister purge volume control solenoid valve and the circuit • Fuel tank temperature sensor • O-ring of EVAP canister vent control valve is missing or damaged. • EVAP control system pressure sensor • Refueling EVAP vapor cut valve • ORVR system leaks

CAUTION:
- **Use only a genuine NISSAN fuel filler cap as a replacement. If an incorrect fuel filler cap is used, the MIL may come on.**
- **If the fuel filler cap is not tightened properly, the MIL may come on.**
- **Use only a genuine NISSAN rubber tube as a replacement.**

DTC Confirmation Procedure

INFOID:0000000011291843

CAUTION:
Never remove fuel filler cap during the DTC Confirmation Procedure.
NOTE:

- **Make sure that EVAP hoses are connected to EVAP canister purge volume control solenoid valve properly.**
- If DTC Confirmation Procedure has been previously conducted, always perform the following before conducting the next step.

1. Turn ignition switch OFF and wait at least 10 seconds.
2. Turn ignition switch ON.
3. Turn ignition switch OFF and wait at least 10 seconds.

TESTING CONDITION:
- **Perform "DTC WORK SUPPORT" when the fuel level is between 1/4 and 3/4 full, and vehicle is placed on flat level surface.**
- **Open engine hood before conducting the following procedures.**

WITH CONSULT

1. Tighten fuel filler cap securely until ratcheting sound is heard.
2. Turn ignition switch ON.
3. Turn ignition switch OFF and wait at least 10 seconds.
4. Turn ignition switch ON and select "DATA MONITOR" mode with CONSULT.
5. Make sure that the following conditions are met.
   COOLAN TEMP/S: 0 - 70°C (32 - 158°F)
   INT/A TEMP SE: 0 - 60°C (32 - 140°F)
6. Select "EVP SML LEAK P0442/P1442" of "EVAPORATIVE SYSTEM" in "DTC WORK SUPPORT" mode with CONSULT.
   Follow the instruction displayed.
   NOTE:
   If the engine speed cannot be maintained within the range displayed on the CONSULT screen, go to EC-117, "Basic Inspection".
7. Make sure that "OK" is displayed.
   If "NG" is displayed, select "SELF-DIAG RESULTS" mode and make sure that "EVAP GROSS LEAK [P0455]" is displayed. If it is displayed, refer to EC-336, "Diagnosis Procedure".
   If P0442 is displayed, perform Diagnostic Procedure for DTC P0442, EC-299, "Diagnosis Procedure".

WITH GST

NOTE:
Be sure to read the explanation of EC-77, "DTC Index" before driving vehicle.

1. Start engine.
2. Drive vehicle according to EC-77, "DTC Index".
3. Stop vehicle.
4. Turn ignition switch OFF, wait at least 10 seconds and then turn ON.
5. Select Service $07 with GST.
   - If P0441 is displayed on the screen, go to EC-294, "Diagnosis Procedure".
   - If P0442 is displayed on the screen, go to EC-299, "Diagnosis Procedure".
   - If P0455 is displayed on the screen, go to EC-336, "Diagnosis Procedure".

Diagnosis Procedure

INFOID:0000000011291844

1. CHECK FUEL FILLER CAP DESIGN

1. Turn ignition switch OFF.

2. Check for genuine NISSAN fuel filler cap design.

OK or NG

OK >> GO TO 2.
NG >> Replace with genuine NISSAN fuel filler cap. Refer to FL-8.

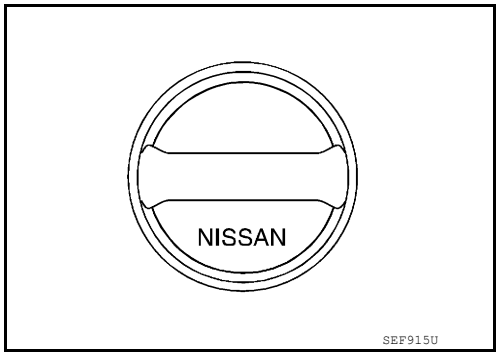

2. CHECK FUEL FILLER CAP INSTALLATION

Check that the cap is tightened properly by rotating the cap clockwise.

OK or NG

OK >> GO TO 3.
NG >> 1. Open fuel filler cap, then clean cap and fuel filler neck threads using air blower.
2. Retighten until ratcheting sound is heard.

3. CHECK FUEL FILLER CAP FUNCTION

Check for air releasing sound while opening the fuel filler cap.

OK or NG

OK >> GO TO 5.
NG >> GO TO 4.

4. CHECK FUEL TANK VACUUM RELIEF VALVE

Refer to EC-341, "Component Inspection".

OK or NG

OK >> GO TO 5.
NG >> Replace fuel filler cap with a genuine one. Refer to FL-8.

5. CHECK EVAP PURGE LINE

Check EVAP purge line (pipe, rubber tube, fuel tank and EVAP canister) for cracks, improper connection or disconnection.
Refer to EC-32, "Description".

OK or NG

OK >> GO TO 6.
NG >> Repair or reconnect the hose.

6. CLEAN EVAP PURGE LINE

Clean EVAP purge line (pipe and rubber tube) using air blower.

>> GO TO 7.

7. CHECK EVAP CANISTER VENT CONTROL VALVE

Check the following.
- EVAP canister vent control valve is installed properly.
  Refer to FL-16, "Removal and Installation".
- EVAP canister vent control valve.
  Refer to EC-316, "Component Inspection".

OK or NG

OK >> GO TO 8.
NG >> Repair or replace EVAP canister vent control valve and O-ring. Refer to FL-16.

8. INSTALL THE PRESSURE PUMP

To locate the EVAP leak, install EVAP service port adapter and pressure pump to EVAP service port securely.

NOTE:

Improper installation of the EVAP service port adapter to the EVAP service port may cause leaking.

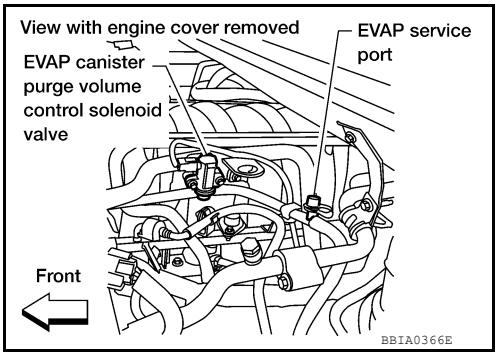

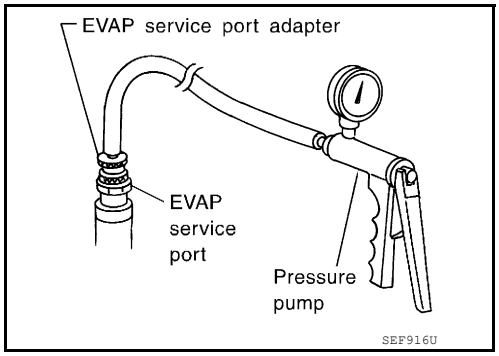

With CONSULT>>GO TO 9.
Without CONSULT>>GO TO 10.

9. CHECK FOR EVAP LEAK

With CONSULT

1. Turn ignition switch ON.
2. Select “EVAP SYSTEM CLOSE” of “WORK SUPPORT” mode with CONSULT.
3. Touch “START” and apply pressure into the EVAP line until the pressure indicator reaches the middle of the bar graph.
   CAUTION:
   - **Do not use compressed air or a high pressure pump.**
   - **Do not exceed 4.12 kPa (0.042 kg/cm^2, 0.6 psi) of pressure in the system.**
4. Using EVAP leak detector, locate the EVAP leak. For the leak detector, refer to the instruction manual for more details.
   Refer to EC-32, "Description".

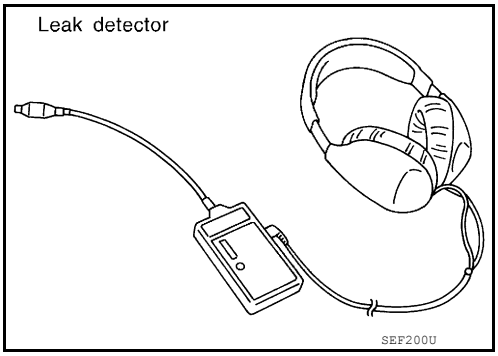

OK or NG

OK >> GO TO 11.
NG >> Repair or replace.

10. CHECK FOR EVAP LEAK

Without CONSULT

1. Turn ignition switch OFF.

2. Apply 12 volts DC to EVAP canister vent control valve. The valve will close. (Continue to apply 12 volts until the end of test.)

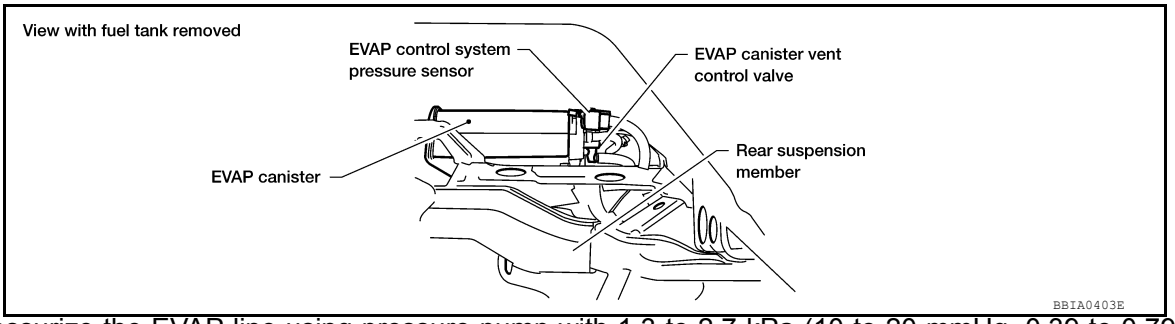

3. Pressurize the EVAP line using pressure pump with 1.3 to 2.7 kPa (10 to 20 mmHg, 0.39 to 0.79 inHg), then remove pump and EVAP service port adapter.
CAUTION:
- **Do not use compressed air or a high pressure pump.**
- **Do not exceed 4.12 kPa (0.042 kg/cm^2, 0.6 psi) of pressure in the system.**

4. Using EVAP leak detector, locate the EVAP leak. For the leak detector, refer to the instruction manual for more details. Refer to EC-32, "Description".

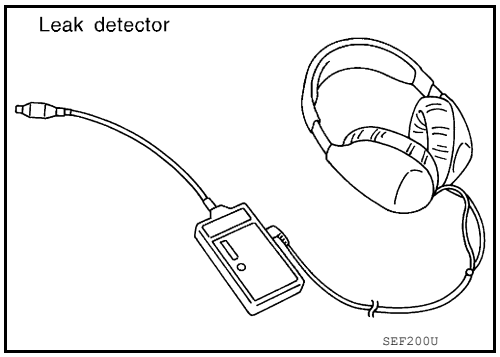

OK or NG

OK >> GO TO 12.
NG >> Repair or replace.

11. CHECK EVAP CANISTER PURGE VOLUME CONTROL SOLENOID VALVE OPERATION

With CONSULT

1. Disconnect vacuum hose to EVAP canister purge volume control solenoid valve at EVAP service port.
2. Start engine.
3. Perform “PURG VOL CONT/V” in “ACTIVE TEST” mode.
4. Touch “Qu” on CONSULT screen to increase “PURG VOL CONT/V” opening to 100%.
5. Check vacuum hose for vacuum when revving engine up to 2,000 rpm.

Vacuum should exist.

OK or NG

OK >> GO TO 14.
NG >> GO TO 13.

12. CHECK EVAP CANISTER PURGE VOLUME CONTROL SOLENOID VALVE OPERATION

Without CONSULT

1. Start engine and warm it up to normal operating temperature.
2. Stop engine.
3. Disconnect vacuum hose to EVAP canister purge volume control solenoid valve at EVAP service port.
4. Start engine and let it idle for at least 80 seconds.
5. Check vacuum hose for vacuum when revving engine up to 2,000 rpm.

Vacuum should exist.

OK or NG

OK >> GO TO 15.
NG >> GO TO 13.

13. CHECK VACUUM HOSE

Check vacuum hoses for clogging or disconnection. Refer to EC-32, "Description".

OK or NG

OK (With CONSULT)>>GO TO 14.
OK (Without CONSULT)>>GO TO 15.
NG >> Repair or reconnect the hose.

14. CHECK EVAP CANISTER PURGE VOLUME CONTROL SOLENOID VALVE

With CONSULT

1. Start engine.
2. Perform “PURG VOL CONT/V” in “ACTIVE TEST” mode with CONSULT. Check that engine speed varies according to the valve opening.

OK or NG

OK >> GO TO 16.
NG >> GO TO 15.

15. CHECK EVAP CANISTER PURGE VOLUME CONTROL SOLENOID VALVE

Refer to EC-313, "Component Inspection".

OK or NG

OK >> GO TO 16.
NG >> Replace EVAP canister purge volume control solenoid valve. Refer to EM-26.

16. CHECK FUEL TANK TEMPERATURE SENSOR

Refer to EC-262, "Component Inspection".

OK or NG

OK >> GO TO 17.
NG >> Replace fuel level sensor unit. Refer to FL-12.

17. CHECK EVAP CONTROL SYSTEM PRESSURE SENSOR

Refer to EC-324, "Component Inspection".

OK or NG

OK >> GO TO 18.
NG >> Replace EVAP control system pressure sensor. Refer to FL-16.

18. CHECK EVAP/ORVR LINE

Check EVAP/ORVR line between EVAP canister and fuel tank for clogging, kink, looseness and improper connection. For location, refer to EC-491.

OK or NG

OK >> GO TO 19.
NG >> Repair or replace hoses and tubes.

19. CHECK RECIRCULATION LINE

Check recirculation line between filler neck tube and fuel tank for clogging, kink, cracks, looseness and improper connection.

OK or NG

OK >> GO TO 20.
NG >> Repair or replace hose, tube or filler neck tube.

20. CHECK REFUELING EVAP VAPOR CUT VALVE

Refer to EC-491.

OK or NG

OK >> GO TO 21.
NG >> Replace refueling EVAP vapor cut valve with fuel tank. Refer to FL-8.

21. CHECK INTERMITTENT INCIDENT

Refer to GI-40, "How to Check Terminal" and GI-43, "Intermittent Incident".

>> **INSPECTION END**

Component Inspection

INFOID:0000000011291845

FUEL TANK VACUUM RELIEF VALVE (BUILT INTO FUEL FILLER CAP)

1. Wipe clean valve housing.

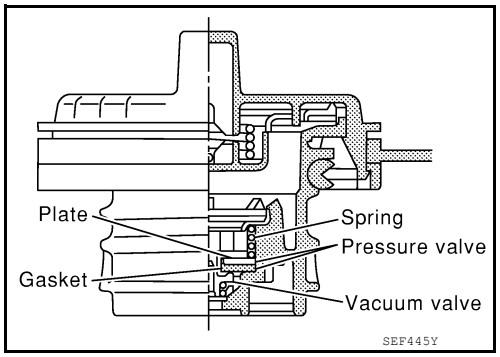

2. Check valve opening pressure and vacuum.

Pressure: **15.3 - 20.0 kPa (0.156 - 0.204 kg/cm^2, 2.22 - 2.90 psi)**

Vacuum: **–6.0 to –3.3 kPa (–0.061 to –0.034 kg/cm^2, –0.87 to –0.48 psi)**

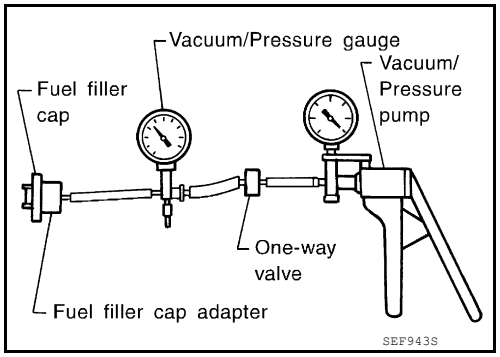

3. If out of specification, replace fuel filler cap as an assembly. Refer to FL-8.

CAUTION:
Use only a genuine fuel filler cap as a replacement. If an incorrect fuel filler cap is used, the MIL may come on.

P0456 EVAP CONTROL SYSTEM

On Board Diagnosis Logic

INFOID:0000000011291846

This diagnosis detects very small leaks in the EVAP line between fuel tank and EVAP canister purge volume control solenoid valve, using the intake manifold vacuum in the same way as conventional EVAP small leak diagnosis.
If ECM judges a leak which corresponds to a very small leak, the very small leak P0456 will be detected.
If ECM judges a leak equivalent to a small leak, EVAP small leak P0442 will be detected.
If ECM judges there are no leaks, the diagnosis will be OK.

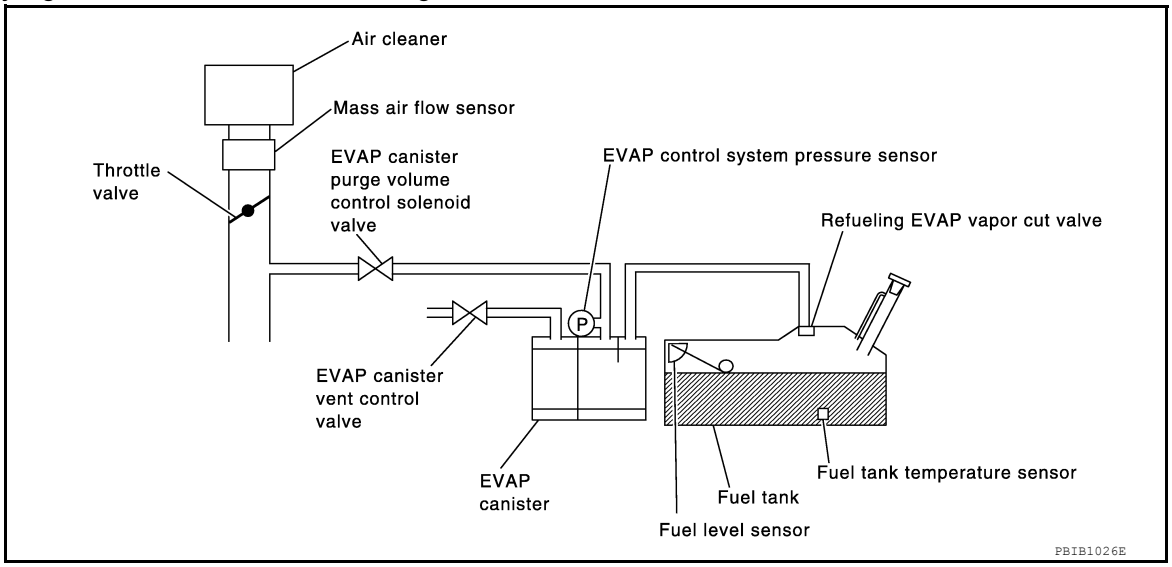

DTC No.	Trouble diagnosis name	DTC detecting condition	Possible cause
P0456 0456	Evaporative emission control system very small leak (negative pressure check)	• EVAP system has a very small leak. • EVAP system does not operate properly.	• Incorrect fuel tank vacuum relief valve • Incorrect fuel filler cap used • Fuel filler cap remains open or fails to close. • Foreign matter caught in fuel filler cap. • Leak is in line between intake manifold and EVAP canister purge volume control solenoid valve. • Foreign matter caught in EVAP canister vent control valve. • EVAP canister or fuel tank leaks • EVAP purge line (pipe and rubber tube) leaks • EVAP purge line rubber tube bent • Loose or disconnected rubber tube • EVAP canister vent control valve and the circuit • EVAP canister purge volume control solenoid valve and the circuit • Fuel tank temperature sensor • O-ring of EVAP canister vent control valve is missing or damaged • EVAP canister is saturated with water • EVAP control system pressure sensor • Refueling EVAP vapor cut valve • ORVR system leaks • Fuel level sensor and the circuit • Foreign matter caught in EVAP canister purge volume control solenoid valve

CAUTION:
- **Use only a genuine NISSAN fuel filler cap as a replacement. If an incorrect fuel filler cap is used, the MIL may come on.**
- **If the fuel filler cap is not tightened properly, the MIL may come on.**
- **Use only a genuine NISSAN rubber tube as a replacement.**

DTC Confirmation Procedure

INFOID:0000000011291847

NOTE:
- **If DTC P0456 is displayed with P0442, first perform trouble diagnosis for DTC P0456.**
- **After repair, make sure that the hoses and clips are installed properly.**
- If DTC Confirmation Procedure has been previously conducted, always perform the following before conducting the next step.

1. Turn ignition switch OFF and wait at least 10 seconds.
2. Turn ignition switch ON.
3. Turn ignition switch OFF and wait at least 10 seconds.

TESTING CONDITION:
- **Open engine hood before conducting following procedure.**
- **If any of following conditions are met just before the DTC confirmation procedure, leave the vehicle for more than 1 hour.**
- **Fuel filler cap is removed.**
- **Fuel is refilled or drained.**
- **EVAP component parts is/are removed.**
- **Before performing the following procedure, confirm that battery voltage is more than 11V at idle.**

WITH CONSULT

1. Turn ignition switch ON and select “DATA MONITOR” mode with CONSULT.
2. Make sure the following conditions are met.
   FUEL LEVEL SE: 0.25 - 1.4V
   COOLAN TEMP/S: 0 - 32°C (32 - 90°F)
   FUEL T/TMP SE: 0 - 35°C (32 - 95°F)
   INT/A TEMP SE: More than 0°C (32°F)
   If NG, turn ignition switch OFF and leave the vehicle in a cool place (soak the vehicle) or refilling/draining fuel until the output voltage condition of the “FUEL LEVEL SE” meets within the range above and leave the vehicle for more than 1 hour. Then start from step 1).
3. Turn ignition switch OFF, wait at least 10 seconds and then turn ON.
4. Select “EVP V/S LEAK P0456/P1456” of “EVAPORATIVE SYSTEM” in “DTC WORK SUPPORT” mode with CONSULT.
   Follow the instruction displayed.
5. Make sure that “OK” is displayed.
   If “NG” is displayed, refer to EC-344, "Diagnosis Procedure".
   NOTE:
   - **If the engine speed cannot be maintained within the range displayed on CONSULT screen, go to EC-117, "Basic Inspection".**
   - **Make sure that EVAP hoses are connected to EVAP canister purge volume control solenoid valve properly.**

Overall Function Check

INFOID:0000000011291848

WITH GST

Use this procedure to check the overall function of the EVAP very small leak function. During this check, a 1st trip DTC might not be confirmed.

CAUTION:
- **Do not use compressed air, doing so may damage the EVAP system.**
- **Do not start engine.**
- **Do not exceeded 4.12 kPa (0.042 kg/cm^2, 0.6 psi).**

1. Attach the EVAP service port adapter (commercial service tool) securely to the EVAP service port.

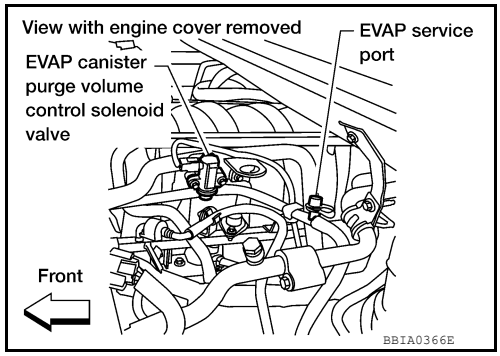

2. Set the pressure pump and a hose.
3. Also set a vacuum gauge via 3-way connector and a hose.
4. Turn ignition switch ON.
5. Connect GST and select Service $08.
6. Using Service $08, control the EVAP canister vent control valve (close).
7. Apply pressure and make sure the following conditions are satisfied.
   Pressure to be applied: 2.7 kPa (20 mmHg, 0.79 inHg)
   Time to be waited after the pressure drawn in to the EVAP system and the pressure to be dropped: 60 seconds and the pressure should not be dropped more than 0.4 kPa (3 mmHg, 0.12 inHg).
   If NG, go to EC-344, "Diagnosis Procedure".
   If OK, go to next step.
8. Disconnect GST.
9. Start engine and warm it up to normal operating temperature.
10. Turn ignition switch OFF and wait at least 10 seconds.
11. Restart engine and let it idle for 90 seconds.
12. Keep engine speed at 2,000 rpm for 30 seconds.
13. Turn ignition switch OFF.
    NOTE:
    For more information, refer to GST Instruction Manual.

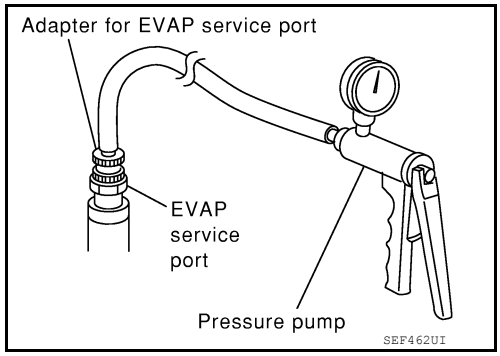

Diagnosis Procedure

INFOID:0000000011291849

1. CHECK FUEL FILLER CAP DESIGN

1. Turn ignition switch OFF.
2. Check for genuine NISSAN fuel filler cap design.

OK or NG

OK >> GO TO 2.
NG >> Replace with genuine NISSAN fuel filler cap. Refer to FL-8.

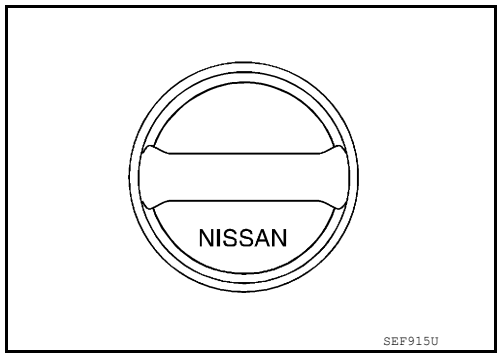

2. CHECK FUEL FILLER CAP INSTALLATION

Check that the cap is tightened properly by rotating the cap clockwise.

OK or NG

OK >> GO TO 3.
NG >> 1. Open fuel filler cap, then clean cap and fuel filler neck threads using air blower.
2. Retighten until ratcheting sound is heard.

3. CHECK FUEL FILLER CAP FUNCTION

Check for air releasing sound while opening the fuel filler cap.

OK or NG

OK >> GO TO 5.
NG >> GO TO 4.

4. CHECK FUEL TANK VACUUM RELIEF VALVE

Refer to EC-349, "Component Inspection".

OK or NG

OK >> GO TO 5.
NG >> Replace fuel filler cap with a genuine one. Refer to FL-8.

5. INSTALL THE PRESSURE PUMP

To locate the EVAP leak, install EVAP service port adapter and pressure pump to EVAP service port securely.

NOTE:

Improper installation of the EVAP service port adapter to the EVAP service port may cause leaking.

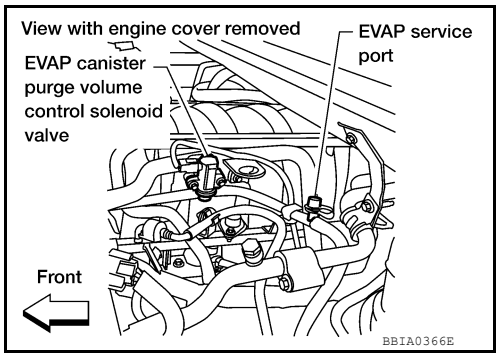

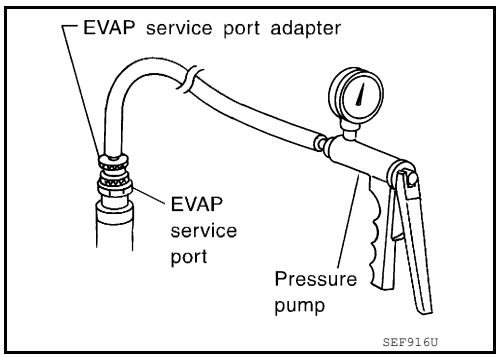

With CONSULT>>GO TO 6.
Without CONSULT>>GO TO 7.

6. CHECK FOR EVAP LEAK

With CONSULT

1. Turn ignition switch ON.
2. Select “EVAP SYSTEM CLOSE” of “WORK SUPPORT” mode with CONSULT.
3. Touch “START” and apply pressure into the EVAP line until the pressure indicator reaches the middle of the bar graph.

   CAUTION:
   - **Do not use compressed air or a high pressure pump.**
   - **Do not exceed 4.12 kPa (0.042 kg/cm^2, 0.6 psi) of pressure in the system.**

4. Using EVAP leak detector, locate the EVAP leak. For the leak detector, refer to the instruction manual for more details. Refer to EC-32, "Description".

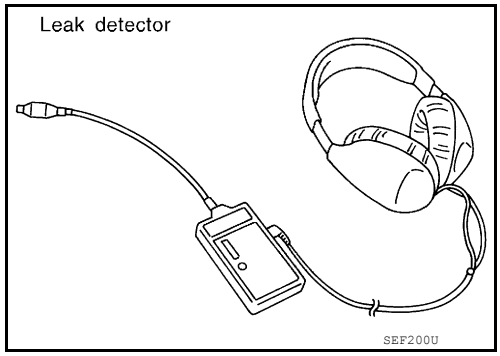

OK or NG

OK >> GO TO 8.
NG >> Repair or replace.

7. CHECK FOR EVAP LEAK

Without CONSULT

1. Turn ignition switch OFF.
2. Apply 12 volts DC to EVAP canister vent control valve. The valve will close. (Continue to apply 12 volts until the end of test.)

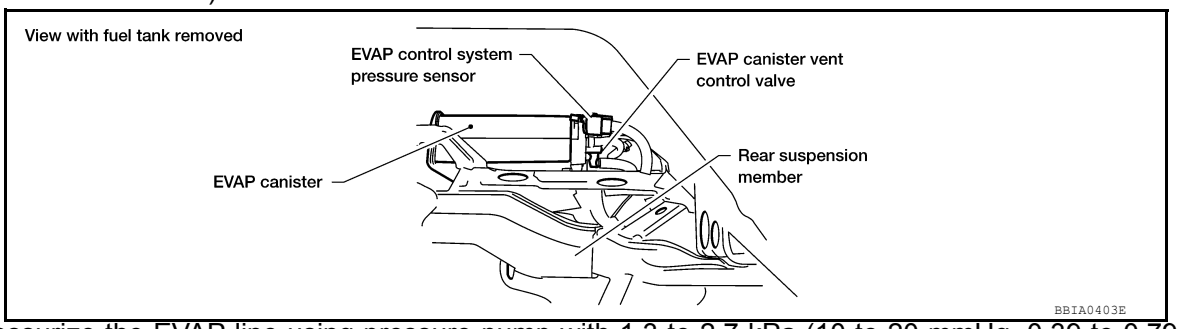

3. Pressurize the EVAP line using pressure pump with 1.3 to 2.7 kPa (10 to 20 mmHg, 0.39 to 0.79 inHg), then remove pump and EVAP service port adapter.
   CAUTION:
   - **Do not use compressed air or a high pressure pump.**
   - **Do not exceed 4.12 kPa (0.042 kg/cm^2, 0.6 psi) of pressure in the system.**
4. Using EVAP leak detector, locate the EVAP leak. For the leak detector, refer to the instruction manual for more details. Refer to EC-32, "Description".

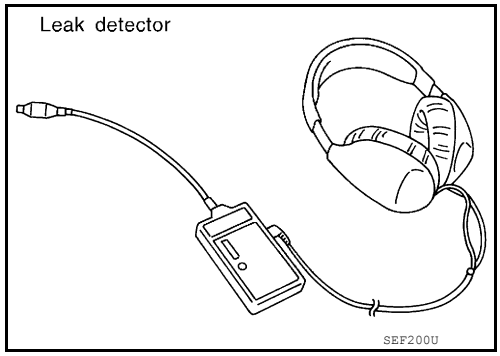

OK or NG

OK >> GO TO 8.
NG >> Repair or replace.

8. CHECK EVAP CANISTER VENT CONTROL VALVE

Check the following.

- EVAP canister vent control valve is installed properly.
  Refer to FL-16, "Removal and Installation".
- EVAP canister vent control valve.
  Refer to EC-316, "Component Inspection".

OK or NG

OK >> GO TO 9.
NG >> Repair or replace EVAP canister vent control valve and O-ring. Refer to FL-16.

9. CHECK IF EVAP CANISTER SATURATED WITH WATER

1. Remove EVAP canister with EVAP canister vent control valve and EVAP control system pressure sensor attached. Refer to FL-16.

2. Does water drain from the EVAP canister?

Yes or No

Yes >> GO TO 10.
No (With CONSULT)>>GO TO 12.
No (Without CONSULT)>>GO TO 13.

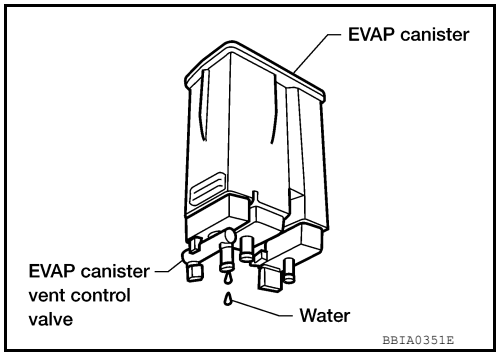

10. CHECK EVAP CANISTER

Weigh the EVAP canister with the EVAP canister vent control valve and EVAP control system pressure sensor attached.

The weight should be less than 2.5 kg (5.5 lb).

OK or NG

OK (With CONSULT)>>GO TO 12.
OK (Without CONSULT)>>GO TO 13.
NG >> GO TO 11.

11. DETECT MALFUNCTIONING PART

Check the following.
- EVAP canister for damage
- EVAP hose between EVAP canister and vehicle frame for clogging or poor connection

>> Repair hose or replace EVAP canister. Refer to FL-8, "Removal and Installation" or FL-16, "Removal and Installation".

12. CHECK EVAP CANISTER PURGE VOLUME CONTROL SOLENOID VALVE OPERATION

With CONSULT

1. Disconnect vacuum hose to EVAP canister purge volume control solenoid valve at EVAP service port.
2. Start engine.
3. Perform “PURG VOL CONT/V” in “ACTIVE TEST” mode.
4. Touch “Qu” on CONSULT screen to increase “PURG VOL CONT/V” opening to 100%.
5. Check vacuum hose for vacuum when revving engine up to 2,000 rpm.

Vacuum should exist.

OK or NG

OK >> GO TO 15.
NG >> GO TO 14.

13. CHECK EVAP CANISTER PURGE VOLUME CONTROL SOLENOID VALVE OPERATION

Without CONSULT

1. Start engine and warm it up to normal operating temperature.
2. Stop engine.
3. Disconnect vacuum hose to EVAP canister purge volume control solenoid valve at EVAP service port.
4. Start engine and let it idle for at least 80 seconds.
5. Check vacuum hose for vacuum when revving engine up to 2,000 rpm.

Vacuum should exist.

OK or NG

OK >> GO TO 16.
NG >> GO TO 14.

14. CHECK VACUUM HOSE

Check vacuum hoses for clogging or disconnection. Refer to EC-32, "Description".

OK or NG

OK >> GO TO 15.
NG >> Repair or reconnect the hose.

15. CHECK EVAP CANISTER PURGE VOLUME CONTROL SOLENOID VALVE

Refer to EC-313, "Component Inspection".

OK or NG

OK >> GO TO 16.
NG >> Replace EVAP canister purge volume control solenoid valve. Refer to EM-26.

16. CHECK FUEL TANK TEMPERATURE SENSOR

Refer to EC-262, "Component Inspection".

OK or NG

OK >> GO TO 17.
NG >> Replace fuel level sensor unit. Refer to FL-12.

17. CHECK EVAP CONTROL SYSTEM PRESSURE SENSOR

Refer to EC-324, "Component Inspection".

OK or NG

OK >> GO TO 18.
NG >> Replace EVAP control system pressure sensor. Refer to FL-16.

18. CHECK EVAP PURGE LINE

Check EVAP purge line (pipe, rubber tube, fuel tank and EVAP canister) for cracks or improper connection. Refer to EC-32, "Description".

OK or NG

OK >> GO TO 19.
NG >> Repair or reconnect the hose.

19. CLEAN EVAP PURGE LINE

Clean EVAP purge line (pipe and rubber tube) using air blower.

>> GO TO 20.

20. CHECK EVAP/ORVR LINE

Check EVAP/ORVR line between EVAP canister and fuel tank for clogging, kink, looseness and improper connection. For location, refer to EC-491.

OK or NG

OK >> GO TO 21.
NG >> Repair or replace hoses and tubes. Refer to FL-8.

21. CHECK RECIRCULATION LINE

Check recirculation line between filler neck tube and fuel tank for clogging, kink, cracks, looseness and improper connection.

OK or NG

OK >> GO TO 22.
NG >> Repair or replace hose, tube or filler neck tube. Refer to FL-8.

22. CHECK REFUELING EVAP VAPOR CUT VALVE

Refer to EC-493, "Component Inspection".

OK or NG

OK >> GO TO 23.
NG >> Replace refueling EVAP vapor cut valve with fuel tank. Refer to FL-8.

23. CHECK FUEL LEVEL SENSOR

Refer to MWI-37, "Component Inspection".

OK or NG

OK >> GO TO 24.
NG >> Replace fuel level sensor unit. Refer to FL-12.

24. CHECK INTERMITTENT INCIDENT

Refer to GI-40, "How to Check Terminal" and GI-43, "Intermittent Incident".

>> **INSPECTION END**

Component Inspection

INFOID:0000000011291850

FUEL TANK VACUUM RELIEF VALVE (BUILT INTO FUEL FILLER CAP)

1. Wipe clean valve housing.

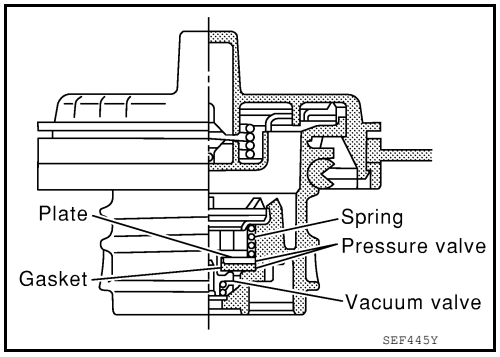

2. Check valve opening pressure and vacuum.

Pressure: **15.3 - 20.0 kPa (0.156 - 0.204 kg/cm^2, 2.22 - 2.90 psi)**

Vacuum: **−6.0 to −3.3 kPa (−0.061 to −0.034 kg/cm^2, −0.87 to −0.48 psi)**

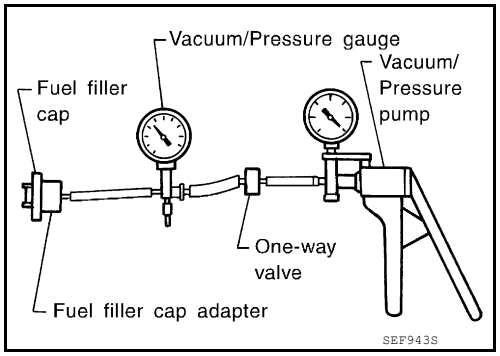

3. If out of specification, replace fuel filler cap as an assembly. Refer to FL-8.

CAUTION:
Use only a genuine fuel filler cap as a replacement. If an incorrect fuel filler cap is used, the MIL may come on.

P0460 FUEL LEVEL SENSOR

Component Description

INFOID:0000000011291851

The fuel level sensor is mounted in the fuel level sensor unit. The sensor detects a fuel level in the fuel tank and transmits a signal to the combination meter. The combination meter sends the fuel level sensor signal to the ECM through CAN communication line.
It consists of two parts, one is mechanical float and the other is variable resistor. Fuel level sensor output voltage changes depending on the movement of the fuel mechanical float.

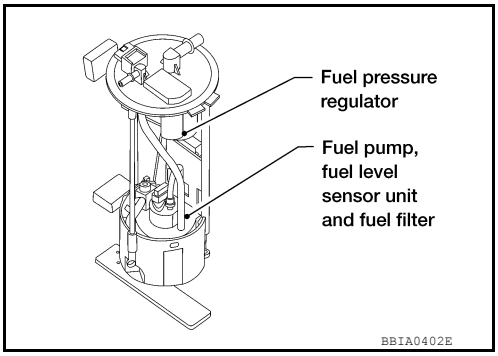

On Board Diagnosis Logic

INFOID:0000000011291852

NOTE:
- **If DTC P0460 is displayed with DTC UXXXX, first perform the trouble diagnosis for DTC UXXXX.**
- **If DTC P0460 is displayed with DTC P0607, first perform the trouble diagnosis for DTC P0607. Refer to EC-371.**

When the vehicle is parked, naturally the fuel level in the fuel tank is stable. It means that output signal of the fuel level sensor does not change. If ECM senses sloshing signal from the sensor, fuel level sensor malfunction is detected.

DTC No.	Trouble diagnosis name	DTC detecting condition	Possible cause
P0460 0460	Fuel level sensor circuit noise	Even though the vehicle is parked, a signal being varied is sent from the fuel level sensor to ECM.	• Harness or connectors (The CAN communication line is open or shorted) • Harness or connectors (The sensor circuit is open or shorted) • Combination meter • Fuel level sensor

DTC Confirmation Procedure

INFOID:0000000011291853

1. If DTC Confirmation Procedure has been previously conducted, always perform the following before conducting the next step.

a. Turn ignition switch OFF and wait at least 10 seconds.
b. Turn ignition switch ON.
c. Turn ignition switch OFF and wait at least 10 seconds.

2. Start engine and wait maximum of 2 consecutive minutes.
3. Check 1st trip DTC.
4. If 1st trip DTC is detected, go to EC-350, "Diagnosis Procedure".

Diagnosis Procedure

INFOID:0000000011291854

1. CHECK COMBINATION METER FUNCTION

Refer to MWI-27, "CONSULT Function (METER/M&A)".

OK or NG

OK >> GO TO 2.
NG >> Go to MWI-36, "Diagnosis Procedure".

2. CHECK INTERMITTENT INCIDENT

Refer to GI-40, "How to Check Terminal" and GI-43, "Intermittent Incident".

>> **INSPECTION END**

P0461 FUEL LEVEL SENSOR

Component Description

INFOID:0000000011291855

The fuel level sensor is mounted in the fuel level sensor unit. The sensor detects a fuel level in the fuel tank and transmits a signal to the combination meter. The combination meter sends the fuel level sensor signal to the ECM through CAN communication line.
It consists of two parts, one is mechanical float and the other is variable resistor. Fuel level sensor output voltage changes depending on the movement of the fuel mechanical float.

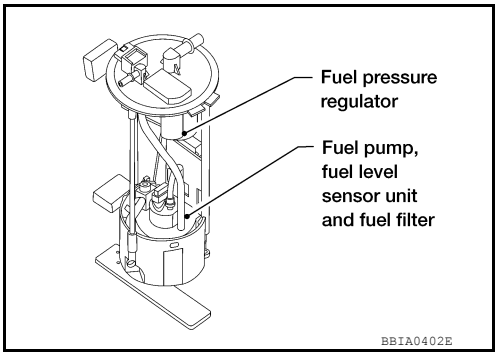

On Board Diagnosis Logic

INFOID:0000000011291856

NOTE:
- **If DTC P0461 is displayed with DTC UXXXX, first perform the trouble diagnosis for DTC UXXXX.**
- **If DTC P0461 is displayed with DTC P0607, first perform the trouble diagnosis for DTC P0607. Refer to EC-371.**

Driving long distances naturally affect fuel gauge level.
This diagnosis detects the fuel gauge malfunction of the gauge not moving even after a long distance has been driven.

DTC No.	Trouble diagnosis name	DTC detecting condition	Possible cause
P0461 0461	Fuel level sensor circuit range/performance	The output signal of the fuel level sensor does not change within the specified range even though the vehicle has been driven a long distance.	• Harness or connectors (The CAN communication line is open or shorted) • Harness or connectors (The sensor circuit is open or shorted) • Combination meter • Fuel level sensor

Overall Function Check

INFOID:0000000011291857

Use this procedure to check the overall function of the fuel level sensor function. During this check, a 1st trip DTC might not be confirmed.

WARNING:
When performing following procedure, be sure to observe the handling of the fuel. Refer to FL-8, "Removal and Installation".
TESTING CONDITION:
Before starting overall function check, preparation of draining fuel and refilling fuel is required.

WITH CONSULT

NOTE:
Start from step 10, if it is possible to confirm that the fuel cannot be drained by 30 ℓ (7-7/8 US gal, 6-5/8 Imp gal) in advance.

1. Prepare a fuel container and a spare hose.
2. Release fuel pressure from fuel line, refer to EC-506, "Fuel Pressure Check".
3. Remove the fuel feed hose on the fuel level sensor unit.
4. Connect a spare fuel hose where the fuel feed hose was removed.
5. Turn ignition switch OFF and wait at least 10 seconds then turn ON.
6. Select “FUEL LEVEL SE” in “DATA MONITOR” mode with CONSULT.
7. Check “FUEL LEVEL SE” output voltage and note it.
8. Select “FUEL PUMP” in “ACTIVE TEST” mode with CONSULT.
9. Touch “ON” and drain fuel approximately 30 ℓ (7-7/8 US gal, 6-5/8 Imp gal) and stop it.
10. Check “FUEL LEVEL SE” output voltage and note it.
11. Fill fuel into the fuel tank for 30 ℓ (7-7/8 US gal, 6-5/8 Imp gal).
12. Check “FUEL LEVEL SE” output voltage and note it.

13. Confirm whether the voltage changes more than 0.03V during step 7 to 10 and 10 to 12.
    If NG, go to EC-353, "Diagnosis Procedure".

WITH GST

NOTE:
Start from step 8, if it is possible to confirm that the fuel cannot be drained by 30 ℓ (7-7/8 US gal, 6-5/8 Imp gal) in advance.

1. Prepare a fuel container and a spare hose.
2. Release fuel pressure from fuel line. Refer to EC-506, "Fuel Pressure Check".
3. Remove the fuel feed hose on the fuel level sensor unit.
4. Connect a spare fuel hose where the fuel feed hose was removed.
5. Turn ignition switch ON.
6. Drain fuel by 30 ℓ (7-7/8 US gal, 6-5/8 Imp gal) from the fuel tank using proper equipment.
7. Confirm that the fuel gauge indication varies.
8. Fill fuel into the fuel tank for 30 ℓ (7-7/8 US gal, 6-5/8 Imp gal).
9. Confirm that the fuel gauge indication varies.
10. If NG, go to EC-353, "Diagnosis Procedure".

Diagnosis Procedure

INFOID:0000000011291858

1. CHECK COMBINATION METER FUNCTION

Refer to MWI-27, "CONSULT Function (METER/M&A)".

OK or NG

OK >> GO TO 2.
NG >> Go to MWI-36, "Diagnosis Procedure".

2. CHECK INTERMITTENT INCIDENT

Refer to GI-40, "How to Check Terminal" and GI-43, "Intermittent Incident".

>> **INSPECTION END**

P0462, P0463 FUEL LEVEL SENSOR

Component Description

INFOID:0000000011291859

The fuel level sensor is mounted in the fuel level sensor unit. The sensor detects a fuel level in the fuel tank and transmits a signal to the combination meter. The combination meter sends the fuel level sensor signal to the ECM through CAN communication line.
It consists of two parts, one is mechanical float and the other is variable resistor. Fuel level sensor output voltage changes depending on the movement of the fuel mechanical float.

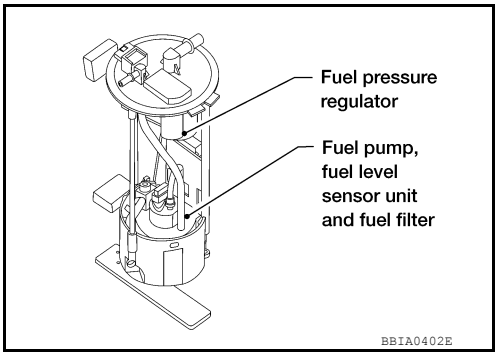

On Board Diagnosis Logic

INFOID:0000000011291860

NOTE:
- **If DTC P0462 or P0463 is displayed with DTC UXXXX, first perform the trouble diagnosis for DTC UXXXX.**
- **If DTC P0462 or P0463 is displayed with DTC P0607, first perform the trouble diagnosis for DTC P0607. Refer to EC-371.**

This diagnosis indicates the former, to detect open or short circuit malfunction.

DTC No.	Trouble diagnosis name	DTC detecting condition	Possible cause
P0462 0462	Fuel level sensor circuit low input	An excessively low voltage from the sensor is sent to ECM.	• Harness or connectors (The CAN communication line is open or shorted) • Harness or connectors (The sensor circuit is open or shorted) • Combination meter • Fuel level sensor
P0463 0463	Fuel level sensor circuit high input	An excessively high voltage from the sensor is sent to ECM.	

DTC Confirmation Procedure

INFOID:0000000011291861

NOTE:
If DTC Confirmation Procedure has been previously conducted, always perform the following before conducting the next step.
1. Turn ignition switch OFF and wait at least 10 seconds.
2. Turn ignition switch ON.
3. Turn ignition switch OFF and wait at least 10 seconds.

TESTING CONDITION:
Before performing the following procedure, confirm that battery voltage is more than 11 V at ignition switch ON.

1. Turn ignition switch ON.
2. Wait at least 5 seconds.
3. Check 1st trip DTC.
4. If 1st trip DTC is detected, go to EC-354, "Diagnosis Procedure".

Diagnosis Procedure

INFOID:0000000011291862

1. CHECK COMBINATION METER FUNCTION

Refer to MWI-27, "CONSULT Function (METER/M&A)".

OK or NG

OK >> GO TO 2.
NG >> Go to MWI-36, "Diagnosis Procedure".

2. CHECK INTERMITTENT INCIDENT

Refer to GI-40, "How to Check Terminal" and GI-43, "Intermittent Incident".

>> **INSPECTION END**

P0500 VSS

Description

INFOID:0000000011291863

ECM receives vehicle speed signals from two different paths via CAN communication line: One is from the ABS actuator and electric unit (control unit) via the combination unit and the other is from TCM.

DTC Logic

INFOID:0000000011291864

DTC DETECTION LOGIC

NOTE:
- If DTC P0500 is displayed with DTC UXXXX, first perform the trouble diagnosis for DTC UXXXX.
- If DTC P0500 is displayed with DTC P0607, first perform the trouble diagnosis for DTC P0607. Refer to EC-371, "DTC Logic".

DTC No.	Trouble diagnosis (Trouble diagnosis content)	DTC detecting condition	Possible cause
P0500	VEH SPEED SEN/CIRC (Vehicle speed sensor)	At 20 km/h (13 MPH), ECM detects the following status continuously for 5 seconds or more: The difference between a vehicle speed calculated by a output speed sensor transmitted from TCM to ECM via CAN communication and the vehicle speed indicated on the combination meter exceeds 15km/h (10 MPH).	• Harness or connector (The CAN communication line is open or shorted.) • Combination meter • ABS actuator and electric unit (control unit) • Wheel sensor • TCM • Output speed sensor

DTC CONFIRMATION PROCEDURE

1. PRECONDITIONING

If DTC CONFIRMATION PROCEDURE has been previously conducted, always perform the following procedure before conducting the next test.
1. Turn ignition switch OFF and wait at least 10 seconds.
2. Turn ignition switch ON.
3. Turn ignition switch OFF and wait at least 10 seconds.

TESTING CONDITION:
Before performing the following procedure, confirm that battery voltage is 10 V or more at idle.

>> GO TO 2.

2. PERFORM DTC CONFIRMATION PROCEDURE

1. Start engine.
2. Shift the selector lever to D range and wait at least for 2 seconds.
3. Drive the vehicle at least 5 seconds at 20 km/h (13 MPH) or more.
   CAUTION:
   Always drive vehicle at a safe speed.
   NOTE:
   This procedure may be conducted with the drive wheels lifted in the shop or by driving the vehicle. If a road test is expected to be easier, it is unnecessary to lift the vehicle.
4. Check 1st trip DTC.

Is 1st trip DTC detected?

YES >> Proceed to EC-356, "Diagnosis Procedure"
NO >> INSPECTION END

Diagnosis Procedure

INFOID:0000000011291865

1. CHECK DTC WITH TCM

Check DTC with TCM. Refer to TM-34, "CONSULT Function (TRANSMISSION)".

Is the inspection result normal?

YES >> GO TO 2.

NO >> Perform trouble shooting relevant to DTC indicated.

2. CHECK DTC WITH ABS ACTUATOR AND ELECTRIC UNIT (CONTROL UNIT)

Check DTC with ABS actuator and electric unit (control unit). Refer to BRC-24, "CONSULT Function (ABS)".

Is the inspection result normal?

YES >> GO TO 3.
NO >> Perform trouble shooting relevant to DTC indicated.

3. CHECK DTC WITH COMBINATION METER

Check DTC with combination meter. Refer to MWI-27, "CONSULT Function (METER/M&A)".

Is the inspection result normal?

YES >> GO TO 4.
NO >> Perform trouble shooting relevant to DTC indicated.

4. CHECK OUTPUT SPEED SENSOR

Check output speed sensor. Refer to TM-53, "On Board Diagnosis Logic".

Is the inspection result normal?

YES >> GO TO 5.
NO >> Replace or replace error-detected parts.

5. CHECK WHEEL SENSOR

Check wheel sensor. Refer to BRC-43, "Component Inspection".

Is the inspection result normal?

YES >> Check intermittent incident. Refer to GI-43, "Intermittent Incident".
NO >> Replace or replace error-detected parts.

P0506 ISC SYSTEM

Description

INFOID:0000000011291866

NOTE:
If DTC P0506 is displayed with other DTC, first perform the trouble diagnosis for the other DTC.
The ECM controls the engine idle speed to a specified level through the fine adjustment of the air, which is let into the intake manifold, by operating the electric throttle control actuator. The operating of the throttle valve is varied to allow for optimum control of the engine idling speed. The crankshaft position sensor (POS) detects the actual engine speed and sends a signal to the ECM.
The ECM controls the electric throttle control actuator so that the engine speed coincides with the target value memorized in the ECM. The target engine speed is the lowest speed at which the engine can operate steadily. The optimum value stored in the ECM is determined by taking into consideration various engine conditions, such as during warming up, deceleration, and engine load (air conditioner, power steering and cooling fan operation, etc.).

On Board Diagnosis Logic

INFOID:0000000011291867

DTC No.	Trouble diagnosis name	DTC detecting condition	Possible cause
P0506 0506	Idle speed control system RPM lower than expected	The idle speed is less than the target idle speed by 100 rpm or more.	• Electric throttle control actuator • Intake air leak

DTC Confirmation Procedure

INFOID:0000000011291868

NOTE:
- If DTC Confirmation Procedure has been previously conducted, always perform the following before conducting the next step.

1. Turn ignition switch OFF and wait at least 10 seconds.
2. Turn ignition switch ON.
3. Turn ignition switch OFF and wait at least 10 seconds.

- **If the target idle speed is out of the specified value, perform EC-129, "Idle Air Volume Learning", before conducting DTC Confirmation Procedure. For the target idle speed, refer to the EC-510.**

TESTING CONDITION:
- **Before performing the following procedure, confirm that battery voltage is more than 11V at idle.**
- **Always perform the test at a temperature above –10°C (14°F).**

1. Open engine hood.
2. Start engine and warm it up to normal operating temperature.
3. Turn ignition switch OFF and wait at least 10 seconds.
4. Start engine and run it for at least 1 minute at idle speed.
5. Check 1st trip DTC.
6. If 1st trip DTC is detected, go to EC-358, "Diagnosis Procedure".

Diagnosis Procedure

INFOID:0000000011291869

1. CHECK INTAKE AIR LEAK

1. Start engine and let it idle.
2. Listen for an intake air leak after the mass air flow sensor.

OK or NG

OK >> GO TO 2.
NG >> Discover air leak location and repair.

2. REPLACE ECM

1. Stop engine.
2. Replace ECM.
3. Perform initialization of NVIS(NATS) system and registration of all NVIS(NATS) ignition key IDs. Refer to SEC-10, "ECM RE-COMMUNICATING FUNCTION : Special Repair Requirement" (With intelligent key

system) or SEC-131, "ECM RE-COMMUNICATING FUNCTION : Special Repair Requirement" (Without intelligent key system).

4. Perform EC-127, "VIN Registration".
5. Perform EC-128, "Accelerator Pedal Released Position Learning".
6. Perform EC-128, "Throttle Valve Closed Position Learning".
7. **<Flexible Fuel Vehicle>**
   Perform EC-128, "Ethanol Mixture Ratio Adaptation (Flexible Fuel Vehicle)".
8. Perform EC-129, "Idle Air Volume Learning".

>> **INSPECTION END**

P0507 ISC SYSTEM

Description

INFOID:0000000011291870

NOTE:
If DTC P0507 is displayed with other DTC, first perform the trouble diagnosis for the other DTC.
The ECM controls the engine idle speed to a specified level through the fine adjustment of the air, which is let into the intake manifold, by operating the electric throttle control actuator. The operating of the throttle valve is varied to allow for optimum control of the engine idling speed. The crankshaft position sensor (POS) detects the actual engine speed and sends a signal to the ECM.
The ECM controls the electric throttle control actuator so that the engine speed coincides with the target value memorized in the ECM. The target engine speed is the lowest speed at which the engine can operate steadily. The optimum value stored in the ECM is determined by taking into consideration various engine conditions, such as during warming up, deceleration, and engine load (air conditioner, power steering and cooling fan operation, etc.).

On Board Diagnosis Logic

INFOID:0000000011291871

DTC No.	Trouble diagnosis name	DTC detecting condition	Possible cause
P0507 0507	Idle speed control system RPM higher than expected	The idle speed is more than the target idle speed by 200 rpm or more.	• Electric throttle control actuator • Intake air leak • PCV system

DTC Confirmation Procedure

INFOID:0000000011291872

NOTE:
- If DTC Confirmation Procedure has been previously conducted, always perform the following before conducting the next step.

1. Turn ignition switch OFF and wait at least 10 seconds.
2. Turn ignition switch ON.
3. Turn ignition switch OFF and wait at least 10 seconds.

- **If the target idle speed is out of the specified value, perform EC-129, "Idle Air Volume Learning", before conducting DTC Confirmation Procedure. For the target idle speed, refer to the EC-510.**

TESTING CONDITION:
- **Before performing the following procedure, confirm that battery voltage is more than 11 V at idle.**
- **Always perform the test at a temperature above –10°C (14°F).**

1. Open engine hood.
2. Start engine and warm it up to normal operating temperature.
3. Turn ignition switch OFF and wait at least 10 seconds.
4. Start engine and run it for at least 1 minute at idle speed.
5. Check 1st trip DTC.
6. If 1st trip DTC is detected, go to EC-360, "Diagnosis Procedure".

Diagnosis Procedure

INFOID:0000000011291873

1. CHECK PCV HOSE CONNECTION

Confirm that PCV hose is connected correctly.

OK or NG

OK >> GO TO 2.
NG >> Repair or replace.

2. CHECK INTAKE AIR LEAK

1. Start engine and let it idle.
2. Listen for an intake air leak after the mass air flow sensor.

OK or NG

OK >> GO TO 3.
NG >> Discover air leak location and repair.

3. REPLACE ECM

1. Stop engine.
2. Replace ECM.
3. Perform initialization of NVIS(NATS) system and registration of all NVIS(NATS) ignition key IDs. Refer to SEC-10, "ECM RE-COMMUNICATING FUNCTION : Special Repair Requirement" (With intelligent key system) or SEC-131, "ECM RE-COMMUNICATING FUNCTION : Special Repair Requirement" (Without intelligent key system).
4. Perform EC-127, "VIN Registration".
5. Perform EC-128, "Accelerator Pedal Released Position Learning".
6. Perform EC-128, "Throttle Valve Closed Position Learning".
7. **<Flexible Fuel Vehicle>**
   Perform EC-128, "Ethanol Mixture Ratio Adaptation (Flexible Fuel Vehicle)".
8. Perform EC-129, "Idle Air Volume Learning".

>> **INSPECTION END**

P050A, P050B, P050E COLD START CONTROL

Description

INFOID:0000000011291874

ECM controls ignition timing and engine idle speed when engine is started with pre-warming up condition. This control promotes the activation of three way catalyst by heating the catalyst and reduces emissions.

DTC Logic

INFOID:0000000011291875

DTC DETECTION LOGIC

NOTE:
If DTC P050A, P050B or P050E is displayed with other DTC, first perform the trouble diagnosis for other DTC.

DTC No.	Trouble diagnosis name	DTC detecting condition	Possible cause
P050A	Cold start idle air control system performance	ECM does not control engine idle speed properly when engine is started with pre-warming up condition.	• Lack of intake air volume • Fuel injection system • ECM
P050B	Cold start ignition timing performance	ECM does not control engine timing properly when engine is started with pre-warming up condition.	
P050E	Cold start engine exhaust temperature too low	The temperature of the catalyst inlet does not rise to the proper temperature when the engine is started with pre-warming up condition.	

DTC CONFIRMATION PROCEDURE

1. PRECONDITIONING

If DTC Confirmation Procedure has been previously conducted, always perform the following procedure before conducting the next test.
1. Turn ignition switch OFF and wait at least 10 seconds.
2. Turn ignition switch ON.
3. Turn ignition switch OFF and wait at least 10 seconds.

TESTING CONDITION:
Before performing the following procedure, confirm that battery voltage is 11 V or more at idle.

>> GO TO 2.

2. PERFORM DTC CONFIRMATION PROCEDURE-I

WITH CONSULT
1. Turn ignition switch OFF and wait at least 10 seconds.
2. Turn ignition switch ON.
3. Select “DATA MONITOR” mode with CONSULT.
4. Check the indication of “COOLAN TEMP/S”.

WITH GST
Follow the procedure “With CONSULT” above.

Is the value of “COOLAN TEMP/S” between 5°C (41°F) and 36°C (97°F)?

YES >> GO TO 3.
NO-1 [If it is below 5°C (41°F)]>>Warm up the engine until the value of “COOLAN TEMP/S” reaches 5°C (41°F) or more. Retry from step 1.
NO-2 [If it is above 36°C (97°F)]>>Cool engine down to less than 36°C (97°F). Retry from step 1.

3. PERFORM DTC CONFIRMATION PROCEDURE-II

WITH CONSULT
1. Set the select lever in N range.
2. Start the engine and warm up in idle with the value of “COOLAN TEMP/S” between 5°C (41°F) and 40°C (104°F) for more than 15 seconds.
3. Check 1st trip DTC.

WITH GST
Follow the procedure “With CONSULT” above.

Is 1st trip DTC detected?

YES >> Proceed to EC-363, "Diagnosis Procedure".
NO >> INSPECTION END

Diagnosis Procedure

INFOID:0000000011291876

1. PERFORM IDLE AIR VOLUME LEARNING

Perform EC-129, "Idle Air Volume Learning".

Is Idle Air Volume Learning carried out successfully?

YES >> GO TO 2.
NO >> Follow the instruction of Idle Air Volume Learning.

2. CHECK INTAKE SYSTEM

Check for the cause of intake air volume lacking. Refer to the following.
- Crushed intake air passage
- Intake air passage clogging
- Clogging of throttle body

Is the inspection result normal?

YES >> GO TO 3.
NO >> Repair or replace malfunctioning part

3. CHECK FUEL INJECTION SYSTEM FUNCTION

Perform DTC Confirmation Procedure for DTC P0171, P0174. Refer to EC-249, "On Board Diagnosis Logic".

Is the inspection result normal?

YES >> GO TO 4.
NO >> Proceed to EC-250, "Diagnosis Procedure" for DTC P0171, P0174.

4. PERFORM DTC CONFIRMATION PROCEDURE

1. Turn ignition switch ON.
2. Erase DTC.
3. Perform DTC Confirmation Procedure.
   See EC-362, "DTC Logic".

Is the 1st trip DTC P050A, P050B or P050E displayed again?

YES >> GO TO 5.
NO >> INSPECTION END

5. REPLACE ECM

Replace ECM. Refer to EC-16, "Engine Control Component Parts Location" and EC-125, "Procedure After Replacing ECM".

>> INSPECTION END

P0550 PSP SENSOR

Component Description

INFOID:0000000011291877

Power steering pressure (PSP) sensor (1) is installed to the power steering high-pressure tube and detects a power steering load. This sensor is a potentiometer which transforms the power steering load into output voltage, and emits the voltage signal to the ECM. The ECM controls the electric throttle control actuator and adjusts the throttle valve opening angle to increase the engine speed and adjusts the idle speed for the increased load.

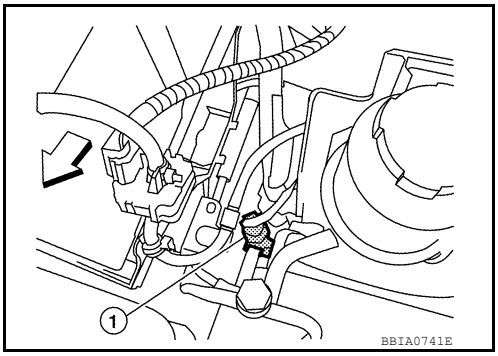

On Board Diagnosis Logic

INFOID:0000000011291878

The MIL will not light up for this self-diagnosis.
NOTE:
If DTC P0550 is displayed with DTC P0643, first perform the trouble diagnosis for DTC P0643. Refer to EC-374.

DTC No.	Trouble diagnosis name	DTC detecting condition	Possible cause
P0550 0550	Power steering pressure sensor circuit	An excessively low or high voltage from the sensor is sent to ECM.	• Harness or connectors (The sensor circuit is open or shorted) • Power steering pressure sensor

DTC Confirmation Procedure

INFOID:0000000011291879

1. If DTC Confirmation Procedure has been previously conducted, always perform the following before conducting the next step.

a. Turn ignition switch OFF and wait at least 10 seconds.
b. Turn ignition switch ON.
c. Turn ignition switch OFF and wait at least 10 seconds.

2. Start engine and let it idle for at least 5 seconds.
3. Check 1st trip DTC.
4. If 1st trip DTC is detected, go to EC-364, "Diagnosis Procedure".

Diagnosis Procedure

INFOID:0000000011291880

1. CHECK GROUND CONNECTIONS

1. Turn ignition switch OFF.
2. Loosen and retighten three ground screws on the body.
   Refer to EC-154, "Ground Inspection".

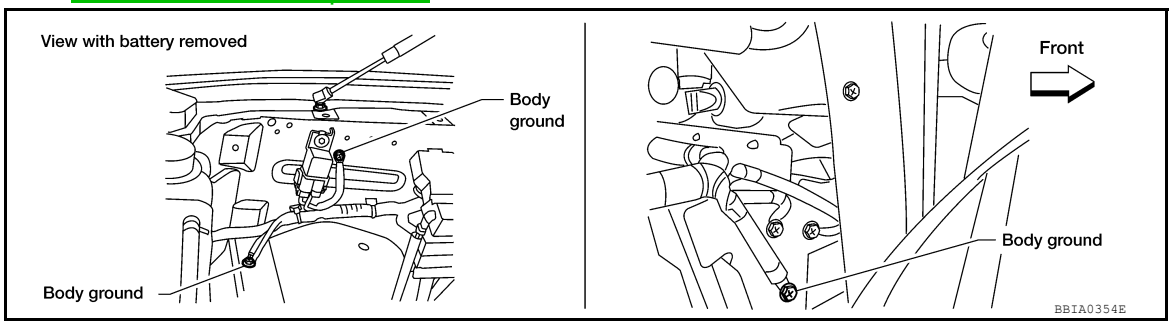

OK or NG

OK >> GO TO 2.
NG >> Repair or replace ground connections.

2. CHECK PSP SENSOR POWER SUPPLY CIRCUIT

1. Disconnect power steering pressure (PSP) sensor (1) harness connector.
2. Turn ignition switch ON.

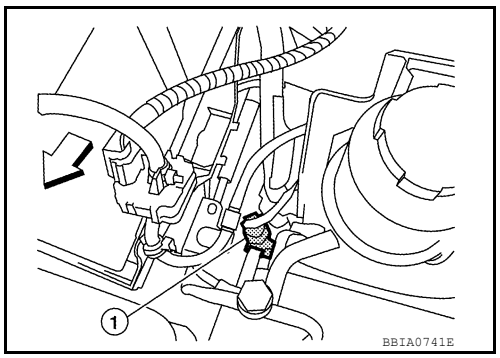

3. Check voltage between PSP sensor terminal 1 and ground with CONSULT or tester.

Voltage: Approximately 5 V

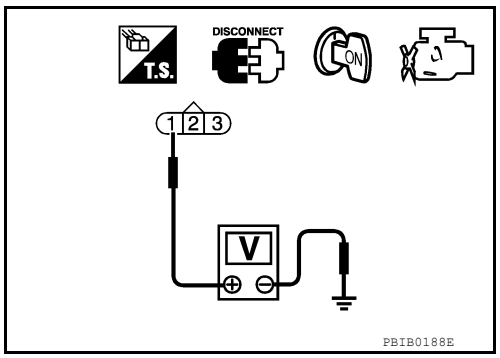

OK or NG

OK >> GO TO 3.
NG >> Repair harness or connectors.

3. CHECK PSP SENSOR GROUND CIRCUIT FOR OPEN AND SHORT

1. Turn ignition switch OFF.
2. Disconnect ECM harness connector.
3. Check harness continuity between PSP sensor terminal 3 and ECM terminal 67. Refer to Wiring Diagram.

Continuity should exist.

4. Also check harness for short to ground and short to power.

OK or NG

OK >> GO TO 4.
NG >> Repair open circuit or short to ground or short to power in harness or connectors.

4. CHECK PSP SENSOR INPUT SIGNAL CIRCUIT FOR OPEN AND SHORT

1. Check harness continuity between ECM terminal 12 and PSP sensor terminal 2.

Continuity should exist.

2. Also check harness for short to ground and short to power.

OK or NG

OK >> GO TO 5.
NG >> Repair open circuit or short to ground or short to power in harness or connectors.

5. CHECK PSP SENSOR

Refer to EC-366, "Component Inspection".

OK or NG

OK >> GO TO 6.
NG >> Replace PSP sensor. Refer to ST-18.

6. CHECK INTERMITTENT INCIDENT

Refer to GI-40, "How to Check Terminal" and GI-43, "Intermittent Incident".

>> **INSPECTION END**

Component Inspection

INFOID:0000000011291881

POWER STEERING PRESSURE SENSOR

1. Reconnect all harness connectors disconnected.
2. Start engine and let it idle.
3. Check voltage between ECM terminal 12 and ground under the following conditions.

Condition	Voltage
Steering wheel: Being turned.	0.5 - 4.5 V
Steering wheel: Not being turned.	0.4 - 0.8 V

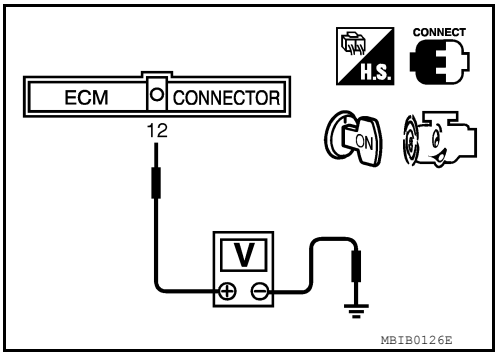

P0603 ECM

DTC Logic

INFOID:0000000011291882

DTC DETECTION LOGIC

DTC No.	CONSULT screen terms (Trouble diagnosis content)	DTC detecting condition	Possible cause
P0603	ECM BACK UP CIRCUIT [Internal control module keep alive memory (KAM) error]	• Malfunction in the internal back up RAM of ECM. • Malfunction in the internal EEP-ROM system of ECM.	• ECM power supply • ECM

DTC CONFIRMATION PROCEDURE

1.PRECONDITIONING

TESTING CONDITION:
Before performing the following procedure, confirm that battery voltage is 11 V or more with ignition switch ON.

>> GO TO 2.

2.PERFORM DTC CONFIRMATION PROCEDURE

1. Turn ignition switch ON and wait at least 1 second.
2. Turn ignition switch OFF and wait at least 10 seconds.
3. Repeat step 1 and 2 for 10 times.
4. Turn ignition switch ON.
5. Check 1st trip DTC.

Is 1st trip DTC detected?

YES >> Proceed to EC-367, "Diagnosis Procedure".
NO >> INSPECTION END

Diagnosis Procedure

INFOID:0000000011291883

1.CHECK ECM POWER SUPPLY AND GROUND CIRCUIT

Perform trouble diagnosis for ECM power supply and ground circuit. Refer to GI-40, "How to Check Terminal".

Is the inspection result normal?

YES >> GO TO 2.
NO >> Repair or replace error-detected parts.

2.CHECK INTERMITTENT INCIDENT

Check intermittent incident. Refer to GI-43, "Intermittent Incident".

Is the inspection result normal?

YES >> GO TO 3.
NO >> Repair or replace error-detected parts.

3.PERFORM DTC CONFIRMATION PROCEDURE

1. Turn ignition switch ON.
2. Erase DTC.
3. Perform DTC confirmation procedure. Refer to EC-367, "DTC Logic".

Is the 1st trip DTC P0603 displayed again?

YES >> Replace ECM.
NO >> INSPECTION END

P0604 ECM

DTC Logic

INFOID:0000000011291884

DTC DETECTION LOGIC

DTC No.	CONSULT screen terms (Trouble diagnosis content)	DTC detecting condition	Possible cause
P0604	ECM [Internal control module random access memory (RAM) error]	Malfunction in the internal RAM of ECM.	ECM

DTC CONFIRMATION PROCEDURE

1.PRECONDITIONING

1. Turn ignition switch OFF and wait at least 10 seconds.
2. Turn ignition switch ON.
3. Turn ignition switch OFF and wait at least 10 seconds.

TESTING CONDITION:
Before performing the following procedure, confirm that battery voltage is 11 V or more with ignition switch ON.

>> GO TO 2.

2.PERFORM DTC CONFIRMATION PROCEDURE

1. Turn ignition switch ON (engine stopped) and wait least 20 minutes.
   CAUTION:
   Never start engine during this procedure.
2. Turn ignition switch OFF and wait at least 10 seconds.
3. Turn ignition switch ON.
4. Check 1st trip DTC.

Is 1st trip DTC detected?

YES >> Proceed to EC-368, "Diagnosis Procedure".
NO >> INSPECTION END

Diagnosis Procedure

INFOID:0000000011291885

1.PERFORM DTC CONFIRMATION PROCEDURE

1. Turn ignition switch ON.
2. Erase DTC.
3. Perform DTC confirmation procedure. Refer to EC-368, "DTC Logic".

Is the 1st trip DTC P0604 displayed again?

YES >> Replace ECM.
NO >> INSPECTION END

P0605 ECM

DTC Logic

INFOID:0000000011291886

DTC DETECTION LOGIC

DTC No.	CONSULT screen terms (Trouble diagnosis content)	DTC detecting condition	Possible cause
P0605	ECM [Internal control module read only memory (ROM) error]	Malfunction in the internal ROM of ECM.	ECM

DTC CONFIRMATION PROCEDURE

1.PRECONDITIONING

1. Turn ignition switch OFF and wait at least 10 seconds.
2. Turn ignition switch ON.
3. Turn ignition switch OFF and wait at least 10 seconds.

TESTING CONDITION:
Before performing the following procedure, confirm that battery voltage is 11 V or more with ignition switch ON.

>> GO TO 2.

2.PERFORM DTC CONFIRMATION PROCEDURE

1. Turn ignition switch ON (engine stopped) and wait least 20 minutes.
   CAUTION:
   Never start engine during this procedure.
2. Turn ignition switch OFF and wait at least 10 seconds.
3. Turn ignition switch ON.
4. Check 1st trip DTC.

Is 1st trip DTC detected?

YES >> Proceed to EC-369, "Diagnosis Procedure".
NO >> INSPECTION END

Diagnosis Procedure

INFOID:0000000011291887

1.PERFORM DTC CONFIRMATION PROCEDURE

1. Turn ignition switch ON.
2. Erase DTC.
3. Perform DTC confirmation procedure. Refer to EC-369, "DTC Logic".

Is the 1st trip DTC P0605 displayed again?

YES >> Replace ECM.
NO >> INSPECTION END

P0606 ECM

DTC Logic

INFOID:0000000011291888

DTC DETECTION LOGIC

DTC No.	CONSULT screen terms (Trouble diagnosis content)	DTC detecting condition	Possible cause
P0606	CONTROL MODULE (Control module processor)	Malfunction in ECM processor.	ECM

DTC CONFIRMATION PROCEDURE

1.PRECONDITIONING

1. Turn ignition switch OFF and wait at least 10 seconds.
2. Turn ignition switch ON.
3. Turn ignition switch OFF and wait at least 10 seconds.

TESTING CONDITION:
Before performing the following procedure, confirm that battery voltage is 11 V or more with ignition switch ON.

>> GO TO 2.

2.PERFORM DTC CONFIRMATION PROCEDURE-I

1. Turn ignition switch ON (engine stopped) and wait at least 10 seconds.
   CAUTION:
   Never start engine during this procedure.
2. Turn ignition switch OFF and wait at least 10 seconds.
3. Turn ignition switch ON.
4. Check 1st trip DTC.

Is 1st trip DTC detected?

YES >> Proceed to EC-370, "Diagnosis Procedure".
NO >> GO TO 3.

3.PERFORM DTC CONFIRMATION PROCEDURE-II

1. Start engine.
2. Rev up the engine quickly to approximately 3,000 rpm under unloaded condition and completely release the accelerator pedal.
3. Let the engine idle and wait at least 10 seconds.
4. Turn ignition switch OFF and wait at least 10 seconds.
5. Turn ignition switch ON.
6. Check 1st trip DTC.

Is 1st trip DTC detected?

YES >> Proceed to EC-370, "Diagnosis Procedure".
NO >> INSPECTION END

Diagnosis Procedure

INFOID:0000000011291889

1.PERFORM DTC CONFIRMATION PROCEDURE

1. Turn ignition switch ON.
2. Erase DTC.
3. Perform DTC confirmation procedure for 3 times. Refer to EC-370, "DTC Logic".

Is the 1st trip DTC P0606 displayed again?

YES >> Replace ECM.
NO >> INSPECTION END

P0607 ECM

DTC Logic

INFOID:0000000011291890

DTC DETECTION LOGIC

DTC No.	CONSULT screen terms (Trouble diagnosis content)	DTC detecting condition	Possible cause
P0607	ECM (Control module performance)	ECM internal communication system is malfunctioning.	ECM

DTC CONFIRMATION PROCEDURE

1.PRECONDITIONING

1. Turn ignition switch OFF and wait at least 10 seconds.
2. Turn ignition switch ON.
3. Turn ignition switch OFF and wait at least 10 seconds.

TESTING CONDITION:
Before performing the following procedure, confirm that battery voltage is 11 V or more with ignition switch ON.

>> GO TO 2.

2.PERFORM DTC CONFIRMATION PROCEDURE

1. Turn ignition switch ON (engine stopped) and wait least 10 seconds.
2. Turn ignition switch OFF and wait at least 10 seconds.
3. Turn ignition switch ON.
4. Check 1st trip DTC.

Is 1st trip DTC detected?

YES >> Proceed to EC-371, "Diagnosis Procedure".
NO >> INSPECTION END

Diagnosis Procedure

INFOID:0000000011291891

1.PERFORM DTC CONFIRMATION PROCEDURE

1. Turn ignition switch ON.
2. Erase DTC.
3. Perform DTC confirmation procedure. Refer to EC-371, "DTC Logic".

Is the 1st trip DTC P0607 displayed again?

YES >> Replace ECM.
NO >> INSPECTION END

P060A ECM

DTC Logic

INFOID:0000000011291892

DTC DETECTION LOGIC

DTC No.	CONSULT screen terms (Trouble diagnosis content)	DTC detecting condition	Possible cause
P060A	CONTROL MODULE (Internal control module monitoring processor performance)	ECM internal monitoring processor is malfunctioning.	ECM

DTC CONFIRMATION PROCEDURE

1.PRECONDITIONING

1. Turn ignition switch OFF and wait at least 10 seconds.
2. Turn ignition switch ON.
3. Turn ignition switch OFF and wait at least 10 seconds.

TESTING CONDITION:
Before performing the following procedure, confirm that battery voltage is 11 V or more with ignition switch ON.

>> GO TO 2.

2.PERFORM DTC CONFIRMATION PROCEDURE

1. Start engine and wait at least 10 seconds.
2. Turn ignition switch OFF and wait at least 10 seconds.
3. Repeat step 1 and 2 for 5 times.
4. Turn ignition switch ON.
5. Check 1st trip DTC.

Is 1st trip DTC detected?

YES >> Proceed to EC-372, "Diagnosis Procedure".
NO >> INSPECTION END

Diagnosis Procedure

INFOID:0000000011291893

1.PERFORM DTC CONFIRMATION PROCEDURE

1. Turn ignition switch ON.
2. Erase DTC.
3. Perform DTC confirmation procedure. Refer to EC-372, "DTC Logic".

Is the 1st trip DTC P060A displayed again?

YES >> Replace ECM.
NO >> INSPECTION END

P060B ECM

DTC Logic

INFOID:0000000011291894

DTC DETECTION LOGIC

DTC No.	CONSULT screen terms (Trouble diagnosis content)	DTC detecting condition	Possible cause
P060B	CONTROL MODULE (Internal control module A/D processing performance)	ECM internal analog/digital conversion processing system is malfunctioning.	ECM

DTC CONFIRMATION PROCEDURE

1.PRECONDITIONING

1. Turn ignition switch OFF and wait at least 10 seconds.
2. Turn ignition switch ON.
3. Turn ignition switch OFF and wait at least 10 seconds.

TESTING CONDITION:
Before performing the following procedure, confirm that battery voltage is 11 V or more with ignition switch ON.

>> GO TO 2.

2.PERFORM DTC CONFIRMATION PROCEDURE

1. Turn ignition switch ON (engine stopped) and wait least 10 seconds.
2. Turn ignition switch OFF and wait at least 10 seconds.
3. Turn ignition switch ON.
4. Check 1st trip DTC.

Is 1st trip DTC detected?

YES >> Proceed to EC-373, "Diagnosis Procedure".
NO >> INSPECTION END

Diagnosis Procedure

INFOID:0000000011291895

1.PERFORM DTC CONFIRMATION PROCEDURE

1. Turn ignition switch ON.
2. Erase DTC.
3. Perform DTC confirmation procedure. Refer to EC-373, "DTC Logic".

Is the 1st trip DTC P060B displayed again?

YES >> Replace ECM.
NO >> INSPECTION END

P0643 SENSOR POWER SUPPLY

On Board Diagnosis Logic

INFOID:0000000011291896

This self-diagnosis has the one trip detection logic.

DTC No.	Trouble diagnosis name	DTC detecting condition	Possible cause
P0643 0643	Sensor power supply circuit short	ECM detects a voltage of power source for sensor is excessively low or high.	• Harness or connectors (APP sensor 1 circuit is shorted.) (PSP sensor circuit is shorted.) (Battery current sensor circuit is shorted.) (Refrigerant pressure sensor circuit is shorted.) (EVAP control system pressure sensor circuit is shorted.) • Accelerator pedal position sensor • Power steering pressure sensor • Refrigerant pressure sensor • EVAP control system pressure sensor

FAIL-SAFE MODE

When the malfunction is detected, ECM enters fail-safe mode and the MIL lights up.

Engine operation condition in fail-safe mode
ECM stops the electric throttle control actuator control, throttle valve is maintained at a fixed opening (approx. 5 degrees) by the return spring.

DTC Confirmation Procedure

INFOID:0000000011291897

NOTE:

If DTC Confirmation Procedure has been previously conducted, always perform the following before conducting the next step.

1. Turn ignition switch OFF and wait at least 10 seconds.
2. Turn ignition switch ON.
3. Turn ignition switch OFF and wait at least 10 seconds.

TESTING CONDITION:

Before performing the following procedure, confirm that battery voltage is more than 10 V at idle.

1. Start engine and let it idle for 1 second.
2. Check DTC.
3. If DTC is detected, go to EC-374, "Diagnosis Procedure".

Diagnosis Procedure

INFOID:0000000011291898

1.CHECK GROUND CONNECTIONS

1. Turn ignition switch OFF.
2. Loosen and retighten three ground screws on the body.
   Refer to EC-154, "Ground Inspection".

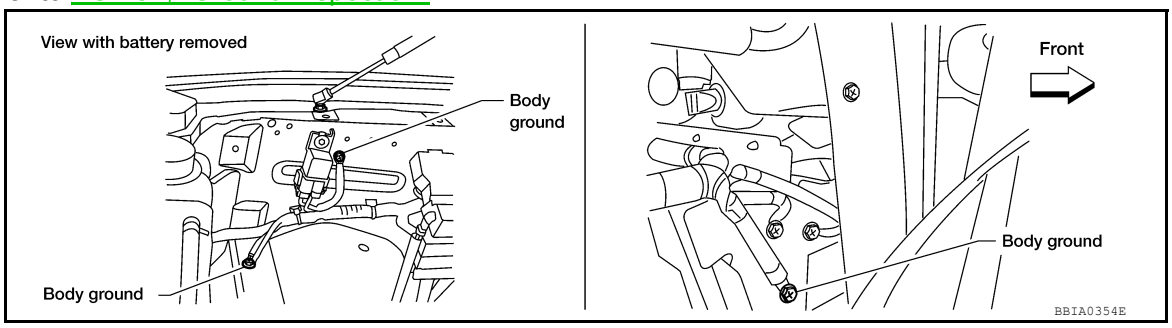

OK or NG

OK >> GO TO 2.

NG >> Repair or replace ground connections.

2. CHECK APP SENSOR 1 POWER SUPPLY CIRCUIT

1. Disconnect accelerator pedal position (APP) sensor harness connector.
2. Turn ignition switch ON.

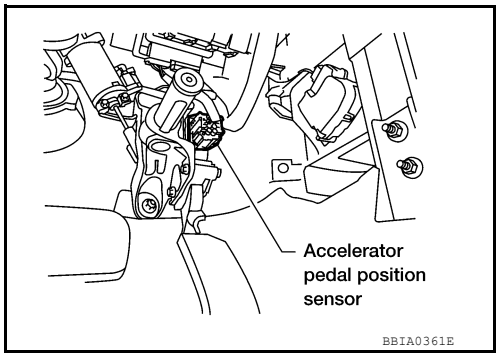

3. Check voltage between APP sensor terminal 7 and ground with CONSULT or tester.

Voltage: Approximately 5 V

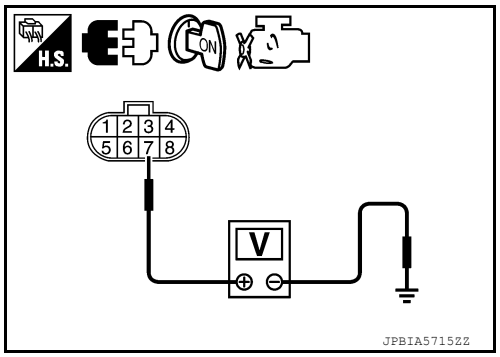

OK or NG

OK >> GO TO 5.
NG >> GO TO 3.

3. CHECK SENSOR POWER SUPPLY CIRCUITS

Check harness for short to power and short to ground, between the following terminals.

ECM terminal	Sensor terminal	Reference Wiring Diagram
48	EVAP control system pressure sensor terminal 3	EC-89, "Wiring Diagram"
49	Refrigerant pressure sensor terminal 1	
	Battery current sensor terminal 1	
68	Power steering pressure sensor terminal 1	
90	APP sensor terminal 7	

OK or NG

OK >> GO TO 4.
NG >> Repair short to ground or short to power in harness or connectors.

4. CHECK COMPONENTS

Check the following.
- EVAP control system pressure sensor (Refer to EC-329, "Component Inspection".)
- Power steering pressure sensor (Refer to EC-366, "Component Inspection".)
- Battery current sensor (Refer to EC-402, "Component Inspection".)
- Refrigerant pressure sensor (Refer to EC-498, "Component Description".)

OK or NG

OK >> GO TO 7.
NG >> Replace malfunctioning components.

5. CHECK ACCELERATOR PEEDAL POSITION SENSOR

Refer to EC-461, "Component Inspection".

OK or NG

OK >> GO TO 7.
NG >> GO TO 6.

6. REPLACE ACCELERATOR PEDAL ASSEMBLY

1. Replace accelerator pedal position assembly. Refer to ACC-4.
2. Perform EC-128, "Accelerator Pedal Released Position Learning".
3. Perform EC-128, "Throttle Valve Closed Position Learning".
4. Perform EC-129, "Idle Air Volume Learning".

>> **INSPECTION END**

7. CHECK INTERMITTENT INCIDENT

Refer to GI-40, "How to Check Terminal" and GI-43, "Intermittent Incident".

>> **INSPECTION END**

P0850 PNP SWITCH

Component Description

INFOID:0000000011291899

When the selector lever position is P or N, park/neutral position (PNP) signal from the TCM is sent to ECM. When the gear position is P or N, transmission range switch is ON.

On Board Diagnosis Logic

INFOID:0000000011291900

DTC No.	Trouble diagnosis name	DTC detecting condition	Possible cause
P0850 0850	Park/neutral position switch	The signal of the park/neutral position (PNP) signal is not changed in the process of engine starting and driving.	• Harness or connectors [The park/neutral position (PNP) signal circuit is open or shorted.] • Combination meter • TCM

DTC Confirmation Procedure

INFOID:0000000011291901

CAUTION:
Always drive vehicle at a safe speed.
NOTE:
If DTC Confirmation Procedure has been previously conducted, always perform the following before conducting the next step.

1. Turn ignition switch OFF and wait at least 10 seconds.
2. Turn ignition switch ON.
3. Turn ignition switch OFF and wait at least 10 seconds.

WITH CONSULT

1. Turn ignition switch ON.
2. Select “P/N POSI SW” in “DATA MONITOR” mode with CONSULT. Then check the “P/N POSI SW” signal under the following conditions.

Position (Selector lever)	Known-good signal
N or P position	ON
Except the above position	OFF

If NG, go to EC-378, "Diagnosis Procedure".
If OK, go to following step.

3. Select “DATA MONITOR” mode with CONSULT.
4. Start engine and warm it up to normal operating temperature.
5. Maintain the following conditions for at least 60 consecutive seconds.

ENG SPEED	1,000 - 6,375 rpm
COOLAN TEMP/S	More than 70°C (158°F)
B/FUEL SCHDL	2.0 - 31.8 msec
VHCL SPEED SE	More than 64 km/h (40 MPH)
Selector lever	Suitable position

6. Check 1st trip DTC.
7. If 1st trip DTC is detected, go to EC-378, "Diagnosis Procedure".

Overall Function Check

INFOID:0000000011291902

Use this procedure to check the overall function of the park/neutral position (PNP) signal circuit. During this check, a 1st trip DTC might not be confirmed.

WITH GST

1. Turn ignition switch ON.
2. Check voltage between ECM terminal 102 (PNP signal) and ground under the following conditions.

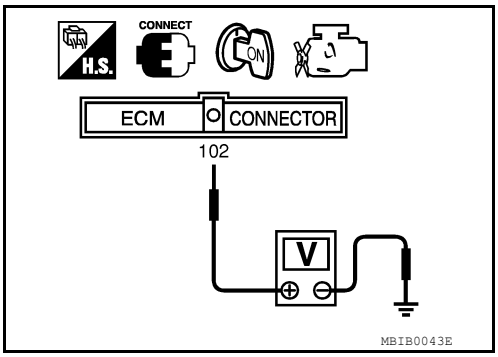

Condition (Gear position)	Voltage (Known good data)
P or N position	Approx. 0
Except the above position	BATTERY VOLTAGE (11 - 14 V)

3. If NG, go to EC-378, "Diagnosis Procedure".

Diagnosis Procedure

INFOID:0000000011291903

1. CHECK DTC WITH TCM

Refer to TM-32, "OBD-II Diagnostic Trouble Code (DTC)".

OK or NG

OK >> GO TO 2.
NG >> Repair or replace.

2. CHECK STARTING SYSTEM

Turn ignition switch OFF, then turn it to START.
Does starter motor operate?

Yes or No

Yes >> GO TO 3.
No >> Refer to STR-11, "System Diagram".

3. CHECK PNP SWITCH INPUT SIGNAL CIRCUIT FOR OPEN AND SHORT-I

1. Turn ignition switch OFF.
2. Disconnect A/T assembly harness connector.
3. Disconnect combination meter harness connector.
4. Check harness continuity between A/T assembly terminal 9 and combination meter terminal 39. Refer to Wiring Diagram.

Continuity should exist.

5. Also check harness for short to ground and short to power.

OK or NG

OK >> GO TO 5.
NG >> GO TO 4.

4. DETECT MALFUNCTIONING PART

Check the following.
- Harness connectors F14, E5
- Harness connectors E152, M31
- Harness for open or short between A/T assembly and combination meter

>> Repair open circuit or short to ground or short to power in harness or connectors.

5. CHECK PNP SWITCH INPUT SIGNAL CIRCUIT FOR OPEN AND SHORT-II

1. Disconnect ECM harness connector.
2. Check harness continuity between ECM terminal 102 and combination meter terminal 40. Refer to Wiring Diagram.

Continuity should exist.

3. Also check harness for short to ground and short to power.

OK or NG

OK >> GO TO 7.
NG >> GO TO 6.

6. DETECT MALFUNCTIONING PART

Check the following.
- Harness connectors M31, E152
- Harness for open or short between ECM and combination meter

>> Repair open circuit or short to ground or short to power in harness or connectors.

7. CHECK PNP SWITCH INPUT SIGNAL CIRCUIT FOR OPEN AND SHORT-III

1. Check harness continuity between A/T assembly terminal 9 and TCM terminal 8.
   Refer to Wiring Diagram.

   Continuity should exist.

2. Also check harness for short to ground and short to power.

OK or NG

OK >> GO TO 8.
NG >> Repair open circuit or short to ground or short to power in harness or connectors.

8. CHECK INTERMITTENT INCIDENT

Refer to GI-40, "How to Check Terminal" and GI-43, "Intermittent Incident".

OK or NG

OK >> GO TO 9.
NG >> Repair or replace.

9. REPLACE COMBINATION METER

Refer to MWI-99, "Removal and Installation".

>> **INSPECTION END**

P1140, P1145 IVT CONTROL POSITION SENSOR

Component Description

INFOID:0000000011291904

Intake valve timing control position sensors are located in the front of cylinder heads in both bank 1 and bank 2.
This sensor uses a Hall IC.
The cam position is determined by the intake camshaft sprocket concave (in four places). The ECM provides feedback to the intake valve timing control for appropriate target valve open-close timing according to drive conditions based on detected cam position.

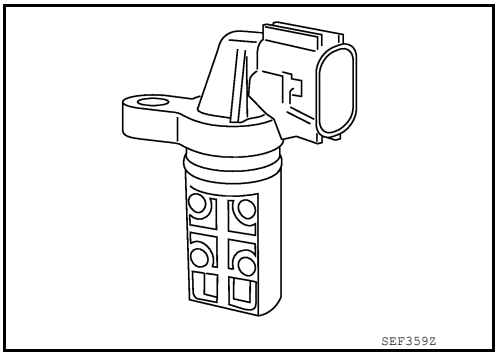

On Board Diagnosis Logic

INFOID:0000000011291905

DTC No.	Trouble diagnosis name	DTC detecting condition	Possible cause
P1140 1140 (Bank 1)	Intake valve timing control position sensor circuit	An excessively high or low voltage from the sensor is sent to ECM.	• Harness or connectors (Intake valve timing control position sensor circuit is open or shorted) • Intake valve timing control position sensor • Crankshaft position sensor (POS) • Camshaft position sensor (PHASE) • Accumulation of debris to the signal pick-up portion of the camshaft sprocket
P1145 1145 (Bank 2)			

DTC Confirmation Procedure

INFOID:0000000011291906

1. If DTC Confirmation Procedure has been previously conducted, always perform the following before conducting the next step.

a. Turn ignition switch OFF and wait at least 10 seconds.
b. Turn ignition switch ON.
c. Turn ignition switch OFF and wait at least 10 seconds.

2. Turn ignition switch ON.
3. Maintain the following conditions for at least 10 seconds.

ENG SPEED	More than idle speed
Selector lever	P or N position

4. Check 1st trip DTC.
5. If 1st trip DTC is detected, go to EC-380, "Diagnosis Procedure".

Diagnosis Procedure

INFOID:0000000011291907

1. CHECK GROUND CONNECTIONS

1. Turn ignition switch OFF.
2. Loosen and retighten three ground screws on the body.

Refer to EC-154, "Ground Inspection".

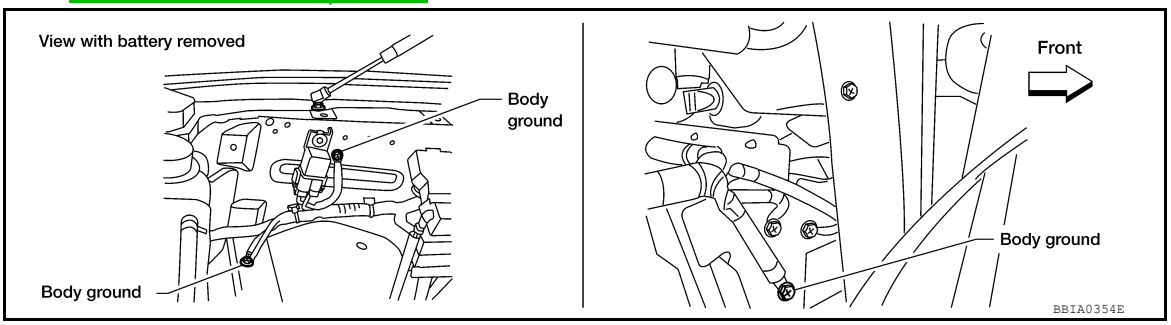

OK or NG

OK >> GO TO 2.
NG >> Repair or replace ground connections.

2. CHECK INTAKE VALVE TIMING CONTROL POSITION SENSOR POWER SUPPLY CIRCUIT

1. Disconnect intake valve timing control position sensor harness connector.

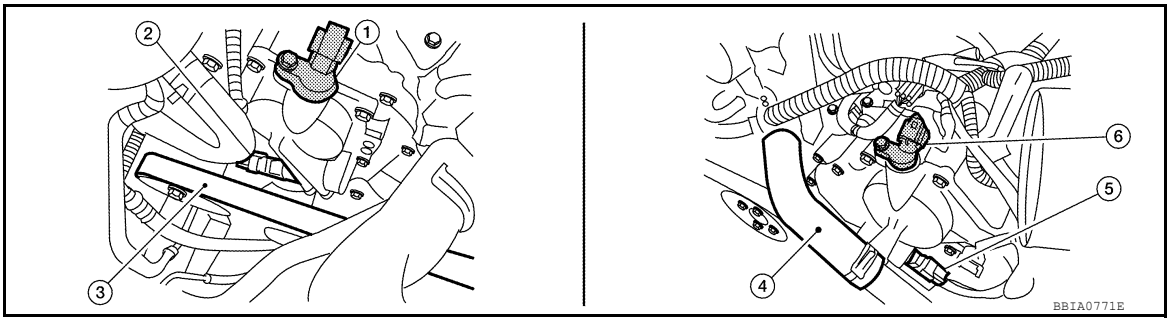

1.	Intake valve timing control position sensor (bank 2)	2.	Intake valve timing control solenoid valve (bank 2)	3.	Drive belt
4.	Radiator hose	5.	Intake valve timing control solenoid valve (bank 1)	6.	Intake valve timing control position sensor (bank 1)

2. Turn ignition switch ON.
3. Check voltage between intake valve timing control position sensor terminal 3 and ground with CONSULT or tester.

Voltage: Battery voltage

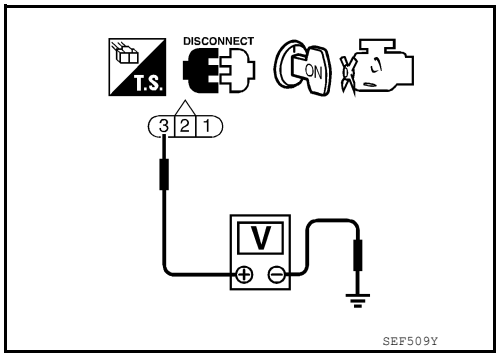

OK or NG

OK >> GO TO 4.
NG >> GO TO 3.

3. DETECT MALFUNCTIONING PART

Check the following.
- Harness connectors E2, F32
- Harness for open or short between intake valve timing control position sensor and IPDM E/R
- Harness for open or short between intake valve timing control position sensor and ECM

>> Repair open circuit or short to ground or short to power in harness or connectors.

4. CHECK INTAKE VALVE TIMING CONTROL POSITION SENSOR GROUND CIRCUIT FOR OPEN AND SHORT

1. Turn ignition switch OFF.
2. Check harness continuity between intake valve timing control position sensor terminal 1 and ground. Refer to Wiring Diagram.

Continuity should exist.

3. Also check harness for short to power.

OK or NG

OK >> GO TO 6.
NG >> GO TO 5.

5. DETECT MALFUNCTIONING PART

Check the following.
- Harness connectors E2, F32
- Harness for open or short between intake valve timing control position sensor and ground

>> Repair open circuit or short to power in harness or connectors.

6. CHECK INTAKE VALVE TIMING CONTROL POSITION SENSOR INPUT SIGNAL CIRCUIT FOR OPEN AND SHORT

1. Disconnect ECM harness connector.
2. Check harness continuity between the following;
   ECM terminal 72 and intake valve timing control position sensor (Bank 1) terminal 2 or
   ECM terminal 53 and intake valve timing control position sensor (Bank 2) terminal 2.
   Refer to Wiring Diagram.

Continuity should exist.

3. Also check harness for short to ground and short to power.

OK or NG

OK >> GO TO 7.
NG >> Repair open circuit or short to ground or short to power in harness or connectors.

7. CHECK INTAKE VALVE TIMING CONTROL POSITION SENSOR

Refer to EC-383, "Component Inspection".

OK or NG

OK >> GO TO 8.
NG >> Replace malfunctioning intake valve timing control position sensor. Refer to EM-47.

8. CHECK CRANKSHAFT POSITION SENSOR (POS)

Refer to EC-283, "Component Inspection".

OK or NG

OK >> GO TO 9.
NG >> Replace crankshaft position sensor (POS). Refer to EM-91.

9. CHECK CAMSHAFT POSITION SENSOR (PHASE)

Refer to EC-287, "Component Inspection".

OK or NG

OK >> GO TO 10.
NG >> Replace camshaft position sensor (PHASE). Refer to EM-47.

10. CHECK CAMSHAFT SPROCKET

Check accumulation of debris to the signal pick-up portion of the camshaft sprocket. Refer to EM-61, "Removal and Installation".

OK or NG

OK >> GO TO 11.
NG >> Remove debris and clean the signal pick-up cutout of camshaft sprocket. Refer to EM-61.

11. CHECK INTERMITTENT INCIDENT

Refer to GI-40, "How to Check Terminal" and GI-43, "Intermittent Incident".

>> **INSPECTION END**

Component Inspection

INFOID:0000000011291908

INTAKE VALVE TIMING CONTROL POSITION SENSOR

1. Disconnect intake valve timing control position sensor harness connector.
2. Loosen the fixing bolt of the sensor.
3. Remove the sensor. Refer to EM-47.
4. Visually check the sensor for chipping.

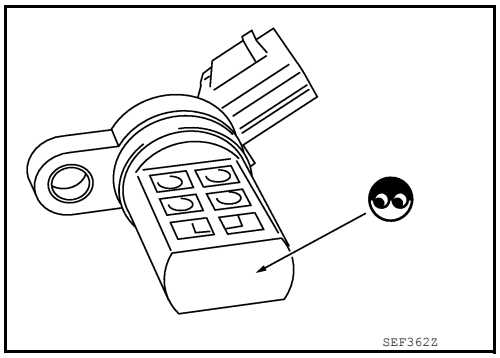

5. Check resistance as shown below.

Terminal No. (Polarity)	Resistance Ω [at 25°C (77°F)]
3 (+) - 1 (-)	Except 0 or ∞
2 (+) - 1 (-)	
3 (+) - 2 (-)	

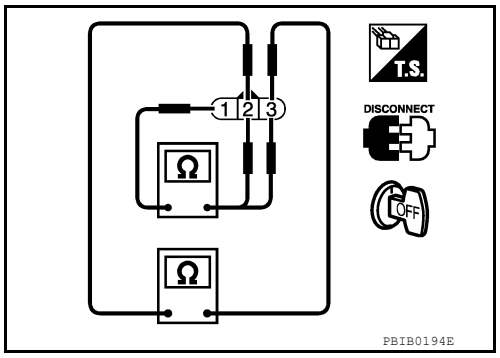

6. If NG, replace intake valve timing control position sensor. Refer to EM-47.

P1148, P1168 CLOSED LOOP CONTROL

On Board Diagnosis Logic

INFOID:0000000011291909

These self-diagnoses have the one trip detection logic.

DTC No.	Trouble diagnosis name	DTC detecting condition	Possible cause
P1148 1148 (Bank 1)	Closed loop control function	The closed loop control function for bank 1 does not operate even when vehicle is driving in the specified condition.	• Harness or connectors [The air fuel ratio (A/F) sensor 1 circuit is open or shorted.] • Air fuel ratio (A/F) sensor 1 • Air fuel ratio (A/F) sensor 1 heater
P1168 1168 (Bank 2)		The closed loop control function for bank 2 does not operate even when vehicle is driving in the specified condition.	

DTC P1148 or P1168 is displayed with another DTC for air fuel ratio (A/F) sensor 1.
Perform the trouble diagnosis for the corresponding DTC.

P1211 TCS CONTROL UNIT

Description

INFOID:0000000011291910

The malfunction information related to TCS is transferred through the CAN communication line from “ABS actuator and electric unit (control unit)” to ECM.
Be sure to erase the malfunction information such as DTC not only for “ABS actuator and electric unit (control unit)” but also for ECM after TCS related repair.

On Board Diagnosis Logic

INFOID:0000000011291911

Freeze frame data is not stored in the ECM for this self-diagnosis.
The MIL will not light up for this self-diagnosis.

DTC No.	Trouble diagnosis name	DTC detecting condition	Possible cause
P1211 1211	TCS control unit	ECM receives a malfunction information from “ABS actuator electric unit (control unit)”	• ABS actuator and electric unit (control unit) • TCS related parts

DTC Confirmation Procedure

INFOID:0000000011291912

TESTING CONDITION:
Before performing the following procedure, confirm that battery voltage is more than 10.5 V at idle.

1. Start engine and let it idle for at least 60 seconds.
2. Check 1st trip DTC.
3. If 1st trip DTC is detected, go to EC-385, "Diagnosis Procedure".

Diagnosis Procedure

INFOID:0000000011291913

Go to BRC-24, "CONSULT Function (ABS)".

P1212 TCS COMMUNICATION LINE

Description

INFOID:0000000011291914

NOTE:
- **If DTC P1212 is displayed with DTC UXXXX, first perform the trouble diagnosis for DTC UXXXX.**
- **If DTC P1212 is displayed with DTC P0607, first perform the trouble diagnosis for DTC P0607. Refer to EC-371.**

This CAN communication line is used to control the smooth engine operation during the TCS operation. Pulse signals are exchanged between ECM and “ABS actuator and electric unit (control unit)”.
Be sure to erase the malfunction information such as DTC not only for “ABS actuator and electric unit (control unit)” but also for ECM after TCS related repair.

On Board Diagnosis Logic

INFOID:0000000011291915

Freeze frame data is not stored in the ECM for this self-diagnosis.
The MIL will not light up for this self-diagnosis.

DTC No.	Trouble diagnosis name	DTC detecting condition	Possible cause
P1212 1212	TCS communication line	ECM can not receive the information from “ABS actuator and electric unit (control unit)” continuously.	• Harness or connectors (The CAN communication line is open or shorted.) • ABS actuator and electric unit (control unit) • Dead (Weak) battery

DTC Confirmation Procedure

INFOID:0000000011291916

TESTING CONDITION:
Before performing the following procedure, confirm that battery voltage is more than 10.5 V at idle.

1. Start engine and let it idle for at least 10 seconds.
2. Check 1st trip DTC.
3. If 1st trip DTC is detected, go to EC-386, "Diagnosis Procedure".

Diagnosis Procedure

INFOID:0000000011291917

Go to BRC-24, "CONSULT Function (ABS)".

P1217 ENGINE OVER TEMPERATURE

On Board Diagnosis Logic

INFOID:0000000011291918

NOTE:
- **If DTC P1217 is displayed with DTC UXXXX, first perform the trouble diagnosis for DTC UXXXX.**
- **If DTC P1217 is displayed with DTC P0607, first perform the trouble diagnosis for DTC P0607. Refer to EC-371.**

If the cooling fan or another component in the cooling system malfunctions, engine coolant temperature will rise.
When the engine coolant temperature reaches an abnormally high temperature condition, a malfunction is indicated.
This self-diagnosis has the one trip detection logic.

DTC No.	Trouble diagnosis name	DTC detecting condition	Possible cause
P1217 1217	Engine over temperature (Overheat)	• Cooling fan does not operate properly (Overheat). • Cooling fan system does not operate properly (Overheat). • Engine coolant was not added to the system using the proper filling method. • Engine coolant is not within the specified range.	• Harness or connectors (The cooling fan circuit is open or shorted.) • Cooling fan • Cooling fan (crankshaft driven) • IPDM E/R (Cooling fan relay) • Radiator hose • Radiator • Radiator cap • Reservoir tank • Reservoir tank cap • Water pump • Thermostat For more information, refer to EC-389, "Main 13 Causes of Overheating".

CAUTION:
When a malfunction is indicated, be sure to replace the coolant. Refer to CO-11, "Changing Engine Coolant". Also, replace the engine oil. Refer to LU-9, "Changing Engine Oil".
1. **Fill radiator with coolant up to specified level with a filling speed of 2 liters per minute. Be sure to use coolant with the proper mixture ratio. Refer to CO-10, "Inspection".**
2. **After refilling coolant, run engine to ensure that no water-flow noise is emitted.**

Overall Function Check

INFOID:0000000011291919

Use this procedure to check the overall function of the cooling fan. During this check, a DTC might not be confirmed.

WARNING:
Never remove the radiator cap and/or reservoir tank cap when the engine is hot. Serious burns could be caused by high pressure fluid escaping from the radiator and/or reservoir tank.
Wrap a thick cloth around cap. Carefully remove the cap by turning it a quarter turn to allow built-up pressure to escape. Then turn the cap all the way off.

WITH CONSULT

1. Check the coolant level in the reservoir tank and radiator.
   Allow engine to cool before checking coolant level.
   If the coolant level in the reservoir tank and/or radiator is below the proper range, skip the following steps and go to EC-471, "Diagnosis Procedure".
2. Confirm whether customer filled the coolant or not. If customer filled the coolant, skip the following steps and go to EC-471, "Diagnosis Procedure".
3. Turn ignition switch ON.
4. Perform “COOLING FAN” in “ACTIVE TEST” mode with CONSULT.
5. If the results are NG, go to EC-471, "Diagnosis Procedure".

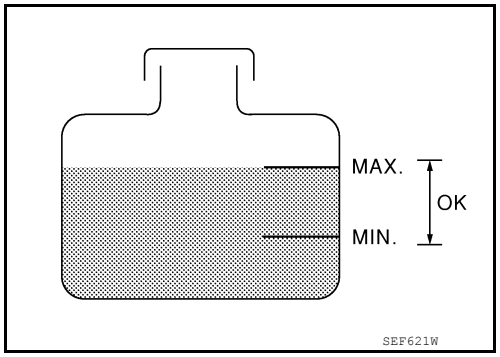

WITH GST

1. Check the coolant level in the reservoir tank and radiator.
   Allow engine to cool before checking coolant level.
   If the coolant level in the reservoir tank and/or radiator is below the proper range, skip the following steps and go to EC-471, "Diagnosis Procedure".
2. Confirm whether customer filled the coolant or not. If customer filled the coolant, skip the following steps and go to EC-471, "Diagnosis Procedure".
3. Disconnect engine coolant temperature sensor harness connector.
4. Connect 150Ω resistor to engine coolant temperature sensor harness connector.

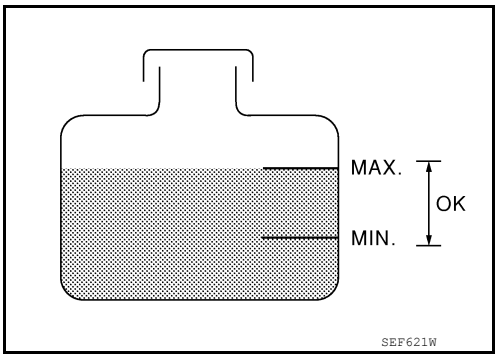

5. Start engine and make sure that cooling fan operates.
   CAUTION:
   Be careful not to overheat engine.
6. If NG, go to EC-471, "Diagnosis Procedure".

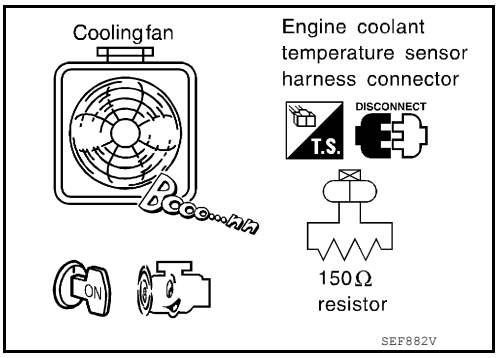

Diagnosis Procedure

INFOID:0000000011291920

1. CHECK COOLING FAN (CRANKSHAFT DRIVEN) OPERATION

1. Start engine and let it idle.
2. Make sure that cooling fan (crankshaft driven) operates normally.

OK or NG

OK (With CONSULT)>>GO TO 2.
OK (Without CONSULT)>>GO TO 3.
NG >> Check cooling fan (crankshaft driven). Refer to CO-19, "Removal and Installation (Crankshaft Driven Type)".

2. CHECK COOLING FAN MOTOR OPERATION

With CONSULT

1. Start engine and let it idle.
2. Select “COOLING FAN” in “ACTIVE TEST” mode with CONSULT.
3. Make sure that cooling fan operates.

OK or NG

OK >> GO TO 4.
NG >> Check cooling fan control circuit. (Proceed to “PROCEDURE A”.)

3. CHECK COOLING FAN MOTOR OPERATION

Without CONSULT

1. Disconnect engine coolant temperature sensor harness connector.
2. Connect 150Ω resistor to engine coolant temperature sensor harness connector.
3. Start engine and let it idle.

4. Make sure that cooling fan operates.

OK or NG

OK >> GO TO 4.
NG >> Check cooling fan control circuit. (Proceed to “PROCEDURE A”.)

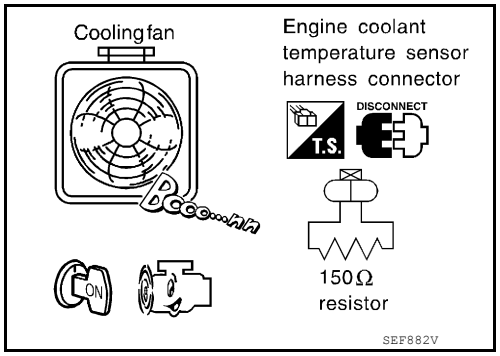

4. CHECK COOLING SYSTEM FOR LEAK

Refer to CO-10, "Inspection".

OK or NG

OK >> GO TO 5.
NG >> Check the following for leak.
- Hose
- Radiator
- Radiator cap
- Water pump
- Reservoir tank

5. CHECK COMPONENT PARTS

Check the following.
- RESERVOIR TANK CAP (Refer to CO-15, "Checking Radiator".)
- Thermostat. (Refer to CO-23, "Removal and Installation".)
- Water control valve. (Refer to CO-23, "Removal and Installation".)
- Engine coolant temperature sensor. (Refer to EC-192, "Component Inspection".)

OK or NG

OK >> GO TO 6.
NG >> Replace malfunctioning component.

6. CHECK MAIN 13 CAUSES

If the cause cannot be isolated, go to EC-389, "Main 13 Causes of Overheating".

>> **INSPECTION END**

Main 13 Causes of Overheating

INFOID:0000000011291921

Engine	Step	Inspection item	Equipment	Standard	Reference page
OFF	1	• Blocked radiator • Blocked condenser • Blocked radiator grille • Blocked bumper	• Visual	No blocking	—
	2	• Coolant mixture	• Coolant tester	50 - 50% coolant mixture	CO-10, "Inspection"
	3	• Coolant level	• Visual	Coolant up to MAX level in reservoir tank and radiator filler neck	CO-11, "Changing Engine Coolant"
	4	• Reservoir tank cap	• Pressure tester	95 - 125 kPa (0.97 - 1.28 kg/cm^2, 14 - 18 psi) (Limit)	CO-10, "Inspection"
ON*2	5	• Coolant leaks	• Visual	No leaks	CO-10, "Inspection"
ON*2	6	• Thermostat	• Touch the upper and lower radiator hoses	Both hoses should be hot	CO-23, "Removal and Installation"

Engine	Step	Inspection item	Equipment	Standard	Reference page
ON*1	7	• Cooling fan	• CONSULT	Operating	See trouble diagnosis for DTC P1217 (EC-31).
OFF	8	• Combustion gas leak	• Color checker chemical tester 4 Gas analyzer	Negative	—
ON*3	9	• Coolant temperature gauge	• Visual	Gauge less than 3/4 when driving	—
		• Coolant overflow to reservoir tank	• Visual	No overflow during driving and idling	CO-11, "Changing Engine Coolant"
OFF*4	10	• Coolant return from reservoir tank to radiator	• Visual	Should be initial level in reservoir tank	CO-11, "Changing Engine Coolant"
OFF	11	• Water control valve	• Remove and inspect the valve	Within the specified value	CO-23, "Removal and Installation"
OFF	12	• Cylinder head	• Straight gauge feeler gauge	0.1 mm (0.004 in) Maximum distortion (warping)	EM-77, "Removal and Installation"
	13	• Cylinder block and pistons	• Visual	No scuffing on cylinder walls or piston	EM-81, "Inspection After Disassembly"

*1: Turn the ignition switch ON.

*2: Engine running at 3,000 rpm for 10 minutes.

*3: Drive at 90 km/h (55 MPH) for 30 minutes and then let idle for 10 minutes.

*4: After 60 minutes of cool down time.

For more information, refer to CO-8, "Troubleshooting Chart".

P1220 FUEL PUMP CONTROL MODULE (FPCM)

Description

INFOID:0000000011291922

SYSTEM DESCRIPTION

Sensor	Input Signal to ECM	ECM function	Actuator
Crankshaft position sensor (POS) Camshaft position sensor (PHASE)	Engine speed*	Fuel pump control	Fuel pump control module (FPCM)
Mass air flow sensor	Amount of intake air		
Engine coolant temperature sensor	Engine coolant temperature		
Battery	Battery voltage*		

*: ECM determines the start signal status by the signals of engine speed and battery voltage.

This system controls the fuel pump operation. The amount of fuel flow delivered from the fuel pump is altered between two flow rates by the FPCM operation. The FPCM determines the voltage supplied to the fuel pump (and therefore fuel flow) according to the following conditions.

Conditions	Amount of fuel flow	Supplied voltage
• Engine cranking • Engine coolant temperature is below 10°C (50°F). • Engine is running under heavy load and high speed conditions	high	Battery voltage (11 - 14V)
Except the above	low	Approximately 8V

COMPONENT DESCRIPTION

The FPCM adjusts the voltage supplied to the fuel pump to control the amount of fuel flow. When the FPCM increases the voltage supplied to the fuel pump, the fuel flow is increased. When the FPCM decreases the voltage, the fuel flow is decreased.

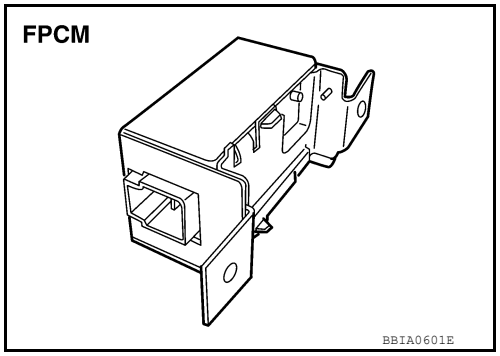

On Board Diagnosis Logic

INFOID:0000000011291923

DTC No.	Trouble diagnosis name	DTC detecting condition	Possible cause
P1220 1220	Fuel pump control module (FPCM)	An improper voltage signal from the FPCM, which is supplied to a point between the fuel pump and the dropping resistor, is detected by ECM.	• Harness or connectors (FPCM circuit is shorted.) • Dropping resistor • FPCM

DTC Confirmation Procedure

INFOID:0000000011291924

CAUTION:
Always drive vehicle at a safe speed.
NOTE:
If DTC Confirmation Procedure has been previously conducted, always perform the following before conducting the next step.
1. Turn ignition switch OFF and wait at least 10 seconds.
2. Turn ignition switch ON.
3. Turn ignition switch OFF and wait at least 10 seconds.

TESTING CONDITION:
Before performing the following procedure, confirm that battery voltage is more than 11V with ignition switch ON.

WITH CONSULT

1. Turn ignition switch ON and select “DATA MONITOR” mode with CONSULT.
2. Make sure that “COOLAN TEMP/S” indicates less than 70°C (158°F). If not, cool down the engine.
3. Start engine.
4. Hold vehicle at the following conditions for 12 seconds.

ENG SPEED	900 - 2,600 rpm
VHCL SPEED SE	More than 70 km/h (43 MPH)
B/FUEL SCHDL	0 - 25 msec
Selector lever	Suitable position

5. Check 1st trip DTC.
6. If 1st trip DTC is detected, go to EC-392, "Diagnosis Procedure".

WITH GST

Follow the procedure “WITH CONSULT” above.

Diagnosis Procedure

INFOID:0000000011291925

1. CHECK GROUND CONNECTIONS

1. Turn ignition switch OFF.
2. Loosen and retighten three ground screws on the body.
   Refer to EC-154, "Ground Inspection".

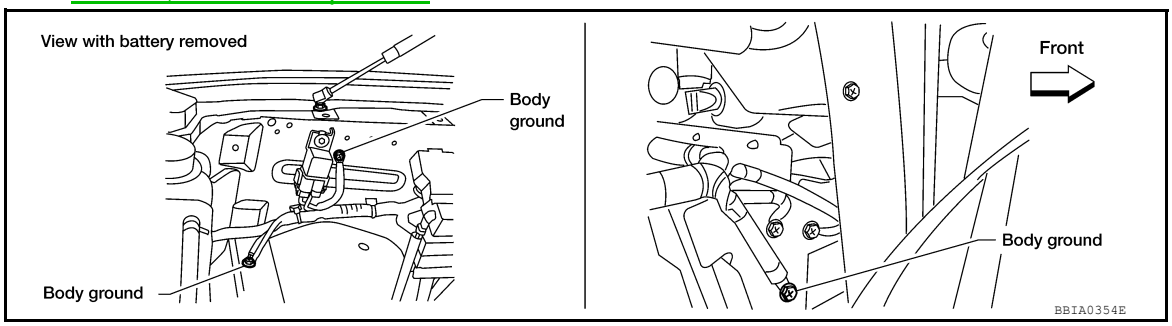

OK or NG

OK >> GO TO 2.
NG >> Repair or replace ground connections.

2. CHECK FPCM POWER SUPPLY CIRCUIT

1. Disconnect fuel pump control module (FPCM) harness connector.

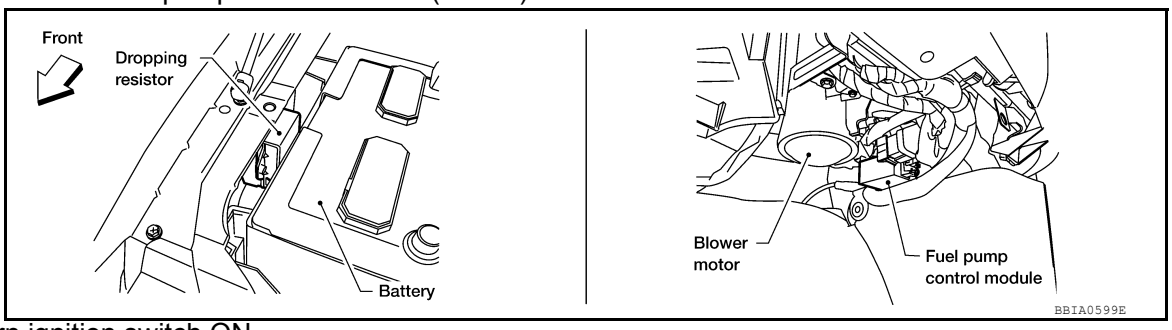

2. Turn ignition switch ON.

3. Check voltage between FPCM terminal 4 and ground with CONSULT or tester.

Voltage: Battery voltage

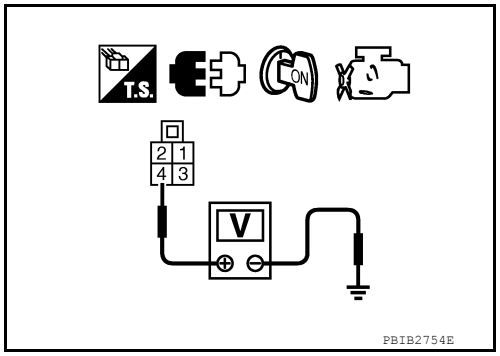

OK or NG

OK >> GO TO 3.
NG >> Repair open circuit or short to ground or short to power in harness or connectors.

3. CHECK FPCM GROUND CIRCUIT FOR OPEN AND SHORT-I

1. Turn ignition switch OFF.
2. Check harness continuity between FPCM terminal 1 and ground. Refer to Wiring Diagram.

Continuity should exist.

3. Also check harness for short to power.

OK or NG

OK >> GO TO 4.
NG >> Repair open circuit or short to power in harness or connectors.

4. CHECK FPCM GROUND CIRCUIT FOR OPEN AND SHORT-II

1. Disconnect “fuel level sensor unit and fuel pump” harness connector.
2. Disconnect dropping resistor harness connector.
3. Check harness continuity between the following;
“fuel level sensor unit and fuel pump” terminal 3 and dropping resistor terminal 2,
FPCM terminal 2 and dropping resister terminal 2.
Refer to Wiring Diagram.

Continuity should exist.

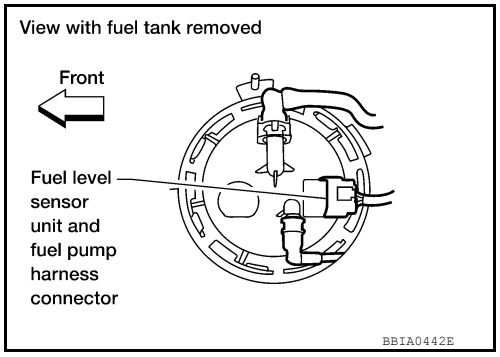

4. Check harness continuity between the following;
FPCM terminal 2 and ground,
“fuel level sensor and fuel pump” terminal 3 and ground.
Refer to Wiring Diagram.

Continuity should not exist.

5. Also check harness for short to power.

OK or NG

OK >> GO TO 6.
NG >> GO TO 5.

5. DETECT MALFUNCTIONING PART

Check the following.
- Harness connectors C1, E41
- Harness for open or short between “fuel level sensor unit and fuel pump” and dropping resistor
- Harness for open or short between FPCM and dropping resistor
- Harness for short between “fuel level sensor unit and fuel pump” and ground
- Harness for short between FPCM and ground

>> Repair open circuit or short to ground or short to power in harness or connectors.

6. CHECK FPCM INPUT SIGNAL CIRCUIT FOR OPEN AND SHORT

1. Disconnect ECM harness connector.

2. Check harness continuity between ECM terminal 38 and FPCM terminal 2.
   Refer to Wiring Diagram.

   Continuity should exist.

3. Check harness continuity between ECM terminal 38 and ground.
   Refer to Wiring Diagram.

   Continuity should not exist.

4. Also check harness for short to power.

OK or NG

OK >> GO TO 8.
NG >> GO TO 7.

7. DETECT MALFUNCTIONING PART

Check the following.
- Harness connectors F32, E2
- Harness for open or short between ECM and FPCM

>> Repair open circuit or short to ground or short to power in harness or connectors.

8. CHECK FPCM OUTPUT SIGNAL CIRCUIT FOR OPEN AND SHORT

1. Check harness continuity between ECM terminal 39 and FPCM terminal 3.
   Refer to Wiring Diagram.

   Continuity should exist.

2. Also check harness for short to ground and short to power.

OK or NG

OK >> GO TO 10.
NG >> GO TO 9.

9. DETECT MALFUNCTIONING PART

Check the following.
- Harness connectors F32, E2
- Harness for open or short between ECM and FPCM

>> Repair open circuit or short to ground or short to power in harness or connectors.

10. CHECK FPCM

Refer to EC-395, "Component Inspection".

OK or NG

OK >> GO TO 11.
NG >> Replace FPCM.

11. CHECK INTERMITTENT INCIDENT

Refer to GI-40, "How to Check Terminal" and GI-43, "Intermittent Incident".

>> **INSPECTION END**

Component Inspection

INFOID:0000000011291926

FUEL PUMP CONTROL MODULE (FPCM)

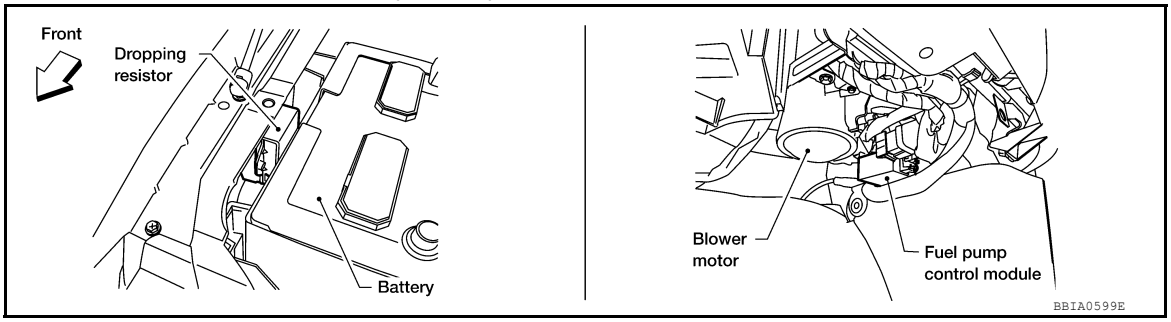

1. Start engine and warm it up to normal operating temperature.
2. Turn ignition switch OFF and wait at least 10 seconds.
3. Check voltage between FPCM terminal 2 and ground under the following conditions.

Condition	Voltage
When engine cranking	Approx. 0 V
After starting engine	Approx. 5 V

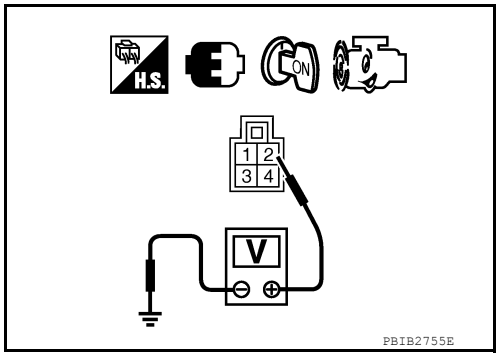

4. If NG, replace fuel pump control module.

P1225 TP SENSOR

Component Description

INFOID:0000000011291927

Electric throttle control actuator consists of throttle control motor, throttle position sensor, etc. The throttle position sensor responds to the throttle valve movement.
The throttle position sensor has the two sensors. These sensors are a kind of potentiometers which transform the throttle valve position into output voltage, and emit the voltage signal to the ECM. In addition, these sensors detect the opening and closing speed of the throttle valve and feed the voltage signals to the ECM. The ECM judges the current opening angle of the throttle valve from these signals and the ECM controls the throttle control motor to make the throttle valve opening angle properly in response to driving condition.

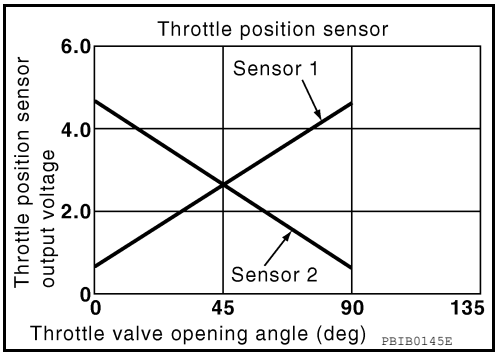

On Board Diagnosis Logic

INFOID:0000000011291928

The MIL will not light up for this self-diagnosis.

DTC No.	Trouble diagnosis name	DTC detecting condition	Possible cause
P1225 1225	Closed throttle position learning performance	Closed throttle position learning value is excessively low.	• Electric throttle control actuator (TP sensor 1 and 2)

DTC Confirmation Procedure

INFOID:0000000011291929

NOTE:
If DTC Confirmation Procedure has been previously conducted, always perform the following before conducting the next step.
1. Turn ignition switch OFF and wait at least 10 seconds.
2. Turn ignition switch ON.
3. Turn ignition switch OFF and wait at least 10 seconds.

TESTING CONDITION:
Before performing the following procedure, confirm that battery voltage is more than 10 V at idle.

1. Turn ignition switch ON.
2. Turn ignition switch OFF and wait at least 10 seconds.
3. Turn ignition switch ON.
4. Check 1st trip DTC.
5. If 1st trip DTC is detected, go to EC-396, "Diagnosis Procedure".

Diagnosis Procedure

INFOID:0000000011291930

1. CHECK ELECTRIC THROTTLE CONTROL ACTUATOR VISUALLY

1. Turn ignition switch OFF.
2. Remove the intake air duct. Refer to EM-25.
3. Check if foreign matter is caught between the throttle valve and the housing.

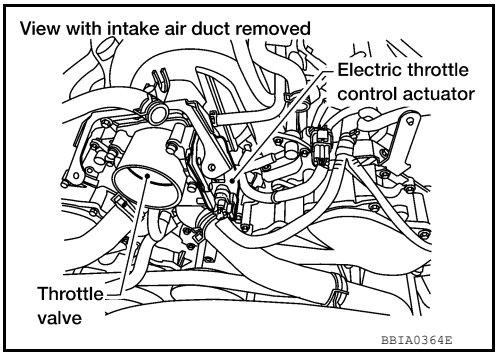

OK or NG

OK >> GO TO 2.
NG >> Remove the foreign matter and clean the electric throttle control actuator inside, and then perform throttle valve closed position learning. Refer to EC-128, "Throttle Valve Closed Position Learning".

2. REPLACE ELECTRIC THROTTLE CONTROL ACTUATOR

1. Replace the electric throttle control actuator. Refer to EM-26.
2. Perform EC-128, "Throttle Valve Closed Position Learning".
3. Perform EC-129, "Idle Air Volume Learning".

>> **INSPECTION END**

P1226 TP SENSOR

Component Description

INFOID:0000000011291931

Electric throttle control actuator consists of throttle control motor, throttle position sensor, etc. The throttle position sensor responds to the throttle valve movement.
The throttle position sensor has the two sensors. These sensors are a kind of potentiometers which transform the throttle valve position into output voltage, and emit the voltage signal to the ECM. In addition, these sensors detect the opening and closing speed of the throttle valve and feed the voltage signals to the ECM. The ECM judges the current opening angle of the throttle valve from these signals and the ECM controls the throttle control motor to make the throttle valve opening angle properly in response to driving condition.

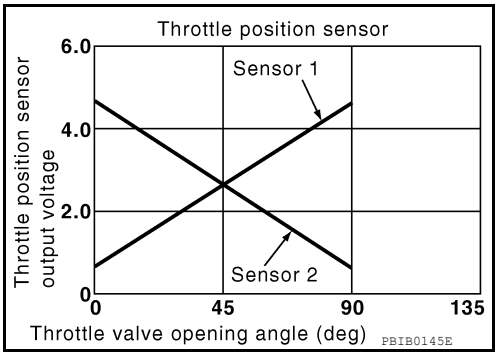

On Board Diagnosis Logic

INFOID:0000000011291932

The MIL will not light up for this self-diagnosis.

DTC No.	Trouble diagnosis name	DTC detecting condition	Possible cause
P1226 1226	Closed throttle position learning performance	Closed throttle position learning is not performed successfully, repeatedly.	• Electric throttle control actuator (TP sensor 1 and 2)

DTC Confirmation Procedure

INFOID:0000000011291933

NOTE:
If DTC Confirmation Procedure has been previously conducted, always perform the following before conducting the next step.
1. Turn ignition switch OFF and wait at least 10 seconds.
2. Turn ignition switch ON.
3. Turn ignition switch OFF and wait at least 10 seconds.

TESTING CONDITION:
Before performing the following procedure, confirm that battery voltage is more than 10 V at idle.

1. Turn ignition switch ON.
2. Turn ignition switch OFF and wait at least 10 seconds.
3. Turn ignition switch ON.
4. Repeat steps 2 and 3 for 32 times.
5. Check 1st trip DTC.
6. If 1st trip DTC is detected, go to EC-398, "Diagnosis Procedure".

Diagnosis Procedure

INFOID:0000000011291934

1. CHECK ELECTRIC THROTTLE CONTROL ACTUATOR VISUALLY

1. Turn ignition switch OFF.
2. Remove the intake air duct. Refer to EM-25.
3. Check if foreign matter is caught between the throttle valve and the housing.

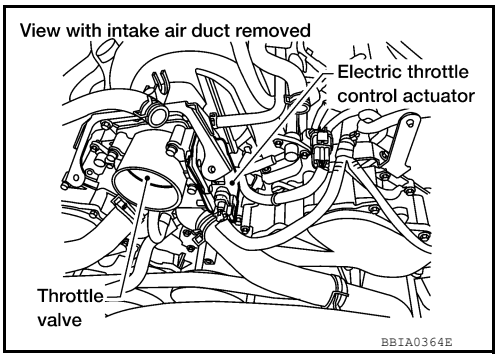

OK or NG

OK >> GO TO 2.
NG >> Remove the foreign matter and clean the electric throttle control actuator inside, and then perform throttle valve closed position learning. Refer to EC-128, "Throttle Valve Closed Position Learning".

2. REPLACE ELECTRIC THROTTLE CONTROL ACTUATOR

1. Replace the electric throttle control actuator. Refer to EM-26.
2. Perform EC-128, "Throttle Valve Closed Position Learning".
3. Perform EC-129, "Idle Air Volume Learning".

>> **INSPECTION END**

P1550 BATTERY CURRENT SENSOR

Component Description

INFOID:0000000011291935

The power generation voltage variable control enables fuel consumption to be decreased by reducing the engine load which is caused by the power generation of the generator. The battery current sensor (1) is installed to the battery cable at the negative terminal. The sensor measures the charging/discharging current of the battery. Based on the sensor signal, ECM judges whether or not the power generation voltage variable control is performed. When performing the power generation voltage variable control, ECM calculates the target power generation voltage based on the sensor signal. And ECM sends the calculated value as the power generation command value to IPDM E/R. For the details of the power generation voltage variable control, refer to CHG-12, "System Description".

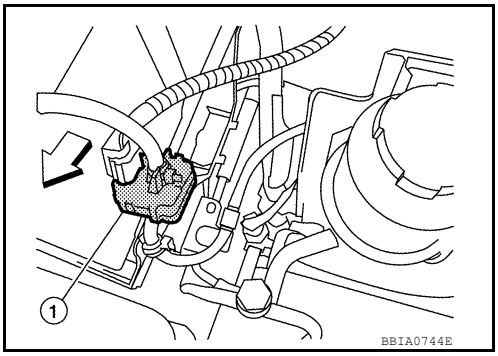

⇦: Vehicle front

CAUTION:
Do not connect the electrical component or the ground wire directly to the battery terminal. The connection causes the malfunction of the power generation voltage variable control, and then the battery discharge may occur.

On Board Diagnosis Logic

INFOID:0000000011291936

The MIL will not light up for this self-diagnosis.
NOTE:
If DTC P1550 is displayed with DTC P0643, first perform the trouble diagnosis for DTC P0643. Refer to EC-374.

DTC No.	Trouble diagnosis name	DTC detecting condition	Possible cause
P1550 1550	Battery current sensor circuit range/performance	The output voltage of the battery current sensor remains within the specified range while engine is running.	• Harness or connectors (The sensor circuit is open or shorted.) • Battery current sensor

DTC Confirmation Procedure

INFOID:0000000011291937

If DTC Confirmation Procedure has been previously conducted, always perform the following before conducting the next step.
1. Turn ignition switch OFF and wait at least 10 seconds.
2. Turn ignition switch ON.
3. Turn ignition switch OFF and wait at least 10 seconds.

TESTING CONDITION:
Before performing the following procedure, confirm that battery voltage is more than 8 V at idle.

1. Start engine and wait at least 10 seconds.
2. Check 1st trip DTC.
3. If 1st trip DTC is detected, go to EC-400, "Diagnosis Procedure".

Diagnosis Procedure

INFOID:0000000011291938

1. CHECK GROUND CONNECTIONS

1. Turn ignition switch OFF.
2. Loosen and retighten ground screws on the body.

Refer to EC-154, "Ground Inspection".

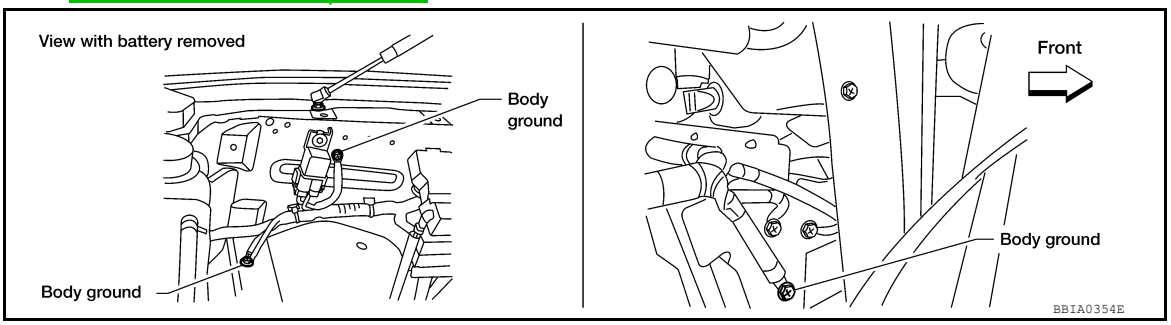

OK or NG

OK >> GO TO 2.
NG >> Repair or replace ground connections.

2. CHECK BATTERY CURRENT SENSOR POWER SUPPLY CIRCUIT

1. Disconnect battery current sensor (1) harness connector.
2. Turn ignition switch ON.

⇦: Vehicle front

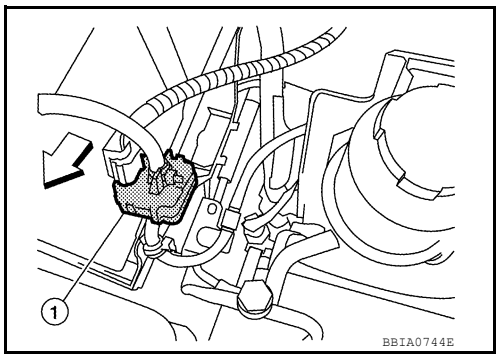

3. Check voltage between battery current sensor terminal 1 and ground with CONSULT or tester.

Voltage: Approximately 5 V

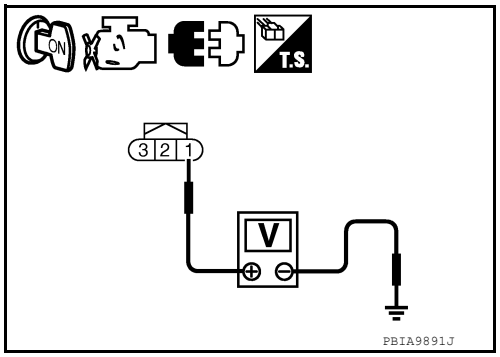

OK or NG

OK >> GO TO 4.
NG >> GO TO 3.

3. DETECT MALFUNCTIONING PART

Check the following.
- Harness connectors E5, F14
- Harness for open or short between battery current sensor and ECM

>> Repair open circuit or short to ground or short to power in harness or connectors.

4. CHECK BATTERY CURRENT SENSOR GROUND CIRCUIT FOR OPEN AND SHORT

1. Turn ignition switch OFF.
2. Disconnect ECM harness connector.
3. Check harness continuity between battery current sensor terminal 2 and ECM terminal 67. Refer to Wiring Diagram.

Continuity should exist.

4. Also check harness for short to ground and short to power.

OK or NG

OK >> GO TO 6.
NG >> GO TO 5.

5. DETECT MALFUNCTIONING PART

Check the following.
- Harness connectors E5, F14
- Harness for open or short between battery current sensor and ECM

>> Repair open circuit or short to ground or short to power in harness or connectors.

6. CHECK BATTERY CURRENT SENSOR INPUT SIGNAL CIRCUIT FOR OPEN AND SHORT

1. Check harness continuity between battery current sensor terminal 3 and ECM terminal 71. Refer to Wiring Diagram.

Continuity should exist.

2. Also check harness for short to ground and short to power.

OK or NG

OK >> GO TO 8.
NG >> GO TO 7.

7. DETECT MALFUNCTIONING PART

Check the following.
- Harness connectors E2, F32
- Harness for open or short between battery current sensor and ECM

>> Repair open circuit or short to ground or short to power in harness or connectors.

8. CHECK BATTERY CURRENT SENSOR

Refer to EC-402, "Component Inspection".

OK or NG

OK >> GO TO 9.
NG >> Replace battery negative cable assembly.

9. CHECK INTERMITTENT INCIDENT

Refer to GI-40, "How to Check Terminal" and GI-43, "Intermittent Incident".

>> **INSPECTION END**

Component Inspection

INFOID:0000000011291939

BATTERY CURRENT SENSOR

1. Reconnect harness connectors disconnected.
2. Disconnect battery negative cable (1).
3. Install jumper cable (A) between battery negative terminal and body ground.
4. Turn ignition switch ON.

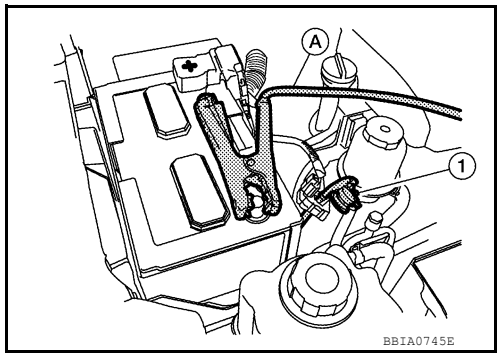

5. Check voltage between ECM terminal 71 (battery current sensor signal) and ground.

Voltage: Approximately 2.5 V

6. If NG, replace battery negative cable assembly.

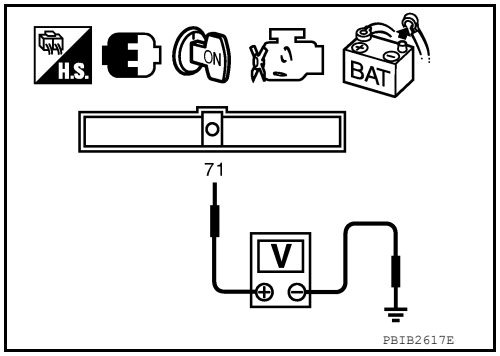

P1551, P1552 BATTERY CURRENT SENSOR

Component Description

INFOID:0000000011291940

The power generation voltage variable control enables fuel consumption to be decreased by reducing the engine load which is caused by the power generation of the generator. The battery current sensor (1) is installed to the battery cable at the negative terminal. The sensor measures the charging/discharging current of the battery. Based on the sensor signal, ECM judges whether or not the power generation voltage variable control is performed. When performing the power generation voltage variable control, ECM calculates the target power generation voltage based on the sensor signal. And ECM sends the calculated value as the power generation command value to IPDM E/R. For the details of the power generation voltage variable control, refer to CHG-12, "System Description".

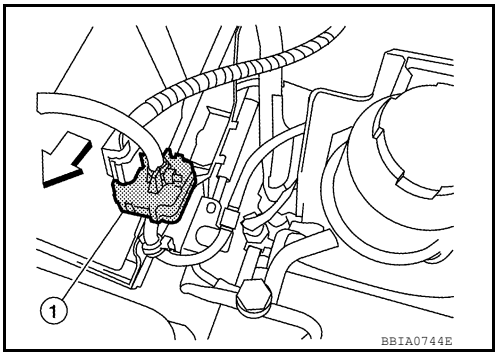

⇦: Vehicle front

CAUTION:
Do not connect the electrical component or the ground wire directly to the battery terminal. The connection causes the malfunction of the power generation voltage variable control, and then the battery discharge may occur.

On Board Diagnosis Logic

INFOID:0000000011291941

The MIL will not light up for these self-diagnoses.
NOTE:
If DTC P1551 or P1552 is displayed with DTC P0643, first perform the trouble diagnosis for DTC P0643. Refer to EC-374.

DTC No.	Trouble diagnosis name	DTC detecting condition	Possible cause
P1551 1551	Battery current sensor circuit low input	An excessively low voltage from the sensor is sent to ECM.	• Harness or connectors (The sensor circuit is open or shorted.) • Battery current sensor
P1552 1552	Battery current sensor circuit high input	An excessively high voltage from the sensor is sent to ECM.	

DTC Confirmation Procedure

INFOID:0000000011291942

If DTC Confirmation Procedure has been previously conducted, always perform the following before conducting the next step.
1. Turn ignition switch OFF and wait at least 10 seconds.
2. Turn ignition switch ON.
3. Turn ignition switch OFF and wait at least 10 seconds.

TESTING CONDITION:
Before performing the following procedure, confirm that battery voltage is more than 8 V with ignition switch ON

1. Turn ignition switch ON.
2. Wait at least 10 seconds.
3. Check 1st trip DTC.
4. If 1st trip DTC is detected, go to EC-404, "Diagnosis Procedure".

Diagnosis Procedure

INFOID:0000000011291943

1. CHECK GROUND CONNECTIONS

1. Turn ignition switch OFF.
2. Loosen and retighten ground screws on the body.

Refer to EC-154, "Ground Inspection".

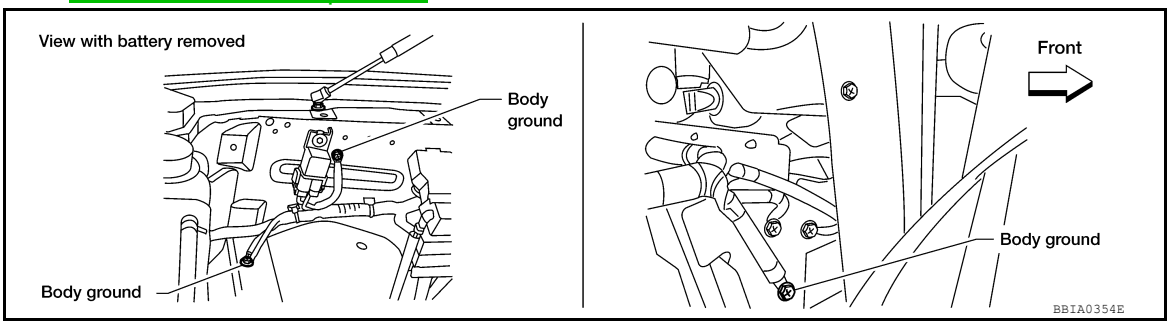

OK or NG

OK >> GO TO 2.
NG >> Repair or replace ground connections.

2. CHECK BATTERY CURRENT SENSOR POWER SUPPLY CIRCUIT

1. Disconnect battery current sensor (1) harness connector.
2. Turn ignition switch ON.

⇦: Vehicle front

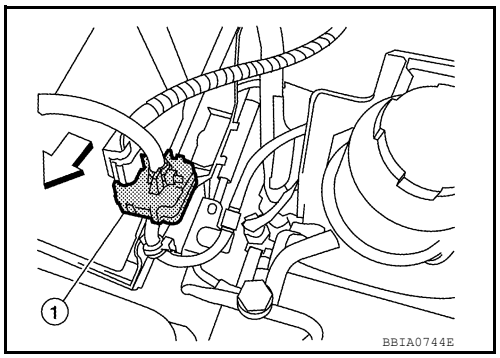

3. Check voltage between battery current sensor terminal 1 and ground with CONSULT or tester.

Voltage: Approximately 5 V

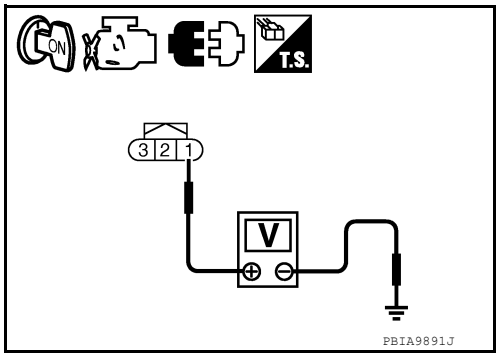

OK or NG

OK >> GO TO 4.
NG >> GO TO 3.

3. DETECT MALFUNCTIONING PART

Check the following.
- Harness connectors E5, F14
- Harness for open or short between battery current sensor and ECM

>> Repair open circuit or short to ground or short to power in harness or connectors.

4. CHECK BATTERY CURRENT SENSOR GROUND CIRCUIT FOR OPEN AND SHORT

1. Turn ignition switch OFF.
2. Disconnect ECM harness connector.
3. Check harness continuity between battery current sensor terminal 2 and ECM terminal 67. Refer to Wiring Diagram.

Continuity should exist.

4. Also check harness for short to ground and short to power.

OK or NG

OK >> GO TO 6.
NG >> GO TO 5.

5. DETECT MALFUNCTIONING PART

Check the following.
- Harness connectors E5, F14
- Harness for open or short between battery current sensor and ECM

>> Repair open circuit or short to ground or short to power in harness or connectors.

6. CHECK BATTERY CURRENT SENSOR INPUT SIGNAL CIRCUIT FOR OPEN AND SHORT

1. Check harness continuity between battery current sensor terminal 3 and ECM terminal 71. Refer to Wiring Diagram.

Continuity should exist.

2. Also check harness for short to ground and short to power.

OK or NG

OK >> GO TO 8.
NG >> GO TO 7.

7. DETECT MALFUNCTIONING PART

Check the following.
- Harness connectors E2, F32
- Harness for open or short between battery current sensor and ECM

>> Repair open circuit or short to ground or short to power in harness or connectors.

8. CHECK BATTERY CURRENT SENSOR

Refer to EC-406, "Component Inspection".

OK or NG

OK >> GO TO 9.
NG >> Replace battery negative cable assembly.

9. CHECK INTERMITTENT INCIDENT

Refer to GI-40, "How to Check Terminal" and GI-43, "Intermittent Incident".

>> **INSPECTION END**

Component Inspection

INFOID:0000000011291944

BATTERY CURRENT SENSOR

1. Reconnect harness connectors disconnected.
2. Disconnect battery negative cable (1).
3. Install jumper cable (A) between battery negative terminal and body ground.
4. Turn ignition switch ON.

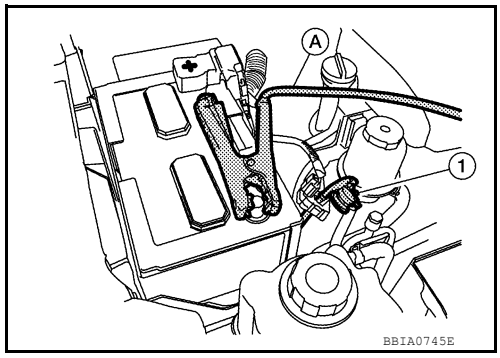

5. Check voltage between ECM terminal 71 (battery current sensor signal) and ground.

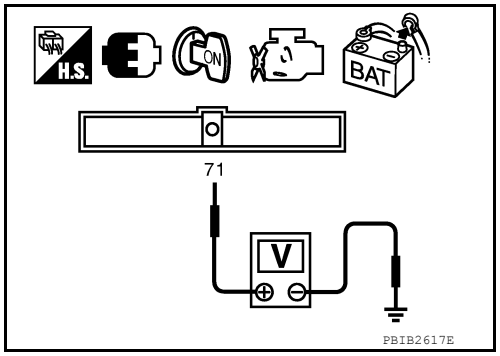

Voltage: Approximately 2.5 V

6. If NG, replace battery negative cable assembly.

P1553 BATTERY CURRENT SENSOR

Component Description

INFOID:0000000011291945

The power generation voltage variable control enables fuel consumption to be decreased by reducing the engine load which is caused by the power generation of the generator. The battery current sensor (1) is installed to the battery cable at the negative terminal. The sensor measures the charging/discharging current of the battery. Based on the sensor signal, ECM judges whether or not the power generation voltage variable control is performed. When performing the power generation voltage variable control, ECM calculates the target power generation voltage based on the sensor signal. And ECM sends the calculated value as the power generation command value to IPDM E/R. For the details of the power generation voltage variable control, refer to CHG-12, "System Description".

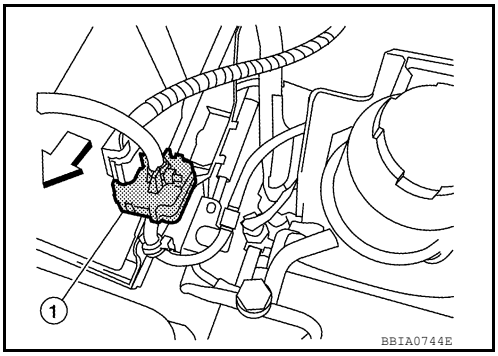

⇦: Vehicle front

CAUTION:
Do not connect the electrical component or the ground wire directly to the battery terminal. The connection causes the malfunction of the power generation voltage variable control, and then the battery discharge may occur.

On Board Diagnosis Logic

INFOID:0000000011291946

The MIL will not light up for this self-diagnosis.
NOTE:
If DTC P1553 is displayed with DTC P0643, first perform the trouble diagnosis for DTC P0643. Refer to EC-374.

DTC No.	Trouble diagnosis name	DTC detecting condition	Possible cause
P1553 1553	Battery current sensor performance	The signal voltage transmitted from the sensor to ECM is higher than the amount of the maximum power generation.	• Harness or connectors (The sensor circuit is open or shorted.) • Battery current sensor

DTC Confirmation Procedure

INFOID:0000000011291947

If DTC Confirmation Procedure has been previously conducted, always perform the following before conducting the next step.
1. Turn ignition switch OFF and wait at least 10 seconds.
2. Turn ignition switch ON.
3. Turn ignition switch OFF and wait at least 10 seconds.

TESTING CONDITION:
Before performing the following procedure, confirm that battery voltage is more than 8 V at idle.

1. Start engine and wait at least 10 seconds.
2. Check 1st trip DTC.
3. If 1st trip DTC is detected, go to EC-408, "Diagnosis Procedure".

Diagnosis Procedure

INFOID:0000000011291948

1. CHECK GROUND CONNECTIONS

1. Turn ignition switch OFF.
2. Loosen and retighten ground screws on the body.

Refer to EC-154, "Ground Inspection".

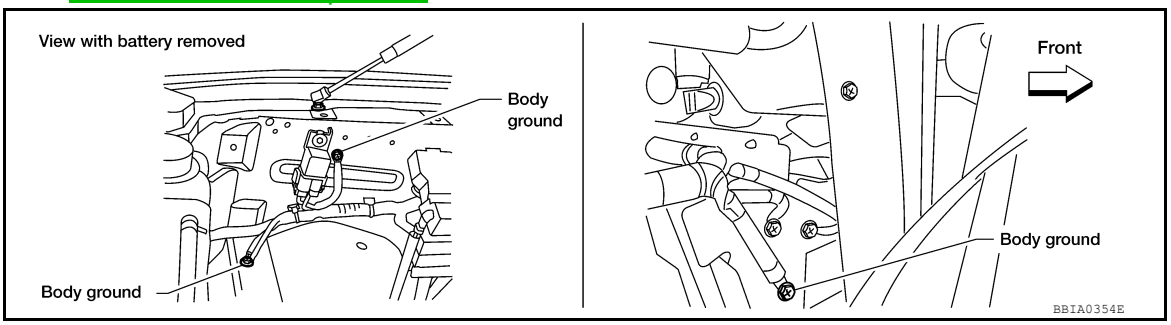

OK or NG

OK >> GO TO 2.
NG >> Repair or replace ground connections.

2. CHECK BATTERY CURRENT SENSOR POWER SUPPLY CIRCUIT

1. Disconnect battery current sensor (1) harness connector.
2. Turn ignition switch ON.

⇦: Vehicle front

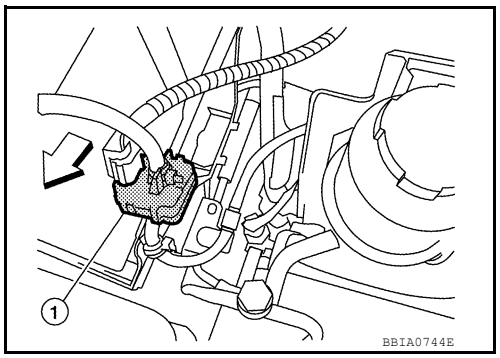

3. Check voltage between battery current sensor terminal 1 and ground with CONSULT or tester.

Voltage: Approximately 5 V

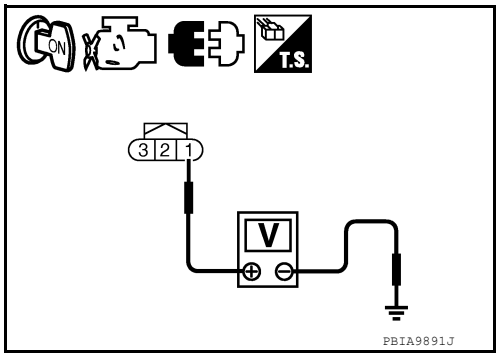

OK or NG

OK >> GO TO 4.
NG >> GO TO 3.

3. DETECT MALFUNCTIONING PART

Check the following.
- Harness connectors E5, F14
- Harness for open or short between battery current sensor and ECM

>> Repair open circuit or short to ground or short to power in harness or connectors.

4. CHECK BATTERY CURRENT SENSOR GROUND CIRCUIT FOR OPEN AND SHORT

1. Turn ignition switch OFF.
2. Disconnect ECM harness connector.
3. Check harness continuity between battery current sensor terminal 2 and ECM terminal 67. Refer to Wiring Diagram.

Continuity should exist.

4. Also check harness for short to ground and short to power.

OK or NG

OK >> GO TO 6.
NG >> GO TO 5.

5. DETECT MALFUNCTIONING PART

Check the following.
- Harness connectors E5, F14
- Harness for open or short between battery current sensor and ECM

>> Repair open circuit or short to ground or short to power in harness or connectors.

6. CHECK BATTERY CURRENT SENSOR INPUT SIGNAL CIRCUIT FOR OPEN AND SHORT

1. Check harness continuity between battery current sensor terminal 3 and ECM terminal 71. Refer to Wiring Diagram.

Continuity should exist.

2. Also check harness for short to ground and short to power.

OK or NG

OK >> GO TO 8.
NG >> GO TO 7.

7. DETECT MALFUNCTIONING PART

Check the following.
- Harness connectors E2, F32
- Harness for open or short between battery current sensor and ECM

>> Repair open circuit or short to ground or short to power in harness or connectors.

8. CHECK BATTERY CURRENT SENSOR

Refer to EC-410, "Component Inspection".

OK or NG

OK >> GO TO 9.
NG >> Replace battery negative cable assembly.

9. CHECK INTERMITTENT INCIDENT

Refer to GI-40, "How to Check Terminal" and GI-43, "Intermittent Incident".

>> **INSPECTION END**

Component Inspection

INFOID:0000000011291949

BATTERY CURRENT SENSOR

1. Reconnect harness connectors disconnected.
2. Disconnect battery negative cable (1).
3. Install jumper cable (A) between battery negative terminal and body ground.
4. Turn ignition switch ON.

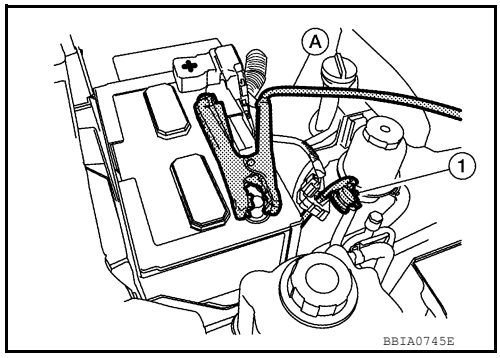

5. Check voltage between ECM terminal 71 (battery current sensor signal) and ground.

Voltage: Approximately 2.5 V

6. If NG, replace battery negative cable assembly.

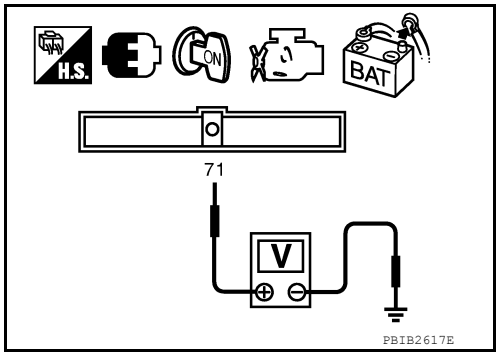

P1554 BATTERY CURRENT SENSOR

Component Description

INFOID:0000000011291950

The power generation voltage variable control enables fuel consumption to be decreased by reducing the engine load which is caused by the power generation of the generator. The battery current sensor (1) is installed to the battery cable at the negative terminal. The sensor measures the charging/discharging current of the battery. Based on the sensor signal, ECM judges whether or not the power generation voltage variable control is performed. When performing the power generation voltage variable control, ECM calculates the target power generation voltage based on the sensor signal. And ECM sends the calculated value as the power generation command value to IPDM E/R. For the details of the power generation voltage variable control, refer to CHG-12, "System Description".

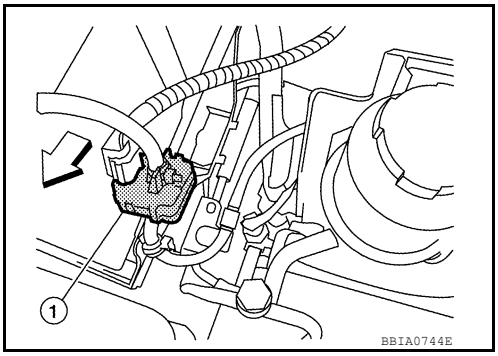

⇦: Vehicle front

CAUTION:
Do not connect the electrical component or the ground wire directly to the battery terminal. The connection causes the malfunction of the power generation voltage variable control, and then the battery discharge may occur.

On Board Diagnosis Logic

INFOID:0000000011291951

The MIL will not light up for this self-diagnosis.
NOTE:
If DTC P1554 is displayed with DTC P0643, first perform the trouble diagnosis for DTC P0643. Refer to EC-374.

DTC No.	Trouble diagnosis name	DTC detecting condition	Possible cause
P1554 1554	Battery current sensor performance	The output voltage of the battery current sensor is lower than the specified value while the battery voltage is high enough.	• Harness or connectors (The sensor circuit is open or shorted.) • Battery current sensor

Overall Function Check

INFOID:0000000011291952

Use this procedure to check the overall function of the battery current sensor circuit. During this check, a 1st trip DTC might not be confirmed.
TESTING CONDITION:
- **Before performing the following procedure, confirm that battery voltage is more than 12.8 V at idle.**
- **Before performing the following procedure, confirm that all load switches and A/C switch are turned OFF.**

WITH CONSULT

1. Start engine and let it idle.
2. Select “BAT CUR SEN” in “DATA MONITOR” mode with CONSULT.
3. Check “BAT CUR SEN” indication for 10 seconds.
   “BAT CUR SEN” should be above 2,300 mV at least once.
4. If NG, go to EC-413, "Diagnosis Procedure".

WITH GST

1. Start engine and let it idle.

2. Check voltage between ECM terminal 71 (battery current sensor signal) and ground for 10 seconds.
The voltage should be above 2.3 V at least once.
3. If NG, go to EC-413, "Diagnosis Procedure".

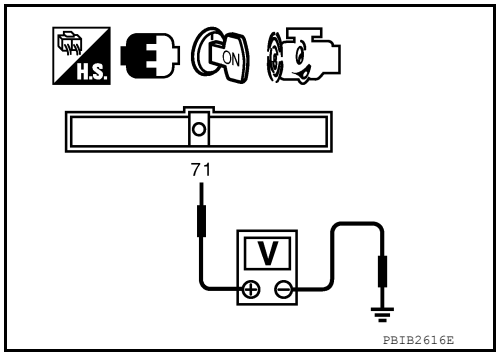

Diagnosis Procedure

INFOID:0000000011291953

1. CHECK GROUND CONNECTIONS

1. Turn ignition switch OFF.
2. Loosen and retighten ground screws on the body.
Refer to EC-154, "Ground Inspection".

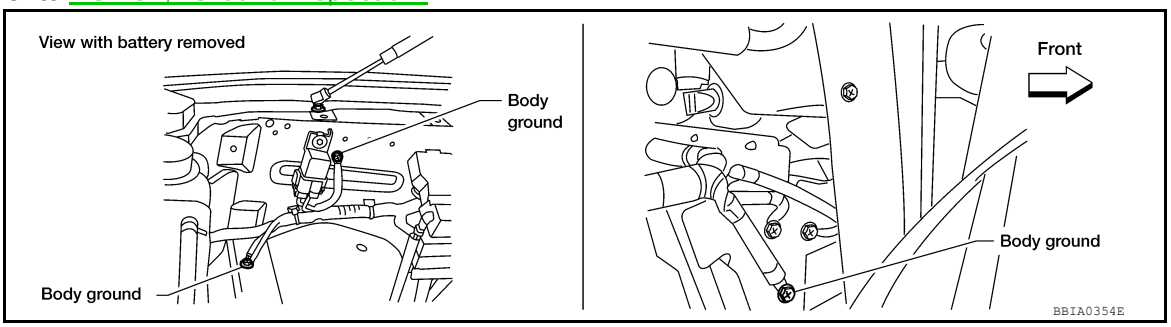

OK or NG

OK >> GO TO 2.
NG >> Repair or replace ground connections.

2. CHECK BATTERY CURRENT SENSOR POWER SUPPLY CIRCUIT

1. Disconnect battery current sensor (1) harness connector.
2. Turn ignition switch ON.

⇦: Vehicle front

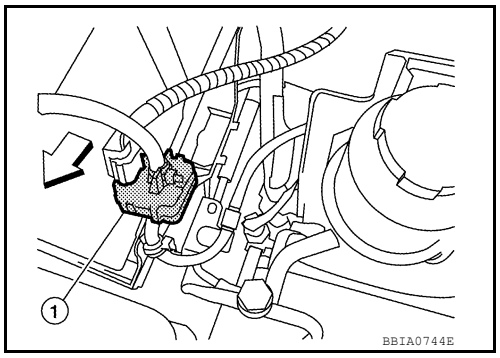

3. Check voltage between battery current sensor terminal 1 and ground with CONSULT or tester.

Voltage: Approximately 5 V

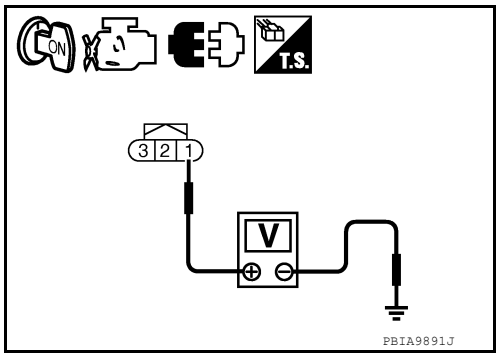

OK or NG

OK >> GO TO 4.
NG >> GO TO 3.

3. DETECT MALFUNCTIONING PART

Check the following.

- Harness connectors E5, F14
- Harness for open or short between battery current sensor and ECM

>> Repair open circuit or short to ground or short to power in harness or connectors.

4. CHECK BATTERY CURRENT SENSOR GROUND CIRCUIT FOR OPEN AND SHORT

1. Turn ignition switch OFF.
2. Disconnect ECM harness connector.
3. Check harness continuity between battery current sensor terminal 2 and ECM terminal 67.
   Refer to Wiring Diagram.

Continuity should exist.

4. Also check harness for short to ground and short to power.

OK or NG

OK >> GO TO 6.
NG >> GO TO 5.

5. DETECT MALFUNCTIONING PART

Check the following.
- Harness connectors E5, F14
- Harness for open or short between battery current sensor and ECM

>> Repair open circuit or short to ground or short to power in harness or connectors.

6. CHECK BATTERY CURRENT SENSOR INPUT SIGNAL CIRCUIT FOR OPEN AND SHORT

1. Check harness continuity between battery current sensor terminal 3 and ECM terminal 71.
   Refer to Wiring Diagram.

Continuity should exist.

2. Also check harness for short to ground and short to power.

OK or NG

OK >> GO TO 8.
NG >> GO TO 7.

7. DETECT MALFUNCTIONING PART

Check the following.
- Harness connectors E2, F32
- Harness for open or short between battery current sensor and ECM

>> Repair open circuit or short to ground or short to power in harness or connectors.

8. CHECK BATTERY CURRENT SENSOR

Refer to EC-383, "Component Inspection".

OK or NG

OK >> GO TO 9.
NG >> Replace battery negative cable assembly.

9. CHECK INTERMITTENT INCIDENT

Refer to GI-40, "How to Check Terminal" and GI-43, "Intermittent Incident".

>> **INSPECTION END**

Component Inspection

INFOID:0000000011291954

BATTERY CURRENT SENSOR

1. Reconnect harness connectors disconnected.

2. Disconnect battery negative cable (1).
3. Install jumper cable (A) between battery negative terminal and body ground.
4. Turn ignition switch ON.

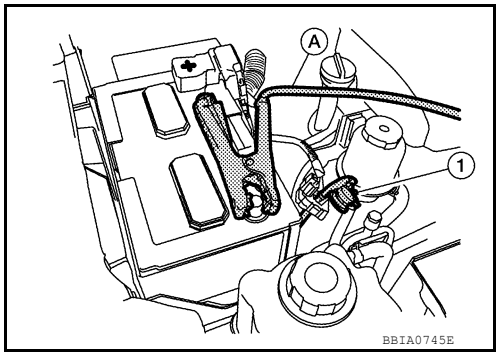

5. Check voltage between ECM terminal 71 (battery current sensor signal) and ground.

Voltage: Approximately 2.5 V

6. If NG, replace battery negative cable assembly.

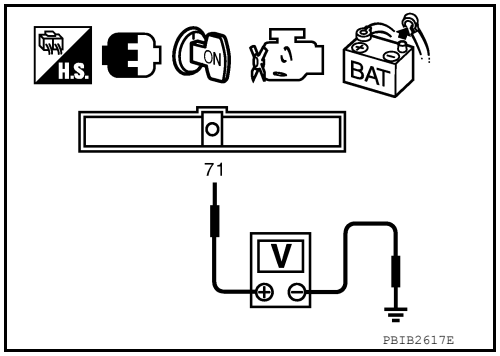

P1564 ASCD STEERING SWITCH

Component Description

INFOID:0000000011291955

ASCD steering switch has variant values of electrical resistance for each button. ECM reads voltage variation of switch, and determines which button is operated.

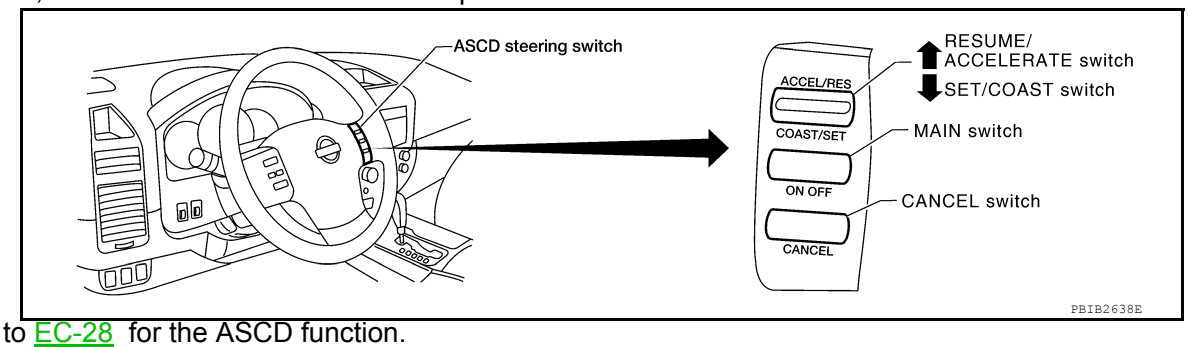

Refer to EC-28 for the ASCD function.

On Board Diagnosis Logic

INFOID:0000000011291956

- **This self-diagnosis has the one trip detection logic.**
- **The MIL will not light up for this self-diagnosis.**

NOTE:
If DTC P1564 is displayed with DTC P0605, first perform the trouble diagnosis for DTC P0605. Refer to EC-369.

DTC No.	Trouble Diagnosis Name	DTC Detecting Condition	Possible Cause
P1564 1564	ASCD steering switch	• An excessively high voltage signal from the ASCD steering switch is sent to ECM. • ECM detects that input signal from the ASCD steering switch is out of the specified range. • ECM detects that the ASCD steering switch is stuck ON.	• Harness or connectors (The switch circuit is open or shorted.) • ASCD steering switch • Combination switch (spiral cable) • ECM

DTC Confirmation Procedure

INFOID:0000000011291957

1. If DTC Confirmation Procedure has been previously conducted, always perform the following before conducting the next step.

a. Turn ignition switch OFF and wait at least 10 seconds.
b. Turn ignition switch ON.
c. Turn ignition switch OFF and wait at least 10 seconds.

2. Turn ignition switch ON.
3. Wait at least 10 seconds.
4. Press MAIN switch for at least 10 seconds, then release it and wait at least 10 seconds.
5. Press CANCEL switch for at least 10 seconds, then release it and wait at least 10 seconds.
6. Press RESUME/ACCELERATE switch for at least 10 seconds, then release it and wait at least 10 seconds.
7. Press SET/COAST switch for at least 10 seconds, then release it and wait at least 10 seconds.
8. Check DTC.
9. If DTC is detected, go to EC-416, "Diagnosis Procedure".

Diagnosis Procedure

INFOID:0000000011291958

1.CHECK GROUND CONNECTIONS

1. Turn ignition switch OFF.
2. Loosen and retighten three ground screws on the body.

Refer to EC-154, "Ground Inspection".

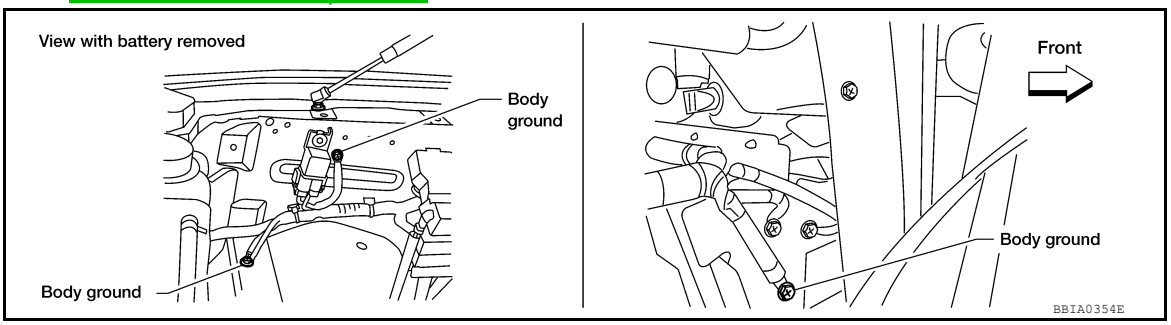

OK or NG

OK >> GO TO 2.
NG >> Repair or replace ground connections.

2. CHECK ASCD STEERING SWITCH CIRCUIT

With CONSULT

1. Turn ignition switch ON.
2. Select “MAIN SW”, “CANCEL SW”, RESUME/ACC SW” and “SET SW” in “DATA MONITOR” mode with CONSULT.
3. Check each item indication under the following conditions.

Switch	Monitor item	Condition	Indication
MAIN switch	MAIN SW	Pressed	ON
		Released	OFF
CANCEL switch	CANCEL SW	Pressed	ON
		Released	OFF
RESUME/ACCELERATE switch	RESUME/ACC SW	Pressed	ON
		Released	OFF
SET/COAST switch	SET SW	Pressed	ON
		Released	OFF

Without CONSULT

1. Turn ignition switch ON.
2. Check voltage between ECM terminal 99 and ground with pressing each button.

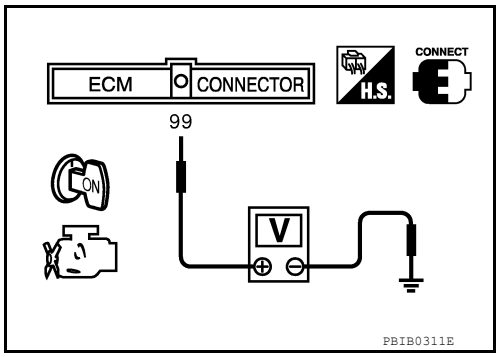

Switch	Condition	Voltage [V]
MAIN switch	Pressed	Approx. 0
	Released	Approx. 4
CANCEL switch	Pressed	Approx. 1
	Released	Approx. 4
RESUME/ACCELERATE switch	Pressed	Approx. 3
	Released	Approx. 4
SET/COAST switch	Pressed	Approx. 2
	Released	Approx. 4

OK or NG

OK >> GO TO 8.
NG >> GO TO 3.

3. CHECK ASCD STEERING SWITCH GROUND CIRCUIT FOR OPEN AND SHORT

1. Turn ignition switch OFF.

2. Disconnect combination switch (spiral cable) harness connector M30.
3. Disconnect ECM harness connector.
4. Check harness continuity between combination switch (spiral cable) terminal 26 and ECM terminal 67.
   Refer to Wiring Diagram.

   Continuity should exist.

5. Also check harness for short to ground and short to power.

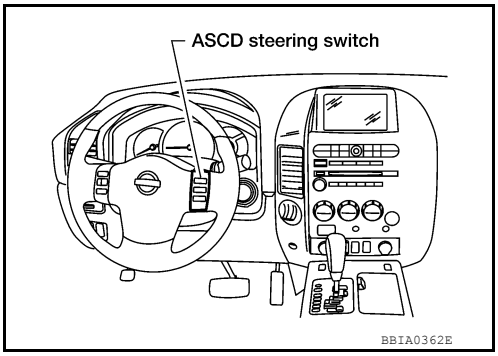

OK or NG

OK >> GO TO 5.
NG >> GO TO 4.

4. DETECT MALFUNCTIONING PART

Check the following.
- Harness connectors M31, E152
- Harness connectors E5, F14
- Combination switch (spiral cable)
- Harness for open and short between ECM and combination switch (spiral cable)

>> Repair open circuit or short to ground or short to power in harness or connectors.

5. CHECK ASCD STEERING SWITCH INPUT SIGNAL CIRCUIT FOR OPEN AND SHORT

1. Check harness continuity between ECM terminal 99 and combination switch (spiral cable) terminal 27.
   Refer to Wiring Diagram.

   Continuity should exist.

2. Also check harness for short to ground and short to power.

OK or NG

OK >> GO TO 7.
NG >> GO TO 6.

6. DETECT MALFUNCTIONING PART

Check the following.
- Harness connectors M31, E152
- Combination switch (spiral cable)
- Harness for open and short between ECM and combination switch (spiral cable)

>> Repair open circuit or short to ground or short to power in harness or connectors.

7. CHECK ASCD STEERING SWITCH

Refer to EC-418, "Component Inspection".

OK or NG

OK >> GO TO 8.
NG >> Replace ASCD steering switch. Refer to ST-28, "Removal and Installation".

8. CHECK INTERMITTENT INCIDENT

Refer to GI-40, "How to Check Terminal" and GI-43, "Intermittent Incident".

>> **INSPECTION END**

Component Inspection

INFOID:0000000011291959

ASCD STEERING SWITCH

1. Disconnect combination switch (spiral cable) harness connector M102.

2. Check continuity between combination switch (spiral cable) terminals 14 and 15 with pushing each switch.

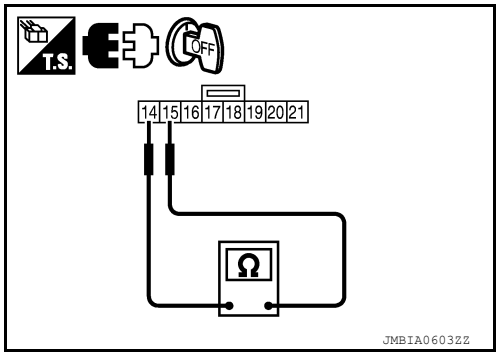

Switch	Condition	Resistance [Ω]
MAIN switch	Pressed	Approx. 0
	Released	Approx. 4,000
CANCEL switch	Pressed	Approx. 250
	Released	Approx. 4,000
RESUME/ACCELERATE switch	Pressed	Approx. 1,480
	Released	Approx. 4,000
SET/COAST switch	Pressed	Approx. 660
	Released	Approx. 4,000

P1572 ASCD BRAKE SWITCH

Component Description

INFOID:0000000011291960

When the brake pedal is depressed, ASCD brake switch is turned OFF and stop lamp switch is turned ON. ECM detects the state of the brake pedal by this input of two kinds (ON/OFF signal).
Refer to EC-28 for the ASCD function.

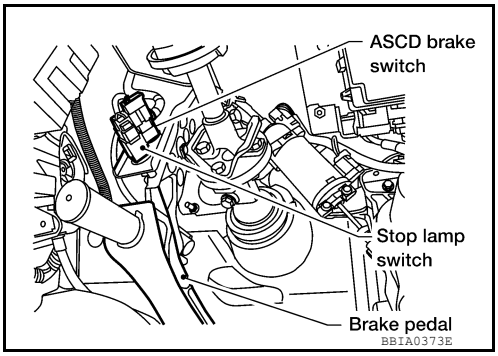

On Board Diagnosis Logic

INFOID:0000000011291961

- **This self-diagnosis has the one trip detection logic.**
- **The MIL will not light up for this self-diagnosis.**

NOTE:
- **If DTC P 1572 is displayed with DTC P0605, first perform the trouble diagnosis for DTC P0605. Refer to EC-369.**
- **This self-diagnosis has the one trip detection logic. When malfunction A is detected, DTC is not stored in ECM memory. And in that case, 1st trip DTC and 1st trip freeze frame data are displayed. 1st trip DTC is erased when ignition switch OFF. And even when malfunction A is detected in two consecutive trips, DTC is not stored in ECM memory.**

DTC No.	Trouble Diagnosis Name	DTC Detecting Condition		Possible Cause
P1572 1572	ASCD brake switch	A)	When the vehicle speed is above 30km/h (19 MPH), ON signals from the stop lamp switch and the ASCD brake switch are sent to ECM at the same time.	• Harness or connectors (The stop lamp switch circuit is shorted.) • Harness or connectors (The ASCD brake switch circuit is shorted.) • Stop lamp switch • ASCD brake switch • Incorrect stop lamp switch installation • Incorrect ASCD brake switch installation • ECM
		B)	ASCD brake switch signal is not sent to ECM for extremely long time while the vehicle is driving	

DTC Confirmation Procedure

INFOID:0000000011291962

CAUTION:
Always drive vehicle at a safe speed.

NOTE:
- Procedure for malfunction B is not described here. It takes extremely long time to complete procedure for malfunction B. By performing procedure for malfunction A, the incident that causes malfunction B can be detected.
- If DTC Confirmation Procedure has been previously conducted, always perform the following before conducting the next step.

1. Turn ignition switch OFF and wait at least 10 seconds.
2. Turn ignition switch ON.
3. Turn ignition switch OFF and wait at least 10 seconds.

TESTING CONDITION:
Steps 4 and 7 may be conducted with the drive wheels lifted in the shop or by driving the vehicle. If a road test is expected to be easier, it is unnecessary to lift the vehicle.

WITH CONSULT

1. Start engine (VDC switch OFF).
2. Select “DATA MONITOR” mode with CONSULT.
3. Press MAIN switch and make sure that CRUISE indicator lights up.

4. Drive the vehicle for at least 5 consecutive seconds under the following condition.

VHCL SPEED SE	More than 30 km/h (19 MPH)
Selector lever	Suitable position

5. Check 1st trip DTC.
6. If 1st trip DTC is detected, go to EC-421, "Diagnosis Procedure".
   If 1st trip DTC is not detected, go to the following step.
7. Drive the vehicle for at least 5 consecutive seconds under the following condition.

VHCL SPEED SE	More than 30 km/h (19 MPH)
Selector lever	Suitable position
Driving location	Depress the brake pedal for more than five seconds so as not to come off from the above-mentioned condition.

8. Check 1st trip DTC.
9. If 1st trip DTC is detected, go to EC-421, "Diagnosis Procedure".

WITH GST
Follow the procedure “WITH CONSULT” above.

Diagnosis Procedure

INFOID:0000000011291963

1. CHECK OVERALL FUNCTION-I

With CONSULT
1. Turn ignition switch ON.
2. Select “BRAKE SW1” in “DATA MONITOR” mode with CONSULT.
3. Check “BRAKE SW1” indication under the following conditions.

CONDITION	INDICATION
Brake pedal: Slightly depressed	OFF
Brake pedal: Fully released	ON

Without CONSULT
1. Turn ignition switch ON.
2. Check voltage between ECM terminal 108 and ground under the following conditions.

CONDITION	VOLTAGE
Brake pedal: Slightly depressed	Approximately 0 V
Brake pedal: Fully released	Battery voltage

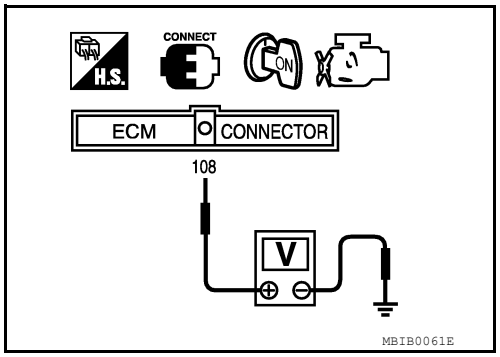

OK or NG
OK >> GO TO 2.
NG >> GO TO 3.

2. CHECK OVERALL FUNCTION-II

With CONSULT
Check “BRAKE SW2” indication in “DATA MONITOR” mode.

CONDITION	INDICATION
Brake pedal: Fully released	OFF
Brake pedal: Slightly depressed	ON

Without CONSULT

Check voltage between ECM terminal 101 and ground under the following conditions.

CONDITION	VOLTAGE
Brake pedal: Fully released	Approximately 0 V
Brake pedal: Slightly depressed	Battery voltage

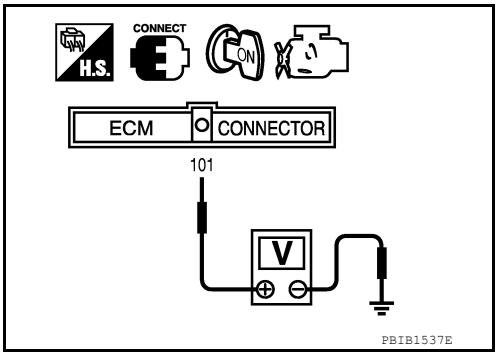

OK or NG

OK >> GO TO 11.
NG >> GO TO 7.

3. CHECK ASCD BRAKE SWITCH POWER SUPPLY CIRCUIT

1. Turn ignition switch OFF.
2. Disconnect ASCD brake switch harness connector.
3. Turn ignition switch ON.

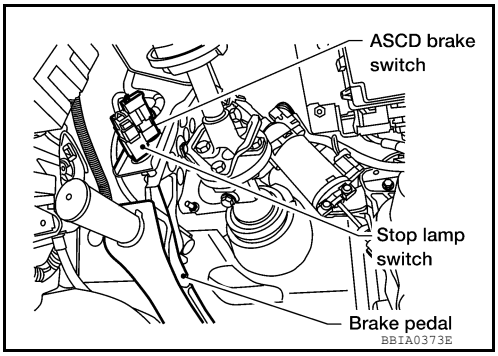

4. Check voltage between ASCD brake switch terminal 1 and ground with CONSULT or tester.

Voltage: Battery voltage

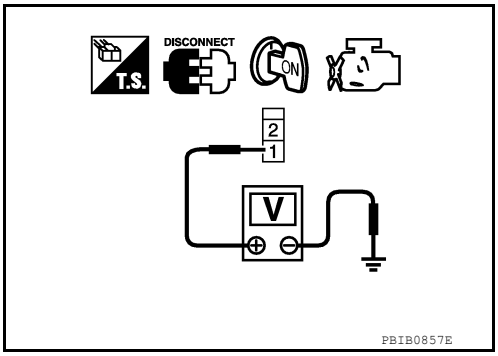

OK or NG

OK >> GO TO 5.
NG >> GO TO 4.

4. DETECT MALFUNCTIONING PART

Check the following.
- Harness connectors M31, E152
- Fuse block (J/B) connector M4
- 10 A fuse (No. 15)
- Harness for open or short between ASCD brake switch and fuse

>> Repair open circuit or short to ground or short to power in harness or connectors.

5. CHECK ASCD BRAKE SWITCH INPUT SIGNAL CIRCUIT FOR OPEN AND SHORT

1. Turn ignition switch OFF.
2. Disconnect ECM harness connector.
3. Check harness continuity between ECM terminal 108 and ASCD brake switch terminal 2. Refer to Wiring Diagram.

Continuity should exist.

4. Also check harness for short to ground and short to power.

OK or NG

OK >> GO TO 6.
NG >> Repair open circuit or short to ground or short to power in harness or connectors.

6. CHECK ASCD BRAKE SWITCH

Refer to EC-424, "Component Inspection".

OK or NG

OK >> GO TO 11.
NG >> Replace ASCD brake switch. Refer to BR-19.

7. CHECK STOP LAMP SWITCH POWER SUPPLY CIRCUIT

1. Turn ignition switch OFF.
2. Disconnect stop lamp switch harness connector.

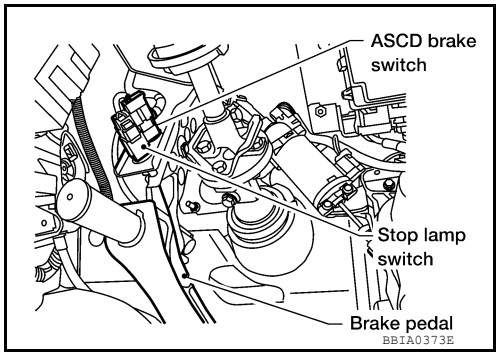

3. Check voltage between stop lamp switch terminal 1 and ground with CONSULT or tester.

Voltage: Battery voltage

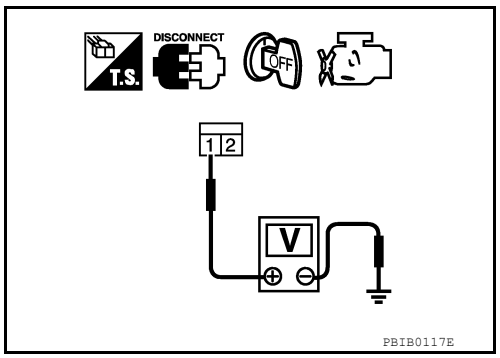

OK or NG

OK >> GO TO 9.
NG >> GO TO 8.

8. DETECT MALFUNCTIONING PART

Check the following.
- Harness connectors M31, E152
- Fuse block (J/B) connector M60
- 10 A fuse (No. 21)
- Harness for open or short between stop lamp switch and battery

>> Repair open circuit or short to ground or short to power in harness or connectors.

9. CHECK STOP LAMP SWITCH INPUT SIGNAL CIRCUIT FOR OPEN AND SHORT

1. Disconnect ECM harness connector.
2. Check harness continuity between ECM terminal 101 and stop lamp switch terminal 2. Refer to Wiring Diagram.

Continuity should exist.

3. Also check harness for short to ground and short to power.

OK or NG

OK >> GO TO 10.
NG >> Repair open circuit or short to ground or short to power in harness or connectors.

10. CHECK STOP LAMP SWITCH

Refer to EC-424, "Component Inspection".

OK or NG

OK >> GO TO 11.
NG >> Replace stop lamp switch. Refer to BR-19.

11. CHECK INTERMITTENT INCIDENT

Refer to GI-40, "How to Check Terminal" and GI-43, "Intermittent Incident".

>> **INSPECTION END**

Component Inspection

INFOID:0000000011291964

ASCD BRAKE SWITCH

1. Turn ignition switch OFF.
2. Disconnect ASCD brake switch harness connector.
3. Check harness continuity between ASCD brake switch terminals 1 and 2 under the following conditions.

Condition	Continuity
Brake pedal: Fully released	Should exist.
Brake pedal: Slightly depressed	Should not exist.

If NG, adjust ASCD brake switch installation, refer to BR-15, "Inspection and Adjustment", and perform step 3 again.

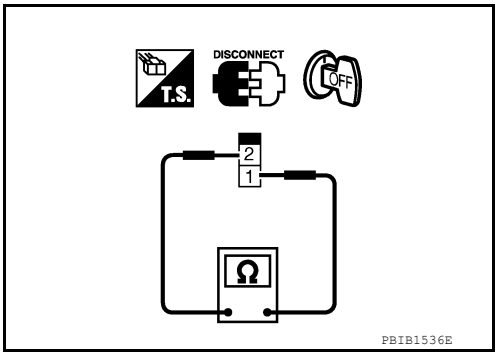

STOP LAMP SWITCH

1. Turn ignition switch OFF.
2. Disconnect stop lamp switch harness connector.
3. Check harness continuity between stop lamp switch terminals 1 and 2 under the following conditions.

Condition	Continuity
Brake pedal: Fully released	Should not exist.
Brake pedal: Slightly depressed	Should exist.

If NG, adjust stop lamp switch installation, refer to BR-15, "Inspection and Adjustment", and perform step 3 again.

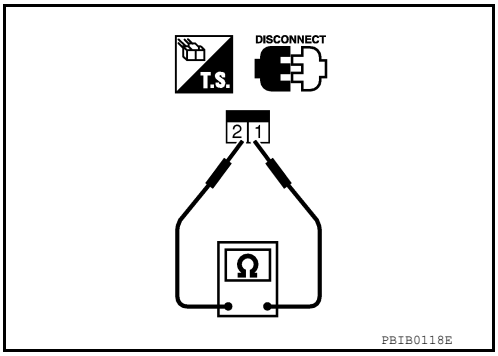

P1574 ASCD VEHICLE SPEED SENSOR

Component Description

INFOID:0000000011291965

The ECM receives two vehicle speed sensor signals via CAN communication line. One is sent from combination meter and the other is from TCM (Transmission control module). The ECM uses these signals for ASCD control. Refer to EC-28 for ASCD functions.

On Board Diagnosis Logic

INFOID:0000000011291966

- **This self-diagnosis has the one trip detection logic.**
- **The MIL will not light up for this self-diagnosis.**

NOTE:
- **If DTC P1574 is displayed with DTC UXXXX, first perform the trouble diagnosis for DTC UXXXX.**
- **If DTC P1574 is displayed with DTC P0500, first perform the trouble diagnosis for DTC P0500. Refer to EC-356.**
- **If DTC P1574 is displayed with DTC P0605, first perform the trouble diagnosis for DTC P0605. Refer to EC-369.**
- **If DTC P1574 is displayed with DTC P0607, first perform the trouble diagnosis for DTC P0607. Refer to EC-371.**

DTC No.	Trouble Diagnosis Name	DTC Detecting Condition	Possible Cause
P1574 1574	ASCD vehicle speed sensor	ECM detects a difference between two vehicle speed signals is out of the specified range.	• Harness or connectors (The CAN communication line is open or shorted.) • Combination meter • ABS actuator and electric unit (control unit) • Wheel sensor • TCM • ECM

DTC Confirmation Procedure

INFOID:0000000011291967

CAUTION:
Always drive vehicle at a safe speed.
NOTE:
If DTC Confirmation Procedure has been previously conducted, always perform the following before conducting the next step.
1. Turn ignition switch OFF and wait at least 10 seconds.
2. Turn ignition switch ON.
3. Turn ignition switch OFF and wait at least 10 seconds.

TESTING CONDITION:
Step 3 may be conducted with the drive wheels lifted in the shop or by driving the vehicle. If a road test is expected to be easier, it is unnecessary to lift the vehicle.
1. Start engine (VDC switch OFF).
2. Drive the vehicle at more than 40 km/h (25 MPH).
3. Check DTC.
4. If DTC is detected, go to EC-425, "Diagnosis Procedure".

Diagnosis Procedure

INFOID:0000000011291968

1. CHECK DTC WITH TCM

Check DTC with TCM. Refer to TM-32, "OBD-II Diagnostic Trouble Code (DTC)".

OK or NG

OK >> GO TO 2.
NG >> Perform trouble shooting relevant to DTC indicated.

2. CHECK DTC WITH ABS ACTUATOR AND ELECTRIC UNIT (CONTROL UNIT)

Refer to BRC-24, "CONSULT Function (ABS)".

OK or NG

OK >> GO TO 3.
NG >> Repair or replace.

3. CHECK COMBINATION METER FUNCTION

Check combination meter function.
Refer to MWI-27, "CONSULT Function (METER/M&A)".

>> **INSPECTION END**

P1805 BRAKE SWITCH

Description

INFOID:0000000011291969

Brake switch signal is applied to the ECM through the stop lamp switch when the brake pedal is depressed. This signal is used mainly to decrease the engine speed when the vehicle is driving.

On Board Diagnosis Logic

INFOID:0000000011291970

The MIL will not light up for this self-diagnosis.

DTC No.	Trouble diagnosis name	DTC detecting condition	Possible cause
P1805 1805	Brake switch	A brake switch signal is not sent to ECM for extremely long time while the vehicle is driving.	• Harness or connectors (Stop lamp switch circuit is open or shorted.) • Stop lamp switch

FAIL-SAFE MODE

When the malfunction is detected, the ECM enters fail-safe mode.

Engine operating condition in fail-safe mode	
ECM controls the electric throttle control actuator by regulating the throttle opening to a small range. Therefore, acceleration will be poor.	
Vehicle condition	Driving condition
When engine is idling	Normal
When accelerating	Poor acceleration

DTC Confirmation Procedure

INFOID:0000000011291971

1. Turn ignition switch ON.
2. Fully depress the brake pedal for at least 5 seconds.
3. Erase the DTC with CONSULT.
4. Check 1st trip DTC.
5. If 1st trip DTC is detected, go to EC-427, "Diagnosis Procedure".

Diagnosis Procedure

INFOID:0000000011291972

1. CHECK STOP LAMP SWITCH CIRCUIT

1. Turn ignition switch OFF.
2. Check the stop lamp when depressing and releasing the brake pedal.

Brake pedal	Stop lamp
Fully released	Not illuminated
Slightly depressed	Illuminated

OK or NG

OK >> GO TO 4.
NG >> GO TO 2.

2. CHECK STOP LAMP SWITCH POWER SUPPLY CIRCUIT

1. Disconnect stop lamp switch harness connector.

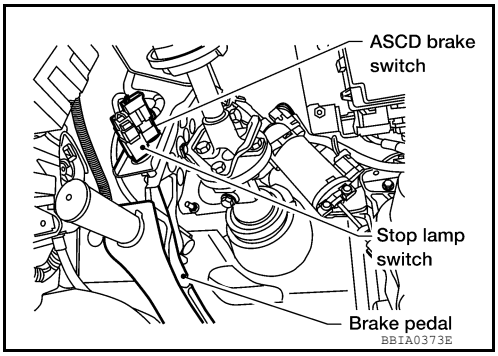

2. Check voltage between stop lamp switch terminal 1 and ground with CONSULT or tester.

Voltage: Battery voltage

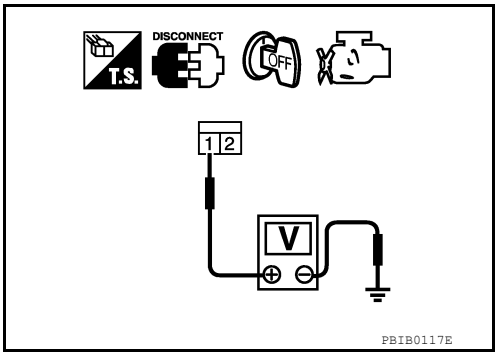

OK or NG

OK >> GO TO 4.
NG >> GO TO 3.

3. DETECT MALFUNCTIONING PART

Check the following.
- Harness connectors M31, E152
- Fuse block (J/B) connector M60
- 10A fuse (No. 21)
- Harness for open and short between stop lamp switch and battery

>> Repair open circuit or short to ground or short to power in harness or connectors.

4. CHECK STOP LAMP SWITCH INPUT SIGNAL CIRCUIT FOR OPEN AND SHORT

1. Turn ignition switch OFF.
2. Disconnect ECM harness connector.
3. Check harness continuity between ECM terminal 101 and stop lamp switch terminal 2. Refer to Wiring Diagram.

Continuity should exist.

4. Also check harness for short to ground and short to power.

OK or NG

OK >> GO TO 5.
NG >> Repair open circuit or short to ground or short to power in harness or connectors.

5. CHECK STOP LAMP SWITCH

Refer to EC-429, "Component Inspection" .

OK or NG

OK >> GO TO 6.
NG >> Replace stop lamp switch. Refer to BR-19.

6. CHECK INTERMITTENT INCIDENT

Refer to GI-40, "How to Check Terminal" and GI-43, "Intermittent Incident".

>> **INSPECTION END**

Component Inspection

INFOID:0000000011291973

STOP LAMP SWITCH

1. Disconnect stop lamp switch harness connector.

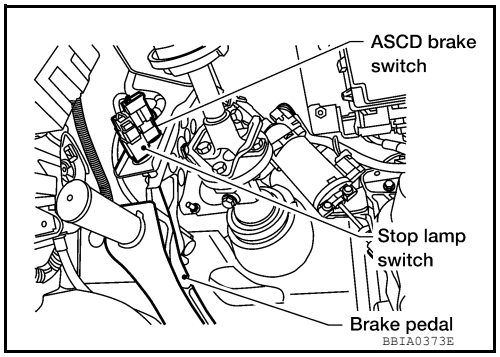

2. Check continuity between stop lamp switch terminals 1 and 2 under the following conditions.

Conditions	Continuity
Brake pedal: Fully released	Should not exist.
Brake pedal: Slightly depressed	Should exist.

3. If NG, adjust stop lamp switch installation, refer to BR-15, "Inspection and Adjustment", and perform step 2 again.

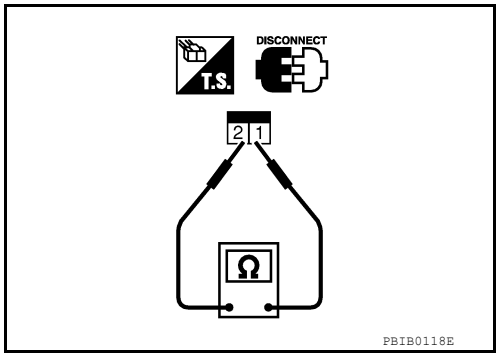

P2096, P2097, P2098, P2099 A/F SENSOR 1

Component Description

INFOID:0000000011291974

The air fuel ratio (A/F) sensor 1 is a planar one-cell limit current sensor. The sensor element of the A/F sensor 1 is composed an electrode layer, which transports ions. It has a heater in the element.

The sensor is capable of precise measurement λ = 1, but also in the lean and rich range. Together with its control electronics, the sensor outputs a clear, continuous signal throughout a wide λ range.

The exhaust gas components diffuse through the diffusion layer at the sensor cell. An electrode layer is applied voltage, and this current relative oxygen density in lean. Also this current relative hydrocarbon density in rich.

Therefore, the A/F sensor 1 is able to indicate air fuel ratio by this electrode layer of current. In addition, a heater is integrated in the sensor to ensure the required operating temperature of about 800°C (1,472°F).

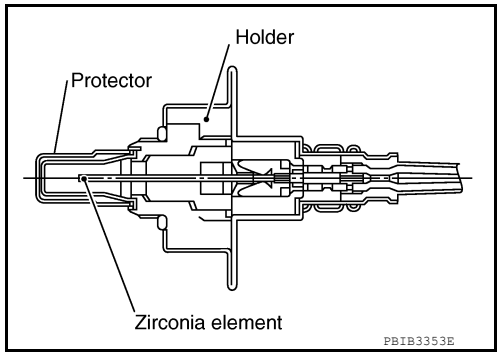

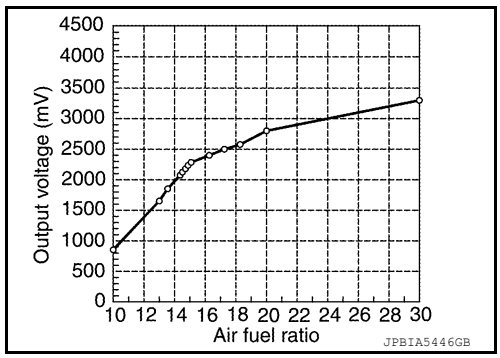

On Board Diagnosis Logic

INFOID:0000000011291975

DTC No.	Trouble diagnosis name (Trouble diagnosis content)	DTC detecting condition	Possible Cause
P2096	POST CAT FUEL TRIM SYS B1 (Post catalyst fuel trim system too lean bank 1)	The output voltage computed by ECM from the A/F sensor 1 signal is shifts to the lean side for a specified period.	• A/F sensor 1 (bank 1) • A/F sensor 1 heater • Heated oxygen sensor 2 (bank 1) • Fuel pressure • Fuel injector • Intake air leaks • Exhaust gas leaks
P2097	POST CAT FUEL TRIM SYS B1 (Post catalyst fuel trim system too rich bank 1)	The A/F signal computed by ECM from the A/F sensor 1 signal is shifts to the rich side for a specified period.	
P2098	POST CAT FUEL TRIM SYS B2 (Post catalyst fuel trim system too lean bank 2)	The output voltage computed by ECM from the A/F sensor 1 signal is shifts to the lean side for a specified period.	• A/F sensor 1 (bank 2) • A/F sensor 1 heater • Heated oxygen sensor 2 (bank 2) • Fuel pressure • Fuel injector • Intake air leaks • Exhaust gas leaks
P2099	POST CAT FUEL TRIM SYS B2 (Post catalyst fuel trim system too rich bank 2)	The A/F signal computed by ECM from the A/F sensor 1 signal is shifts to the rich side for a specified period.	

DTC Confirmation Procedure

INFOID:0000000011291976

NOTE:
If DTC Confirmation Procedure has been previously conducted, always perform the following before conducting the next step.

1. Turn ignition swich OFF and wait at least 10 seconds.
2. Turn ignition swich ON.
3. Turn ignition swich OFF and wait at least 10 seconds.

TESTING CONDITION:

Before performing the following procedure, confirm that battery voltage is more than 11V at idle.

WITH CONSULT

1. Start engine and warm it up to normal operating temperature.
2. Turn ignition switch OFF and wait at least 10 seconds.
3. Turn ignition switch ON and select “SELF-LEARNING CONT” in “WORK SUPPORT” mode with CONSULT.
4. Clear the self-learning coefficient by touching “CLEAR”.
5. Turn ignition switch OFF and wait at least 10 seconds.
6. Start engine and keep the engine speed between 3,500 and 4,000 rpm for 1 minute under no load.
7. Let engine idle for 1 minute.
8. Keep engine speed between 2,500 and 3,000 rpm for 20 minutes.
9. Check 1st trip DTC.
10. If 1st trip DTC is detected, go to EC-431, "Diagnosis Procedure".

WITH GST

1. Start engine and warm it up to normal operating temperature.
2. Turn ignition switch OFF and wait at least 10 seconds.
3. Disconnect mass air flow sensor harness connector.
4. Start engine and let it idle for at least 5 seconds.
5. Stop engine and reconnect mass air flow sensor harness connector.
6. Select Service $03 with GST and make sure that DTC P0102 is detected.
7. Select Service $04 with GST and erase the DTC P0102.
8. Start engine and keep the engine speed between 3,500 and 4,000 rpm for 1 minute under no load.
9. Let engine idle for 1 minute.
10. Keep engine speed between 2,500 and 3,000 rpm for 20 minutes.
11. Select Service $07 with GST.
    If 1st trip DTC is detected, go to EC-431, "Diagnosis Procedure".

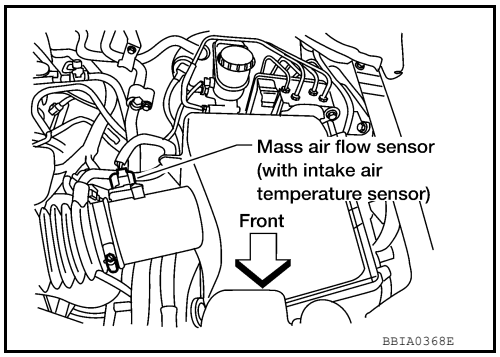

Diagnosis Procedure

INFOID:0000000011291977

1. CHECK GROUND CONNECTIONS

1. Turn ignition switch OFF.
2. Loosen and retighten two ground screws on the body.
   Refer to EC-154, "Ground Inspection".

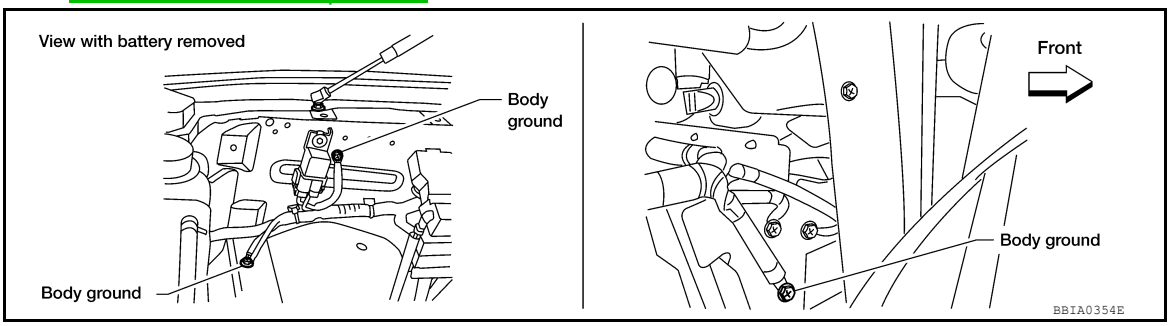

OK or NG

OK >> GO TO 2.
NG >> Repair or replace ground connections.

2. RETIGHTEN A/F SENSOR 1 AND HEATED OXYGEN SENSOR 2

Loosen and retighten the A/F sensor 1 and heated oxygen sensor 2. Refer to EM-31, "Exploded View" and EX-6, "Removal and Installation".

>> GO TO 3.

3. CHECK FOR EXHAUST GAS LEAK

1. Start engine and run it at idle.
2. Listen for an exhaust gas leak before the three way catalyst 2.

Is exhaust gas detected?

YES >> Repair or replace.
NO >> GO TO 4.

4. CHECK FOR INTAKE AIR LEAK

1. Start engine and run it at idle.
2. Listen for an intake air leak after the mass air flow sensor.

OK or NG

OK >> GO TO 5.
NG >> Repair or replace.

5. CLEAR THE SELF-LEARNING DATA

With CONSULT

1. Start engine and warm it up to normal operating temperature.
2. Select “SELF-LEARNING CONT” in “WORK SUPPORT” mode with CONSULT.
3. Clear the self-learning control coefficient by touching “CLEAR”.
4. Run engine for at least 10 minutes at idle speed.
   Is the 1st trip DTC P0171, P0172, P0174 or P0175 detected?
   Is it difficult to start engine?

Without CONSULT

1. Start engine and warm it up to normal operating temperature.
2. Turn ignition switch OFF.
3. Disconnect mass air flow sensor harness connector.
4. Restart engine and let it idle for at least 5 seconds.
5. Stop engine and reconnect mass air flow sensor harness connector.
6. Make sure DTC P0102 is displayed.
7. Erase the DTC memory. Refer to EC-49, "CONSULT Function" or EC-46, "On Board Diagnosis Function".
8. Make sure DTC P0000 is displayed.
9. Run engine for at least 10 minutes at idle speed.
   Is the 1st trip DTC P0171, P0172, P0174 or P0175 detected?
   Is it difficult to start engine?

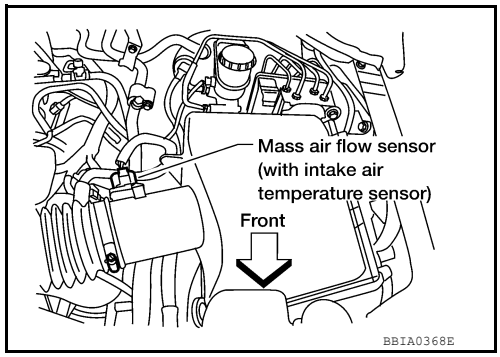

Yes or No

Yes >> Perform trouble diagnosis for DTC P0171, P0174 or P0172, P0175. Refer to EC-249 or EC-254.
No >> GO TO 6.

6. CHECK HARNESS CONNECTOR

1. Turn ignition switch OFF.

2. Disconnect A/F sensor 1 harness connector.

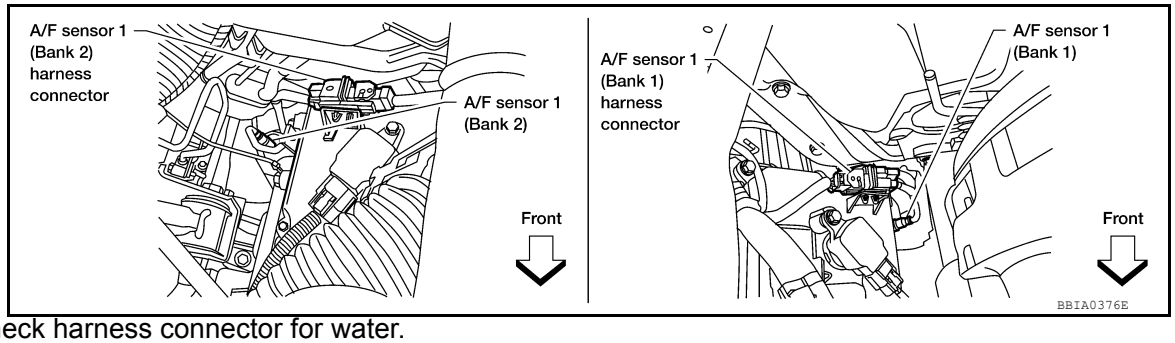

3. Check harness connector for water.

Water should not exit.

OK or NG

OK >> GO TO 7.
NG >> Repair or replace harness connector.

7. CHECK A/F SENSOR 1 POWER SUPPLY CIRCUIT

1. Turn ignition switch ON.
2. Check voltage between A/F sensor 1 terminal 4 and ground with CONSULT or tester.

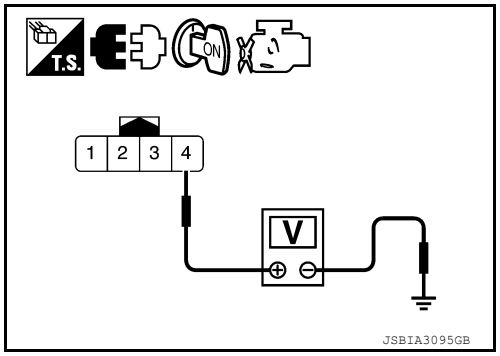

Voltage: Battery voltage

OK or NG

OK >> GO TO 9.
NG >> GO TO 8.

8. DETECT MALFUNCTIONING PART

Check the following.
- Harness connectors E5, F14
- IPDM E/R harness connector E119
- 15A fuse
- Harness for open or short between A/F sensor 1 and fuse

>> Repair or replace harness or connectors.

9. CHECK A/F SENSOR 1 INPUT SIGNAL CIRCUIT FOR OPEN AND SHORT

1. Turn ignition switch OFF.
2. Disconnect ECM harness connector.
3. Check harness continuity between A/F sensor 1 terminal and ECM terminal as follows. Refer to Wiring Diagram.

	A/F sensor 1 terminal	ECM terminal
Bank1	1	35
	2	56
Bank 2	1	16
	2	75

Continuity should exist.

4. Check harness continuity between the following terminals and ground. Refer to Wiring Diagram.

Bank 1		Bank 2	
A/F sensor 1 terminal	ECM terminal	A/F sensor 1 terminal	ECM terminal
1	35	1	16
2	56	2	75

Continuity should not exist.

5. Also check harness for short to power.

OK or NG

OK >> GO TO 10.
NG >> Repair open circuit or short to ground or short to power in harness or connectors.

10. CHECK A/F SENSOR 1 HEATER

Refer to EC-166, "Component Inspection".

OK or NG

OK >> GO TO 11.
NG >> GO TO 13.

11. CHECK HEATED OXYGEN SENSOR 2

Refer to EC-227, "Component Inspection".

Is the inspection result normal?

YES >> GO TO 12.
NO >> Replace heated oxygen sensor 2. Refer to EX-6, "Removal and Installation".

12. CHECK INTERMITTENT INCIDENT

Refer to GI-40, "How to Check Terminal" and GI-43, "Intermittent Incident".

OK or NG

OK >> GO TO 13.
NG >> Repair or replace.

13. REPLACE AIR FUEL RATIO (A/F) SENSOR 1

Replace malfunctioning air fuel ratio (A/F) sensor 1.

CAUTION:

- **Discard any A/F sensor which has been dropped from a height of more than 0.5 m (19.7 in) onto a hard surface such as a concrete floor; use a new one.**
- **Before installing new A/F sensor, clean exhaust system threads using Oxygen Sensor Thread Cleaner tool J-43897-18 or J-43897-12 and approved anti-seize lubricant.**

>> GO TO 14.

14. CONFIRM A/F ADJUSTMENT DATA

1. Turn ignition switch OFF and then ON.
2. Select “A/F ADJ-B1” and “A/F ADJ-B2” in “DATA MONITOR” mode with CONSULT.
3. Make sure that “0.000” is displayed on CONSULT screen.

OK or NG

OK >> **INSPECTION END**
NG >> GO TO 15.

15. CLEAR THE SELF-LEARNING DATA

With CONSULT

1. Start engine and warm it up to normal operating temperature.
2. Select “SELF-LEARNING CONT” in “WORK SUPPORT” mode with CONSULT.
3. Clear the self-learning control coefficient by touching “CLEAR”.

Without CONSULT

1. Start engine and warm it up to normal operating temperature.

2. Turn ignition switch OFF.
3. Disconnect mass air flow sensor harness connector.
4. Restart engine and let it idle for at least 5 seconds.
5. Stop engine and reconnect mass air flow sensor harness connector.
6. Make sure DTC P0102 is displayed.
7. Erase the DTC memory. Refer to EC-49, "CONSULT Function" or EC-46, "On Board Diagnosis Function".
8. Make sure DTC P0000 is displayed.

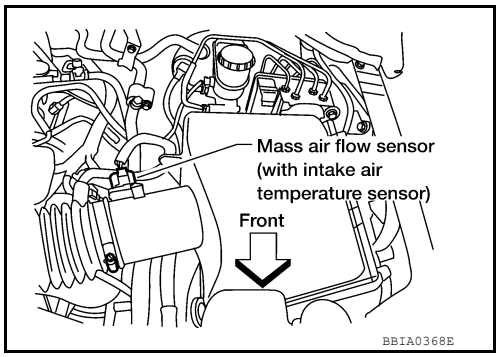

>> GO TO 16.

16. CONFIRM A/F ADJUSTMENT DATA

1. Turn ignition switch OFF and then ON.
2. Select “A/F ADJ-B1” and “A/F ADJ-B2” in “DATA MONITOR” mode with CONSULT.
3. Make sure that “0.000” is displayed on CONSULT screen.

>> **INSPECTION END**

P2100, P2103 THROTTLE CONTROL MOTOR RELAY

Component Description

INFOID:0000000011291978

Power supply for the throttle control motor is provided to the ECM via throttle control motor relay. The throttle control motor relay is ON/OFF controlled by the ECM. When the ignition switch is turned ON, the ECM sends an ON signal to throttle control motor relay and battery voltage is provided to the ECM. When the ignition switch is turned OFF, the ECM sends an OFF signal to throttle control motor relay and battery voltage is not provided to the ECM.

On Board Diagnosis Logic

INFOID:0000000011291979

These self-diagnoses have the one trip detection logic.

DTC No.	Trouble diagnosis name	DTC detecting condition	Possible cause
P2100 2100	Throttle control motor relay circuit open	ECM detects a voltage of power source for throttle control motor is excessively low.	• Harness or connectors (Throttle control motor relay circuit is open) • Throttle control motor relay
P2103 2103	Throttle control motor relay circuit short	ECM detect the throttle control motor relay is stuck ON.	• Harness or connectors (Throttle control motor relay circuit is shorted) • Throttle control motor relay

FAIL-SAFE MODE

When the malfunction is detected, ECM enters fail-safe mode and the MIL lights up.

Engine operating condition in fail-safe mode
ECM stops the electric throttle control actuator control, throttle valve is maintained at a fixed opening (approx. 5 degrees) by the return spring.

DTC Confirmation Procedure

INFOID:0000000011291980

NOTE:
If DTC Confirmation Procedure has been previously conducted, always perform the following before conducting the next step.

1. Turn ignition switch OFF and wait at least 10 seconds.
2. Turn ignition switch ON.
3. Turn ignition switch OFF and wait at least 10 seconds.

PROCEDURE FOR DTC P2100

1. Turn ignition switch ON and wait at least 2 seconds.
2. Start engine and let it idle for 5 seconds.
3. Check DTC.
4. If DTC is detected, go to EC-436, "Diagnosis Procedure".

PROCEDURE FOR DTC P2103

TESTING CONDITION:
Before performing the following procedure, confirm that battery voltage is more than 8 V.

1. Turn ignition switch ON and wait at least 1 second.
2. Check DTC.
3. If DTC is detected, go to EC-436, "Diagnosis Procedure".

Diagnosis Procedure

INFOID:0000000011291981

1. CHECK THROTTLE CONTROL MOTOR RELAY POWER SUPPLY CIRCUIT-I

1. Turn ignition switch OFF.

2. Check voltage between ECM terminal 104 and ground with CONSULT or tester.

Voltage: Battery voltage

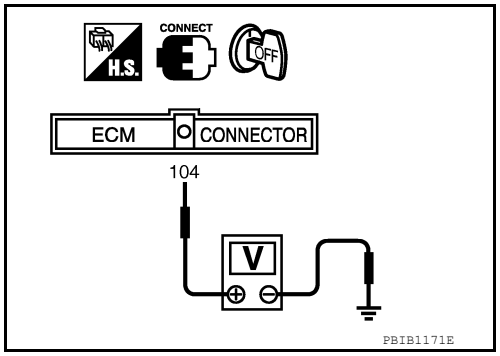

OK or NG

OK >> GO TO 4.
NG >> GO TO 2.

2. CHECK THROTTLE CONTROL MOTOR RELAY POWER SUPPLY CIRCUIT-II

1. Disconnect ECM harness connector.
2. Disconnect IPDM E/R harness connector E122.
3. Check continuity between ECM terminal 104 and IPDM E/R terminal 47.
   Refer to Wiring Diagram.

Continuity should exist.

4. Also check harness for short to ground and short to power.

OK or NG

OK >> GO TO 3.
NG >> Repair open circuit or short to ground or short to power in harness or connectors.

3. CHECK FUSE

1. Disconnect 20 A fuse.
2. Check 20 A (No. 52) fuse for blown.

OK or NG

OK >> GO TO 7.
NG >> Replace 20 A fuse.

4. CHECK THROTTLE CONTROL MOTOR RELAY INPUT SIGNAL CIRCUIT-I

Check voltage between ECM terminal 3 and ground under the following conditions with CONSULT or tester.

Ignition switch	Voltage
OFF	Approximately 0 V
ON	Battery voltage (11 - 14 V)

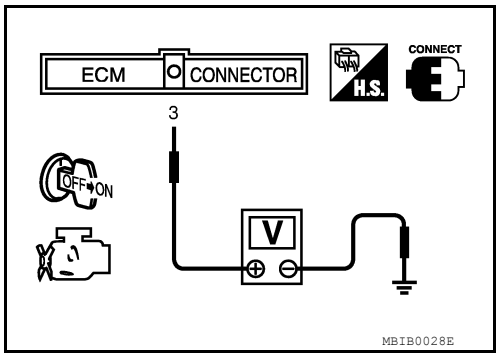

OK or NG

OK >> GO TO 7.
NG >> GO TO 5.

5. CHECK THROTTLE CONTROL MOTOR RELAY INPUT SIGNAL CIRCUIT-II

1. Turn ignition switch OFF.
2. Disconnect ECM harness connector.
3. Disconnect IPDM E/R harness connector E119.
4. Check continuity between ECM terminal 3 and IPDM E/R terminal 6.
   Refer to Wiring Diagram.

Continuity should exist.

5. Also check harness for short to ground and short to power.

OK or NG

OK >> GO TO 7.
NG >> GO TO 6.

6. DETECT MALFUNCTIONING PART

Check the following.
- Harness connectors E2, F32
- Harness for open or short between ECM and IPDM E/R

>> Repair open circuit or short to ground or short to power in harness or connectors.

7. CHECK INTERMITTENT INCIDENT

Refer to GI-40, "How to Check Terminal" and GI-43, "Intermittent Incident".

OK or NG

OK >> Replace IPDM E/R. Refer to PCS-31, "Removal and Installation of IPDM E/R".
NG >> Repair or replace harness or connectors.

P2101 ELECTRIC THROTTLE CONTROL FUNCTION

Description

INFOID:0000000011291982

NOTE:
If DTC P2101 is displayed with DTC P2100 or 2119, first perform the trouble diagnosis for DTC P2100 or P2119. Refer to EC-436 or EC-445 .
Electric throttle control actuator consists of throttle control motor, throttle position sensor, etc.
The throttle control motor is operated by the ECM and it opens and closes the throttle valve.
The current opening angle of the throttle valve is detected by the throttle position sensor and it provides feedback to the ECM to control the throttle control motor to make the throttle valve opening angle properly in response to driving condition.

On Board Diagnosis Logic

INFOID:0000000011291983

This self-diagnosis has the one trip detection logic.

DTC No.	Trouble diagnosis name	DTC detecting condition	Possible cause
P2101 2101	Electric throttle control performance	Electric throttle control function does not operate properly.	• Harness or connectors (Throttle control motor circuit is open or shorted) • Electric throttle control actuator

FAIL-SAFE MODE

When the malfunction is detected, ECM enters fail-safe mode and the MIL lights up.

Engine operating condition in fail-safe mode
ECM stops the electric throttle control actuator control, throttle valve is maintained at a fixed opening (approx. 5 degrees) by the return spring.

DTC Confirmation Procedure

INFOID:0000000011291984

NOTE:
If DTC Confirmation Procedure has been previously conducted, always perform the following before conducting the next step.
1. Turn ignition switch OFF and wait at least 10 seconds.
2. Turn ignition switch ON.
3. Turn ignition switch OFF and wait at least 10 seconds.

TESTING CONDITION:
Before performing the following procedure, confirm that battery voltage is more than 11 V when engine is running.
1. Turn ignition switch ON and wait at least 2 seconds.
2. Start engine and let it idle for 5 seconds.
3. Check DTC.
4. If DTC is detected, go to EC-439, "Diagnosis Procedure".

Diagnosis Procedure

INFOID:0000000011291985

1. CHECK GROUND CONNECTIONS

1. Turn ignition switch OFF.
2. Loosen and retighten three ground screws on the body.

Refer to EC-154, "Ground Inspection" .

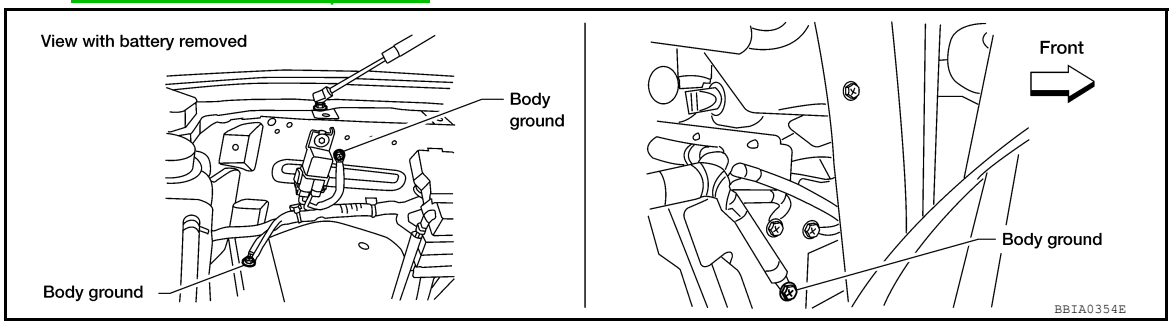

OK or NG

OK >> GO TO 2.
NG >> Repair or replace ground connections.

2. CHECK THROTTLE CONTROL MOTOR RELAY INPUT SIGNAL CIRCUIT-I

1. Check voltage between ECM terminal 3 and ground under the following conditions with CONSULT or tester.

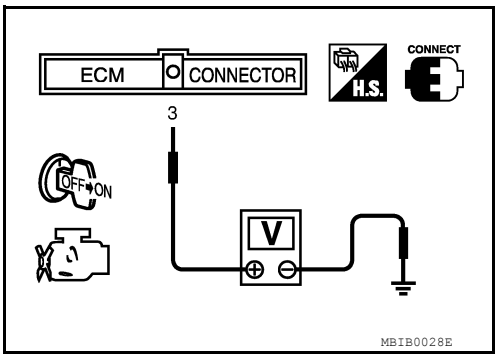

Ignition switch	Voltage
OFF	Approximately 0 V
ON	Battery voltage (11 - 14 V)

OK or NG

OK >> GO TO 9.
NG >> GO TO 3.

3. CHECK THROTTLE CONTROL MOTOR RELAY POWER SUPPLY CIRCUIT-I

1. Turn ignition switch OFF.
2. Check voltage between ECM terminal 104 and ground with CONSULT or tester.

Voltage: Battery voltage

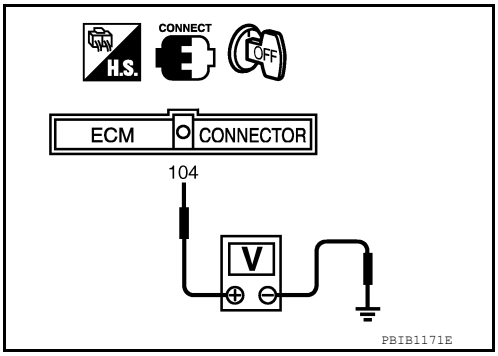

OK or NG

OK >> GO TO 6.
NG >> GO TO 4.

4. CHECK THROTTLE CONTROL MOTOR RELAY POWER SUPPLY CIRCUIT-II

1. Disconnect ECM harness connector.
2. Disconnect IPDM E/R harness connector E122.
3. Check harness continuity between ECM terminal 104 and IPDM E/R terminal 47. Refer to Wiring Diagram.

Continuity should exist.

4. Also check harness for short to ground and short to power.

OK or NG

OK >> GO TO 5.
NG >> Repair open circuit or short to ground or short to power in harness or connectors.

5. CHECK FUSE

1. Disconnect 20 A fuse.
2. Check 20 A (No. 52) fuse for blown.

OK or NG

OK >> GO TO 8.
NG >> Replace 20 A fuse.

6. CHECK THROTTLE CONTROL MOTOR RELAY INPUT SIGNAL CIRCUIT-II

1. Disconnect ECM harness connector.
2. Disconnect IPDM E/R harness connector E119.
3. Check harness continuity between ECM terminal 3 and IPDM E/R terminal 6.
   Refer to Wiring Diagram.

Continuity should exist.

4. Also check harness for short to ground and short to power.

OK or NG

OK >> GO TO 8.
NG >> GO TO 7.

7. DETECT MALFUNCTIONING PART

Check the following.
- Harness connectors E2, F32
- Harness for open or short between ECM and IPDM E/R

>> Repair open circuit or short to ground or short to power in harness or connectors.

8. CHECK INTERMITTENT INCIDENT

Refer to GI-40, "How to Check Terminal" and GI-43, "Intermittent Incident".

OK or NG

OK >> Replace IPDM E/R. Refer to PCS-31, "Removal and Installation of IPDM E/R" .
NG >> Repair or replace harness or connectors.

9. CHECK THROTTLE CONTROL MOTOR OUTPUT SIGNAL CIRCUIT FOR OPEN OR SHORT

1. Turn ignition switch OFF.
2. Disconnect electric throttle control actuator harness connector.
3. Disconnect ECM harness connector.
4. Check harness continuity between the following terminals.
   Refer to Wiring Diagram.

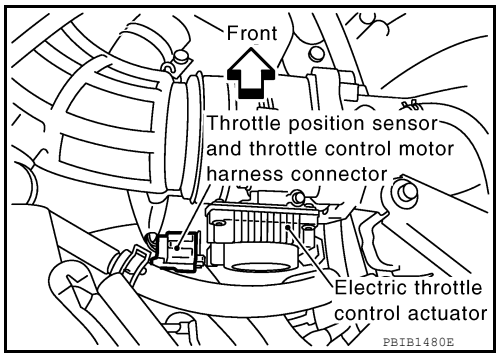

Electric throttle control actuator terminal	ECM terminal	Continuity
5	5	Should not exist
	4	Should exist
6	5	Should exist
	4	Should not exist

5. Also check harness for short to ground and short to power.

OK or NG

OK >> GO TO 10.
NG >> Repair or replace.

10. CHECK ELECTRIC THROTTLE CONTROL ACTUATOR VISUALLY

1. Remove the intake air duct. Refer to EM-25.

2. Check if foreign matter is caught between the throttle valve and the housing.

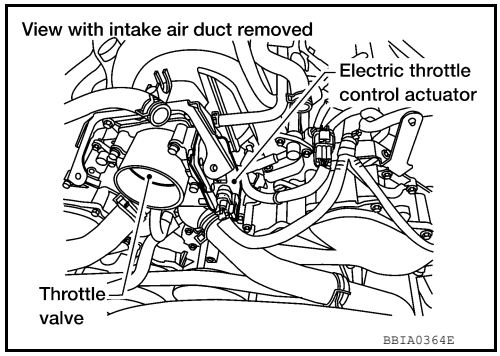

OK or NG

OK >> GO TO 11.
NG >> Remove the foreign matter and clean the electric throttle control actuator inside, and then perform throttle valve closed position learning. Refer to EC-128, "Throttle Valve Closed Position Learning".

11. CHECK THROTTLE CONTROL MOTOR

Refer to EC-442, "Component Inspection" .

OK or NG

OK >> GO TO 12.
NG >> GO TO 13.

12. CHECK INTERMITTENT INCIDENT

Refer to GI-40, "How to Check Terminal" and GI-43, "Intermittent Incident".

OK or NG

OK >> GO TO 13.
NG >> Repair or replace harness or connectors.

13. REPLACE ELECTRIC THROTTLE CONTROL ACTUATOR

1. Replace the electric throttle control actuator.
2. Perform EC-128, "Throttle Valve Closed Position Learning".
3. Perform EC-129, "Idle Air Volume Learning".

>> **INSPECTION END**

Component Inspection

INFOID:0000000011291986

THROTTLE CONTROL MOTOR

1. Disconnect electric throttle control actuator harness connector.
2. Check resistance between terminals 5 and 6.

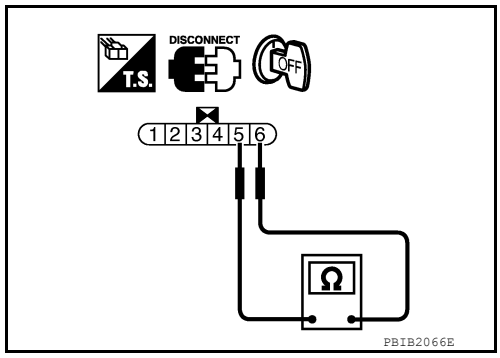

Resistance: Approximately 1 - 15 Ω [at 25 °C (77°F)]

3. If NG, replace electric throttle control actuator and go to next step.
4. Perform EC-128, "Throttle Valve Closed Position Learning" .
5. Perform EC-129, "Idle Air Volume Learning" .

P2118 THROTTLE CONTROL MOTOR

Component Description

INFOID:0000000011291987

The throttle control motor is operated by the ECM and it opens and closes the throttle valve.
The current opening angle of the throttle valve is detected by the throttle position sensor and it provides feedback to the ECM to control the throttle control motor to make the throttle valve opening angle properly in response to driving condition.

On Board Diagnosis Logic

INFOID:0000000011291988

This self-diagnosis has the one trip detection logic.

DTC No.	Trouble diagnosis name	DTC detecting condition	Possible cause
P2118 2118	Throttle control motor circuit short	ECM detects short in both circuits between ECM and throttle control motor.	• Harness or connectors (Throttle control motor circuit is shorted.) • Electric throttle control actuator (Throttle control motor)

FAIL-SAFE MODE

When the malfunction is detected, the ECM enters fail-safe mode and the MIL lights up.

Engine operating condition in fail-safe mode
ECM stops the electric throttle control actuator control, throttle valve is maintained at a fixed opening (approx. 5 degrees) by the return spring.

DTC Confirmation Procedure

INFOID:0000000011291989

1. If DTC Confirmation Procedure has been previously conducted, always perform the following before conducting the next step.

a. Turn ignition switch OFF and wait at least 10 seconds.
b. Turn ignition switch ON.
c. Turn ignition switch OFF and wait at least 10 seconds.

2. Turn ignition switch ON and wait at least 2 seconds.
3. Start engine and let it idle for 5 seconds.
4. Check DTC.
5. If DTC is detected, go to EC-443, "Diagnosis Procedure".

Diagnosis Procedure

INFOID:0000000011291990

1. CHECK GROUND CONNECTIONS

1. Turn ignition switch OFF.
2. Loosen and retighten three ground screws on the body.
   Refer to EC-154, "Ground Inspection".

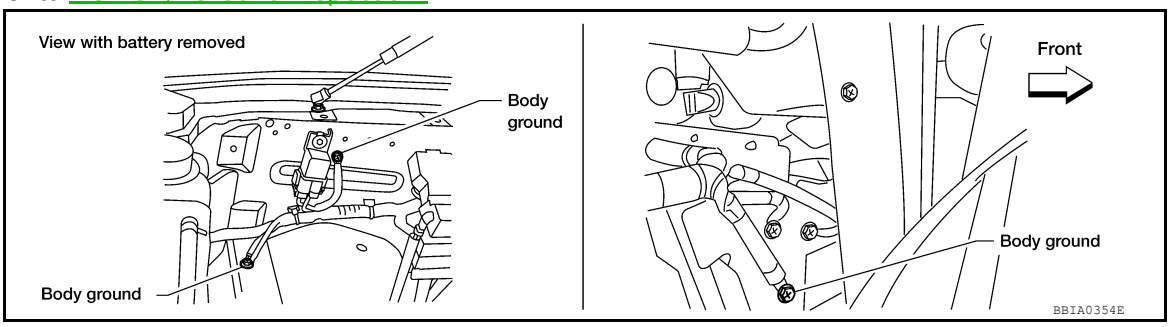

OK or NG

OK >> GO TO 2.
NG >> Repair or replace ground connections.

2. CHECK THROTTLE CONTROL MOTOR OUTPUT SIGNAL CIRCUIT FOR OPEN OR SHORT

1. Disconnect electric throttle control actuator harness connector.
- Illustration shows the view with intake air duct removed.
2. Disconnect ECM harness connector.
3. Check harness continuity between the following terminals. Refer to Wiring Diagram.

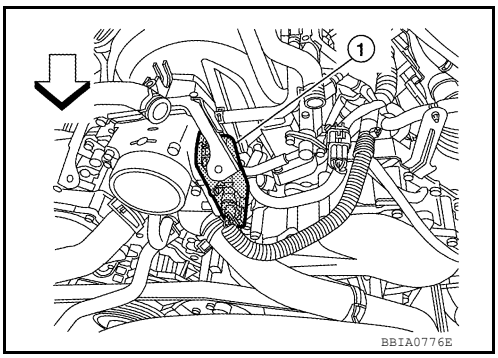

Electric throttle control actuator terminal	ECM terminal	Continuity
5	5	Should not exist
	4	Should exist
6	5	Should exist
	4	Should not exist

4. Also check harness for short to ground and short to power.

OK or NG

OK >> GO TO 3.
NG >> Repair or replace.

3. CHECK THROTTLE CONTROL MOTOR

Refer to EC-444, "Component Inspection".

OK or NG

OK >> GO TO 4.
NG >> GO TO 5.

4. CHECK INTERMITTENT INCIDENT

Refer to GI-40, "How to Check Terminal" and GI-43, "Intermittent Incident".

OK or NG

OK >> GO TO 5.
NG >> Repair or replace harness or connectors.

5. REPLACE ELECTRIC THROTTLE CONTROL ACTUATOR

1. Replace the electric throttle control actuator.
2. Perform EC-128, "Throttle Valve Closed Position Learning".
3. Perform EC-129, "Idle Air Volume Learning".

>> **INSPECTION END**

Component Inspection

INFOID:0000000011291991

THROTTLE CONTROL MOTOR

1. Disconnect electric throttle control actuator harness connector.
2. Check resistance between terminals 5 and 6.

Resistance: Approximately 1 - 15 Ω [at 25 °C (77°F)]

3. If NG, replace electric throttle control actuator and go to next step.
4. Perform EC-128, "Throttle Valve Closed Position Learning".
5. Perform EC-129, "Idle Air Volume Learning".

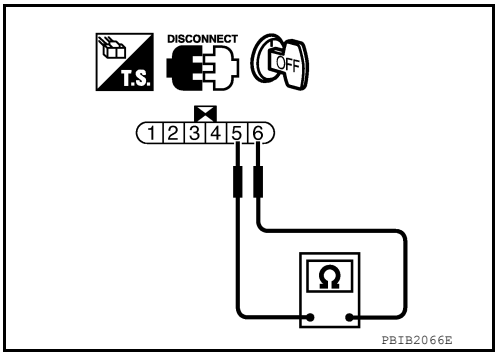

P2119 ELECTRIC THROTTLE CONTROL ACTUATOR

Component Description

INFOID:0000000011291992

Electric throttle control actuator consists of throttle control motor, throttle position sensor, etc.
The throttle control motor is operated by the ECM and it opens and closes the throttle valve.
The throttle position sensor detects the throttle valve position, and the opening and closing speed of the throttle valve and feeds the voltage signals to the ECM. The ECM judges the current opening angle of the throttle valve from these signals and the ECM controls the throttle control motor to make the throttle valve opening angle properly in response to driving condition.

On Board Diagnosis Logic

INFOID:0000000011291993

This self-diagnosis has one trip detection logic.

DTC No.	Trouble diagnosis name	DTC detecting condition		Possible cause
P2119 2119	Electric throttle control actuator	A)	Electric throttle control actuator does not function properly due to the return spring malfunction.	• Electric throttle control actuator
		B)	Throttle valve opening angle in fail-safe mode is not in specified range.	
		C)	ECM detect the throttle valve is stuck open.	

FAIL-SAFE MODE

When the malfunction is detected, ECM enters fail-safe mode and the MIL lights up.

Detected items	Engine operating condition in fail-safe mode
Malfunction A	The ECM controls the electric throttle actuator by regulating the throttle opening around the idle position. The engine speed will not rise more than 2,000 rpm.
Malfunction B	ECM controls the electric throttle control actuator by regulating the throttle opening to 20 degrees or less.
Malfunction C	While the vehicle is driving, it slows down gradually by fuel cut. After the vehicle stops, the engine stalls. The engine can restart in N or P position, and engine speed will not exceed 1,000 rpm or more.

DTC Confirmation Procedure

INFOID:0000000011291994

NOTE:
- **Perform PROCEDURE FOR MALFUNCTION A AND B first. If the DTC cannot be confirmed, perform PROCEDURE FOR MALFUNCTION C.**
- If DTC Confirmation Procedure has been previously conducted, always perform the following before conducting the next step.

1. Turn ignition switch OFF and wait at least 10 seconds.
2. Turn ignition switch ON.
3. Turn ignition switch OFF and wait at least 10 seconds.

PROCEDURE FOR MALFUNCTION A AND B

1. Turn ignition switch ON and wait at least 1 second.
2. Shift selector lever to D position and wait at least 3 seconds.
3. Shift selector lever to P or N position.
4. Turn ignition switch OFF and wait at least 10 seconds.
5. Turn ignition switch ON and wait at least 1 second.
6. Shift selector lever to D position and wait at least 3 seconds.
7. Shift selector lever to P or N position.
8. Turn ignition switch OFF, wait at least 10 seconds and then turn ON.
9. Check DTC.
10. If DTC is detected, go to EC-446, "Diagnosis Procedure".

PROCEDURE FOR MALFUNCTION C

1. Turn ignition switch ON and wait at least 1 second.
2. Shift selector lever to D position and wait at least 3 seconds.
3. Shift selector lever to P position.
4. Start engine and let it idle for 3 seconds.
5. Check DTC.
6. If DTC is detected, go to EC-446, "Diagnosis Procedure".

Diagnosis Procedure

INFOID:0000000011291995

1. CHECK ELECTRIC THROTTLE CONTROL ACTUATOR VISUALLY

1. Remove the intake air duct. Refer to EM-25, "Removal and Installation".
2. Check if a foreign matter is caught between the throttle valve and the housing.

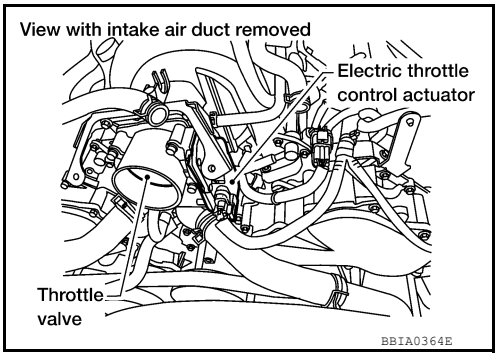

OK or NG

OK >> GO TO 2.
NG >> Remove the foreign matter and clean the electric throttle control actuator inside, and then perform throttle valve closed position learning. Refer to EC-128, "Throttle Valve Closed Position Learning".

2. REPLACE ELECTRIC THROTTLE CONTROL ACTUATOR

1. Replace the electric throttle control actuator. Refer to EM-26, "Removal and Installation".
2. Perform EC-128, "Throttle Valve Closed Position Learning".
3. Perform EC-129, "Idle Air Volume Learning".

>> **INSPECTION END**

P2122, P2123 APP SENSOR

Component Description

INFOID:0000000011291996

The accelerator pedal position sensor is installed on the upper end of the accelerator pedal assembly. The sensor detects the accelerator position and sends a signal to the ECM.
Accelerator pedal position sensor has two sensors. These sensors are a kind of potentiometers which transform the accelerator pedal position into output voltage, and emit the voltage signal to the ECM. In addition, these sensors detect the opening and closing speed of the accelerator pedal and feed the voltage signals to the ECM. The ECM judges the current opening angle of the accelerator pedal from these signals and controls the throttle control motor based on these signals.

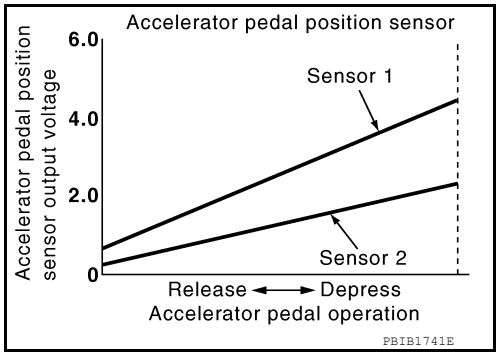

Idle position of the accelerator pedal is determined by the ECM receiving the signal from the accelerator pedal position sensor. The ECM uses this signal for the engine operation such as fuel cut.

On Board Diagnosis Logic

INFOID:0000000011291997

These self-diagnoses have the one trip detection logic.
NOTE:
If DTC P2122 or P2123 is displayed with DTC P0643, first perform the trouble diagnosis for DTC P0643. Refer to EC-374 .

DTC No.	Trouble diagnosis name	DTC detecting condition	Possible cause
P2122 2122	Accelerator pedal position sensor 1 circuit low input	An excessively low voltage from the APP sensor 1 is sent to ECM.	• Harness or connectors (The APP sensor 1 circuit is open or shorted.) • Accelerator pedal position sensor (Accelerator pedal position sensor 1)
P2123 2123	Accelerator pedal position sensor 1 circuit high input	An excessively high voltage from the APP sensor 1 is sent to ECM.	

FAIL-SAFE MODE

When the malfunction is detected, ECM enters fail-safe mode and the MIL lights up.

Engine operating condition in fail-safe mode
The ECM controls the electric throttle control actuator in regulating the throttle opening in order for the idle position to be within +10 degrees. The ECM regulates the opening speed of the throttle valve to be slower than the normal condition. So, the acceleration will be poor.

DTC Confirmation Procedure

INFOID:0000000011291998

NOTE:
If DTC Confirmation Procedure has been previously conducted, always perform the following before conducting the next step.
1. Turn ignition switch OFF and wait at least 10 seconds.
2. Turn ignition switch ON.
3. Turn ignition switch OFF and wait at least 10 seconds.

TESTING CONDITION:
Before performing the following procedure, confirm that battery voltage is more than 8 V at idle.
1. Start engine and let it idle for 1 second.
2. Check DTC.
3. If DTC is detected, go to EC-447, "Diagnosis Procedure".

Diagnosis Procedure

INFOID:0000000011291999

1.CHECK GROUND CONNECTIONS

1. Turn ignition switch OFF.
2. Loosen and retighten three ground screws on the body.
   Refer to EC-154, "Ground Inspection" .

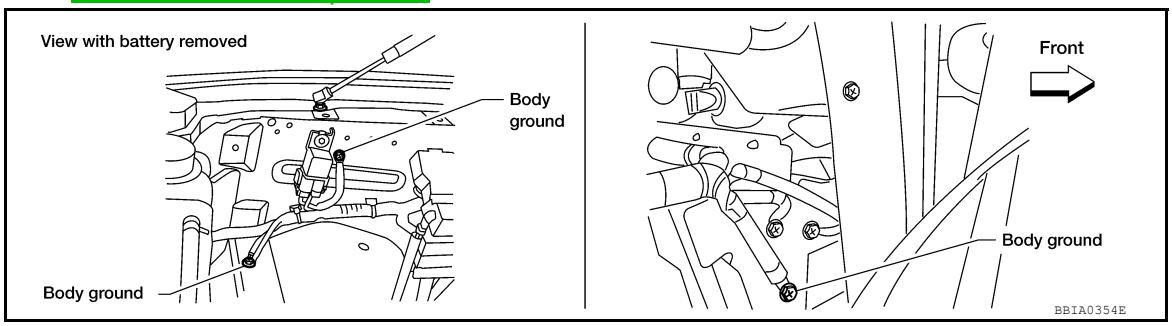

OK or NG

OK >> GO TO 2.
NG >> Repair or replace ground connections.

2. CHECK APP SENSOR 1 POWER SUPPLY CIRCUIT

1. Disconnect accelerator pedal position (APP) sensor harness connector.
2. Turn ignition switch ON.

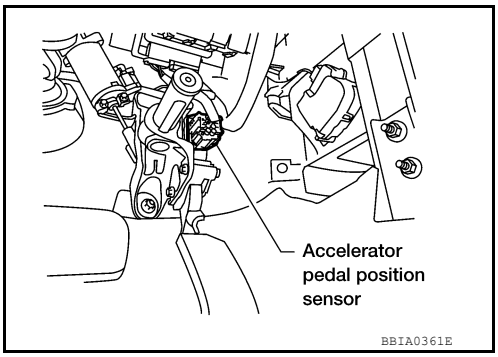

3. Check voltage between APP sensor terminal 7 and ground with CONSULT or tester.

Voltage: Approximately 5 V

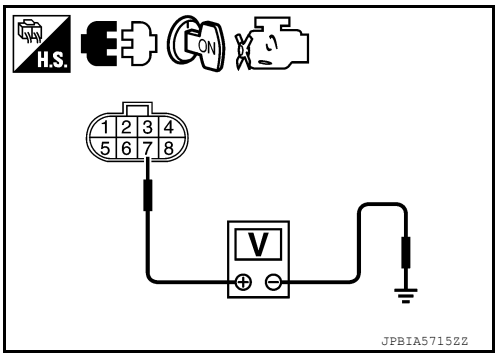

OK or NG

OK >> GO TO 3.
NG >> Repair open circuit or short to ground or short to power in harness or connectors.

3. CHECK APP SENSOR 1 GROUND CIRCUIT FOR OPEN AND SHORT

1. Turn ignition switch OFF.
2. Disconnect ECM harness connector.
3. Check harness continuity between ECM terminal 82 and APP sensor terminal 1.
   Refer to Wiring Diagram.

Continuity should exist.

4. Also check harness for short to ground and short to power.

OK or NG

OK >> GO TO 4.
NG >> Repair open circuit or short to ground or short to power in harness or connectors.

4. CHECK APP SENSOR INPUT SIGNAL CIRCUIT FOR OPEN AND SHORT

1. Check harness continuity between ECM terminal 106 and APP sensor terminal 2.
   Refer to Wiring Diagram.

Continuity should exist.

2. Also check harness for short to ground and short to power.

OK or NG

OK >> GO TO 5.
NG >> Repair open circuit or short to ground or short to power in harness or connectors.

5. CHECK APP SENSOR

Refer to EC-449, "Component Inspection" .

OK or NG

OK >> GO TO 7.
NG >> GO TO 6.

6. REPLACE ACCELERATOR PEDAL ASSEMBLY

1. Replace the accelerator pedal assembly. Refer to ACC-4.
2. Perform EC-128, "Accelerator Pedal Released Position Learning".
3. Perform EC-128, "Throttle Valve Closed Position Learning".
4. Perform EC-129, "Idle Air Volume Learning".

>> **INSPECTION END**

7. CHECK INTERMITTENT INCIDENT

Refer to GI-40, "How to Check Terminal" and GI-43, "Intermittent Incident".

>> **INSPECTION END**

Component Inspection

INFOID:0000000011292000

ACCELERATOR PEDAL POSITION SENSOR

1. Reconnect all harness connectors disconnected.
2. Turn ignition switch ON.
3. Check voltage between ECM terminals 106 (APP sensor 1 signal), 98 (APP sensor 2 signal) and ground under the following conditions.

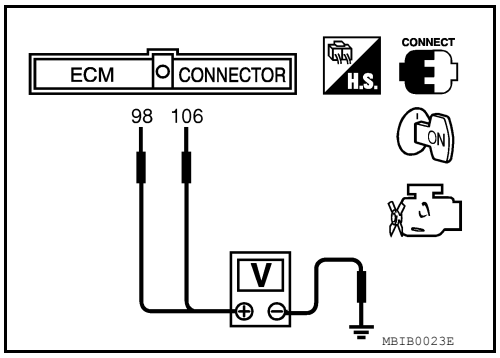

Terminal	Accelerator pedal	Voltage
106 (Accelerator pedal position sensor 1)	Fully released	0.5 - 1.0 V
	Fully depressed	4.2 - 4.8 V
98 (Accelerator pedal position sensor 2)	Fully released	0.25 - 0.5 V
	Fully depressed	2.0 - 2.5 V

4. If NG, replace accelerator pedal assembly, refer to ACC-4, and go to next step.
5. Perform EC-128, "Accelerator Pedal Released Position Learning".
6. Perform EC-128, "Throttle Valve Closed Position Learning".
7. Perform EC-129, "Idle Air Volume Learning".

P2127, P2128 APP SENSOR

Component Description

INFOID:0000000011292001

The accelerator pedal position sensor is installed on the upper end of the accelerator pedal assembly. The sensor detects the accelerator position and sends a signal to the ECM.
Accelerator pedal position sensor has two sensors. These sensors are a kind of potentiometers which transform the accelerator pedal position into output voltage, and emit the voltage signal to the ECM. In addition, these sensors detect the opening and closing speed of the accelerator pedal and feed the voltage signals to the ECM. The ECM judges the current opening angle of the accelerator pedal from these signals and controls the throttle control motor based on these signals.

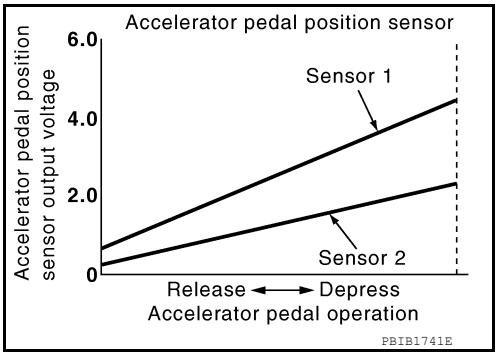

Idle position of the accelerator pedal is determined by the ECM receiving the signal from the accelerator pedal position sensor. The ECM uses this signal for the engine operation such as fuel cut.

On Board Diagnosis Logic

INFOID:0000000011292002

These self-diagnoses have the one trip detection logic.

DTC No.	Trouble diagnosis name	DTC detecting condition	Possible cause
P2127 2127	Accelerator pedal position sensor 2 circuit low input	An excessively low voltage from the APP sensor 2 is sent to ECM.	• Harness or connectors (APP sensor 2 circuit is open or shorted.) (TP sensor circuit is shorted.) • Accelerator pedal position sensor (Accelerator pedal position sensor 2) • Electric throttle control actuator (TP sensor)
P2128 2128	Accelerator pedal position sensor 2 circuit high input	An excessively high voltage from the APP sensor 2 is sent to ECM.	

FAIL-SAFE MODE

When the malfunction is detected, ECM enters fail-safe mode and the MIL lights up.

Engine operating condition in fail-safe mode
The ECM controls the electric throttle control actuator in regulating the throttle opening in order for the idle position to be within +10 degrees. The ECM regulates the opening speed of the throttle valve to be slower than the normal condition. So, the acceleration will be poor.

DTC Confirmation Procedure

INFOID:0000000011292003

NOTE:
If DTC Confirmation Procedure has been previously conducted, always perform the following before conducting the next step.
1. Turn ignition switch OFF and wait at least 10 seconds.
2. Turn ignition switch ON.
3. Turn ignition switch OFF and wait at least 10 seconds.

TESTING CONDITION:
Before performing the following procedure, confirm that battery voltage is more than 8 V at idle.

1. Start engine and let it idle for 1 second.
2. Check DTC.
3. If DTC is detected, go to EC-450, "Diagnosis Procedure".

Diagnosis Procedure

INFOID:0000000011292004

1. CHECK GROUND CONNECTIONS

1. Turn ignition switch OFF.
2. Loosen and retighten three ground screws on the body.

Refer to EC-154, "Ground Inspection" .

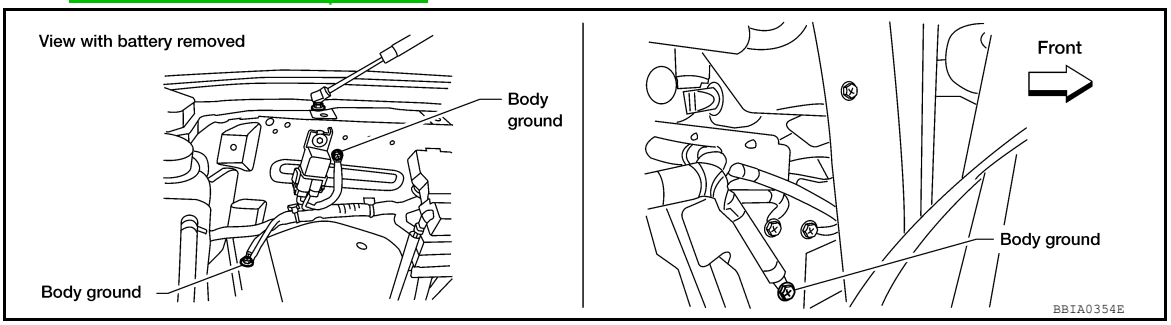

OK or NG

OK >> GO TO 2.
NG >> Repair or replace ground connections.

2. CHECK APP SENSOR 2 POWER SUPPLY CIRCUIT-I

1. Disconnect accelerator pedal position (APP) sensor harness connector.
2. Turn ignition switch ON.

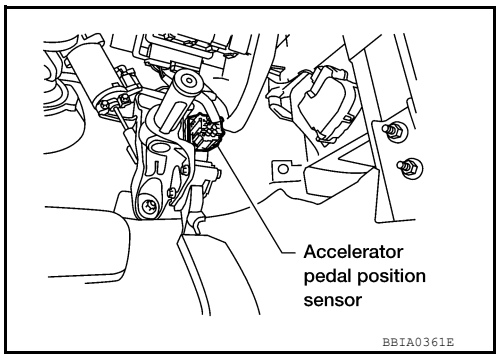

3. Check voltage between APP sensor terminal 6 and ground with CONSULT or tester.

Voltage: Approximately 5 V

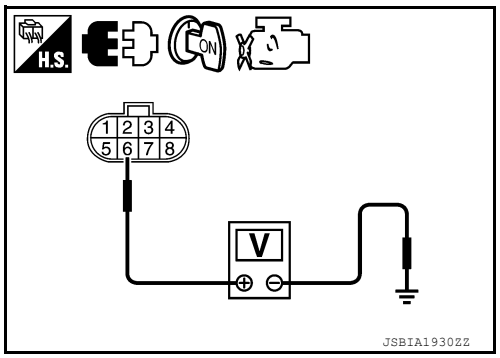

OK or NG

OK >> GO TO 7.
NG >> GO TO 3.

3. CHECK APP SENSOR 2 POWER SUPPLY CIRCUIT-II

1. Turn ignition switch OFF.
2. Disconnect ECM harness connector.
3. Check harness continuity between APP sensor terminal 6 and ECM terminal 91. Refer to Wiring Diagram.

Continuity should exist.

OK or NG

OK >> GO TO 4.
NG >> Repair open circuit.

4. CHECK APP SENSOR 2 POWER SUPPLY CIRCUIT-III

Check harness for short to power and short to ground, between the following terminals

ECM terminal	Sensor terminal	Reference Wiring Diagram
47	Electric throttle control actuator terminal 2	EC-89, "Wiring Diagram"
91	APP sensor terminal 6	

OK or NG

OK >> GO TO 5.
NG >> Repair short to ground or short to power in harness or connectors.

5. CHECK THROTTLE POSITION SENSOR

Refer to EC-457, "Component Inspection" .

OK or NG

OK >> GO TO 11.
NG >> GO TO 6.

6. REPLACE ELECTRIC THROTTLE CONTROL ACTUATOR

1. Replace the electric throttle control actuator. Refer to EM-26.
2. Perform EC-128, "Throttle Valve Closed Position Learning".
3. Perform EC-129, "Idle Air Volume Learning".

>> **INSPECTION END**

7. CHECK APP SENSOR 2 GROUND CIRCUIT FOR OPEN AND SHORT

1. Turn ignition switch OFF.
2. Disconnect ECM harness connector.
3. Check harness continuity between ECM terminal 83 and APP sensor terminal 3.
   Refer to Wiring Diagram.

   Continuity should exist.

4. Also check harness for short to ground and short to power.

OK or NG

OK >> GO TO 8.
NG >> Repair open circuit or short to ground or short to power in harness or connectors.

8. CHECK APP SENSOR 2 INPUT SIGNAL CIRCUIT FOR OPEN AND SHORT

1. Check harness continuity between ECM terminal 98 and APP sensor terminal 5.
   Refer to Wiring Diagram.

   Continuity should exist.

2. Also check harness for short to ground and short to power.

OK or NG

OK >> GO TO 9.
NG >> Repair open circuit or short to ground or short to power in harness or connectors.

9. CHECK APP SENSOR

Refer to EC-453, "Component Inspection".

OK or NG

OK >> GO TO 11.
NG >> GO TO 10.

10. REPLACE ACCELERATOR PEDAL ASSEMBLY

1. Replace the accelerator pedal assembly. Refer to ACC-4.
2. Perform EC-128, "Accelerator Pedal Released Position Learning".
3. Perform EC-128, "Throttle Valve Closed Position Learning".
4. Perform EC-129, "Idle Air Volume Learning".

>> **INSPECTION END**

11. CHECK INTERMITTENT INCIDENT

Refer to GI-40, "How to Check Terminal" and GI-43, "Intermittent Incident".

>> **INSPECTION END**

Component Inspection

INFOID:0000000011292005

ACCELERATOR PEDAL POSITION SENSOR

1. Reconnect all harness connectors disconnected.
2. Turn ignition switch ON.
3. Check voltage between ECM terminals 106 (APP sensor 1 signal), 98 (APP sensor 2 signal) and ground under the following conditions.

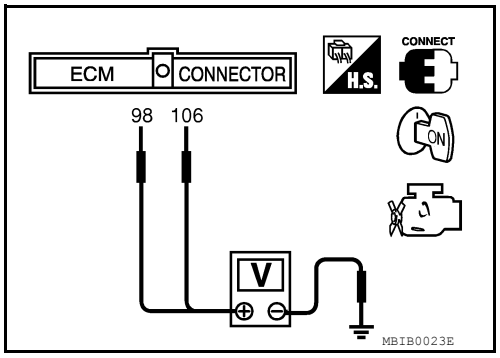

Terminal	Accelerator pedal	Voltage
106 (Accelerator pedal position sensor 1)	Fully released	0.5 - 1.0 V
	Fully depressed	4.2 - 4.8 V
98 (Accelerator pedal position sensor 2)	Fully released	0.25 - 0.5 V
	Fully depressed	2.0 - 2.5 V

4. If NG, replace accelerator pedal assembly, refer to ACC-4, and go to next step.
5. Perform EC-128, "Accelerator Pedal Released Position Learning".
6. Perform EC-128, "Throttle Valve Closed Position Learning".
7. Perform EC-129, "Idle Air Volume Learning".

P2135 TP SENSOR

Component Description

INFOID:0000000011292006

Electric throttle control actuator consists of throttle control motor, throttle position sensor, etc. The throttle position sensor responds to the throttle valve movement.
The throttle position sensor has the two sensors. These sensors are a kind of potentiometers which transform the throttle valve position into output voltage, and emit the voltage signal to the ECM. In addition, these sensors detect the opening and closing speed of the throttle valve and feed the voltage signals to the ECM. The ECM judges the current opening angle of the throttle valve from these signals and the ECM controls the throttle control motor to make the throttle valve opening angle properly in response to driving condition.

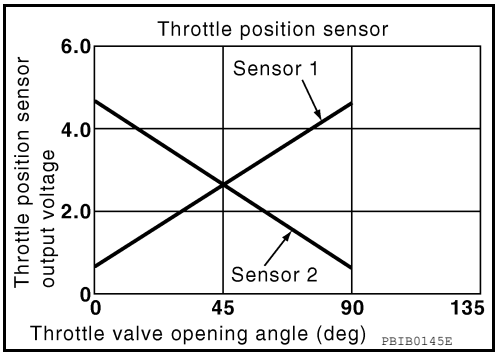

On Board Diagnosis Logic

INFOID:0000000011292007

This self-diagnosis has the one trip detection logic.

DTC No.	Trouble diagnosis name	DTC detecting condition	Possible cause
P2135 2135	Throttle position sensor circuit range/performance	Rationally incorrect voltage is sent to ECM compared with the signals from TP sensor 1 and TP sensor 2.	• Harness or connector (TP sensor 1 and 2 circuit is open or shorted.) (APP sensor 2 circuit is shorted.) • Electric throttle control actuator (TP sensor 1 and 2) • Accelerator pedal position sensor (APP sensor 2)

FAIL-SAFE MODE

When the malfunction is detected, the ECM enters fail-safe mode and the MIL lights up.

Engine operation condition in fail-safe mode
The ECM controls the electric throttle control actuator in regulating the throttle opening in order for the idle position to be within +10 degrees. The ECM regulates the opening speed of the throttle valve to be slower than the normal condition. So, the acceleration will be poor.

DTC Confirmation Procedure

INFOID:0000000011292008

NOTE:
If DTC Confirmation Procedure has been previously conducted, always perform the following before conducting the next step.
1. Turn ignition switch OFF and wait at least 10 seconds.
2. Turn ignition switch ON.
3. Turn ignition switch OFF and wait at least 10 seconds.

TESTING CONDITION:
Before performing the following procedure, confirm that battery voltage is more than 8 V at idle.
1. Start engine and let it idle for 1 second.
2. Check DTC.
3. If DTC is detected, go to EC-454, "Diagnosis Procedure".

Diagnosis Procedure

INFOID:0000000011292009

1. CHECK GROUND CONNECTIONS

1. Turn ignition switch OFF.
2. Loosen and retighten three ground screws on the body.

Refer to EC-154, "Ground Inspection" .

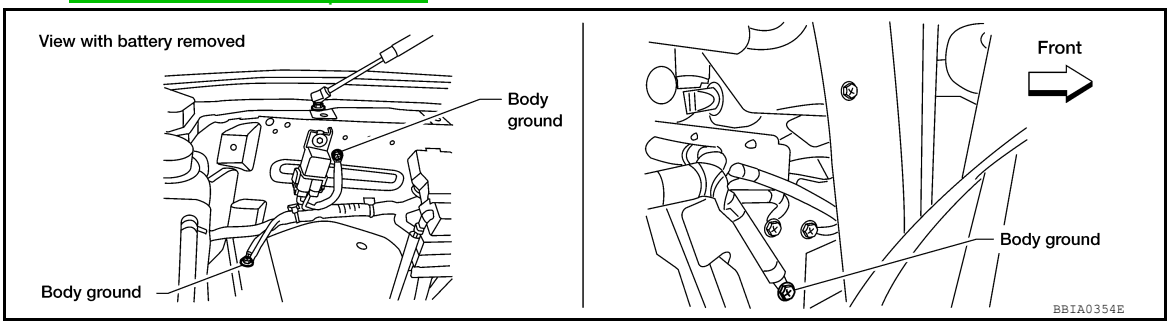

OK or NG

OK >> GO TO 2.
NG >> Repair or replace ground connections.

2. CHECK THROTTLE POSITION SENSOR POWER SUPPLY CIRCUIT-I

1. Disconnect electric throttle control actuator harness connector.
2. Turn ignition switch ON.

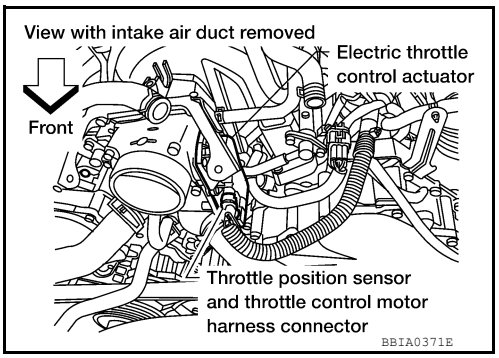

3. Check voltage between electric throttle control actuator terminal 2 and ground with CONSULT or tester.

Voltage: Approximately 5 V

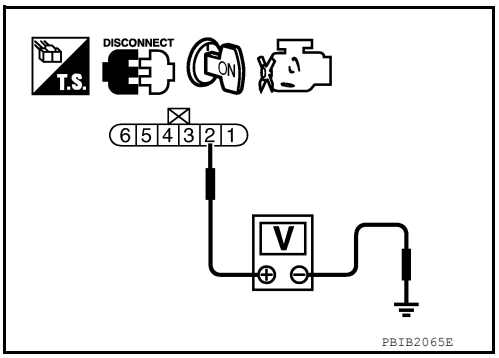

OK or NG

OK >> GO TO 7.
NG >> GO TO 3.

3. CHECK THROTTLE POSITION SENSOR POWER SUPPLY CIRCUIT-II

1. Turn ignition switch OFF.
2. Disconnect ECM harness connector.
3. Check harness continuity between electric throttle control actuator terminal 2 and ECM terminal 47. Refer to Wiring Diagram.

Continuity should exist.

OK or NG

OK >> GO TO 4.
NG >> Repair open circuit.

4. CHECK THROTTLE POSITION SENSOR POWER SUPPLY CIRCUIT-III

Check harness for short to power and short to ground, between the following terminals.

ECM terminal	Sensor terminal	Reference Wiring Diagram
47	Electric throttle control actuator terminal 2	EC-89, "Wiring Diagram"
91	APP sensor terminal 7	

OK or NG

OK >> GO TO 5.
NG >> Repair short to ground or short to power in harness or connectors.

5. CHECK ACCELERATOR PEDAL POSITION SENSOR

Refer to EC-461, "Component Inspection" .

OK or NG

OK >> GO TO 11.
NG >> GO TO 6.

6. REPLACE ACCELERATOR PEDAL ASSEMBLY

1. Replace the accelerator pedal assembly. Refer to ACC-4.
2. Perform EC-128, "Accelerator Pedal Released Position Learning".
3. Perform EC-128, "Throttle Valve Closed Position Learning".
4. Perform EC-129, "Idle Air Volume Learning".

>> **INSPECTION END**

7. CHECK THROTTLE POSITION SENSOR GROUND CIRCUIT FOR OPEN AND SHORT

1. Turn ignition switch OFF.
2. Disconnect ECM harness connector.
3. Check harness continuity between electric throttle control actuator terminal 4 and ECM terminal 66.
   Refer to Wiring Diagram.

Continuity should exist.

4. Also check harness for short to ground and short to power.

OK or NG

OK >> GO TO 8.
NG >> Repair open circuit or short to ground or short to power in harness or connectors.

8. CHECK THROTTLE POSITION SENSOR INPUT SIGNAL CIRCUIT FOR OPEN AND SHORT

1. Check harness continuity between ECM terminal 50 and electric throttle control actuator terminal 1, ECM terminal 69 and electric throttle control actuator terminal 3.
   Refer to Wiring Diagram.

Continuity should exist.

2. Also check harness for short to ground and short to power.

OK or NG

OK >> GO TO 9.
NG >> Repair open circuit or short to ground or short to power in harness or connectors.

9. CHECK THROTTLE POSITION SENSOR

Refer to EC-457, "Component Inspection".

OK or NG

OK >> GO TO 11.
NG >> GO TO 10.

10. REPLACE ELECTRIC THROTTLE CONTROL ACTUATOR

1. Replace the electric throttle control actuator. Refer to EM-26.
2. Perform EC-128, "Throttle Valve Closed Position Learning".
3. Perform EC-129, "Idle Air Volume Learning".

>> **INSPECTION END**

11. CHECK INTERMITTENT INCIDENT

Refer to GI-40, "How to Check Terminal" and GI-43, "Intermittent Incident".

>> **INSPECTION END**

Component Inspection

INFOID:0000000011292010

THROTTLE POSITION SENSOR

1. Reconnect all harness connectors disconnected.
2. Perform EC-128, "Throttle Valve Closed Position Learning" .
3. Turn ignition switch ON.
4. Set selector lever to D position.
5. Check voltage between ECM terminals 50 (TP sensor 1 signal), 69 (TP sensor 2 signal) and ground under the following conditions.

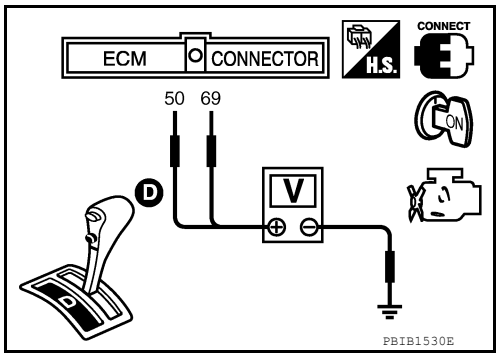

Terminal	Accelerator pedal	Voltage
50 (Throttle position sensor 1)	Fully released	More than 0.36 V
	Fully depressed	Less than 4.75 V
69 (Throttle position sensor 2)	Fully released	Less than 4.75 V
	Fully depressed	More than 0.36 V

6. If NG, replace electric throttle control actuator, refer to EM-26, and go to the next step.
7. Perform EC-128, "Throttle Valve Closed Position Learning".
8. Perform EC-129, "Idle Air Volume Learning".

P2138 APP SENSOR

Component Description

INFOID:0000000011292011

The accelerator pedal position sensor is installed on the upper end of the accelerator pedal assembly. The sensor detects the accelerator position and sends a signal to the ECM.
Accelerator pedal position sensor has two sensors. These sensors are a kind of potentiometers which transform the accelerator pedal position into output voltage, and emit the voltage signal to the ECM. In addition, these sensors detect the opening and closing speed of the accelerator pedal and feed the voltage signals to the ECM. The ECM judges the current opening angle of the accelerator pedal from these signals and controls the throttle control motor based on these signals.

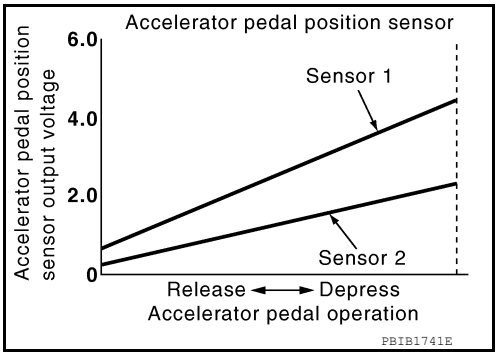

Idle position of the accelerator pedal is determined by the ECM receiving the signal from the accelerator pedal position sensor. The ECM uses this signal for the engine operation such as fuel cut.

On Board Diagnosis Logic

INFOID:0000000011292012

This self-diagnosis has the one trip detection logic.
NOTE:
If DTC P2138 is displayed with DTC P0643, first perform the trouble diagnosis for DTC P0643. Refer to EC-374 .

DTC No.	Trouble diagnosis name	DTC detecting condition	Possible cause
P2138 2138	Accelerator pedal position sensor circuit range/performance	Rationally incorrect voltage is sent to ECM compared with the signals from APP sensor 1 and APP sensor 2.	• Harness or connector (APP sensor 1 and 2 circuit is open or shorted.) (TP sensor circuit is shorted.) • Accelerator pedal position sensor 1 and 2 • Electric throttle control actuator (TP sensor)

FAIL-SAFE MODE

When the malfunction is detected, ECM enters fail-safe mode and the MIL lights up.

Engine operating condition in fail-safe mode
The ECM controls the electric throttle control actuator in regulating the throttle opening in order for the idle position to be within +10 degrees. The ECM regulates the opening speed of the throttle valve to be slower than the normal condition. So, the acceleration will be poor.

DTC Confirmation Procedure

INFOID:0000000011292013

NOTE:
If DTC Confirmation Procedure has been previously conducted, always perform the following before conducting the next step.
1. Turn ignition switch OFF and wait at least 10 seconds.
2. Turn ignition switch ON.
3. Turn ignition switch OFF and wait at least 10 seconds.

TESTING CONDITION:
Before performing the following procedure, confirm that battery voltage is more than 8 V at idle.

1. Start engine and let it idle for 1 second.
2. Check DTC.
3. If DTC is detected, go to EC-459, "Diagnosis Procedure".

Diagnosis Procedure

INFOID:0000000011292014

1. CHECK GROUND CONNECTIONS

1. Turn ignition switch OFF.
2. Loosen and retighten three ground screws on the body.
   Refer to EC-154, "Ground Inspection" .

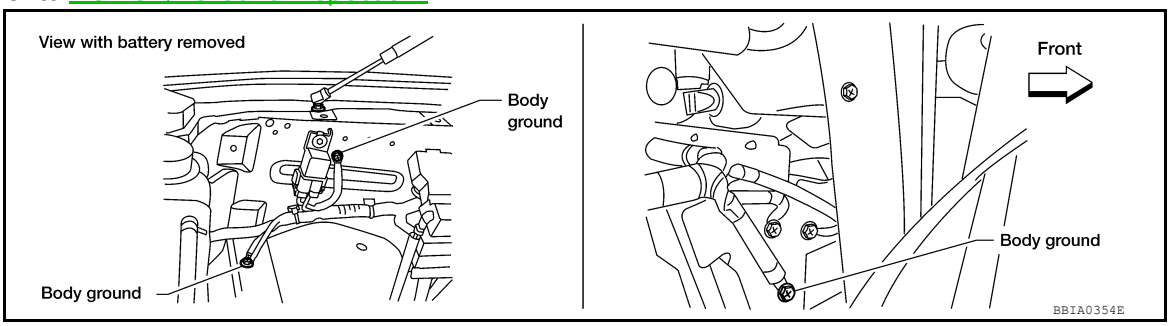

OK or NG

OK >> GO TO 2.
NG >> Repair or replace ground connections.

2. CHECK APP SENSOR 1 POWER SUPPLY CIRCUIT

1. Disconnect accelerator pedal position (APP) sensor harness connector.
2. Turn ignition switch ON.

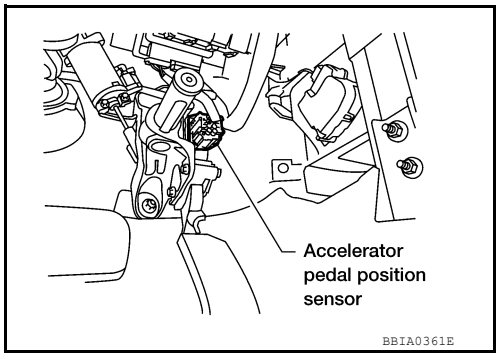

3. Check voltage between APP sensor terminal 7 and ground with CONSULT or tester.

Voltage: Approximately 5 V

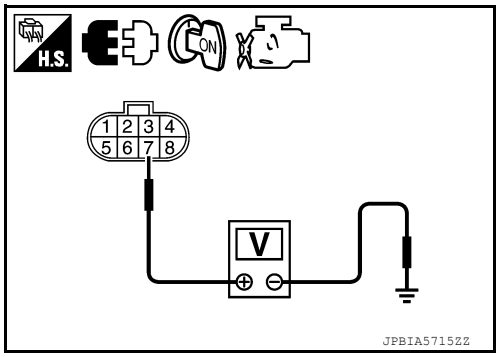

OK or NG

OK >> GO TO 3.
NG >> Repair open circuit or short to ground or short to power in harness or connectors.

3. CHECK APP SENSOR 2 POWER SUPPLY CIRCUIT-I

1. Turn ignition switch ON.
2. Check voltage between APP sensor terminal 6 and ground with CONSULT or tester.

Voltage: Approximately 5 V

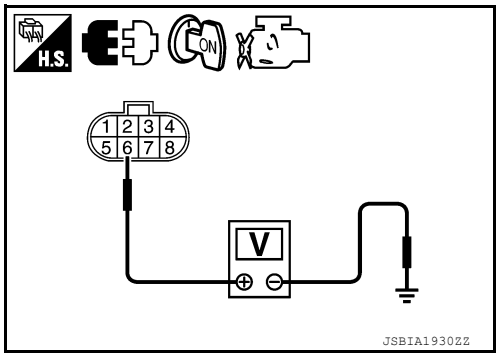

OK or NG

OK >> GO TO 8.
NG >> GO TO 4.

4. CHECK APP SENSOR 2 POWER SUPPLY CIRCUIT-II

1. Turn ignition switch OFF.
2. Disconnect ECM harness connector.
3. Check harness continuity between APP sensor terminal 6 and ECM terminal 91.
   Refer to Wiring Diagram.

Continuity should exist.

OK or NG

OK >> GO TO 5.
NG >> Repair open circuit in harness or connectors.

5. CHECK APP SENSOR 2 POWER SUPPLY CIRCUIT-III

Check harness for short to power and short to ground, between the following terminals

ECM terminal	Sensor terminal	Reference Wiring Diagram
47	Electric throttle control actuator terminal 2	EC-89, "Wiring Diagram"
91	APP sensor terminal 6	

OK or NG

OK >> GO TO 6.
NG >> Repair short to ground or short to power in harness connectors.

6. CHECK THROTTLE POSITION SENSOR

Refer to EC-457, "Component Inspection" .

OK or NG

OK >> GO TO 12.
NG >> GO TO 7.

7. REPLACE ELECTRIC THROTTLE CONTROL ACTUATOR

1. Replace the electric throttle control actuator. Refer to EM-26.
2. Perform EC-128, "Throttle Valve Closed Position Learning".
3. Perform EC-129, "Idle Air Volume Learning".

>> **INSPECTION END**

8. CHECK APP SENSOR GROUND CIRCUIT FOR OPEN AND SHORT

1. Turn ignition switch OFF.
2. Disconnect ECM harness connector.
3. Check harness continuity between ECM terminal 82 and APP sensor terminal 1, ECM terminal 83 and APP sensor terminal 3.
   Refer to Wiring Diagram.

Continuity should exist.

4. Also check harness for short to ground and short to power.

OK or NG

OK >> GO TO 9.
NG >> Repair open circuit or short to ground or short to power in harness or connectors.

9. CHECK APP SENSOR INPUT SIGNAL CIRCUIT FOR OPEN AND SHORT

1. Check harness continuity between ECM terminal 106 and APP sensor terminal 2, ECM terminal 98 and APP sensor terminal 5.
   Refer to Wiring Diagram.

Continuity should exist.

2. Also check harness for short to ground and short to power.

OK or NG

OK >> GO TO 10.
NG >> Repair open circuit or short to ground or short to power in harness or connectors.

10. CHECK ACCELERATOR PEDAL POSITION SENSOR

Refer to EC-461, "Component Inspection".

OK or NG

OK >> GO TO 12.
NG >> GO TO 11.

11. REPLACE ACCELERATOR PEDAL ASSEMBLY

1. Replace the accelerator pedal assembly. Refer to ACC-4.
2. Perform EC-128, "Accelerator Pedal Released Position Learning".
3. Perform EC-128, "Throttle Valve Closed Position Learning".
4. Perform EC-129, "Idle Air Volume Learning".

>> **INSPECTION END**

12. CHECK INTERMITTENT INCIDENT

Refer to GI-40, "How to Check Terminal" and GI-43, "Intermittent Incident".

>> **INSPECTION END**

Component Inspection

INFOID:0000000011292015

ACCELERATOR PEDAL POSITION SENSOR

1. Reconnect all harness connectors disconnected.
2. Turn ignition switch ON.
3. Check voltage between ECM terminals 106 (APP sensor 1 signal), 98 (APP sensor 2 signal) and ground under the following conditions.

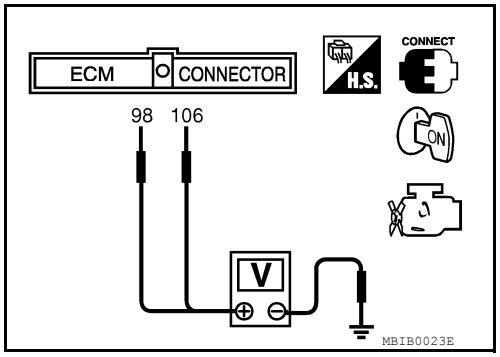

Terminal	Accelerator pedal	Voltage
106 (Accelerator pedal position sensor 1)	Fully released	0.5 - 1.0 V
	Fully depressed	4.2 - 4.8 V
98 (Accelerator pedal position sensor 2)	Fully released	0.25 - 0.5 V
	Fully depressed	2.0 - 2.5 V

4. If NG, replace accelerator pedal assembly, refer to ACC-4, and go to next step.
5. Perform EC-128, "Accelerator Pedal Released Position Learning".
6. Perform EC-128, "Throttle Valve Closed Position Learning".
7. Perform EC-129, "Idle Air Volume Learning".

P219A, P219B AIR FUEL RATIO

DTC Logic

INFOID:0000000011545976

DTC DETECTION LOGIC

NOTE:
If DTC P219A or P219B is displayed with other DTC, first perform the trouble diagnosis for the other DTC. Refer to EC-77, "DTC Index".

DTC No.	CONSULT screen terms (Trouble diagnosis content)	DTC detecting condition	Possible cause
P219A	AIR FUEL RATIO IMBALANCE B1 (Air-fuel ratio imbalance bank 1)	ECM detects a lean/rich air fuel ratio state in any cylinder for a specified length of time.	• Fuel injector • Exhaust gas leaks • Incorrect fuel pressure • Mass air flow sensor • Intake air leaks • Lack of fuel • Incorrect PCV hose connection • Improper spark plug • Insufficient compression • The fuel injector circuit is open or shorted • Ignition coil • The ignition signal circuit is open or shorted
P219B	AIR FUEL RATIO IMBALANCE B2 (Air-fuel ratio imbalance bank 2)		

DTC CONFIRMATION PROCEDURE

1. PRECONDITIONING-1

If DTC Confirmation Procedure has been previously conducted, always perform the following before conducting the next test.
1. Turn ignition switch OFF and wait at least 10 seconds.
2. Turn ignition switch ON.
3. Turn ignition switch OFF and wait at least 10 seconds.

NOTE:
Before performing the following procedure, confirm that battery voltage is 11 V or more at idle.

>> GO TO 2.

2. PRECONDITIONING-2

1. Turn ignition switch ON.
2. Clear the mixture ratio self-learning value. Refer to EC-128, "Ethanol Mixture Ratio Adaptation (Flexible Fuel Vehicle)".

Will CONSULT be used?

YES >> GO TO 3.
NO >> GO TO 6.

3. PERFORM DTC CONFIRMATION PROCEDURE-1

1. Turn ignition switch ON.
2. Select “COOLAN TEMP/S” in “DATA MONITOR” mode of “ENGINE” using CONSULT.
3. Start engine.
4. Make sure that “COOLAN TEMP/S” indicates more than 80°C (176°F).

>> GO TO 4.

4. PERFORM DTC CONFIRMATION PROCEDURE-2

With CONSULT
1. Select “SYSTEM 1 DIAGNOSIS B B1” and “SYSTEM 1 DIAGNOSIS A B1” in “DATA MONITOR” mode of “ENGINE” using CONSULT.
2. Drive vehicle under the following conditions for at least 5 consecutive seconds.

CAUTION:
- **Always drive vehicle at a safe speed.**

ENG SPEED	1,150 – 1,850rpm
COOLAN TEMP/S	More than 80°C (176°F)
B/FUEL SCHDL	6.5 – 10.4 msec
Selector lever	D position
SYSTEM 1 DIAGNOSIS B B1	PRSENT

NOTE:
- Drive the vehicle at approximately 88 km/h (55MPH) allows easy diagnosis.
- Keep the accelerator pedal as possible during crusing.

3. Check “SYSTEM 1 DIAGNOSIS A B1” indication.

Is “CMPLT” displayed?

YES >> GO TO 5.
NO >> GO TO 2.

5. PERFORM DTC CONFIRMATION PROCEDURE-3

Check 1st trip DTC.

Is 1st trip DTC detected?

YES >> Proceed to EC-463, "Diagnosis Procedure".
NO >> INSPECTION END

6. PERFORM DTC CONFIRMATION PROCEDURE-4

Without CONSULT

1. Start the engine and warm it up to normal operating temperature.
2. Drive vehicle under the following conditions for at least 5 consecutive seconds.

CAUTION:
- **Always drive vehicle at a safe speed.**

Engine speed	1,150 – 1,850rpm
Calculated load value	38 – 83 %
Selector lever	D position

NOTE:
- Drive the vehicle at approximately 88 km/h (55MPH) allows easy diagnosis.
- Keep the accelerator pedal as possible during crusing.

3. Check 1st trip DTC.

Is 1st trip DTC detected?

YES >> Proceed to EC-463, "Diagnosis Procedure".
NO >> INSPECTION END

Diagnosis Procedure

INFOID:0000000011545977

1. CHECK FOR INTAKE AIR LEAK

1. Stop engine and check the following for connection.
- Air duct
- Vacuum hoses
- PCV hose
- Intake air passage between air duct to intake manifold
2. Start engine and let it idle.
3. Listen for an intake air leak after the mass air flow sensor.

Is the inspection result normal?

YES >> GO TO 2.
NO >> Repair or replace error-detected parts.

2. CHECK EXHAUST GAS LEAK

1. Stop engine and visually check exhaust tube, three way catalyst and muffler for dents connection.
2. Start engine and let it idle.
3. Listen for an exhaust gas leak before three way catalyst (manifold).

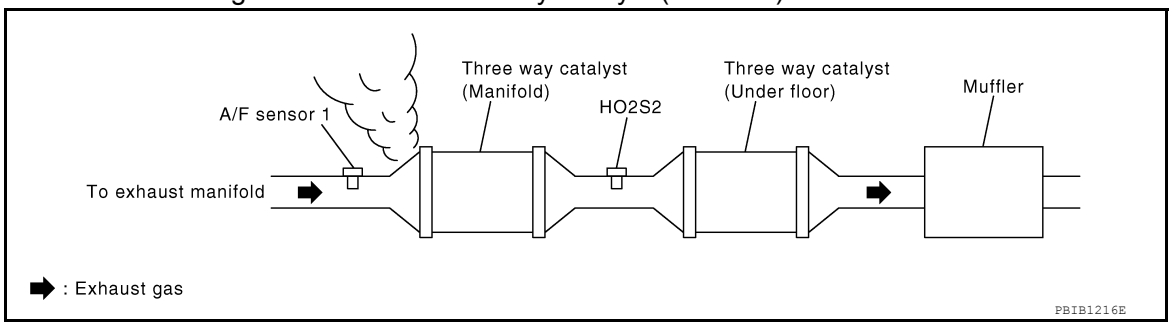

Is the inspection result normal?

YES >> GO TO 3.
NO >> Repair or replace error-detected parts.

3. CHECK FUEL PRESSURE

1. Release fuel pressure to zero. Refer to EC-506, "Fuel Pressure Check".
2. Check fuel pressure. Refer to EC-506, "Fuel Pressure Check".

Is the inspection result normal?

YES >> GO TO 4.
NO >> GO TO 9.

4. CHECK MASS AIR FLOW SENSOR

With CONSULT
Check “MASS AIR FLOW” in “DATA MONITOR” mode of “ENGINE” using CONSULT.
For specification, refer to EC-510, "Mass Air Flow Sensor".

With GST
Check mass air flow sensor signal in Service $01 using GST.
For specification, refer to EC-510, "Mass Air Flow Sensor".

Is the inspection result normal?

YES >> GO TO 5.
NO >> Check connectors for rusted terminals or loose connections in the mass air flow sensor circuit or grounds. Refer to EC-174, "Diagnosis Procedure".

5. CHECK FUNCTION OF FUEL INJECTOR-1

With CONSULT

1. Start engine.
2. Perform “POWER BALANCE” in “ACTIVE TEST” mode of “ENGINE” using CONSULT.
3. Check that each circuit produces a momentary engine speed drop.

Without CONSULT

1. Let engine idle.
2. Listen to each fuel injector operating sound.

Clicking noise should be heard.

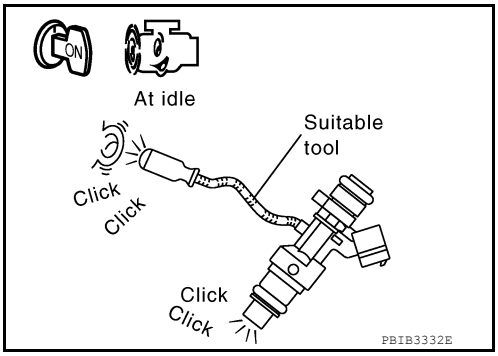

Is the inspection result normal?

YES >> GO TO 6.
NO >> Perform trouble diagnosis for fuel injector, refer to EC-475, "Component Description".

6. CHECK FUNCTION OF FUEL INJECTOR-2

CAUTION:
Perform the following procedure in a place with no combustible objects and good ventilation.

1. Turn ignition switch OFF.
2. Confirm that the engine is cooled down and there are no fire hazards near the vehicle.
3. Disconnect all fuel injector harness connectors.
4. Remove fuel tube assembly. Refer to EM-42, "Removal and Installation".
   Keep fuel hose and all fuel injectors connected to fuel tube.
5. Disconnect all ignition coil harness connectors.
6. Prepare pans or saucers under each fuel injector.
7. Crank engine for approximately 3 seconds.

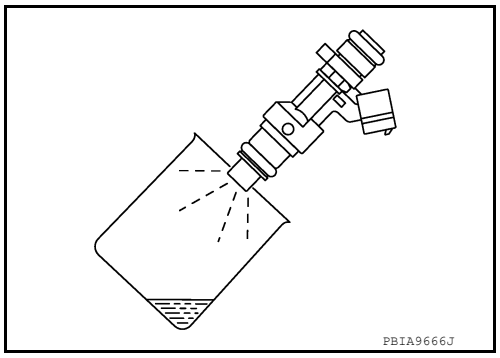

- **Fuel should be sprayed evenly for each fuel injector.**
- **Fuel must not drip from the tip of fuel injector.**

Is the inspection result normal?

YES >> GO TO 7.
NO >> Replace fuel injector. Refer to EM-42, "Removal and Installation".

7. CHECK FUNCTION OF IGNITION COIL-1

CAUTION:
Perform the following steps in a well-ventilated area with no combustibles.

1. Turn ignition switch OFF.
2. Remove fuel pump fuse from IPDM E/R to release fuel pressure.
   NOTE:
   CONSULT must not be used to release fuel pressure. It develops again during the following steps, if released by using CONSULT.
3. Start the engine.
4. After an engine stall, crank the engine two or three times to release all the fuel pressure.
5. Turn ignition switch OFF.
6. Disconnect all the harness connectors of ignition coil to prevent electric discharge from occurring in ignition coil.
7. Remove ignition coil assembly and spark plug of cylinder. Refer to EM-39, "Removal and Installation".
8. Crank engine for 5 seconds or more to remove combustion gas in the cylinder.
9. Connect spark plug and harness connector to ignition coil.
10. Allow a 13-17mm (0.52-0.66 in) spacing between spark plug and grounded metal portion as shown in the figure to fix the ignition coil with a rope or an equivalent.
11. Crank the engine for approximately 3 seconds to see if sparking occurs between spark plug and the grounded metal portion.

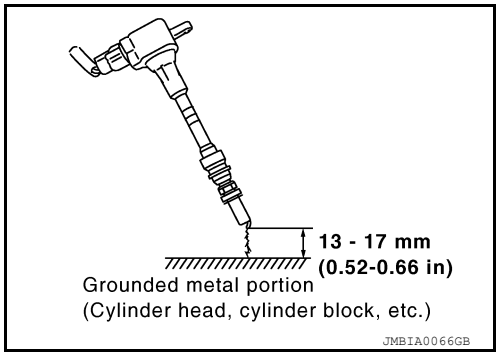

Spark should be generated.

CAUTION:
- **The discharge voltage becomes 20 kV or higher. Therefore, always stay away from the spark plug and ignition coil at least 50 cm (19.7 in) during the inspection.**
- **Leaving a space of more than 17mm (0.66 in) may damage the ignition coil.**

NOTE:
When the gap is less than 13 mm (0.52 in), a the spark might be generated even if the coil is malfunctioning.

Is the inspection result normal?

YES >> GO TO 8.
NO >> GO TO 10.

8. CHECK COMPRESSION PRESSURE

Check compression pressure. Refer to EM-23, "Checking Compression Pressure".

Is the inspection result normal?

YES >> Check intermittent incident. Refer to GI-43, "Intermittent Incident".
NO >> Check pistons, piston rings, valves, valve seats and cylinder head gaskets.

9. DETECT MALFUNCTIONING PART

Check fuel hoses and fuel tubes for clogging.

Is the inspection result normal?

YES >> Replace fuel filter and fuel pump assembly. Refer to FL-12, "Removal and Installation".
NO >> Repair or replace error-detected parts.

10. CHECK FUNCTION OF IGNITION COIL-2

1. Turn ignition switch OFF.
2. Disconnect spark plug and connect a non-malfunctioning spark plug.
3. Crank engine for approximately 3 seconds, and recheck whether spark is generated between the spark plug and the grounded metal portion.

Spark should be generated.

Is the inspection result normal?

YES >> GO TO 11.
NO >> Check ignition coil, power transistor and their circuits. Refer to EC-485, "Component Description".

11. CHECK SPARK PLUG

Check the initial spark plug for fouling, etc.

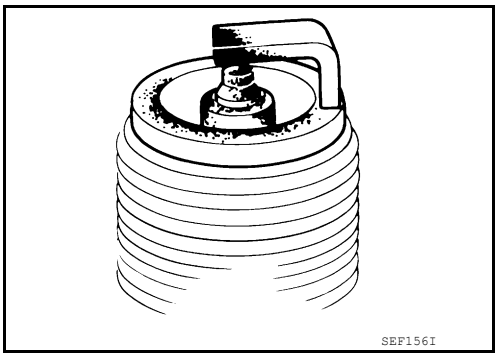

Is the inspection result normal?

YES >> 1. Repair or clean spark plug. Refer to EM-16, "Removal and Installation".
2. GO TO 12.
NO >> Replace spark plug(s) with standard type one(s). For spark plug type, refer to EM-118, "Standard and Limit".

12. CHECK FUNCTION OF IGNITION COIL-3

1. Reconnect the initial spark plugs.
2. Crank engine for approximately 3 seconds, and recheck whether spark is generated between the spark plug and the grounded portion.

Spark should be generated.

Is the inspection result normal?

YES >> Check intermittent incident. Refer to GI-43, "Intermittent Incident".
NO >> Replace spark plug(s) with standard type one(s). For spark plug type, refer to EM-118, "Standard and Limit".

ASCD BRAKE SWITCH

Component Description

INFOID:0000000011292016

When the brake pedal is depressed, ASCD brake switch is turned OFF and stop lamp switch is turned ON. ECM detects the state of the brake pedal by this input of two kinds (ON/OFF signal).
Refer to EC-28 for the ASCD function.

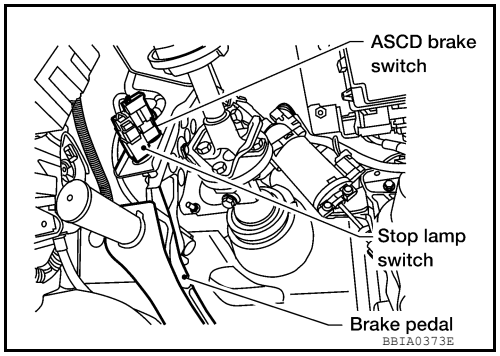

Diagnosis Procedure

INFOID:0000000011292017

1. CHECK OVERALL FUNCTION-I

With CONSULT

1. Turn ignition switch ON.
2. Select “BRAKE SW1” in “DATA MONITOR” mode with CONSULT.
3. Check “BRAKE SW1” indication under the following conditions.

CONDITION	INDICATION
Brake pedal: Slightly depressed	OFF
Brake pedal: Fully released	ON

Without CONSULT

1. Turn ignition switch ON.
2. Check voltage between ECM terminal 108 and ground under the following conditions.

CONDITION	VOLTAGE
Brake pedal: Slightly depressed	Approximately 0 V
Brake pedal: Fully released	Battery voltage

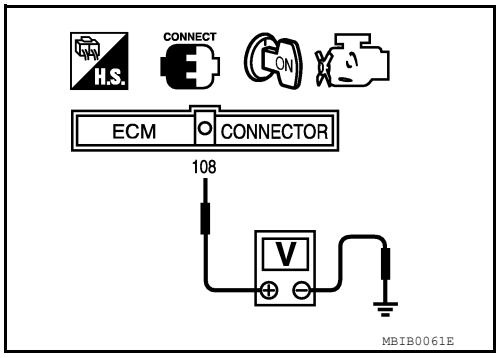

OK or NG

OK >> INSPECTION END
NG >> GO TO 2.

2. CHECK ASCD BRAKE SWITCH POWER SUPPLY CIRCUIT

1. Turn ignition switch OFF.

2. Disconnect ASCD brake switch harness connector.
3. Turn ignition switch ON.

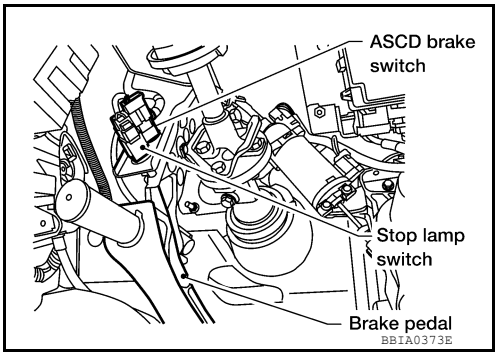

4. Check voltage between ASCD brake switch terminal 1 and ground with CONSULT or tester.

Voltage: Battery voltage

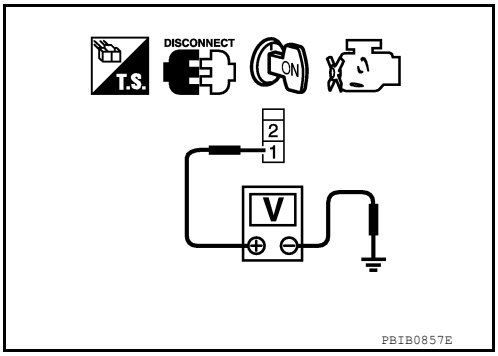

OK or NG

OK >> GO TO 4.
NG >> GO TO 3.

3. DETECT MALFUNCTIONING PART

Check the following.
- Harness connectors M31, E152
- Fuse block (J/B) connector M4
- 10 A fuse (No. 15)
- Harness for open or short between ASCD brake switch and fuse

>> Repair open circuit or short to ground or short to power in harness or connectors.

4. CHECK ASCD BRAKE SWITCH INPUT SIGNAL CIRCUIT FOR OPEN AND SHORT

1. Turn ignition switch OFF.
2. Disconnect ECM harness connector.
3. Check harness continuity between ECM terminal 108 and ASCD brake switch terminal 2. Refer to Wiring Diagram.

Continuity should exist.

4. Also check harness for short to ground and short to power.

OK or NG

OK >> GO TO 5.
NG >> Repair open circuit or short to ground or short to power in harness or connectors.

5. CHECK ASCD BRAKE SWITCH

Refer to EC-469, "Component Inspection".

OK or NG

OK >> GO TO 6.
NG >> Replace ASCD brake switch. Refer to BR-19.

6. CHECK INTERMITTENT INCIDENT

Refer to GI-40, "How to Check Terminal" and GI-43, "Intermittent Incident".

>> **INSPECTION END**

Component Inspection

INFOID:0000000011292018

ASCD BRAKE SWITCH

1. Turn ignition switch OFF.
2. Disconnect ASCD brake switch harness connector.
3. Check harness continuity between ASCD brake switch terminals 1 and 2 under the following conditions.

Condition	Continuity
Brake pedal: Fully released	Should exist.
Brake pedal: Slightly depressed	Should not exist.

If NG, adjust ASCD brake switch installation, refer to BR-15, "Inspection and Adjustment", and perform step 3 again.

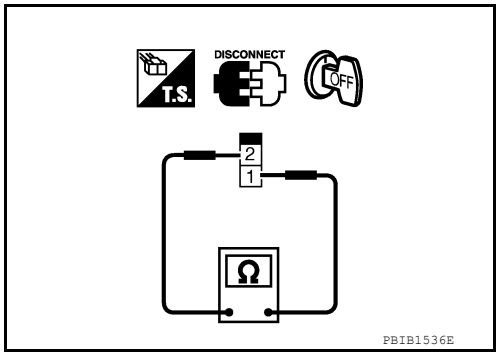

ASCD INDICATOR

Component Description

INFOID:0000000011292019

The ASCD operation status is indicated by two indicators (CRUISE and SET on the information display) on the combination meter.
CRUISE indicator is displayed to indicated that ASCD system is ready for operation when MAIN switch on ASCD steering switch is turned ON.
SET indicator is displayed when the following conditions are met.
- CRUISE indicator is displayed.
- SET/COAST switch on ASCD steering switch is turned ON while vehicle speed is within the range of the ASCD setting.

SET indicator is displayed during ASCD control.
Refer to EC-28 for the ASCD function.

Diagnosis Procedure

INFOID:0000000011292020

1.CHECK OVERALL FUNCTION

Check ASCD indicator under the following conditions.

ASCD INDICATOR	CONDITION		SPECIFICATION
CRUISE	• Ignition switch: ON	• MAIN switch: Pressed at the 1st time → at the 2nd time	ON → OFF
SET	• MAIN switch: ON • When vehicle speed is between 40 km/h (25 MPH) and 144 km/h (89 MPH)	• ASCD: Operating	ON
		• ASCD: Not operating	OFF

OK or NG

OK >> **INSPECTION END**
NG >> GO TO 2.

2.CHECK DTC

Check that DTC UXXXXX is not displayed.

OK or NG

OK >> GO TO 3.
NG >> Perform trouble diagnosis for DTC UXXXX.

3.CHECK COMBINATION METER FUNCTION

Refer to MWI-27, "CONSULT Function (METER/M&A)".

OK or NG

OK >> GO TO 4.
NG >> Go to MWI-99, "Removal and Installation".

4.CHECK INTERMITTENT INCIDENT

Refer to GI-40, "How to Check Terminal" and GI-43, "Intermittent Incident".

>> **INSPECTION END**

COOLING FAN

Diagnosis Procedure

INFOID:0000000011292021

1. CHECK COOLING FAN (CRANKSHAFT DRIVEN) OPERATION

1. Start engine and let it idle.
2. Make sure that cooling fan (crankshaft driven) operates normally.

OK or NG

OK (With CONSULT)>>GO TO 2.
OK (Without CONSULT)>>GO TO 3.
NG >> Check cooling fan (crankshaft driven). Refer to CO-19, "Removal and Installation (Crankshaft Driven Type)".

2. CHECK COOLING FAN MOTOR OPERATION

With CONSULT

1. Start engine and let it idle.
2. Select “COOLING FAN” in “ACTIVE TEST” mode with CONSULT.
3. Make sure that cooling fan operates.

OK or NG

OK >> **INSPECTION END**
NG >> Check cooling fan control circuit. (Proceed to “PROCEDURE A”.)

3. CHECK COOLING FAN MOTOR OPERATION

Without CONSULT

1. Disconnect engine coolant temperature sensor harness connector.
2. Connect 150Ω resistor to engine coolant temperature sensor harness connector.
3. Start engine and let it idle.
4. Make sure that cooling fan operates.

OK or NG

OK >> **INSPECTION END**
NG >> Check cooling fan control circuit. (Proceed to “PROCEDURE A”.)

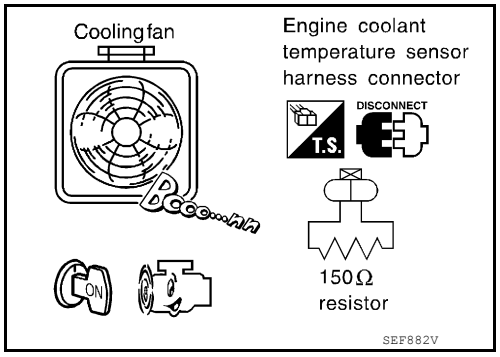

PROCEDURE A

1. CHECK POWER SUPPLY CIRCUIT

1. Turn ignition switch OFF.
2. Disconnect IPDM E/R harness connector E120.
3. Check voltage between IPDM E/R terminal 22 and ground with CONSULT or tester.

Voltage: Battery voltage

OK or NG

OK >> GO TO 3.
NG >> GO TO 2.

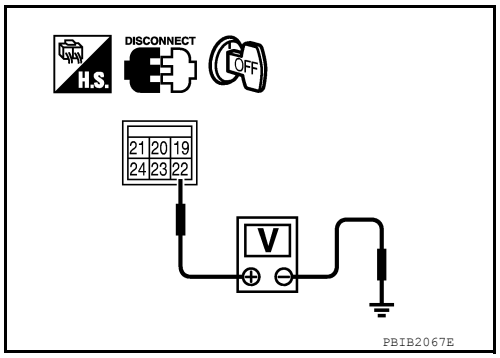

2. DETECT MALFUNCTIONING PART

Check the following.

- 40 A fusible link (letter L)
- 25 A fusible link (letter N)
- Harness for open or short between IPDM E/R and battery

>> Repair open circuit or short to ground or short to power in harness or connectors.

3. CHECK COOLING FAN MOTOR CIRCUIT FOR OPEN OR SHORT

1. Disconnect cooling fan motor harness connector.
2. Check harness continuity between cooling fan motor terminal 1 and IPDM E/R terminal 24, cooling fan motor terminal 2 and ground.
   Refer to wiring diagram.

   Continuity should exist.

3. Also check harness for short to ground and short to power.

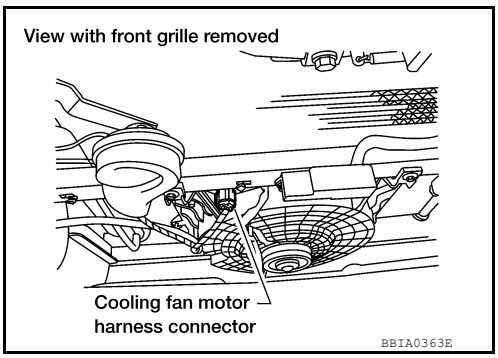

OK or NG

OK >> GO TO 4.
NG >> Repair open circuit or short to ground or short to power in harness or connectors.

4. CHECK COOLING FAN MOTOR

Refer to EC-472, "Component Inspection".

OK or NG

OK >> GO TO 5.
NG >> Replace cooling fan motor. Refer to CO-20.

5. CHECK INTERMITTENT INCIDENT

Perform GI-40, "How to Check Terminal" and GI-43, "Intermittent Incident".

OK or NG

OK >> Replace IPDM E/R. Refer to PCS-31, "Removal and Installation of IPDM E/R".
NG >> Repair or replace harness connectors.

Component Inspection

INFOID:0000000011292022

COOLING FAN MOTOR

1. Disconnect cooling fan motor harness connector.
2. Supply cooling fan motor terminals with battery voltage and check operation.
   Cooling fan motor should operate.
   If NG, replace cooling fan motor. Refer to CO-20.

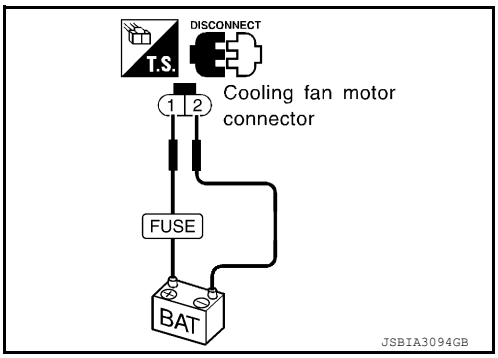

ELECTRICAL LOAD SIGNAL

Description

INFOID:0000000011292023

The electrical load signal (Headlamp switch signal, rear window defogger switch signal, etc.) is transferred through the CAN communication line from BCM to ECM via IPDM E/R.

Diagnosis Procedure

INFOID:0000000011292024

1. CHECK LOAD SIGNAL CIRCUIT OVERALL FUNCTION-I

1. Turn ignition switch ON.
2. Connect CONSULT and select “DATA MONITOR” mode.
3. Select “LOAD SIGNAL” and check indication under the following conditions.

Condition	Indication
Rear window defogger switch: ON	ON
Rear window defogger switch: OFF	OFF

OK or NG

OK >> GO TO 2.
NG >> GO TO 4.

2. CHECK LOAD SIGNAL CIRCUIT OVERALL FUNCTION-II

Check “LOAD SIGNAL” indication under the following conditions.

Condition	Indication
Lighting switch: ON at 2nd position	ON
Lighting switch: OFF	OFF

OK or NG

OK >> GO TO 3.
NG >> GO TO 5.

3. CHECK HEATER FAN SIGNAL CIRCUIT OVERALL FUNCTION

Select “HEATER FAN SW” and check indication under the following conditions.

Condition	Indication
Heater fan control switch: ON	ON
Heater fan control switch: OFF	OFF

OK or NG

OK >> **INSPECTION END**
NG >> GO TO 6.

4. CHECK REAR WINDOW DEFOGGER SYSTEM

Refer to DEF-4, "System Diagram".

>> **INSPECTION END**

5. CHECK HEADLAMP SYSTEM

Refer to EXL-7, "System Diagram" (For USA), or EXL-9, "System Diagram" (For Canada).

>> **INSPECTION END**

6. CHECK HEATER FAN CONTROL SYSTEM

Refer to HAC-20, "CONSULT Function (HVAC)".

>> **INSPECTION END**

FUEL INJECTOR

Component Description

INFOID:0000000011292025

The fuel injector is a small, precise solenoid valve. When the ECM supplies a ground to the fuel injector circuit, the coil in the fuel injector is energized. The energized coil pulls the needle valve back and allows fuel to flow through the fuel injector into the intake manifold. The amount of fuel injected depends upon the injection pulse duration. Pulse duration is the length of time the fuel injector remains open. The ECM controls the injection pulse duration based on engine fuel needs.

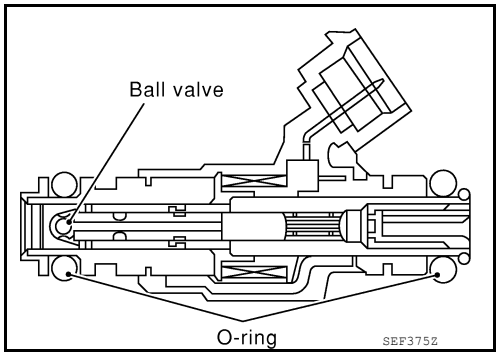

Diagnosis Procedure

INFOID:0000000011292026

1. INSPECTION START

Turn ignition switch to START.
Is any cylinder ignited?

Yes or No

Yes >> GO TO 2.
No >> GO TO 3.

2. CHECK OVERALL FUNCTION

With CONSULT

1. Start engine.
2. Perform “POWER BALANCE” in “ACTIVE TEST” mode with CONSULT.
3. Make sure that each circuit produces a momentary engine speed drop.

Without CONSULT

1. Start engine.
2. Listen to each fuel injector operating sound.
   Clicking noise should be heard.

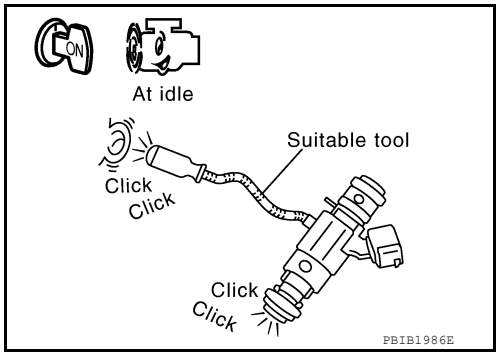

OK or NG

OK >> **INSPECTION END**
NG >> GO TO 3.

3. CHECK FUEL INJECTOR POWER SUPPLY CIRCUIT

1. Turn ignition switch OFF.

2. Disconnect fuel injector harness connector.

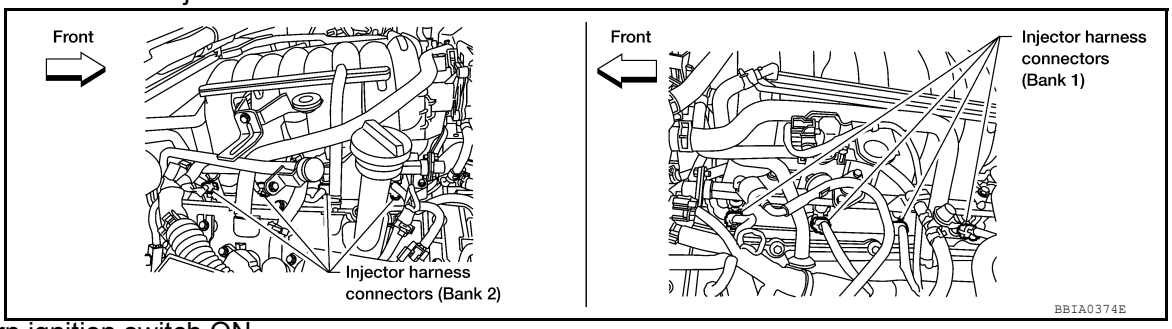

3. Turn ignition switch ON.
4. Check voltage between fuel injector terminal 1 and ground with CONSULT or tester.

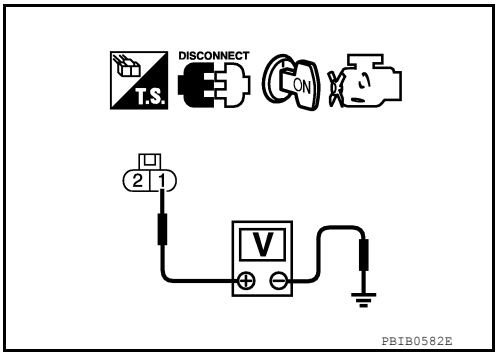

Voltage: Battery voltage

OK or NG

OK >> GO TO 5.
NG >> GO TO 4.

4. DETECT MALFUNCTIONING PART

Check the following.
- Harness connectors E2, F32
- IPDM E/R connector E119
- 15 A (No. 55) fuse
- Harness for open or short between fuel injector and fuse

>> Repair harness or connectors.

5. CHECK FUEL INJECTOR OUTPUT SIGNAL CIRCUIT FOR OPEN AND SHORT

1. Turn ignition switch OFF.
2. Disconnect ECM harness connector.
3. Check harness continuity between fuel injector terminal 2 and ECM terminals 21, 22, 23, 40, 41, 42, 44, 63.
   Refer to Wiring Diagram.

Continuity should exist.

4. Also check harness for short to ground and short to power.

OK or NG

OK >> GO TO 6.
NG >> Repair open circuit or short to ground or short to power in harness or connectors.

6. CHECK INJECTOR

Refer to EC-477, "Component Inspection".

OK or NG

OK >> GO TO 7.
NG >> Replace malfunctioning fuel injector. Refer to EM-42.

7. CHECK INTERMITTENT INCIDENT

Refer to GI-40, "How to Check Terminal" and GI-43, "Intermittent Incident".

>> **INSPECTION END**

Component Inspection

INFOID:0000000011292027

FUEL INJECTOR

1. Disconnect fuel injector harness connector.
2. Check resistance between terminals as shown in the figure.

Resistance: 11.1 - 14.5 Ω [at 10 - 60°C (50 - 140°F)]

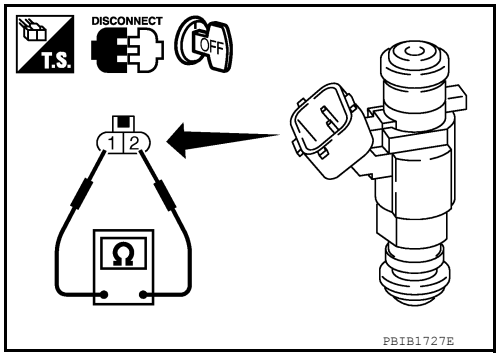

FUEL PUMP

Description

INFOID:0000000011292028

SYSTEM DESCRIPTION

Sensor	Input signal to ECM	ECM Function	Actuator
Crankshaft position sensor (POS) Camshaft position sensor (PHASE)	Engine speed*	Fuel pump control	Fuel pump relay
Battery	Battery voltage*		

*: ECM determines the start signal status by the signals of engine speed and battery voltage.

The ECM activates the fuel pump for several seconds after the ignition switch is turned ON to improve engine startability. If the ECM receives a engine speed signal from the camshaft position sensor (PHASE), it knows that the engine is rotating, and causes the pump to operate. If the engine speed signal is not received when the ignition switch is ON, the engine stalls. The ECM stops pump operation and prevents battery discharging, thereby improving safety. The ECM does not directly drive the fuel pump. It controls the ON/OFF fuel pump relay, which in turn controls the fuel pump.

Condition	Fuel pump operation
Ignition switch is turned to ON.	Operates for 1 second.
Engine running and cranking	Operates.
When engine is stopped	Stops in 1.5 seconds.
Except as shown above	Stops.

COMPONENT DESCRIPTION

A turbine type design fuel pump is used in the fuel tank.

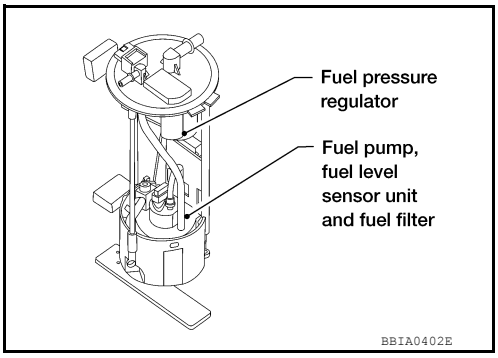

Diagnosis Procedure

INFOID:0000000011292029

EXCEPT FLEXIBLE FUEL VEHICLE

1. CHECK OVERALL FUNCTION

1. Turn ignition switch ON.
2. Pinch fuel feed hose with two fingers.

Fuel pressure pulsation should be felt on the fuel feed hose for 1 second after ignition switch is turned ON.

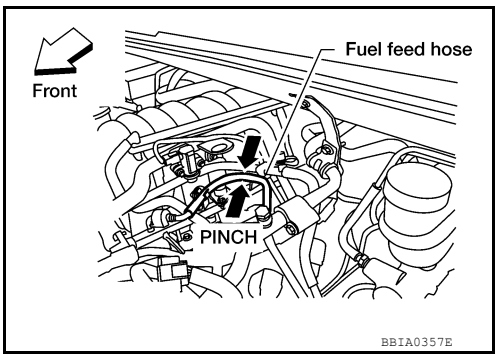

OK or NG

OK >> **INSPECTION END**
NG >> GO TO 2.

2. CHECK FUEL PUMP POWER SUPPLY CIRCUIT-I

1. Turn ignition switch OFF.

2. Disconnect ECM harness connector.
3. Turn ignition switch ON.
4. Check voltage between ECM terminal 113 and ground with CONSULT or tester.

Voltage: Battery voltage

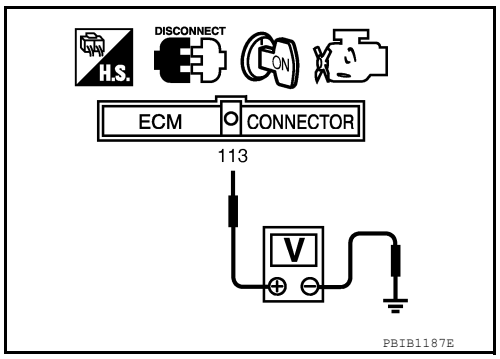

OK or NG

OK >> GO TO 4.
NG >> GO TO 3.

3. CHECK FUEL PUMP POWER SUPPLY CIRCUIT-II

Check voltage between IPDM E/R terminal 46 and ground with CONSULT or tester.

Voltage: Battery voltage

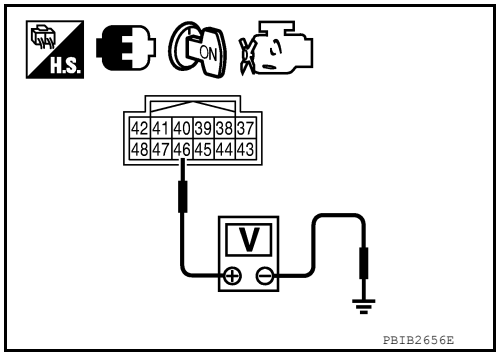

OK or NG

OK >> Repair open circuit or short to ground or short to power in harness or connector.
NG >> Replace IPDM E/R. Refer to PCS-31.

4. CHECK CONDENSER-2 POWER SUPPLY CIRCUIT

1. Turn ignition switch OFF.
2. Reconnect all harness connectors disconnected.
3. Disconnect condenser-2 harness connector.
4. Turn ignition switch ON.

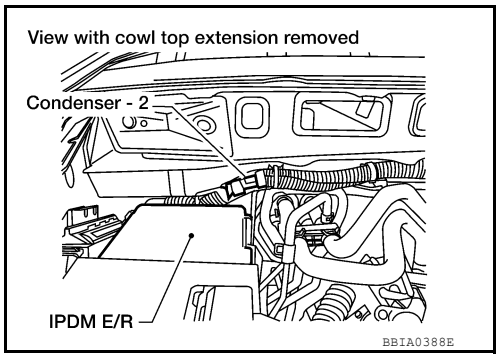

5. Check voltage between condenser-2 terminal 1 and ground with CONSULT or tester.

Voltage: Battery voltage should exist for 1 second after ignition switch is turned ON.

6. Also check harness for short to ground and short to power.

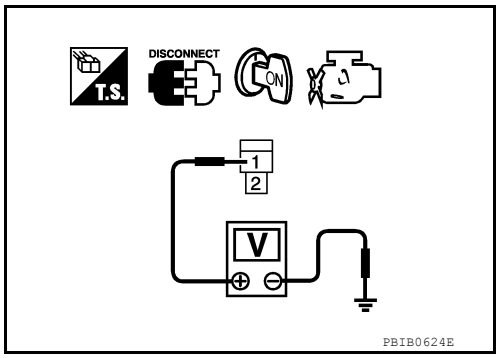

OK or NG

OK >> GO TO 7.
NG >> GO TO 5.

5. CHECK 15A FUSE

1. Turn ignition switch OFF.
2. Disconnect 15 A fuse.
3. Check 15 A (No. 48) fuse.

OK or NG

OK >> GO TO 6.
NG >> Replace fuse.

6. CHECK CONDENSER-2 POWER SUPPLY CIRCUIT-II FOR OPEN AND SHORT

1. Disconnect IPDM E/R harness connector E119.
2. Check harness continuity between IPDM E/R terminal 13 and condenser-2 terminal 1.
   Refer to Wiring Diagram.

Continuity should exist.

3. Also check harness for short to ground and short to power.

OK or NG

OK >> GO TO 12.
NG >> Repair open circuit or short to ground or short to power in harness or connectors.

7. CHECK CONDENSER-2 GROUND CIRCUIT FOR OPEN AND SHORT

1. Check harness continuity between condenser-2 terminal 2 and ground.
   Refer to Wiring Diagram.

Continuity should exist.

2. Also check harness for short to power.

OK or NG

OK >> GO TO 8.
NG >> Repair open circuit or short to ground or short to power in harness or connectors.

8. CHECK CONDENSER-2

Refer to EC-483, "Component Inspection".

OK or NG

OK >> GO TO 9.
NG >> Replace condenser-2.

9. CHECK FUEL PUMP POWER SUPPLY AND GROUND CIRCUIT FOR OPEN AND SHORT

1. Turn ignition switch OFF.
2. Disconnect “fuel level sensor unit and fuel pump” harness connector.
3. Disconnect IPDM E/R harness connector E119.
4. Check harness continuity between IPDM E/R terminal 13 and “fuel level sensor unit and fuel pump” terminal 1, “fuel level sensor unit and fuel pump” terminal 3 and ground.
   Refer to Wiring Diagram.

Continuity should exist.

5. Also check harness for short to ground and short to power.

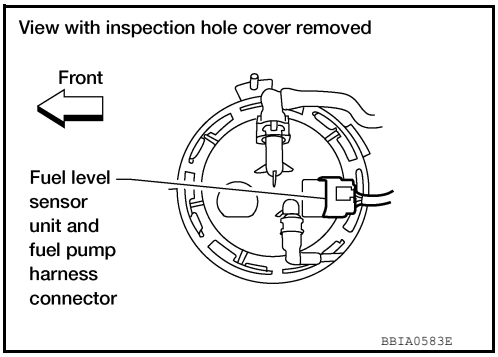

OK or NG

OK >> GO TO 11.
NG >> GO TO 10.

10. DETECT MALFUNCTIONING PART

Check the following.
- Harness connectors E41, C1
- Harness for open or short between fuel pump and IPDM E/R
- Harness for open or short between fuel pump and ground

>> Repair open circuit or short to ground or short to power in harness or connectors.

11. CHECK FUEL PUMP

Refer to EC-483, "Component Inspection".

OK or NG

OK >> GO TO 12.
NG >> Replace “fuel level sensor unit and fuel pump”. Refer to FL-12.

12. CHECK INTERMITTENT INCIDENT

Refer to GI-40, "How to Check Terminal" and GI-43, "Intermittent Incident".

OK or NG

OK >> Replace IPDM E/R. Refer to PCS-31.
NG >> Repair or replace harness or connectors.

FLEXIBLE FUEL VEHICLE

1. CHECK OVERALL FUNCTION

1. Turn ignition switch ON.
2. Pinch fuel feed hose with two fingers.

Fuel pressure pulsation should be felt on the fuel feed hose for 1 second after ignition switch is turned ON.

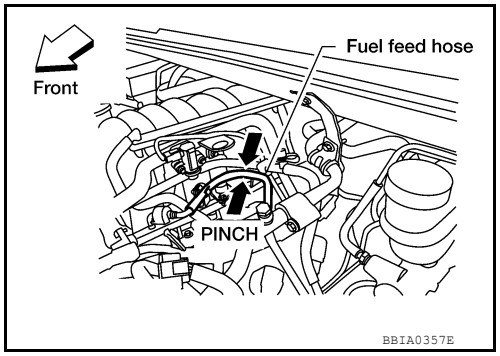

OK or NG

OK >> **INSPECTION END**
NG >> GO TO 2.

2. CHECK FUEL PUMP POWER SUPPLY CIRCUIT-I

1. Turn ignition switch OFF.
2. Disconnect ECM harness connector.
3. Turn ignition switch ON.
4. Check voltage between ECM terminal 113 and ground with CONSULT or tester.

Voltage: Battery voltage

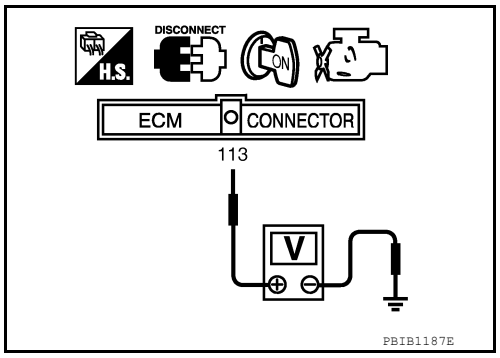

OK or NG

OK >> GO TO 4.
NG >> GO TO 3.

3. CHECK FUEL PUMP POWER SUPPLY CIRCUIT-II

Check voltage between IPDM E/R terminal 46 and ground with CONSULT or tester.

Voltage: Battery voltage

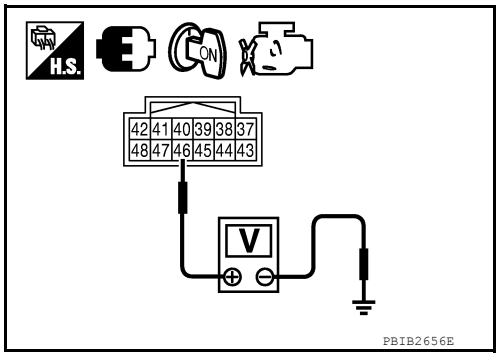

OK or NG

OK >> Repair open circuit or short to ground or short to power in harness or connector.
NG >> Replace IPDM E/R. Refer to PCS-31.

4. CHECK CONDENSER-2 POWER SUPPLY CIRCUIT

1. Turn ignition switch OFF.
2. Reconnect all harness connectors disconnected.

3. Disconnect condenser-2 harness connector.
4. Turn ignition switch ON.

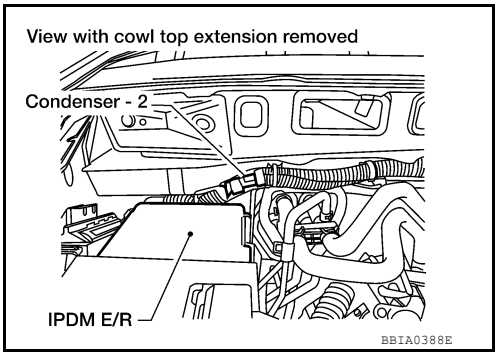

5. Check voltage between condenser-2 terminal 1 and ground with CONSULT or tester.

Voltage: Battery voltage should exist for 1 second after ignition switch is turned ON.

6. Also check harness for short to ground and short to power.

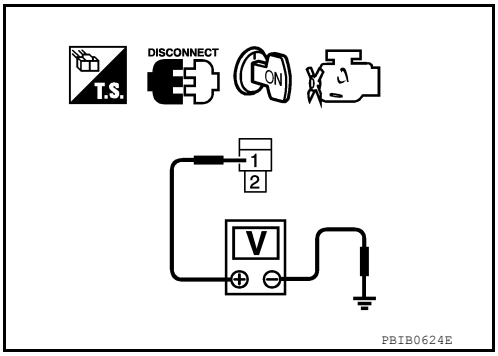

OK or NG

OK >> GO TO 7.
NG >> GO TO 5.

5. CHECK 15A FUSE

1. Turn ignition switch OFF.
2. Disconnect 15 A fuse.
3. Check 15 A (No. 48) fuse.

OK or NG

OK >> GO TO 6.
NG >> Replace fuse.

6. CHECK CONDENSER-2 POWER SUPPLY CIRCUIT-II FOR OPEN AND SHORT

1. Disconnect IPDM E/R harness connector E119.
2. Check harness continuity between IPDM E/R terminal 13 and condenser-2 terminal 1. Refer to Wiring Diagram.

Continuity should exist.

3. Also check harness for short to ground and short to power.

OK or NG

OK >> GO TO 13.
NG >> Repair open circuit or short to ground or short to power in harness or connectors.

7. CHECK CONDENSER-2 GROUND CIRCUIT FOR OPEN AND SHORT

1. Check harness continuity between condenser-2 terminal 2 and ground. Refer to Wiring Diagram.

Continuity should exist.

2. Also check harness for short to power.

OK or NG

OK >> GO TO 8.
NG >> Repair open circuit or short to power in harness or connectors.

8. CHECK CONDENSER-2

Refer to EC-483, "Component Inspection".

OK or NG

OK >> GO TO 9.

NG >> Replace condenser-2.

9. CHECK FUEL PUMP POWER SUPPLY AND GROUND CIRCUIT FOR OPEN AND SHORT

1. Turn ignition switch OFF.
2. Disconnect “fuel level sensor unit and fuel pump” harness connector.
3. Disconnect IPDM E/R harness connector E119.
4. Disconnect dropping resistor harness connector.
5. Check harness continuity between IPDM E/R terminal 13 and “fuel level sensor unit and fuel pump” terminal 1, “fuel level sensor unit and fuel pump” terminal 2 and dropping resistor terminal 2, dropping resistor terminal 1 and ground.
   Refer to Wiring Diagram.

   Continuity should exist.

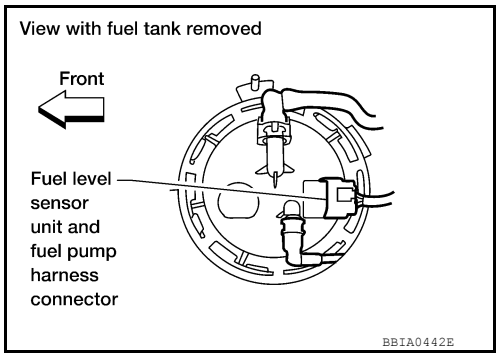

6. Also check harness for short to ground and short to power.

OK or NG

OK >> GO TO 11.
NG >> GO TO 10.

10. DETECT MALFUNCTIONING PART

Check the following.
- Harness connectors E41, C1
- Harness for open or short between fuel pump and IPDM E/R
- Harness for open or short between fuel pump and dropping resistor
- Harness for open or short between dropping resistor and ground

>> Repair open circuit or short to ground or short to power in harness or connectors.

11. CHECK DROPPING RESISTOR

Refer to EC-483, "Component Inspection".

OK or NG

OK >> GO TO 12.
NG >> Replace dropping resistor.

12. CHECK FUEL PUMP

Refer to EC-483, "Component Inspection".

OK or NG

OK >> GO TO 13.
NG >> Replace “fuel level sensor unit and fuel pump”. Refer to FL-12.

13. CHECK INTERMITTENT INCIDENT

Refer to GI-40, "How to Check Terminal" and GI-43, "Intermittent Incident".

OK or NG

OK >> Replace IPDM E/R. Refer to PCS-31.
NG >> Repair or replace harness or connectors.

Component Inspection

INFOID:0000000011292030

FUEL PUMP

1. Disconnect “fuel level sensor unit and fuel pump” harness connector.

2. Check resistance between fuel level sensor unit and fuel pump terminals 1 and 3.

Resistance: 0.2 - 5.0 Ω [at 25°C (77°F)]

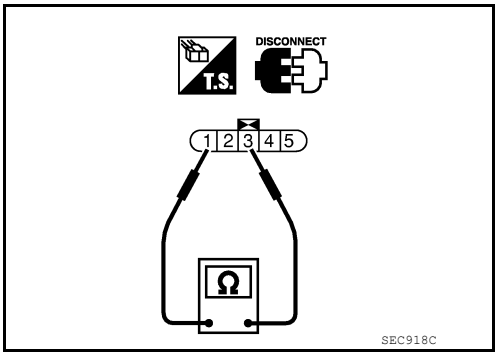

DROPPING RESISTOR

1. Turn ignition switch OFF.
2. Disconnect dropping resistor harness connector.
3. Check resistance between dropping resistor terminals as 1 and 2.

Resistance	Above 1 MΩ at 25°C (77°F)

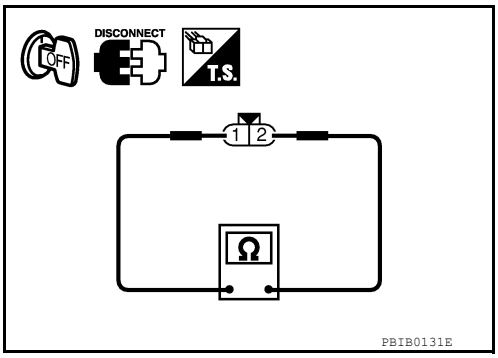

CONDENSER-2

1. Turn ignition switch OFF.
2. Disconnect condenser-2 harness connector.
3. Check resistance between condenser-2 terminals as 1 and 2.

Resistance	Above 1 MΩ at 25°C (77°F)

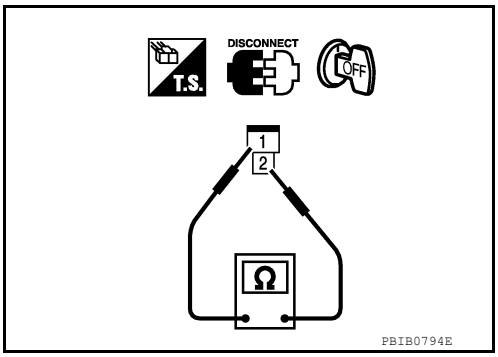

IGNITION SIGNAL

Component Description

INFOID:0000000011292031

IGNITION COIL & POWER TRANSISTOR

The ignition signal from the ECM is sent to and amplified by the power transistor. The power transistor turns ON and OFF the ignition coil primary circuit. This ON/OFF operation induces the proper high voltage in the coil secondary circuit.

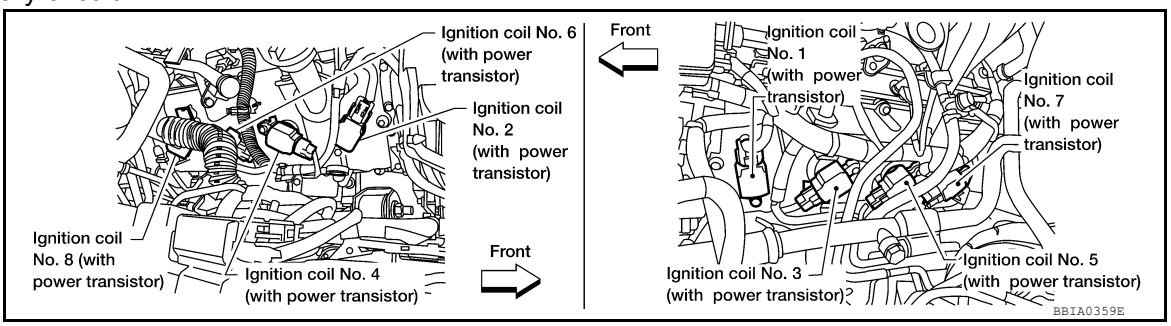

Diagnosis Procedure

INFOID:0000000011292032

1. CHECK ENGINE START

Turn ignition switch OFF, and restart engine.
Is engine running?

Yes or No

Yes (With CONSULT)>>GO TO 2.
Yes (Without CONSULT)>>GO TO 3.
No >> GO TO 4.

2. CHECK OVERALL FUNCTION

With CONSULT

1. Perform “POWER BALANCE” in “ACTIVE TEST” mode with CONSULT.
2. Make sure that each circuit produces a momentary engine speed drop.

OK or NG

OK >> **INSPECTION END**
NG >> GO TO 10.

3. CHECK OVERALL FUNCTION

Without CONSULT

1. Let engine idle.
2. Read the voltage signal between ECM terminals 46, 60, 61, 62, 65, 79, 80, 81 and ground with an oscilloscope.
3. Verify that the oscilloscope screen shows the signal wave as shown below.
   NOTE:
   The pulse cycle changes depending on rpm at idle.

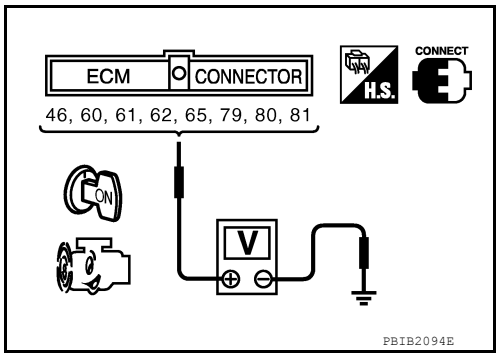

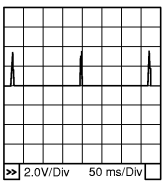

OK or NG

OK >> **INSPECTION END**
NG >> GO TO 10.

4. CHECK IGNITION COIL POWER SUPPLY CIRCUIT-I

1. Turn ignition switch OFF, wait at least 10 seconds and then turn ON.
2. Check voltage between ECM terminals 119, 120 and ground with CONSULT or tester.

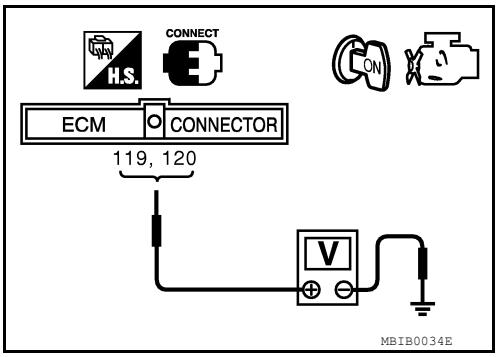

Voltage: Battery voltage

OK or NG

OK >> GO TO 5.
NG >> Go to EC-151.

5. CHECK IGNITION COIL POWER SUPPLY CIRCUIT-II

1. Turn ignition switch OFF.
2. Disconnect condenser-1 harness connector.
3. Turn ignition switch ON.

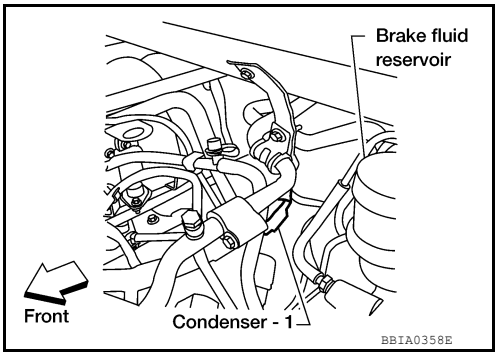

4. Check voltage between condenser-1 terminal 1 and ground with CONSULT or tester.

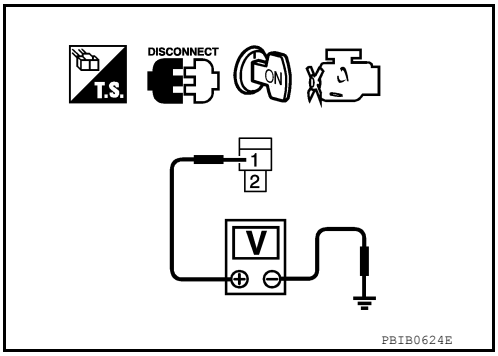

Voltage: Battery voltage

OK or NG

OK >> GO TO 8.
NG >> GO TO 6.

6. CHECK IGNITION COIL POWER SUPPLY CIRCUIT-III

1. Turn ignition switch OFF.
2. Disconnect IPDM E/R connector E119.
3. Check harness continuity between IPDM E/R terminal 4 and condenser-1 terminal 1. Refer to Wiring Diagram.

Continuity should exist.

4. Also check harness for short to ground and short to power.

OK or NG

OK >> Go to EC-151.
NG >> GO TO 7.

7. DETECT MALFUNCTIONING PART

Check the following.
- Harness connectors E2, F32
- Harness for open or short between condenser-1 and IPDM E/R

>> Repair open circuit or short to ground or short to power in harness or connectors.

8. CHECK CONDENSER-1 GROUND CIRCUIT FOR OPEN AND SHORT

1. Turn ignition switch OFF.
2. Check harness continuity between condenser-1 terminal 2 and ground.
   Refer to Wiring Diagram.

   Continuity should exist.

3. Also check harness for short to power.

OK or NG

OK >> GO TO 9.
NG >> Repair open circuit or short to power in harness or connectors.

9. CHECK CONDENSER-1

Refer to EC-488, "Component Inspection".

OK or NG

OK >> GO TO 10.
NG >> Replace condenser-1.

10. CHECK IGNITION COIL POWER SUPPLY CIRCUIT-IV

1. Turn ignition switch OFF.
2. Reconnect all harness connectors disconnected.
3. Disconnect ignition coil harness connector.

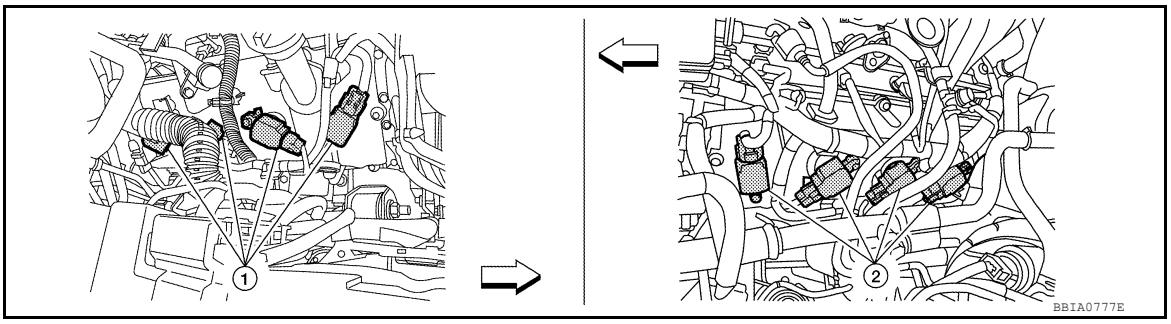

1. Ignition coils (with power transistor) (bank 2)
2. Ignition coils (with power transistor) (bank 1)

4. Turn ignition switch ON.
5. Check voltage between ignition coil terminal 3 and ground with CONSULT or tester.

   Voltage: Battery voltage

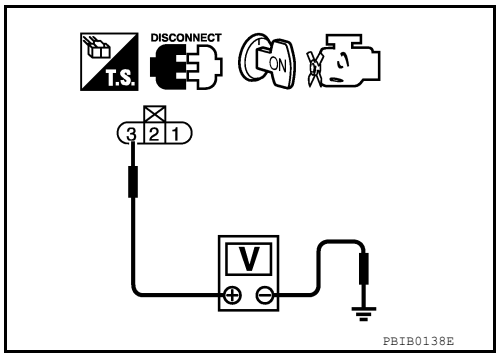

OK or NG

OK >> GO TO 12.
NG >> GO TO 11.

11. DETECT MALFUNCTIONING PART

Check the following.
- Harness connectors E2, F32
- Harness for open or short between ignition coil and harness connector F32

>> Repair or replace harness or connectors.

12. CHECK IGNITION COIL GROUND CIRCUIT FOR OPEN AND SHORT

1. Turn ignition switch OFF.

2. Check harness continuity between ignition coil terminal 2 and ground.
   Refer to Wiring Diagram.

   Continuity should exist.

3. Also check harness for short to power.

OK or NG

OK >> GO TO 13.
NG >> Repair open circuit or short to power in harness or connectors.

13. CHECK IGNITION COIL OUTPUT SIGNAL CIRCUIT FOR OPEN AND SHORT

1. Disconnect ECM harness connector.
2. Check harness continuity between ECM terminals 46, 60, 61, 62, 65, 79, 80, 81 and ignition coil terminal 1.
   Refer to Wiring Diagram.

   Continuity should exist.

3. Also check harness for short to ground and short to power.

OK or NG

OK >> GO TO 14.
NG >> Repair open circuit or short to ground or short to power in harness or connectors.

14. CHECK IGNITION COIL WITH POWER TRANSISTOR

Refer to EC-488, "Component Inspection".

OK or NG

OK >> GO TO 15.
NG >> Replace ignition coil with power transistor. Refer to EM-39.

15. CHECK INTERMITTENT INCIDENT

Refer to GI-40, "How to Check Terminal" and GI-43, "Intermittent Incident".

>> **INSPECTION END**

Component Inspection

INFOID:0000000011292033

IGNITION COIL WITH POWER TRANSISTOR

CAUTION:

Do the following procedure in the place where ventilation is good without the combustible.

1. Turn ignition switch OFF.
2. Disconnect ignition coil harness connector.
3. Check resistance between ignition coil terminals as follows.

Terminal No. (Polarity)	Resistance Ω [at 25°C (77°F)]
1 and 2	Except 0 or ∞
1 and 3	Except 0
2 and 3	

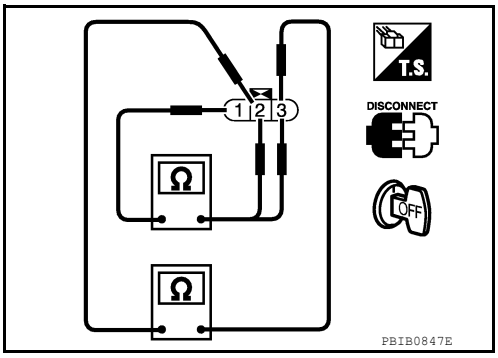

4. If NG, replace ignition coil with power transistor. Refer to EM-39.
   If OK, go to next step.
5. Turn ignition switch OFF.
6. Reconnect all harness connectors disconnected.

7. Remove fuel pump fuse in IPDM E/R to release fuel pressure.
   NOTE:
   Do not use CONSULT to release fuel pressure, or fuel pressure applies again during the following procedure.
8. Start engine.
9. After engine stalls, crank it two or three times to release all fuel pressure.
10. Turn ignition switch OFF.
11. Remove all ignition coil harness connectors to avoid the electrical discharge from the ignition coils.
12. Remove ignition coil and spark plug of the cylinder to be checked.

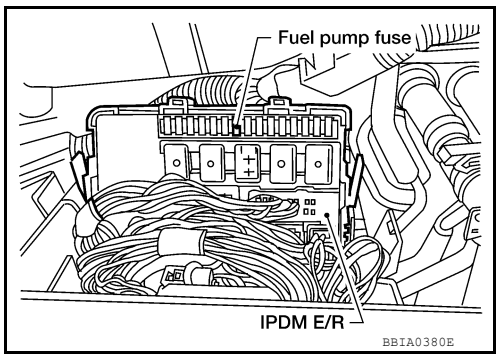

13. Crank engine for 5 seconds or more to remove combustion gas in the cylinder.
14. Connect spark plug and harness connector to ignition coil.
15. Fix ignition coil using a rope etc. with gap of 13 - 17 mm (0.52 - 0.66 in) between the edge of the spark plug and grounded metal portion as shown in the figure.
16. Crank engine for about 3 seconds, and check whether spark is generated between the spark plug and the grounded metal portion.

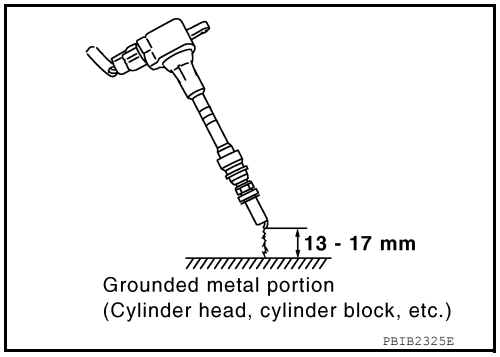

Spark should be generated.

CAUTION:
- **During the operation, always stay 0.5 m (1.6 ft) or more away from the spark plug and the ignition coil. Be careful not to get an electrical shock while checking, because the electrical discharge voltage becomes 20 kV or more.**
- **It might cause to damage the ignition coil if the gap of more than 17 mm (0.66 in) is taken.**

NOTE:
When the gap is less than 13 mm (0.52 in), the spark might be generated even if the coil is malfunctioning.

17. If NG, replace ignition coil with power transistor. Refer to EM-39.

CONDENSER-1

1. Turn ignition switch OFF.
2. Disconnect condenser-1 harness connector.
3. Check resistance between condenser-1 terminals 1 and 2.

Resistance	Above 1 MΩ [at 25°C (77°F)]

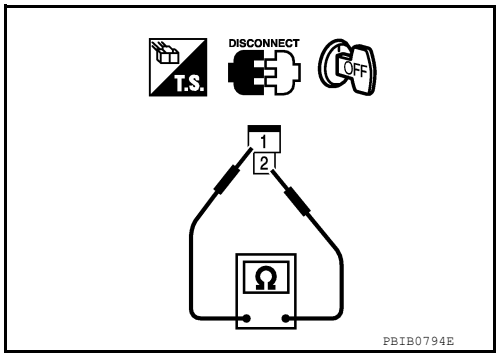

MALFUNCTION INDICATOR LAMP

Component Function Check

INFOID:0000000011292034

1.CHECK MIL FUNCTION

1. Turn ignition switch ON.
2. Check that MIL illuminates.

Is the inspection result normal?

YES >> INSPECTION END
NO >> Proceed to EC-490, "Diagnosis Procedure".

Diagnosis Procedure

INFOID:0000000011292035

1.CHECK DTC

Check that DTC UXXXX is not displayed.

Is the inspection result normal?

YES >> GO TO 2.
NO >> Perform trouble diagnosis for DTC UXXXX.

2.CHECK DTC WITH COMBINATION METER

Refer to MWI-27, "CONSULT Function (METER/M&A)".

Is the inspection result normal?

YES >> GO TO 3.
NO >> Perform trouble diagnosis for DTC indicated.

3.CHECK INTERMITTENT INCIDENT

Refer to GI-43, "Intermittent Incident".

Is the inspection result normal?

YES >> Replace combination meter. Refer to MWI-99, "Removal and Installation".
NO >> Repair or replace malfunctioning part.

ON BOARD REFUELING VAPOR RECOVERY (ORVR)

System Description

INFOID:0000000011292036

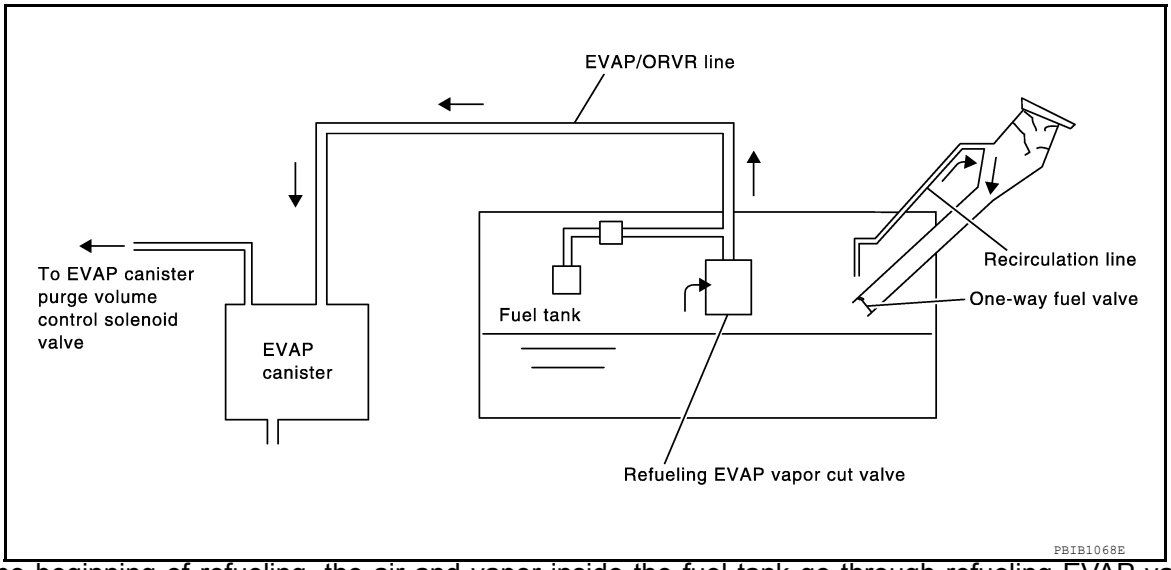

From the beginning of refueling, the air and vapor inside the fuel tank go through refueling EVAP vapor cut valve and EVAP/ORVR line to the EVAP canister. The vapor is absorbed by the EVAP canister and the air is released to the atmosphere.
When the refueling has reached the full level of the fuel tank, the refueling EVAP vapor cut valve is closed and refueling is stopped because of auto shut-off. The vapor which was absorbed by the EVAP canister is purged during driving.

WARNING:
When conducting inspections below, be sure to observe the following:
- **Put a "CAUTION: FLAMMABLE" sign in workshop.**
- **Do not smoke while servicing fuel system. Keep open flames and sparks away from work area.**
- **Be sure to furnish the workshop with a CO_2 fire extinguisher.**

CAUTION:
- **Before removing fuel line parts, carry out the following procedures:**
  - **Put drained fuel in an explosion-proof container and put lid on securely.**
  - **Release fuel pressure from fuel line. Refer to EC-506, "Fuel Pressure Check".**
  - **Disconnect battery ground cable.**
- **Always replace O-ring when the fuel gauge retainer is removed.**
- **Do not kink or twist hose and tube when they are installed.**
- **Do not tighten hose and clamps excessively to avoid damaging hoses.**
- **After installation, run engine and check for fuel leaks at connection.**
- **Do not attempt to top off the fuel tank after the fuel pump nozzle shuts off automatically. Continued refueling may cause fuel overflow, resulting in fuel spray and possibly a fire.**

Diagnosis Procedure

INFOID:0000000011292037

SYMPTOM: FUEL ODOR FROM EVAP CANISTER IS STRONG.

1. CHECK EVAP CANISTER

1. Remove EVAP canister with EVAP canister vent control valve and EVAP control system pressure sensor attached. Refer to FL-16.
2. Weigh the EVAP canister with EVAP canister vent control valve and EVAP control system pressure sensor attached.
   The weight should be less than 2.5 kg (5.5 lb).

OK or NG

OK >> GO TO 2.
NG >> GO TO 3.

2. CHECK IF EVAP CANISTER SATURATED WITH WATER

Does water drain from the EVAP canister?

Yes or No

Yes >> GO TO 3.
No >> GO TO 5.

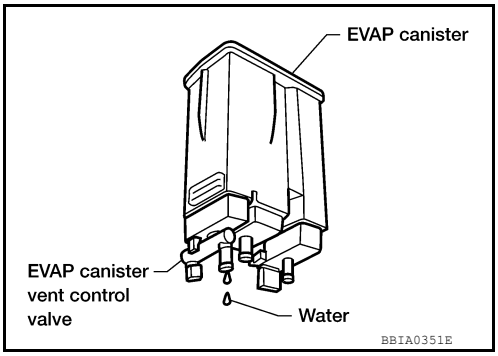

3. REPLACE EVAP CANISTER

Replace EVAP canister with a new one. Refer to FL-16.

>> GO TO 4.

4. DETECT MALFUNCTIONING PART

Check the EVAP hose between EVAP canister and vehicle frame for clogging or poor connection.

>> Repair or replace EVAP hose. Refer to FL-8.

5. CHECK REFUELING EVAP VAPOR CUT VALVE

Refer to EC-493, "Component Inspection".

OK or NG

OK >> **INSPECTION END**
NG >> Replace refueling EVAP vapor cut valve with fuel tank. Refer to FL-8.

SYMPTOM: CANNOT REFUEL/FUEL ODOR FROM THE FUEL FILLER OPENING IS STRONG WHILE REFUELING.

1. CHECK EVAP CANISTER

1. Remove EVAP canister with EVAP canister vent control valve and EVAP control system pressure sensor attached. Refer to FL-16.
2. Weigh the EVAP canister with EVAP canister vent control valve and EVAP control system pressure sensor attached.
   The weight should be less than 2.5 kg (5.5 lb).

OK or NG

OK >> GO TO 2.
NG >> GO TO 3.

2. CHECK IF EVAP CANISTER SATURATED WITH WATER

Does water drain from the EVAP canister?

Yes or No

Yes >> GO TO 3.
No >> GO TO 5.

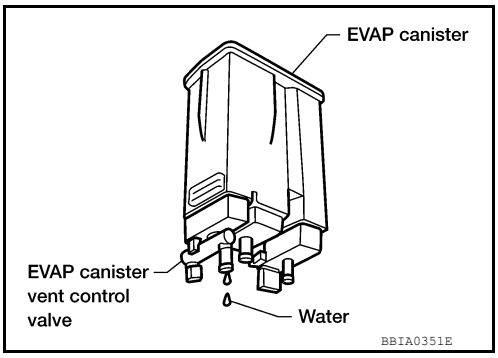

3. REPLACE EVAP CANISTER

Replace EVAP canister with a new one. Refer to FL-16.

>> GO TO 4.

4. DETECT MALFUNCTIONING PART

Check the EVAP hose between EVAP canister and vehicle frame for clogging or poor connection.

>> Repair or replace EVAP hose. Refer to FL-8.

5. CHECK VENT HOSES AND VENT TUBES

Check hoses and tubes between EVAP canister and refueling EVAP vapor cut valve for clogging, kink, looseness and improper connection.

OK or NG

OK >> GO TO 6.
NG >> Repair or replace hoses and tubes. Refer to FL-8.

6. CHECK FILLER NECK TUBE

Check recirculation line for clogging, dents and cracks.

OK or NG

OK >> GO TO 7.
NG >> Replace filler neck tube. Refer to FL-8.

7. CHECK REFUELING EVAP VAPOR CUT VALVE

Refer to EC-493, "Component Inspection".

OK or NG

OK >> GO TO 8.
NG >> Replace refueling EVAP vapor cut valve with fuel tank. Refer to FL-8.

8. CHECK FUEL FILLER TUBE

Check filler neck tube and hose connected to the fuel tank for clogging, dents and cracks.

OK or NG

OK >> GO TO 9.
NG >> Replace fuel filler tube. Refer to FL-8.

9. CHECK ONE-WAY FUEL VALVE-I

Check one-way valve for clogging.

OK or NG

OK >> GO TO 10.
NG >> Repair or replace one-way fuel valve with fuel tank. Refer to FL-8.

10. CHECK ONE-WAY FUEL VALVE-II

1. Make sure that fuel is drained from the tank.
2. Remove fuel filler tube and hose. Refer to FL-8.
3. Check one-way fuel valve for operation as follows.
   When a stick is inserted, the valve should open, when removing stick it should close.
   Do not drop any material into the tank.

OK or NG

OK >> **INSPECTION END**
NG >> Replace fuel filler tube or replace one-way fuel valve with fuel tank. Refer to FL-8.

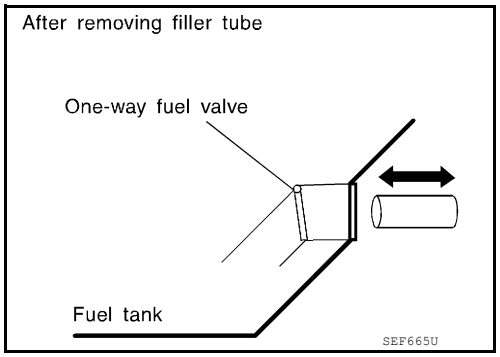

Component Inspection

INFOID:0000000011292038

REFUELING EVAP VAPOR CUT VALVE

With CONSULT

1. Remove fuel tank. Refer to FL-8, "Removal and Installation".

2. Drain fuel from the tank as follows:
a. Remove fuel feed hose located on the fuel gauge retainer.
b. Connect a spare fuel hose, one side to fuel gauge retainer where the hose was removed and the other side to a fuel container.
c. Drain fuel using “FUEL PUMP RELAY” in “ACTIVE TEST” mode with CONSULT.
3. Check refueling EVAP vapor cut valve for being stuck to close as follows.
Blow air into the refueling EVAP vapor cut valve (from the end of EVAP/ORVR line hose), and check that the air flows freely into the tank.
4. Check refueling EVAP vapor cut valve for being stuck to open as follows.
a. Connect vacuum pump to hose end.
b. Remove fuel gauge retainer with fuel gauge unit.
Always replace O-ring with new one.
c. Put fuel tank upside down.
d. Apply vacuum pressure to hose end [–13.3 kPa (–100 mmHg, –3.94 inHg)] with fuel gauge retainer remaining open and check that the pressure is applicable.

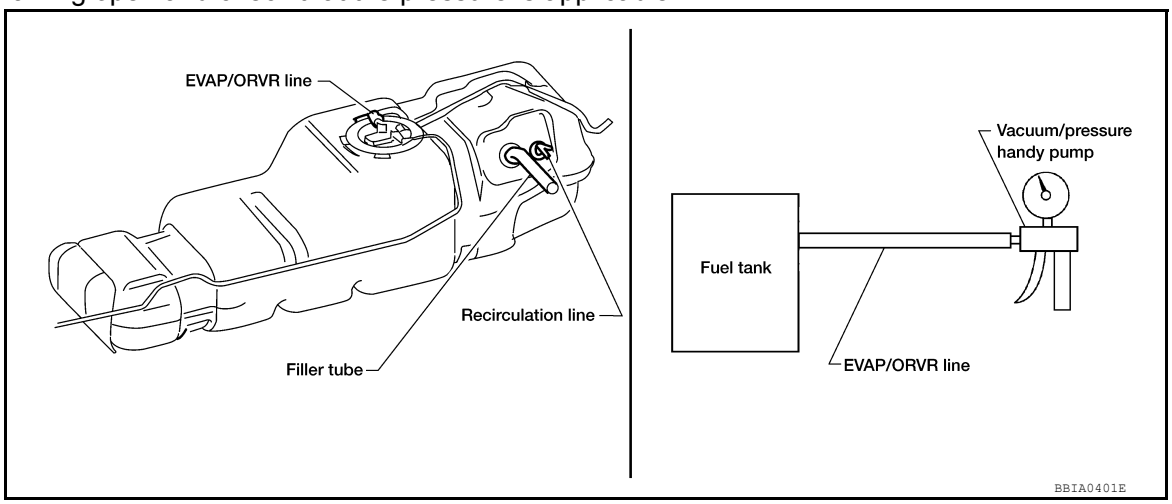

Without CONSULT
1. Remove fuel tank. Refer to FL-8, "Removal and Installation".
2. Drain fuel from the tank as follows:
a. Remove fuel gauge retainer.
b. Drain fuel from the tank using a handy pump into a fuel container.
3. Check refueling EVAP vapor cut valve for being stuck to close as follows.
Blow air into the refueling EVAP vapor cut valve (from the end of EVAP/ORVR line hose), and check that the air flows freely into the tank.
4. Check refueling EVAP vapor cut valve for being stuck to open as follows.
a. Connect vacuum pump to hose end.
b. Remove fuel gauge retainer with fuel gauge unit.
Always replace O-ring with new one.
c. Put fuel tank upside down.

d. Apply vacuum pressure to hose end [–13.3 kPa (–100 mmHg, –3.94 inHg)] with fuel gauge retainer remaining open and check that the pressure is applicable.

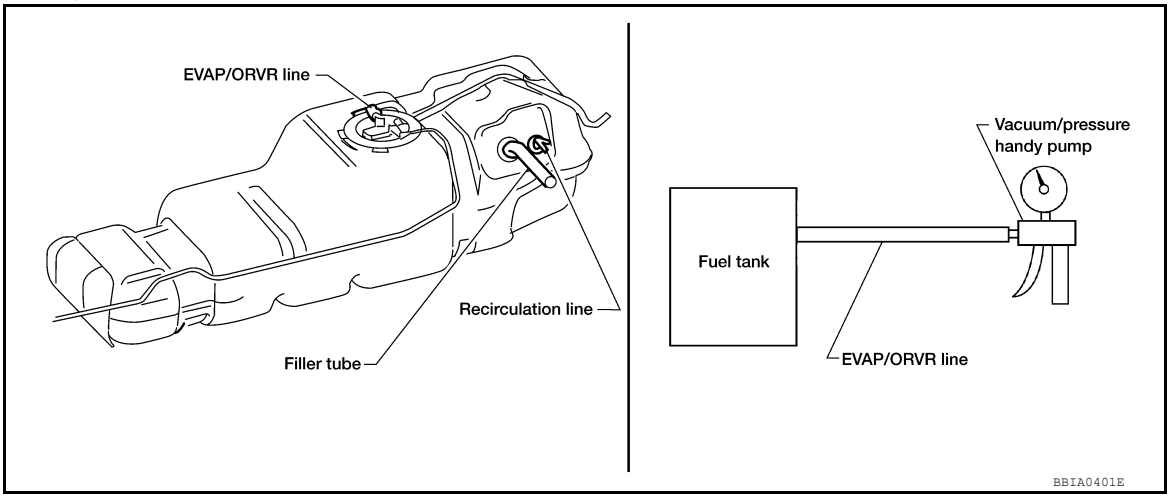

POSITIVE CRANKCASE VENTILATION

Description

INFOID:0000000011292039

SYSTEM DESCRIPTION

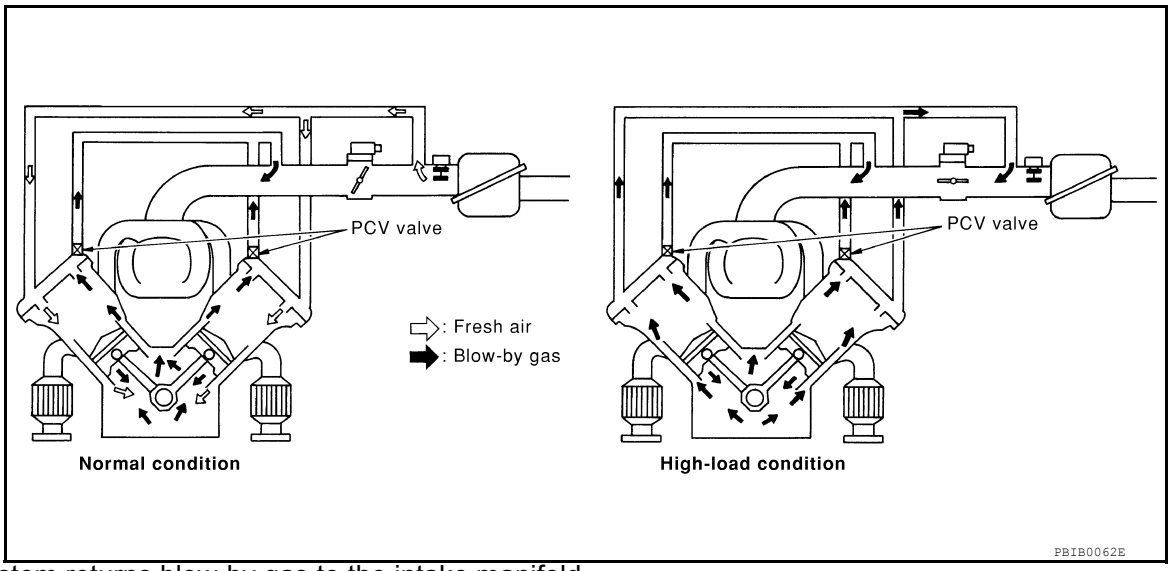

This system returns blow-by gas to the intake manifold.
The positive crankcase ventilation (PCV) valve is provided to conduct crankcase blow-by gas to the intake manifold. During partial throttle operation of the engine, the intake manifold sucks the blow-by gas through the PCV valve. Normally, the capacity of the valve is sufficient to handle any blow-by and a small amount of ventilating air. The ventilating air is drawn from the air inlet tubes into the crankcase. In this process the air passes through the hose connecting air inlet tubes to rocker cover. Under full-throttle condition, the manifold vacuum is insufficient to draw the blow-by flow through the valve. The flow goes through the hose connection in the reverse direction.
On vehicles with an excessively high blow-by, the valve does not meet the requirement. This is because some of the flow will go through the hose connection to the air inlet tubes under all conditions.

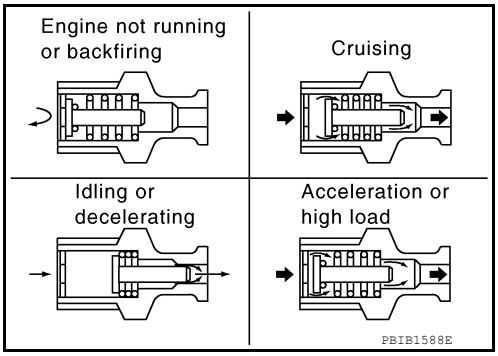

Component Inspection

INFOID:0000000011292040

PCV (POSITIVE CRANKCASE VENTILATION) VALVE

With engine running at idle, remove PCV valve from rocker cover. Refer to EM-40. A properly working valve makes a hissing noise as air passes through it. A strong vacuum should be felt immediately when a finger is placed over valve inlet.

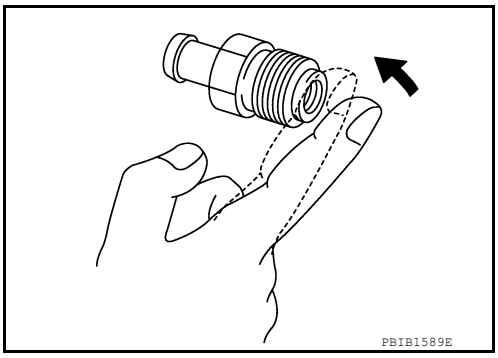

PCV VALVE VENTILATION HOSE

1. Check hoses and hose connections for leaks.
2. Disconnect all hoses and clean with compressed air. If any hose cannot be freed of obstructions, replace.

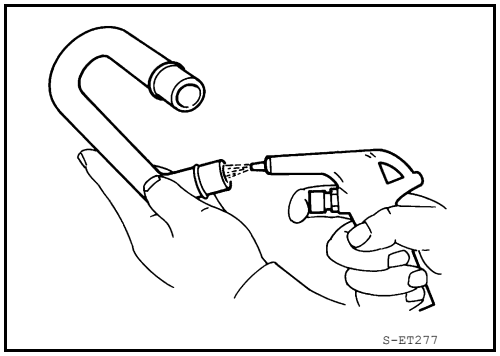

REFRIGERANT PRESSURE SENSOR

Component Description

INFOID:0000000011292041

The refrigerant pressure sensor is installed at the condenser of the air conditioner system. The sensor uses an electrostatic volume pressure transducer to convert refrigerant pressure to voltage. The voltage signal is sent to ECM, and ECM controls cooling fan system.

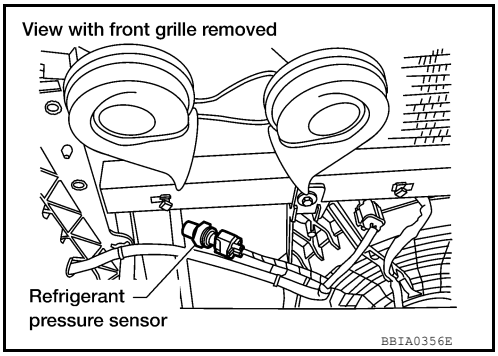

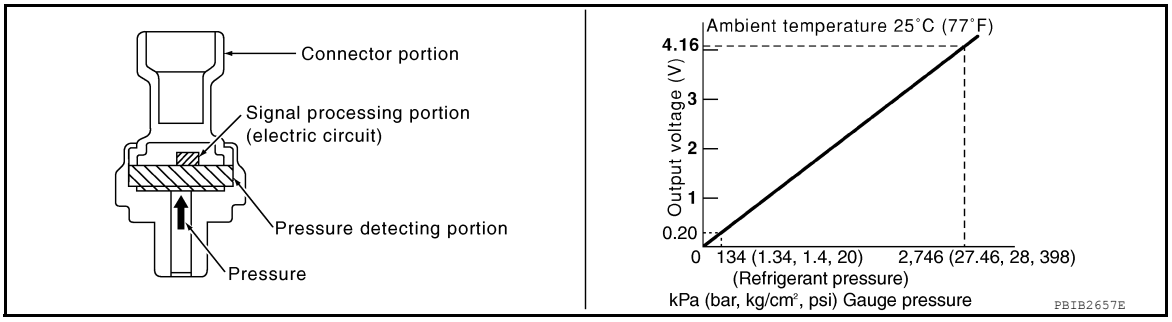

Diagnosis Procedure

INFOID:0000000011292042

1. CHECK REFRIGERANT PRESSURE SENSOR OVERALL FUNCTION

1. Start engine and warm it up to normal operating temperature.
2. Turn A/C switch and blower fan switch ON.
3. Check voltage between ECM terminal 70 and ground with CONSULT or tester.

Voltage: 1.0 - 4.0 V

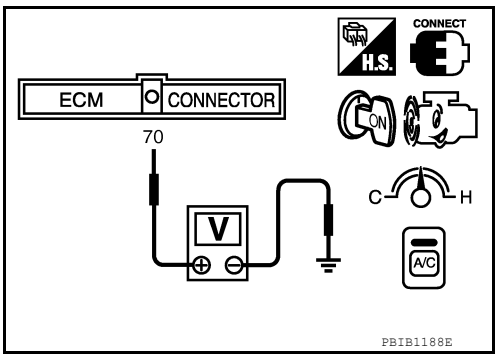

OK or NG

OK >> **INSPECTION END**
NG >> GO TO 2.

2. CHECK GROUND CONNECTIONS

1. Turn A/C switch and blower fan switch OFF.
2. Turn ignition switch OFF.
3. Loosen and retighten three ground screws on the body.

Refer to EC-154, "Ground Inspection".

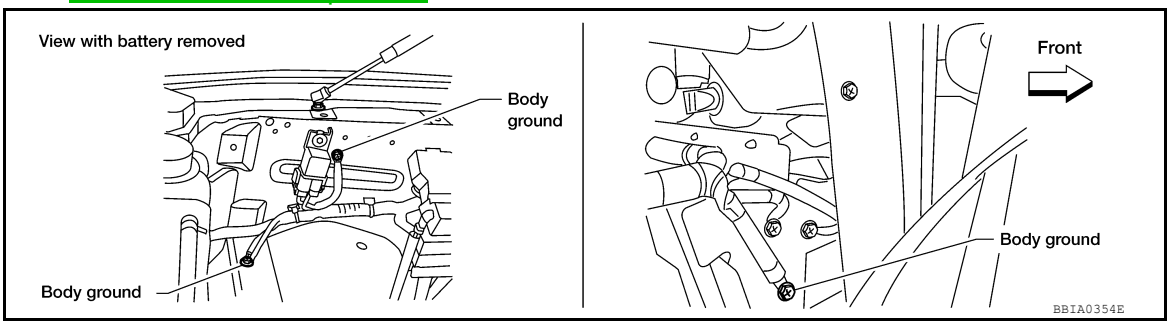

OK or NG

OK >> GO TO 3.
NG >> Repair or replace ground connections.

3. CHECK REFRIGERANT PRESSURE SENSOR POWER SUPPLY CIRCUIT

1. Disconnect refrigerant pressure sensor harness connector.
2. Turn ignition switch ON.

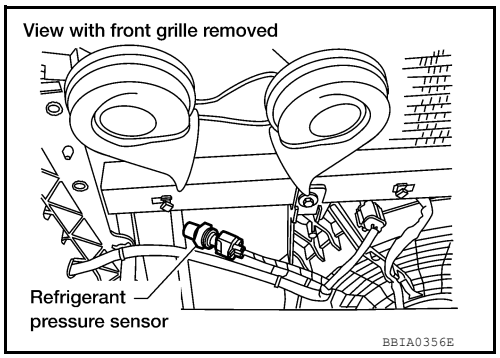

3. Check voltage between refrigerant pressure sensor terminal 1 and ground with CONSULT or tester.

Voltage: Approximately 5 V

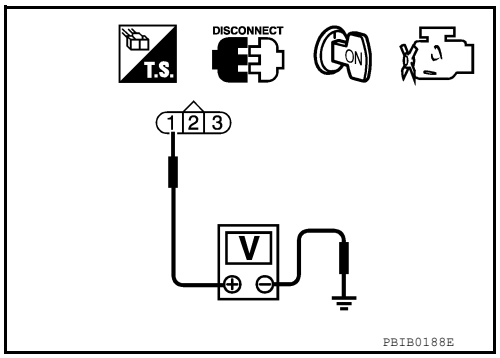

OK or NG

OK >> GO TO 5.
NG >> GO TO 4.

4. DETECT MALFUNCTIONING PART

Check the following.
- Harness connectors E5, F14
- Harness for open or short between ECM and refrigerant pressure sensor

>> Repair harness or connectors.

5. CHECK REFRIGERANT PRESSURE SENSOR GROUND CIRCUIT FOR OPEN AND SHORT

1. Turn ignition switch OFF.
2. Disconnect ECM harness connector.
3. Check harness continuity between refrigerant pressure sensor terminal 3 and ECM terminal 67. Refer to Wiring Diagram.

Continuity should exist.

4. Also check harness for short to ground and short to power.

OK or NG

OK >> GO TO 7.
NG >> GO TO 6.

6. DETECT MALFUNCTIONING PART

Check the following.
- Harness connectors E5, F14
- Harness for open or short between ECM and refrigerant pressure sensor

>> Repair open circuit or short to ground or short to power in harness or connectors.

7. CHECK REFRIGERANT PRESSURE SENSOR INPUT SIGNAL CIRCUIT FOR OPEN AND SHORT

1. Check harness continuity between ECM terminal 70 and refrigerant pressure sensor terminal 2. Refer to Wiring Diagram.

Continuity should exist.

2. Also check harness for short to ground and short to power.

OK or NG

OK >> GO TO 9.
NG >> GO TO 8.

8. DETECT MALFUNCTIONING PART

Check the following.
- Harness connectors E5, F14
- Harness for open or short between ECM and refrigerant pressure sensor

>> Repair open circuit or short to ground or short to power in harness or connectors.

9. CHECK INTERMITTENT INCIDENT

Refer to GI-40, "How to Check Terminal" and GI-43, "Intermittent Incident".

OK or NG

OK >> Replace refrigerant pressure sensor. Refer to HA-47.
NG >> Repair or replace.

SYMPTOM DIAGNOSIS

ENGINE CONTROL SYSTEM SYMPTOMS

Symptom Matrix Chart

INFOID:0000000011292043

SYSTEM — BASIC ENGINE CONTROL SYSTEM

		SYMPTOM													Refer-ence page
		HARD/NO START/RESTART (EXCP. HA)	ENGINE STALL	HESITATION/SURGING/FLAT SPOT	SPARK KNOCK/DETONATION	LACK OF POWER/POOR ACCELERATION	HIGH IDLE/LOW IDLE	ROUGH IDLE/HUNTING	IDLING VIBRATION	SLOW/NO RETURN TO IDLE	OVERHEATS/WATER TEMPERATURE HIGH	EXCESSIVE FUEL CONSUMPTION	EXCESSIVE OIL CONSUMPTION	BATTERY DEAD (UNDER CHARGE)	
Warranty symptom code		AA	AB	AC	AD	AE	AF	AG	AH	AJ	AK	AL	AM	HA	
Fuel	Fuel pump circuit	1	1	2	3	2		2	2			3		2	EC-391
	Fuel pressure regulator system	3	3	4	4	4	4	4	4	4		4			EC-506
	Fuel injector circuit	1	1	2	3	2		2	2			2			EC-475
	Evaporative emission system	3	3	4	4	4	4	4	4	4		4			EC-32
Air	Positive crankcase ventilation system	3	3	4	4	4	4	4	4	4		4	1		EC-496
	Incorrect idle speed adjustment						1	1	1	1		1			EC-117
	Electric throttle control actuator	1	1	2	3	3	2	2	2	2		2		2	EC-436, EC-439 , EC-443 , EC-445
Ignition	Incorrect ignition timing adjustment	3	3	1	1	1		1	1			1			EC-117
	Ignition circuit	1	1	2	2	2		2	2			2			EC-485
Main power supply and ground circuit		2	2	3	3	3		3	3		2	3			EC-151

	SYMPTOM													
	HARD/NO START/RESTART (EXCP. HA)	ENGINE STALL	HESITATION/SURGING/FLAT SPOT	SPARK KNOCK/DETONATION	LACK OF POWER/POOR ACCELERATION	HIGH IDLE/LOW IDLE	ROUGH IDLE/HUNTING	IDLING VIBRATION	SLOW/NO RETURN TO IDLE	OVERHEATS/WATER TEMPERATURE HIGH	EXCESSIVE FUEL CONSUMPTION	EXCESSIVE OIL CONSUMPTION	BATTERY DEAD (UNDER CHARGE)	Refer-ence page
Warranty symptom code	AA	AB	AC	AD	AE	AF	AG	AH	AJ	AK	AL	AM	HA	
Mass air flow sensor circuit	1	1	2	2	2		2	2			2			EC-173, EC-177
Engine coolant temperature sensor circuit				3		3			3					EC-190, EC-198
Air fuel ratio (A/F) sensor 1 circuit														EC-206, EC-210 , EC-214 , EC-218 , EC-430
Throttle position sensor circuit						2			2					EC-194, EC-267 , EC-396 , EC-398 , EC-454
Accelerator pedal position sensor circuit			3	2	1									EC-458, EC-447 , EC-450 , EC-454
Knock sensor circuit			2								3			EC-278
Crankshaft position sensor (POS) circuit	2	2												EC-281
Camshaft position sensor (PHASE) circuit	3	2												EC-285
Vehicle speed signal circuit		2	3		3						3			EC-356
Power steering pressure sensor circuit		2					3	3						EC-364
ECM	2	2	3	3	3	3	3	3	3	3	3			EC-367, EC-368, EC-369, EC-370, EC-371, EC-372, EC-373
Intake valve timing control solenoid valve circuit		3	2		1	3	2	2	3		3			EC-170
Transmission range switch signal circuit			3		3		3	3			3			EC-377
Refrigerant pressure sensor circuit		2				3			3		4			EC-498
Electrical load signal circuit							3							EC-473
Air conditioner circuit	2	2	3	3	3	3	3	3	3		3		2	HAC-3
ABS actuator and electric unit (control unit)			4											EC-385, EC-386 or BRC-4

1 - 6: The numbers refer to the order of inspection.

(continued on next page)

SYSTEM — ENGINE MECHANICAL & OTHER

		SYMPTOM													Reference page
		HARD/NO START/RESTART (EXCP. HA)	ENGINE STALL	HESITATION/SURGING/FLAT SPOT	SPARK KNOCK/DETONATION	LACK OF POWER/POOR ACCELERATION	HIGH IDLE/LOW IDLE	ROUGH IDLE/HUNTING	IDLING VIBRATION	SLOW/NO RETURN TO IDLE	OVERHEATS/WATER TEMPERATURE HIGH	EXCESSIVE FUEL CONSUMPTION	EXCESSIVE OIL CONSUMPTION	BATTERY DEAD (UNDER CHARGE)	
Warranty symptom code		AA	AB	AC	AD	AE	AF	AG	AH	AJ	AK	AL	AM	HA	
Fuel	Fuel tank	5	5												FL-8
	Fuel piping			5	5	5		5	5			5			EM-42
	Vapor lock														—
	Valve deposit	5		5	5	5		5	5			5			—
	Poor fuel (Heavy weight gasoline, Low octane)														—
Air	Air duct		5	5		5		5	5			5			EM-25
	Air cleaner														EM-25
	Air leakage from air duct (Mass air flow sensor — electric throttle control actuator)	5			5		5			5					EM-25
	Electric throttle control actuator														EM-26
	Air leakage from intake manifold/ Collector/Gasket														EM-26
Cranking	Battery	1	1	1		1		1	1			1		1	PG-81
	Generator circuit														CHG-28
	Starter circuit	3													STR-20
	Signal plate	6													EM-92
	Transmission range switch signal	4													TM-48
Engine	Cylinder head	5	5	5	5	5		5	5			5			EM-80
	Cylinder head gasket										4		3		
	Cylinder block	6	6	6	6	6		6	6			6	4		EM-92
	Piston														
	Piston ring														
	Connecting rod														
	Bearing														
	Crankshaft														

		SYMPTOM													Reference page
		HARD/NO START/RESTART (EXCP. HA)	ENGINE STALL	HESITATION/SURGING/FLAT SPOT	SPARK KNOCK/DETONATION	LACK OF POWER/POOR ACCELERATION	HIGH IDLE/LOW IDLE	ROUGH IDLE/HUNTING	IDLING VIBRATION	SLOW/NO RETURN TO IDLE	OVERHEATS/WATER TEMPERATURE HIGH	EXCESSIVE FUEL CONSUMPTION	EXCESSIVE OIL CONSUMPTION	BATTERY DEAD (UNDER CHARGE)	
Warranty symptom code		AA	AB	AC	AD	AE	AF	AG	AH	AJ	AK	AL	AM	HA	
Valve mechanism	Timing chain	5	5	5	5	5		5	5			5			EM-56
	Camshaft														EM-61
	Intake valve timing control														EM-56
	Intake valve												3		EM-81
	Exhaust valve														
Exhaust	Exhaust manifold/Tube/Muffler/Gasket	5	5	5	5	5		5	5			5			EM-42, EX-6
	Three way catalyst														
Lubrication	Oil pan/Oil strainer/Oil pump/Oil filter/Oil gallery/Oil cooler	5	5	5	5	5		5	5			5			EM-34, LU-14 , LU-11 , LU-12
	Oil level (Low)/Filthy oil														LU-8
Cooling	Radiator/Hose/Radiator filler cap	5	5	5	5	5		5	5		4	5			CO-15
	Thermostat									5					CO-23
	Water pump														CO-21
	Water gallery														CO-23
	Cooling fan									5					CO-19, CO-20
	Coolant level (Low)/Contaminated coolant									5					CO-10
NVIS (NISSAN Vehicle Immobilizer System — NATS)		1	1												SEC-5

1 - 6: The numbers refer to the order of inspection.

NORMAL OPERATING CONDITION

Fuel Cut Control (at No Load and High Engine Speed)

INFOID:0000000011292044

INPUT/OUTPUT SIGNAL CHART

Sensor	Input signal to ECM	ECM function	Actuator
TCM	Neutral position	Fuel cut control	Fuel injector
Accelerator pedal position sensor	Accelerator pedal position		
Engine coolant temperature sensor	Engine coolant temperature		
Crankshaft position sensor (POS) Camshaft position sensor (PHASE)	Engine speed		
Wheel sensor	Vehicle speed*		

*: This signal is sent to the ECM through CAN communication line.

SYSTEM DESCRIPTION

If the engine speed is above 1,800 rpm under no load (for example, the shift position is neutral and engine speed over is 1,800 rpm) fuel will be cut off after some time. The exact time when the fuel is cut off varies based on engine speed.
Fuel cut will be operated until the engine speed reaches 1,500 rpm, then fuel cut will be cancelled.
NOTE:
This function is different from deceleration control listed under EC-23, "System Description".

PERIODIC MAINTENANCE

FUEL PRESSURE

Fuel Pressure Check

INFOID:0000000011292045

FUEL PRESSURE RELEASE

With CONSULT

1. Turn ignition switch ON.
2. Perform “FUEL PRESSURE RELEASE” in “WORK SUPPORT” mode with CONSULT.
3. Start engine.
4. After engine stalls, crank it two or three times to release all fuel pressure.
5. Turn ignition switch OFF.

Without CONSULT

1. Remove fuel pump fuse located in IPDM E/R. Refer to PCS-19, "Terminal Layout".
2. Start engine.
3. After engine stalls, crank it two or three times to release all fuel pressure.
4. Turn ignition switch OFF.
5. Reinstall fuel pump fuse after servicing fuel system.

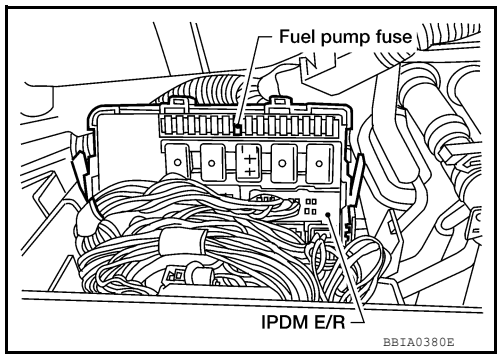

FUEL PRESSURE CHECK

CAUTION:

- **Before disconnecting fuel line, release fuel pressure from fuel line to eliminate danger.**
- **Be careful not to scratch or get the fuel hose connection area dirty when servicing, so that the quick connector o-ring maintains sealability.**
- **Use Fuel Pressure Gauge Kit J-44321 and Fuel Pressure Adapter J-44321-6 to check fuel pressure.**
- **Do not perform fuel pressure check with electrical system operating (i.e. lights, rear defog, A/C, etc.). Fuel pressure gauge may indicate false readings due to varying engine loads and changes in manifold vacuum.**

NOTE:

Prepare pans or saucers under the disconnected fuel line because the fuel may spill out. The fuel pressure cannot be completely released because TA60 models do not have fuel return system.

1. Release fuel pressure to zero. Refer to "FUEL PRESSURE RELEASE".
2. Remove engine cover.
3. Remove fuel hose using Quick Connector Release J-45488. Refer to EM-26, "Removal and Installation".
   - Do not twist or kink fuel hose because it is plastic hose.
   - Do not remove fuel hose from quick connector.
   - Keep fuel hose connections clean.
4. Install Fuel Pressure Adapter J-44321-6 and Fuel Pressure Gauge (from kit J-44321) as shown in figure.
   - Do not distort or bend fuel rail tube when installing fuel pressure gauge adapter.
   - When reconnecting fuel hose, check the original fuel hose for damage and abnormality.
5. Turn ignition switch ON (reactivate fuel pump), and check for fuel leakage.
6. Start engine and check for fuel leakage.
7. Read the indication of fuel pressure gauge.
   - During fuel pressure check, check for fuel leakage from fuel connection every 3 minutes.

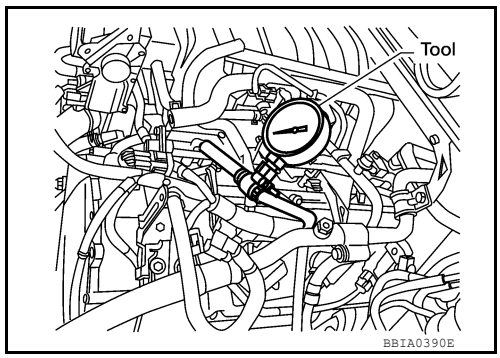

At idling: **Approximately 350 kPa (3.57 kg/cm^2, 51 psi)**

8. If result is unsatisfactory, go to next step.
9. Check the following.
   - Fuel hoses and fuel tubes for clogging
   - Fuel filter for clogging
   - Fuel pump
   - Fuel pressure regulator for clogging

   If OK, replace fuel pressure regulator.
   If NG, repair or replace.
10. Before disconnecting Fuel Pressure Gauge and Fuel Pressure Adapter J-44321-6, release fuel pressure to zero. Refer to "FUEL PRESSURE RELEASE".

EVAP LEAK CHECK

How to Detect Fuel Vapor Leakage

INFOID:0000000011292046

CAUTION:
- **Never use compressed air or a high pressure pump.**
- **Do not exceed 4.12 kPa (0.042 kg/cm^2, 0.6 psi) of pressure in EVAP system.**

NOTE:
- Do not start engine.
- Improper installation of EVAP service port adapter to the EVAP service port may cause a leak.

WITH CONSULT

1. Attach the EVAP service port adapter securely to the EVAP service port.
2. Also attach the pressure pump and hose to the EVAP service port adapter.
3. Turn ignition switch ON.
4. Select the “EVAP SYSTEM CLOSE” of “WORK SUPPORT MODE” with CONSULT.
5. Touch “START”. A bar graph (Pressure indicating display) will appear on the screen.
6. Apply positive pressure to the EVAP system until the pressure indicator reaches the middle of the bar graph.
7. Remove EVAP service port adapter and hose with pressure pump.
8. Locate the leak using a leak detector. Refer to EC-32, "Description".

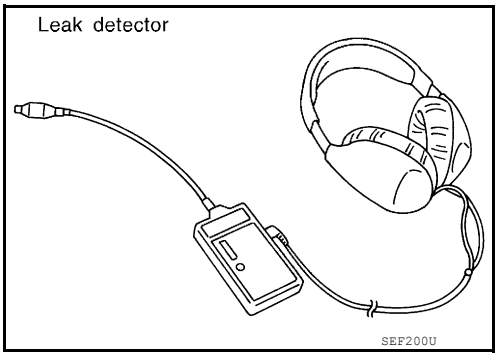

WITHOUT CONSULT

1. Attach the EVAP service port adapter securely to the EVAP service port.

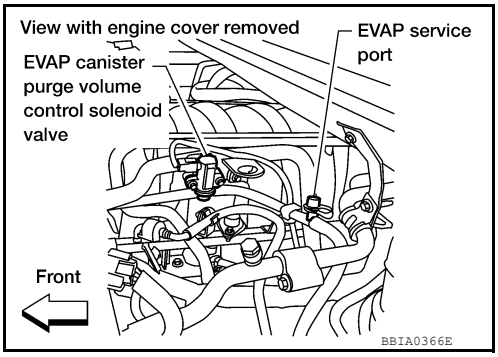

2. Also attach the pressure pump with pressure gauge to the EVAP service port adapter.

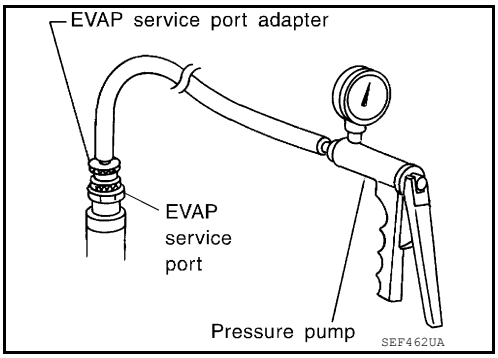

3. Apply battery voltage between the terminals of EVAP canister vent control valve to make a closed EVAP system.

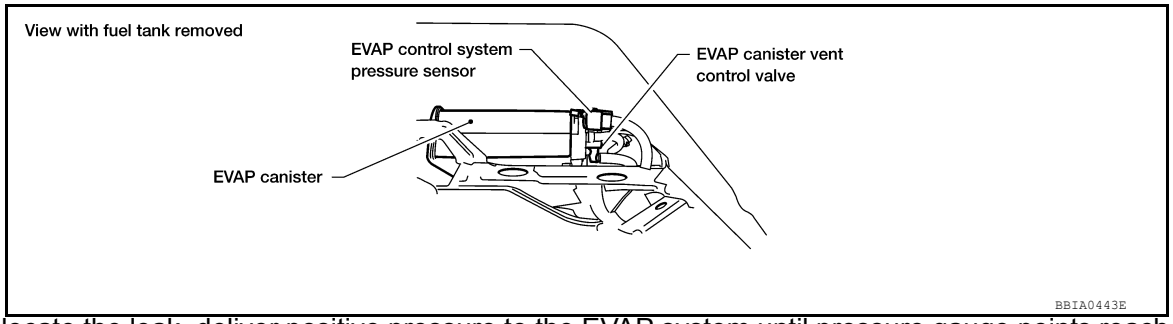

4. To locate the leak, deliver positive pressure to the EVAP system until pressure gauge points reach 1.38 to 2.76 kPa (0.014 to 0.028 kg/cm^2, 0.2 to 0.4 psi).
5. Remove EVAP service port adapter and hose with pressure pump.
6. Locate the leak using a leak detector. Refer to EC-32, "Description".

SERVICE DATA AND SPECIFICATIONS (SDS)

SERVICE DATA AND SPECIFICATIONS (SDS)

Fuel Pressure

INFOID:0000000011292047

Fuel pressure at idling kPa (kg/cm^2, psi)	Approximately 350 (3.57, 51)

Idle Speed and Ignition Timing

INFOID:0000000011292048

Target idle speed	No-load* (in P or N position)	650±50 rpm
Air conditioner: ON	In P or N position	700 rpm or more
Ignition timing	In P or N position	15° ± 5° BTDC

*: Under the following conditions:

- Air conditioner switch: OFF
- Electric load: OFF (Lights, heater fan & rear window defogger)
- Steering wheel: Kept in straight-ahead position

Calculated Load Value

INFOID:0000000011292049

Condition	Calculated load value % (Using CONSULT or GST)
At idle	14.0 - 33.0
At 2,500 rpm	12.0 - 25.0

Mass Air Flow Sensor

INFOID:0000000011292050

Supply voltage	Battery voltage (11 - 14V)
Output voltage at idle	0.9 - 1.3V*
Mass air flow (Using CONSULT or GST)	3.0 - 9.0 g/s at idle* 9.0 - 28.0 g/s at 2,500 rpm*

*: Engine is warmed up to normal operating temperature and running under no load.

Intake Air Temperature Sensor

INFOID:0000000011292051

Temperature °C (°F)	Resistance kΩ
25 (77)	1.800 - 2.200

Engine Coolant Temperature Sensor

INFOID:0000000011292052

Temperature °C (°F)	Resistance kΩ
20 (68)	2.1 - 2.9
50 (122)	0.68 - 1.00
90 (194)	0.236 - 0.260

A/F Sensor 1 Heater

INFOID:0000000011292053

Resistance [at 25°C (77°F)]	1.80 - 2.44Ω

Heated Oxygen sensor 2 Heater

INFOID:0000000011292054

Resistance [at 25°C (77°F)]	8 - 10Ω

Crankshaft Position Sensor (POS)

INFOID:0000000011292055

Refer to EC-283, "Component Inspection".

Camshaft Position Sensor (PHASE)

INFOID:0000000011292056

Refer to EC-287, "Component Inspection".

Throttle Control Motor

INFOID:0000000011292057

Resistance [at 25°C (77°F)]	Approximately 1 - 15Ω

Fuel Injector

INFOID:0000000011292058

Resistance [at 10 - 60°C (50 - 140°F)]	11.1 - 14.5Ω

Fuel Pump

INFOID:0000000011292059

Resistance [at 25°C (77°F)]	0.2 - 5.0Ω