SECTION WT
ROAD WHEELS & TIRES

CONTENTS

BASIC INSPECTION 3

DIAGNOSIS AND REPAIR WORKFLOW 3
Repair Work Flow 3

INSPECTION AND ADJUSTMENT 5
Preliminary Check 5

ID REGISTRATION PROCEDURE 6
Description 6
Work Procedure 6

SYSTEM DESCRIPTION 9

TPMS 9
System Diagram 9
System Description 9
System Component 11

DIAGNOSIS SYSTEM (BCM) 12
CONSULT Function (BCM - COMMON ITEM) 12
CONSULT Function (BCM - AIR PRESSURE MONITOR) 13
Self-Diagnosis (Without CONSULT) 13

DTC/CIRCUIT DIAGNOSIS 15

C1708 - C1711 DATA FROM TRANSMITTER NOT BEING RECEIVED 15
Description 15
DTC Logic 15
Diagnosis Procedure 15
Special Repair Requirement 16

C1712 - C1715, C1720 - C1723, C1724 - C1727 TRANSMITTER MALFUNCTION 17
Description 17
DTC Logic 17
Diagnosis Procedure 17
Special Repair Requirement 18

C1716 - C1719 TRANSMITTER PRESSURE MALFUNCTION 19
Description 19
DTC Logic 19
Diagnosis Procedure 19
Special Repair Requirement 20

C1729 VEHICLE SPEED SIGNAL 21
Description 21
DTC Logic 21
Diagnosis Procedure 21
Special Repair Requirement 21

C1735 IGNITION SIGNAL 22
Description 22
DTC Logic 22
Diagnosis Procedure 22
Special Repair Requirement 23

ECU DIAGNOSIS INFORMATION 24

BCM (BODY CONTROL MODULE) 24
Reference Value 24
Terminal Layout 27
Physical Values 27
Self-Diagnosis (With CONSULT) 33
Self-Diagnosis (Without CONSULT) 33

WIRING DIAGRAM 35

TIRE PRESSURE MONITORING SYSTEM 35
Wiring Diagram 35

SYMPTOM DIAGNOSIS 40

TPMS 40
Symptom Table 40

LOW TIRE PRESSURE WARNING LAMP DOES NOT TURN ON 41
Low Tire Pressure Warning Lamp Does Not Come On When Ignition Switch Is Turned On 41

LOW TIRE PRESSURE WARNING LAMP STAYS ON 42
Low Tire Pressure Warning Lamp Stays On When Ignition Switch Is Turned On 42

LOW TIRE PRESSURE WARNING LAMP BLINKS 43
Low Tire Pressure Warning Lamp Flashes When Ignition Switch Is Turned On 43

HAZARD WARNING LAMPS FLASH 44
Hazard Warning Lamps Flash When Ignition Switch Is Turned On 44

"TIRE PRESSURE" INFORMATION IN DISPLAY UNIT DOES NOT EXIST 45
"TIRE PRESSURE" Information in Display Unit Does Not Exist 45

ID REGISTRATION CANNOT BE COMPLETED 46
ID Registration Cannot Be Completed 46

NOISE, VIBRATION, AND HARSHNESS (NVH) TROUBLESHOOTING 47
NVH Troubleshooting Chart 47

PRECAUTION 48

PRECAUTIONS 48
Precaution for Supplemental Restraint System (SRS) "AIR BAG" and "SEAT BELT PRE-TENSIONER" 48
Precaution Necessary for Steering Wheel Rotation After Battery Disconnect 48
Precaution for Work 49

PREPARATION 50

PREPARATION 50
Special Service Tool 50
Commercial Service Tool 50

PERIODIC MAINTENANCE 51

WHEEL 51
Inspection 51

WHEEL AND TIRE ASSEMBLY 52
Balancing Wheels 52
Rotation 53

UNIT REMOVAL AND INSTALLATION 55

TRANSMITTER 55
Exploded View 55
Removal and Installation 55
Disposal 58

SERVICE DATA AND SPECIFICATIONS (SDS) 59

SERVICE DATA AND SPECIFICATIONS (SDS) 59
Road Wheel 59
Tire 59

BASIC INSPECTION

DIAGNOSIS AND REPAIR WORKFLOW

Repair Work Flow

INFOID:0000000011290243

WORK FLOW

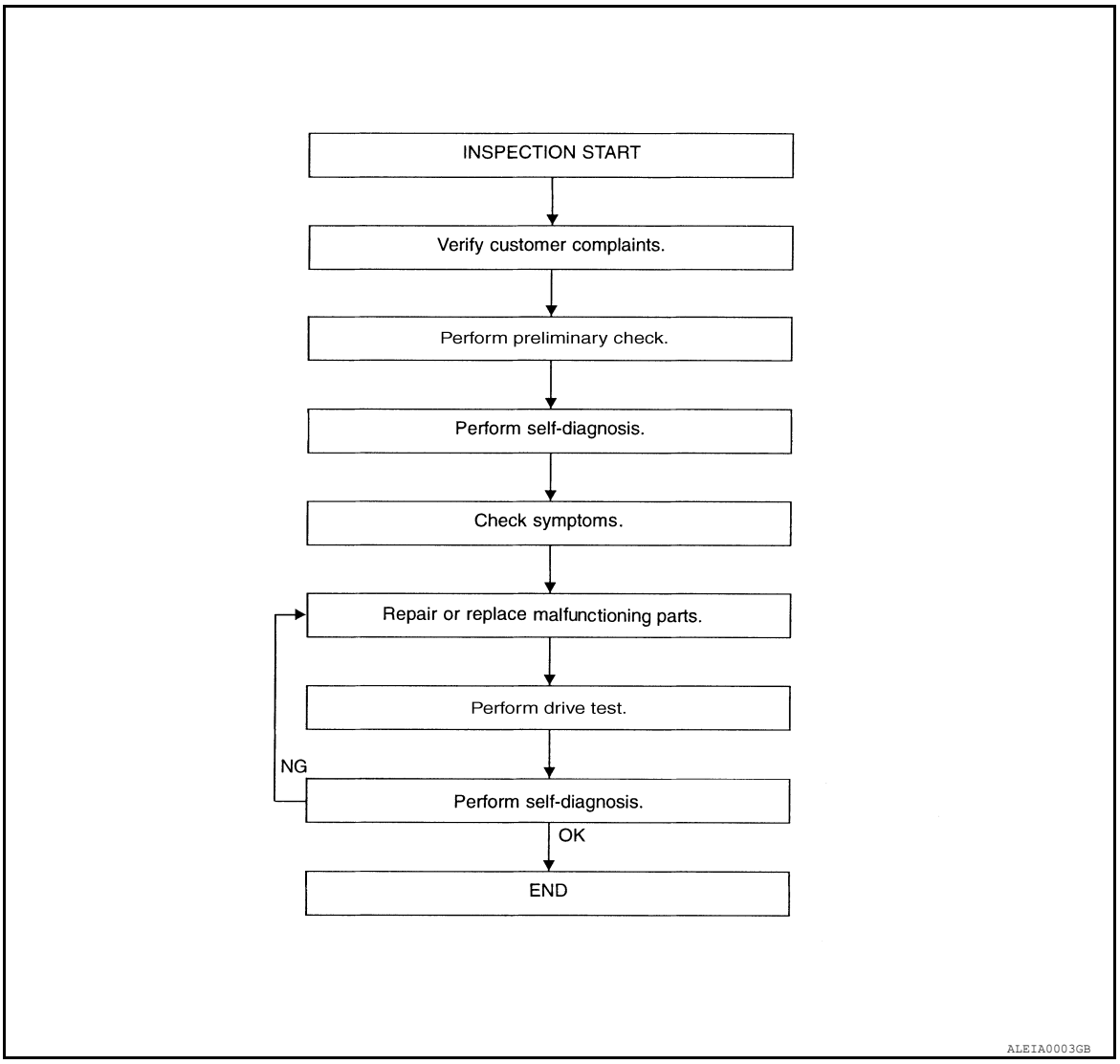

WT-5, "Preliminary Check"
WT-33, "Self-Diagnosis (With CONSULT)"
WT-33, "Self-Diagnosis (Without CONSULT)"
WT-40, "Symptom Table"

DETAILED FLOW

1.CUSTOMER INFORMATION

Interview the customer to obtain detailed information about the symptom.

>> GO TO 2

2.PRELIMINARY CHECK

Perform preliminary check. Refer to WT-5, "Preliminary Check".

>> GO TO 3

3. SELF-DIAGNOSIS

Perform SELF-DIAGNOSIS. Refer to WT-33, "Self-Diagnosis (With CONSULT)" or WT-33, "Self-Diagnosis (Without CONSULT)".

>> GO TO 4

4. SYMPTOM

Check for symptoms. Refer to WT-40, "Symptom Table".

>> GO TO 5

5. MALFUNCTIONING PARTS

Repair or replace the applicable parts.

>> GO TO 6

6. DRIVE TEST

1. Perform a drive test.
2. Check the low tire pressure warning lamp.

>> GO TO 7

7. SELF-DIAGNOSIS

Perform SELF-DIAGNOSIS. Refer to WT-33, "Self-Diagnosis (With CONSULT)" or WT-33, "Self-Diagnosis (Without CONSULT)".

Are any DTC's displayed?

YES >> GO TO 5
NO >> Inspection End

INSPECTION AND ADJUSTMENT

Preliminary Check

INFOID:0000000011290244

NOTE:
The Signal Tech II Tool (J-50190) can be used to perform the following functions. Refer to the Signal Tech II User Guide for additional information.
- Activate and display TPMS transmitter IDs
- Display tire pressure reported by the TPMS transmitter
- Read TPMS DTCs
- Register TPMS transmitter IDs

1. TIRE PRESSURE

Check all tire pressures. Refer to WT-59, "Tire".

Do tire pressures match specification?

YES >> GO TO 2.
NO >> Adjust tire pressures to specified value.

2. LOW TIRE PRESSURE WARNING LAMP

Check low tire pressure warning lamp activation.

Does the low tire pressure warning lamp activate for one second when ignition switch is turned ON?

YES >> GO TO 3.
NO >> GO TO WT-41, "Low Tire Pressure Warning Lamp Does Not Come On When Ignition Switch Is Turned On".

3. BCM CONNECTOR

1. Disconnect BCM harness connectors.
2. Check terminals for damage or loose connections.
3. Reconnect harness connectors.

Are BCM connectors damaged or loose?

YES >> Repair or replace damaged parts.
NO >> GO TO 4.

4. TRANSMITTER ACTIVATION TOOL

Check battery in transmitter activation tool.

Is transmitter activation tool battery fully charged?

YES >> Perform self-diagnosis. Refer to WT-33, "Self-Diagnosis (With CONSULT)" or WT-33, "Self-Diagnosis (Without CONSULT)".
NO >> Replace battery in transmitter activation tool.

ID REGISTRATION PROCEDURE

Description

INFOID:0000000011290245

This procedure must be performed after replacement of a transmitter, BCM or rotation of the wheels.

Work Procedure

INFOID:0000000011290246

TPMS ID registration can be performed using one of the following procedures:
- Transmitter Activation tool (J-45295-A) with CONSULT (preferred method)
- Signal Tech II tool (J-50190) with CONSULT (preferred method)
- Signal Tech II tool (J-50190) without CONSULT
- CONSULT only

TPMS REGISTRATION WITH TRANSMITTER ACTIVATION TOOL (J-45295-A)

With CONSULT
1. Turn the ignition switch ON.
2. Using CONSULT, select “WORK SUPPORT” in BCM (AIR PRESSURE MONITOR). Then, select “ID REGIST.”
3. Select “Start” on “ID REGIST” screen.
4. Hold the transmitter activation tool (J-45295-A) (1) against the side of the left front tire, near the valve stem.
5. With the tool held at a 0 to 15 degree angle to the tire, press and hold the transmitter activation tool button until the indicator lamp turns OFF (approximately 5 seconds).
6. Repeat steps 4 and 5 for the remaining tires in this order: right front, right rear and left rear.

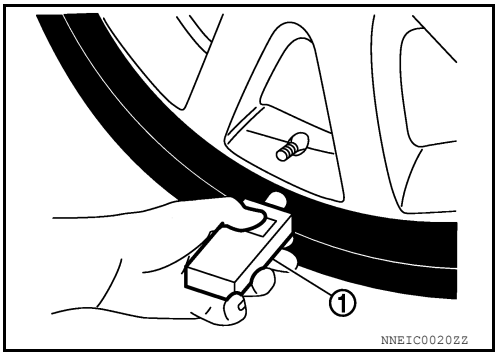

7. When ID registration is complete, check the following pattern at each wheel.

Sequence	ID registration position	Turn signal lamp	CONSULT
1	Front LH	2 blinks	“Yet (red)” ↓ “Done (green)”
2	Front RH		
3	Rear RH		
4	Rear LH		

8. After the ID registration procedure for all wheels is complete, press “End” on the CONSULT to finish ID registration.
9. Test drive the vehicle to ensure that the TPMS lamp is OFF and no warning messages are present.

TPMS REGISTRATION WITH SIGNAL TECH II TOOL (J-50190)

NOTE:
The Signal Tech II must be updated with software version 1.1.48 or newer in order to perform the below procedures. The Signal Tech II software updates can only be downloaded from a CONSULT unit with ASIST. Other versions of ASIST will not show the updates.

With CONSULT
1. Adjust the tire pressure for all tires to the recommended value. Refer to WT-59, "Tire".
2. Turn the ignition switch ON.
3. Using CONSULT, select “WORK SUPPORT” in BCM (AIR PRESSURE MONITOR). Then, select “ID REGIST.”
4. Select “Start” on “ID REGIST” screen.
5. Turn on the Signal Tech II tool (J-50190).

6. Hold the Signal Tech II against the side of the left front tire, near the valve stem.
7. With the tool held at a 0 to 15 degree angle to the tire, select “Activate Sensor” from the main menu, then press and release the “OK” button to activate the sensor. Once the sensor is activated, the vehicle parking lamps will flash and the sensor ID will appear on the CONSULT screen.
8. Repeat steps 6 and 7 for the remaining tires in this order: right front, right rear and left rear.
9. When ID registration is complete, check the following pattern at each wheel.

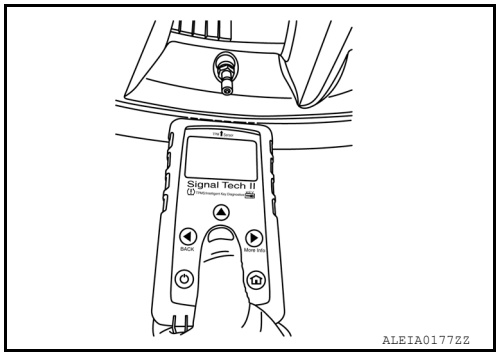

Sequence	ID registration position	Turn signal lamp	CONSULT
1	Front LH	2 blinks	“Yet (red)” ↓ “Done (green)”
2	Front RH		
3	Rear RH		
4	Rear LH		

10. Once all sensors have been activated, select “End” on the CONSULT to finish ID registration.
11. Test drive the vehicle to ensure that the TPMS lamp is OFF and no warning messages are present.

Without CONSULT

1. Adjust the tire pressure for all tires to the recommended value. Refer to WT-59, "Tire".
2. Turn on the Signal Tech II tool (J-50190) and select “TPMS Check” from the main menu.
3. Select vehicle model and year.
4. When prompted, hold the Signal Tech II against the side of the left front tire, near the valve stem.
5. With the tool held at a 0 to 15 degree angle to the tire, press and release the “OK” button to activate the sensor. Once the sensor is activated, the tool will sound a tone and the tire pressure will be displayed.
6. Repeat steps 4 and 5 for the remaining tires in this order: right front, right rear and left rear.
7. When prompted, connect the tool to the data link connector. The tool will connect to the BCM, read the VIN, read sensor IDs and check for TPMS DTCs. Along with DTCs detected, one of the following will be displayed next to each wheel:

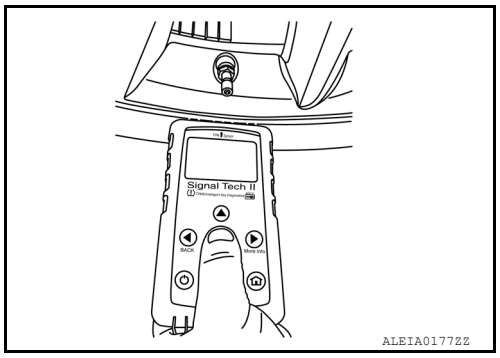

- N/A - Not applicable because no ID found by the tool
- OK - Wheel and sensor are in original position
- NEW - New ID found compared to BCM
- RT - Wheel has been rotated
- Low Press - Low tire pressure

8. If no DTC is present or the repair has been completed, press the “OK” button to register the IDs and clear DTCs.
9. Test drive the vehicle to ensure that the TPMS lamp is OFF and no warning messages are present.
10. Print a Signal Tech II Audit Report for your records. Refer to the Signal Tech II User Guide for instructions.

TPMS REGISTRATION WITH CONSULT ONLY

With CONSULT

1. Adjust the tire pressure for all wheels to match the list below.

Tire position	Tire pressure kPa (kg/cm^2, psi)
Front LH	240 (2.4, 35)
Front RH	220 (2.2, 32)
Rear RH	200 (2.0, 29)
Rear LH	180 (1.8, 26)

2. Turn the ignition switch ON.
3. Using CONSULT, select “WORK SUPPORT” in BCM (AIR PRESSURE MONITOR). Then, select “ID REGIST.”
4. Select “Start” on “ID REGIST” screen.
5. Drive the vehicle at a speed greater than 40 km/h (25 MPH) for 3 minutes or more.
6. After ID registration for all wheels is complete, press “End” on the CONSULT to finish ID registration.

ID registration position	CONSULT
Front LH	“Yet (red)” ↓ “Done (green)”
Front RH	
Rear RH	
Rear LH	

7. Adjust the tire pressures for all tires to the recommended value. Refer to WT-59, "Tire".
8. Test drive the vehicle to ensure that the TPMS lamp is OFF and no warning messages are present.

SYSTEM DESCRIPTION

TPMS

System Diagram

INFOID:0000000011290247

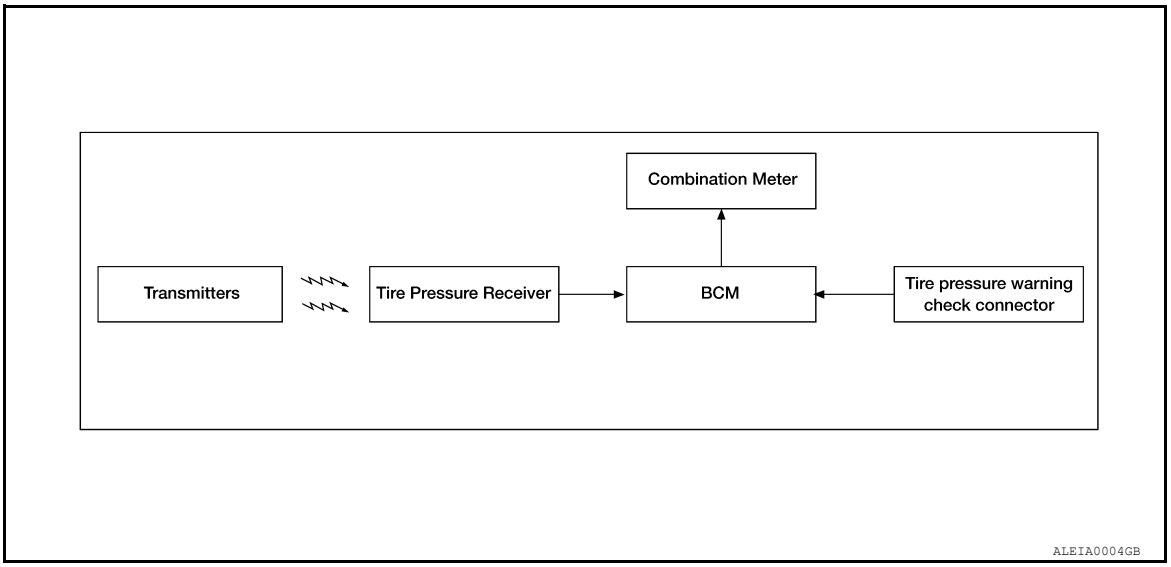

System Description

INFOID:0000000011290248

BODY CONTROL MODULE (BCM)

The BCM is shown with the lower instrument panel LH removed. The BCM reads the air pressure signal received by the remote keyless entry receiver, and controls the low tire pressure warning lamp as shown below. It also has a self-diagnosis function to detect a system malfunction.

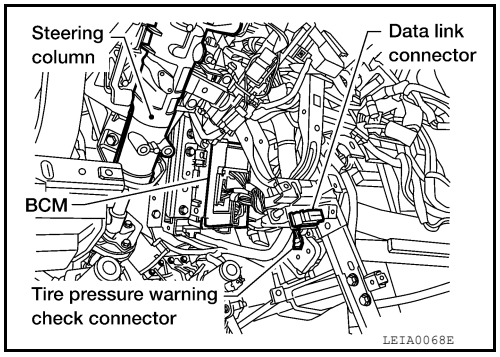

Condition	Low tire pressure warning lamp
System normal	On for 1 second after ignition ON
Tire less than 193 kPa (2.0 kg/cm^2 , 28 psi) [Flat tire]	ON
TPMS malfunction	After key ON, flashes once per second for 1 minute, then stays ON

TRANSMITTER

A sensor-transmitter integrated with a valve is installed in each wheel, and transmits a detected air pressure signal in the form of a radio wave. The radio signal is received by the remote keyless entry receiver.

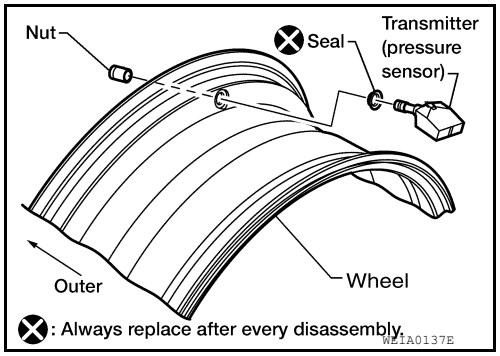

REMOTE KEYLESS ENTRY RECEIVER

The remote keyless entry receiver is shown with the instrument panel RH removed. The remote keyless entry receiver receives the air pressure signal transmitted by the transmitter in each wheel.

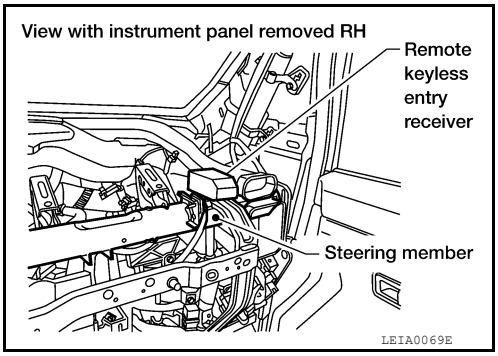

COMBINATION METER

The combination meter receives tire pressure status from the BCM using CAN communication. When a low tire pressure condition is sensed by the BCM, the combination meter low tire pressure warning lamp is activated. A CHECK TIRE PRESSURE warning message will also be displayed in the vehicle information display. Refer to the Owner's Manual for additional information.

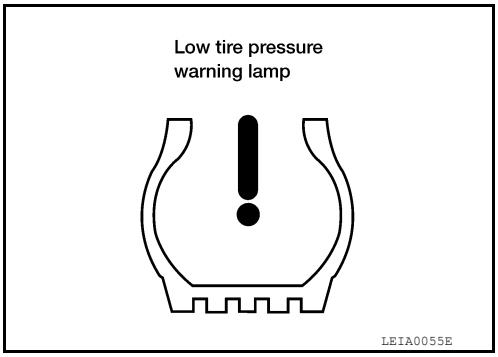

TIRE PRESSURE WARNING CHECK CONNECTOR

The tire pressure warning check connector can be grounded in order to initiate self-diagnosis without a CONSULT. Refer to WT-33, "Self-Diagnosis (Without CONSULT)". The tire pressure warning check connector is located behind the lower portion of the instrument panel LH.

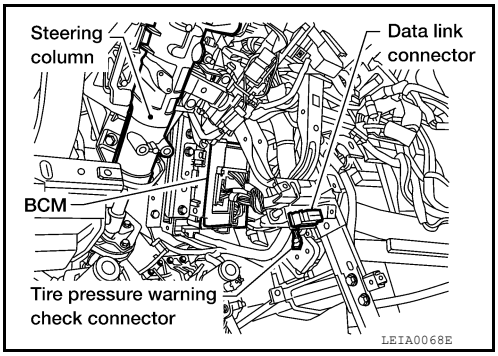

DISPLAY UNIT

Displays the air pressure of each tire.

NOTE:

After the ignition switch is turned on, the pressure values will not be displayed until the data of each wheel is received.

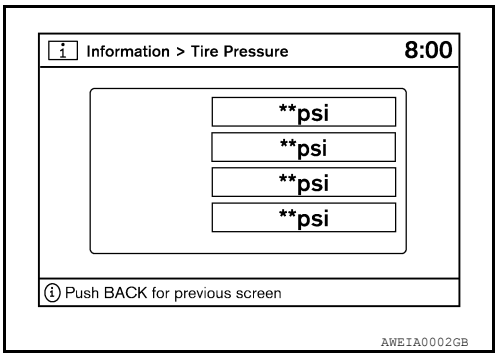

DESCRIPTION

During driving, the tire pressure monitoring system receives the signal transmitted from the transmitter installed in each wheel, and turns on the low tire pressure warning lamp when the tire pressure becomes low. The control unit (BCM) for this system has pressure judgement and self-diagnosis functions.

FUNCTION

When the tire pressure monitoring system detects low inflation pressure or an internal malfunction, the low tire pressure warning lamp in the combination meter comes on. The malfunction is indicated by the low tire pressure warning lamp flashing.

System Component

INFOID:0000000011290249

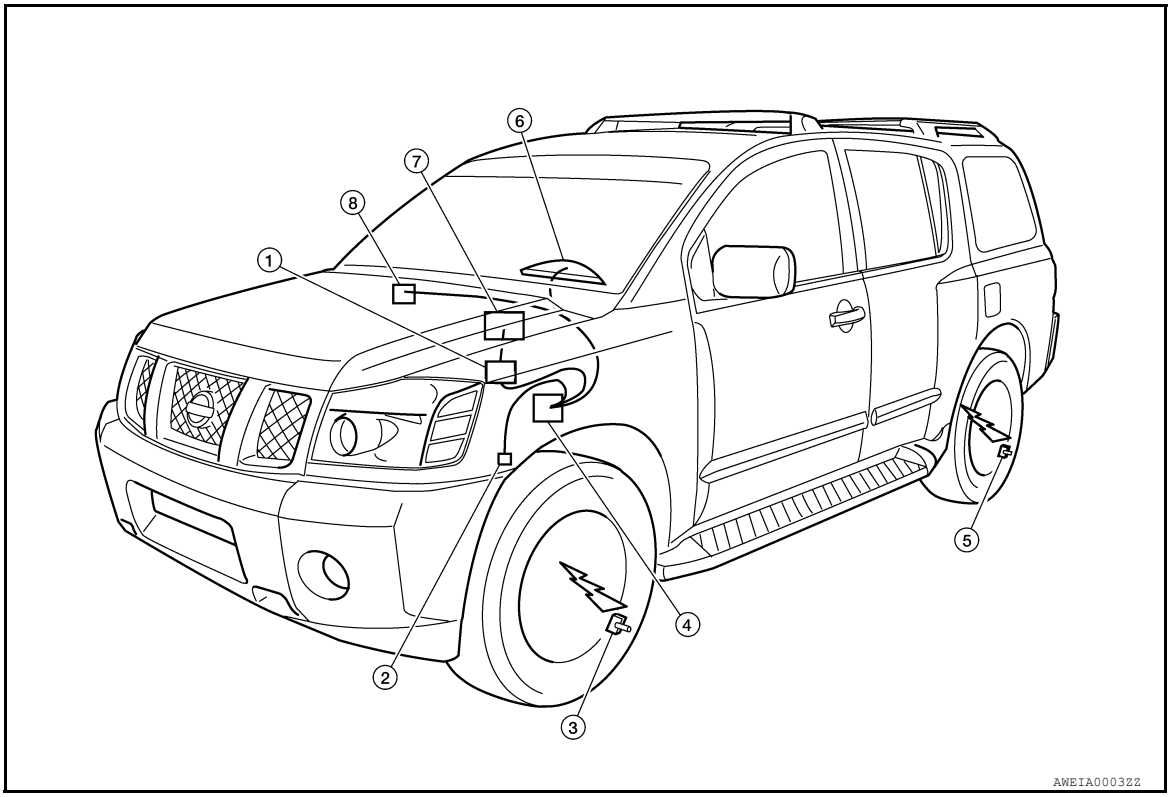

1. AV control unit M44, M46 (base audio system without NAVI)
   AV control unit M166, M171 (Bose audio system without NAVI)
   AV control unit M165 (with NAVI)
2. Tire pressure warning check connector M123
3. Transmitter
4. BCM M18, M20
5. Transmitter
6. Combination meter M24
7. Display unit M93 (without NAVI)
   Display unit M168 (with NAVI)
8. Remote keyless entry receiver M120

DIAGNOSIS SYSTEM (BCM)

CONSULT Function (BCM - COMMON ITEM)

INFOID:0000000011516276

APPLICATION ITEM

CONSULT performs the following functions via CAN communication with BCM.

Direct Diagnostic Mode	Description
ECU Identification	The BCM part number is displayed.
Self Diagnostic Result	The BCM self diagnostic results are displayed.
Data Monitor	The BCM input/output data is displayed in real time.
Active Test	The BCM activates outputs to test components.
Work support	The settings for BCM functions can be changed.
Configuration	• The vehicle specification can be read and saved. • The vehicle specification can be written when replacing BCM.
CAN Diag Support Mntr	The result of transmit/receive diagnosis of CAN communication is displayed.

SYSTEM APPLICATION

BCM can perform the following functions.

System	Sub System	Direct Diagnostic Mode						
		ECU Identification	Self Diagnostic Result	Data Monitor	Active Test	Work support	Configuration	CAN Diag Support Mntr
Door lock	DOOR LOCK		×	×	×	×		
Rear window defogger	REAR DEFOGGER			×	×			
Warning chime	BUZZER			×	×			
Interior room lamp timer	INT LAMP			×	×	×		
Remote keyless entry system	MULTI REMOTE ENT			×	×	×		
Exterior lamp	HEADLAMP			×	×	×		
Wiper and washer	WIPER			×	×	×		
Turn signal and hazard warning lamps	FLASHER			×	×			
Air conditioner	AIR CONDITIONER			×				
Intelligent Key system	INTELLIGENT KEY			×				
Combination switch	COMB SW			×				
BCM	BCM	×	×			×	×	×
Immobilizer	IMMU		×	×	×			
Interior room lamp battery saver	BATTERY SAVER			×	×	×		
Back door open	TRUNK			×	×			
Vehicle security system	THEFT ALM			×	×	×		
RAP system	RETAINED PWR			×	×	×		
Signal buffer system	SIGNAL BUFFER			×	×			
TPMS	AIR PRESSURE MONITOR		×	×	×	×		
Panic alarm system	PANIC ALARM				×			

CONSULT Function (BCM - AIR PRESSURE MONITOR)

INFOID:0000000011516277

NOTE:
The Signal Tech II Tool (J-50190) can be used to perform the following functions. Refer to the Signal Tech II User Guide for additional information.
- Activate and display TPMS transmitter IDs
- Display tire pressure reported by the TPMS transmitter
- Read TPMS DTCs
- Register TPMS transmitter IDs

SELF DIAGNOSTIC RESULT

NOTE:
Before performing Self Diagnostic Result, be sure to register the ID, or else the actual malfunction may be different from that displayed on CONSULT.
Refer to BCS-44, "DTC Index".

DATA MONITOR

Monitor Item	Condition	Specification
VEHICLE SPEED	Drive vehicle.	Vehicle speed (km/h or mph)
AIR PRESS FL	• Drive vehicle for a few minutes. or • Ignition switch ON and activation tool is transmitting activation signals.	Tire pressure (kPa, kg/cm^2 or psi).
AIR PRESS FR		
AIR PRESS RR		
AIR PRESS RL		
ID REGST FL1	Ignition switch ON.	Registration ID: Green. No registration: Red.
ID REGST FR1		
ID REGST RR1		
ID REGST RL1		
WARNING LAMP	Ignition switch ON.	Low tire pressure warning lamp on: ON. Low tire pressure warning lamp off: OFF.
BUZZER	Ignition switch ON.	Buzzer in combination meter on: ON. Buzzer in combination meter off: OFF.

ACTIVE TEST

Test Item	Description
WARNING LAMP	This test is able to check tire pressure warning lamp operation [On/Off].
ID REGIST WARNING	This test is able to check ID regist warning chime operation [On/Off].
FLAT TIRE WARNING	This test is able to check flat tire warning chime operation [On/Off].
HORN	This test is able to check horn operation [On].
FLASHER	This test is able to check turn signal lamp operation [Off/LH/RH].

WORK SUPPORT

Support Item	Description
ID REGIST	Refer to WT-6, "Description".
ID READ	The registered ID number is displayed.

Self-Diagnosis (Without CONSULT)

INFOID:0000000011290252

NOTE:
The Signal Tech II Tool (J-50190) can be used to perform the following functions. Refer to the Signal Tech II User Guide for additional information.
- Activate and display TPMS transmitter IDs
- Display tire pressure reported by the TPMS transmitter
- Read TPMS DTCs

- Register TPMS transmitter IDs

SELF-DIAGNOSTIC PROCEDURE (WITHOUT CONSULT)

1. Turn ignition switch ON.
2. Ground the tire pressure warning check connector to initiate self diagnosis.
3. Compare the flashing pattern with the flash code chart below.

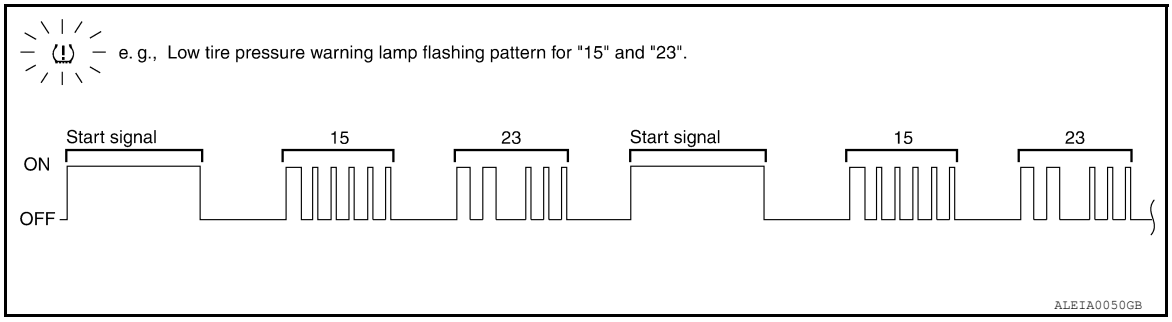

NOTE:
The system is normal when the low tire pressure warning lamp flashes 5 times and continues repeating. Self-diagnosis results are erased automatically by turning the ignition switch “OFF”.

Flash Code	Malfunction part	Reference page
15 16 17 18	Tire pressure dropped below specified value. Refer to WT-9, "System Description".	—
21 22 23 24	Transmitter no data (FL) Transmitter no data (FR) Transmitter no data (RR) Transmitter no data (RL)	WT-15
31 32 33 34	Transmitter checksum error (FL) Transmitter checksum error (FR) Transmitter checksum error (RR) Transmitter checksum error (RL)	WT-17
35 36 37 38	Transmitter pressure data error (FL) Transmitter pressure data error (FR) Transmitter pressure data error (RR) Transmitter pressure data error (RL)	WT-19
41 42 43 44	Transmitter function code error (FL) Transmitter function code error (FR) Transmitter function code error (RR) Transmitter function code error (RL)	WT-17
45 46 47 48	Transmitter battery voltage low (FL) Transmitter battery voltage low (FR) Transmitter battery voltage low (RR) Transmitter battery voltage low (RL)	WT-17
52	Vehicle speed signal	WT-21
54	Vehicle ignition signal	WT-22

DTC/CIRCUIT DIAGNOSIS

C1708 - C1711 DATA FROM TRANSMITTER NOT BEING RECEIVED

Description

INFOID:0000000011290253

Tire pressure data for one or more transmitters is not being received by the BCM.

DTC Logic

INFOID:0000000011290254

NOTE:
The Signal Tech II Tool (J-50190) can be used to perform the following functions. Refer to the Signal Tech II User Guide for additional information.
- Activate and display TPMS transmitter IDs
- Display tire pressure reported by the TPMS transmitter
- Read TPMS DTCs
- Register TPMS transmitter IDs

DTC DETECTION LOGIC

DTC	CONSULT	DTC detecting condition
C1708	[NO - DATA] - FL	Data from FL transmitter cannot be received.
C1709	[NO - DATA] - FR	Data from FR transmitter cannot be received.
C1710	[NO - DATA] - RR	Data from RR transmitter cannot be received.
C1711	[NO - DATA] - RL	Data from RL transmitter cannot be received.

DTC CONFIRMATION PROCEDURE

1. ID REGISTRATION AND VEHICLE DRIVING

1. Carry out ID registration of all transmitters. Refer to WT-6, "Work Procedure".
2. Drive at a speed of 40 km/h (25 MPH) or more for 3 minutes, and then drive the vehicle at any speed for 10 minutes.
3. Check all tire pressures with CONSULT within 5 minutes.

Does “DATA MONITOR ITEM” display tire pressure as normal without any warning lamp?

YES >> Inspection End.
NO >> Refer to WT-15, "Diagnosis Procedure".

Diagnosis Procedure

INFOID:0000000011290255

NOTE:
The Signal Tech II Tool (J-50190) can be used to perform the following functions. Refer to the Signal Tech II User Guide for additional information.
- Activate and display TPMS transmitter IDs
- Display tire pressure reported by the TPMS transmitter
- Read TPMS DTCs
- Register TPMS transmitter IDs

MALFUNCTION CODE NO. 21, 22, 23 OR 24 (DTC C1708, C1709, C1710 OR C1711)

1. CHECK BCM

Drive for several minutes. Check all tire pressures with CONSULT.

Are all tire pressures displayed as 0 kPa?

YES >> GO TO 2
NO >> GO TO 3

2. CHECK TIRE PRESSURE RECEIVER CONNECTOR

Check tire pressure receiver connector for damage or loose connection.

Is tire pressure receiver connector damaged or loose?

YES >> Repair or replace tire pressure receiver connector.

NO >> Replace BCM, then GO TO 3. Refer to BCS-54, "Removal and Installation".

3. PERFORM ID REGISTRATION

Carry out ID registration of all transmitters. Refer to WT-6, "Work Procedure".

Is there a tire that cannot register ID?

YES >> Replace malfunctioning transmitter, then GO TO 5. Refer to WT-55, "Removal and Installation".
NO >> GO TO 4

4. DRIVE VEHICLE

1. Drive at a speed of 40 km/h (25 MPH) or more for several minutes without stopping.
2. Check all tire pressures with CONSULT within 15 minutes after vehicle speed becomes 17 km/h (11 MPH).

Does “DATA MONITOR ITEM” display tire pressure as normal without any warning lamp?

YES >> Inspection End.
NO >> GO TO 5

5. ID REGISTRATION AND VEHICLE DRIVING

1. Carry out ID registration of all transmitters. Refer to WT-6, "Work Procedure".
2. Drive at a speed of 40 km/h (25 MPH) or more for 3 minutes, and then drive the vehicle at any speed for 10 minutes.
3. Check all tire pressures with CONSULT within 5 minutes.

Does “DATA MONITOR ITEM” display tire pressure as normal without any warning lamp?

YES >> Inspection End.
NO >> Proceed to the inspection applicable to DTC.

Special Repair Requirement

INFOID:0000000011290256

Perform preliminary check. Refer to WT-5, "Preliminary Check".

C1712 - C1715, C1720 - C1723, C1724 - C1727 TRANSMITTER MALFUNCTION

Description

INFOID:0000000011290257

One or more transmitters are malfunctioning internally.

DTC Logic

INFOID:0000000011290258

NOTE:
The Signal Tech II Tool (J-50190) can be used to perform the following functions. Refer to the Signal Tech II User Guide for additional information.
- Activate and display TPMS transmitter IDs
- Display tire pressure reported by the TPMS transmitter
- Read TPMS DTCs
- Register TPMS transmitter IDs

DTC DETECTION LOGIC

DTC	CONSULT	DTC detecting condition
C1712	[CHECKSUM - ERR] - FL	Checksum data from FL transmitter is malfunctioning.
C1713	[CHECKSUM - ERR] - FR	Checksum data from FR transmitter is malfunctioning.
C1714	[CHECKSUM - ERR] - RR	Checksum data from RR transmitter is malfunctioning.
C1715	[CHECKSUM - ERR] - RL	Checksum data from RL transmitter is malfunctioning.
C1720	[CODE - ERR] - FL	Function code data from FL transmitter is malfunctioning.
C1721	[CODE - ERR] - FR	Function code data from FR transmitter is malfunctioning.
C1722	[CODE - ERR] - RR	Function code data from RR transmitter is malfunctioning.
C1723	[CODE - ERR] - RL	Function code data from RL transmitter is malfunctioning.
C1724	[BATT - VOLT - LOW] - FL	Battery voltage of FL transmitter drops.
C1725	[BATT - VOLT - LOW] - FR	Battery voltage of FR transmitter drops.
C1726	[BATT - VOLT - LOW] - RR	Battery voltage of RR transmitter drops.
C1727	[BATT - VOLT - LOW] - RL	Battery voltage of RL transmitter drops.

DTC CONFIRMATION PROCEDURE

1. DRIVE VEHICLE

1. Drive at a speed of 40 km/h (25 MPH) or more for 3 minutes, and then drive the vehicle at any speed for 10 minutes.
2. Check all tire pressures with CONSULT within 5 minutes.

Does “DATA MONITOR ITEM” display tire pressure as normal without any warning lamp?

YES >> Inspection End.
NO >> Refer to WT-17, "Diagnosis Procedure".

Diagnosis Procedure

INFOID:0000000011290259

NOTE:
The Signal Tech II Tool (J-50190) can be used to perform the following functions. Refer to the Signal Tech II User Guide for additional information.
- Activate and display TPMS transmitter IDs
- Display tire pressure reported by the TPMS transmitter
- Read TPMS DTCs
- Register TPMS transmitter IDs

MALFUNCTION CODE NO. 31, 32, 33, 34, 41, 42, 43, 44, 45, 46, 47 OR 48 (DTC C1712, C1713, C1714, C1715, C1720, C1721, C2722, C1723, C1724, C1725, C1726 OR C1727)

1. PERFORM ID REGISTRATION

1. Carry out ID registration of all transmitters. Refer to WT-6, "Work Procedure".
2. Drive at a speed of 40 km/h (25 MPH) or more for 3 minutes, and then drive the vehicle at any speed for 10 minutes.

>> GO TO 2

2. REPLACE TRANSMITTER

1. Check low tire pressure warning lamp again for flashing, replace malfunctioning transmitter. Refer to WT-55, "Removal and Installation".
2. Carry out ID registration of all transmitters. Refer to WT-6, "Work Procedure".

Can ID registration of all transmitters be completed?

YES >> GO TO 3
NO >> GO TO WT-15, "Diagnosis Procedure".

3. DRIVE VEHICLE

1. Drive at a speed of 40 km/h (25 MPH) or more for 3 minutes, and then drive the vehicle at any speed for 10 minutes.
2. Check all tire pressures with CONSULT within 5 minutes.

Does “DATA MONITOR ITEM” display tire pressure as normal without any warning lamp?

YES >> Inspection End.
NO >> Replace malfunctioning transmitter, and perform Step 3 again.

Special Repair Requirement

INFOID:0000000011290260

Perform preliminary check. Refer to WT-5, "Preliminary Check".

C1716 - C1719 TRANSMITTER PRESSURE MALFUNCTION

Description

INFOID:0000000011290261

Air pressure data from one or more transmitters is out of range.

DTC Logic

INFOID:0000000011290262

NOTE:
The Signal Tech II Tool (J-50190) can be used to perform the following functions. Refer to the Signal Tech II User Guide for additional information.
- Activate and display TPMS transmitter IDs
- Display tire pressure reported by the TPMS transmitter
- Read TPMS DTCs
- Register TPMS transmitter IDs

DTC DETECTION LOGIC

DTC	CONSULT	DTC detecting condition
C1716	[PRESSDATA - ERR] FL	Air pressure data from FL transmitter is malfunctioning.
C1717	[PRESSDATA - ERR] FR	Air pressure data from FR transmitter is malfunctioning.
C1718	[PRESSDATA - ERR] RR	Air pressure data from RR transmitter is malfunctioning.
C1719	[PRESSDATA - ERR] RL	Air pressure data from RL transmitter is malfunctioning.

DTC CONFIRMATION PROCEDURE

1. ID REGISTRATION AND VEHICLE DRIVING

1. Carry out ID registration of all transmitters. Refer to WT-6, "Work Procedure".
2. Drive at a speed of 40 km/h (25 MPH) or more for 3 minutes, and then drive the vehicle at any speed for 10 minutes.
3. Check all tire pressures with CONSULT within 5 minutes.

Does “DATA MONITOR ITEM” display tire pressure as normal without any warning lamp?

YES >> Inspection End.
NO >> Refer to WT-19, "Diagnosis Procedure".

Diagnosis Procedure

INFOID:0000000011290263

NOTE:
The Signal Tech II Tool (J-50190) can be used to perform the following functions. Refer to the Signal Tech II User Guide for additional information.
- Activate and display TPMS transmitter IDs
- Display tire pressure reported by the TPMS transmitter
- Read TPMS DTCs
- Register TPMS transmitter IDs

MALFUNCTION CODE NO. 35, 36, 37 OR 38 (DTC C1716, C1717, C1718 OR C1719)

1. CHECK ALL TIRE PRESSURES

Check all tire pressures. Refer to WT-59, "Tire".

Are there any tires with pressure of 64 psi or more?

YES >> Adjust tire pressure to specified value.
NO >> GO TO 2

2. ID REGISTRATION AND VEHICLE DRIVING

1. Carry out ID registration of all transmitters. Refer to WT-6, "Work Procedure".
2. Drive at a speed of 40 km/h (25 MPH) or more for several minutes without stopping.
3. Check all tire pressures with CONSULT within 15 minutes after vehicle speed becomes 17 km/h (11 MPH).

Does “DATA MONITOR ITEM” display 64 psi or more?

YES >> Replace transmitter. Refer to WT-55, "Removal and Installation". GO TO 3.
NO >> GO TO 3

3. ID REGISTRATION AND VEHICLE DRIVING

1. Carry out ID registration of all transmitters. Refer to WT-6, "Work Procedure".
2. Drive at a speed of 40 km/h (25 MPH) or more for 3 minutes, and then drive the vehicle at any speed for 10 minutes.
3. Check all tire pressures with CONSULT within 5 minutes.

Does “DATA MONITOR ITEM” display tire pressure as normal without any warning lamp?

YES >> Inspection End.
NO >> Proceed to the inspection applicable to DTC.

Special Repair Requirement

INFOID:0000000011290264

Perform preliminary check. Refer to WT-5, "Preliminary Check".

C1729 VEHICLE SPEED SIGNAL

Description

INFOID:0000000011290265

The vehicle speed signal is not being detected by the BCM.

DTC Logic

INFOID:0000000011290266

NOTE:
The Signal Tech II Tool (J-50190) can be used to perform the following functions. Refer to the Signal Tech II User Guide for additional information.
- Activate and display TPMS transmitter IDs
- Display tire pressure reported by the TPMS transmitter
- Read TPMS DTCs
- Register TPMS transmitter IDs

DTC DETECTION LOGIC

DTC	CONSULT	DTC detecting condition
C1729	VHCL SPEED SIG ERR	Vehicle speed signal is in error.

DTC CONFIRMATION PROCEDURE

1.CHECK SELF-DIAGNOSTIC RESULTS

1. On “SELECT DIAG MODE”, select the “SELF-DIAG RESULT” screen.
2. Check display contents on "SELF DIAG RESULT" screen.

Is the “CAN COMM CIRCUIT” displayed in the self-diagnosis display?

YES >> Refer to WT-21, "Diagnosis Procedure".
NO >> Inspection End.

Diagnosis Procedure

INFOID:0000000011290267

NOTE:
The Signal Tech II Tool (J-50190) can be used to perform the following functions. Refer to the Signal Tech II User Guide for additional information.
- Activate and display TPMS transmitter IDs
- Display tire pressure reported by the TPMS transmitter
- Read TPMS DTCs
- Register TPMS transmitter IDs

MALFUNCTION CODE NO. 52 (DTC C1729)

1.CHECK SELF-DIAGNOSTIC RESULTS

1. On “SELECT DIAG MODE”, select the “SELF-DIAG RESULT” screen.
2. Check display contents on "SELF DIAG RESULT" screen.

Is the “CAN COMM CIRCUIT” displayed in the self-diagnosis display?

YES >> Perform trouble diagnosis for CAN communication system. Refer to LAN-14, "Trouble Diagnosis Flow Chart".
NO >> Check combination meter. Refer to MWI-27, "CONSULT Function (METER/M&A)".

Special Repair Requirement

INFOID:0000000011290268

Perform preliminary check. Refer to WT-5, "Preliminary Check".

C1735 IGNITION SIGNAL

Description

INFOID:0000000011290269

The BCM monitors the IGN ON signal on the CAN line and compares it to it's direct IGN ON signal. When these two signals do not match, the BCM sets C1735.

DTC Logic

INFOID:0000000011290270

NOTE:
The Signal Tech II Tool (J-50190) can be used to perform the following functions. Refer to the Signal Tech II User Guide for additional information.
- Activate and display TPMS transmitter IDs
- Display tire pressure reported by the TPMS transmitter
- Read TPMS DTCs
- Register TPMS transmitter IDs

DTC DETECTION LOGIC

DTC	CONSULT	DTC detecting condition
C1735	IGNITION SIGNAL LINE - BCM/TPMS	BCM has detected a mismatch between IGN ON signals.

DTC CONFIRMATION PROCEDURE

1.CHECK SELF-DIAGNOSTIC RESULTS

1. On SELECT DIAG MODE, select the SELF-DIAG RESULT screen.
2. Check display contents on SELF DIAG RESULT screen.

Is C1735 displayed in the self-diagnosis display?

YES >> Refer to WT-22, "Diagnosis Procedure".
NO >> Inspection End.

Diagnosis Procedure

INFOID:0000000011290271

NOTE:
The Signal Tech II Tool (J-50190) can be used to perform the following functions. Refer to the Signal Tech II User Guide for additional information.
- Activate and display TPMS transmitter IDs
- Display tire pressure reported by the TPMS transmitter
- Read TPMS DTCs
- Register TPMS transmitter IDs

MALFUNCTION CODE NO. 54 (DTC C1735)

1.CAN IGNITION SIGNAL

Check BCM IGN RLY signal with CONSULT. Refer to BCS-35, "Reference Value".

Are the inspection results normal with the ignition switch ON?

YES >> GO TO 2.
NO >> Check CAN system. Refer to LAN-46, "CAN System Specification Chart".

2.BCM POWER SUPPLY

Check BCM power supply (ignition ON). Refer to BCS-30, "Diagnosis Procedure".

Is the power supply with the ignition switch ON normal?

YES >> GO TO 3.
NO >> Repair power supply as necessary.

3.DRIVE VEHICLE

Clear DTC and then test drive the vehicle and check the low tire pressure warning lamp.

Does the vehicle operate without any low tire pressure warning lamp?

YES >> Inspection End.
NO >> Replace BCM. Refer to BCS-54, "Removal and Installation".

Special Repair Requirement

INFOID:0000000011290272

Perform preliminary check. Refer to WT-5, "Preliminary Check".

ECU DIAGNOSIS INFORMATION

BCM (BODY CONTROL MODULE)

Reference Value

INFOID:0000000011516353

NOTE:
The Signal Tech II Tool (J-50190) can be used to perform the following functions. Refer to the Signal Tech II User Guide for additional information.
- Activate and display TPMS transmitter IDs
- Display tire pressure reported by the TPMS transmitter
- Read TPMS DTCs
- Register TPMS transmitter IDs
- Check Intelligent Key relative signal strength
- Confirm vehicle Intelligent Key antenna signal strength
- Test remote keyless entry keyfob relative signal strength

VALUES ON THE DIAGNOSIS TOOL

Monitor Item	Condition	Value/Status
ACC ON SW	Ignition switch OFF or ON	Off
	Ignition switch ACC	On
AIR COND SW	A/C switch OFF	Off
	A/C switch ON	On
AIR PRESS FL	Front left tire air pressure value	kPa, kg/cm^2, psi
AIR PRESS FR	Front right tire air pressure value	kPa, kg/cm^2, psi
AIR PRESS RL	Rear left tire air pressure value	kPa, kg/cm^2, psi
AIR PRESS RR	Rear right tire air pressure value	kPa, kg/cm^2, psi
AUTO LIGHT SW	Lighting switch OFF	Off
	Lighting switch AUTO	On
BACK DOOR SW	Back door closed	Off
	Back door opened	On
BRAKE SW	Brake pedal released	Off
	Brake pedal applied	On
BUCKLE SW	Seat belt buckle unfastened	Off
	Seat belt buckle fastened	On
BUZZER	Buzzer in combination meter OFF	Off
	Buzzer in combination meter ON	On
CARGO LAMP SW	Cargo lamp switch OFF	Off
	Cargo lamp switch ON	On
CDL LOCK SW	Door lock/unlock switch does not operate	Off
	Press door lock/unlock switch to the LOCK side	On
CDL UNLOCK SW	Door lock/unlock switch does not operate	Off
	Press door lock/unlock switch to the UNLOCK side	On
DOOR SW-AS	Front door RH closed	Off
	Front door RH opened	On
DOOR SW-DR	Front door LH closed	Off
	Front door LH opened	On
DOOR SW-RL	Rear door LH closed	Off
	Rear door LH opened	On

Monitor Item	Condition	Value/Status
DOOR SW-RR	Rear door RH closed	Off
	Rear door RH opened	On
FAN ON SIG	Blower motor fan switch OFF	Off
	Blower motor fan switch ON	On
FR FOG SW	Front fog lamp switch OFF	Off
	Front fog lamp switch ON	On
FR WASHER SW	Front washer switch OFF	Off
	Front washer switch ON	On
FR WIPER LOW	Front wiper switch OFF	Off
	Front wiper switch LO	On
FR WIPER HI	Front wiper switch OFF	Off
	Front wiper switch HI	On
FR WIPER INT	Front wiper switch OFF	Off
	Front wiper switch INT	On
FR WIPER STOP	Any position other than front wiper stop position	Off
	Front wiper stop position	On
HAZARD SW	When hazard switch is not pressed	Off
	When hazard switch is pressed	On
HEAD LAMP SW1	Headlamp switch OFF	Off
	Headlamp switch 1st	On
HEAD LAMP SW2	Headlamp switch OFF	Off
	Headlamp switch 1st	On
HI BEAM SW	High beam switch OFF	Off
	High beam switch HI	On
ID REGST FL1	ID registration of front left tire incomplete	YET
	ID registration of front left tire complete	DONE
ID REGST FR1	ID registration of front right tire incomplete	YET
	ID registration of front right tire complete	DONE
ID REGST RL1	ID registration of rear left tire incomplete	YET
	ID registration of rear left tire complete	DONE
ID REGST RR1	ID registration of rear right tire incomplete	YET
	ID registration of rear right tire complete	DONE
IGN ON SW	Ignition switch OFF or ACC	Off
	Ignition switch ON	On
IGN SW CAN	Ignition switch OFF or ACC	Off
	Ignition switch ON	On
INT VOLUME	Wiper intermittent dial is in a dial position 1 - 7	1 - 7
I-KEY LOCK[1]	LOCK button of Intelligent Key is not pressed	Off
	LOCK button of Intelligent Key is pressed	On
I-KEY PANIC[1]	PANIC button of Intelligent Key is not pressed	Off
	PANIC button of Intelligent Key is pressed	On
I-KEY PW DWN[1]	UNLOCK button of Intelligent Key is not pressed	Off
	UNLOCK button of Intelligent Key is pressed for greater than 3 seconds and driver's window operating in DOWN direction	On

Monitor Item	Condition	Value/Status
I-KEY UNLOCK[1]	UNLOCK button of Intelligent Key is not pressed	Off
	UNLOCK button of Intelligent Key is pressed	On
KEY CYL LK-SW	Door key cylinder LOCK position	On
	Door key cylinder other than LOCK position	Off
KEY CYL UN-SW	Door key cylinder UNLOCK position	On
	Door key cylinder other than UNLOCK position	Off
KEY ON SW	Mechanical key is removed from key cylinder	Off
	Mechanical key is inserted to key cylinder	On
KEYLESS LOCK[2]	LOCK button of key fob is not pressed	Off
	LOCK button of key fob is pressed	On
KEYLESS PANIC[2]	PANIC button of key fob is not pressed	Off
	PANIC button of key fob is pressed	On
KEYLESS UNLOCK[2]	UNLOCK button of key fob is not pressed	Off
	UNLOCK button of key fob is pressed	On
LIGHT SW 1ST	Lighting switch OFF	Off
	Lighting switch 1st	On
OIL PRESS SW	• Ignition switch OFF or ACC • Engine running	Off
	Ignition switch ON	On
OPTICAL SENSOR	Bright outside of the vehicle	Close to 5V
	Dark outside of the vehicle	Close to 0V
PASSING SW	Other than lighting switch PASS	Off
	Lighting switch PASS	On
PUSH SW[1]	Return to ignition switch to LOCK position	Off
	Press ignition switch	On
REAR DEF SW	Rear window defogger switch OFF	Off
	Rear window defogger switch ON	On
RR WASHER SW	Rear washer switch OFF	Off
	Rear washer switch ON	On
RR WIPER INT	Rear wiper switch OFF	Off
	Rear wiper switch INT	On
RR WIPER ON	Rear wiper switch OFF	Off
	Rear wiper switch ON	On
RR WIPER STOP	Rear wiper stop position	Off
	Other than rear wiper stop position	On
RR WIPER STP2	Rear wiper stop position	Off
	Other than rear wiper stop position	On
TURN SIGNAL L	Turn signal switch OFF	Off
	Turn signal switch LH	On
TURN SIGNAL R	Turn signal switch OFF	Off
	Turn signal switch RH	On
VEHICLE SPEED	While driving	Equivalent to speedometer reading
WARNING LAMP	Low tire pressure warning lamp in combination meter OFF	Off
	Low tire pressure warning lamp in combination meter ON	On

1: With Intelligent Key

2: With remote keyless entry system

Terminal Layout

INFOID:0000000011516354

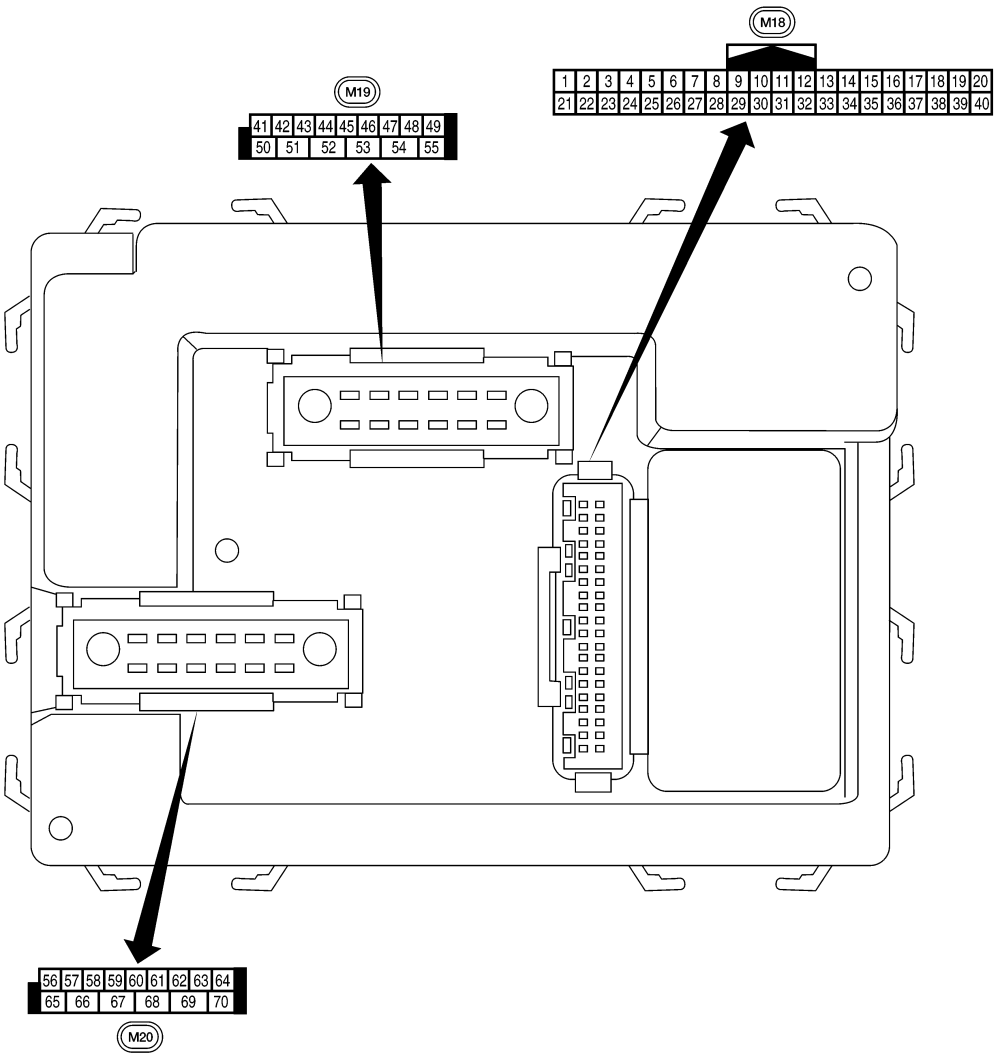

AWMIA1542ZZ

Physical Values

INFOID:0000000011516355

Terminal	Wire color	Signal name	Signal input/ output	Measuring condition		Reference value or waveform (Approx.)
				Ignition switch	Operation or condition	
1	BR/W	Ignition keyhole illumination	Output	OFF	Door is locked (SW OFF)	Battery voltage
					Door is unlocked (SW ON)	0V
2	SB	Combination switch input 5	Input	ON	Lighting, turn, wiper OFF Wiper dial position 4	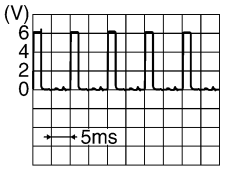
3	G/Y	Combination switch input 4	Input	ON	Lighting, turn, wiper OFF Wiper dial position 4	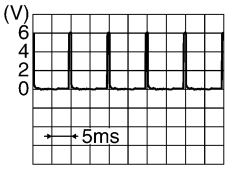
4	Y	Combination switch input 3	Input	ON	Lighting, turn, wiper OFF Wiper dial position 4	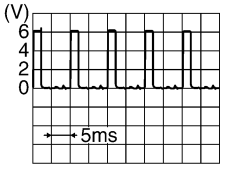
5	G/B	Combination switch input 2	Input	ON	Lighting, turn, wiper OFF Wiper dial position 4	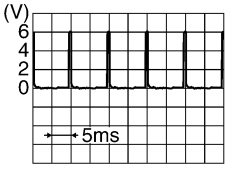
6	V	Combination switch input 1				
9	R/G	Stop lamp switch	Input	OFF	Brake pedal depressed	Battery voltage
					Brake pedal released	0V
10	G	Hazard lamp flash	Input	OFF	ON (opening or closing)	0V
					OFF (other than above)	Battery voltage
11	O	Ignition switch (ACC or ON)	Input	ACC or ON	Ignition switch ACC or ON	Battery voltage
12	R/L	Front door switch RH	Input	OFF	ON (open)	0V
					OFF (closed)	Battery voltage
13	GR	Rear door switch RH	Input	OFF	ON (open)	0V
					OFF (closed)	Battery voltage
15	L/W	Tire pressure warning check connector	Input	OFF	—	5V
18	P	Remote keyless entry receiver and optical sensor (ground)	Output	OFF	—	0V

Terminal	Wire color	Signal name	Signal input/ output	Measuring condition		Reference value or waveform (Approx.)
				Ignition switch	Operation or condition	
19	V/W	Remote keyless entry receiver (power supply)	Output	OFF	Ignition switch OFF	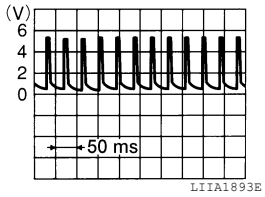
20	G/W	Remote keyless entry receiver (signal)	Input	OFF	Stand-by (keyfob buttons released)	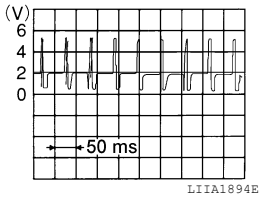
					When remote keyless entry receiver receives signal from keyfob (keyfob buttons pressed)	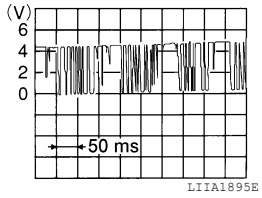
21	G	NATS antenna amp.	Input	OFF → ON	Ignition switch (OFF → ON)	Just after turning ignition switch ON: Pointer of tester should move for approx. 1 second, then return to battery voltage.
22	G	BUS	—	—	Ignition switch ON or power window timer operates	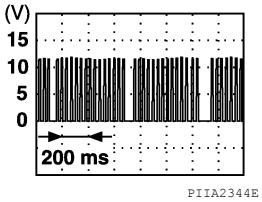
23	G/O	Security indicator lamp	Output	OFF	Goes OFF → illuminates (Every 2.4 seconds)	Battery voltage → 0V
25	BR	NATS antenna amp.	Input	OFF → ON	Ignition switch (OFF → ON)	Just after turning ignition switch ON: Pointer of tester should move for approx. 1 second, then return to battery voltage.
26	Y/L	Rear wiper auto stop switch 2	Input	ON	Rise up position (rear wiper arm on stopper)	0V
					A Position (full clockwise stop position)	0V
					Forward sweep (counterclockwise direction)	Fluctuating
					B Position (full counterclockwise stop position)	Battery voltage
					Reverse sweep (clockwise direction)	Fluctuating
27	W/R	Compressor ON signal	Input	ON	A/C switch OFF	5V
					A/C switch ON	0V

Terminal	Wire color	Signal name	Signal input/ output	Measuring condition		Reference value or waveform (Approx.)
				Ignition switch	Operation or condition	
28	L/R	Front blower monitor	Input	ON	Front blower motor OFF	Battery voltage
					Front blower motor ON	0V
29	W/B	Hazard switch	Input	OFF	ON	0V
					OFF	5V
32	R/G	Combination switch output 5	Output	ON	Lighting, turn, wiper OFF Wiper dial position 4	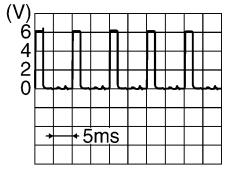 SKIA5291E
33	R/Y	Combination switch output 4	Output	ON	Lighting, turn, wiper OFF Wiper dial position 4	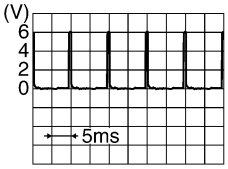 SKIA5292E
34	L	Combination switch output 3	Output	ON	Lighting, turn, wiper OFF Wiper dial position 4	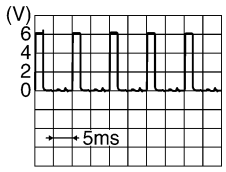 SKIA5291E
35	O/B	Combination switch output 2	Output	ON	Lighting, turn, wiper OFF Wiper dial position 4	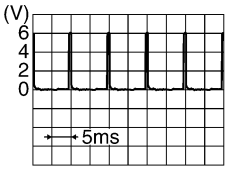 SKIA5292E
36	R/W	Combination switch output 1				
37[1]	B/R	Key switch and ignition knob switch	Input	OFF	Intelligent Key inserted	Battery voltage
					Intelligent Key removed	0V
37[2]	B/R	Key switch and key lock solenoid	Input	OFF	Key inserted	Battery voltage
					Key removed	0V
38	W/L	Ignition switch (ON)	Input	ON	—	Battery voltage
39	L	CAN-H	—	—	—	—
40	P	CAN-L	—	—	—	—
41	GR/R	Rear window defogger switch	Input	ON	Rear window defogger switch ON	0V
					Rear window defogger switch OFF	5V
42	GR	Glass hatch ajar switch	Input	ON	Glass hatch open	0
					Glass hatch closed	Battery

Terminal	Wire color	Signal name	Signal input/ output	Measuring condition		Reference value or waveform (Approx.)
				Ignition switch	Operation or condition	
43	R/B	Back door switch (without power back door) or back door latch (door ajar switch) (with power back door)	Input	OFF	ON (open)	0V
					OFF (closed)	Battery voltage
44	O	Rear wiper auto stop switch 1	Input	ON	Rise up position (rear wiper arm on stopper)	0V
					A Position (full clockwise stop position)	Battery voltage
					Forward sweep (counterclockwise direction)	Fluctuating
					B Position (full counterclockwise stop position)	0V
					Reverse sweep (clockwise direction)	Fluctuating
47	SB	Front door switch LH	Input	OFF	ON (open)	0V
					OFF (closed)	Battery voltage
48	R/Y	Rear door switch LH	Input	OFF	ON (open)	0V
					OFF (closed)	Battery voltage
49	R	Cargo lamp	Output	OFF	Any door open (ON)	0V
					All doors closed (OFF)	Battery voltage
51	Y/B	Trailer turn signal (right)	Output	ON	Turn right ON	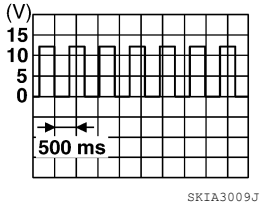
52	G/B	Trailer turn signal (left)	Output	ON	Turn left ON	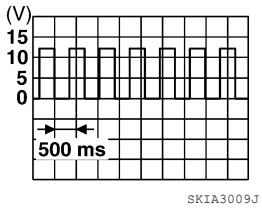
54	Y	Rear wiper output circuit 2	Input	ON	Rise up position (rear wiper arm on stopper)	0V
					A Position (full clockwise stop position)	0V
					Forward sweep (counterclockwise direction)	0V
					B Position (full counterclockwise stop position)	Battery voltage
					Reverse sweep (clockwise direction)	Battery voltage
55	SB	Rear wiper output circuit 1	Output	ON	OFF	0
					ON	Battery voltage

Terminal	Wire color	Signal name	Signal input/ output	Measuring condition		Reference value or waveform (Approx.)
				Ignition switch	Operation or condition	
56	R/G	Battery saver output	Output	OFF	10 minutes after ignition switch is turned OFF	0V
				ON	—	Battery voltage
57	Y/R	Battery power supply	Input	OFF	—	Battery voltage
58	W/R	Optical sensor	Input	ON	When optical sensor is illuminated	3.1V or more
					When optical sensor is not illuminated	0.6V or less
59	G	Front door lock assembly LH actuator (unlock)	Output	OFF	OFF (neutral)	0V
					ON (unlock)	Battery voltage
60	G/B	Turn signal (left)	Output	ON	Turn left ON	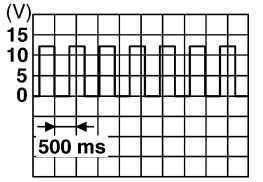
61	G/Y	Turn signal (right)	Output	ON	Turn right ON	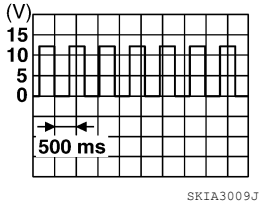
62	R/W	Foot lamp LH and RH	Output	OFF	ON (any door open)	0V
					OFF (all doors closed)	Battery voltage
63	L	Interior room/map lamp	Output	OFF	Any door switch: ON (open)	0V
					Any door switch: OFF (closed)	Battery voltage
65	V	All door lock actuators (lock)	Output	OFF	OFF (neutral)	0V
					ON (lock)	Battery voltage
66	G/Y	Front door lock actuator RH, rear door lock actuators LH/RH and back door lock actuator (unlock)	Output	OFF	OFF (neutral)	0V
					ON (unlock)	Battery voltage
67	B	Ground	Input	ON	—	0V
68	W/L	Power window power supply (RAP)	Output	—	Ignition switch ON	Battery voltage
					Within 45 seconds after ignition switch OFF	Battery voltage
					More than 45 seconds after ignition switch OFF	0V
					When front door LH or RH is open or power window timer operates	0V
69	W/R	Power window power supply	Output	—	—	Battery voltage
70	W/B	Battery power supply	Input	OFF	—	Battery voltage

1: With Intelligent Key system

2: With remote keyless entry system

Self-Diagnosis (With CONSULT)

INFOID:0000000011290276

NOTE:
The Signal Tech II Tool (J-50190) can be used to perform the following functions. Refer to the Signal Tech II User Guide for additional information.
- Activate and display TPMS transmitter IDs
- Display tire pressure reported by the TPMS transmitter
- Read TPMS DTCs
- Register TPMS transmitter IDs

FUNCTION

Self-Diagnostic Results Mode

Diagnostic item	Diagnostic item is detected when ···	Reference page
LOW - PRESSURE - FL [C1704] LOW - PRESSURE - FR [C1705] LOW - PRESSURE - RR [C1706] LOW - PRESSURE - RL [C1707]	Tire pressures dropped below specified value. Refer to WT-9, "System Description".	—
[NO-DATA] - FL [C1708] [NO-DATA] - FR [C1709] [NO-DATA] - RR [C1710] [NO-DATA] - RL [C1711]	Data from FL transmitter cannot be received. Data from FR transmitter cannot be received. Data from RR transmitter cannot be received. Data from RL transmitter cannot be received.	WT-15
[CHECKSUM- ERR] - FL [C1712] [CHECKSUM- ERR] - FR [C1713] [CHECKSUM- ERR] - RR [C1714] [CHECKSUM- ERR] - RL [C1715]	Checksum data from FL transmitter is malfunctioning. Checksum data from FR transmitter is malfunctioning. Checksum data from RR transmitter is malfunctioning. Checksum data from RL transmitter is malfunctioning.	WT-17
[PRESSDATA- ERR] - FL [C1716] [PRESSDATA- ERR] - FR [C1717] [PRESSDATA- ERR] - RR [C1718] [PRESSDATA- ERR] - RL [C1719]	Air pressure data from FL transmitter is malfunctioning. Air pressure data from FR transmitter is malfunctioning. Air pressure data from RR transmitter is malfunctioning. Air pressure data from RL transmitter is malfunctioning.	WT-19
[CODE- ERR] - FL [C1720] [CODE- ERR] - FR [C1721] [CODE- ERR] - RR [C1722] [CODE- ERR] - RL [C1723]	Function code data from FL transmitter is malfunctioning. Function code data from FR transmitter is malfunctioning. Function code data from RR transmitter is malfunctioning. Function code data from RL transmitter is malfunctioning.	WT-17
[BATT - VOLT - LOW] - FL [C1724] [BATT - VOLT - LOW] - FR [C1725] [BATT - VOLT - LOW] - RR [C1726] [BATT - VOLT - LOW] - RL [C1727]	Battery voltage of FL transmitter drops. Battery voltage of FR transmitter drops. Battery voltage of RR transmitter drops. Battery voltage of RL transmitter drops.	WT-17
VHCL_SPEED_SIG_ERR [C1729]	Vehicle speed signal is in error.	WT-21
IGN_CIRCUIT_OPEN [C1735]	Vehicle ignition signal is in error.	WT-22

NOTE:
Before performing the self-diagnosis, be sure to register the ID or else the actual malfunction location may be different from that displayed on CONSULT.

Self-Diagnosis (Without CONSULT)

INFOID:0000000011290277

NOTE:
The Signal Tech II Tool (J-50190) can be used to perform the following functions. Refer to the Signal Tech II User Guide for additional information.
- Activate and display TPMS transmitter IDs
- Display tire pressure reported by the TPMS transmitter
- Read TPMS DTCs
- Register TPMS transmitter IDs

SELF DIAGNOSTIC PROCEDURE (WITHOUT CONSULT)

1. Turn ignition switch ON.
2. Ground the tire pressure warning check connector to initiate self diagnosis.

3. Compare the flashing pattern with the flash code chart below.

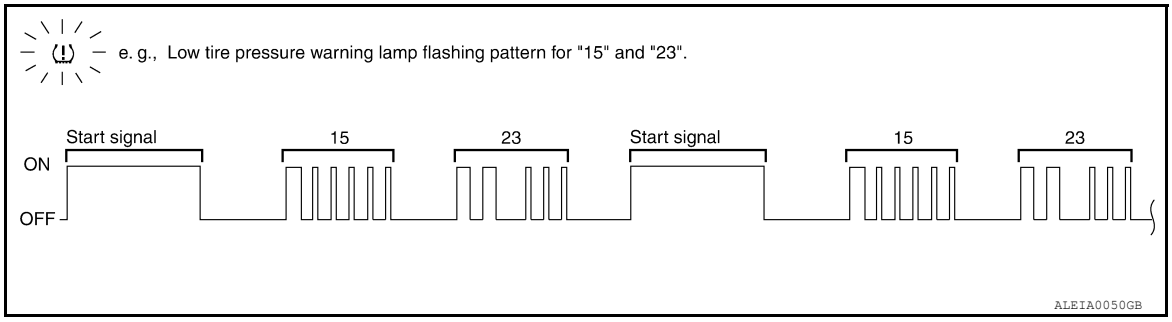

NOTE:
The system is normal when the low tire pressure warning lamp flashes 5 times and continues repeating. Self-diagnosis results are erased automatically by turning the ignition switch “OFF”.

Flash Code	Malfunction part	Reference page
15 16 17 18	Tire pressure dropped below specified value. Refer to WT-9, "System Description".	—
21 22 23 24	Transmitter no data (FL) Transmitter no data (FR) Transmitter no data (RR) Transmitter no data (RL)	WT-15
31 32 33 34	Transmitter checksum error (FL) Transmitter checksum error (FR) Transmitter checksum error (RR) Transmitter checksum error (RL)	WT-17
35 36 37 38	Transmitter pressure data error (FL) Transmitter pressure data error (FR) Transmitter pressure data error (RR) Transmitter pressure data error (RL)	WT-19
41 42 43 44	Transmitter function code error (FL) Transmitter function code error (FR) Transmitter function code error (RR) Transmitter function code error (RL)	WT-17
45 46 47 48	Transmitter battery voltage low (FL) Transmitter battery voltage low (FR) Transmitter battery voltage low (RR) Transmitter battery voltage low (RL)	WT-17
52	Vehicle speed signal	WT-21
54	Vehicle ignition signal	WT-22

WIRING DIAGRAM

TIRE PRESSURE MONITORING SYSTEM

Wiring Diagram

INFOID:0000000011290278

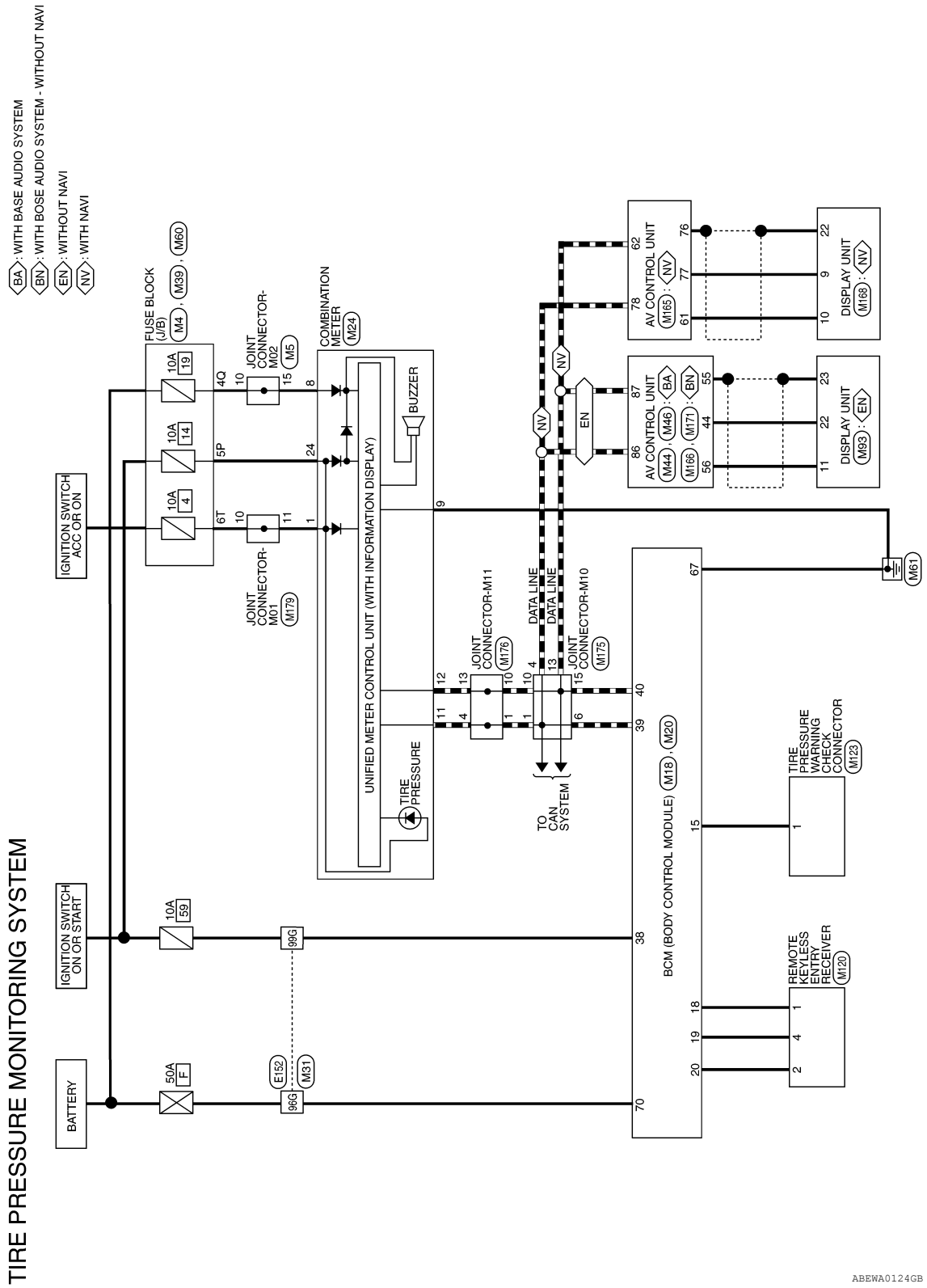

TIRE PRESSURE MONITORING SYSTEM CONNECTORS

Connector No.	M4
Connector Name	FUSE BLOCK (J/B)
Connector Color	WHITE

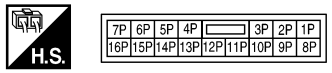

Terminal No.	Color of Wire	Signal Name
5P	O/L	–

Connector No.	M5
Connector Name	JOINT CONNECTOR-M02
Connector Color	BLUE

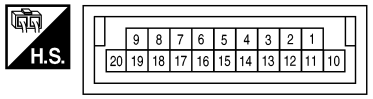

Terminal No.	Color of Wire	Signal Name
10	Y/R	–
15	Y/R	–

Connector No.	M18
Connector Name	BCM (BODY CONTROL MODULE)
Connector Color	WHITE

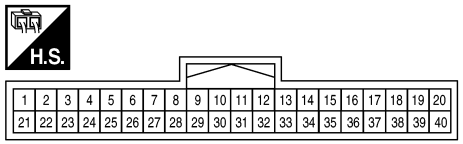

Terminal No.	Color of Wire	Signal Name
15	L/W	TPMS MODE TRIGGER SW
18	P	KEYLESS AND AUTO LIGHT SENSOR GND
19	V/W	KEYLESS TUNER POWER SUPPLY OUTPUT
20	G/W	KEYLESS TUNER SIGNAL
38	W/L	IGN SW
39	L	CAN-H
40	P	CAN-L

Connector No.	M20
Connector Name	BCM (BODY CONTROL MODULE)
Connector Color	BLACK

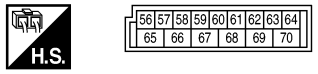

Terminal No.	Color of Wire	Signal Name
67	B	GND (POWER)
70	W/B	BAT (F/L)

Connector No.	M24
Connector Name	COMBINATION METER
Connector Color	WHITE

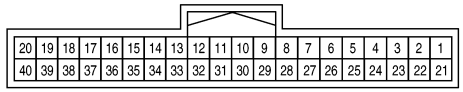

Terminal No.	Color of Wire	Signal Name
1	O	ACCESSORY
8	Y/R	BATTERY
9	B	GND
11	L	CAN-H
12	P	CAN-L
24	O/L	RUN/START

ABEIA0276GB

Connector No.	M31
Connector Name	WIRE TO WIRE
Connector Color	WHITE

H.S.

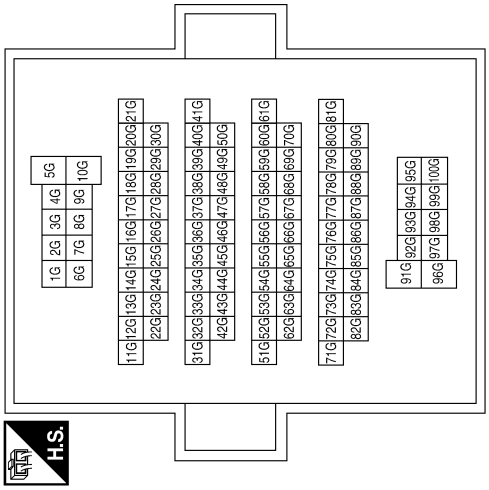

Terminal No.	Color of Wire	Signal Name
96G	W/B	–
99G	W/L	–

Connector No.	M39
Connector Name	FUSE BLOCK (J/B)
Connector Color	WHITE

H.S.

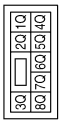

Terminal No.	Color of Wire	Signal Name
4Q	Y/R	–

Connector No.	M44
Connector Name	AV CONTROL UNIT (WITH BASE AUDIO SYSTEM)
Connector Color	WHITE

H.S.

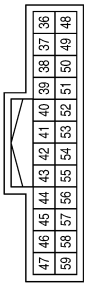

Terminal No.	Color of Wire	Signal Name
44	LG	DISP IT
55	SHIELD	SHIELD
56	V	IT DISP

Connector No.	M46
Connector Name	AV CONTROL UNIT (WITH BASE AUDIO SYSTEM)
Connector Color	WHITE

H.S.

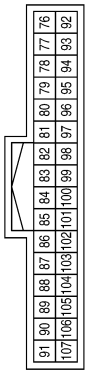

Terminal No.	Color of Wire	Signal Name
86	L	CAN-H
87	P	CAN-L

Connector No.	M60
Connector Name	FUSE BLOCK (J/B)
Connector Color	WHITE

H.S.

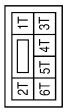

Terminal No.	Color of Wire	Signal Name
6T	O	–

ABEIA0173GB

Connector No.	M93
Connector Name	DISPLAY UNIT (WITHOUT NAVI)
Connector Color	WHITE

H.S.

12	11	10	9	8	7	6	5	4	3	2	1
24	23	22	21	20	19	18	17	16	15	14	13

Terminal No.	Color of Wire	Signal Name
11	V	IT DISP
22	LG	DISP IT
23	SHIELD	SHIELD

Connector No.	M120
Connector Name	REMOTE KEYLESS ENTRY RECEIVER
Connector Color	WHITE

H.S.

1	2	3	4

Terminal No.	Color of Wire	Signal Name
1	P	–
2	G/W	–
4	V/W	–

Connector No.	M123
Connector Name	TIRE PRESSURE WARNING CHECK CONNECTOR
Connector Color	WHITE

H.S.

2	1

Terminal No.	Color of Wire	Signal Name
1	L/W	–

Connector No.	M165
Connector Name	AV CONTROL UNIT (WITH BOSE AUDIO SYSTEM WITH NAVI)
Connector Color	WHITE

H.S.

49	50	51	52	53	54	55	56	57	58	59	60	61	62	63	64
65	66	67	68	69	70	71	72	73	74	75	76	77	78	79	80

Terminal No.	Color of Wire	Signal Name
61	V	IT DISP
62	P	CAN-L
76	SHIELD	DISP SHIELD
77	LG	DISP IT
78	L	CAN-H

Connector No.	M166
Connector Name	AV CONTROL UNIT (WITH BOSE AUDIO SYSTEM WITHOUT NAVI)
Connector Color	WHITE

H.S.

91	90	89	88	87	86	85	84	83	82	81	80	79	78	77	76
107	106	105	104	103	102	101	100	99	98	97	96	95	94	93	92

Terminal No.	Color of Wire	Signal Name
86	L	CAN-H
87	P	CAN-L

Connector No.	M168
Connector Name	DISPLAY UNIT (WITH NAVI)
Connector Color	WHITE

H.S.

12	11	10	9	8	7	6	5	4	3	2	1
24	23	22	21	20	19	18	17	16	15	14	13

Terminal No.	Color of Wire	Signal Name
9	LG	FR DISP IT
10	V	IT FRONT DISP
22	SHIELD	SHIELD

ABEIA0277GB

Connector No.	M171
Connector Name	AV CONTROL UNIT (WITH BOSE AUDIO SYSTEM WITHOUT NAVI)
Connector Color	WHITE

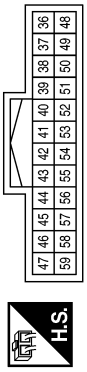

Terminal No.	Color of Wire	Signal Name
44	LG	DISP IT
55	SHIELD	SHIELD
56	V	IT DISP

Connector No.	M175
Connector Name	JOINT CONNECTOR-M10
Connector Color	BLUE

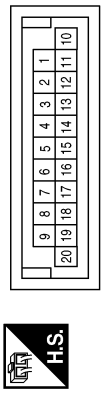

Terminal No.	Color of Wire	Signal Name
1	L	–
4	L	–
6	L	–
10	P	–
13	P	–
15	P	–

Connector No.	M176
Connector Name	JOINT CONNECTOR-M11
Connector Color	BLUE

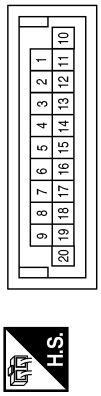

Terminal No.	Color of Wire	Signal Name
1	L	–
4	L	–
10	P	–
13	P	–

Connector No.	M179
Connector Name	JOINT CONNECTOR-M01
Connector Color	GREEN

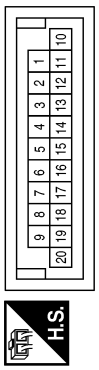

Terminal No.	Color of Wire	Signal Name
10	O	–
11	O	–

Connector No.	E152
Connector Name	WIRE TO WIRE
Connector Color	WHITE

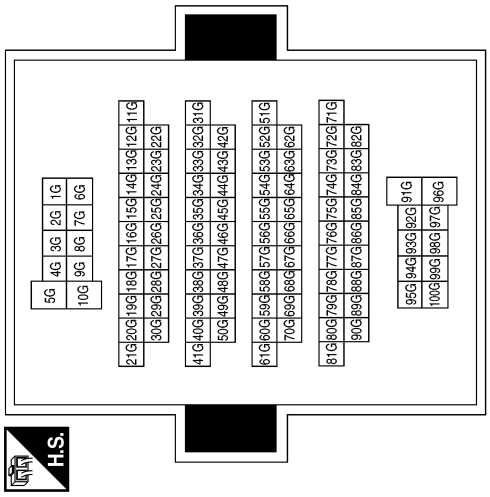

Terminal No.	Color of Wire	Signal Name
96G	W/B	–
99G	L/W	–

ABEIA0278GB

SYMPTOM DIAGNOSIS

TPMS

Symptom Table

INFOID:0000000011290279

Symptom	Reference
Low tire pressure warning lamp does not come on when ignition switch is turned ON.	WT-41
Low tire pressure warning lamp stays on when ignition switch is turned ON.	WT-42
Low tire pressure warning lamp flashes when ignition switch is turned ON.	WT-43
Hazard warning lamps flash when ignition switch is turned ON.	WT-44
Tire pressure information in display unit does not exist.	WT-45
ID registration cannot be completed.	WT-46

LOW TIRE PRESSURE WARNING LAMP DOES NOT TURN ON

Low Tire Pressure Warning Lamp Does Not Come On When Ignition Switch Is Turned On

INFOID:0000000011290280

NOTE:
The Signal Tech II Tool (J-50190) can be used to perform the following functions. Refer to the Signal Tech II User Guide for additional information.
- Activate and display TPMS transmitter IDs
- Display tire pressure reported by the TPMS transmitter
- Read TPMS DTCs
- Register TPMS transmitter IDs

DIAGNOSTIC PROCEDURE

1. SELF-DIAGNOSTIC RESULT CHECK

Using CONSULT, check display contents of BCM in SELF-DIAGNOSIS.

Is "CAN COMM CIRCUIT" displayed in the self-diagnosis display items?

YES >> Malfunction in CAN communication system. Refer to LAN-14, "Trouble Diagnosis Flow Chart".
NO >> GO TO 2

2. CHECK COMBINATION METER

Check combination meter operation. Refer to MWI-27, "CONSULT Function (METER/M&A)".

Is the inspection result normal?

YES >> GO TO 3
NO >> Replace combination meter. Refer to MWI-99, "Removal and Installation".

3. CHECK LOW TIRE PRESSURE WARNING LAMP

Disconnect BCM harness connector.

Does the low tire pressure warning lamp activate?

YES >> Replace BCM. Refer to BCS-54, "Removal and Installation".
NO >> Check combination meter operation.

LOW TIRE PRESSURE WARNING LAMP STAYS ON

Low Tire Pressure Warning Lamp Stays On When Ignition Switch Is Turned On

INFOID:0000000011290281

DIAGNOSTIC PROCEDURE

1. BCM CONNECTORS

1. Turn ignition switch OFF.
2. Disconnect BCM harness connectors.
3. Check terminals for damage or loose connections.

Is the inspection result normal?

YES >> GO TO 2
NO >> Repair or replace damaged parts.

2. BCM POWER SUPPLY AND GROUND CIRCUITS

Check BCM power supply and ground circuits. Refer to BCS-30, "Diagnosis Procedure".

Is the inspection result normal?

YES >> Replace BCM. Refer to BCS-54, "Removal and Installation".
NO >> Repair BCM circuits.

LOW TIRE PRESSURE WARNING LAMP BLINKS

Low Tire Pressure Warning Lamp Flashes When Ignition Switch Is Turned On

INFOID:0000000011290282

Regarding Wiring Diagram information, refer to WT-35, "Wiring Diagram".

NOTE:
If low tire pressure warning lamp flashes as shown, the system is normal.
Flash Mode A
- This mode shows transmitter status is OFF-mode.
  Carry out transmitter wake up operation. Refer to WT-6, "Work Procedure".

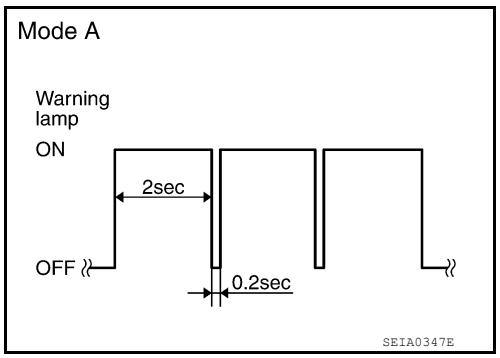

DIAGNOSTIC PROCEDURE

1. CHECK BCM CONNECTORS

1. Turn ignition switch OFF.
2. Disconnect BCM harness connectors.
3. Check terminals for damage or loose connections.

Is the inspection result normal?

YES >> GO TO 2
NO >> Repair or replace damaged parts.

2. CHECK TIRE PRESSURE WARNING CHECK CONNECTOR CIRCUIT

Check continuity between BCM harness connector M18 terminal 15 and ground.

Continuity should not exist.

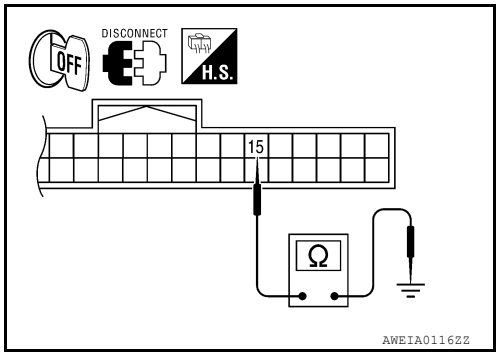

Is the inspection result normal?

YES >> Replace BCM. Refer to BCS-54, "Removal and Installation".
NO >> Repair circuit for short to ground.

HAZARD WARNING LAMPS FLASH

Hazard Warning Lamps Flash When Ignition Switch Is Turned On

INFOID:0000000011290283

DIAGNOSTIC PROCEDURE

1. CHECK BCM GROUND CIRCUIT

Check BCM ground circuit. Refer to BCS-30, "Diagnosis Procedure".

Is the inspection result normal?

YES >> Replace BCM. Refer to BCS-54, "Removal and Installation".
NO >> Repair BCM ground circuit.

"TIRE PRESSURE" INFORMATION IN DISPLAY UNIT DOES NOT EXIST

"TIRE PRESSURE" Information in Display Unit Does Not Exist

INFOID:0000000011290284

NOTE:
The Signal Tech II Tool (J-50190) can be used to perform the following functions. Refer to the Signal Tech II User Guide for additional information.
- Activate and display TPMS transmitter IDs
- Display tire pressure reported by the TPMS transmitter
- Read TPMS DTCs
- Register TPMS transmitter IDs

DIAGNOSTIC PROCEDURE

1. SELF-DIAGNOSTIC RESULT CHECK

Using CONSULT, check display contents in self-diagnostic results.

Is "CAN COMM CIRCUIT" displayed in the self-diagnosis display items?

YES >> Malfunction in CAN communication system. Refer to LAN-14, "Trouble Diagnosis Flow Chart".
NO >> GO TO 2.

2. CHECK DISPLAY UNIT

Perform display unit self-diagnosis. Refer to AV-342, "AV CONTROL UNIT : CONSULT Function" (with NAVI) or AV-161, "AV CONTROL UNIT : CONSULT Function" (without NAVI).

Is the inspection result normal?

YES >> Replace BCM. Refer to BCS-54, "Removal and Installation".
NO >> Repair or replace malfunctioning parts.

ID REGISTRATION CANNOT BE COMPLETED

ID Registration Cannot Be Completed

INFOID:0000000011290285

NOTE:
The Signal Tech II Tool (J-50190) can be used to perform the following functions. Refer to the Signal Tech II User Guide for additional information.
- Activate and display TPMS transmitter IDs
- Display tire pressure reported by the TPMS transmitter
- Read TPMS DTCs
- Register TPMS transmitter IDs

DIAGNOSTIC PROCEDURE

1. PERFORM ID REGISTRATION OF ALL TRANSMITTERS

Carry out ID registration of all transmitters. Refer to WT-6, "Work Procedure".

Can ID registration of all transmitters be completed?

YES >> Inspection End.
NO >> Refer to WT-15, "Diagnosis Procedure".

NOISE, VIBRATION, AND HARSHNESS (NVH) TROUBLESHOOTING

NVH Troubleshooting Chart

INFOID:0000000011290286

Use chart below to help you find the cause of the symptom. If necessary, repair or replace these parts.

Reference page			WT-51	WT-52	WT-59	WT-53	—	—	WT-59	DLN-206, "NVH Troubleshooting Chart" (FFD) DLN-239, "NVH Troubleshooting Chart" (RFD)	FAX-5, "NVH Troubleshooting Chart" (FAX) FSU-5, "NVH Troubleshooting Chart" (FSU)	RAX-5, "NVH Troubleshooting Chart" (RAX) RSU-5, "NVH Troubleshooting Chart" (RSU)	Refer to TIRES in this chart.	Refer to ROAD WHEEL in this chart.	BR-7, "NVH Troubleshooting Chart"	ST-9, "NVH Troubleshooting Chart"
Possible cause and SUSPECTED PARTS			Out-of-round	Imbalance	Incorrect tire pressure	Uneven tire wear	Deformation or damage	Non-uniformity	Incorrect tire size	FRONT AND REAR FINAL DRIVE	FRONT AXLE AND FRONT SUSPENSION	REAR AXLE AND REAR SUSPENSION	TIRES	ROAD WHEEL	BRAKE	STEERING
Symptom	TIRES	Noise	×	×	×	×	×	×		×	×	×	×		×	×
		Shake	×	×	×	×	×		×		×	×	×		×	×
		Vibration			×				×		×	×	×			×
		Shimmy	×	×	×	×	×	×	×		×	×	×		×	×
		Shudder	×	×	×	×	×		×		×	×	×		×	×
		Poor quality ride or handling	×	×	×	×	×		×		×	×	×			
	ROAD WHEEL	Noise	×	×			×			×	×	×		×	×	×
		Shake	×	×			×				×	×		×	×	×
		Shimmy, shudder	×	×			×				×	×		×	×	×
		Poor quality ride or handling	×	×			×				×	×		×		

×: Applicable

PRECAUTION

PRECAUTIONS

Precaution for Supplemental Restraint System (SRS) "AIR BAG" and "SEAT BELT PRE-TENSIONER"

INFOID:0000000011290287

The Supplemental Restraint System such as “AIR BAG” and “SEAT BELT PRE-TENSIONER”, used along with a front seat belt, helps to reduce the risk or severity of injury to the driver and front passenger for certain types of collision. This system includes seat belt switch inputs and dual stage front air bag modules. The SRS system uses the seat belt switches to determine the front air bag deployment, and may only deploy one front air bag, depending on the severity of a collision and whether the front occupants are belted or unbelted.
Information necessary to service the system safely is included in the SR and SB section of this Service Manual.

WARNING:

- **To avoid rendering the SRS inoperative, which could increase the risk of personal injury or death in the event of a collision which would result in air bag inflation, all maintenance must be performed by an authorized NISSAN/INFINITI dealer.**
- **Improper maintenance, including incorrect removal and installation of the SRS, can lead to personal injury caused by unintentional activation of the system. For removal of Spiral Cable and Air Bag Module, see the SR section.**
- **Do not use electrical test equipment on any circuit related to the SRS unless instructed to in this Service Manual. SRS wiring harnesses can be identified by yellow and/or orange harnesses or harness connectors.**

PRECAUTIONS WHEN USING POWER TOOLS (AIR OR ELECTRIC) AND HAMMERS

WARNING:

- **When working near the Airbag Diagnosis Sensor Unit or other Airbag System sensors with the Ignition ON or engine running, DO NOT use air or electric power tools or strike near the sensor(s) with a hammer. Heavy vibration could activate the sensor(s) and deploy the air bag(s), possibly causing serious injury.**
- **When using air or electric power tools or hammers, always switch the Ignition OFF, disconnect the battery and wait at least three minutes before performing any service.**

Precaution Necessary for Steering Wheel Rotation After Battery Disconnect

INFOID:0000000011290288

NOTE:

- This Procedure is applied only to models with Intelligent Key system and NATS (NISSAN ANTI-THEFT SYSTEM).
- Remove and install all control units after disconnecting both battery cables with the ignition knob in the ″LOCK″ position.
- Always use CONSULT to perform self-diagnosis as a part of each function inspection after finishing work. If DTC is detected, perform trouble diagnosis according to self-diagnostic results.

For models equipped with the Intelligent Key system and NATS, an electrically controlled steering lock mechanism is adopted on the key cylinder.
For this reason, if the battery is disconnected or if the battery is discharged, the steering wheel will lock and steering wheel rotation will become impossible.
If steering wheel rotation is required when battery power is interrupted, follow the procedure below before starting the repair operation.

OPERATION PROCEDURE

1. Connect both battery cables.
   NOTE:
   Supply power using jumper cables if battery is discharged.
2. Use the Intelligent Key or mechanical key to turn the ignition switch to the ″ACC″ position. At this time, the steering lock will be released.
3. Disconnect both battery cables. The steering lock will remain released and the steering wheel can be rotated.
4. Perform the necessary repair operation.

5. When the repair work is completed, return the ignition switch to the ″LOCK″ position before connecting the battery cables. (At this time, the steering lock mechanism will engage.)
6. Perform a self-diagnosis check of all control units using CONSULT.

Precaution for Work

INFOID:0000000011290289

- When removing or disassembling each component, be careful not to damage or deform it. If a component may be subject to interference, be sure to protect it with a shop cloth.
- When removing (disengaging) components with a screwdriver or similar tool, be sure to wrap the component with a shop cloth or vinyl tape to protect it.
- Protect the removed parts with a shop cloth and prevent them from being dropped.
- Replace a deformed or damaged clip.
- If a part is specified as a non-reusable part, always replace it with a new one.
- Be sure to tighten bolts and nuts securely to the specified torque.
- After installation is complete, be sure to check that each part works properly.
- Follow the steps below to clean components:
- Water soluble dirt:
- Dip a soft cloth into lukewarm water, wring the water out of the cloth and wipe the dirty area.
- Then rub with a soft, dry cloth.
- Oily dirt:
- Dip a soft cloth into lukewarm water with mild detergent (concentration: within 2 to 3%) and wipe the dirty area.
- Then dip a cloth into fresh water, wring the water out of the cloth and wipe the detergent off.
- Then rub with a soft, dry cloth.
- Do not use organic solvent such as thinner, benzene, alcohol or gasoline.
- For genuine leather seats, use a genuine leather seat cleaner.

PREPARATION

PREPARATION

Special Service Tool

INFOID:0000000011290290

The actual shape of the tools may differ from those illustrated here.

Tool number (TechMate No.) Tool name	Description
— (J-50190) Signal Tech II ALEIA0131ZZ	• Activate and display TPMS transmitter IDs • Display tire pressure reported by the TPMS transmitter • Read TPMS DTCs • Register TPMS transmitter IDs • Test remote keyless entry keyfob relative signal strength • Check Intelligent Key relative signal strength • Confirm vehicle Intelligent Key antenna signal strength • Compatible with future sensors • Equipped with a display
KV48105501 (J-45295-A) Transmitter activation tool ALEIA0183ZZ	• Activate TPMS transmitter IDs • Compatible with future sensors • Equipped with a display (KV48105501 only)

Commercial Service Tool

INFOID:0000000011290291

Tool name	Description
Power tool 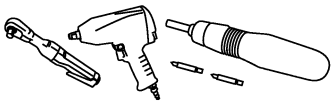 PIIB1407E	Loosening nuts, screws and bolts

PERIODIC MAINTENANCE

WHEEL

Inspection

INFOID:0000000011290292

ALUMINUM WHEEL

1. Check tires for wear and improper inflation.
2. Check wheels for deformation, cracks and other damage. If deformed, remove wheel and check wheel runout.

a. Remove tire from wheel and mount wheel on a balancer machine.

b. Set dial indicator as shown.

Wheel runout (Dial indicator value):

Refer to WT-59, "Road Wheel".

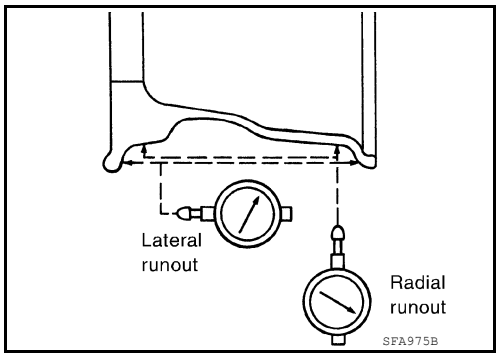

STEEL WHEEL

1. Check tires for wear and improper inflation.
2. Check wheels for deformation, cracks, and other damage. If deformed, remove wheel and check wheel runout.

a. Remove tire from wheel and mount on a balancer machine.

b. Set two dial indicators as shown.

c. Set each dial indicator to 0.

d. Rotate wheel and check dial indicators at several points around the circumference of the wheel.

e. Calculate runout at each point as shown.

Radial runout = (A+B)/2

Lateral runout = (C+D)/2

f. Select maximum positive runout value and the maximum negative value.
Add the two values to determine total runout. In case a positive or negative value is not available, use the maximum value (negative or positive) for total runout. If the total runout value exceeds the limit, replace the steel wheel.

Wheel runout : Refer to WT-59, "Road Wheel"

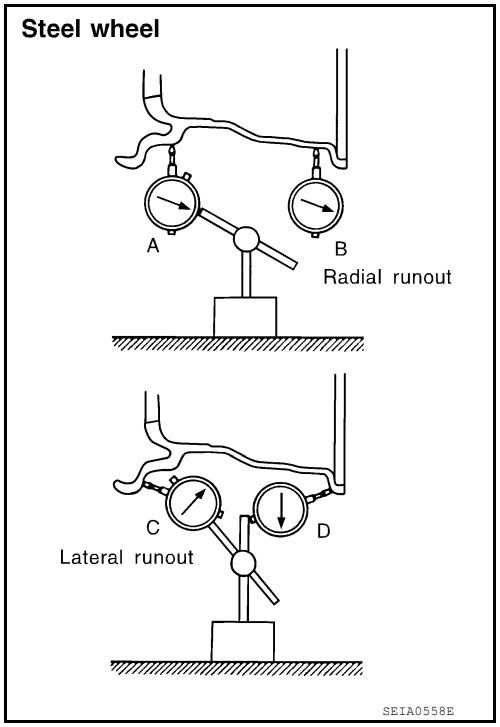

WHEEL AND TIRE ASSEMBLY

Balancing Wheels

INFOID:0000000011290293

BALANCING WHEELS (ADHESIVE WEIGHT TYPE)

Preparation Before Adjustment

Remove inner and outer balance weights from the road wheel using releasing agent. Remove double-faced adhesive tape from the road wheel.

CAUTION:

- **Be careful not to scratch the road wheel during removal.**
- **After removing double-faced adhesive tape, wipe clean all traces of releasing agent from the road wheel.**

Wheel Balance Adjustment

CAUTION:

- **DO NOT use center hole cone-type clamping machines to hold the wheel assembly during tire removal/installation or balancing or damage to the wheel paint, cladding or chrome may result. Use only rim-type or universal lug-type clamping machines to hold the wheel assembly during servicing.**
- If a balancer machine has an adhesive weight mode setting, select the adhesive weight mode setting and skip Step 2. below. If a balancer machine only has the clip-on (rim flange) weight mode setting, follow Step 2. to calculate the correct size adhesive weight.

1. Set road wheel on balancer machine using the center hole as a guide. Start the balancer machine.
2. For balancer machines that only have a clip-on (rim flange) weight mode setting, follow this step to calculate the correct size adhesive weight to use. When inner and outer imbalance values are shown on the balancer machine indicator, multiply outer imbalance value by 5/3 (1.67) to determine balance weight that should be used. Select the outer balance weight with a value closest to the calculated value above and install in to the designated outer position of, or at the designated angle in relation to the road wheel.

a. Indicated imbalance value × 5/3 = balance weight to be installed
Calculation example:
23 g (0.81 oz) × 5/3 (1.67) = 38.33 g (1.35 oz) ⇒ 40 g (1.41 oz) balance weight (closer to calculated balance weight value)
NOTE:
Note that balance weight value must be closer to the calculated balance weight value.
Example:
37.4 ⇒ 35 g (1.23 oz)
37.5 ⇒ 40 g (1.41 oz)

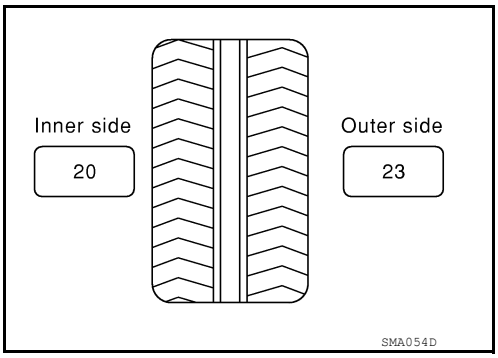

3. Install balance weight in the position shown.
   CAUTION:
   - **Do not install the inner balance weight before installing the outer balance weight.**
   - **Before installing the balance weight, be sure to clean the mating surface of the road wheel.**
   - When installing balance weight (1) to road wheel, set it into the grooved area (A) on the inner wall of the road wheel as shown so that the balance weight center (B) is aligned with the balancer machine indication position (angle) (C).
   CAUTION:
   - **Always use genuine NISSAN adhesive balance weights.**
   - **Balance weights are non-reusable; always replace with new ones.**
   - **Do not install more than three sheets of balance weight.**

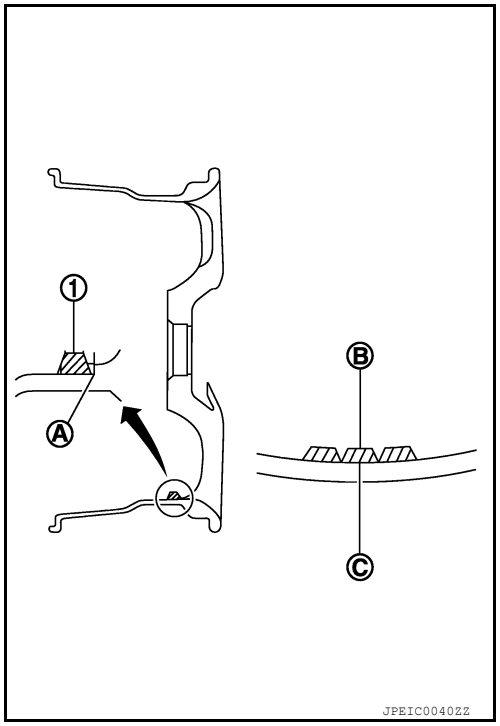

4. If calculated balance weight value exceeds 50 g (1.76 oz), install two balance weight sheets in line with each other as shown.
   CAUTION:
   - **Do not install one balance weight sheet on top another.**
5. Start balancer machine again.
6. Install balance weight on inner side of road wheel in the balancer machine indication position (angle).
   CAUTION:
   - **Do not install more than two balance weights.**
7. Start balancer machine. Make sure that inner and outer residual imbalance values are 5 g (0.17 oz) each or below.
8. If either residual imbalance value exceeds 5 g (0.17 oz), repeat installation procedures.

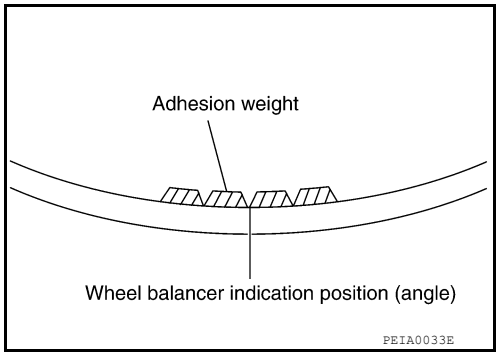

Wheel balance	Dynamic (At flange)	Static (At flange)
Maximum allowable imbalance	Refer to WT-59, "Road Wheel".	

Rotation

INFOID:0000000011290294

TIRE ROTATION

- Follow the maintenance schedule for tire rotation service intervals. Refer to MA-10, "FOR NORTH AMERICA : Introduction of Periodic Maintenance" (FOR USA AND CANADA), MA-13, "FOR MEXICO : Introduction of Periodic Maintenance" (FOR MEXICO).
- Rotate the wheel and tires front to back in the pattern as shown. When installing the wheel and tires, tighten the wheel nuts diagonally to the specified torque.

Wheel nut tightening torque : 133 N·m (14 kg-m, 98 ft-lb)

CAUTION:
- **Do not include the spare wheel and tire when rotating the wheel and tires.**

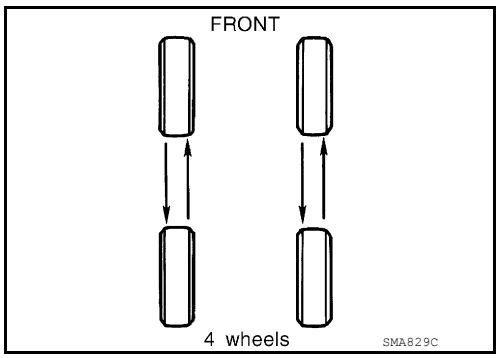

- **When installing the wheel nuts, tighten them diagonally by dividing the work two to three times in order to prevent the wheels from developing any distortion.**
- **Be careful not to tighten the wheel nuts to a torque exceeding specification to prevent strain on the disc rotor.**
- **Use genuine NISSAN wheel nuts for aluminum wheels.**

UNIT REMOVAL AND INSTALLATION

TRANSMITTER

Exploded View

INFOID:0000000011404348

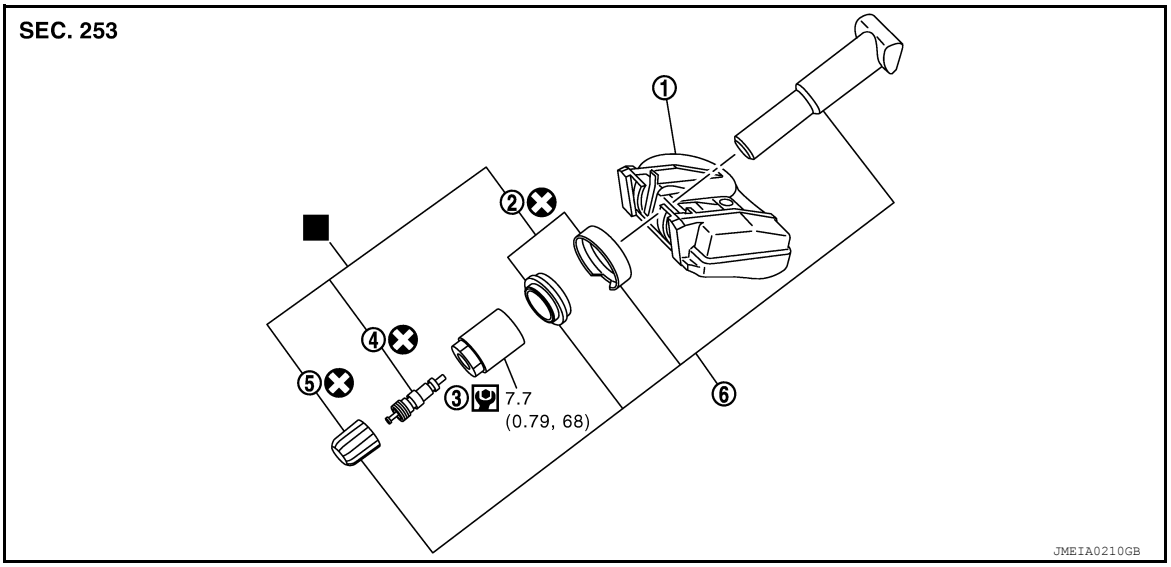

1.	Transmitter (tire pressure sensor)	2.	Washer/ Grommet seal	3.	Valve stem nut
4.	Valve core	5.	Valve cap	6.	Valve stem assembly

■: Parts that are replaced as a set when the tire is replaced.

Removal and Installation

INFOID:0000000011404349

REMOVAL

1. Remove wheel and tire using power tool. Refer to WT-52, "Balancing Wheels".
2. Remove valve cap and valve core to deflate the tire.
   NOTE:
   If the tire is to be reused, apply a matching mark on the tire in line with the position of the valve stem assembly for the purpose of wheel and tire balance adjustment after installation.
3. Remove the valve stem nut and allow transmitter (1) to fall into tire.
4. Lubricate the tire outside bead well with a suitable non-silicone lubricant, and remove outside of tire from the wheel.
   CAUTION:
   - **Do not use silicone lubricant. Use of silicone lubricant will deteriorate the tire and wheel.**
   - **Be sure not to damage the wheel or transmitter.**
   - **Do not allow lubricant to make contact with transmitter.**
   - **Verify that the transmitter (1) is at the bottom of the tire while performing the above.**

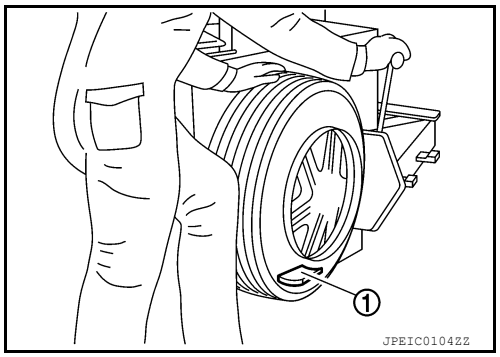

5. Lubricate the tire inside bead well with a suitable non-silicone lubricant, and remove inside of tire from the wheel.
   CAUTION:
   - **Do not use silicone lubricant. Use of silicone lubricant will deteriorate the tire and wheel.**
   - **Be sure not to damage the wheel.**
6. Set tire onto the tire changer turntable so that the transmitter inside the tire is located close to the valve stem hole in the wheel.

7. Turn tire so that the valve stem hole in the wheel is at the bottom and bounce so that the transmitter (1) inside the tire is near the valve stem hole in the wheel. Carefully lift tire onto turn table and position the valve stem hole in the wheel (and transmitter) 270 degrees from mounting/dismounting head (2).
   CAUTION:
   Do not damage the wheel or transmitter.

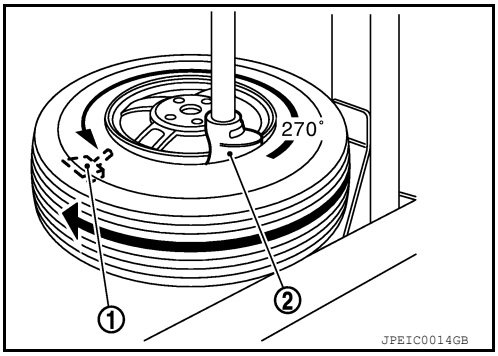

8. Remove the transmitter from the tire.
9. Remove the grommet seal and washer.
10. Remove the valve stem in the direction (⬅).

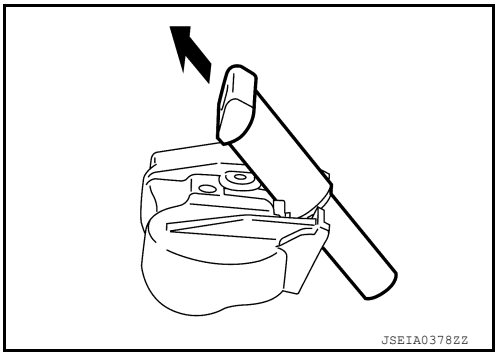

INSTALLATION

1. Apply a suitable non-silicone lubricant to the tire inside bead.
   CAUTION:
   - **Replace the valve stem assembly if the valve stem has deformations, cracks, damage, or corrosion.**
   - **Do not use silicone lubricant. Use of silicone lubricant will deteriorate the tire and wheel.**
   - **Do not drop or strike the transmitter. Replace the transmitter if it has been dropped from higher than one meter.**
2. Install the tire inside bead (1) onto the wheel (2) in the position shown.

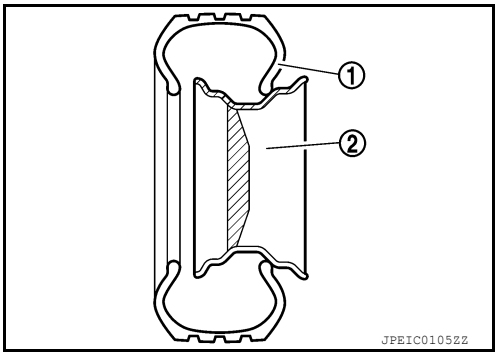

3. Install the valve stem to the transmitter.
4. Install the washer (1) onto the valve stem, and then install the grommet seal (2) onto the valve stem.
   CAUTION:
   - **Do not reuse grommet seal or washer.**
   - **Check the direction of the grommet seal.**
   - **Insert the grommet seal all the way to the base.**

   ⬆ : Outside

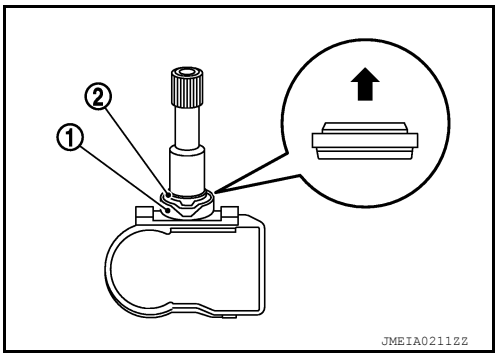

CAUTION:
Direct the cut part (A) of the washer to the center of the valve stem as shown.

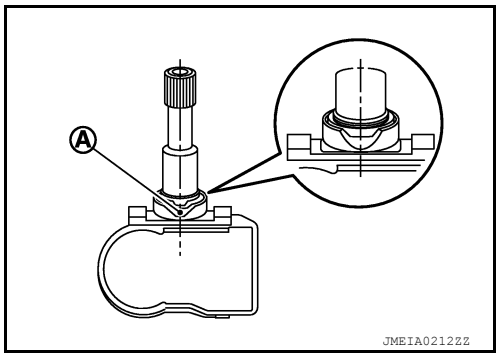

5. Follow the procedure below and install the transmitter to the wheel.

a. Check the position of the valve stem before installing transmitter to the wheel.

CAUTION:
The base of the valve stem (A) must be positioned in the groove of the metal plate as shown.

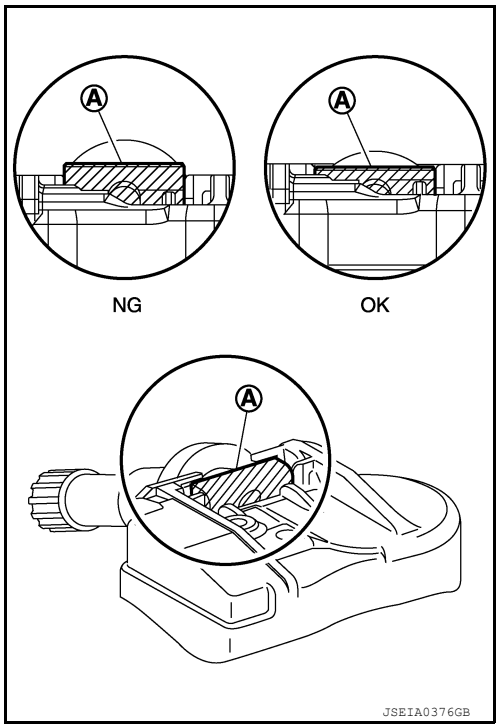

b. Hold transmitter as shown and press the transmitter in the direction shown by the arrow (⬅) to bring into absolute contact with the wheel. Tighten the valve stem nut to the specified torque.

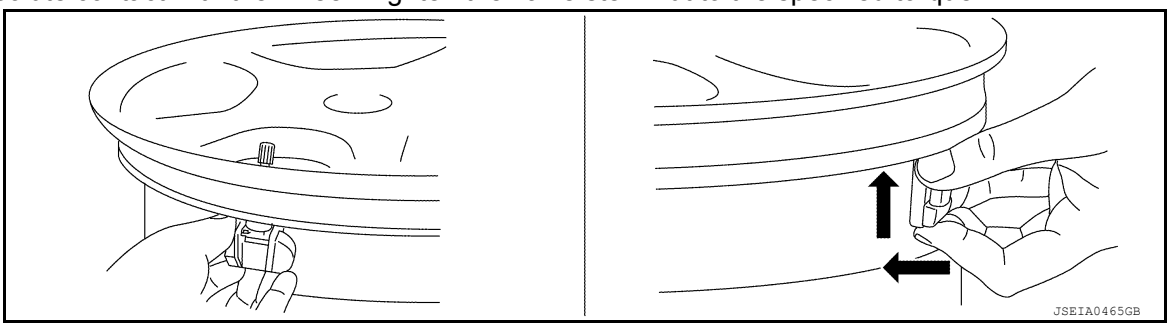

Valve stem nut tightening torque : WT-55, "Exploded View"

CAUTION:
- **Do not reuse valve core and valve cap.**
- **Check that grommet seal is free of foreign matter.**
- **Check that grommet seal contacts horizontally with wheel.**
- **Check again that the base of valve stem is positioned in the groove of the metal plate.**
- **Manually tighten valve stem nut all the way to the wheel. (Do not use a power tool to avoid impact.)**

- **Do not tighten valve stem nut to more than the specified torque. It may cause grommet seal damage.**
- **Do not tighten valve stem nut to less than the specified torque. It may cause an air leak.**

6. Place wheel on turntable of tire machine. Ensure that transmitter (1) is 270 degrees from mounting/dismounting head (2).
   CAUTION:
   Do not touch transmitter with mounting head.

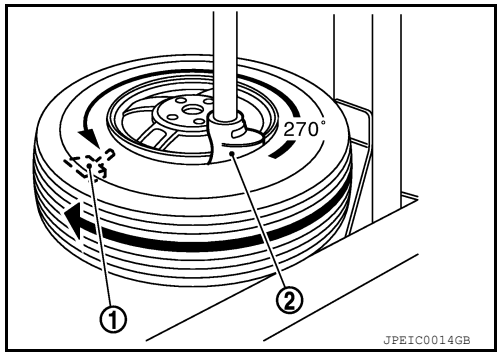

7. Apply a suitable non-silicone lubricant to the tire outside bead.
   CAUTION:
   - **Do not use silicone lubricant. Use of silicone lubricant will deteriorate the tire and wheel.**
   - **Do not allow lubricant to make contact with transmitter.**
   - **When installing, check that the tire does not turn together with the wheel.**
8. Install the tire outside bead onto the wheel as normal.
   NOTE:
   If the tire is being reused, align the matching mark applied on the tire with the position of the valve stem assembly for the purpose of wheel and tire balance adjustment after installation. Make sure that the tire does not rotate relative to wheel.
9. Install the valve core and inflate tire. Refer to WT-59, "Tire".
   CAUTION:
   Do not reuse valve core.
10. Install the valve cap.
    CAUTION:
    Do not reuse valve cap.
11. Balance the wheel and tire. Install wheel and tire in the appropriate position on vehicle. Refer to WT-52, "Balancing Wheels".
12. Perform the ID registration procedure. Refer to WT-6, "Work Procedure".

NOTE:
If replacing the transmitter, then the ID registration procedure must be performed.

Disposal

INFOID:0000000011404350

CAUTION:
- **When discarding transmitter, remove battery from transmitter.**
- **Dispose of battery according to the law and local regulations.**

1. Remove battery from transmitter.
   NOTE:
   The battery is sealed to the transmitter with urethane.

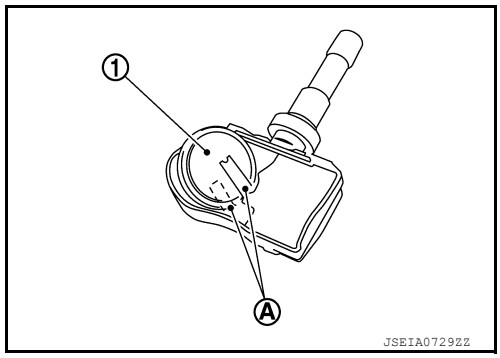

a. Remove urethane from transmitter.
b. Cut battery terminal (A), then remove battery (1) from transmitter.

SERVICE DATA AND SPECIFICATIONS (SDS)

SERVICE DATA AND SPECIFICATIONS (SDS)

Road Wheel

INFOID:0000000011290297

Wheel type		Aluminum	Steel	
			Inside	Outside
Maximum radial runout limit	Lateral mm (in)	0.3 (0.012) or less	1.0 (0.039) or less	0.9 (0.035) or less
	Radial mm (in)	0.3 (0.012) or less	0.8 (0.031) or less	0.4 (0.016) or less
Maximum residual imbalance	Dynamic (at rim flange)	Less than 5 g (0.18 oz) (per side)		
	Static (at rim flange)	Less than 10 g (0.35 oz)		

Tire

INFOID:0000000011290298

Unit: kPa (kg/cm^2 , psi)

Tire size	Air pressure	
	Conventional tire	Spare tire
P265/70R18	250 (2.5, 36)	250 (2.5, 36)
P275/60R20	250 (2.5, 36)	250 (2.5, 36)