NISSAN AXXESS

MODEL M11 SERIES

QUICK REFERENCE INDEX

GENERAL INFORMATION	GI
MAINTENANCE	MA
ENGINE MECHANICAL	EM
ENGINE LUBRICATION & COOLING SYSTEMS	LC
ENGINE FUEL & EMISSION CONTROL SYSTEM	EF & EC
ENGINE CONTROL, FUEL & EXHAUST SYSTEMS	FE
CLUTCH	CL
MANUAL TRANSAXLE	MT
AUTOMATIC TRANSAXLE	AT
TRANSFER	TF
PROPELLER SHAFT & DIFFERENTIAL CARRIER	PD
FRONT AXLE & FRONT SUSPENSION	FA
REAR AXLE & REAR SUSPENSION	RA
BRAKE SYSTEM	BR
STEERING SYSTEM	ST
BODY	BF
HEATER & AIR CONDITIONER	HA
ELECTRICAL SYSTEM	EL

© 1989 NISSAN MOTOR CO., LTD. Printed in Japan

Not to be reproduced in whole or in part without the prior written permission of Nissan Motor Company Ltd., Tokyo, Japan.

FOREWORD

This manual contains maintenance and repair procedures for NISSAN AXXESS, model M11 series.

In order to assure your safety and the efficient functioning of the vehicle, this manual should be read thoroughly. It is especially important that the PRECAUTIONS in the GI section be completely understood before starting any repair task.

All information in this manual is based on the latest product information at the time of publication. The right is reserved to make changes in specifications and methods at any time without notice.

IMPORTANT SAFETY NOTICE

The proper performance of service is essential for both the safety of the technician and the efficient functioning of the vehicle.
The service methods in this Service Manual are described in such a manner that the service may be performed safely and accurately.
Service varies with the procedures used, the skills of the technician and the tools and parts available. Accordingly, anyone using service procedures, tools or parts which are not specifically recommended by NISSAN must first completely satisfy himself that neither his safety nor the vehicle's safety will be jeopardized by the service method selected.

NISSAN MOTOR CO., LTD.
Overseas Service Department
Tokyo, Japan

GENERAL INFORMATION

SECTION GI

CONTENTS

PRECAUTIONS ..... GI- 2
HOW TO USE THIS MANUAL ..... GI- 5
HOW TO READ WIRING DIAGRAMS ..... GI- 7
HOW TO FOLLOW FLOW CHART IN TROUBLE DIAGNOSES GI-10
IDENTIFICATION INFORMATION GI-13
LIFTING POINTS AND TOW TRUCK TOWING GI-17
ON-THE-CAR WHEEL BALANCING GI-21
TIGHTENING TORQUE OF STANDARD BOLTS GI-23

Observe the following precautions to ensure safe and proper servicing. These precautions are not described in each individual section.

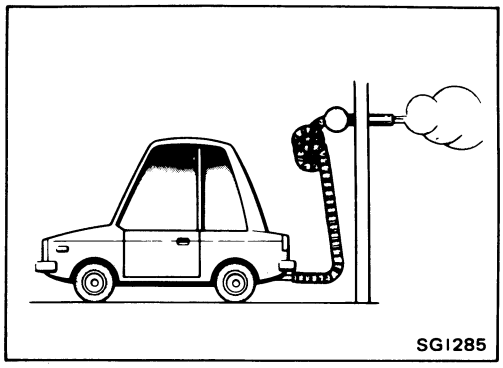
SGI285

1. Do not operate the engine for an extended period of time without proper exhaust ventilation.
   Keep the work area well ventilated and free of any inflammable materials. Special care should be taken when handling any inflammable or poisonous materials, such as gasoline, refrigerant gas, etc. When working in a pit or other enclosed area, be sure to properly ventilate the area before working with hazardous materials.
   Do not smoke while working on the vehicle.

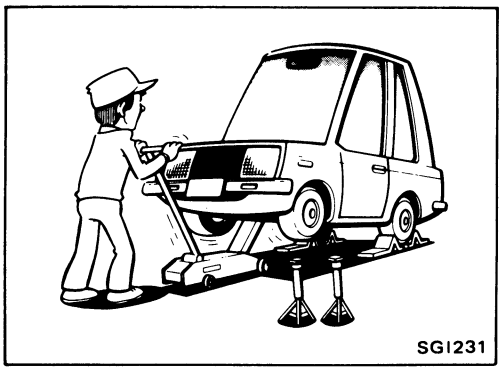
SGI231

2. Before jacking up the vehicle, apply wheel chocks or other tire blocks to the wheels to prevent the vehicle from moving. After jacking up the vehicle, support the vehicle weight with safety stands at the points designated for proper lifting and towing before working on the vehicle.
   These operations should be done on a level surface.
3. When removing a heavy component such as the engine or transaxle/transmission, be careful not to lose your balance and drop them. Also, do not allow them to strike adjacent parts, especially the brake tubes and master cylinder.

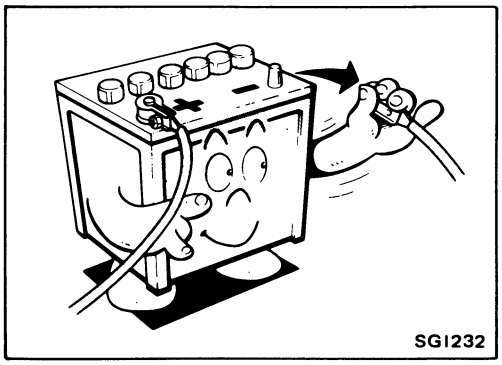
SGI232

4. Before starting repairs which do not require battery power, always turn off the ignition switch, then disconnect the ground cable from the battery to prevent accidental short circuit.

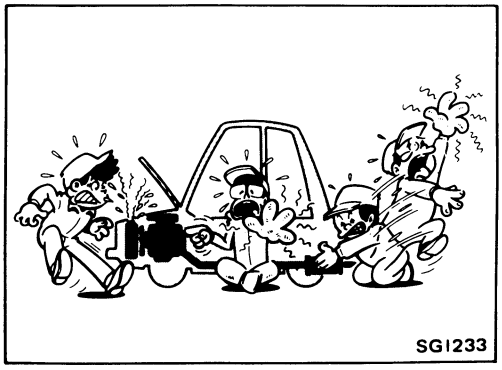
SGI233

5. To prevent serious burns, avoid contact with hot metal parts such as the radiator, exhaust manifold, tail pipe and muffler. Do not remove the radiator cap when the engine is hot.

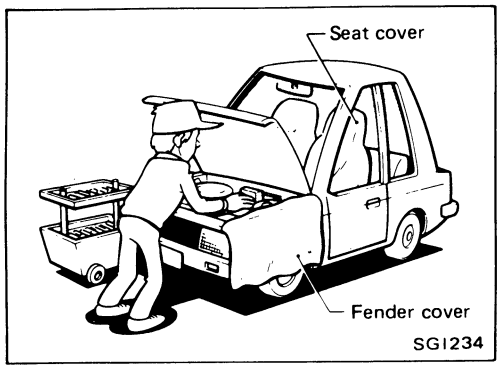

6. Before servicing the vehicle, protect fenders, upholstery and carpeting with appropriate covers.
   Take caution that keys, buckles or buttons on your person do not scratch the paint.

7. Clean all disassembled parts in the designated liquid or solvent prior to inspection or assembly.
8. Replace oil seals, gaskets, packings, O-rings, locking washers, cotter pins, self-locking nuts, etc. with new ones.
9. Replace inner and outer races of tapered roller bearings and needle bearings as a set.
10. Arrange the disassembled parts in accordance with their assembled locations and sequence.
11. Do not touch the terminals of electrical components which use microcomputers (such as electronic control units).
    Static electricity may damage internal electronic components.
12. After disconnecting vacuum or air hoses, attach a tag to indicate the proper connection.
13. Use only the lubricants specified in MA section.
14. Use approved bonding agent, sealants or their equivalents when required.
15. Use tools and recommended special tools where specified for safe and efficient service repairs.
16. When repairing the fuel, oil, water, vacuum or exhaust systems, check all affected lines for leaks.
17. Dispose of drained oil or the solvent used for cleaning parts in an appropriate manner.

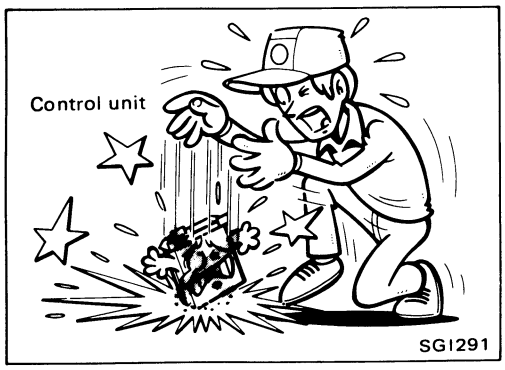

Precautions for E.F.I. or E.C.C.S. Engine

1. Before connecting or disconnecting E.F.I. or E.C.C.S. harness connector to or from any E.F.I. or E.C.C.S. control unit, be sure to turn the ignition switch to the "OFF" position and disconnect the negative battery terminal.
   Otherwise, there may be damage to control unit.
2. Before disconnecting pressurized fuel line from fuel pump to injectors, be sure to release fuel pressure to eliminate danger.
3. Be careful not to jar components such as control unit and air flow meter.

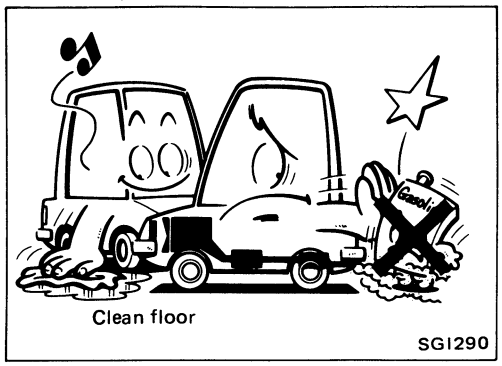

Clean floor
SGI290

Precautions for Catalyst

If a large amount of unburned fuel flows into the converter, the converter temperature will be excessively high. To prevent this, follow the procedure below:

1. Use unleaded gasoline only. Leaded gasoline will seriously damage the catalytic converter.
2. When checking for ignition spark or measuring engine compression, make tests quickly and only when necessary.
3. Do not run engine when the fuel tank level is low, otherwise the engine may misfire causing damage to the converter.
4. Do not place the vehicle on inflammable material. Keep inflammable material off the exhaust pipe.

Precautions for Fuel

Use unleaded gasoline with an octane rating of at least 87 AKI (Anti-Knock Index) number (research octane number 91).

CAUTION:

Do not use a leaded gasoline. Using a leaded gasoline will damage the catalytic converter.

1. **A QUICK REFERENCE INDEX,** a black tab (e.g. BR) is provided on the first page. You can quickly find the first page of each section by mating it to the section's black tab.
2. **THE CONTENTS** are listed on the first page of each section.
3. **THE TITLE** is indicated on the upper portion of each page and shows the part or system.
4. **THE PAGE NUMBER** of each section consists of two letters which designate the particular section and a number (e.g. "BR-5").
5. **THE LARGE ILLUSTRATIONS** are exploded views (See below.) and contain tightening torques, lubrication points and other information necessary to perform repairs.
   The illustrations should be used in reference to service matters only. When ordering parts, refer to the appropriate **PARTS CATALOG.**

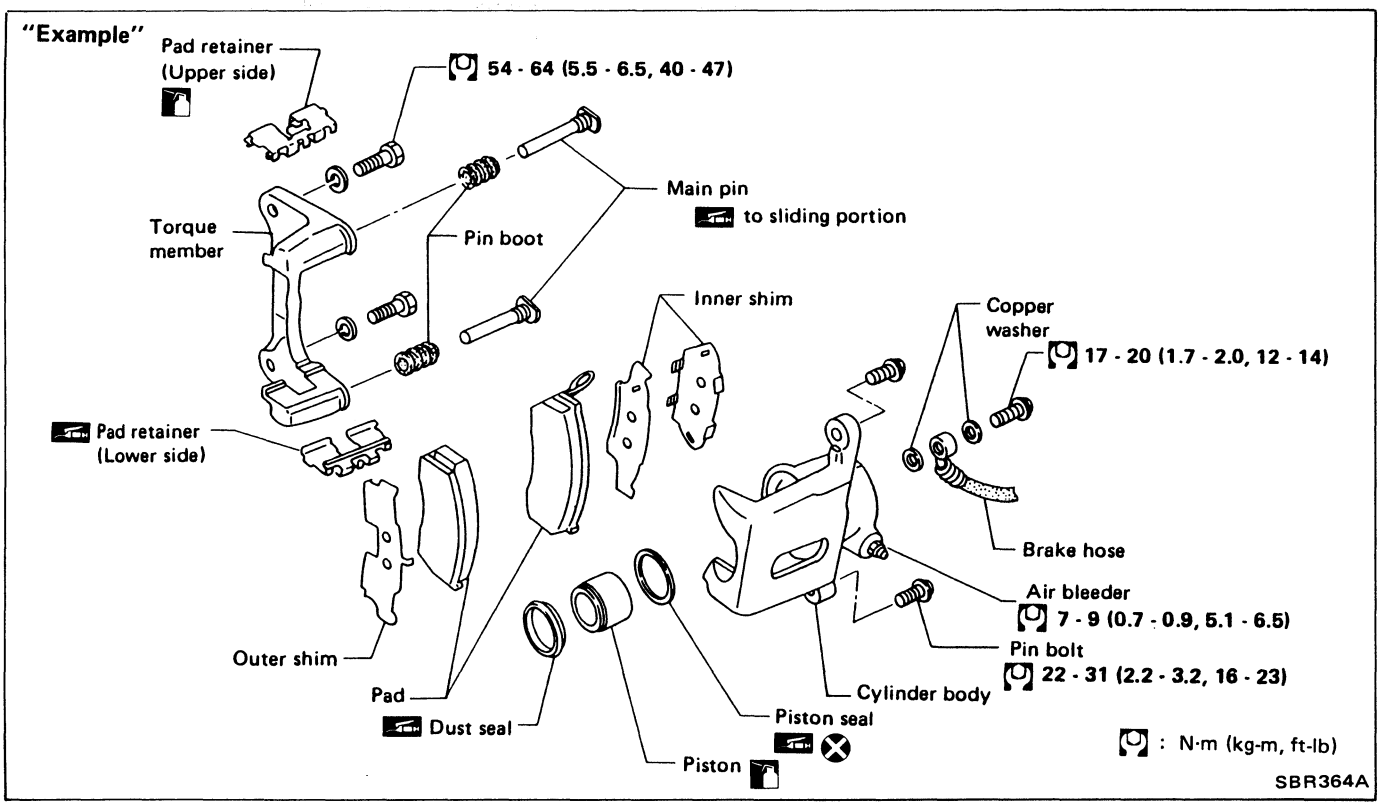

6. **THE SMALL ILLUSTRATIONS** show the important steps such as inspection, use of special tools, knacks of work and hidden or tricky steps which are not shown in the previous large illustrations.
   Assembly, inspection and adjustment procedures for complicated units such as the automatic transaxle or transmission, etc. are presented in a step-by-step format where necessary.
7. The following **SYMBOLS AND ABBREVIATIONS** are used:

	:	Tightening torque
	:	Should be lubricated with grease. Unless otherwise indicated, use recommended multi-purpose grease.
	:	Should be lubricated with oil.
	:	Sealing point
	:	Checking point
	:	Always replace after every disassembly.
(P)	:	Apply petroleum jelly.
(ATF)	:	Apply A.T.F.
★	:	Select with proper thickness.
☆	:	Adjustment is required.
S.D.S.	:	Service Data and Specifications
L.H., R.H.	:	Left-Hand, Right-Hand
2WD	:	2-Wheel Drive
4WD	:	4-Wheel Drive
M/T	:	Manual Transaxle/Transmission
A/T	:	Automatic Transaxle/Transmission
Tool	:	Special Service Tools
L.H.D.	:	Left-Hand Drive
A.T.F.	:	Automatic Transmission Fluid
D_1	:	Drive range 1st gear
D_2	:	Drive range 2nd gear
D_3	:	Drive range 3rd gear
D_4	:	Drive range 4th gear
O.D.	:	Overdrive
2_2	:	2nd range 2nd gear
2_1	:	2nd range 1st gear
1_2	:	1st range 2nd gear
1_1	:	1st range 1st gear

8. The **UNITS** given in this manual are primarily expressed as SI UNITS (International System of Unit), and alternately expressed in the metric system and in the yard/pound system.
   "Example"
   Tightening torque:
   59 - 78 N•m (6.0 - 8.0 kg-m, 43 - 58 ft-lb)
9. **TROUBLE DIAGNOSES** are included in sections dealing with complicated components.
10. **SERVICE DATA AND SPECIFICATIONS** are contained at the end of each section for quick reference of data.
11. The captions **WARNING** and **CAUTION** warn you of steps that must be followed to prevent personal injury and/or damage to some part of the vehicle.

- **WARNING** indicates the possibility of personal injury if instructions are not followed.
- **CAUTION** indicates the possibility of component damage if instructions are not followed.
- **BOLD TYPED STATEMENTS** except **WARNING** and **CAUTION** give you helpful information.

WIRING DIAGRAM

Symbols used in WIRING DIAGRAM are shown below:

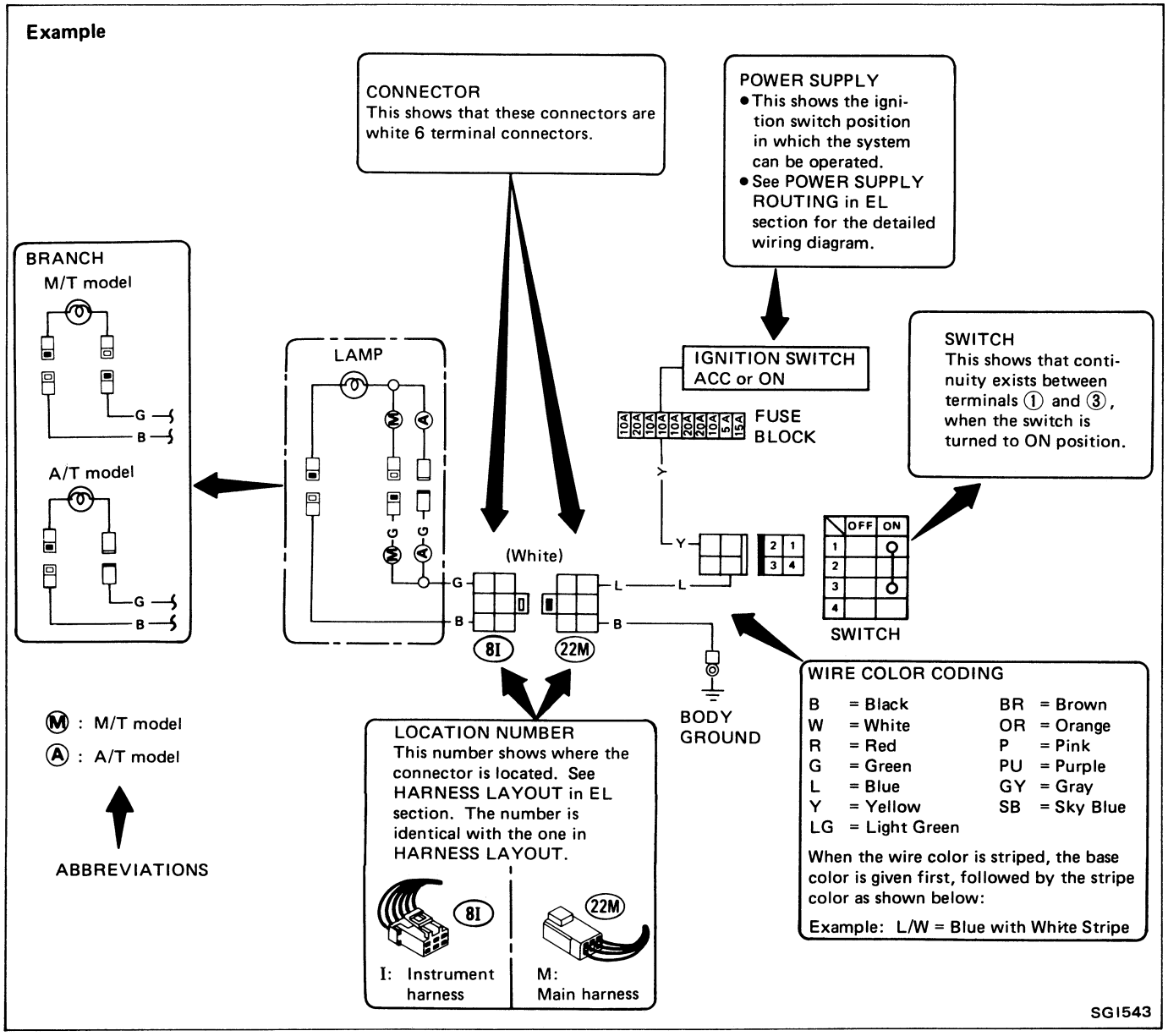

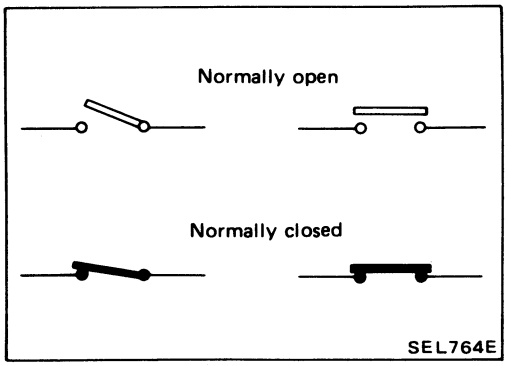

SWITCH POSITIONS

Wiring diagram switches are shown with the vehicle in the following condition.

- Ignition switch "OFF".
- Doors, hood and trunk lid/back door closed.
- Pedals are not depressed and parking brake is released.

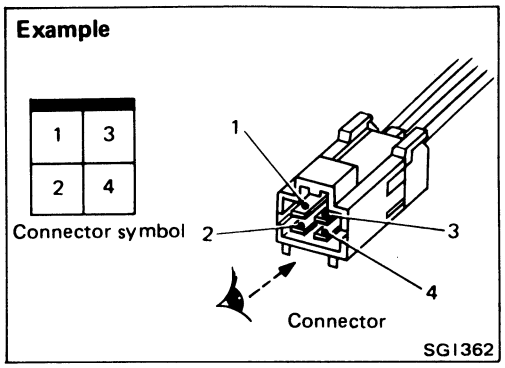

CONNECTOR SYMBOLS

- All connector symbols in wiring diagrams are shown from the terminal side.

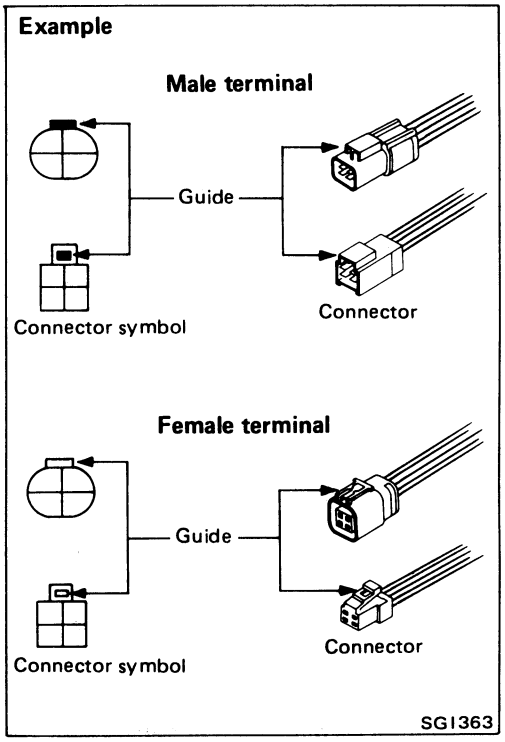

- Male and female terminals
  Connector guides for male terminals are shown in black and female terminals in white in wiring diagrams.

MULTIPLE SWITCH

The continuity of the multiple switch is identified in the switch chart in wiring diagrams.

Example

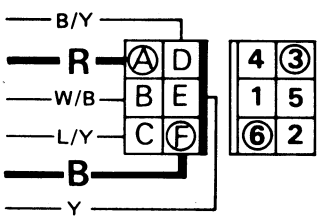

WIPER SWITCH

	OFF	INT	LO	HI	WASH
1					○
2				○	
3	○	○	●		
4	○	○			
5		○			
6		○	●	○	○

Continuity circuit of wiper switch

SWITCH POSITION	CONTINUITY CIRCUIT
OFF	3 - 4
INT	3 - 4, 5 - 6
LO	3 - 6
HI	2 - 6
WASH	1 - 6

Example: Wiper switch in LO position
Continuity circuit: Red wire – Ⓐ terminal – ③ terminal – Wiper switch (● – ●: LO) – ⑥ terminal – Ⓕ terminal – Black wire

SG1365

SUPER MULTIPLE JUNCTION (S.M.J.)

- The "S.M.J." indicated in wiring diagrams is shown in a simplified form. The terminal arrangement should therefore be referred to in the foldout at the end of the Service Manual.
- The foldout should be spread to read the entire wiring diagram.

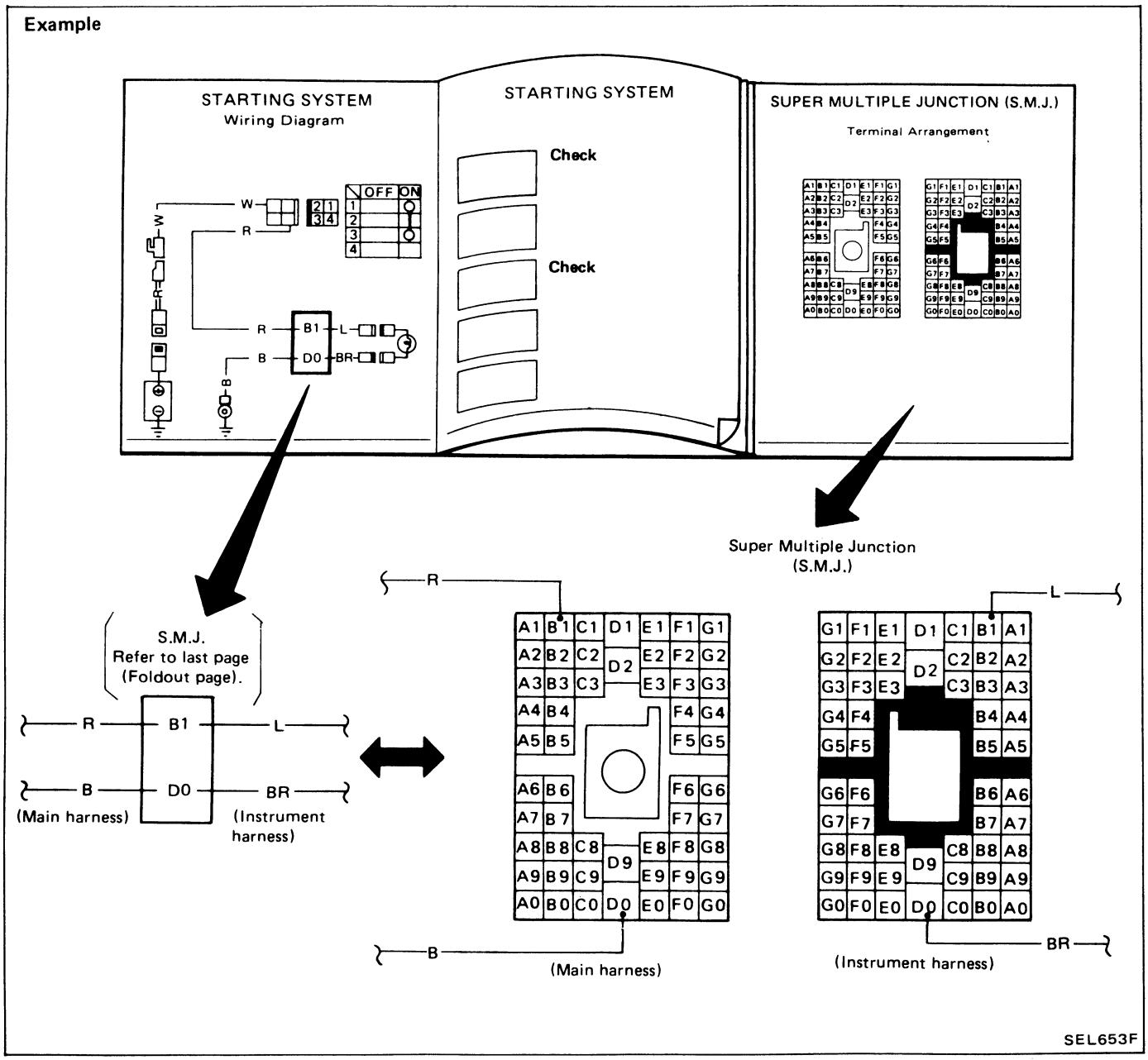

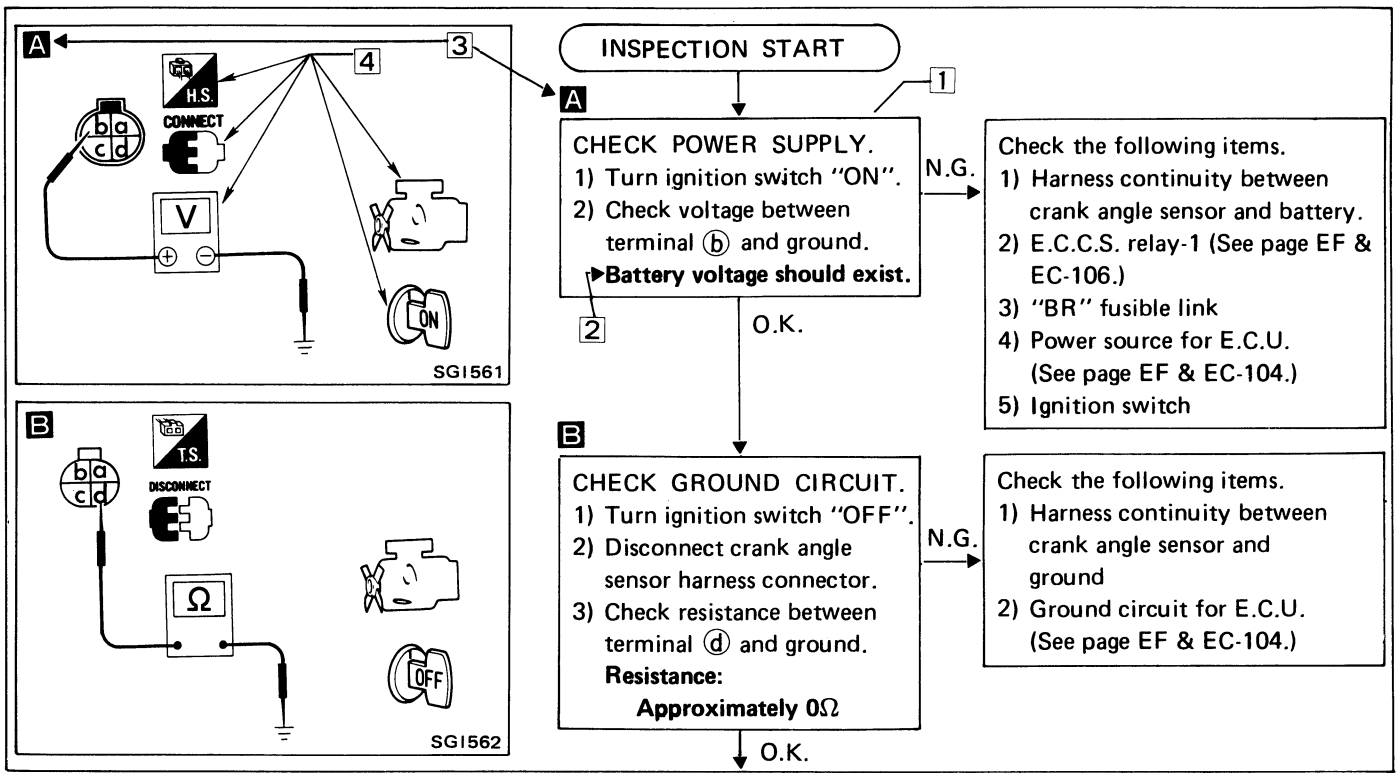

NOTICE

The flow chart indicates work procedures required to diagnose problems effectively. Observe the following instructions before diagnosing.

1) **Use the flow chart after locating probable causes of a problem following the "Preliminary Check" or the "Symptom Chart".**
2) **After repairs, re-check that the problem has been completely eliminated.**
3) **Refer to Component Parts Location and Harness Layout for the Systems described in each section for identification/location of components and harness connectors.**
4) **Refer to the Circuit Diagram for Quick Pin Point Check. If you must perform circuit continuity between harness connectors more detail, such as in case of sub harness is used, refer to Wiring Diagram and Harness Layout in EL section for identification of harness connectors.**
5) **When checking circuit continuity, ignition switch should be "OFF".**
6) **Before checking voltage at connectors, check battery voltage.**
7) **After accomplishing the Diagnostic Procedures and Electrical Components Inspection, make sure that all harness connectors are reconnected as it was.**

HOW TO FOLLOW THIS FLOW CHART

1 **Work and diagnostic procedure**
Start to diagnose a problem using procedures indicated in enclosed blocks, as shown in the following example.

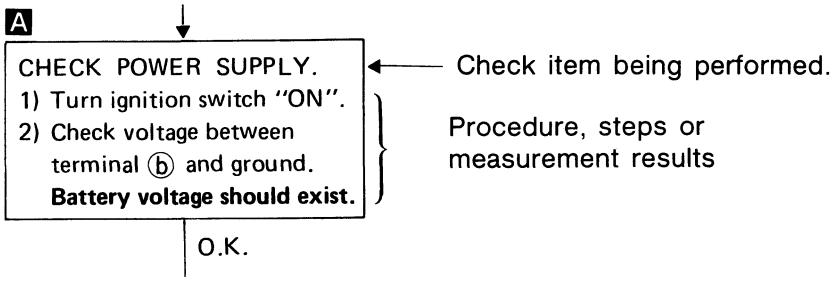

2 **Measurement results**
Required results are indicated in bold type in the corresponding block, as shown below.
These have the following meanings:
Battery voltage → 11 - 14V or approximately 12V
Voltage: Approximately 0V → Less than 1V

3 **Cross reference of work symbols in the text and illustrations**
Illustrations are provided as visual aids for work procedures. For example, symbol A indicated in the left upper portion of each illustration corresponds with the symbol in the flowchart for easy identification. More precisely, the procedure under the "CHECK POWER SUPPLY" outlined previously is indicated by an illustration A .

4 **Symbols used in illustrations**
Symbols included in illustrations refer to measurements or procedures. Before diagnosing a problem, familiarize yourself with each symbol.

Direction mark
A direction mark is shown to clarify the side of connector (terminal side or harness side).
Direction marks are mainly used in the illustrations indicating terminal inspection.

: **View from terminal side ... T.S.**

- **All connector symbols shown from the terminal side are enclosed by a single line.**

: **View from harness side ... H.S.**

- **All connector symbols shown from the harness side are enclosed by a double line.**

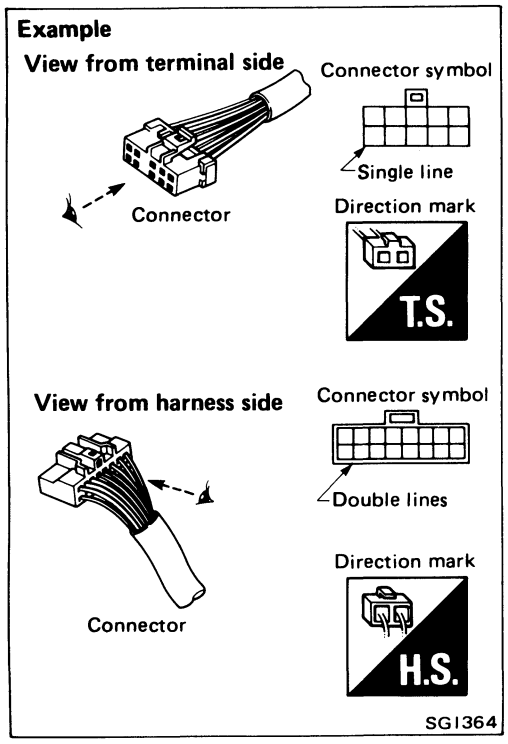

Key to symbols signifying measurements or procedures

Symbol	Symbol explanation	Symbol	Symbol explanation
DISCONNECT	Check after disconnecting the connector to be measured.	A	Current should be measured with an ammeter.
CONNECT	Check after connecting the connector to be measured.	A/C	A/C switch is "OFF".
	Insert key into ignition switch.	A/C	A/C switch is "ON".
OFF	Turn ignition switch to "OFF" position.	OFF 1 2 3 4	Fan switch is "ON". (At any position except for "OFF" position)
ON	Turn ignition switch to "ON" position.	OFF 1 2 3 4	Fan switch is "OFF".
ST	Turn ignition switch to "START" position.	BAT	Apply battery voltage directly to components.
OFF→ACC	Turn ignition switch from "OFF" to "ACC" position.		Drive vehicle.
ACC→OFF	Turn ignition switch from "ACC" to "OFF" position.	BAT	Disconnect battery negative cable.
OFF→ON	Turn ignition switch from "OFF" to "ON" position.		Depress brake pedal.
ON→OFF	Turn ignition switch from "ON" to "OFF" position.		Release brake pedal.
	Do not start engine, or check with engine stopped.		Depress accelerator pedal.
	Start engine, or check with engine running.		Release accelerator pedal.
	Apply parking brake.	C/UNIT CONNECTOR 8 V HS CONNECT	Pin terminal check for S.M.J. type E.C.U. and A/T control unit connectors. **For details regarding the terminal arrangement, refer to the foldout page.**
	Release parking brake.		
C H	Check after engine is warmed up sufficiently.		
V	Voltage should be measured with a voltmeter.		
Ω Ω	Circuit resistance should be measured with an ohmmeter.		

Model Variation

Grade	Destination	Passenger	Body	Engine: KA24E			
			Model	2WD		4WD	
			Transaxle	M/T	A/T	M/T	A/T
			Transfer	RS5F50A	RL4F02A	RS5F50A	RL4F02A
			Rear differential	–	–	FTY10	
			Body	–	–	R180, R180V*	R180, R180V*
SGL	Non-California, U.S.A.	5	Wagon	HLM11JEU	HLM11JAEU	HLNM11JEU	HLNM11JAEU
SGL	California, U.S.A.	5	Wagon	HLM11JEV	HLM11JAEV	HLNM11JEV	HLNM11JAEV
SGL	Canada	5	Wagon	HLM11JEN	HLM11JAEN	HLNM11JEN	HLNM11JAEN
SGL	Canada	7	Wagon	HLM11TJEN	HLM11TJAEN	HLNM11TJEN	HLNM11TJAEN

*: Option

Prefix and suffix designations:

H L N M11 T J A E N

H : KA24E

L : Left-hand drive

□ : 2-wheel drive

N : 4-wheel drive

U : Non-California

V : California

N : Canada

E : E.G.I. engine

□ : 5-speed manual transaxle

A : Automatic transaxle

J : SGL

□ : All variations for U.S.A.
5 passengers for Canada

T : 7 passengers for Canada

□ : means no indication.

Identification Number

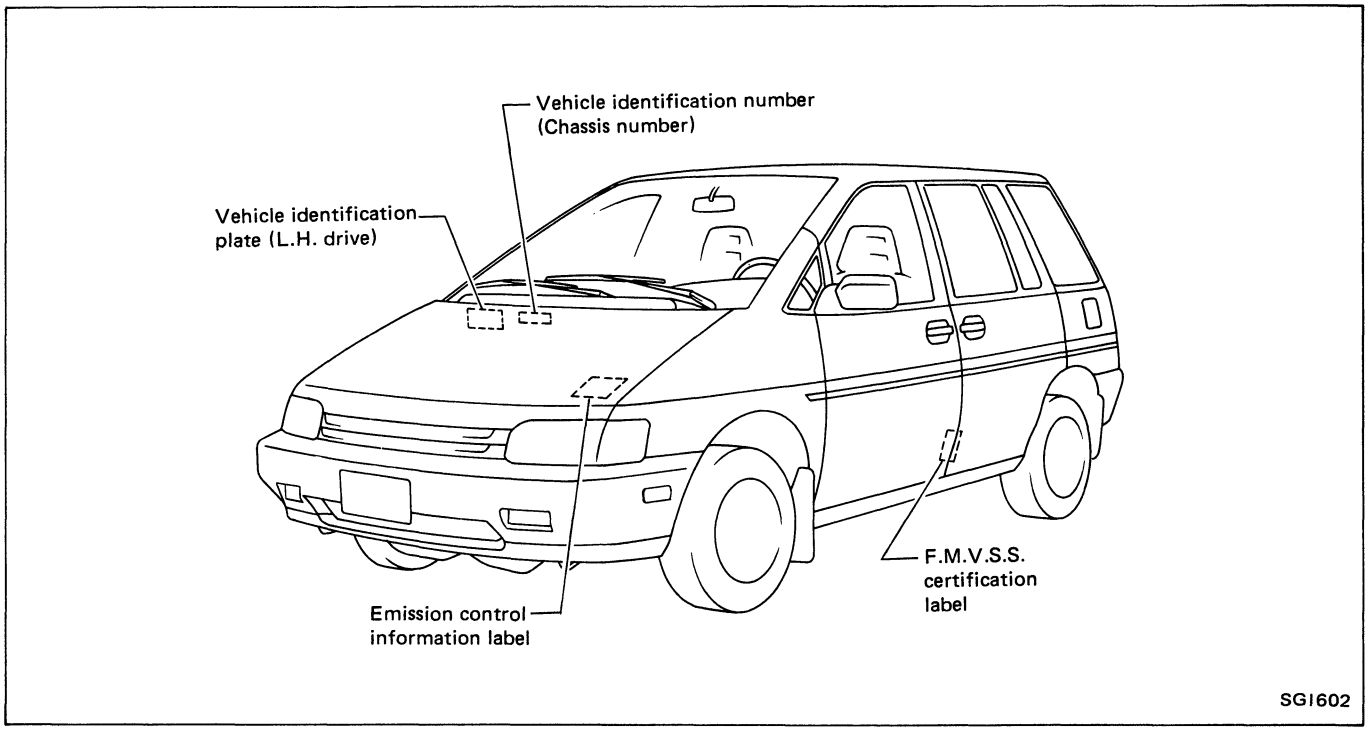

VEHICLE IDENTIFICATION NUMBER ARRANGEMENT

JN1 H M 1 5 P 9 L X 123456

Manufacture
JN1: Nissan passenger vehicle

Engine type
H : KA24E

Vehicle line
M : Nissan Axxess

Model change (0 to 9)

Body type
5 : All variations for U.S.A.
7 passengers for Canada
6 : 5 passengers for Canada

Seat belt
P : 2-point automatic + wrap manual. (for 2WD)
S : 3-point manual (for 2WD)
J : 2-point automatic + wrap manual (for 4WD)
Y : 3-point manual (for 4WD)

Check digit (0 to 9 or x)
The code for the check digit is determined by mathematical computation.

Model year
L : 1990 year model

Manufacture plant
X : Hiratsuka

Vehicle serial number

Identification Number (Cont'd)

IDENTIFICATION PLATE

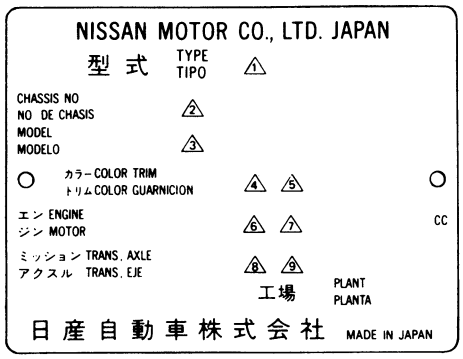

SGI315

1 Type
2 Vehicle identification number (Chassis number)
3 Model
4 Body color code
5 Trim color code
6 Engine model
7 Engine displacement
8 Transaxle model
9 Axle model

ENGINE SERIAL NUMBER

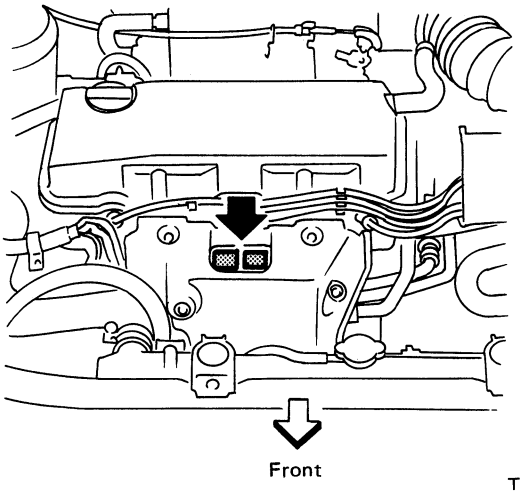

TI1032M

TRANSAXLE NUMBER

Manual transaxle

RS5F50A

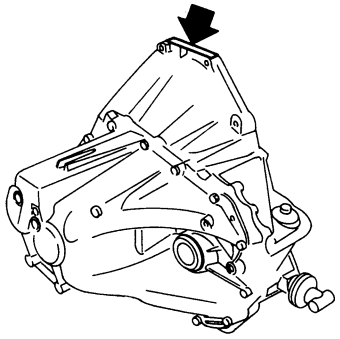

SGI298

Automatic transaxle

RL4F02A

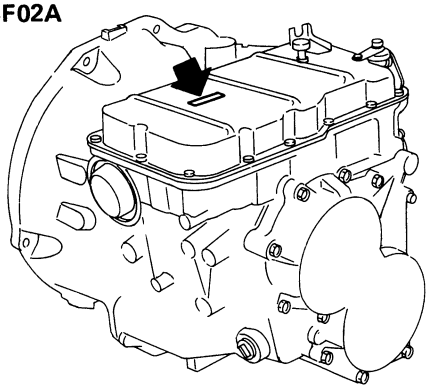

SGI299

Dimensions

Unit: mm (in)

	2WD	4WD
Overall length	4,365 (171.9)	4,365 (171.9)
Overall width	1,690 (66.5)	1,690 (66.5)
Overall height	1,640 (64.6)	1,640 (64.6)
Front tread	1,460 (57.5)	1,460 (57.5)
Rear tread	1,430 (56.3)	1,435 (56.5)
Wheelbase	2,610 (102.8)	2,600 (102.4)

Wheels and Tires

Road wheel size	Offset mm (in)	Tire size	Spare tire
Steel 5-1/2JJ x 14	45 (1.77)	P195/70SR14	
Aluminum 5-1/2JJ x 14	45 (1.77)		
T-type 4T x 15	40 (1.57)	– –	T125/70D15*2 T135/90D15*1

*1: 4-wheel drive model
*2: 2-wheel drive model

Garage Jack and Safety Stand

WARNING:

- **Never get under the vehicle while it is supported only by the jack. Always use safety stands to support the frame when you have to get under the vehicle.**
- **Place wheel chocks at the front wheels when the rear wheels are raised and place wheel chocks at the rear wheels when the front wheels are raised.**

CAUTION:

Place a wooden or rubber block between safety stand and vehicle body when the supporting body is flat.

2WD

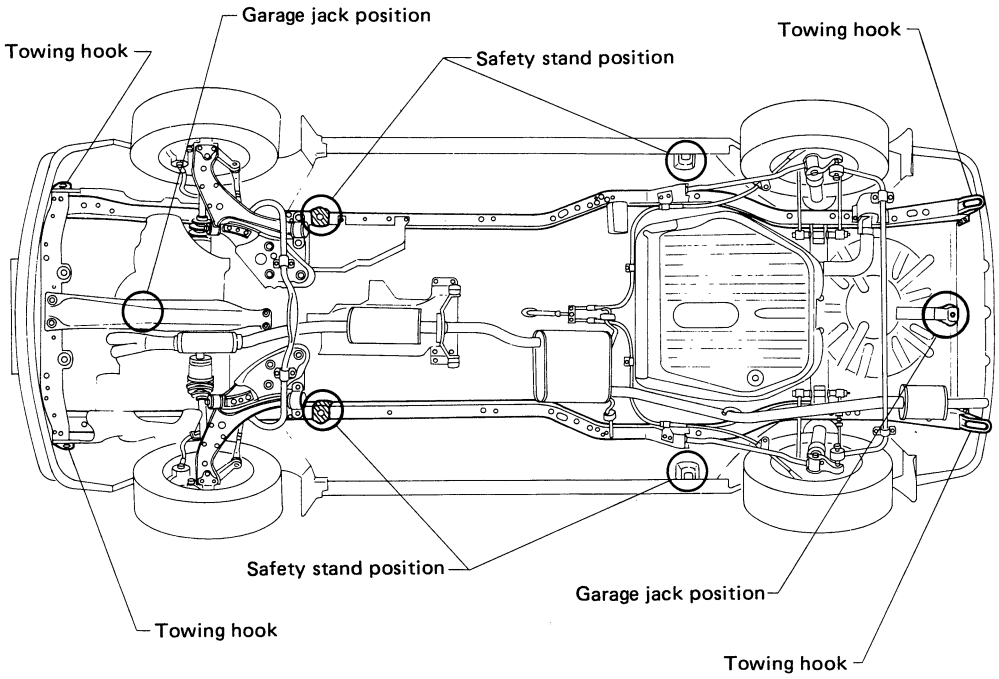

SGI576

4WD

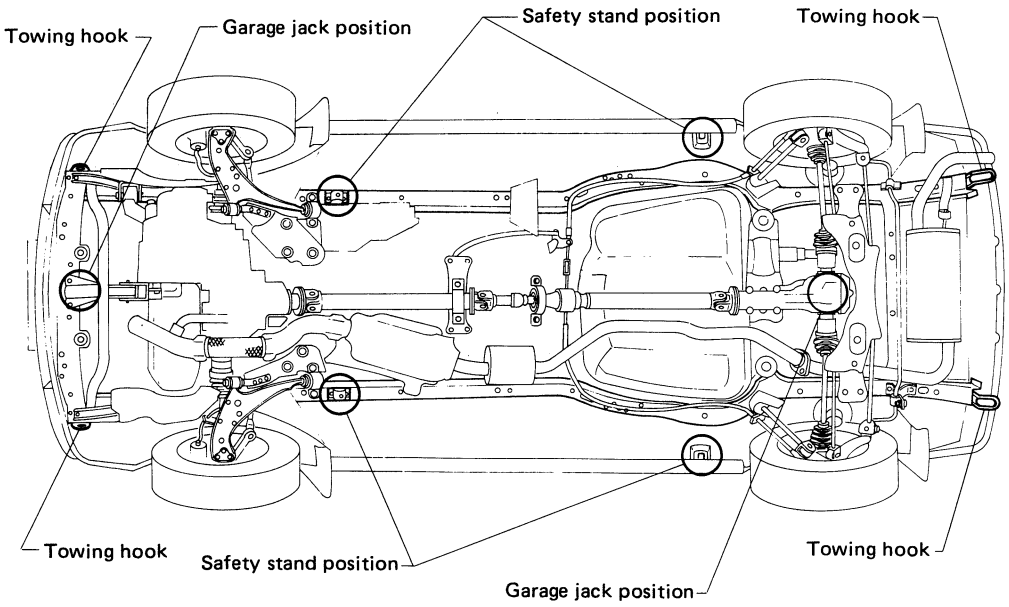

SGI578

2-pole Lift

WARNING:

When lifting the vehicle, open the lift arms as wide as possible and ensure that the front and rear of the vehicle are well balanced.

When setting the lift arm, do not allow the arm to contact the brake tubes and fuel lines.

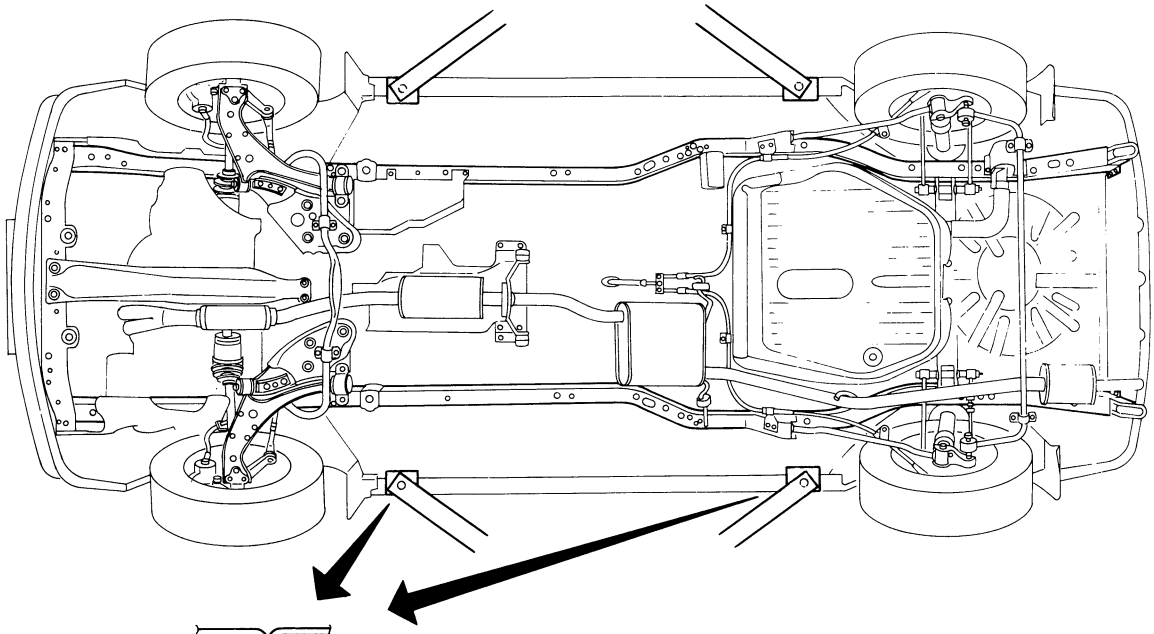

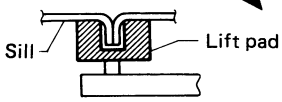

Put the sill in the slit of the lift pad to prevent the sill from deforming. If the pad does not have the slit, prepare a suitable attachment with slit.

Note:
Lift-up points are the same as pantograph jack points.

SGI577

Tow Truck Towing

CAUTION:

- **All applicable state or Provincial (in Canada) laws and local laws regarding the towing operation must be obeyed.**
- **It is necessary to use proper towing equipment to avoid possible damage to the vehicle during towing operation. Towing is in accordance with Towing Procedure Manual at dealer.**
- **When towing with the rear wheels on the ground, release the parking brake and move the gearshift lever to neutral ("N" position).**

Tow Truck Towing (Cont'd)

2-WHEEL DRIVE MODELS

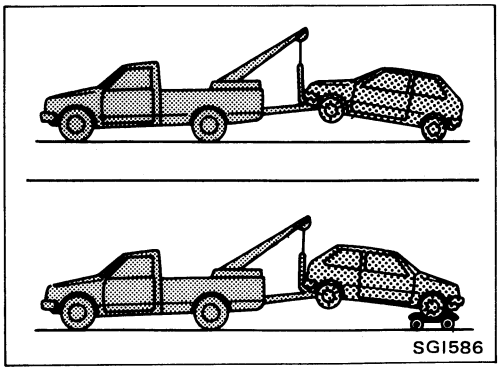
SGI586

NISSAN recommends that vehicle be towed with the driving (front) wheels off the ground as illustrated.

Towing an automatic transaxle model with four wheels on ground

Observe the following restricted towing speeds and distances.

Speed:
Below 50 km/h (30 MPH)
Distance:
Less than 65 km (40 miles)

CAUTION:
Never tow from the rear (i.e., backward) with four wheels on the ground as this may cause serious and expensive damage to the transaxle.

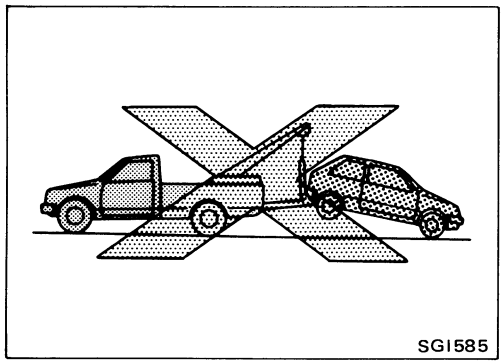
SGI585

Towing an automatic transaxle model with rear wheels raised (with front wheels on ground)

Never tow an automatic transaxle model with rear wheels raised (with front wheels on ground) as this may cause serious and expensive damage to the transaxle. If it is necessary to tow it with rear wheels raised, always use a towing dolly under the front wheels.

4-WHEEL DRIVE MODELS

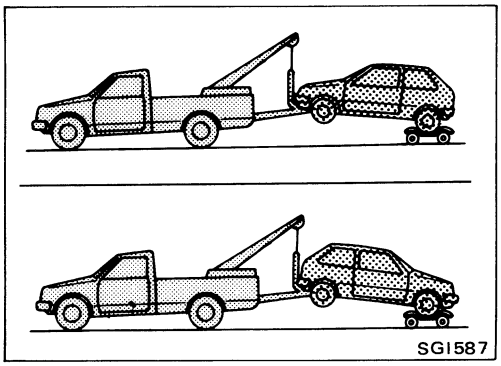
SGI587

NISSAN recommends that the 4-wheel drive vehicle be towed with all wheels off the ground as follows:

1. Using a flat-bed truck.
2. Using a combination of a tow truck and a dolly as illustrated.

Towing an automatic transaxle model with four wheels on ground

Observe the following restricted towing speeds and distances.

Speed:
Below 50 km/h (30 MPH)
Distance:
Less than 65 km (40 miles)

CAUTION:
Never tow from the rear (i.e., backward) with four wheels on the ground as this may cause serious and expensive damage to the transaxle.

Tow Truck Towing (Cont'd)

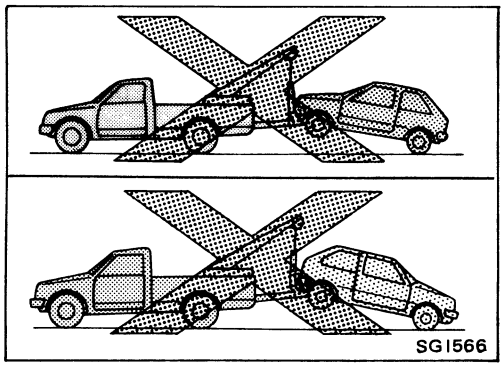

Towing a 4-wheel drive model with front or rear wheels raised (with rear or front wheels on the ground)

Never tow a 4-wheel drive model with front or rear wheels raised and rear or front wheels on the ground as this may cause serious and expensive damage to the transfer and transaxle. If it is necessary to tow the vehicle with the front or rear wheels raised, always use a towing dolly under the rear or front wheels.

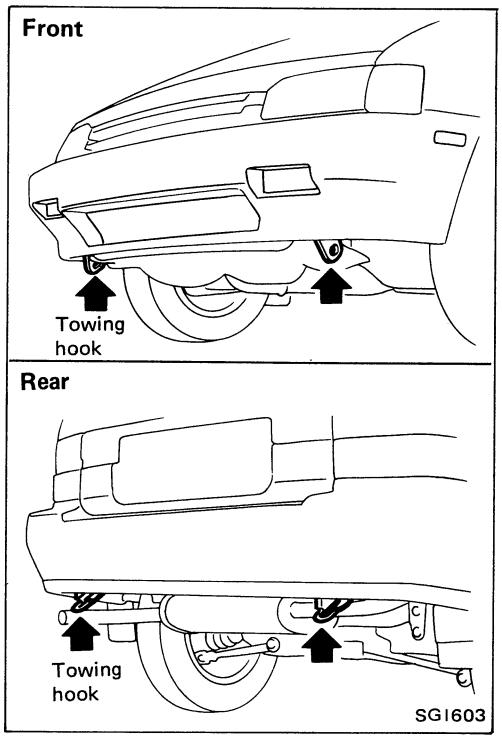

TOWING POINT

Always pull the cable straight out from the vehicle. Never pull on the hook at a sideways angle.

CAUTION:

a. When doing on-the-car wheel balancing with a full-time 4WD vehicle, to prevent the wheels from rotating at different speeds or in different directions from each other (which could lead to damage to transaxle gear), always be sure to observe the following precautions:

1) All four wheels should be jacked up, clearing the ground completely.

2) The wheels should be rotated with both the engine and the wheel balancer engaged.

3) The parking brake lever should be fully released.

4) None of the brakes should be allowed to drag.

b. Avoid sudden acceleration, deceleration and braking.

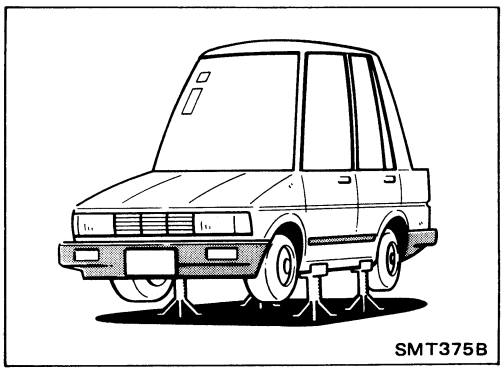

1. Jack up vehicle so that all four wheels can rotate.

Make sure the vehicle is firmly supported on stands.

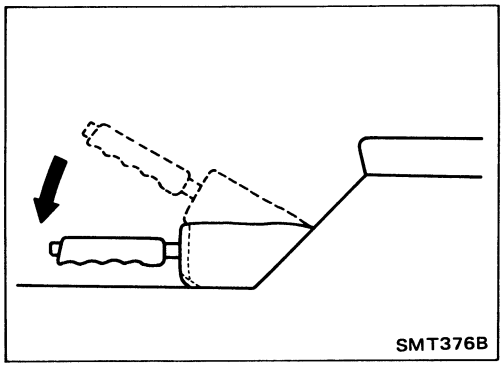

2. Release parking brake fully.

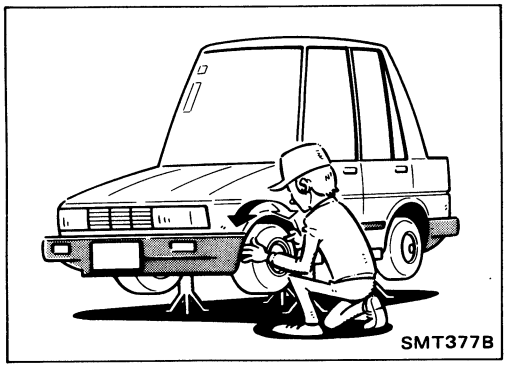

3. Make sure that brakes are not dragging on any of four wheels.

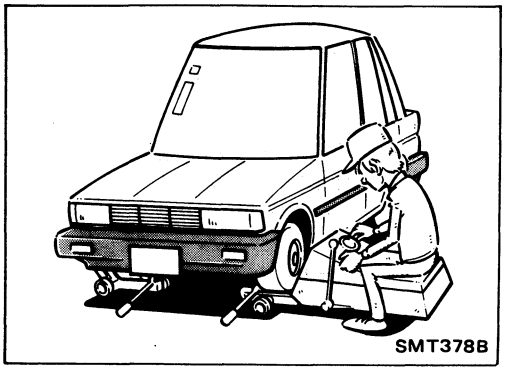
SMT378B

4. Place wheel to be balanced on wheel balancer.
   Follow the procedure specified by the wheel balancer manufacturer.

5. Start engine.
6.

—M/T MODEL—

Put shift lever in 3rd or 4th gear and engage clutch slowly, then gradually increase speed to test speed.

—A/T MODEL—

Put shift lever into "D" position, then gradually increase speed to test speed.

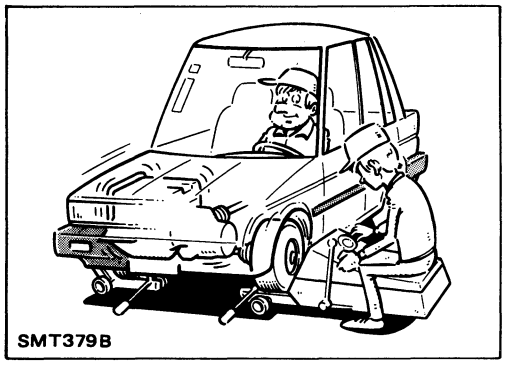
SMT379B

7. Rotate wheels using both engine's driving force and wheel balancer driving force and check wheel balance.

Assure that the other wheels will rotate at the same time.

TIGHTENING TORQUE OF STANDARD BOLTS

Grade	Bolt size	Bolt diameter* mm	Pitch mm	Tightening torque (Without lubricant)					
				Hexagon head bolt			Hexagon flange bolt		
				N·m	kg-m	ft-lb	N·m	kg-m	ft-lb
4T	M6	6.0	1.0	5.1	0.52	3.8	6.1	0.62	4.5
	M8	8.0	1.25	13	1.3	9	15	1.5	11
			1.0	13	1.3	9	16	1.6	12
	M10	10.0	1.5	25	2.5	18	29	3.0	22
			1.25	25	2.6	19	30	3.1	22
	M12	12.0	1.75	42	4.3	31	51	5.2	38
			1.25	46	4.7	34	56	5.7	41
	M14	14.0	1.5	74	7.5	54	88	9.0	65
7T	M6	6.0	1.0	8.4	0.86	6.2	10	1.0	7
	M8	8.0	1.25	21	2.1	15	25	2.5	18
			1.0	22	2.2	16	26	2.7	20
	M10	10.0	1.5	41	4.2	30	48	4.9	35
			1.25	43	4.4	32	51	5.2	38
	M12	12.0	1.75	71	7.2	52	84	8.6	62
			1.25	77	7.9	57	92	9.4	68
	M14	14.0	1.5	127	13.0	94	147	15.0	108
9T	M6	6.0	1.0	12	1.2	9	15	1.5	11
	M8	8.0	1.25	29	3.0	22	35	3.6	26
			1.0	31	3.2	23	37	3.8	27
	M10	10.0	1.5	59	6.0	43	70	7.1	51
			1.25	62	6.3	46	74	7.5	54
	M12	12.0	1.75	98	10.0	72	118	12.0	87
			1.25	108	11.0	80	137	14.0	101
	M14	14.0	1.5	177	18.0	130	206	21.0	152

1. **Special parts are excluded.**
2. **This standard is applicable to bolts having the following marks embossed on the bolt head.**

Grade	Mark
4T	4
7T	7
9T	9

*: Nominal diameter

M 6
- 6 — Nominal diameter of bolt threads (Unit: mm)
- M — Metric screw threads

MAINTENANCE

SECTION MA

MA

CONTENTS

PERIODIC MAINTENANCE ..... MA- 2
GENERAL MAINTENANCE ..... MA- 5
RECOMMENDED FLUIDS AND LUBRICANTS ..... MA- 7
ENGINE MAINTENANCE ..... MA- 9
CHASSIS AND BODY MAINTENANCE MA-15
SERVICE DATA AND SPECIFICATIONS (S.D.S.) MA-23

Two different maintenance schedules are provided, and should be used, depending upon the conditions in which the vehicle is mainly operated. **After 60,000 miles (96,000 km) or 48 months, continue the periodic maintenance at the same mileage/time intervals.**

SCHEDULE 1

Follow Periodic Maintenance Schedule 1 if your driving habits frequently includes one or more of the following driving conditions:

- Repeated short trips of less than 5 miles (8 km).
- Repeated short trips of less than 10 miles (16 km) with outside temperatures remaining below freezing.
- Operating in hot weather in stop-and-go "rush hour" traffic.
- Extensive idling and/or low speed driving for long distances, such as police, taxi or door-to-door delivery use.
- Driving in dusty conditions.
- Driving on rough, muddy, or salt spread roads.
- Towing a trailer, using a camper or a car-top carrier.

SCHEDULE 2

Follow Periodic Maintenance Schedule 2 if none of the driving conditions shown in Schedule 1 apply to your driving habits.

Maintenance for off-road driving (4WD only)

Whenever you drive off-road through sand, mud or water, more frequent maintenance may be required of the following items:

- ▲ Brake pads and discs
- ▲ Brake lining and drums
- ▲ Brake lines and hoses
- ▲ Differential, transaxle and transfer oil
- ▲ Steering linkage
- ▲ Propeller shaft and drive shafts
- ▲ Air cleaner filter
- ▲ Clutch housing (Check water entry. Refer to MA-21.)

Schedule 1

Abbreviations: R = Replace I = Inspect. Correct or replace if necessary. [ ] : At the mileage intervals only

MAINTENANCE OPERATION	MAINTENANCE INTERVAL																
Perform at number of miles, kilometers or months, whichever comes first.	Miles x 1,000	3.75	7.5	11.25	15	18.75	22.5	26.25	30	33.75	37.5	41.25	45	48.75	52.5	56.25	60	Reference page
	(km x 1,000)	(6)	(12)	(18)	(24)	(30)	(36)	(42)	(48)	(54)	(60)	(66)	(72)	(78)	(84)	(90)	(96)	
	Months	3	6	9	12	15	18	21	24	27	30	33	36	39	42	45	48	
Emission control system maintenance																		
Drive belts	See NOTE (1)																I*	MA-9
Air cleaner filter	See NOTE (2)								[R]								[R]	MA-12
Vapor lines									I*								I*	MA-14
Fuel lines									I*								I*	MA-11
Fuel filter	See NOTE (3)*																	MA-11
Engine coolant									R*								R*	MA-10
Engine oil		R	R	R	R	R	R	R	R	R	R	R	R	R	R	R	R	MA-12
Engine oil filter (Use Nissan PREMIUM type or equivalent.)		R	R	R	R	R	R	R	R	R	R	R	R	R	R	R	R	MA-13
Spark plugs									[R]								[R]	MA-13
Chassis and body maintenance																		
Brake lines & cables					I				I				I				I	MA-18
Brake pads, discs, drums & linings			I		I		I		I		I		I		I		I	MA-18, 19
Manual & automatic transaxle oil (Transfer & differential gear oil 4WD)	See NOTE (4)				I				I				I				I	MA-15, 16, 17, 18
Steering gear & linkage, axle & suspension parts			I		I		I		I		I		I		I		I	MA-20, FA-6, RA-5
Steering linkage ball joints & front suspension ball joints			I		I		I		I		I		I		I		I	MA-20, FA-6
Exhaust system			I		I		I		I		I		I		I		I	MA-15
Drive shaft boots, (Propeller shaft 4WD)			I		I		I		I		I		I		I		I	FA-9, PD-6

NOTE:
(1) After 60,000 miles (96,000 km) or 48 months, inspect every 15,000 miles (24,000 km) or 12 months.
(2) If operating mainly in dusty conditions, more frequent maintenance may be required.
(3) If vehicle is operated under extremely adverse weather conditions or in areas where ambient temperatures are either extremely low or extremely high, the filters might become clogged. In such an event, replace them immediately.
(4) If towing a trailer, using a camper or a car-top carrier, or driving on rough or muddy roads, change (not just inspect) oil at every 30,000 miles (48,000 km) or 24 months.
(5) Maintenance items and intervals with "*" are recommended by NISSAN for reliable vehicle operation. The owner need not perform such maintenance in order to maintain the emission warranty or manufacturer recall liability. Other maintenance itmes and intervals are required.

Schedule 2

Abbreviations: R = Replace I = Inspect. Correct or replace if necessary. [ ]: At the mileage intervals only

MAINTENANCE OPERATION Perform at number of miles, kilometers or months, whichever comes first.	Miles x 1,000 (km x 1,000) Months	MAINTENANCE INTERVAL 7.5 (12) 6	15 (24) 12	22.5 (36) 18	30 (48) 24	37.5 (60) 30	45 (72) 36	52.5 (84) 42	60 (96) 48	Reference page
Emission control system maintenance										
Drive belts	See NOTE (1)								I*	MA-9
Air cleaner filter					[R]				[R]	MA-12
Vapor lines					I*				I*	MA-14
Fuel lines					I*				I*	MA-11
Fuel filter	See NOTE (2)*									MA-11
Engine coolant					R*				R*	MA-10
Engine oil		R	R	R	R	R	R	R	R	MA-12
Engine oil filter (Use Nissan PREMIUM type or equivalent.)		R		R		R		R		MA-13
Spark plugs					[R]				[R]	MA-13
Chassis and body maintenance										
Brake lines & cables			I		I		I		I	MA-18
Brake pads, discs, drums & linings			I		I		I		I	MA-18, 19
Manual & automatic transaxle oil (Transfer & differential gear oil 4WD)			I		I		I		I	MA-15, 16, 17, 18
Steering gear linkage, axle & suspension parts					I				I	MA-20, FA-6, RA-5
Exhaust system			I		I		I		I	MA-15
Drive shaft boots			I		I		I		I	FA-9

NOTE:
(1) After 60,000 miles (96,000 km) or 48 months, inspect every 15,000 miles (24,000 km) or 12 months.
(2) If vehicle is operated under extremely adverse weather conditions or in areas where ambient temperatures are either extremely low or extremely high, the filters might become clogged. In such an event, replace them immediately.
(3) Maintenance items and intervals with "*" are recommended by NISSAN for reliable vehicle operation. The owner need not perform such maintenance in order to maintain the emission warranty or manufacturer recall liability. Other maintenance items and intervals are required.

General maintenance includes those items which should be checked during the normal day-to-day operation of the vehicle. They are essential if the vehicle is to continue operating properly. The owners can perform the checks and inspections themselves or they can have their NISSAN dealers do them for a nominal charge.

Item	Reference page
OUTSIDE THE VEHICLE The maintenance items listed here should be performed from time to time, unless otherwise specified.	
Tires Check the pressure with a gauge periodically when at a service station, including the spare, and adjust to the specified pressure if necessary. Check carefully for damage, cuts or excessive wear.	–
Wheel nuts When checking the tires, make sure no nuts are missing, and check for any loose nuts. Tighten if necessary.	–
Tire rotation Tires should be rotated every 12,000 km (7,500 miles.)	MA-20
Wheel alignment and balance If the vehicle should pull to either side while driving on a straight and level road, or if you detect uneven or abnormal tire wear, there may be a need for wheel alignment. If the steering wheel or seat vibrates at normal highway speeds, wheel balancing may be needed.	MA-20 FA-7
Windshield wiper blades Check for cracks or wear if they do not wipe properly.	–
Doors and engine hood Check that all doors and the engine hood operate smoothly as well as the trunk lid and back hatch. Also ensure, that all latches lock securely. Lubricate hinges, latches, rollers and links if necessary. Make sure that the secondary latch keeps the hood from opening when the primary latch is released. When driving in areas using road salt or other corrosive materials, check lubrication frequently.	MA-22
INSIDE THE VEHICLE The maintenance items listed here should be checked on a regular basis, such as when performing periodic maintenance, cleaning the vehicle, etc.	
Lights Make sure that the headlights, stop lights, tail lights, turn signal lights, and other lights are all operating properly and installed securely. Also check headlight aim.	–
Warning lights and buzzers/chimes Make sure that all warning lights and buzzers/chimes are operating properly.	–
Windshield wiper and washer Check that the wipers and washer operate properly and that the wipers do not streak.	–
Windshield defroster Check that the air comes out of the defroster outlets properly and in sufficient quantity when operating the heater or air conditioner.	–
Steering wheel Check that it has the specified free play. Be sure to check for changes in the steering condition, such as excessive free play, hard steering or strange noises. **Free play: Less than 35 mm (1.38 in)**	–
Seats Check seat position controls such as seat adjusters, seatback recliner, etc. to ensure they operate smoothly and that all latches lock securely in every position. Check that the head restrains move up and down smoothly and that the locks (if so equipped) hold securely in all latched positions. Check that the latches lock securely for folding-down rear seatbacks.	–
Seat belts Check that all parts of the seat belt system (e.g. buckles, anchors, adjusters and retractors) operate properly and smoothly, and are installed securely. Check the belt webbing for cuts, fraying, wear or damage.	MA-22

Item	Reference page
Clutch pedal Make sure the pedal operates smoothly and check that it has the proper free travel.	CL-4
Brakes Check that the brake does not pull the vehicle to one side when applied.	–
Brake pedal Check the pedal for smooth operation and make sure it has the proper distance under it when depressed fully. Check the brake booster function.	BR-7, 8
Parking brake Check that the lever has the proper travel and confirm that your vehicle is held securely on a fairly steep hill with only the parking brake applied.	BR-24
Automatic transmission "Park" mechanism Check that the lock release button on the selector lever operates properly and smoothly. On a fairly steep hill check that your vehicle is held securely with the selector lever in the "P" position without applying any brakes.	–
UNDER THE HOOD AND VEHICLE The maintenance items listed here should be checked periodically (e.g. each time you check the engine oil or refuel).	
Windshield washer fluid Check that there is adequate fluid in the tank.	–
Engine coolant level Check the coolant level when the engine is cold.	MA-10
Radiator and hoses Check the front of the radiator and clean off any dirt, insects, leaves, etc., that may have accumulated. Make sure the hoses have no cracks, deformation, rot or loose connections.	–
Brake and clutch fluid levels Make sure that the brake and clutch fluid levels are between the "MAX" and "MIN" lines on the reservoir.	MA-15, 18
Battery Check the fluid level in each cell. It should be between the "MAX" and "MIN" lines.	–
Engine drive belts Make sure that no belt is frayed, worn, cracked or oily.	MA-9
Engine oil level Check the level on the dipstick after parking the vehicle on a level spot and turning off the engine.	MA-12
Power steering fluid level and lines Check the level when the fluid is cold and the engine is turned off. Check the lines for proper attachment, leaks, cracks, etc.	MA-20
Automatic transmission fluid level Check the level on the dipstick after putting the selector lever in "P" with the engine idling.	MA-16
Exhaust system Make sure there are no loose supports, cracks or holes. If the sound of the exhaust seems unusual or there is a smell of exhaust fumes, immediately locate the trouble and correct it.	MA-15
Underbody The underbody is frequently exposed to corrosive substances such as those used on icy roads or to control dust. It is very important to remove these substances, otherwise rust will form on the floor pan, frame, fuel lines and around the exhaust system. At the end of winter, the underbody should be thoroughly flushed with plain water, being careful to clean those areas where mud and dirt can easily accumulate.	–
Fluid leaks Check under the vehicle for fuel, oil, water or other fluid leaks after the vehicle has been parked for a while. Water dripping from the air conditioner after use is normal. If you should notice any leaks or gasoline fumes are evident, check for the cause and correct it immediately.	–

Fluids and Lubricants

	Capacity (Approximate)			Recommended fluids and lubricants
	US measure	Imp measure	Liter	
Engine oil (Refill)				
With oil filter	3-3/4 qt	3-1/8 qt	3.5	Genuine Nissan Motor Oil*1 or equivalent Energy Conserving Oils of API SF or SG *2, *3
Without oil filter	3-3/8 qt	2-7/8 qt	3.2	
Cooling system	7-7/8 qt	6-1/2 qt	7.4	Anti-freeze coolant (Ethylene glycol base)
Manual transaxle gear oil	10 pt	8-1/4 pt	4.7	API GL-4*2
Transfer gear oil (4WD)	1-3/4 qt	1-3/8 qt	1.6	API GL-5*2
Differential gear oil (4WD)	2-1/8 pt	1-3/4 pt	1.0	
Automatic transaxle fluid	7-7/8 qt	6-1/2 qt	7.4	Genuine Nissan ATF*1 or equivalent Type DEXRON™
Power steering fluid	1-1/8 qt	7/8 qt	1.0	Type DEXRON™
Brake fluid	—	—	—	Genuine Nissan Brake Fluid*1 or equivalent DOT 3 (US FMVSS No. 116)
Multi-purpose grease	—	—	—	NLGI No. 2 (Lithium soap base)

*1: Available in mainland U.S.A. through your Nissan dealer.
*2: For further details, see "Recommended SAE viscosity number".
*3: Energy conserving oils
These oils can be identified by such labels as energy conserving, energy saving, improved fuel economy, etc.

SAE Viscosity Number

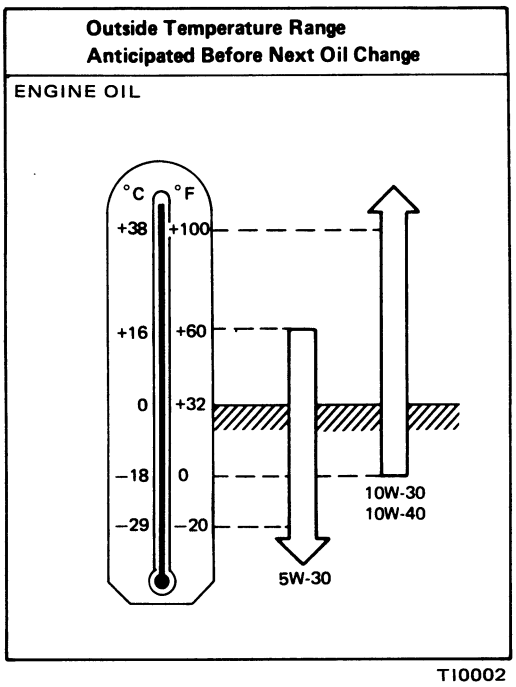

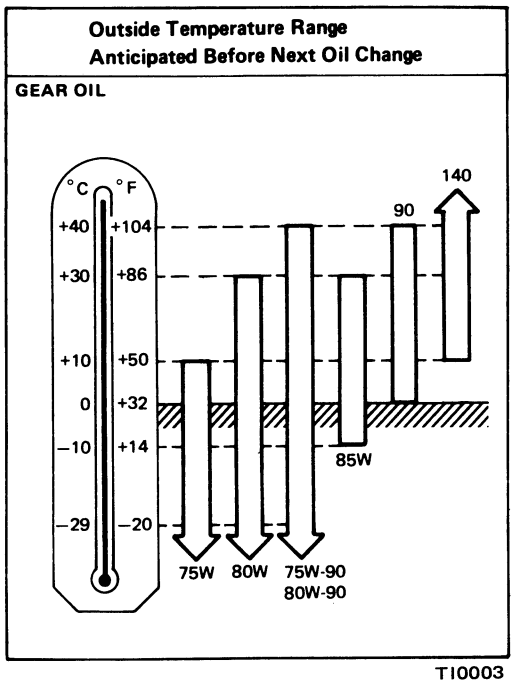

10W-30 is preferable if the ambient temperature is above −18°C (0°F). 20W-40 and 20W-50 are usable if the ambient temperature is above 10°C (50°F) for all seasons.

80W-90 is preferable if the ambient temperature is below 40°C (104°F).

Checking Drive Belts

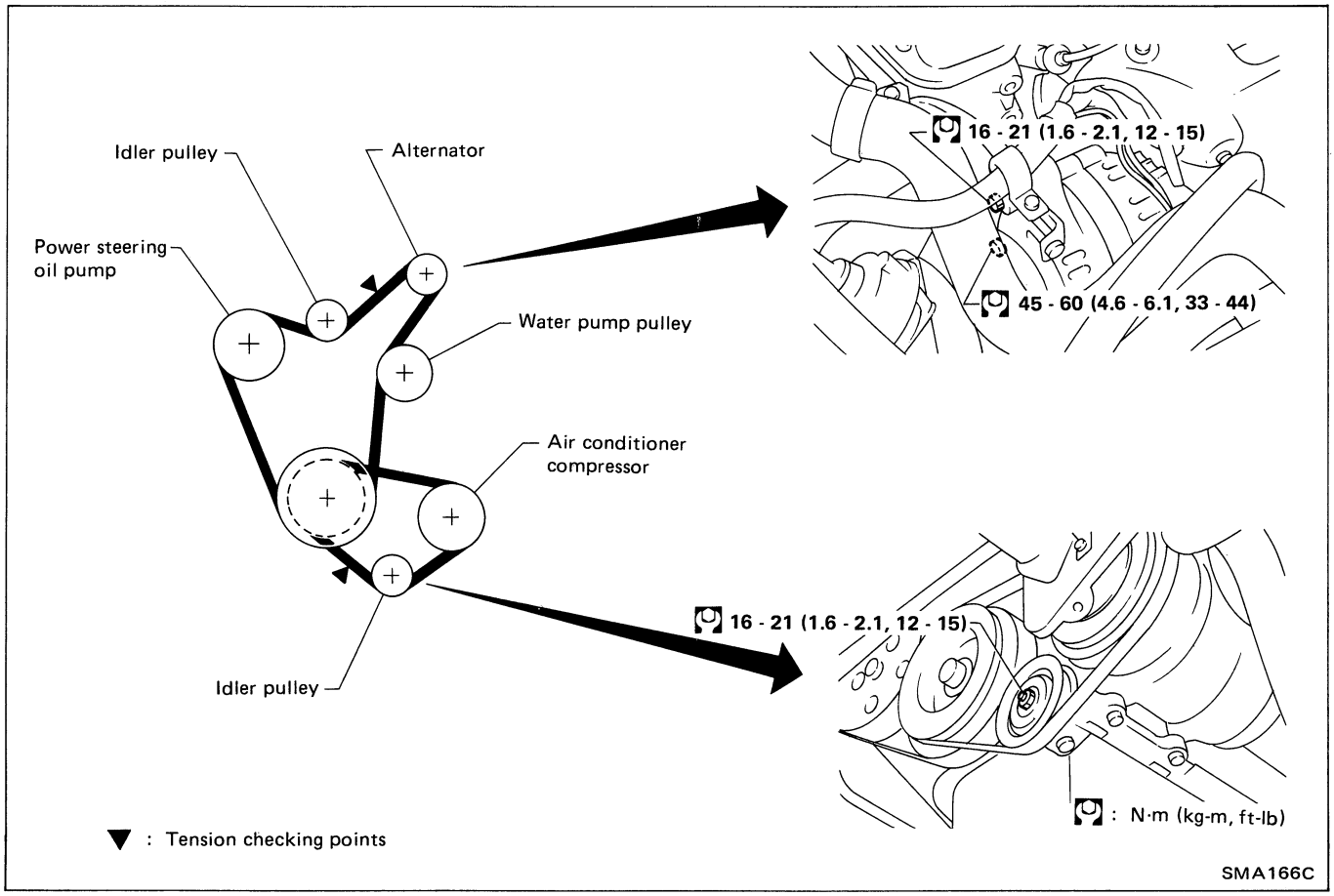

1. Inspect for cracks, fraying, wear or oil adhesion. If necessary, replace with a new one.
2. Inspect drive belt deflections by pushing on the belt midway between pulleys.

Adjust if belt deflections exceed the limit.
Belt deflection:
Inspect drive belt deflections when engine is cold.

Unit: mm (in)

	Used belt deflection		Set deflection of new belt
	Limit	Adjusted deflection	
Alternator Power steering oil pump	8 (0.31)	6 - 7 (0.24 - 0.28)	5 - 6 (0.20 - 0.24)
Air conditioner compressor	8 (0.31)	5 - 6 (0.20 - 0.24)	4 - 5 (0.16 - 0.20)
Applied pushing force	98 N (10 kg, 22 lb)		

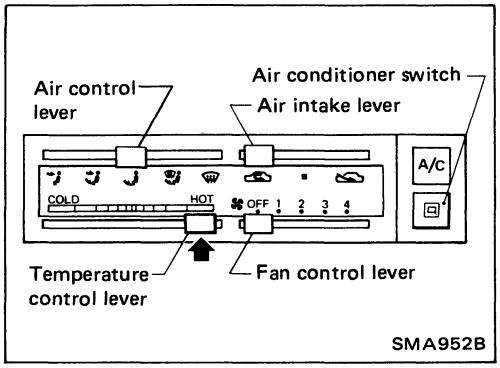

Changing Engine Coolant

WARNING:
To avoid being scalded, never change the coolant when the engine is hot.

1. Move heater "TEMP" control lever all the way to "HOT" position.

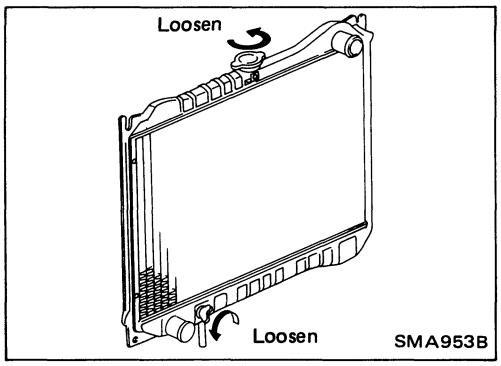

2. Open drain cock at the bottom of radiator, and remove radiator cap.

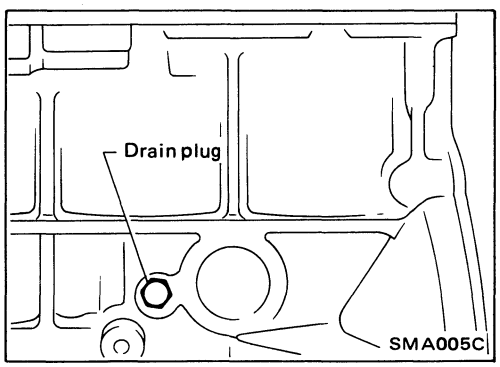

3. Remove cylinder block drain plug.
4. Close drain cock and tighten drain plug securely.
- **Apply sealant to the thread of drain plug.**
  [O]: 34 - 44 N•m
  (3.5 - 4.5 kg-m, 25 - 33 ft-lb)
5. Open air relief plug.
6. Fill radiator with water and close air relief plug and radiator cap.
7. Run engine and warm it up sufficiently.
8. Race engine 2 or 3 times under no-load.
9. Stop engine and wait until it cools down.
10. Drain water.
11. Repeat step 2 through step 10 until clear water begins to drain from radiator.

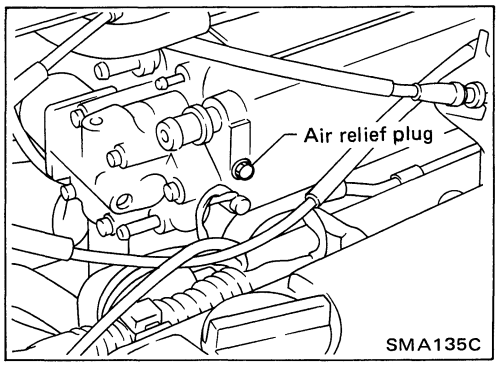

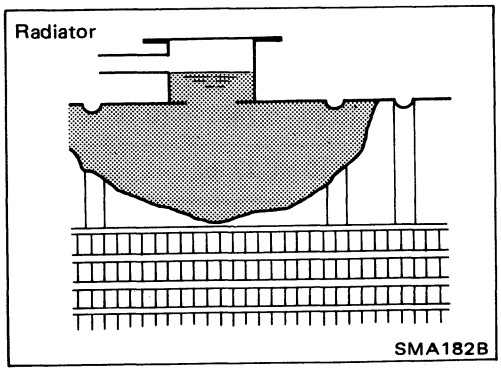

12. Open radiator cap and air relief plug.
13. Fill radiator with coolant up to specified level.
    Follow instructions attached to anti-freeze container for mixing ratio of anti-freeze to water.
    Coolant capacity (With reservoir tank):
    7.4 ℓ (7-7/8 US qt, 6-1/2 Imp qt)

Pour coolant through coolant filler neck slowly to allow air in system to escape.

Changing Engine Coolant (Cont'd)

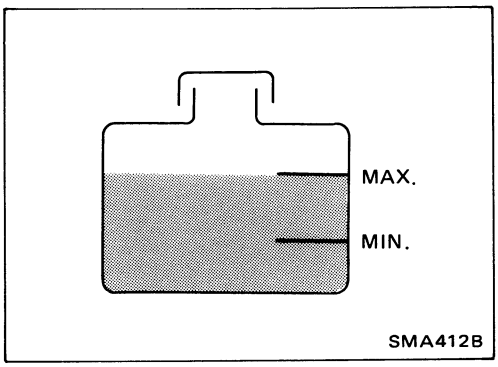

14. Close air relief plug.
15. Remove reservoir tank, drain coolant, then clean reservoir tank.
16. Install reservoir tank and fill it with coolant up to "MAX" level and then install radiator cap.
17. Run engine and warm it up sufficiently.
18. Race engine 2 or 3 times under no-load.
19. Stop engine and cool it down, then add coolant as necesary.

Checking Fuel Lines

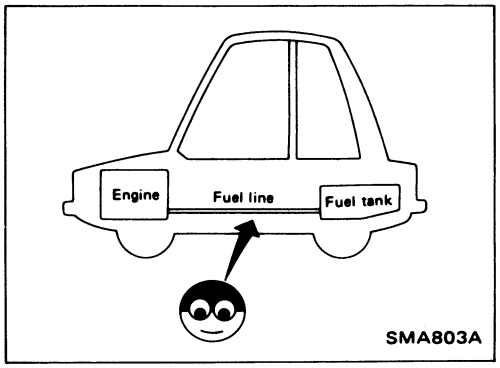

Inspect fuel lines and tank for improper attachment and for leaks, cracks, damage, loose connections, chafing and deterioration.
If necessary, repair or replace faulty parts.

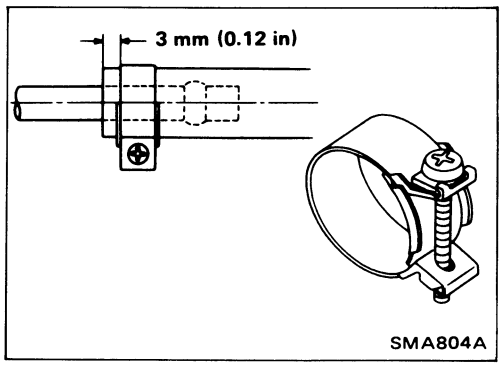

CAUTION:
Tighten high-pressure rubber hose clamp so that clamp end is 3 mm (0.12 in) from hose end.
Ensure that screw does not contact adjacent parts.

Changing Fuel Filter

WARNING:
Before removing fuel filter, release fuel pressure from fuel line.

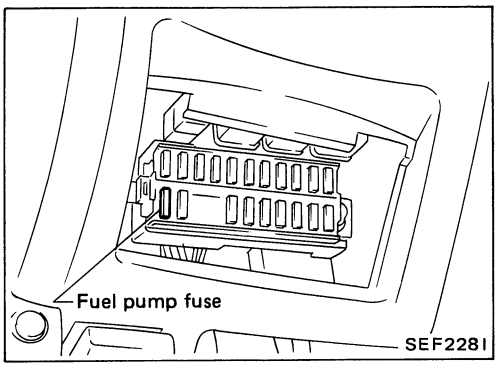

1. Remove fuse for fuel pump.
2. Start engine.
3. After engine stalls, crank engine two or three times to make sure that fuel pressure is released.
4. Turn ignition switch off and install fuse for fuel pump.

Checking Fuel Filter (Cont'd)

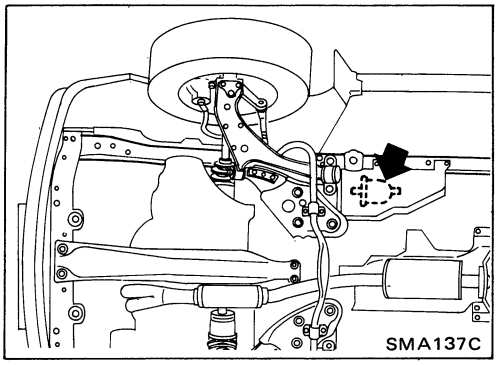

5. Loosen fuel hose clamps.
6. Replace fuel filter.

- **Use a high-pressure type fuel filter. Do not use a synthetic resinous fuel filter.**
- **When tightening fuel hose clamps, refer to "Checking Fuel Lines".**

Changing Air Cleaner Filter

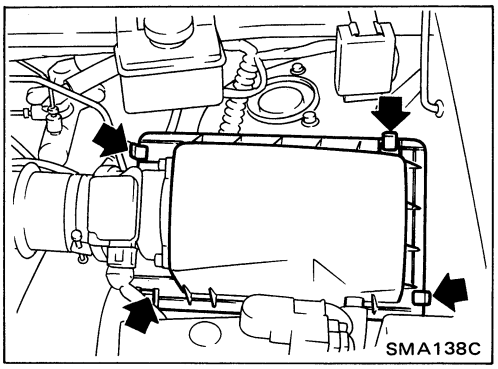

The viscous paper type filter does not need cleaning between renewals.

Changing Engine Oil

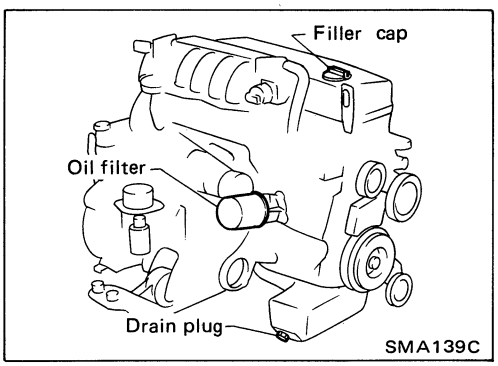

WARNING:

Be careful not to burn yourself, as the engine oil is hot.

1. Warm up engine, and check for oil leakage from engine components.
2. Remove drain plug and oil filler cap.
3. Drain oil and refill with new engine oil.

Refill oil capacity (Approximate):

Unit: liter (US qt, Imp qt)

With oil filter change	3.5 (3-3/4, 3-1/8)
Without oil filter change	3.2 (3-3/8, 2-7/8)

CAUTION:

- **Be sure to clean drain plug and install with new washer.**
  Drain plug:
  [O]: 29 - 39 N•m
  (3.0 - 4.0 kg-m, 22 - 29 ft-lb)
- **Use recommended engine oil.**

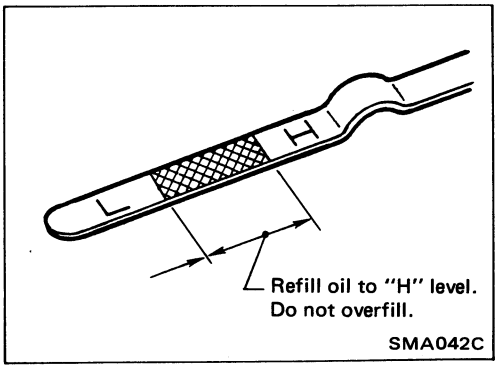

4. Check oil level.
5. Start engine and check area around drain plug and oil filter for oil leakage.
6. Run engine for a few minutes, then turn it off. After several minutes, check oil level.

Changing Oil Filter

1. Remove oil filter with a suitable tool.

WARNING:
Be careful not to burn yourself, as the engine and the engine oil are hot.

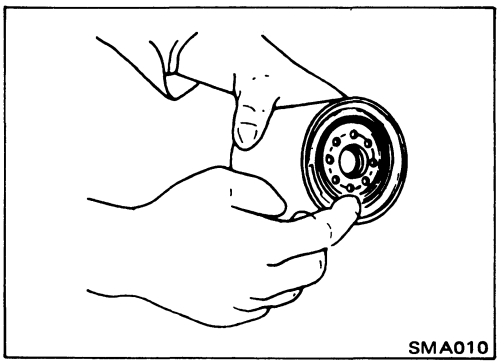

2. Before installing new oil filter, clean the oil filter mounting surface on cylinder block, and coat the rubber seal of oil filter with a little engine oil.

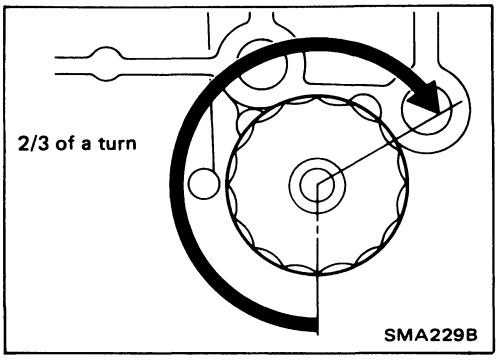

3. Screw in the oil filter until a slight resistance is felt, then tighten additionally more than 2/3 turn.
4. Add engine oil.

Refer to Changing Engine Oil.

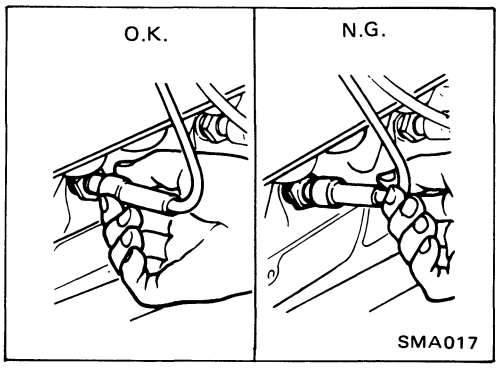

Changing Spark Plugs

1. Disconnect ignition wires from spark plugs at boot.
   Do not pull on the wire.

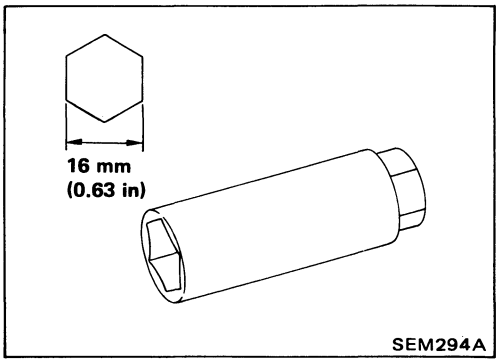

2. Remove spark plugs with spark plug wrench.

Spark plug:
- **Standard type**
  - **ZFR5E-11**
- **Hot type**
  - **ZFR4E-11**
- **Cold type**
  - **ZFR6E-11**

Changing Spark Plugs (Cont'd)

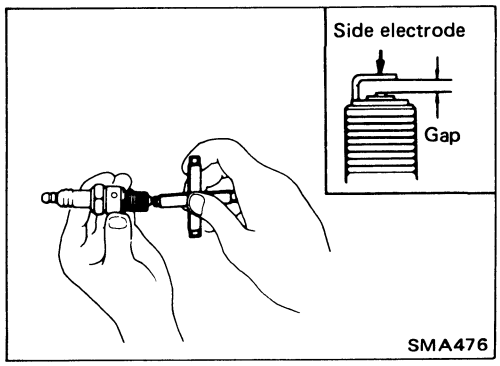

3. Check plug gap of each new spark plug.
   Gap: 1.0 - 1.1 mm (0.039 - 0.043 in)
4. Install spark plugs. Reconnect ignition wires according to nos. indicated on them.
   Spark plug:
   [O]: 20 - 29 N•m
   (2.0 - 3.0 kg-m, 14 - 22 ft-lb)

Checking Vapor Lines

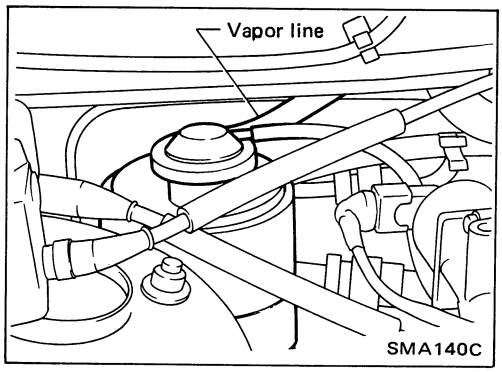

1. Visually inspect vapor lines for improper attachment and for cracks, damage, loose connections, chafing and deterioration.
2. Inspect vacuum relief valve of fuel tank filler cap for clogging, sticking, etc.
   Refer to EVAPORATIVE EMISSION CONTROL SYSTEM INSPECTION in EF & EC section.

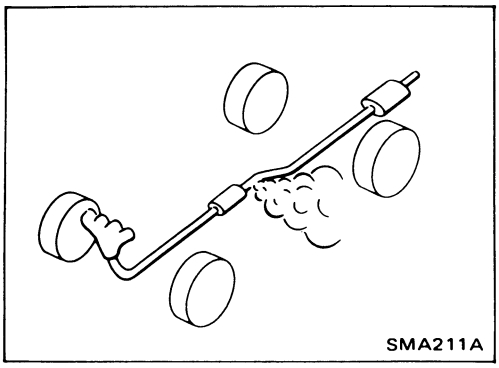
SMA211A

Checking Exhaust System

Check exhaust pipes, muffler and mounting for improper attachment and for leaks, cracks, damage, loose connections, chafing and deterioration.

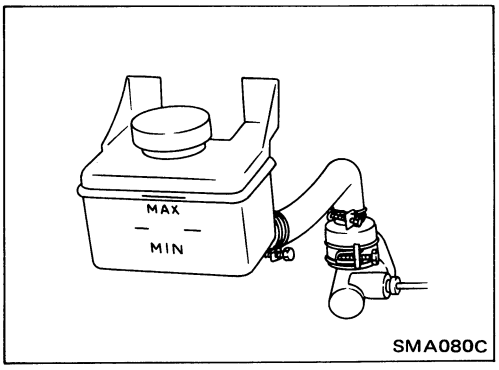

SMA080C

Checking Clutch Fluid Level and Leaks

If fluid level is extremely low, check clutch system for leaks.

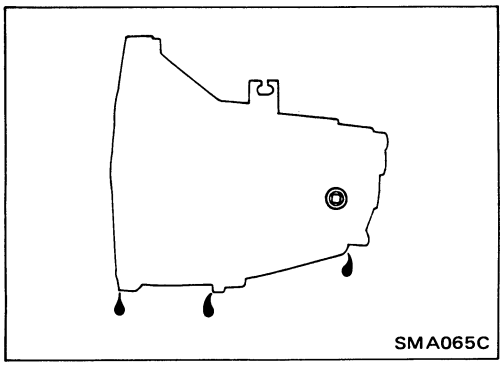
SMA065C

Checking M/T Oil

1. Check for oil leaks.

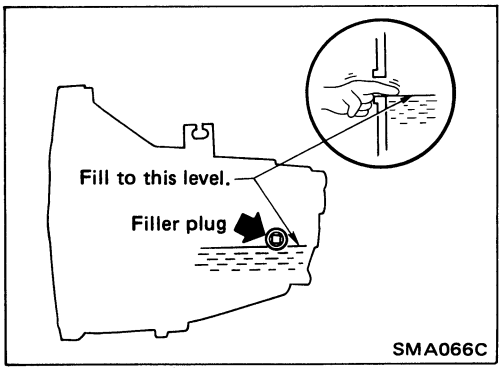

SMA066C

2. Check oil level.

Never start engine while checking oil level.

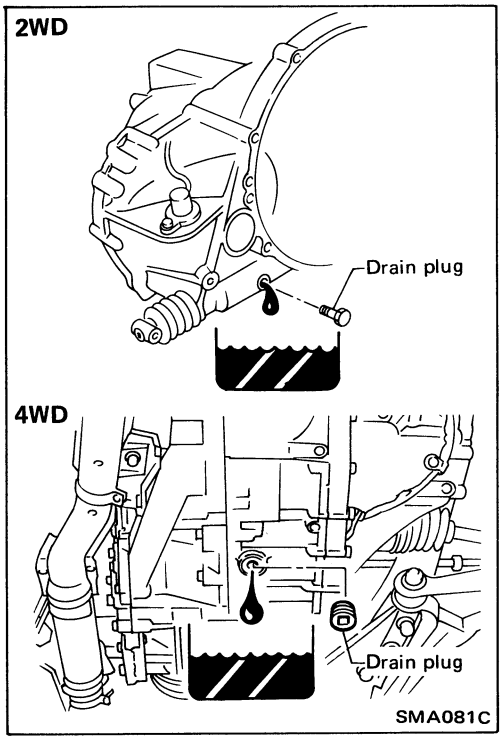

Changing M/T Oil

Oil capacity:
4.7 liters (10 US pt, 8-1/4 Imp pt)

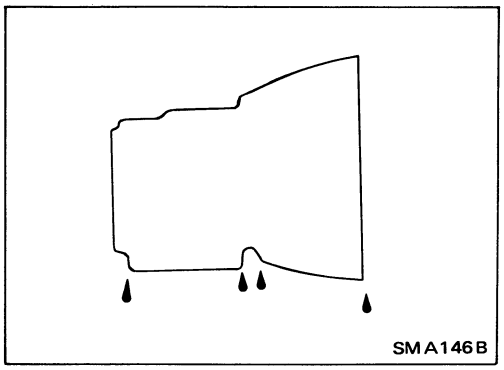

Checking A/T Fluid

1. Check for fluid leakage.

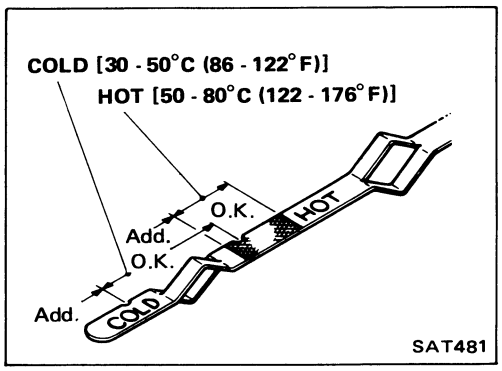

2. Check fluid level.
   Fluid level should be checked using "HOT" range on dipstick at fluid temperatures of 50 to 80°C (122 to 176°F) after vehicle has been driven approximately 5 minutes in urban areas after engine is warmed up. But it can be checked at fluid temperatures of 30 to 50°C (86 to 122°F) using "COLD" range on dipstick for reference after engine is warmed up and before driving. However, fluid level must be rechecked using "HOT" range.
   1) Park vehicle on level surface and set parking brake.
   2) Start engine and then move selector lever through each gear range, ending in "P".
   3) Check fluid level with engine idling.
   4) Remove dipstick and wipe it clean with lint-free paper.
   5) Re-insert dipstick into charging pipe as far as it will go.
   6) Remove dipstick and note reading. If level is at low side of either range, add fluid to the charging pipe.

Do not overfill.

Checking A/T Fluid (Cont'd)

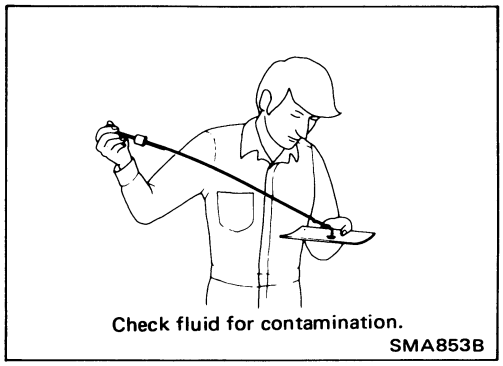
Check fluid for contamination.
SMA853B

3. Check fluid condition.
   Check fluid for contamination. If fluid is very dark or smells burned, or contains frictional material (clutches, band, etc.), check operation of A/T.
   Refer to section AT for checking operation of A/T.

Changing A/T Fluid

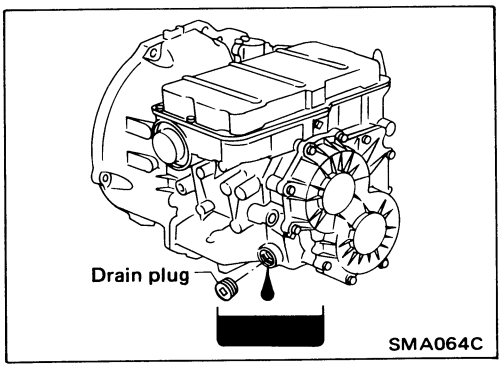

SMA064C

Oil capacity (With torque converter):
7.4 liters (7-7/8 US qt, 6-1/2 Imp qt)

Checking Transfer Oil Level

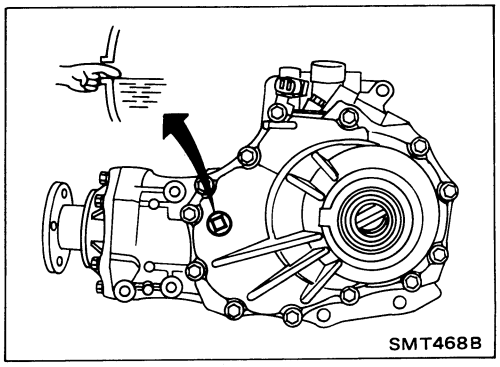
SMT468B

Never start engine while checking oil level.

1. Check for oil leaks.
2. Check oil level.

Changing Transfer Oil

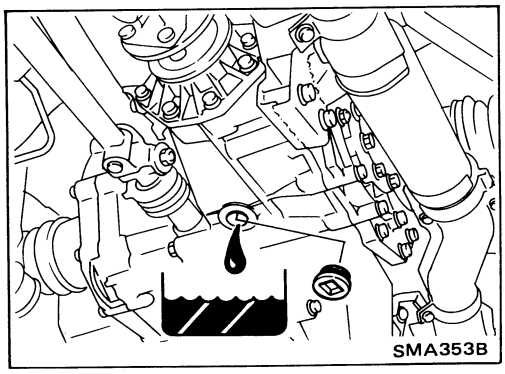
SMA353B

Oil capacity:
1.6 liters (1-3/4 US qt, 1-3/8 Imp qt)

Checking Differential Gear Oil

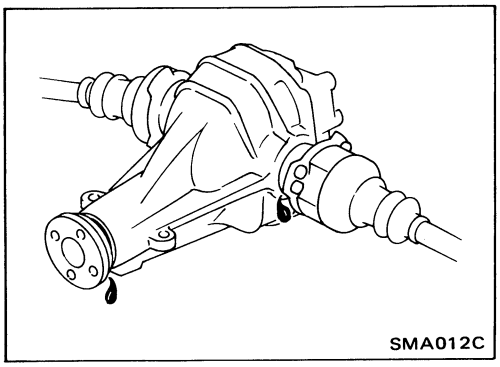
SMA012C

1. Check differential carrier for oil leakage.

Checking Differential Gear Oil (Cont'd)

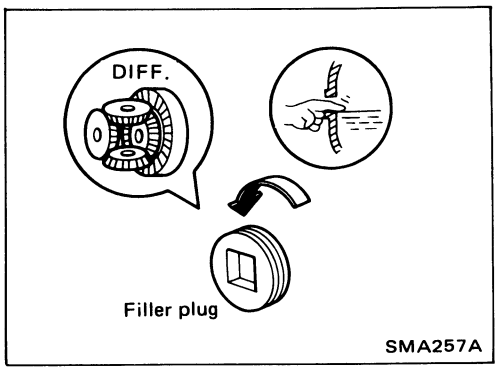

2. If leakage is found, check oil level.

Changing Differential Gear Oil

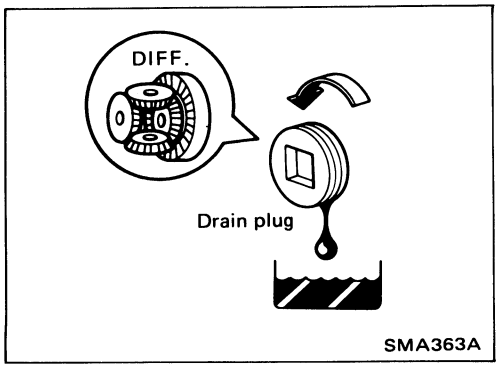

1. Drain oil and refill with new gear oil.
2. Check oil level.
   Oil capacity:
   1.0 liters (2-1/8 US pt, 1-3/4 Imp pt)

Checking Brake Fluid Level and Leaks

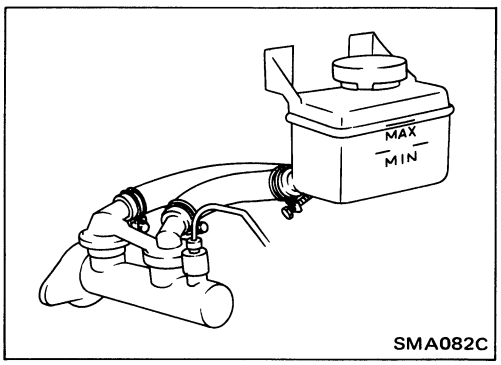

If fluid level is extremely low, check brake system for leaks.

Checking Brake Lines and Cables

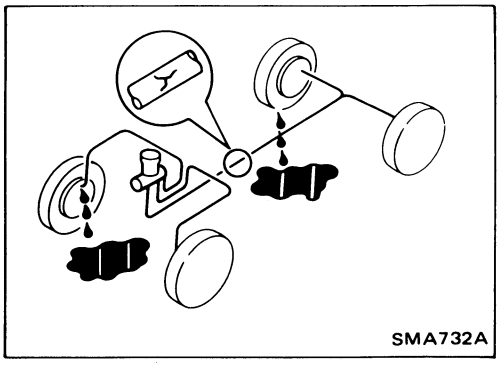

Check brake fluid lines and parking brake cables for improper attachment and for leaks, chafing, abrasions, deterioration, etc.

Checking Disc Brake

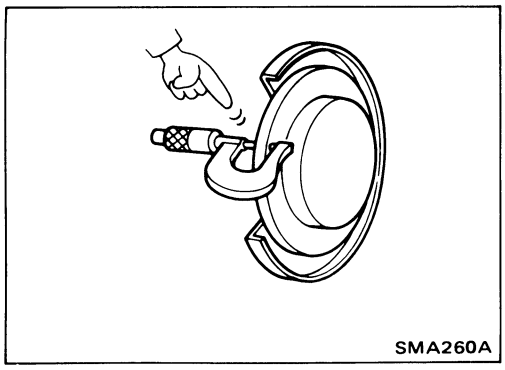

Check condition of disc brake components.

ROTOR

Check condition and thickness.

Standard thickness:
22.0 mm (0.866 in)
Minimum thickness:
20.0 mm (0.787 in)

Checking Disc Brake (Cont'd)

CALIPER

Check operation and for leakage.

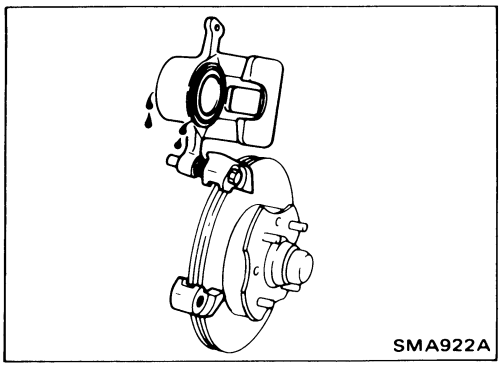
SMA922A

PAD

Check for wear or damage.

Standard thickness:
11.0 mm (0.433 in)
Minimum thickness:
2.0 mm (0.079 in)

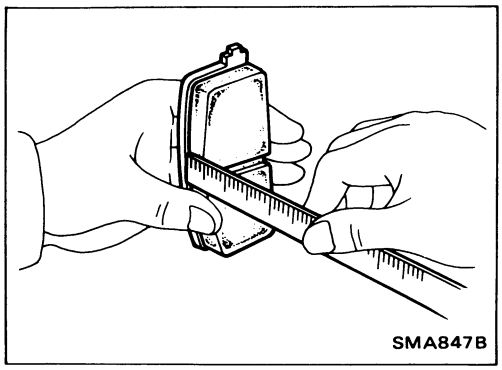
SMA847B

Checking Drum Brake

Check condition of drum brake components.

WHEEL CYLINDER

Check operation and for leakage.

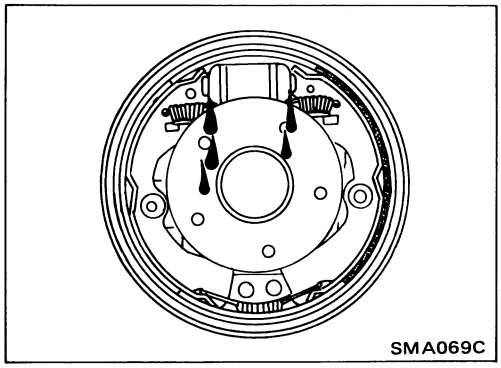
SMA069C

DRUM

Check condition of inner surface.

2WD 5 passengers:
Standard inner diameter
228.6 mm (9 in)
Maximum diameter
230.0 mm (9.06 in)
4WD and 2WD 7 passengers:
Standard inner diameter
260.0 mm (10.24 in)
Maximum diameter
261.5 mm (10.30 in)

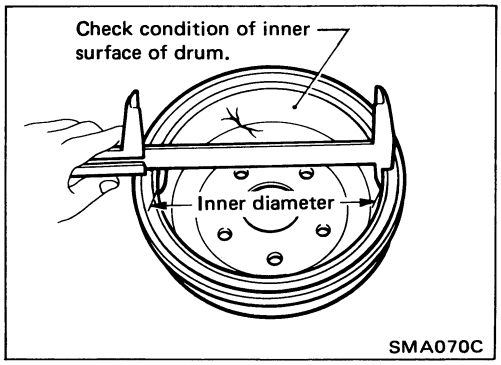

SMA070C

LINING

Check for wear or damage.

Standard thickness:
4.5 mm (0.177 in)
Minimum thickness:
1.5 mm (0.059 in)

Refer to section BR for shoe replacement.

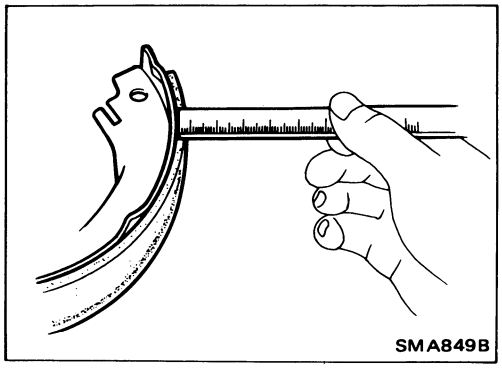
SMA849B

Checking Drum Brake (Cont'd)

TEMPORARY METHOD FOR CHECKING LINING WEAR

Remove inspection hole plug and check for lining wear.

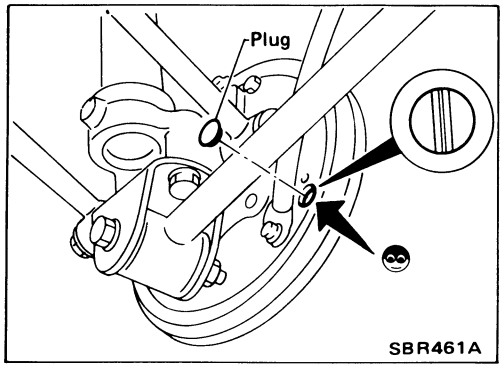

Balancing Wheels

- Adjust wheel balance using road wheel center.
  Wheel balance (Maximum allowable unbalance at rim flange):
  Refer to S.D.S.
  Tire balance weight: Refer to S.D.S.

Tire Rotation

Wheel nuts:
[O]: 98 - 118 N•m (10.0 - 12.0 kg-m, 72 - 87 ft-lb)

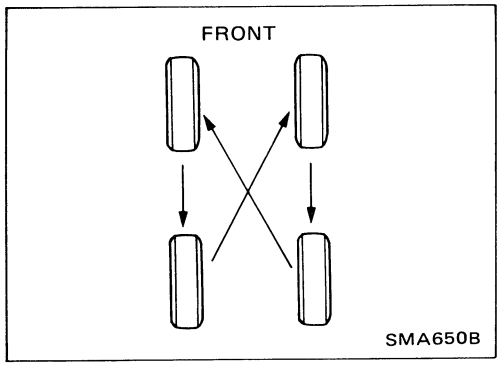

Checking Steering Gear and Linkage

STEERING GEAR

- Check gear housing and boots for looseness, damage or grease leakage.
- Check connection with steering column for looseness.

STEERING LINKAGE

- Check ball joint, dust cover and other component parts for looseness, wear, damage or grease leakage.

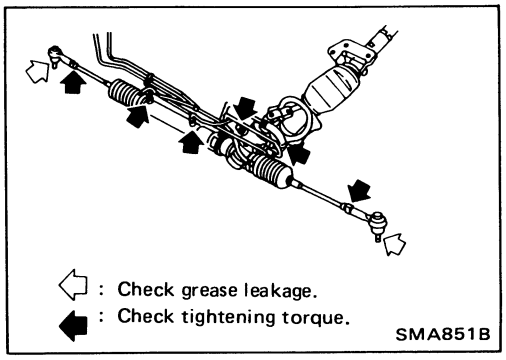

Checking Power Steering Fluid and Lines

- Check fluid level.
- Fluid level should be checked using "HOT" range on dipstick at fluid temperatures of 50 to 80°C (122 to 176°F) or using "COLD" range on dipstick at fluid temperatures of 0 to 30°C (32 to 86°F).

CAUTION:

- **Do not overfill.**
- **Recommended fluid is Automatic Transmission Fluid "DEXRON™ Type".**

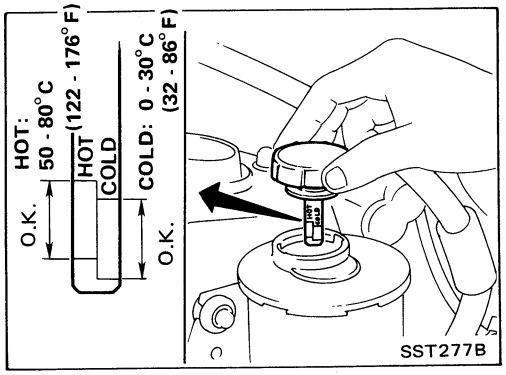

Checking Power Steering Fluid and Lines (Cont'd)

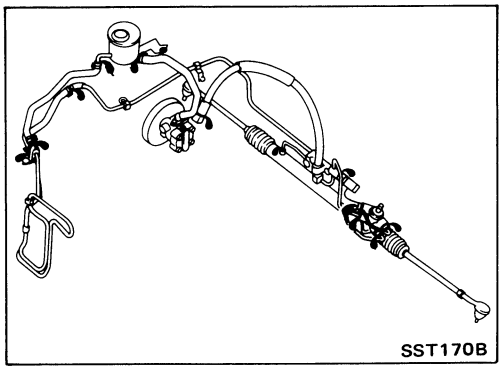

- Check lines for improper attachment, leaks, cracks, damage, loose connections, chafing and deterioration.

Checking Water Entry

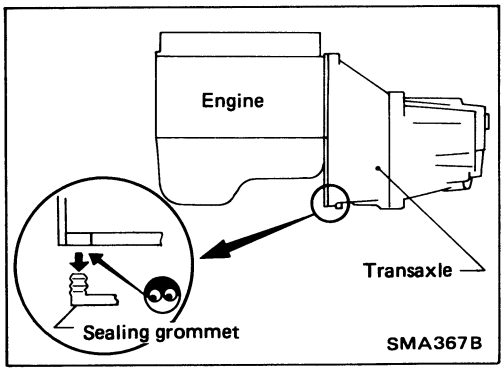

Check water entry in the clutch housing by removing the sealing grommet, whenever driving in deep water or mud.

Body

LUBRICATING HOOD LATCHES, LOCKS, HINGES, SLIDE DOOR ROLLERS AND LINKS

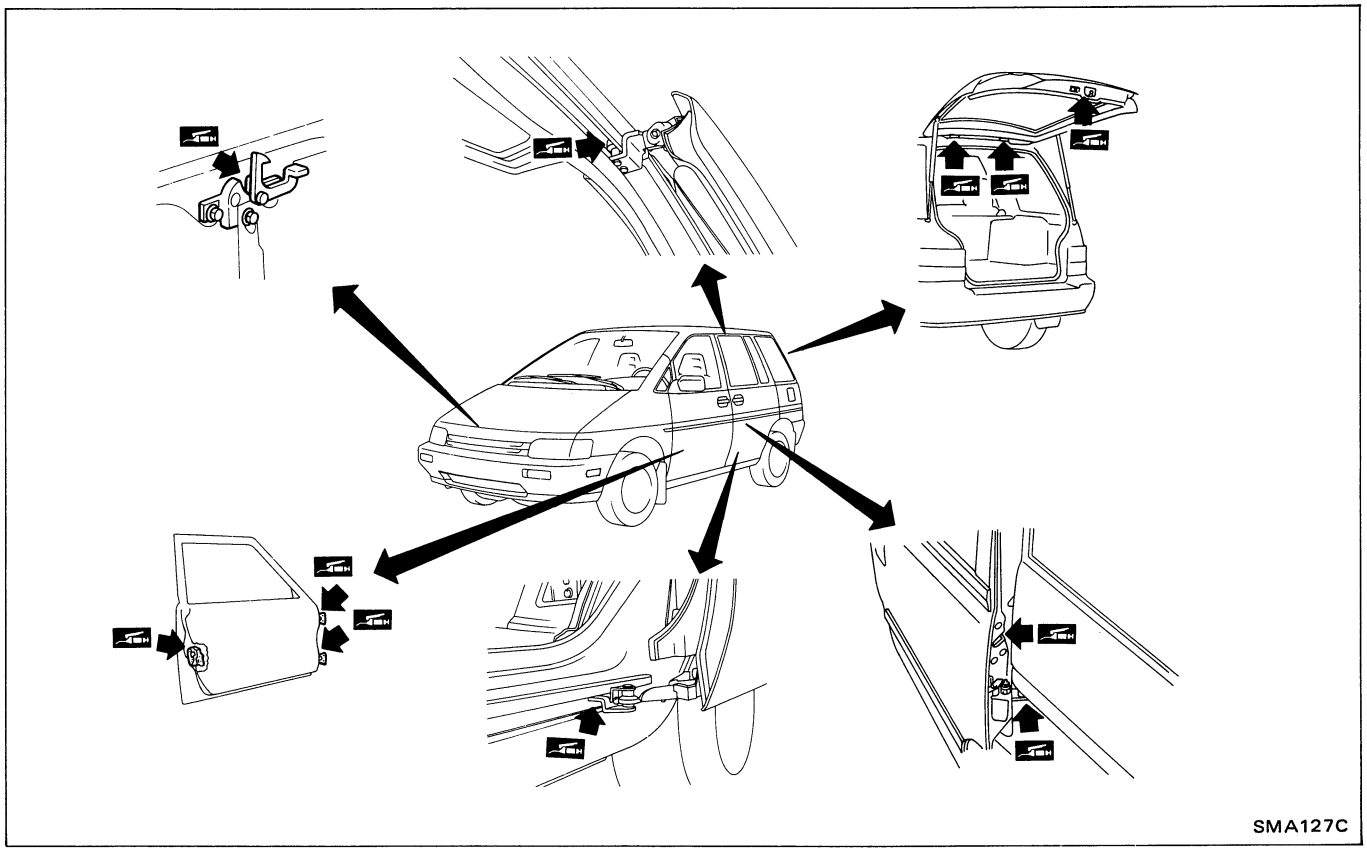

CHECKING SEAT BELTS, BUCKLES, RETRACTORS, ANCHORS AND ADJUSTERS

CAUTION:

1. **All seat belt assemblies, including retractors and attaching hardwares such as guide rail set, etc., should be inspected after any collision. Nissan recommends that all seat belt assemblies in use during a collision be replaced unless the collision was minor and the belts show no damage and continue to operate properly. Seat belt assemblies not in use during a collision should also be inspected and replaced if either damage or improper operation is noted.**
2. **If the condition of any component of seat belt assembly is questionable, do not have it repaired, but replaced as seat belt assembly.**
3. **If webbing is cut, frayed, or damaged, replace belt assembly.**
4. **Do not spill drinks, oil, etc. on inner lap belt buckle. Never oil tongue and buckle.**
5. **Use a NISSAN genuine seat belt assembly.**

For automatic seat belt details, refer to BF section.

Anchor bolt
43 - 55
(4.4 - 5.6, 32 - 41)

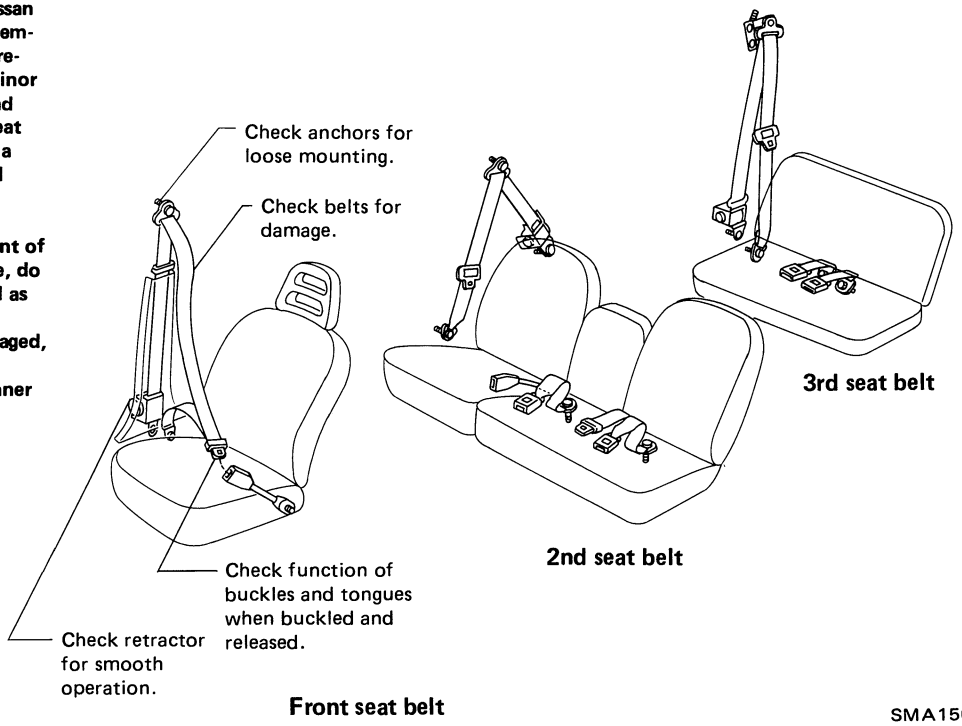

Engine Maintenance

INSPECTION AND ADJUSTMENT

Drive belt deflection

Unit: mm (in)

	Used belt deflection		Set deflection of new belt
	Limit	Adjusted deflection	
Alternator Power steering oil pump	8 (0.31)	6 - 7 (0.24 - 0.28)	5 - 6 (0.20 - 0.24)
Air conditioner compressor	8 (0.31)	5 - 6 (0.20 - 0.24)	4 - 5 (0.16 - 0.20)
Applied pushing force	98 N (10 kg, 22 lb)		

Oil capacity (Refill)

Unit: ℓ (US qt, Imp qt)

With oil filter	3.5 (3-3/4, 3-1/8)
Without oil filter	3.2 (3-3/8, 2-7/8)

Coolant capacity

Unit: ℓ (US qt, Imp qt)

With reservoir tank	7.4 (7-7/8, 6-1/2)

Spark plug

Standard type	ZFR5E-11
Hot type	ZFR4E-11
Cold type	ZFR6E-11
Plug gap	1.0 - 1.1 mm (0.039 - 0.043 in)

Ignition wire

Resistance kΩ/m	Less than 30 (9.1)

TIGHTENING TORQUE

Unit	N·m	kg-m	ft-lb
Spark plug	20 - 29	2.0 - 3.0	14 - 22
Drain plug			
Engine block	34 - 44	3.5 - 4.5	25 - 33
Oil pan	29 - 39	3.0 - 4.0	22 - 29

Chassis and Body Maintenance

INSPECTION AND ADJUSTMENT

Clutch

Unit: mm (in)

Pedal free height	177 - 187 (6.97 - 7.36)
Pedal free play	1 - 3 (0.04 - 0.12)

Front axle and front suspension (Unladen)*

		2WD	4WD
Camber	degree	–25′ to 1°05′	–35′ to 55′
Caster	degree	–15′ to 1°15′	–5′ to 1°25′
Toe-in	mm (in)	0 - 4 (0 - 0.16)	0 - 4 (0 - 0.16)
(Total toe-in)	degree	0′ - 24′	0′ - 24′
Kingpin inclination	degree	13°35′ - 15°05′	13°15′ - 14°45′
Front wheel turning angle Full turn Inside/Outside	degree	37° - 41°/28° - 32°	36° - 40°/28° - 32°

* Tankful of fuel, radiator coolant and engine oil full
Spare tire, jack, hand tools, mats in designated positions

Rear axle and rear suspension (Unladen)*

		2WD	4WD
Camber	degree	–45′ to 45′	–55′ to 35′
Toe-out	mm (in)	2 - 6 (0.08 - 0.24)	0 - 4 (0 - 0.16)
(Total toe-out)	degree	12′ - 36′	0′ - 24′

* Tankful of fuel, radiator coolant and engine oil full
Spare tire, jack, hand tools, mats in designated positions

Chassis and Body Maintenance (Cont'd)

Brake

Disc brake mm (in)		
Pad		
Standard thickness	11.0 (0.433)	
Minimum thickness	2.0 (0.079)	
Rotor		
Standard thickness	22.0 (0.866)	
Minimum thickness	20.0 (0.787)	
Drum brake mm (in)		
Lining		
Standard thickness	4.5 (0.177)	
Minimum thickness	1.5 (0.059)	
Drum	2WD 5 passengers	4WD and 2WD 7 passengers
Standard diameter	228.6 (9)	260.0 (10.24)
Maximum diameter	230.0 (9.06)	261.5 (10.30)
Pedal		
Free height "H" mm (in)		
M/T	165 - 175 (6.50 - 6.89)	
A/T	174 - 184 (6.85 - 7.24)	
Free play	1 - 3 (0.04 - 0.12)	
Depressed height [Under force of 490 N (50 kg, 110 lb) with engine running]	90 (3.54) or more	
Parking brake	2WD	4WD
Number of notches [at pulling force 196 N (20 kg, 44 lb)]	10 - 11	12 - 13

Wheel balance

Wheel balance (Maximum allowable unbalance at rim flange) g (oz)	10 (0.35)
Tire balance weight g (oz)	5 - 60 (0.18 - 2.12) Spacing 5 (0.18)

Wheel bearing

	Front	Rear	
Wheel bearing axle end play mm (in)	0.05 (0.0020) or less		
Wheel bearing lock nut		2WD	4WD
Tightening torque N·m (kg-m, ft-lb)	235 - 314 (24 - 32, 174 - 231)	186 - 255 (19 - 26, 137 - 188)	235 - 314 (24 - 32, 174 - 231)

TIGHTENING TORQUE

Unit	N·m	kg-m	ft-lb
Clutch			
Pedal stopper lock nut	16 - 22	1.6 - 2.2	12 - 16
Clutch switch lock nut	12 - 15	1.2 - 1.5	9 - 11
Manual transaxle			
Filler plug	25 - 34	2.5 - 3.5	18 - 25
Drain plug 2WD	20 - 29	2.0 - 3.0	14 - 22
4WD	15 - 20	1.5 - 2.0	11 - 14
Automatic transaxle			
Drain plug	25 - 34	2.5 - 3.5	18 - 25
Transfer			
Filler plug	18 - 25	1.8 - 2.6	13 - 19
Drain plug	20 - 29	2.0 - 3.0	14 - 22
Differential gear			
Drain plug	59 - 98	6 - 10	43 - 72
Front axle and front suspension			
Tie-rod lock nut	78 - 98	8.0 - 10.0	58 - 72
Rear axle and rear suspension			
Toe adjusting pin	78 - 98	8.0 - 10.0	58 - 72
Brake system			
Air bleed valve	7 - 9	0.7 - 0.9	5.1 - 6.5
Brake lamp switch lock nut	12 - 15	1.2 - 1.5	9 - 11
Brake booster input rod lock nut	16 - 22	1.6 - 2.2	12 - 16
Wheel and tire			
Wheel nut	98 - 118	10.0 - 12.0	72 - 87

ENGINE MECHANICAL

SECTION EM

EM

CONTENTS

PRECAUTION ..... EM- 2
PREPARATION ..... EM- 3
OUTER COMPONENT PARTS ..... EM- 6
COMPRESSION PRESSURE ..... EM- 8
OIL PAN ..... EM- 9
TIMING CHAIN EM-11
OIL SEAL REPLACEMENT EM-16
CYLINDER HEAD EM-18
ENGINE REMOVAL EM-32
CYLINDER BLOCK EM-35
SERVICE DATA AND SPECIFICATIONS (S.D.S.) EM-47

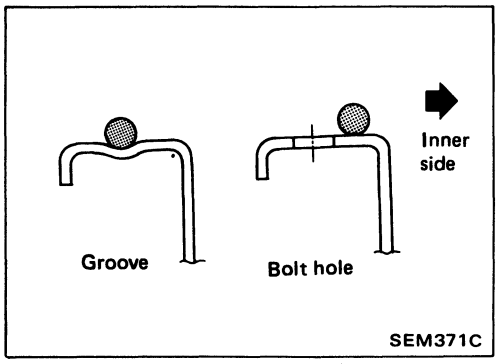

LIQUID GASKET APPLICATION PROCEDURE

a. Before applying liquid gasket, use a scraper to remove all traces of old liquid gasket from mating surface.
b. Apply a continuous bead of liquid gasket to mating surfaces. (Use Genuine Liquid Gasket or equivalent.)
   - Be sure liquid gasket is 3.5 to 4.5 mm (0.138 to 0.177 in) wide (for oil pan).
   - Be sure liquid gasket is 2.0 to 3.0 mm (0.079 to 0.118 in) wide (in areas except oil pan).
c. Apply liquid gasket to inner sealing surface around hole perimeter area.
   (Assembly should be done within 5 minutes after coating.)
d. Wait at least 30 minutes before refilling engine oil and engine coolant.

SPECIAL SERVICE TOOLS

Tool number (Kent-Moore No.) Tool name	Description	
ST0501S000 (–) Engine stand assembly ① ST05011000 (–) Engine stand ② ST05012000 (–) Base	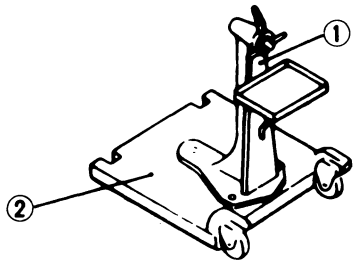	Disassembling and assembling
KV10114300 (–) Engine sub-attachment	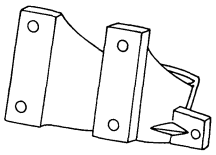	
KV101065001 (–) Engine stand shaft	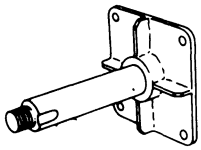	
KV101092S0 (–) Valve spring compressor ① KV10109210 (–) Compressor ② KV10109220 (–) Adapter	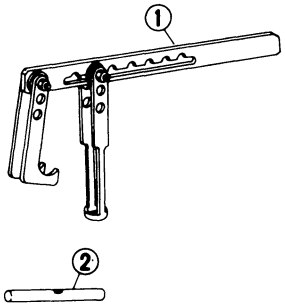	Disassembling and assembling valve components
KV109B0010 (–) Valve oil seal drift	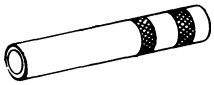	Installing valve oil seal

Tool number (Kent-Moore No.) Tool name	Description	
KV10110300 (–) Piston pin press stand assembly ① KV10110310 (–) Cap ② KV10110330 (–) Spacer ③ ST13030020 (–) Press stand ④ ST13030030 (–) Spring ⑤ KV10110340 (–) Drift ⑥ KV10110320 (–) Center shaft	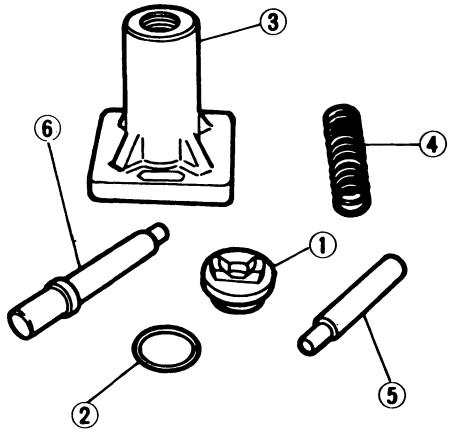	Disassembling and assembling piston with connecting rod
EM03470000 (J8037) Piston ring compressor	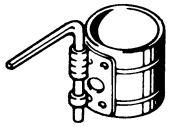	Installing piston assembly into cylinder bore
(J36467) Valve oil seal remover	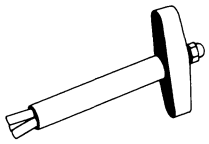	Displacement valve oil seal
KV10111100 (–) Seal cutter	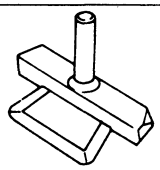	Removing oil pan
WS39930000 (–) Tube presser	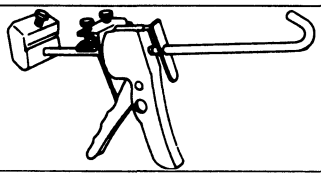	Pressing the tube of liquid gasket
ST16610001 (J23907) Pilot bushing puller	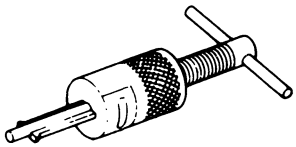	

COMMERCIAL SERVICE TOOLS

Tool name	Description
Spark plug wrench	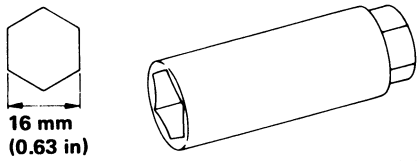 Removing and installing spark plug
Pulley holder	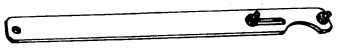 Holding camshaft pulley while tightening or loosening camshaft bolt
Valve seat cutter set	Finishing valve seat dimensions
Piston ring expander	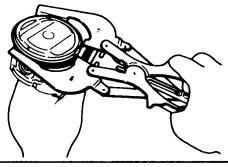 Removing and installing piston ring
Valve guide drift	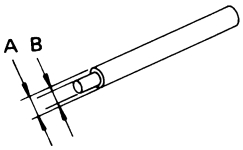 Removing and installing valve guide **Diameter:** mm (in) Intake / Exhaust A: 10.5 (0.413) / 11.5 (0.453) B: 6.6 (0.260) / 7.6 (0.299)
Valve guide reamer	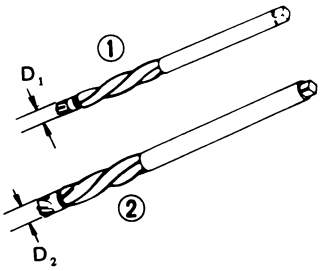 Reaming valve guide (①) or hole for oversize valve guide (②) **Diameter:** mm (in) Intake / Exhaust D_1: 7 (0.28) / 8 (0.31) D_2: 11.2 (0.441) / 12.2 (0.480)

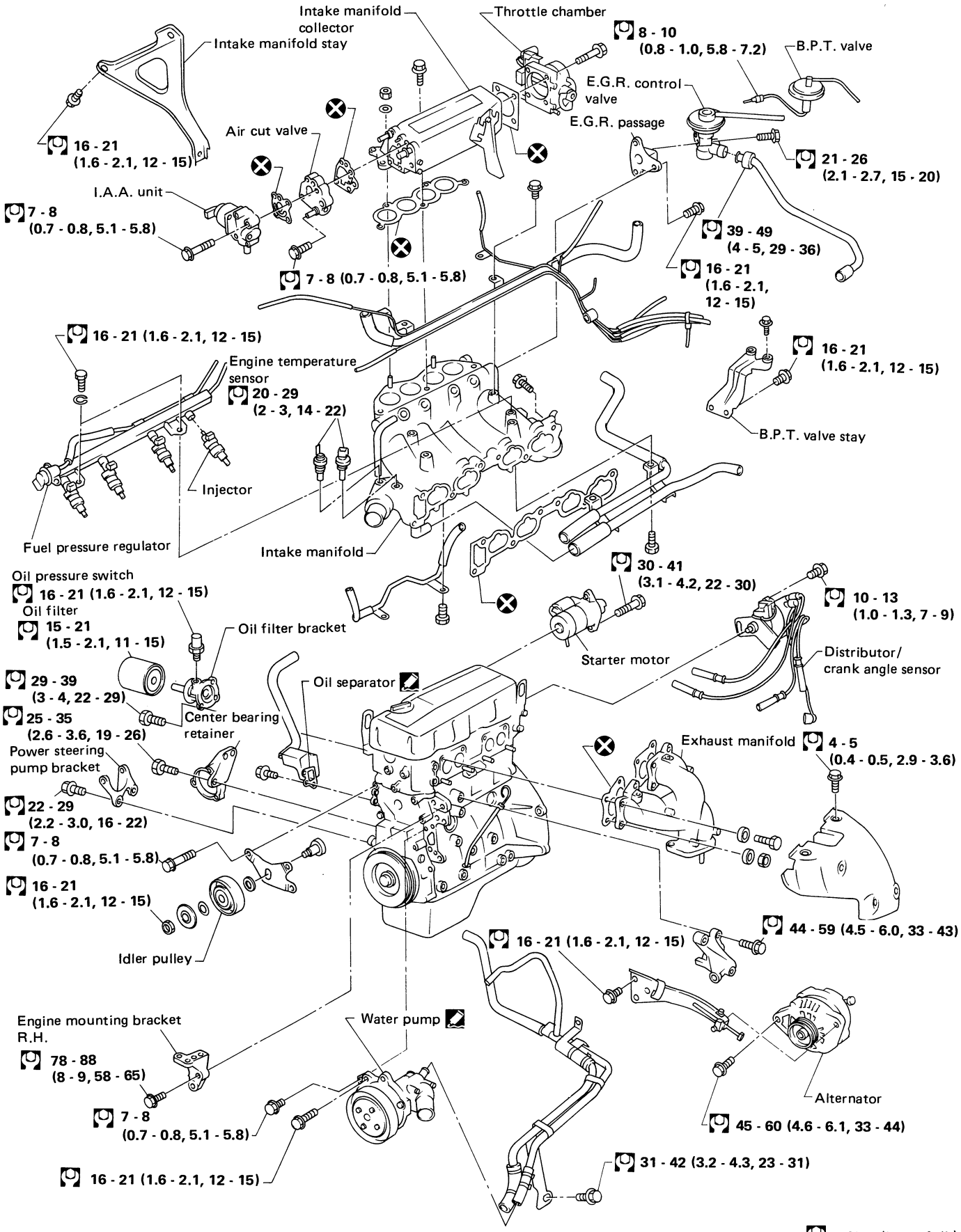

: N·m (kg-m, ft-lb)

SEM549C

Tightening Procedure of each Part

INTAKE MANIFOLD

[O]: 16 - 21 N•m (1.6 - 2.1 kg-m, 12 - 15 ft-lb)

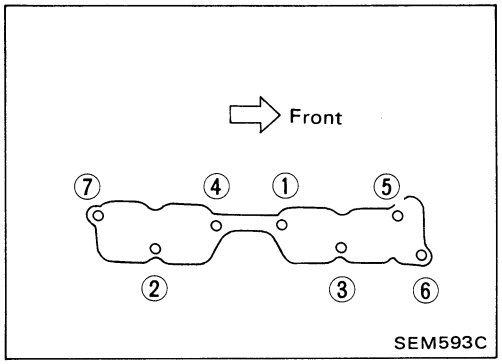

EXHAUST MANIFOLD

[O]: 16 - 21 N•m (1.6 - 2.1 kg-m, 12 - 15 ft-lb)

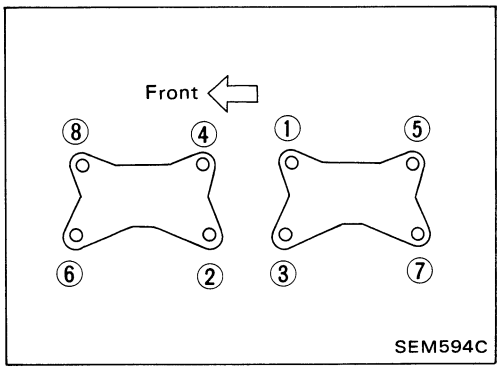

INTAKE MANIFOLD COLLECTOR

[O]: 16 - 21 N•m (1.6 - 2.1 kg-m, 12 - 15 ft-lb)

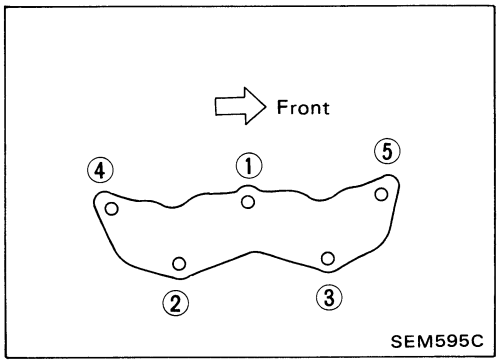

THROTTLE CHAMBER

[O]: Bolts should be tightened twice.

1st:

9 - 11 N•m (0.9 - 1.1 kg-m, 6.5 - 8.0 ft-lb)

2nd:

18 - 22 N•m (1.8 - 2.2 kg-m, 13 - 16 ft-lb)

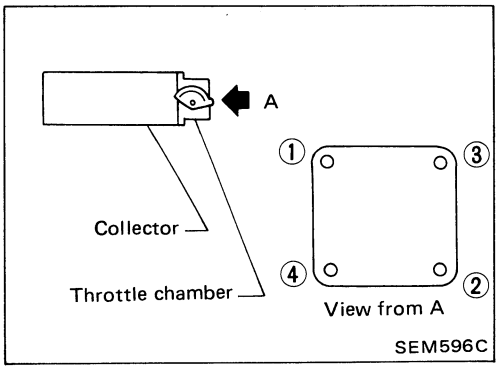

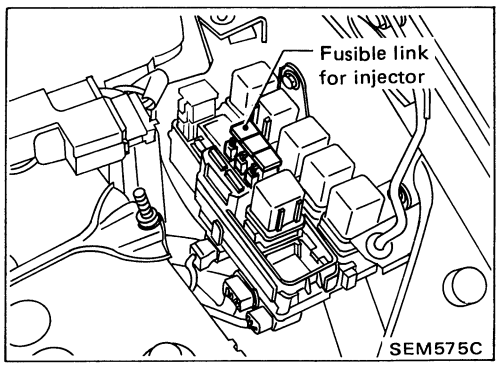

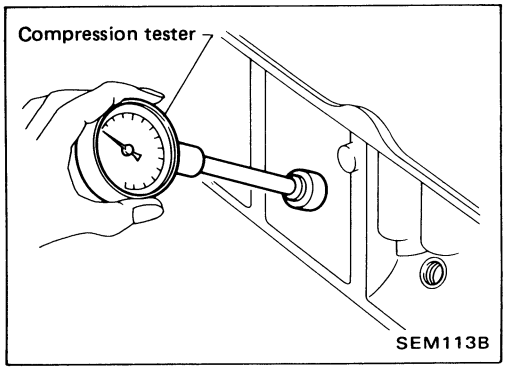

Measurement of Compression Pressure

1. Warm up engine.
2. Turn ignition switch off.
3. Disconnect fusible link for injectors.
4. Remove all spark plugs.
5. Disconnect distributor center cable.

6. Attach a compression tester to No. 1 cylinder.
7. Depress accelerator pedal fully to keep throttle valve wide open.
8. Crank engine and record highest gauge indication.
9. Repeat the measurement on each cylinder as shown above.

- **Always use a fully-charged battery to obtain specified engine revolution.**

Compression pressure:
kPa (kg/cm^2, psi)/rpm
Standard
1,206 (12.3, 175)/250
Minimum
1,010 (10.3, 146)/250
Difference limit between cylinders
98 (1.0, 14)/250

10. If cylinder compression in one or more cylinders is low, pour a small amount of engine oil into cylinders through spark plug holes and retest compression.

- **If adding oil helps compression, piston rings may be worn or damaged. If so, replace piston rings after checking piston.**
- **If pressure stays low, a valve may be sticking or seating improperly. Inspect and repair valve and valve seat. (Refer to S.D.S.) If valve or valve seat is damaged excessively, replace them.**
- **If compression in any two adjacent cylinders is low and if adding oil does not help compression, there is leakage past the gasket surface. If so, replace cylinder head gasket.**

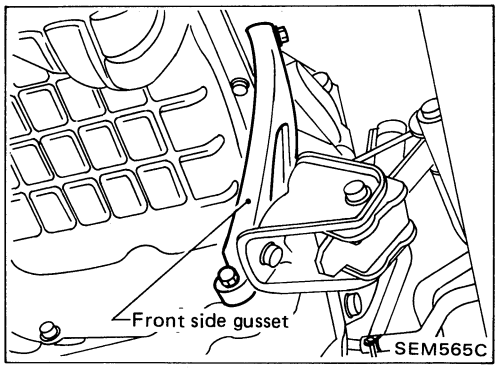

Removal

1. Remove the following parts:
- Front exhaust tube
- Front side gusset
- Center member (2WD model)
2. Remove oil pan bolts.

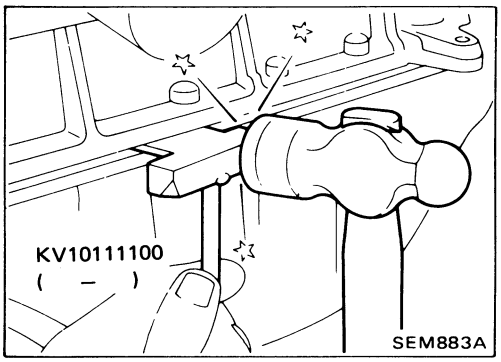

3. Remove oil pan.

(1) Insert Tool between cylinder block and oil pan.
- **Do not drive seal cutter into oil pump or rear oil seal retainer portion, or aluminum mating face will be damaged.**
- **Do not insert screwdriver, or oil pan flange will be deformed.**

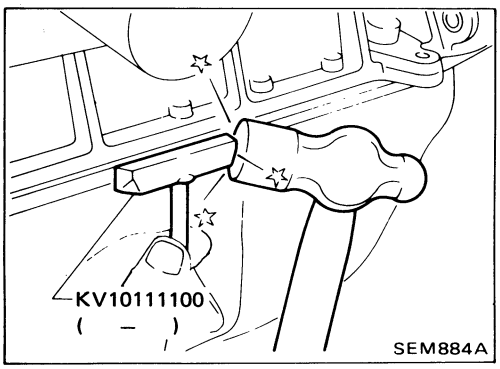

(2) Slide Tool by tapping its side with a hammer, and remove oil pan.

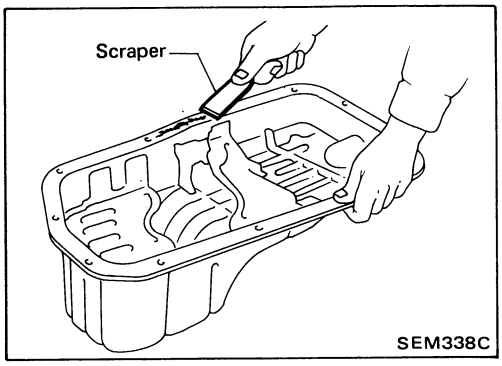

Installation

1. Before installing oil pan, remove all traces of liquid gasket from mating surface using a scraper.
- Also remove traces of liquid gasket from mating surface of cylinder block.

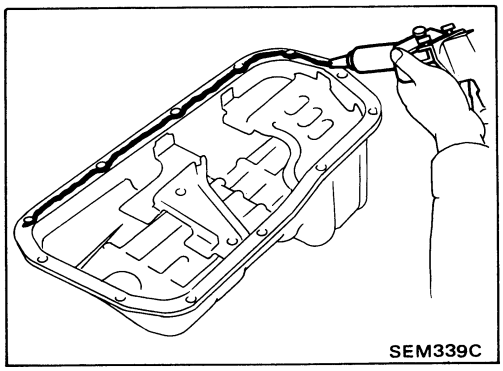

2. Apply a continuous bead of liquid gasket to mating surface of oil pan.
- **Use Genuine Liquid Gasket or equivalent.**

Installation (Cont'd)

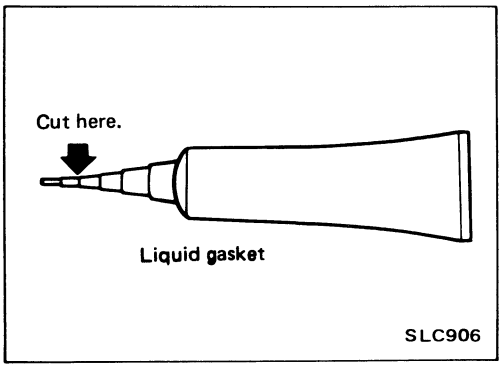

- Be sure liquid gasket is 3.5 to 4.5 mm (0.138 to 0.177 in) wide.

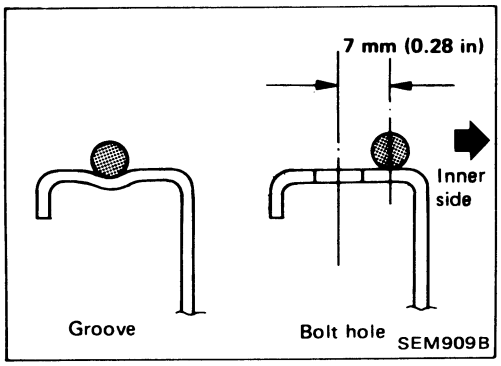

3. Apply liquid gasket to inner sealing surface as shown in figure.
- Attaching should be done within 5 minutes after coating.
4. Install oil pan.
- **Wait at least 30 minutes before refilling engine oil.**

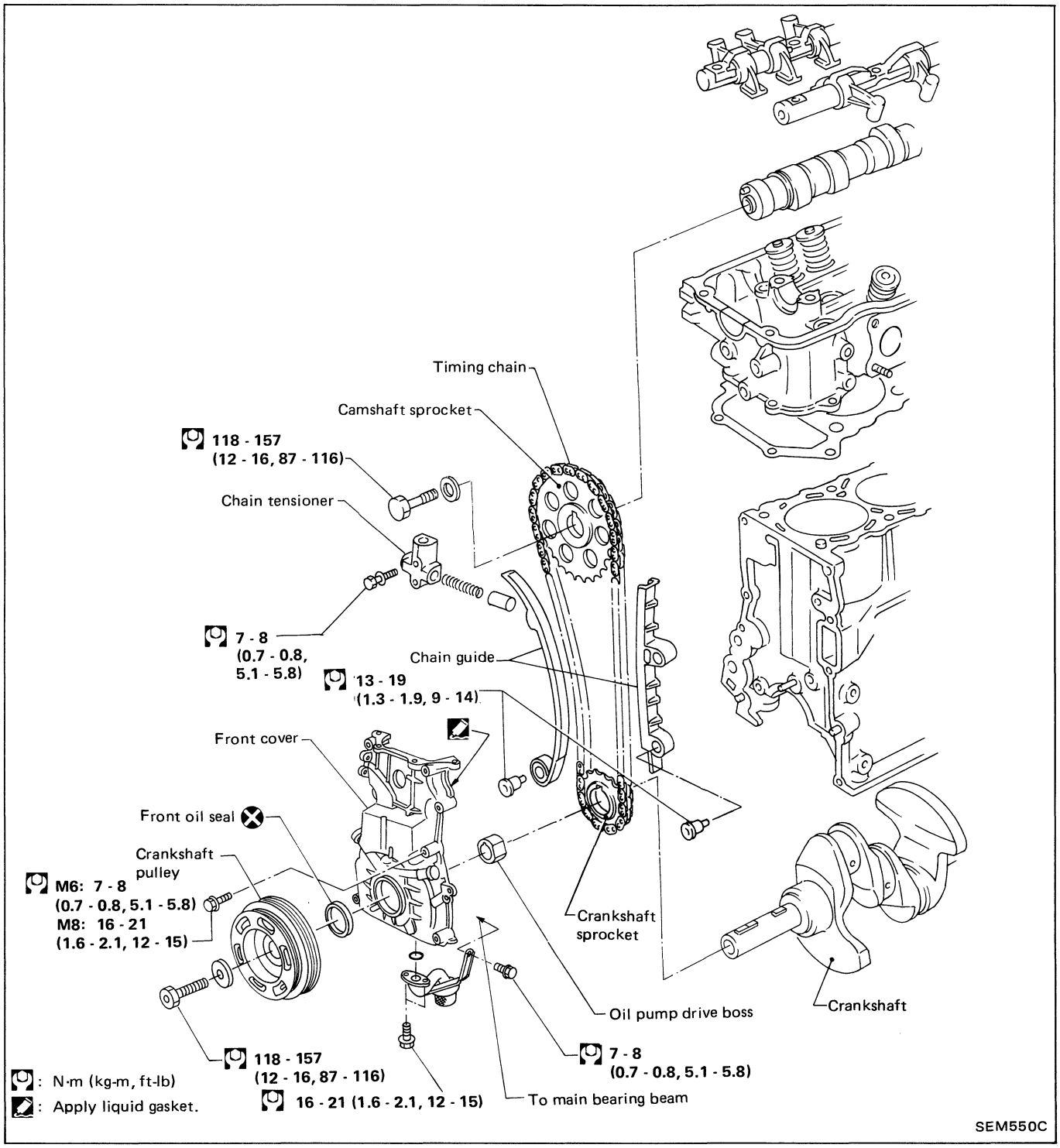

CAUTION:

- **After removing timing chain, do not turn crankshaft and camshaft separately, or valves will strike piston heads.**

Removal

1. Place wheel chocks at both front and back of rear wheels.
2. Place safety stands under designated front supporting points. Remove front right side wheel.
3. Remove dust cover and under cover.
4. Drain engie oil.

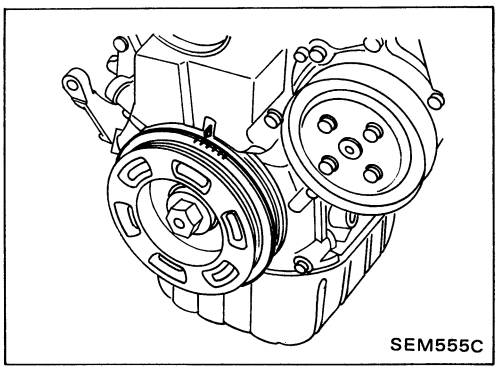

5. Set No. 1 piston at T.D.C. on its compression stroke.

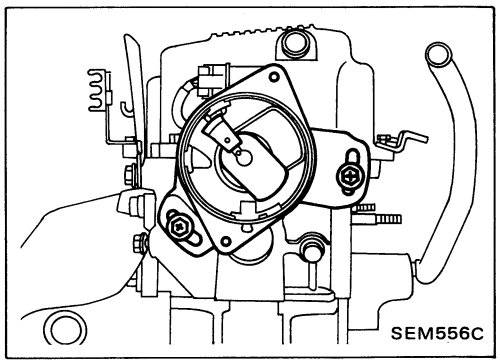

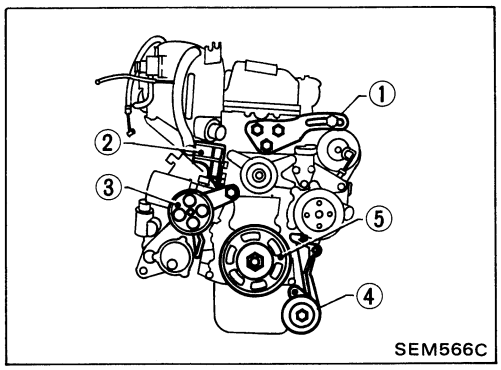

6. Remove the alternator and compressor drive belts.
7. Remove the following parts.

① Alternator and adjusting bar
② Oil separator
③ Power steering pump pulley, pump stay and bracket.
④ Compressor and bracket.
⑤ Crank shaft pulley and oil pump drive boss.

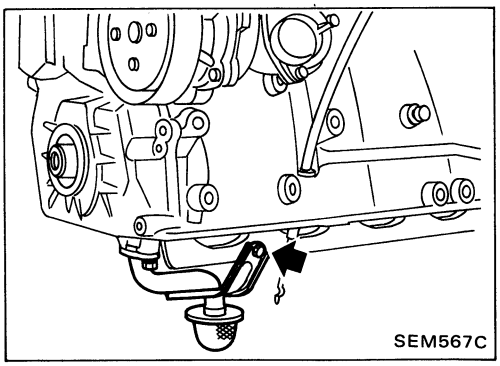

8. Remove oil pan. (Refer to OIL PAN.)
9. Remove oil strainer securing bolt.
10. Remove front cover securing bolts (cover to block and head to cover).

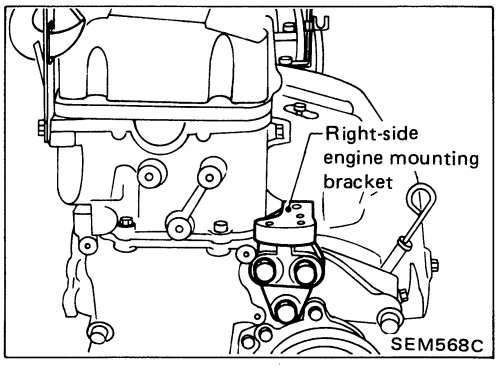

Removal (Cont'd)

11. Remove rocker cover.
12. Support engine with hoist or chain block.
13. Remove right-side engine mounting bracket and lower the engine.

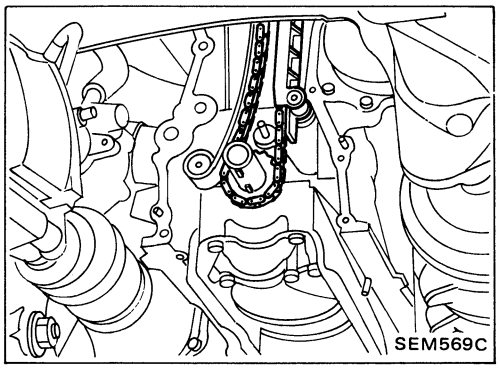

14. Remove front cover.

15. Remove the following parts:
- Chain tensioner
- Chain guides
- Timing chain and sprocket

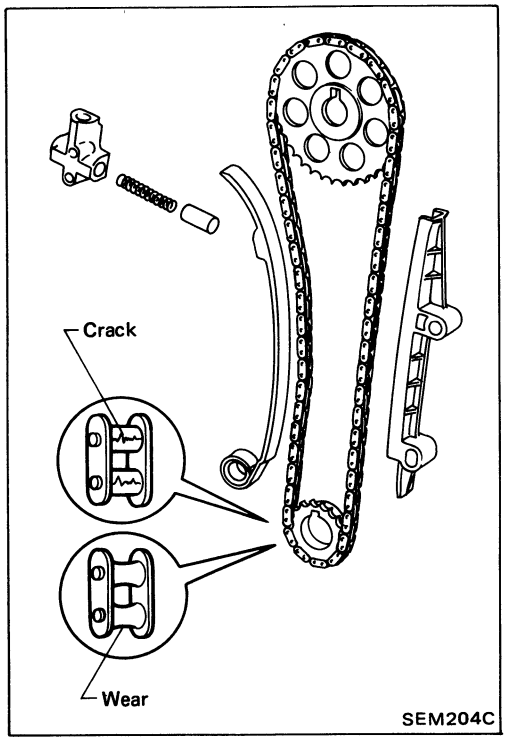

Inspection

Check for cracks and excessive wear at roller links. Replace if necessary.

Installation

1. Install crankshaft sprocket.

- **Make sure that mating marks of crankshaft sprocket face engine front.**

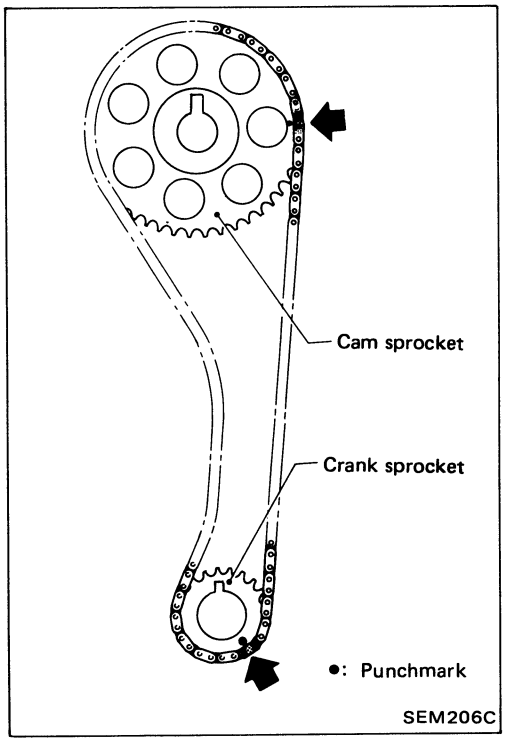

2. Install camshaft sprocket.
3. Confirm that No. 1 piston is set at T.D.C. on its compression stroke.
4. Install timing chain.

- **Set timing chain by aligning its mating marks with those of crankshaft sprocket and camshaft sprocket.**

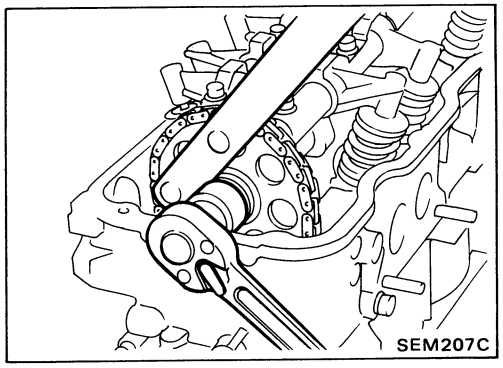

5. Tighten camshaft sprocket bolt.

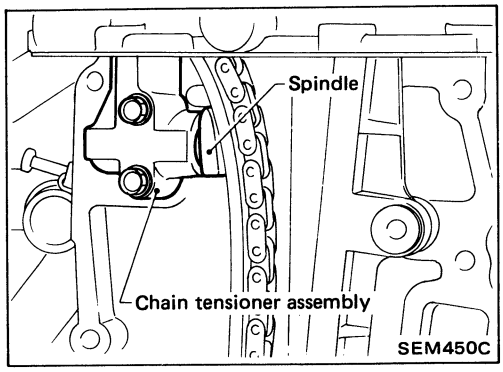

6. Install chain guide and chain tensioner.

Installation (Cont'd)

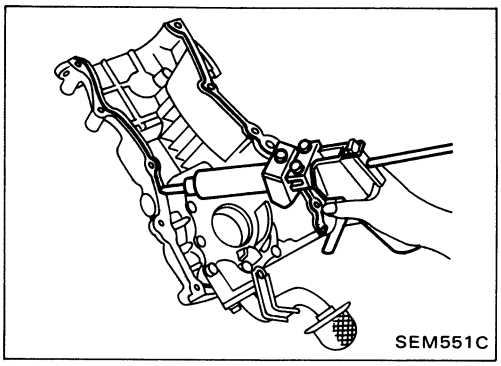

7. Apply liquid gasket to front cover.

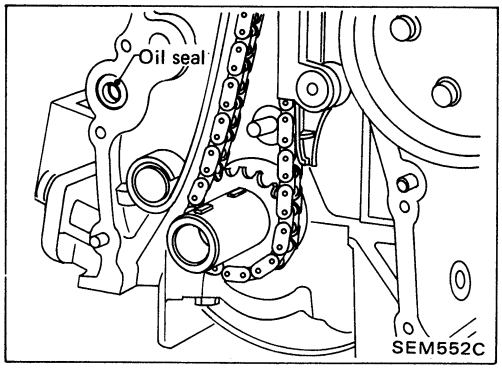

8. Install front cover.
- **Be careful not to damage cylinder head gasket.**
- **Do not forget oil seal.**

9. Install rubber plug onto cylinder head. (Refer to "Installation" of CYLINDER HEAD.)
10. Install oil pan. (Refer to OIL PAN.)
11. Install engine mounting.
12. Install any parts removed.

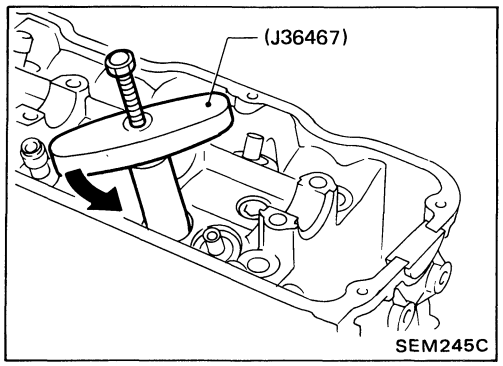

VALVE OIL SEAL

1. Remove rocker cover.
2. Remove rocker shaft assembly.
3. Remove valve spring and valve oil seal with Tool or suitable tool.

Piston concerned should be set at T.D.C. to prevent valve from falling.

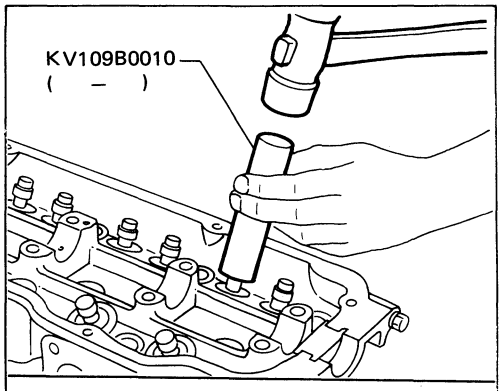

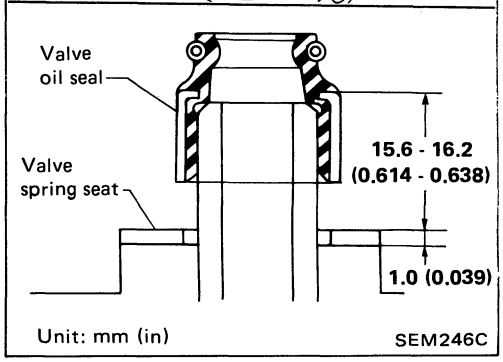

4. Apply engine oil to new valve oil seal and install it with Tool.

Before installing valve oil seal, install valve spring seat.

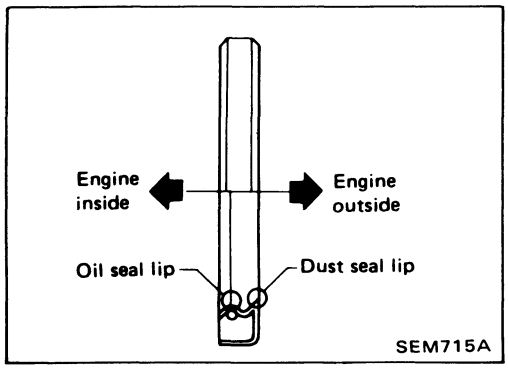

OIL SEAL INSTALLING DIRECTION

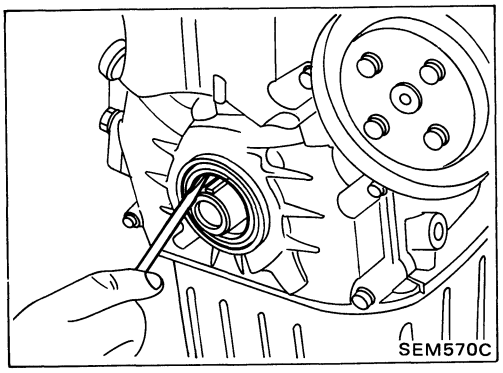

FRONT OIL SEAL

1. Remove crankshaft pulley.
2. Remove front oil seal.

Be careful not to damage crankshaft.

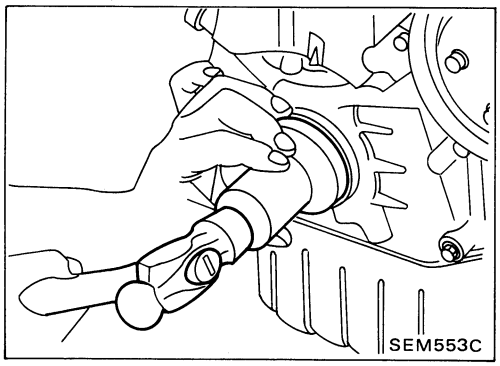

3. Apply engine oil to new oil seal and install it using suitable tool.

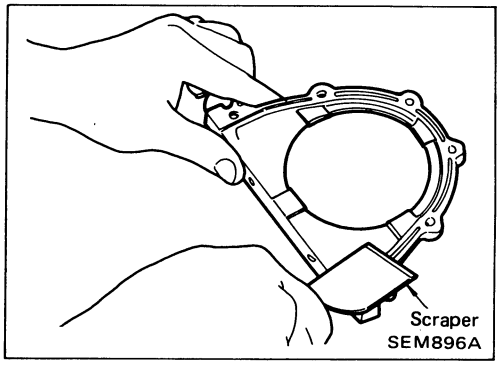

REAR OIL SEAL

1. Remove transaxle.
2. Remove flywheel or drive plate.
3. Remove rear oil seal retainer.
4. Remove traces of liquid gasket using scraper.

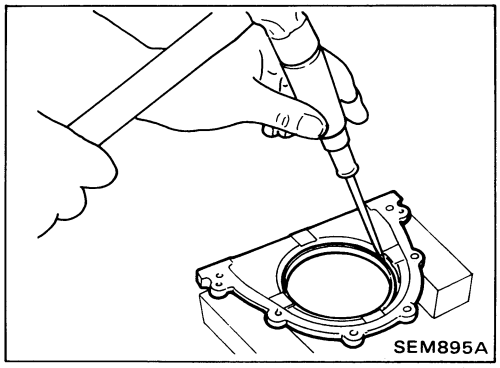

5. Remove rear oil seal from retainer.

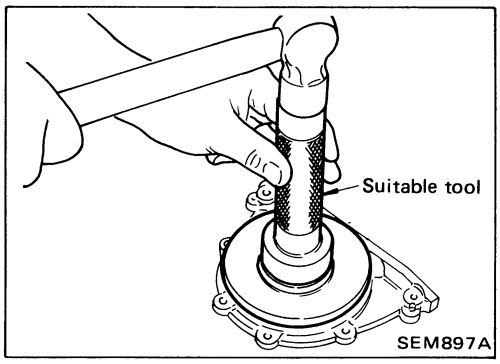

6. Apply engine oil to new oil seal and install it using suitable tool.

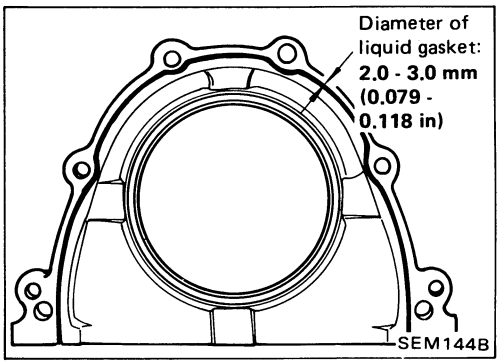

7. Apply liquid gasket to rear oil seal retainer.

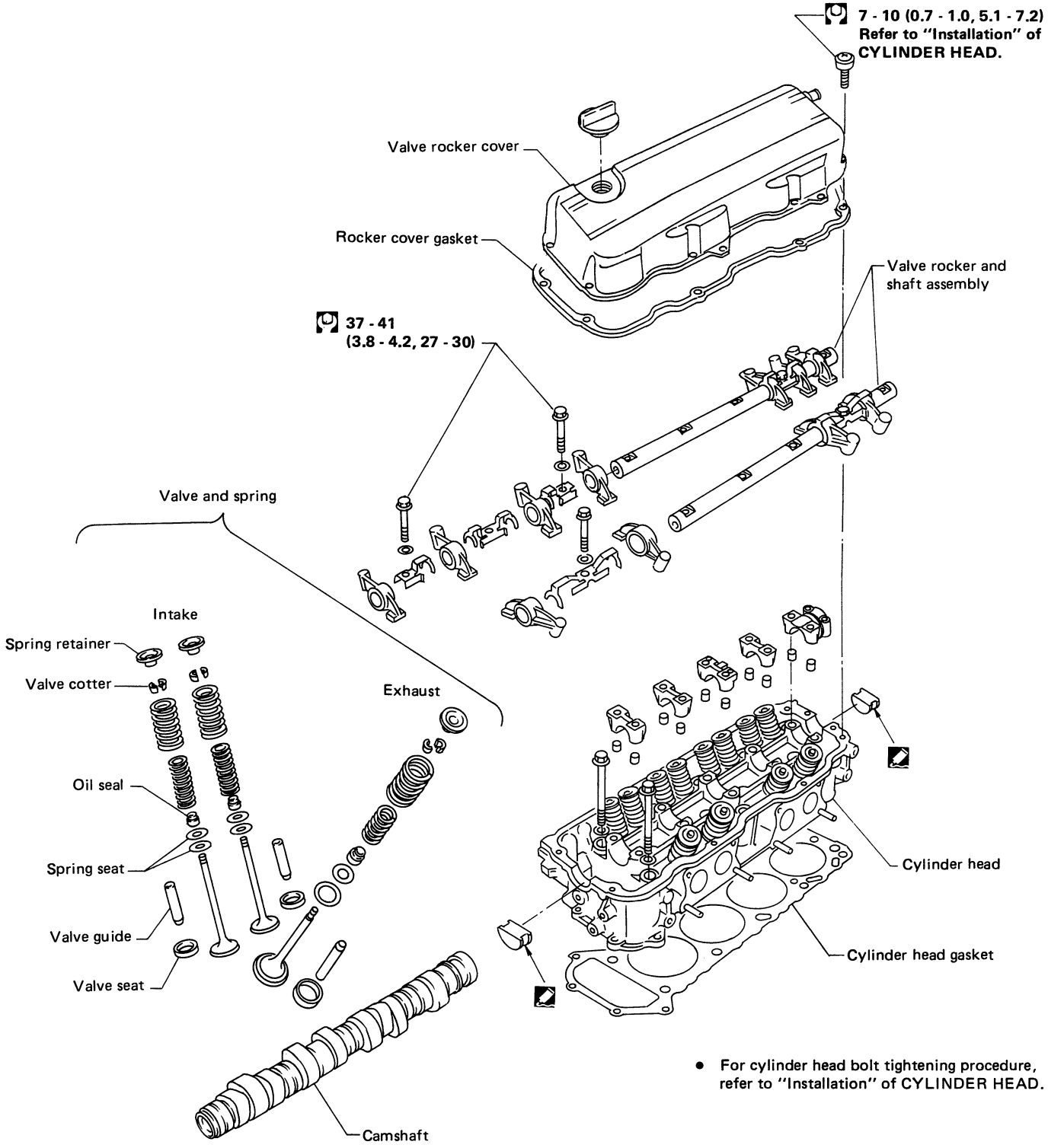

- For cylinder head bolt tightening procedure, refer to "Installation" of CYLINDER HEAD.

: N·m (kg-m, ft-lb)

SEM554C

CAUTION:

- **When installing sliding parts such as rocker arms, camshaft and oil seal, be sure to apply new engine oil on their sliding surfaces.**
- **When tightening cylinder head bolts and rocker shaft bolts, apply new engine oil to thread portions and seat surfaces of bolts.**

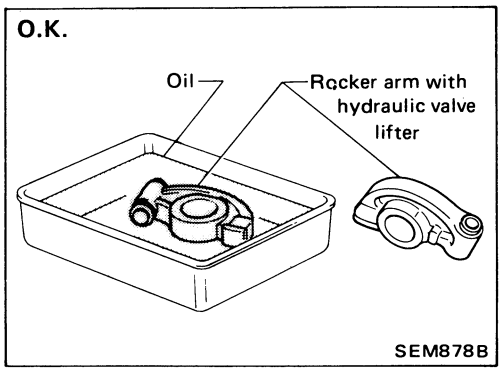

- **Hydraulic valve lifters are installed in each rocker arm. If hydraulic valve lifter is kept on its side, even when installed in rocker arm, there is a possibility of air entering it. After removal, always set rocker arm straight up, or when laying it on its side, have it soak in new engine oil.**

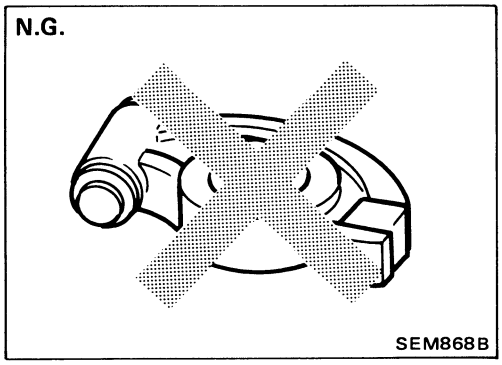

- **Do not disassemble hydraulic valve lifter.**
- **Attach tags to valve lifters so as not to mix them up.**

Removal

1. Drain coolant from radiator.
2. Relieve fuel pressure to zero.

Refer to EF & EC section "FUEL INJECTION CONTROL SYSTEM INSPECTION".

3. Remove the following parts:
- Exhaust manifold
- Air duct
- Intake manifold collector
- Intake manifold stay

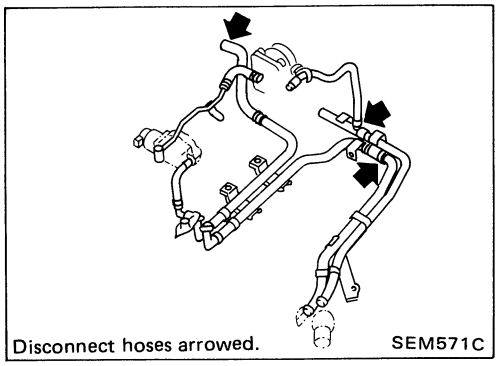

4. Disconnect hoses.
- Vacuum gallery hoses, which are installed on intake manifold.
- Fuel tube hoses
- Air bleed hose for transfer (4WD model)

5. Disconnect water hoses as shown in figure.

Removal (Cont'd)

6. Remove intake manifold.
7. Remove rocker cover.

When removing rocker cover, do not knock rocker cover against rocker arms.

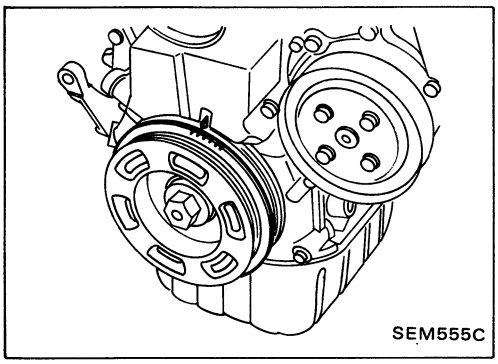

8. Set No. 1 piston at T.D.C. on its compression stroke.

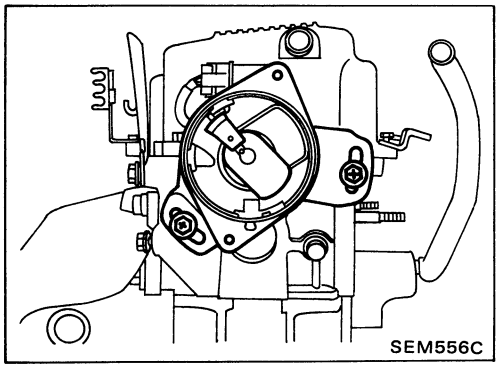

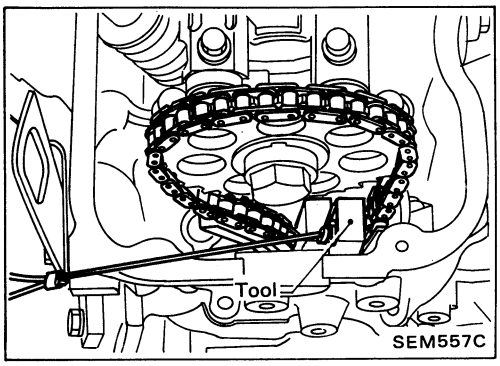

9. Loosen camshaft sprocket bolt.
- Support timing chain by using Tool as shown in figure.

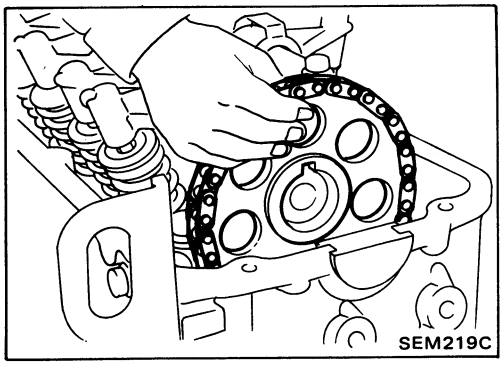

10. Remove camshaft sprocket.

Removal (Cont'd)

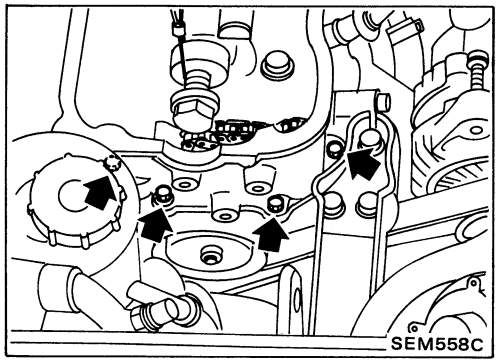

11. Remove front cover tightening bolts to cylinder head.

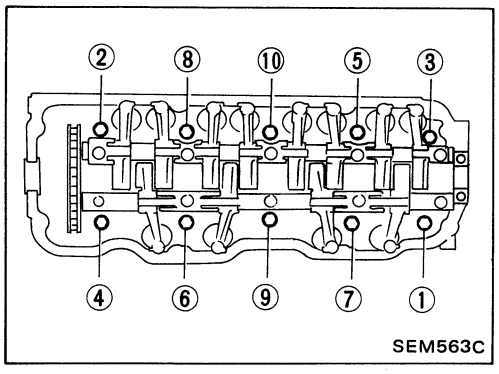

12. Remove cylinder head.
- **Head warpage or cracking could result from removing in incorrect order.**
- **Cylinder head bolts should be loosened in two or three steps.**

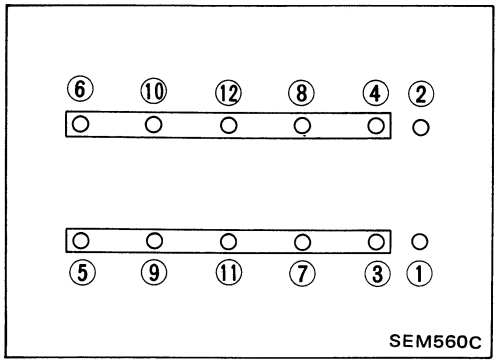

Disassembly

1. Remove rocker shaft assembly.

a. When loosening bolts, evenly loosen from outside in sequence.

b. Bolts should be loosened in two or three steps.

2. Remove camshaft.
- **Before removing camshaft, measure camshaft end play. (Refer to "Inspection".)**

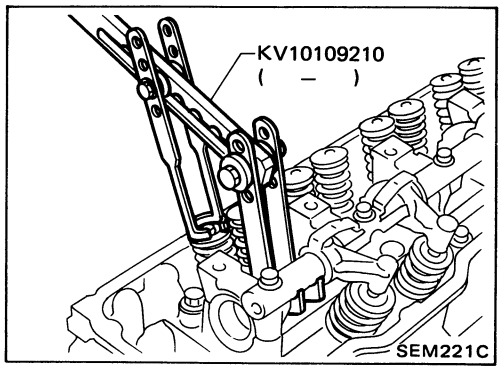

3. Remove valve components with Tool.
4. Remove valve oil seals. (Refer to OIL SEAL REPLACEMENT.)

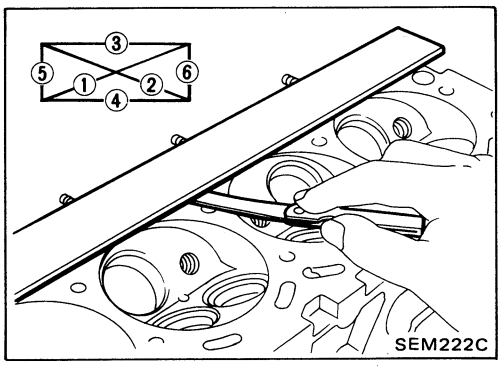

Inspection

CYLINDER HEAD DISTORTION

Head surface flatness:
Less than 0.1 mm (0.004 in)

If beyond the specified limit, replace it or resurface it.

Resurfacing limit:

The resurfacing limit of cylinder head is determined by the cylinder block resurfacing in an engine.
Amount of cylinder head resurfacing is "A"
Amount of cylinder block resurfacing is "B"
The maximum limit is as follows:
A + B = 0.2 mm (0.008 in)

After resurfacing cylinder head, check that camshaft rotates freely by hand. If resistance is felt, cylinder head must be replaced.

Nominal cylinder head height:
98.8 - 99.0 mm (3.890 - 3.898 in)

CAMSHAFT VISUAL CHECK

Check camshaft for scratches, seizure and wear.

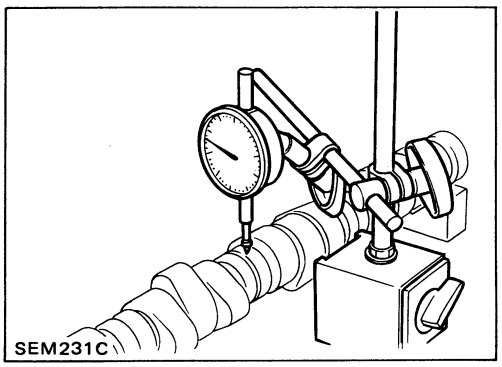

CAMSHAFT RUNOUT

1. Measure camshaft runout at the center journal.
   Runout (Total indicator reading):
   0 - 0.02 mm (0 - 0.0008 in)
2. If it exceeds the limit, replace camshaft.

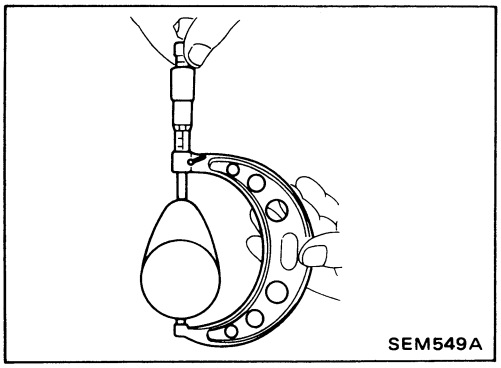

CAMSHAFT CAM HEIGHT

1. Measure camshaft cam height.
   Standard cam height:
   44.839 - 45.029 mm (1.7653 - 1.7728 in)
   Cam wear limit:
   0.2 mm (0.008 in)
2. If wear is beyond the limit, replace camshaft.

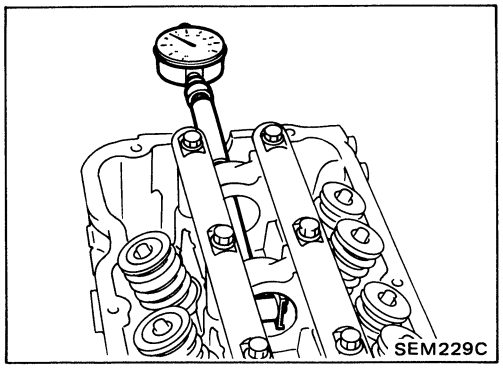

CAMSHAFT JOURNAL CLEARANCE

1. Install camshaft bracket and rocker shaft and tighten bolts to the specified torque.
2. Measure inner diameter of camshaft bearing.
   Standard inner diameter:
   33.000 - 33.025 mm (1.2992 - 1.3002 in)

Inspection (Cont'd)

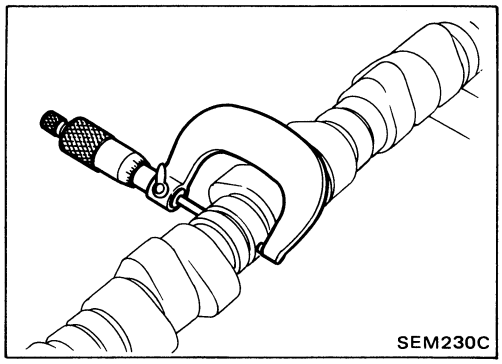
SEM230C

3. Measure outer diameter of camshaft journal.
   Standard outer diameter:
   32.935 - 32.955 mm (1.2967 - 1.2978 in)
4. If clearance exceeds the limit, replace camshaft and/or cylinder head.
   Camshaft journal clearance:
   Standard
   0.045 - 0.090 mm (0.0018 - 0.0035 in)
   Limit
   0.12 mm (0.0047 in)

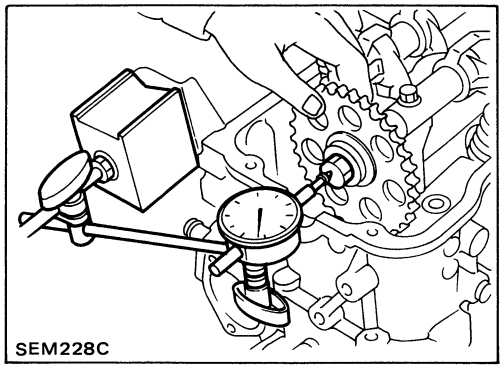
SEM228C

CAMSHAFT END PLAY

1. Install camshaft in cylinder head.
2. Measure camshaft end play.
   Camshaft end play:
   Standard
   0.07 - 0.15 mm (0.0028 - 0.0059 in)
   Limit
   0.2 mm (0.008 in)

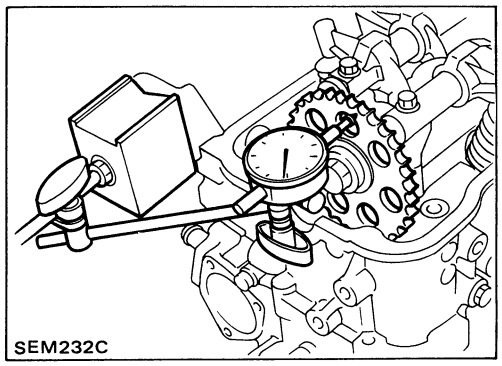
SEM232C

CAMSHAFT SPROCKET RUNOUT

1. Install sprocket on camshaft.
2. Measure camshaft sprocket runout.
   Runout (Total indicator reading):
   Limit 0.12 mm (0.0047 in)
3. If it exceeds the limit, replace camshaft sprocket.

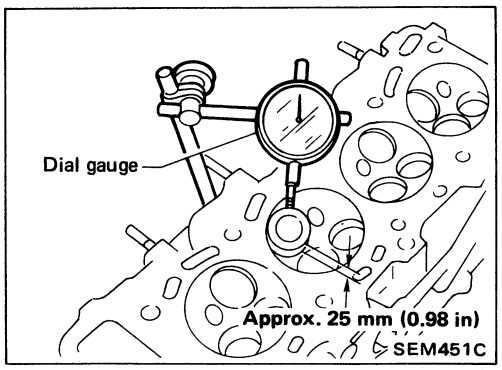

SEM451C

VALVE GUIDE CLEARANCE

1. Measure valve deflection in a right-angled direction with camshaft. (Valve and valve guide mostly wear in this direction.)
   Valve deflection limit (Dial gauge reading):
   0.15 mm (0.0059 in)

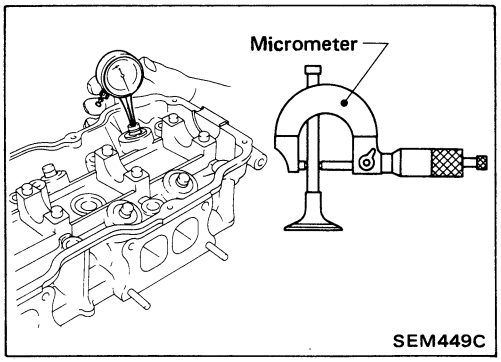

SEM449C

2. If it exceeds the limit, check valve to valve guide clearance.
   a. Measure valve stem diameter and valve guide inner diameter.
   b. Check that clearance is within specification.
      Valve to valve guide clearance:
      Standard
      0.020 - 0.053 mm
      (0.0008 - 0.0021 in) (Intake)
      0.040 - 0.070 mm
      (0.0016 - 0.0028 in) (Exhaust)
      Limit
      0.1 mm (0.004 in)
   c. If it exceeds the limit, replace valve or valve guide.

Inspection (Cont'd)

VALVE GUIDE REPLACEMENT

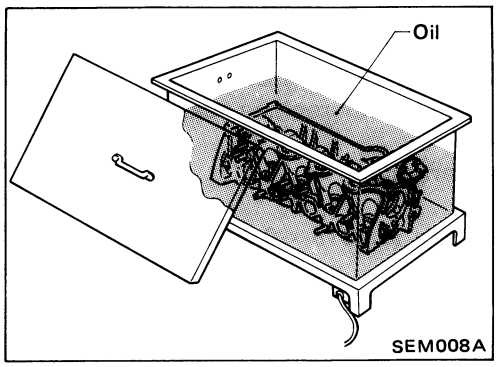

1. To remove valve guide, heat cylinder head to 150 to 160°C (302 to 320°F).

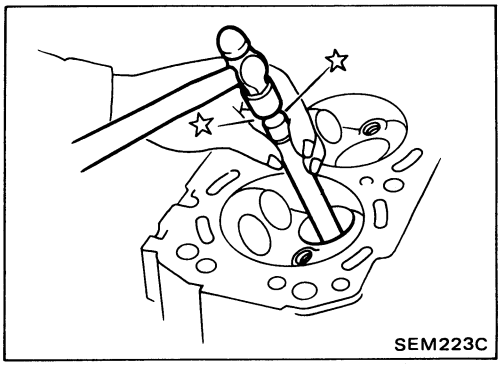

2. Drive out valve guide with a press [under a 20 kN (2 t, 2.2 US ton, 2.0 Imp ton) pressure] or hammer and suitable tool.

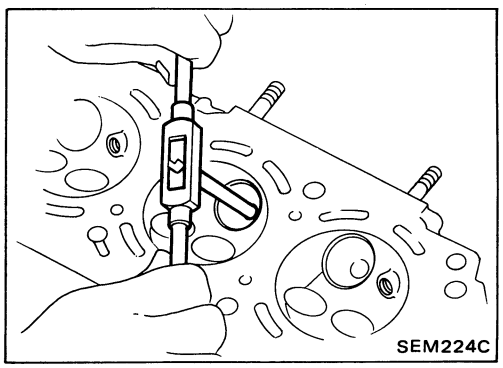

3. Ream cylinder head valve guide hole.
   Valve guide hole diameter (for service parts):
   Intake
   11.175 - 11.196 mm (0.4400 - 0.4408 in)
   Exhaust
   12.175 - 12.196 mm (0.4793 - 0.4802 in)

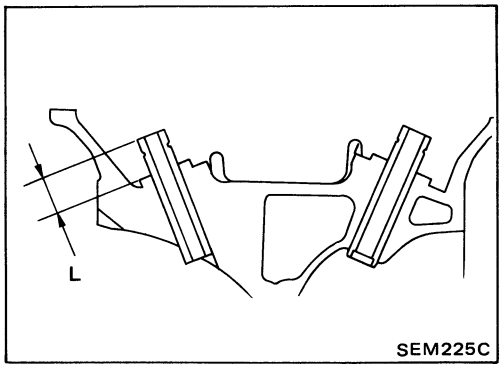

4. Heat cylinder head to 150 to 160°C (302 to 320°F) and press service valve guide onto cylinder head.
   Projection "L":
   14.9 - 15.1 mm (0.587 - 0.594 in)

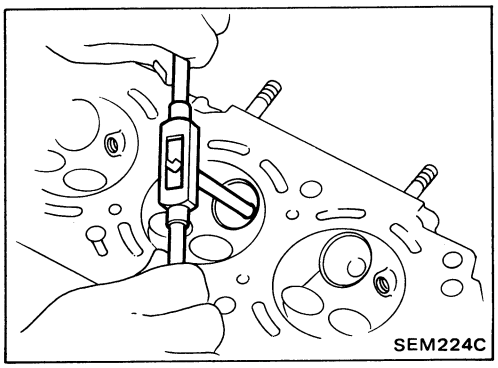

5. Ream valve guide.
   Finished size:
   Intake
   7.000 - 7.018 mm (0.2756 - 0.2763 in)
   Exhaust
   8.000 - 8.018 mm (0.3150 - 0.3157 in)

Inspection (Cont'd)

VALVE SEATS

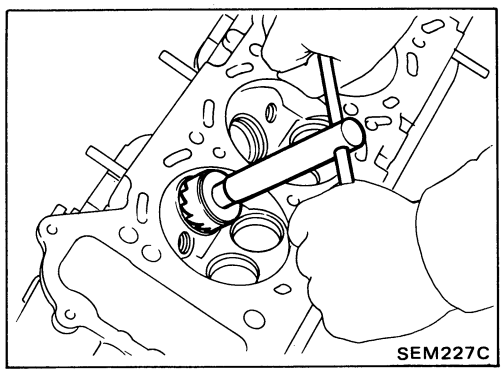
SEM227C

Check valve seats for any evidence of pitting at valve contact surface, and reseat or replace if it has worn out excessively.

- **Before repairing valve seats, check valve and valve guide for wear. If they have worn, replace them. Then correct valve seat.**
- **Cut with both hands to uniform the cutting surface.**

REPLACING VALVE SEAT FOR SERVICE PARTS

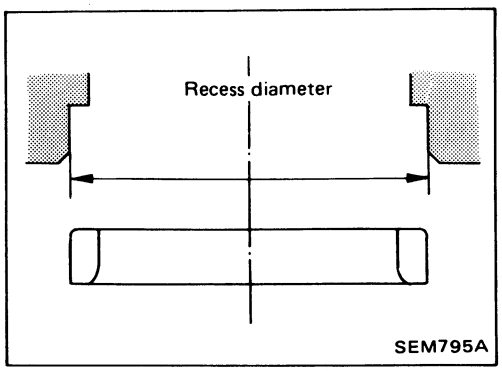

SEM795A

1. Bore out old seat until it collapses. The machine depth stop should be set so that boring cannot continue beyond the bottom face of the seat recess in cylinder head.
2. Ream cylinder head recess.

   Reaming bore for service valve seat
   Oversize [0.5 mm (0.020 in)]:
   Intake
   36.500 - 36.516 mm (1.4370 - 1.4376 in)
   Exhaust
   42.500 - 42.516 mm (1.6732 - 1.6739 in)

Reaming should be done to the concentric circles to valve guide center so that valve seat will have the correct fit.

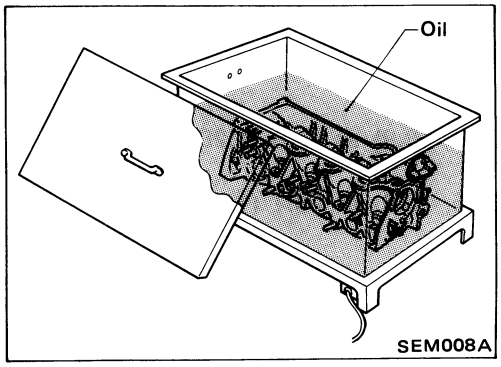

SEM008A

3. Heat cylinder head to 150 to 160°C (302 to 320°F).

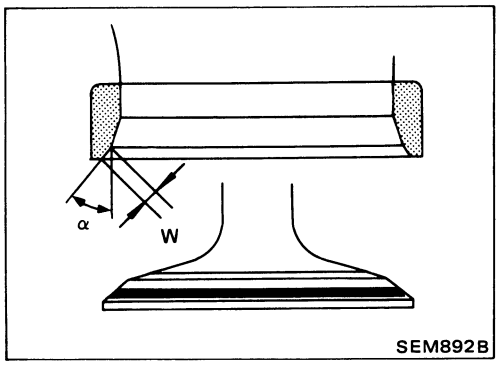

SEM892B

4. Cut or grind valve seat using suitable tool at the specified dimensions as shown in S.D.S.
5. After cutting, lap valve seat with abrasive compound.
6. Check valve seating condition.

   Seat face angle "α":
   45 deg.
   Contacting width "W"
   Intake
   1.6 - 1.7 mm (0.063 - 0.067 in)
   Exhaust
   1.7 - 2.1 mm (0.067 - 0.083 in)

Inspection (Cont'd)

VALVE DIMENSIONS

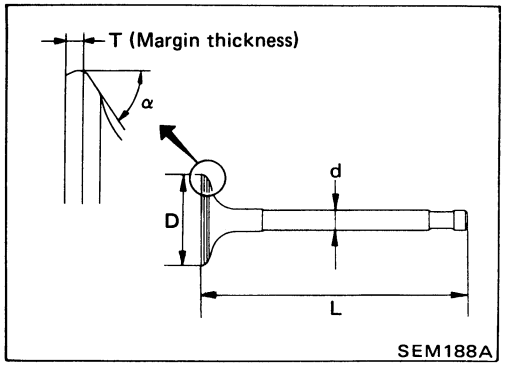

Check dimensions in each valve. For dimensions, refer to S.D.S. When valve head has been worn down to 0.5 mm (0.020 in) in margin thickness, replace valve.

Grinding allowance for valve stem tip is 0.2 mm (0.008 in) or less.

VALVE SPRING

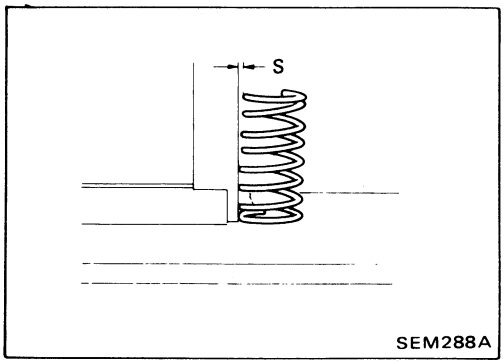

Squareness

1. Measure "S" dimension.

Out-of-square:
- **Outer**
  - **Intake**
    - **Less than 2.5 mm (0.098 in)**
  - **Exhaust**
    - **Less than 2.3 mm (0.091 in)**
- **Inner**
  - **Intake**
    - **Less than 2.3 mm (0.091 in)**
  - **Exhaust**
    - **Less than 2.1 mm (0.083 in)**

2. If it exceeds the limit, replace spring.

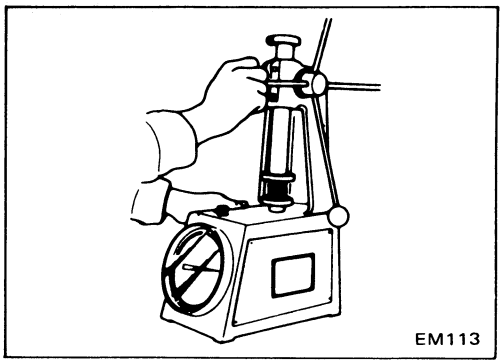

Pressure

Check valve spring pressure.

Pressure: N (kg, lb) at height mm (in)
- **Standard**
  - **Outer**
    - **Intake**
      - **604.1 (61.6, 135.8) at 37.6 (1.480)**
    - **Exhaust**
      - **640.4 (65.3, 144.0) at 34.1 (1.343)**
  - **Inner**
    - **Intake**
      - **284.4 (29.0, 63.9) at 32.6 (1.283)**
    - **Exhaust**
      - **328.5 (33.5, 73.9) at 29.1 (1.146)**
- **Limit**
  - **Outer**
    - **Intake**
      - **567.8 (57.9, 127.7) at 37.6 (1.480)**
    - **Exhaust**
      - **620.8 (63.3, 139.6) at 34.1 (1.343)**
  - **Inner**
    - **Intake**
      - **266.8 (27.2, 60.0) at 32.6 (1.283)**
    - **Exhaust**
      - **318.7 (32.5, 71.7) at 29.1 (1.146)**

If it exceeds the limit, replace spring.

Inspection (Cont'd)

ROCKER SHAFT AND ROCKER ARM

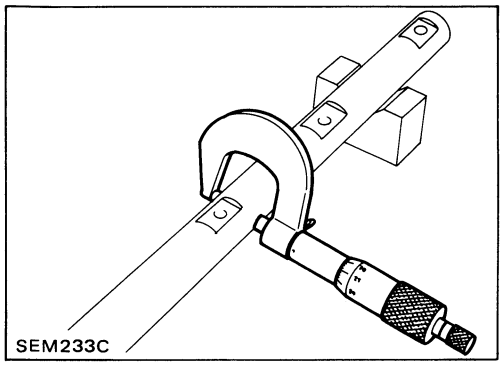

1. Check rocker shafts for scratches, seizure and wear.
2. Check outer diameter of rocker shaft.

   Diameter:

   21.979 - 22.000 mm (0.8653 - 0.8661 in)

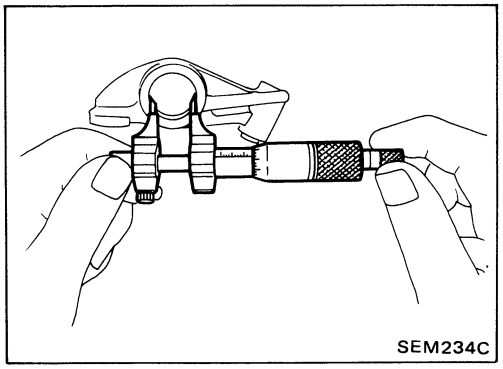

3. Check inner diameter of rocker arm.

   Diameter:

   22.012 - 22.029 mm (0.8666 - 0.8673 in)

   Rocker arm to shaft clearance:

   0.012 - 0.050 mm (0.0005 - 0.0020 in)

- **Keep rocker arm with hydraulic valve lifter standing to prevent air from entering hydraulic valve lifter when checking.**

Assembly

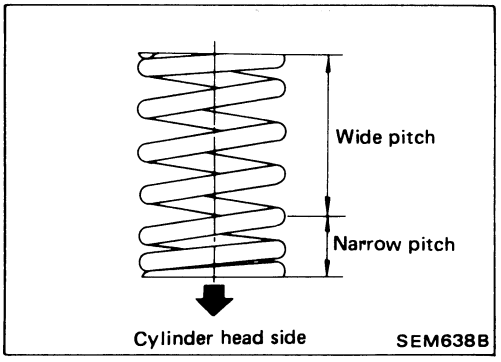

1. Install valve component parts.

- **Always use new valve oil seal. Refer to OIL SEAL REPLACEMENT.**
- **Before installing valve oil seal, install inner valve spring seat.**
- **Install outer valve spring (uneven pitch type) with its narrow pitch side toward cylinder head side.**
- **After installing valve component parts, use plastic hammer to lightly tap valve stem tip to assure a proper fit.**

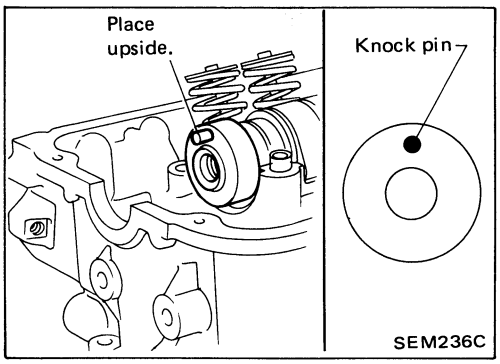

2. Mount camshaft onto cylinder head, placing knock pin at front end to top position.

Apply engine oil to camshaft when mounting onto cylinder head.

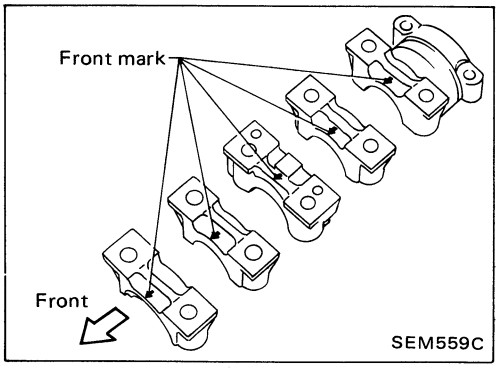

3. Install camshaft brackets.

Front mark is punched on the camshaft bracket.

Assembly (Cont'd)

4. Install rocker shaft with rocker arms.

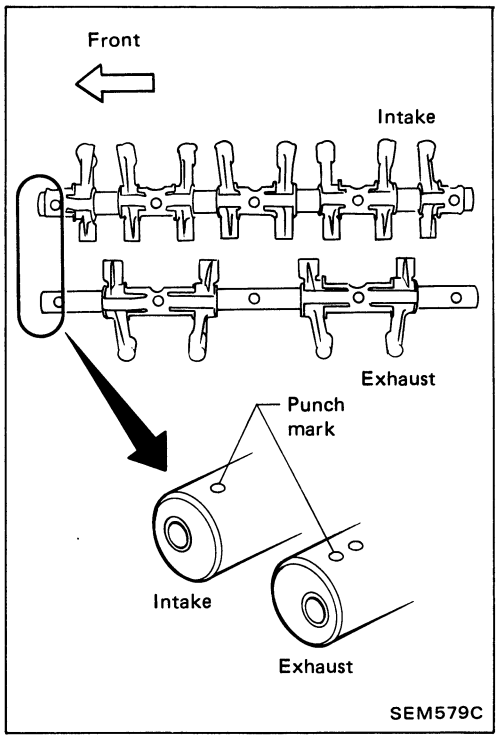

- Install retainer with cutout facing direction shown in figure at left.

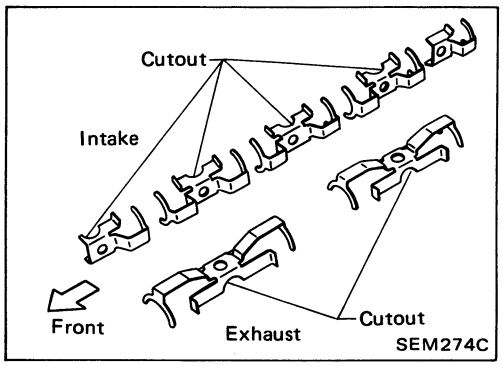

5. Tighten bolts as shown in figure at left.

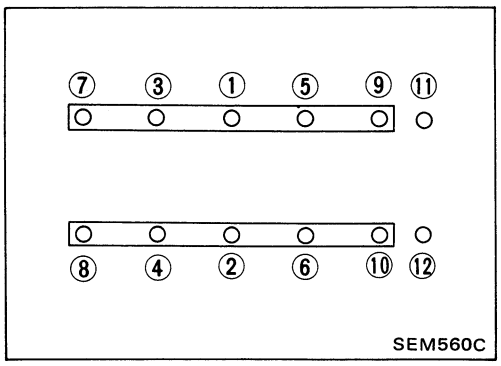

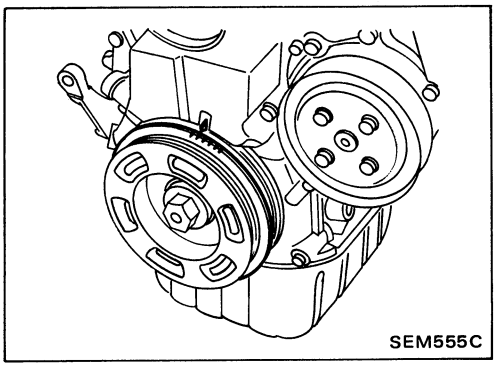

Installation

1. Set No. 1 piston at T.D.C. on its compression stroke as follows:

(1) Align mark on crankshaft pulley with "0°" position and confirm that distributor rotor head is set as shown in figure.

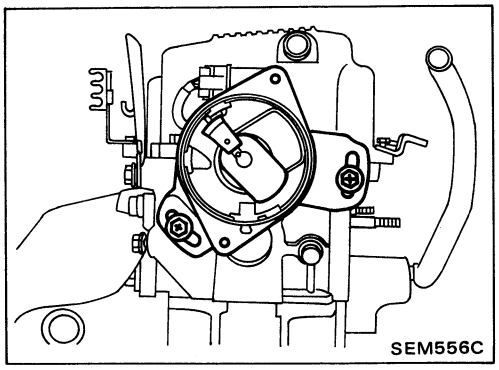

(2) Confirm that knock pin on camshaft is set at the top.

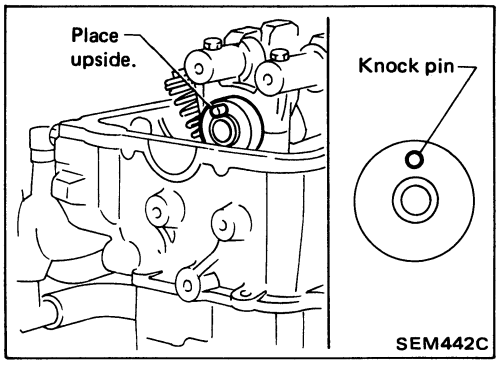

2. Install cylinder head with new gasket and tighten cylinder head bolts in numerical order.

- **Do not rotate crankshaft and camshaft separately, or valves will hit piston heads.**
- **Tightening procedure**

(1) Tighten all bolts to 29 N•m (3.0 kg-m, 22 ft-lb).
(2) Tighten all bolts to 78 N•m (8.0 kg-m, 58 ft-lb).
(3) Loosen all bolts completely.
(4) Tighten all bolts to 29 N•m (3.0 kg-m, 22 ft-lb).
(5) Turn all bolts 80 to 85 degrees clockwise with an angle wrench, or if an angle wrench is not available, tighten all bolts to 74 to 83 N•m (7.5 to 8.5 kg-m, 54 to 61 ft-lb).

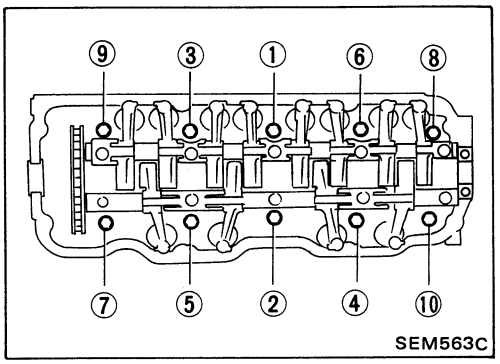

Installation (Cont'd)

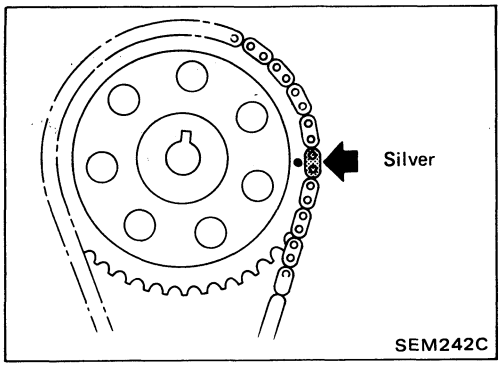

3. Set chain on camshaft sprocket by aligning each mating mark. Then install camshaft sprocket to camshaft.

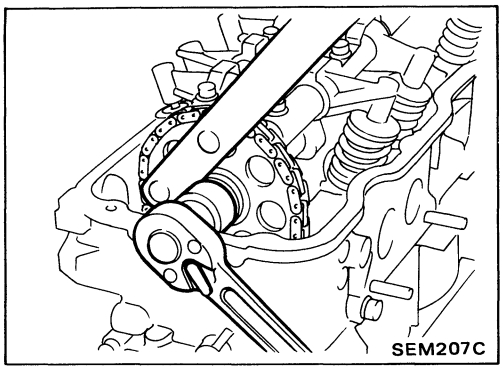

4. Tighten camshaft sprocket bolt.

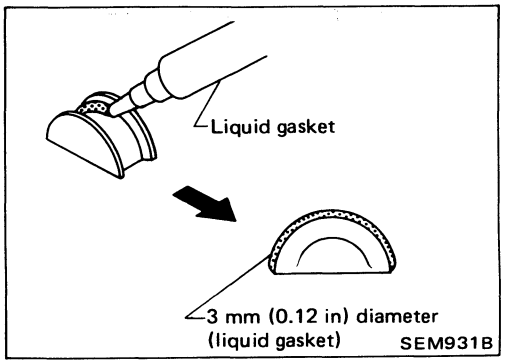

5. Install rubber plugs as follows:

(1) Apply liquid gasket to rubber plugs.

- **Rubber plugs should be replaced with new ones.**
- **Rubber plugs should be installed within 5 minutes of applying liquid gasket.**

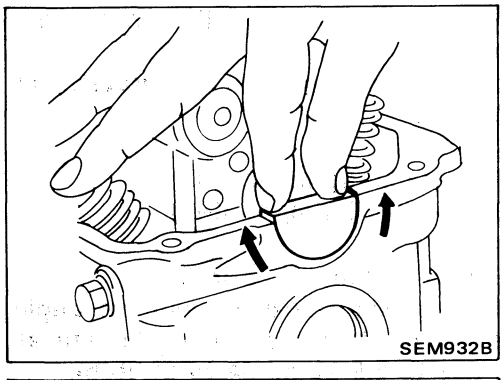

(2) Install rubber plugs, then move them with your fingers to uniformly spread the gasket on cylinder head surface.

- **Rubber plugs should be installed flush with the surface.**
- **Do not start the engine for 30 minutes after installing rocker cover.**
- **Wipe clean excessive liquid gasket from cylinder head top surface.**

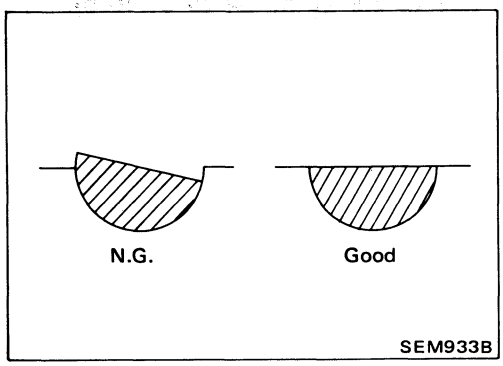

Installation (Cont'd)

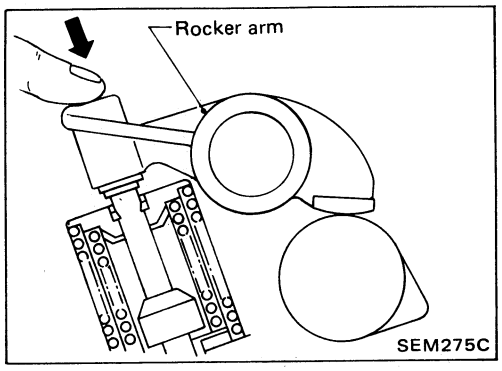

6. Check hydraulic valve lifter.
(1) Push hydraulic valve lifter forcefully with your finger.
- **Be sure to check it with rocker arm in its free position.**

(2) If valve lifter moves more than 1 mm (0.04 in), air may be inside of it.
(3) Bleed air off by running engine at 1,000 rpm under no-load for about 20 minutes (After completing installation of all parts).
(4) If hydraulic valve lifters are still noisy, replace them and bleed air off again in the same manner as in step (3).

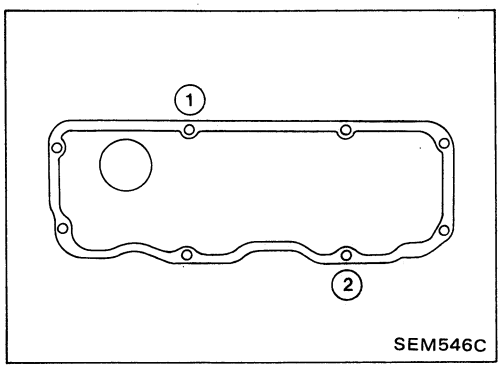

7. Install rocker cover.
- When installing rocker cover, be sure to avoid interference between rocker cover and rocker arms.

8. Tighten bolts as shown below:
(1) Temporarily tighten 2 bolts to 3 N•m (0.3 kg-m, 2.2 ft-lb) in order as shown in figure.

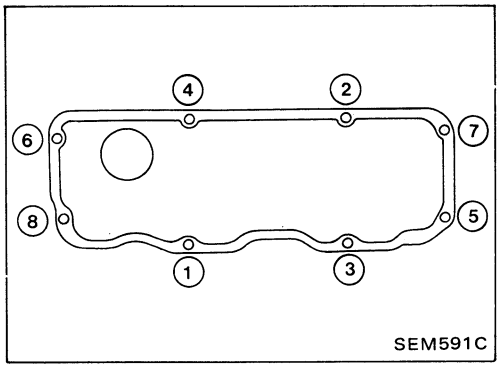

(2) Tighten all bolts to 7 to 10 N•m (0.7 to 1.0 kg-m, 5.1 to 7.2 ft-lb) as shown in figure.

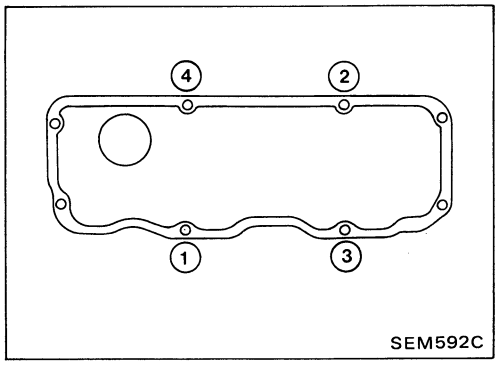

(3) Retighten 4 bolts to 7 to 10 N•m (0.7 to 1.0 kg-m, 5.1 to 7.2 ft-lb) as shown in figure.

9. Install any parts removed.

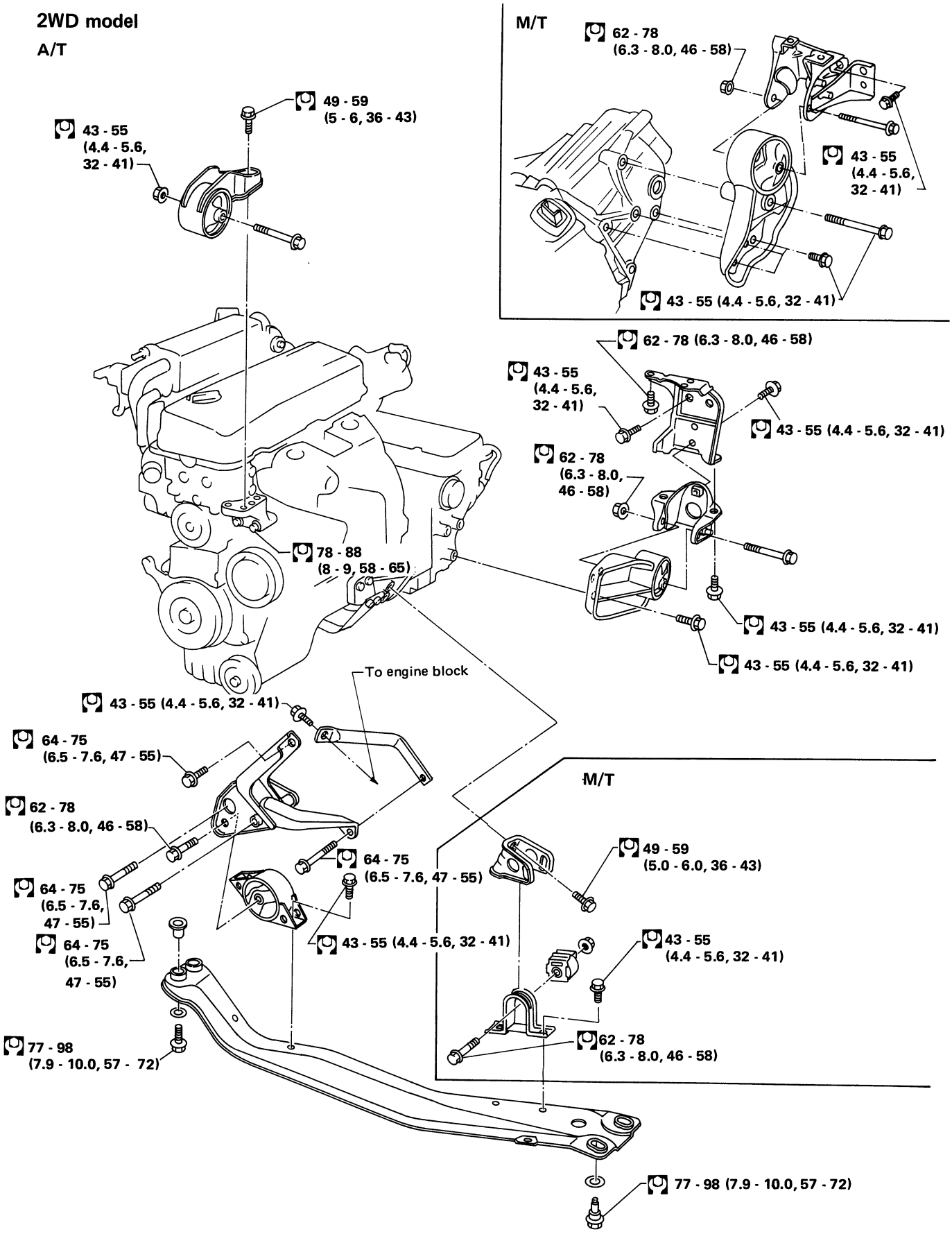

: N·m (kg-m, ft-lb)

SEM572C

4WD model

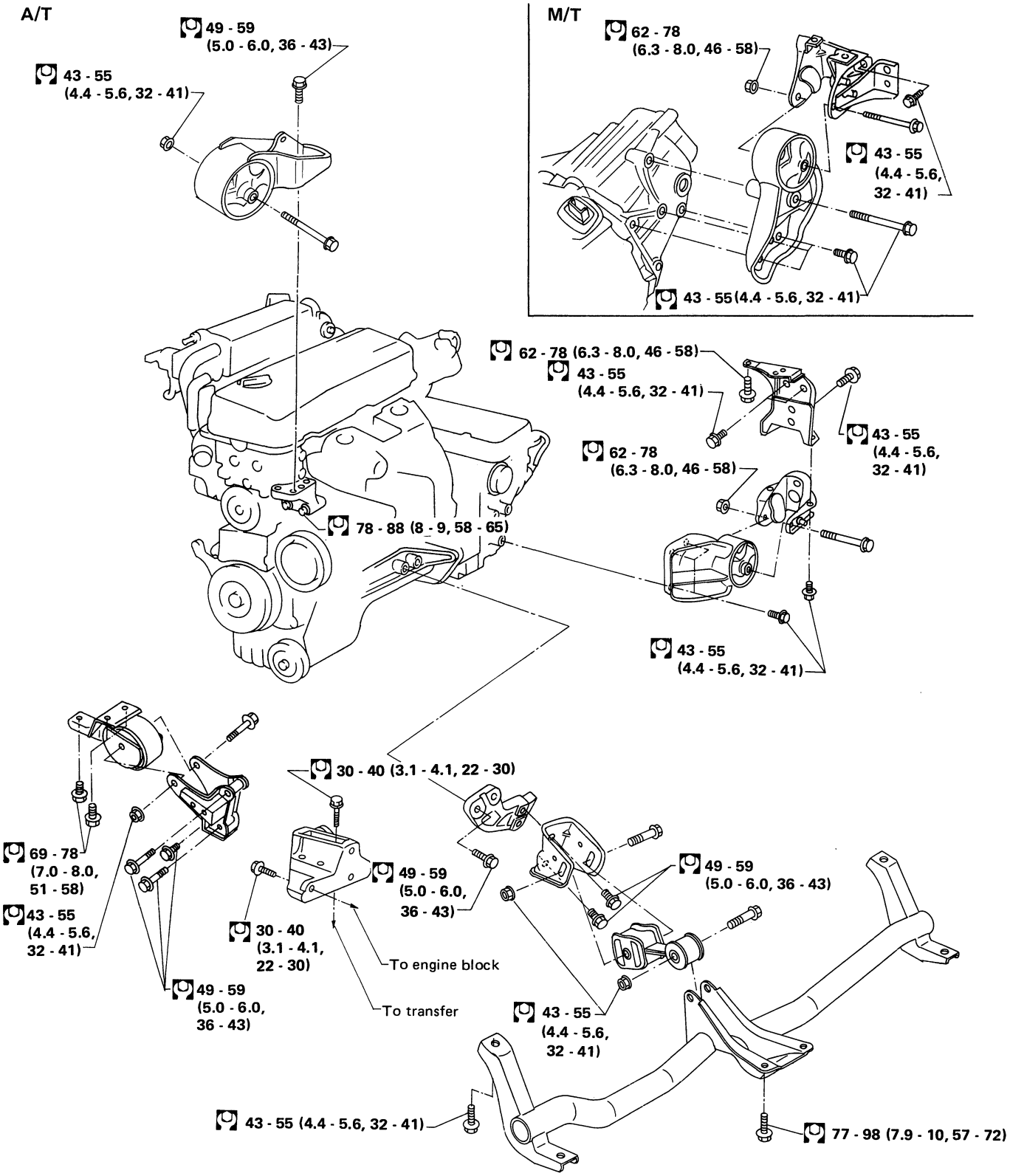

: N·m (kg-m, ft-lb)

SEM573C

WARNING:

a. Situate vehicle on a flat and solid surface.

b. Do not remove engine until exhaust system has completely cooled off.
Otherwise, you may burn yourself and/or fire may break out in fuel line.

c. For safety during subsequent steps, the tension of wires should be slackened against the engine.

d. Before disconnecting fuel hose, release fuel pressure from fuel line.
Refer to "Releasing Fuel Pressure" in section EF & EC.

e. Before removing front axle from transaxle, place safety stands under designated front supporting points. Refer to GI section for lifting points and towing.

f. Be sure to hoist engine and transaxle in a safe manner.

g. For engines not equipped with engine slingers, attach proper slingers and bolts described in PARTS CATALOG.

CAUTION:

- **When lifting engine, be careful not to strike adjacent parts, especially accelerator wire casing, brake lines, and brake master cylinder.**
- **In hoisting the engine, always use engine slingers in a safe manner.**
- **In removing drive shaft, be careful not to damage grease seal of transaxle.**

Removal

1. Drain coolant.
2. Disconnect adjacent wires, harness, pipes and hoses.
3. Remove the follwing parts:
   - Drive belts
   - Power steering pump
   - A/C compressor
   - Alternator and adjusting bar
   - Drive shafts
   - Propeller shaft (4WD model)
   - Front exhaust tube
4. Lift up engine slightly with engine slingers and disconnect or remove all engine mountings.
5. Support engine and transaxle assembly by placing suitable jacks under oil pan and transaxle.
6. Lower engine and transaxle assembly.
7. Remove engine from transaxle.

Installation

- When installing buffer rods, adjust the length between bolts of buffer rods as shown (4WD model).

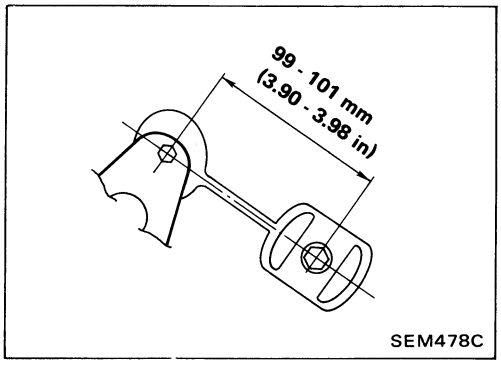

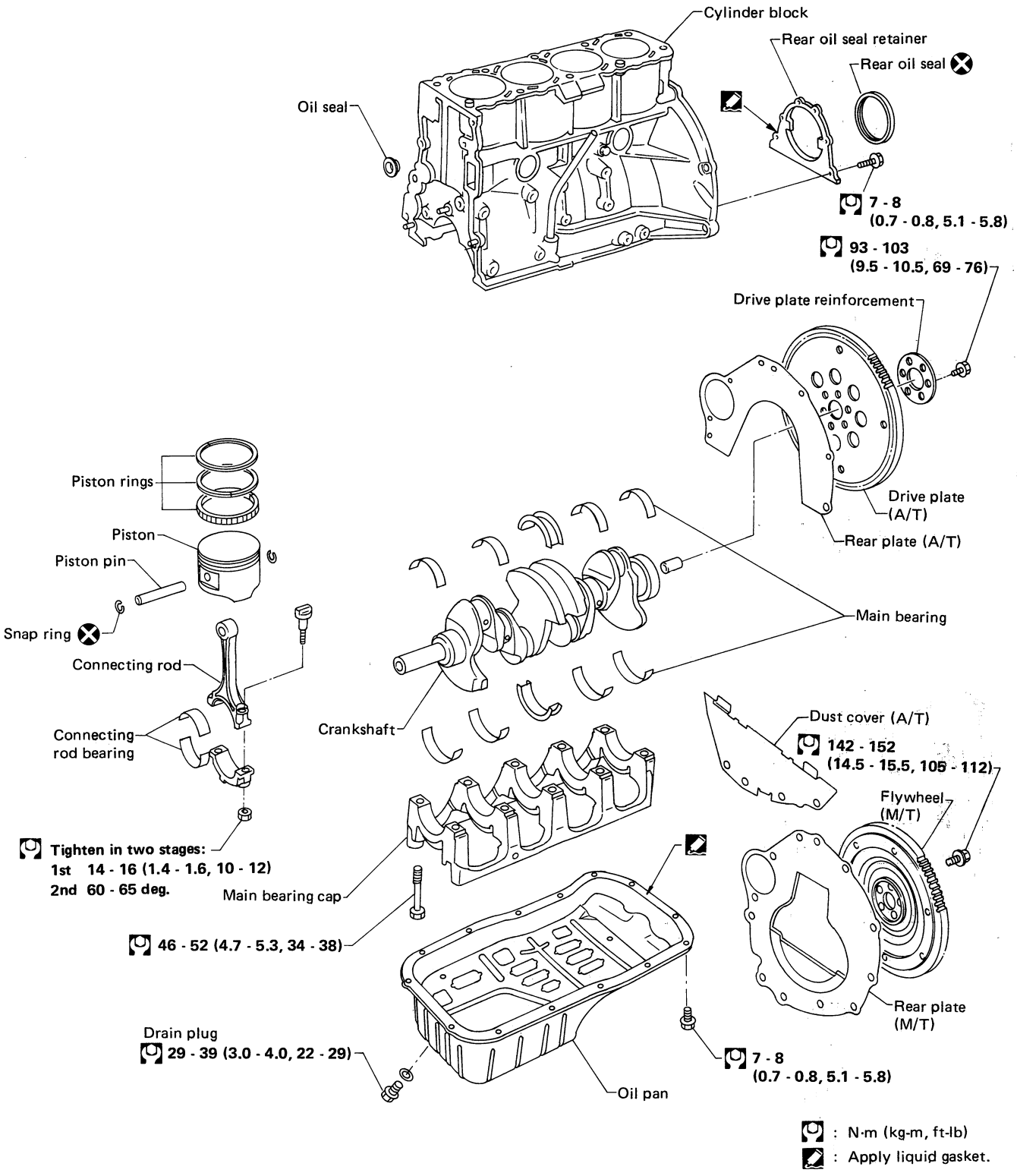
Cylinder block
Rear oil seal retainer
Rear oil seal
Oil seal
7 - 8
(0.7 - 0.8, 5.1 - 5.8)
93 - 103
(9.5 - 10.5, 69 - 76)
Drive plate reinforcement
Drive plate
(A/T)
Rear plate (A/T)
Piston rings
Piston
Piston pin
Snap ring
Connecting rod
Connecting
rod bearing
Main bearing
Crankshaft
Dust cover (A/T)
142 - 152
(14.5 - 15.5, 105 - 112)
Flywheel
(M/T)
Tighten in two stages:
1st 14 - 16 (1.4 - 1.6, 10 - 12)
2nd 60 - 65 deg.
Main bearing cap
46 - 52 (4.7 - 5.3, 34 - 38)
Rear plate
(M/T)
Drain plug
29 - 39 (3.0 - 4.0, 22 - 29)
7 - 8
(0.7 - 0.8, 5.1 - 5.8)
Oil pan
: N·m (kg-m, ft-lb)
: Apply liquid gasket.
SEM564C

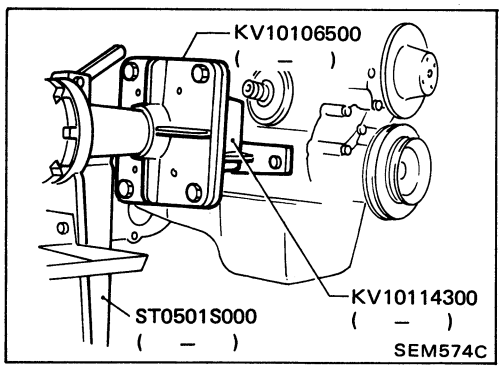

Disassembly

PISTON AND CRANKSHAFT

1. Place engine on a work stand.
2. Drain oil.
3. Remove oil pan.
4. Remove water pump.
5. Remove cylinder head.
6. Remove timing chain.

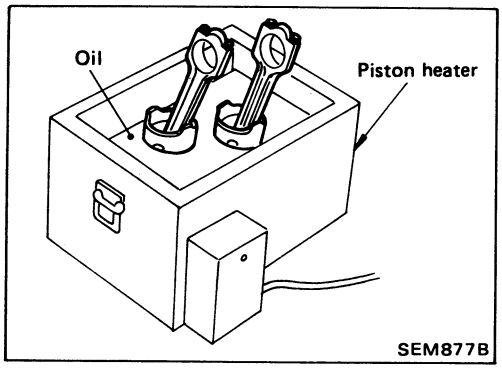

7. Remove pistons.
- When disassembling piston and connecting rod, remove snap rings, then heat piston to 60 to 70°C (140 to 158°F) or use piston pin press stand at room temperature.

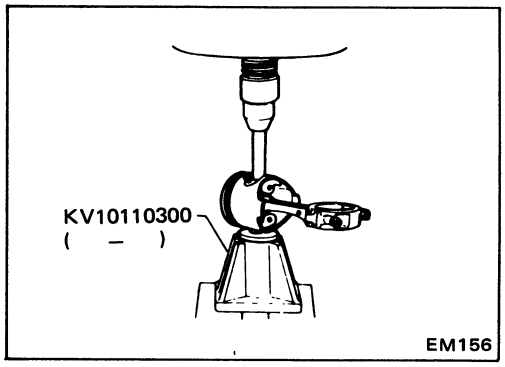

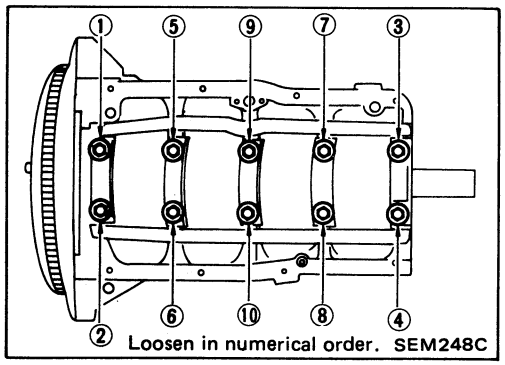

8. Remove main bearing beam and crankshaft.
- **Before removing main bearing beam, measure crankshaft end play.**
- **Bolts should be loosened in two or three steps.**

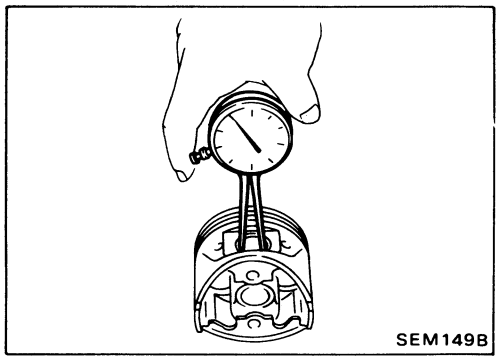

Inspection

PISTON AND PISTON PIN CLEARANCE

1. Measure inner diameter of piston pin hole "dp".

   Standard diameter "dp":

   20.987 - 20.999 mm (0.8263 - 0.8267 in)

Inspection (Cont'd)

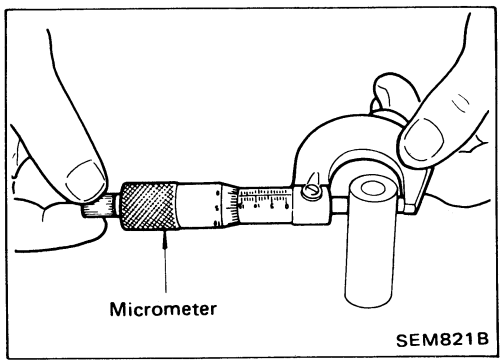

2. Measure outer diameter of piston pin "Dp".
   Standard diameter "Dp":
   20.989 - 21.001 mm (0.8263 - 0.8268 in)
3. Calculate interference fit of piston pin to piston.
   dp – Dp = 0 - 0.004 mm (0 - 0.0002 in)

If it exceeds the above value, replace piston assembly with pin.

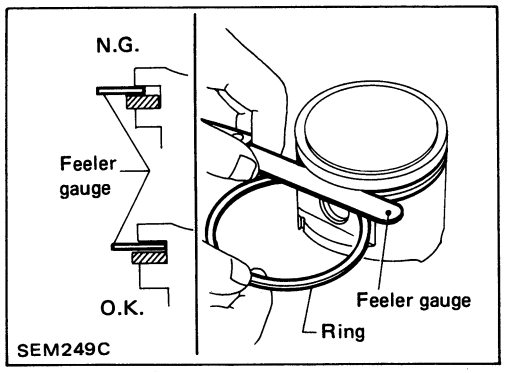

PISTON RING SIDE CLEARANCE

Side clearance:
Top ring
0.04 - 0.08 mm (0.0016 - 0.0031 in)
2nd ring
0.03 - 0.07 mm (0.0012 - 0.0028 in)
Max. limit of side clearance:
0.1 mm (0.004 in)

If out of specification, replace piston and/or piston ring assembly.

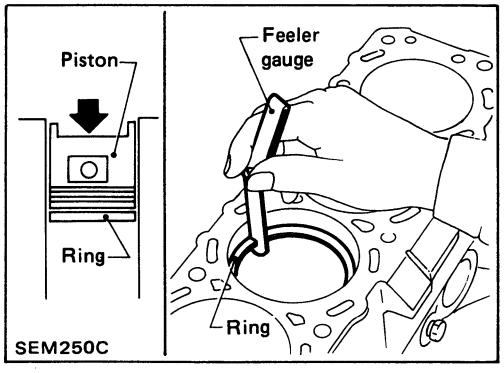

PISTON RING END GAP

End gap:
Top ring
0.28 - 0.43 mm (0.0110 - 0.0169 in)
2nd ring
0.45 - 0.60 mm (0.0177 - 0.0236 in)
(For rings punched with R or T.)
0.55 - 0.70 mm (0.0217 - 0.0276 in)
(For rings punched with N.)
Oil ring
0.20 - 0.60 mm (0.0079 - 0.0236 in)
Max. limit of ring gap:
0.5 mm (0.020 in)

If out of specification, replace piston ring. If gap still exceeds the limit even with a new ring, rebore cylinder and use oversized piston and piston rings.
Refer to S.D.S.

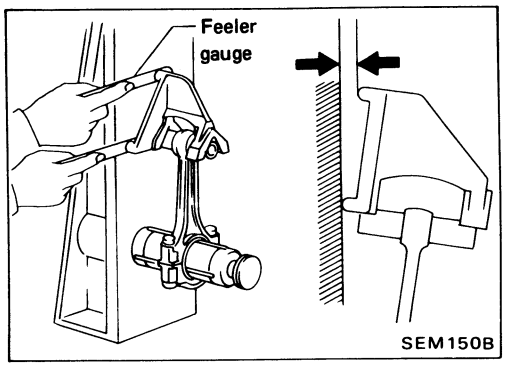

CONNECTING ROD BEND AND TORSION

Bend:
Limit 0.15 mm (0.0059 in)
per 100 mm (3.94 in) length
Torsion:
Limit 0.30 mm (0.0118 in)
per 100 mm (3.94 in) length

If it exceeds the limit, replace connecting rod assembly.

Inspection (Cont'd)

CYLINDER BLOCK DISTORTION AND WEAR

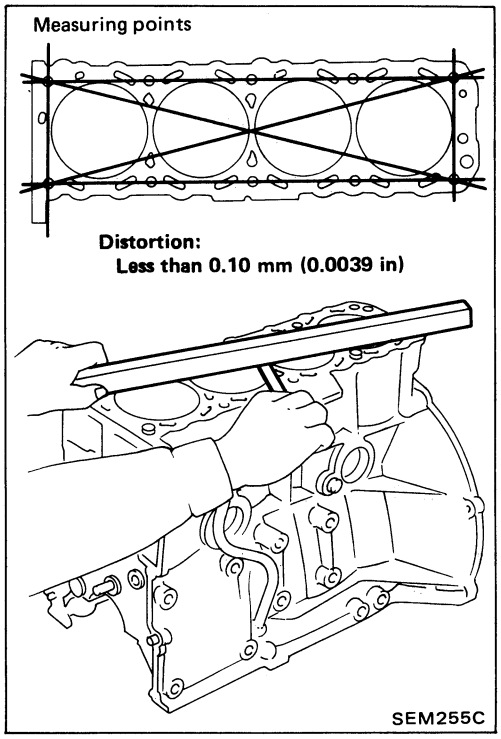

1. Clean upper face of cylinder block and measure the distortion.
   Limit:
   0.10 mm (0.0039 in)
2. If out of specification, resurface it.
   The resurfacing limit is determined by cylinder head resurfacing in engine.

Amount of cylinder head resurfacing is "A"
Amount of cylinder block resurfacing is "B"
The maximum limit is as follows:
A + B = 0.2 mm (0.008 in)
Nominal cylinder block height from crankshaft center:
246.95 - 247.05 mm (9.7224 - 9.7264 in)

3. If necessary, replace cylinder block.

PISTON-TO-BORE CLEARANCE

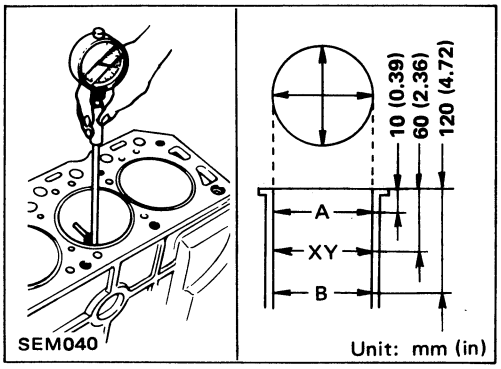

1. Using a bore gauge, measure cylinder bore for wear, out-of-round and taper.
   Standard inner diameter:
   89.000 - 89.030 mm (3.5039 - 3.5051 in)
   Wear limit:
   0.2 mm (0.008 in)
   Out-of-round (X–Y) limit:
   0.015 mm (0.0006 in)
   Taper (A–B) limit:
   0.015 mm (0.0006 in)

If it exceeds the limit, rebore all cylinders. Replace cylinder block if necessary.

2. Check for scratches and seizure. If seizure is found, hone it.

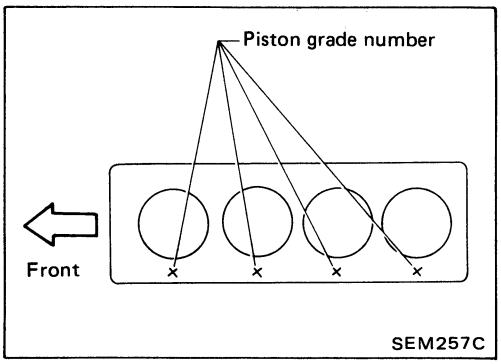

- **If both cylinder block and piston are replaced with new ones, select piston of the same grade number punched on cylinder block upper surface.**

Inspection (Cont'd)

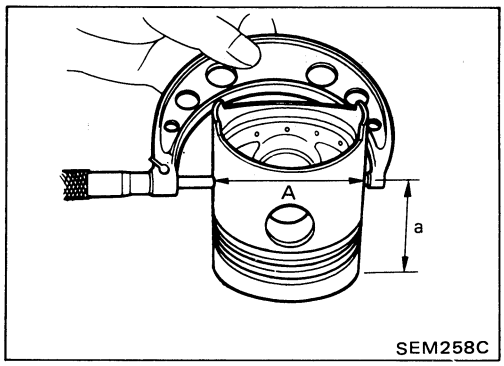

3. Measure piston skirt diameter.
   Piston diameter "A":
   Refer to S.D.S.
   Measuring point "a" (Distance from the top):
   Approximately 52 mm (2.05 in)
4. Check that piston-to-bore clearance is within specification.
   Piston-to-bore clearance "B":
   0.020 - 0.040 mm (0.0008 - 0.0016 in)
5. Determine piston oversize according to amount of cylinder wear.

Oversize pistons are available for service. Refer to S.D.S.

6. Cylinder bore size is determined by adding piston-to-bore clearance to piston diameter "A".
   Rebored size calculation:
   D = A + B – C
   where,
   D: Bored diameter
   A: Piston diameter as measured
   B: Piston-to-bore clearance
   C: Honing allowance 0.02 mm (0.0008 in)
7. Install main bearing caps, and tighten to the specified torque to prevent distortion of cylinder bores in final assembly.
8. Cut cylinder bores.

- **When any cylinder needs boring, all other cylinders must also be bored.**
- **Do not cut too much out of cylinder bore at a time. Cut only 0.05 mm (0.0020 in) or so in diameter at a time.**

9. Hone cylinders to obtain specified piston-to-bore clearance.
10. Measure finished cylinder bore for out-of-round and taper.

- **Measurement should be done after cylinder bore cools down.**

CRANKSHAFT

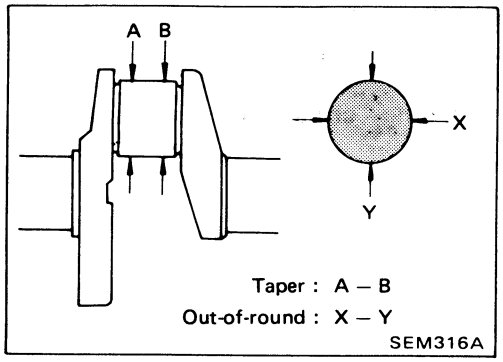

1. Check crankshaft main and pin journals for score, wear or cracks.
2. With a micrometer, measure journals for taper and out-of-round.
   Out-of-round (X–Y):
   Main journal Less than 0.01 mm (0.0004 in)
   Crank pin Less than 0.005 mm (0.0002 in)
   Taper (A–B):
   Main journal Less than 0.01 mm (0.0004 in)
   Crank pin Less than 0.005 mm (0.0002 in)

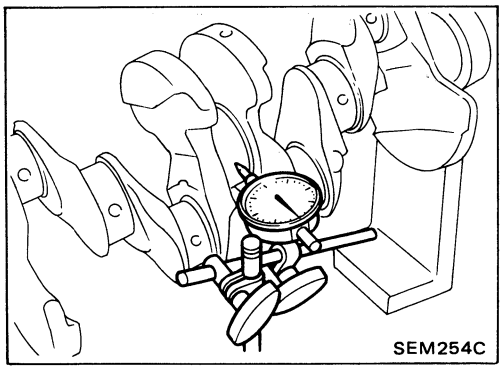

3. Measure crankshaft runout.
   Runout (Total indicator reading):
   Less than 0.10 mm (0.0039 in)

Inspection (Cont'd)

BEARING CLEARANCE

Method A (Using bore gauge and micrometer)

Main bearing

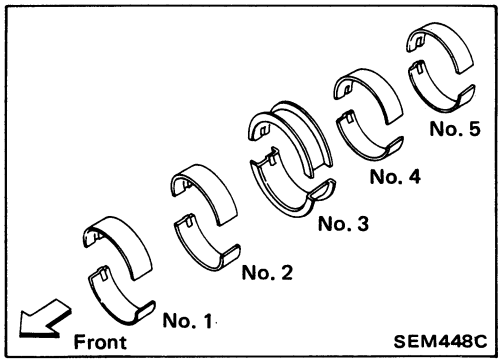

1. Set main bearings in their proper positions on cylinder block and main bearing cap.

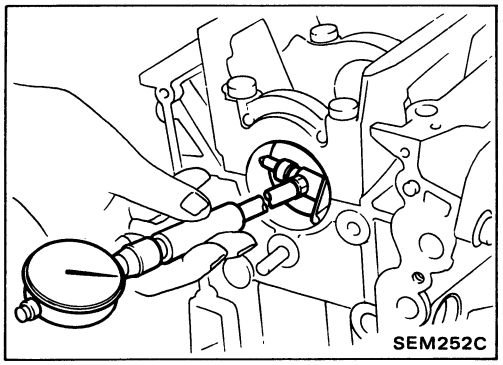

2. Install main bearing cap to cylinder block.

Tighten all bolts in correct order in two or three stages. Refer to "Assembly".

3. Measure inner diameter "A" of each main bearing.

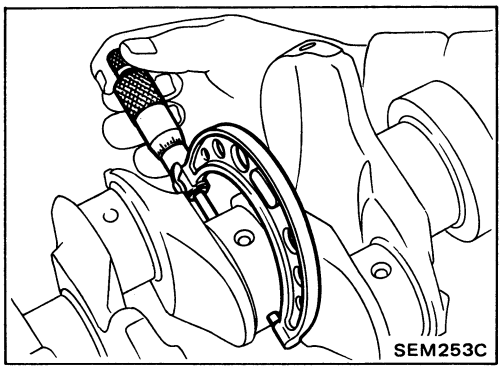

4. Measure outer diameter "Dm" of each crankshaft main journal.
5. Calculate main bearing clearance.
   Main bearing clearance = A – Dm
   Standard:
   0.020 - 0.047 mm (0.0008 - 0.0019 in)
   Limit: 0.1 mm (0.004 in)
6. If it exceeds the limit, replace bearing.
7. If clearance cannot be adjusted within the standard of any bearing, grind crankshaft journal and use undersized bearing.

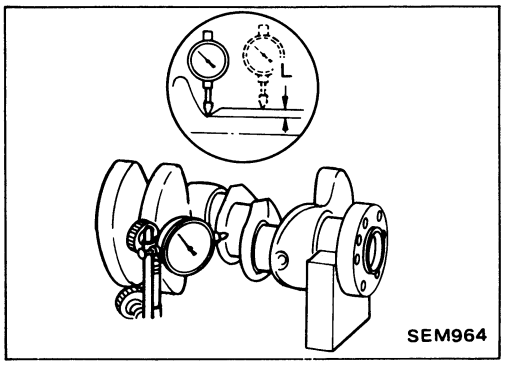

a. When grinding crankshaft journal, confirm that "L" dimension in fillet roll is more than the specified limit.
   "L": 0.1 mm (0.004 in)

b. Refer to S.D.S. for grinding crankshaft and available service parts.

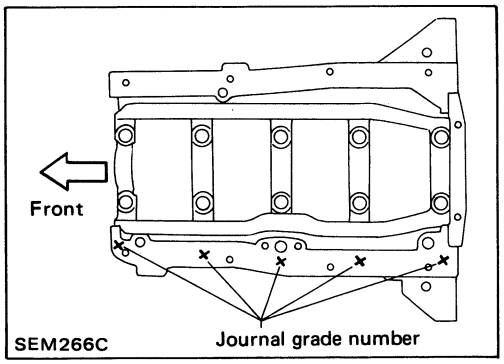

8. If crankshaft, is reused, measure main bearing clearance and thickness of main bearing.
   If crankshaft is replaced with a new one, it is necessary to select thickness of main bearings as follows:

a. Grade number of each cylinder block main journal is punched on the respective cylinder block.

Inspection (Cont'd)

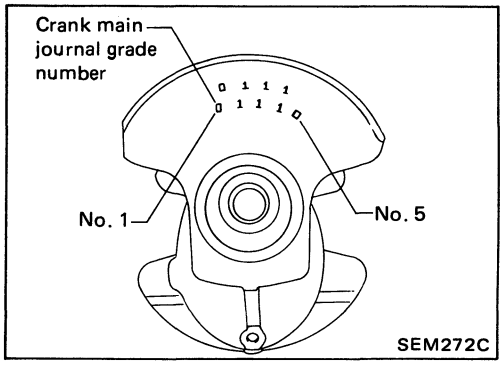

b. Grade number of each crankshaft main journal is punched on crankshaft.

c. Select main bearing with suitable thickness according to the following table.

Main bearing grade number:

Crankshaft journal grade number \ Main journal grade number	0	1	2
0	0	1	2
1	1	2	3
2	2	3	4

For example:
Main journal grade number: 1
Crankshaft journal grade number: 2
Main bearing grade number = 1 + 2
= 3

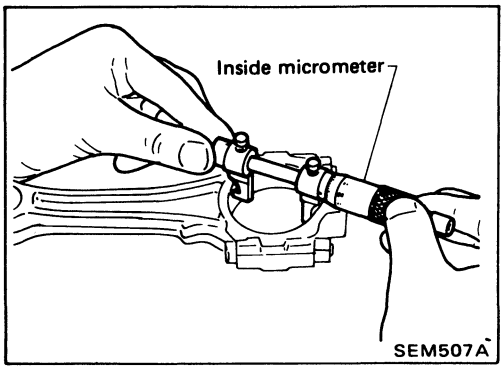

Connecting rod bearing (Big end)

1. Install connecting rod bearing to connecting rod and cap.
2. Install connecting rod cap to connecting rod.

Tighten bolts to the specified torque.

3. Measure inner diameter "C" of each bearing.

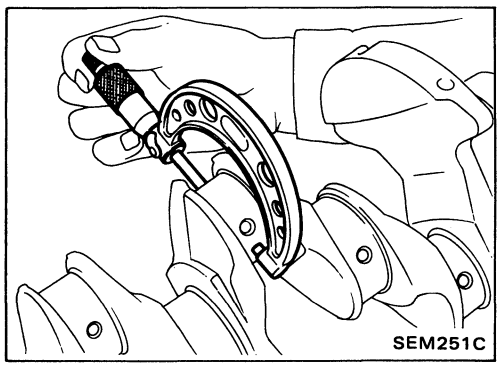

4. Measure outer diameter "Dp" of each crankshaft pin journal.
5. Calculate connecting rod bearing clearance.

   Connecting rod bearing clearance = C – Dp

   Standard:

   0.010 - 0.035 mm (0.0004 - 0.0014 in)

   Limit: 0.09 mm (0.0035 in)
6. If it exceeds the limit, replace bearing.
7. If clearance cannot be adjusted within the standard of any bearing, grind crankshaft journal and use undersized bearing. Refer to step 7 of "BEARING CLEARANCE — Main bearing"

Inspection (Cont'd)

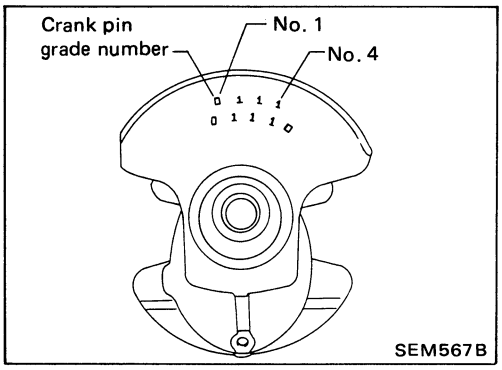

8. If crankshaft is replaced with a new one, select connecting rod bearing according to the following table.

Connecting rod bearing grade number:

Crank pin grade number	Connecting rod bearing grade number
0	0
1	1
2	2

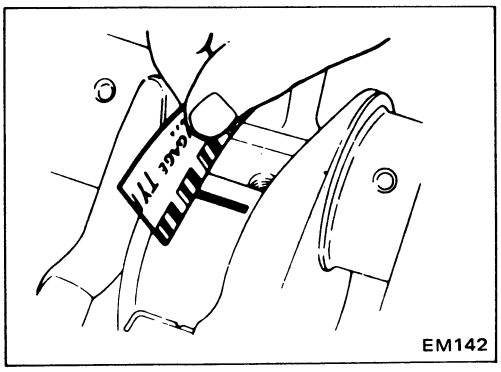

Method B (Using plastigauge)
CAUTION:

- **Do not turn crankshaft or connecting rod while plastigage is being inserted.**
- **When bearing clearance exceeds the specified limit, ensure that the proper bearing has been installed. Then if excessive bearing clearance exists, use a thicker main bearing or undersized bearing so that the specified bearing clearance is obtained.**

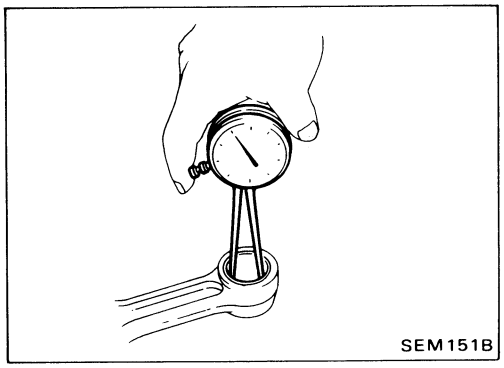

CONNECTING ROD BUSHING CLEARANCE (Small end)

1. Measure inner diameter "C" of bushing.

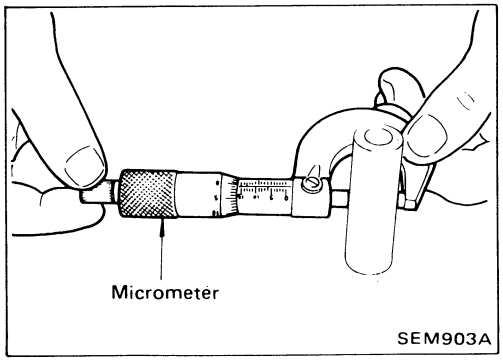

2. Measure outer diameter "Dp" of piston pin.
3. Calculate connecting rod bearing clearance.

   C – Dp =
   0.005 - 0.017 mm (0.0002 - 0.0007 in) (Standard)
   0.023 mm (0.0009 in) (Limit)

   If it exceeds the limit, replace connecting rod assembly and/or piston set with pin.

Inspection (Cont'd)

REPLACEMENT OF CONNECTING ROD BUSHING (Small end)

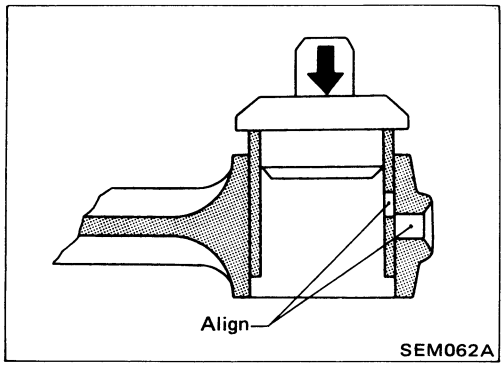

1. Drive in small end bushing until it is flush with end surface of rod.

Be sure to align the oil holes.

2. After driving in small end bushing, ream the bushing so that clearance between small end bushing and piston pin is specified valve.

   Clearance between small end bushing and piston pin:
   0.005 - 0.017 mm (0.0002 - 0.0007 in)

FLYWHEEL/DRIVE PLATE RUNOUT

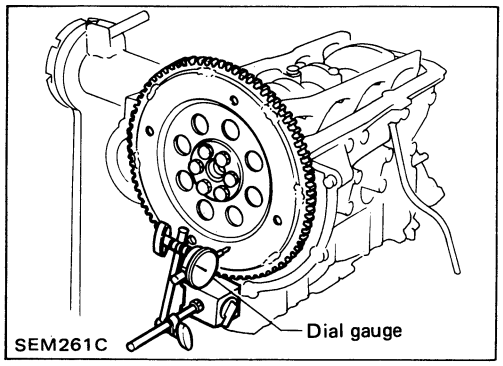

Runout (Total indicator reading):
Flywheel (M/T model)
Less than 0.1 mm (0.004 in)
Drive plate (A/T model)
Less than 0.1 mm (0.004 in)

Assembly

PISTON

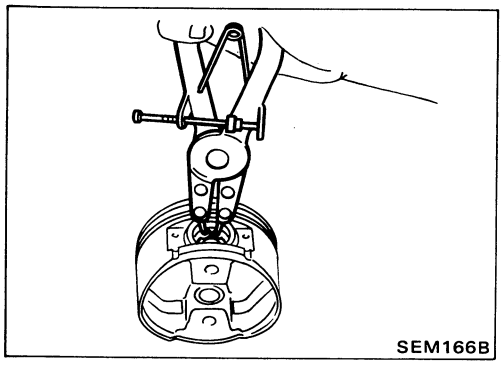

1. Install new snap ring on one side of piston pin hole.

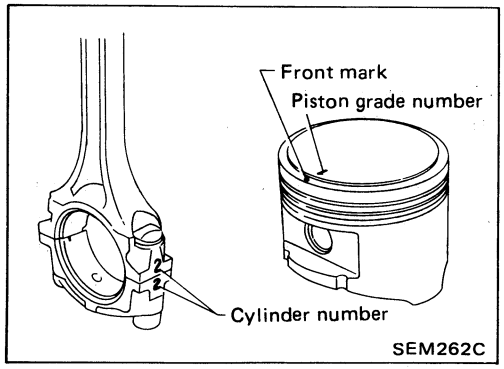

2. Heat piston to 60 to 70°C (140 to 158°F) and assemble piston, piston pin, connecting rod and new snap ring.

- **Align the direction of piston and connecting rod.**
- **Numbers stamped on connecting rod and cap correspond to each cylinder.**
- **After assembly, make sure connecting rod swings smoothly.**

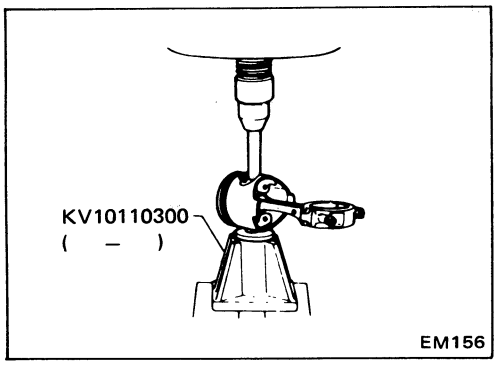

Assembly (Cont'd)

3. Set piston rings as shown.

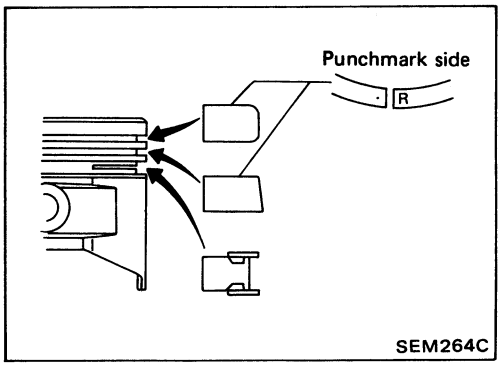

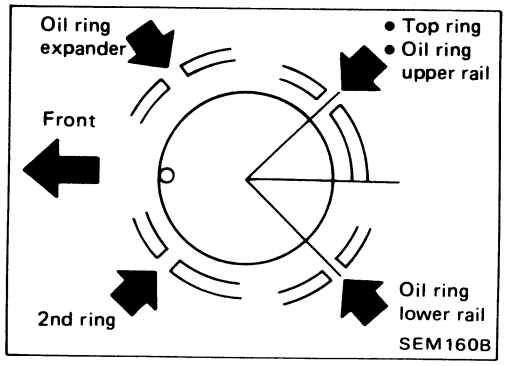

CRANKSHAFT

1. Set main bearings in their proper positions on cylinder block and main bearing beam.
- **Confirm that correct main bearings are used. Refer to "Inspection" of this section.**

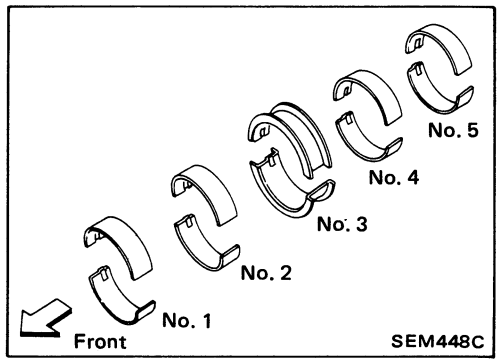

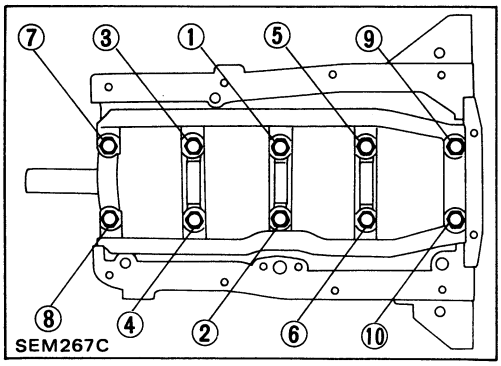

2. Install crankshaft and main bearing beam and tighten bolts to the specified torque.
- **Prior to tightening bearing cap bolts, place bearing cap in its proper position by shifting crankshaft in the axial direction.**
- **Tighten bearing cap bolts gradually in two or three stages. Start with center bearing and move outward sequentially.**
- **After securing bearing cap bolts, make sure crankshaft turns smoothly by hand.**

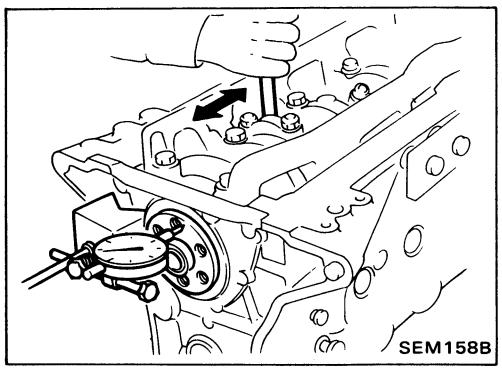

3. Measure crankshaft end play.

Crankshaft end play:

Standard

0.05 - 0.18 mm (0.0020 - 0.0071 in)

Limit

0.3 mm (0.012 in)

If beyond the limit, replace bearing with a new one.

Assembly (Cont'd)

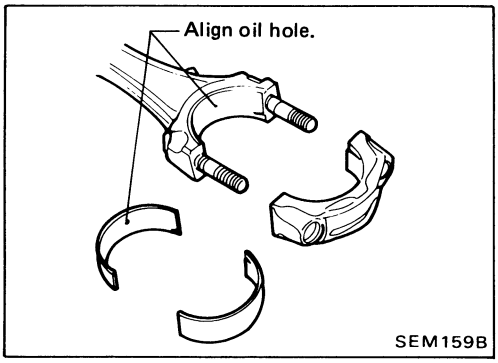

4. Install connecting rod bearings in connecting rods and connecting rod caps.
- Confirm that correct bearings are used.

Refer to "Inspection".

- Install bearings so that oil hole in connecting rod aligns with oil hole of bearing.

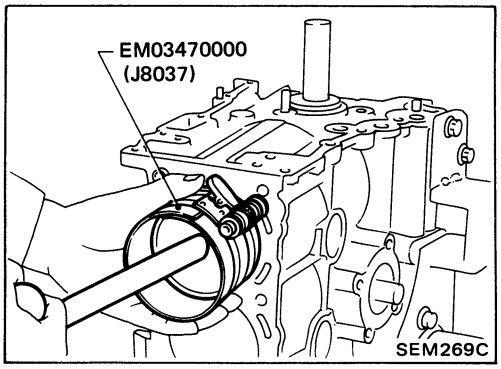

5. Install pistons with connecting rods.

a. Install them into corresponding cylinders with Tool.

- **Be careful not to scratch cylinder wall by connecting rod.**
- **Arrange so that front mark on piston head faces toward front of engine.**

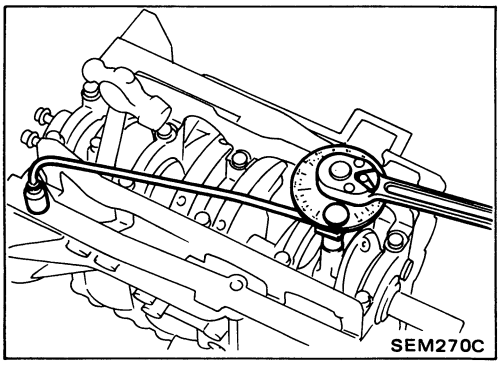

b. Install connecting rod bearing caps.
Tighten connecting rod bearing cap nuts to the specified torque.

Connecting rod bearing nut:

(1) Tighten to 14 to 16 N•m (1.4 to 1.6 kg-m, 10 to 12 ft-lb).

(2) Tighten bolts 60 to 65 degrees clockwise with an angle wrench, or if an angle wrench is not available, tighten them to 38 to 44 N•m (3.9 to 4.5 kg-m, 28 to 33 ft-lb).

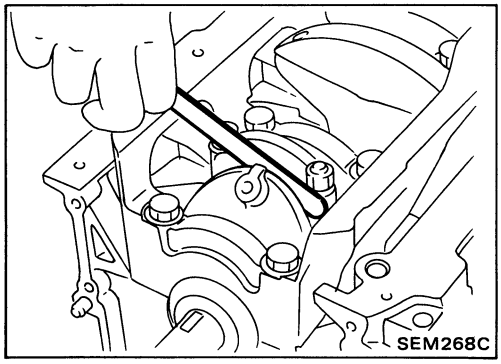

6. Measure connecting rod side clearance.

Connecting rod side clearance:

Standard

0.2 - 0.4 mm (0.008 - 0.016 in)

Limit

0.6 mm (0.024 in)

If beyond the limit, replace connecting rod and/or crankshaft.

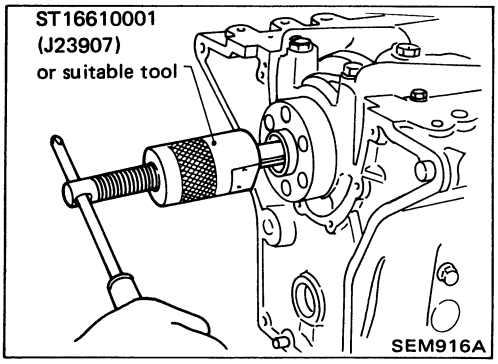

REPLACING PILOT BUSHING

1. Remove pilot bushing (M/T) or pilot convertor (A/T).

Assembly (Cont'd)

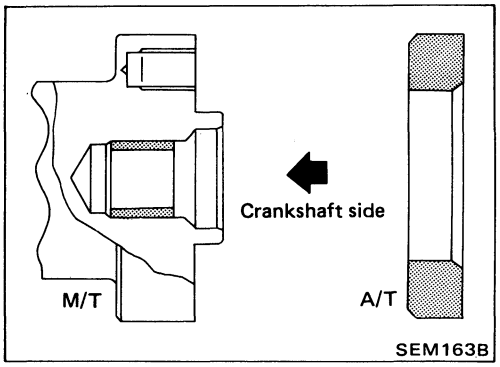

2. Install pilot bushing (M/T) or pilot convertor (A/T).

General Specifications

Engine model	KA24E
Cylinder arrangement	4, in-line
Displacement cm^3 (cu in)	2,389 (145.78)
Bore x stroke mm (in)	89 x 96 (3.50 x 3.78)
Valve arrangement	O.H.C.
Firing order	1-3-4-2
Number of piston rings	
Compression	2
Oil	1
Number of main bearings	5
Compression ratio	8.6

Unit: kPa (kg/cm^2, psi)/rpm

Compression pressure	
Standard	1,206 (12.3, 175)/250
Minimum	1,010 (10.3, 146)/250
Differential limit between cylinders	98 (1.0, 14)/250

Inspection and Adjustment

CYLINDER BLOCK

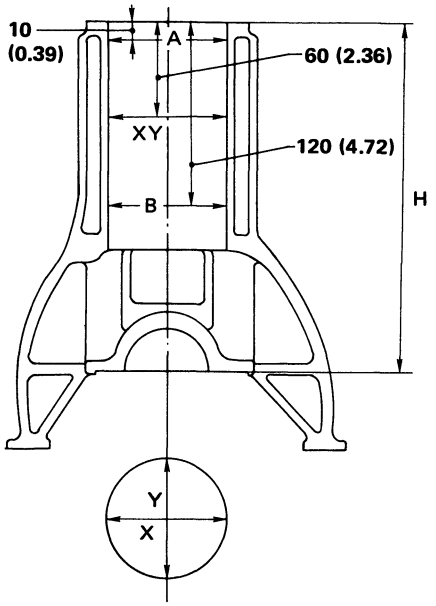

SEM447C

Unit: mm (in)

			Standard	Limit
Distortion			–	0.1 (0.004)
Cylinder bore	Inner diameter	Grade 1	89.000 - 89.010 (3.5039 - 3.5043)	0.2 (0.008)*
		Grade 2	89.010 - 89.020 (3.5043 - 3.5047)	
		Grade 3	89.020 - 89.030 (3.5047 - 3.5051)	
	Out-of-round (X-Y)		Less than 0.015 (0.0006)	–
	Taper (A-B)		Less than 0.010 (0.0004)	–
Difference in inner diameter between cylinders			Less than 0.05 (0.0020)	0.2 (0.008)
Piston-to-cylinder clearance			0.020 - 0.040 (0.0008 - 0.0016)	–
Cylinder block height (From crankshaft center)			246.95 - 247.05 (9.7224 - 9.7264)	0.2 (0.008)**

* Wear limit

** Total amount of cylinder head resurfacing and cylinder block resurfacing

CYLINDER HEAD

Unit: mm (in)

	Standard	Limit
Height (H)	98.8 - 99.0 (3.890 - 3.898)	0.2 (0.008)*
Surface distortion	0.03 (0.0012)	0.1 (0.004)

* Total amount of cylinder head resurfacing and cylinder block resurfacing

Inspection and Adjustment (Cont'd)

VALVE GUIDE

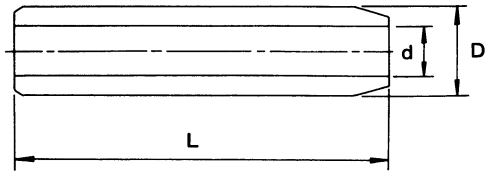

SEM571B

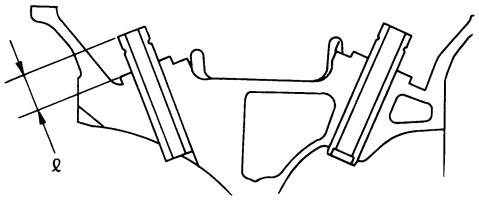

SEM225C

Unit: mm (in)

	Standard		Service		Limit
	Intake	Exhaust	Intake	Exhaust	–
Length (L)	52.6 (2.071)	56.0 (2.205)	52.6 (2.071)	56.0 (2.205)	–
Outer diameter (D)	11.023 - 11.034 (0.4340 - 0.4344)	12.023 - 12.034 (0.4733 - 0.4738)	11.223 - 11.234 (0.4418 - 0.4423)	12.223 - 12.234 (0.4812 - 0.4817)	–
Inner diameter (d) (Finished size)	7.000 - 7.018 (0.2756 - 0.2763)	8.000 - 8.018 (0.3150 - 0.3157)	7.000 - 7.018 (0.2756 - 0.2763)	8.000 - 8.018 (0.3150 - 0.3157)	–
Cylinder head hole diameter	10.975 - 10.996 (0.4321 - 0.4329)	11.975 - 11.996 (0.4715 - 0.4723)	11.175 - 11.196 (0.4400 - 0.4408)	12.175 - 12.196 (0.4793 - 0.4802)	–
Interference fit	0.027 - 0.059 (0.0011 - 0.0023)				–
Stem to guide clearance	0.020 - 0.053 (0.0008 - 0.0021)	0.040 - 0.070 (0.0016 - 0.0028)	0.020 - 0.053 (0.0008 - 0.0209)	0.040 - 0.070 (0.0016 - 0.0028)	0.1 (0.004)
Tapping length (ℓ)	14.9 - 15.1 (0.587 - 0.594)				–

Inspection and Adjustment (Cont'd)

Standard

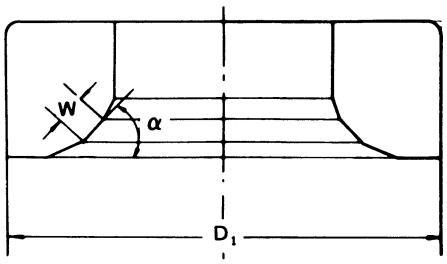

SEM177

Service

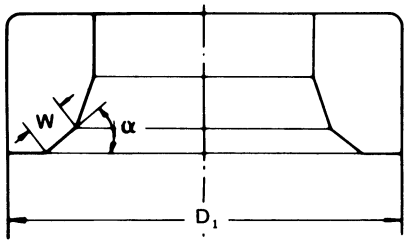

SEM178

Unit: mm (in)

	Standard		Service	
	Intake	Exhaust	Intake	Exhaust
Cylinder head seat recess diameter	36.000 - 36.016 (1.4173 - 1.4179)	42.000 - 42.016 (1.6535 - 1.6542)	36.500 - 36.516 (1.4370 - 1.4376)	42.500 - 42.516 (1.6732 - 1.6739)
Valve seat outer diameter (D_1)	36.080 - 36.096 (1.4205 - 1.4211)	42.080 - 42.096 (1.6567 - 1.6573)	36.580 - 36.596 (1.4402 - 1.4408)	42.580 - 42.596 (1.6764 - 1.6770)
Face angle (α)	45°	45°	45°	45°
Contacting width (W)	1.6 - 1.7 (0.063 - 0.067)	1.7 - 2.1 (0.067 - 0.083)	1.6 - 1.7 (0.063 - 0.067)	1.7 - 2.1 (0.067 - 0.083)

Inspection and Adjustment (Cont'd)

VALVE

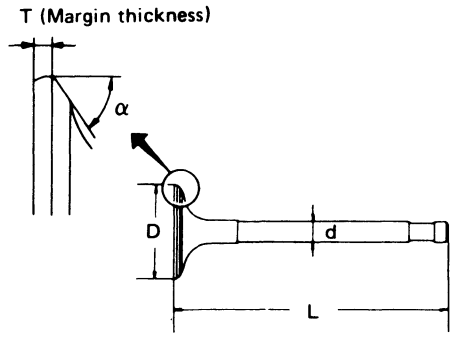

SEM188A

Unit: mm (in)

		Standard	Limit
Valve head diameter (D)	In.	34.0 - 34.2 (1.339 - 1.346)	–
	Ex.	40.0 - 40.2 (1.575 - 1.583)	–
Valve length (L)	In.	119.9 - 120.2 (4.720 - 4.732)	–
	Ex.	120.67 - 120.97 (4.7508 - 4.7626)	–
Valve stem diameter (d)	In.	6.965 - 6.980 (0.2742 - 0.2748)	–
	Ex.	7.948 - 7.960 (0.3129 - 0.3134)	–
Valve face angle (α)	In.	45°30′	–
	Ex.	45°30′	–
Valve head margin (T)	In.	1.15 - 1.45 (0.0453 - 0.0571)	0.5 (0.020)
	Ex.	1.35 - 1.65 (0.0531 - 0.0650)	

VALVE SPRING

Unit: mm (in)

		Standard		Limit	
		Intake	Exhaust	Intake	Exhaust
Free height (H)	Outer	57.44 (2.2614)	53.21 (2.0949)	–	–
	Inner	53.34 (2.1000)	47.95 (1.8878)	–	–
Pressure N (kg, lb) at height	Outer	604.1 (61.6, 135.8) at 37.6 (1.480)	640.4 (65.3, 144.0) at 34.1 (1.343)	567.8 (57.9, 127.7) at 37.6 (1.480)	620.8 (63.3, 139.6) at 34.1 (1.343)
	Inner	284.4 (29.0, 63.9) at 32.6 (1.283)	328.5 (33.5, 73.9) at 29.1 (1.146)	266.8 (27.2, 60.0) at 32.6 (1.283)	318.7 (32.5, 71.7) at 29.1 (1.146)
Out-of-square	Outer	–	–	2.5 (0.098)	2.3 (0.091)
	Inner	–	–	2.3 (0.091)	2.1 (0.083)

Inspection and Adjustment (Cont'd)

CAMSHAFT AND CAMSHAFT BEARING

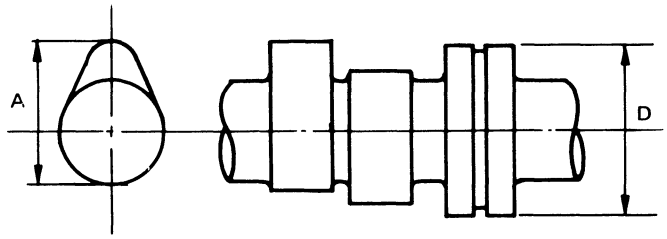

SEM568A

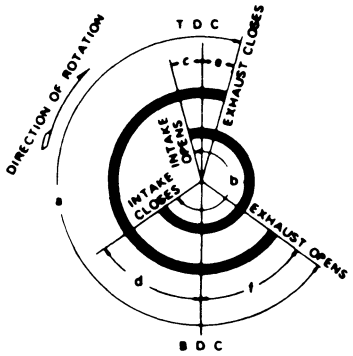

EM120

Unit: mm (in)

		Standard	Limit
Cam height (A)		44.839 - 45.029 (1.7653 - 1.7728)	–
Valve lift (h)		10.4 (0.409)	–
Wear limit of cam height		–	0.2 (0.008)
Camshaft journal to bearing clearance		0.045 - 0.090 (0.0018 - 0.0035)	0.12 (0.0047)
Inner diameter of camshaft bearing		33.000 - 33.025 (1.2992 - 1.3002)	–
Outer diameter of camshaft journal (D)		32.935 - 32.955 (1.2967 - 1.2974)	–
Camshaft runout		0 - 0.02 (0 - 0.0008)	–
Camshaft end play		0.07 - 0.15 (0.0028 - 0.0059)	0.2 (0.008)
Valve timing (Degree on crankshaft)	a	248	–
	b	240	–
	c	3	–
	d	57	–
	e	12	–
	f	56	–

ROCKER ARM AND ROCKER SHAFT

Unit: mm (in)

Rocker arm to shaft clearance	0.012 - 0.050 (0.0005 - 0.0020)
Rocker shaft diameter	21.979 - 22.000 (0.8653 - 0.8661)
Rocker arm rocker shaft hole diameter	22.012 - 22.029 (0.8666 - 0.8673)

Inspection and Adjustment (Cont'd)

PISTON, PISTON RING AND PISTON PIN

Piston

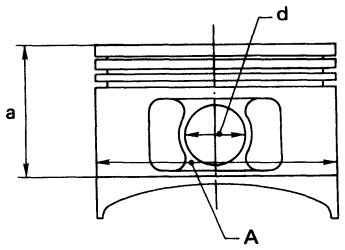

SEM444C

Unit: mm (in)

Piston skirt diameter (A)	Standard	Grade No. 1	88.970 - 88.980 (3.5027 - 3.5031)
		Grade No. 2	88.980 - 88.990 (3.5031 - 3.5035)
		Grade No. 3	88.990 - 89.000 (3.5035 - 3.5039)
	Service (Oversize)	0.5 (0.020)	89.470 - 89.500 (3.5224 - 3.5236)
		1.0 (0.039)	89.970 - 90.000 (3.5421 - 3.5433)
Dimension (a)		Approximately 52 (2.05)	
Piston pin hole diameter (d)		20.987 - 20.999 (0.8263 - 0.8267)	
Piston-to-cylinder bore clearance		0.020 - 0.040 (0.0008 - 0.0016)	

Piston pin

Unit: mm (in)

	Standard	Limit
Piston pin outer diameter	20.989 - 21.001 (0.8263 - 0.8268)	–
Interference fit of piston pin to piston pin hole	0 - 0.004 (0 - 0.0002)	–
Piston pin to connecting rod bearing clearance	0.005 - 0.017 (0.0002 - 0.0007)	0.023 (0.0009)

Piston ring

Unit: mm (in)

		Standard	Limit
Side clearance	Top	0.040 - 0.080 (0.0016 - 0.0031)	0.1 (0.004)
	2nd	0.030 - 0.070 (0.0012 - 0.0028)	0.1 (0.004)
Ring gap	Top	0.28 - 0.43 (0.0110 - 0.0169)	0.5 (0.020)
	2nd	0.45 - 0.60 (0.0177 - 0.0236)*1 0.55 - 0.70 (0.0217 - 0.0276)*2	0.5 (0.020)
	Oil (rail ring)	0.20 - 0.60 (0.0079 - 0.0236)	0.5 (0.020)

*1: For rings punched with R or T.
*2: For rings punched with N.

CONNECTING ROD

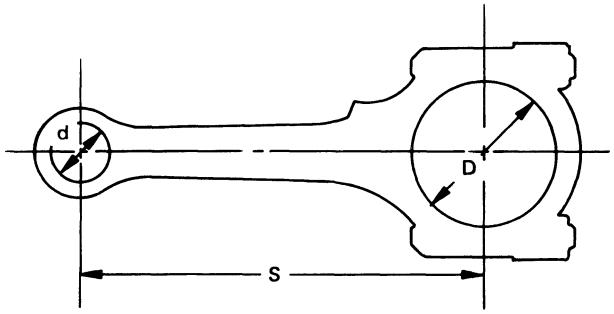

SEM570A

Unit: mm (in)

	Standard	Limit
Center distance (S)	164.95 - 165.05 (6.4941 - 6.4980)	–
Bend [per 100 mm (3.94 in)]	–	0.15 (0.0059)
Torsion [per 100 mm (3.94 in)]	–	0.3 (0.012)
Piston pin bushing inner diameter (d)*	21.000 - 21.012 (0.8268 - 0.8272)	–
Connecting rod big end inner diameter (D)*	53.000 - 53.013 (2.0866 - 2.0871)	–
Side clearance	0.2 - 0.4 (0.008 - 0.016)	0.6 (0.024)

* Without bearing

Inspection and Adjustment (Cont'd)

CRANKSHAFT

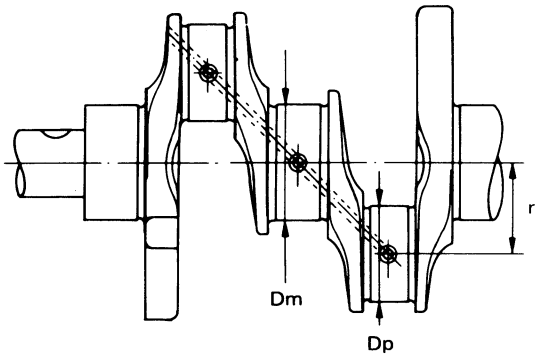

SEM394

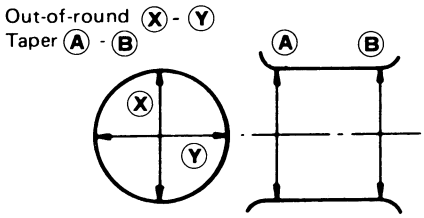

EM715

Unit: mm (in)

Main journal diameter (Dm)	Grade	No. 0	59.967 - 59.975 (2.3609 - 2.3612)
		No. 1	59.959 - 59.967 (2.3606 - 2.3609)
		No. 2	59.951 - 59.959 (2.3603 - 2.3606)
Pin journal diameter (Dp)	Grade	No. 0	49.968 - 49.974 (1.9672 - 1.9675)
		No. 1	49.962 - 49.968 (1.9670 - 1.9672)
		No. 2	49.956 - 49.962 (1.9668 - 1.9670)
Center distance (r)			47.97 - 48.03 (1.8886 - 1.8909)

		Standard	Limit
Taper of journal and pin [Ⓐ - Ⓑ]	Journal	–	0.01 (0.0004)
	Pin	–	0.005 (0.0002)
Out-of-round of journal and pin [Ⓧ - Ⓨ]	Journal	–	0.01 (0.0004)
	Pin	–	0.005 (0.0002)
Runout [T.I.R.] *		–	0.10 (0.0039)
Free end play		0.05 - 0.18 (0.0020 - 0.0071)	0.3 (0.012)
Fillet roil		More than 0.1 (0.004)	

* Total indicator reading

BEARING CLEARANCE

Unit: mm (in)

	Standard	Limit
Main bearing clearance	0.020 - 0.047 (0.0008 - 0.0019)	0.1 (0.004)
Connecting rod bearing clearance	0.010 - 0.035 (0.0004 - 0.0014)	0.09 (0.0035)

Inspection and Adjustment (Cont'd)

AVAILABLE MAIN BEARING

Standard

Grade number	Thickness mm (in)	Identification color
0	1.821 - 1.825 (0.0717 - 0.0719)	Black
1	1.825 - 1.829 (0.0719 - 0.0720)	Brown
2	1.829 - 1.833 (0.0720 - 0.0722)	Green
3	1.833 - 1.837 (0.0722 - 0.0723)	Yellow
4	1.837 - 1.841 (0.0723 - 0.0725)	Blue

Undersize (service)

Unit: mm (in)

	Thickness	Main journal diameter "Dm"
0.25 (0.0098)	1.952 - 1.960 (0.0769 - 0.0772)	Grind so that bearing clearance is the specified value.

AVAILABLE CONNECTING ROD BEARING

Standard

Grade number	Thickness mm (in)	Identification color
0	1.505 - 1.508 (0.0593 - 0.0594)	–
1	1.508 - 1.511 (0.0594 - 0.0595)	Brown
2	1.511 - 1.514 (0.0595 - 0.0596)	Green

Undersize (service)

Unit: mm (in)

	Thickness	Crank pin journal diameter "Dp"
0.08 (0.0031)	1.540 - 1.548 (0.0606 - 0.0609)	Grind so that bearing clearance is the specified value.
0.12 (0.0047)	1.560 - 1.568 (0.0614 - 0.0617)	
0.25 (0.0098)	1.625 - 1.633 (0.0640 - 0.0643)	

MISCELLANEOUS COMPONENTS

Unit: mm (in)

Camshaft sprocket runout [T.I.R.] *	Less than 0.12 (0.0047)
Flywheel runout [T.I.R.] *	Less than 0.1 (0.004)
Drive plate runout [T.I.R.] *	Less than 0.1 (0.004)

* Total indicator reading

ENGINE LUBRICATION & COOLING SYSTEMS

SECTION LC

LC

CONTENTS

PREPARATION ..... LC- 2
PRECAUTION ..... LC- 3
ENGINE LUBRICATION SYSTEM ..... LC- 4
ENGINE COOLING SYSTEM ..... LC- 7
SERVICE DATA AND SPECIFICATIONS (S.D.S.) LC-11

SPECIAL SERVICE TOOLS

Tool number (Kent-Moore No.) Tool name	Description	
ST25051001 (J25695-1) Oil pressure gauge		
ST25052000 (J25695-2) Hose	Adapting oil pressure gauge to cylinder block	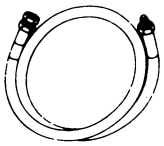
EG17650301 (–) Radiator cap tester adapter	Pressing the tube of liquid gasket	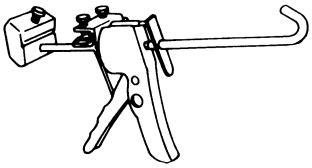
WS39930000 (–) Tube presser	Adapting radiator cap tester to radiator filler neck	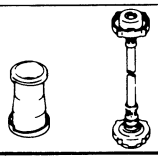

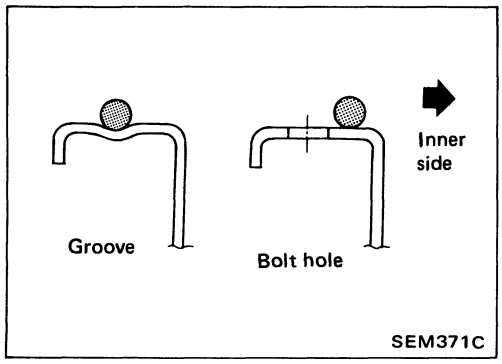

LIQUID GASKET APPLICATION PROCEDURE

a. Before applying liquid gasket, use a scraper to remove all traces of old liquid gasket from mating surface.
b. Apply a continuous bead of liquid gasket to mating surfaces. (Use Genuine Liquid Gasket or equivalent.)
   - Be sure liquid gasket is 3.5 to 4.5 mm (0.138 to 0.177 in) wide (for oil pan).
   - Be sure liquid gasket is 2.0 to 3.0 mm (0.079 to 0.118 in) wide (in areas except oil pan).
c. Apply liquid gasket to inner sealing surface around hole perimeter area.
   (Assembly should be done within 5 minutes after coating.)
d. Wait at least 30 minutes before refilling engine oil and engine coolant.

Lubrication Circuit

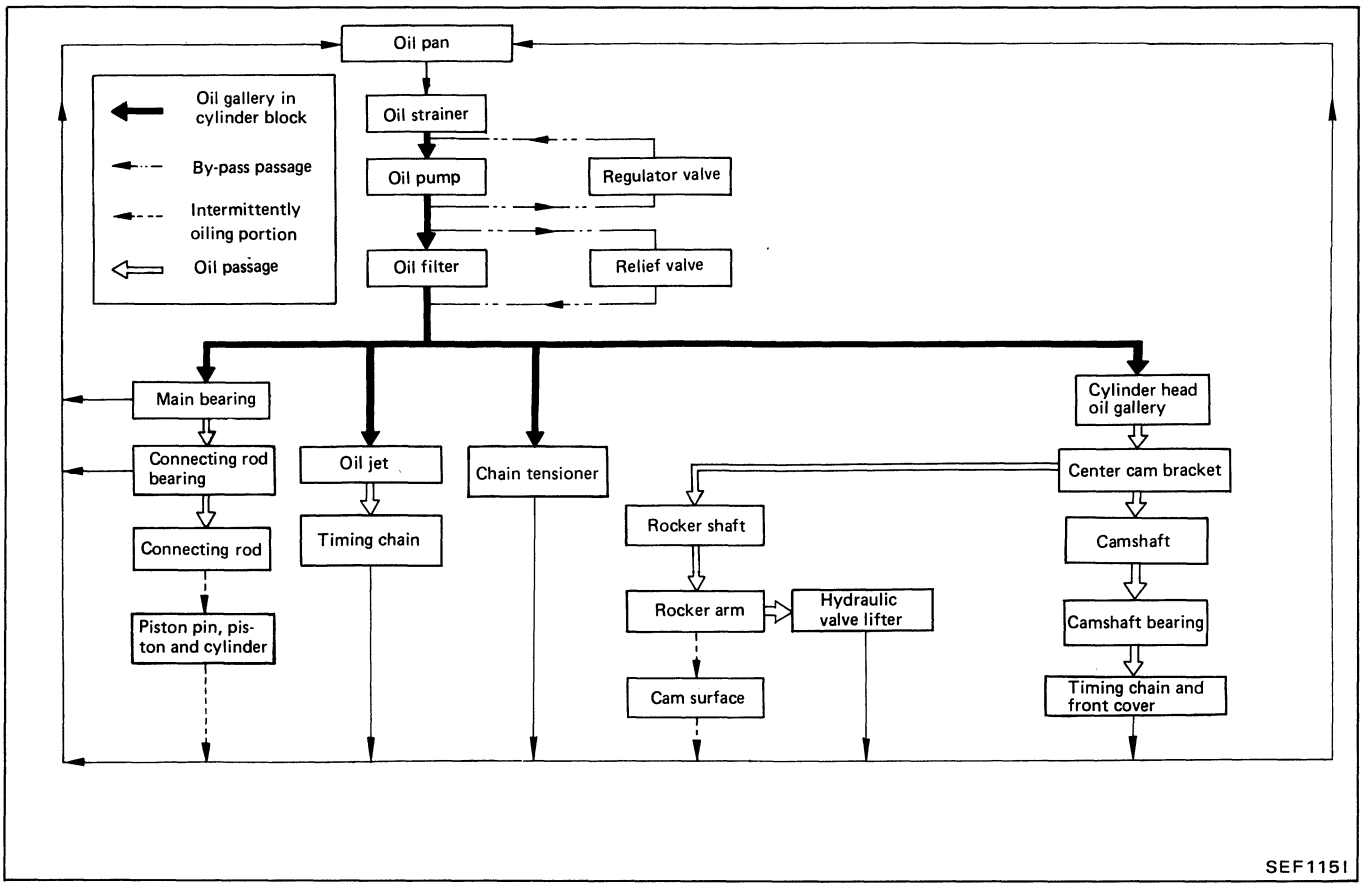

Oil Pressure Check

WARNING:

- **Be careful not to burn yourself, as the engine and oil may be hot.**
- **Oil pressure check should be done in "Neutral" gear position.**

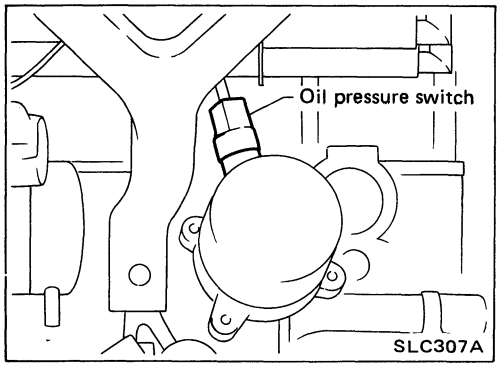

1. Check oil level.
2. Remove oil pressure switch.

Oil Pressure Check (Cont'd)

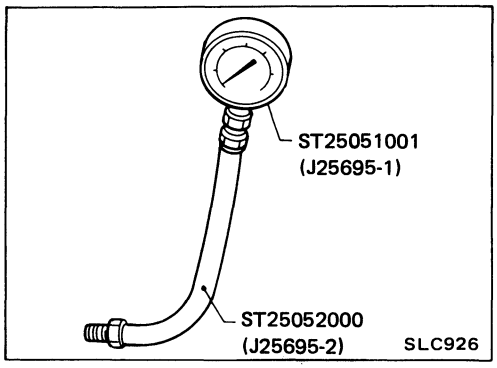

3. Install pressure gauge.
4. Start engine and warm it up to normal operating temperature.
5. Check oil pressure with engine running under no-load.

Engine rpm	Approximate discharge pressure kPa (kg/cm^2, psi)
Idle speed	More than 78 (0.8, 11)
3,000	412 - 481 (4.2 - 4.9, 60 - 70)

If difference is extreme, check oil passage and oil pump for oil leaks.

6. Install oil pressure switch with sealant.

Oil Pump

REMOVAL

1. Drain oil.
2. Remove front cover. (Refer to EM section.)
3. Remove oil pump assembly.

DISASSEMBLY AND ASSEMBLY

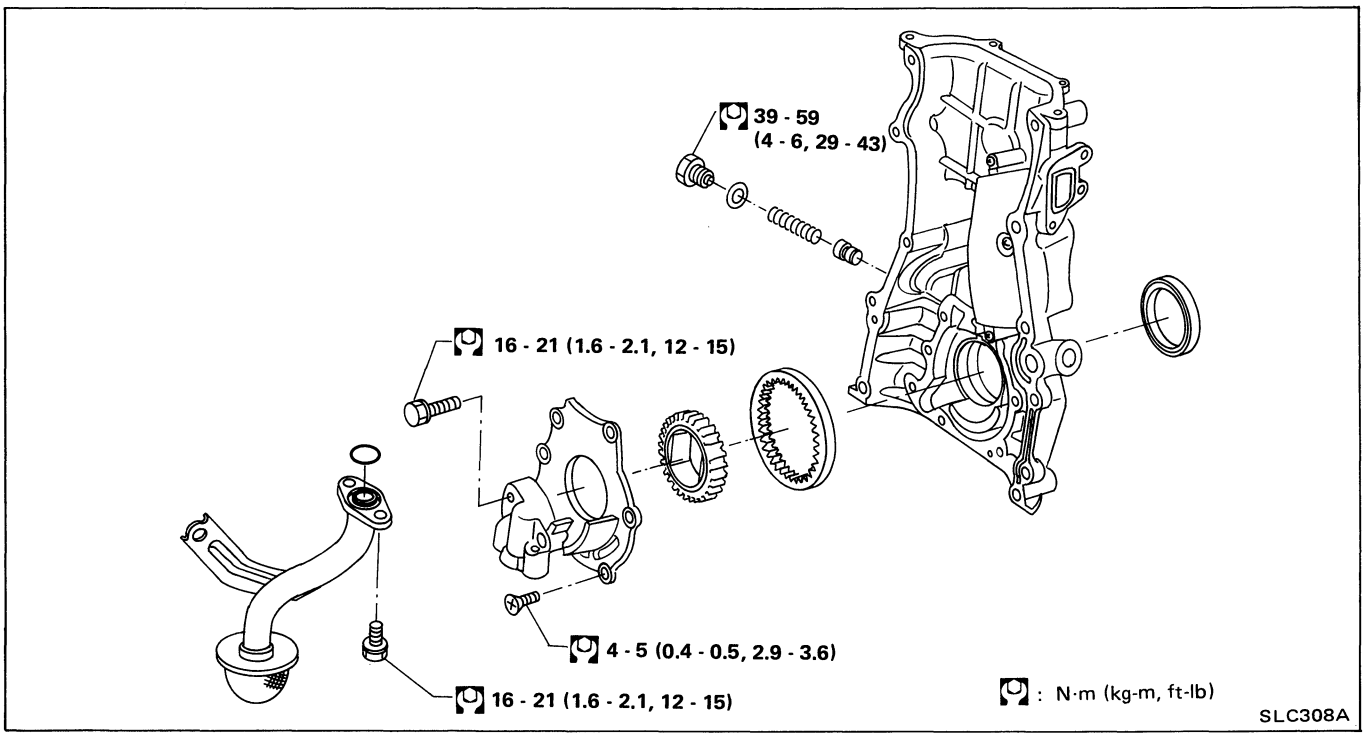

- **Always replace with new oil seal and gasket.**
- **When installing oil pump, apply engine oil to inner and outer gears.**
- **Be sure that O-ring is properly installed.**

Oil Pump (Cont'd)

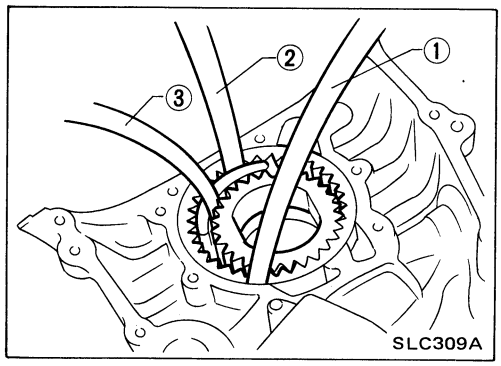

INSPECTION

Using a feeler gauge, check the following clearances:

Standard clearance:	Unit: mm (in)
Body to outer gear clearance ①	0.11 - 0.20 (0.0043 - 0.0079)
Inner gear to crescent clearance ②	0.22 - 0.33 (0.0087 - 0.0130)
Outer gear to crescent clearance ③	0.21 - 0.32 (0.0083 - 0.0126)
Housing to inner gear clearance ④	0.05 - 0.09 (0.0020 - 0.0035)
Housing to outer gear clearance ⑤	0.05 - 0.11 (0.0020 - 0.0043)

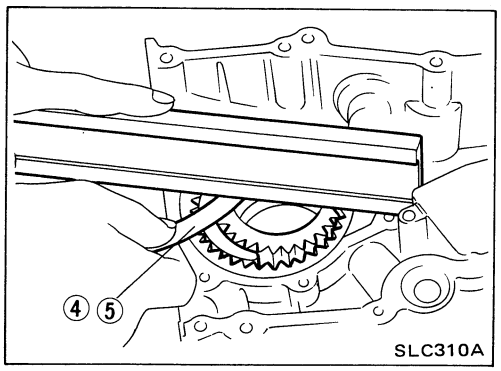

If any clearance exceeds the limit, replace gear set or entire oil pump assembly.

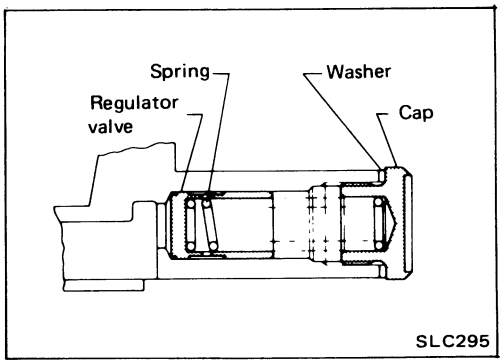

REGULATOR VALVE INSPECTION

1. Visually inspect components for wear and damage.
2. Check oil pressure regulator valve sliding surface and valve spring.
3. Coat regulator valve with engine oil and check to make sure that it falls smoothly into the valve hole by its own weight.

If damaged, replace regulator valve set or oil pump assembly.

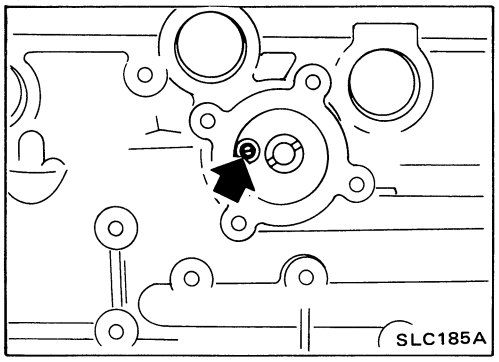

OIL PRESSURE RELIEF VALVE INSPECTION

Inspect oil pressure relief valve for movement, cracks and breaks by pushing the ball. If replacement is necessary, remove valve by prying it out with a suitable tool.
Install a new valve by tapping it in place.

Cooling Circuit

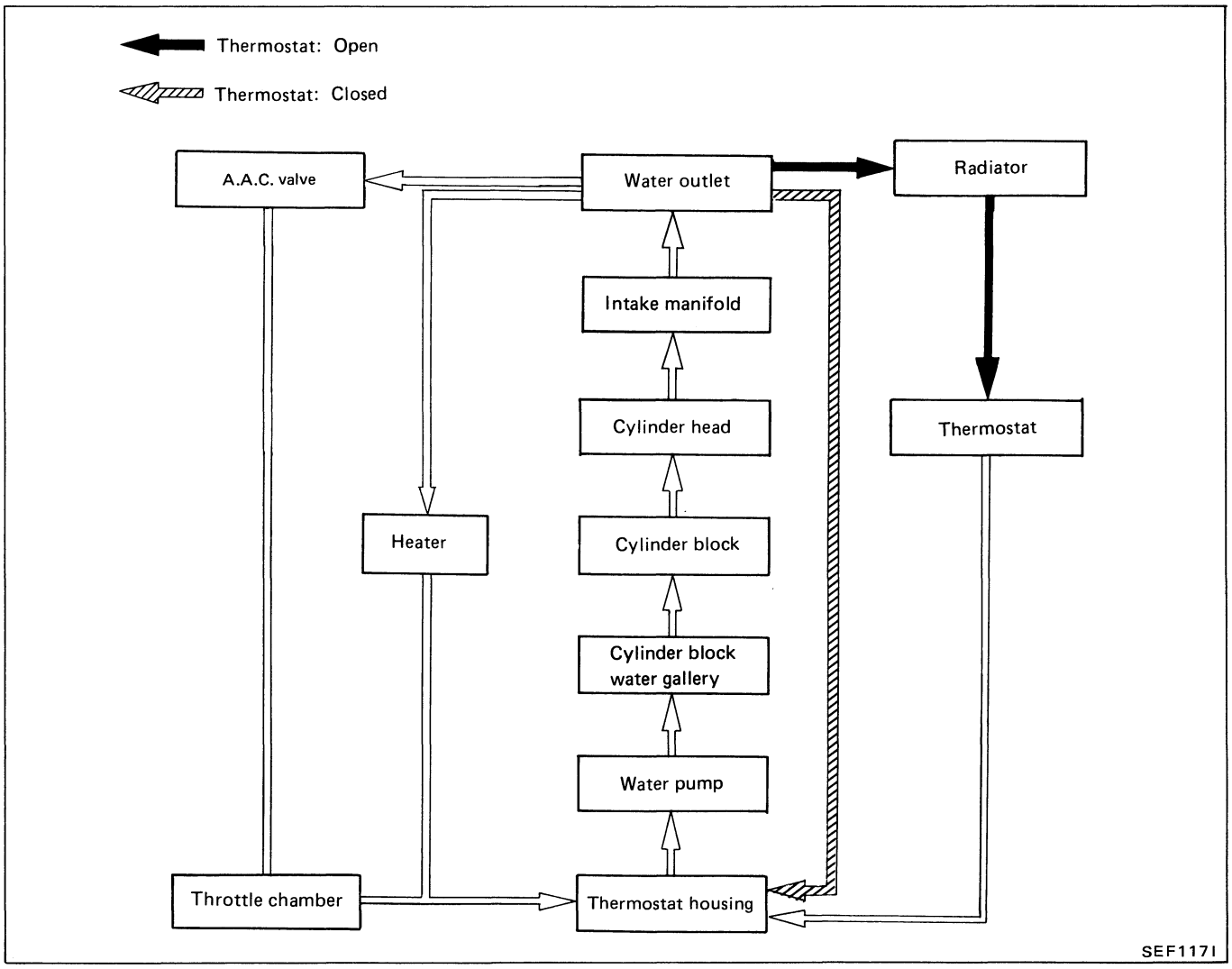

System Check

WARNING:
Never remove the radiator cap when the engine is hot; serious burns could be caused by high pressure fluid escaping from the radiator.
Wrap a thick cloth around the cap and carefully remove by turning it a quarter turn to allow built-up pressure to escape. Then continue to turn the cap until it can be removed safely.

CHECKING COOLING SYSTEM HOSES

Check hoses for improper attachment, leaks, cracks, damage, loose connections, chafing and deterioration.

System Check (Cont'd)

CHECKING COOLING SYSTEM FOR LEAKS

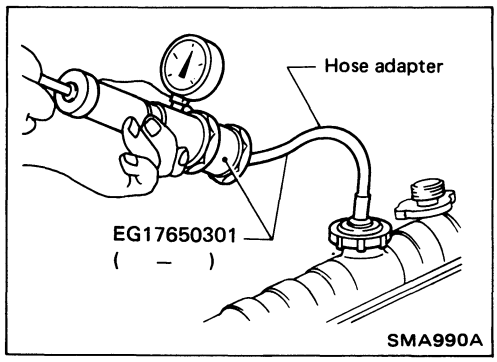

To check for leakage, apply pressure to the cooling system with a tester.

Testing pressure:
98 kPa (1.0 kg/cm^2, 14 psi)

CAUTION:
Higher than the specified pressure may cause radiator damage.

CHECKING RADIATOR CAP

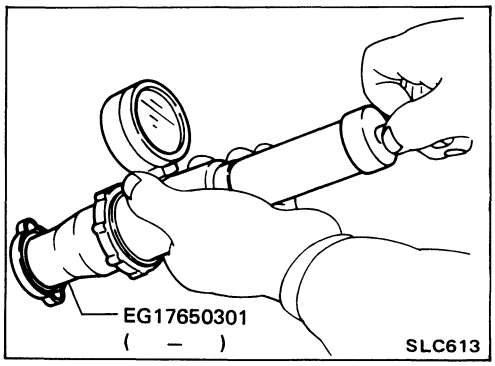

To check radiator cap, apply pressure to cap with a tester.

Radiator cap relief pressure:
78 - 98 kPa (0.8 - 1.0 kg/cm^2, 11 - 14 psi)

Water Pump

REMOVAL AND INSTALLATION

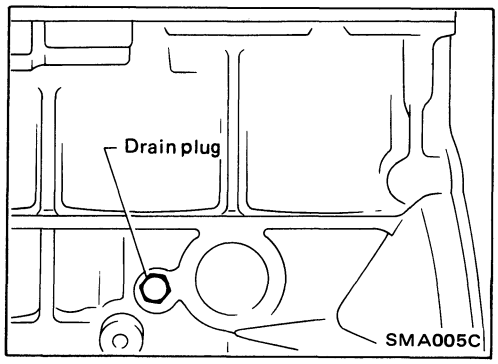

Drain coolant from drain cocks on both cylinder block and radiator.

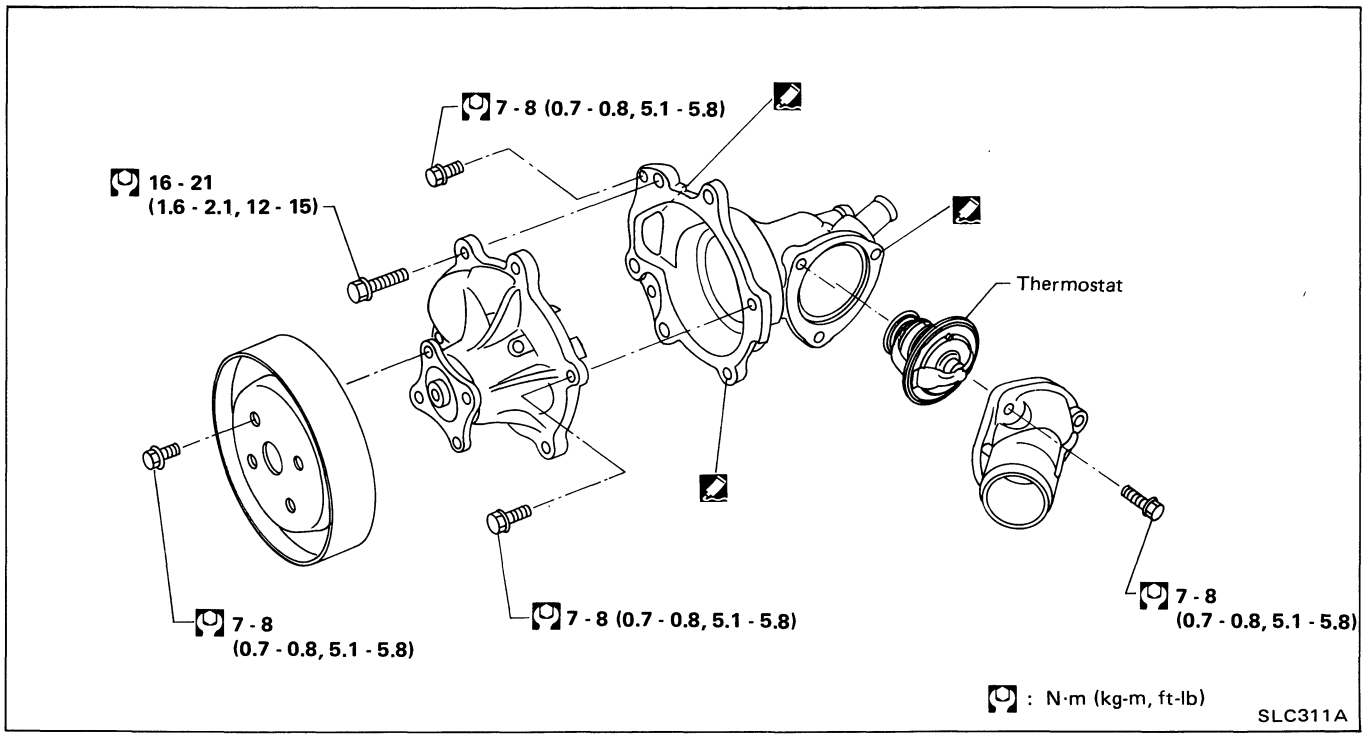

Water Pump (Cont'd)

CAUTION:

- **When removing water pump assembly, be careful not to get coolant on timing belt.**
- **Water pump cannot be disassembled and should be replaced as a unit.**
- **To avoid damaging timing cover, make sure there is adequate clearance between it and the hose clamp.**
- **After installing water pump, connect hose and clamp securely, then check for leaks using radiator cap tester.**

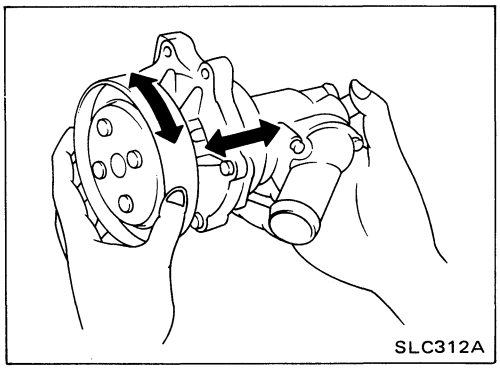

INSPECTION

1. Check for badly rusted or corroded vanes and body assembly.
2. Check for rough operation due to excessive end play.

Thermostat

INSPECTION

1. Check valve seating condition at ordinary room temperatures. It should seat tightly.

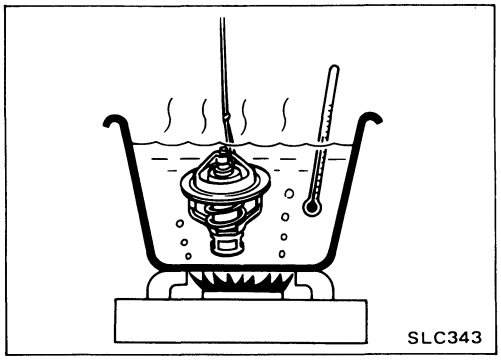

2. Check valve opening temperature and maximum valve lift.

		Standard
Valve opening temperature	°C (°F)	76.5 (170)
Maximum valve lift	mm/°C (in/°F)	8/90 (0.31/194)

3. Then check if valve is 5°C (9°F) below valve opening temperature.

- **After installation, run engine for a few minutes, and check for leaks.**
- **Be careful not to spill coolant over engine compartment. Use a rag to absorb coolant.**

Radiator

REMOVAL AND INSTALLATION

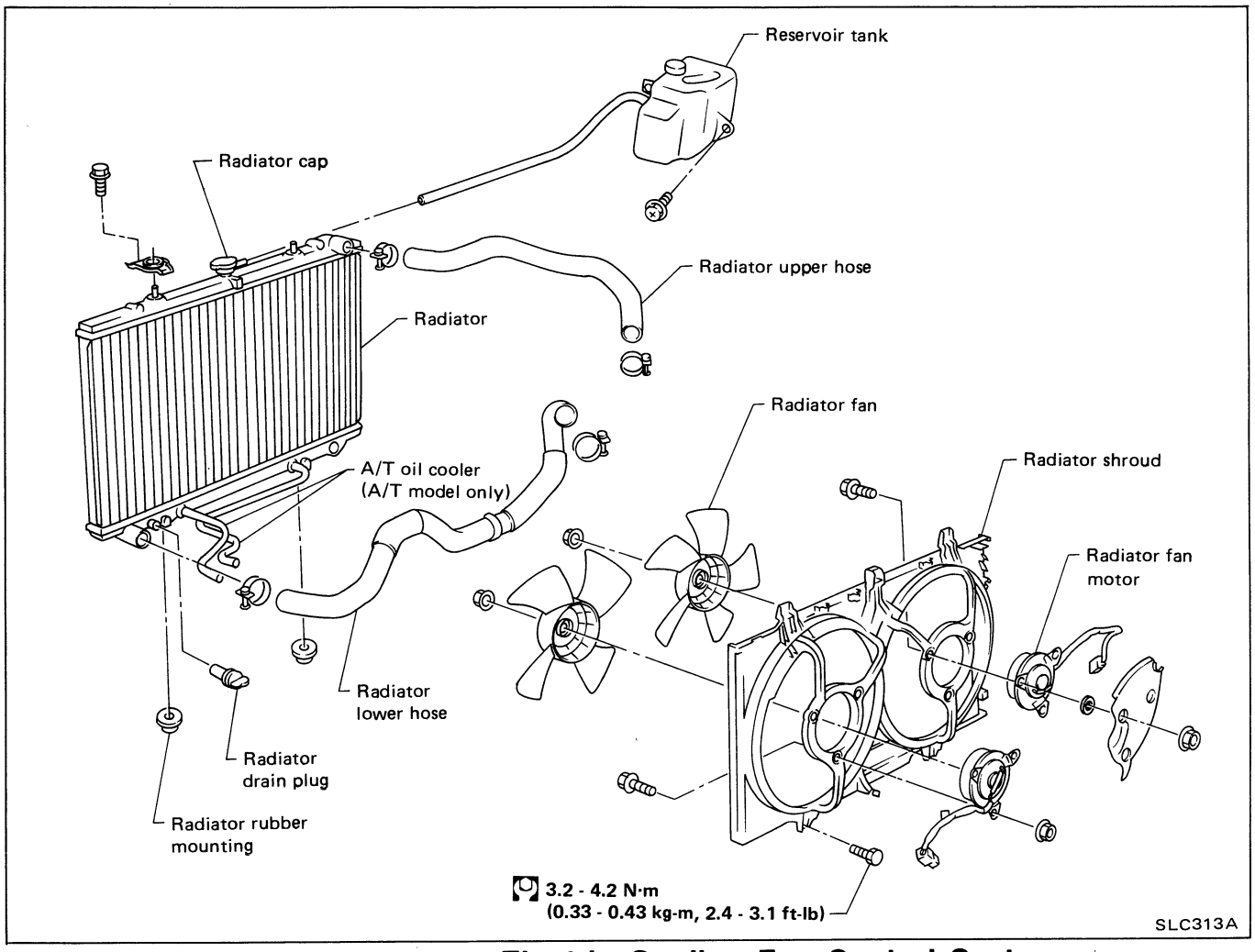

Electric Cooling Fan Control System

Radiator fan and condenser fan are both controlled by E.C.C.S. control unit.
For details, refer to EF & EC section.

Engine Lubrication System

Oil pressure check

Engine rpm	Approximate discharge pressure kPa (kg/cm², psi)
Idle speed	More than 78 (0.8, 11)
3,000	412 - 481 (4.2 - 4.9, 60 - 70)

Oil pump

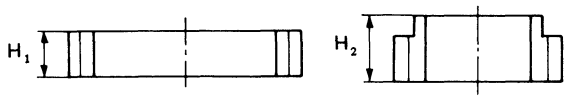

OUTER GEAR INNER GEAR SLC573

Unit: mm (in)

	H_1	H_2
Height	11.5 (0.453)	17.25 (0.6791)

Unit: mm (in)

Body to outer gear clearance ①	0.11 - 0.20 (0.0043 - 0.0079)
Inner gear to crescent clearance ②	0.22 - 0.33 (0.0087 - 0.0130)
Outer gear to crescent clearance ③	0.21 - 0.32 (0.0083 - 0.0126)
Housing to inner gear side clearance ④	0.05 - 0.09 (0.0020 - 0.0035)
Housing to outer gear side clearance ⑤	0.05 - 0.11 (0.0020 - 0.0043)

Engine Cooling System

Thermostat

	Standard
Valve opening temperature °C (°F)	76.5 (170)
Maximum valve lift mm/°C (in/°F)	8/90 (0.31/194)

Radiator

Unit: kPa (kg/cm², psi)

Cap relief pressure	78 - 98 (0.8 - 1.0, 11 - 14)
Leakage test pressure	98 (1.0, 14)

ENGINE FUEL & EMISSION CONTROL SYSTEM

SECTION EF & EC

CONTENTS

PREPARATION ..... EF & EC- 2
PRECAUTIONS ..... EF & EC- 3
ENGINE AND EMISSION CONTROL OVERALL SYSTEM ..... EF & EC- 4
ENGINE AND EMISSION CONTROL PARTS DESCRIPTION ..... EF & EC- 12
ENGINE AND EMISSION CONTROL SYSTEM DESCRIPTION ..... EF & EC- 18
IDLE SPEED/IGNITION TIMING/IDLE MIXTURE RATIO INSPECTION ..... EF & EC- 29
TROUBLE DIAGNOSES ..... EF & EC- 34
FUEL INJECTION CONTROL SYSTEM INSPECTION ..... EF & EC-159
EVAPORATIVE EMISSION CONTROL SYSTEM ..... EF & EC-162
CRANKCASE EMISSION CONTROL SYSTEM ..... EF & EC-164
SERVICE DATA AND SPECIFICATIONS (S.D.S.) ..... EF & EC-165

When you read wiring diagrams:

- **Read GI section, "HOW TO READ WIRING DIAGRAMS".**
- **See EL section, "POWER SUPPLY ROUTING" for power distribution circuit.**

When you perform trouble diagnoses, read GI section, "HOW TO FOLLOW FLOW CHART IN TROUBLE DIAGNOSES".

SPECIAL SERVICE TOOL

Tool number (Kent-Moore No.) Tool name	Description	
EG11160000 (—) Ignition coil adapter harness	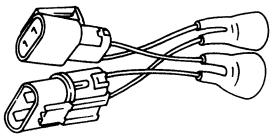	Measuring engine speed

E.C.U.
- Do not disassemble E.C.C.S. control unit. (E.C.U.)
- Do not turn diagnosis mode selector forcibly.
- If a battery terminal is disconnected, the memory will return to the ROM value. The E.C.C.S. will now start to self-control at its initial value. Engine operation can vary slightly when the terminal is disconnected. However, this is not an indication of a problem. Do not replace parts because of a slight variation.
- Do not apply undue force to mounting bracket.
- Before connecting or disconnecting E.C.U. connector, make sure red and green LEDs are off after turning ignition key off.
- Always install the properly specified E.C.U. on car; otherwise, erroneous engine operation may result.

INJECTOR
- Do not disconnect injector harness connectors with engine running.
- Do not apply battery power directly to injectors; otherwise injectors will be damaged.

WIRELESS EQUIPMENT
- When installing a C.B. ham radio or a mobile phone, be sure to observe the following, as installation location may affect the electronic control systems.

1) Keep antenna as far as possible away from electronic control units.
2) Keep antenna feeder line more than 20 cm (7.9 in) away from harness of electronic controls. Do not let them run parallel for a long distance.
3) Adjust antenna and feeder line so that standing-wave ratio can be kept smaller.
4) Be sure to ground radio to vehicle body.

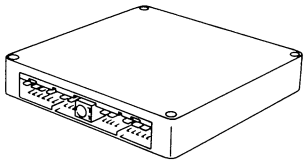

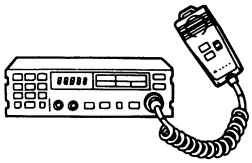

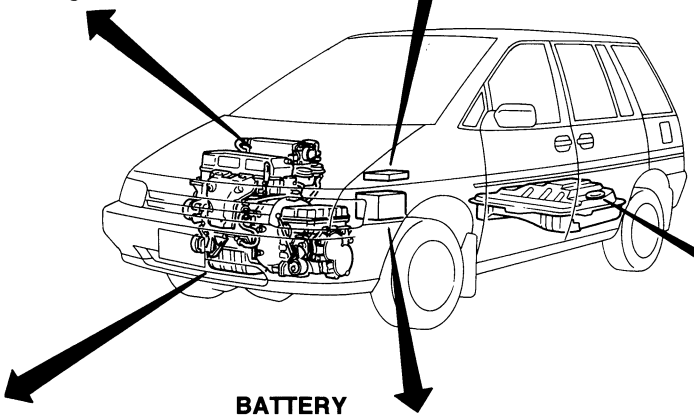

FUEL PUMP
- Do not operate fuel pump when there is no fuel in lines.
- Tighten fuel hose clamps to the specified torque.

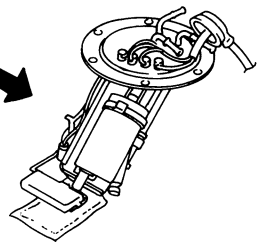

E.C.C.S. PARTS HANDLING
- Handle air flow meter carefully to avoid damage.
- Do not disassemble air flow meter.
- Do not clean air flow meter with detergent.
- Do not jolt or jar the crank angle sensor.
- Even a slight leak in the air intake system can cause serious problems.
- Do not disassemble auxiliary air control valve.

BATTERY
- Always use a 12 volt battery as a power source.
- Do not disconnect battery cables while the engine is running.
- Do not reverse polarity of battery when connecting it. Otherwise, E.C.U. and/or injectors may be burned.

WHEN STARTING
- Do not depress accelerator pedal when starting.
- Immediately after starting, do not rev up engine unnecessarily.
- Do not rev up engine just prior to shutdown.

E.C.C.S. HARNESS HANDLING
- Securely connect E.C.C.S. harness connectors.
  A poor connection can cause extremely high voltage to develop in the coil and condenser, resulting in damage to ICs.
- Keep E.C.C.S. harness at least 10 cm (3.9 in) away from adjacent harnesses, to prevent an E.C.C.S. system malfunction due to receiving external noise, degraded operation of ICs, etc.
- Keep E.C.C.S. parts and harnesses dry.
- Before removing parts, turn off ignition switch and then disconnect battery ground cable.

SEF170I

E.C.C.S. Component Parts Location

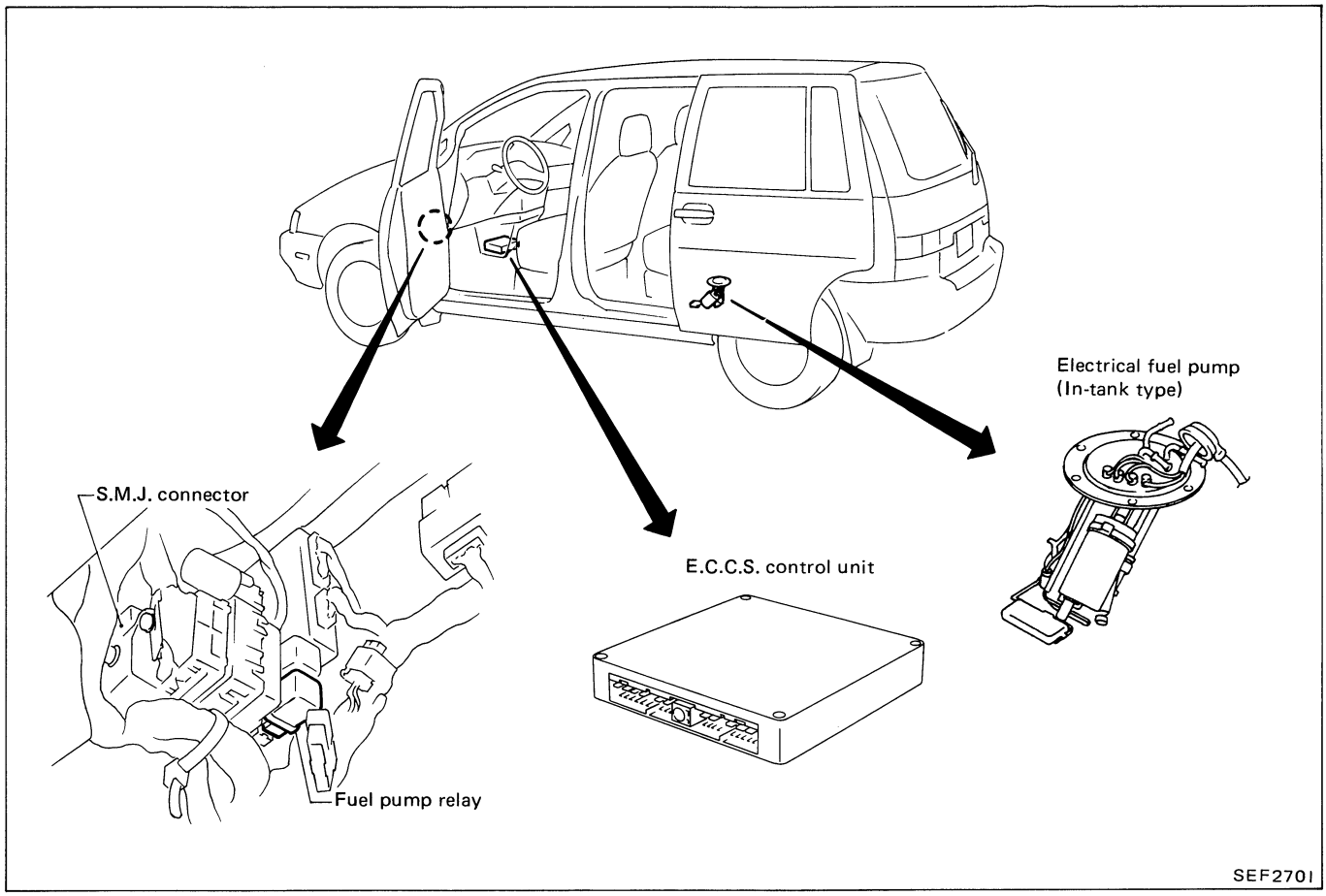

E.C.C.S. Component Parts Location (Cont'd)

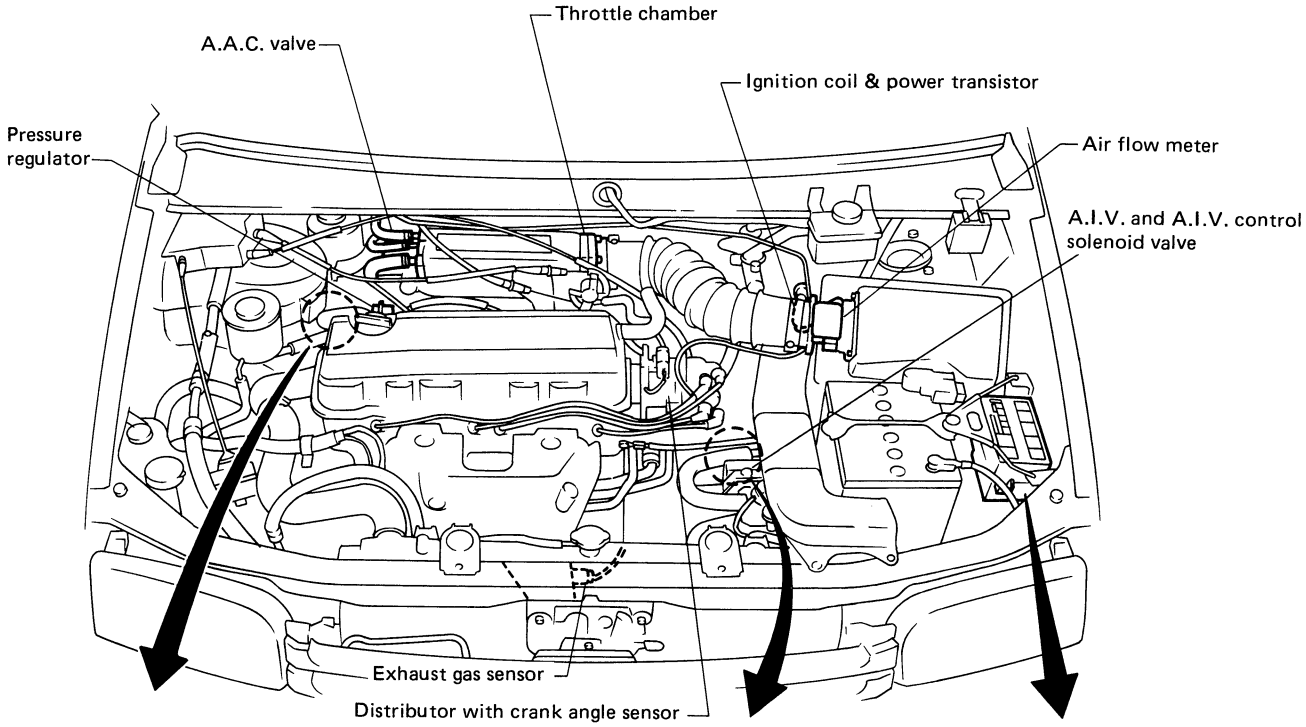

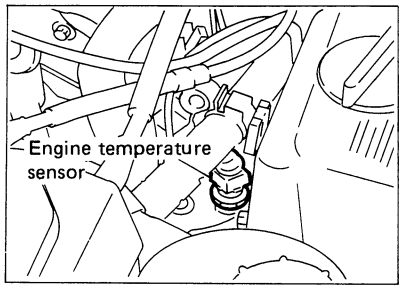

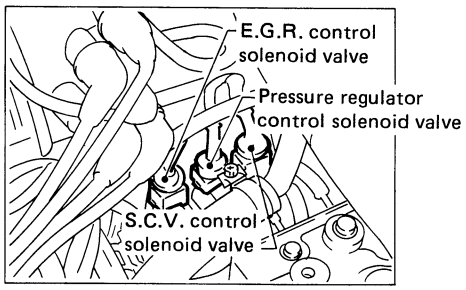

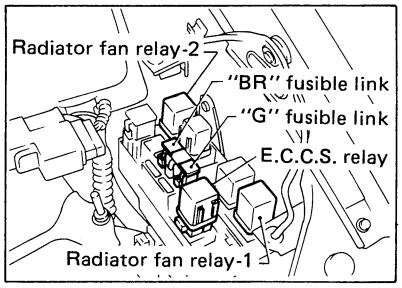

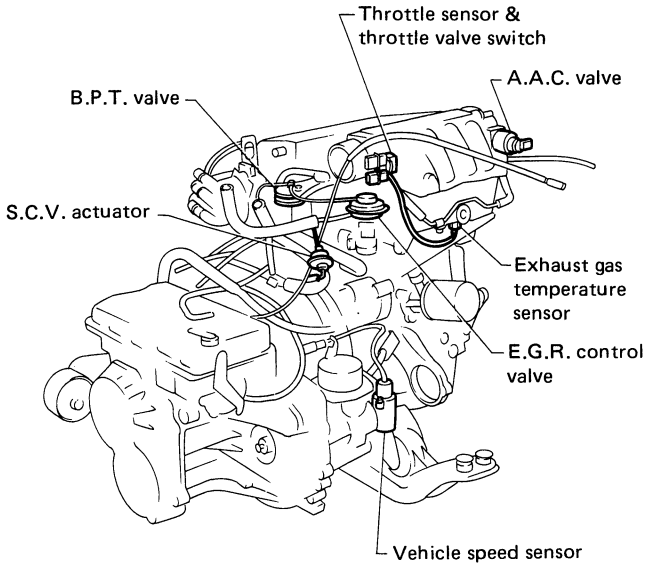

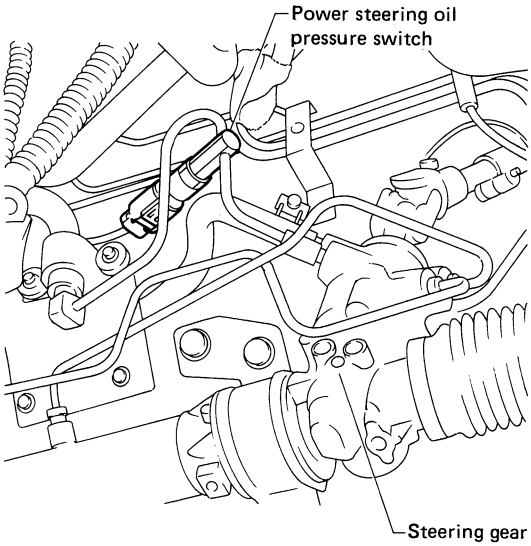

SEF171I

System Diagram

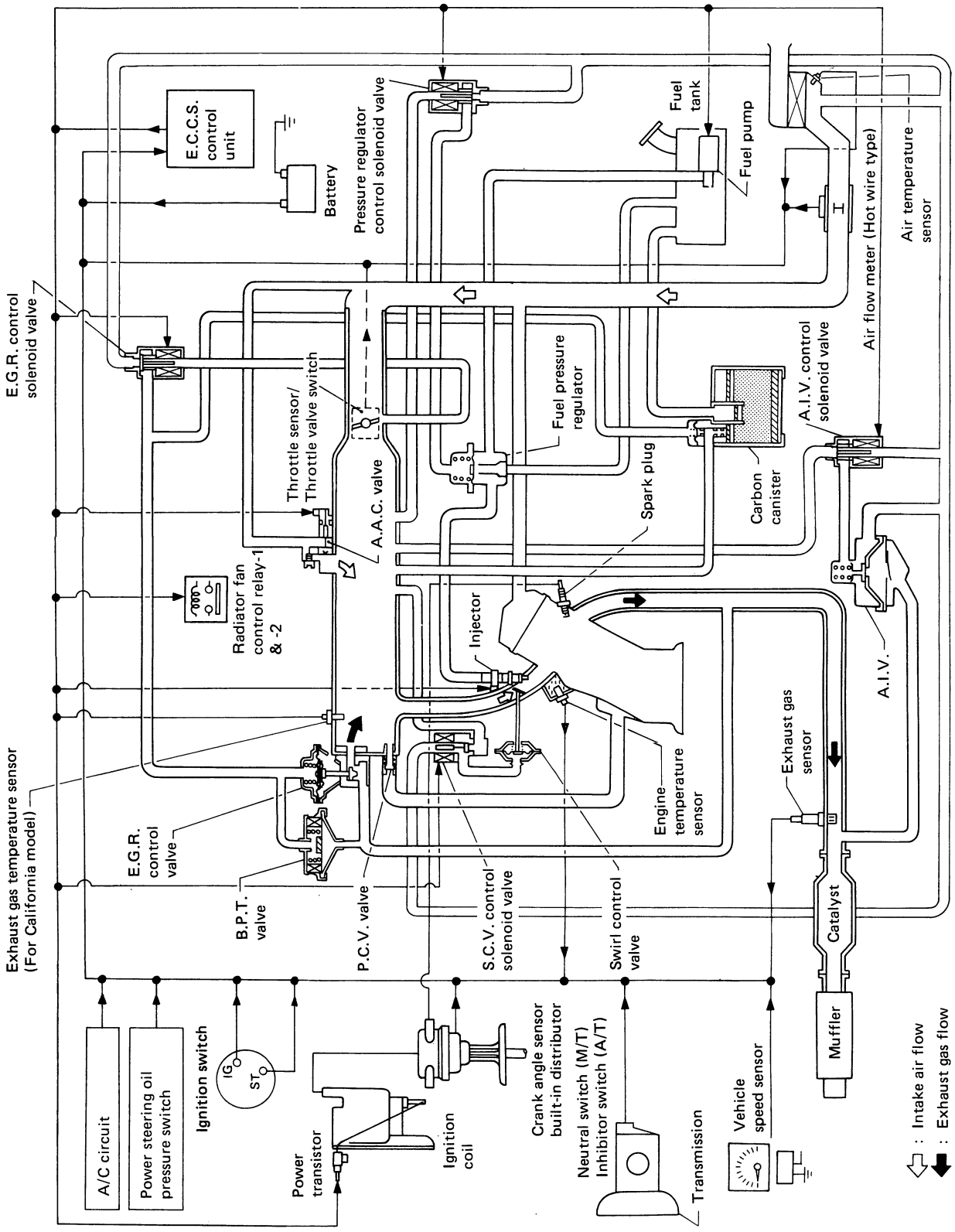

SEF119I

System Chart

E.C.C.S. CONTROL SYSTEM

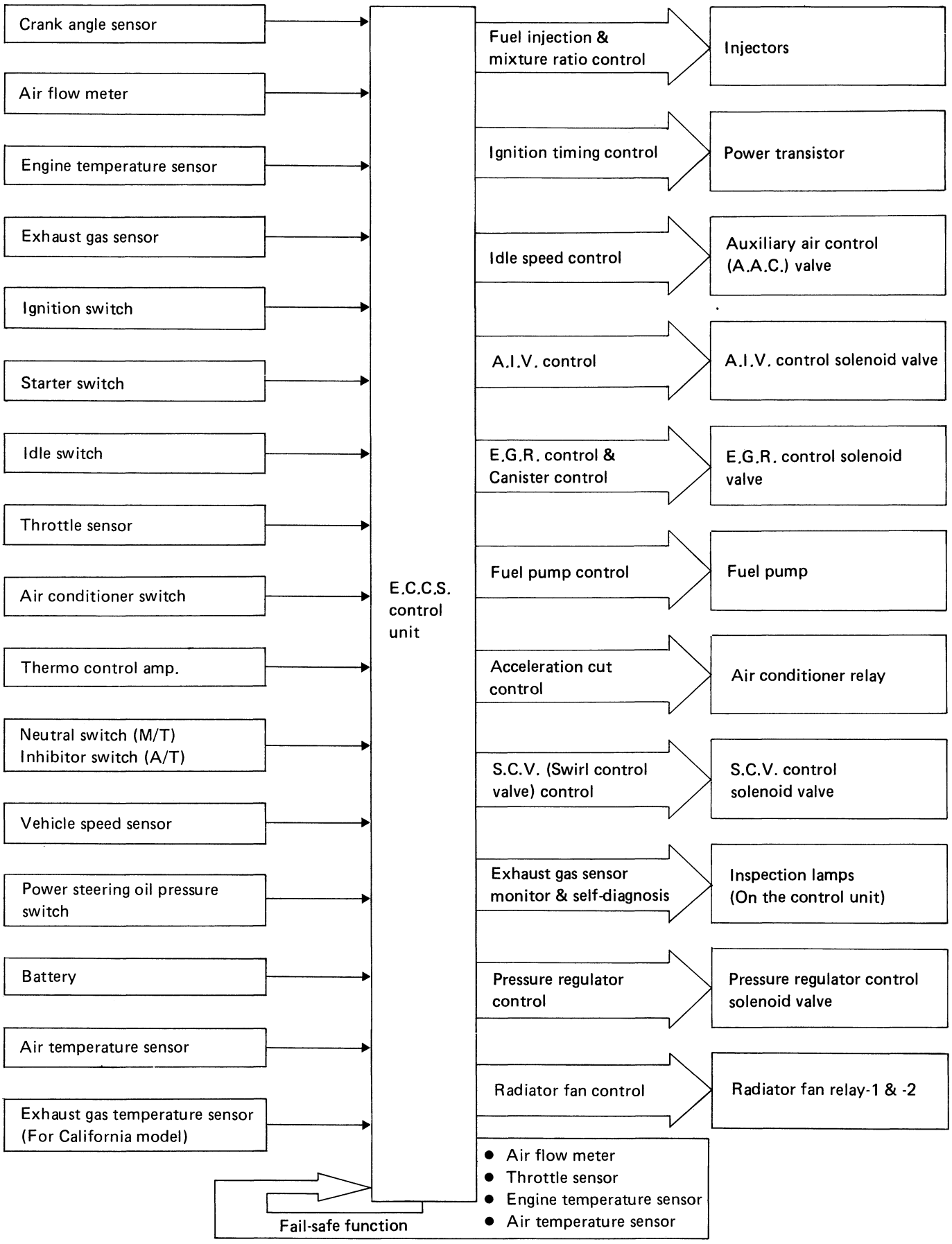

Vacuum Hose Drawing

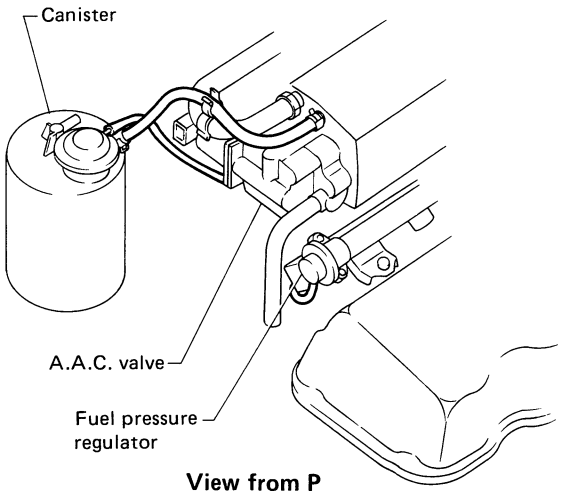

View from P

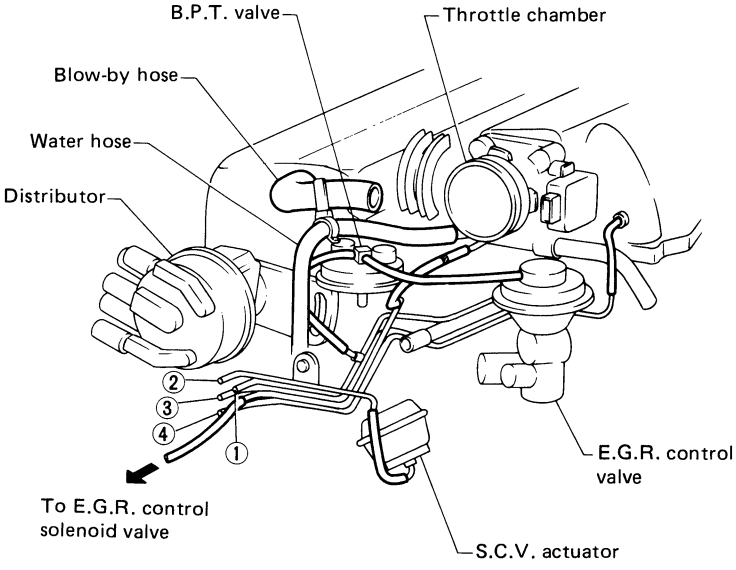

View from T

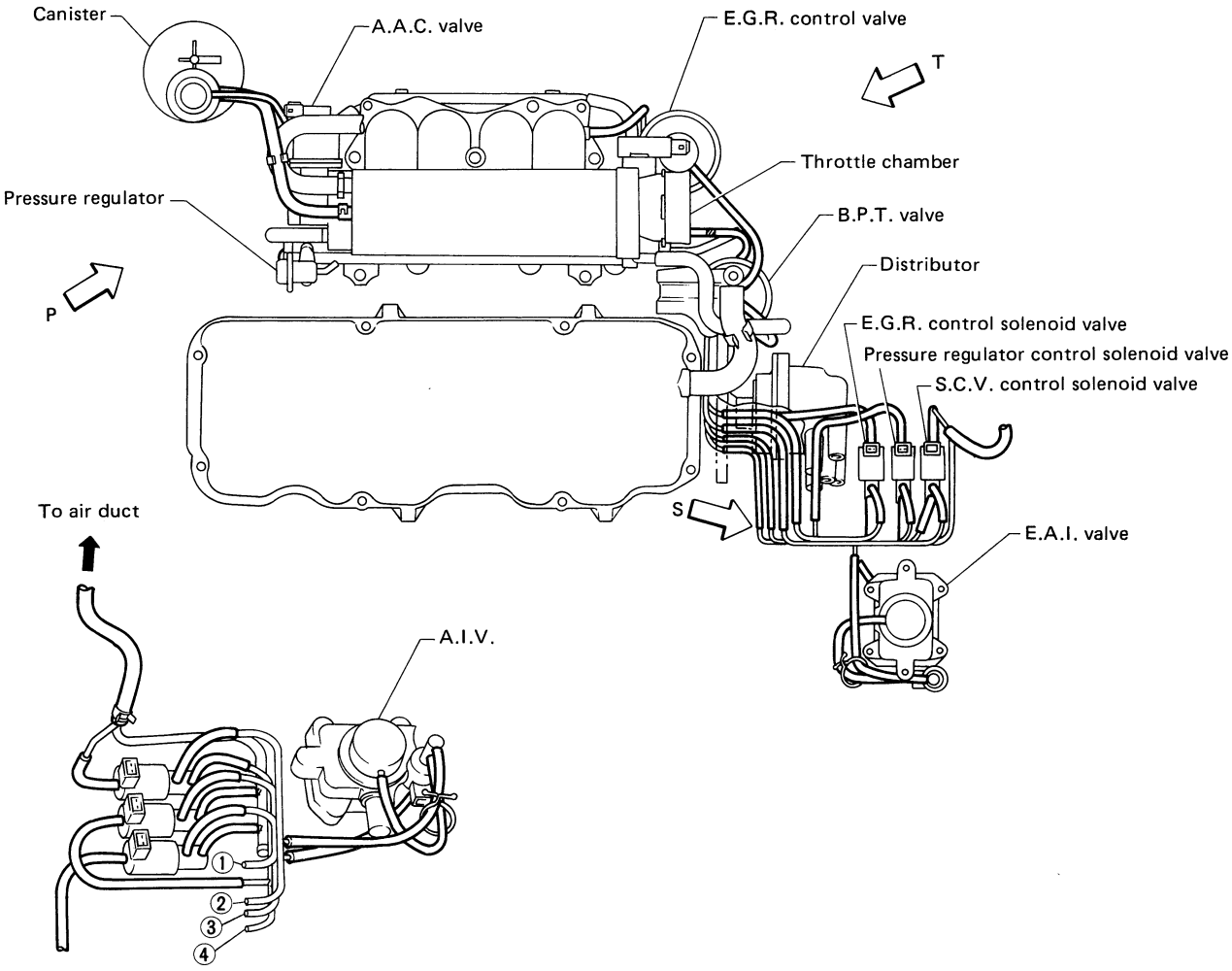

View from S

SEF172I

Circuit Diagram

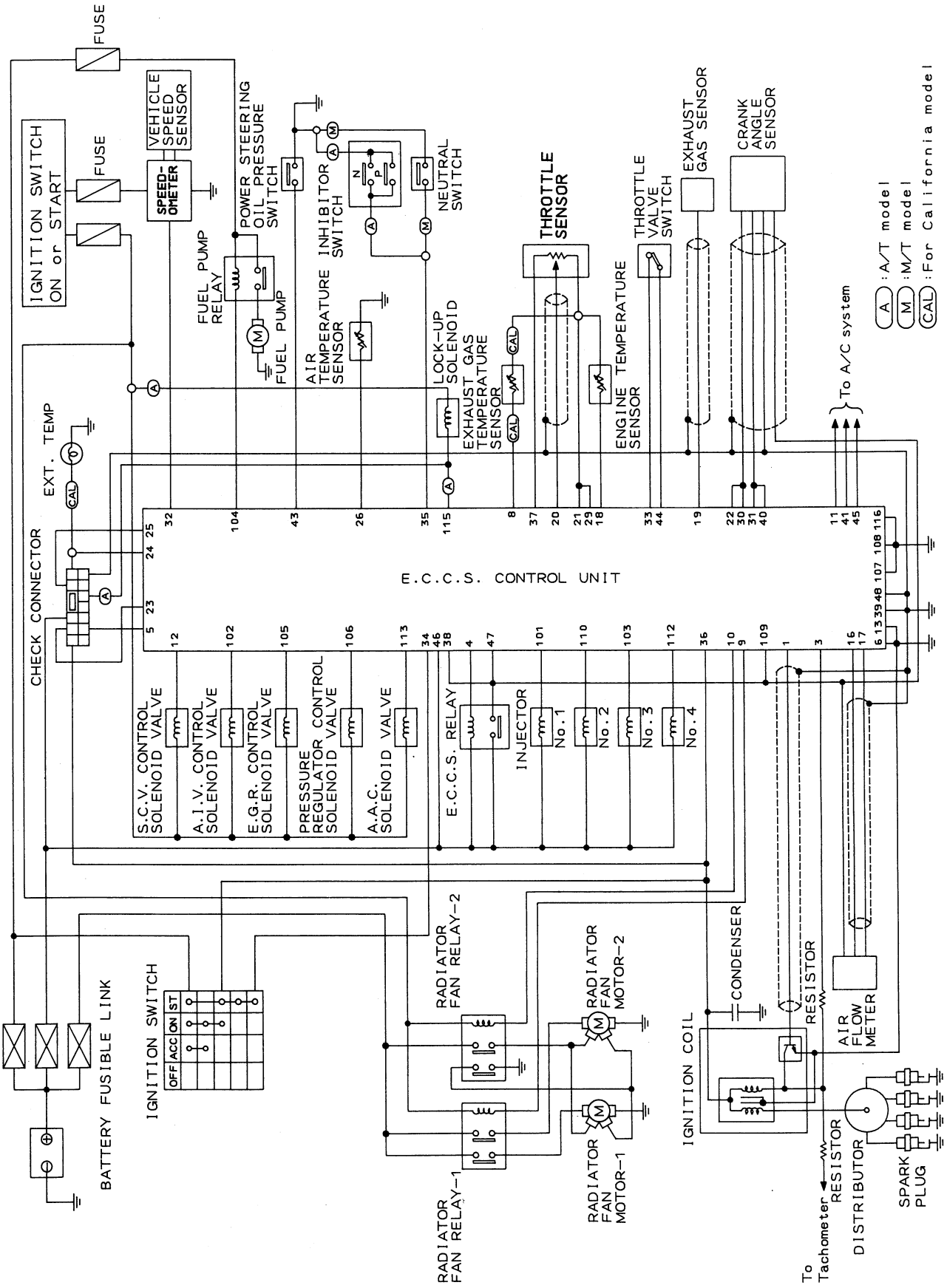

SEF173I

Wiring Diagram

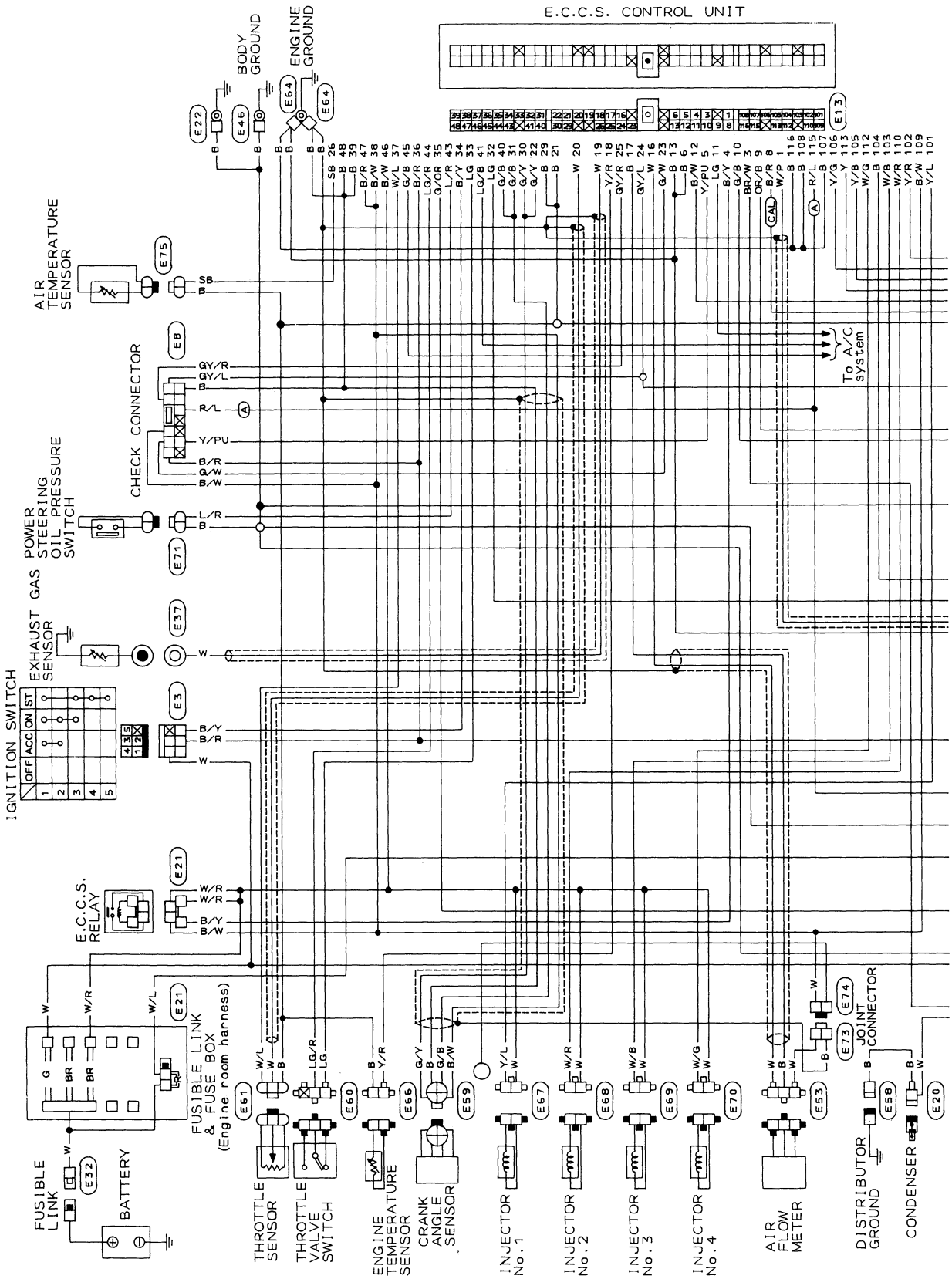

Wiring Diagram (Cont'd)

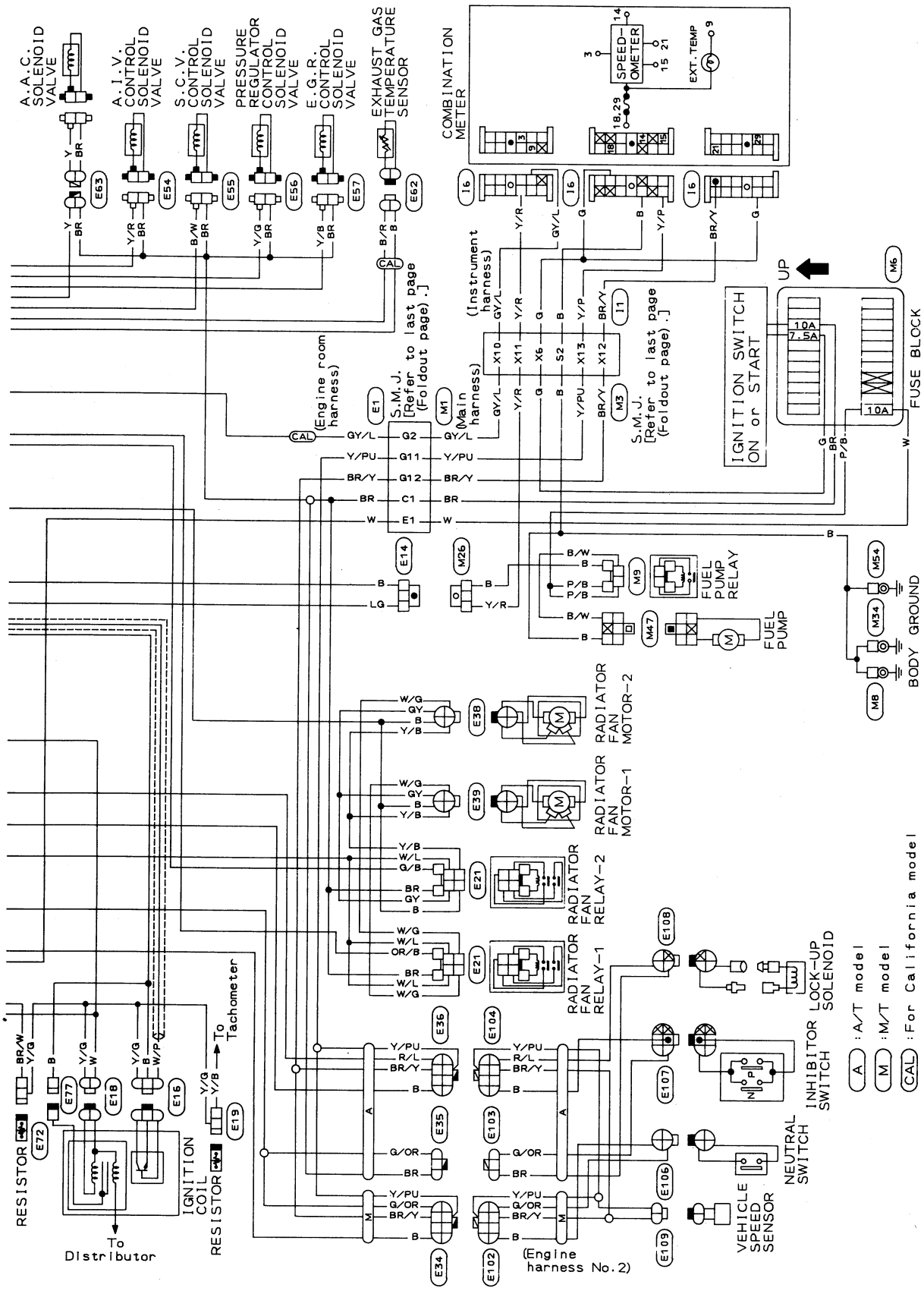

SEF272J

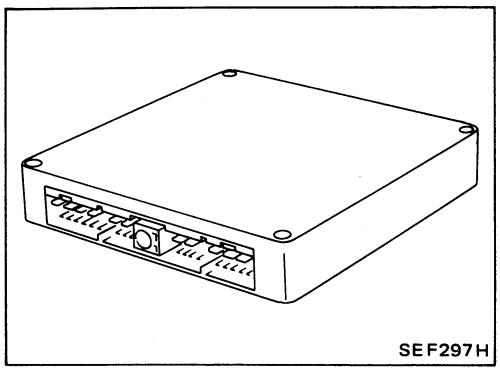

E.C.C.S. Control Unit (E.C.U.)

The E.C.U. consists of a microcomputer, inspection lamps, a diagnostic mode selector, and connectors for signal input and output and for power supply. The unit controls the engine.

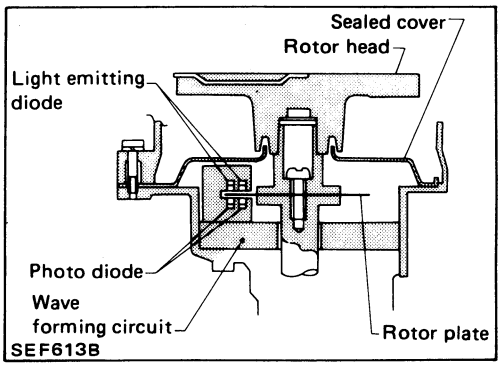

Crank Angle Sensor

The crank angle sensor is a basic component of the entire E.C.C.S. It monitors engine speed and piston position, and sends signals to the E.C.U. to control fuel injection, ignition timing and other functions.

The crank angle sensor has a rotor plate and a wave-forming circuit. The rotor plate has 360 slits for 1° signal and 4 slits for 180° signal. Light Emitting Diodes (L.E.D.) and photo diodes are built in the wave-forming circuit.

When the rotor plate passes between the L.E.D. and the photo diode, the slits in the rotor plate continually cut the light being transmitted to the photo diode from the L.E.D. This generates rough-shaped pulses which are converted into on-off signals by the wave-forming circuit, which are then sent to the E.C.U.

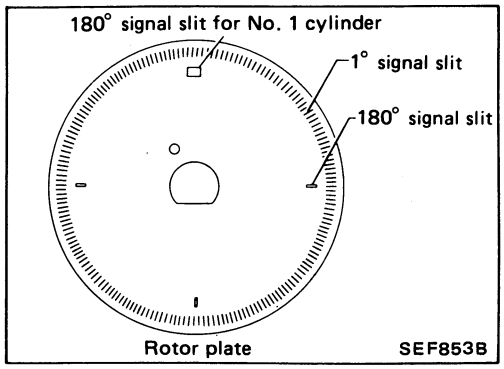

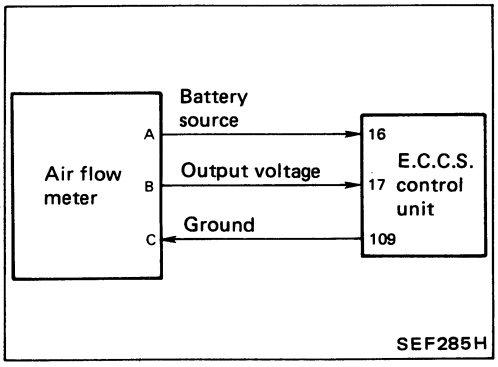

Air Flow Meter

The air flow meter measures the mass flow rate of intake air. Measurements are made so that the control circuit will emit an electrical output signal corresponding to the amount of heat dissipated from a hot wire placed in the stream of intake air.

The airflow past the hot wire removes the heat from the hot wire. The temperature of the hot wire is very sensitive to the mass flow rate. The higher the temperature of the hot wire, the greater its resistance value. This temperature change (resistance) is determined by the mass air flow rate. The control circuit accurately regulates current (I) in relation to the varying resistance value (R_H) so that V_A always equals V_B. The air flow meter transmits a voltage value V_A to the control unit where the output is converted into an intake air signal.

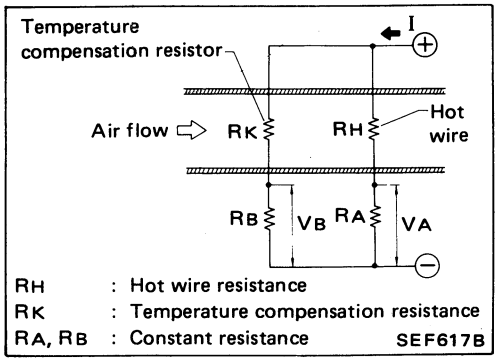

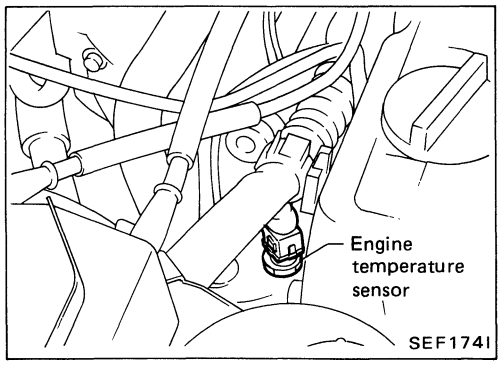

Engine Temperature Sensor

The engine temperature sensor detects the engine temperature, which is dependent on engine coolant temperature, and transmits a signal to the E.C.U.
The temperature sensing unit employs a thermistor which is sensitive to the change in temperature. Electrical resistance of the thermistor decreases in response to the temperature rise.

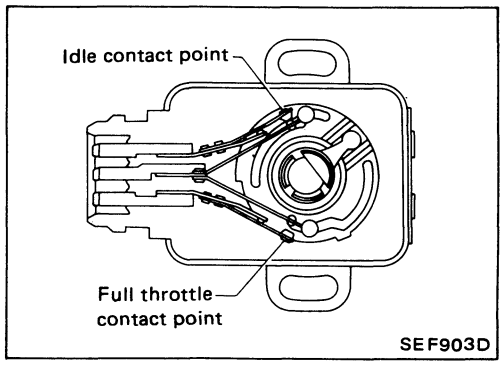

Throttle Sensor & Soft/Hard Idle Switch

The throttle sensor responds to the accelerator pedal movement. This sensor is a kind of potentiometer which transforms the throttle valve position into output voltage, and emits the voltage signal to the E.C.U. In addition, the sensor detects the opening and closing speed of the throttle valve and feeds the voltage signal to the E.C.U.
Idle position of the throttle valve is determined by the E.C.U. receiving the signal from the throttle sensor. This system is called "soft idle switch" and controls engine operation such as fuel cut. On the other hand, "hard idle switch", which is built in the throttle sensor unit, is used not for engine control but for self-diagnosis.

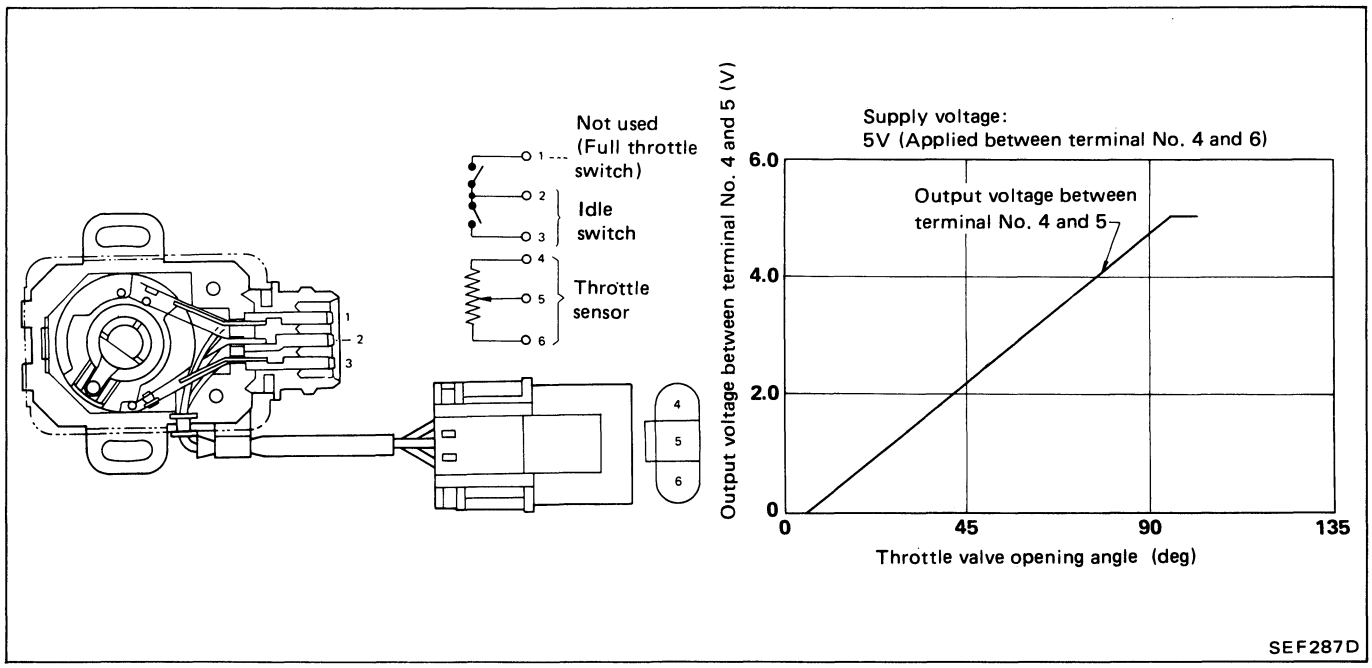

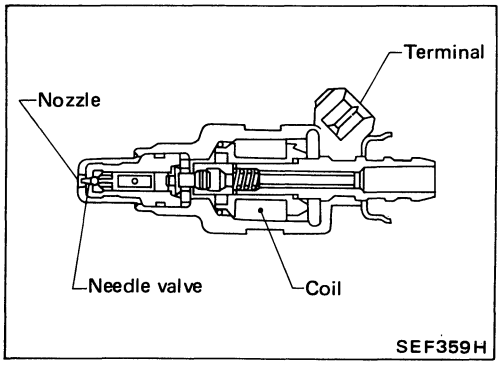

Fuel Injector

The fuel injector is a small, elaborate solenoid valve. As the E.C.U. sends injection signals to the injector, the coil in the injector pulls the needle valve back and fuel is released into the intake manifold through the nozzle. The injected fuel is controlled by the E.C.U. in terms of injection pulse duration.
Brass wire is used in the injector coil and thus the resistance is higher than a conventional injector.

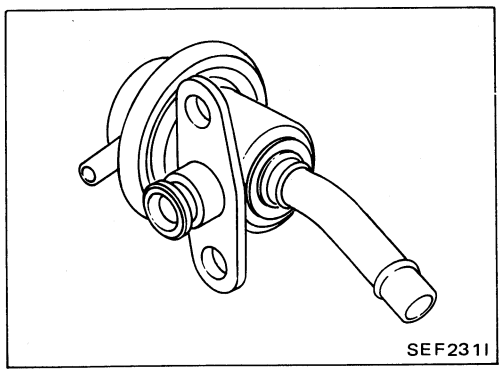

Pressure Regulator

The pressure regulator maintains the fuel pressure at 299.1 kPa (3.05 kg/cm^2, 43.4 psi). Since the injected fuel amount depends on injection pulse duration, it is necessary to maintain the pressure at the above value.

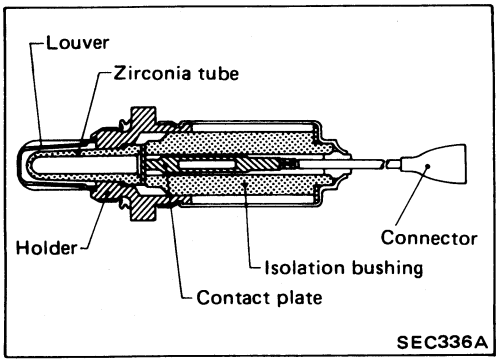

Exhaust Gas Sensor

The exhaust gas sensor, which is placed into the exhaust manifold, monitors the amount of oxygen in the exhaust gas.
The sensor has a closed-end tube made of ceramic zirconia. The outer surface of the tube is exposed to exhaust gas, and the inner surface to atmosphere. The zirconia of the tube compares the oxygen density of exhaust gas with that of atmosphere, and generates electricity. In order to improve the generating power of the zirconia, its tube is coated with platinum. The voltage is approximately 1V in a richer condition of the mixture ratio than the ideal air-fuel ratio, while approximately 0V in leaner conditions. The radical change from 1V to 0V occurs at around the ideal mixture ratio. In this way, the exhaust gas sensor detects the amount of oxygen in the exhaust gas and sends the signal of approximately 1V or 0V to the E.C.U.

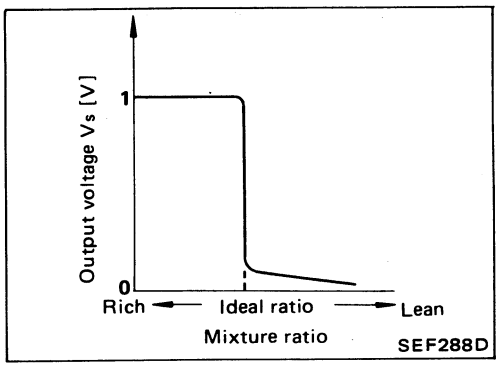

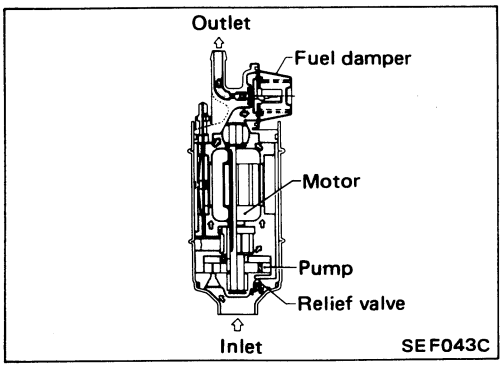

Fuel Pump

The fuel pump with a fuel damper is a submergible type, and are located in the fuel tank.

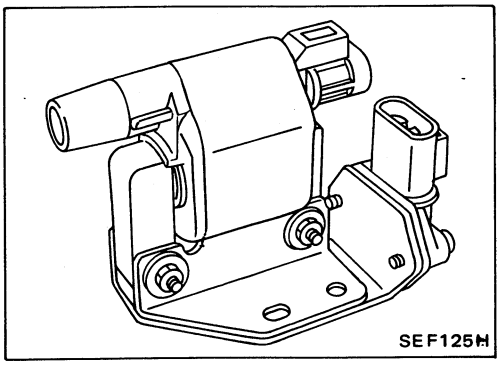

Power Transistor

The ignition signal from the E.C.U. is amplified by the power transistor, which turns the ignition coil primary circuit on and off, inducing the proper high voltage in the secondary circuit. The ignition coil is a small, molded type.

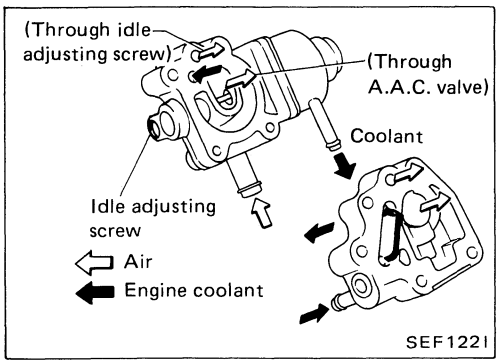

Idle Air Adjusting (I.A.A.) Unit

The I.A.A. unit is made up of the A.A.C. valve and air cut valve. It receives the signal from the E.C.U. and controls the idle speed at the preset value under various conditions.
The air cut valve prevents an abnormal rise of idle rpm when A.A.C. valve operates abnormally.

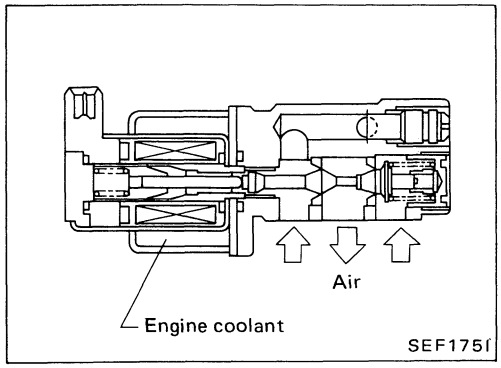

Auxiliary Air Control (A.A.C.) Valve

The E.C.U. actuates the A.A.C. valve by an ON/OFF pulse. The longer that ON pulse is received, the larger the amount of air that will flow through the A.A.C. valve.
This air flow also varies with the temperature of the engine coolant flowing through the A.A.C. valve. The higher the coolant temperature, the less the amount of air flow.

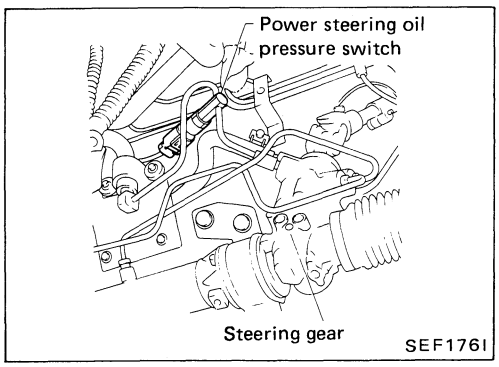

Power Steering Oil Pressure Switch

The power steering oil pressure switch is attached to the power steering high-pressure tube and detects the power steering load, sending the load signal to the E.C.U. The E.C.U. then sends the idle-up signal to the A.A.C. valve.

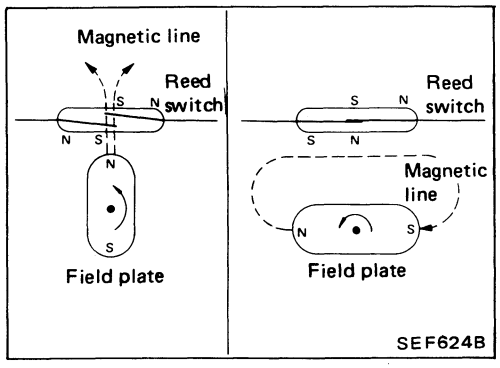

Vehicle Speed Sensor

The vehicle speed sensor provides a vehicle speed signal to the E.C.U.
The speed sensor consists of a reed switch, which is installed on the transmission unit and transforms vehicle speed into a pulse signal.

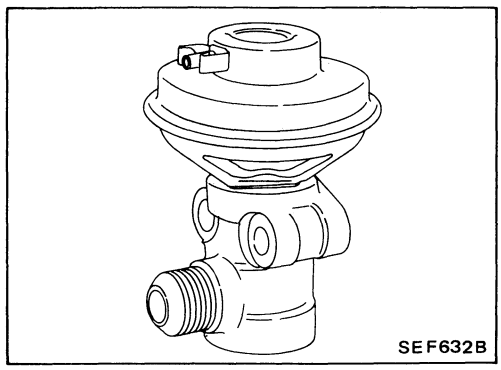

E.G.R. Control Valve

The E.G.R. control valve controls the quantity of exhaust gas to be led to the intake manifold through vertical movement of the taper valve connected to the diaphragm, to which vacuum is applied in response to the opening of the throttle valve.

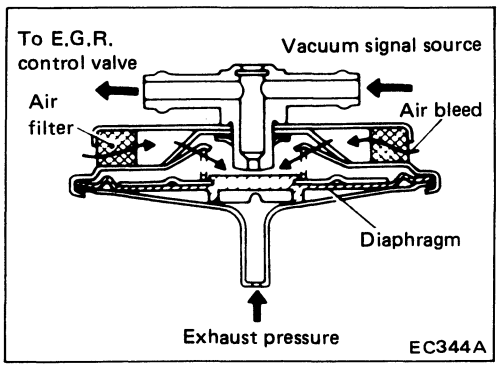

B.P.T. Valve

The B.P.T. valve monitors exhaust pressure to activate the diaphragm, controlling throttle chamber vacuum applied to the E.G.R. control valve. In other words, recirculated exhaust gas is controlled in response to positioning of the E.G.R. control valve or to engine operation.

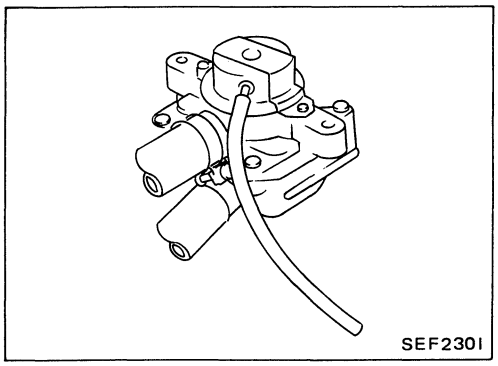

Air Induction Valve (A.I.V.)

The air induction valve sends secondary air to the exhaust manifold, using a vacuum created by exhaust pulsation in the exhaust manifold. When the exhaust pressure is below atmospheric pressure (negative pressure), secondary air is sent to the exhaust manifold. When the exhaust pressure is above atmospheric pressure, the reed valves prevent secondary air from being sent back to the air cleaner.

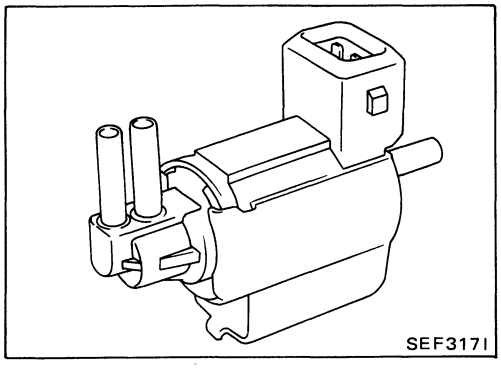

A.I.V. Control Solenoid Valve

The A.I.V. control solenoid valve cuts the intake manifold vacuum signal for A.I.V. control. It responses to the ON/OFF signal from the E.C.U. When the solenoid is off, the vacuum signal from the intake manifold is cut. When the control unit sends an ON signal, the coil pulls the plunger downward and feeds the vacuum signal to the A.I.V. control valve.

E.G.R. Control Solenoid Valve

The E.G.R. system is controlled only by the E.C.U. At both low- and high-speed engine revolutions, the solenoid valve turns on and accordingly the E.G.R. valve cuts the exhaust gas leading to the intake manifold.

Pressure Regulator (P.R.) Control Solenoid Valve

The solenoid valve responds to the ON/OFF signal from the E.C.U. When it is off, a vacuum signal from the intake manifold is fed into the pressure regulator. When the control unit sends an ON signal, the coil pulls the plunger downward and cuts the vacuum signal.

S.C.V. Control Solenoid Valve

The S.C.V. control solenoid valve cuts the intake manifold vacuum signal for swirl control valve. It responds to the ON/OFF signal from the E.C.U. When the solenoid is off, the vacuum signal from the intake manifold is cut. When the control unit sends an ON signal the coil pulls the plunger and feeds the vacuum signal to the swirl control valve actuator.

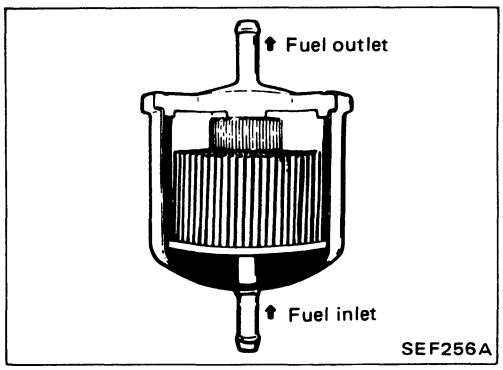

Fuel Filter

The specially designed fuel filter has a metal case in order to withstand high fuel pressure.

Carbon Canister

The carbon canister is filled with active charcoal to absorb evaporative gases produced in the fuel tank. These absorbed gases are then delivered to the intake manifold by manifold vacuum for combustion purposes.
The vacuum in the intake passage upstream of the throttle valve increases in response to the amount of the intake air.
When the vacuum of the intake passage is higher than a preset value, the 2nd purge control valve opens and the absorbed gases are sucked into the intake passage for combustion purposes.

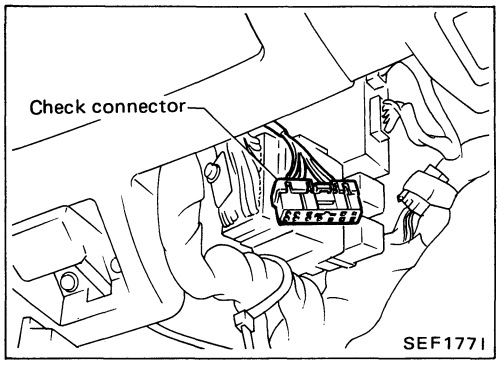

Check Connector for E.C.C.S. Checker Box

The check connector for E.C.C.S. checker box is beside the fuse box.

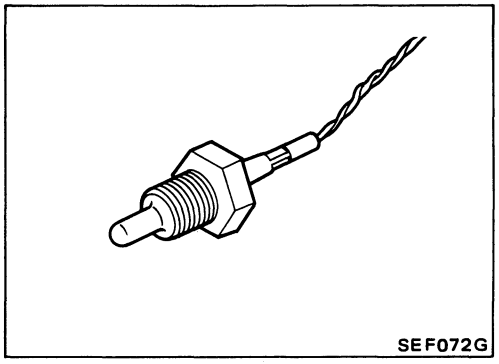

Exhaust Gas Temperature Sensor (For California model)

The exhaust gas temperature sensor monitors in exhaust gas temperature and transmits a signal to the E.C.U. The temperature sensing unit employs a thermistor which is sensitive to the change in temperature. Electric resistance of the thermistor decreases in response to the temperature rise.

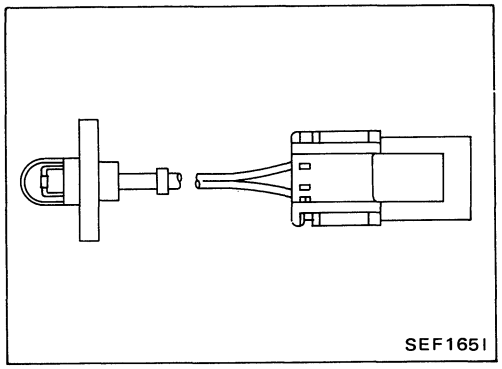

Air Temperature Sensor

The air temperature sensor controls ignition timing when the temperature of the intake air is extremely high, in order not to cause knocking.

Fuel Injection Control

INPUT/OUTPUT SIGNAL LINE

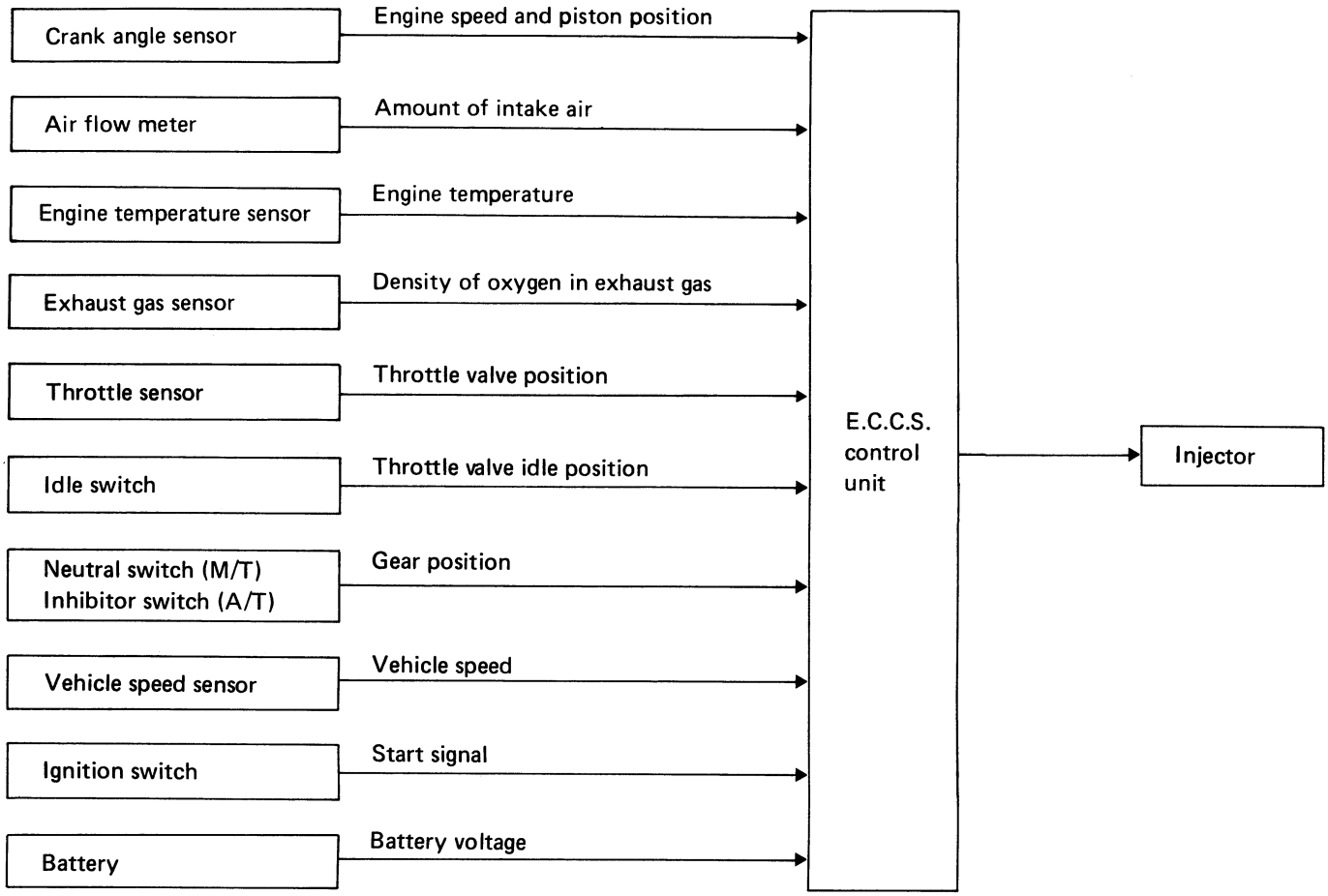

BASIC FUEL INJECTION CONTROL

The amount of fuel injected from the fuel injector, or the length of time the valve remains open, is determined by the E.C.U. The basic amount of fuel injected is a programmable value mapped in the E.C.U. ROM memory. In other words, the programmable value is preset by engine operating conditions determined by input signals (for engine rpm and air intake) from both the crank angle sensor and the air flow meter.

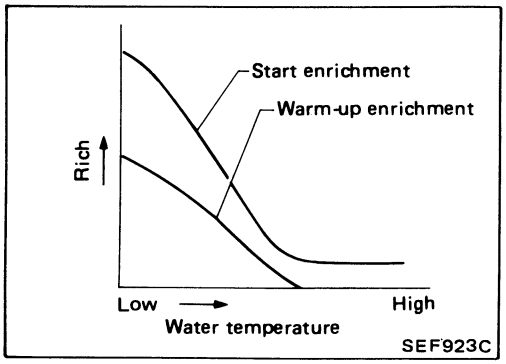

VARIOUS FUEL INJECTION INCREASE/DECREASE COMPENSATION

In addition, the amount of fuel injection is compensated for to improve engine performance under various operating conditions as listed below:

<Fuel increase>

1) During warm-up
2) When starting the engine
3) During acceleration
4) Hot-engine operation

<Fuel decrease>

1) During deceleration

Fuel Injection Control (Cont'd)

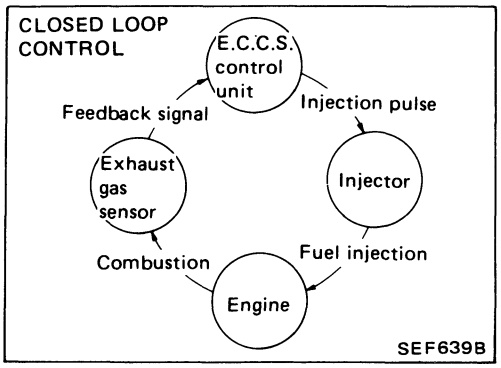

MIXTURE RATIO FEEDBACK CONTROL

Mixture ratio feedback system is designed to precisely control the mixture ratio to the stoichiometric point so that the three-way catalyst can reduce CO, HC and NOx emissions. This system uses an exhaust gas sensor in the exhaust manifold to check the air-fuel ratio. The control unit adjusts the injection pulse width according to the sensor voltage so the mixture ratio will be within the range of the stoichiometric air-fuel ratio.

This stage refers to the closed-loop control condition. The open-loop control condition refers to that under which the E.C.U. detects any of the following conditions and feedback control stops in order to maintain stabilized fuel combustion.

1) Deceleration
2) High-load, high-speed operation
3) Engine idling
4) Malfunctioning of exhaust gas sensor or its circuit
5) Insufficient activation of exhaust gas sensor at low engine temperature
6) Engine starting

MIXTURE RATIO SELF-LEARNING CONTROL

The mixture ratio feedback control system monitors the mixture ratio signal transmitted from the exhaust gas sensor. This feedback signal is then sent to the E.C.U. to control the amount of fuel injection to provide a basic mixture ratio as close to the theoretical mixture ratio as possible. However, the basic mixture ratio is not necessarily controlled as originally designed. This is due to manufacturing errors (e.g., air flow meter hot wire) and changes during operation (injector clogging, etc.) of E.C.C.S. parts which directly affect the mixture ratio.

Accordingly, a difference between the basic and theoretical mixture ratios is quantitatively monitored in this system. It is then computed in terms of "fuel injection duration" to automatically compensate for the difference between the two ratios.

FUEL INJECTION TIMING

Fuel is injected once a cycle for each cylinder in the firing order.

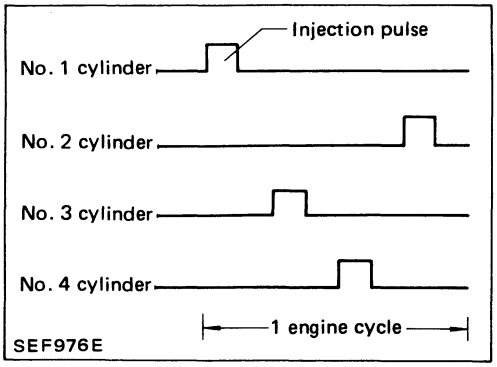

When engine starts, fuel is injected into all four cylinders simultaneously twice a cycle.

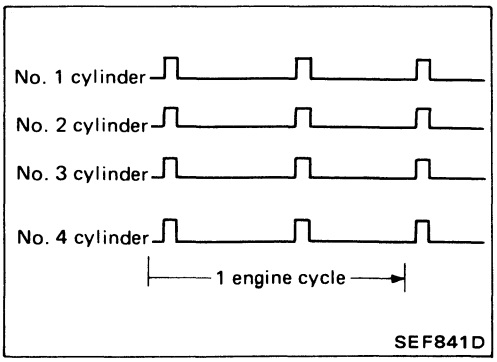

Fuel Injection Control (Cont'd)

FUEL SHUT-OFF

Fuel to all cylinders is cut off during deceleration or high-speed operation.

Ignition Timing Control

INPUT/OUTPUT SIGNAL LINE

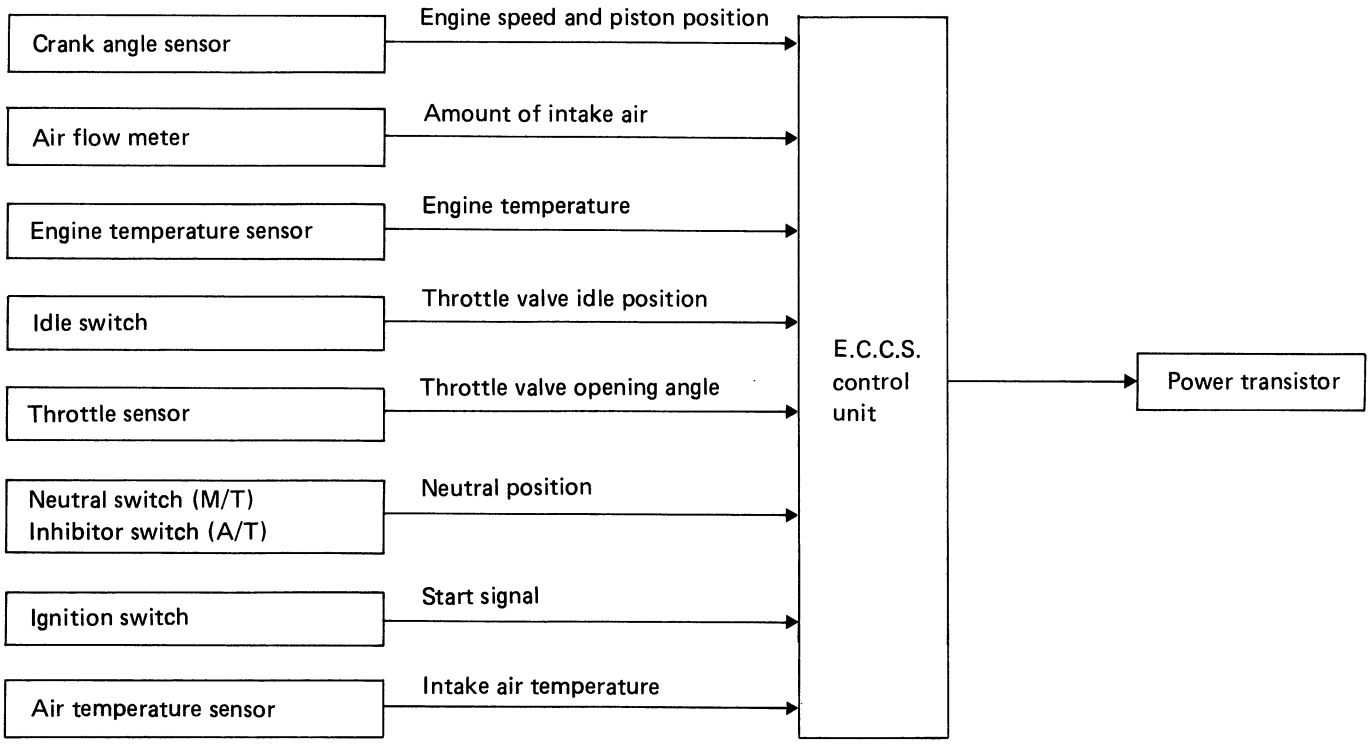

Ignition Timing Control (Cont'd)

SYSTEM DESCRIPTION

The ignition timing is controlled by the E.C.U. in order to maintain the best air-fuel ratio in response to every running condition of the engine.
The ignition timing data is stored in the ROM located in the E.C.U., in the form of the map shown below.
The E.C.U. detects information such as the injection pulse width and crank angle sensor signal which varies every moment. Then responding to this information, ignition signals are transmitted to the power transistor.

e.g. N: 1,800 rpm, Tp: 1.50 msec
A °B.T.D.C.

In addition to this,

1 At starting
2 During warm-up
3 At idle
4 At low battery voltage
5 During swirl control valve operates
6 During hot engine operation
7 At acceleration
8 When intake air temperature is extremely high

the ignition timing is revised by the E.C.U. according to the other data stored in the ROM.

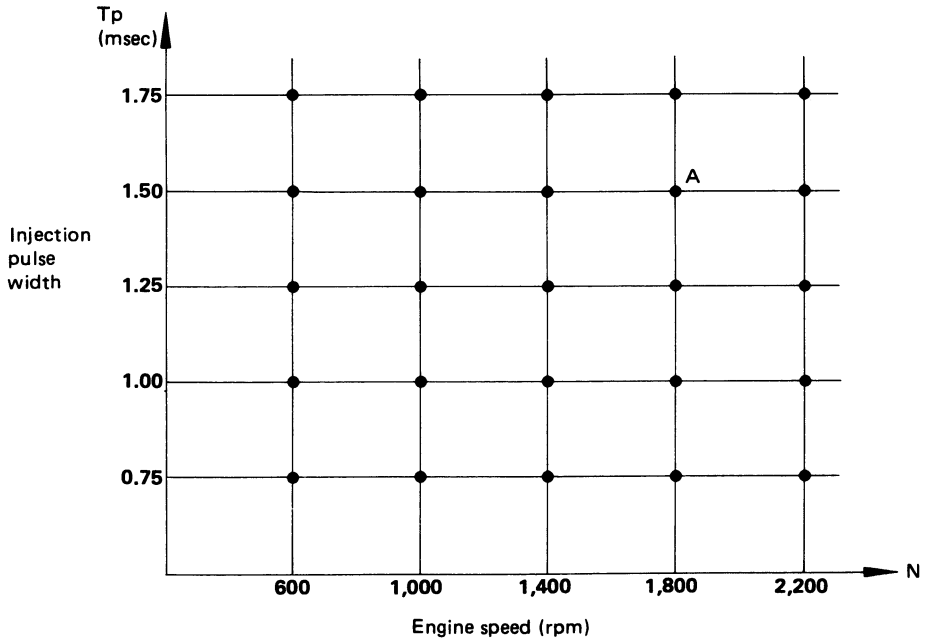

SEC750A

Idle Speed Control

INPUT/OUTPUT SIGNAL LINE

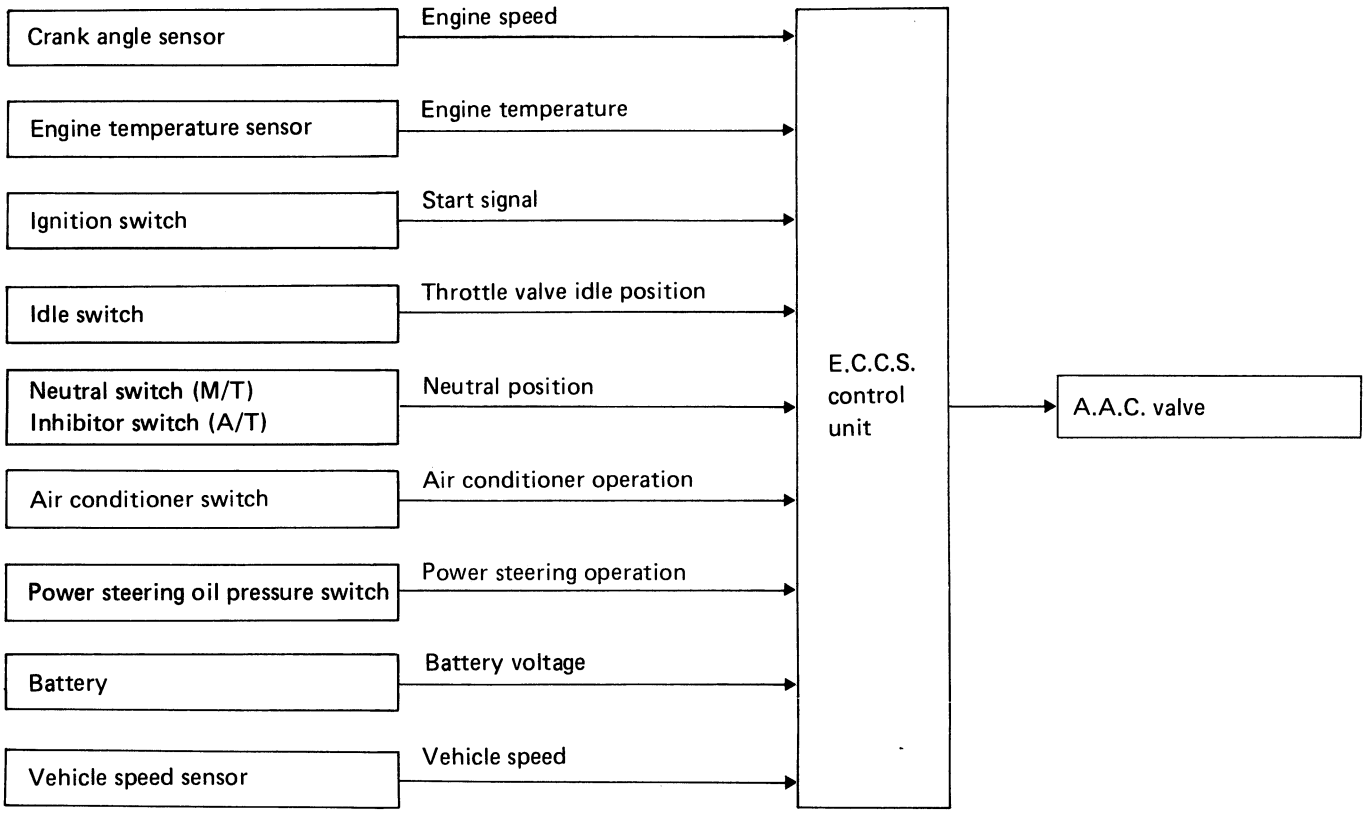

SYSTEM DESCRIPTION

This system automatically controls engine idle speed to a specified level. Idle speed is controlled through fine adjustment of the amount of air which by-passes the throttle valve via A.A.C. valve. The A.A.C. valve repeats ON/OFF operation according to the signal sent from the E.C.U. The crank angle sensor detects the actual engine speed and sends a signal to the E.C.U. The E.C.U. then controls the ON/OFF time of the A.A.C. valve so that engine speed coincides with the target value memorized in ROM. The target engine speed is the lowest speed at which the engine can operate steadily. The optimum value stored in the ROM is determined by taking into consideration various engine conditions, such as noise and vibration transmitted to the compartment, fuel consumption, and engine load.

Fuel Pump Control

INPUT/OUTPUT SIGNAL LINE

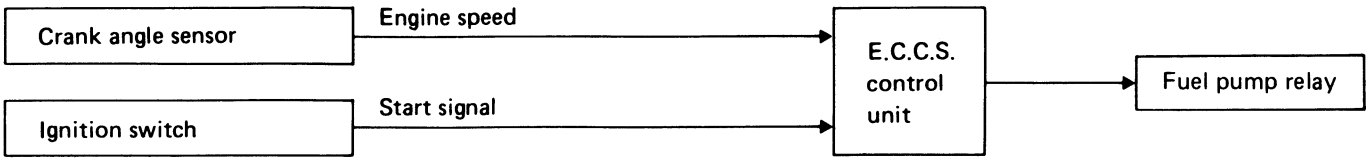

SYSTEM DESCRIPTION

The E.C.U. activates the fuel pump for several seconds after the ignition switch is turned on to improve engine startability. If the E.C.U. receives a 1° signal from the crank angle sensor, it knows that the engine is rotating, and causes the pump to perform. If the 1° signal is not received when the ignition switch is on, the engine stalls. The E.C.U. stops pump operation and prevents battery discharging, thereby improving safety. The E.C.U. does not directly drive the fuel pump. It controls the ON/OFF fuel pump relay, which in turn controls the fuel pump.

Condition	Fuel pump operation
Ignition switch is tunred to ON.	Operates for 5 seconds
Engine running and cranking	Operates
When engine is stopped	Stops in 1 second
Except as shown above	Stops

Air Induction Valve (A.I.V.) Control

INPUT/OUTPUT SIGNAL LINE

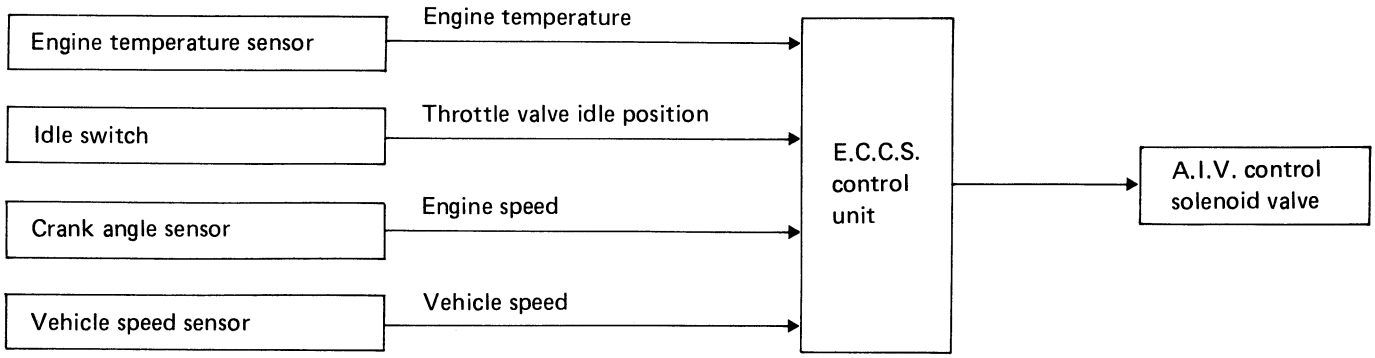

SYSTEM DESCRIPTION

The air induction system is designed to send secondary air to the exhaust manifold, utilizing the vacuum caused by exhaust pulsation in the exhaust manifold.

The exhaust pressure in the exhaust manifold usually pulsates in response to the opening and closing of the exhaust valve and decreases below atmospheric pressure periodically.

If a secondary air intake pipe is opened to the atmosphere under vacuum conditions, secondary air can be drawn into the exhaust manifold in proportion to the vacuum.

The air induction valve is controlled by the E.C.C.S. control unit, corresponding to the engine temperature. When the engine is cold, the A.I.V. control system operates to reduce HC and CO.

In extremely cold conditions, A.I.V. control system does not operate to reduce after-burning. This system also operates during deceleration for the purpose of blowing off water around the air induction valve.

Engine condition	Water temperature °C (°F)	A.I.V. control solenoid valve	A.I.V. control system
Idle or deceleration	Between 28 (82) and 115 (239)	ON	Operates

E.G.R. (Exhaust Gas Recirculation) Control

INPUT/OUTPUT SIGNAL LINE

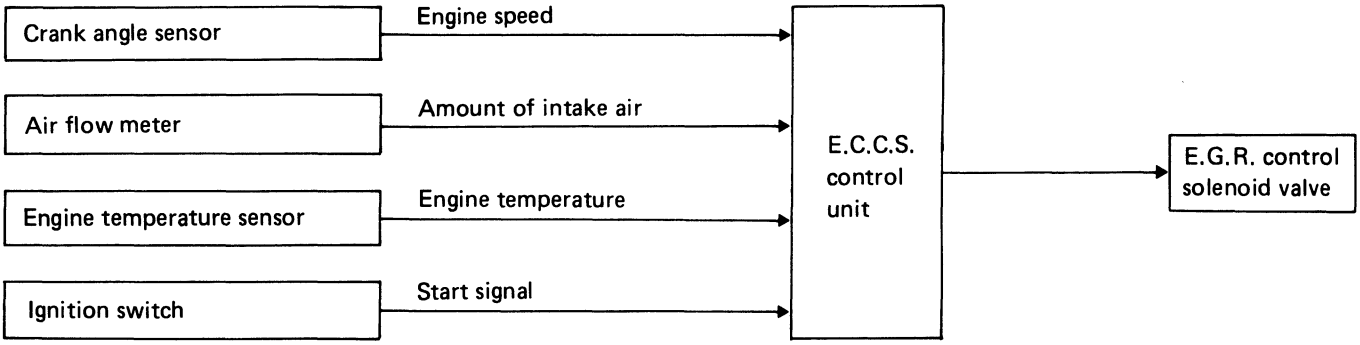

SYSTEM DESCRIPTION

In addition, a system is provided which precisely cuts and controls port vacuum applied to the E.G.R. valve to suit engine operating conditions. This cut-and-control operation is accomplished through the E.C.U. When the E.C.U. detects any of the following conditions, current flows through the solenoid valve in the E.G.R. control vacuum line. This causes the port vacuum to be discharged into the atmosphere so that the E.G.R. control valve remains closed.

1) Low engine temperature
2) Engine starting
3) High-speed engine operation
4) Engine idling

E.G.R. control solenoid valve operation

Condition			E.G.R. control solenoid valve
When starting			ON
Water temperature	°C (°F)	Below 60 (140)	
		Above 155 (239)	
Idle & heavy load conditions			
Other conditions			OFF

E.G.R. system operation

E.G.R. system operates under only the following conditions.

Water temperature °C (°F)	B.P.T. valve		Throttle position	E.G.R. control solenoid valve	E.G.R. system
	Exhaust gas pressure	Operation			
Between 60 (140) and 115 (239)	High	Closed	Partially open	OFF	Operates

Fuel Pressure Regulator Control

INPUT/OUTPUT SIGNAL LINE

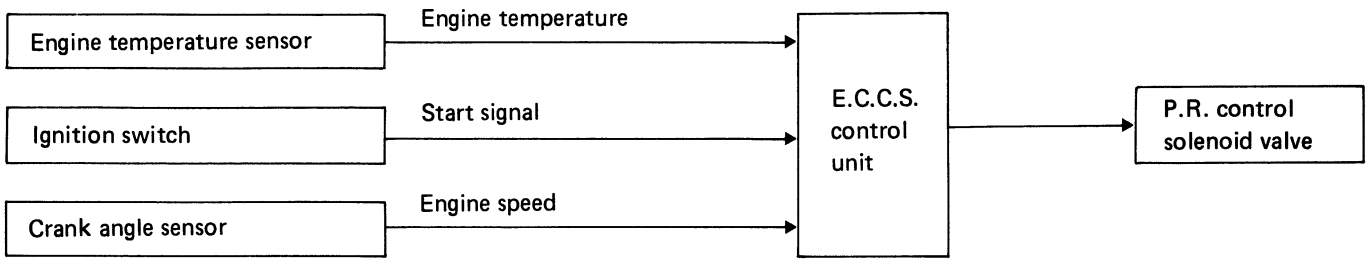

SYSTEM DESCRIPTION

The fuel "pressure-up" control system briefly increases fuel pressure for improved starting performance of a hot engine. Under normal operating conditions, manifold vacuum is applied to the fuel pressure regulator. When starting the engine, however, the E.C.U. allows current to flow through the ON/OFF solenoid valve in the control vacuum line, opening this line to the atmosphere. As a result, atmospheric pressure is applied, throttling the fuel passage to increase fuel pressure.

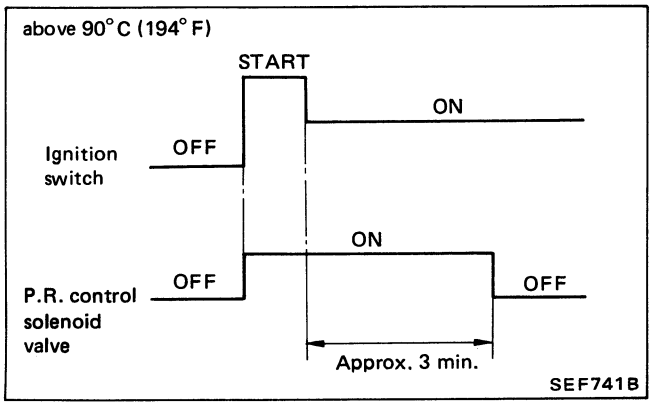

Swirl Control Valve (S.C.V.) Control

INPUT/OUTPUT SIGNAL LINE

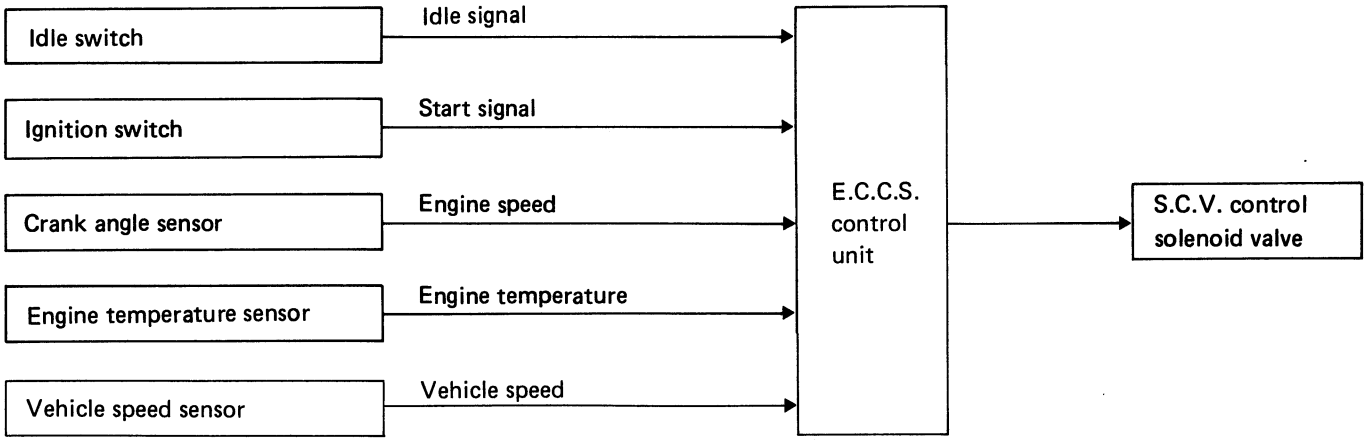

SYSTEM DESCRIPTION

This system has a swirl control valve (S.C.V.) in the intake passage of each cylinder.
While idling the S.C.V. closes. Thus the velocity of the air in the intake passage increases, promoting the vaporization of the fuel and producing a swirl in the combustion chamber.
Because of this operation, this system tends to increase the burning speed of the gas mixture, improve fuel consumption, and increase the stability in running conditions.

The solenoid valve controls S.C.V.'s shut/open condition. This solenoid valve is operated by the E.C.U.

Water temperature is above 35°C (95°F) with vehicle stopped and engine running

Idle switch	Engine rpm	Solenoid valve	S.C.V.
ON	Below 1,800*1 Below 1,500*2	ON	Close
Except above		OFF	Open

*1: M/T *2: A/T

Acceleration Cut Control

INPUT/OUTPUT SIGNAL LINE

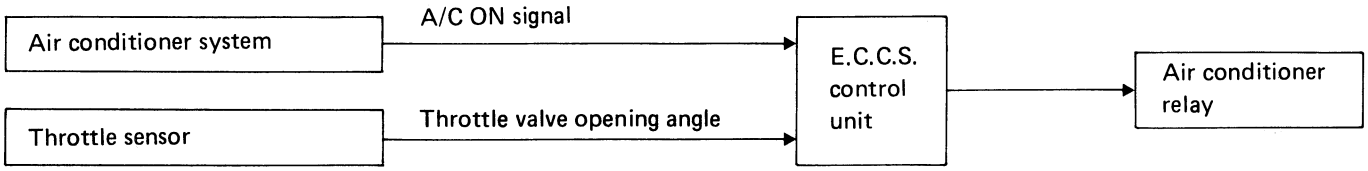

SYSTEM DESCRIPTION

When accelerator pedal is fully depressed, air conditioner is turned off for a few seconds.
This system improves acceleration when air conditioner is used.

Radiator Fan Control

INPUT/OUTPUT SIGNAL LINE

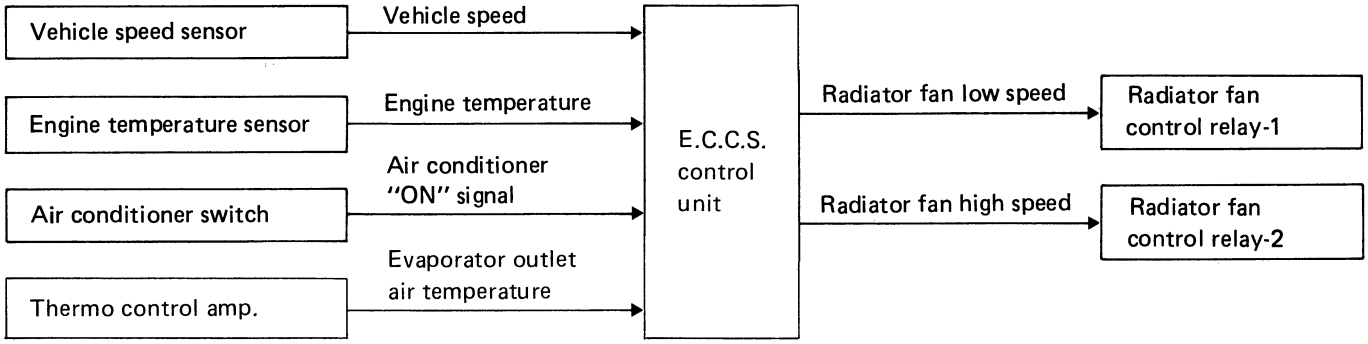

The E.C.U. performs ON/OFF control and LOW/HIGH speed control of the radiator fan corresponding to the vehicle speed, engine temperature, and air conditioner ON signal.

OPERATION

Air conditioner switch is "OFF"

Engine temperature °C (°F)	Radiator fan	Radiator fan control relay		Remarks
Below 94 (201)	OFF	Relay-1	OFF	–
		Relay-2	OFF	
Between 95 (203) and 99 (210)	LOW	Relay-1	ON	–
		Relay-2	OFF	
Above 100 (212)	HIGH	Relay-1	ON	–
		Relay-2	ON	

The radiator fan operates at HIGH if the self-diagnosing engine temperature sensor system results in "N.G.".

Radiator Fan Control (Cont'd)

Air conditioner switch and blower fan switch are "ON"
[Evaporator outlet air temperature is over 8°C (46°F).]

Engine temperature °C (°F)	Radiator fan	Radiator fan control relay		Remarks
Below 94 (201)	*HIGH	Relay-1	ON	*OFF if vehicle speed is above 80 km/h (50 MPH).
		Relay-2	ON	
Between 95 (203) and 99 (210)	*HIGH	Relay-1	ON	*LOW if vehicle speed is above 80 km/h (50 MPH).
		Relay-2	ON	
Above 100 (212)	HIGH	Relay-1	ON	–
		Relay-2	ON	

The radiator fan operates at HIGHT if the self-diagnosing engine temperature sensor system results in "N.G.".

Air conditioner switch and blower fan switch are "ON"
[Evaporator outlet air temperature is between 3°C (37°F) and 8°C (46°F).]

Engine temperature °C (°F)	Radiator fan	Radiator fan control relay		Remarks
Below 94 (201)	*LOW	Relay-1	ON	*OFF if vehicle speed is above 80 km/h (50 MPH).
		Relay-2	OFF	
Between 95 (203) and 99 (210)	LOW	Relay-1	ON	–
		Relay-2	OFF	
Above 100 (212)	HIGH	Relay-1	ON	–
		Relay-2	ON	

The radiator fan operates at HIGH if the self-diagnosing engine temperature sensor system results in "N.G.".

Fail-safe System

AIR FLOW METER MALFUNCTION

If the air flow meter output voltage is above or below the specified value, the E.C.U. senses an air flow meter malfunction. In case of a malfunction, the throttle sensor substitutes for the air flow meter.
Though air flow meter is malfunctioning, it is possible to drive the vehicle and start the engine. But engine speed will not rise more than 2,400 rpm in order to inform the driver of fail-safe system operation while driving.

Operation

System	Fixed condition
E.G.R. control system	OFF
Idle speed control system	A duty ratio is fixed at the preprogrammed value.
Fuel injection control system	Fuel is shut off above 2,400 rpm. (Engine speed does not exceed 2,400 rpm.)

Fail-safe System (Cont'd)

ENGINE TEMPERATURE SENSOR MALFUNCTION

When engine temperature sensor output voltage is below or above the specified value, water temperature is fixed at the preset value as follows:

Operation

Condition	Engine temperature decided
Just as ignition switch is turned ON or Start	20°C (68°F)
More than 6 minutes after ignition ON or Start	80°C (176°F)
Except as shown above	20 - 80°C (68 - 176°F) (Depends on the time)

THROTTLE SENSOR MALFUNCTION

When throttle sensor output voltage is below or above the specified value, throttle sensor output is fixed at the preset value.

AIR TEMPERATURE SENSOR MALFUNCTION

When air temperature sensor is below or above the specified value, air temperature value is fixed at the preset value [20°C (68°F)].

PREPARATION

1. Make sure that the following parts are in good order.
- Battery
- Ignition system
- Engine oil and coolant levels
- Fuses
- E.C.U. harness connector
- Vacuum hoses
- Air intake system
  (Oil filler cap, oil level gauge, etc.)
- Fuel pressure
- A.I.V. hose
- Engine compression
- E.G.R. control valve operation
- Throttle valve and idle switch

2. On air conditioner equipped models, checks should be carried out while the air conditioner is "OFF".
3. On automatic transaxle equipped models, when checking idle rpm, ignition timing and mixture ratio, checks should be carried out while shift lever is in "N" position.
4. When measuring "CO" percentage, insert probe more than 40 cm (15.7 in) into tail pipe.

WARNING:

a. When checking or adjustment, move selector lever to "N" position, set parking brake and chock rear wheels.
b. After the adjustment has been made, remove wheel chocks.

Overall inspection sequence

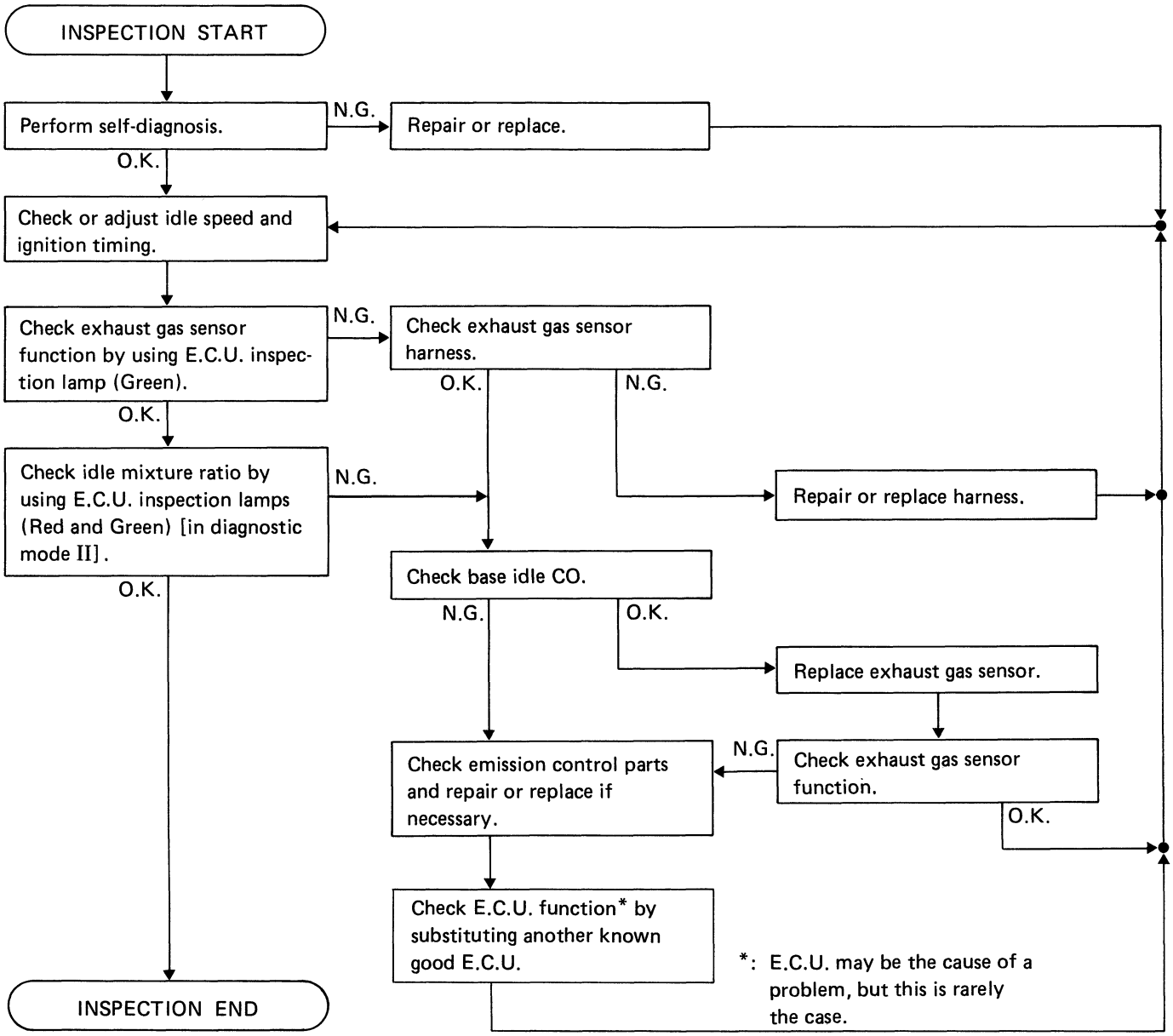

INSPECTION START

Visually check the following:
- Air cleaner clogging
- Hoses and ducts for leaks
- E.G.R. control valve operation
- Electrical connectors
- Gaskets
- Throttle valve and throttle sensor operation

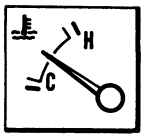

SEF457C

Start engine and warm it up until water temperature indicator points to the middle of gauge.

Open engine hood and run engine at about 2,000 rpm for about 2 minutes under no-load.

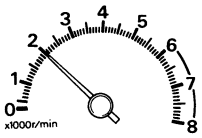

SEF477B

Perform E.C.C.S. self-diagnosis.

O.K. → Does engine run smoothly?

N.G. → Check, correct or replace malfunctioning parts. → Does engine run smoothly?

Does engine run smoothly?

Yes → Race engine two or three times under no-load, then run engine at idle speed.

No → Check and clean injectors, and replace injectors if necessary. → Race engine two or three times under no-load, then run engine at idle speed.

Race engine two or three times under no-load, then run engine at idle speed.

Check idle speed.

M/T: 700±50 rpm*1
750±50 rpm*2
A/T: 700±50 rpm*1 (in "N" position)
750±50 rpm*2 (in "N" position)
***1: For U.S.A.**
***2: For Canada**

O.K. → Ⓐ

N.G. → Ⓑ

Ⓒ → Race engine two or three times under no-load, then run engine at idle speed.

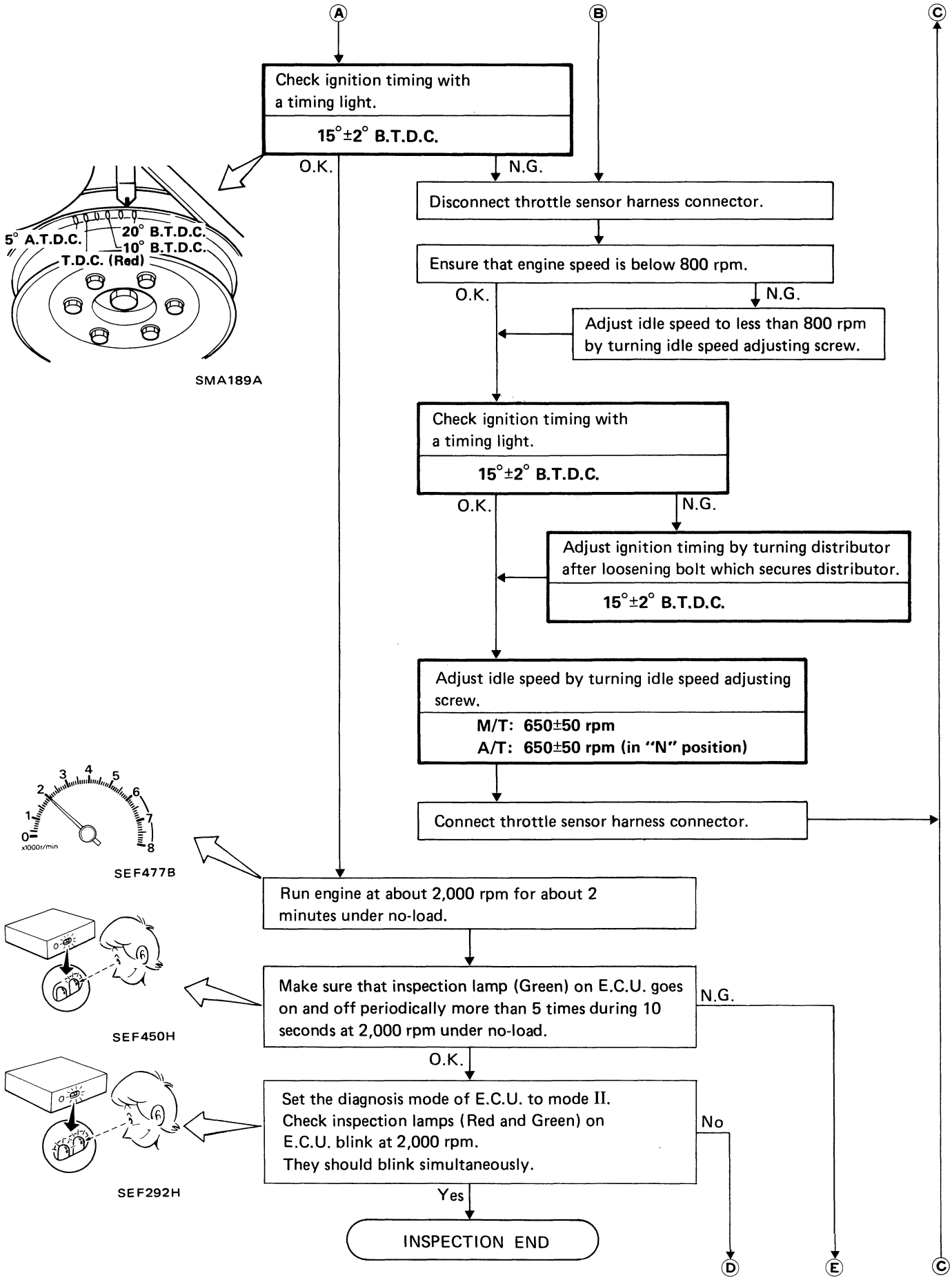
A
B
C
Check ignition timing with a timing light.
15°±2° B.T.D.C.
O.K.
N.G.
5° A.T.D.C.
20° B.T.D.C.
10° B.T.D.C.
T.D.C. (Red)
SMA189A
Disconnect throttle sensor harness connector.
Ensure that engine speed is below 800 rpm.
O.K.
N.G.
Adjust idle speed to less than 800 rpm by turning idle speed adjusting screw.
Check ignition timing with a timing light.
15°±2° B.T.D.C.
O.K.
N.G.
Adjust ignition timing by turning distributor after loosening bolt which secures distributor.
15°±2° B.T.D.C.
Adjust idle speed by turning idle speed adjusting screw.
M/T: 650±50 rpm
A/T: 650±50 rpm (in "N" position)
Connect throttle sensor harness connector.
x1000r/min
SEF477B
Run engine at about 2,000 rpm for about 2 minutes under no-load.
SEF450H
Make sure that inspection lamp (Green) on E.C.U. goes on and off periodically more than 5 times during 10 seconds at 2,000 rpm under no-load.
N.G.
O.K.
SEF292H
Set the diagnosis mode of E.C.U. to mode II. Check inspection lamps (Red and Green) on E.C.U. blink at 2,000 rpm. They should blink simultaneously.
No
Yes
INSPECTION END
D
E
C

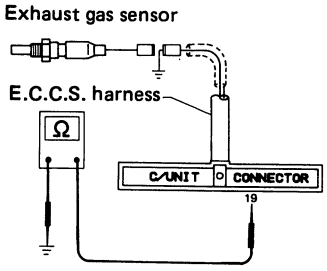

SEF353H

Check exhaust gas sensor harness:
1) Turn off engine and disconnect battery ground cable.
2) Disconnect harness connector from E.C.U.
3) Disconnect exhaust gas sensor harness connector and connect terminal for exhaust gas sensor harness connector to ground with a jumping wire.
4) Check for continuity between terminal No. 19 of E.C.U. harness connector and ground metal on vehicle body.

Continuity exists. ..... O.K.
Continuity does not exist ..... N.G.

O.K. → Connect harness connector to E.C.U. and disconnect jumping wire from exhaust gas sensor.

N.G. → Repair or replace E.C.C.S. harness and connect battery ground cable. → (D) → (C)

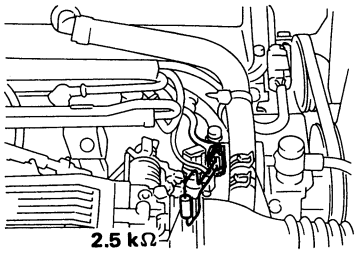

SEF351H

- Disconnect engine temperature sensor harness connector.
- Connect a resistor (2.5 kΩ) between terminals of engine temperature sensor harness connector.
- Disconnect A.I.V. hose and install a suitable plug in A.I.V. pipe.
- Connect battery ground cable.

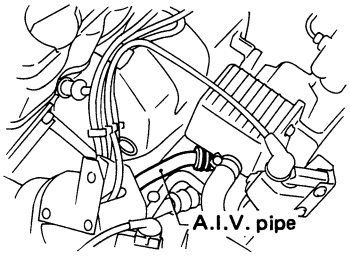

SEF354H

Start engine and warm it up until water temperature indicator points to the middle of gauge. (Wait more than 5 minutes after starting.)

Race engine two or three times under no-load then run engine at idle speed.

Check "CO"% and if engine runs smoothly.

Idle CO: Less than 5%

After checking CO%
1) Turn off engine.
2) Disconnect the resistor from terminals of engine temperature sensor harness connector.
3) Connect engine temperature sensor harness connector to engine temperature sensor.
4) Connect A.I.V. hose.

O.K. → (G)

N.G. → (F)

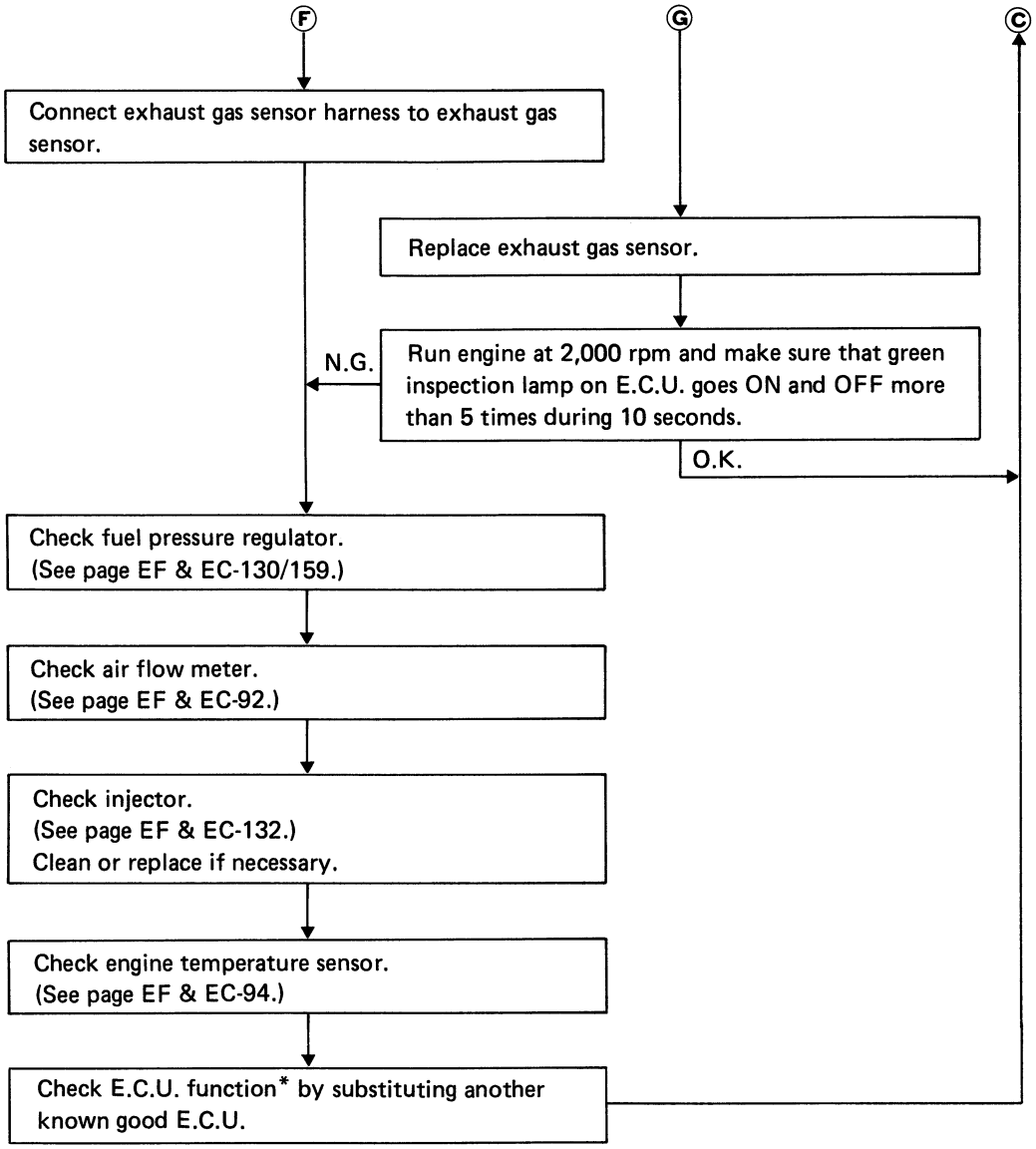

*: E.C.U. may be the cause of a problem, but this is rarely the case.

Contents

How to Perform Trouble Diagnoses for Quick and Accurate Repair ..... EF & EC- 36
Diagnostic Table ..... EF & EC- 40
1. Impossible to start — no combustion ..... EF & EC- 41
2. Impossible to start — partial combustion ..... EF & EC- 42
3. Impossible to start — partial combustion (not affected by throttle position) ..... EF & EC- 43
4. Impossible to start — partial combustion (throttle position changes combustion quality) ..... EF & EC- 44
5. Hard to start — before warm-up ..... EF & EC- 45
6. Hard to start — after warm-up ..... EF & EC- 46
7. Hard to start — every time ..... EF & EC- 47
8. Hard to start — morning after a rainy day ..... EF & EC- 48
9. Abnormal idling — no fast idle ..... EF & EC- 49
10. Abnormal idling — low idle (after warm-up) ..... EF & EC- 50
11. Abnormal idling — high idle (after warm-up) ..... EF & EC- 51
12. Unstable idling — before warm-up ..... EF & EC- 52
13. Unstable idling — after warm-up ..... EF & EC- 53
14. Poor driveability — stumble (while accelerating) ..... EF & EC- 54
15. Poor driveability — surge (while cruising) ..... EF & EC- 55
16. Poor driveability — lack of power ..... EF & EC- 56
17. Poor driveability — detonation ..... EF & EC- 57
18. Engine stall — during start-up ..... EF & EC- 58
19. Engine stall — while idling ..... EF & EC- 59
20. Engine stall — while accelerating ..... EF & EC- 60
21. Engine stall — while cruising ..... EF & EC- 61
22. Engine stall — while decelerating/just after stopping ..... EF & EC- 62
23. Engine stall — while loading (power steering, air conditioner, headlamps, etc.) ..... EF & EC- 63
24. Backfire — through the intake ..... EF & EC- 64
25. Backfire — through the exhaust ..... EF & EC- 65
Self-diagnosis — Description ..... EF & EC- 66
Self-diagnosis — Mode I (Exhaust gas sensor monitor) ..... EF & EC- 70
Self-diagnosis — Mode II (Mixture ratio feedback control monitor) ..... EF & EC- 70
Self-diagnosis — Mode III (Self-diagnostic system) ..... EF & EC- 71
Self-diagnosis — Mode IV (Switches ON/OFF diagnostic system) ..... EF & EC- 78
Self-diagnosis — Mode V (Real-time diagnostic system) ..... EF & EC- 80
Diagnostic Procedure ..... EF & EC- 86
Diagnostic Procedure 1
MAIN POWER SUPPLY AND GROUND CIRCUIT ..... EF & EC- 88
Self-diagnostic item
Diagnostic Procedure 2
CRANK ANGLE SENSOR ..... EF & EC- 90
Diagnostic Procedure 3
CHECK AIR FLOW METER ..... EF & EC- 92
Diagnostic Procedure 4
CHECK ENGINE TEMPERATURE SENSOR ..... EF & EC- 94
Diagnostic Procedure 5
CHECK VEHICLE SPEED SENSOR ..... EF & EC- 96
Diagnostic Procedure 6
IGNITION SIGNAL ..... EF & EC- 98
Diagnostic Procedure 7
CHECK ENGINE CONTROL UNIT ..... EF & EC-102
Diagnostic Procedure 8
CHECK E.G.R. FUNCTION ..... EF & EC-104
Diagnostic Procedure 9
CHECK EXHAUST GAS SENSOR ..... EF & EC-108
Diagnostic Procedure 10
CHECK EXHAUST GAS TEMPERATURE SENSOR ..... EF & EC-110

Contents (Cont'd)

Diagnostic Procedure 11
AIR TEMPERATURE SENSOR ..... EF & EC-114
Diagnostic Procedure 12
CHECK THROTTLE SENSOR ..... EF & EC-116
Switch ON/OFF diagnostic item
Diagnostic Procedure 13
INJECTOR LEAK ..... EF & EC-120
Diagnostic Procedure 14
IDLE SWITCH ..... EF & EC-122
Not self-diagnostic item
Diagnostic Procedure 15
START SIGNAL ..... EF & EC-124
Diagnostic Procedure 16
FUEL PUMP ..... EF & EC-126
Diagnostic Procedure 17
PRESSURE REGULATOR (P.R.) CONTROL SOLENOID VALVE ..... EF & EC-130
Diagnostic Procedure 18
INJECTORS ..... EF & EC-132
Diagnostic Procedure 19
SWIRL CONTROL VALVE (S.C.V.) CONTROL SOLENOID VALVE ..... EF & EC-134
Diagnostic Procedure 20
AUXILIARY AIR CONTROL (A.A.C.) VALVE ..... EF & EC-136
Diagnostic Procedure 21
FAST IDLE CONTROL (With air conditioner) ..... EF & EC-138
Diagnostic Procedure 22
AIR INDUCTION VALVE (A.I.V.) CONTROL SOLENOID VALVE ..... EF & EC-140
Diagnostic Procedure 23
NEUTRAL SWITCH, INHIBITOR SWITCH AND INHIBITOR RELAY ..... EF & EC-142
Diagnostic Procedure 24
RADIATOR FAN CONTROL ..... EF & EC-144
Electrical Components Inspection ..... EF & EC-148

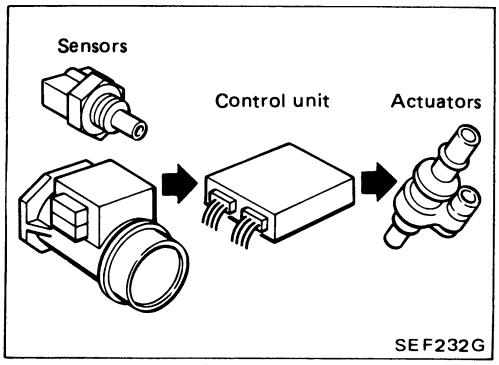

SEF232G

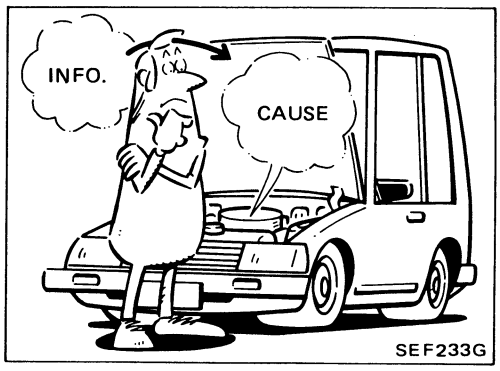

SEF233G

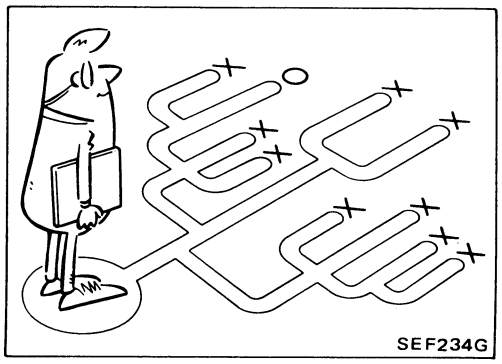
SEF234G

How to Perform Trouble Diagnoses for Quick and Accurate Repair

INTRODUCTION

The engine has an electronic control unit to control major systems such as fuel control, ignition control, idle speed control, etc. The control unit accepts input signals from sensors and instantly drives actuators. It is essential that both kinds of signals are proper and stable. At the same time, it is important that there are no conventional problems such as vacuum leaks, fouled spark plugs, or other problems with the engine.

It is much more difficult to diagnose a problem that occurs intermittently rather than continuously. Most intermittent problems are caused by poor electric connections or faulty wiring. In this case, careful checking of suspicious circuits may help prevent the replacement of good parts.

A visual check only may not find the cause of the problems. A road test with a circuit tester connected to a suspected circuit should be performed.

Before undertaking actual checks, take just a few minutes to talk with a customer who approaches with a driveability complaint. The customer is a very good supplier of information on such problems, especially intermittent ones. Through the talks with the customer, find out what symptoms are present and under what conditions they occur.

Start your diagnosis by looking for "conventional" problems first. This is one of the best ways to troubleshoot driveability problems on an electronically controlled engine vehicle.

How to Perform Trouble Diagnoses for Quick and Accurate Repair (Cont'd)

WORK FLOW

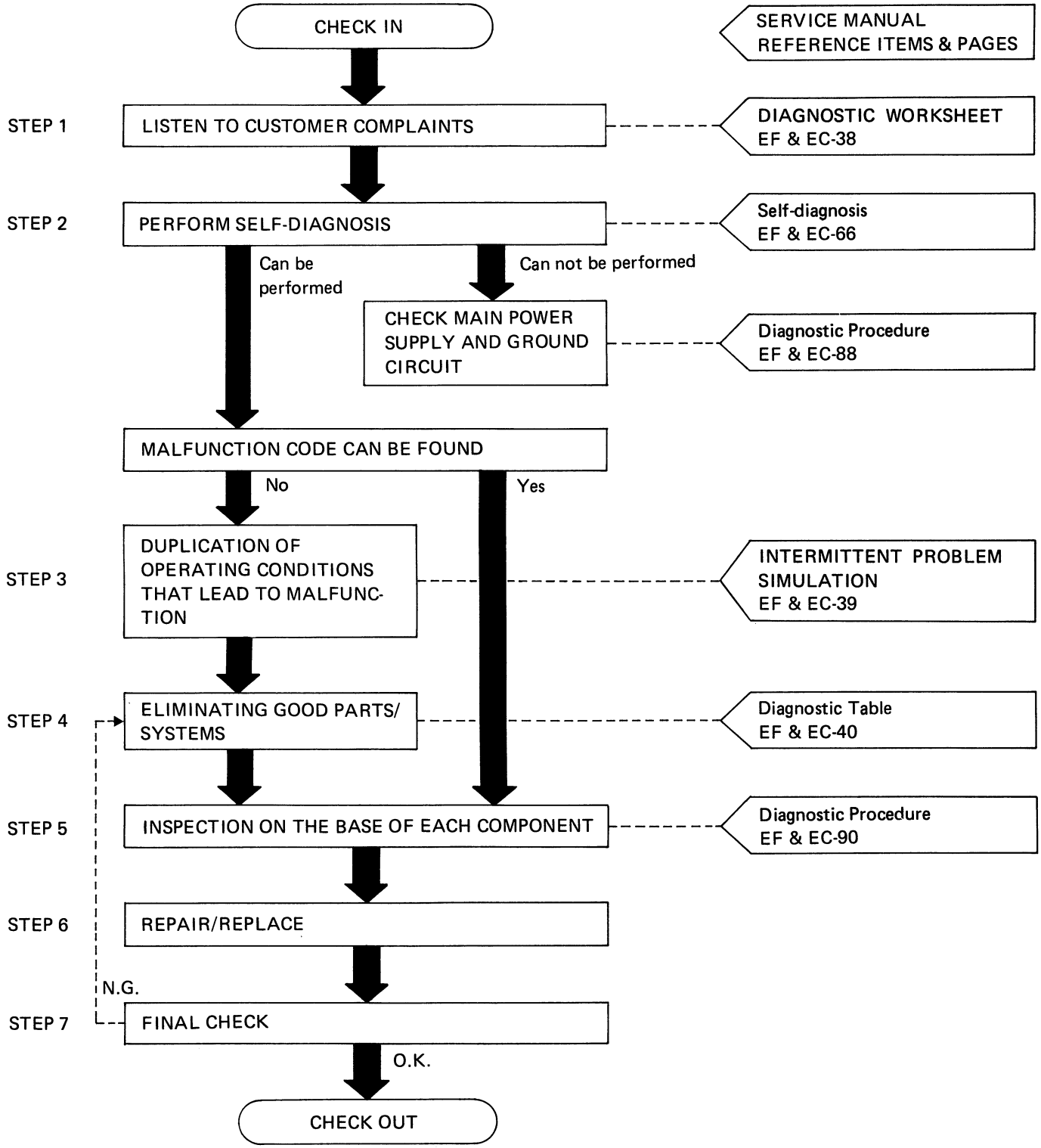

How to Perform Trouble Diagnoses for Quick and Accurate Repair (Cont'd)

KEY POINTS

WHAT ..... Vehicle & engine model
WHEN ..... Date, Frequencies
WHERE ..... Road conditions
HOW ..... Operating conditions, Weather conditions, Symptoms

DIAGNOSTIC WORKSHEET

There are many kinds of operating conditions that lead to malfunctions on engine components.

A good grasp of such conditions can make trouble-shooting faster and more accurate.

In general, feelings for a problem depend on each customer. It is important to fully understand the symptoms or under what conditions a customer complains..

Make good use of a diagnostic worksheet such as the one shown below in order to utilize all the complaints for trouble-shooting.

Worksheet sample

Customer name MR/MS		Model & Year	VIN
Engine #		Trans.	Mileage
Incident Date		Manuf. Date	In Service Date
Symptoms	☐ Startability	☐ Impossible to start ☐ No combustion ☐ Partial combustion ☐ Partial combustion affected by throttle position ☐ Partial combustion NOT affected by throttle position ☐ Possible but hard to start ☐ Others [ ]	
	☐ Idling	☐ No fast idle ☐ Unstable ☐ High idle ☐ Low idle ☐ Others [ ]	
	☐ Driveability	☐ Stumble ☐ Surge ☐ Detonation ☐ Lack of power ☐ Intake backfire ☐ Exhaust backfire ☐ Others [ ]	
	☐ Engine stall	☐ At the time of start ☐ While idling ☐ While accelerating ☐ While decelerating ☐ Just after stopping ☐ While loading	
Incident occurrence		☐ Just after delivery ☐ Recently ☐ In the morning ☐ At night ☐ In the daytime	
Frequency		☐ All the time ☐ Under certain conditions ☐ Sometimes	
Weather conditions		☐ Not effected	
	Weather	☐ Fine ☐ Raining ☐ Snowing ☐ Others [ ]	
	Temperature	☐ Hot ☐ Warm ☐ Cool ☐ Cold ☐ Humid °F	
Engine conditions		☐ Cold ☐ During warm-up ☐ After warm-up Engine speed 0 2,000 4,000 6,000 8,000 rpm	
Road conditions		☐ In town ☐ In suburbs ☐ Highway ☐ Off road (up/down)	
Driving conditions		☐ Not affected ☐ At starting ☐ While idling ☐ At racing ☐ While accelerating ☐ While cruising ☐ While decelerating ☐ While turning (RH/LH) Vehicle speed 0 10 20 30 40 50 60 MPH	
Check engine light		☐ Turned on ☐ Not turned on	

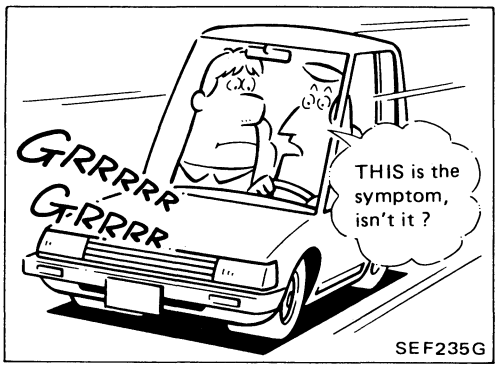

How to Perform Trouble Diagnoses for Quick and Accurate Repair (Cont'd)

INTERMITTENT PROBLEM SIMULATION

In order to duplicate an intermittent problem, it is effective to create similar conditions for component parts, under which the problem might occur.

Perform the activity listed under Service procedure and note the result.

	Variable factor	Influential part	Target condition	Service procedure
1	Mixture ratio	Pressure regulator	Made lean	Remove vacuum hose and apply vacuum.
			Made rich	Remove vacuum hose and apply pressure.
2	Ignition timing	Distributor	Advanced	Rotate distributor clockwise.
			Retarded	Rotate distributor counterclockwise.
3	Mixture ratio feedback control	Exhaust gas sensor	Suspended	Disconnect exhaust gas sensor harness connector.
		Control unit	Operation check	Perform self-diagnosis (Mode I/II) at 2,000 rpm.
4	Idle speed	I.A.A. unit	Raised	Turn idle adjusting screw counterclockwise.
			Lowered	Turn idle adjusting screw clockwise.
5	Electric connection (Electric continuity)	Harness connectors and wires	Poor electric connection or faulty wiring	Tap or wiggle.
				Race engine rapidly. See if the torque reaction of the engine unit causes electric breaks.
6	Temperature	Control unit	Cooled	Cool with an icing spray or similar device.
			Warmed	Heat with a hair drier. **[WARNING: Do not overheat the unit.]**
7	Moisture	Electric parts	Damp	Wet. **[WARNING: Do not directly pour water on components. Use a mist sprayer.]**
8	Electric loads	Load switches	Loaded	Turn on head lights, air conditioner, rear defogger, etc.
9	Idle switch condition	Control unit	ON-OFF switching	Perform self-diagnosis (Mode IV).
10	Ignition spark	Timing light	Spark power check	Try to flash timing light for each cylinder.

Diagnostic Table

To assist with your trouble diagnoses, some typical diagnostic procedures for the following symptoms are described.

REMARKS

In the following pages, the numbers such as ❶, ❷ in the above chart correspond to those in the service procedure described below.
Possible causes can be checked through the service procedure shown by the mark "○".

Diagnostic Table (Cont'd)

SYMPTOM & CONDITION 1 Impossible to start – no combustion

	POSSIBLE CAUSES	❶	❷	❸	❹	❺	❻	❼
SPECIFICATIONS	Mixture ratio (too lean)	○	○					
	Ignition sparks (weak, missing)				○	○	○	
	Ignition timing							○
FUEL SYSTEM	Fuel pump (no operation)	○						
	Fuel pump relay (open circuited)	○						
	Injectors (no operation, clogged)		○					
IGNITION SYSTEM	Ignition switch	○	○	○	○			○
	Main relay	○	○	○	○			○
	Power transistor			○	○			○
	Ignition coil				○			○
	Center cable (ignition leaks)				○			○
	Ignition wires (ignition leaks)				○	○		
	Spark plugs						○	
CONTROL SYSTEM	Crank angle sensor	○	○		○			○

SERVICE PROCEDURE

❶ LISTEN

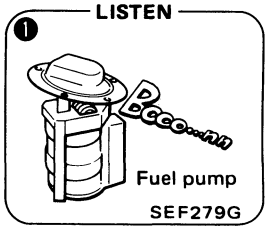

Listen for fuel pump operating sound.

N.G. → Check fuel pump and/or related circuits. [See page EF & EC-126.]

❷ LISTEN

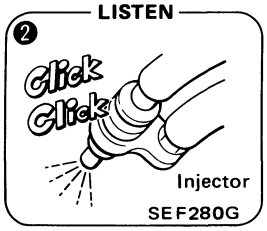

Listen for injector operating sound.

N.G. → Check injector circuit. [See page EF & EC-132.]

❸ CHECK

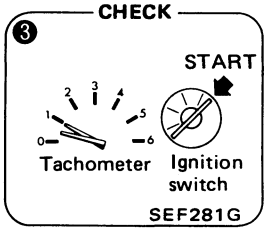

Make sure tachometer needle moves when cranking.

N.G. →

❹ CHECK

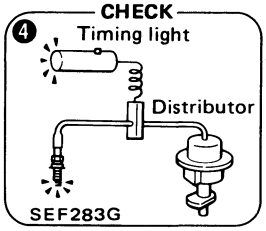

Check flashes of timing light for weakness.

N.G. →

❺ MEASURE

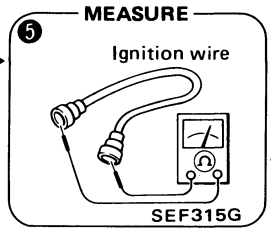

Measure resistance of suspect wires.

N.G. → Replace the wire.

O.K. →

❻ CHECK

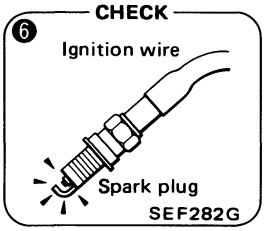

Remove spark plugs and check their ignition sparks.

❼ CHECK

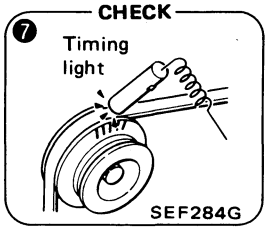

Check ignition timing.

N.G. → Adjust ignition timing. [See page EF & EC-29.]

Diagnostic Table (Cont'd)

SYMPTOM & CONDITION 2 **Impossible to start — partial combustion**

POSSIBLE CAUSES		❶	❷	❸	❹	❺
SPECIFICATIONS	Mixture ratio	○	○	○		
	Fuel pressure (too low)				○	
	Ignition timing					○
FUEL SYSTEM	Fuel pump	○				
	Fuel pump relay (open circuited)	○				
	Injectors (clogged)		○			

SERVICE PROCEDURE

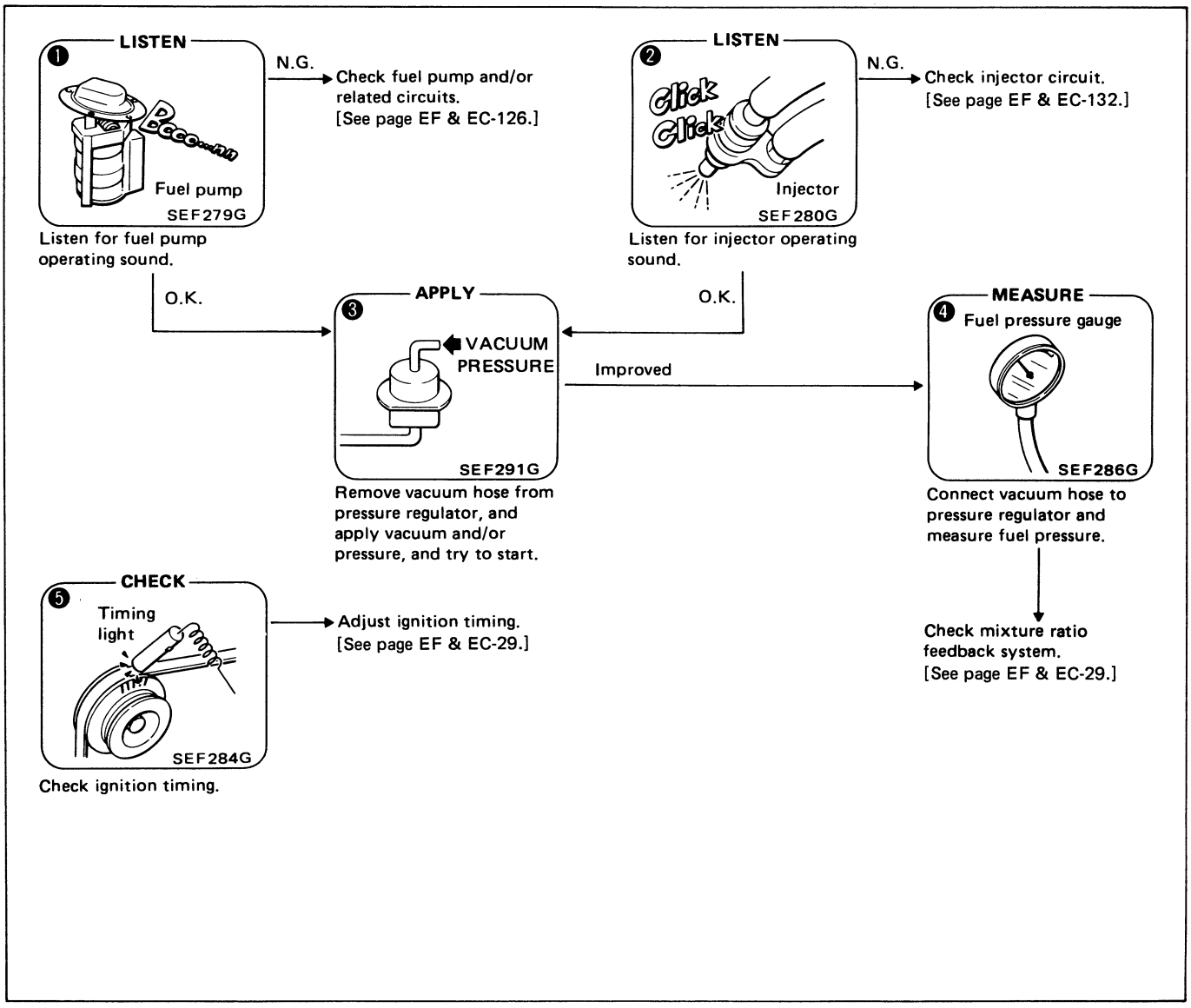

Diagnostic Table (Cont'd)

SYMPTOM & CONDITION 3 Impossible to start – partial combustion (not affected by throttle position)

	POSSIBLE CAUSES	❶	❷	❸	❹	❺	❻	❼	❽	❾	❿
SPECIFICATIONS	Mixture ratio	○		○	○						
	Fuel pressure (too low)			○	○	○					
	Ignition timing						○				
FUEL SYSTEM	Fuel filter (clogged)					○					
	Fuel line (clogged)					○					
	Injectors (clogged)	○									
	Pressure regulator				○						
	Pressure regulator vacuum hose (clogged)			○							
IGNITION SYSTEM	Ignition wires (ignition leaks)							○	○		
	Spark plugs (wet with fuel)									○	
	Ignition switch	○						○			○
INTAKE SYSTEM	Throttle chamber (with ports clogged)		○								
	Throttle valve (clogged)		○								
CONTROL SYSTEM	Engine temperature sensor										
	Crank angle sensor	○						○			

SERVICE PROCEDURE

❶ **LISTEN**

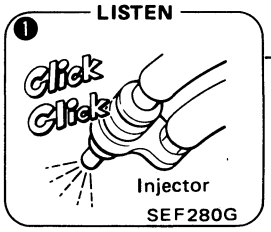

Listen for injector operating sound.

N.G. → Check injector circuit. [See page EF & EC-132.]

O.K. ↓

❷ **CHECK**

Throttle chamber

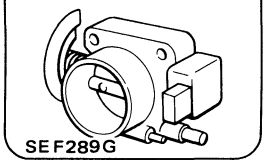

Check throttle chamber ports and valve for clogging.

N.G. → Clean the ports and/or throttle valve.

❸ **CHECK**

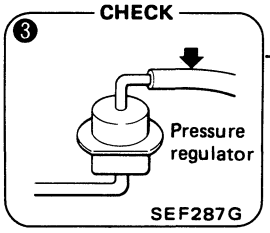

Check vacuum hose of pressure regulator for clogging.

O.K. → ❹

N.G. ↓

Repair or replace the hose.

❹ **REMOVE**

Pressure regulator

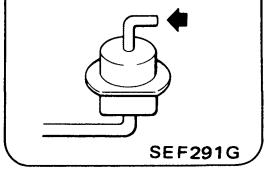

Remove vacuum hose from pressure regulator, and try to start.

Improved → ❺

❺ **MEASURE**

Fuel pressure

Connect vacuum hose to pressure regulator and measure fuel pressure.

→ Check mixture ratio feedback system. [See page EF & EC-29.]

❻ **CHECK**

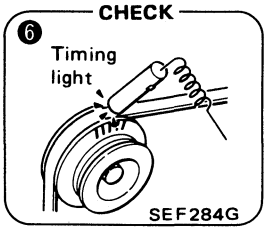

Check ignition timing.

N.G. ↓

Adjust ignition timing. [See page EF & EC-29.]

❼ **CHECK**

Timing light

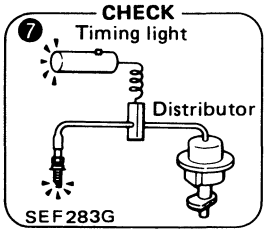

Check flashes of timing light for weakness.

N.G. → ❽

❽ **MEASURE**

Ignition wire

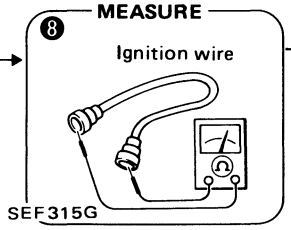

Measure resistance of suspect ignition wires.

N.G. ↓

Replace the wires.

O.K. → ❾

❾ **CHECK**

Ignition wire

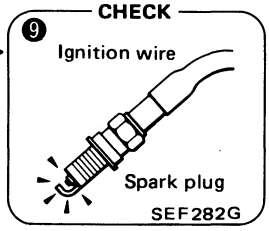

Remove spark plugs and check their ignition sparks by cranking.

❿ **PERFORM**

Self-diagnosis Mode IV

Perform self-diagnosis Mode IV (for start signal).

N.G. → Check starter circuit. [See page EF & EC-124.]

Diagnostic Table (Cont'd)

SYMPTOM & CONDITION **4** **Impossible to start – partial combustion (throttle position changes combustion quality)**

	POSSIBLE CAUSES	❶	❷	❸	❹
INTAKE SYSTEM	Throttle chamber (with ports clogged)	○			
	Throttle valve (clogged)		○		
	A.A.C. valve			○	
CONTROL SYSTEM	Engine temperature sensor				○
	Idle switch				○
	Neutral switch				○

SERVICE PROCEDURE

❶ **CHECK**

Throttle chamber

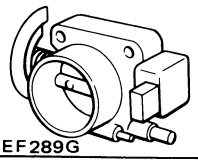

N.G. → Clean the ports.

Check throttle chamber ports for clogging.

❷ **CHECK**

Throttle chamber

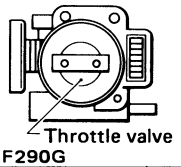

N.G. → Clean the valve.

Check throttle valve for clogging.

❸ **CHECK**

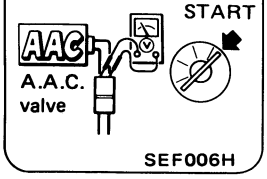

N.G. → Check idle speed control circuit. [See page EF & EC-136.]

Check terminal voltage of A.A.C. valve while cranking.

❹ **CRANK**

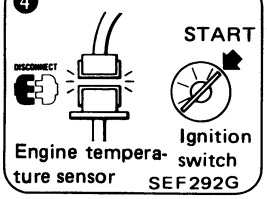

N.G. → Check sensor circuit. [See page EF & EC-94.]

Start with engine temperature sensor connector disconnected.

Diagnostic Table (Cont'd)

SYMPTOM & CONDITION 5 Hard to start – before warm-up

POSSIBLE CAUSES		❶	❷	❸	❹	❺
SPECIFICATIONS	Mixture ratio			○		○
IGNITION SYSTEM	Ignition switch (no start signal)	○			○	
INTAKE SYSTEM	A.A.C. valve			○		
CONTROL SYSTEM	Engine temperature sensor					○
	Idle switch				○	
	Neutral switch	○				
OTHERS	Starter (operation too slow)	○				
	Battery (voltage too low)	○	○			

SERVICE PROCEDURE

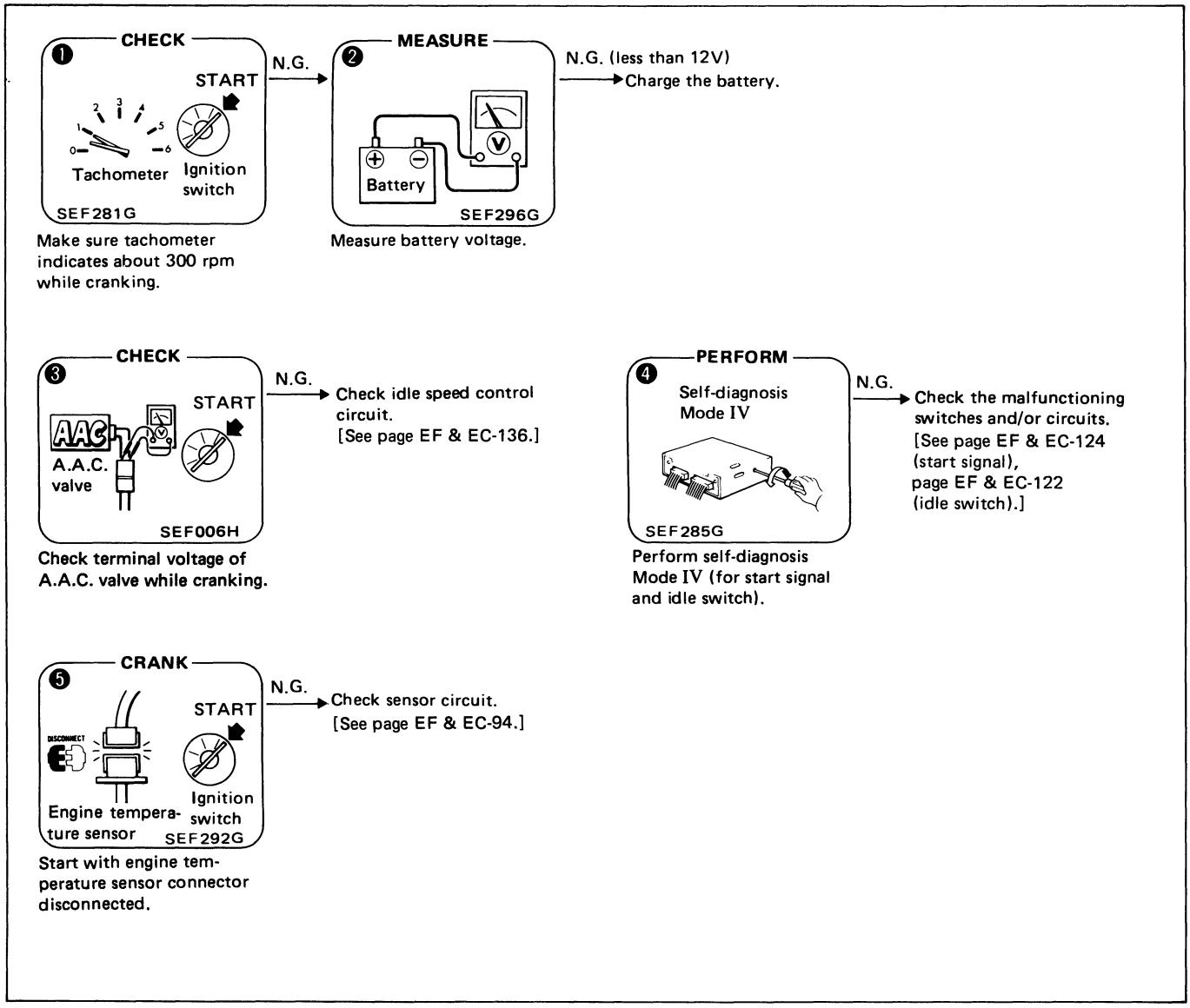

❶ Make sure tachometer indicates about 300 rpm while cranking.

❷ Measure battery voltage.

❸ Check terminal voltage of A.A.C. valve while cranking.

❹ Perform self-diagnosis Mode IV (for start signal and idle switch).

❺ Start with engine temperature sensor connector disconnected.

Diagnostic Table (Cont'd)

SYMPTOM & CONDITION 6 Hard to start – after warm-up

POSSIBLE CAUSES		❶	❷	❸	❹	❺	❻	❼
SPECIFICATIONS	Mixture ratio			○		○		
	Fuel pressure			○		○	○	
FUEL SYSTEM	Fuel line (hot fuel)			○				
	Pressure regulator (low fuel pressure)					○		
	Pressure regulator vacuum hose (clogged)					○		
	Pressure regulator control solenoid						○	○
	Pressure regulator control solenoid vacuum hose					○		
	Fuel temperature sensor (open circuited)							
IGNITION SYSTEM	Ignition switch (no start signal)	○			○			
CONTROL SYSTEM	Engine temperature sensor							
	Air flow meter							
OTHERS	Starter (operation too slow)	○						
	Battery (voltage too low)	○	○					

SERVICE PROCEDURE

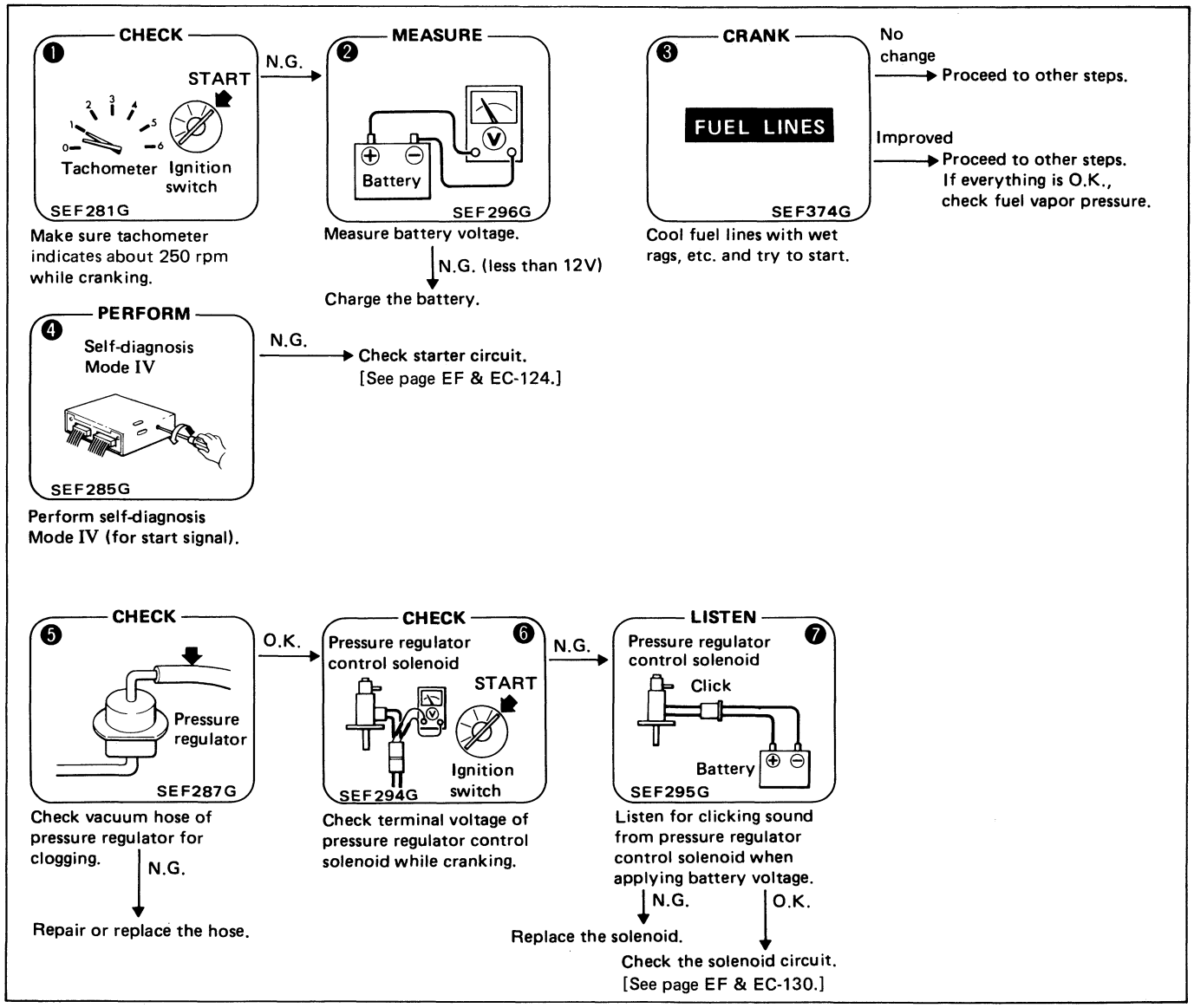

Diagnostic Table (Cont'd)

SYMPTOM & CONDITION 7 Hard to start – every time

	POSSIBLE CAUSES	❶	❷	❸	❹	❺	❻	❼	❽	❾	❿	⓫	⓬
SPECIFICATIONS	Mixture ratio	○				○	○						
	Fuel pressure						○	○					
	Ignition sparks (missing)								○	○		○	
	Ignition timing				○								
FUEL SYSTEM	Fuel pump (improper operation)	○											
	Fuel line (clogged)							○					
	Canister (air leaks)					○							
	Pressure regulator (low fuel pressure)						○						
IGNITION SYSTEM	Ignition wires (ignition leaks)								○	○			
	Spark plugs (improper gap)										○		
CONTROL SYSTEM	Crank angle sensor	○							○				
	Engine temperature sensor												
	Idle switch												○
	Neutral switch		○										
OTHERS	Starter (operation too slow)		○										
	Battery (voltage too low)		○	○									

SERVICE PROCEDURE

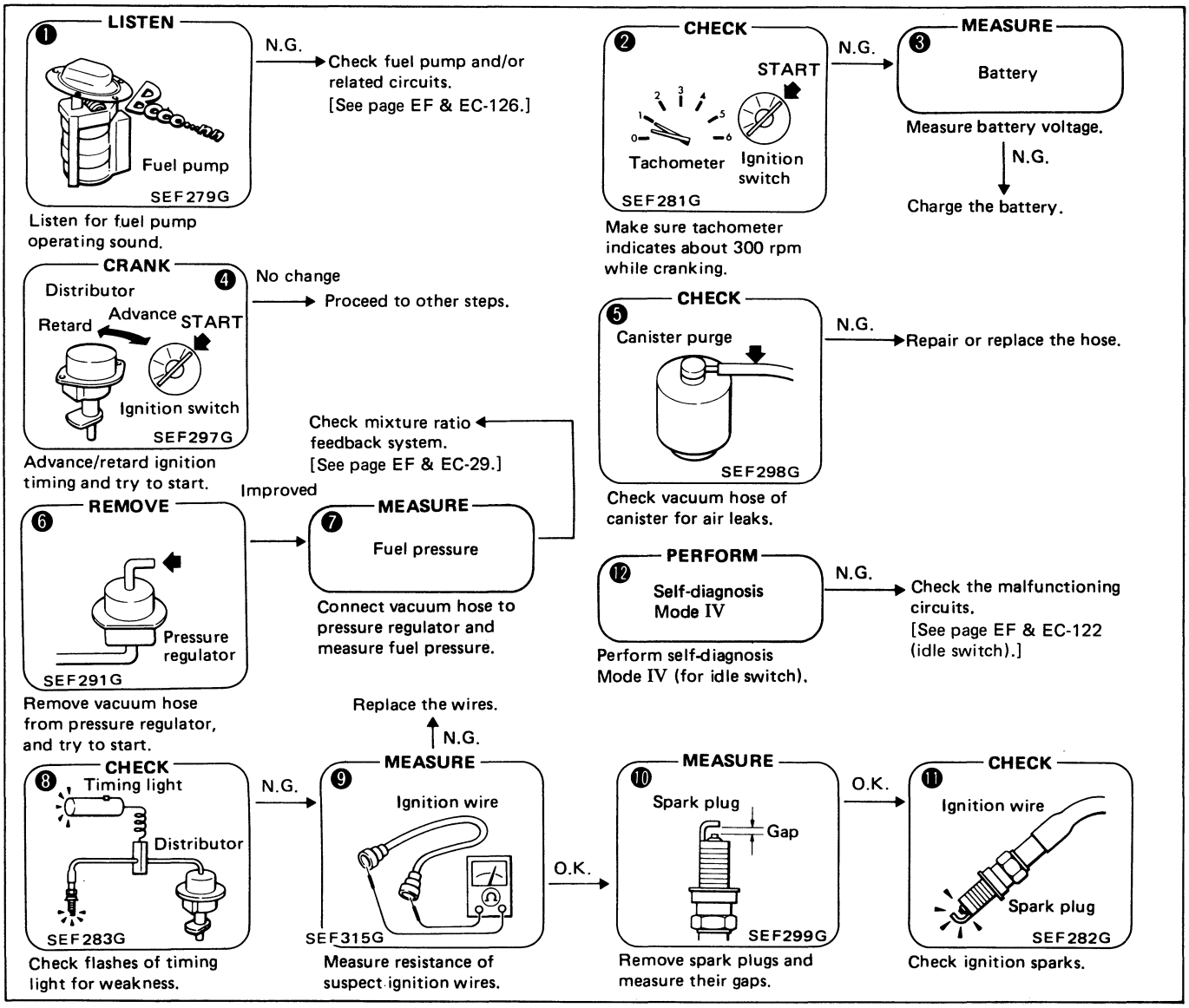

Diagnostic Table (Cont'd)

SYMPTOM & CONDITION 8 Hard to start – morning after a rainy day

POSSIBLE CAUSES		❶	❷	❸	❹	❺
SPECIFICATIONS	Ignition sparks (weak)	○	○			○
IGNITION SYSTEM	Power transistor	○				○
	Ignition coil	○		○		○
	Center cable (ignition leaks)	○				○
	Ignition wires (ignition leaks)	○	○			○
	Distributor cap (ignition leaks)	○		○		○
	Spark plugs (improper gap)				○	○

SERVICE PROCEDURE

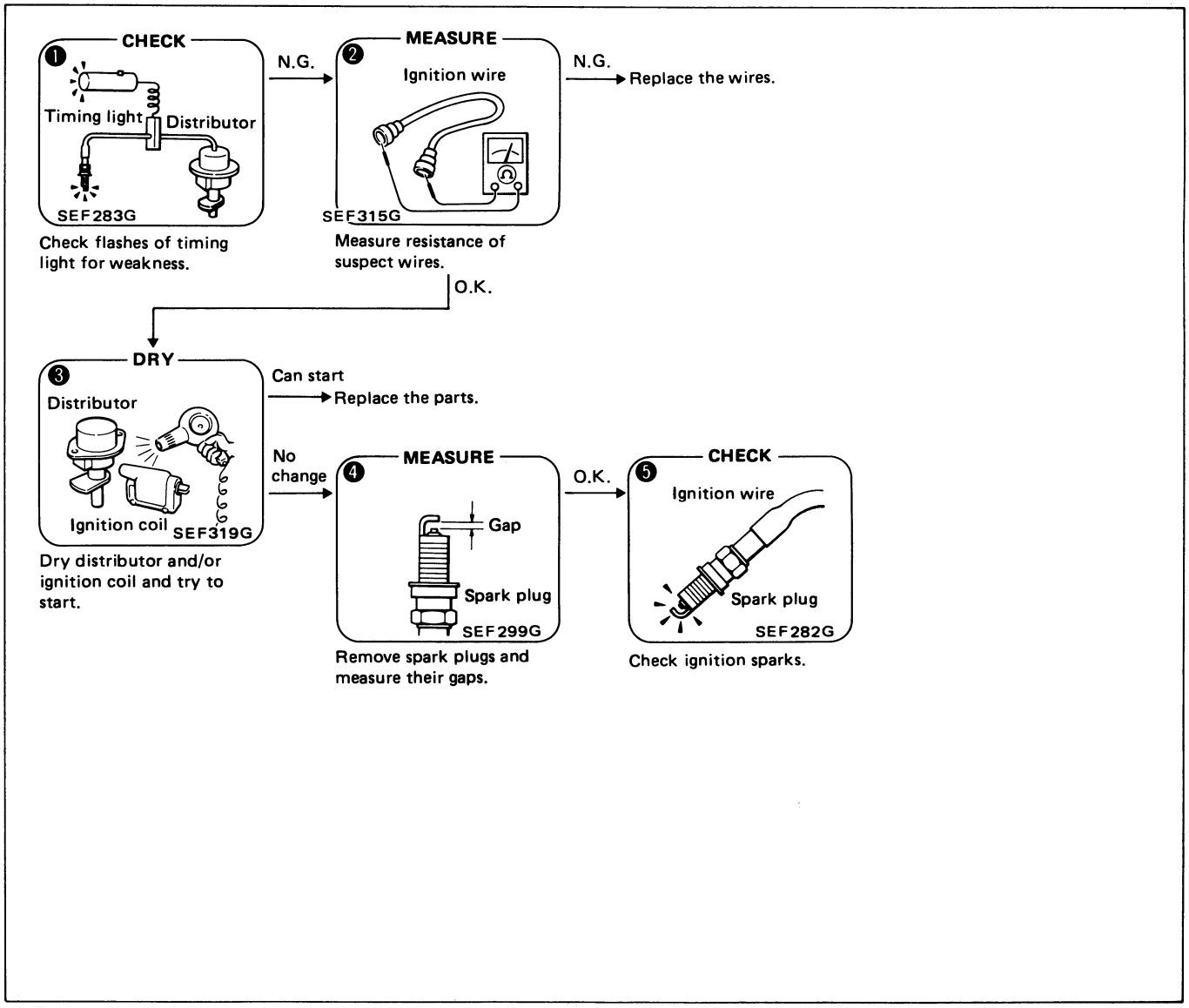

Diagnostic Table (Cont'd)

SYMPTOM & CONDITION 9 **Abnormal idling – no fast idle**

POSSIBLE CAUSES		❶	❷	❸	❹	❺
SPECIFICATIONS	Mixture ratio	○	○		○	
	Ignition timing			○		
INTAKE SYSTEM	Blow-by hose (clogged)		○			
	A.A.C. valve	○				
CONTROL SYSTEM	Engine temperature sensor					○

SERVICE PROCEDURE

❶ **CHECK**

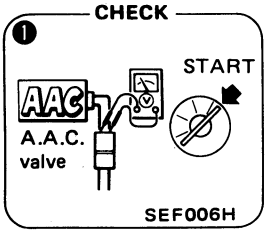

Check terminal voltage of A.A.C. valve while cranking.

N.G. → Check idle speed control circuit. [See page EF & EC-136.]

❷ **CHECK**

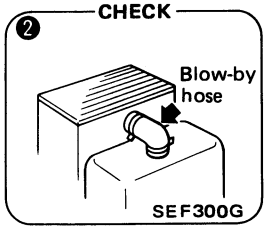

Check blow-by hose for clogging.

N.G. → Clean or replace the hose.

❸ **APPLY**

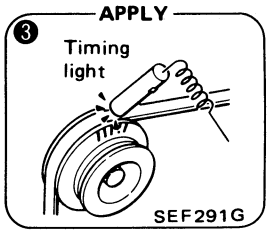

Check ignition timing.

Improved → Adjust ignition timing. [See page EF & EC-29.]

❹ **CHECK**

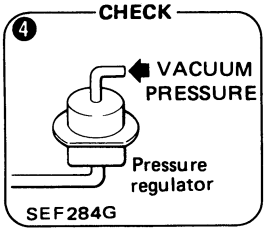

Apply vacuum pressure to pressure regulator after disconnecting vacuum hose, and check idling.

N.G. → Check mixture ratio feedback system. [See page EF & EC-29.]

❺ **CRANK**

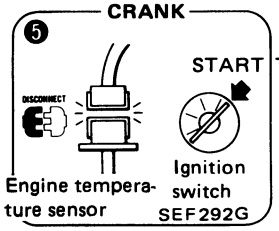

Start with engine temperature sensor connector disconnected.

N.G. → Check sensor circuit. [See page EF & EC-94.]

Diagnostic Table (Cont'd)

SYMPTOM & CONDITION 10 | **Abnormal idling – low idle (after warm-up)**

POSSIBLE CAUSES		❶	❷	❸	❹	❺	❻	❼
SPECIFICATIONS	Mixture ratio		○			○		
	Ignition timing (too retarded)	○						
INTAKE SYSTEM	Throttle chamber (with ports clogged)			○				
	Throttle valve (clogged)				○			
CONTROL SYSTEM	Crank angle sensor						○	
	Air flow meter						○	
	Engine temperature sensor							○
	Load switches (remaining OFF)							

SERVICE PROCEDURE

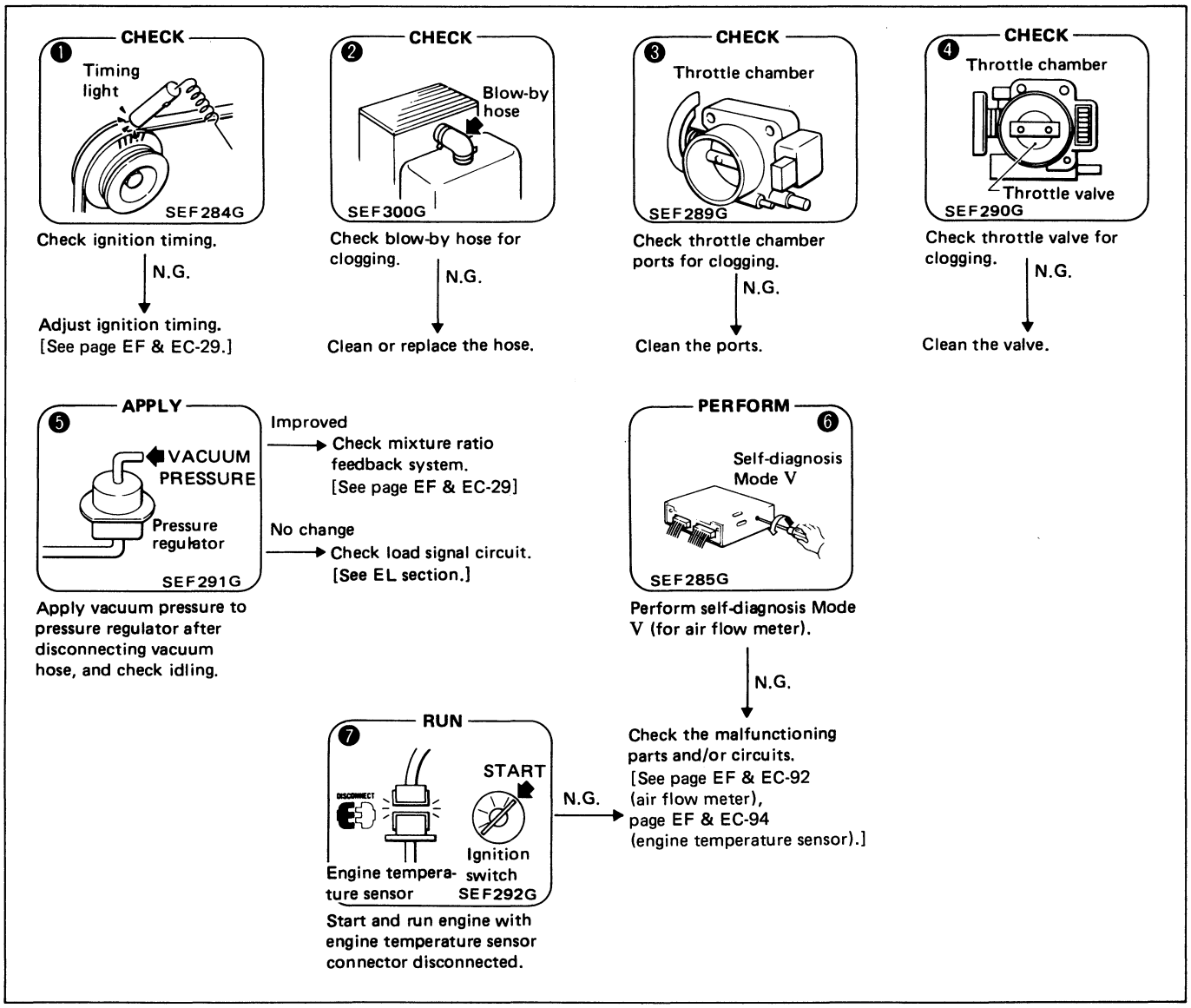

Diagnostic Table (Cont'd)

SYMPTOM & CONDITION 11 Abnormal idling – high idle (after warm-up)

POSSIBLE CAUSES		❶	❷	❸	❹	❺	❻	❼	❽	❾
SPECIFICATIONS	Mixture ratio		○	○		○	○			
	Ignition timing (too advanced)	○								
INTAKE SYSTEM	Air duct (leaks)		○							
	Throttle chamber (air leaks)				○					
	Throttle valve (stuck control wire)				○					
	Intake manifold (gasket) (air leaks)		○							
	Idle speed control valve (remaining ON)			○						
CONTROL SYSTEM	Engine temperature sensor									○
	Idle switch (remaining OFF)							○		
	A/C switch circuit (remaining ON)							○	○	
	Load switches (remaining ON)							○	○	
OTHERS	Battery (voltage too low)									

SERVICE PROCEDURE

❶ CHECK

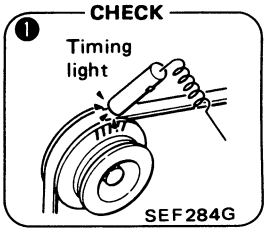

Check ignition timing.

N.G. ↓

Adjust ignition timing.
[See page EF & EC-29.]

❷ CHECK

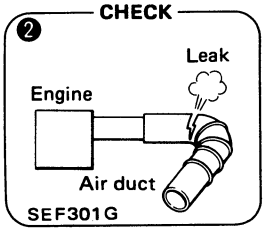

Check intake system for air leaks.

N.G. → Repair/replace the part.

O.K. → Check throttle wire for rough sliding.

❸ CHECK

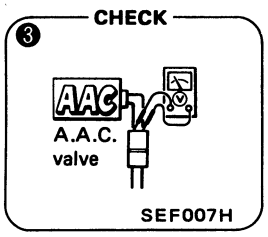

Check terminal voltage of A.A.C. valve while idling.

N.G. ↓

Check the part and/or circuit.
[See page EF & EC-136.]

❹ CHECK

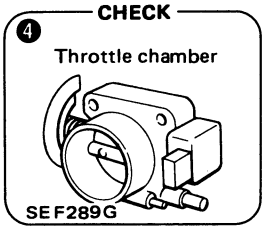

Check throttle chamber ports and valve for clogging.

N.G. ↓

Clean the ports and/or throttle valve.

❺ REMOVE

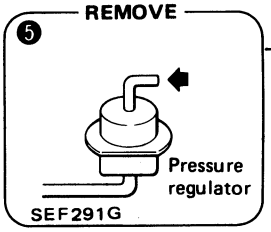

Remove vacuum hose from pressure regulator, and try to start.

Improved →

❻ MEASURE

Fuel pressure

Connect vacuum hose to pressure regulator and measure fuel pressure.

↓

Check mixture ratio feedback system.
[See page EF & EC-29.]

❼ PERFORM

Self-diagnosis Mode IV

Perform self-diagnosis Mode IV (for idle switch).

N.G. ↓

Check the idle switch circuit.
[See page EF & EC-122.]

❽ CRANK

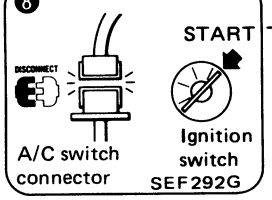

Start with A/C switch connector disconnected.

N.G. → Check A/C switch circuit.
[See HA section.]

❾ CRANK

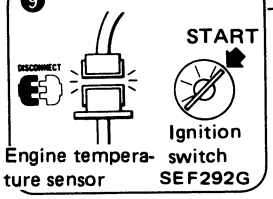

Start with engine temperature sensor connector disconnected.

N.G. → Check sensor circuit.
[See page EF & EC-94.]

Diagnostic Table (Cont'd)

SYMPTOM & CONDITION 12 Unstable idling – before warm-up

POSSIBLE CAUSES		❶	❷	❸	❹	❺	❻
SPECIFICATIONS	Mixture ratio		○				
	Ignition timing	○					
INTAKE SYSTEM	Idle speed control valve (remaining OFF)			○			
CONTROL SYSTEM	Engine temperature sensor						○
E.G.R. SYSTEM	E.G.R. control valve (stuck open)				○		
	E.G.R. solenoid (remaining OFF)				○	○	

SERVICE PROCEDURE

❶ CHECK

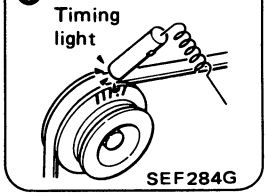

Check ignition timing.

N.G. → Adjust ignition timing. [See page EF & EC-29.]

❷ APPLY

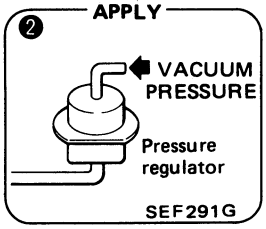

Apply vacuum pressure to pressure regulator after disconnecting vacuum hose, and check idling.

Improved → Check mixture ratio feedback system. [See page EF & EC-29.]

❸ CHECK

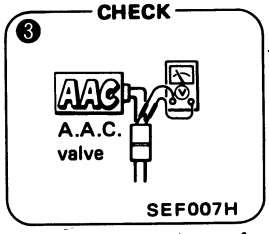

Check terminal voltage of A.A.C. valve while idling.

Does not turn ON → Check its circuit. [See page EF & EC-136.]

❹ CHECK

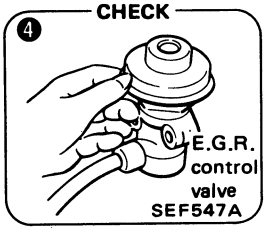

Check E.G.R. control valve for operation.

Stays lifted →

❺ CHECK

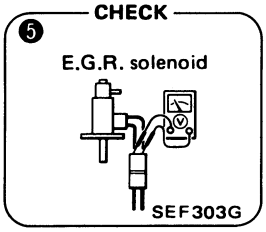

Check terminal voltage of E.G.R. solenoid while idling.

N.G. ↓ Check the solenoid circuit. [See page EF & EC-104.]

❻ RUN

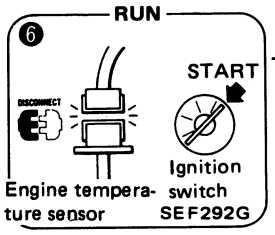

Start and run engine with engine temperature sensor connector disconnected.

N.G. → Check sensor circuit. [See page EF & EC-94.]

Diagnostic Table (Cont'd)

SYMPTOM & CONDITION 13 Unstable idling – after warm-up

	POSSIBLE CAUSES	❶	❷	❸	❹	❺	❻	❼	❽	❾	❿	⓫	⓬
SPECIFICATIONS	Mixture ratio	○	○	○	○								
	Ignition sparks					○	○	○					
	Ignition timing								○				
	Compression pressure									○			
FUEL SYSTEM	Fuel line (clogged)												
	Canister (air leaks)			○									
	Pressure regulator control solenoid				○								
IGNITION SYSTEM	Power transistor					○		○					
	Ignition coil					○		○					
	Ignition wires					○	○	○					
INTAKE SYSTEM	Blow-by hose (leaks)	○											
	Air duct (leaks)		○										
CONTROL SYSTEM	Idle switch												○
	Load switches												
E.G.R. SYSTEM	E.G.R. control valve										○		
	E.G.R. solenoid										○	○	

SERVICE PROCEDURE

❶ CHECK

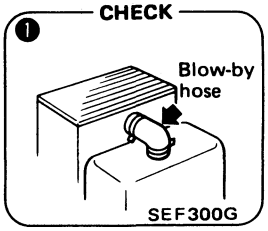

Check blow-by hose for leaks.

N.G. → Repair/replace the hose.

❷ CHECK

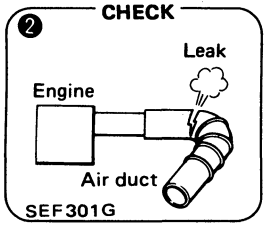

Check intake system for air leaks.

N.G. → Repair/replace the part.

❸ CHECK

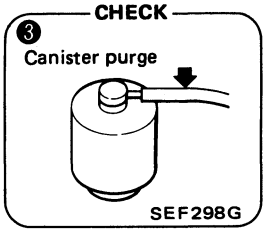

Check purge line for leaks.

N.G. → Repair/replace the hose.

❹ CHECK

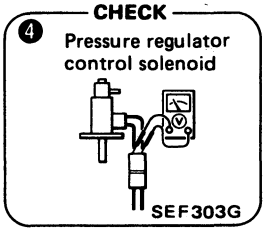

Check terminal voltage of the solenoid while idling.

N.G. → Check the solenoid circuit. [See page EF & EC-130.]

❺ CHECK

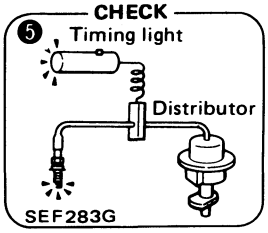

Check flashes of timing light for weakness.

N.G. →

❻ MEASURE

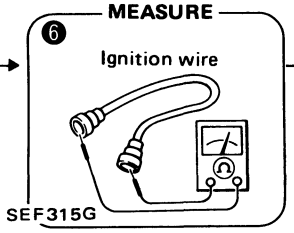

Measure resistance of suspect wires.

N.G. → Replace the wire.

O.K. →

❼ CHECK

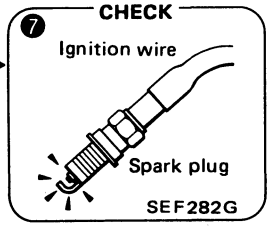

Remove spark plugs and check their ignition sparks.

❽ CHECK

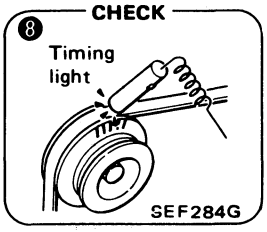

Check ignition timing.

N.G. → Adjust ignition timing. [See page EF & EC-29.]

❾ MEASURE

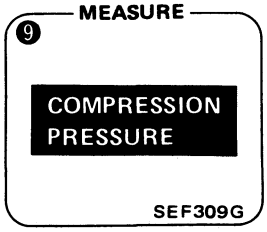

Measure compression pressure.

N.G. → Check cylinder head and gasket. [See EM section.]

❿ CHECK

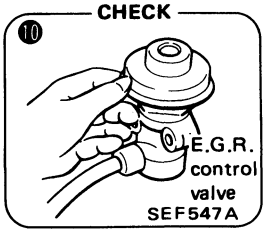

Check E.G.R. control valve for operation.

Stays lifted →

⓫ CHECK

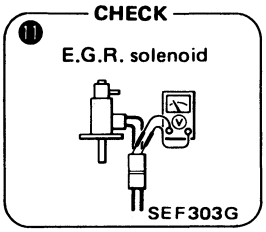

Check terminal voltage of E.G.R. solenoid while idling.

N.G. → Check the solenoid circuit. [See page EF & EC-104.]

⓬ PERFORM

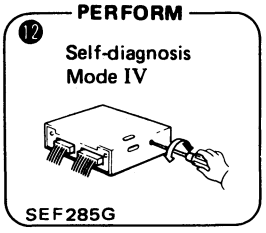

Perform self-diagnosis Mode IV (for idle switch).

N.G. → Check the idle switch circuit. [See page EF & EC-122.]

Diagnostic Table (Cont'd)

SYMPTOM & CONDITION 14 Poor driveability – stumble (while accelerating)

POSSIBLE CAUSES		❶	❷	❸	❹	❺	❻	❼	❽	❾
SPECIFICATIONS	Mixture ratio				○		○	○		○
	Fuel pressure						○	○		
FUEL SYSTEM	Fuel filter (clogged)							○		
	Fuel line (clogged)							○		
	Injectors (clogged)							○		
IGNITION SYSTEM	Power transistor	○		○						
	Ignition coil	○		○						
	Ignition wires (ignition leaks)	○	○	○						
	Spark plugs (ignition leaks, improper gap)			○						
INTAKE SYSTEM	Air duct (leaks)				○					
CONTROL SYSTEM	Crank angle sensor	○							○	
	Air flow meter								○	
	Engine temperature sensor	○							○	
	Exhaust gas sensor									○
	Idle switch (remaining OFF)					○				
OTHERS	Fuel (poor quality)									

SERVICE PROCEDURE

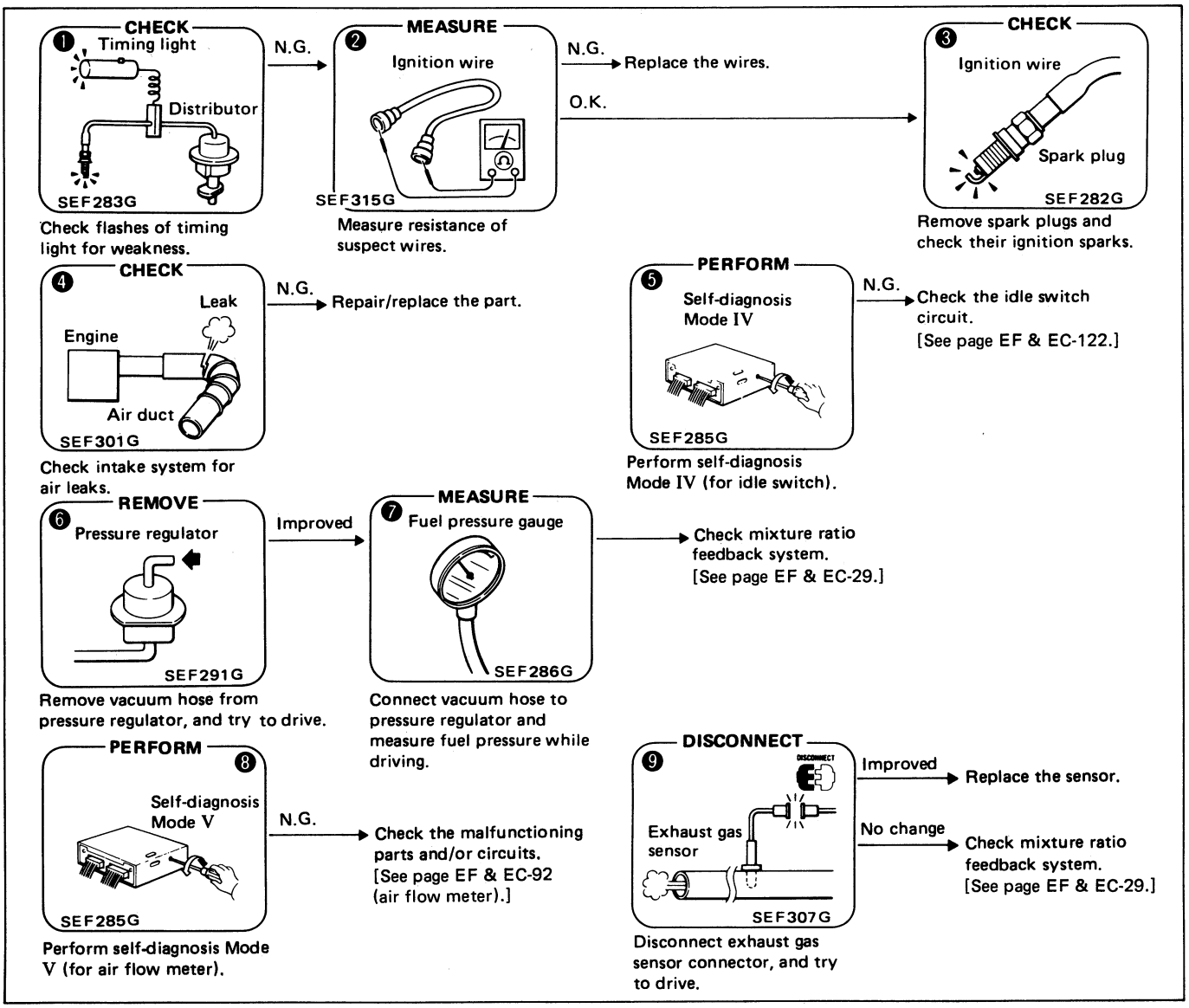

Diagnostic Table (Cont'd)

SYMPTOM & CONDITION 15 Poor driveability – surge (while cruising)

POSSIBLE CAUSES		❶	❷	❸	❹	❺	❻	❼	❽	❾
SPECIFICATIONS	Mixture ratio (too lean)	○				○	○			○
	Fuel pressure (low)					○	○			
	Ignition timing		○							
IGNITION SYSTEM	(missing)								○	
INTAKE SYSTEM	Air duct (leaks)	○								
	Throttle chamber (air leaks)	○								
	Intake manifold (gasket) (air leaks)	○								
CONTROL SYSTEM	Crank angle sensor								○	
	Air flow meter								○	
	Exhaust gas sensor								○	
	Idle switch							○		
E.G.R. SYSTEM	E.G.R. control valve (stuck open)			○						
	E.G.R. solenoid (remaining OFF)			○	○					
	E.G.R. vacuum hose (removed)			○						

SERVICE PROCEDURE

❶ CHECK

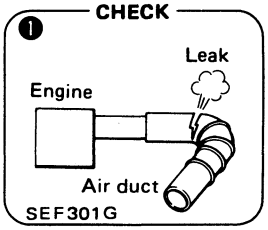

Check intake system for air leaks.

N.G. → Repair/replace the part.

❷ CHECK

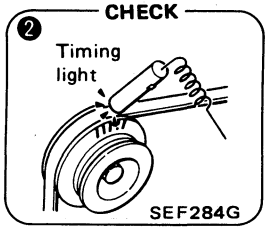

Check ignition timing.

N.G. → Adjust ignition timing. [See page EF & EC-29.]

❸ CHECK

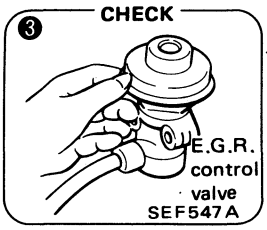

Check E.G.R. control valve for operation.

Stays lifted →

❹ CHECK

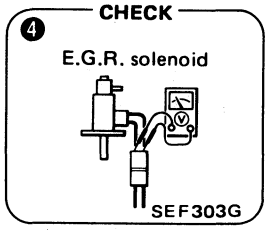

Check terminal voltage of E.G.R. solenoid.

N.G. → Check the solenoid circuit. [See page EF & EC-104.]

❺ REMOVE

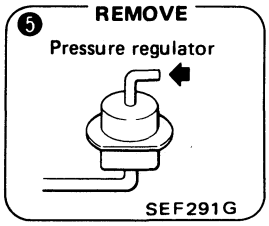

Remove vacuum hose from pressure regulator, and try to drive.

Improved →

❻ MEASURE

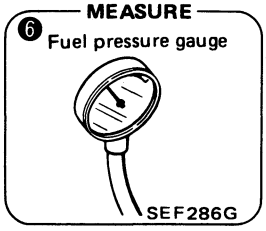

Connect vacuum hose to pressure regulator and measure fuel pressure while driving.

→ Check mixture ratio feedback system. [See page EF & EC-29.]

❼ PERFORM

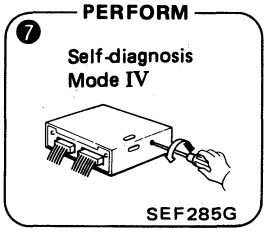

Perform self-diagnosis Mode IV (for idle switch).

N.G. → Check the idle switch circuit. [See page EF & EC-122.]

❽ PERFORM

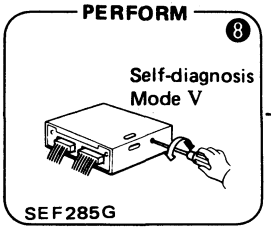

Perform self-diagnosis Mode V (for crank angle sensor, air flow meter, ignition signal.)

N.G. → Check the malfunctioning parts and/or circuits. [See page EF & EC-90 (crank angle sensor), page EF & EC-92 (air flow meter), page EF & EC-98 (ignition signal).]

❾ DISCONNECT

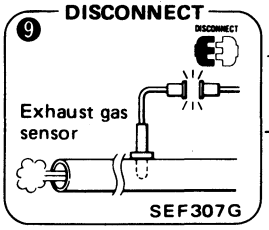

Disconnect exhaust gas sensor connector, and try to drive.

Improved → Replace the sensor.

No change → Check mixture ratio feedback system. [See page EF & EC-29.]

Diagnostic Table (Cont'd)

SYMPTOM & CONDITION 16 Poor driveability — lack of power

	POSSIBLE CAUSES	❶	❷	❸	❹	❺	❻	❼	❽	❾	❿	⓫
SPECIFICATIONS	Fuel pressure								○	○		
	Ignition timing		○									
	Compression pressure (too low)							○				
FUEL SYSTEM	Fuel pump (low fuel output)									○		
	Fuel filter (clogged)									○		
	Fuel line (clogged)									○		
	Injectors (clogged)									○		
IGNITION SYSTEM	Ignition wires (ignition leaks)				○	○	○					
	Spark plugs (improper gap)						○					
INTAKE SYSTEM	Air cleaner element (clogged)	○										
	Throttle chamber (clogged)			○								
	Throttle valve (not open enough)			○								
CONTROL SYSTEM	Air flow meter										○	
	Exhaust gas sensor											○

SERVICE PROCEDURE

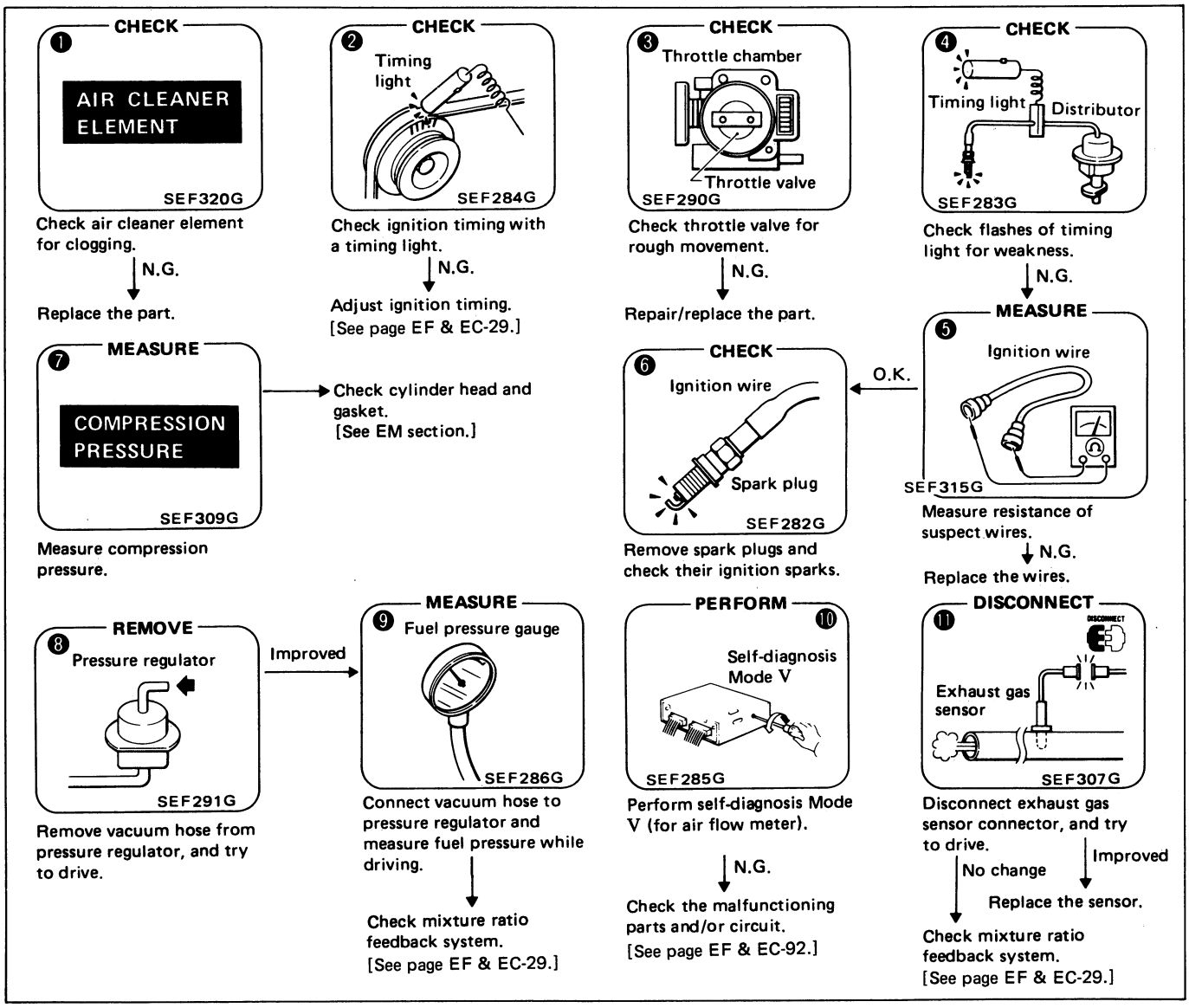

Diagnostic Table (Cont'd)

SYMPTOM & CONDITION 17 Poor driveability – detonation

POSSIBLE CAUSES		❶	❷	❸	❹	❺
SPECIFICATIONS	Mixture ratio (too lean)			○	○	
	Fuel pressure (low)			○		
	Ignition timing (too advanced)		○			
FUEL SYSTEM	Fuel filter (clogged)				○	
	Fuel line (clogged)				○	
	Injectors (clogged)				○	
CONTROL SYSTEM	Crank angle sensor (improper 1°-signals)					○
	Air flow meter					○
	Engine temperature sensor					○
OTHERS	Water temperature (too high)	○				
	Fuel (low octane rating, poor quality)					

SERVICE PROCEDURE

❶ **CHECK** Water temperature

SEF312G

Check water temperature.

Too high → Check cooling system. [See LC section.]

❷ **CHECK** Timing light

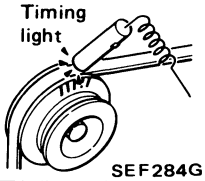

SEF284G

Check ignition timing.

N.G. → Adjust ignition timing. [See page EF & EC-29.]

❸ **REMOVE** Pressure regulator

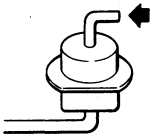

SEF291G

Remove vacuum hose from pressure regulator, and try to drive.

Improved →

❹ **MEASURE** Fuel pressure gauge

SEF286G

Connect vacuum hose to pressure regulator, and measure fuel pressure while driving.

❺ **PERFORM** Self-diagnosis Mode V

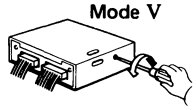

SEF285G

Perform self-diagnosis Mode V (for crank angle sensor and air flow meter).

N.G. → Check the malfunctioning parts. [See page EF & EC-90 (crank angle sensor), page EF & EC-92 (air flow meter).]

Diagnostic Table (Cont'd)

SYMPTOM & CONDITION 18 Engine stall – during start-up

	POSSIBLE CAUSES	❶	❷	❸	❹	❺	❻	❼	❽	❾
SPECIFICATIONS	Mixture ratio (too rich/too lean)							○	○	○
	Ignition sparks (weak)			○	○					
	Ignition timing	○								
	Compression pressure (too low)						○			
FUEL SYSTEM	Canister (too much evaporation to intake)							○		
IGNITION SYSTEM	Ignition wires (ignition leaks)			○	○	○				
	Spark plugs (wet with fuel, improper gap)					○				
INTAKE SYSTEM	Throttle valve (not open enough)		○							

SERVICE PROCEDURE

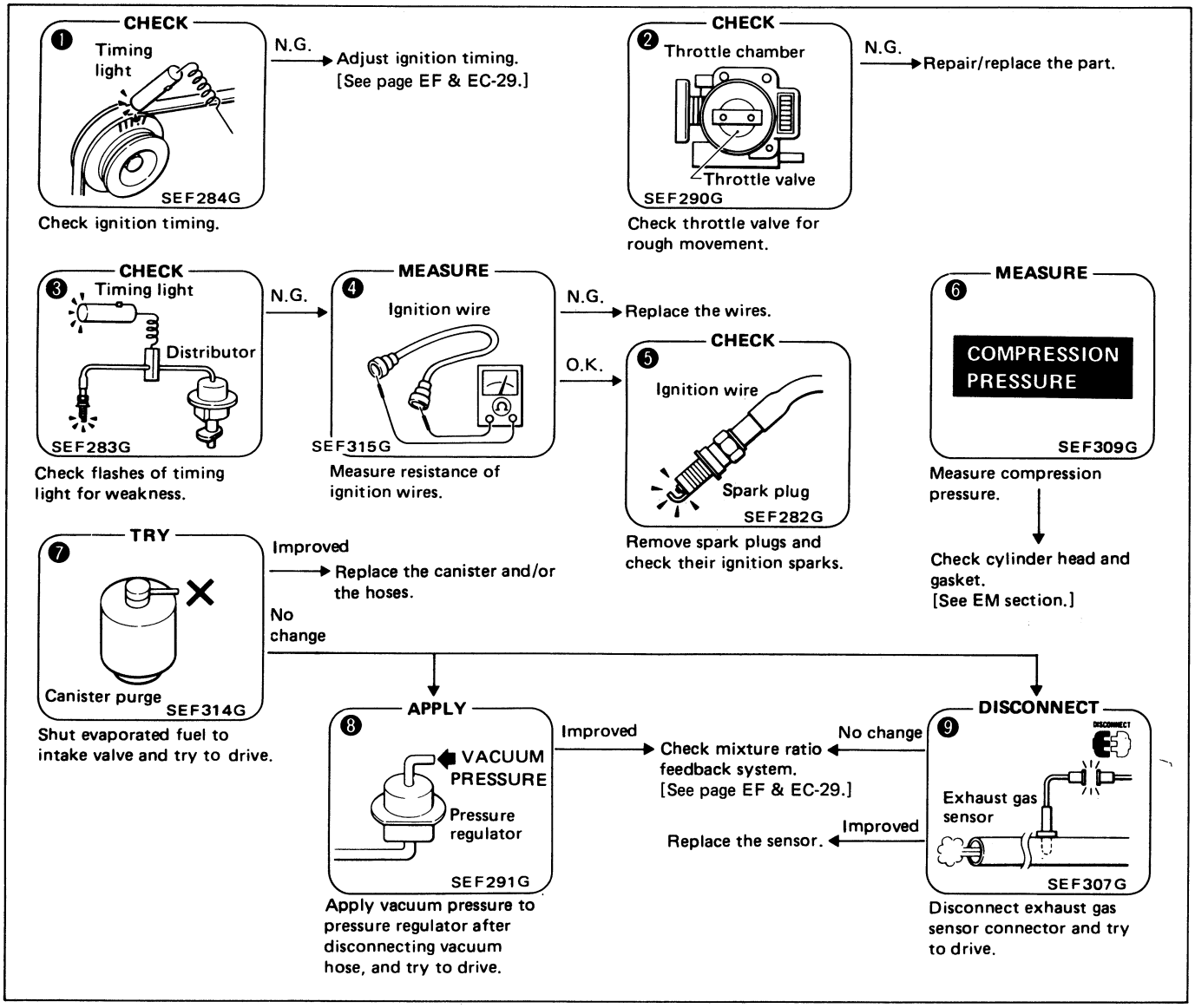

Diagnostic Table (Cont'd)

SYMPTOM & CONDITION 19 Engine stall – while idling

POSSIBLE CAUSES		❶	❷	❸	❹	❺	❻	❼	❽	❾
SPECIFICATIONS	Mixture ratio (too rich/too lean)	○	○							
	Fuel pressure (low)	○	○							
	Ignition sparks (weak, missing)				○					
	Idle speed (low)			○						
FUEL SYSTEM	Fuel line (clogged)		○							
IGNITION SYSTEM	Spark plugs (wet with fuel, improper gap)					○	○			
INTAKE SYSTEM	Idle speed control valve (improper operation)			○				○		
CONTROL SYSTEM	Idle switch (remaining OFF)									○
	Neutral switch (remaining OFF)			○						
	A/C switch circuit (remaining OFF)							○	○	
	Load switches (remaining OFF)							○	○	

SERVICE PROCEDURE

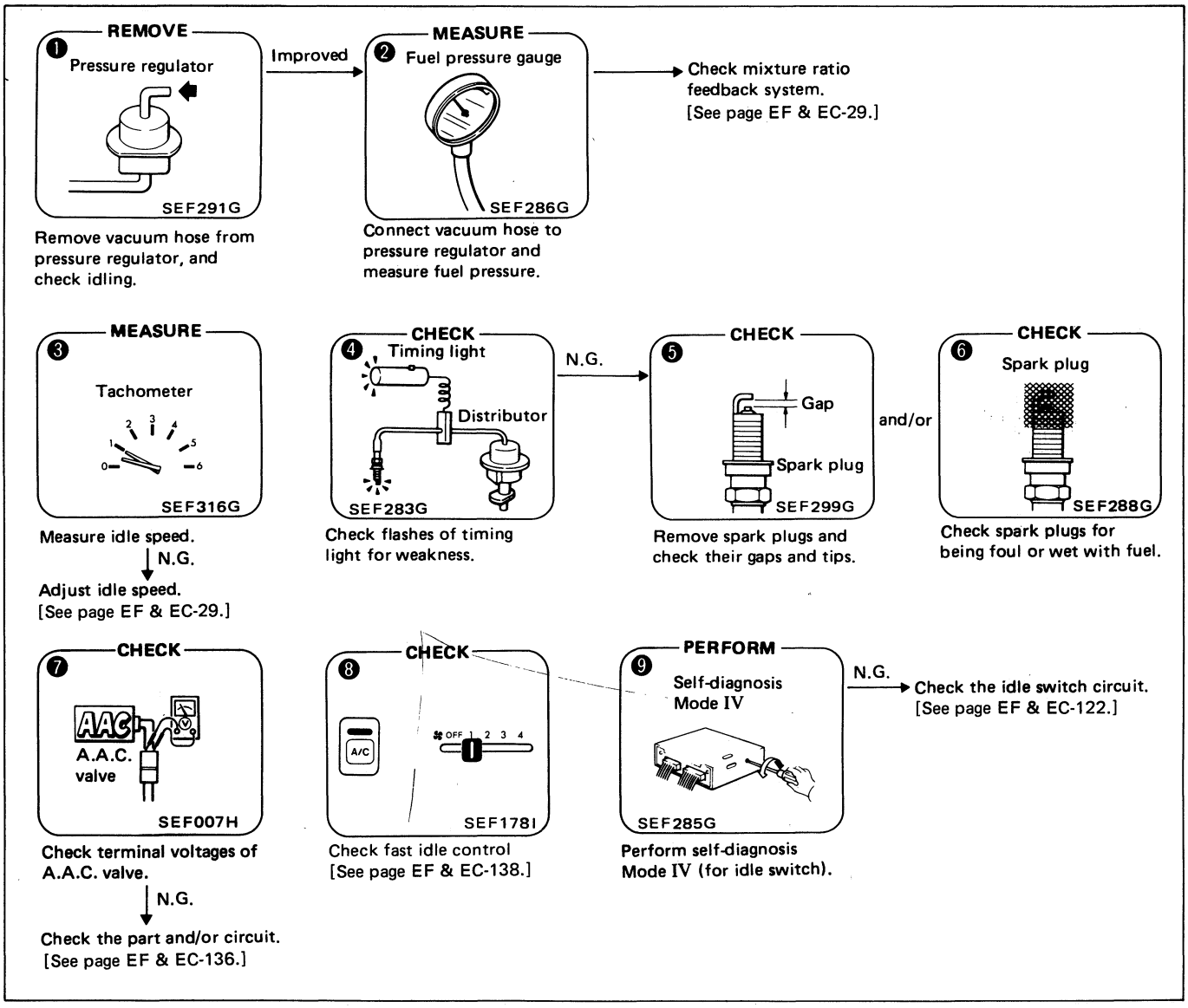

Diagnostic Table (Cont'd)

SYMPTOM & CONDITION 20 Engine stall – while accelerating

POSSIBLE CAUSES		❶	❷	❸	❹	❺	❻	❼
SPECIFICATIONS	Mixture ratio					○	○	
	Ignition sparks (weak, missing)	○	○	○				
	Compression pressure (low)				○			
CONTROL SYSTEM	Crank angle sensor	○						○
	Air flow meter							○
	Exhaust gas sensor					○	○	

SERVICE PROCEDURE

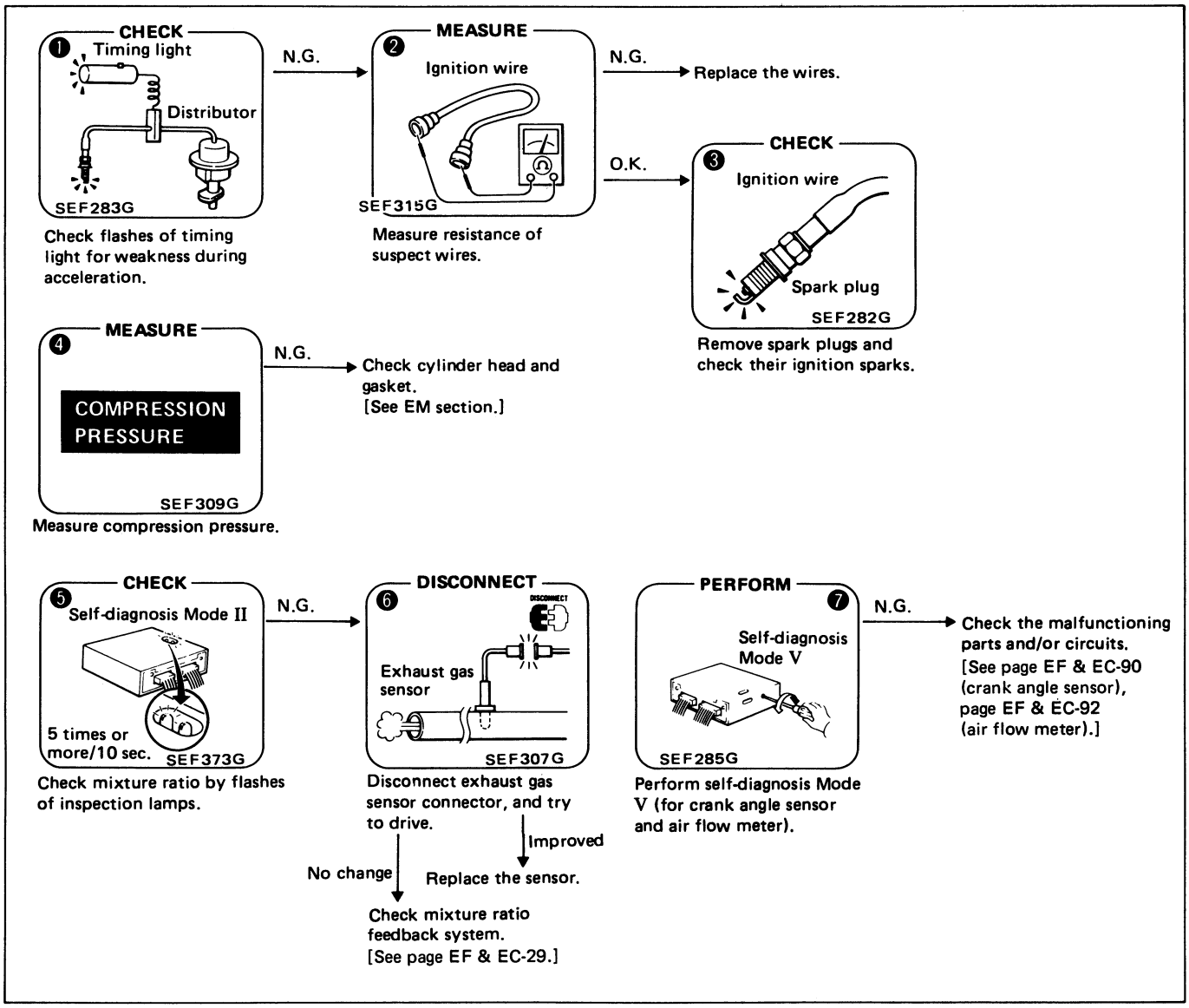

Diagnostic Table (Cont'd)

SYMPTOM & CONDITION 21 Engine stall – while cruising

POSSIBLE CAUSES		❶	❷	❸	❹	❺	❻
SPECIFICATIONS	Mixture ratio				○	○	
	Ignition sparks (weak, missing)	○	○	○			
CONTROL SYSTEM	Crank angle sensor						○
	Air flow meter						○

SERVICE PROCEDURE

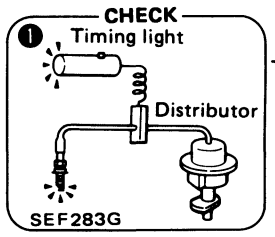

Check flashes of timing light for weakness at constant engine revolution. (1,000 - 2,000 rpm).

N.G. →

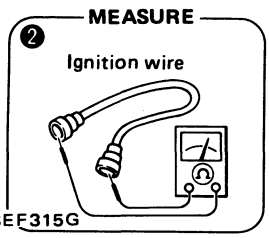

Measure resistance of suspect wires.

N.G. → Replace the wires.

O.K. →

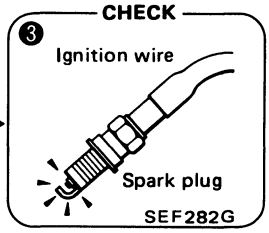

Remove spark plugs and check their ignition sparks.

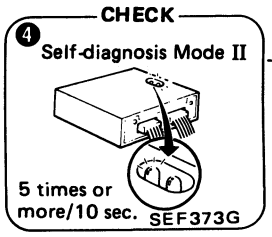

Check mixture ratio by flashes of inspection lamps.

N.G. →

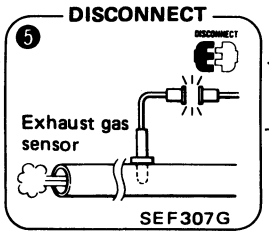

Disconnect exhaust gas sensor connector, and try to drive.

Improved → Replace the sensor.

No change → Check mixture ratio feedback system. [See page EF & EC-29.]

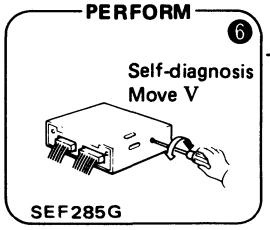

Perform self-diagnosis Mode V (for air flow meter and crank angle sensor).

N.G. → Check the circuits. [See page EF & EC-90 (crank angle sensor), page EF & EC-92 (air flow meter).]

Diagnostic Table (Cont'd)

SYMPTOM & CONDITION 22 Engine stall – while decelerating/just after stopping

POSSIBLE CAUSES		❶	❷	❸	❹	❺	❻
SPECIFICATIONS	Mixture ratio					○	○
	Ignition sparks (missing)	○					
	Idle speed (too low)			○			
IGNITION SYSTEM	(missing)	○	○				
INTAKE SYSTEM	Idle speed control valve (remaining OFF)			○	○		
CONTROL SYSTEM	Exhaust gas sensor (malfunctioning feedback control)					○	○
	Crank angle sensor		○				
	Idle switch (remaining OFF)			○			
	Load switches (remaining OFF)			○	○		

SERVICE PROCEDURE

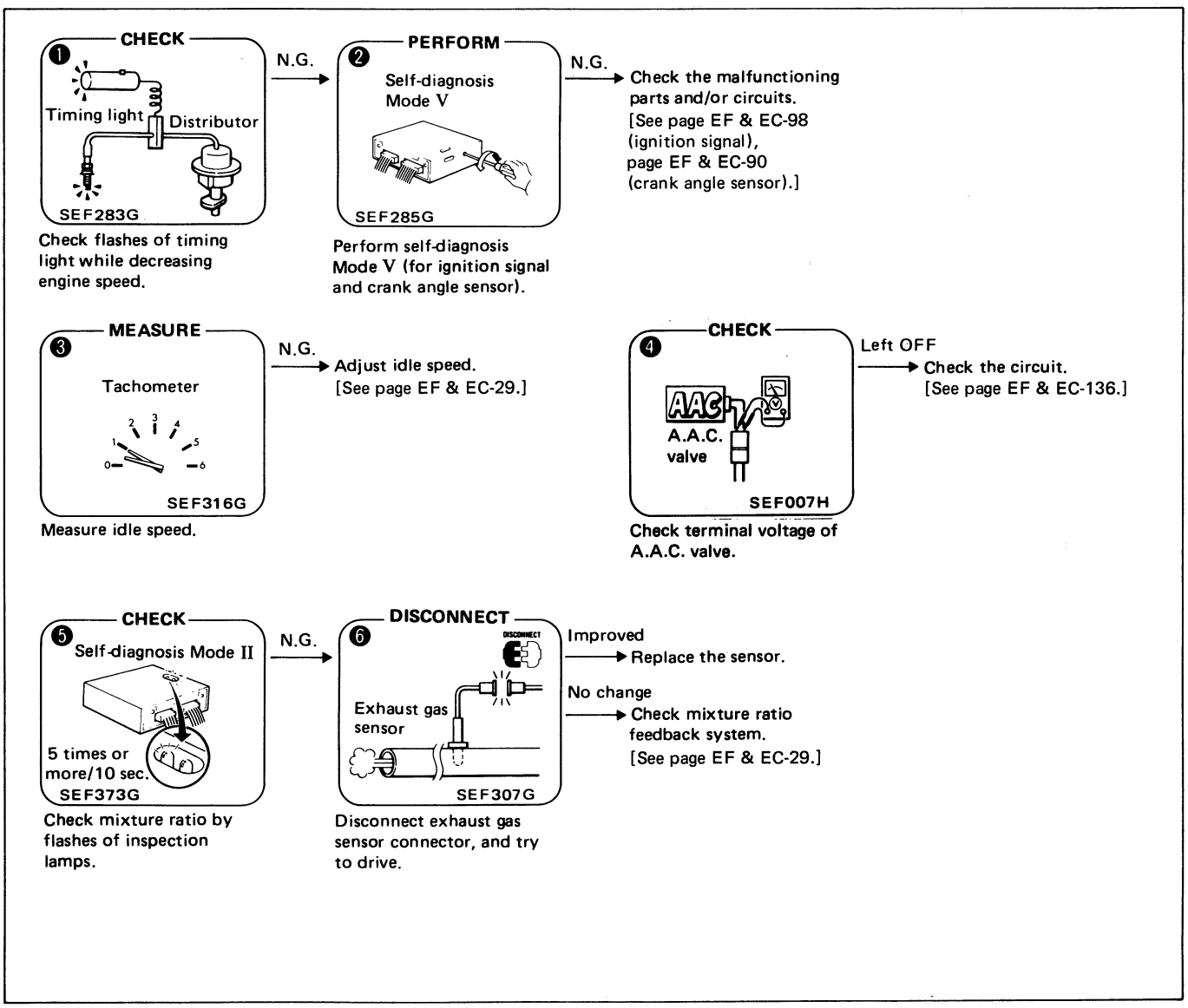

Diagnostic Table (Cont'd)

SYMPTOM & CONDITION 23 Engine stall – while loading

POSSIBLE CAUSES		❶	❷	❸	❹	❺
SPECIFICATIONS	Ignition timing		○			
	Idle speed (too low)	○				
INTAKE SYSTEM	Idle speed control valve (remaining OFF)	○		○		
CONTROL SYSTEM	Idle switch (remaining OFF)	○				○
	A/C switch circuit (remaining OFF)	○		○	○	
	Load switches (remaining OFF)	○		○	○	

SERVICE PROCEDURE

❶ MEASURE

Tachometer

SEF316G

Measure idle speed.

N.G. → Adjust idle speed. [See page EF & EC-29.]

❷ CHECK

Timing light

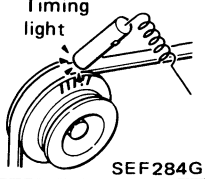

SEF284G

Check ignition timing.

N.G. → Adjust ignition timing. [See page EF & EC-29.]

❸ CHECK

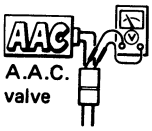

A.A.C. valve

SEF007H

Check terminal voltage of A.A.C. valve.

N.G. → Check the part and/or circuit. [See page EF & EC-136.]

❹ CHECK

SEF178I

Check fast idle control [See page EF & EC-138.]

❺ PERFORM

Self-diagnosis Mode IV

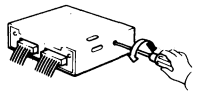

SEF285G

Perform self-diagnosis Mode IV (for idle switch).

N.G. → Check the idle switch circuit. [See page EF & EC-122.]

Diagnostic Table (Cont'd)

SYMPTOM & CONDITION 24 Backfire – through the intake

POSSIBLE CAUSES		❶	❷	❸	❹	❺	❻	❼
SPECIFICATIONS	Mixture ratio (too lean)	○		○		○	○	
	Ignition timing (too retarded)		○					
FUEL SYSTEM	Injectors (clogged)				○			
INTAKE SYSTEM	Air duct (air leaks)	○						
	Intake manifold (gaskets) (air leaks)	○						
CONTROL SYSTEM	Air flow meter							○
	Exhaust gas sensor					○	○	

SERVICE PROCEDURE

❶ CHECK

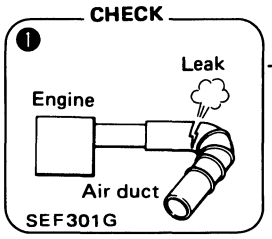

Check intake system for air leaks.

N.G. → Repair/replace the part.

❷ CHECK

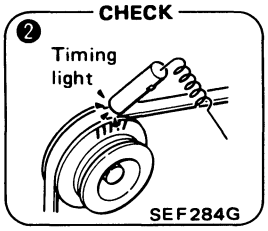

Check ignition timing.

N.G. → Adjust ignition timing. [See page EF & EC-29.]

❸ REMOVE

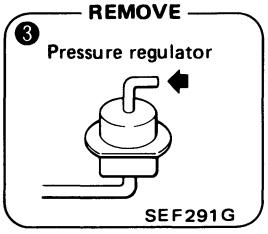

Remove vacuum hose from pressure regulator, and try to drive.

Improved → Check mixture ratio feedback system. [See page EF & EC-29.]

or

❹ CLEAN

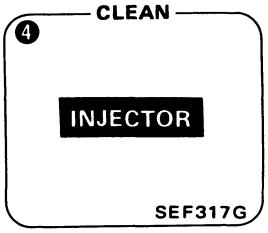

Clean the injector.

No change ↓

❺ PERFORM

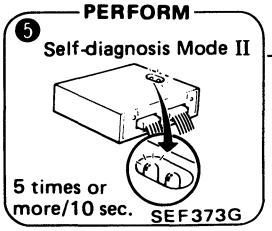

Check mixture ratio by flashes of inspection lamps.

N.G. →

❻ DISCONNECT

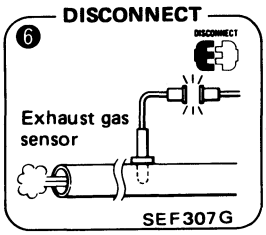

Disconnect exhaust gas sensor connector, and try to drive.

Improved → Replace the sensor.

No change → Check mixture ratio feedback system. [See page EF & EC-29.]

❼ CHECK

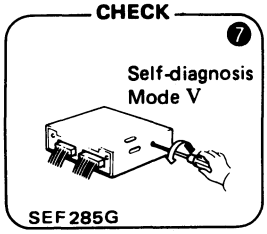

Perform self-diagnosis Mode V (for air flow meter).

N.G. ↓

Check the circuits. [See page EF & EC-92 (air flow meter).]

Diagnostic Table (Cont'd)

SYMPTOM & CONDITION 25 Backfire – through the exhaust

POSSIBLE CAUSES		❶	❷	❸	❹	❺	❻
SPECIFICATIONS	Mixture ratio (too rich)	○	○				
FUEL SYSTEM	Injectors (fuel leaks)		○				
IGNITION SYSTEM	(missing)				○		
INTAKE SYSTEM	Air cleaner element (clogged)	○					
	A.I.V. (always operating)					○	
	A.I.V. solenoid (remaining ON)					○	○
CONTROL SYSTEM	Idle switch (remaining OFF)			○			

SERVICE PROCEDURE

❶ **CHECK**

AIR CLEANER ELEMENT

SEF320G

Check air cleaner element for clogging.

N.G. → Replace the element.

❷ **APPLY**

PRESSURE

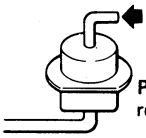

SEF291G

Apply pressure to pressure regulator after disconnecting vacuum hose, and try to drive.

Improved → Check mixture ratio feedback system. [See page EF & EC-29.]

❸ **PERFORM**

Self-diagnosis Mode IV

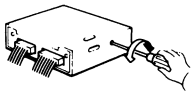

SEF285G

Perform self-diagnosis Mode IV (for idle switch).

N.G. → Check idle switch and/or its circuit. [See page EF & EC-122.]

❹ **PERFORM**

Self-diagnosis Mode V

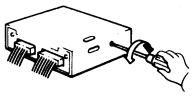

SEF285G

Perform self-diagnosis Mode V (for ignition signal).

N.G. → Check the malfunctioning part and/or circuit. [See page EF & EC-98 (ignition signal).]

❺ **CHECK**

A.I.V.

SEF375G

Check secondary air to exhaust system.

Keeps flowing →

❻ **CHECK**

A.I.V. solenoid

SEF372G

Check terminal voltage of A.I.V. solenoid.

Left ON → Check the solenoid circuit. [See page EF & EC-140.]

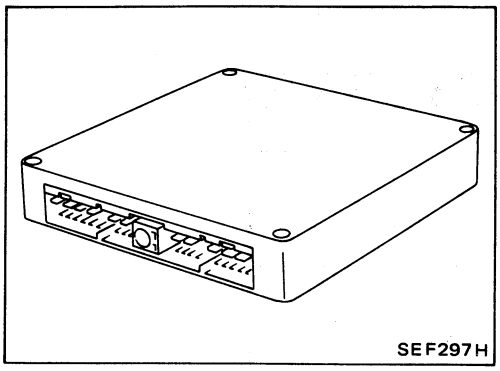

Self-diagnosis — Description

The self-diagnosis is useful to diagnose malfunctions in major sensors and actuators of the E.C.C.S. system. There are 5 modes in the self-diagnosis system.

1. **Mode I (Exhaust gas sensor monitor)**
   - During closed-loop operation:
     The green inspection lamp turns ON when a lean condition is detected and goes OFF under rich condition.
   - During open-loop operation condition:
     The green inspection lamp remains OFF or ON.
2. **Mode II (Mixture ratio feedback control monitor)**
   The green inspection lamp function is the same as Mode I.
   - During closed-loop operation:
     The red inspection lamp turns ON and OFF simultaneously with the green inspection lamp when the mixture ratio is controlled within the specified value.
   - During open-loop operation:
     The red inspection lamp remains ON or OFF.
3. **Mode III (Self-diagnostic system)**
   This mode is the same as the former self-diagnosis in self-diagnosis mode.
4. **Mode IV (Switches ON/OFF diagnostic system)**
   During this mode, the inspection lamps monitor the switch ON-OFF condition.
   - Idle switch
   - Starter switch
   - Vehicle speed sensor
5. **Mode V (Real-time diagnostic system)**
   The moment the malfunction is detected, the display will be presented immediately. That is, the condition at which the malfunction occurs can be found by observing the inspection lamps during driving test.

Self-diagnosis — Description (Cont'd)

HOW TO SWITCH THE DIAGNOSTIC MODES

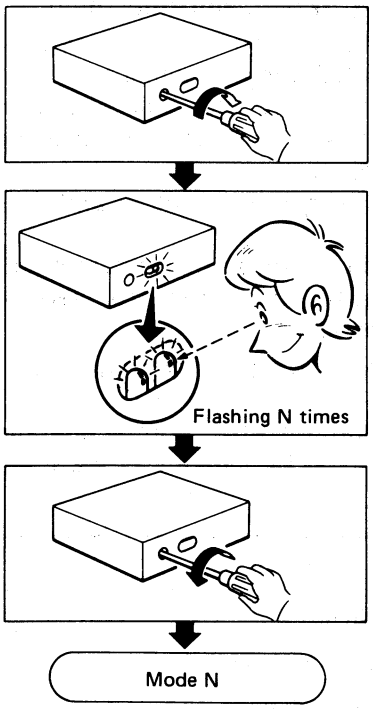

SEF288H

1. Turn ignition switch "ON".
2. Turn diagnostic mode selector to E.C.U. (fully clockwise) and wait for inspection lamps to flash.
3. Count the number of flashes, and after the inspection lamps have flashed the number of the required mode, immediately turn diagnostic mode selector fully counterclockwise.

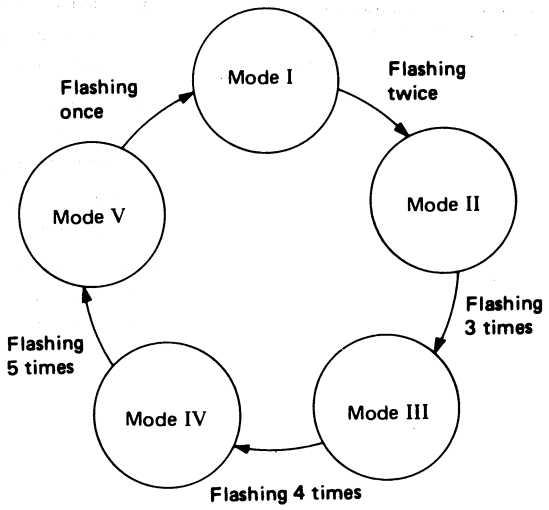

SEF989D

- **When the ignition switch is turned off during diagnosis in any mode and then turned on again (after power to the E.C.U. has dropped completely), the diagnosis will automatically return to Mode I.**
  The stored memory will be lost if:

1. Battery terminal is disconnected.
2. After selecting Mode III, Mode IV is selected.
   However, if the diagnostic mode selector is kept turned fully clockwise, it will continue to change in the order of Mode I → II → III → IV → V → I ... etc., and in this state the stored memory will not be erased.

This unit serves as an idle rpm feedback control. When the diagnostic mode selector is turned within the "diagnostic mode OFF" range, a target engine speed can be selected. Mark the original position of the selector before conducting self-diagnosis. Upon completion of self-diagnosis, return the selector to the previous position. Otherwise, engine speed may change before and after conducting self-diagnosis.

Self-diagnosis — Description (Cont'd)

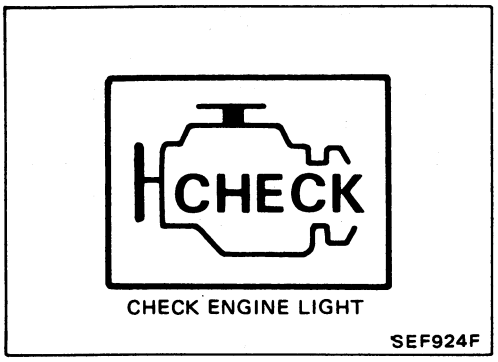

CHECK ENGINE LIGHT (For California only)

This vehicle has a check engine light on the instrument panel. This light comes ON under the following conditions:

1) When ignition switch is turned "ON" (for bulb check).
2) When systems related to emission performance malfunction in Mode I (with engine running).

- **This check engine light always illuminates and is synchronous with red L.E.D.**
- **Malfunction systems related to emission performance can be detected by self-diagnosis, and they are clarified as self-diagnostic codes in Mode III.**

3) Check engine light will come "ON" only when malfunction is sensed.
   The check engine light will turn off when normal operation is resumed. Mode III memory must be cleared as the contents remain stored.

Code No.	Malfunction
12	Air flow meter circuit
13	Engine temperature sensor circuit
14	Vehicle speed sensor circuit
31	E.C.U. (E.C.C.S. control unit)
32	E.G.R. function
33	Exhaust gas sensor circuit
35	Exhaust gas temperature sensor circuit
43	Throttle sensor circuit
45	Injector leak

Use the following diagnostic flowchart to check and repair a malfunctioning system.

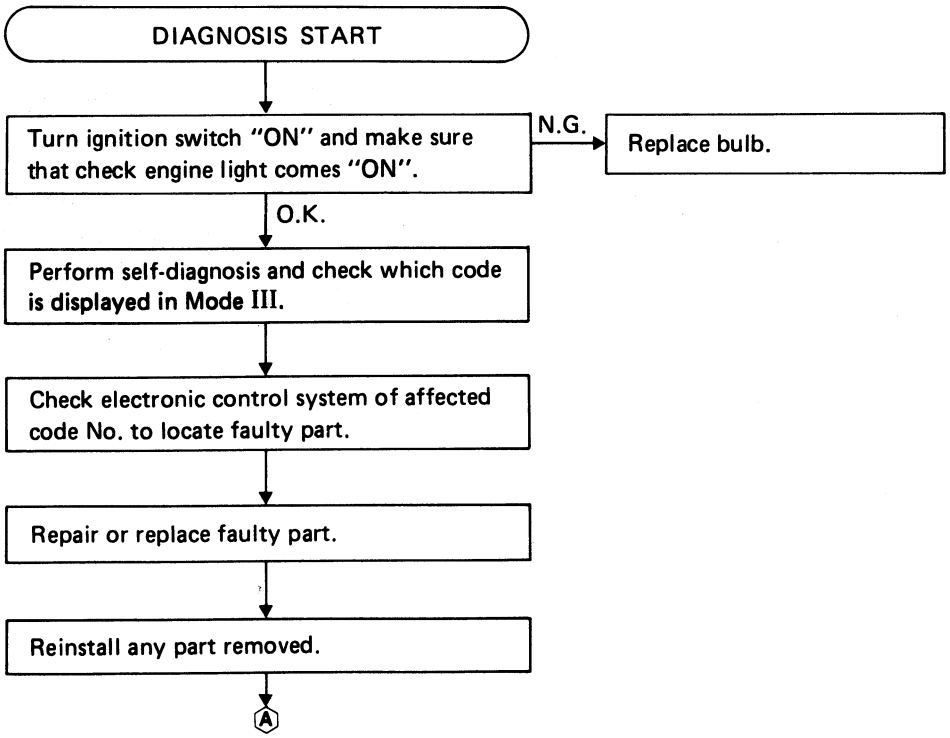

Self-diagnosis — Description (Cont'd)

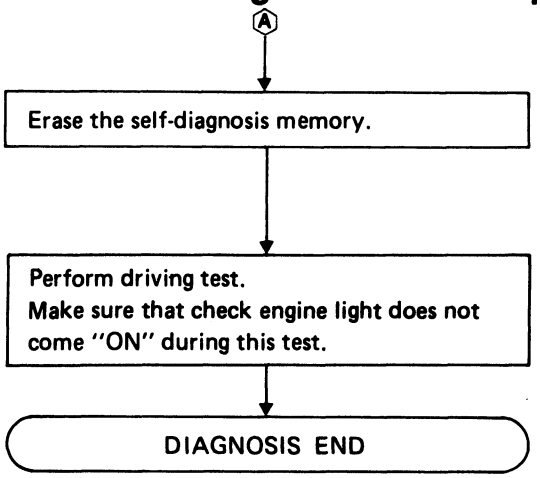

- **Methods of erasing memories differ with systems. Read the manual before diagnosing systems.**
- **After repairs, test drive to check that check engine light does not come on.**
- **Test driving modes differ with systems. Read the manual before test driving.**

Self-diagnosis — Mode I (Exhaust gas sensor monitor)

This mode checks the exhaust gas sensor for proper functioning. The operation of the E.C.U. L.E.D. in this mode differs with mixture ratio control conditions as follows:

Mode	L.E.D.	Engine stopped (Ignition switch "ON")	Engine running	
			Open loop condition	Closed loop condition
Mode I (Monitor A)	Green	ON	*Remains ON or OFF	Blinks
	Red	ON	Except for California model • OFF	For California model • ON: when the CHECK ENGINE LIGHT ITEMS are stored in the E.C.U. • OFF: except for the above condition

*: Maintains conditions just before switching to open loop

EXHAUST GAS SENSOR FUNCTION CHECK

If the number of L.E.D. blinks is less than that specified, replace the exhaust gas sensor.
If the L.E.D. does not blink, check exhaust gas sensor circuit.

EXHAUST GAS SENSOR CIRCUIT CHECK

See page EF & EC-108.

Self-diagnosis — Mode II (Mixture ratio feedback control monitor)

This mode checks, through the E.C.U. L.E.D., optimum control of the mixture ratio. The operation of the L.E.D., as shown below, differs with the control conditions of the mixture ratio (for example, richer or leaner mixture ratios, etc., which are controlled by the E.C.U.).

Mode	L.E.D.	Engine stopped (Ignition switch "ON")	Engine running			
			Open loop condition	Closed loop condition		
Mode II (Monitor B)	Green	ON	*Remains ON or OFF	Blinks		
	Red	OFF	*Remains ON or OFF (synchronous with green L.E.D.)	Compensating mixture ratio		
				More than 5% rich	Between 5% lean and 5% rich	More
				OFF	Synchronized with green L.E.D.	Remains ON

*: Maintains conditions just before switching to open loop

If the red L.E.D. remains on or off during the closed-loop operation, the mixture ratio may not be controlled properly. Using the following procedures, check the related components or adjust the mixture ratio.

COMPONENT CHECK OR MIXTURE RATIO ADJUSTMENT

See page EF & EC-29.

Self-diagnosis — Mode III (Self-diagnostic system)

The E.C.U. constantly monitors the function of these sensors and actuators, regardless of ignition key position. If a malfunction occurs, the information is stored in the E.C.U. and can be retrieved from the memory by turning on the diagnostic mode selector, located on the side of the E.C.U. When activated, the malfunction is indicated by flashing a red and a green L.E.D. (Light Emitting Diode), also located on the E.C.U. Since all the self-diagnostic results are stored in the E.C.U.'s memory even intermittent malfunctions can be diagnosed.
A malfunction is indicated by the number of both red and green flashing L.E.D.s. First, the red L.E.D. flashes and the green flashes follow. The red L.E.D. corresponds to units of ten and the green L.E.D. corresponds to units of one. For example, when the red L.E.D. flashes once and the green L.E.D. flashes twice, this signifies the number "12", showing that the air flow meter signal is malfunctioning. All problems are classified by code numbers in this way.

- **When the engine fails to start, crank it two or more seconds before beginning self-diagnosis.**
- **Before starting self-diagnosis, do not erase the stored memory before beginning self-diagnosis. If it is erased, the self-diagnosis function for intermittent malfunctions will be lost.**

DISPLAY CODE TABLE

Code No.	Detected items	California	Non-California
11	Crank angle sensor circuit	X	X
12	Air flow meter circuit	X	X
13	Engine temperature sensor circuit	X	X
14	Vehicle speed sensor circuit	X	X
21	Ignition signal missing in primary coil	X	X
31	E.C.U. (E.C.C.S. control unit)	X	X
32	E.G.R. function	X	–
33	Exhaust gas sensor circuit	X	X
35	Exhaust gas temperature sensor circuit	X	–
41	Air temperature sensor circuit	X	X
43	Throttle sensor circuit	X	X
45	Injector leak	X	–
55	No malfunction in the above circuits	X	X

X: Available —: Not available

Self-diagnosis — Mode III (Self-diagnostic system) (Cont'd)

RETENTION OF DIAGNOSTIC RESULTS

The diagnostic results will remain in E.C.U. memory until the starter is operated fifty times after a diagnostic item has been judged to be malfunctioning. The diagnostic result will then be cancelled automatically. If a diagnostic item which has been judged to be malfunctioning and stored in memory is again judged to be malfunctioning before the starter is operated fifty times, the second result will replace the previous one. It will be stored in E.C.U. memory until the starter is operated fifty times more.

RETENTION TERM CHART (Example)

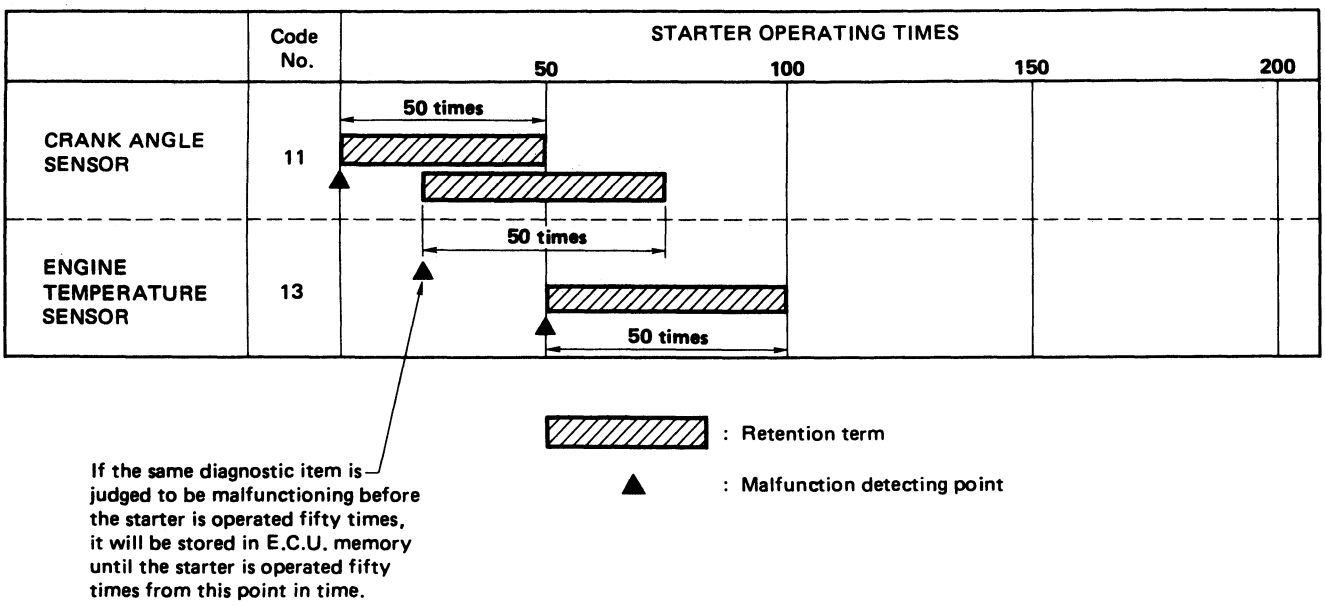

SEF793D

Self-diagnosis — Mode III (Self-diagnostic system) (Cont'd)

SELF-DIAGNOSTIC PROCEDURE

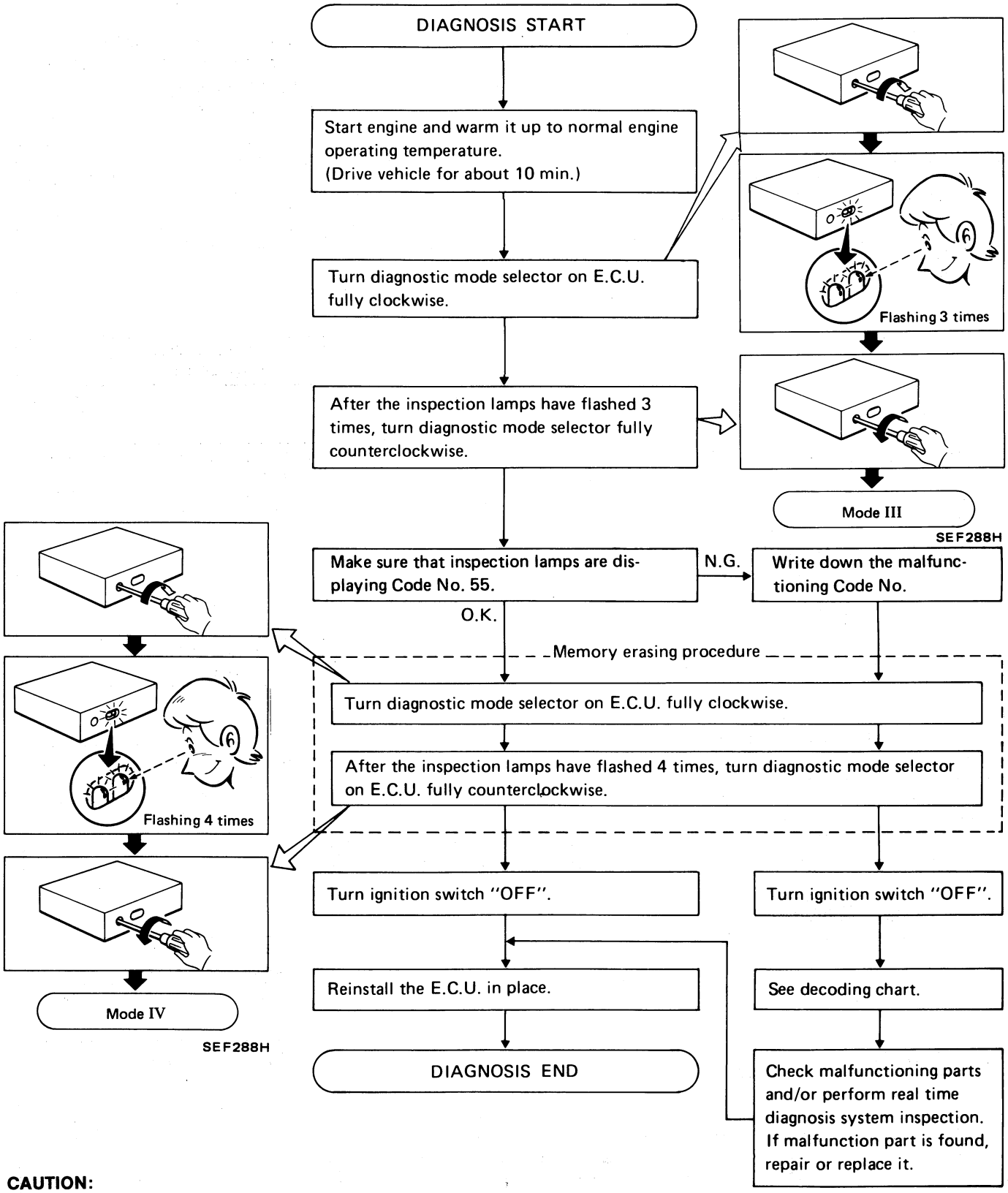

CAUTION:

- **During display of a code number in self-diagnosis mode (Mode III), if another diagnostic mode is to be performed, be sure to note the malfunction code number before turning diagnostic mode selector on E.C.U. fully clockwise. When selecting an alternative, select the diagnosis mode after turning switch "OFF". Otherwise, self-diagnosis information in the E.C.U. memory will be lost.**
  Return the DIAGNOSTIC MODE selector to the previous position.

Self-diagnosis — Mode III (Self-diagnostic system) (Cont'd)

DECODING CHART

DISPLAY CODE	MALFUNCTIONING CIRCUIT OR PARTS	CONTROL UNIT SHOWS A MALFUNCTION SIGNAL WHEN THE FOLLOWING CONDITIONS ARE DETECTED.
CRANK ANGLE SENSOR Code No. 11 Red → Green	Crank angle sensor circuit	• Either 1° or 180° signal is not entered for the first few seconds during engine cranking. • Either 1° or 180° signal is not input often enough while the engine speed is higher than the specified rpm. SYSTEM INSPECTION See page EF & EC-90.
AIR FLOW METER CHECK Code No. 12 Red → Green	Air flow meter circuit	• The air flow meter circuit is open or shorted. (An abnormally high or low voltage is entered.) SYSTEM INSPECTION See page EF & EC-92.
ENGINE TEMPERATURE SENSOR CHECK Code No. 13 Red → Green	Engine temperature sensor circuit	• The engine temperature sensor circuit is open or shorted. (An abnormally high or low output voltage is entered.) SYSTEM INSPECTION See page EF & EC-94.
VEHICLE SPEED SENSOR CHECK Code No. 14 Red → Green	Vehicle speed sensor circuit	• Signal circuit is open. SYSTEM INSPECTION See page EF & EC-96.

SEF042F

SEF043F

SEF044F

SEF074G

Self-diagnosis — Mode III (Self-diagnostic system) (Cont'd)

DISPLAY CODE	MALFUNCTIONING CIRCUIT OR PARTS	CONTROL UNIT SHOWS A MALFUNCTION SIGNAL WHEN THE FOLLOWING CONDITIONS ARE DETECTED.
IGNITION SIGNAL **Code No. 21** Red → Green	Ignition signal circuit	• The ignition signal in primary circuit does not enter to E.C.U. during engine cranking or running. SYSTEM INSPECTION See page EF & EC-98.

SEF045F

E.C.U. (E.C.C.S. control unit) CHECK **Code No. 31** Red → Green	E.C.U. calculation function	• Signal is beyond "normal" range. SYSTEM INSPECTION See page EF & EC-102.

SEF076G

E.G.R. function CHECK **Code No. 32** Red → Green	E.G.R. function	• E.G.R. valve does not operate. (E.G.R. valve spring does not lift.) SYSTEM INSPECTION See page EF & EC-104.

SEF077G

EXHAUST GAS SENSOR CHECK **Code No. 33** Red → Green	Exhaust gas sensor circuit	• Signal circuit is open. SYSTEM INSPECTION See page EF & EC-108.

SEF078G

Self-diagnosis — Mode III (Self-diagnostic system) (Cont'd)

DISPLAY CODE	MALFUNCTIONING CIRCUIT OR PARTS	CONTROL UNIT SHOWS A MALFUNCTION SIGNAL WHEN THE FOLLOWING CONDITIONS ARE DETECTED.
EXHAUST GAS TEMPERATURE SENSOR (CHECK) Code No. 35 Red → Green	Exhaust gas temperature sensor circuit	• Signal circuit is open. SYSTEM INSPECTION See page EF & EC-110.
AIR TEMPERATURE SENSOR Code No. 41	Air temperature sensor circuit	• Signal circuit is open or shorted. (Output voltage is too high or too low.) SYSTEM INSPECTION See page EF & EC-114.
THROTTLE SENSOR (CHECK) Code No. 43 Red → Green	Throttle sensor circuit	• Throttle sensor circuit is open or short. (Output voltage is too high or too low.) SYSTEM INSPECTION See page EF & EC-116.
INJECTOR LEAK (CHECK) Code No. 45 Red → Green	Injector leak	• Fuel leak from injector. SYSTEM INSPECTION See page EF & EC-120.

SEF393G

SEF232I

SEF079G

SEF080G

Self-diagnosis — Mode III (Self-diagnostic system) (Cont'd)

DISPLAY CODE	MALFUNCTIONING CIRCUIT OR PARTS	CONTROL UNIT SHOWS A MALFUNCTION SIGNAL WHEN THE FOLLOWING CONDITIONS ARE DETECTED.
Code No. 55 (Red → Green)		E.C.C.S. normal operation.

SEF984F

Self-diagnosis — Mode IV (Switches ON/OFF diagnostic system)

In switches ON/OFF diagnosis system, ON/OFF operation of the following switches can be detected continuously.

- Idle switch
- Starter switch
- Vehicle speed sensor

(1) Idle switch & Starter switch
The switches ON/OFF status in mode IV is stored in E.C.U. memory. When either switch is turned from "ON" to "OFF" or "OFF" to "ON", the red L.E.D. on E.C.U. alternately comes on and goes off each time switching is performed.

(2) Vehicle Speed Sensor
The switches ON/OFF status in mode IV is selected is stored in E.C.U. memory. The green L.E.D. on E.C.U. remains off when vehicle speed is 20 km/h (12 MPH or below), and comes ON at higher speeds.

Self-diagnosis — Mode IV (Switches ON/OFF diagnostic system) (Cont'd)

SELF-DIAGNOSTIC PROCEDURE

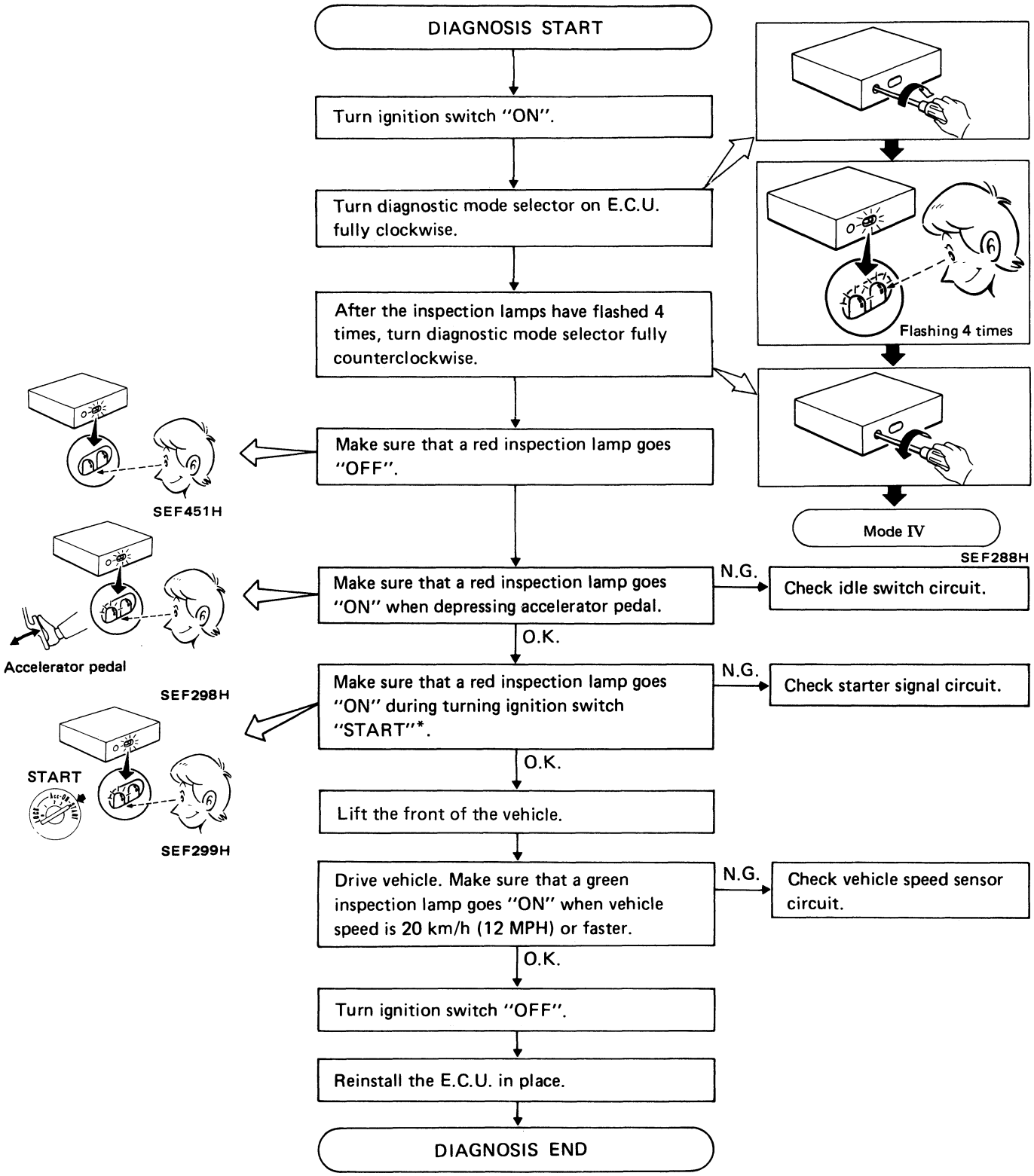

CAUTION:

- **For safety, do not drive rear wheels at higher speed than required.**

Self-diagnosis — Mode V (Real-time diagnostic system)

In real-time diagnosis, if the following items are judged to be working incorrectly, a malfunction will be indicated immediately.

- Crank angle sensor (180° signal & 1° signal) output signal
- Ignition signal
- Air flow meter output signal

Consequently, this diagnosis very effectively determines whether the above systems cause the malfunction, during driving test. Compared with self-diagnosis, real-time diagnosis is very sensitive and can detect malfunctions instantly. However, items regarded as malfunctions in this diagnosis are not stored in E.C.U. memory.

SELF-DIAGNOSTIC PROCEDURE

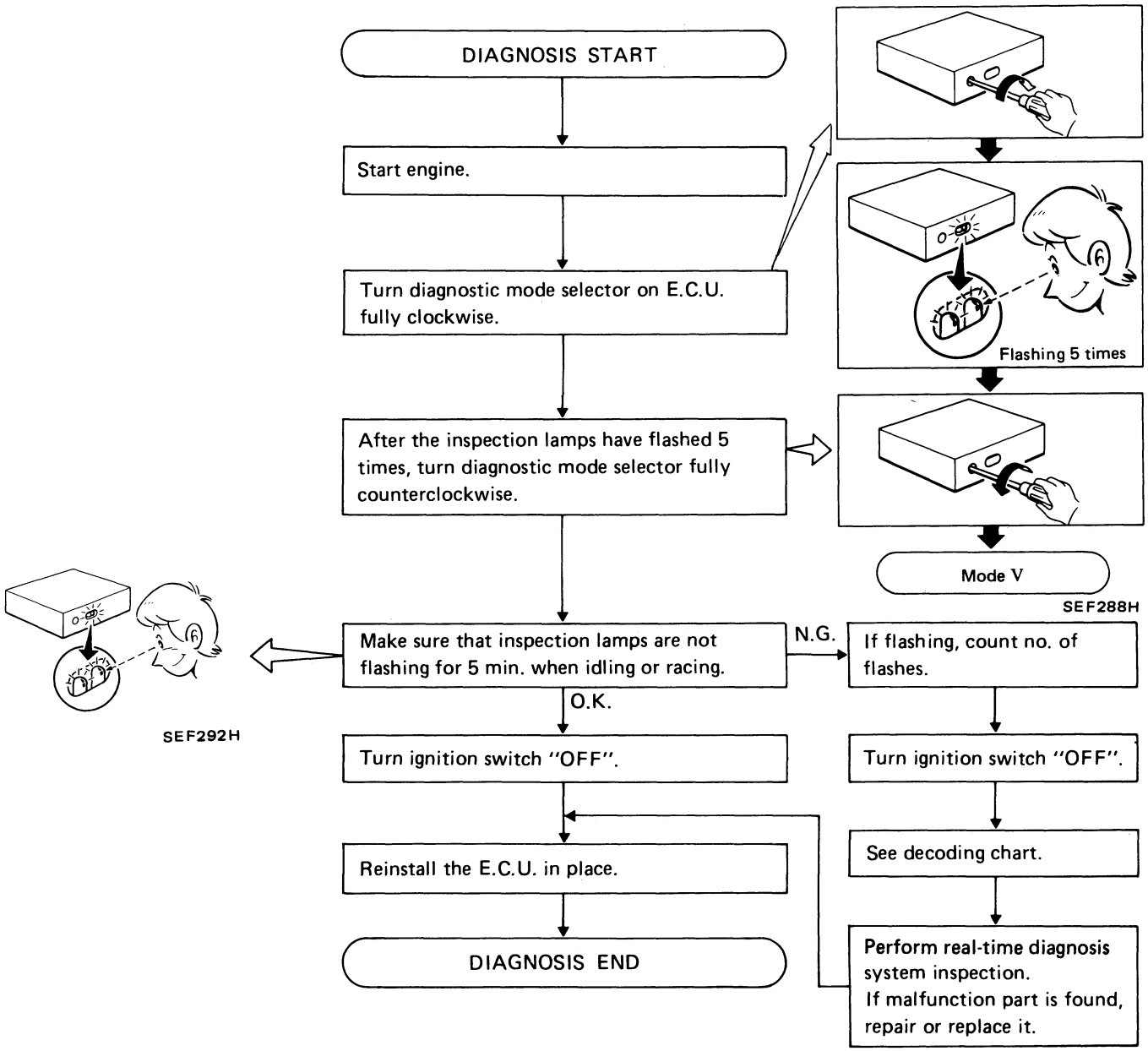

CAUTION:
In real-time diagnosis, pay attention to inspection lamp flashing. E.C.U. displays the malfunction code only once and does not memorize the inspection.

Self-diagnosis — Mode V (Real-time diagnostic system) (Cont'd)

DECODING CHART

DISPLAY CODE	MALFUNCTIONING CIRCUIT OR PARTS	CONTROL UNIT SHOWS A MALFUNCTION SIGNAL WHEN THE FOLLOWING CONDITIONS ARE DETECTED. (Compare with Self-diagnosis – Mode III.)
CRANK ANGLE SENSOR	Malfunction of crank angle sensor circuit	• The 1° or 180° signal is momentarily missing, or, multiple, momentary noise signals enter. REAL-TIME DIAGNOSTIC INSPECTION See page EF & EC-90.
AIR FLOW METER	Malfunction of air flow meter circuit	• Abnormal, momentary increase in air flow meter output signal REAL-TIME DIAGNOSTIC INSPECTION See page EF & EC-92.
IGNITION SIGNAL	Malfunction of ignition signal	• Signal from the primary ignition coil momentarily drops off. REAL-TIME DIAGNOSTIC INSPECTION See page EF & EC-98.

CRANK ANGLE SENSOR

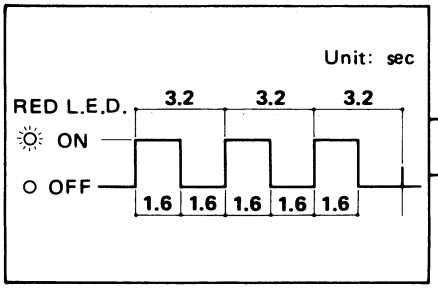

SEF047F

AIR FLOW METER

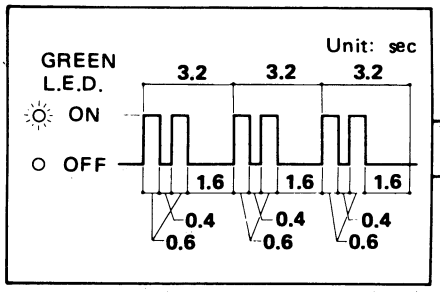

SEF048F

IGNITION SIGNAL

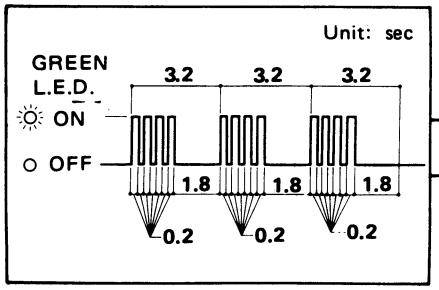

SEF049F

Self-diagnosis — Mode V (Real-time diagnostic system) (Cont'd)

Crank Angle Sensor

REAL-TIME DIAGNOSTIC INSPECTION

X: Available
—: Not available

Check sequence	Check items	Check conditions	Check parts			If malfunction, perform the following items.
			Middle connectors	Sensor & actuator	E.C.U. harness connector	
1	Tap harness connector or component during real-time diagnosis.	During real-time diagnosis	X	X	X	Go to check item 2.
2	Check harness continuity at connector.	Engine stopped	X	—	—	Go to check item 3.
3	Disconnect harness connector, and then check dust adhesion to harness connector.	Engine stopped	X	—	X	Clean terminal surface.
4	Check pin terminal bend.	Engine stopped	—	—	X	Take out bend.
5	Reconnect harness connector and then recheck harness continuity at connector.	Engine stopped	X	—	—	Replace terminal.
6	Tap harness connector or component during real-time diagnosis.	During real-time diagnosis	X	X	X	If malfunction codes are displayed during real-time diagnosis, replace terminal.

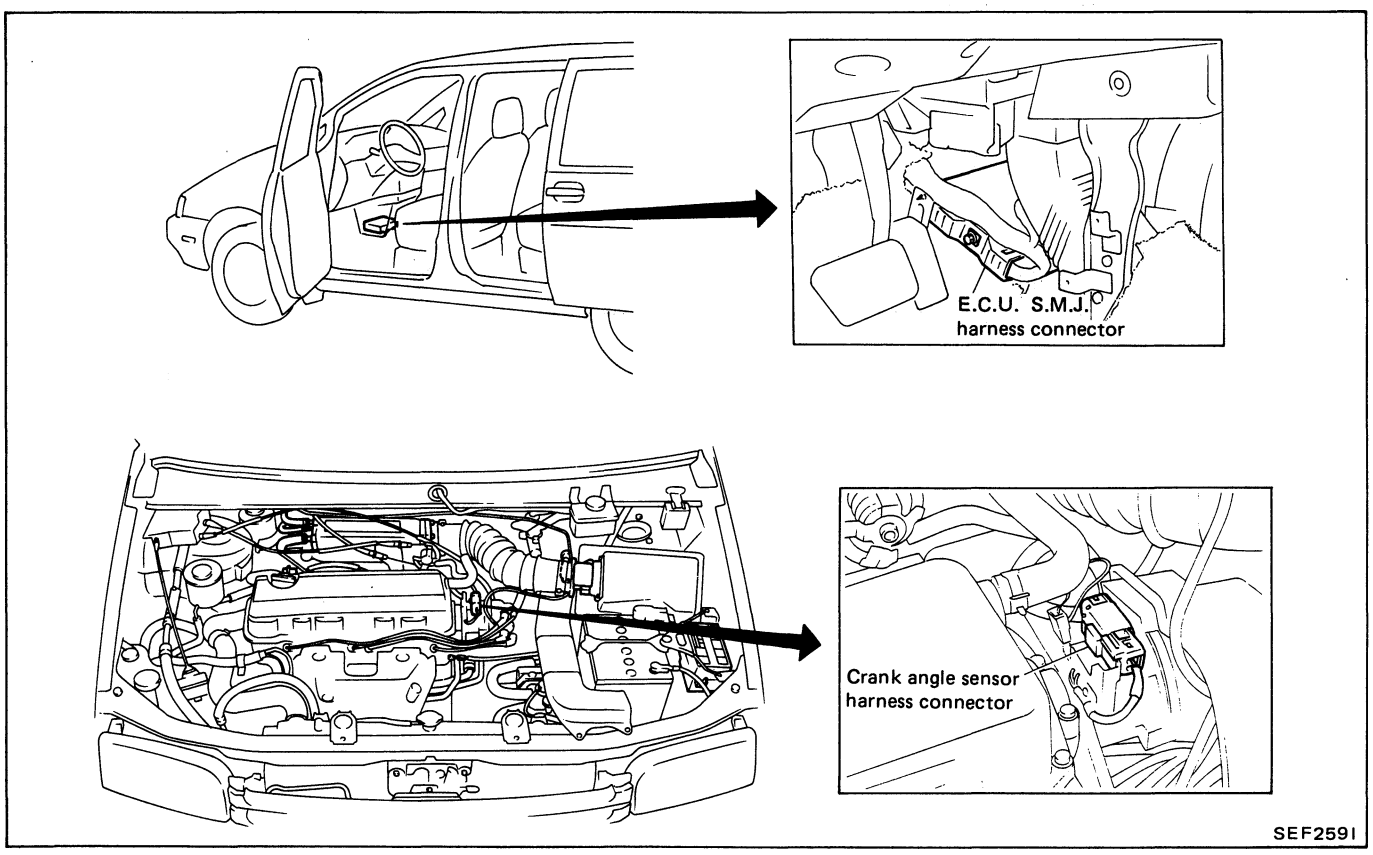

Self-diagnosis — Mode V (Real-time diagnostic system) (Cont'd)

Air Flow Meter

X: Available
—: Not available

Check sequence	Check items	Check conditions	Check parts			If malfunction, perform the following items.
			Middle connectors	Sensor & actuator	E.C.U. harness connector	
1	Tap harness connector or component during real-time diagnosis.	During real-time diagnosis	X	X	X	Go to check item 2.
2	Check harness continuity at connector.	Engine stopped	X	—	—	Go to check item 3.
3	Disconnect harness connector, and then check dust adhesion to harness connector.	Engine stopped	X	—	X	Clean terminal surface.
4	Check pin terminal bend.	Engine stopped	—	—	X	Take out bend.
5	Reconnect harness connector and then recheck harness continuity at connector.	Engine stopped	X	—	—	Replace terminal.
6	Tap harness connector or component during real-time diagnosis.	During real-time diagnosis	X	X	X	If malfunction codes are displayed during real-time diagnosis, replace terminal.

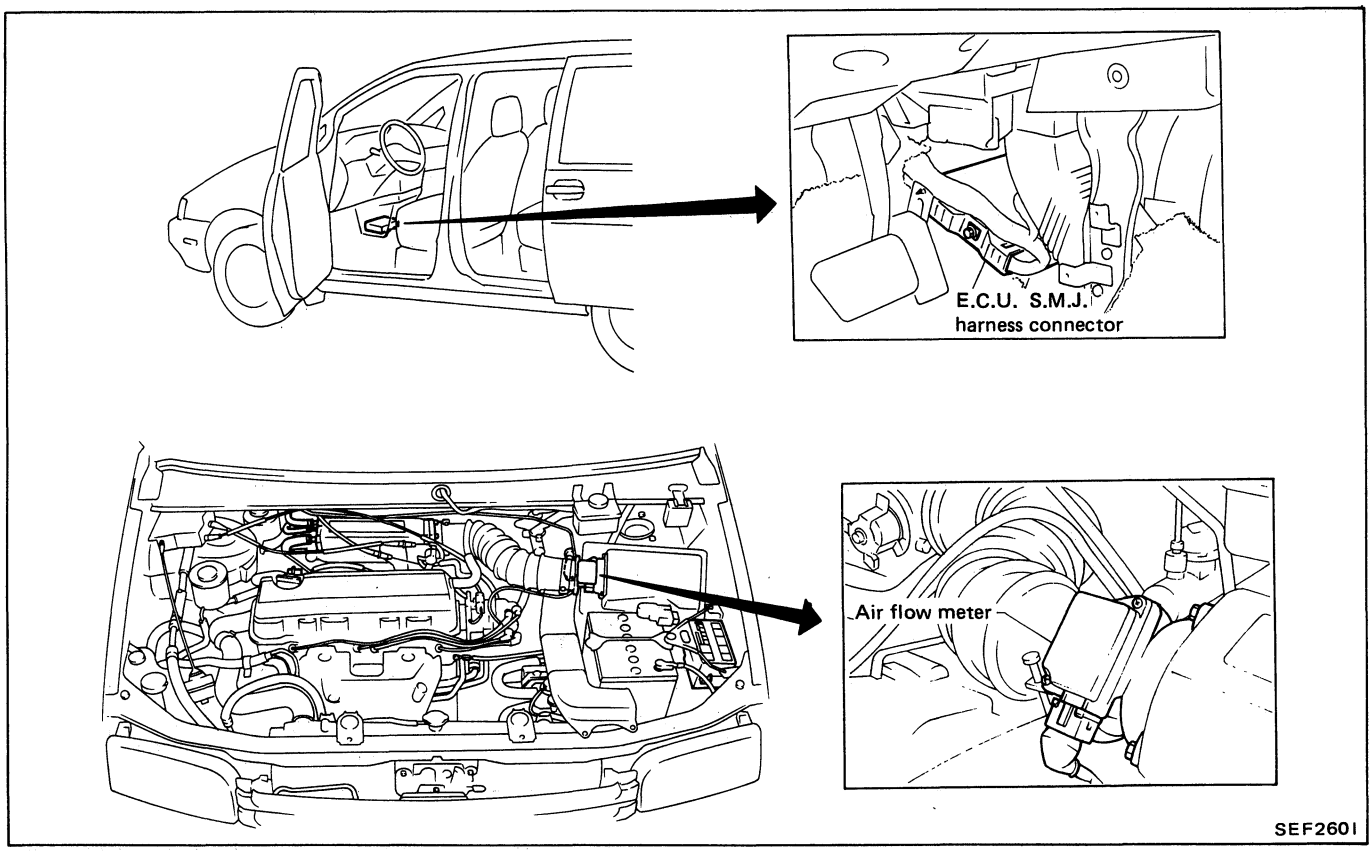

Self-diagnosis — Mode V (Real-time diagnostic system) (Cont'd)

Ignition Signal

X: Available
—: Not available

Check sequence	Check items	Check conditions	Check parts			If malfunction, perform the following items.
			Middle connectors	Sensor & actuator	E.C.U. harness connector	
1	Tap harness connector or component during real-time diagnosis.	During real-time diagnosis	X	X	X	Go to check item 2.
2	Check harness continuity at connector.	Engine stopped	X	—	—	Go to check item 3.
3	Disconnect harness connector, and then check dust adhesion to harness connector.	Engine stopped	X	—	X	Clean terminal surface.
4	Check pin terminal bend.	Engine stopped	—	—	X	Take out bend.
5	Reconnect harness connector and then recheck harness continuity at connector.	Engine stopped	X	—	—	Replace terminal.
6	Tap harness connector or component during real-time diagnosis.	During real-time diagnosis	X	X	X	If malfunction codes are displayed during real-time diagnosis, replace terminal.

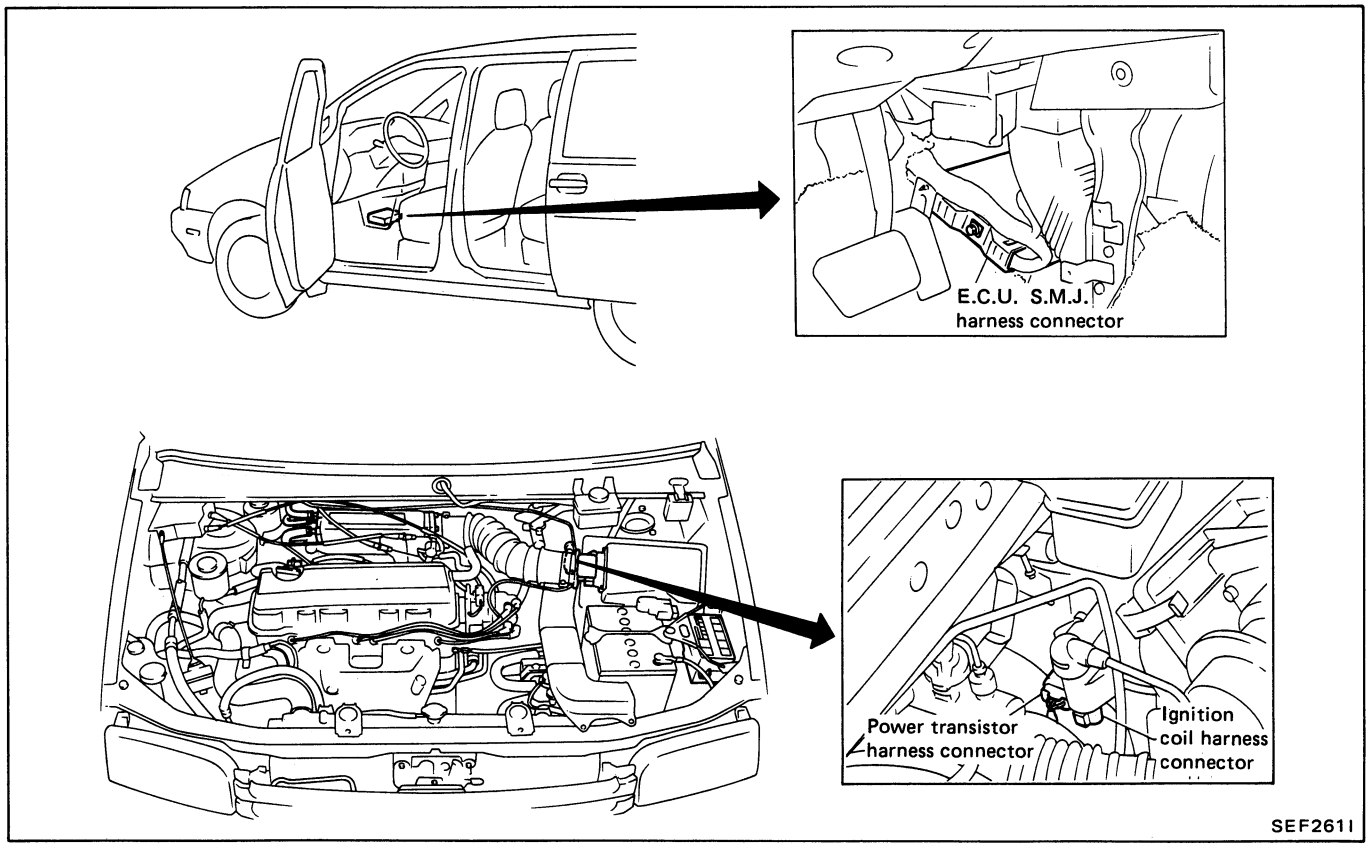

NOTE

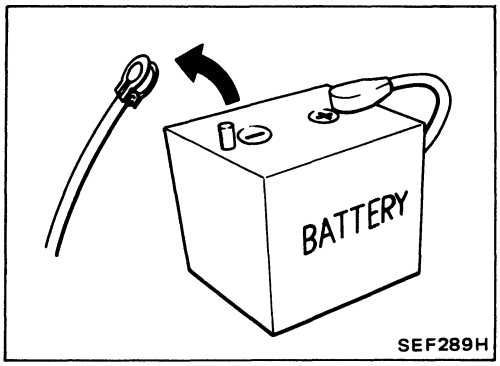

SEF289H

Diagnostic Procedure

CAUTION:

1. **Before connecting or disconnecting the E.C.U. harness connector to or from any E.C.U., be sure to turn the ignition switch to the "OFF" position and disconnect the negative battery terminal in order not to damage E.C.U. as battery voltage is applied to E.C.U. even if ignition switch is turned off. Failure to do so may damage the E.C.U.**

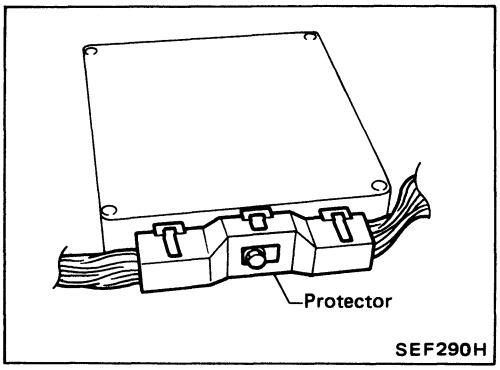

SEF290H

2. **When performing E.C.U. input/output signal inspection, remove connector protector to insert tester probe into connector.**

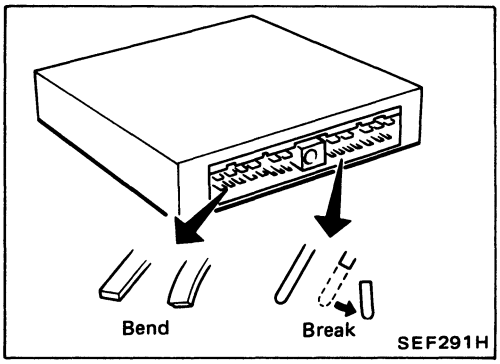

SEF291H

3. **When connecting or disconnecting pin connectors into or from E.C.U., take care not to damage pin terminals.**
4. **Make sure that there are not any bends or breaks on E.C.U. pin terminal, when connecting pin connectors.**

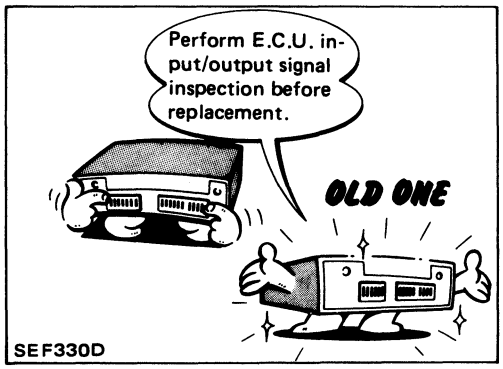

SEF330D

5. **Before replacing E.C.U., perform E.C.U. input/output signal inspection and make sure whether the E.C.U. unit functions properly or not. (See page EF & EC-148.)**

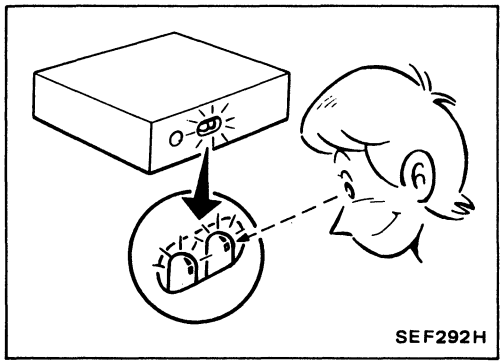
SEF292H

6. **After performing this "Diagnostic Procedure", perform E.C.C.S. self-diagnosis and driving test.**

Diagnostic Procedure (Cont'd)

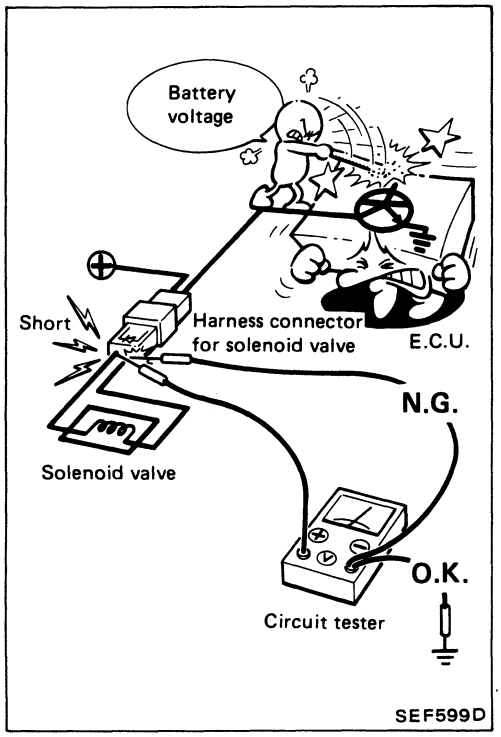

7. **When measuring E.C.U. controlled components supply voltage with a circuit tester, separate one tester probe from the other.**
   If the two tester probes accidentally make contact with each other during measurement, the circuit will be shorted, resulting in damage to the control unit power transistor.

Diagnostic Procedure 1

MAIN POWER SUPPLY AND GROUND CIRCUIT

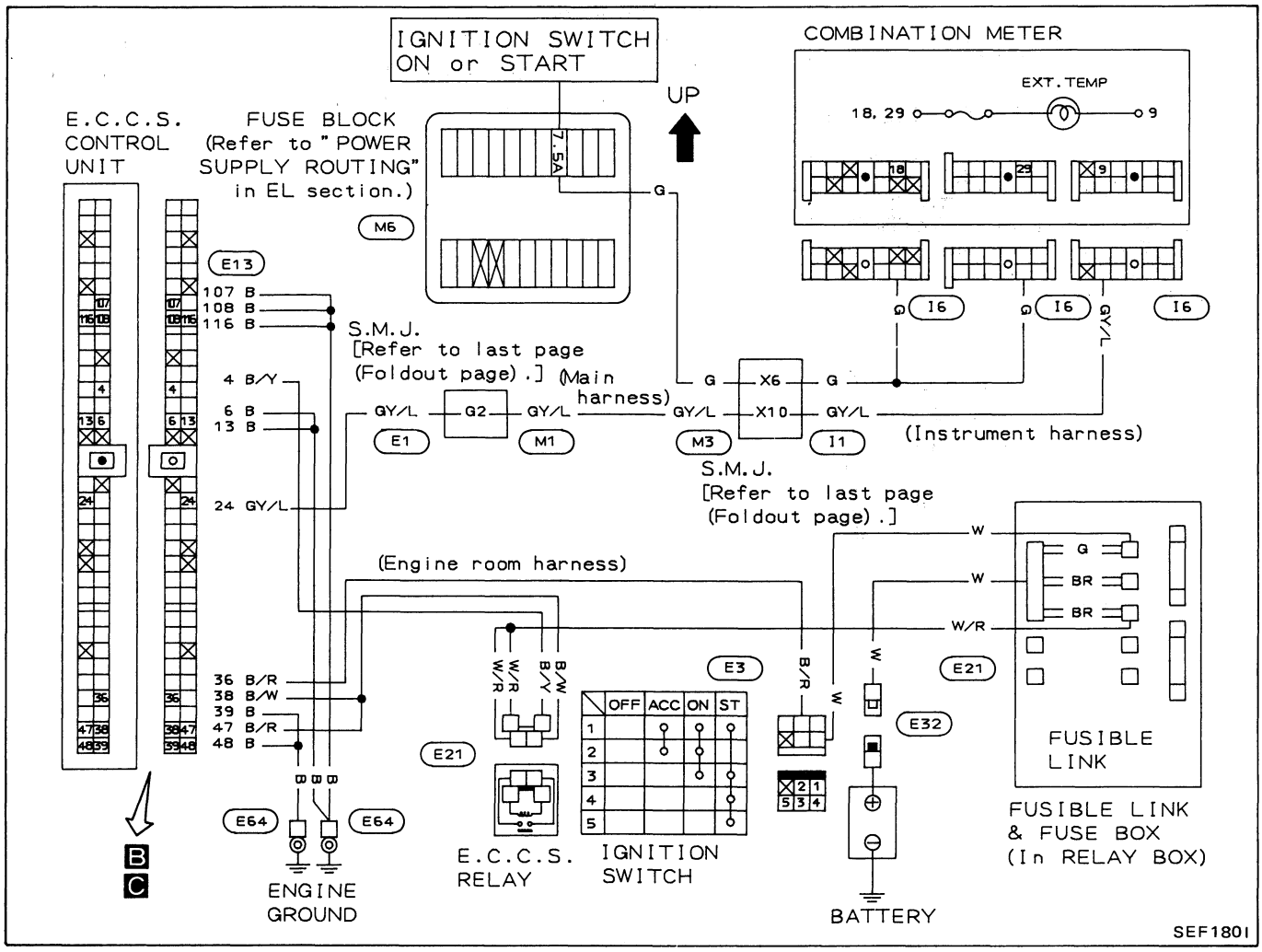

Component location

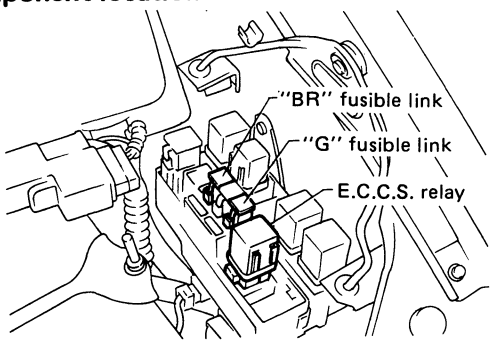

SEF181I

Diagnostic Procedure 1 (Cont'd)

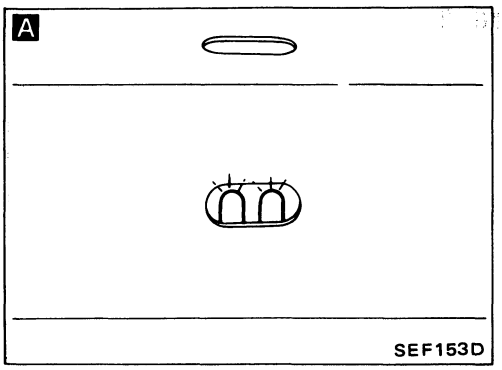

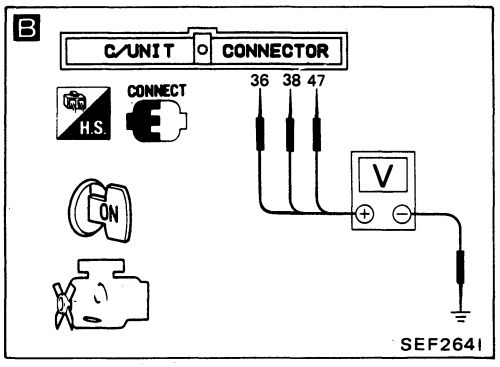

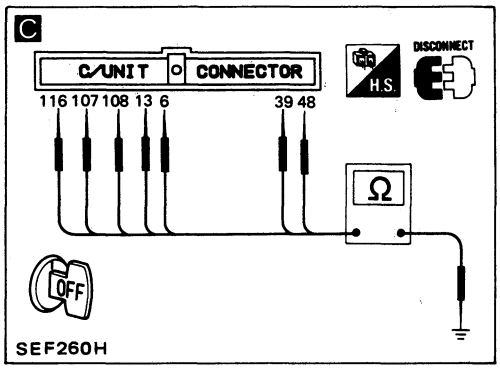

INSPECTION START

CHECK DIAGNOSTIC MODE ON THE E.C.U.
Verify that diagnostic mode selector on the E.C.U. is turned "OFF".

O.K.

A

CHECK POWER SOURCE FOR E.C.U.
1) Turn ignition switch "ON".
2) Verify that red and green inspection lamps on the E.C.U. illuminate.

N.G. → B

Check voltage between E.C.U. terminals ㊱, ㊳, ㊼ and ground.
Battery voltage should exist.

㊳ ㊼ N.G. → Check following items.
1) "G" fusible link
2) Harness or connectors between terminal ㊱ and battery.
3) Ignition switch
If N.G., replace affected parts.

㊱ N.G. → Check following items.
1) "BR" fusible link
2) Harness or connectors between terminal ㊼ and battery
3) Harness or connectors between terminal ④ and battery
4) E.C.C.S. relay
(See page EF & EC-153.)

O.K.

C

CHECK GROUND CIRCUIT.
1) Turn ignition switch "OFF".
2) Disconnect E.C.U. harness connector.
3) Check continuity between terminals ⑥, ⑬, ㊴, ㊽, ⑦, ⑧, ⑯ and ground.
Continuity should exist.

N.G. → Check harness continuity between E.C.U. and engine ground.

O.K.

Reinstall any part removed.

INSPECTION END

Diagnostic Procedure 2

CRANK ANGLE SENSOR (Code No. 11)

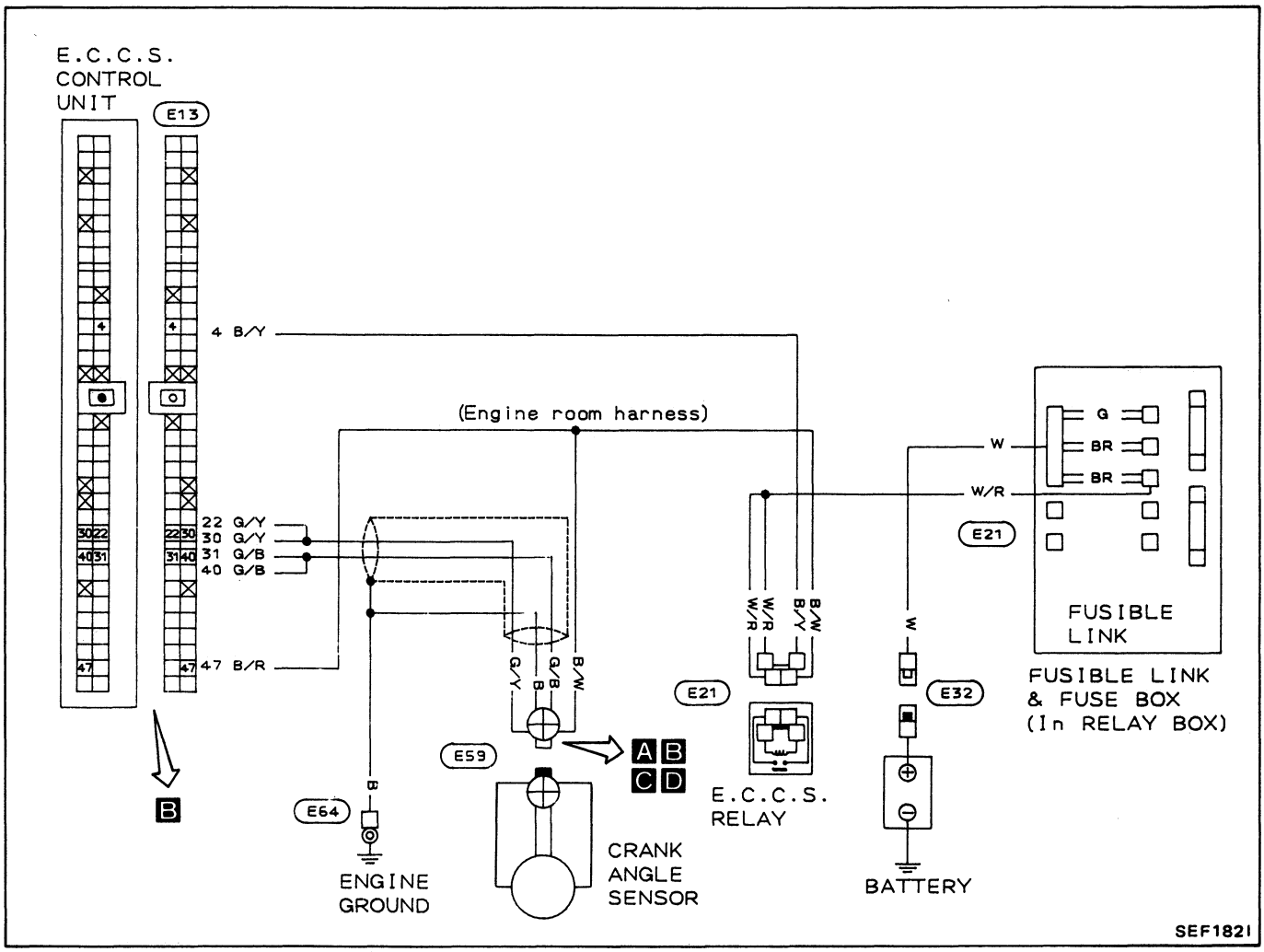

Component location

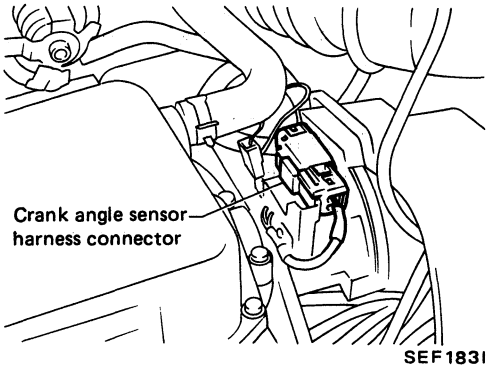

Diagnostic Procedure 2 (Cont'd)

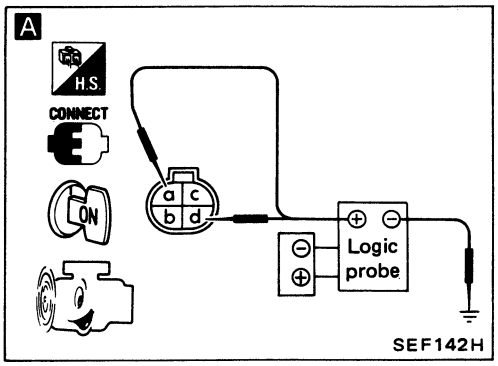

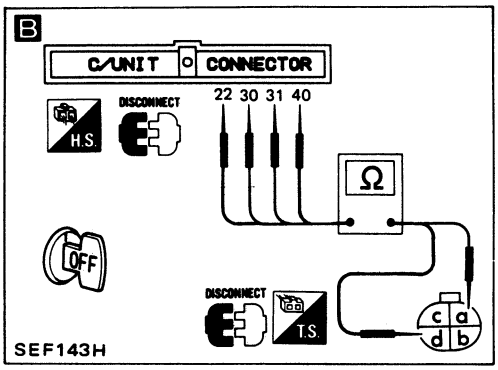

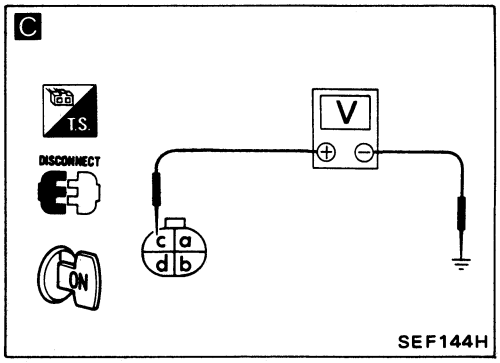

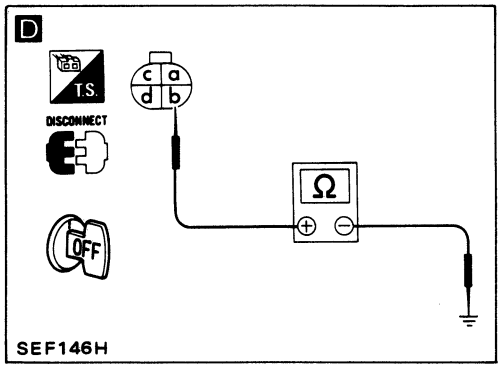

INSPECTION START

A

CHECK E.C.U. INPUT SIGNAL (Crank angle sensor side).
1) Start engine.
2) Check that pulse signals exist in crank angle sensor harness connector terminals ⓐ and ⓓ with logic probe.
Pulse signals should exist.
ⓐ : 180° signal
ⓓ : 1° signal

O.K. → **B**

CHECK HARNESS CONTINUITY BETWEEN CRANK ANGLE SENSOR AND E.C.U.
1) Stop engine.
2) Disconnect crank angle sensor harness connector.
3) Disconnect E.C.U. harness connector.
4) Check continuity between terminals ⓐ and ㉒, ㉚.
5) Check continuity between terminals ⓓ and ㉛, ㊵.
Continuity should exist.

N.G. → Repair harness or connectors between crank angle sensor and E.C.U.

N.G. ↓

C

CHECK POWER SUPPLY (Crank angle sensor side).
1) Stop engine.
2) Disconnect crank angle sensor harness connector.
3) Turn ignition switch "ON".
4) Check voltage between terminal ⓒ and ground.
Battery voltage should exist.

N.G. → Repair or replace harness or connectors between crank angle sensor harness connector terminal ⓒ and E.C.U. harness connector terminal ㊼.

O.K. ↓

D

CHECK GROUND CIRCUIT.
1) Turn ignition switch "OFF".
2) Check resistance between terminal ⓑ and ground.
Continuity should exist.

N.G. → 1) Repair harness or connectors. 2) Check engine ground.

O.K. ↓

CHECK COMPONENTS.
Check crank angle sensor.
(See page EF & EC-153.)

N.G. → Replace crank angle sensor.

O.K. ↓

Reinstall any part removed.

↓

Erase the self-diagnosis memory.

↓

Perform driving test and then perform self-diagnosis (Mode-III) again.

N.G. → 1) Perform E.C.U. input/output signal inspection test. 2) If N.G., recheck the E.C.U. pin terminals for damage or the connection of E.C.U. harness connector.

O.K. ↓

INSPECTION END

Diagnostic Procedure 3

AIR FLOW METER (Code No. 12)

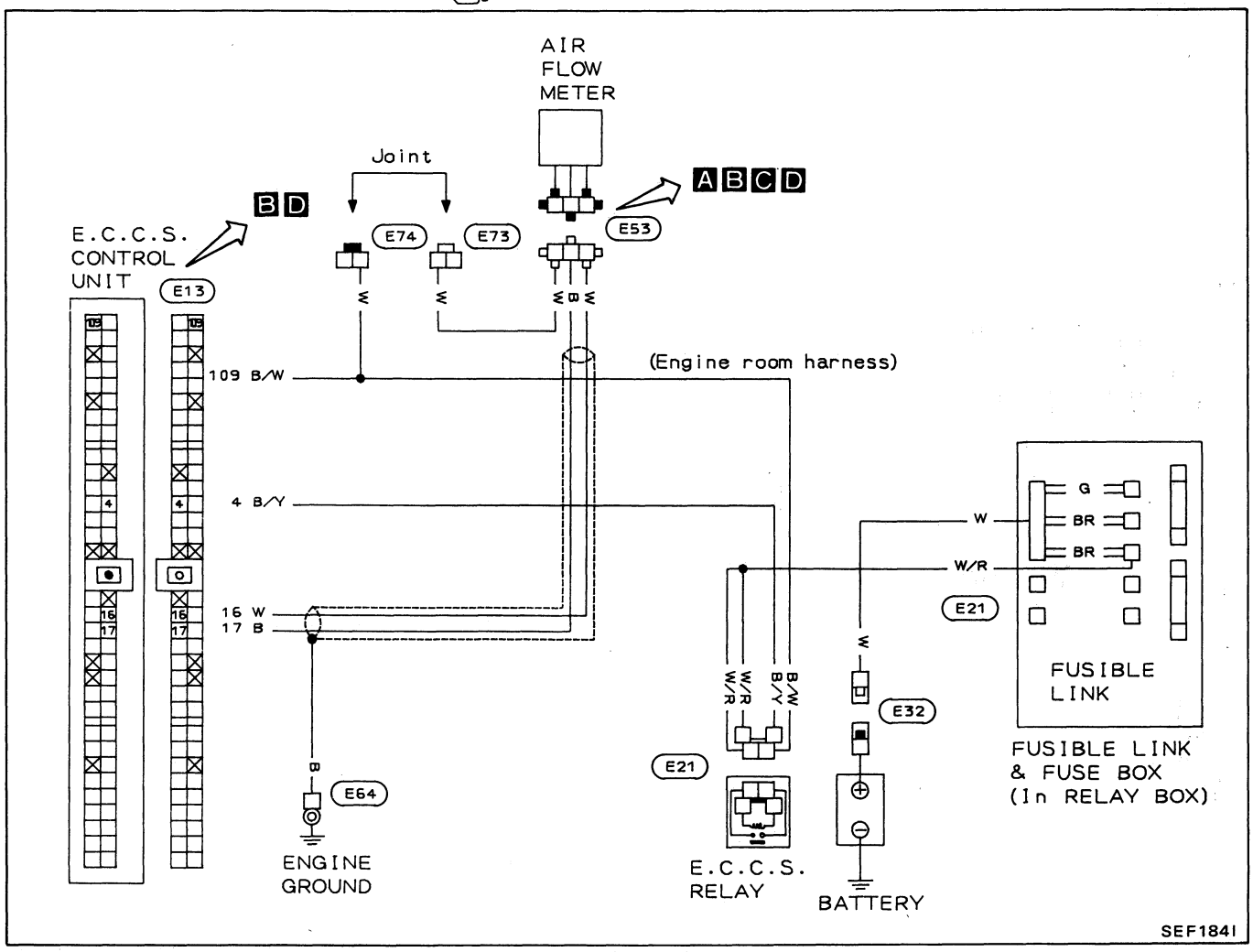

Component location

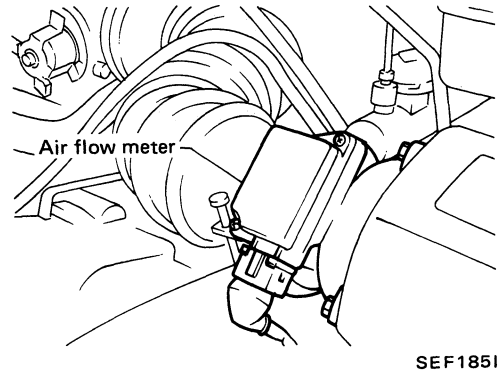

Diagnostic Procedure 3 (Cont'd)

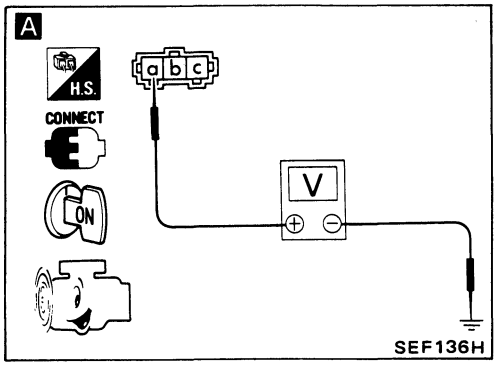

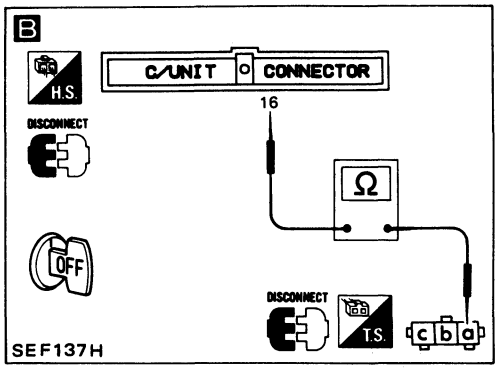

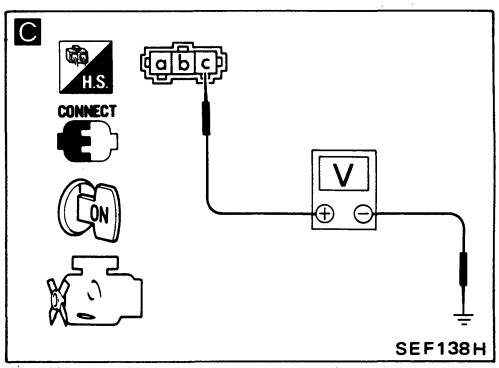

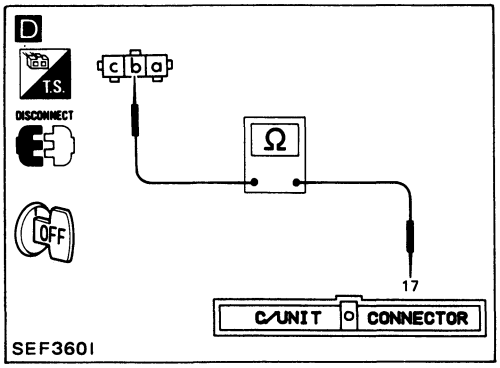

INSPECTION START

A

CHECK E.C.U. INPUT SIGNAL (Air flow meter side).
1) Start engine.
2) Check that voltage between air flow meter harness connector terminal ⓐ and ground changes by racing engine with accelerator pedal.
Output voltage should change.
1.0 - Approximately 3.0V

O.K. → **B**

CHECK HARNESS CONTINUITY BETWEEN AIR FLOW METER AND E.C.U.
1) Stop engine.
2) Disconnect air flow meter harness connector.
3) Disconnect E.C.U. harness connector.
4) Check continuity between terminals ⓐ and ⑯.
Continuity should exist.

N.G. → Repair or replace harness or connectors between terminals ⓐ and ⑯.

N.G. ↓

C

CHECK POWER SUPPLY (Air flow meter side).
1) Stop engine.
2) Disconnect air flow meter harness connector.
3) Turn ignition switch "ON".
4) Check voltage between terminal ⓒ and ground.
Battery voltage should exist.

N.G. → Repair or replace harness or connectors between air flow meter harness connector terminal ⓒ and E.C.U. harness connector terminal ⑩⑨.

O.K. ↓

D

CHECK GROUND CIRCUIT.
1) Turn ignition switch "OFF".
2) Disconnect E.C.U. harness connector.
3) Check continuity between terminals ⓑ and ⑰.
Continuity should exist.

N.G. → 1) Repair or replace harness or connectors between terminals ⓑ and ⑰.
2) Check engine ground.

O.K. ↓

CHECK COMPONENTS.
Check air flow meter.
(See page EF & EC-153.)

N.G. → Replace air flow meter.

O.K. ↓

Reinstall any part removed.

↓

Erase the self-diagnosis memory.

↓

Perform driving test and then perform self-diagnosis again.

N.G. → 1) Perform E.C.U. input/output signal inspection test.
2) If N.G., recheck the E.C.U. pin terminals for damage or the connection of E.C.U. harness connector.

O.K. ↓

INSPECTION END

Diagnostic Procedure 4

ENGINE TEMPERATURE SENSOR (Code No. 13)

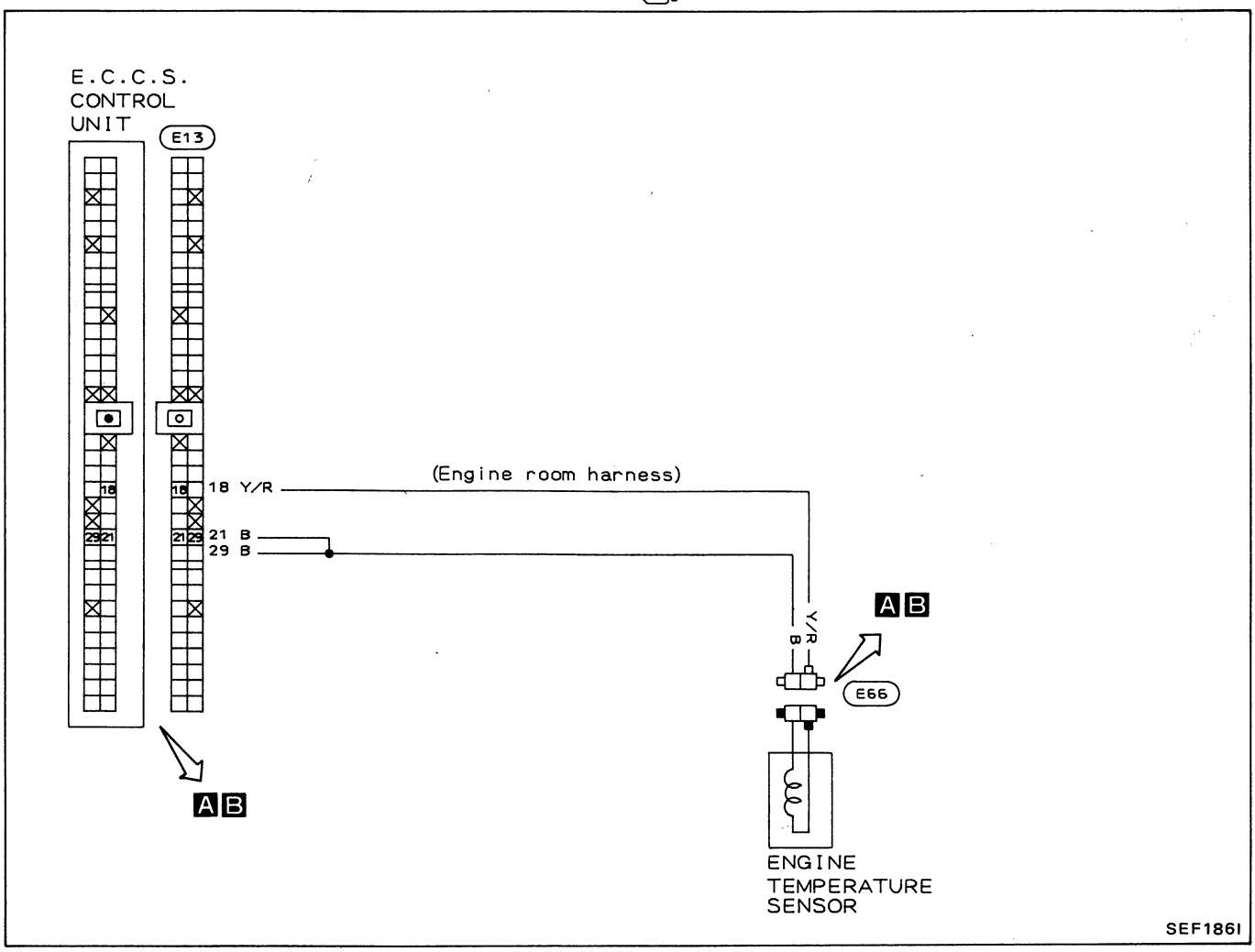

Component location

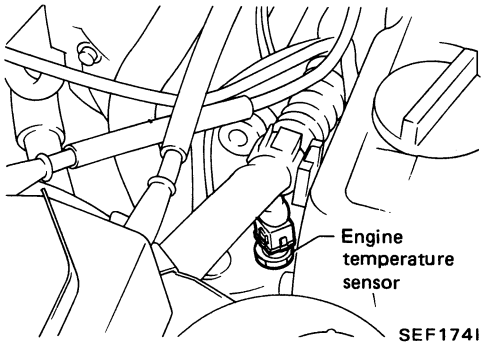

Diagnostic Procedure 4 (Cont'd)

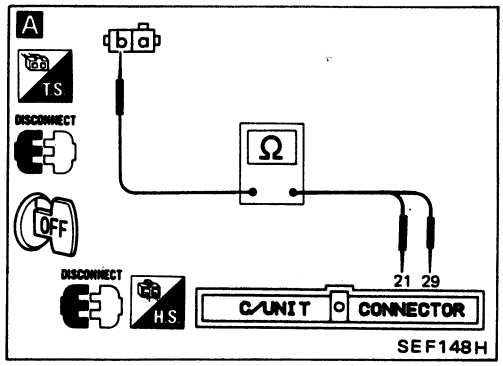

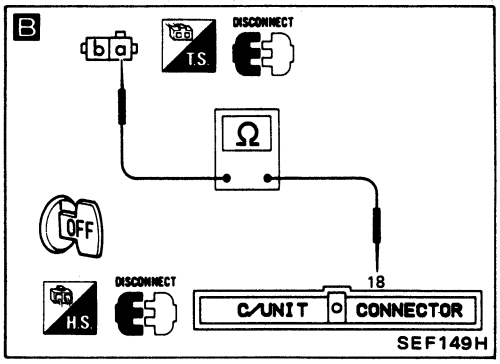

INSPECTION START

↓

CHECK COMPONENTS.
Check engine temperature sensor.
(See page EF & EC-153.)

N.G. → Replace engine temperature sensor.

↓ O.K.

A

CHECK GROUND CIRCUIT.
1) Disconnect E.C.U. harness connector.
2) Check continuity between engine temperature sensor terminal ⓑ and E.C.U. terminals ㉑, ㉙.
Continuity should exist.

N.G. →
1) Repair harness or connectors between terminals ⓑ and ㉑, ㉙.
2) Check engine ground.

↓ O.K.

B

CHECK INPUT SIGNAL CIRCUIT.
Check continuity between terminals ⓐ and ⑱.
Continuity should exist.

N.G. → Repair or replace harness or connectors between terminals ⓐ and ⑱.

↓ O.K.

Reinstall any part removed.

↓

Erase the self-diagnosis memory.

↓

Perform driving test and then perform self-diagnosis (Mode-III) again.

N.G. →
1) Perform E.C.U. input/output signal inspection test.
2) If N.G., recheck the E.C.U. pin terminals for damage or the connection of E.C.U. harness connector.

↓ O.K.

INSPECTION END

Diagnostic Procedure 5

VEHICLE SPEED SENSOR (Switch ON/OFF diagnostic item) (Code No. 14)

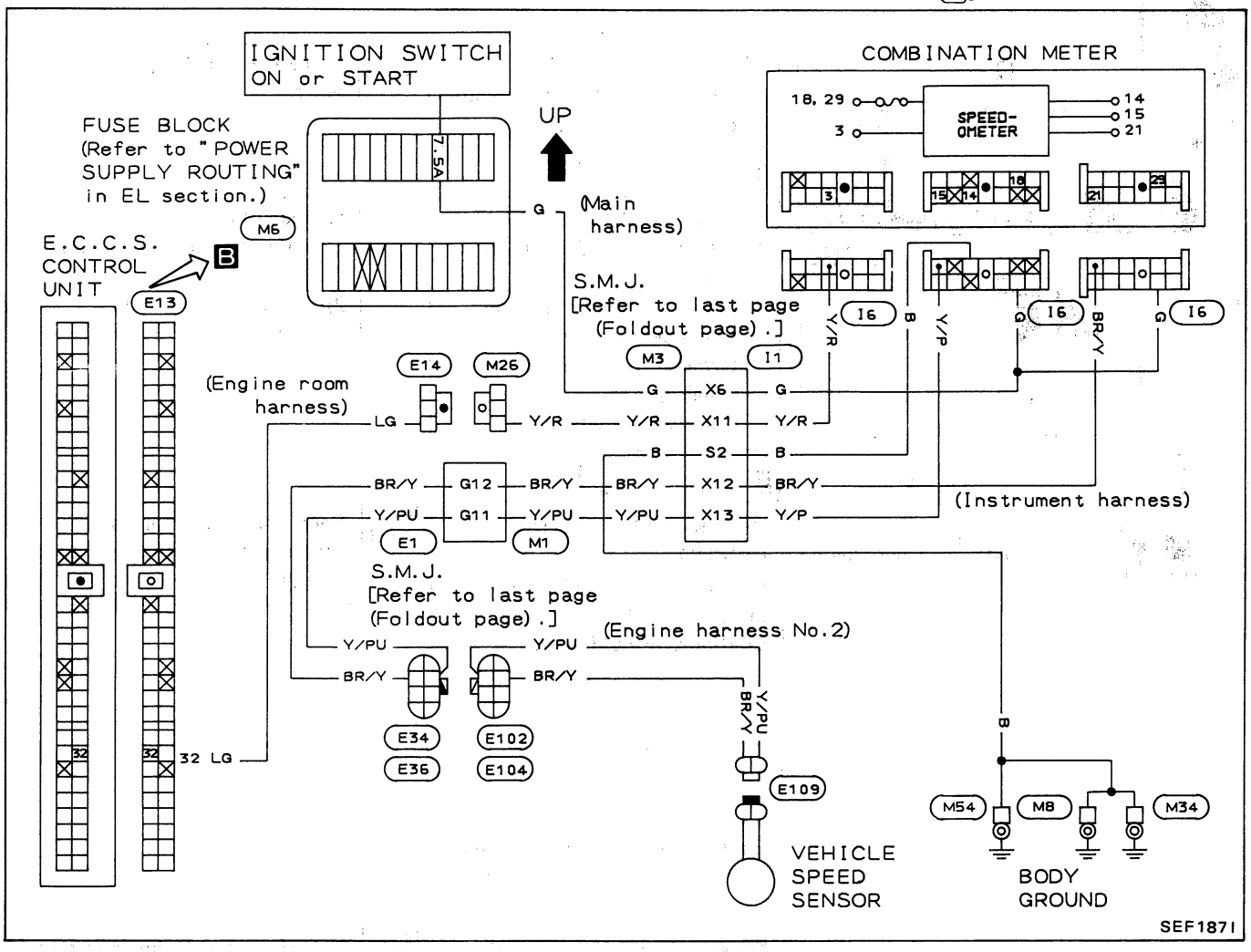

Diagnostic Procedure 5 (Cont'd)

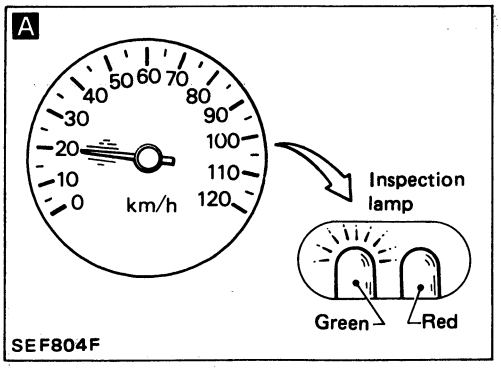

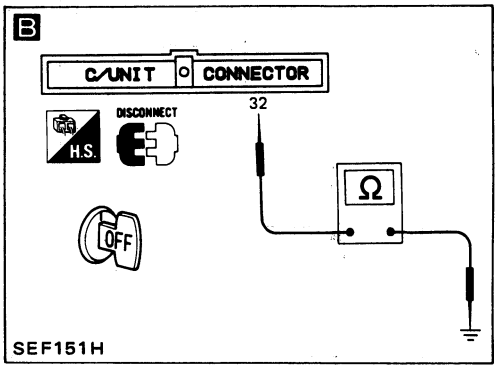

INSPECTION START

Is speedometer working properly?

- No → CHECK VEHICLE SPEED SENSOR AND SPEEDOMETER UNIT. (See EL section.)
- Yes ↓

A

CHECK INPUT SIGNAL.
1) Perform switch ON/OFF diagnosis (in Mode IV).
2) Make sure green inspection lamp on E.C.U. comes "ON" when vehicle speed reaches 20 km/h (12 MPH).

- O.K. → INSPECTION END
- N.G. ↓

B

CHECK CONTINUITY BETWEEN E.C.U. AND VEHICLE SPEED SENSOR.
1) Turn ignition switch "OFF".
2) Disconnect E.C.U. harness connector.
3) Check continuity between E.C.U. terminal ㉜ and ground by rotating rear wheel by hand.
Continuity should come and go.

- N.G. → Repair or replace harness or connectors.
- O.K. ↓

Reinstall any part removed.

↓

Erase the self-diagnosis memory. Make sure Code No. 55 is displayed in Mode III.

↓

1) Perform switch ON/OFF diagnosis (in Mode IV) again.
2) Make sure green inspection lamp on E.C.U. comes "ON" when vehicle speed reaches 20 km/h (12 MPH).

- N.G. → 1) Perform self-diagnosis and find malfunction code. 2) According to displayed code No., perform diagnosis.
- O.K. ↓

INSPECTION END

Diagnostic Procedure 6

IGNITION SIGNAL (Code No. 21)

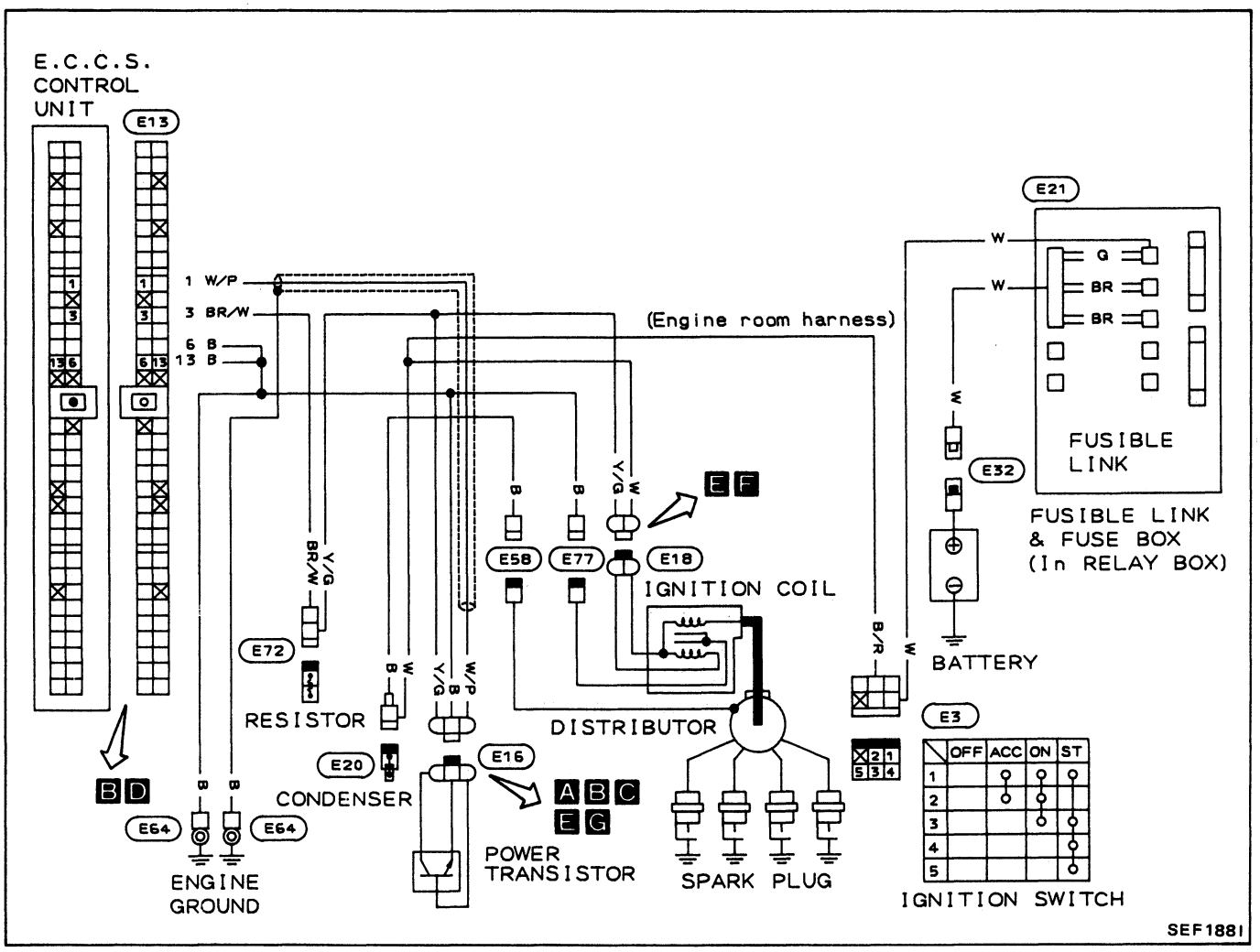

Component location

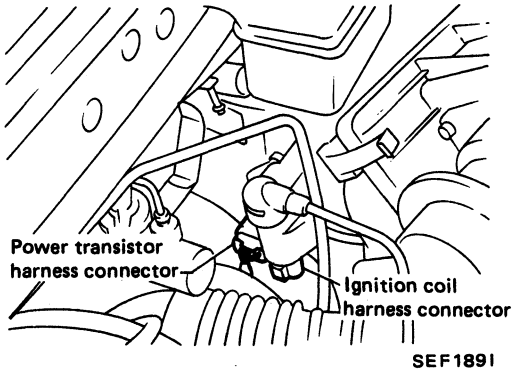

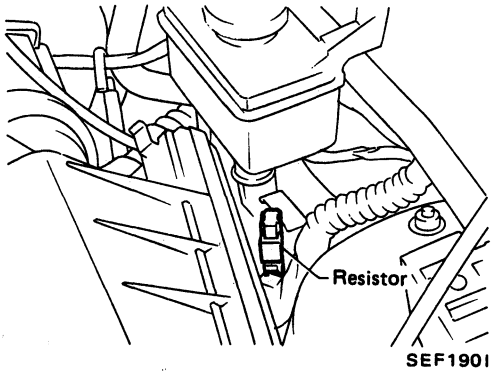

Diagnostic Procedure 6 (Cont'd)

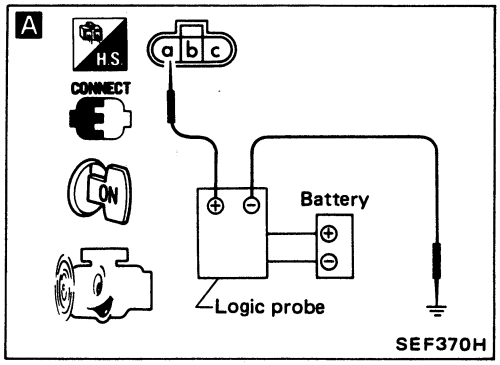

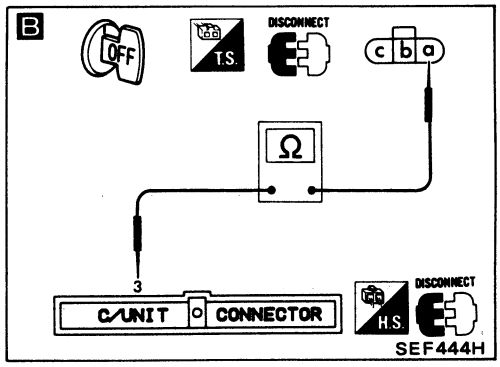

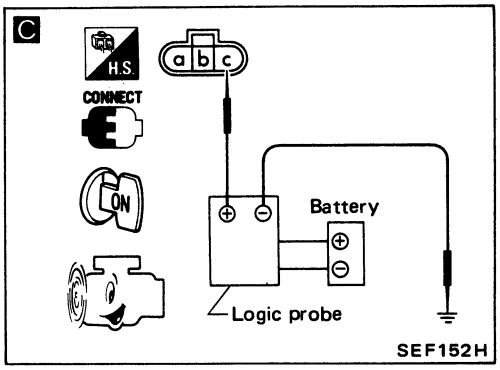

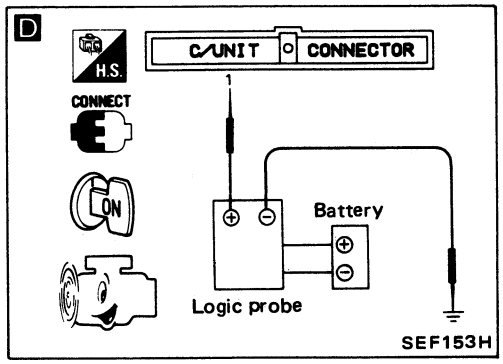

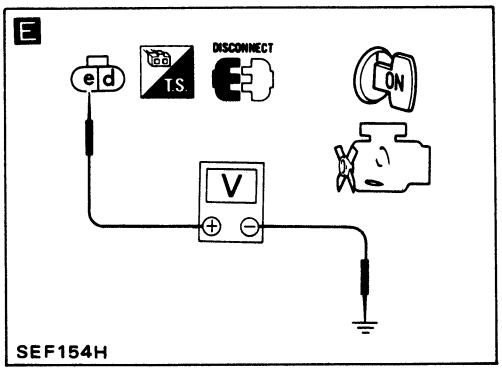

INSPECTION START

A

CHECK E.C.U. INPUT SIGNAL (Power transistor side).
1) Start engine.
2) Verify that pulse signal exists between power transistor harness connector terminal ⓐ and ground with logic probe.
Pulse signal should exist.

O.K. → **B**

CHECK E.C.U. INPUT LINE.
1) Stop engine.
2) Disconnect harness connectors from power transistor and E.C.U.
3) Check continuity between terminals ⓐ and ③.
Continuity should exist.
If N.G., check following.
- Resistor
- Harness or connector

N.G.

C

CHECK E.C.U. OUTPUT SIGNAL (Power transistor side).
Verify that pulse signal exists between power transistor harness connector terminal ⓒ and ground with logic probe.
Pulse signal should exist.

N.G. → **D**

CHECK E.C.U. OUTPUT SIGNAL (E.C.U. side).
Verify that pulse signal exists between E.C.U. harness connector terminal ① and ground with logic probe.
Pulse signal should exist.
If N.G., check the E.C.U. pin terminals for damage or the E.C.U. harness connection.

O.K.

Repair harness, connector, or resistor between terminals ⓒ and ①.

O.K.

E

CHECK POWER SUPPLY.
1) Stop engine.
2) Disconnect harness connector from ignition coil.
3) Turn ignition switch "ON".
4) Check voltage between ignition coil harness connector terminal ⓔ and ground.
Battery voltage should exist.

N.G. → CHECK CONTINUITY BETWEEN BATTERY AND IGNITION COIL.
Check following items.
- Harness
- "G" fusible link
- Ignition switch

O.K.

Diagnostic Procedure 6 (Cont'd)

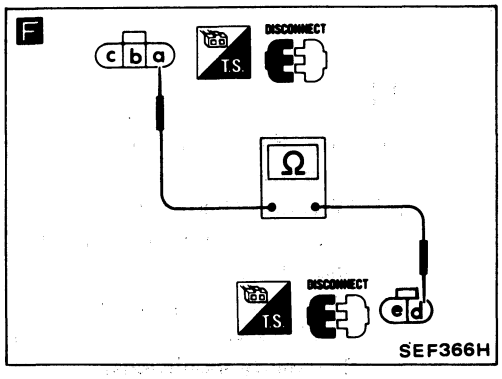

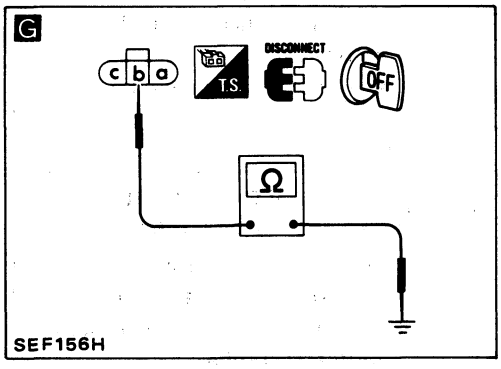

F

CHECK HARNESS CONTINUITY BETWEEN IGNITION COIL AND POWER TRANSISTOR.
1) Turn ignition switch "OFF".
2) Disconnect power transistor harness connector.
3) Check continuity between ignition coil harness connector terminal ⓓ and power transistor harness connector terminal ⓐ.

N.G. → Repair or replace harness between ⓓ and ⓐ.

O.K. ↓

G

CHECK GROUND CIRCUIT.
Check continuity between power transistor harness connector terminal ⓑ and ground.
Continuity should exist.

N.G. → 1) Repair harness or connectors. 2) Check continuity. 3) Check engine ground.

O.K. ↓

CHECK COMPONENTS.
Check ignition coil and power transistor.
(See page EF & EC-154.)

N.G. → Replace ignition coil or power transistor.

O.K. ↓

Reinstall any part removed.

↓

Erase the self-diagnosis memory.

↓

Perform driving test and then perform self-diagnosis again.

N.G. → 1) Perform E.C.U. input/output signal inspection test. 2) If N.G., recheck the E.C.U. pin terminals for damage or the connection of E.C.U. harness connector.

O.K. ↓

INSPECTION END

NOTE

Diagnostic Procedure 7

ENGINE CONTROL UNIT (Code No. 31)

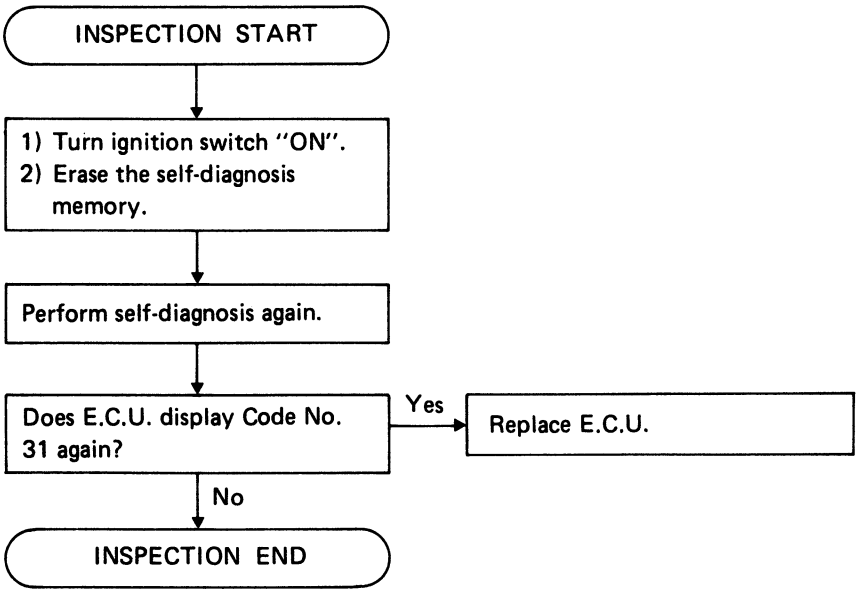

NOTE

Diagnostic Procedure 8

E.G.R. FUNCTION (Code No. 32) [Not self-diagnostic item (For non-California models)]

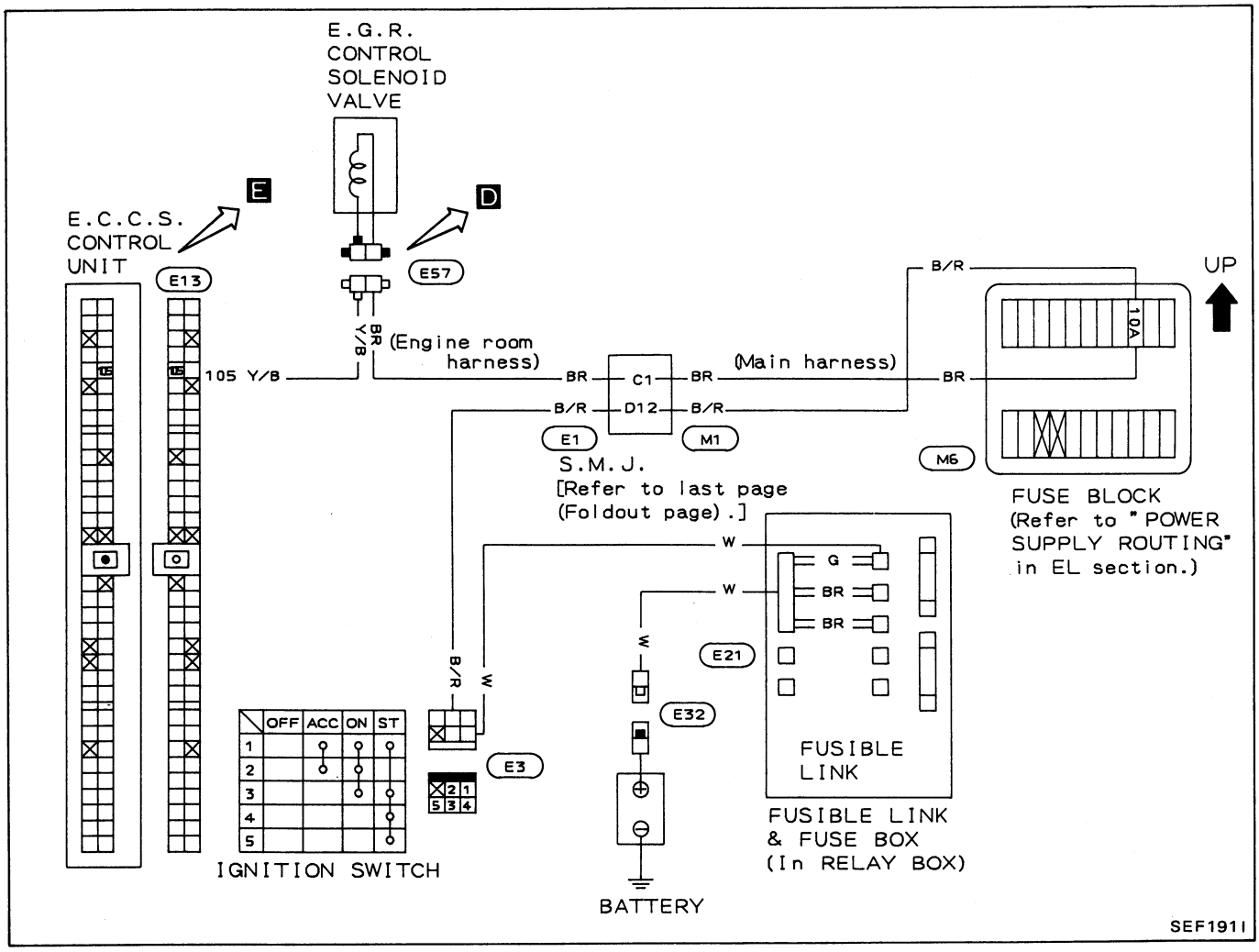

Component location

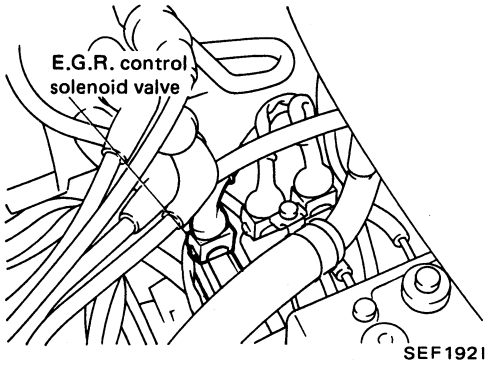

Diagnostic Procedure 8 (Cont'd)

A

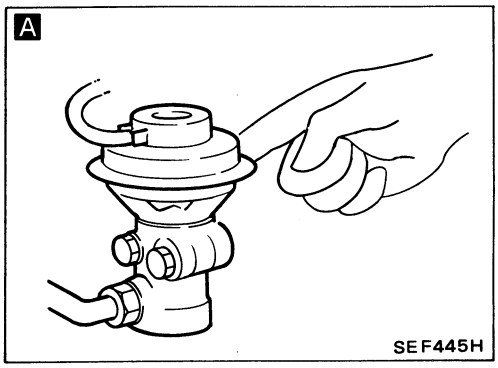

B

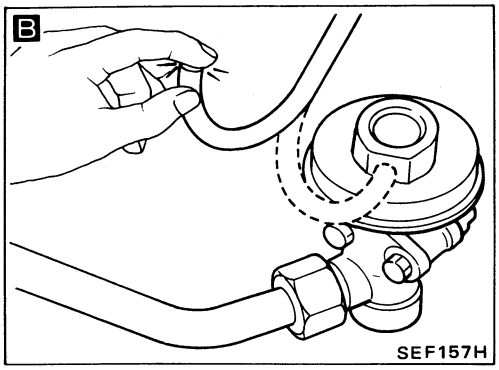

C

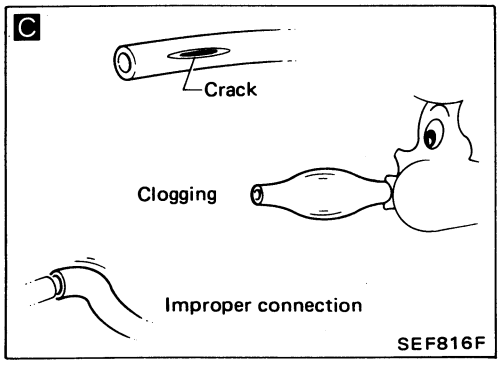

D

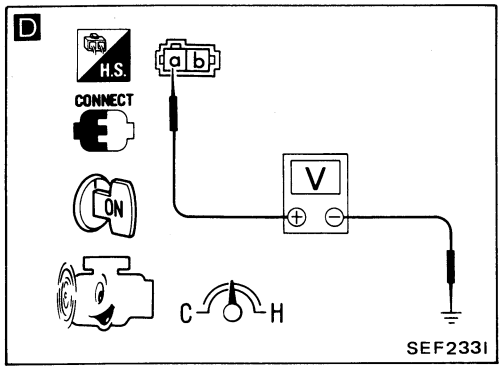

E

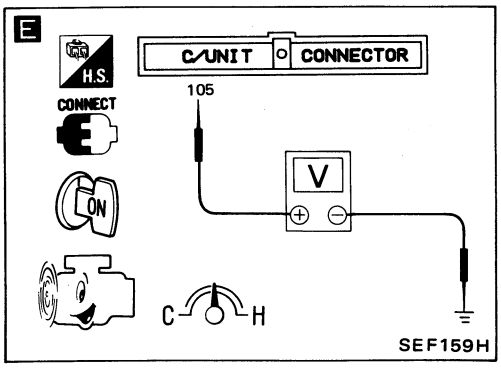

INSPECTION START

A CHECK E.G.R. CONTROL VALVE OPERATION.
1) Start engine and warm it up sufficiently.
2) Make sure E.G.R. control valve spring responds to your touch (use your fingers) and also when engine is raced.

Responds → INSPECTION END

Does not respond ↓

B CHECK VACUUM SOURCE TO E.G.R. CONTROL VALVE.
1) Stop engine.
2) Disconnect vacuum hose connected to E.G.R. control valve and B.P.T. valve.
3) Start engine.
4) Make sure vacuum exists when racing engine.

O.K. → CHECK COMPONENT. Check E.G.R. control valve. (See page EF & EC-154.)
N.G. → Replace E.G.R. control valve.

N.G. ↓

C CHECK VACUUM HOSE.
1) Stop engine.
2) Check vacuum hose for clogging, cracks, and proper connections.

N.G. → If necessary, replace vacuum hose or reconnect vacuum hose firmly.

O.K. ↓

D CHECK E.C.U. OUTPUT SIGNAL (Solenoid side).
1) Start engine and warm it up sufficiently.
2) Check voltage betwen E.G.R. control solenoid valve harness connector terminal ⓐ and ground.

Engine condition	Voltage
Racing	Battery voltage
Idle	Temporarily drops to 0 - 1V

N.G. → **E** CHECK E.C.U. OUTPUT SIGNAL (E.C.U. side).
Check voltage between E.C.U. harness connector terminal (105) and ground.

Engine condition	Voltage
Idle	Battery voltage
Racing	Temporarily drops to 0 - 1V

If N.G., check the E.C.U. pin terminals for damage or the connection of E.C.U. harness connector.

O.K. ↓

Repair harness or connectors between terminals ⓐ and (105).

O.K. ↓

Diagnostic Procedure 8 (Cont'd)

F

Test condition

Drive vehicle under the following conditions with a suitable shift position.

- **Engine speed:**
  3,200±400 rpm
- **Intake manifold vacuum:**
  −45.3±5.3 kPa
  (−340±40 mmHg, −13.39±1.57 inHg)

Driving mode

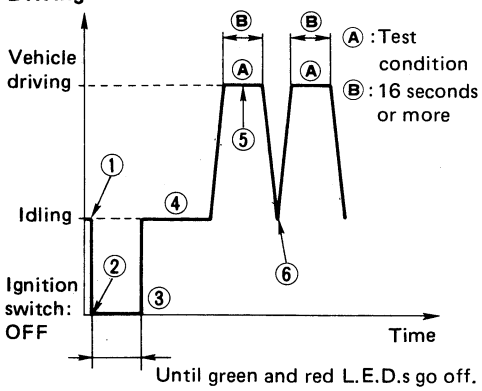

① Start engine and warm it up sufficiently.
② Turn off ignition switch and keep it off until green and red L.E.D.s go off.
③ Start engine and make sure that air conditioner switch and rear defogger are turned "OFF" during driving test.
④ Keep engine running for at least 4 minutes.
⑤ Shift to suitable gear position and drive in "Test condition" for at least 16 seconds.
⑥ Decrease engine revolution to less than 2,000 rpm.
⑦ Repeat steps ⑤ through ⑥ at least 1 time.

SEF302H

G

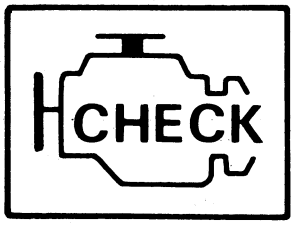

CHECK ENGINE LIGHT

SEF924F

CHECK COMPONENT.
1) Stop engine.
2) Check E.G.R. control solenoid valve. (See page EF & EC-155.)

N.G. → Replace E.G.R. control solenoid valve.

O.K. ↓

CHECK COMPONENT.
Check E.G.R. control valve and B.P.T. valve.
(See page EF & EC-154.)

N.G. → Valve spring may be stuck. Clean if necessary. If this does not correct trouble, replace E.G.R. control valve.

O.K. For California ↓

O.K. For non-California → INSPECTION END

Check resistance of exhaust gas temperature sensor.
(See page EF & EC-155.)

↓

Reinstall any part removed.

↓

Erase the self-diagnosis memory. Make sure Code No. 55 is displayed in Mode III.

↓

F

Perform driving test under the following conditions.
1) Warm up engine sufficiently.
2) Use test driving modes indicated in figure **F**.

↓

G

Make sure check engine light does not come "ON" during driving test.

Comes "ON" → Perform self-diagnosis and find malfunction code. According to displayed code No., perform diagnosis.

Does not come "ON" ↓

INSPECTION END

NOTE

Diagnostic Procedure 9

EXHAUST GAS SENSOR (Code No. 33)

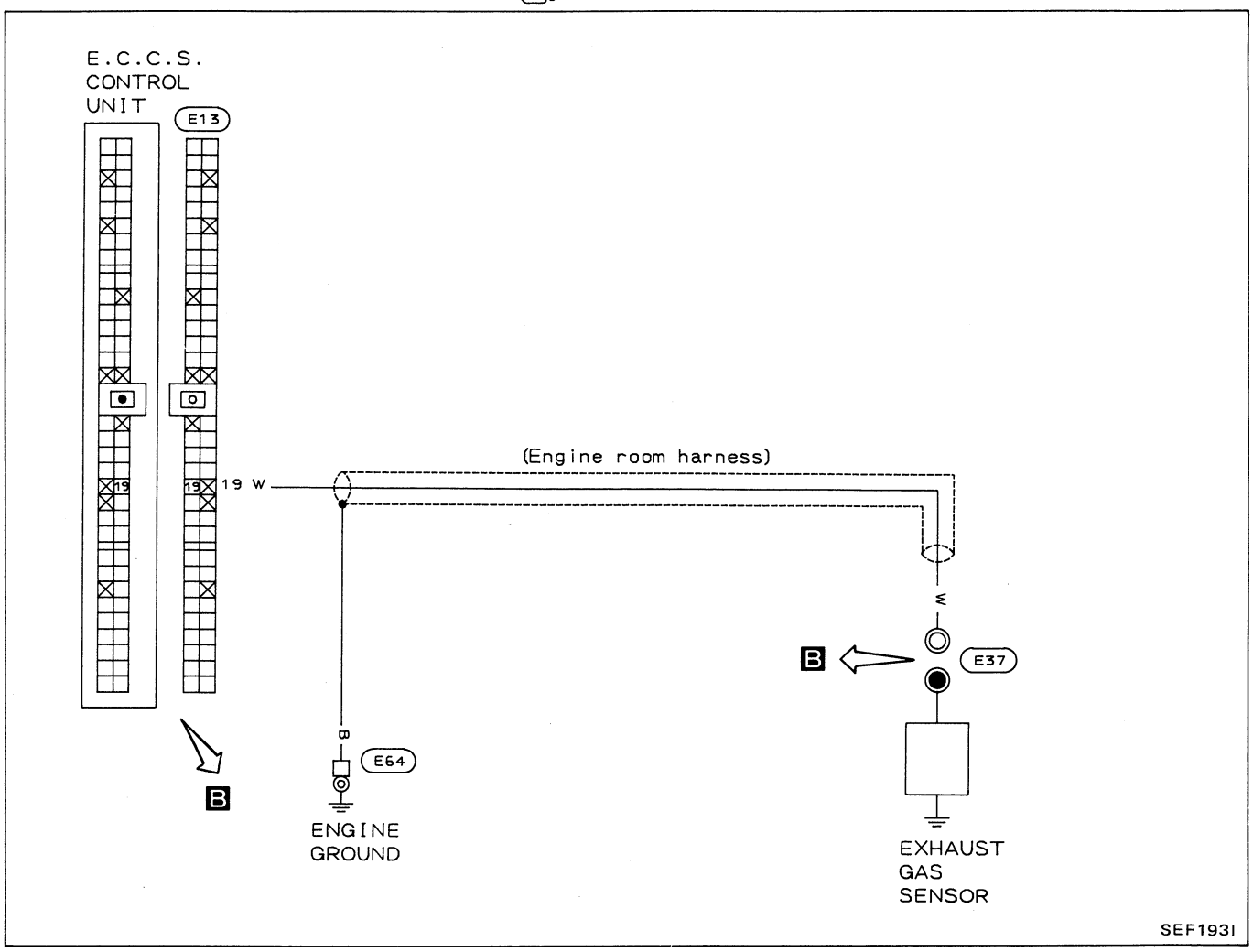

Component location

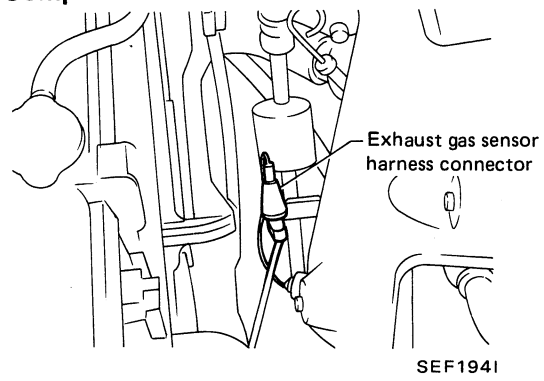

Diagnostic Procedure 9 (Cont'd)

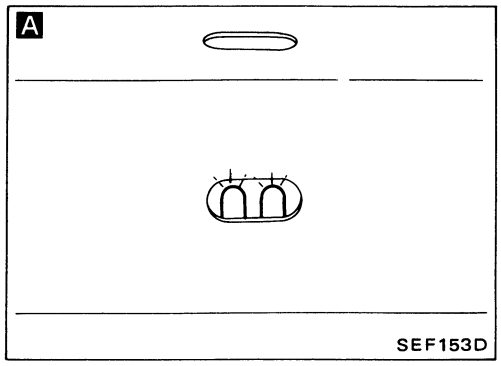

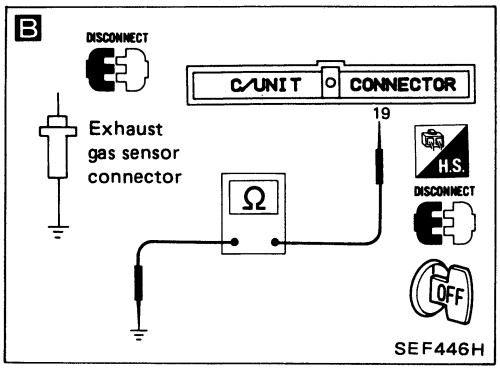

INSPECTION START

A

CHECK INPUT SIGNAL.
1) Start engine and warm it up sufficiently.
2) Make sure green inspection lamp on E.C.U. blinks at 2,000 rpm.

O.K. → INSPECTION END

N.G. ↓

B

CHECK EXHAUST GAS SENSOR CIRCUIT.
1) Stop engine.
2) Disconnect E.C.U. harness connector.
3) Disconnect exhaust gas sensor harness connector.
4) Connect a jumper wire from exhaust gas sensor harness connector to ground.
5) Check continuity between E.C.U. harness connector terminal ⑲ and ground.
Continuity should exist.

N.G. → Repair or replace harness.

O.K. ↓

Replace exhaust gas sensor.

↓

Reinstall any part removed.

↓

Erase the self-diagnosis memory. Make sure Code No. 55 is displayed in Mode III.

↓

1) Start engine and warm it up sufficiently.
2) Set diagnosis mode to Mode I.
3) Make sure that green inspection lamp on E.C.U. goes on and off periodically more than 5 times during 10 seconds at 2,000 rpm.

N.G. → Perform IDLE SPEED/IGNITION TIMING/IDLE MIXTURE RATION INSPECTION. (See page EF & EC-29.)

O.K. ↓

INSPECTION END

Diagnostic Procedure 10

EXHAUST GAS TEMPERATURE SENSOR (Code No. 35)

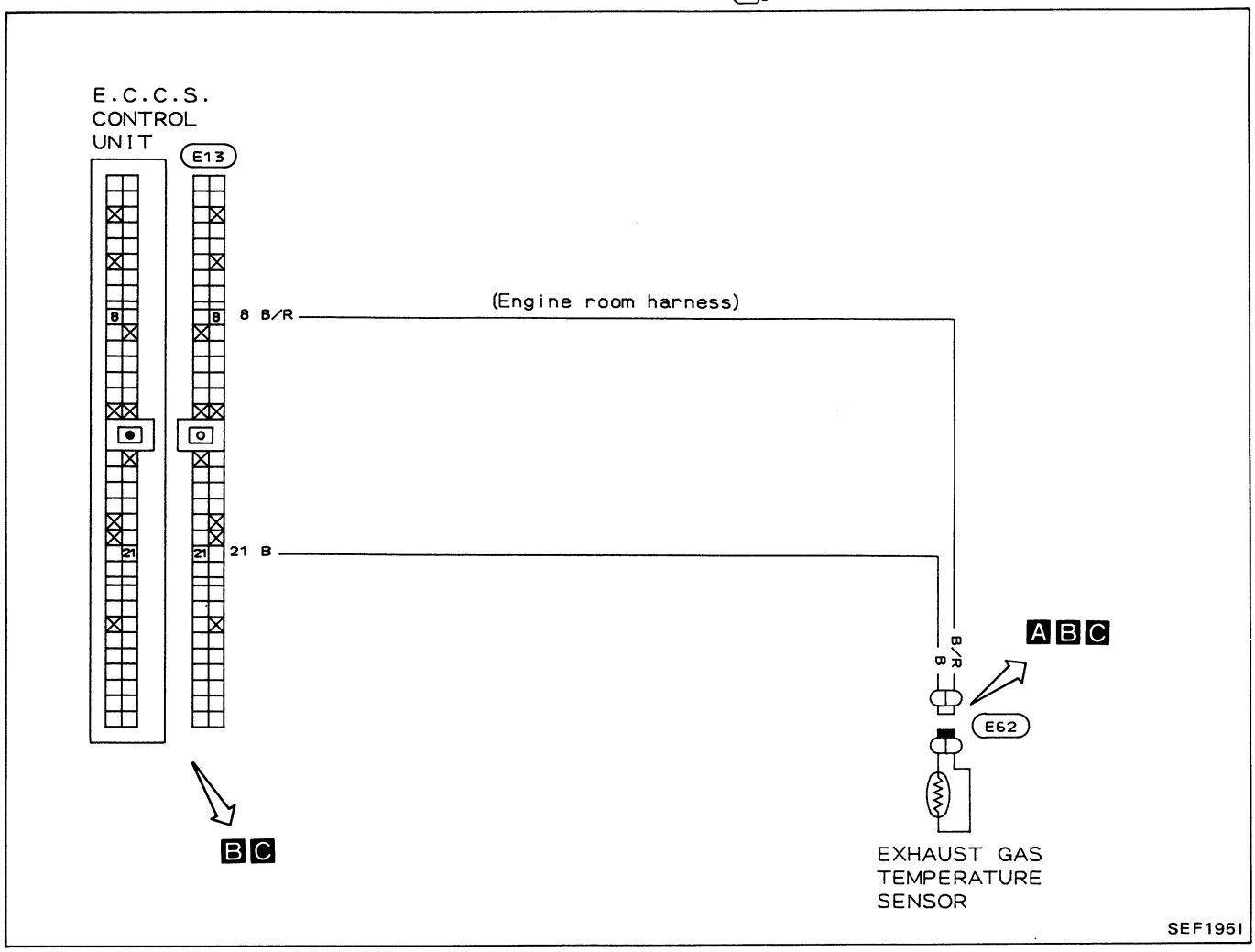

Component location

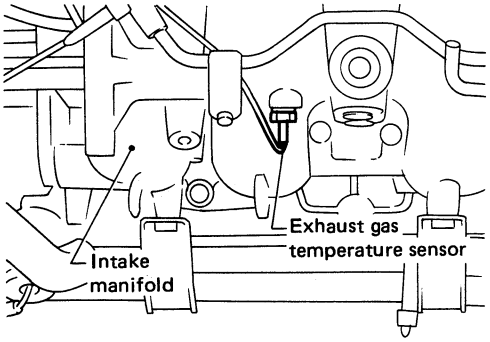

SEF196I

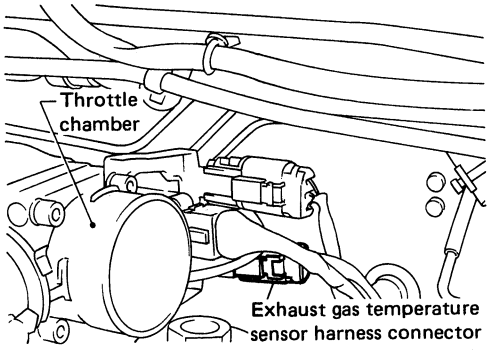

SEF197I

Diagnostic Procedure 10 (Cont'd)

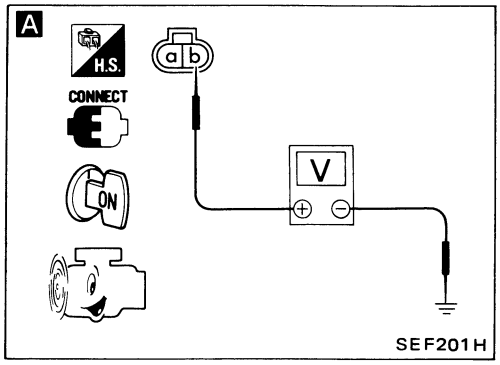

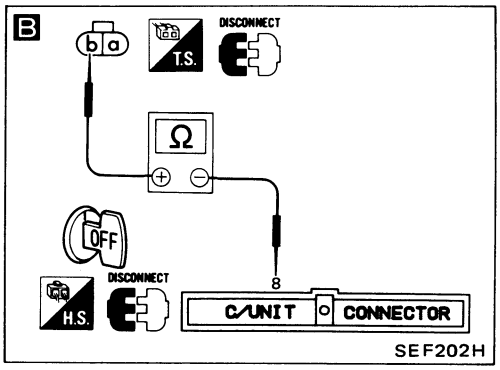

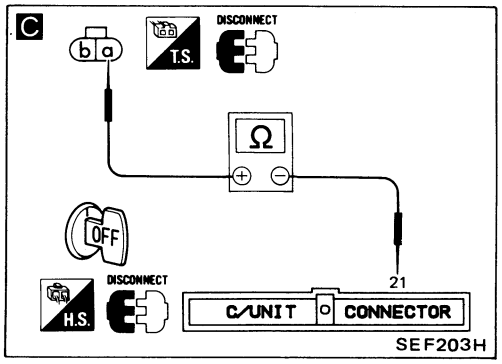

INSPECTION START

A

CHECK INPUT SIGNAL
(Exhaust gas temperature sensor side).
1) Start engine and warm it up sufficiently.
2) Keep engine speed at approximately 2,000 rpm.
3) Check voltage between exhaust gas temperature sensor harness connector terminal ⓑ and ground under the following conditions.

Condition	Voltage
When vacuum is not applied to E.G.R. control valve	1.0 - 2.0V
When vacuum is applied to E.G.R. control valve	0 - 1.0V

A sufficient vacuum applied with a hand vacuum pump may cause the engine to stall.

O.K. → ✦✦

N.G. ↓

B

CHECK HARNESS CONTINUITY BETWEEN E.C.U. AND EXHAUST GAS TEMPERATURE SENSOR.
1) Stop engine.
2) Disconnect E.C.U. harness connector.
3) Disconnect exhaust gas temperature sensor harness connector.
4) Check continuity between terminals ⓑ and ⑧.
Continuity should exist.

N.G. →
1) Check harness and middle harness connector connection between terminals ⓑ and ⑧.
2) If necessary, repair or replace harness.

O.K. ↓

C

CHECK GROUND CIRCUIT.
Check continuity between terminals ⓐ and ㉑.
Continuity should exist.

N.G. →
1) Check middle harness connector connection.
2) If necessary, repair or replace harness.

O.K. ↓

✦

Diagnostic Procedure 10 (Cont'd)

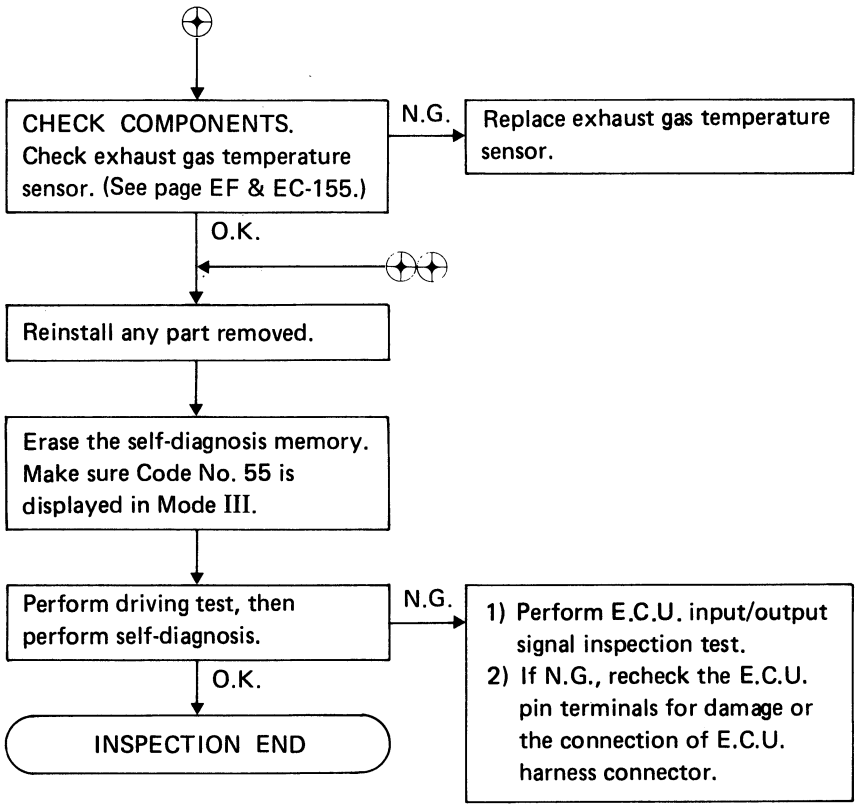

NOTE

Diagnostic Procedure 11

AIR TEMPERATURE SENSOR (Code No. 41)

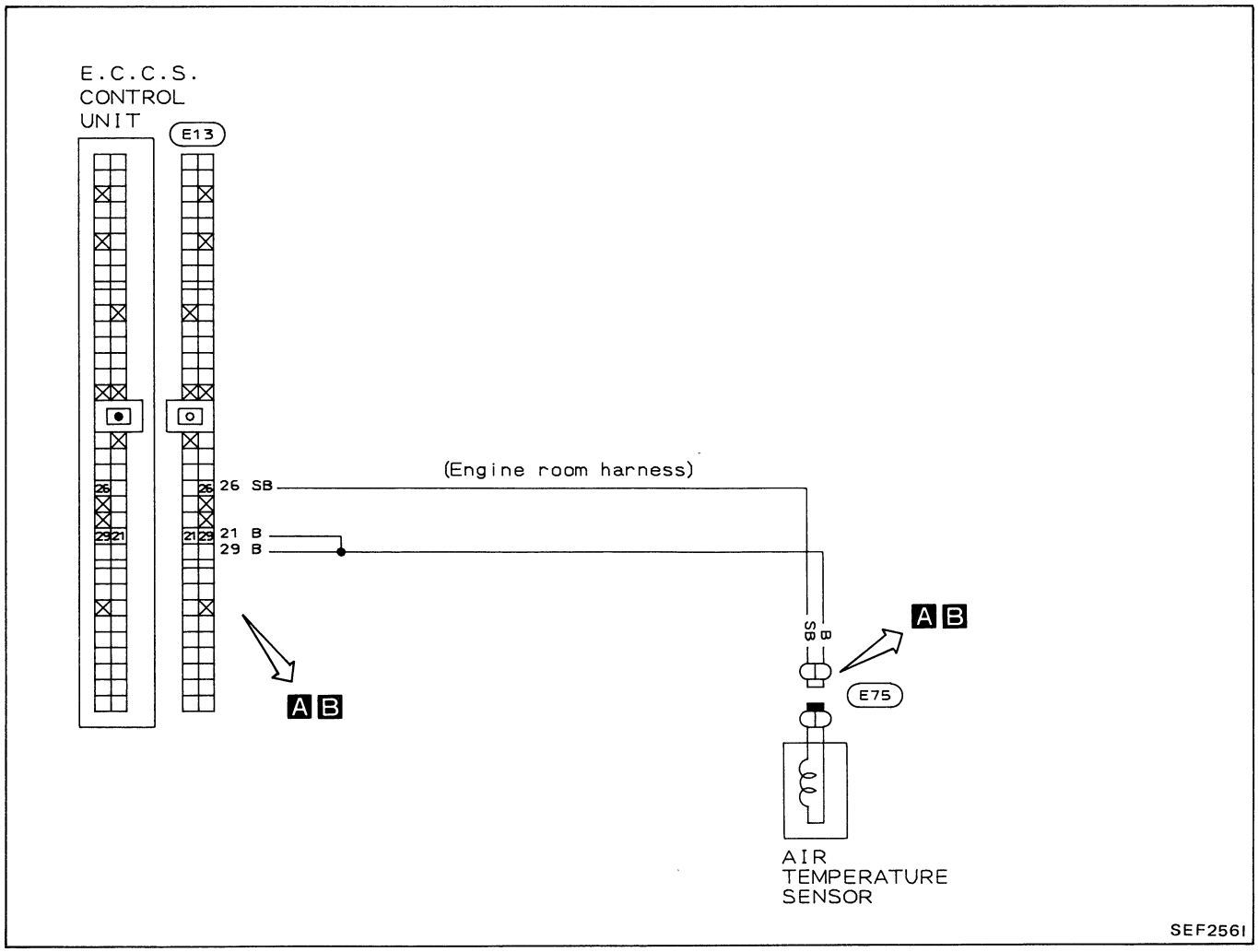

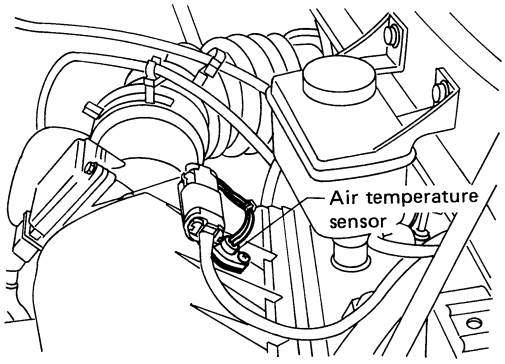

SEF257I

Diagnostic Procedure 11 (Cont'd)

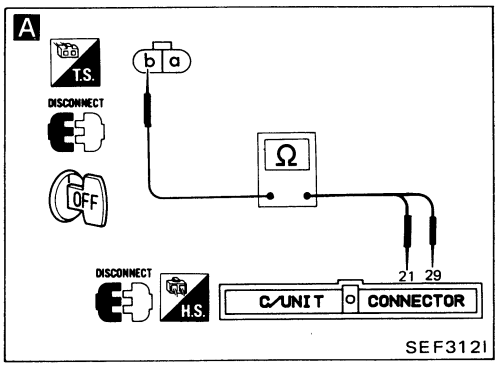

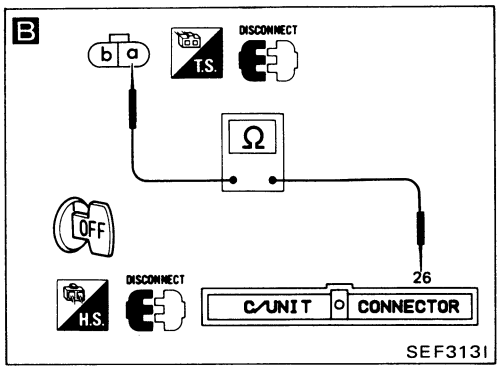

INSPECTION START

↓

CHECK COMPONENTS.
Check air temperature sensor.
(See page EF & EC-155.)

N.G. → Replace air temperature sensor.

O.K. ↓

A

CHECK GROUND CIRCUIT.
1) Disconnect E.C.U. harness connector.
2) Check continuity between air temperature sensor terminal ⓑ and E.C.U. terminals ㉑, ㉙.
Continuity should exist.

N.G. → 1) Repair harness or connectors between terminals ⓑ and ㉑, ㉙.
2) Check engine ground.

O.K. ↓

B

CHECK INPUT SIGNAL CIRCUIT.
Check continuity between terminals ⓐ and ㉖.
Continuity should exist.

N.G. → Repair or replace harness or connectors between terminals ⓐ and ㉖.

O.K. ↓

Reinstall any part removed.

↓

Erase the self-diagnosis memory.

↓

Perform driving test and then perform self-diagnosis (Mode-III) again.

N.G. → 1) Perform E.C.U. input/output signal inspection test.
2) If N.G., recheck the E.C.U. pin terminals for damage or the connection of E.C.U. harness connector.

O.K. ↓

INSPECTION END

Diagnostic Procedure 12

THROTTLE SENSOR (Code No. 43) CHECK

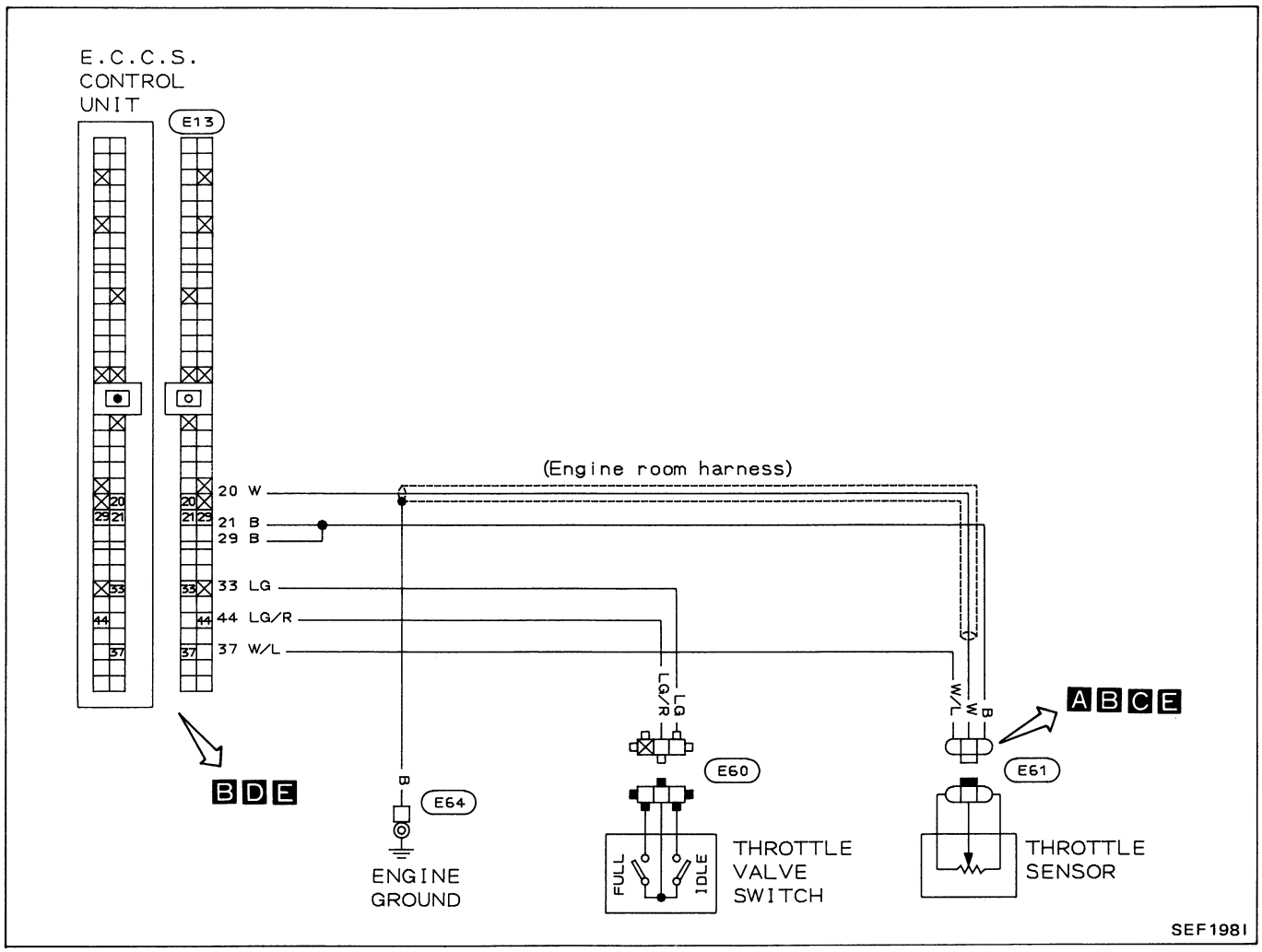

Component location

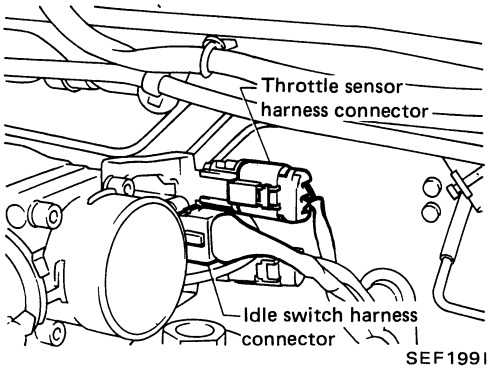

Diagnostic Procedure 12 (Cont'd)

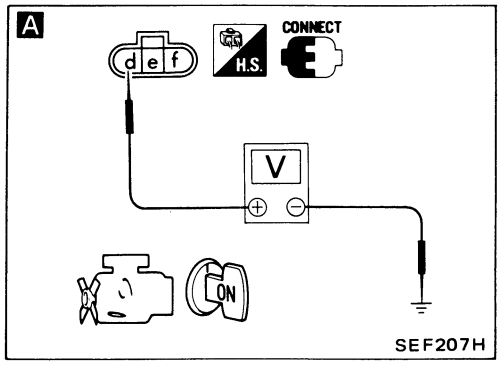

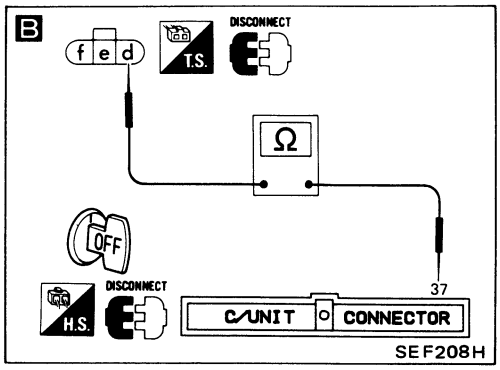

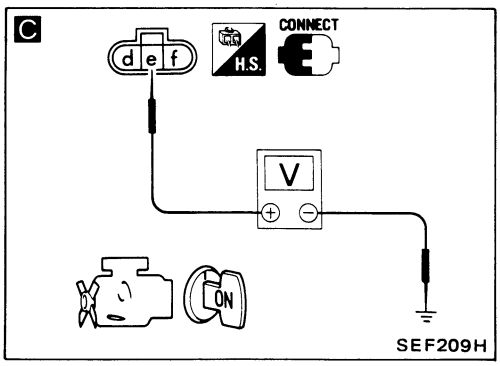

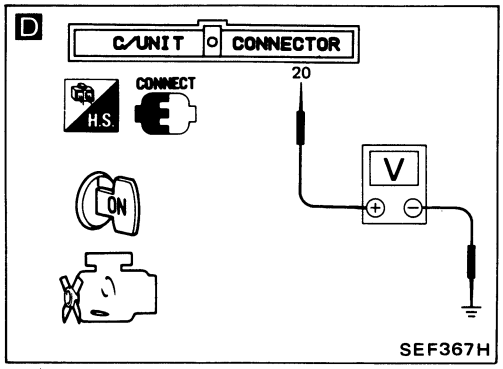

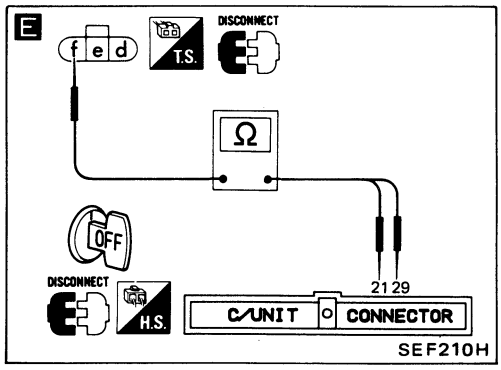

INSPECTION START

A

CHECK POWER SOURCE.
1) Turn ignition switch "ON".
2) Check voltage between terminal ⓓ and ground.
Voltage:
Approximately 5.0V

N.G. → **B**

HARNESS CONTINUITY BETWEEN THROTTLE SENSOR HARNESS CONNECTOR AND E.C.U.
1) Turn ignition switch "OFF".
2) Disconnect throttle sensor harness connector.
3) Disconnect E.C.U. harness connector.
4) Check continuity between terminals ⓓ and ㊲.
Continuity should exist.
If N.G., repair or replace harness or connector.

O.K. ↓

C

CHECK INPUT SIGNAL
(Throttle sensor side).
Make sure that voltage between terminal ⓔ and ground changes when accelerator pedal is depressed.
Voltage:
Approximately 0.5 - 4.0V

O.K. → **D**

CHECK INPUT SIGNAL
(E.C.U. side).
Make sure that voltage between terminal ⑳ and ground changes when accelerator pedal is depressed.
Voltage:
Approximately 0.5 - 4.0V

O.K. ↓

Repair or replace harness or connectors between terminals ⓔ and ⑳.

N.G. ↓

E

CHECK GROUND CIRCUIT.
1) Turn ignition switch "OFF" and disconnect E.C.U. harness connector.
2) Disconnect throttle sensor harness connector.
3) Check continuity between terminal ⓕ and E.C.U. terminals ㉑, ㉙.
Continuity should exist.

N.G. → 1) Check harness continuity between throttle sensor and ground.
2) E.C.U. ground circuit.

O.K. ↓

Diagnostic Procedure 12 (Cont'd)

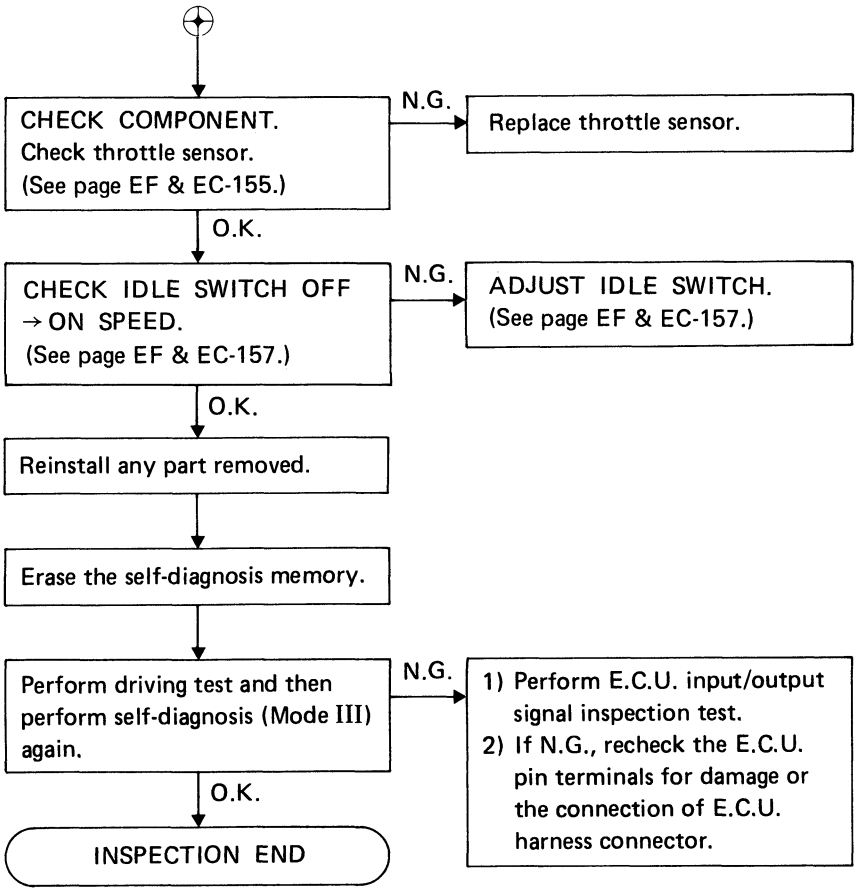

NOTE

INJECTOR LEAK (Code No. 45)

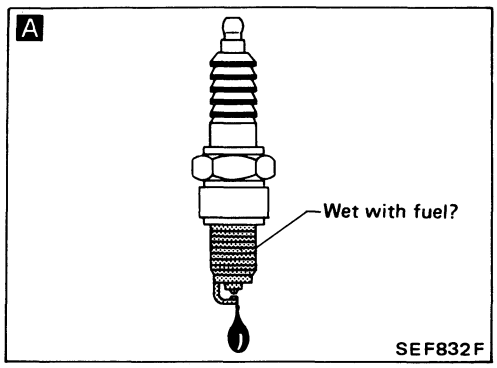

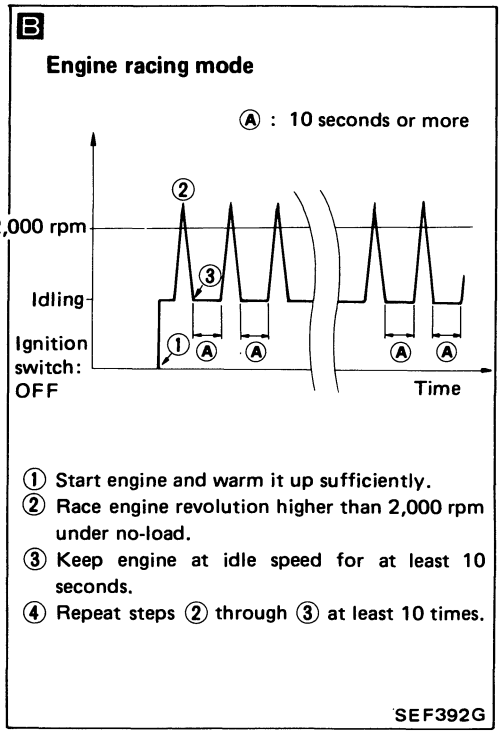

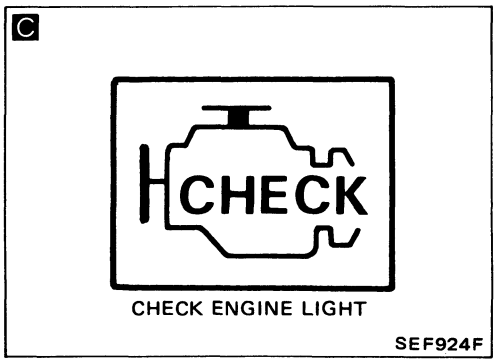

Diagnostic Procedure 13

INSPECTION START

Start engine and warm it up sufficiently.

Make sure engine runs smoothly at idle after warming.

- Runs smoothly → Race engine two or three times under no-load, then run engine at idle speed. → Set diagnosis to Mode II and check that red and green inspection lamps on E.C.U. blink almost simultaneously at 2,000 rpm under no-load.
  - Do not blink → Check idle CO%. (See page EF & EC-29.)
  - Blinks → INSPECTION END
- Does not run smoothly → Set the diagnosis mode selector of E.C.U. to Mode I. → Check if the green inspection lamp stays off during 10 seconds at idle condition.
  - Stays off → A
  - Does not stay off → Check mixture ratio feedback system. (See page EF & EC-29.)

A

1) Stop engine.
2) Remove all spark plugs from intake manifold. Are plugs wet with fuel?

- Yes → Replace the injector in which cylinder spark plug is wet with fuel.
- No → Remove injector assembly. (See page EF & EC-160.) Keep all injectors connected to injector tube. → Turn ignition switch "ON". Make sure fuel does not drip from injector.
  - Drips → Replace the injectors where fuel is dripping from.
  - Does not drip → Reinstall any part removed.

Diagnostic Procedure 13 (Cont'd)

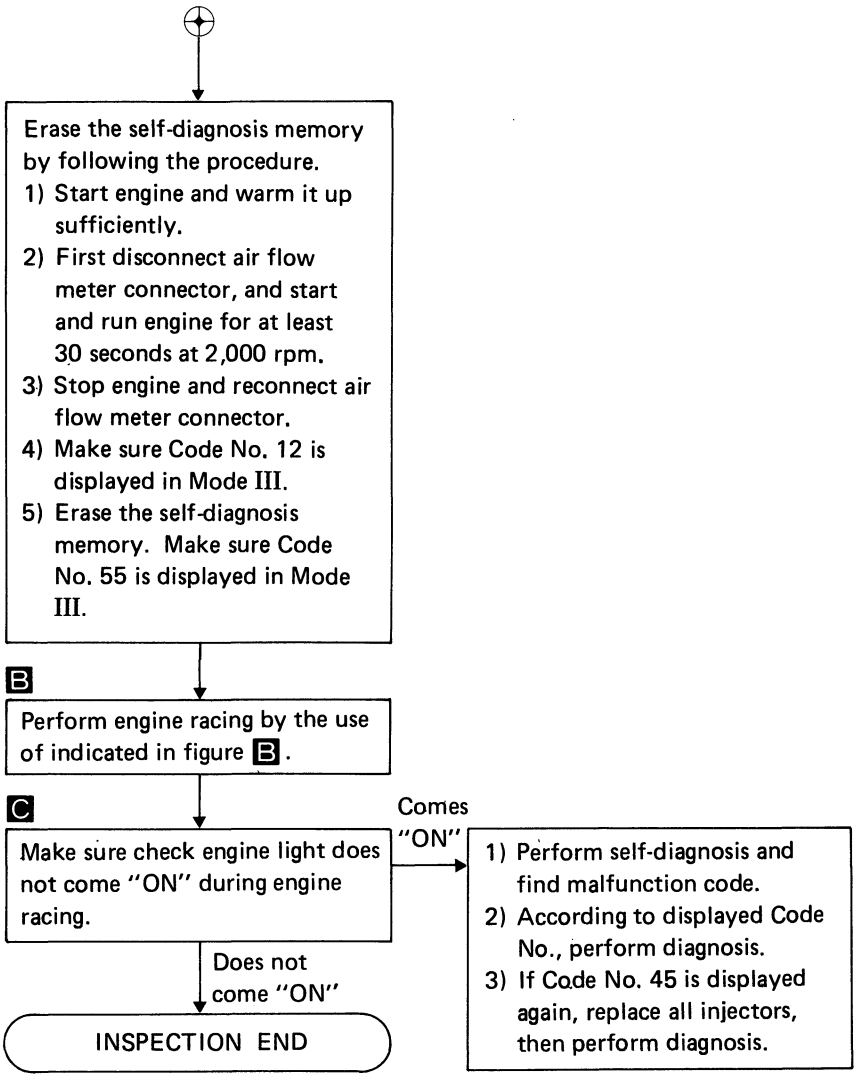

Diagnostic Procedure 14

IDLE SWITCH

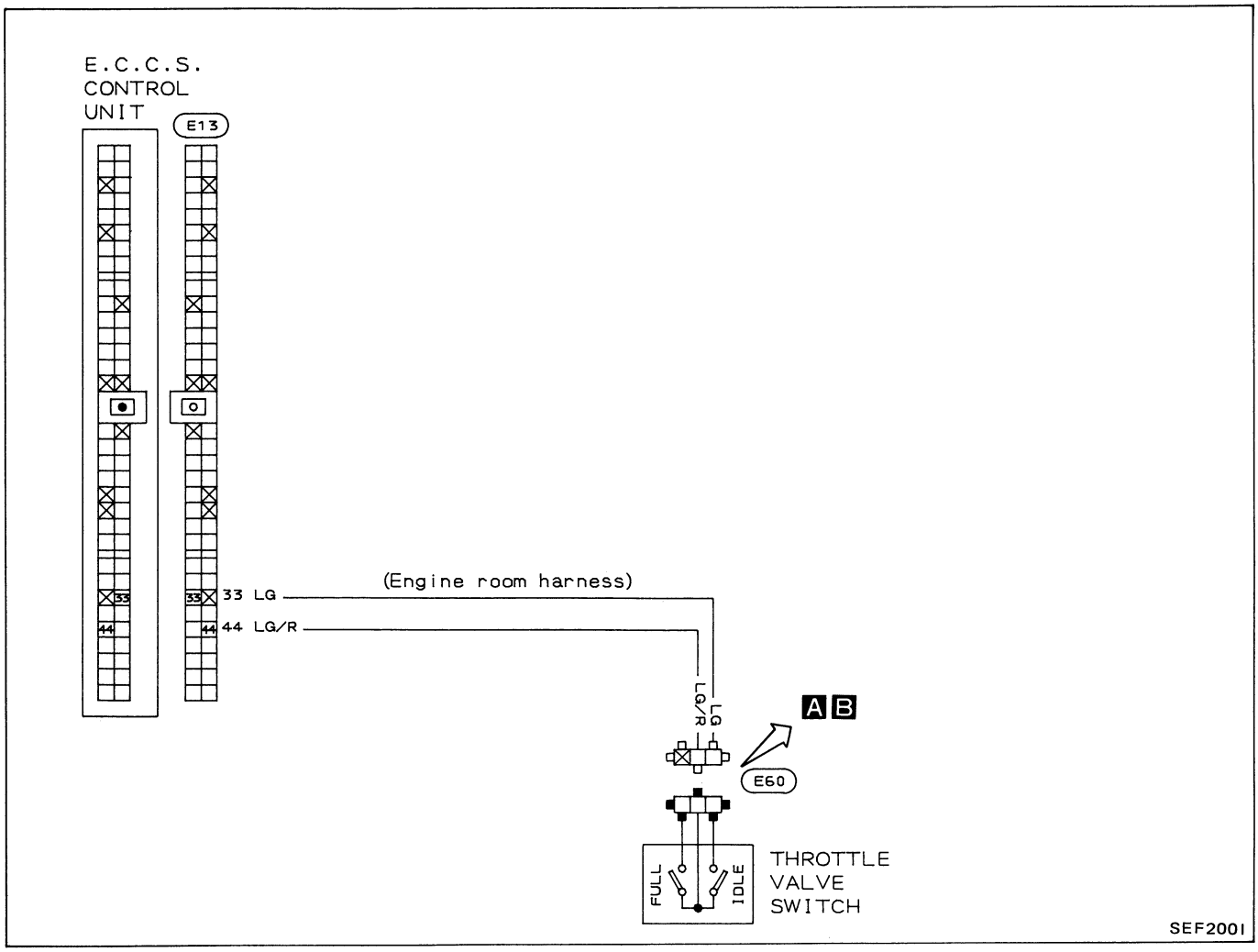

Component location

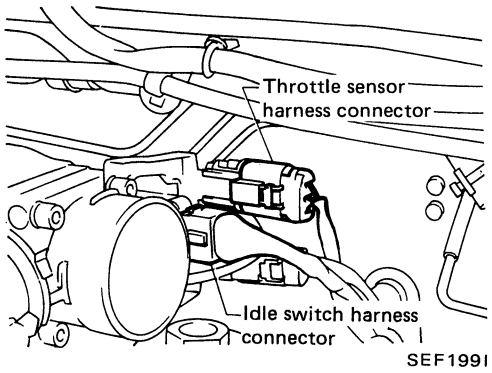

Diagnostic Procedure 14 (Cont'd)

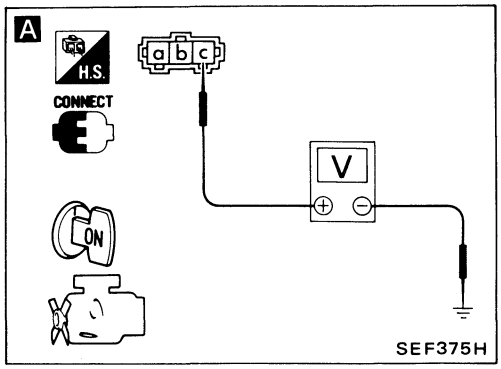

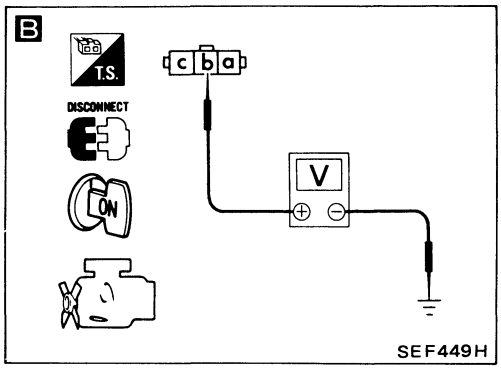

INSPECTION START

Perform switch ON/OFF diagnosis (in Mode IV).

O.K. → INSPECTION END

N.G.

A

CHECK E.C.U. INPUT SIGNAL.
1) Turn ignition switch "ON".
2) Check voltage between throttle valve switch harness connector terminal ⓒ and ground.

Accelerator pedal condition	Voltage
Fully closed	Approximately 8 - 10V
Open	0V

O.K. → Repair or replace harness or connector between throttle valve switch harness connector terminal ⓒ and E.C.U. harness connector terminal ㉝.

N.G.

B

CHECK POWER SUPPLY.
1) Turn ignition switch "OFF".
2) Disconnect throttle valve switch harness connector.
3) Turn ignition switch "ON".
4) Check voltage between terminal ⓑ and ground.
Battery voltage should exist.

O.K. → Check continuity of harness or connectors between throttle valve switch harness connector terminal ⓑ and E.C.U. harness connector terminal ㊹.
If N.G., repair or replace them.

N.G.

CHECK COMPONENT.
Check idle switch.
(See page EF & EC-157.)

N.G. → Replace throttle valve sensor/switch.

O.K.

ADJUST IDLE SWITCH.
(See page EF & EC-157.)

Perform switch ON/OFF diagnosis (in Mode IV).

N.G. → Replace E.C.U.

O.K.

INSPECTION END

Diagnostic Procedure 15

START SIGNAL (Switch ON/OFF diagnostic item)

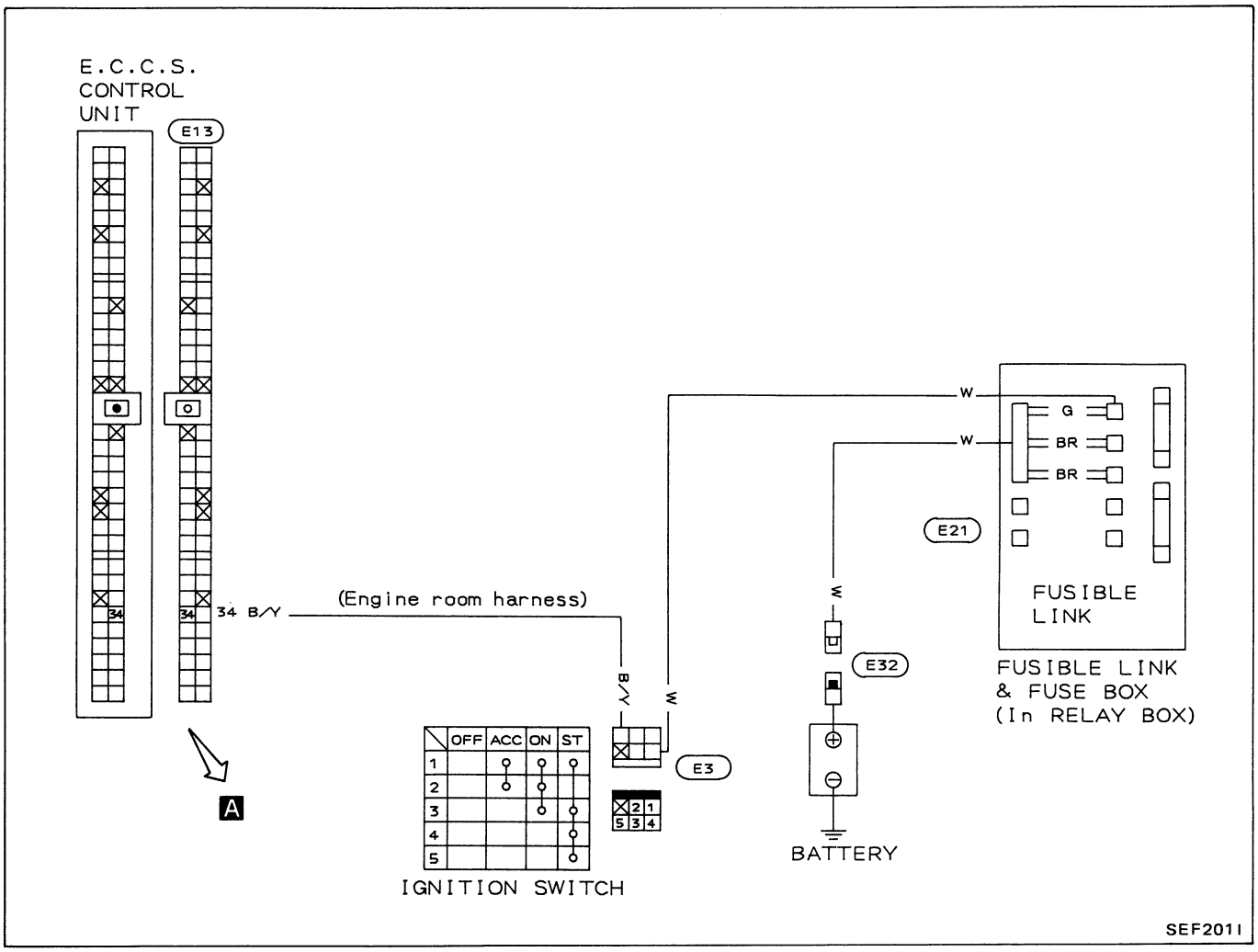

Diagnostic Procedure 15 (Cont'd)

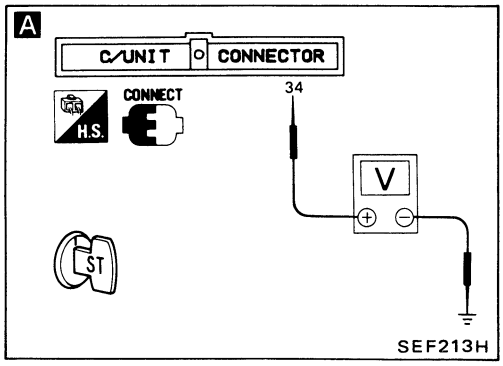

INSPECTION START

Perform switch ON/OFF diagnosis (in Mode IV).

O.K. → INSPECTION END

N.G. ↓

A

CHECK INPUT SIGNAL.
1) Turn ignition switch "START".
2) Check voltage between terminal ㉞ and ground.
Battery voltage should exist.
If N.G., repair harness and connectors.

N.G. → Check the following items.
1) "G" fusible link
2) Ignition switch
3) Middle harness connector

O.K. ↓

INSPECTION END

Diagnostic Procedure 16

FUEL PUMP (Not self-diagnostic item)

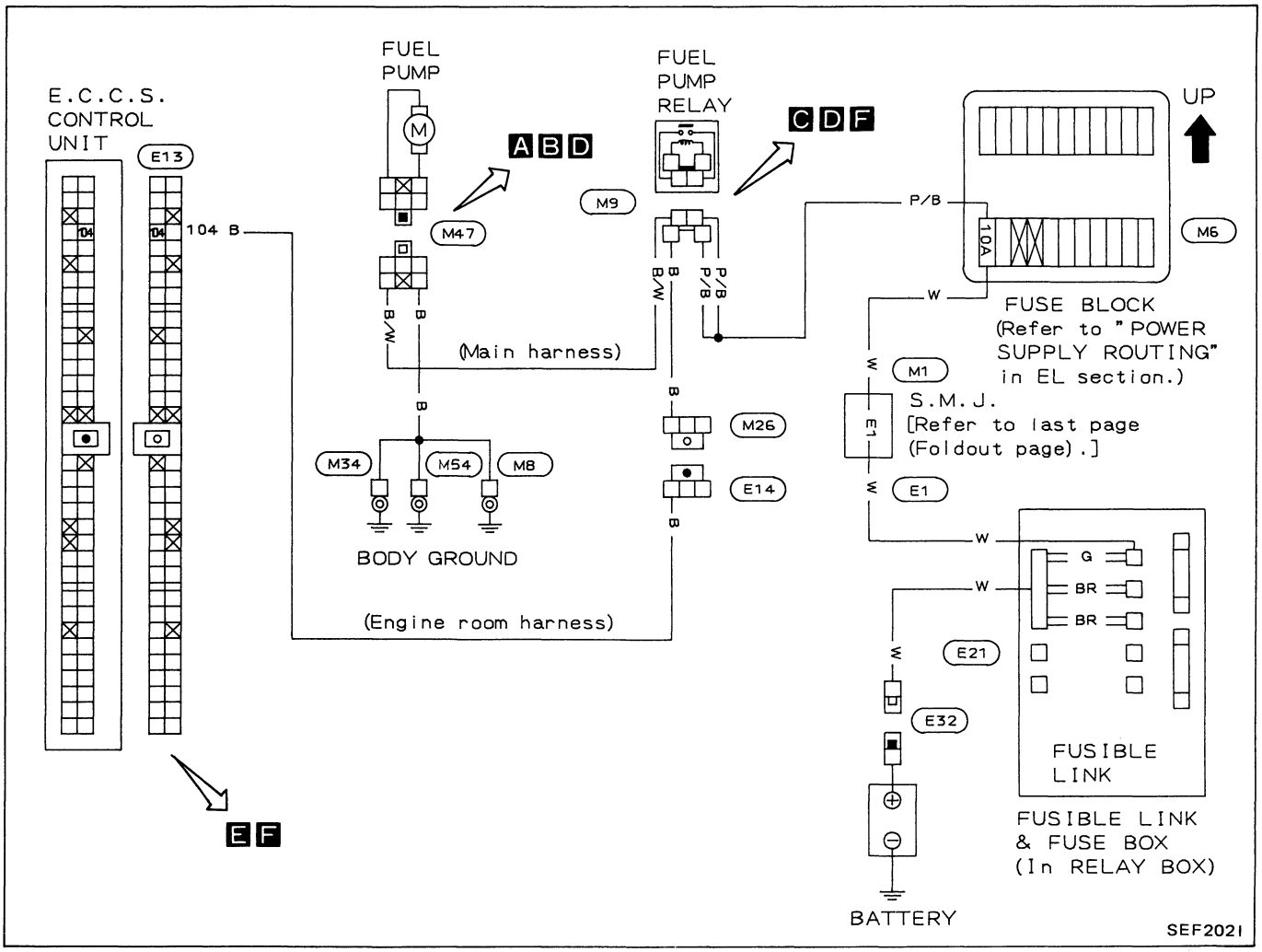

Component location

Under the 2nd seat

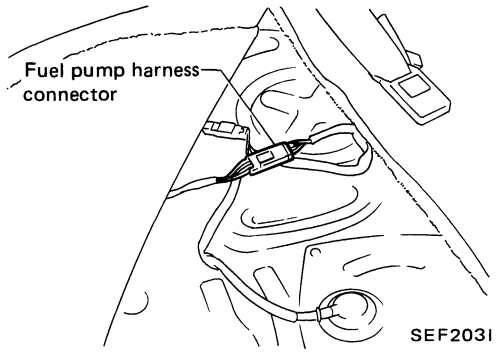

Behind the fuse box.

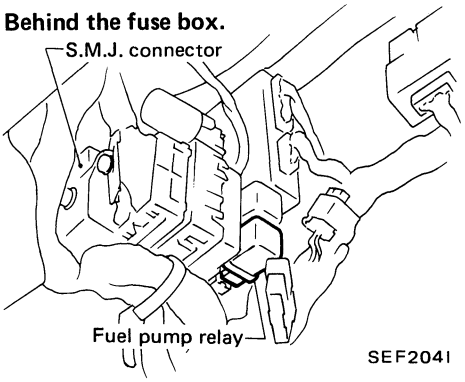

Diagnostic Procedure 16 (Cont'd)

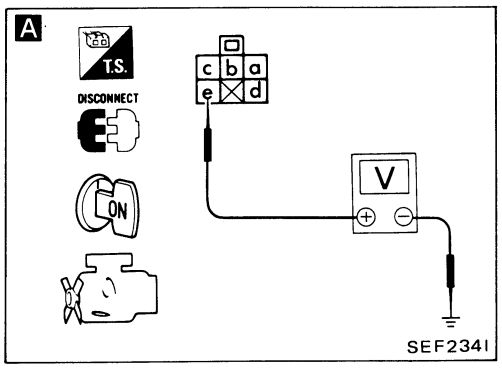

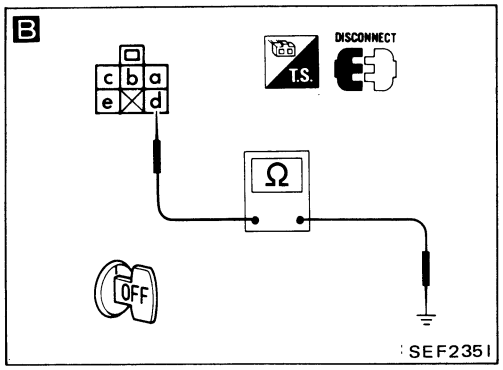

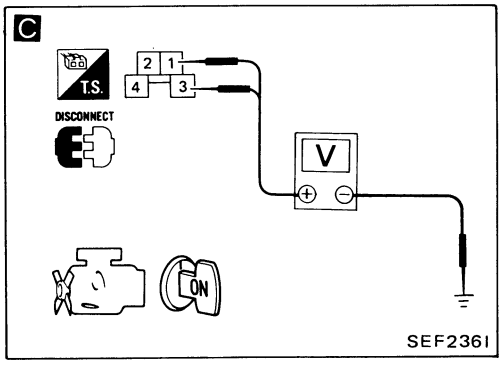

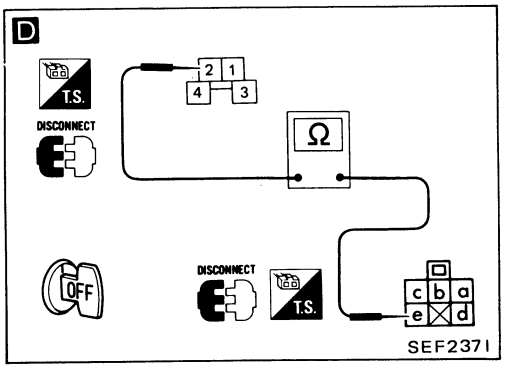

INSPECTION START

A

CHECK POWER SUPPLY
(Fuel pump side).
1) Disconnect fuel pump harness connector.
2) Turn ignition switch "ON".
3) Check voltage between terminal ⓔ and ground.
Battery voltage indication should appear for 5 seconds after turning ignition switch "ON".

O.K. → CHECK COMPONENTS.
1) Turn ignition "OFF".
2) Check fuel pump.
(See page EF & EC-156.)
If N.G., replace fuel pump.

O.K. → **B**

CHECK GROUND CIRCUIT.
Check continuity between terminal ⓓ and ground.
Continuity should exist.
If N.G., repair harness or connectors.

N.G. ↓

C

CHECK POWER SUPPLY
(Relay side).
1) Turn ignition switch "OFF".
2) Disconnect fuel pump relay.
3) Turn ignition switch "ON".
4) Check voltage between terminals ①, ③ and ground.
Battery voltage should exist.

N.G. → CHECK CONTINUITY BETWEEN BATTERY AND FUEL PUMP RELAY.
Check following items.
- Harness or connectors
- "BR" fusible link

O.K. ↓

CHECK COMPONENTS.
1) Turn ignition "OFF".
2) Check fuel pump relay.
(See page EF & EC-156.)

N.G. → Replace fuel pump relay.

O.K. ↓ **D**

CHECK HARNESS CONTINUITY.
Check continuity between relay harness connector terminal ② and fuel pump harness connector terminal ⓔ.

N.G. → Repair or replace harness or connectors between terminals ① and ⓐ.

O.K. ↓

Diagnostic Procedure 16 (Cont'd)

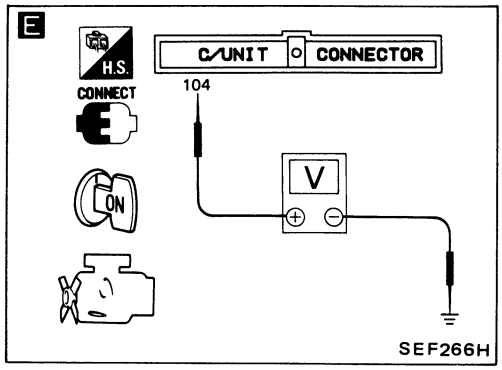

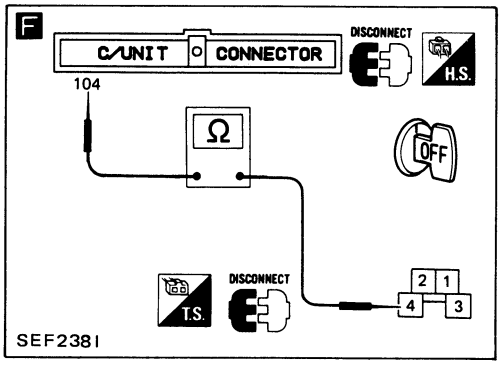

E

CHECK E.C.U. OUTPUT SIGNAL (E.C.U. side).

1) Reconnect fuel pump harness connector and fuel pump relay.
2) Turn ignition switch "ON".
3) Check voltage between E.C.U. harness connector (104) and ground.

Battery voltage indication should appear after 5 seconds.

O.K. → INSPECTION END

N.G. → F

F

CHECK HARNESS CONTINUITY.

1) Turn ignition switch "OFF".
2) Disconnect E.C.U. harness connector.
3) Check continuity between terminal (104) and relay harness connector terminal ③.

Continuity should exist.

If N.G., repair or replace harness and connectors between terminals (104) and ④.

O.K. → Recheck the E.C.U. pin terminals for damage or the connection of E.C.U. harness connector.

NOTE

Diagnostic Procedure 17

PRESSURE REGULATOR (P.R.) CONTROL SOLENOID VALVE (Not self-diagnostic item)

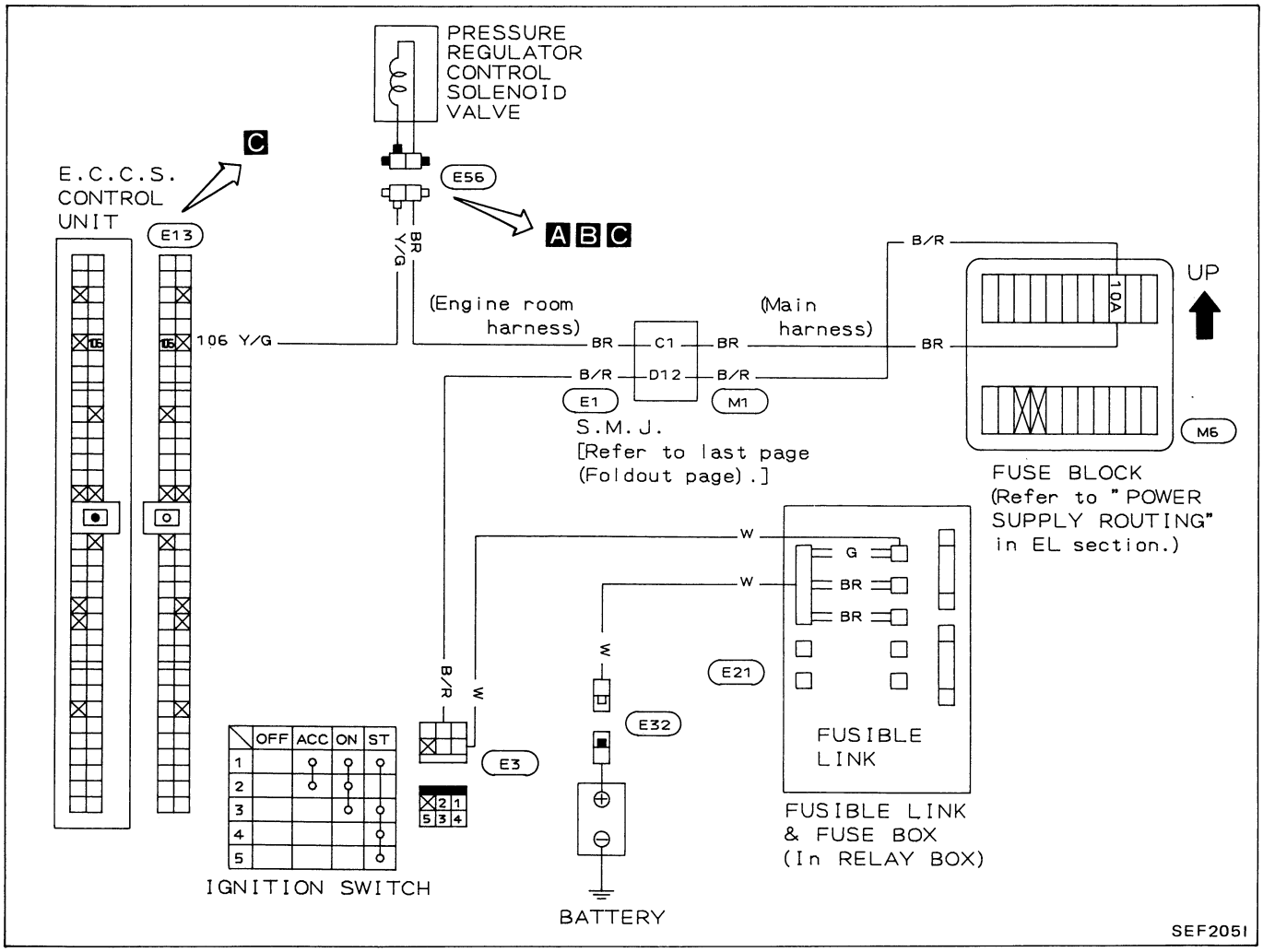

Component location

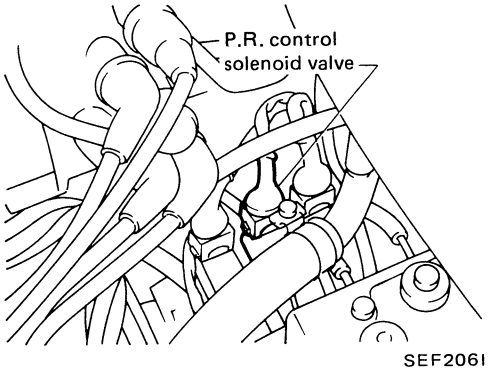

Diagnostic Procedure 17 (Cont'd)

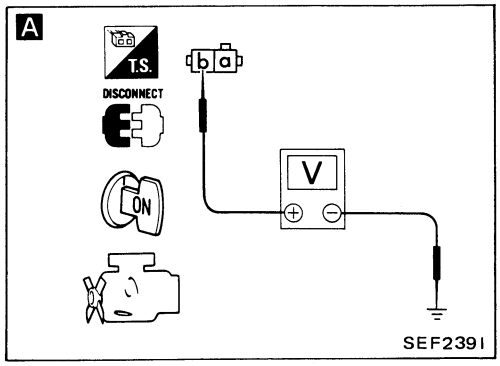

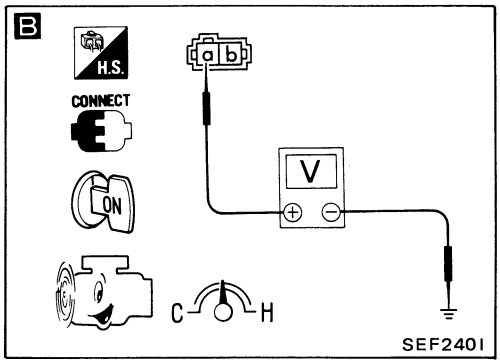

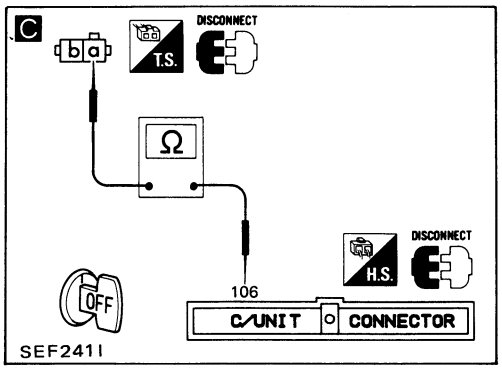

INSPECTION START

A

CHECK POWER SOURCE.
1) Disconnect P.R. control solenoid valve harness connector.
2) Turn ignition switch "ON".
3) Check voltage between terminal ⓑ and ground.
Battery voltage should exist.

N.G. → CHECK CONTINUITY BETWEEN P.R. CONTROL SOLENOID VALVE AND BATTERY.
Check following items.
- Fuse
- Ignition switch
- Harness or connectors

O.K. ↓

CHECK COMPONENTS.
1) Turn ignition switch "OFF".
2) Check P.R. control solenoid valve. (See page EF & EC-155.)

N.G. → Replace P.R. control solenoid valve.

O.K. ↓

B

CHECK OUTPUT SIGNAL.
1) Reconnect P.R. control solenoid valve harness connector.
2) Start engine and warm it up sufficiently [until more than 90°C (194°F) of coolant temperature].
3) Turn ignition switch "OFF" and then start engine again.
4) Check voltage between terminals ⓐ and ground.
Voltage:
0.5 - 1.0V (for 3 minutes after starting)

N.G. → **C**

CHECK HARNESS CONTINUITY BETWEEN P.R. CONTROL SOLENOID VALVE AND E.C.U.
1) Stop engine.
2) Disconnect P.R. control solenoid valve harness connector.
3) Disconnect E.C.U. harness connector.
4) Check continuity between terminals ⓐ and (106).
Continuity should exist.
If N.G., repair harness or connector.

O.K. ↓

1) Perform E.C.U. input/output signal inspection test.
2) If N.G., recheck the E.C.U. pin terminal (106) for damage or the connection of E.C.U. harness connector.

O.K. ↓

INSPECTION END

Diagnostic Procedure 18

INJECTORS (Not self-diagnostic item)

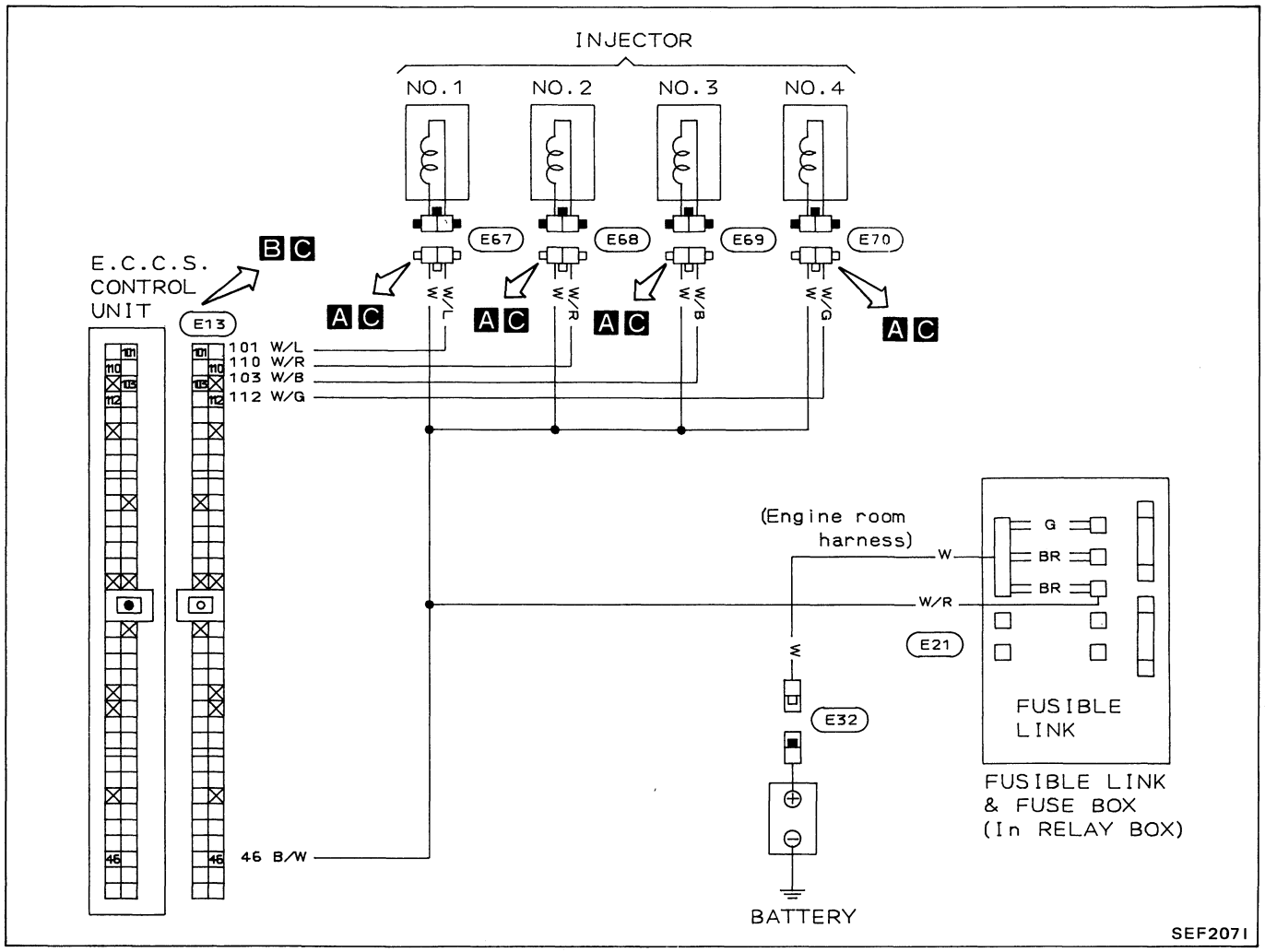

Component location

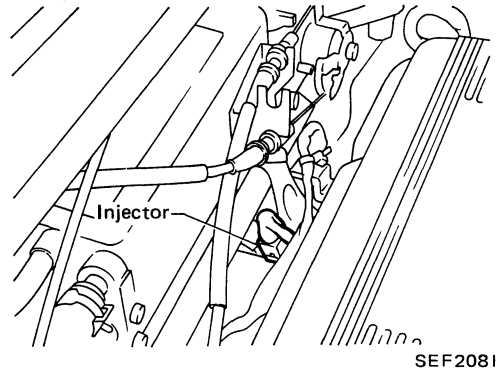

Diagnostic Procedure 18 (Cont'd)

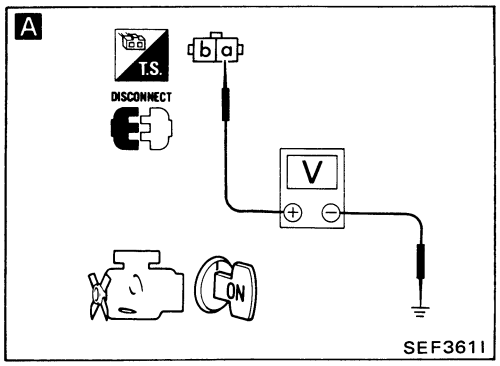

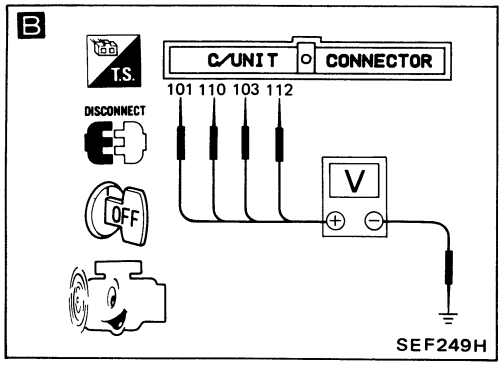

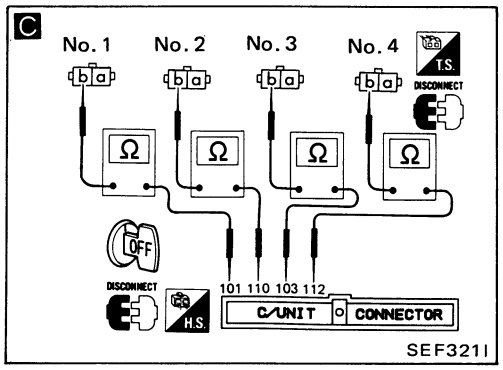

INSPECTION START

A

CHECK POWER SOURCE (Injector side).
1) Disconnect injector harness connectors.
2) Turn ignition switch "ON".
3) Check voltage between terminal ⓐ and ground.
Battery voltage should exist.

N.G. → CHECK CONTINUITY BETWEEN INJECTORS AND BATTERY.
If N.G., repair harness or connector.

O.K. ↓

CHECK COMPONENTS.
1) Turn ignition "OFF".
2) Check injectors.
(See page EF & EC-156.)

N.G. → Replace injectors.

O.K. ↓

B

CHECK OUTPUT SIGNAL.
1) Reconnect injector harness connector.
2) Start engine and warm it up sufficiently.
3) Check voltage between E.C.U. terminals (101), (103), (110), (112) and ground.
Battery voltage should exist.

N.G. → **C**

CHECK HARNESS CONTINUITY BETWEEN INJECTORS AND E.C.U.
1) Stop engine.
2) Disconnect injector harness connectors.
3) Disconnect E.C.U. harness connector.
4) Check continuity between terminals ⓑ (No. 1) and (101), ⓑ (No. 2) and (110), ⓑ (No. 3) and (103), ⓑ (No. 4) and (112).
Continuity should exist.
If N.G., repair harness or connector.

O.K. ↓

Recheck the E.C.U. pin terminals for damage or the connection of E.C.U. harness connector.

O.K. ↓

INSPECTION END

Diagnostic Procedure 19

SWIRL CONTROL VALVE (S.C.V.) CONTROL SOLENOID VALVE (Not self-diagnostic item)

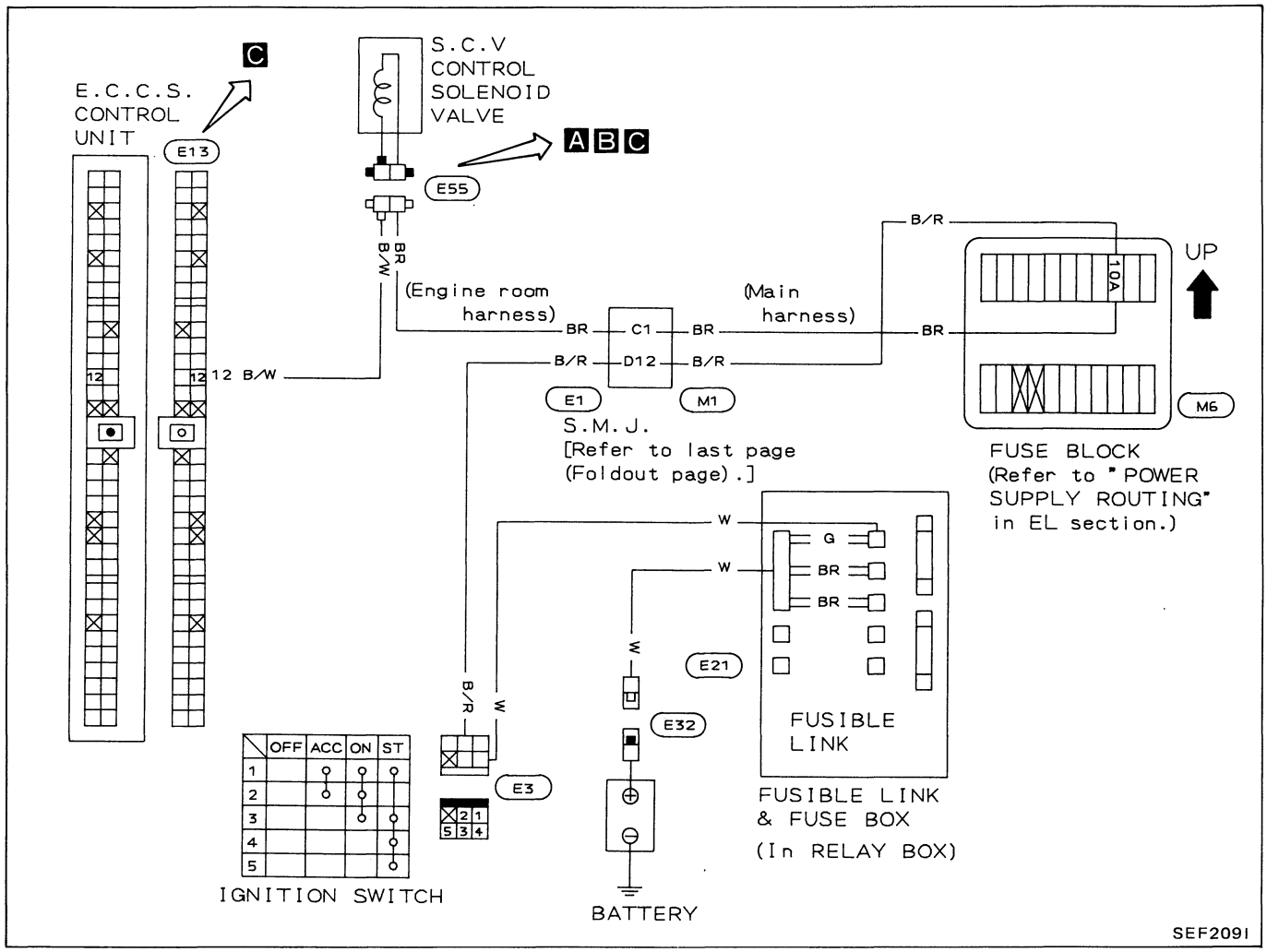

Component location

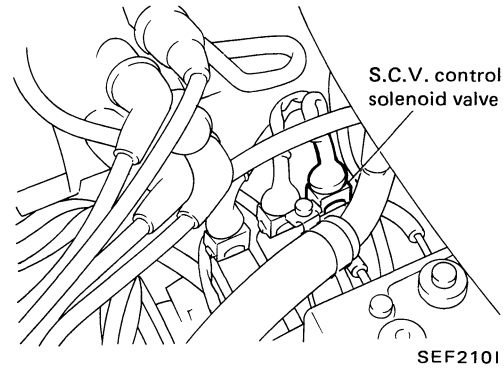

Diagnostic Procedure 19 (Cont'd)

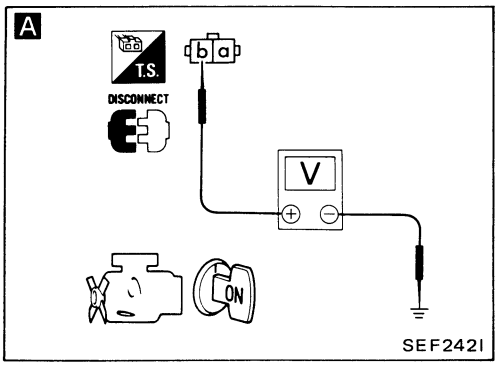

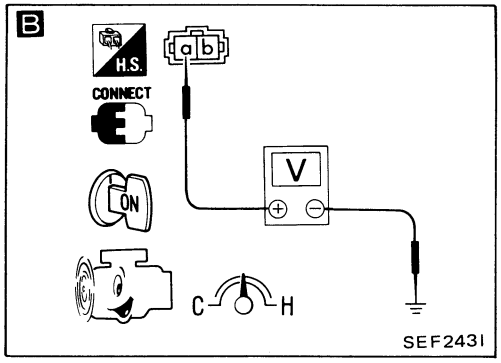

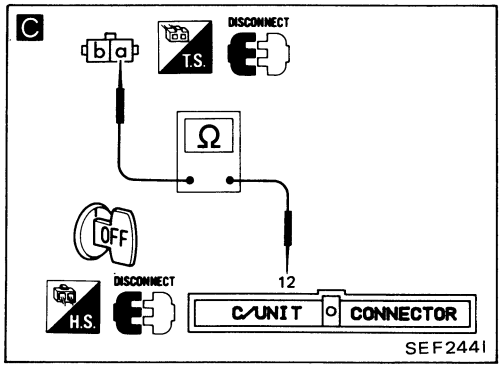

INSPECTION START

A

CHECK POWER SOURCE.
1) Disconnect S.C.V. control solenoid valve harness connector.
2) Turn ignition switch "ON".
3) Check voltage between terminal ⓑ and ground.
Battery voltage should exist.

N.G. → CHECK CONTINUITY FOR POWER SOURCE.
Check harness or connectors between terminals ⓑ and ⊕.

O.K. ↓

CHECK COMPONENTS.
1) Turn ignition switch "OFF".
2) Check S.C.V. control solenoid valve. (See page EF & EC-155.)

N.G. → Replace S.C.V. control solenoid valve.

O.K. ↓

B

CHECK OUTPUT SIGNAL.
1) Reconnect S.C.V. control solenoid valve harness connector.
2) Start engine and warm it up sufficiently.
3) Check voltage between terminal ⓐ and ground.

Engine speed	Voltage between terminal ⓐ and ground
Less than approx. 1,400 rpm	0.5 - 1.0V
More than approx. 1,400 rpm	Battery voltage

N.G. → **C**

CHECK HARNESS CONTINUITY BETWEEN SOLENOID AND E.C.U.
1) Stop engine.
2) Disconnect S.C.V. control solenoid valve harness connector and E.C.U. harness connector.
3) Check continuity between terminals ⓐ and ⑫.
Continuity should exist.
If N.G., repair or replace harness or connector.

O.K. ↓

1) Perform E.C.U. input/output signal inspection test. (Terminal ⑫)
2) If N.G., recheck the E.C.U. pin terminals for damage or the connection of E.C.U. harness connector.

O.K. ↓

CHECK COMPONENT.
Check swirl control valve and actuator. (See page EF & EC-156.)

N.G. → Replace swirl control valve or actuator.

O.K. ↓

INSPECTION END

Diagnostic Procedure 20

AUXILIARY AIR CONTROL (A.A.C.) VALVE (Not self-diagnostic item)

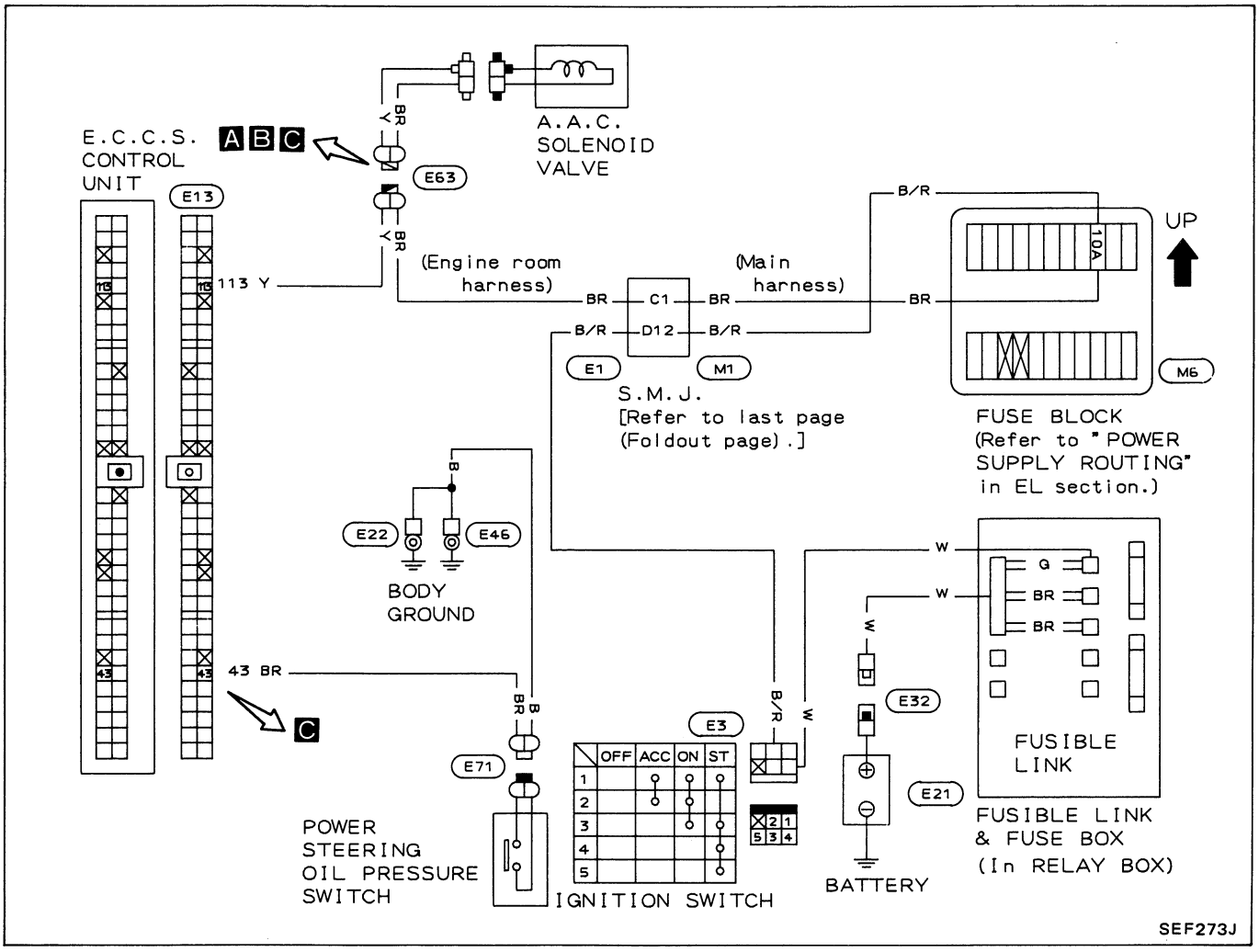

Component location

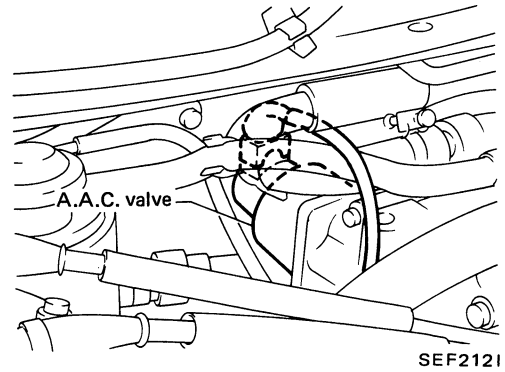

Diagnostic Procedure 20 (Cont'd)

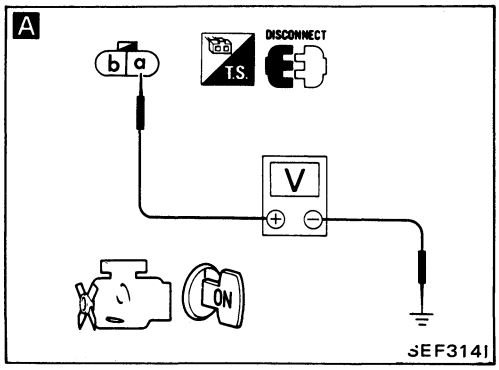

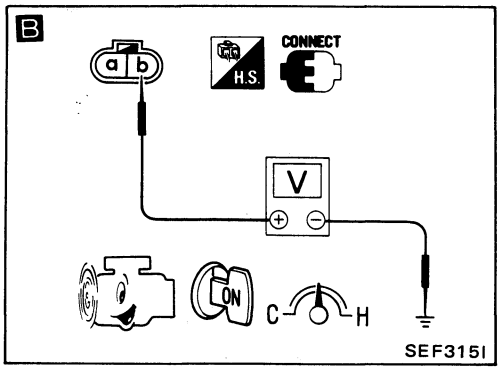

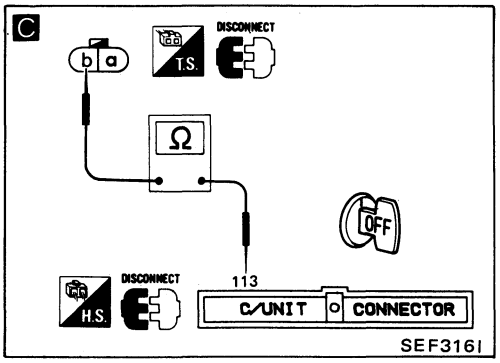

INSPECTION START

↓

CHECK COMPONENTS.
Check A.A.C. valve.
(See page EF & EC-156.)

N.G. → Replace A.A.C. valve.

↓ O.K.

A

CHECK POWER SOURCE.
1) Disconnect A.A.C. valve harness connector.
2) Turn ignition switch "ON".
3) Check voltage between terminal ⓐ and ground.
Battery voltage should exist.
If N.G., repair harness or connectors.

N.G. → **CHECK CONTINUITY BETWEEN A.A.C. VALVE AND BATTERY.**
Check following items.
- Fuse
- "G" fusible link
- Ignition switch
- Harness or connectors

↓ O.K.

B

CHECK INPUT SIGNAL.
1) Turn ignition switch "OFF".
2) Reconnect A.A.C. valve harness connector.
3) Start engine and warm it up sufficiently.
4) Check voltage between terminal ⓑ and ground.
Voltage:
Approximately 7 - 10V

N.G. → C

CHECK CONTINUITY BETWEEN E.C.U. AND A.A.C. VALVE.
1) Stop engine.
2) Disconnect E.C.U. harness connector.
3) Disconnect A.A.C. valve harness connector.
4) Check continuity between terminals (113) and ⓑ.
Continuity should exist.
If N.G., repair or replace harness connectors.

↓ O.K.

1) Perform E.C.U. input/output signal inspection test. (Terminal (113).)
2) If N.G. recheck the E.C.U. pin terminals for damage or the connection of E.C.U. harness connector.

↓ O.K.

INSPECTION END

Diagnostic Procedure 21

FAST IDLE CONTROL (With air conditioner) (Not self-diagnositc item)

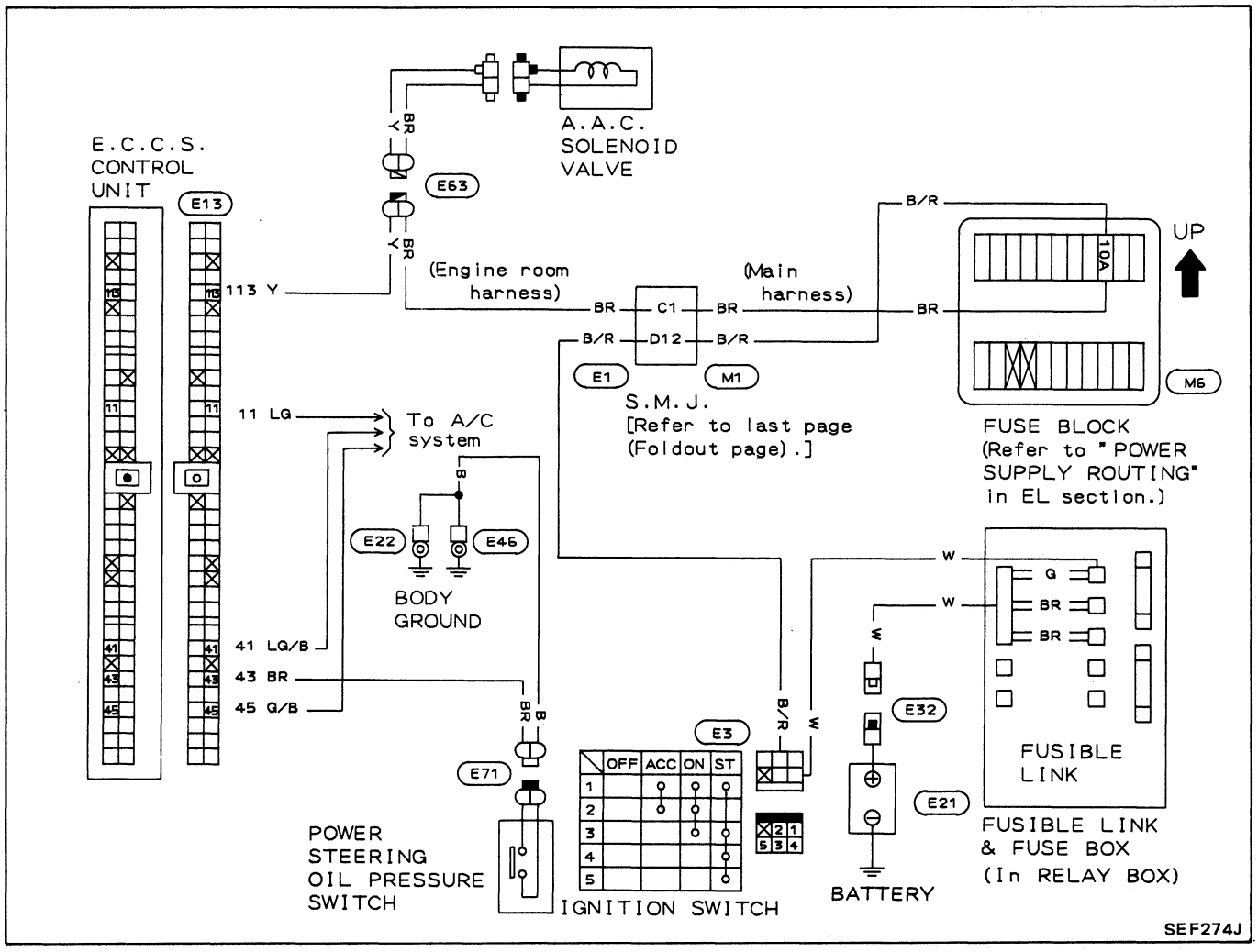

Diagnostic Procedure 21 (Cont'd)

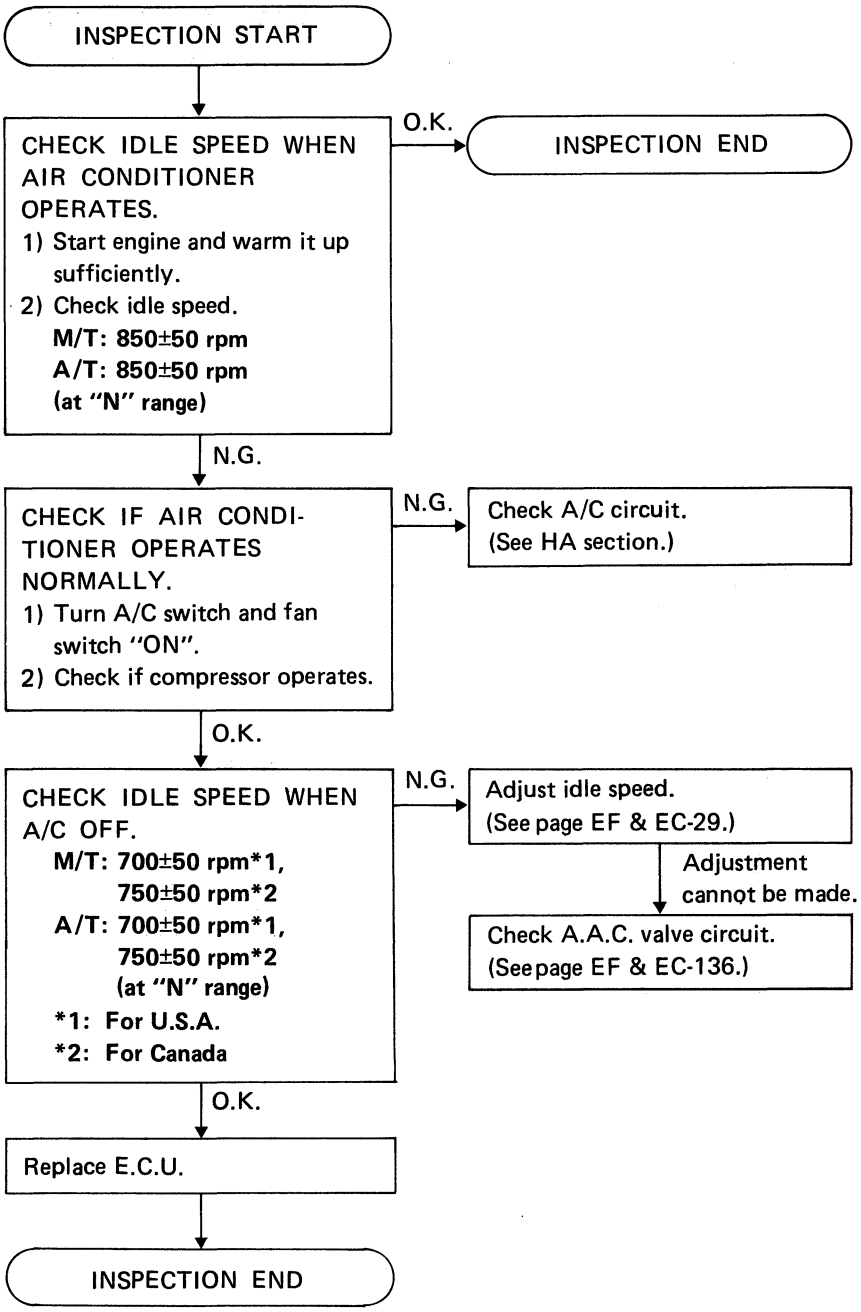

Diagnostic Procedure 22

AIR INDUCTION VALVE (A.I.V.) CONTROL SOLENOID VALVE (Not self-diagnostic item)

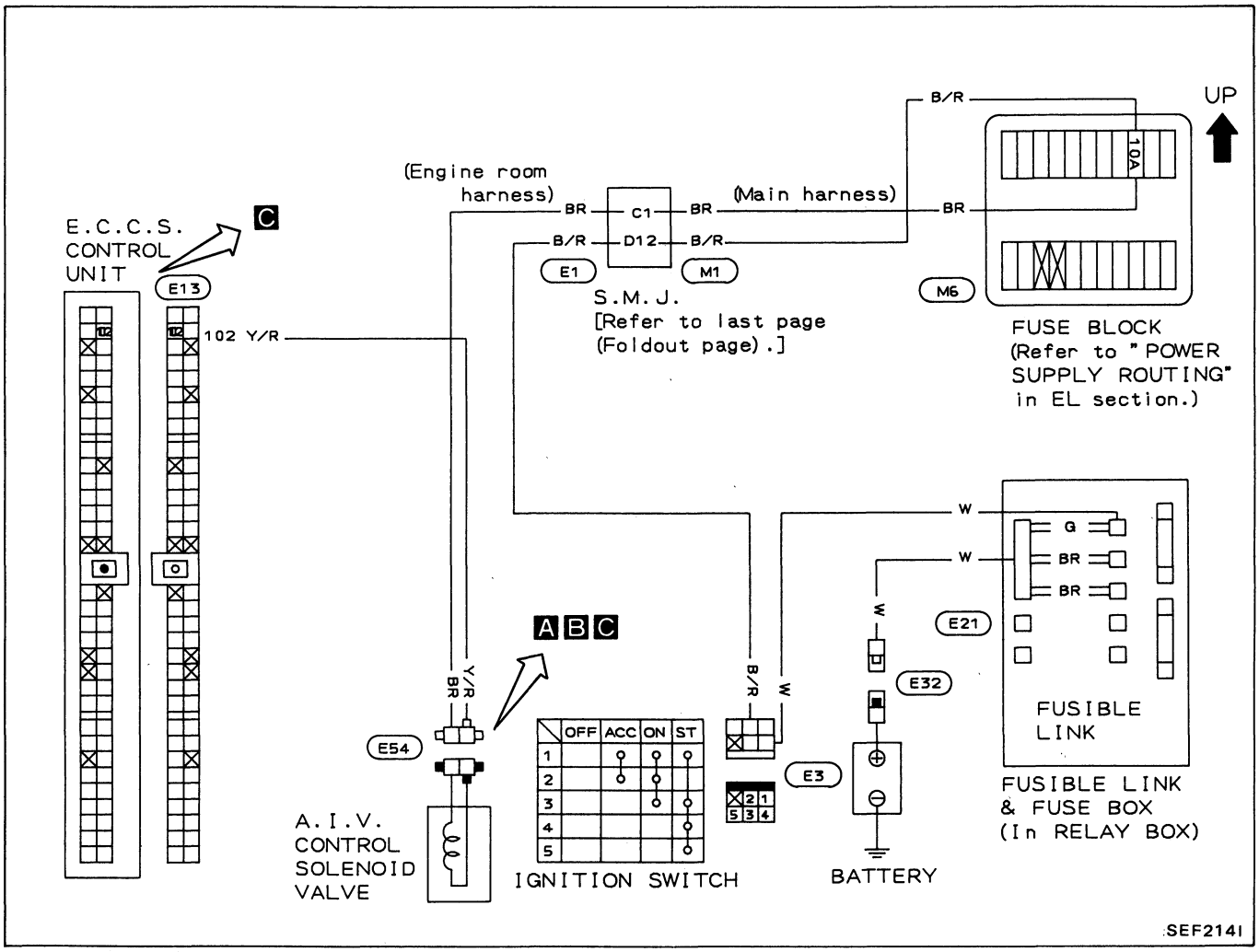

Component location

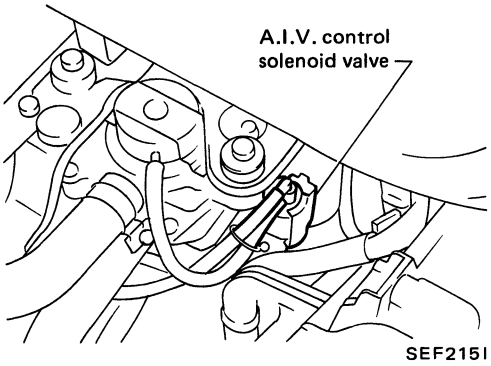

Diagnostic Procedure 22 (Cont'd)

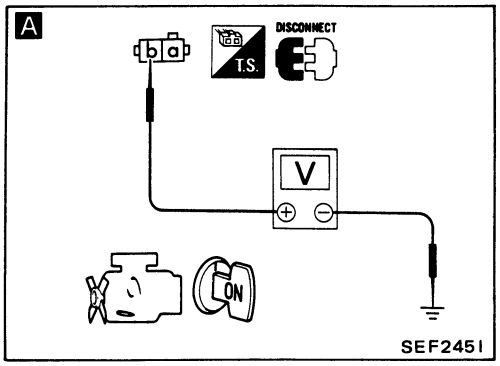

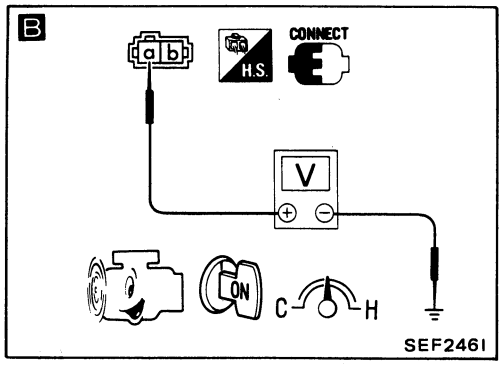

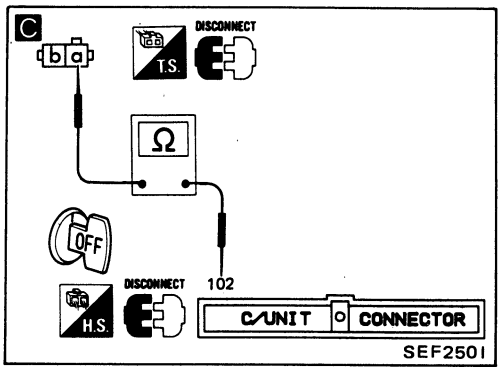

INSPECTION START

A

CHECK POWER SOURCE.
1) Disconnect A.I.V. control solenoid valve harness connector.
2) Turn ignition switch "ON".
3) Check voltage between terminal ⓑ and ground.
Voltage: Battery voltage

N.G. → CHECK HARNESS CONTINUITY BETWEEN A.I.V. CONTROL SOLENOID VALVE AND BATTERY. Check harness or connector.

O.K. ↓

CHECK COMPONENTS.
1) Turn ignition switch "OFF".
2) Check A.I.V. control solenoid valve. (See page EF & EC-155.)

N.G. → Replace A.I.V. control solenoid valve.

O.K. ↓

B

CHECK OUTPUT SIGNAL.
1) Reconnect A.I.V. control solenoid valve harness connector.
2) Start engine and warm it up sufficiently.
3) Check voltage between terminal ⓐ and ground.

Accelerator pedal position	Voltage
Released	0.5 - 1.0V
Depressed	Battery voltage

N.G. → **C**

CHECK HARNESS CONTINUITY BETWEEN A.I.V. CONTROL SOLENOID VALVE AND E.C.U.
1) Stop engine.
2) Disconnect A.I.V. control solenoid valve harness connector.
3) Disconnect E.C.U. harness connector.
4) Check continuity between terminals ⓐ and (102).
Continuity should exist.
If N.G., repair harness or connector.

↓

1) Perform E.C.U. input/output signal inspection test.
2) If N.G., recheck the E.C.U. pin terminals for damage or the connection of E.C.U. harness connector.

O.K. ↓

CHECK COMPONENT.
Check air induction valve.
(See page EF & EC-157.)

N.G. → Replace air induction valve.

O.K. ↓

INSPECTION END

Diagnostic Procedure 23

NEUTRAL SWITCH AND INHIBITOR SWITCH (Not self-diagnostic item)

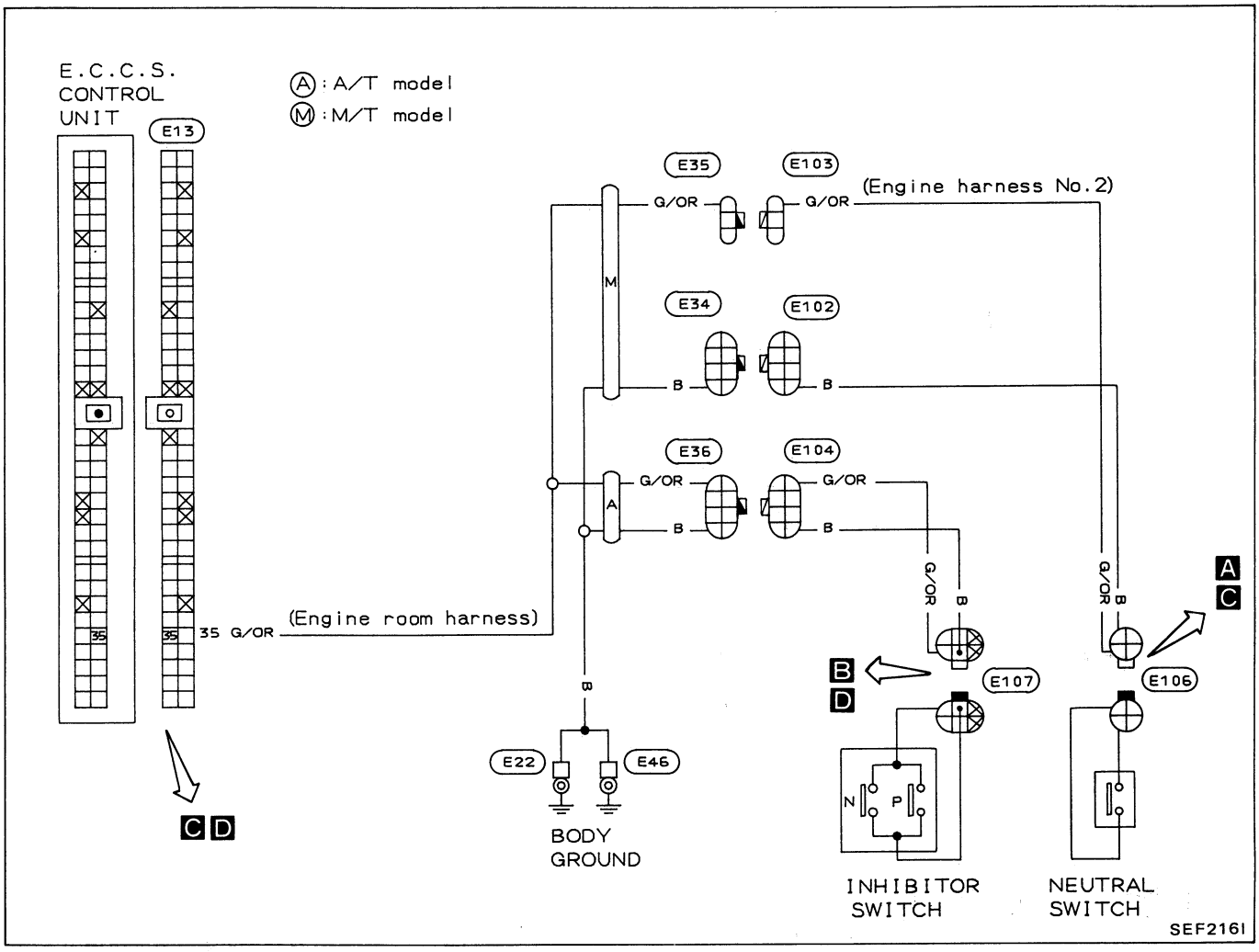

Diagnostic Procedure 23 (Cont'd)

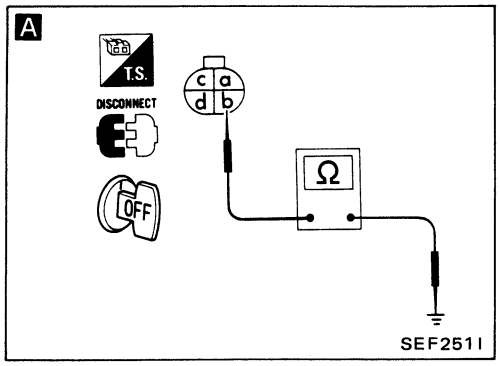

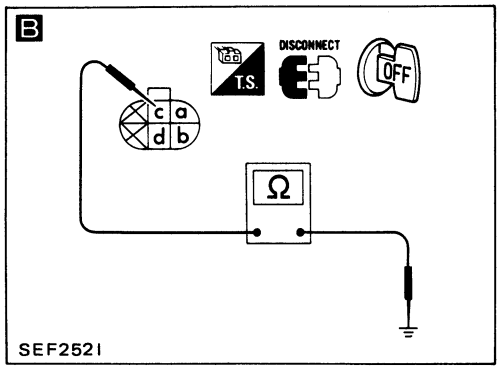

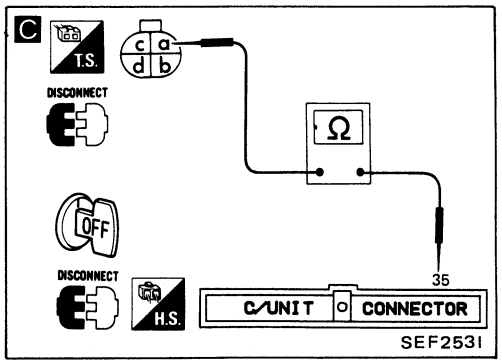

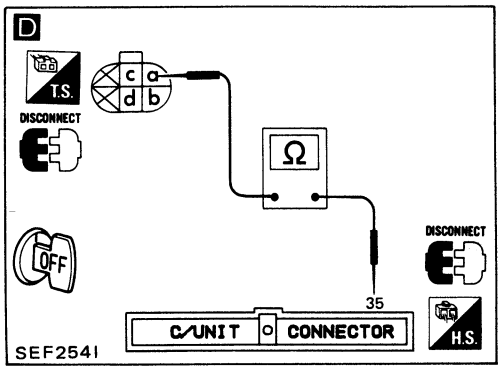

INSPECTION START

↓

CHECK COMPONENTS.
Check neutral switch (M/T) or inhibitor switch (A/T).
(See page EF & EC-158.)

N.G. → Replace switch.

O.K. ↓

CHECK CONTINUITY BETWEEN SWITCH AND GROUND.

A M/T model
Check continuity between terminal ⓑ and ground.

B A/T model
1) Turn ignition switch "OFF".
2) Check continuity between terminal ⓒ and ground.
Continuity should exist.

N.G. → Repair or replace harness or connector.

O.K. ↓

CHECK CONTINUITY BETWEEN SWITCH AND E.C.U.

C M/T model
Check continuity between neutral switch connector terminal ⓐ and ㉟.

D A/T model
Check continuity between inhibitor switch connector terminal ⓐ and ㉟.
Continuity should exist.

N.G. → Repair or replace harness or connector.

O.K. ↓

INSPECTION END

Diagnostic Procedure 24

RADIATOR FAN CONTROL (Not self-diagnostic item)

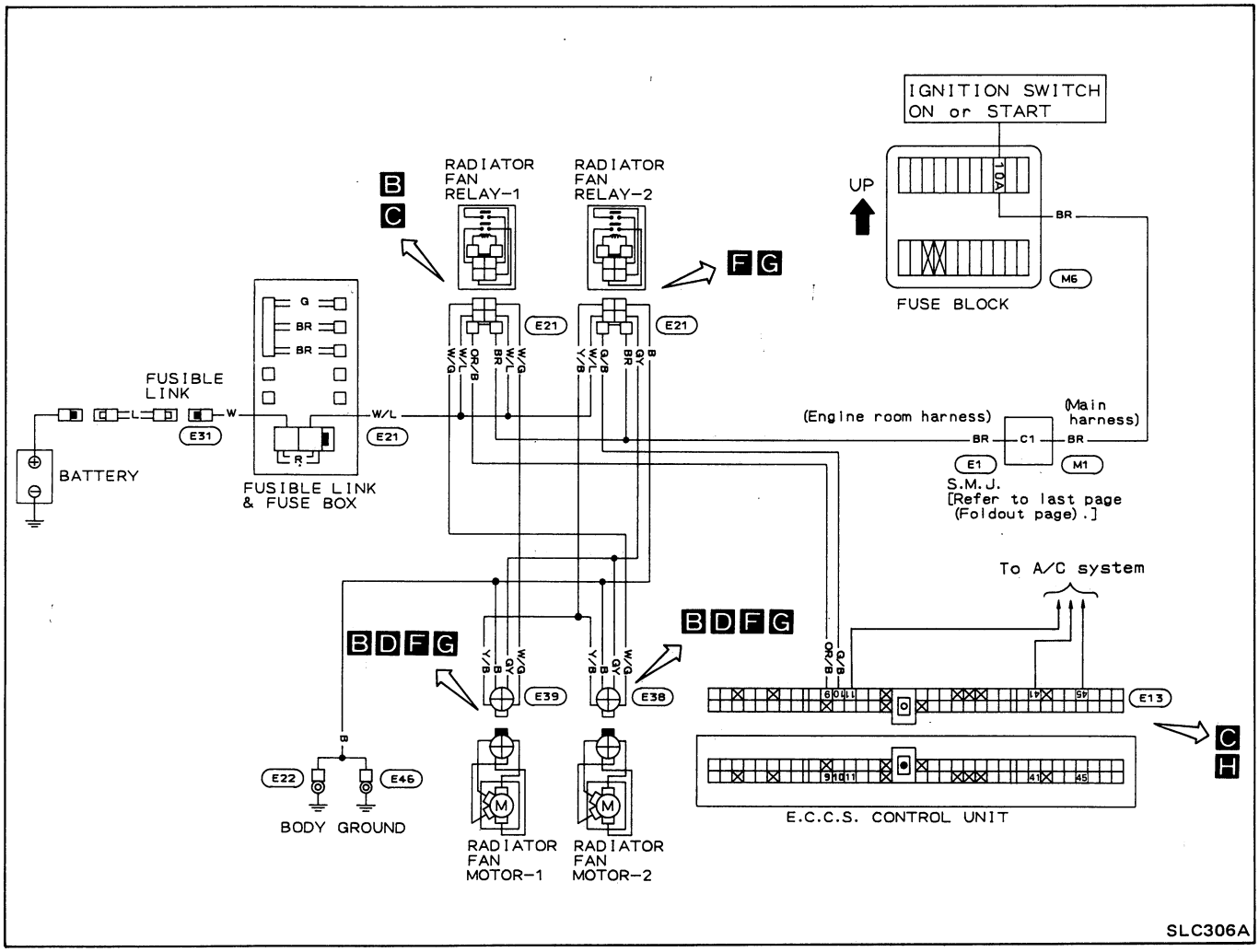

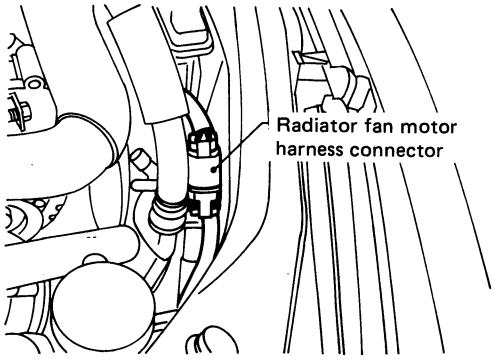

SEF280I

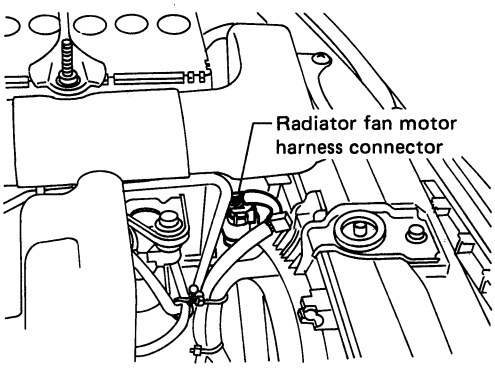

SEF281I

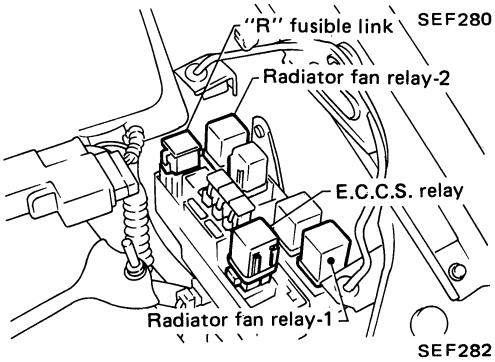

SEF282I

Diagnostic Procedure 24 (Cont'd)

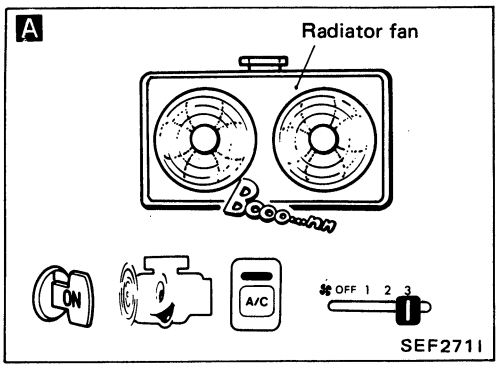

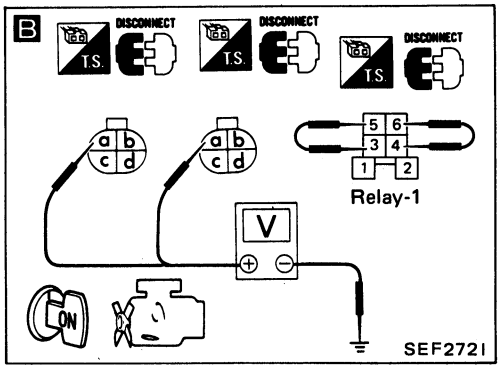

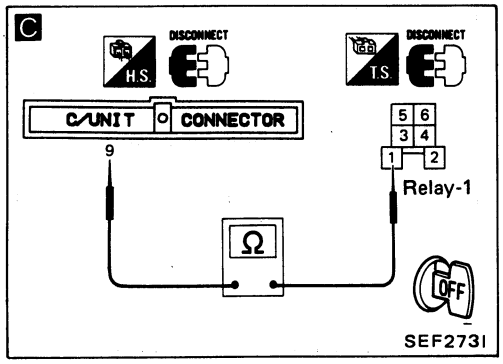

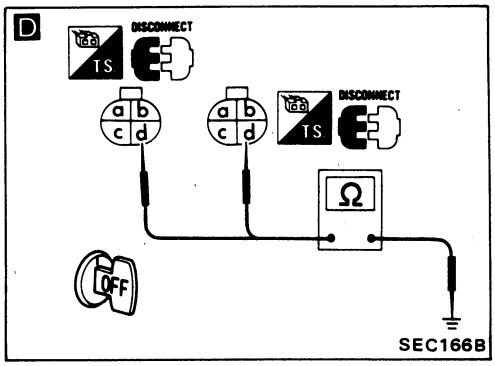

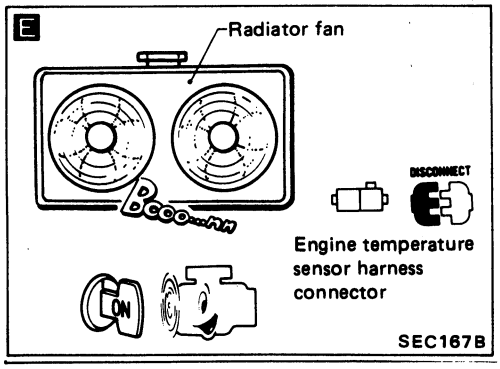

INSPECTION START

A

CHECK RADIATOR FAN LOW SPEED CIRCUIT.
1) Start engine.
2) Turn air conditioner switch and blower fan switch "ON".
3) Make sure that both radiator fan motors operate at low speed.

O.K. → ⊕⊕

N.G. ↓

B

CHECK POWER SUPPLY.
1) Stop engine.
2) Disconnect radiator fan relay-1.
3) Connect jumper wire between terminals ③ and ⑤, ④ and ⑥.
4) Disconnect both radiator fan motor harness connectors.
5) Turn ignition switch "ON".
6) Check voltage between terminal ⓐ and ground.
Voltage: Battery voltage

N.G. → Check the following items.
1) "L" fusible link
2) "R" fusible link
3) S.M.J. (E1)

O.K. ↓

Repair harness or connectors.

O.K. ↓

CHECK COMPONENT (Radiator fan relay-1).
Refer to "Electrical Components Inspection".
(See page EF & EC-158.)

O.K. ↓

C

CHECK HARNESS CONTINUITY BETWEEN E.C.U. AND RADIATOR FAN RELAY-1.
1) Turn ignition switch "OFF".
2) Disconnect jumper wire.
3) Reconnect both radiator fan motor harness connectors.
4) Disconnect E.C.U. S.M.J. harness connector.
5) Check harness continuity between E.C.U. terminal ⑨ and terminal ①.
Continuity should exist.

→ Repair harness or connectors.

O.K. ↓

⊕

Diagnostic Procedure 24 (Cont'd)

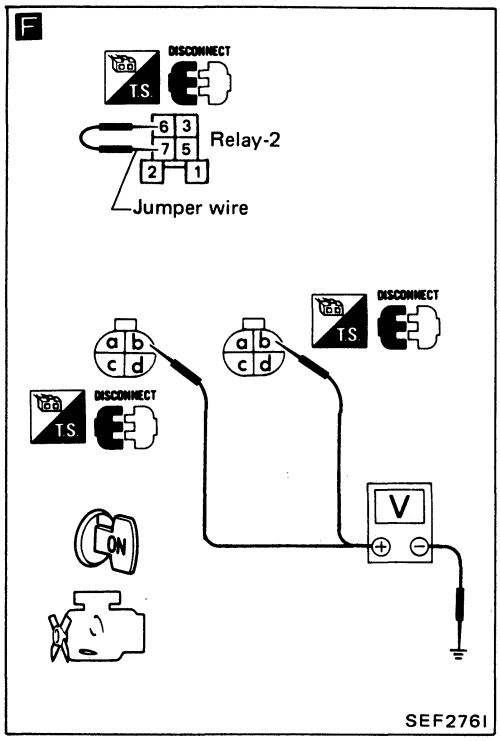

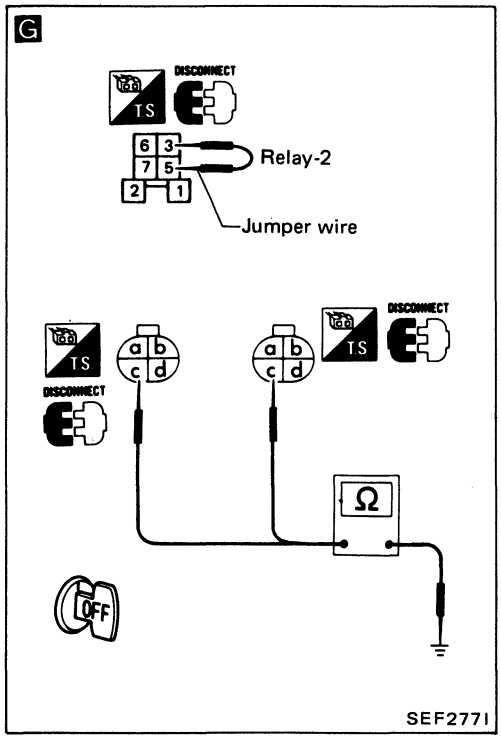

D

CHECK GROUND CIRCUIT.
1) Disconnect both radiator fan motor harness connectors.
2) Check harness continuity between terminal ⓓ and ground.
Continuity should exist.

N.G. → Repair harness or connectors.

O.K. ↓

Replace radiator fan motor.

E

CHECK RADIATOR FAN HIGH-SPEED CIRCUIT.
1) Start engine.
2) Disconnect engine temperature sensor harness connector.
3) Make sure that both radiator fans operate at high speed.

O.K. → INSPECTION END

N.G. ↓

F

CHECK POWER SUPPLY.
1) Stop engine.
2) Disconnect radiator fan relay-2.
3) Connect jumper wire between terminals ⑥ and ⑦.
4) Disconnect both radiator fan motor harness connectors.
5) Turn ignition switch "ON".
6) Check voltage between terminal ⓑ and ground.
Voltage: Battery voltage

N.G. → Check the following items.
1) "L" fusible link
2) "R" fusible link
3) S.M.J. (CI)

O.K. ↓

Repair harness or connectors.

O.K. ↓

G

CHECK GROUND CIRCUIT.
1) Turn ignition switch "OFF".
2) Disconnect jumper wire between terminals ⑥ and ⑦.
3) Connect jumper wire between terminals ⑤ and ③.
4) Check harness continuity between terminal ⓒ and ground.
Continuity should exist.

N.G. → Repair harness or connectors.

O.K. ↓

Diagnostic Procedure 24 (Cont'd)

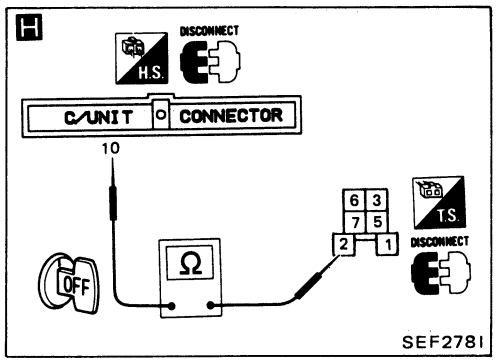

H

CHECK HARNESS CONTINUITY BETWEEN E.C.U. AND RADIATOR FAN RELAY-2.

1) Reconnect both radiator fan motor harness connectors.
2) Disconnect jumper wire between terminals ③ and ⑤.
3) Check harness continuity between E.C.U. terminal ⑩ and terminal ②.
   Continuity should exist.

N.G. → Repair harness or connectors.

O.K. ↓

Turn ignition switch "OFF".
CHECK COMPONENT
(Radiator fan relay-2).
Refer to "Electrical Components Inspection".
(See page EF & EC-158.)

O.K. ↓

Replace radiator fan motor.

Electrical Components Inspection

E.C.U. INPUT/OUTPUT SIGNAL INSPECTION

E.C.U. inspection table

*Data are reference values.

TERMINAL NO.	ITEM	CONDITION	*DATA
1	Ignition signal	Engine is running. └ Idle speed	0.3 - 0.6V
		Engine is running. └ Engine speed is 2,000 rpm	Approximately 1.0V
3	Ignition check	Engine is running. └ Idle speed	9 - 12V
4	E.C.C.S. relay (Main relay)	Engine is running. ↓ Ignition switch "OFF" └ Within approximately 1 second after turning ignition switch "OFF"	0 - 1V
		Ignition switch "OFF" └ For approximately 1 second after turning ignition switch "OFF"	BATTERY VOLTAGE (11 - 14V)
8	Exhaust gas temperature sensor (Only for California model)	Engine is running. └ Idle speed	1.0 - 2.0V
		Engine is running. └ E.G.R. system is operating.	0 - 1.0V
11	Air conditioner relay	Engine is running. └ Both A/C switch and blower switch are "ON"	0 - 1.0V
		Engine is running. └ A/C switch is "OFF".	BATTERY VOLTAGE (11 - 14V)
12	S.C.V. control solenoid valve	Engine is running. └ Idle speed	0 - 1.0V
		Engine is running. └ Engine speed is 2,000 rpm.	BATTERY VOLTAGE (11 - 14V)

Electrical Components Inspection (Cont'd)

*Data are reference values.

TERMINAL NO.	ITEM	CONDITION	*DATA
16	Air flow meter	Engine is running.	1.0 - 3.0V Output voltage varies with engine revolution.
18	Engine temperature sensor	Engine is running.	1.0 - 5.0V Output voltage varies with engine water temperature.
19	Exhaust gas sensor	Engine is running. └ After warming up sufficiently.	0 - Approximately 1.0V
20	Throttle sensor	Ignition switch "ON"	0.4 - Approximately 4V Output voltage varies with the throttle valve opening angle.
22 30	Crank angle sensor (Reference signal)	Engine is running. **Do not run engine at high speed under no-load.**	0.2 - 0.5V
26	Air temperature sensor	Ignition switch "ON" └ Temperature of intake air is 20°C (68°F)	Approximately 1.0 - 1.5V
		Ignition switch "ON" └ Temperature of intake air is 80°C (176°F)	Approximately 0.3V
31 40	Crank angle sensor (Position signal)	Engine is running. **Do not run engine at high speed under no-load.**	2.0 - 3.0V
33	Idle switch (⊖ side)	Ignition switch "ON" └ Throttle valve: idle position	Approximately 9 - 10V
		Ignition switch "ON" └ Throttle valve: Any position except idle position	0V
34	Start signal	Cranking	8 - 12V
35	Neutral switch & Inhibitor switch	Ignition switch "ON" └ Neutral/Parking	0V
		Ignition switch "ON" └ Except the above gear position	Approximately 12V

Electrical Components Inspection (Cont'd)

*Data are reference values.

TERMINAL NO.	ITEM	CONDITION	*DATA
36	Ignition switch	Ignition switch "OFF"	0V
		Ignition switch "ON"	BATTERY VOLTAGE (11 - 14V)
37	Throttle sensor power supply	Ignition switch "ON"	Approximately 5V
38 47	Power supply for E.C.U.	Ignition switch "ON"	BATTERY VOLTAGE (11 - 14V)
41	Air conditioner switch	Engine is running. └ Both air conditioner switch and blower switch are "ON".	0V
		Engine is running. └ Air conditioner switch is "OFF".	BATTERY VOLTAGE (11 - 14V)
43	Power steering oil pressure switch	Engine is running. └ Steering wheel is being turned.	0V
		Engine is running. └ Steering wheel is not being turned.	8 - 9V
44	Idle switch (⊕ side)	Ignition switch "ON" └ Throttle valve: idle position	Approximately 9 - 10V
		Ignition switch "ON" └ Throttle valve: Except idle position	BATTERY VOLTAGE (11 - 14V)
45	Thermo control amp.	Engine is running. Air conditioner is operating. └ Evaporator outlet air temperature is between 3.0 - 8.0°C (37 - 46°F)	Approximately 8 - 9V
		Engine is running. Air conditioner is operating. └ Evaporator outlet air temperature is over 8°C (46°F)	Approximately 0V
46	Power supply (Back-up)	Ignition switch "OFF"	BATTERY VOLTAGE (11 - 14V)

Electrical Components Inspection (Cont'd)

*Data are reference values.

TERMINAL NO.	ITEM	CONDITION	*DATA
101	Injector No. 1	Engine is running.	BATTERY VOLTAGE (11 - 14V)
103	Injector No. 3		
110	Injector No. 2		
112	Injector No. 4		
102	A.I.V. control solenoid valve	Engine is running. Idle speed	0 - 1.0V
		Engine is running. Accelerator pedal is depressed. After warming up	BATTERY VOLTAGE (11 - 14V)
104	Fuel pump relay	Ignition switch "ON" For 5 seconds after turning ignition switch "ON" Engine is running.	0.7 - 0.9V
		Ignition switch "ON" Within 5 seconds after turning ignition switch "ON"	BATTERY VOLTAGE (11 - 14V)
105	E.G.R. control solenoid valve	Engine is running. Engine is cold. [Water temperature is below 60°C (140°F).]	0.7 - 0.9V
		Engine is running. After warming up [Water temperature is between 60°C (140°F) and 105°C (221°F).]	BATTERY VOLTAGE (11 - 14V)

Electrical Components Inspection (Cont'd)

*Data are reference values.

TERMINAL NO.	ITEM	CONDITION	*DATA
106	Pressure regulator control solenoid valve	Stop and restart engine after warming it up. └ Water temperature is above 90°C (194°F)	0 - 1.0V (for 3 minutes after ignition switch is turned off.)
			BATTERY VOLTAGE (After 3 minutes)
		Stop and restart engine after warming it up. └ Water temperature is below 90°C (194°F)	BATTERY VOLTAGE (11 - 14V)
113	A.A.C. valve	Engine is running. └ Idle speed	7 - 10V
		Engine is running. ├ Steering wheel is being turned. ├ Air conditioner is operating. ├ Rear defogger is "ON". └ Headlamps are in high position.	4 - 7V

E.C.U. PIN CONNECTOR TERMINAL LAYOUT

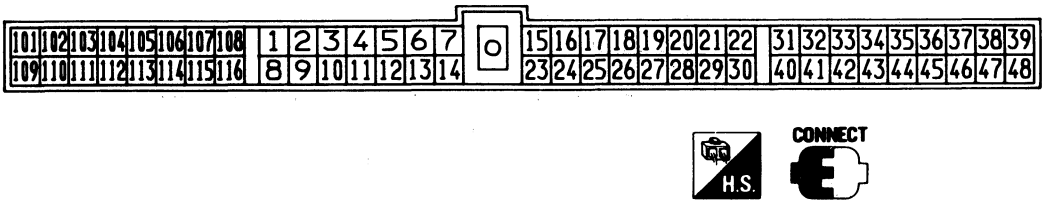

SEF419H

Electrical Components Inspection (Cont'd)

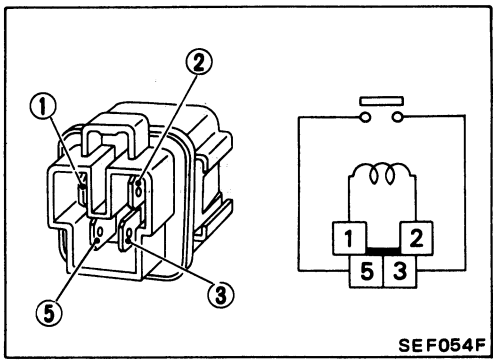

SEF054F

E.C.C.S. RELAY

Check continuity between terminals ③ and ⑤.

Condition	Continuity
12V direct current supply between terminals ① and ②	Yes
No supply	No

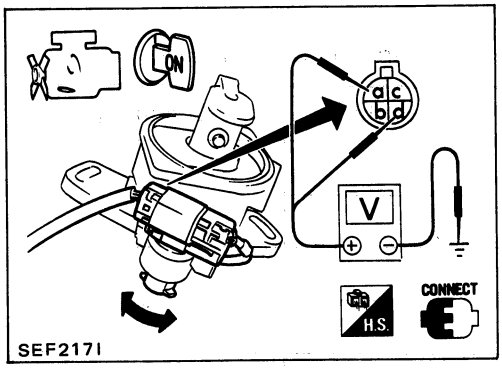

SEF217I

CRANK ANGLE SENSOR

1. Remove distributor from engine. (crank angle sensor harness connector is connected.)
2. Turn ignition switch "ON".
3. Rotate crank angle sensor shaft slowly and check voltage between terminals ⓐ, ⓓ and ground.

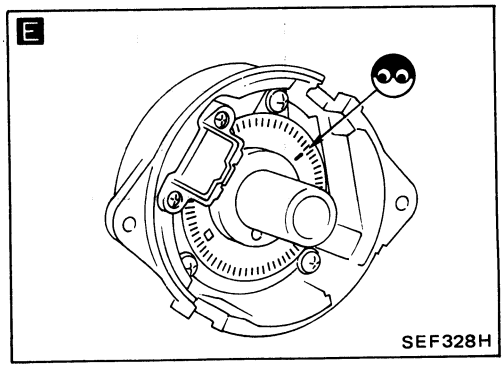

SEF328H

4. Visually check rotor plate for damage or dust.

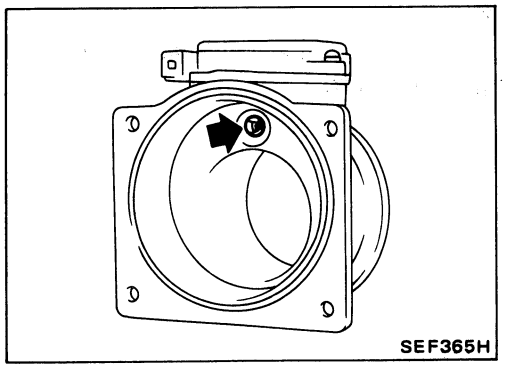
SEF365H

AIR FLOW METER

- Visually check hot wire air passage for dust.

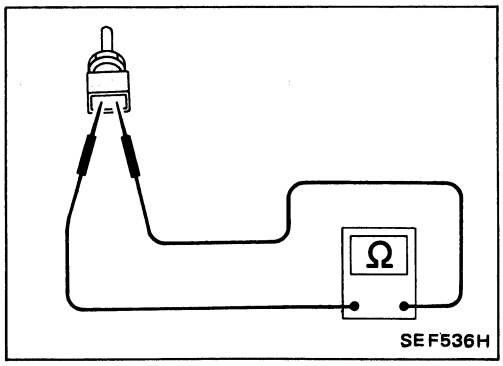

SEF536H

ENGINE TEMPERATURE SENSOR

Check engine temperature sensor resistance.

Temperature °C (°F)	Resistance kΩ
20 (68)	2.1 - 2.9
80 (176)	0.30 - 0.33

Electrical Components Inspection (Cont'd)

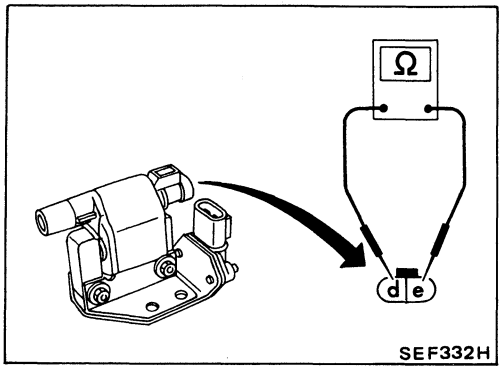

SEF332H

IGNITION COIL

Check ignition coil resistance.

Terminal	Resistance
ⓓ - ⓔ	Approximately 0.7Ω

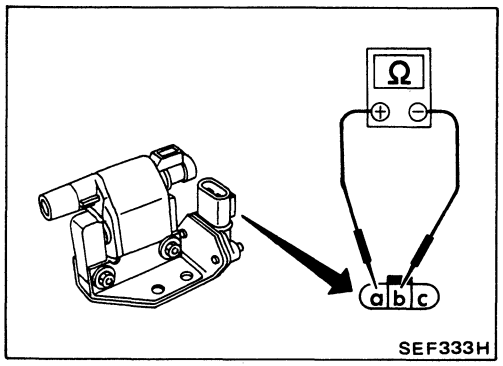

SEF333H

POWER TRANSISTOR

Check continuity between power transistor terminals.

Terminal No.	Tester polarity	Continuity
ⓐ	⊕	No
ⓑ	⊖	
ⓐ	⊖	Yes
ⓑ	⊕	
ⓐ	⊕	No
ⓒ	⊖	
ⓐ	⊖	Yes
ⓒ	⊕	

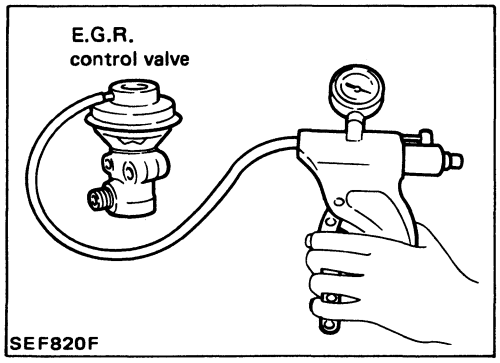

SEF820F

E.G.R. CONTROL VALVE

Apply vacuum to E.G.R. vacuum port with a hand vacuum pump.
E.G.R. control valve spring should lift.

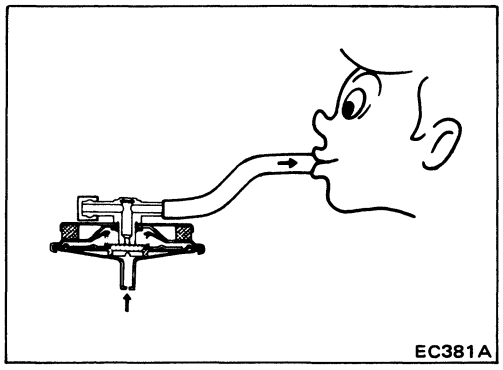
EC381A

B.P.T. VALVE

Plug one of two ports of B.P.T. valve.
Apply a pressure above 0.490 kPa (50 mmH_2O, 1.97 inH_2O) to check for leakage. If a leak is noted, replace valve.

Electrical Components Inspection (Cont'd)

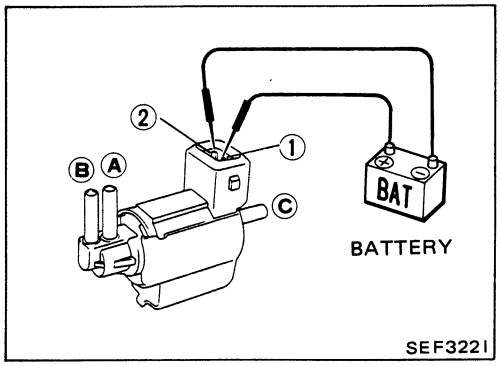

E.G.R. CONTROL SOLENOID VALVE, A.I.V. CONTROL SOLENOID VALVE, P.R. CONTROL SOLENOID VALVE AND S.C.V. CONTROL SOLENOID VALVE

Check air passages continuity.

Condition	Air passage continuity between Ⓐ and Ⓑ	Air passage continuity between Ⓐ and Ⓒ
12V direct current supply between terminals ① and ②	Yes	No
No supply	No	Yes

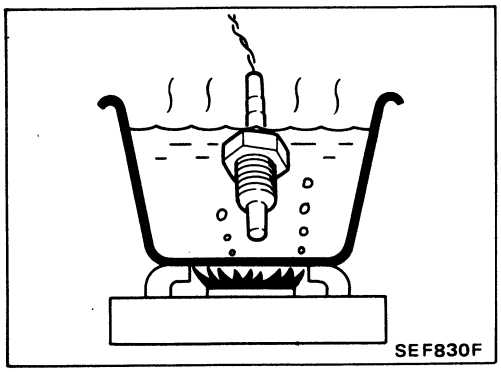

EXHAUST GAS TEMPERATURE SENSOR

Check resistance change and resistance value at 100°C (212°F).

- **Resistance should decrease in response to temperature increase.**

  Resistance: 100°C (212°F)

  85.3 ± 8.53 kΩ

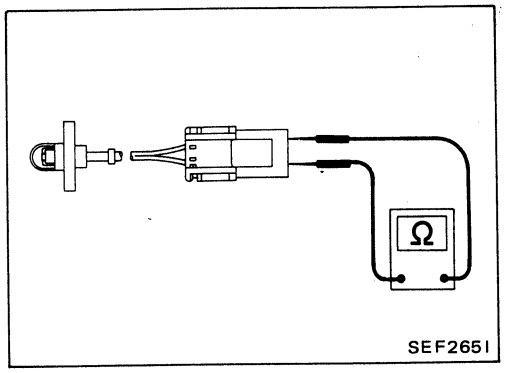

AIR TEMPERATURE SENSOR

Check air temperature sensor resistance.

Temperature °C (°F)	Resistance kΩ
20 (68)	2.1 - 2.9
80 (176)	0.27 - 0.38

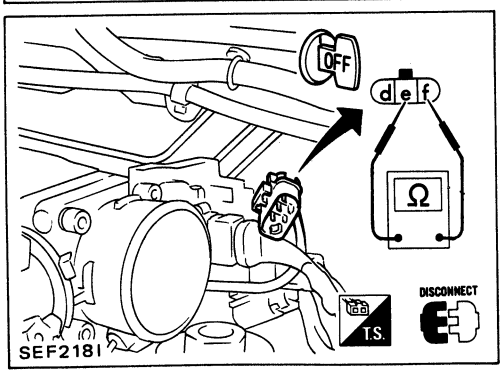

THROTTLE SENSOR

Make sure that resistance between terminals ⓔ and ⓕ changes when opening throttle valve manually.

Resistance should change.

Electrical Components Inspection (Cont'd)

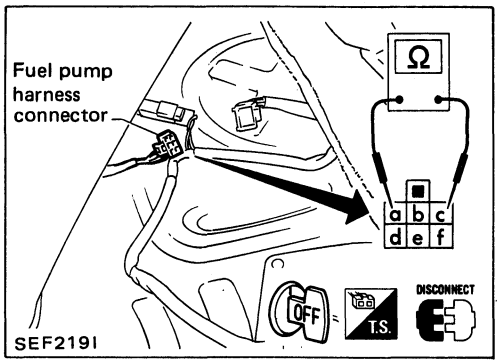

FUEL PUMP

Check continuity between terminals ⓐ and ⓒ.

Continuity should exist.

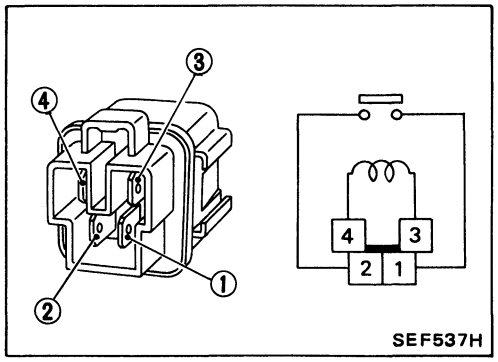

FUEL PUMP RELAY

Check continuity between terminals ① and ②.

Condition	Continuity
12V direct current supply between terminals ③ and ④	Yes
No supply	No

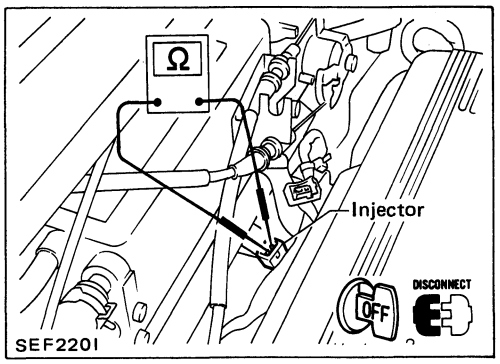

INJECTORS

- Check injector resistance.
  Resistance:
  Approximately 10 - 15Ω
- Remove injector and check nozzle for clogging.

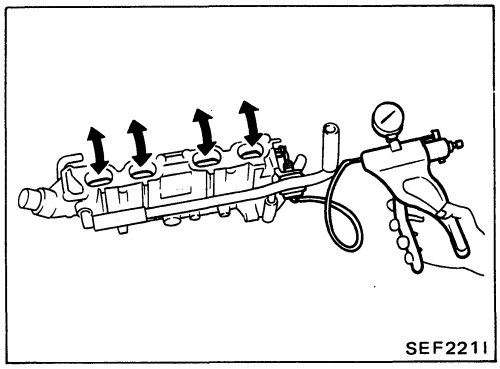

SWIRL CONTROL VALVE

Supply vacuum to actuator and check swirl control valve operation.

Condition	Swirl control valve
Supply vacuum to actuator	Close
No supply	Open

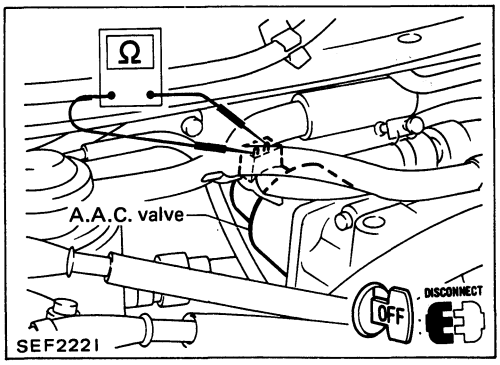

A.A.C. VALVE

- Check A.A.C. valve resistance.
  Resistance:
  Approximately 10Ω [at 20°C (68°F)]

Electrical Components Inspection (Cont'd)

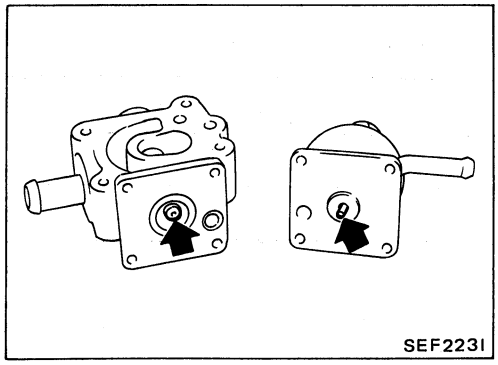
SEF223I

- Check plunger for seizure or sticking.
- Check spring for broken.

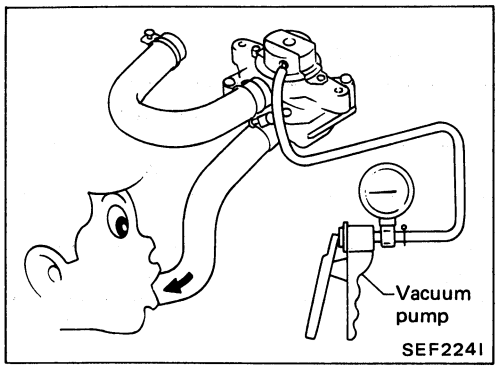

SEF224I

AIR INDUCTION VALVE

Apply vacuum to vacuum motor, suck or blow hose to make sure that air flows only towards the air induction side.

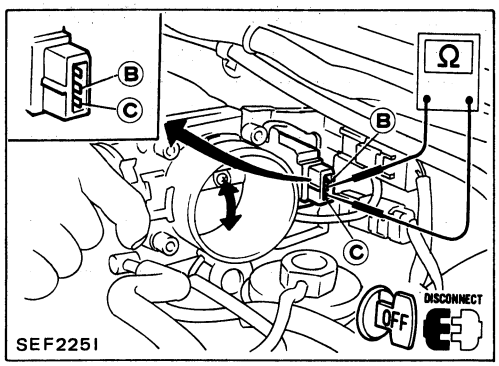

SEF225I

IDLE SWITCH

Unit check

- Check continuity between terminals Ⓑ and Ⓒ while moving throttle valve.

Throttle valve condition	Continuity
Fully closed	Yes
Open	No

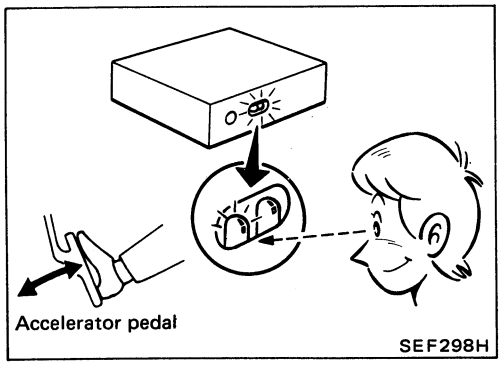

SEF298H

Adjustment

1. Remove air duct.
2. Loosen throttle valve switch body securing bolts.
3. Disconnect throttle sensor harness connector.
4. Install air duct.
5. Start engine and warm it up sufficiently.
6. Turn self-diagnosis to mode Ⅳ.
7. Depress accelerator pedal and release slowly.
8. Check engine rpm when red L.E.D. on E.C.U. is turned on.
   Idle switch ON-OFF: 1,000 ± 150 rpm
9. If it is out of specification, adjust switch by turning idle switch body.
10. Turn engine off and remove air duct.
11. Tighten securing bolts, install air duct and connect throttle sensor connector.
12. Recheck engine ON-OFF rpm.

Electrical Components Inspection (Cont'd)

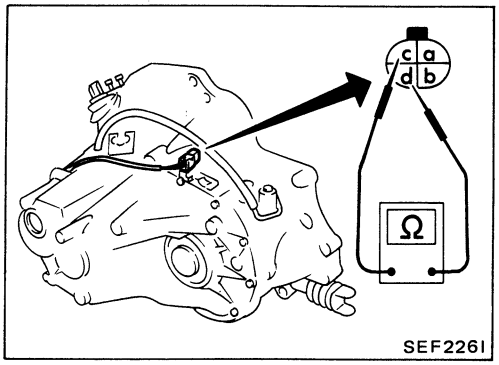

SEF226I

NEUTRAL SWITCH

- Check continuity between terminals Ⓒ and Ⓓ.

Conditions	Continuity
Shift to Neutral	Yes
Shift to other position	No

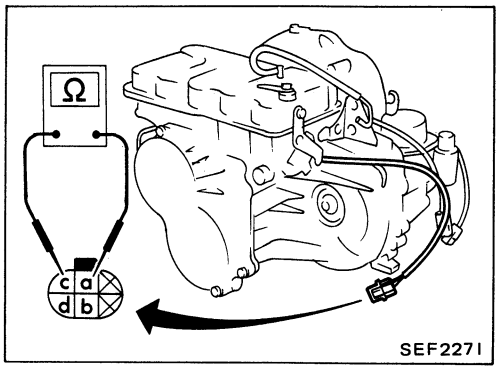

SEF227I

INHIBITOR SWITCH

Check continuity between terminals ⓐ and ⓒ.

Conditions	Continuity
Shift to "P" position	Yes
Shift to "N" position	Yes
Shift to positions other than "P" and "N"	No

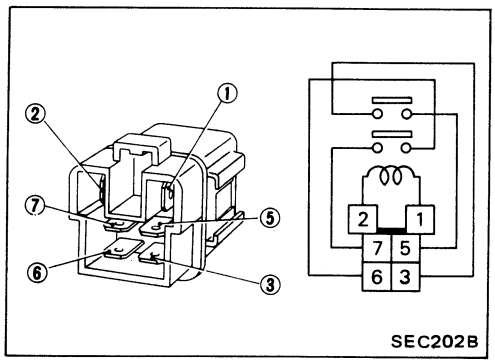

SEC202B

RADIATOR FAN RELAY-1 AND RADIATOR FAN RELAY-2

Check continuity between terminals ③ and ⑤, ⑥ and ⑦.

Conditions	Continuity
12V direct current supply between terminals ① and ②	Yes
No current supply	No

If N.G., replace relay.

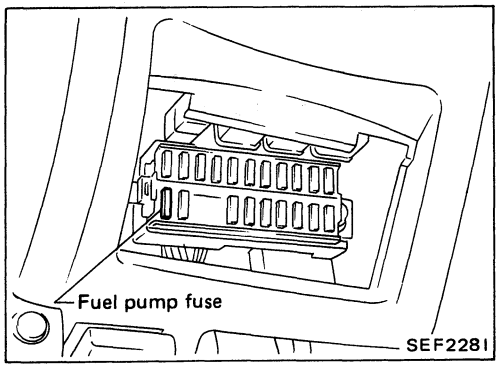

Releasing Fuel Pressure

Before disconnecting fuel line, release fuel pressure from fuel line to eliminate danger.

1. Remove fuel pump fuse.
2. Start engine.
3. After engine stalls, crank it two or three times to release all fuel pressure.
4. Turn ignition switch off and reconnect fuel pump fuse.

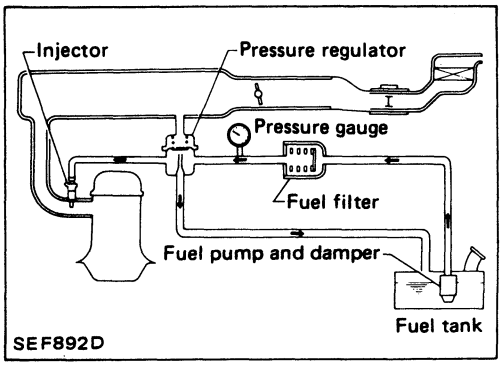

Fuel Pressure Check

a. When reconnecting fuel line, always use new clamps.
b. Make sure that clamp screw does not contact adjacent parts.
c. Use a torque driver to tighten clamps.
d. Use Pressure Gauge to check fuel pressure.
e. Do not perform fuel pressure check while fuel pressure regulator control system is operating; otherwise, fuel pressure gauge might indicate incorrect readings.

1. Release fuel pressure to zero.
2. Remove air duct.
3. Disconnect fuel hose between fuel filter and fuel tube (engine side).
4. Install pressure gauge between fuel filter and fuel tube.
5. Install air duct.
6. Start engine and check for fuel leakage.

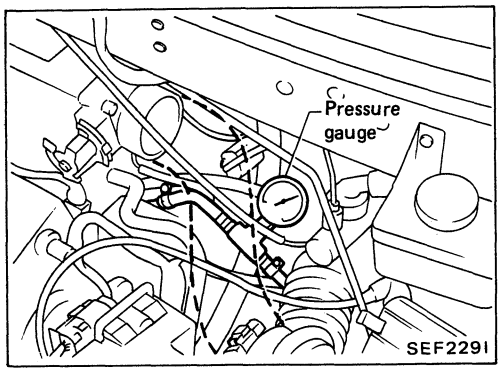

7. Read the fuel pressure gauge indication.
   At idling:
   When fuel pressure regulator valve vacuum hose is connected.
   More than 226 kPa (2.3 kg/cm^2, 33 psi)
   When fuel pressure regulator valve vacuum is disconnected.
   Approximately 294 kPa (3.0 kg/cm^2, 43 psi)
8. Stop engine and disconnect vacuum hose from fuel pressure regulator.
9. Plug vacuum hose.
10. Connect variable vacuum source to fuel pressure regulator.

Fuel Pressure Check (Cont'd)

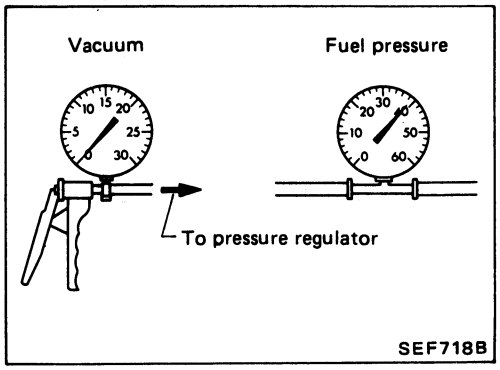

11. Start engine and read fuel pressure gauge indication as vacuum changes.

Fuel pressure should decrease as vacuum increases. If results are unsatisfactory, replace fuel pressure regulator.

Injector Removal and Installation

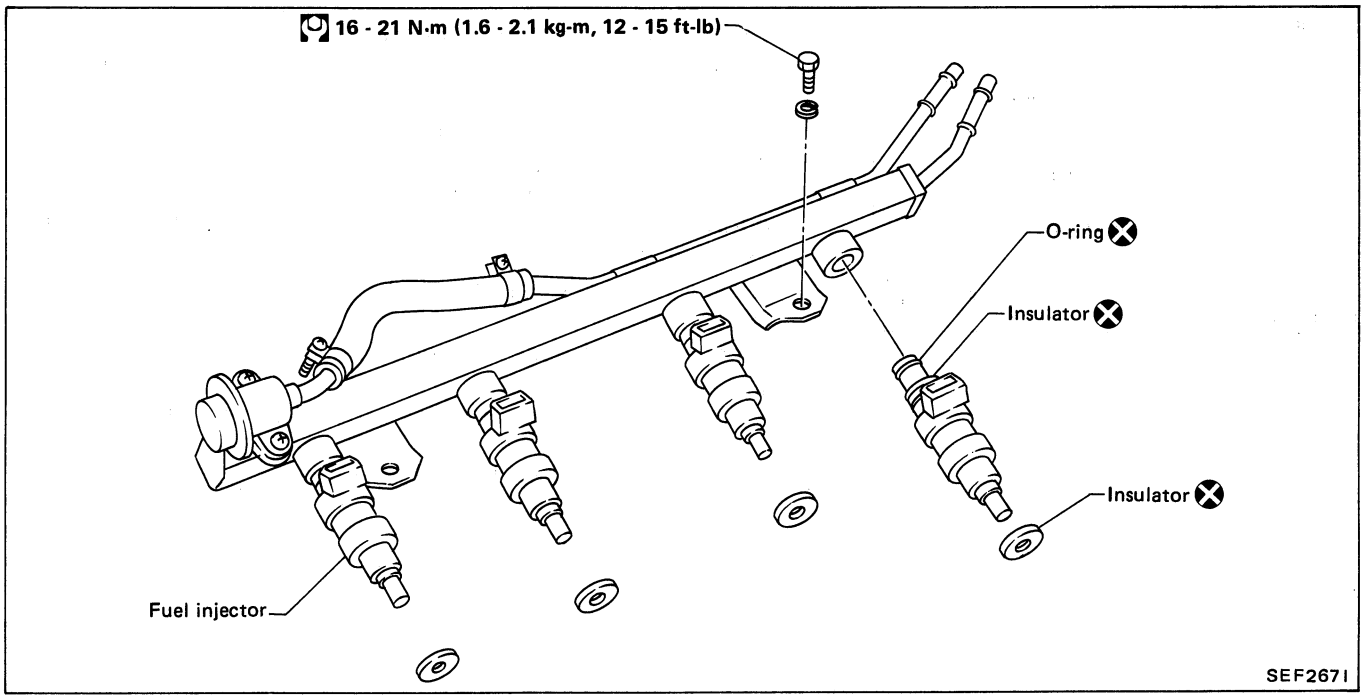

REMOVAL

1. Release fuel pressure to zero.
2. Remove or disconnect the following.

- Air duct
- Fuel hoses
- Fuel pressure regulator.
- Accelerator wire bracket
- Fuel injector harness connectors

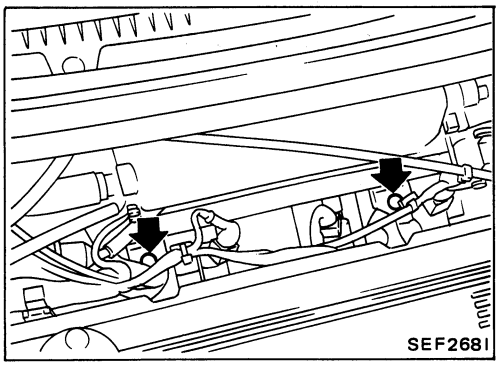

3. Remove fuel tube securing bolts.

Injector Removal and Installation (Cont'd)

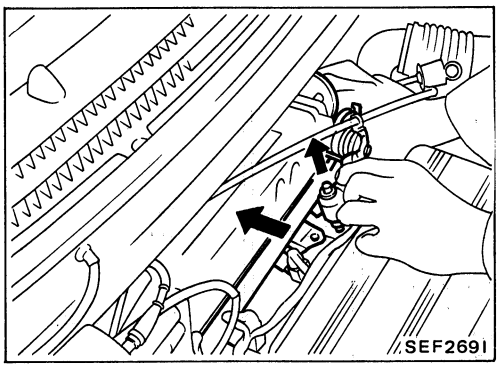

4. Move fuel tube as shown and take out injectors from #4 injector.

INSTALLATION

1. Clean exterior of injector tail piece.
2. Replace O-rings and insulators with new ones.
3. Install injectors.
4. Install any parts removed.

CAUTION:

After properly connecting injectors to fuel tube, check connections for fuel leakage.

Description

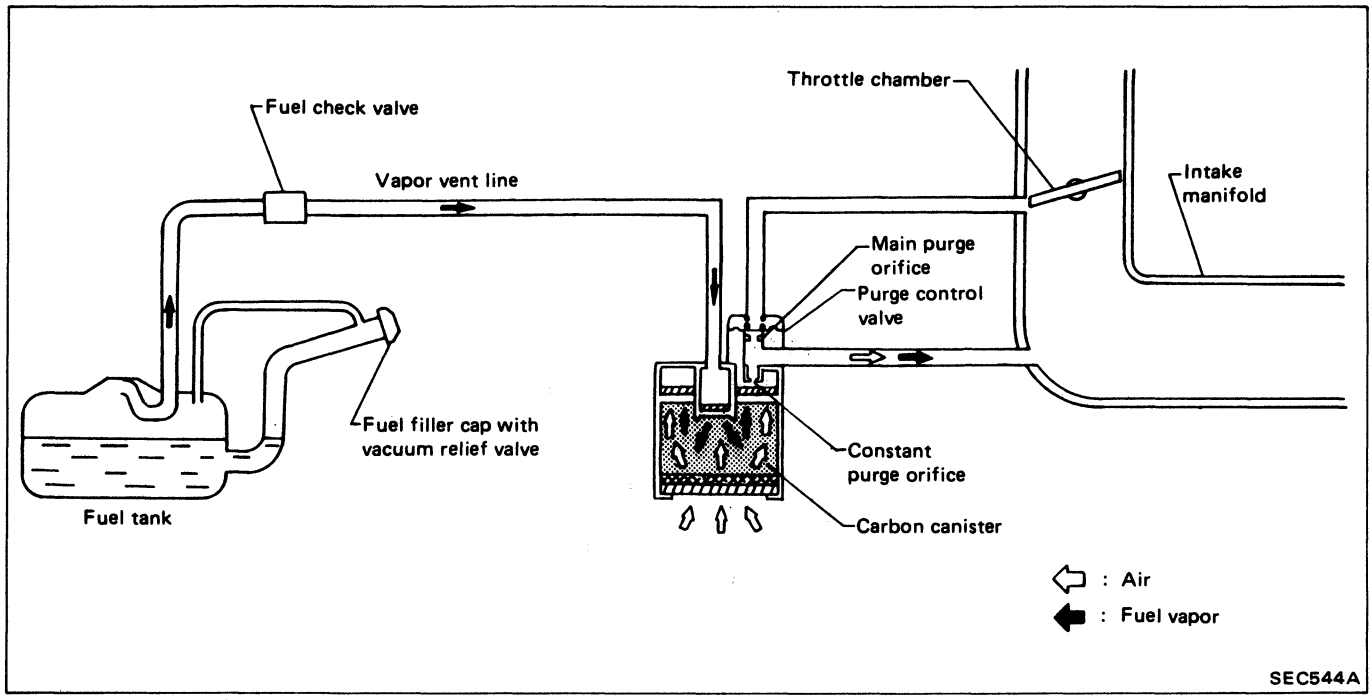

The evaporative emission control system is used to reduce hydrocarbons emitted to the atmosphere from the fuel system. This reduction of hydrocarbons is accomplished by activated charcoals in the carbon canister.
The fuel vapor from the sealed fuel tank is led into the canister which contains activated carbon and the vapor is stored there when the engine is not running.
The canister retains the fuel vapor until the canister is purged by the air drawn through the bottom of the canister to the intake manifold when the engine is running. When the engine runs at idle, the purge control valve is closed.
Only a small amount of stored vapor flows into the intake manifold through the constant purge orifice. As the engine speed increases, and the throttle vacuum increases, the purge control valve opens and the vapor is sucked into the intake manifold through both the main purge orifice and the constant purge orifice.

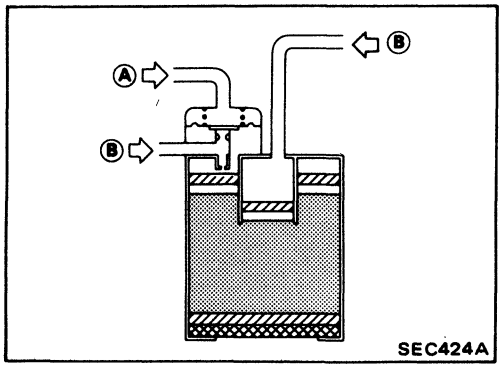

Inspection

CARBON CANISTER

Check carbon canister as follows:

Ⓐ : Blow air and ensure that there is no leakage.
Ⓑ : Blow air and ensure that there is leakage.

Inspection (Cont'd)

FUEL TANK VACUUM RELIEF VALVE

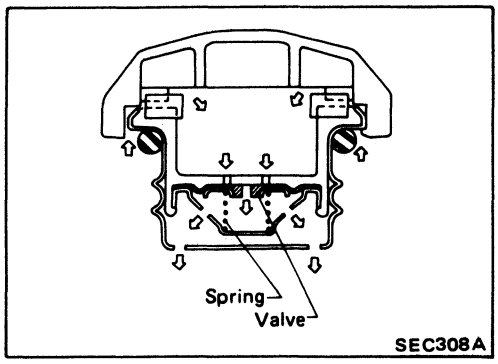

1. Wipe valve housing clean.
2. Inhale air through the cap. A slight resistance accompanied by valve clicks indicates that valve is in good mechanical condition. Note also that, by further inhaling air, the resistance should disappear with valve clicks.
3. If valve is clogged or if no resistance is felt, replace cap as an assembly.

FUEL CHECK VALVE

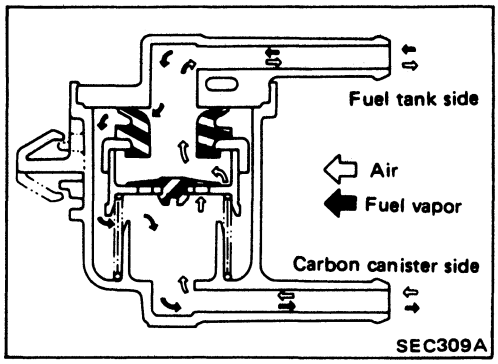

1. Blow air through connector on fuel tank side.
   A considerable resistance should be felt and a portion of air flow should be directed toward the canister.
2. Blow air through connector on canister side.
   Air flow should be smoothly directed toward fuel tank.
3. If fuel check valve is suspected of not properly functioning in steps 1 and 2 above, replace it.

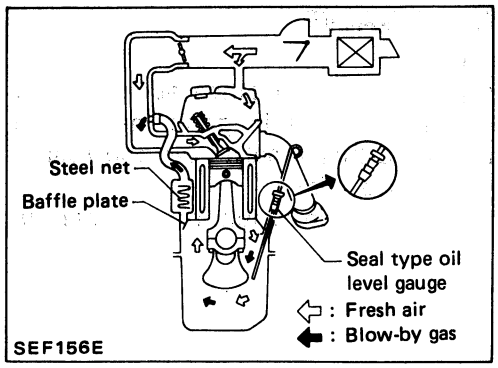

Description

This system returns blow-by gas to both the intake manifold and air cleaner.
The positive crankcase ventilation (P.C.V.) valve is provided to conduct crankcase blow-by gas to the intake manifold.
During partial throttle operation of the engine, the intake manifold sucks the blow-by gas through the P.C.V. valve.
Normally, the capacity of the valve is sufficient to handle any blow-by and a small amount of ventilating air.
The ventilating air is then drawn from the air cleaner, through the hose connecting the air cleaner to rocker cover, into the crankcase.
Under full-throttle condition, the manifold vacuum is insufficient to draw the blow-by flow through the valve, and its flow goes through the hose connection in the reverse direction.
On vehicles with an excessively high blow-by some of the flow will go through the hose connection to the air cleaner under all conditions.

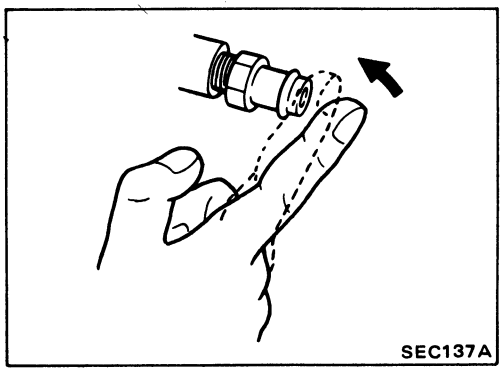

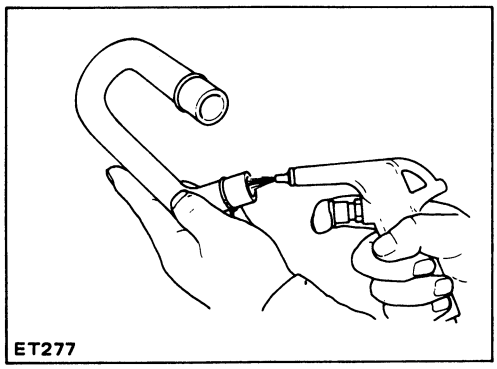

Inspection

P.C.V. (Positive Crankcase Ventilation)

With engine running at idle, remove ventilation hose from P.C.V. valve; if valve is working properly, a hissing noise will be heard as air passes through it and a strong vacuum should be felt immediately when a finger is placed over valve inlet.

VENTILATION HOSE

1. Check hoses and hose connections for leaks.
2. Disconnect all hoses and clean with compressed air. If any hose cannot be freed of obstructions, replace.

General Specifications

IGNITION TIMING B.T.D.C.	15°±2°
IDLE SPEED rpm	M/T 700±50*1, 750±50*2 A/T 700±50*1, 750±50*2 (in "N" position)

*1: For U.S.A.
*2: For Canada

Inspection and Adjustment

ENGINE TEMPERATURE SENSOR		
Thermistor resistance kΩ	20°C (68°F)	80°C (176°F)
	2.1 - 2.9	0.30 - 0.33
AIR TEMPERATURE SENSOR		
Thermistor resistance kΩ	20°C (68°F)	80°C (176°F)
	2.1 - 2.9	0.27 - 0.38
IDLE SWITCH Engine speed when idle switch is changed from "OFF" to "ON" rpm	M/T 1,000±150 A/T 1,000±150 (in "N" position)	
FUEL PRESSURE at idling (Measuring point: between fuel filter and fuel pipe) Vacuum hose is connected kPa (kg/cm², psi)	Approximately 226 (2.3, 33)	
Vacuum hose is disconnected kPa (kg/cm², psi)	Approximately 294 (3.0, 43)	
FUEL INJECTOR Coil resistance Ω	Approximately 10 - 15	
EXHAUST GAS TEMPERATURE SENSOR		
Thermistor resistance kΩ	100°C (212°F)	
	85.3±8.53	

ENGINE CONTROL, FUEL & EXHAUST SYSTEMS

SECTION FE

CONTENTS

ENGINE CONTROL SYSTEM FE-2
FUEL SYSTEM FE-3
EXHAUST SYSTEM FE-5

Accelerator Control System

- When removing accelerator cable, make a mark to indicate lock nut's initial position.
- Check that throttle valve opens fully when accelerator pedal is fully depressed and that it returns to idle position when pedal is released.
- Adjust accelerator cable according to the following procedure.
  Tighten "adjusting nut" until "throttle drum" starts to move from idle position.
  From that position turn back "adjusting nut" 1.5 to 2 turns, and fasten it with a lock nut.
- Check accelerator control parts for improper contact with any adjacent parts.
- When connecting accelerator cable, be careful not to twist or scratch its inner wire.
- On automatic transaxle models, adjust A/T throttle cable. Refer to "ON-VEHICLE SERVICE" in section AT.
- On A.S.C.D. equipped models, adjust A.S.C.D. cable. Refer to "AUTOMATIC SPEED CONTROL DEVICE" in section EL.

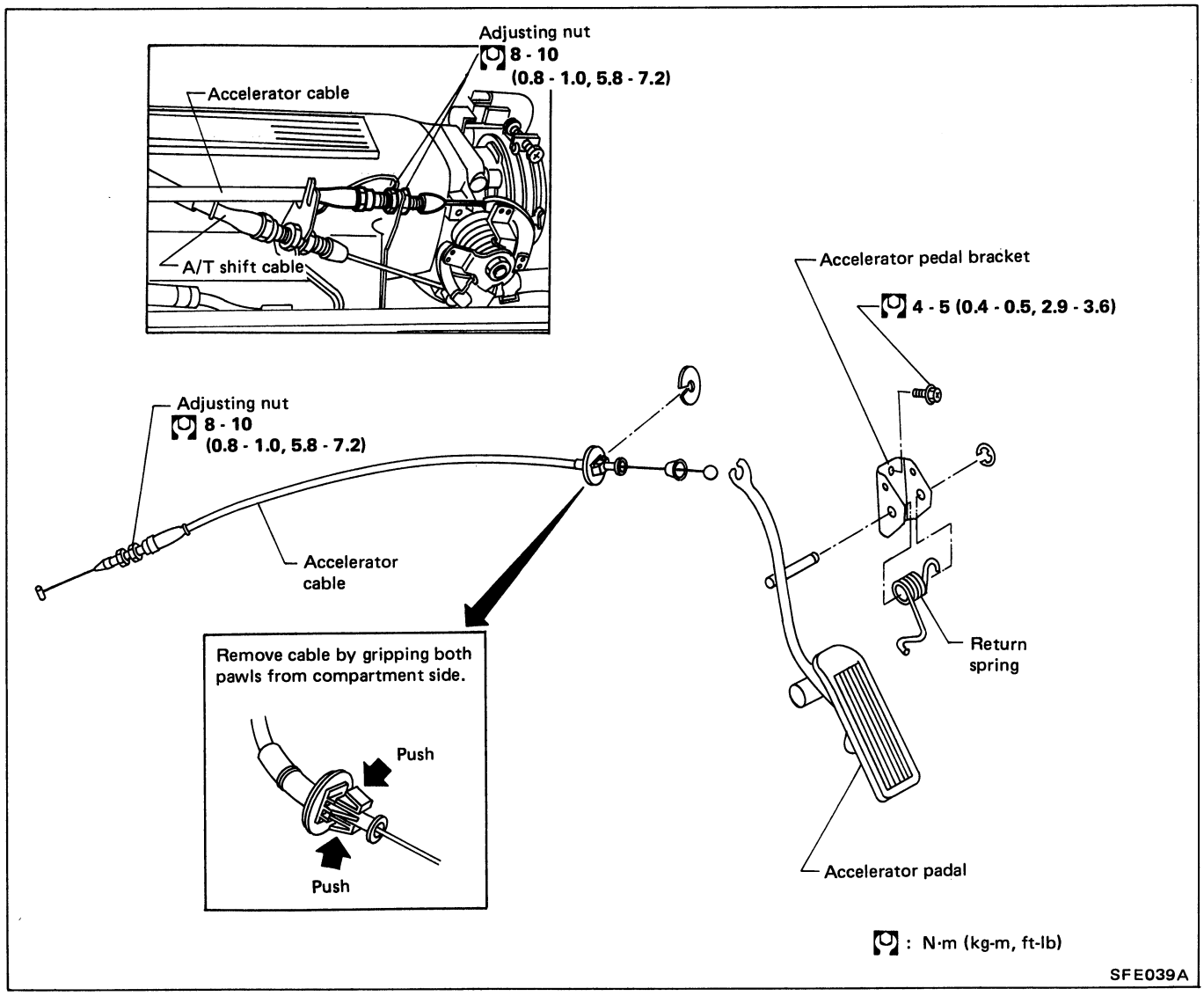

WARNING:
When replacing fuel line parts, be sure to observe the following:
- **Put a "CAUTION: INFLAMMABLE" sign in workshop.**
- **Do not smoke while servicing fuel system. Keep open flames and sparks away from work area.**
- **Be sure to disconnect battery ground cable before conducting operations.**
- **Put drained fuel in an explosion-proof container and put lid on securely.**

CAUTION:
- **Before disconnecting fuel hose, release fuel pressure from fuel line. Refer to "Changing Fuel Filter" in section MA.**
- **Do not disconnect any fuel line unless absolutely necessary.**
- **Plug hose and pipe openings to prevent entry of dust or dirt.**
- **Always replace O-ring and clamps with new ones.**
- **Do not kink or twist hose and tube when they are being installed.**
- **Do not tighten hose clamps excessively.**
- **When installing fuel check valve, be careful of its designated direction. (Refer to section EF & EC.)**
- **After assembly, run engine and check for fuel leaks at connections.**

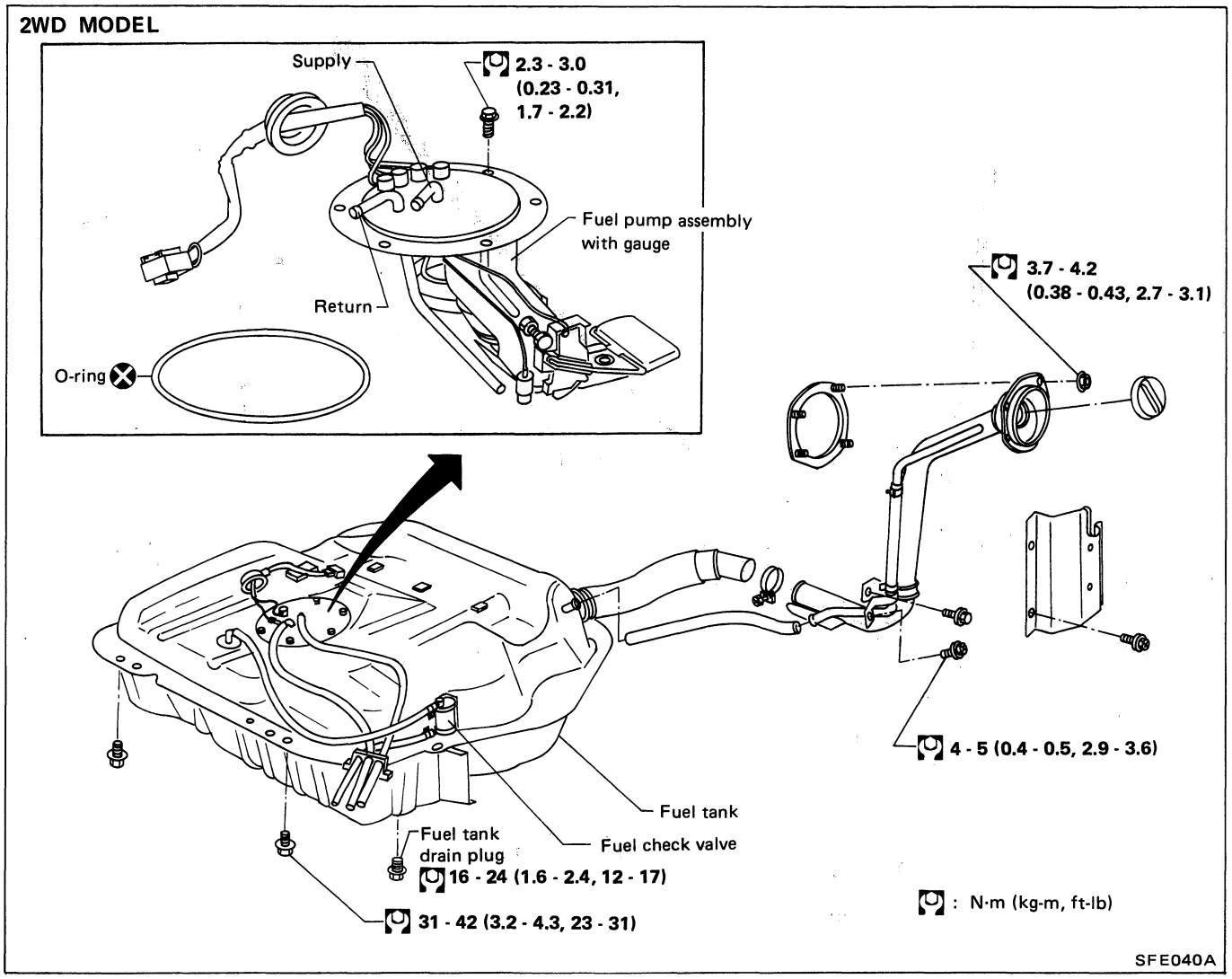

4WD MODEL

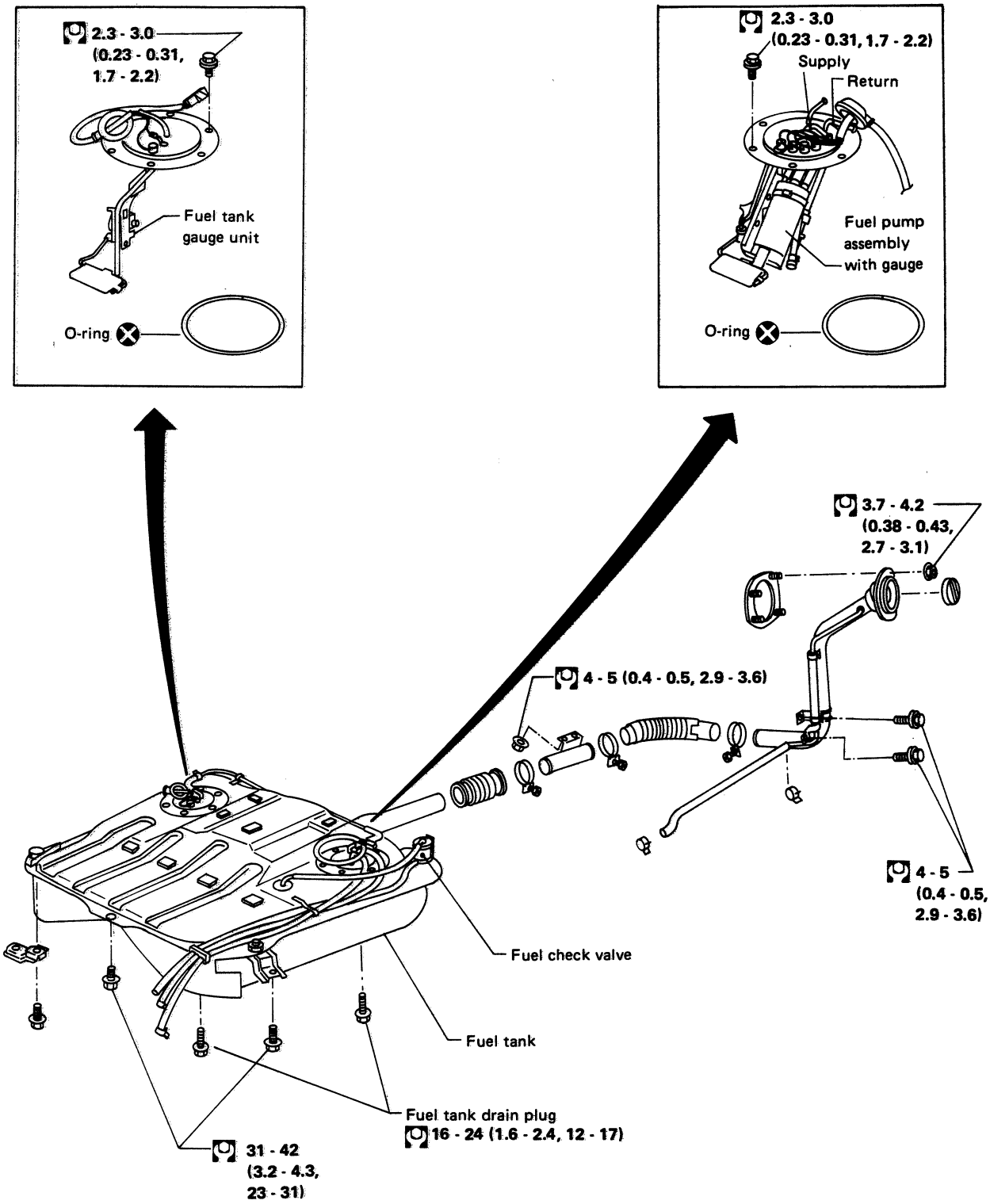

: N·m (kg-m, ft-lb)

SFE041A

CAUTION:

- **Always replace exhaust gaskets with new ones when reassembling.**
- **With engine running, check all tube connections for exhaust gas leaks, and entire system for unusual noises.**
- **After installation, check to assure that mounting brackets and mounting insulator are free from undue stress. If any of above parts are not installed properly, excessive noise or vibration may be transmitted to vehicle body.**

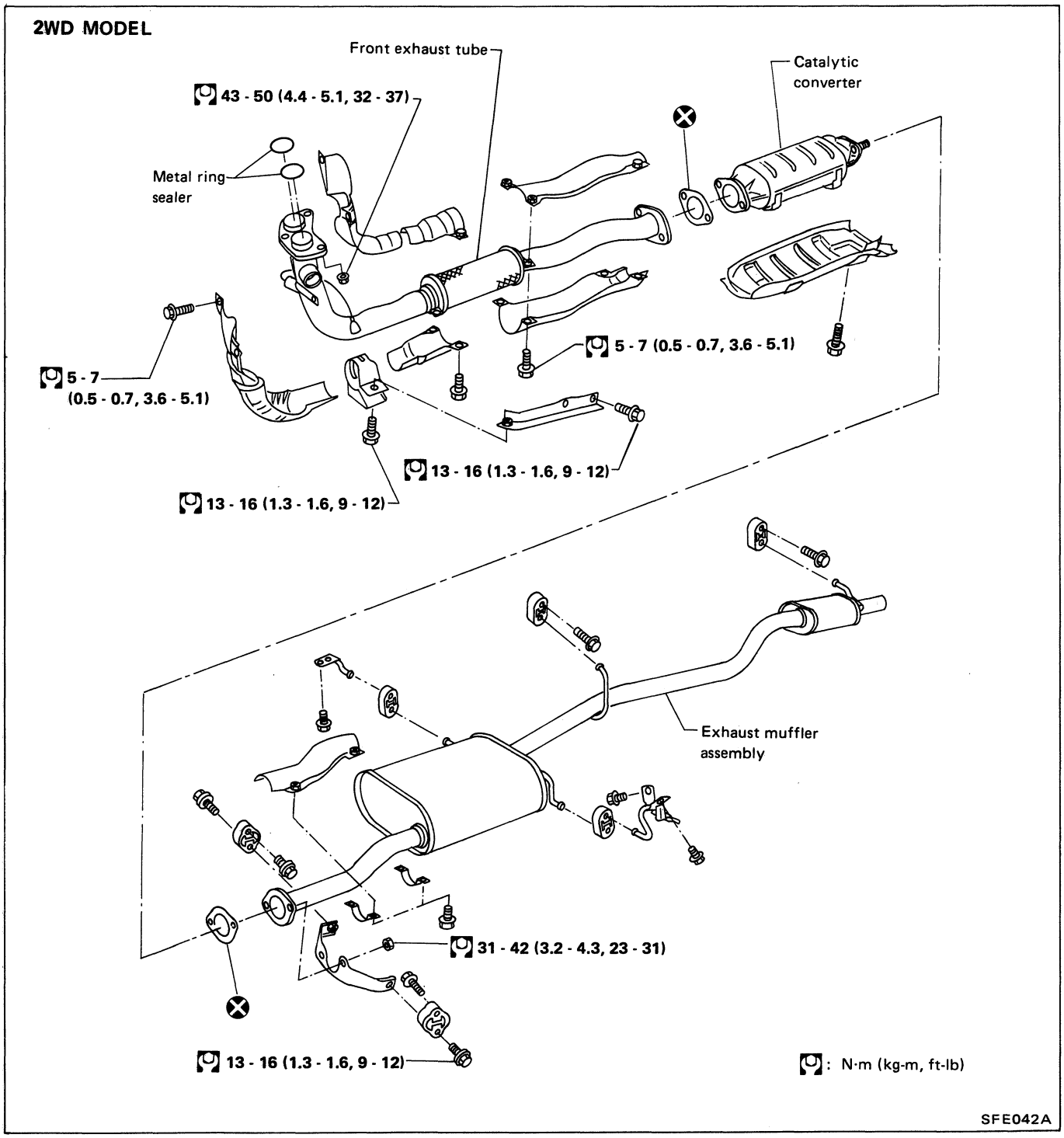

4WD MODEL

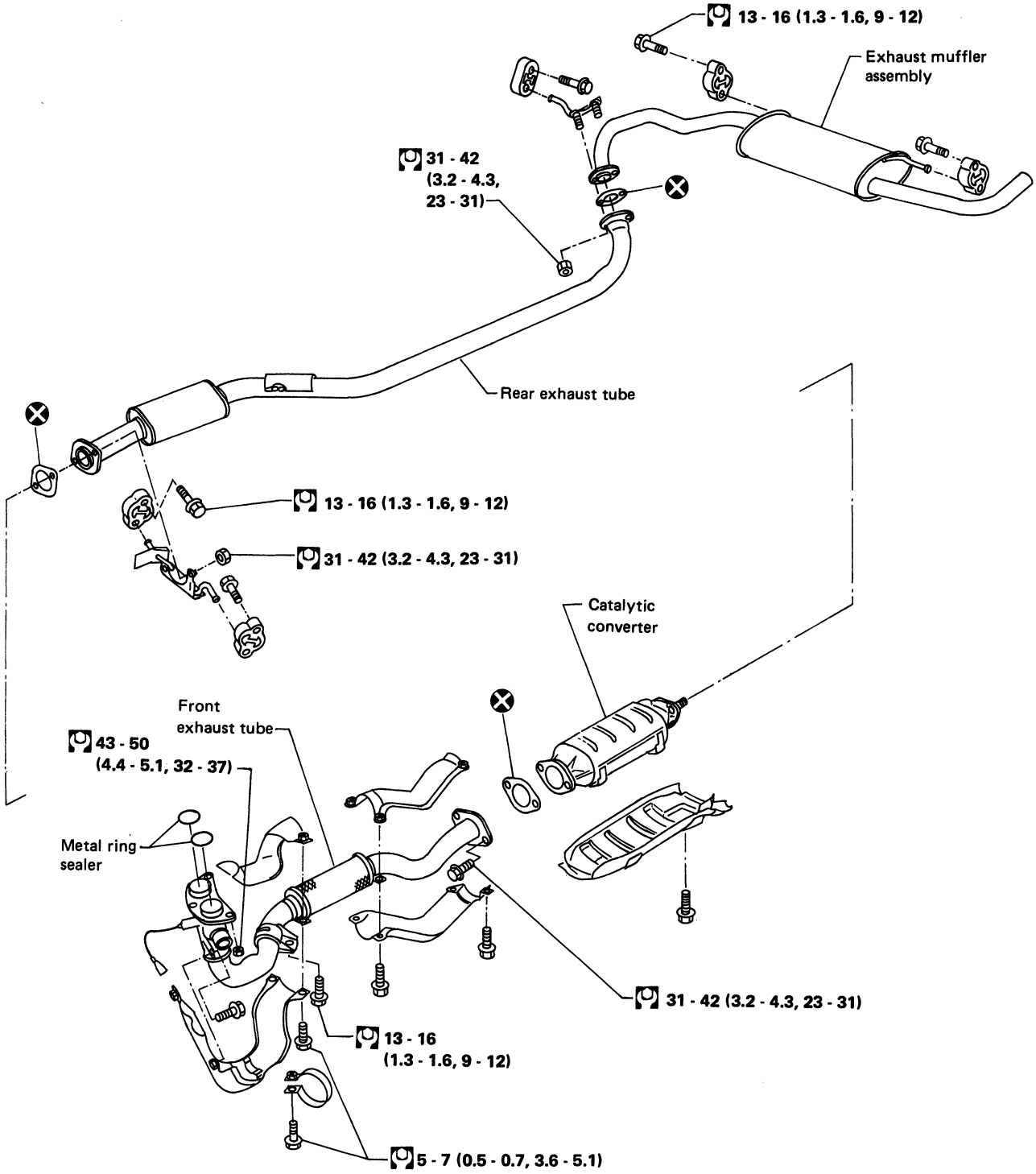

: N·m (kg-m, ft-lb)

SFE043A

CLUTCH

SECTION CL

CONTENTS

PRECAUTIONS AND PREPARATION ..... CL- 2
CLUTCH SYSTEM ..... CL- 3
INSPECTION AND ADJUSTMENT ..... CL- 4
HYDRAULIC CLUTCH CONTROL ..... CL- 6
CLUTCH RELEASE MECHANISM ..... CL- 8
CLUTCH DISC AND CLUTCH COVER ..... CL- 9
SERVICE DATA AND SPECIFICATIONS (S.D.S.) CL-12

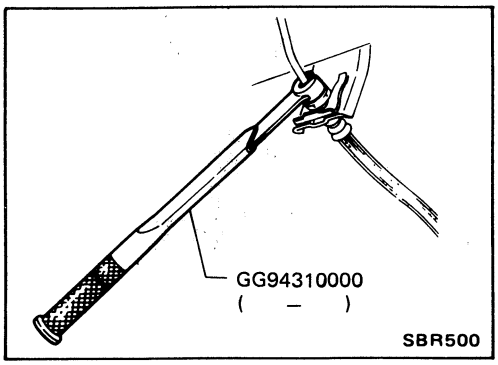

Precautions

- **Recommended fluid is brake fluid "DOT 3".**
- **Do not reuse drained brake fluid.**
- **Be careful not to splash brake fluid on painted areas.**
- **When removing and installing clutch piping, use Tool.**
- **Use new brake fluid to clean or wash all parts of master cylinder, operating cylinder and clutch damper.**
- **Never use mineral oils such as gasoline or kerosene. It will ruin the rubber parts of the hydraulic system.**

WARNING:
After cleaning clutch disc, wipe it with a dust collector. Do not use compressed air.

Preparation

SPECIAL SERVICE TOOLS

Tool number (Kent-Moore No.) Tool name	Description	
GG94310000 (–) Flare nut torque wrench	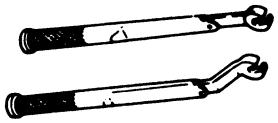	Removing and installing clutch piping
KV30101000 (J33213) Clutch aligning bar	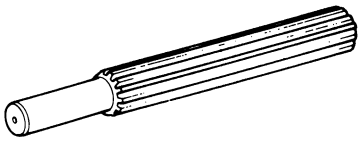	Installing clutch cover and clutch disc
ST20050010 (–) Base plate	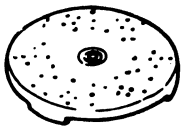	Inspecting diaphragm spring of clutch cover
ST20050100 (–) Distance piece	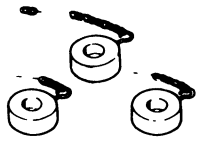	Inspecting diaphragm spring of clutch cover
ST20050240 Diaphragm spring adjusting wrench		Adjusting unevenness of diaphragm spring of clutch cover

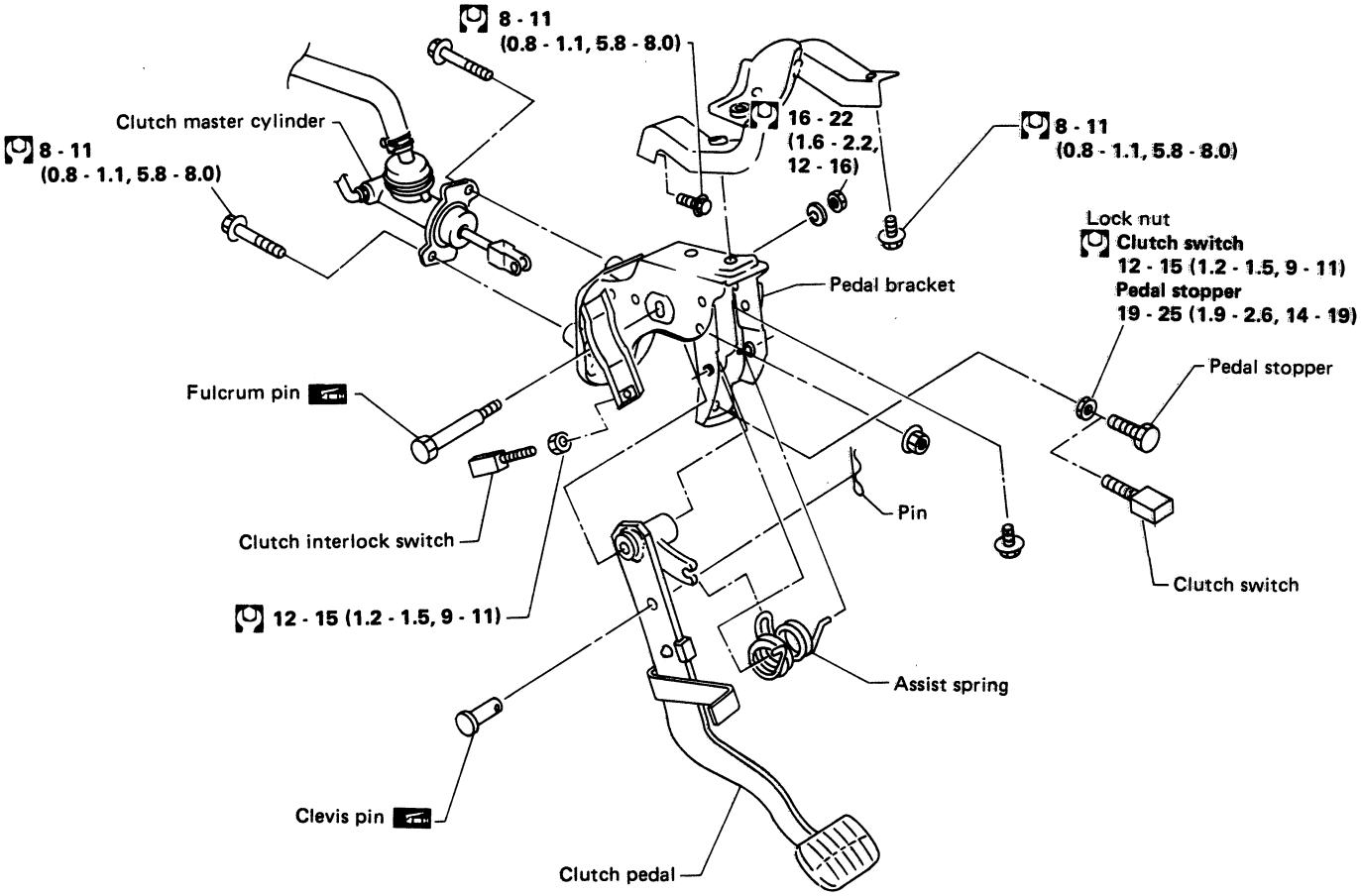

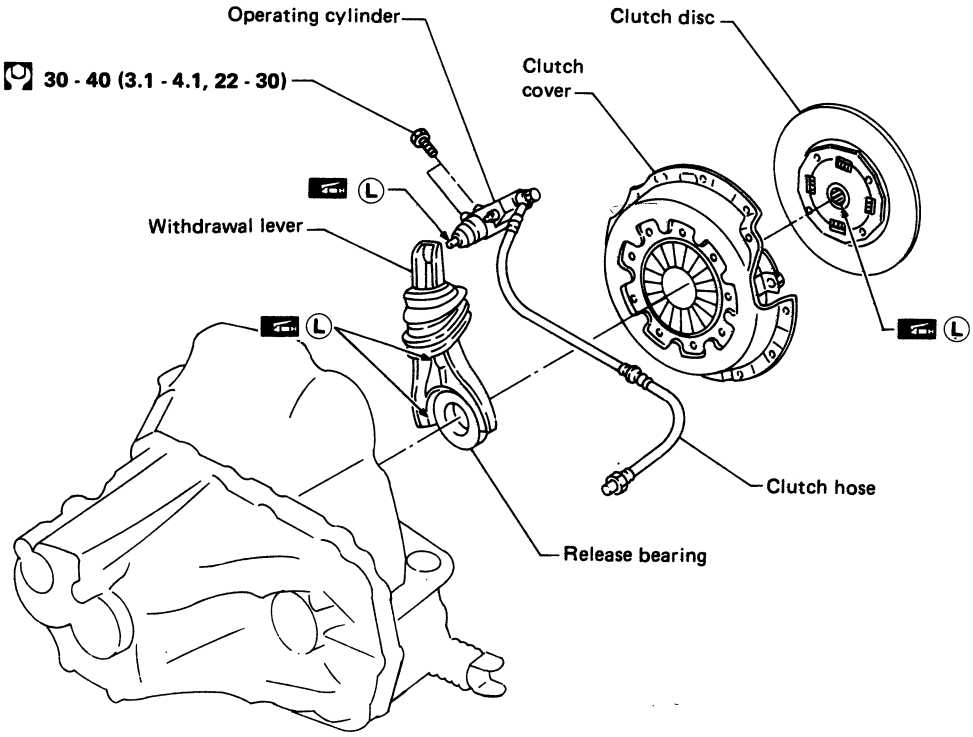

L : Apply lithium-based grease including molybdenum disulphide.
: N·m (kg-m, ft-lb)

SCL379

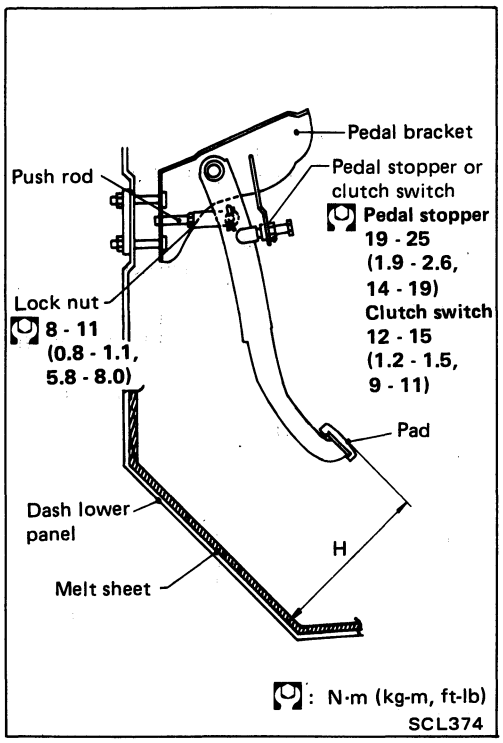

Adjusting Clutch Pedal

1. Adjust pedal height with pedal stopper.
   Pedal height "H":
   177 - 187 mm (6.97 - 7.36 in)

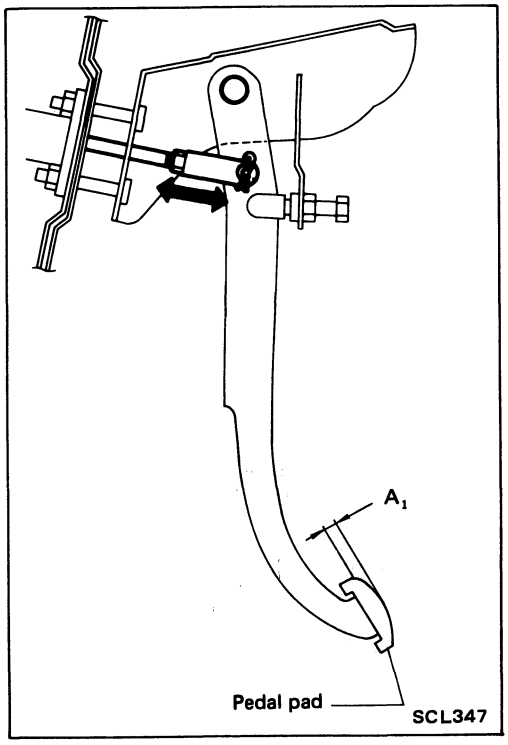

2. Adjust pedal free play with master cylinder push rod. Then tighten lock nut.
   Pedal free play "A_1":
   1.0 - 3.0 mm (0.039 - 0.118 in)

Pedal free play means the follwing total, measured at position of pedal pad:

- **Play due to clevis pin and clevis pin hole in clutch pedal.**
- **Play due to piston and push rod.**

Adjusting Clutch Pedal (Cont'd)

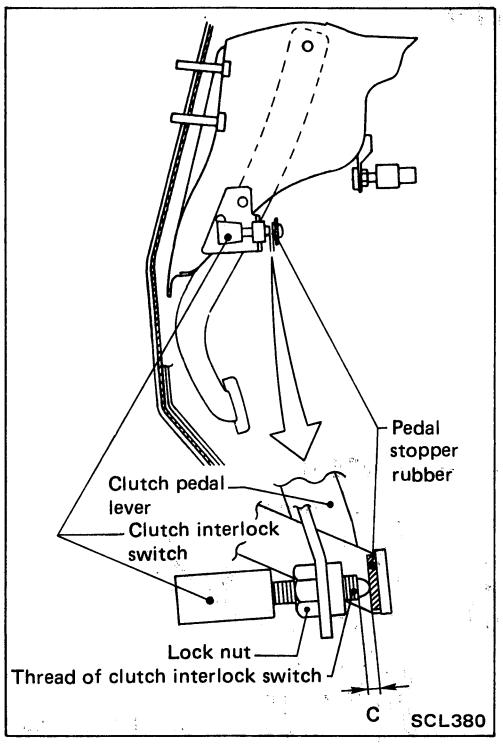

— U.S.A. model only —

3. Adjust clearance "C" between padal stopper rubber and threaded end of clutch interlock switch while depressing clutch pedal fully.
   Clearance C:
   1.5 - 3.5 mm (0.059 - 0.138 in)

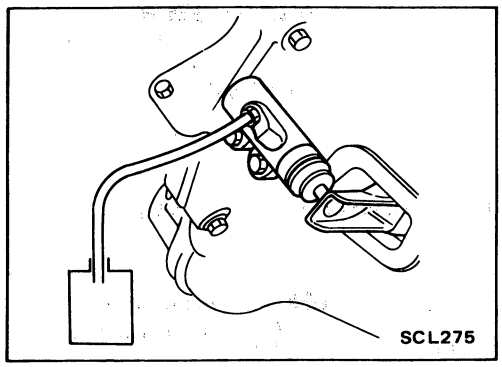

Bleeding Procedure

Bleed air according to the following procedure.

- **Carefully monitor fluid level at master cylinder during bleeding operation.**

1. Top up reservoir with recommended brake fluid.
2. Connect a transparent vinyl tube to air bleeder valve.
3. Fully depress clutch pedal several times.
4. With clutch pedal depressed, open bleeder valve to release air.
5. Close bleeder valve.
6. Repeat steps 3 through 5 above until clear brake fluid comes out of air bleeder valve.

Clutch Master Cylinder

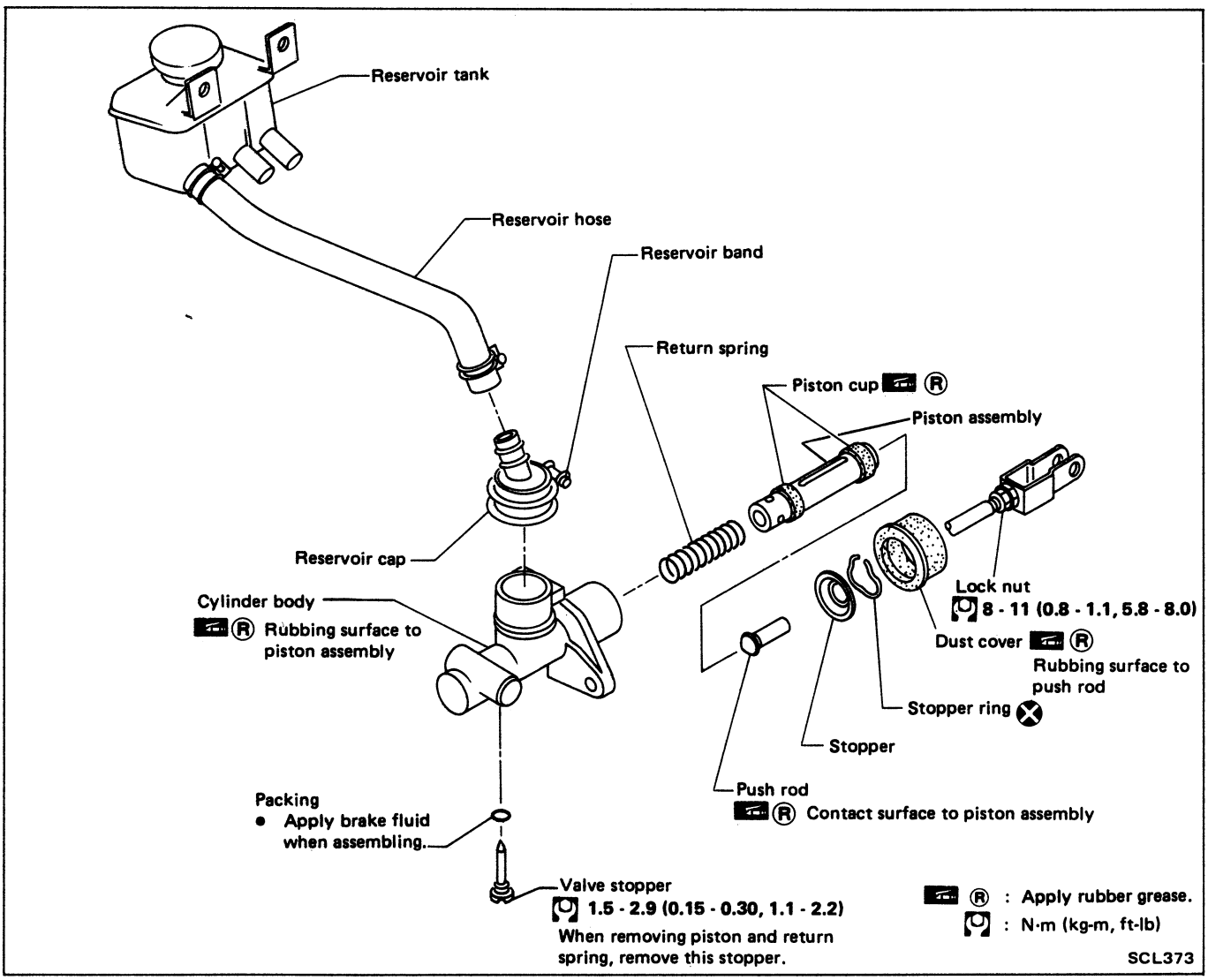

DISASSEMBLY AND ASSEMBLY

- Push piston into cylinder body with screwdriver when removing and installing valve stopper.

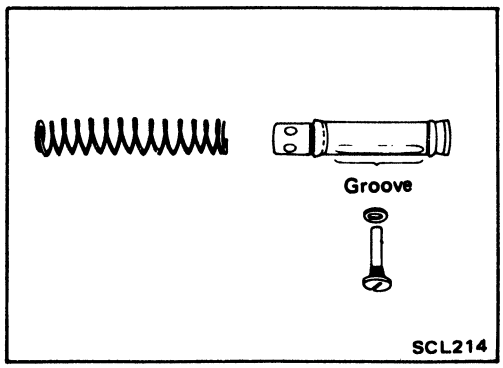

- Align groove of piston assembly and valve stopper when installing valve stopper.
- Check direction of piston cups.

Clutch Master Cylinder (Cont'd)

INSPECTION

Check the following items, and replace if necessary.

- Rubbing surface of cylinder and piston, for uneven wear, rust or damage
- Piston with piston cup, for wear or damage
- Return spring, for wear or damage
- Dust cover, for cracks, deformation or damage
- Reservoir, for deformation or damage

Operating Cylinder

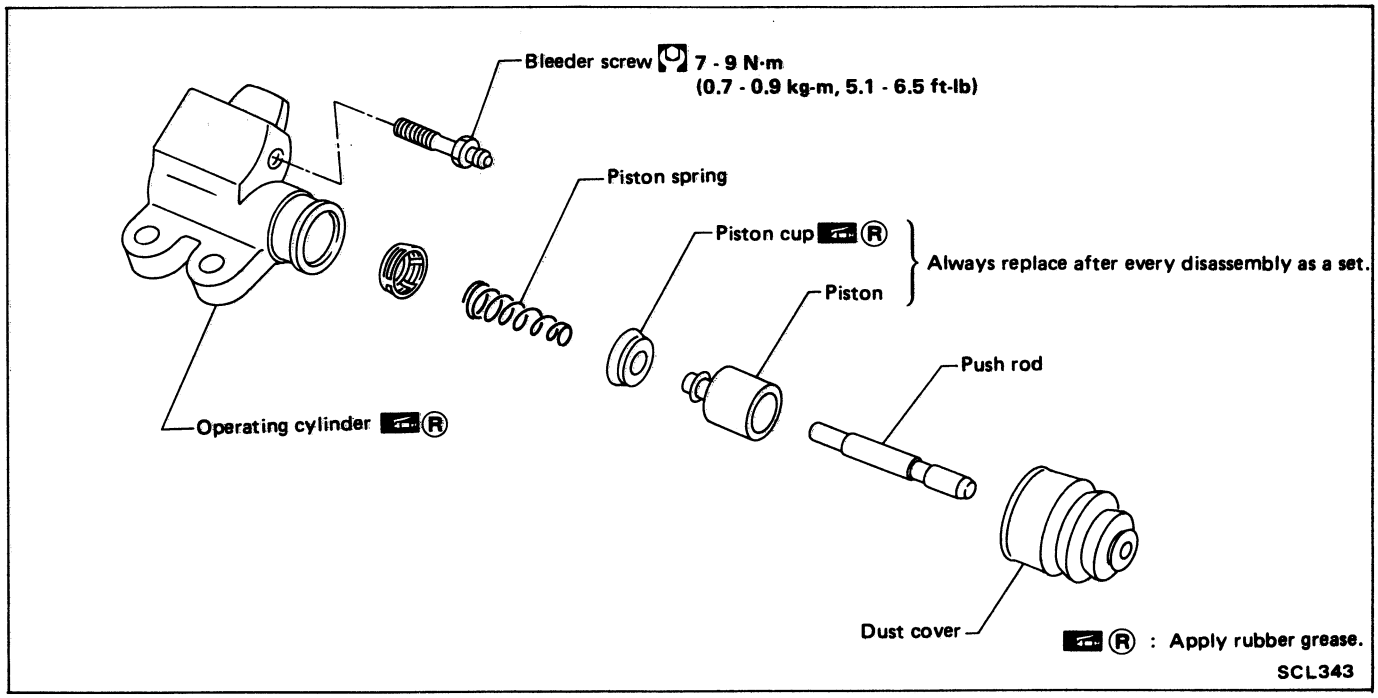

INSPECTION

Check the following items, and replace if necessary.

- Rubbing surface of cylinder and piston, for uneven wear, rust or damage
- Piston with piston cup, for wear or damage
- Piston spring, for wear or damage
- Dust cover, for cracks, deformation or damage

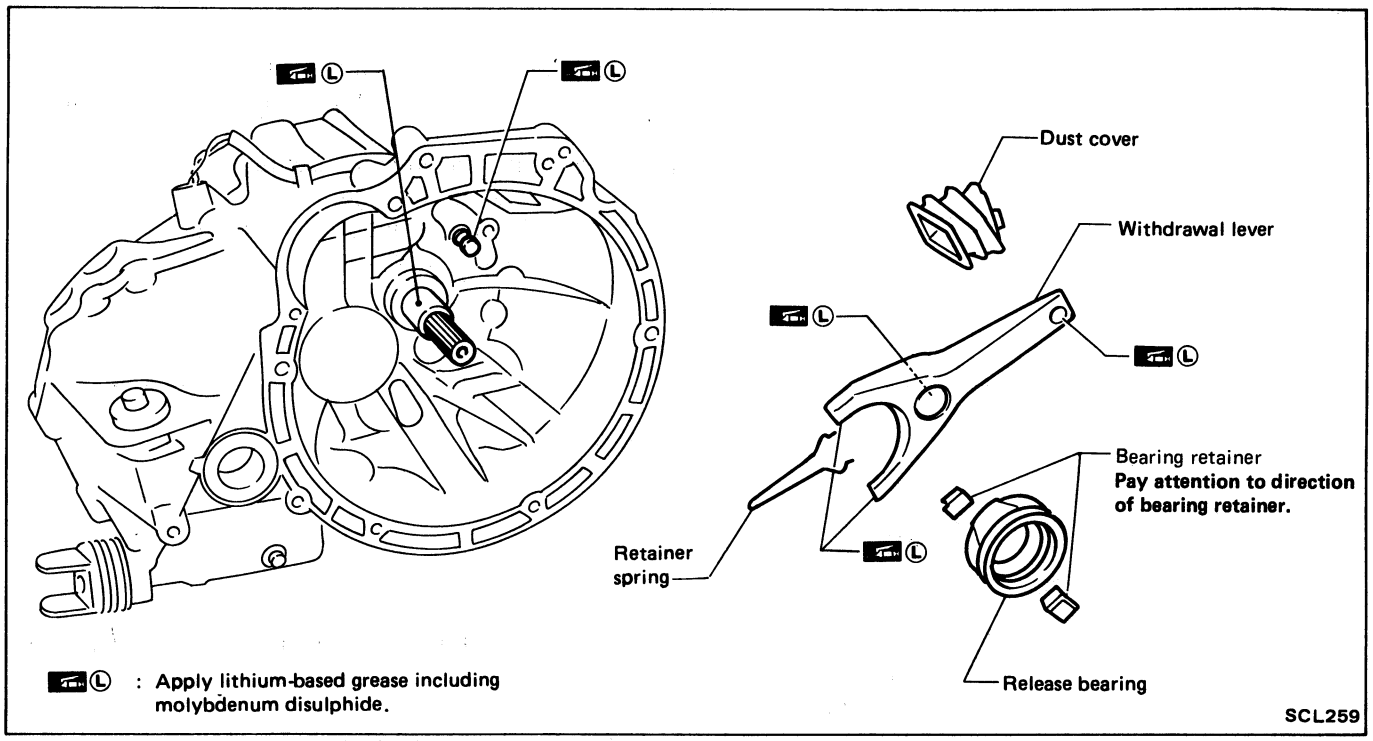

Inspection

Check the following items, and replace if necessary.

- Release bearing, to see that it rolls freely and is free from noise, cracks, pitting or wear
- Release sleeve and withdrawal lever rubbing surface, for wear, rust or damage

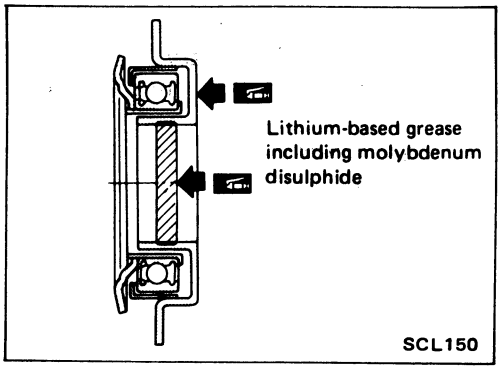

Lubrication

- Apply recommended grease to contact surface and rubbing surface.
- **Too much lubricant might damage clutch disc facing.**

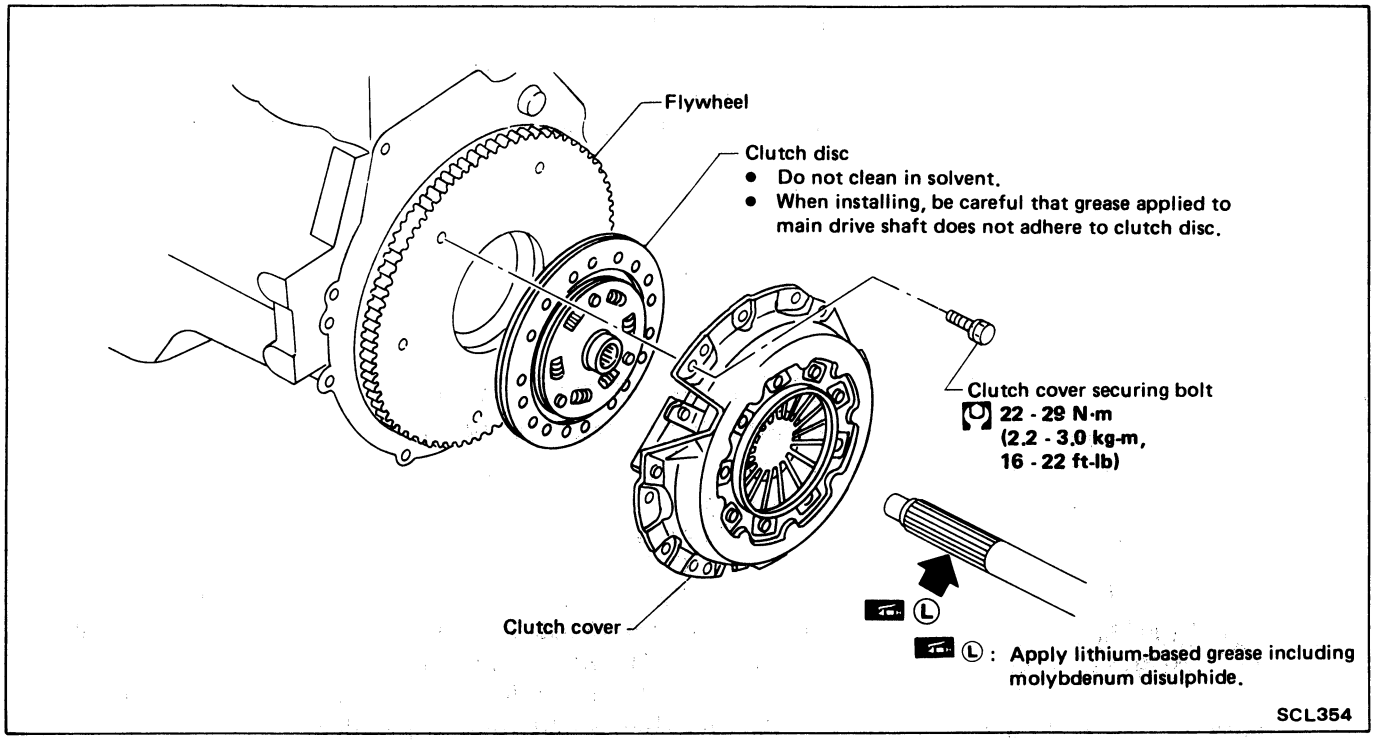

Clutch Disc

INSPECTION

Check the following items, and replace if necessary.

- Clutch disc, for burns, discoloration, oil or grease leakage

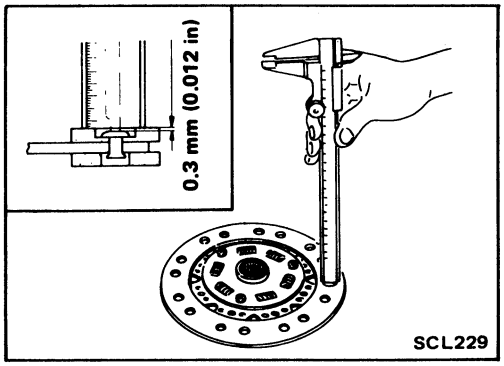

- Clutch disc, for wear of facing
  Wear limit of facing surface to rivet head:
  0.3 mm (0.012 in)

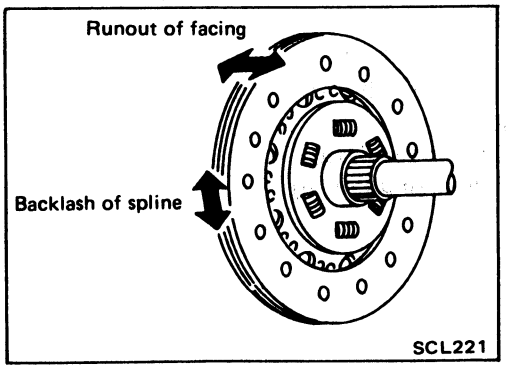

- Clutch disc, for backlash of spline
  Maximum backlash of spline (at outer edge of disc):
  225TBL 0.9 mm (0.035 in)
  240TBL 1.0 mm (0.039 in)
- Clutch disc, for runout of facing
  Runout limit: 1.0 mm (0.039 in)
  Distance of runout check point (from hub center)
  225TBL 107.5 mm (4.23 in)
  240TBL 115.0 mm (4.53 in)

Clutch Disc (Cont'd)

INSTALLATION

- Apply recommended grease to contact surface of spline portion.
- **Too much lubricant might damage clutch facing.**

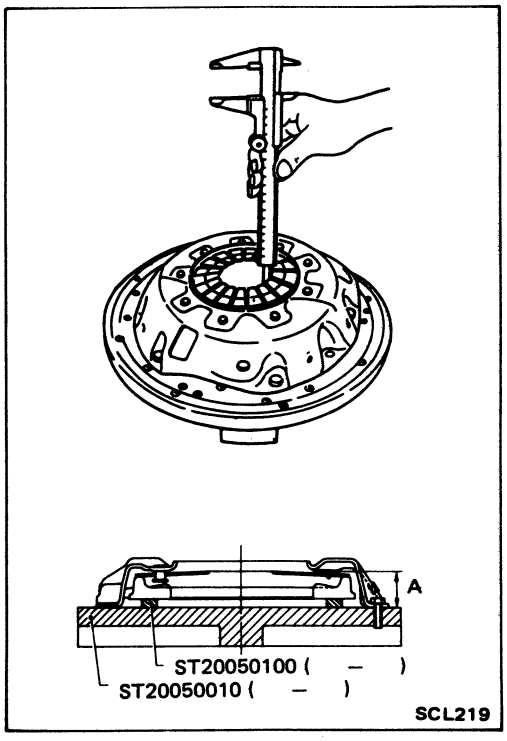

Clutch Cover and Flywheel

INSPECTION AND ADJUSTMENT

- Set Tool and check height and unevenness of diaphragm spring.
  Diaphragm spring height "A":
  C225S 33 - 35 mm (1.30 - 1.38 in)
  C240S 37.5 - 39.5 mm (1.476 - 1.555 in)
- **Set 0.2 mm (0.008 in) feeler gauges on distance pieces (ST20050100) when checking C240S.**
  Set 0.4 mm (0.016 in) feeler gauges on distance pieces (ST20050100) when checking C225S.
- Check thrust rings for wear or damage by shaking cover assembly and listening for chattering noise, or lightly hammering on rivets for a slightly cracked noise. Replace clutch cover assembly if necessary.
- Check pressure plate and clutch disc contact surface for slight burns or discoloration. Repair pressure plate with emery paper.
- Check pressure plate and clutch disc contact surface for deformation or damage. Replace if necessary.

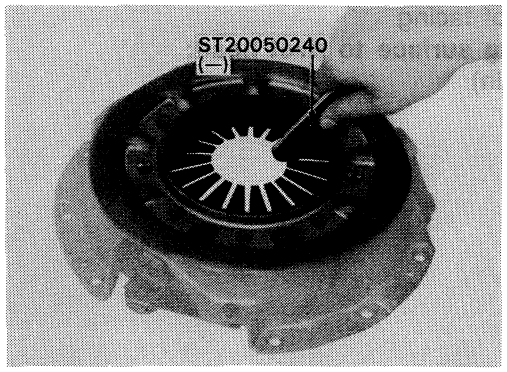

- Adjust unevenness of diaphragm spring with Tool.
  Uneven limit: 0.7 mm (0.028 in)

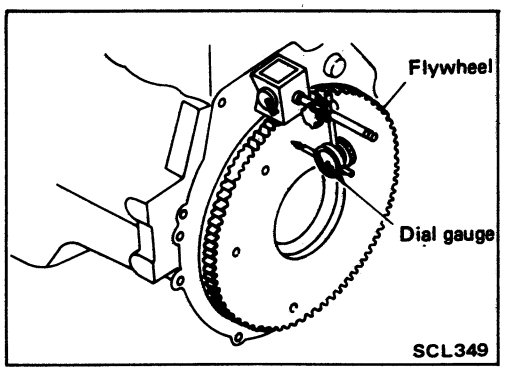

FLYWHEEL INSPECTION

- Check contact surface of flywheel for slight burns or discoloration. Repair flywheel with emery paper.
- Check flywheel runout.
  Runout (Total indicator reading):
  Less than 0.15 mm (0.0059 in)

Clutch Cover and Flywheel (Cont'd)

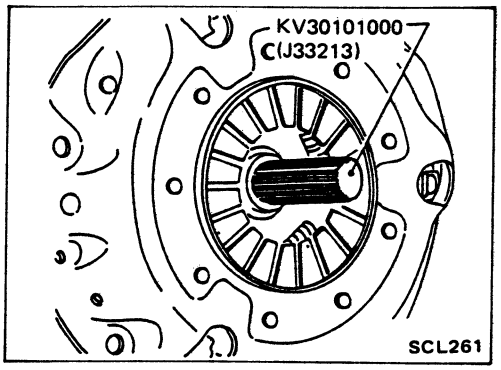

INSTALLATION

- Align clutch disc with Tool when installing clutch cover and disc.

General Specifications

CLUTCH CONTROL SYSTEM

Type of clutch control	Hydraulic

CLUTCH MASTER CYLINDER

Inner diameter	mm (in)	15.87 (5/8)

CLUTCH OPERATING CYLINDER

Inner diameter	mm (in)	19.05 (3/4)

CLUTCH DISC

	2WD	4WD
Model	225TBL	240TBL
Facing size mm (in) (Outer dia. x Inner dia. x thickness)	225 x 150 x 3.5 (8.86 x 5.91 x 0.138)	240 x 160 x 3.5 (9.45 x 6.30 x 0.138)
Thickness of disc assembly With load mm (in)	8.0 - 8.4 (0.315 - 0.331) with 3,923 N (400 kg, 882 lb)	7.8 - 8.2 (0.307 - 0.323) with 5,688 N (580 kg, 1,279 lb)

CLUTCH COVER

		2WD	4WD
Model		C225S	C240S
Full load	N (kg, lb)	4,413 (450, 992)	3,923 (400, 882)

Inspection and Adjustment

CLUTCH PEDAL

Unit: mm (in)

Pedal height*	177 - 187 (6.97 - 7.36)
Pedal free play	1.0 - 3.0 (0.039 - 0.118)

*: Measured from surface of melt sheet to pedal pad

CLUTCH DISC

Unit: mm (in)

Model	225TBL	240TBL
Wear limit of facing surface to rivet head	0.3 (0.012)	
Runout limit of facing	1.0 (0.039)	
Distance of runout check point (from the hub center)	107.5 (4.23)	115.0 (4.53)
Maximum backlash of spline (at outer edge of disc)	0.9 (0.035)	1.0 (0.039)

CLUTCH COVER

Unit: mm (in)

Model	C225S	C240S
Diaphragm spring height	33 - 35 (1.30 - 1.38)	37.5 - 39.5 (1.476 - 1.555)
Uneven limit of diaphragm spring toe height	0.7 (0.028)	

MANUAL TRANSAXLE

SECTION MT

CONTENTS

PREPARATION ..... MT- 2
ON-VEHICLE SERVICE ..... MT- 5
REMOVAL AND INSTALLATION ..... MT- 7
TRANSAXLE GEAR CONTROL MT-11
MAJOR OVERHAUL MT-12
DISASSEMBLY MT-17
REPAIR FOR COMPONENT PARTS MT-21
ADJUSTMENT MT-37
ASSEMBLY MT-41
SERVICE DATA AND SPECIFICATIONS (S.D.S.) MT-46

SPECIAL SERVICE TOOLS

Tool number (Kent-Moore No.) Tool name	Description	
KV38106500 (J34284) Preload adapter	2WD 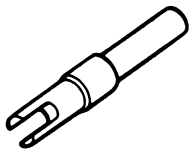	Measuring turning torque of final drive assembly Measuring total turning torque Selecting differential side bearing adjusting shim
KV38107300 (–) Preload adapter	4WD 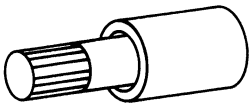	Measuring turning torque of final drive assembly Measuring total turning torque
ST33230000 (J35867, J25742-1) Drift	4WD 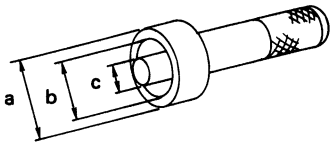	Selecting differential side bearing adjusting shim a: 51 mm (2.01 in) dia. b: 41 mm (1.61 in) dia. c: 28.5 mm (1.122 in) dia.
KV32101000 (J25689-A) Pin punch	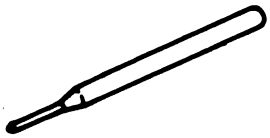	Removing and installing retaining pin
ST22730000 (J25681) Puller	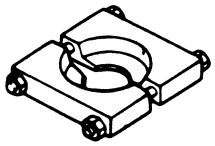	Removing mainshaft front and rear bearing inner race
ST30031000 (J22912-01) Puller	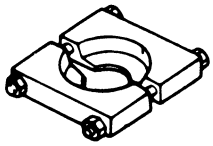	Removing input shaft front and rear bearing Removing 4th & 5th main gear
ST30021000 (J22912-01) Puller	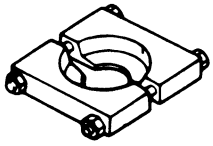	Removing 5th synchronizer Removing 3rd & 4th synchronizer
ST3306S001 (–) Differential side bearing puller set ① ST33051001 (–) Puller ② ST33061000 (J8107-2) Adapter	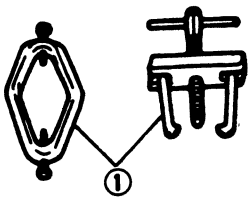 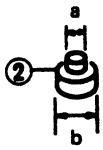	Removing differential side bearing inner race a: 28.5 mm (1.122 in) dia. b: 38 mm (1.50 in) dia.
ST33290001 (J34286) Puller		Removing differential oil seal Removing mainshaft rear bearing outer race Removing differential side bearing outer race

*: Special tool or commercial equivalent

Tool number Tool name	Description	
ST33400001 (J26082) Drift	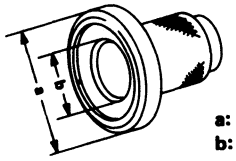 a: 60 mm (2.36 in) dia. b: 47 mm (1.85 in) dia.	Installing differential oil seal
ST30600000 (J25863-01) Drift	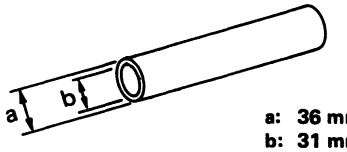 a: 36 mm (1.42 in) dia. b: 31 mm (1.22 in) dia.	Installing input shaft front bearing
ST22452000 (–) Drift	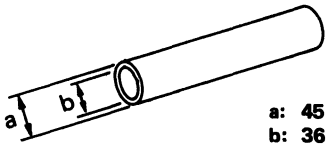 a: 45 mm (1.77 in) dia. b: 36 mm (1.42 in) dia.	Installing 3rd, 4th and 5th main gear
ST30621000 (J25742-5) Drift	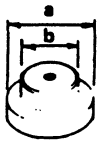 a: 79 mm (3.11 in) dia. b: 59 mm (2.32 in) dia.	Installing mainshaft rear bearing outer race (Use with ST30611000.)
ST30611000 (J25742-1) Drift	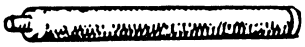	Installing mainshaft rear bearing outer race (Use with ST30621000.)
ST30720000 (–) Drift	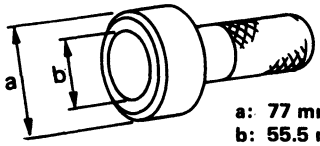 a: 77 mm (3.03 in) dia. b: 55.5 mm (2.185 in) dia.	Installing differential side bearing outer race
(J34290) Shim selecting tool set	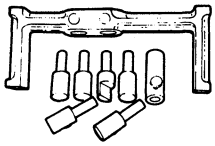	Selecting differential side bearing adjusting shim
(J34305) Snap ring remover and installer	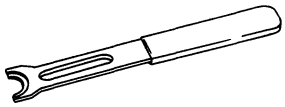	Removing and installing stopper ring of shift fork
(J25407-2)	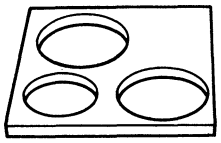	Measuring reverse baulk ring wear

COMMERCIAL SERVICE TOOLS

Tool name	Description	
Drift	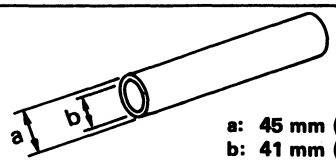 a: 45 mm (1.77 in) dia. b: 41 mm (1.61 in) dia.	Installing differential side bearing inner race
Drift	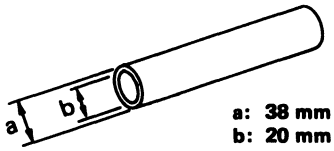 a: 38 mm (1.50 in) dia. b: 20 mm (0.79 in) dia.	Installing striking rod oil seal

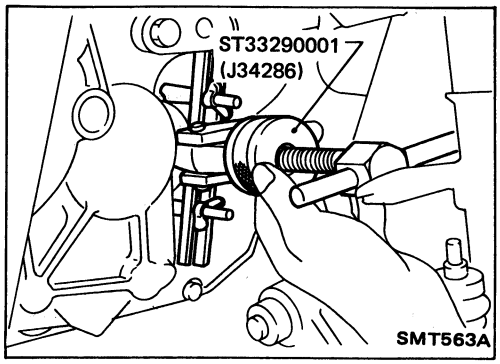

Replacing Oil Seal

DIFFERENTIAL OIL SEAL

1. Drain gear oil from transaxle.
2. Remove drive shafts — Refer to section FA.
3. Remove differential oil seal.

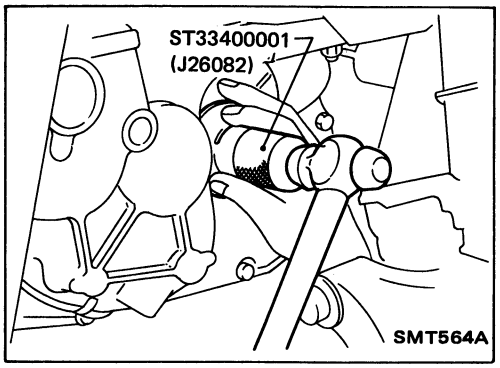

4. Install differential oil seal.
- **Apply multi-purpose grease to seal lip of oil seal before installing.**
5. Install drive shafts — Refer to section FA.

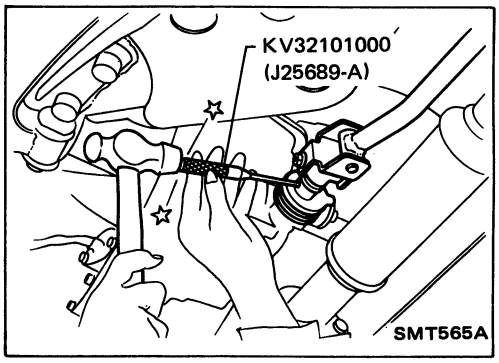

STRIKING ROD OIL SEAL

1. Remove transaxle control rod from yoke.
2. Remove retaining pin of yoke.
- **Be careful not to damage boot.**

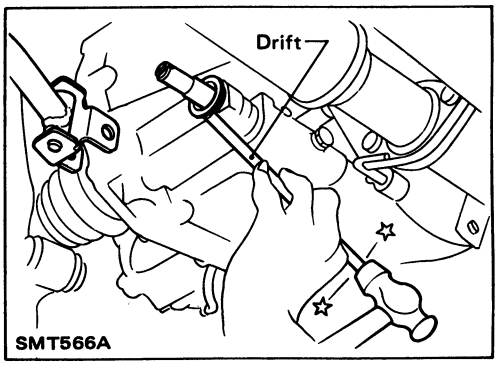

3. Remove striking rod oil seal.

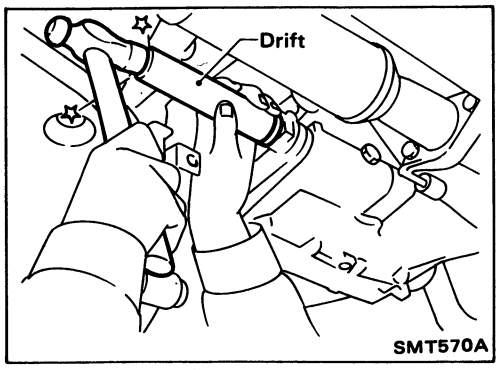

4. Install striking rod oil seal.
- **Apply multi-purpose grease to seal lip of oil seal before installing.**

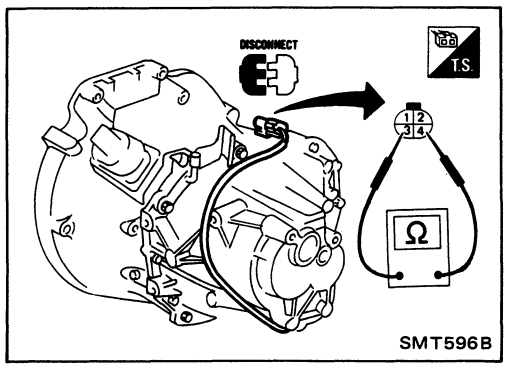

Check of Position Switch

- Check continuity.

Gear position	Continuity
Reverse	② – ④
Neutral	① – ③
Except reverse and neutral	No

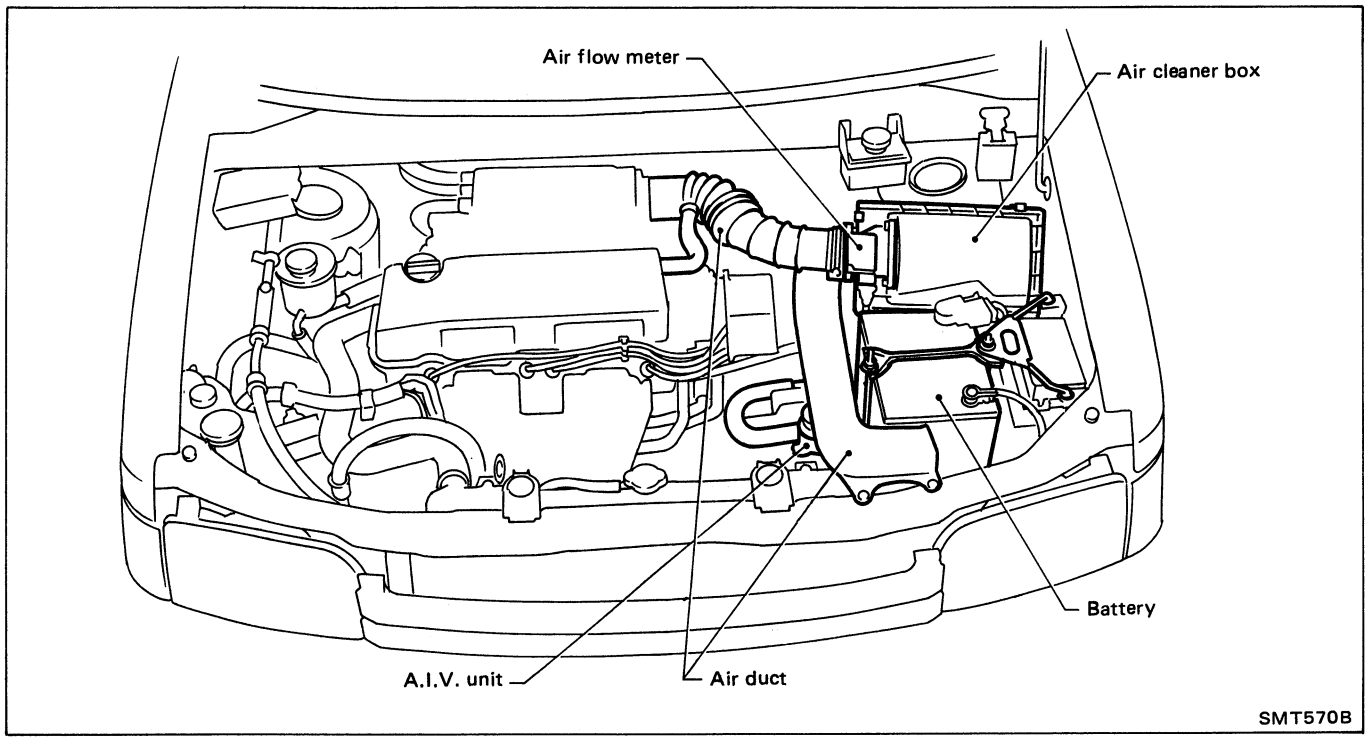

Removal

— 2WD —

1. Remove battery and bracket.
2. Remove air cleaner box with air flow meter.
3. Remove air duct.
4. Remove A.I.V. unit.
5. Remove clutch operating cylinder from transaxle.
6. Remove clutch hose clamp.
7. Disconnect speedometer pinion and position switch connectors.
8. Remove breather hose clamp.
9. Remove starter motor from transaxle.

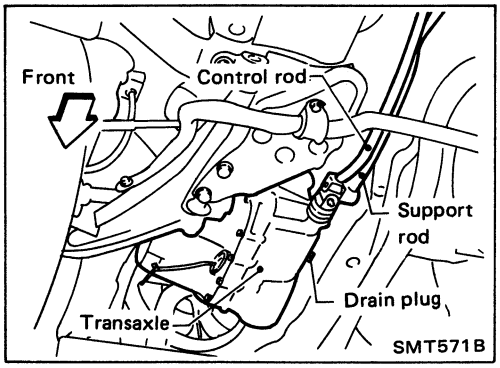

10. Remove shift control rod and support rod from transaxle.
11. Drain gear oil from transaxle.
12. Draw out drive shafts — Refer to section FA.

Removal (Cont'd)

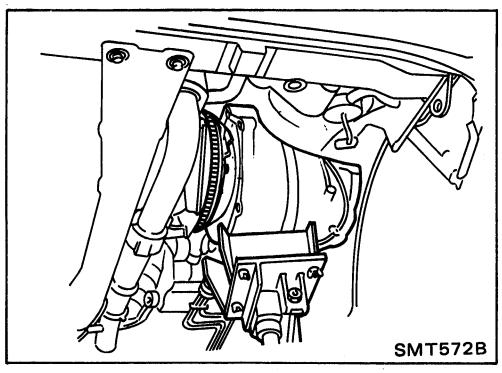

13. Support engine by placing a jack under oil pan.

CAUTION:

Do not place jack under oil pan drain plug.

14. Lower transaxle while supporting it, with a jack.

— 4WD —

1. Remove battery and bracket.
2. Remove air cleaner box with air flow meter.
3. Remove air duct.
4. Remove A.I.V. unit.
5. Remove clutch operating cylinder from transaxle.
6. Remove clutch hose clamp.
7. Disconnect position switch connector.
8. Remove breather hose clamp.
9. Remove starter motor from transaxle.
10. Remove speedometer pinion.

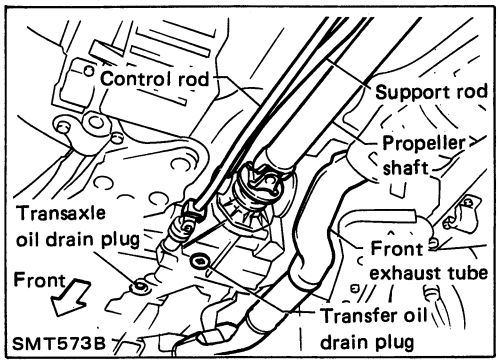

11. Remove propeller shaft from transfer.
12. Remove shift control rod and support rod from transaxle.
13. Remove front exhaust tube.
14. Drain gear oil from transaxle and transfer.
15. Remove drive shafts from transaxle and transfer — Refer to section FA.

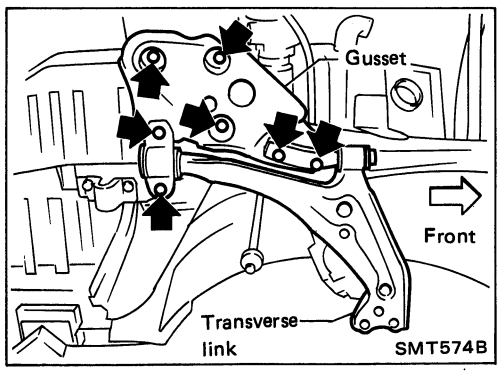

16. Remove L.H. transverse link and gusset.

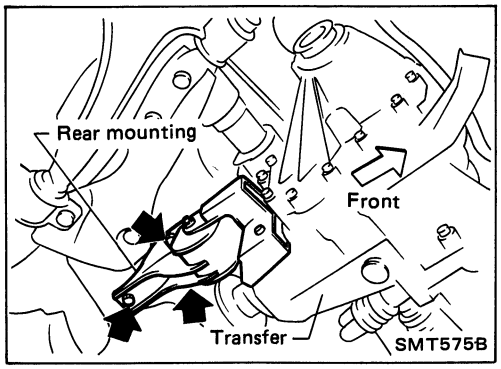

17. Support engine by placing a jack under oil pan.

CAUTION:

Do not place jack under oil pan drain plug.

18. Remove rear mounting.

Removal (Cont'd)

19. Remove engine front mounting.

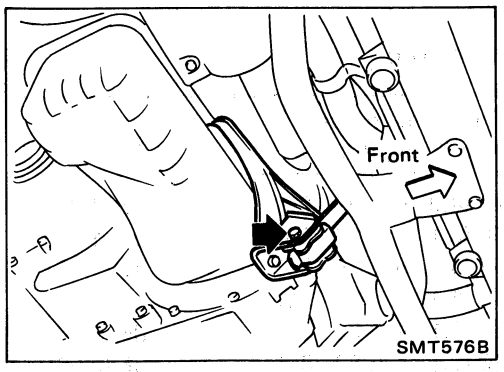

20. Separate transaxle from engine and transfer, and lower transaxle while supporting it, with a jack.

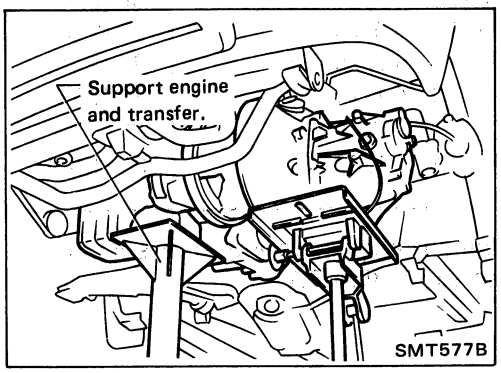

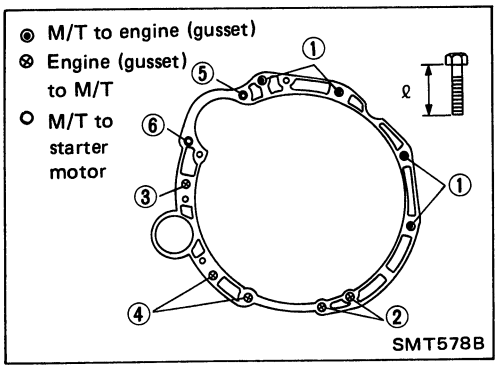

Installation

— 2WD —

1. Tighten bolt securing transaxle.

Bolt No.	Tightening torque N·m (kg-m, ft-lb)	ℓ mm (in)
1	39 - 49 (4.0 - 5.0, 29 - 36)	45 (1.77)
2	30 - 40 (3.1 - 4.1, 22 - 30)	30 (1.18)
3	30 - 40 (3.1 - 4.1, 22 - 30)	40 (1.57)
4	30 - 40 (3.1 - 4.1, 22 - 30)	20 (0.79)
5	39 - 49 (4.0 - 5.0, 29 - 36)	65 (2.56)
6	39 - 49 (4.0 - 5.0, 29 - 36)	80 (3.15)
Front gusset to engine	30 - 40 (3.1 - 4.1, 22 - 30)	35 (1.38)
Rear gusset to engine	30 - 40 (3.1 - 4.1, 22 - 30)	30 (1.18)

Removal (Cont'd)

— 4WD —

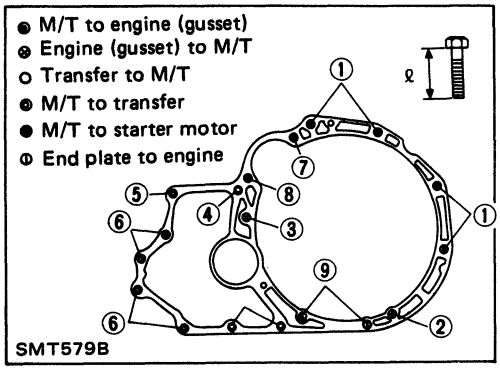

1. Tighten bolt securing transaxle.

Bolt No.	Tightening torque N·m (kg-m, ft-lb)	ℓ mm (in)
1	39 - 49 (4.0 - 5.0, 29 - 36)	45 (1.77)
2	30 - 40 (3.1 - 4.1, 22 - 30)	35 (1.38)
3	39 - 49 (4.0 - 5.0, 29 - 36)	40 (1.57)
4	30 - 40 (3.1 - 4.1, 22 - 30)	65 (2.56)
5	30 - 40 (3.1 - 4.1, 22 - 30)	85 (3.35)
6	30 - 40 (3.1 - 4.1, 22 - 30)	65 (2.56)
7	39 - 49 (4.0 - 5.0, 29 - 36)	65 (2.56)
8	39 - 49 (4.0 - 5.0, 29 - 36)	80 (3.15)
9	30 - 40 (3.1 - 4.1, 22 - 30)	20 (0.79)
Front gusset to engine	30 - 40 (3.1 - 4.1, 22 - 30)	35 (1.38)

2. Check front wheel alignment after installing front suspension and axle parts — Refer to section FA.

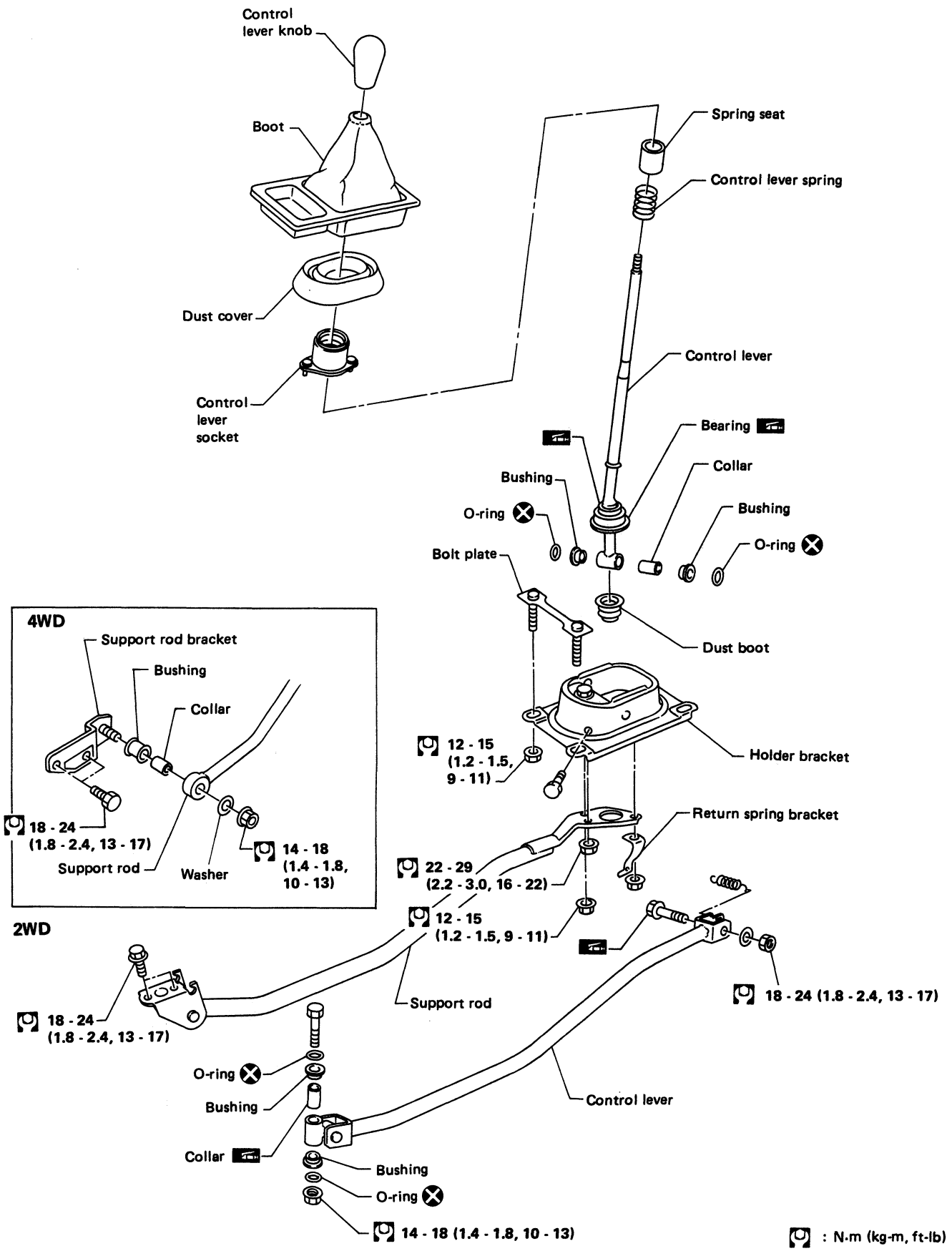
Control lever knob
Boot
Dust cover
Control lever socket
Spring seat
Control lever spring
Control lever
Bearing
Collar
Bushing
O-ring
Bushing
O-ring
Bolt plate
Dust boot
Holder bracket
12 - 15 (1.2 - 1.5, 9 - 11)
Return spring bracket
22 - 29 (2.2 - 3.0, 16 - 22)
12 - 15 (1.2 - 1.5, 9 - 11)
4WD
Support rod bracket
Bushing
Collar
18 - 24 (1.8 - 2.4, 13 - 17)
Support rod
Washer
14 - 18 (1.4 - 1.8, 10 - 13)
2WD
18 - 24 (1.8 - 2.4, 13 - 17)
Support rod
18 - 24 (1.8 - 2.4, 13 - 17)
O-ring
Bushing
Collar
Bushing
O-ring
14 - 18 (1.4 - 1.8, 10 - 13)
Control lever
: N·m (kg-m, ft-lb)
SMT503B

Case Components — 2WD

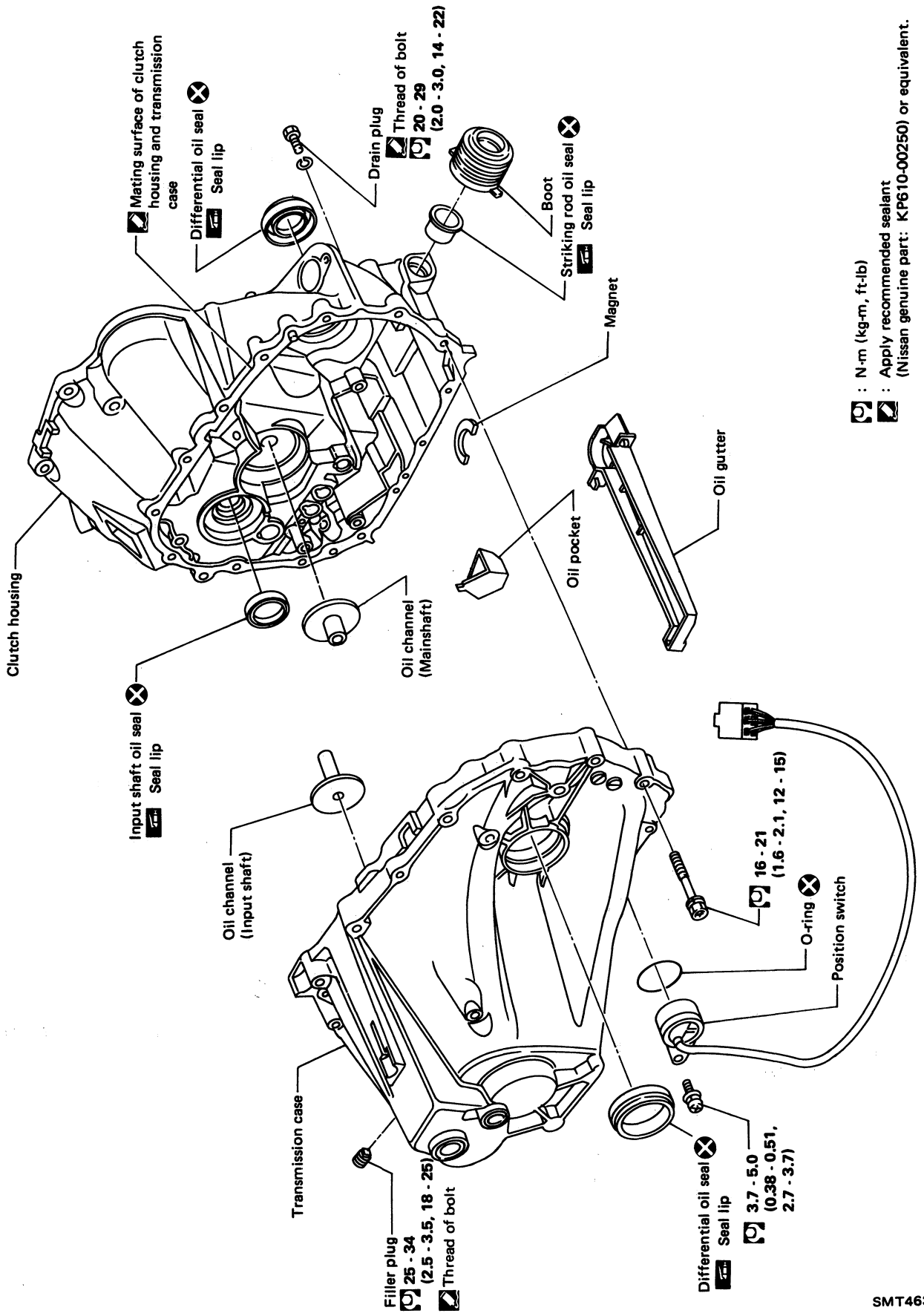

Case Components — 4WD

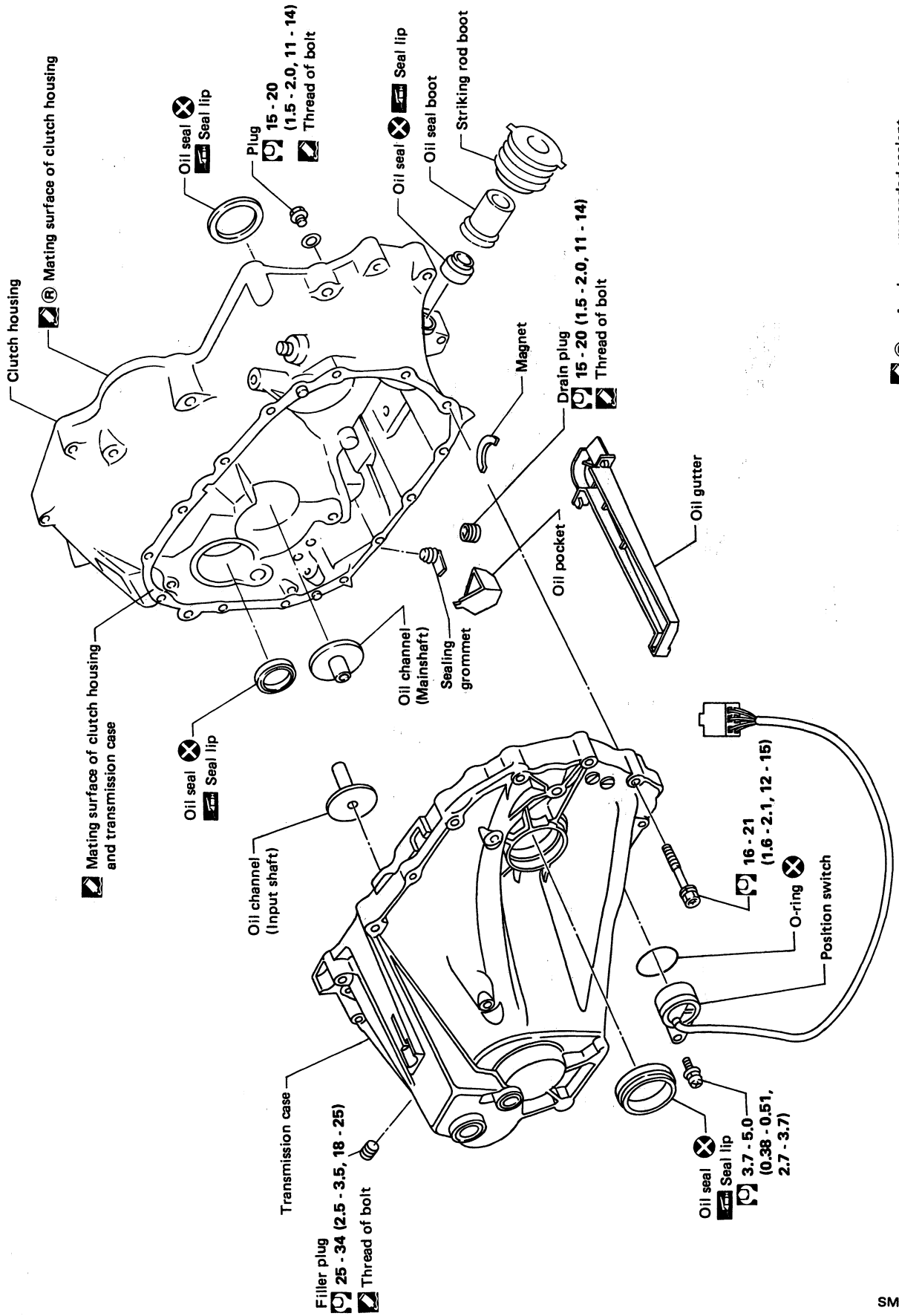

Gear Components — 2WD

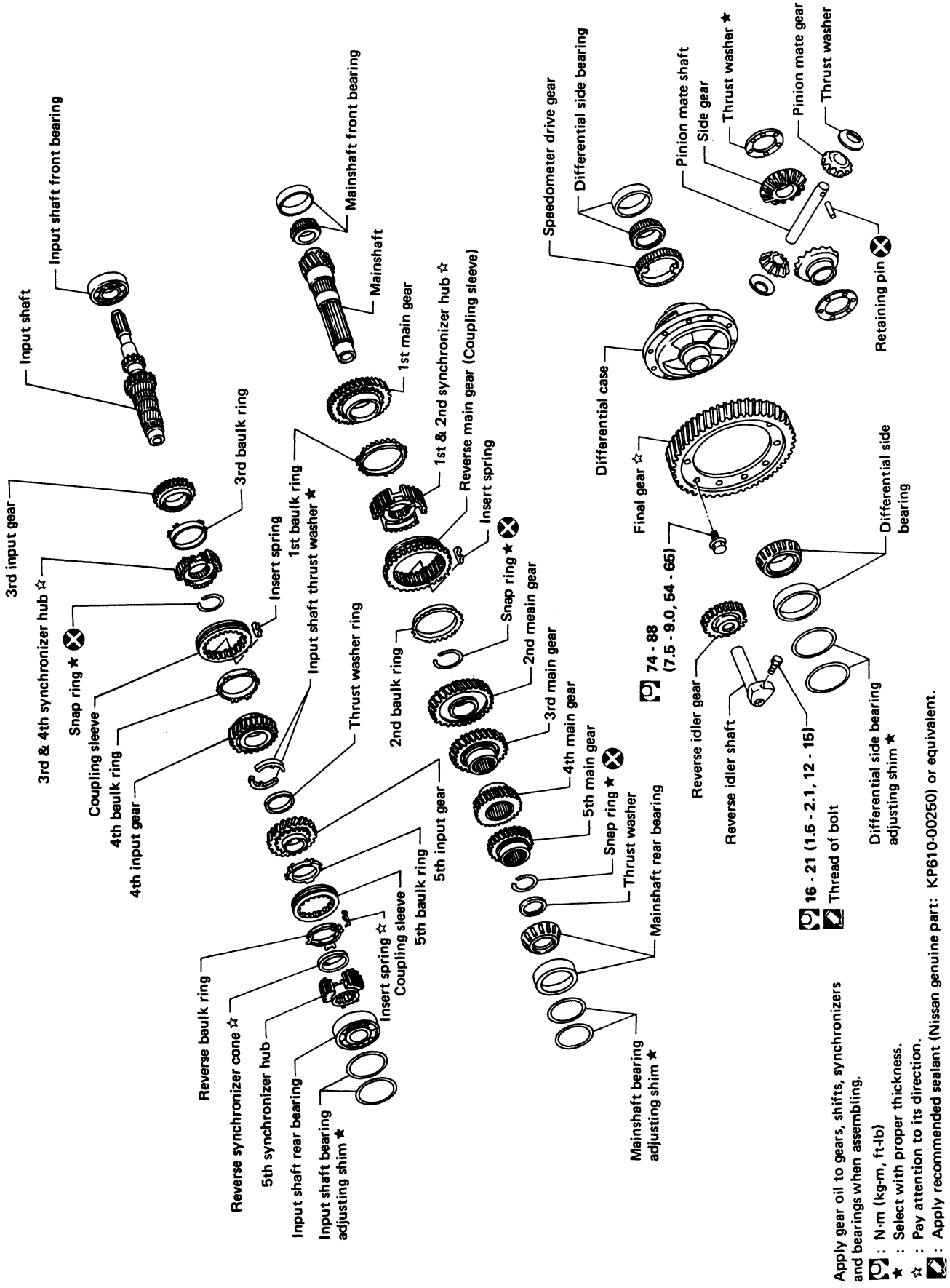

SMT466B

Gear Components — 4WD

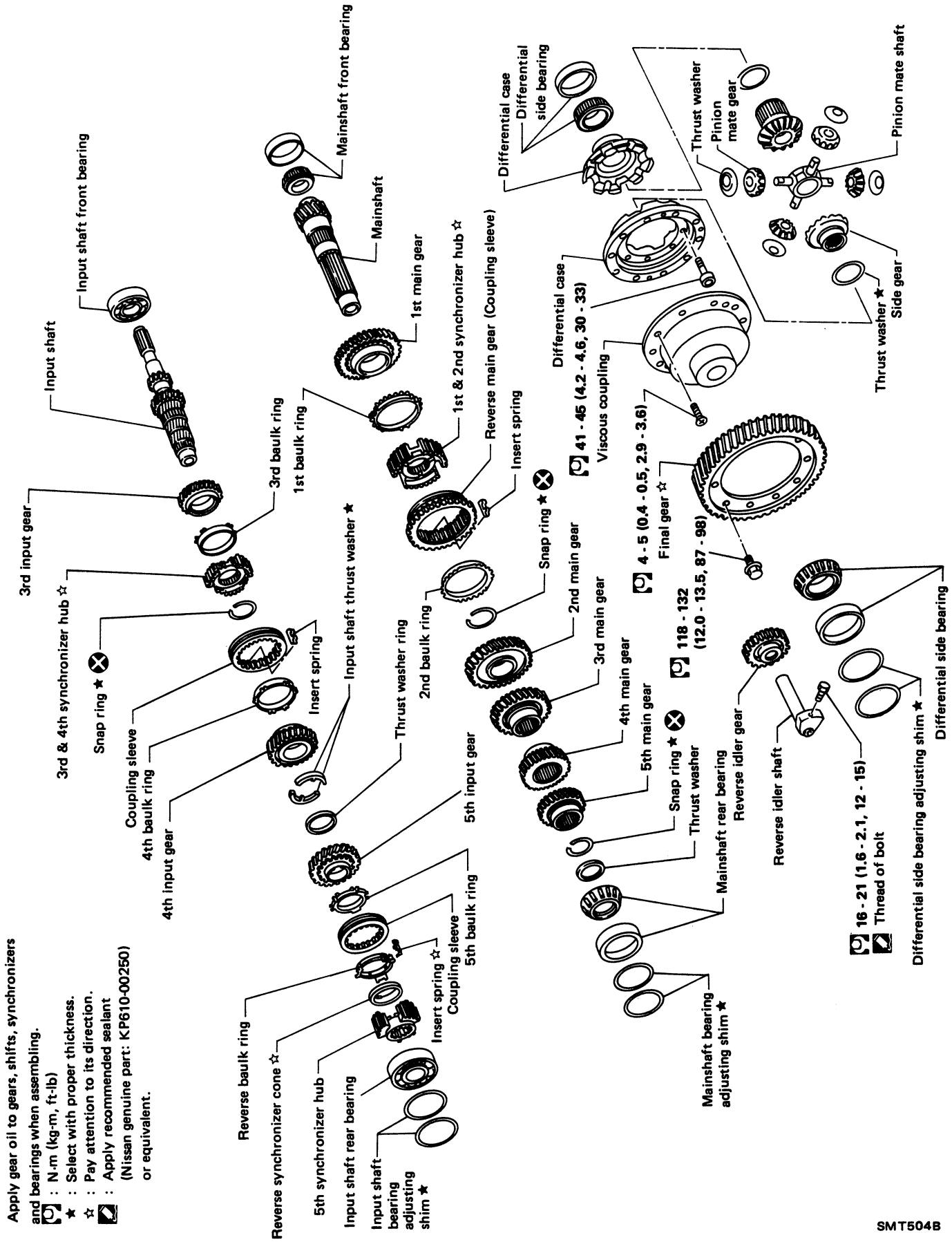

Shift Control Components

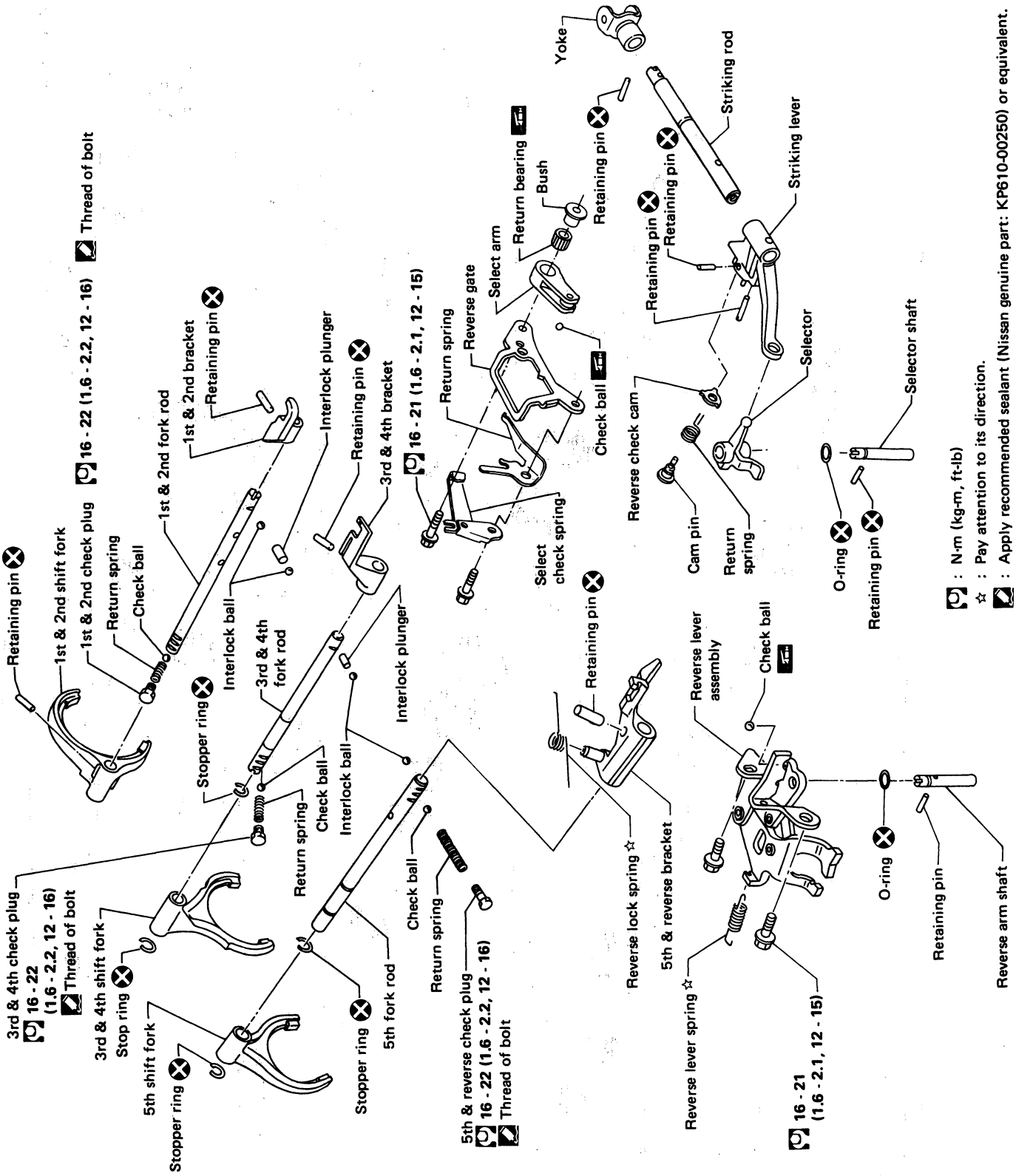

SMT465B

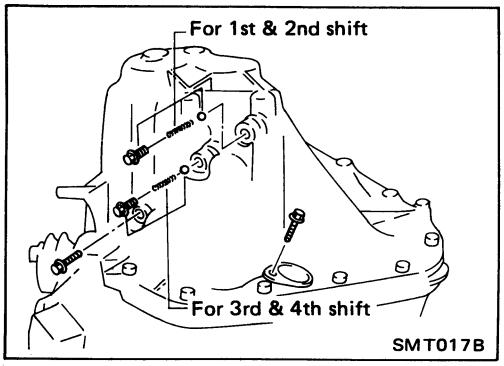

1. Before removing transmission case, remove bolts and plugs as shown left.
2. Remove transmission case.

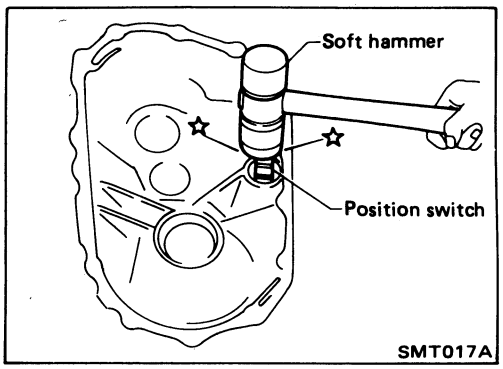

3. Remove position switch.

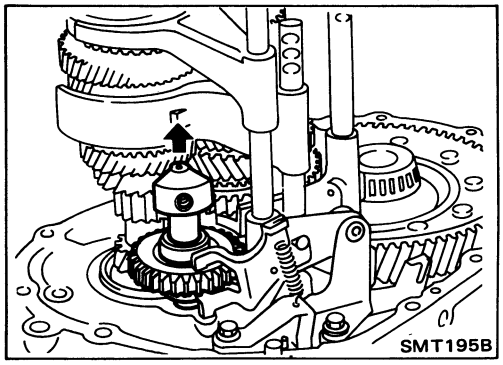

4. Mesh 4th gear, and then remove reverse idler shaft and reverse idler gear.

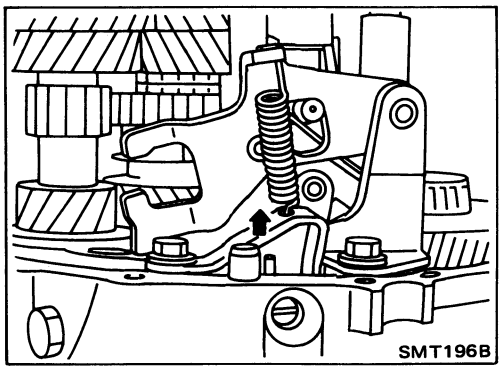

5. Pull out retaining pin from clutch housing.

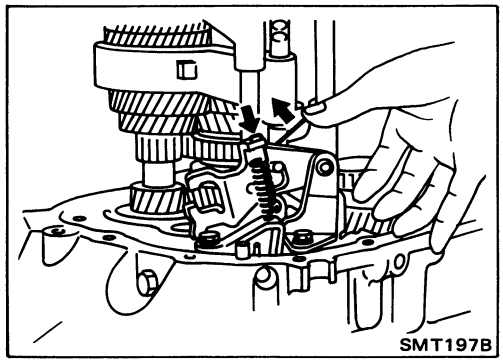

6. Remove reverse lever spring and reverse lock spring from reverse lever assembly.

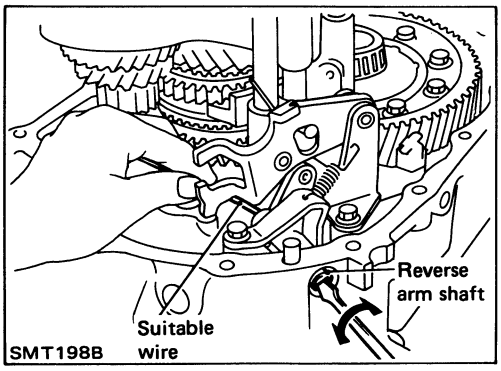

7. Remove reverse arm shaft while rotating it.

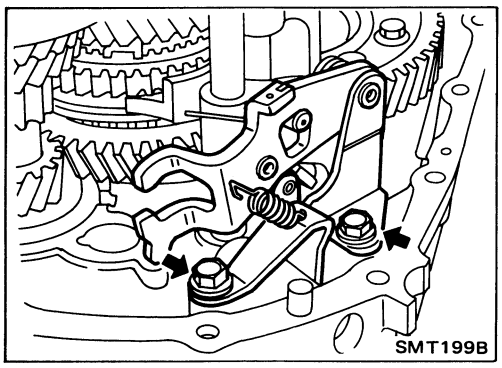

8. Remove reverse lever assembly.

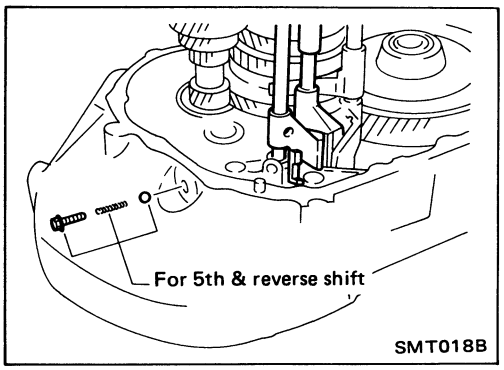

9. Remove 5th & reverse check plug, spring and ball.

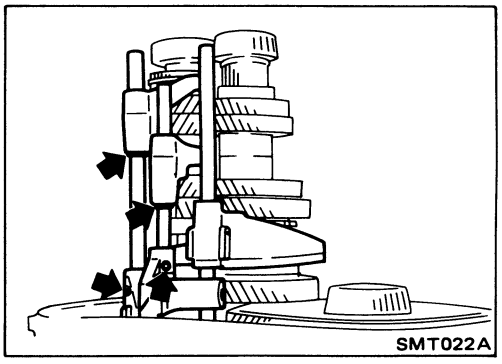

10. Remove stopper rings and retaining pins from 5th & reverse and 3rd & 4th fork rods.
11. Remove 5th & reverse and 3rd & 4th fork rods. Then remove forks and brackets.

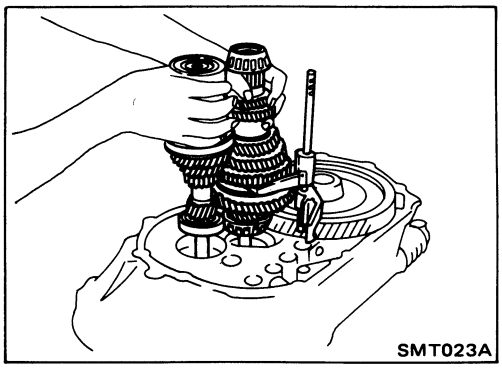

12. Remove both input and mainshafts with 1st & 2nd fork and fork rod as a set.

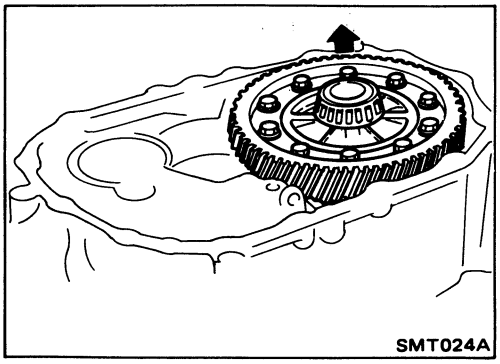

13. Remove final drive assembly.

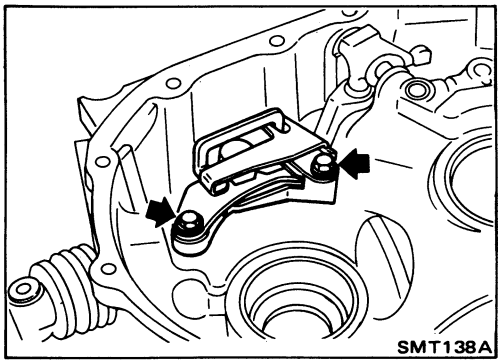

14. Remove reverse check assembly.

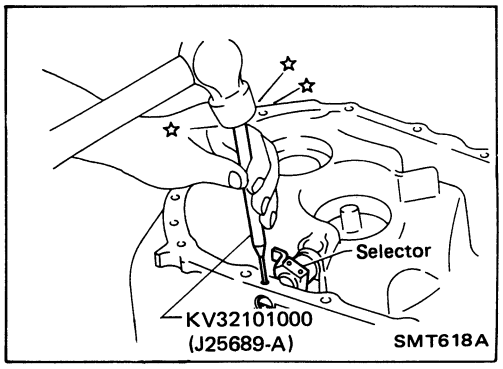

15. Remove retaining pin and detach the selector.

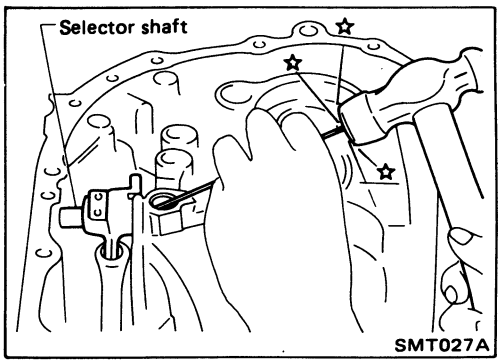

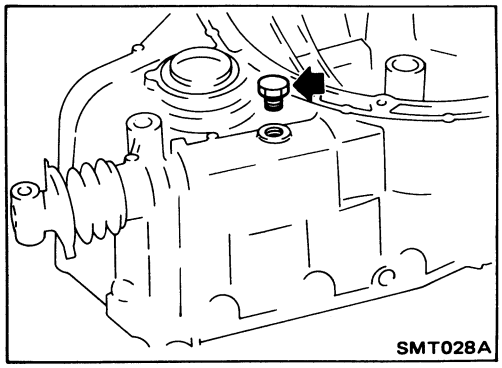

16. Remove plug for convenience in removing retaining pin which holds striking lever to striking rod.

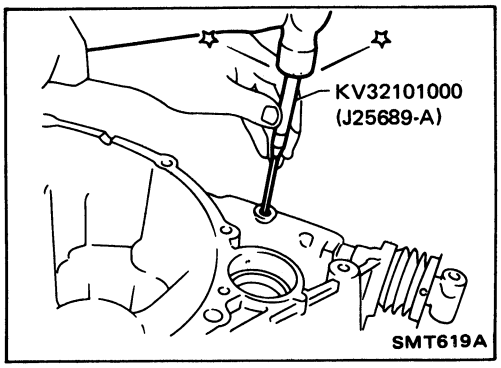

17. Remove retaining pin and then withdraw striking lever and striking rod.

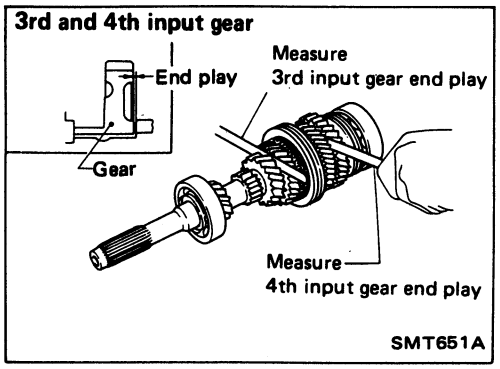

Input Shaft and Gears

DISASSEMBLY

1. Before disassembly, check 3rd, 4th and 5th input gear end plays.

Gear end play

Gears	End play mm (in)
3rd input gear	0.23 - 0.43 (0.0091 - 0.0169)
4th input gear	0.25 - 0.55 (0.0098 - 0.0217)
5th input gear	0.23 - 0.48 (0.0091 - 0.0189)

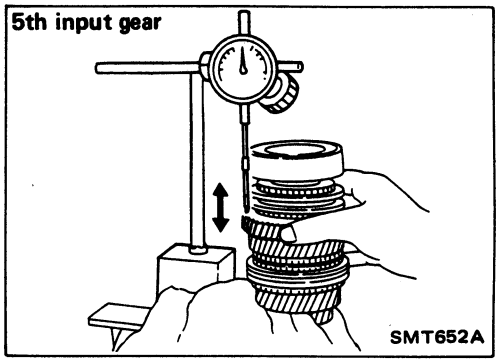

- If not within specification, disassemble and check contact surface of gear, shaft and hub. Then check clearance of snap ring and thrust washer — Refer to "ASSEMBLY".

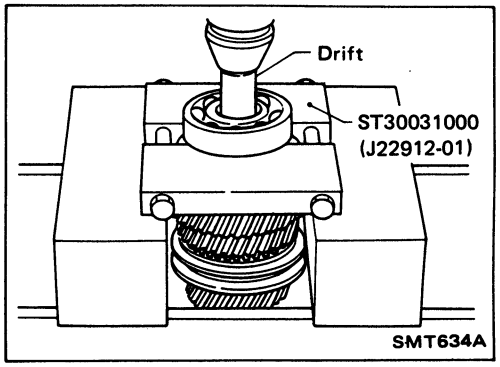

2. Remove input shaft rear bearing.

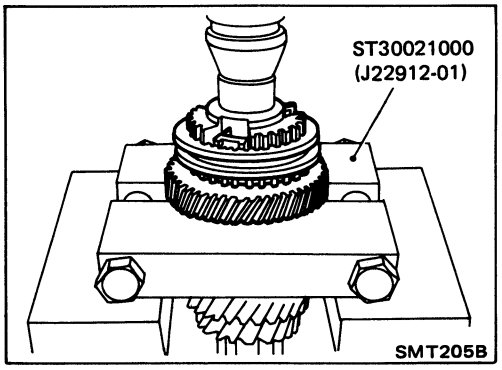

3. Remove 5th & reverse synchronizer and 5th input gear.

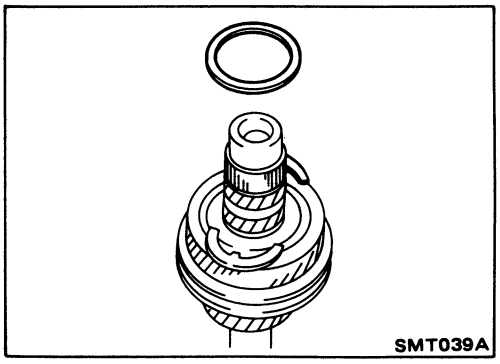

4. Remove thrust washer ring, thrust washers and 4th input gear.

Input Shaft and Gears (Cont'd)

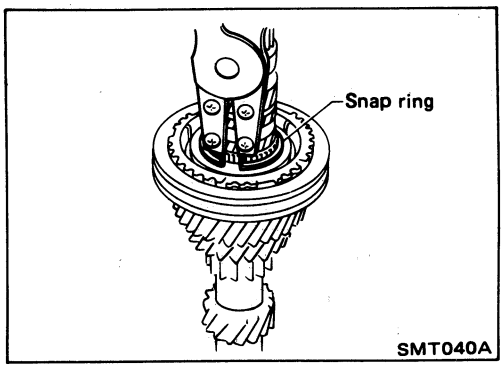

5. Remove snap ring.

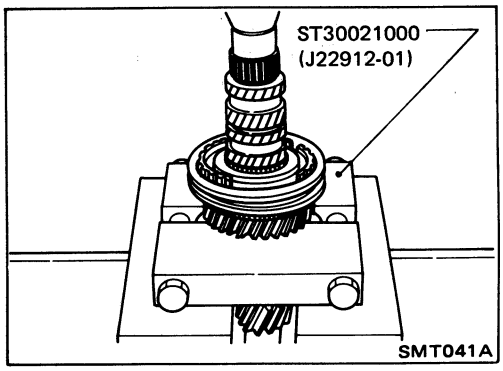

6. Remove 3rd & 4th synchronizer and 3rd input gear.

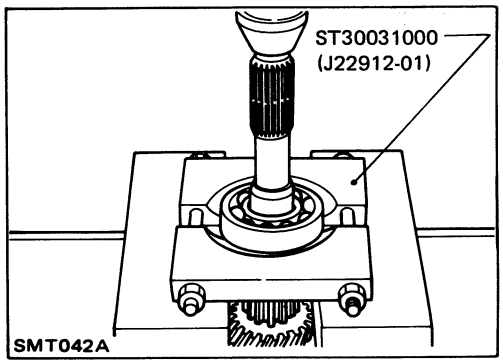

7. Remove input shaft front bearing.

INSPECTION

Gear and shaft

- Check shaft for cracks, wear or bending.
- Check gears for excessive wear, chips or cracks.

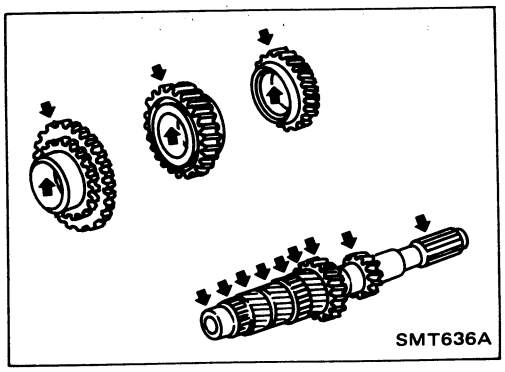

Synchronizer

- Check spline portion of coupling sleeves, hubs and gears for wear or cracks.
- Check baulk rings for cracks or deformation.
- Check insert springs for wear or deformation.

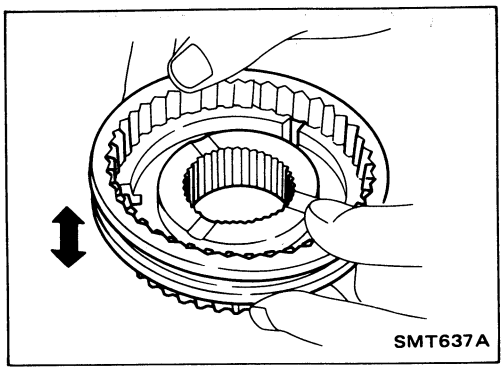

Input Shaft and Gears (Cont'd)

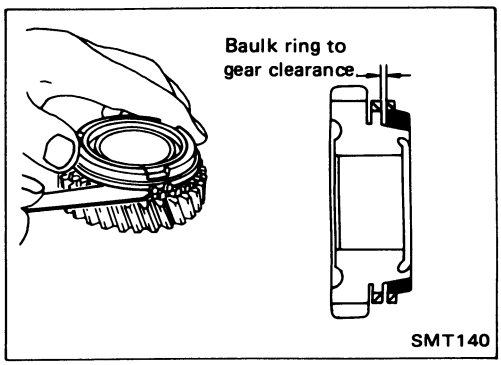

- Measure clearance between baulk ring and gear. (3rd and 4th)

  Clearance between baulk ring and gear:
  Standard
  1.0 - 1.35 mm (0.0394 - 0.0531 in)
  Wear limit
  0.7 mm (0.028 in)

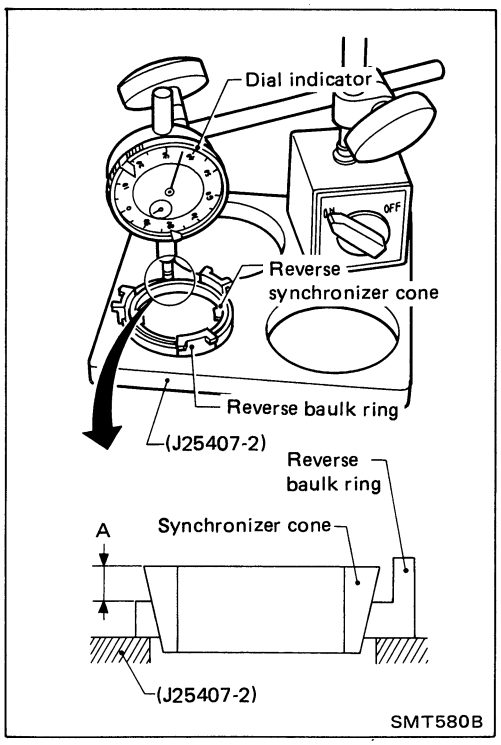

- Measure wear of reverse baulk ring.

a. Place reverse baulk ring on Tool and then place reverse synchronizer cone on reverse baulk ring.
- Make sure projection of synchronizer cone is positioned over the recess on suitable bearing puller.

b. While holding reverse synchronizer cone against reverse baulk ring as firmly as possible, measure dimension "A" with dial indicator.

   Wear limit: 1.2 mm (0.047 in)

c. If dimension "A" is smaller than the wear limit, replace baulk ring.

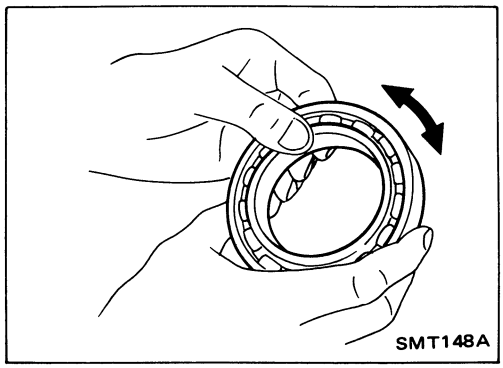

Bearing

- Make sure bearings roll freely and are free from noise, cracks, pitting or wear.

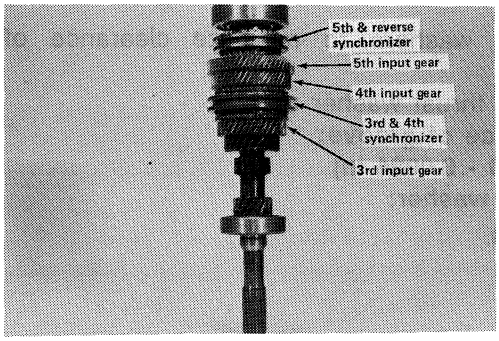

ASSEMBLY

Input Shaft and Gears (Cont'd)

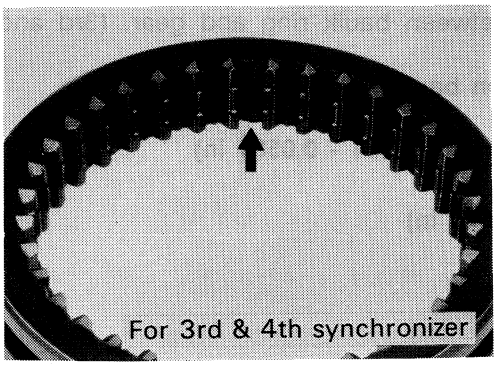

1. Place inserts in three grooves on coupling sleeve (3rd & 4th synchronizer, 5th synchronizer).

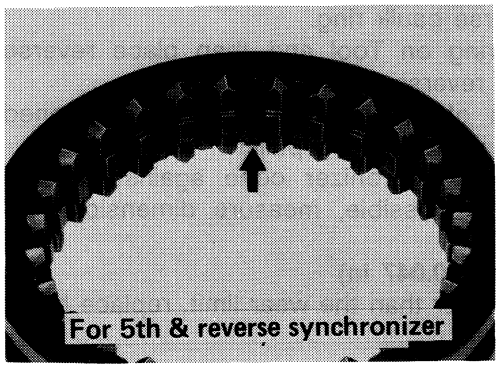

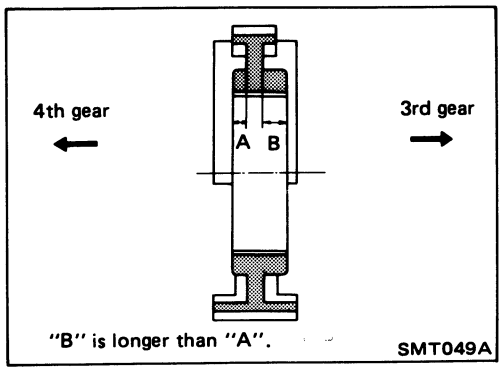

2. Install 3rd input gear and 3rd baulk ring.
3. Press on 3rd & 4th synchronizer hub.
   - **Pay attention to its direction.**
4. Select proper snap ring of 3rd & 4th synchronizer hub to minimize clearance of groove, and then install it.
   Allowable clearance of groove:
   0 - 0.1 mm (0 - 0.004 in)
   Snap ring of 3rd & 4th synchronizer hub:
   Refer to S.D.S.

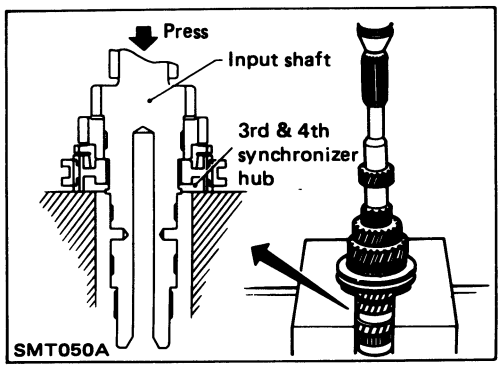

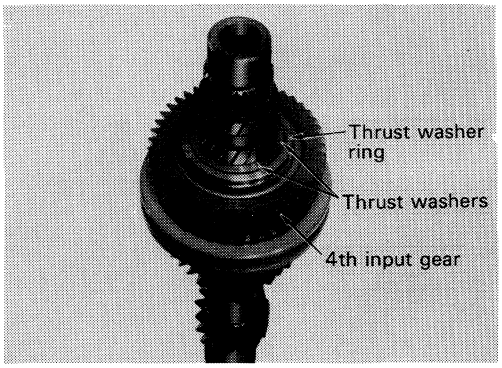

5. Install 4th input gear.
6. Select proper thrust washers to minimize clearance of groove.
   Then install them and thrust washer ring.
   Allowable clearance of groove:
   0 - 0.06 mm (0 - 0.0024 in)
   Input shaft thrust washer:
   Refer to S.D.S.

Input Shaft and Gears (Cont'd)

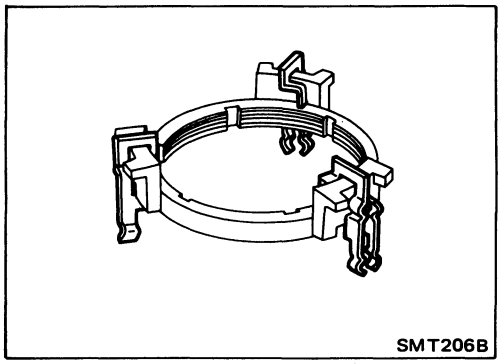
SMT206B

7. Install 5th & reverse synchronizer assembly.
a. Hook insert springs on reverse baulk ring.

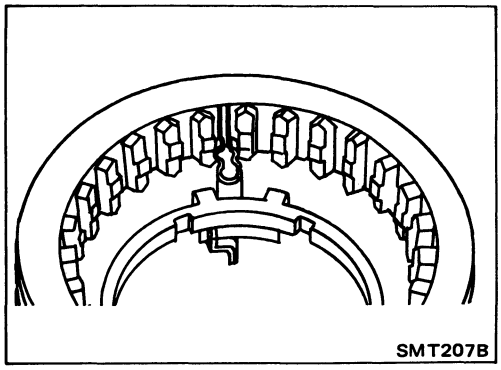
SMT207B

b. Install insert springs with reverse baulk ring onto coupling sleeve.
- **Pay attention to position of insert springs.**

c. Place 5th baulk ring on 5th input gear.
d. Install reverse synchronizer cone on reverse baulk ring.

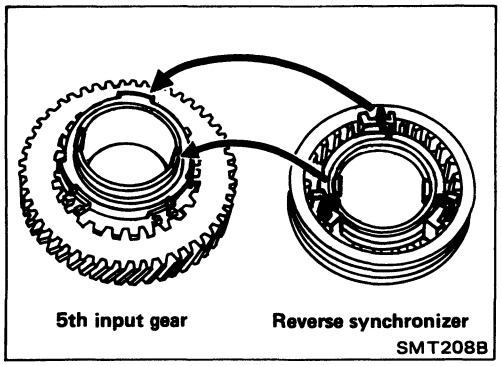

SMT208B

e. Place reverse synchronizer assembly on 5th input gear.
- **Mesh recesses of 5th input gear with projections of reverse synchronizer cone.**
- **Put insert spring mounts on reverse baulk ring upon those on 5th baulk ring.**

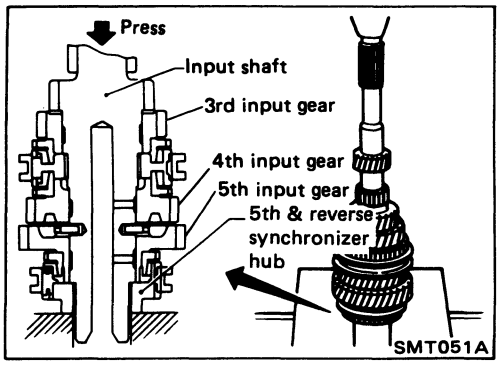

SMT051A

f. Press on 5th & reverse synchronizer assembly with 5th input gear.

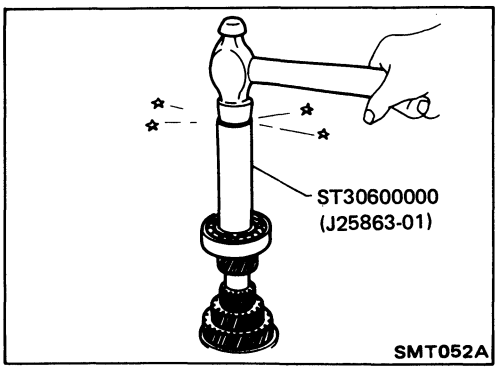

SMT052A

8. Install input shaft front and rear bearings.
9. Measure gear end play as the final check — Refer to "DISASSEMBLY".

Input Shaft and Gears (Cont'd)

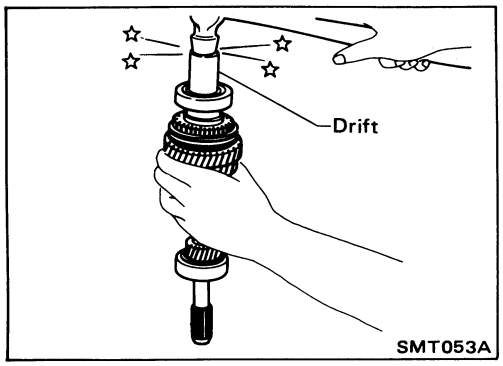

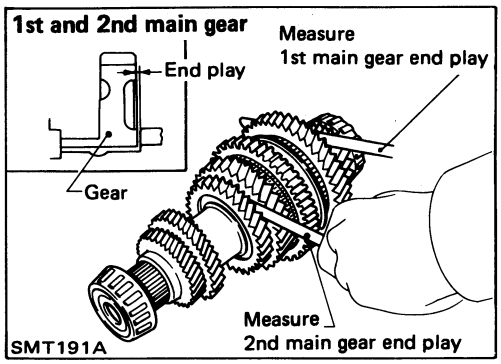

Mainshaft and Gears

DISASSEMBLY

1. Before disassembly, check 1st and 2nd main gear end plays.

Gear end play

Gears	End play mm (in)
1st main gear	0.23 - 0.43 (0.0091 - 0.0169)
2nd main gear	0.23 - 0.58 (0.0091 - 0.0228)

If not within specification, disassemble and check contact surface of gear, shaft and hub. Then check clearance of snap ring — Refer to "ASSEMBLY".

2. Press out mainshaft rear bearing.

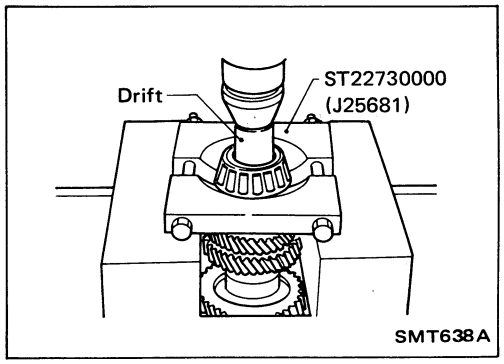

3. Remove thrust washer and snap ring.

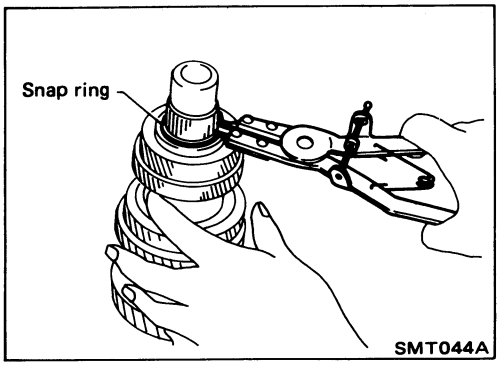

4. Press out 5th main gear and 4th main gear.

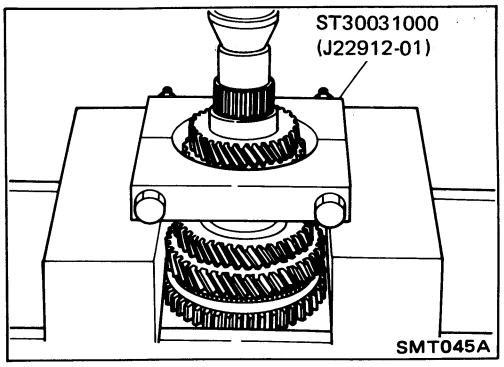

Mainshaft and Gears (Cont'd)

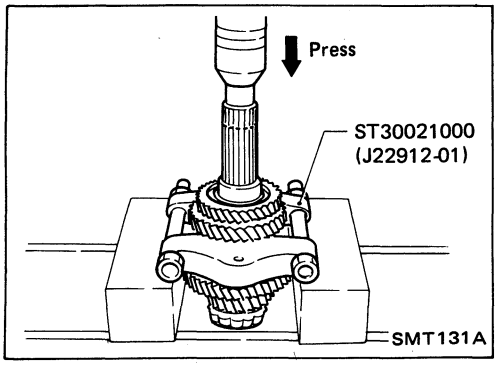

5. Press out 3rd main gear and 2nd main gear.

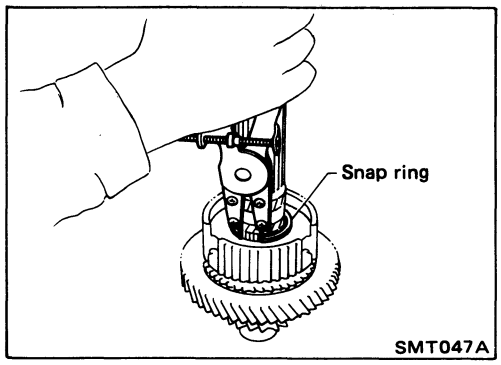

6. Remove snap ring.

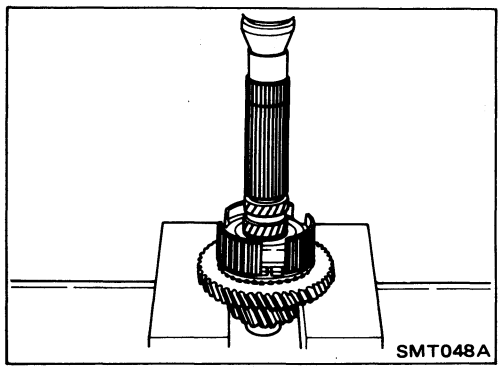

7. Remove 1st & 2nd synchronizer and 1st main gear.

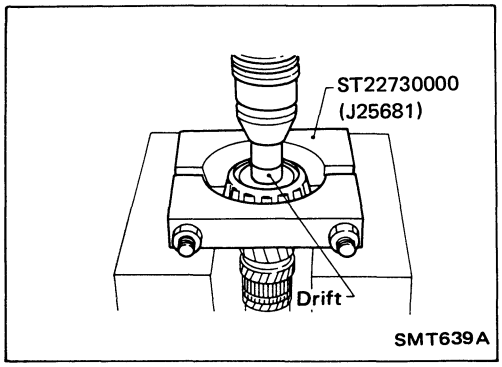

8. Remove mainshaft front bearing.

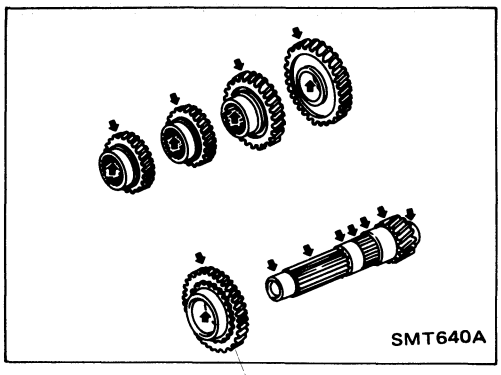

INSPECTION

Gear and shaft

- Check shaft for cracks, wear or bending.
- Check gears for excessive wear, chips or cracks.

Mainshaft and Gears (Cont'd)

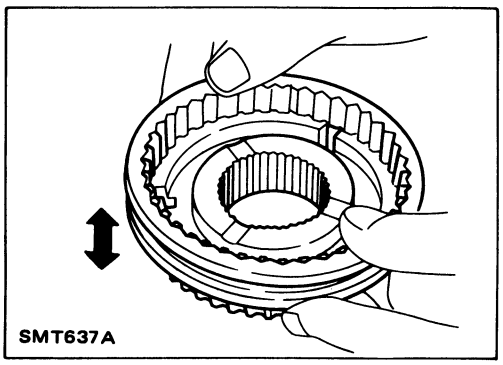

Synchronizer

- Check spline portion of coupling sleeves, hubs and gears for wear or cracks.
- Check baulk rings for cracks or deformation.
- Check insert springs for deformation.

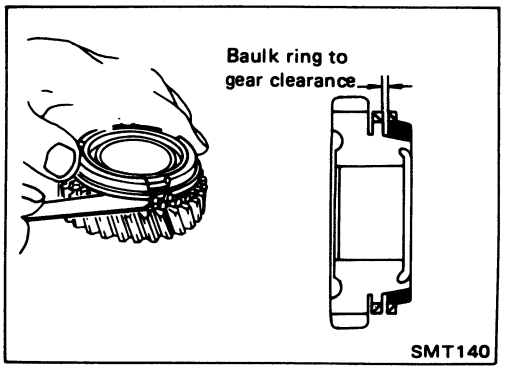

- Measure clearance between baulk ring and gear.

  Clearance between baulk ring and gear:

  Standard

  1.0 - 1.35 mm (0.0394 - 0.0531 in)

  Wear limit

  0.7 mm (0.028 in)

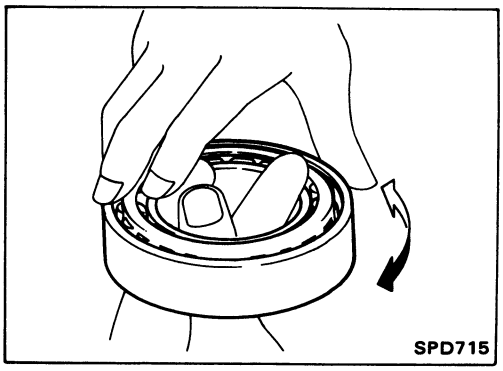

Bearing

- Make sure bearings roll freely and are free from noise, cracks, pitting or wear.
- **When replacing tapered roller bearing, replace outer and inner race as a set.**

ASSEMBLY

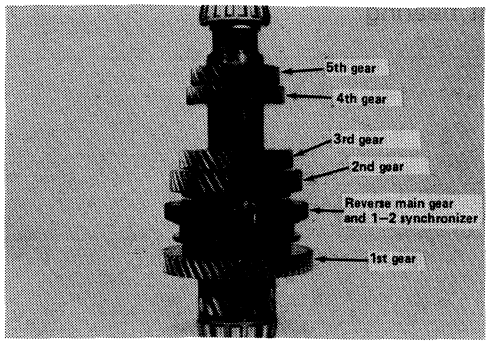

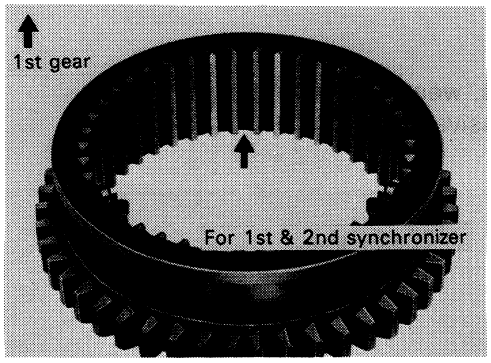

1. Place inserts in three grooves on coupling sleeve (1st & 2nd synchronizer).

Mainshaft and Gears (Cont'd)

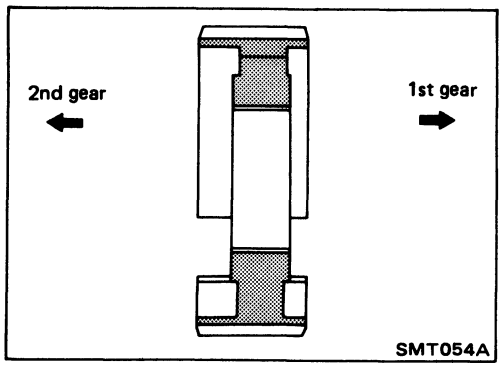

2. Install 1st main gear and 1st baulk ring.
3. Press on 1st & 2nd synchronizer hub.
   - **Pay attention to its direction.**

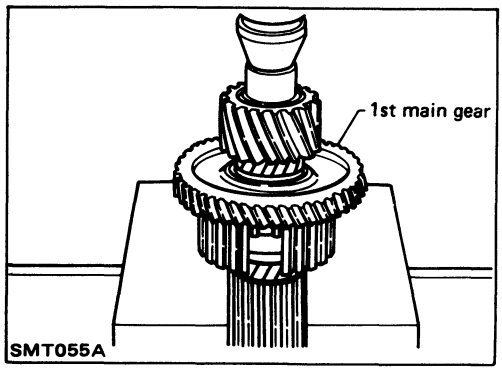

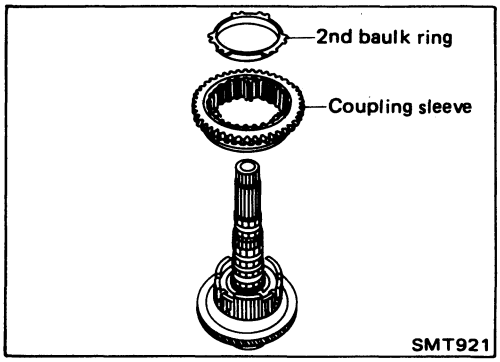

4. Install coupling sleeve with three inserts and 2nd baulk ring.
5. Select proper snap ring of 1st & 2nd synchronizer hub to minimize clearance of groove and then install it.
   Allowable clearance of groove:
   0 - 0.1 mm (0 - 0.004 in)
   Snap ring of 1st & 2nd synchronizer hub:
   Refer to S.D.S.

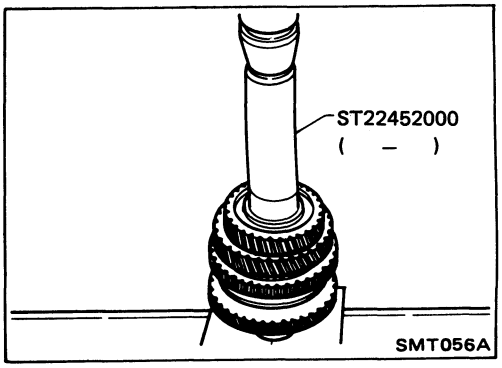

6. Install 2nd main gear.
7. Press on 3rd main gear.

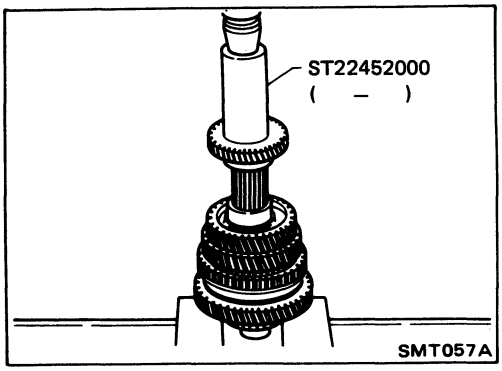

8. Press on 4th main gear.

Mainshaft and Gears (Cont'd)

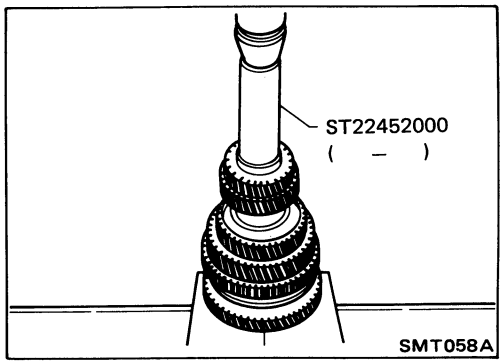

9. Press on 5th main gear.
10. Select proper snap ring of 5th main gear to minimize clearance of groove and then install it.
    Allowable clearance of groove:
    0 - 0.15 mm (0 - 0.0059 in)
    Snap ring of 5th main gear:
    Refer to S.D.S.

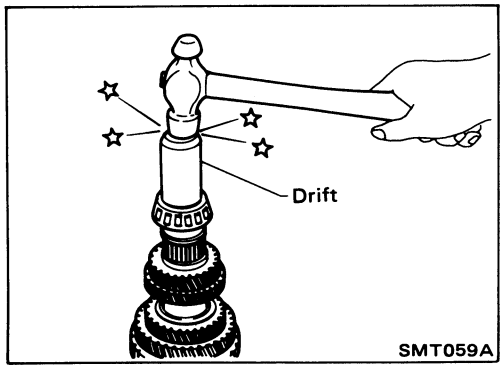

11. Press on thrust washer and press on mainshaft rear bearing.

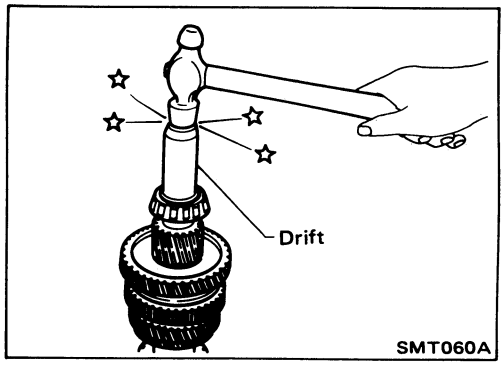

12. Press on mainshaft front bearing.
13. Measure gear end play as the final check — Refer to "DISASSEMBLY".

Final Drive (Front differential) — 2WD

DISASSEMBLY

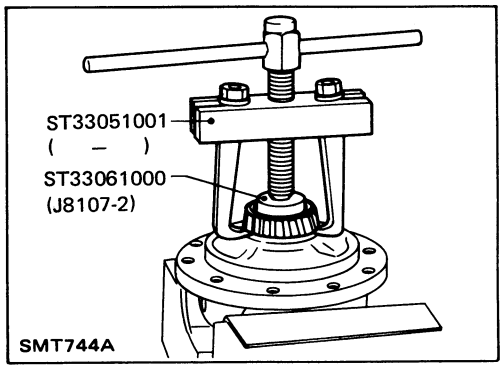

1. Remove final gear.
2. Remove speedometer drive gear by cutting it.
3. Press out differential side bearings.

- **Be careful not to mix up the right and left bearings.**

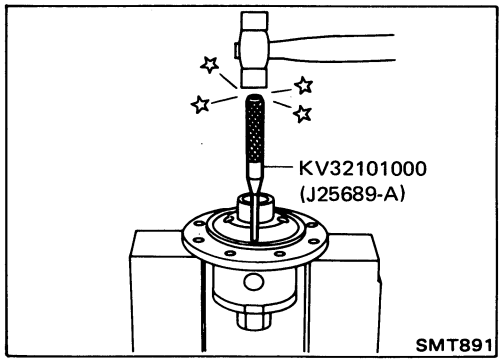

4. Drive out retaining pin and draw out pinion mate shaft.
5. Remove pinion mate gears and side gears.

Final Drive (Front differential) — 2WD (Cont'd)

INSPECTION

Gear, washer, shaft and case

- Check mating surfaces of differential case, side gears and pinion mate gears.
- Check washers for wear.

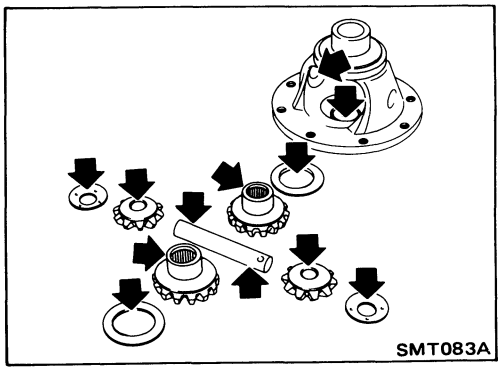

Bearing

- Make sure bearings roll freely and are free from noise, cracks, pitting or wear.
- **When replacing tapered roller bearing, replace outer and inner race as a set.**

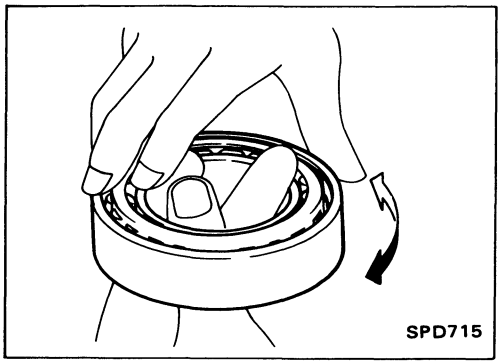

ASSEMBLY

1. Attach side gear thrust washers to side gears, then install pinion mate washers and pinion mate gears in place.

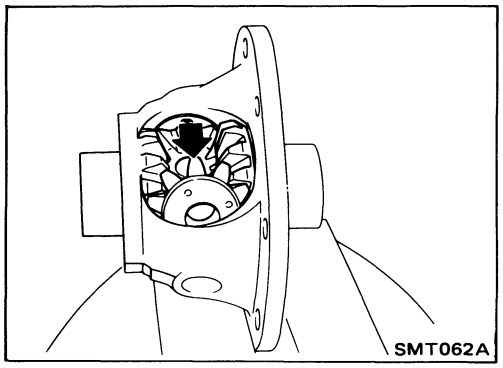

2. Insert pinion mate shaft.
- **When inserting, be careful not to damage pinion mate thrust washers.**

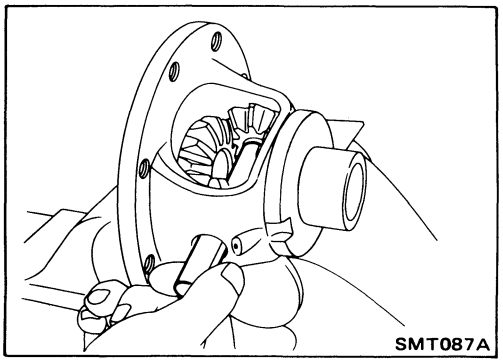

3. Measure clearance between side gear and differential case with washers following the procedure below:

a. Set Tool and dial indicator on side gear.

b. Move side gear up and down to measure dial indicator deflection. Always measure indicator deflection on both side gears.

Clearance between side gear and differential case with washers:

0.1 - 0.2 mm (0.004 - 0.008 in)

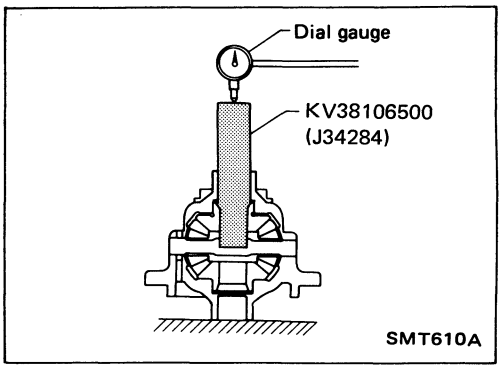

Final Drive (Front differential) — 2WD (Cont'd)

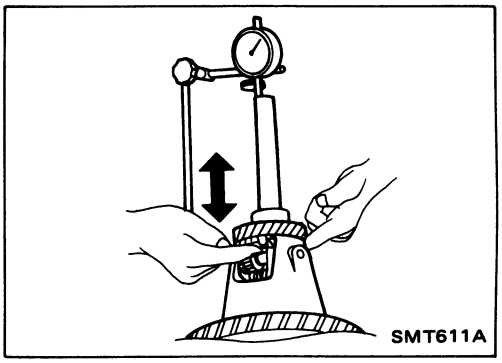

c. If not within specification, adjust clearance by changing thickness of side gear thrust washers.
   Side gear thrust washer:
   Refer to S.D.S.

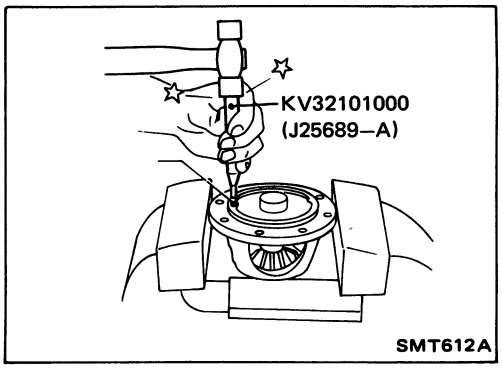

4. Install retaining pin.
   - **Make sure that retaining pin is flush with case.**

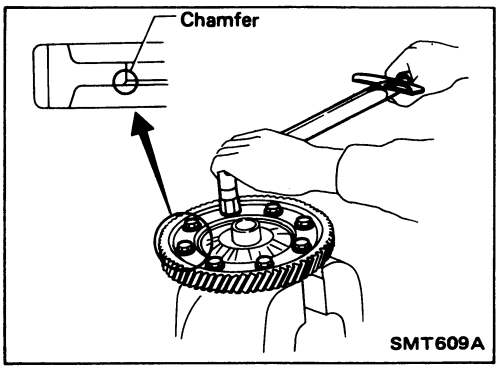

5. Install final gear.
6. Install speedometer drive gear.

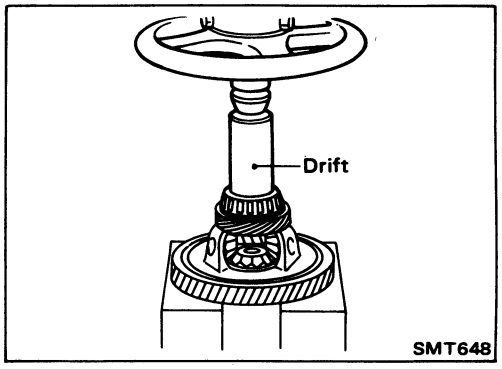

7. Press on differential side bearings.

Final Drive (Center differential) — 4WD

DISASSEMBLY

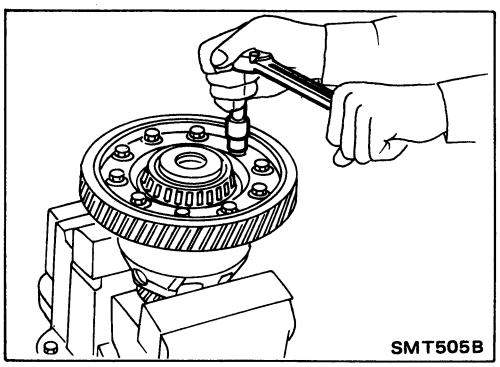

1. Remove final gear.

Final Drive (Center differential) — 4WD (Cont'd)

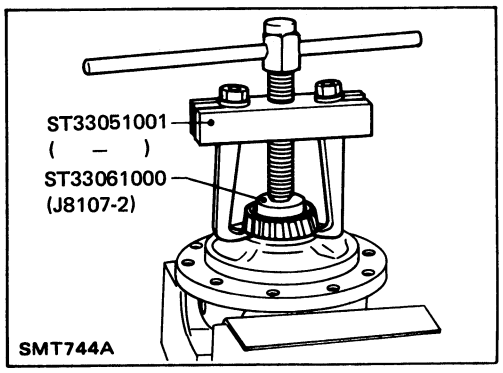

2. Press out differential side bearing.

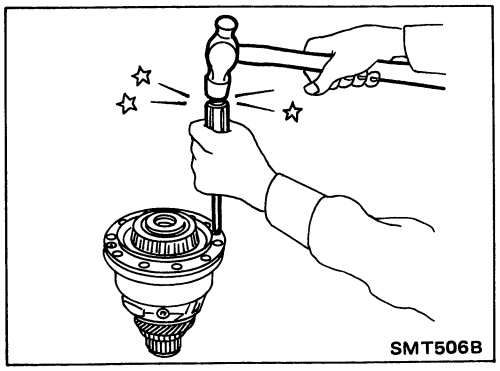

3. Remove viscous coupling.

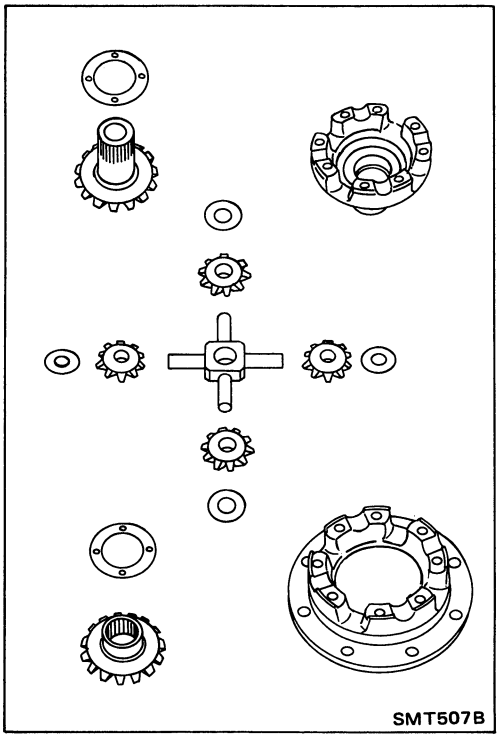

4. Disassemble differential case.

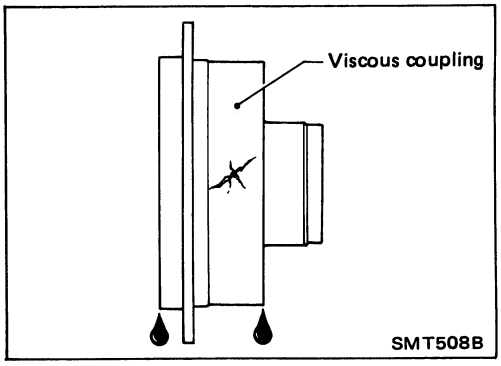

INSPECTION

Viscous coupling

- Check case for cracks.
- Check silicone oil for leakage.

Final Drive (Center differential) — 4WD (Cont'd)

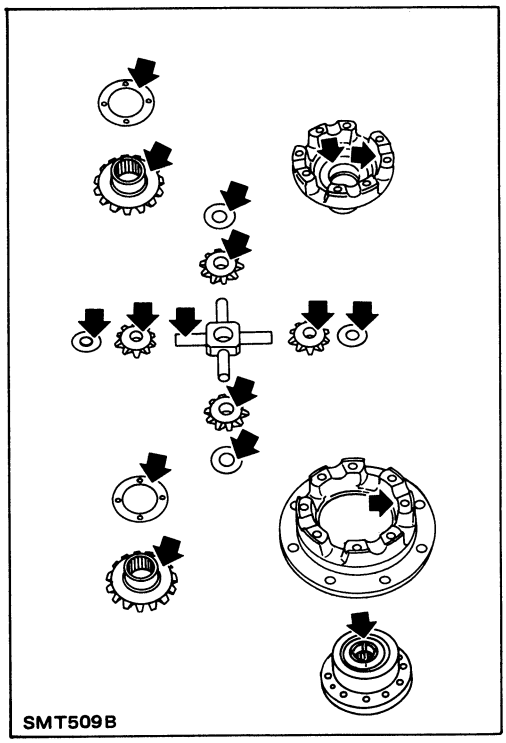
SMT509B

Gear, washer, shaft and case

- Check mating surfaces of differential case, viscous coupling, side gear and pinion mate gear.
- Check washers for wear.

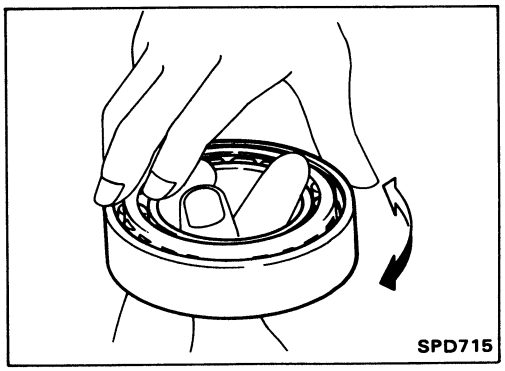
SPD715

Bearing

- Make sure bearings roll freely and are free from noise, cracks, pitting or wear.

When replacing tapered roller bearing, replace outer and inner race as a set.

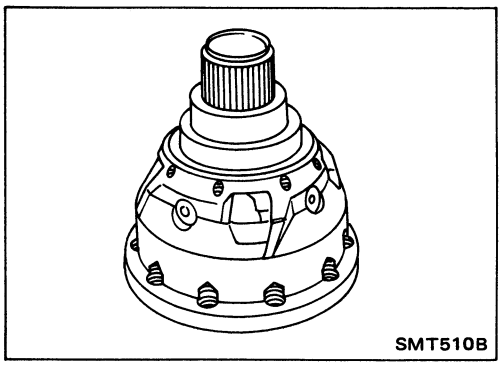
SMT510B

ASSEMBLY

1. Install side gear without thrust washers, pinion mate shaft and pinion mate gear.
2. Install differential case L.H. and R.H.

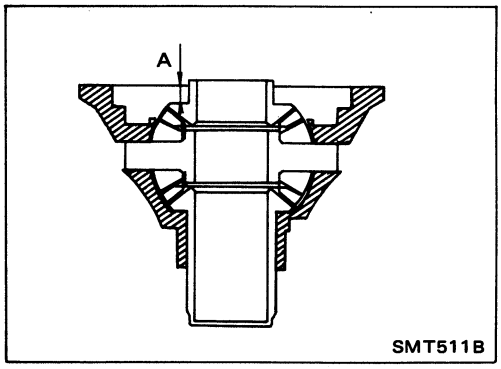

SMT511B

— L.H. side gear —

3. Measure clearance between side gear and viscous coupling following the proceduve.

a. Measure dimension A between side gear and differential case.

Final Drive (Center differential) — 4WD (Cont'd)

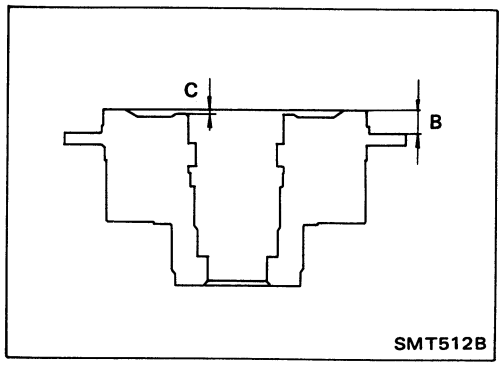

b. Measure dimension B and C of viscous coupling
   Clearance between side gear and viscous coupling with washer (A – B + C):
   0.03 - 0.14 mm (0.0012 - 0.0055 in)
c. Select side gear thrust washer so clearance between side gear and viscous cupling is within specifications.
   Side gear thrust washer: Refer to S.D.S.

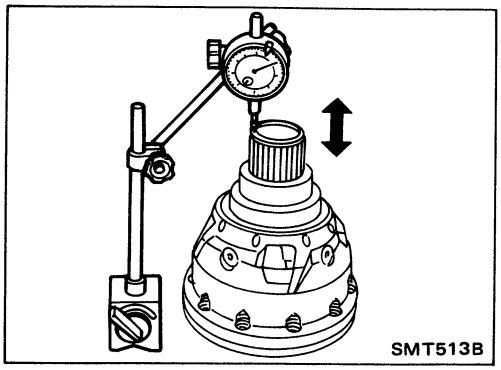

— R.H. side gear —

3. Measure clearance between side gear and differential case following the procedure.

a. Install L.H. side gear thrust washer as priorly selected and install differential case assembly.
b. Set dial indicator on side gear.
c. Move R.H. side gear up and down to measure dial indicator deflection.
   Clearance between side gear and differential case with washer:
   0.03 - 0.14 mm (0.0012 - 0.0055 in)
d. Select side gear thrust washer so clearance between side gear and differential case is within specifications.
   Side gear thrust washer: Refer to S.D.S.

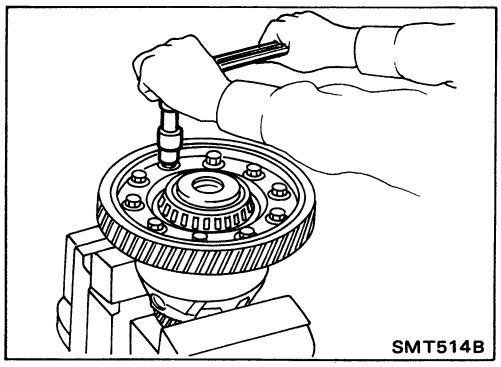

4. Install viscous coupling and final gear.

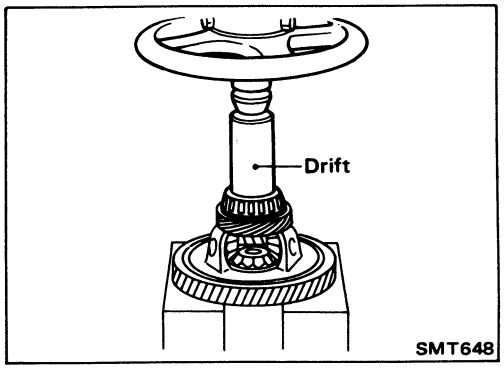

5. Press on differential side bearings.

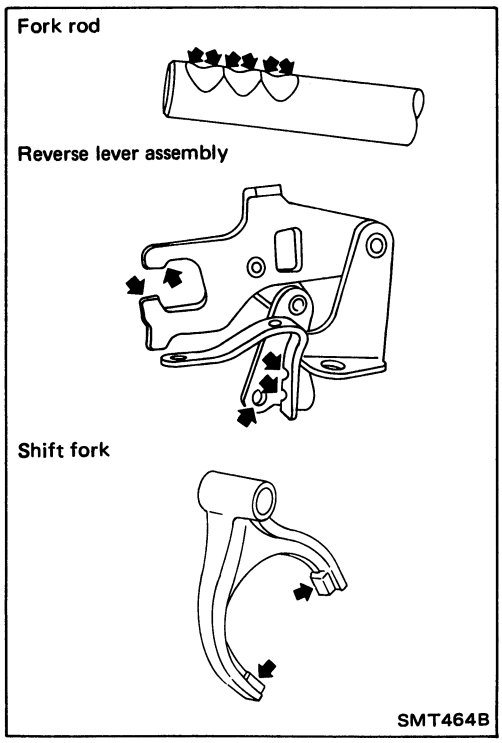

Shift Control Components

INSPECTION

- Check contact surface and sliding surface for wear, scratches, projections or other damage.

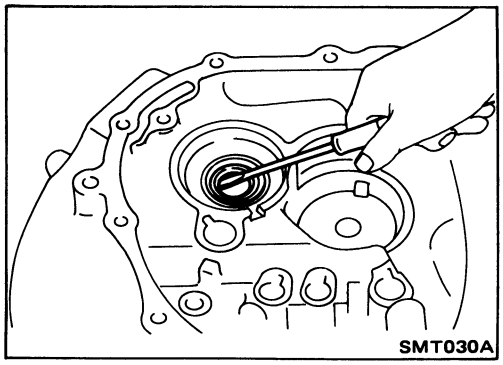

Case Components

REMOVAL AND INSTALLATION

Input shaft oil seal

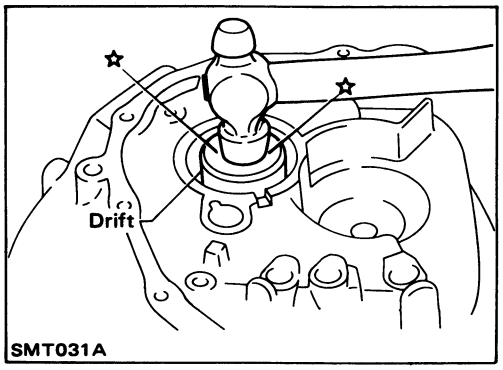

- **Apply multi-purpose grease to seal lip of oil seal before installing.**

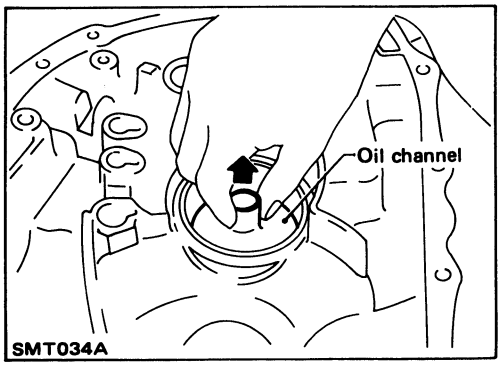

Mainshaft front bearing outer race

Mainshaft rear bearing outer race — Refer to "ADJUSTMENT".
Differential side bearing outer race — Refer to "ADJUSTMENT".

Input Shaft End Play and Differential Side Bearing Preload

If any of the following parts are replaced, adjust input shaft end play.

- **Input shaft**
- **Input shaft bearing**
- **Clutch housing**
- **Transmission case**

If any of the following parts are replaced, adjust differential side bearing preload.

- **Differential case**
- **Viscous coupling**
- **Differential side bearing**
- **Clutch housing**
- **Transmission case**

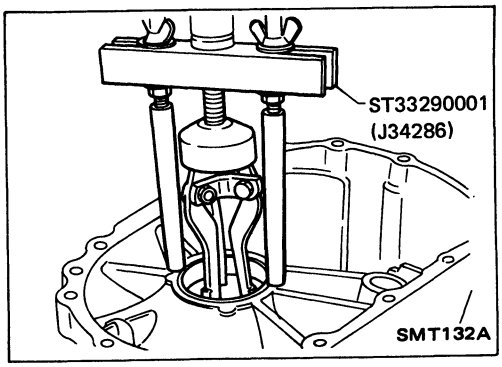

1. Remove differential side bearing outer race (transmission case side) and shim(s).

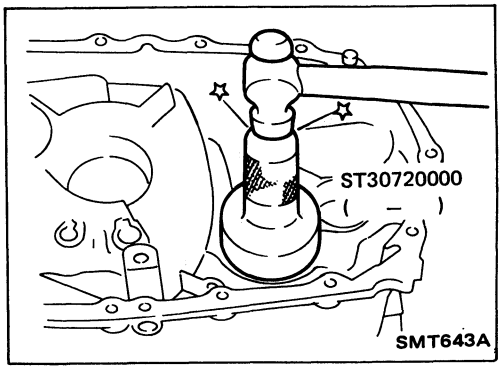

2. Reinstall differential side bearing outer race without shim(s).
3. Install input shaft and final drive assembly on clutch housing.
4. Install transmission case without input shaft bearing shim(s). Then tighten it to the specified torque.

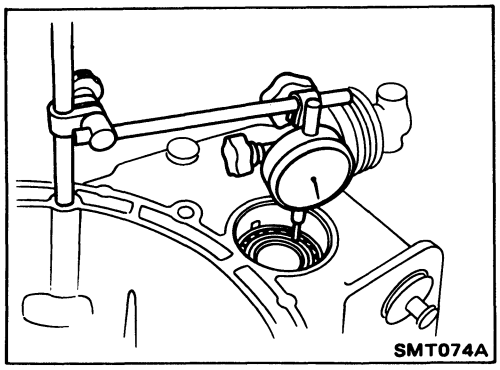

5. Using the following procedures, measure clearance between bearings and transmission case.

- **Differential side**

a. Attach dial indicator. If clamp diameter of dial indicator is too small or too large, attach dial indicator using a magnetic stand.

Input Shaft End Play and Differential Side Bearing Preload (Cont'd)

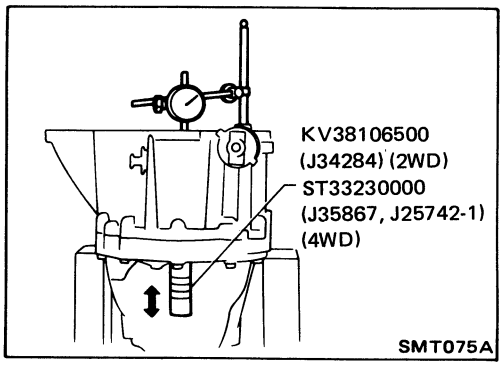

b. Insert Tool all the way into differential side gear. Move Tool up and down and measure dial indicator deflection.
c. Select shims with proper thickness using S.D.S. table as a guide.

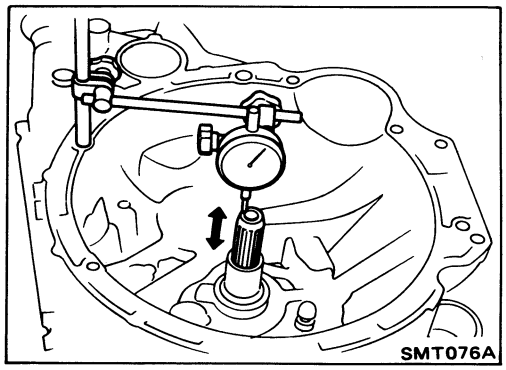

- **Input shaft side**

a. Set dial indicator on rear end of input shaft.
b. Move input shaft up and down and measure dial indicator deflection.
6. Select shims with proper thickness with S.D.S. table as a guide.
7. Install selected differential side bearing adjusting shim and differential side bearing outer race.

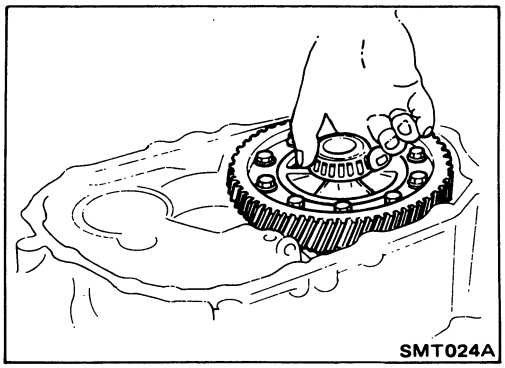

8. Check differential side bearing turning torque.
a. Install final drive assembly on clutch housing.
b. Install transmission case on clutch housing.
- **Tighten transmission case fixing bolts to the specified torque.**

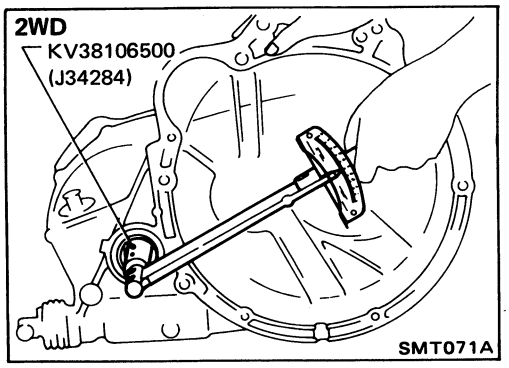

c. Measure turning torque of final drive assembly.

Turning torque of final drive assembly (New bearing):

4.9 - 7.8 N•m (50 - 80 kg-cm, 43 - 69 in-lb)

- **When old bearing is used again, turning torque will be slightly less than the above.**
- **Make sure torque is close to the specified range.**

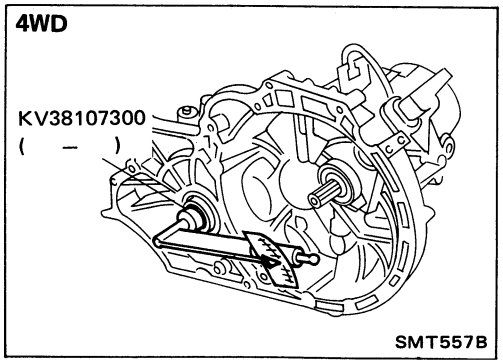

Mainshaft Bearing Preload

If any of the following parts are replaced, adjust mainshaft bearing preload.

- **Mainshaft**
- **Mainshaft bearings**
- **Clutch housing**
- **Transmission case**

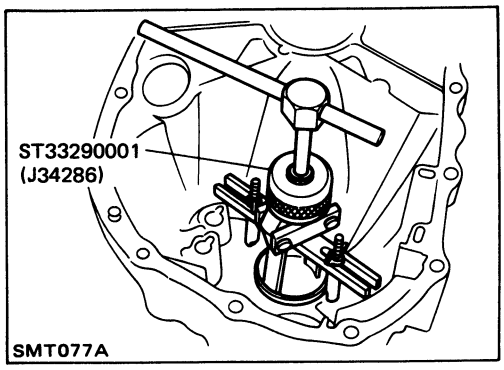

1. Remove mainshaft rear bearing outer race and shim(s).

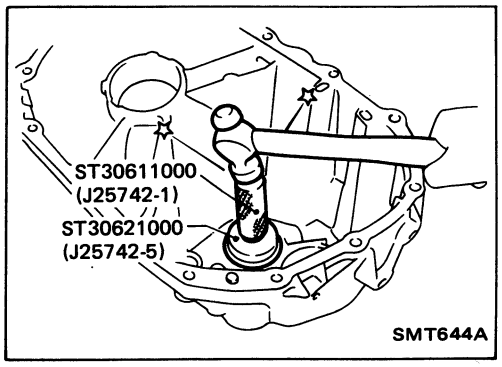

2. Reinstall mainshaft rear bearing outer race without shims.
3. Clean mating surfaces of clutch housing and transmission case with solvent.
4. Install mainshaft and mainshaft front bearing outer race into transmission case. Turn mainshaft while holding bearing outer race so that bearings are properly seated.

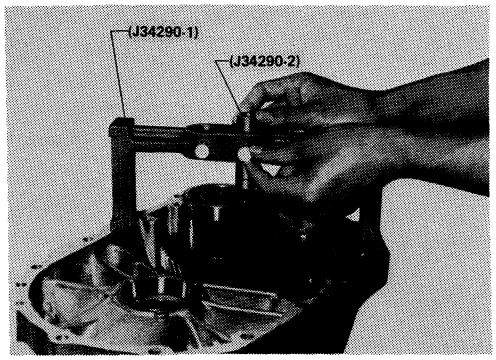

5. Place Tools (bridge and gauging cylinder) onto machined surface of transmission case, allowing gauging cylinder to rest on surface of mainshaft front bearing outer race. Use proper screw in bridge to lock gauging cylinder in place.

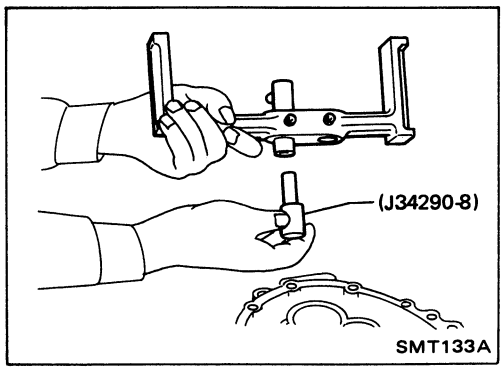

6. Turn bridge over and place Tool (gauging plunger) into gauging cylinder.

Mainshaft Bearing Preload (Cont'd)

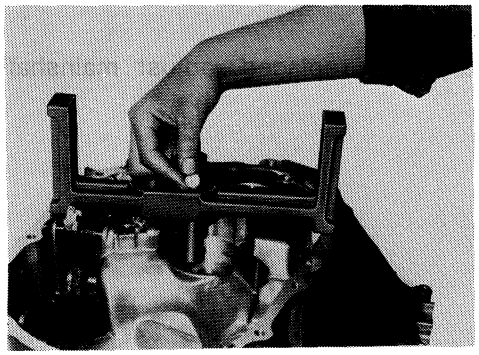

7. Place bridge, legs up, onto machined surface of clutch housing and allow gauging plunger to rest upon mating surface where mainshaft front bearing outer race fits.

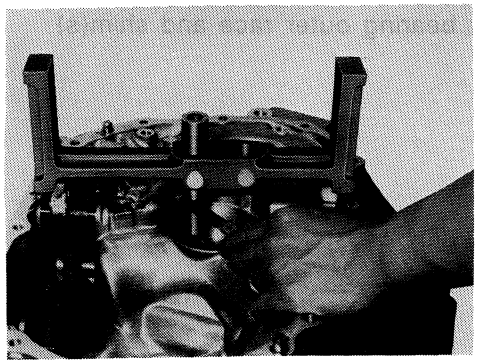

8. Measure with feeler gauge distance between gauging cylinder and shoulder of gauging plunger.
9. Use feeler gauge reading to select correct mainshaft preload shim(s).

   Mainshaft bearing adjusting shim:
   Refer to S.D.S.
10. Install selected mainshaft bearing adjusting shim and mainshaft bearing outer race.
11. Check total turning torque after assembly — Refer to "ASSEMBLY".

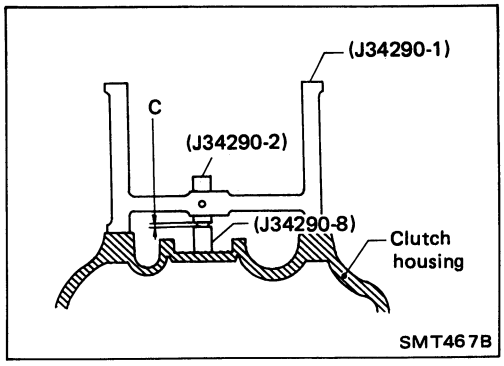

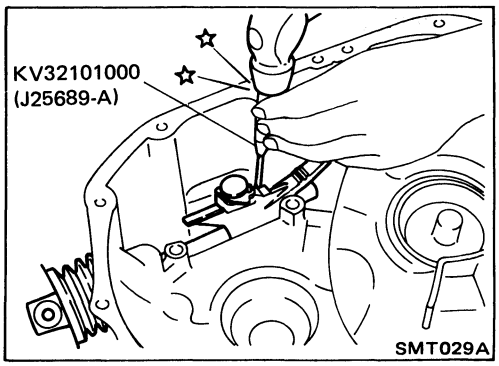

1. Install striking lever and striking rod.

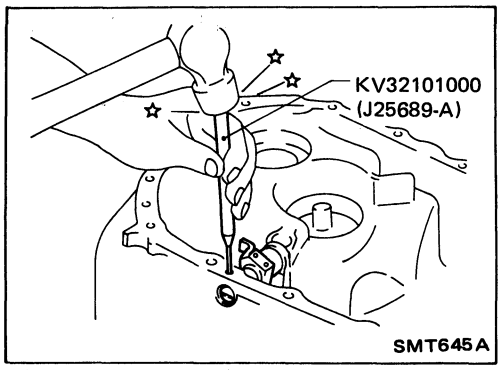

2. Install selector and retaining pin.

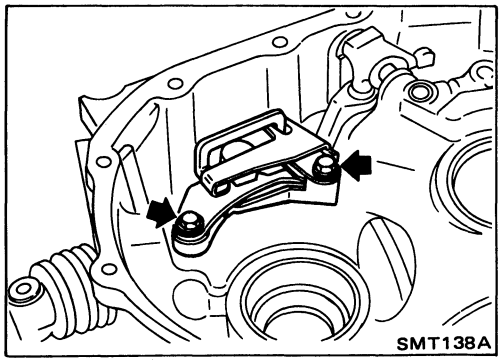

3. Install reverse gate assembly.

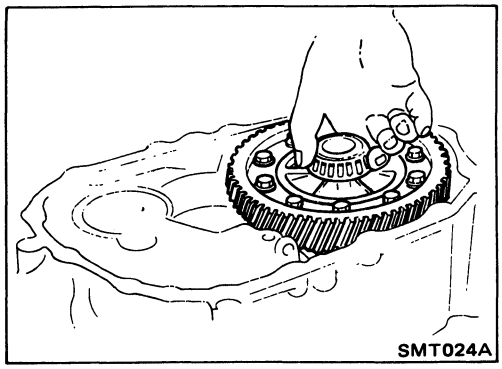

4. Install final drive assembly.

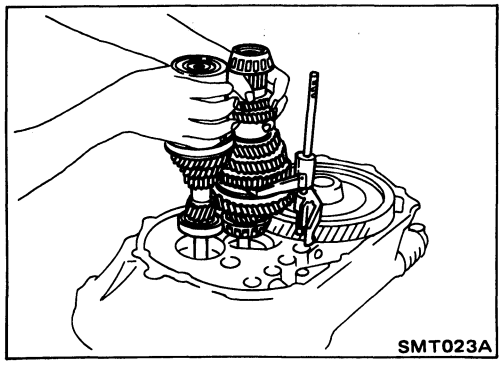

5. Install input shaft and mainshaft with 1st & 2nd shift fork assembly.
- **Be careful not to damage input shaft oil seal.**

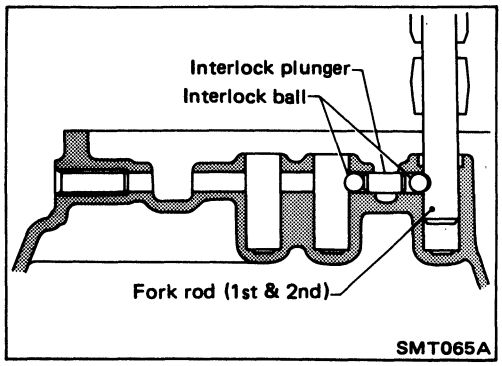

6. Install interlock balls and plunger.

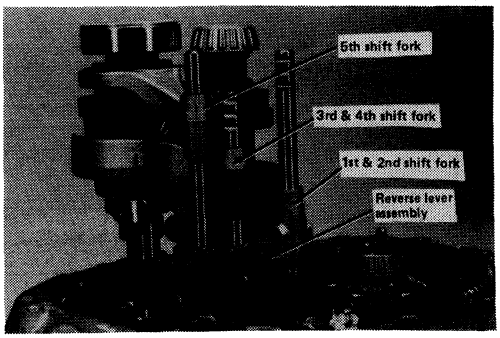

7. Install 3rd & 4th shift fork and bracket, then install 3rd & 4th shift rod, stopper ring and retaining pin.

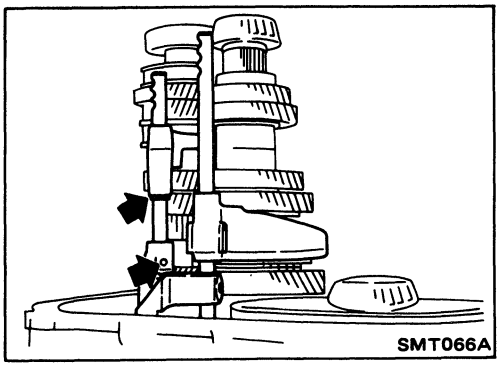

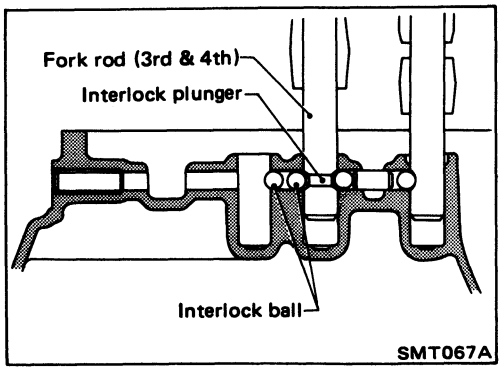

8. Install interlock balls.

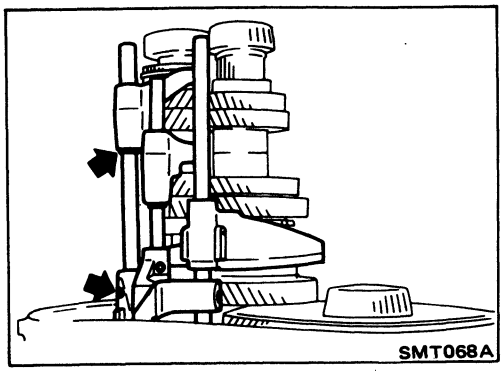

9. Install 5th shift fork and bracket, then install shift rod, stopper ring and retaining pin.

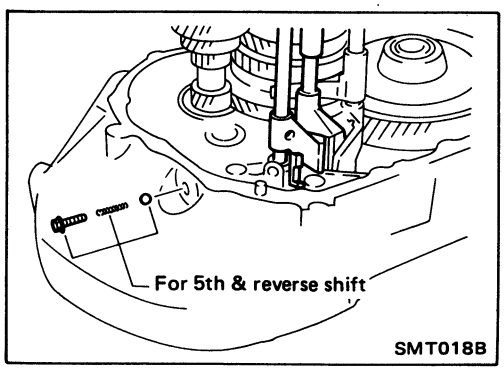

10. Install 5th & reverse check plug, spring and ball.

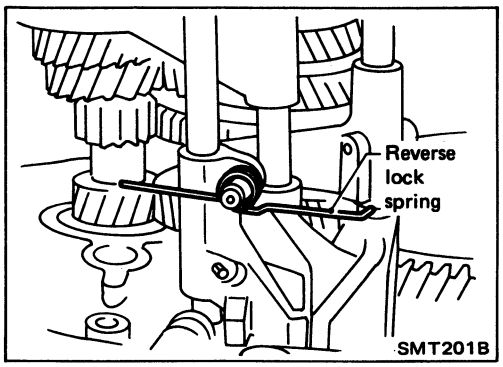

11. Reverse lever assembly

a. Install reverse lock spring on 5th & reverse bracket.

- **Pay attention to its direction.**

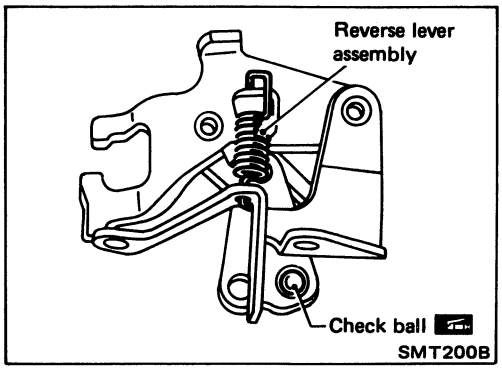

b. Install check ball and reverse lever spring on reverse lever assemlby.

- **Apply multi-purpose grease to check ball.**
- **Pay attention to direction of reverse lever spring.**

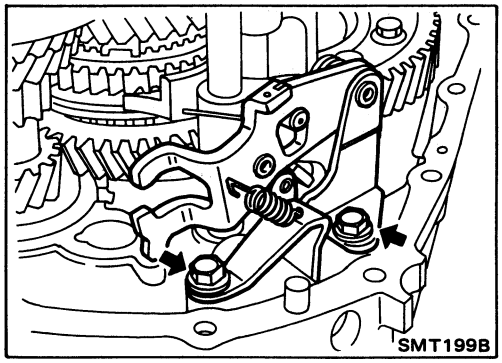

c. Install reverse lever assembly on clutch housing.

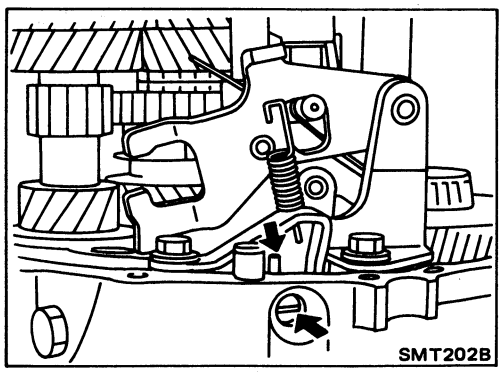

d. Install reverse arm shaft and retaining pin.

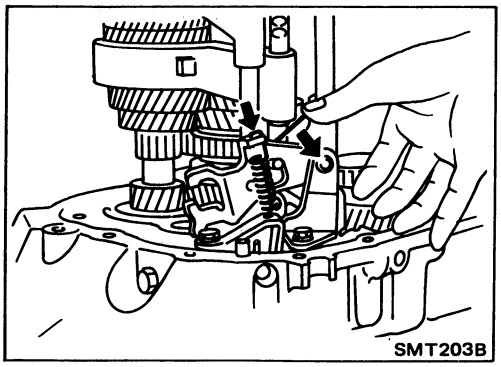

e. Hook reverse lock spring and reverse lever spring on reverse lever assembly.

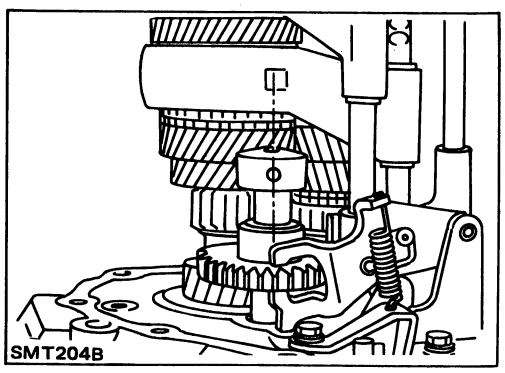

f. Mesh 4th gear, then install reverse idler gear and shaft.
- **Pay attention to direction of tapped hole.**

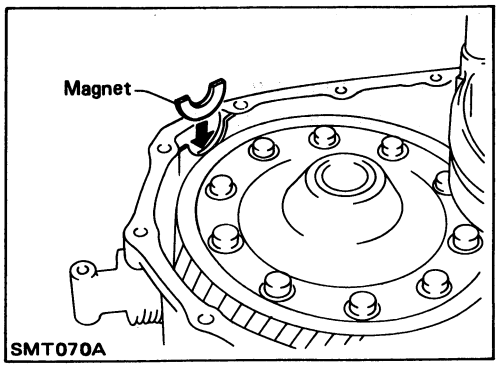

12. Place magnet on clutch housing.

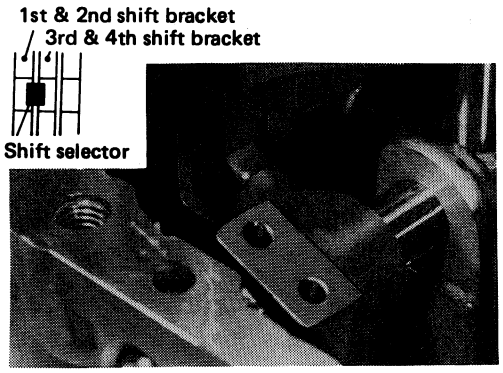

13. If bearing preload was adjusted, install selected shim(s) into transmission case.
- **To aid in installation of transmission case, place shift selector in the 1st and 2nd shift bracket or between 1st and 2nd bracket and 3rd and 4th bracket.**

14. Apply sealant to mating surface of transmission case and install it.
15. Install position switch.

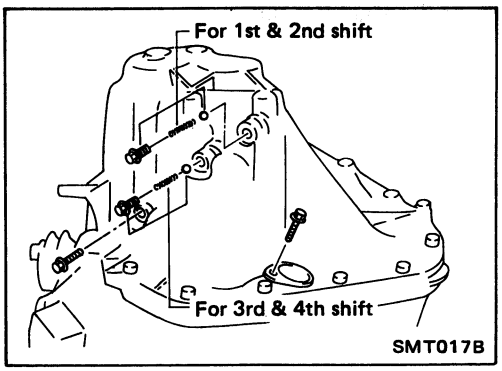

16. Apply sealant to threads of check plugs. Install balls, springs and plugs.
17. After assembly, check that you can shift into each gear smoothly.

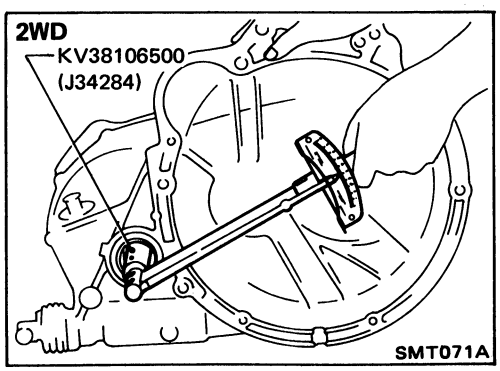

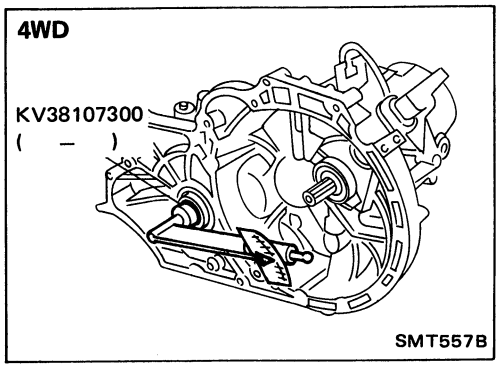

18. Measure total turning torque.

Total turning torque (New bearing):

8.8 - 21.6 N•m (90 - 220 kg-cm, 78 - 191 in-lb)

- **When old bearing is used again, preload will be slightly less than the above. Make sure torque is close to the specified range.**

General Specifications

TRANSAXLE

Applied model			2WD	4WD
Transaxle model			RS5F50A	
Number of speed			5	
Synchromesh type			Warner	
Shift pattern			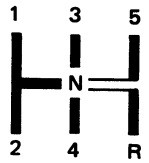	
Gear ratio		1st	3.400	3.400
		2nd	1.955	1.955
		3rd	1.272	1.272
		4th	0.954	0.954
		5th	0.795	0.740
		Rev.	3.428	3.428
Number of teeth	Input gear	1st	15	15
		2nd	22	22
		3rd	33	33
		4th	44	44
		5th	49	50
		Rev.	14	14
	Main gear	1st	51	52
		2nd	43	44
		3rd	42	43
		4th	42	42
		5th	39	37
		Rev.	48	48
	Reverse idler gear		29	29
Oil capacity liter (US pt, Imp pt)			4.7 (10, 8-1/4)	

FINAL GEAR

Applied model		2WD	4WD
Final gear ratio		3.895	4.471
Number of teeth	Final gear/Pinion	74/19	76/17
	Side gear/Pinion	16/10	16/10

Inspection and Adjustment

GEAR END PLAY

Gear	End play mm (in)
1st main gear	0.23 - 0.43 (0.0091 - 0.0169)
2nd main gear	0.23 - 0.58 (0.0091 - 0.0228)
3rd input gear	0.23 - 0.43 (0.0091 - 0.0169)
4th input gear	0.25 - 0.55 (0.0098 - 0.0217)
5th input gear	0.23 - 0.48 (0.0091 - 0.0189)

CLEARANCE BETWEEN BAULK RING AND GEAR

Unit: mm (in)

	Standard	Wear limit
1st & 2nd	1.0 - 1.35 (0.0394 - 0.0531)	0.7 (0.028)
3rd & 4th	1.0 - 1.35 (0.0394 - 0.0531)	0.7 (0.028)
5th	1.0 - 1.35 (0.0394 - 0.0531)	0.7 (0.028)

REVERSE BAULK RING

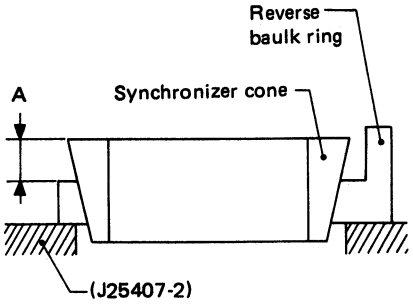

SMT581B

Dimension	Wear limit
A	1.2 mm (0.047 in)

AVAILABLE SNAP RING

3rd & 4th synchronizer hub (At input shaft)

Allowable clearance	0 - 0.1 mm (0 - 0.004 in)
Thickness mm (in)	Part number
1.95 (0.0768)	32269-03E03
2.00 (0.0787)	32269-03E00
2.05 (0.0807)	32269-03E01
2.10 (0.0827)	32269-03E02

1st & 2nd synchronizer hub

Allowable clearance	0 - 0.1 mm (0 - 0.004 in)
Thickness mm (in)	Part number
1.95 (0.0768)	32269-03E03
2.00 (0.0787)	32269-03E00
2.05 (0.0807)	32269-03E01
2.10 (0.0827)	32269-03E02

5th main gear

Allowable clearance	0 - 0.15 mm (0 - 0.0059 in)
Thickness mm (in)	Part number
1.95 (0.0768)	32348-05E00
2.05 (0.0807)	32348-05E01
2.15 (0.0846)	32348-05E02
2.25 (0.0886)	32348-05E03

AVAILABLE WASHER

Input shaft thrust washer

Allowable clearance	0 - 0.06 mm (0 - 0.0024 in)
Thickness mm (in)	Part number
4.500 (0.1772)	32278-03E01
4.525 (0.1781)	32278-03E02
4.550 (0.1791)	32278-03E03
4.575 (0.1801)	32278-03E04

Differential side gear thrust washer

2WD

Allowable clearance between side gear and differential case with washer	0.1 - 0.2 mm (0.004 - 0.008 in)
Thickness mm (in)	Part number
0.75 - 0.80 (0.0295 - 0.0315)	38424-E3000
0.80 - 0.85 (0.0315 - 0.0335)	38424-E3001
0.85 - 0.90 (0.0335 - 0.0354)	38424-E3002
0.90 - 0.95 (0.0354 - 0.0374)	38424-E3003

Inspection and Adjustment (Cont'd)

4WD

Allowable clearance between side gear and differential case (viscous coupling) with washer	0.03 - 0.14 mm (0.0012 - 0.0055 in)

	Thickness mm (in)	Part number
Left side gear	0.75 - 0.80 (0.0295 - 0.0315)	38424-56E00
	0.80 - 0.85 (0.0315 - 0.0335)	38424-56E01
	0.85 - 0.90 (0.0335 - 0.0354)	38424-56E02
	0.90 - 0.95 (0.0354 - 0.0374)	38424-56E03
Right side gear	0.63 (0.0248)	38724-56E00
	0.72 (0.0283)	38724-56E01
	0.81 (0.0319)	38724-56E02
	0.90 (0.0354)	38724-56E03

AVAILABLE SHIM

– INPUT SHAFT END PLAY AND MAINSHAFT AND DIFFERENTIAL SIDE BEARING PRELOAD AND ADJUSTING SHIM

Bearing preload and end play

Unit: mm (in)

Mainshaft bearing preload	0.25 - 0.31 (0.0098 - 0.0122)
Input shaft end play	–0.06 - 0 (–0.0024 - 0)
Differential side bearing preload	0.40 - 0.46 (0.0157 - 0.0181)

Turning torque (New bearing)

Unit: N·m (kg-cm, in-lb)

Final drive only	4.9 - 7.8 (50 - 80, 43 - 69)
Total	8.8 - 21.6 (90 - 220, 78 - 191)

Mainshaft bearing adjusting shim

Thickness mm (in)	Part number
0.40 (0.0157)	32139-03E11
0.44 (0.0173)	32139-03E00
0.48 (0.0189)	32139-03E01
0.52 (0.0205)	32139-03E12
0.56 (0.0220)	32139-03E02
0.60 (0.0236)	32139-03E03
0.64 (0.0252)	32139-03E04
0.68 (0.0268)	32139-03E05
0.72 (0.0283)	32139-03E06
0.76 (0.0299)	32139-03E07
0.80 (0.0315)	32139-03E08
1.20 (0.0472)	32139-03E13

Table for selecting mainshaft bearing adjusting shim

Unit: mm (in)

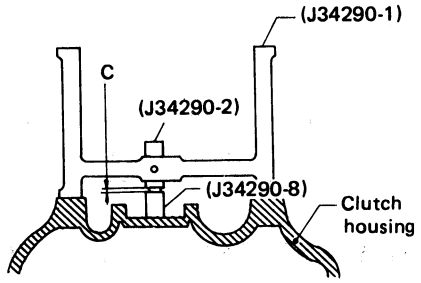

SMT467B

Dimension "C"	Suitable shim(s)
0.30 - 0.34 (0.0118 - 0.0134)	0.60 (0.0236)
0.34 - 0.38 (0.0134 - 0.0150)	0.64 (0.0252)
0.38 - 0.42 (0.0150 - 0.0165)	0.68 (0.0268)
0.42 - 0.46 (0.0165 - 0.0181)	0.72 (0.0283)
0.46 - 0.50 (0.0181 - 0.0197)	0.76 (0.0299)
0.50 - 0.54 (0.0197 - 0.0213)	0.80 (0.0315)
0.54 - 0.58 (0.0213 - 0.0228)	0.40 + 0.44 (0.0157 + 0.0173)
0.58 - 0.62 (0.0228 - 0.0244)	0.44 + 0.44 (0.0173 + 0.0173)
0.62 - 0.66 (0.0244 - 0.0260)	0.44 + 0.48 (0.0173 + 0.0189)
0.66 - 0.70 (0.0260 - 0.0276)	0.48 + 0.48 (0.0189 + 0.0189)
0.70 - 0.74 (0.0276 - 0.0291)	0.48 + 0.52 (0.0189 + 0.0205)
0.74 - 0.78 (0.0291 - 0.0307)	0.52 + 0.52 (0.0205 + 0.0205)
0.78 - 0.82 (0.0307 - 0.0323)	0.52 + 0.56 (0.0205 + 0.0220)
0.82 - 0.86 (0.0323 - 0.0339)	0.56 + 0.56 (0.0220 + 0.0220)
0.86 - 0.90 (0.0339 - 0.0354)	0.56 + 0.60 (0.0220 + 0.0236)
0.90 - 0.94 (0.0354 - 0.0370)	0.60 + 0.60 (0.0236 + 0.0236)
0.94 - 0.98 (0.0370 - 0.0386)	0.60 + 0.64 (0.0236 + 0.0252)
0.98 - 1.02 (0.0386 - 0.0402)	0.64 + 0.64 (0.0252 + 0.0252)
1.02 - 1.06 (0.0402 - 0.0417)	0.64 + 0.68 (0.0252 + 0.0268)
1.06 - 1.10 (0.0417 - 0.0433)	0.68 + 0.68 (0.0268 + 0.0268)
1.10 - 1.14 (0.0433 - 0.0449)	0.68 + 0.72 (0.0268 + 0.0283)
1.14 - 1.18 (0.0449 - 0.0465)	0.72 + 0.72 (0.0283 + 0.0283)
1.18 - 1.22 (0.0465 - 0.0480)	0.72 + 0.76 (0.0283 + 0.0299)
1.22 - 1.26 (0.0480 - 0.0496)	0.76 + 0.76 (0.0299 + 0.0299)
1.26 - 1.30 (0.0496 - 0.0512)	0.76 + 0.80 (0.0299 + 0.0315)
1.30 - 1.34 (0.0512 - 0.0528)	0.80 + 0.80 (0.0315 + 0.0315)
1.34 - 1.38 (0.0528 - 0.0543)	0.44 + 1.20 (0.0173 + 0.0472)
1.38 - 1.42 (0.0543 - 0.0559)	0.48 + 1.20 (0.0189 + 0.0472)
1.42 - 1.46 (0.0559 - 0.0575)	0.52 + 1.20 (0.0205 + 0.0472)
1.46 - 1.50 (0.0575 - 0.0591)	0.56 + 1.20 (0.0220 + 0.0472)

Inspection and Adjustment (Cont'd)

Input shaft bearing adjusting shim

Thickness mm (in)	Part number
0.40 (0.0157)	32225-08E00
0.44 (0.0173)	32225-08E01
0.48 (0.0189)	32225-08E02
0.52 (0.0205)	32225-08E03
0.56 (0.0220)	32225-08E04
0.60 (0.0236)	32225-08E05
0.64 (0.0252)	32225-08E06
0.68 (0.0268)	32225-08E07
0.72 (0.0283)	32225-08E08
0.76 (0.0299)	32225-08E09
0.80 (0.0315)	32225-08E10
1.20 (0.0472)	32225-08E11

Table for selecting input shaft bearing adjusting shim

Unit: mm (in)

Dial indicator deflection	Suitable shim(s)
0.65 - 0.69 (0.0256 - 0.0272)	0.64 (0.0252)
0.69 - 0.73 (0.0272 - 0.0287)	0.68 (0.0268)
0.73 - 0.77 (0.0287 - 0.0303)	0.72 (0.0283)
0.77 - 0.81 (0.0303 - 0.0319)	0.76 (0.0299)
0.81 - 0.85 (0.0319 - 0.0335)	0.80 (0.0315)
0.85 - 0.89 (0.0335 - 0.0350)	0.40 + 0.44 (0.0157 + 0.0173)
0.89 - 0.93 (0.0350 - 0.0366)	0.44 + 0.44 (0.0173 + 0.0173)
0.93 - 0.97 (0.0366 - 0.0382)	0.44 + 0.48 (0.0173 + 0.0189)
0.97 - 1.01 (0.0382 - 0.0398)	0.48 + 0.48 (0.0189 + 0.0189)
1.01 - 1.05 (0.0398 - 0.0413)	0.48 + 0.52 (0.0189 + 0.0205)
1.05 - 1.09 (0.0413 - 0.0429)	0.52 + 0.52 (0.0205 + 0.0205)
1.09 - 1.13 (0.0429 - 0.0445)	0.52 + 0.56 (0.0205 + 0.0220)
1.13 - 1.17 (0.0445 - 0.0461)	0.56 + 0.56 (0.0220 + 0.0220)
1.17 - 1.21 (0.0461 - 0.0476)	0.56 + 0.60 (0.0220 + 0.0236)
1.21 - 1.25 (0.0476 - 0.0492)	0.60 + 0.60 (0.0236 + 0.0236)
1.25 - 1.29 (0.0492 - 0.0508)	0.60 + 0.64 (0.0236 + 0.0252)
1.29 - 1.33 (0.0508 - 0.0524)	0.64 + 0.64 (0.0252 + 0.0252)
1.33 - 1.37 (0.0524 - 0.0539)	0.64 + 0.68 (0.0252 + 0.0268)
1.37 - 1.41 (0.0539 - 0.0555)	0.68 + 0.68 (0.0268 + 0.0268)
1.41 - 1.45 (0.0555 - 0.0571)	0.68 + 0.72 (0.0268 + 0.0283)
1.45 - 1.49 (0.0571 - 0.0587)	0.72 + 0.72 (0.0283 + 0.0283)
1.49 - 1.53 (0.0587 - 0.0602)	0.72 + 0.76 (0.0283 + 0.0299)
1.53 - 1.57 (0.0602 - 0.0618)	0.76 + 0.76 (0.0299 + 0.0299)
1.57 - 1.61 (0.0618 - 0.0634)	0.76 + 0.80 (0.0299 + 0.0315)
1.61 - 1.65 (0.0634 - 0.0650)	0.80 + 0.80 (0.0315 + 0.0315)
1.65 - 1.69 (0.0650 - 0.0665)	0.44 + 1.20 (0.0173 + 0.0472)

Differential side bearing adjusting shim

2WD

Thickness mm (in)	Part number
0.40 (0.0157)	38453-03E11
0.44 (0.0173)	38453-03E00
0.48 (0.0189)	38453-03E01
0.52 (0.0205)	38453-03E12
0.56 (0.0220)	38453-03E02
0.60 (0.0236)	38453-03E03
0.64 (0.0252)	38453-03E04
0.68 (0.0268)	38453-03E05
0.72 (0.0283)	38453-03E06
0.76 (0.0299)	38453-03E07
0.80 (0.0315)	38453-03E08
1.20 (0.0472)	38453-03E13

4WD

Thickness mm (in)	Part number
0.36 (0.0142)	38753-56E00
0.40 (0.0157)	38753-56E01
0.44 (0.0173)	38753-56E02
0.48 (0.0189)	38753-56E03
0.52 (0.0205)	38753-56E04
0.56 (0.0220)	38753-56E05
0.60 (0.0236)	38753-56E06
0.64 (0.0252)	38753-56E07
0.68 (0.0268)	38753-56E08
0.72 (0.0283)	38753-56E09
0.76 (0.0299)	38753-56E10
0.80 (0.0315)	38752-56E11
0.84 (0.0331)	38753-56E12
0.88 (0.0346)	38753-56E13
0.92 (0.0362)	38753-56E14

Inspection and Adjustment (Cont'd)

Table for selecting differential side bearing adjusting shim(s)

2WD

Unit: mm (in)

Dial indicator deflection	Suitable shim(s)
0.47 - 0.51 (0.0185 - 0.0201)	0.44 + 0.48 (0.0173 + 0.0189)
0.51 - 0.55 (0.0201 - 0.0217)	0.48 + 0.48 (0.0189 + 0.0189)
0.55 - 0.59 (0.0217 - 0.0232)	0.48 + 0.52 (0.0189 + 0.0205)
0.59 - 0.63 (0.0232 - 0.0248)	0.52 + 0.52 (0.0205 + 0.0205)
0.63 - 0.67 (0.0248 - 0.0264)	0.52 + 0.56 (0.0205 + 0.0220)
0.67 - 0.71 (0.0264 - 0.0280)	0.56 + 0.56 (0.0220 + 0.0220)
0.71 - 0.75 (0.0280 - 0.0295)	0.56 + 0.60 (0.0220 + 0.0236)
0.75 - 0.79 (0.0295 - 0.0311)	0.60 + 0.60 (0.0236 + 0.0236)
0.79 - 0.83 (0.0311 - 0.0327)	0.60 + 0.64 (0.0236 + 0.0252)
0.83 - 0.87 (0.0327 - 0.0343)	0.64 + 0.64 (0.0252 + 0.0252)
0.87 - 0.91 (0.0343 - 0.0358)	0.64 + 0.68 (0.0252 + 0.0268)
0.91 - 0.95 (0.0358 - 0.0374)	0.68 + 0.68 (0.0268 + 0.0268)
0.95 - 0.99 (0.0374 - 0.0390)	0.68 + 0.72 (0.0268 + 0.0283)
0.99 - 1.03 (0.0390 - 0.0406)	0.72 + 0.72 (0.0283 + 0.0283)
1.03 - 1.07 (0.0406 - 0.0421)	0.72 + 0.76 (0.0283 + 0.0299)
1.07 - 1.11 (0.0421 - 0.0437)	0.76 + 0.76 (0.0299 + 0.0299)
1.11 - 1.15 (0.0437 - 0.0453)	0.76 + 0.80 (0.0299 + 0.0315)
1.15 - 1.19 (0.0453 - 0.0469)	0.80 + 0.80 (0.0315 + 0.0315)
1.19 - 1.23 (0.0469 - 0.0484)	0.44 + 1.20 (0.0173 + 0.0472)
1.23 - 1.27 (0.0484 - 0.0500)	0.48 + 1.20 (0.0189 + 0.0472)
1.27 - 1.31 (0.0500 - 0.0516)	0.52 + 1.20 (0.0205 + 0.0472)

4WD

Unit: mm (in)

Dial indicator deflection	Suitable shim(s)
0.47 - 0.51 (0.0185 - 0.0201)	0.44 + 0.48 (0.0173 + 0.0189)
0.51 - 0.55 (0.0201 - 0.0217)	0.48 + 0.48 (0.0189 + 0.0189)
0.55 - 0.59 (0.0217 - 0.0232)	0.48 + 0.52 (0.0189 + 0.0205)
0.59 - 0.63 (0.0232 - 0.0248)	0.52 + 0.52 (0.0205 + 0.0205)
0.63 - 0.67 (0.0248 - 0.0264)	0.52 + 0.56 (0.0205 + 0.0220)
0.67 - 0.71 (0.0264 - 0.0280)	0.56 + 0.56 (0.0220 + 0.0220)
0.71 - 0.75 (0.0280 - 0.0295)	0.56 + 0.60 (0.0220 + 0.0236)
0.75 - 0.79 (0.0295 - 0.0311)	0.60 + 0.60 (0.0236 + 0.0236)
0.79 - 0.83 (0.0311 - 0.0327)	0.60 + 0.64 (0.0236 + 0.0252)
0.83 - 0.87 (0.0327 - 0.0343)	0.64 + 0.64 (0.0252 + 0.0252)
0.87 - 0.91 (0.0343 - 0.0358)	0.64 + 0.68 (0.0252 + 0.0268)
0.91 - 0.95 (0.0358 - 0.0374)	0.68 + 0.68 (0.0268 + 0.0268)
0.95 - 0.99 (0.0374 - 0.0390)	0.68 + 0.72 (0.0268 + 0.0283)
0.99 - 1.03 (0.0390 - 0.0406)	0.72 + 0.72 (0.0283 + 0.0283)
1.03 - 1.07 (0.0406 - 0.0421)	0.72 + 0.76 (0.0283 + 0.0299)
1.07 - 1.11 (0.0421 - 0.0437)	0.76 - 0.76 (0.0299 + 0.0299)
1.11 - 1.15 (0.0437 - 0.0453)	0.76 + 0.80 (0.0299 + 0.0315)
1.15 - 1.19 (0.0453 - 0.0469)	0.80 + 0.80 (0.0315 + 0.0315)
1.19 - 1.23 (0.0469 - 0.0484)	0.72 - 0.92 (0.0283 + 0.0362)
1.23 - 1.27 (0.0484 - 0.0500)	0.76 + 0.92 (0.0299 + 0.0362)
1.27 - 1.31 (0.0500 - 0.0516)	0.80 + 0.92 (0.0315 + 0.0362)

AUTOMATIC TRANSAXLE

SECTION AT

CONTENTS

PREPARATION ..... AT- 2
PRECAUTIONS ..... AT- 4
ON-VEHICLE SERVICE ..... AT- 5
TROUBLE DIAGNOSES ..... AT- 9
ELECTRICAL SYSTEM AT-21
REMOVAL AND INSTALLATION AT-24
MAJOR OVERHAUL AT-29
DISASSEMBLY AT-35
REPAIR FOR COMPONENT PARTS AT-42
ASSEMBLY AT-69
A/T SHIFT LOCK SYSTEM AT-88
SERVICE DATA AND SPECIFICATIONS (S.D.S.) AT-97

When you read wiring diagrams:

- **Read GI section, "HOW TO READ WIRING DIAGRAMS".**
- **See EL section, "POWER SUPPLY ROUTING" for power distribution circuit.**

SPECIAL SERVICE TOOLS

Tool number (Kent-Moore No.) Tool name	Description
ST25420001 (J34285) Clutch spring compressor	Removing and installing clutch springs 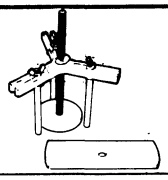
ST2505S001 (J25695-A) Oil pressure gauge set ① ST25051001 (J25695-1) Oil pressure gauge ② ST25052000 (J25695-2) Hose ③ ST25053000 (J25695-3) Joint pipe ④ ST25054000 (J25695-4) Adapter ⑤ ST25055000 (J25695-5) Adapter	Measuring oil pressure 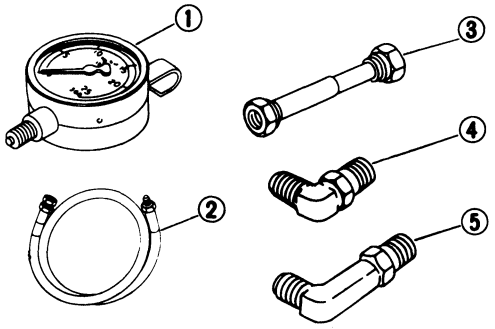
KV31101200 (J34282) Oil pressure gauge adapter	Measuring oil pressure 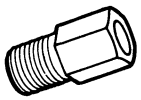
KV38106500 (J34284) Preload adapter	Checking differential side bearing preload 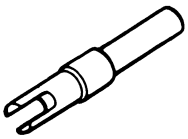 2WD
KV38107300 (–) Preload adapter	Checking differential side bearing preload 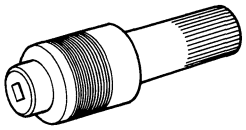 4WD
ST3127S000 (See J25765-A) Preload gauge ① GG91030000 (J25765-A) Torque wrench ② HT62940000 (–) Socket adapter ③ HT62900000 (–) Socket adapter	Checking differential side bearing preload 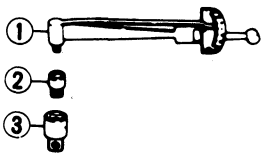

*: Special tool or commercial equivalent

Tool number (Kent-Moore No.) Tool name	Description
(J34290) Shim selecting tool	Selecting oil pump housing bearing race Selecting clutch pack thrust washer Selecting differential side bearing adjusting shim Selecting output shaft bearing adjusting shim Selecting idler gear bearing adjusting shim 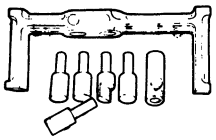
(J26774-A) Seal installation tool	Installing piston 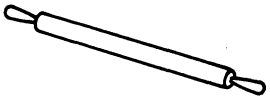
(J25810-A)* Side bearing outer race puller	Removing differential side bearing outer race 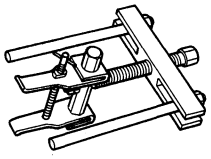
ST33290001* (J34286) Side oil seal puller	Removing differential side oil seal

Service Notice

- Before proceeding with disassembly, thoroughly clean the outside of the transmission. It is important to prevent the internal parts from becoming contaminated by dirt or other foreign matter.
- Disassembly should be done in a clean work area.
- Use lint-free cloth or towels for wiping parts clean. Common shop rags can leave fibers that could interfere with the operation of the transmission.
- When disassembling parts, place them in order in a parts rack so that they can be put back into the unit in their proper positions.
- All parts should be carefully cleaned with a general purpose, non-flammable solvent before inspection or reassembly.
- Gaskets, seals and O-rings should be replaced any time the transmission is disassembled.
- It is very important to perform functional tests whenever they are indicated.
- The valve body contains precision parts and requires extreme care when parts are removed and serviced. Place removed parts in order on a parts rack so they can be put back in the valve body in the same positions and sequences. Care will also prevent springs and small parts from becoming scattered or lost.
- Properly installed valves, sleeves, plugs, etc. will slide along their bores in the valve body under their own weight.
- Before assembly, apply a coat of recommended A.T.F. to all parts. Petroleum jelly may be applied to O-rings and seals and used to hold small bearings and washers in place during reassembly. Do not use grease.
- Extreme care should be taken to avoid damage to O-rings, seals and gaskets when assembling.
- After overhaul, refill the transmission with new A.T.F.

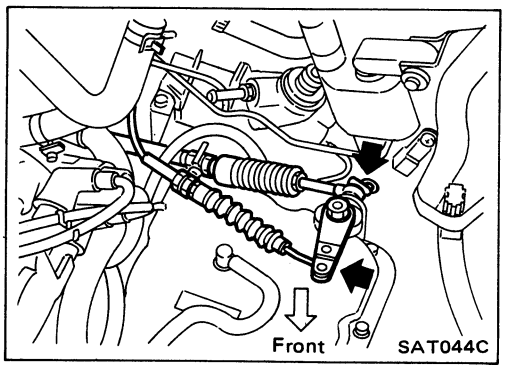

Control Valve

1. Remove battery and its bracket.
2. Disconnect control cable and throttle wire and remove throttle lever.

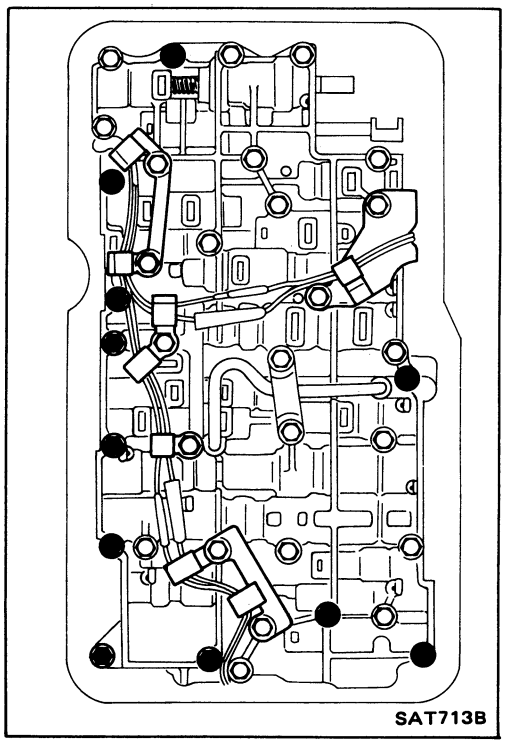

3. Disconnect harness connector on control valve and remove control valve assembly.
- **Be careful not to drop manual valve out of valve body.**

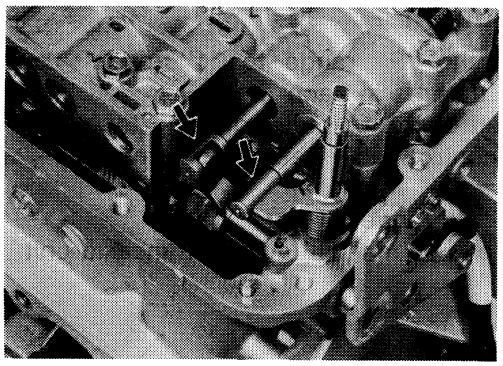

4. Disassemble, inspect and assemble control valve assembly. Refer to "Control Valve Body" of REPAIR FOR COMPONENT PARTS.
- **Set manual shaft at Neutral, then align manual plate with groove in manual valve of control valve assembly.**
- **After installing control valve to transmission case, make sure that selector lever can be moved to all positions.**

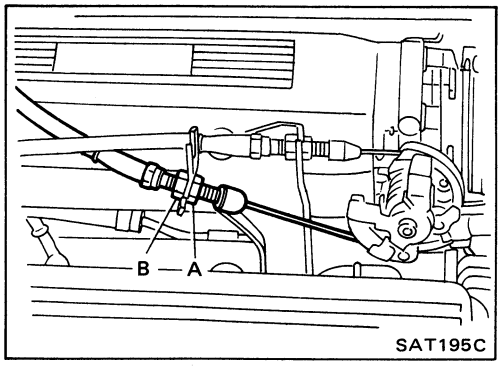

Throttle Wire Adjustment

1. Loosen throttle wire double nuts "A" and "B".

Throttle Wire Adjustment (Cont'd)

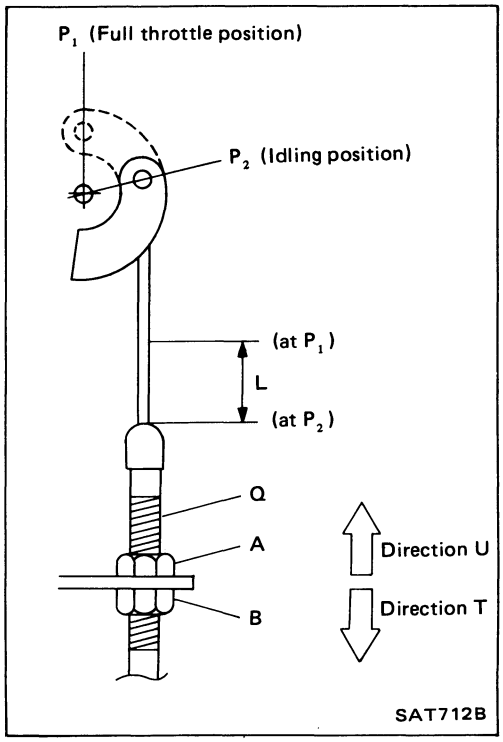

2. With throttle drum set at "P_1" (fully-open), move fitting "Q" fully in direction "T" and tighten nut "B" in direction "U".
3. Reverse nut "B" by "N" revolutions in direction "T", then tighten nut "A" securely. Throttle drum should be held at "P_1".
   Number of revolutions "N":
   2.75 - 3.25 turns
4. Ensure that throttle wire stroke "L" is within specified range between full throttle and idle.
   Throttle wire stroke "L":
   39 - 43 mm (1.54 - 1.69 in)

- **Adjust throttle wire stroke when throttle wire/accelerator wire is installed or after carburetor has been adjusted.**
- **Put marks on throttle wire to facilitate measuring wire stroke.**

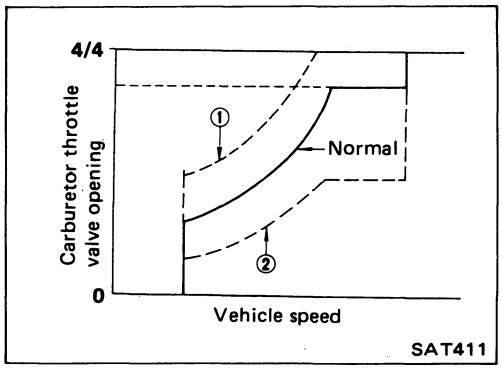

If throttle wire stroke is improperly adjusted, the following problems may arise.

- When full-open position "P_1" of throttle drum is closer to direction "T", shift schedule will be as shown by ② in figure at left, and kickdown range will greatly increase.
- When full-open position "P_1" of throttle drum is closer to direction "U", shift schedule will be as shown by ① in figure at left, and kickdown range will not occur.

5. After properly adjusting throttle wire, ensure the parting line is as straight as possible.

Control Cable Adjustment

Move selector lever from the "P" range to "1" range. You should be able to feel the detents in each range.
If the detents cannot be felt or the pointer indicating the range is improperly aligned, the control cable needs adjustment.

1. Remove center console.
2. Place selector lever at "P" range.
3. Connect control cable end to manual lever in transaxle unit.

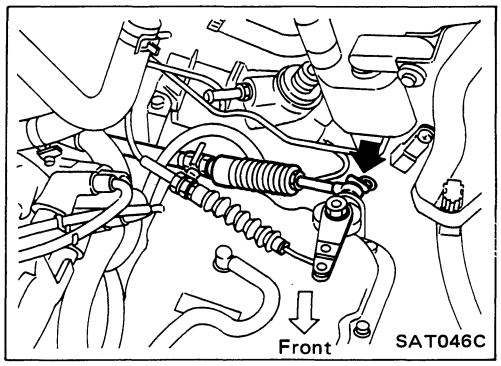

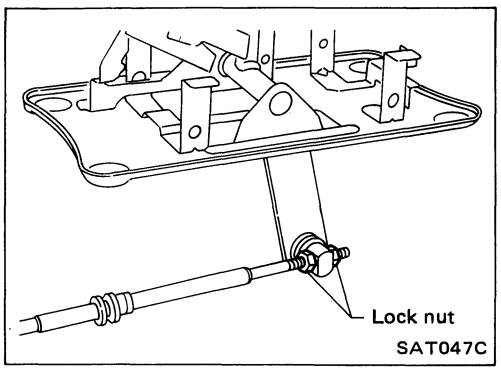

4. Move selector lever from "P" range to "1" range. Make sure that selector lever can move smoothly and without any sliding noise.
5. Place selector lever at "P" range again.

Control Cable Adjustment (Cont'd)

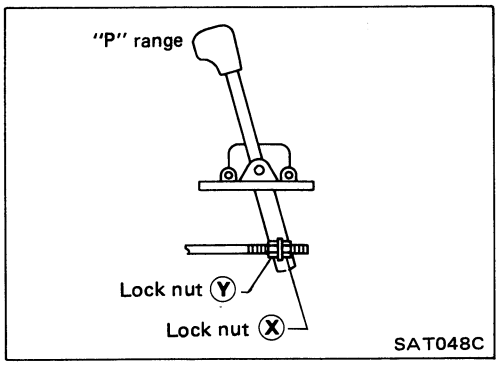

6. Loosen lock nuts.
7. Make sure manual lever in transaxle unit locks at "P" range.
8. Screw lock nut Ⓧ until it touches trunnion, and tighten lock nut Ⓨ.
   Lock nut Ⓧ and Ⓨ:
   [O]: 16 - 22 N•m (1.6 - 2.2 kg-m, 12 - 16 ft-lb)
9. Move selector lever from "P" range to "1" range again. Make sure that selector lever can move smoothly and without any sliding noise.
10. Apply grease to contacting areas of selector lever and select rod.

Inhibitor Switch Adjustment

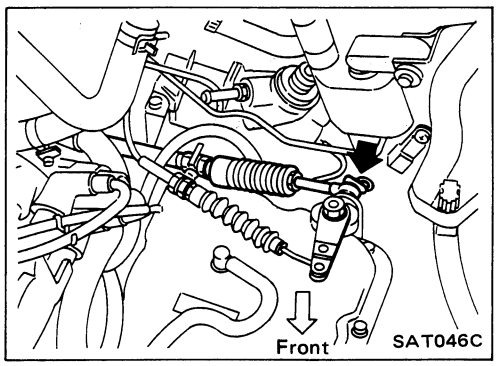

1. Remove control cable end from unit.

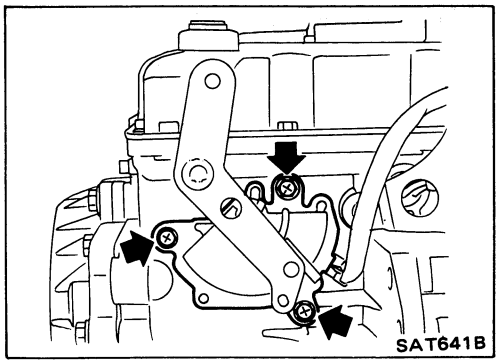

2. Disconnect harness at connector, then remove inhibitor switch.

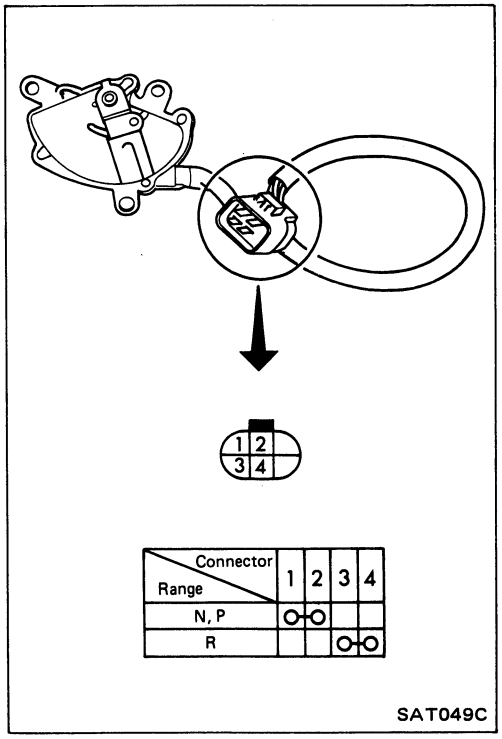

Range \ Connector	1	2	3	4
N, P	O	O		
R			O	O

- Check continuity at "N", "P" and "R" ranges.
- With control lever held in "Neutral", turn manual lever an equal amount in both directions to see if current flow ranges are nearly the same. (Current normally begins to flow before manual lever reaches an angle of 1.5° in either direction.)
  If current flows outside normal range, or if normal flow range is out of specifications, properly adjust inhibitor switch.

Inhibitor Switch Adjustment (Cont'd)

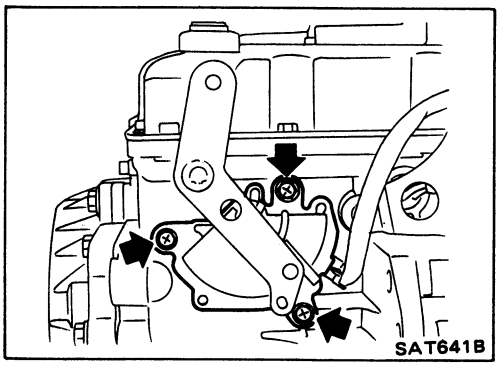

3. Adjust inhibitor switch as follows:
   This adjustment can be done on the vehicle.
1) Loosen attaching screws.
2) Set manual lever in transaxle unit at "N" position.

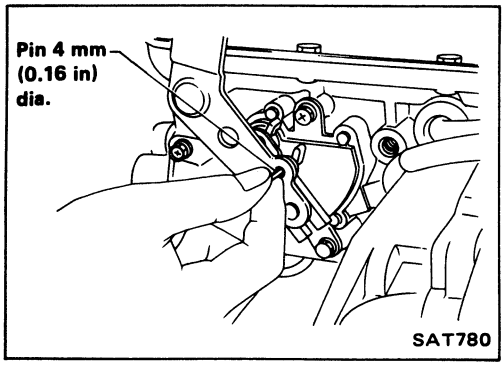

3) Insert a pin into adjustment holes in both inhibitor switch and switch lever as near vertical as possible.
4) Tighten screws.
5) Recheck for continuity. If necessary, replace the switch.

Differential Side Oil Seal Replacement

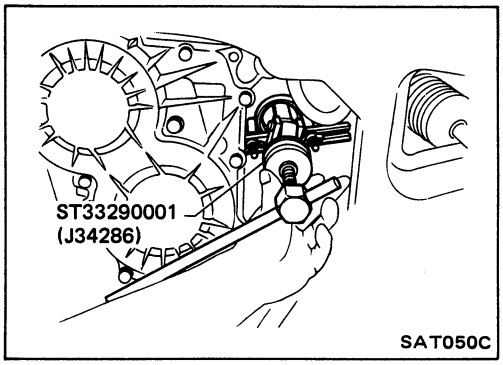

1. Remove drive shaft assembly. Refer to Drive Shaft in section FA.
2. Remove oil seal.

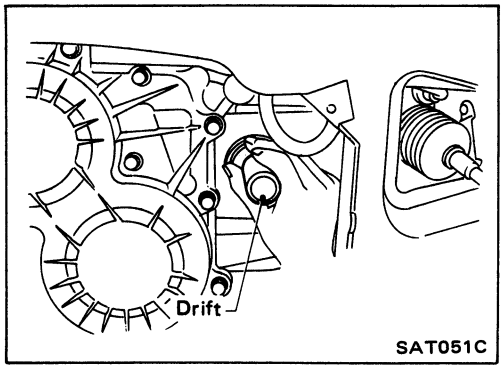

3. Apply coat of A.T.F. to oil seal surface, then drive new oil seal into place.
4. Install drive shaft assembly. Refer to Drive Shaft in section FA.

- **Be extremely careful not to scratch oil seal when inserting drive shaft.**

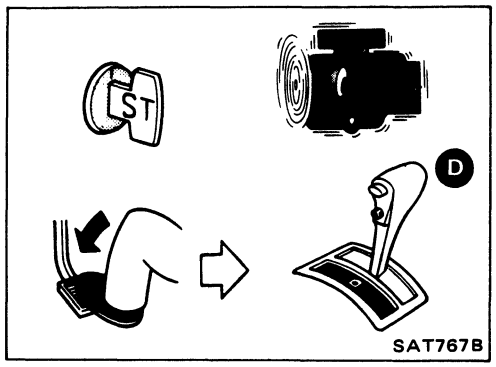

SAT767B

Preliminary Checks (Prior to Road Testing)

FLUID LEAKAGE CHECK

1. Clean area suspected of leaking, — for example, mating surface of converter housing and transmission case.
2. Start engine, apply foot brake, place selector lever in "D" range and wait a few minutes.
3. Stop engine.

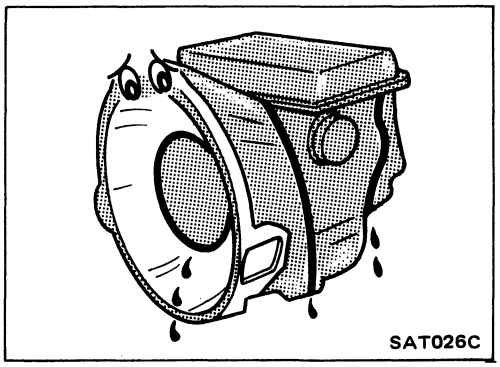
SAT026C

4. Check for fresh leakage.

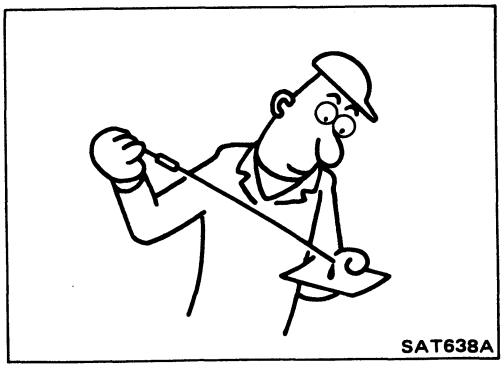
SAT638A

FLUID CONDITION CHECK

Fluid color	Suspected problem
Dark or black with burned odor	Wear of frictional material
Milky pink	Water contamination – Road water entering through filler tube or breather
Varnished fluid, light to dark brown and tacky	Oxidation – Over or under filling – Overheating

FLUID LEVEL CHECK — Refer to section MA.

Road Testing

Perform road tests using "Symptom" chart. Refer to page AT-13.

"P" RANGE

1. Place selector lever in "P" range and start the engine. Stop the engine and repeat the procedure in all ranges, including neutral.
2. Stop vehicle on a slight upgrade and place selector lever in "P" range. Release parking brake to make sure vehicle remains locked.

"R" RANGE

1. Manually move selector lever from "P" to"R", and note shift quality.
2. Drive vehicle in reverse long enough to detect slippage or other abnormalities.

"N" RANGE

1. Manually move selector lever from "R" and "D" to "N" and note quality.
2. Release parking brake with selector lever in "N" range. Lightly depress accelerator pedal to make sure vehicle does not move. (When vehicle is new or soon after clutches have been replaced, vehicle may move slightly. This is not a problem.)

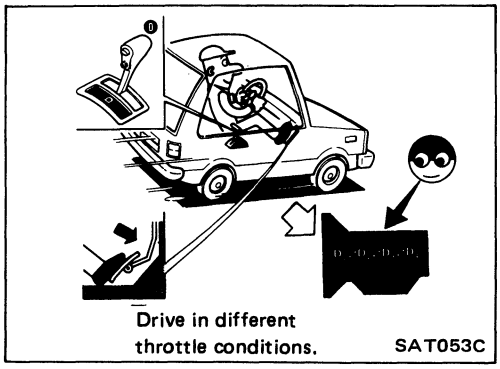

"D" RANGE

1. Manually shift selector lever from "N" to "D" range, and note shift quality.
2. Using the shift schedule as a reference, drive vehicle in "D" range. Record, on symptom chart, respective vehicle speeds at which up-shifting and down-shifting occur. These speeds are to be read at three different throttle positions (light, half and full), respectively. Also determine the timing at which shocks are encountered during shifting and which clutches are engaged.
3. Determine, by observing lock-up pressure, whether lock-up properly occurs while driving vehicle in proper gear position.

Road Testing (Cont'd)

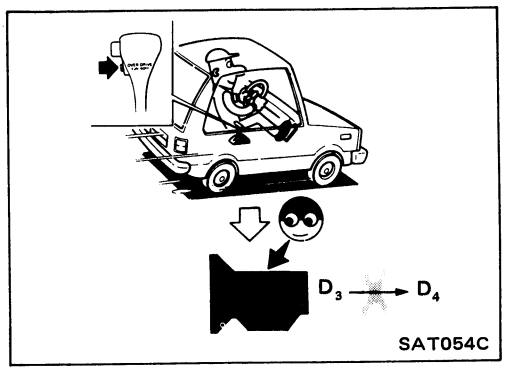

4. Check to determine if shifting to overdrive gear cannot be made while O.D. control switch is "OFF".

5. When vehicle is being driven in the 65 to 80 km/h (40 to 50 MPH) range in "D_3" range at half to light throttle position, fully depress accelerator pedal to make sure it downshifts from 3rd to 2nd gear.
6. When vehicle is being driven in the 25 to 35 km/h (16 to 22 MPH) ("D_2" range) at half to light throttle position, fully depress accelerator pedal to make sure it downshifts from 2nd to 1st gear.

"2" RANGE

1. Shift to "2" range and make sure vehicle begins to move in 1st gear.
2. Increase vehicle speed to make sure it upshifts from 1st to 2nd gear.
3. Further increase vehicle speed. Make sure it does not upshift to 3rd gear.
4. While driving vehicle at the 25 to 35 km/h (16 to 22 MPH) with throttle at half to light position ("2_2" range), fully depress accelerator pedal to make sure it downshifts from 2nd to 1st gear.
5. Allow vehicle to run idle while in "2" range to make sure that it downshifts to 1st gear.
6. Move selector lever to "D" range and allow vehicle to operate at 40 to 50 km/h (25 to 31 MPH). Then, shift to "2" range to make sure it downshifts to 2nd gear.

"1" RANGE

1. Place selector lever in "1" range and accelerate vehicle. Make sure it does not shift from 1st to 2nd gear although vehicle speed increases.
2. While vehicle is being driven in "1" range, release accelerator pedal to make sure that engine compression acts as a brake.
3. Place selector lever in "D" or "2" range and allow vehicle to run at 20 to 30 km/h (12 to 19 MPH). Then move selector lever to "1" range to make sure it downshifts to 1st gear.

Road Testing (Cont'd)

SHIFT SCHEDULE

2WD model

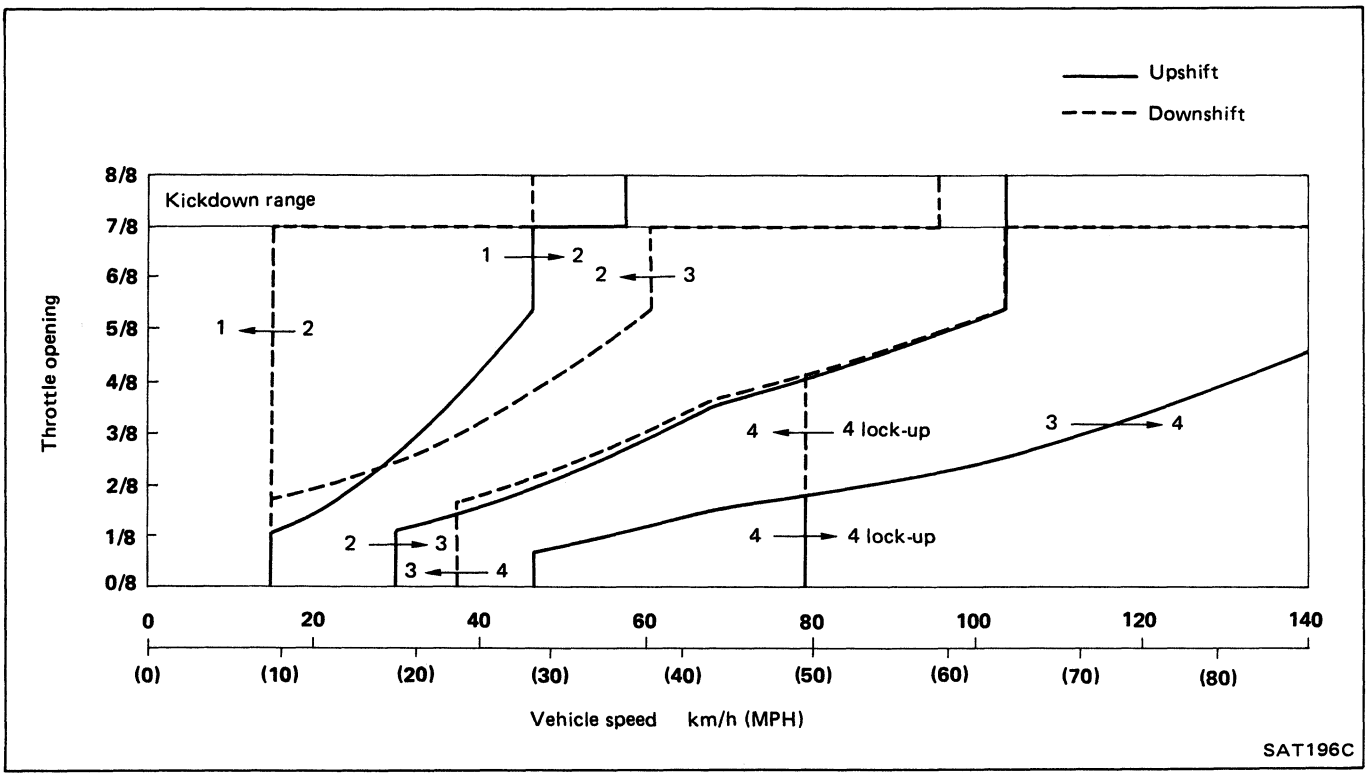

4WD model

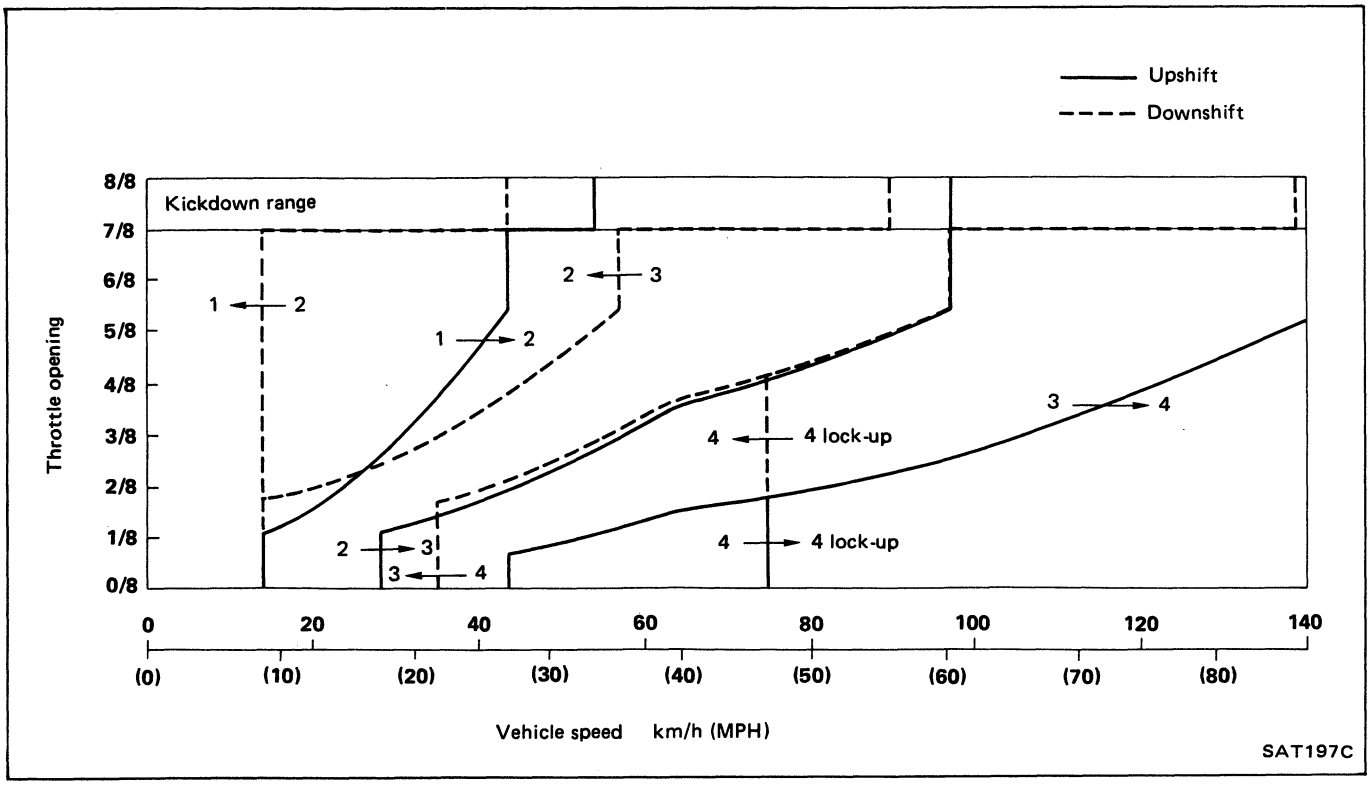

Road Testing (Cont'd)

ROAD TEST SYMPTOM CHART

Numbers in chart below correspond with those indicated in Trouble-shooting chart.

			SHIFT QUALITY: ROUGH	SHIFT QUALITY: SHIFT TIMING [Mark km/h (MPH)]	SHIFT QUALITY: NO SHIFT	SHIFT QUALITY: SHIFT SLIPPAGE	VEHICLE WON'T MOVE	CRUISE SLIPPAGE	POOR POWER/ ACCELERATION	NOISY	ENGINE WON'T START	VEHICLE WON'T STAND STILL	NO ENGINE BRAKING	NO LOCK-UP	COMMENTS
PARK RANGE	ENG. START										A				
	HOLDING									B		C			
"R" RANGE	Man. shift (Vehicle at halt)	P-R					Z			A1					
	REVERSE						E · Z	E	E	A1					
"N" RANGE	Man. shift (Vehicle at halt)	R-N								A1					
	ENG. START										A				
	N									B		D			
"D" RANGE	Man. shift	N-D	F				G · Z			A1					
	1st						G · Z		I	A1					
	Auto shift	1-2	M		J	P				A1					
	2nd									A1					
	Auto shift	2-3	N		K	Q				A1					
	3rd (Top)									A1					
	Auto shift	3-4	O		L	R				A1					
	4th (O.D.)								S	A1					
	Lock-up "OFF" → "ON"					A7				A1				A6	
	Lock-up "ON" → "OFF"									A1					
	Decel.	4-3			T					A1					
	Kickdown	4-3			T · W	X				A1					
	Decel.	3-2			U					A1					
	Kickdown	3-2			U	Y				A1					
	Decel.	2-1			V					A1					
	Kickdown	2-1			V					A1					
"2" RANGE	Man. shift (Vehicle in operation)	D-2			U · A2		H · Z			A1					
	1st						H · Z		I	A1					
	Auto shift	1-2	M		J	P				A1					
	2nd									A1					
	Decel.	2-1			V					A1					
	Kickdown	2-1			V					A1					
"1" RANGE	Man. shift (Vehicle in operation)	2-1	A5		V · A4					A1					
	Man. shift (Vehicle in operation)	D-1	A5		V · A4					A1					
	Acceleration						H · Z		I	A1					
	"1"	Engine Braking								A1		A3			

Road Testing (Cont'd)

TROUBLE-SHOOTING CHART

Numbers are arranged in order of probability. Perform inspections starting with number one and working up. Circled numbers indicate that the transaxle must be removed from the vehicle.

Reference		ON VEHICLE										OFF VEHICLE												
		Oil level	Control cable	Inhibitor switch and wiring	Throttle wire	Engine idling rpm	Line pressure	Control valve	Governor valve	Oil quality	Ignition switch and starter motor	Engine adjustment, brake inspection	Oil pump	High clutch	Low clutch	Reverse clutch	Low & reverse brake	Band brake	Transaxle one-way clutch	Final drive	Solenoids	Oil passage leak	Park linkage	Torque converter
Ⓐ	Engine does not start in "N", "P" ranges.	.	2	3	.	.	.	.	.	.	1	.	.	.	.	.	.	.	.	.	.	.	.	.
	Engine starts in range other than "N" and "P".	.	1	2	.	.	.	.	.	.	.	.	.	.	.	.	.	.	.	.	.	.	.	.
Ⓑ	Transaxle noise in "P" and "N" ranges.	1	.	.	.	.	2	.	.	.	.	.	③	.	.	.	.	.	.	.	.	.	.	.
Ⓒ	Vehicle moves when changing into "P" range or parking gear does not disengage when shifted out of "P" range.	.	1	.	.	.	.	.	.	.	.	.	.	.	.	.	.	.	.	.	.	.	②	.
Ⓓ	Vehicle runs in "N" range.	.	1	.	.	.	.	3	.	2	.	.	.	.	④	.	.	.	.	.	.	.	.	.
Ⓔ	Vehicle will not run in "R" range (but runs in "D", "2" and "1" ranges). Clutch slips. Very poor acceleration.	1	2	.	.	.	3	5	.	4	.	.	.	.	⑧	⑥	⑦	.	.	.	.	⑨	.	.
	Vehicle braked when shifting into "R" range.	.	.	.	.	.	.	.	.	1	.	.	.	.	④	②	③	⑤	.	.	.	.	⑥	.
Ⓕ	Sharp shock in shifting from "N" to "D" range.	.	.	.	2	1	3	4	.	.	.	.	.	.	⑤	.	.	.	.	.	.	.	.	.
Ⓖ	Vehicle will not run in "D" range (but runs in "2", "1" and "R" ranges).	.	1	.	.	.	2	3	.	.	.	.	.	.	.	.	.	.	④	.	.	.	.	.
Ⓗ	Vehicle will not run in "D", "1", "2" ranges (but runs in "R" range). Clutch slips. Very poor acceleration.	1	2	.	.	.	4	5	.	3	.	6	.	⑧	⑦	.	.	.	.	.	.	⑨	.	.
Ⓘ	Clutches or brakes slip somewhat in starting.	1	2	.	6	.	3	5	.	4	.	.	⑦	.	.	.	.	.	.	.	.	⑧	.	.
	Excessive creep.	.	.	.	.	1	.	.	.	.	.	.	.	.	.	.	.	.	.	.	.	.	.	.
	No creep at all.	1	2	.	.	3	.	5	.	4	.	.	⑥	.	⑧	.	.	.	.	.	.	⑦	.	⑨
Ⓙ	Failure to change gear from "1st" to "2nd".	.	1	.	2	.	.	4	5	3	.	.	.	.	.	.	.	⑥	.	.	.	⑦	.	.
Ⓚ	Failure to change gear from "2nd" to "3rd".	.	1	.	2	.	.	4	5	3	.	.	.	⑥	.	.	.	.	.	.	.	⑦	.	.
Ⓛ	Failure to change gear from "3rd" to "4th".	.	1	.	2	.	.	4	5	3	.	.	.	⑥	.	.	.	⑦	.	.	.	.	.	.
	Too high a gear change point from "1st" to "2nd", from "2nd" to "3rd", from "3rd" to "4th".	.	.	.	1	.	2	4	5	3	.	.	.	.	.	.	.	.	.	.	.	⑥	.	.
	Gear change directly from "1st" to "3rd" occurs.	.	.	.	.	.	.	2	3	1	.	.	.	.	.	.	.	④	.	.	.	⑤	.	.
	Engine stops when shifting lever into "D" range.	.	.	.	.	.	.	.	.	.	.	1	.	.	.	.	.	.	.	.	.	.	.	.
Ⓜ	Too sharp a shock in change from "1st" to "2nd".	.	.	.	1	.	3	4	.	2	.	.	.	.	.	.	.	⑤	.	.	.	.	.	.
Ⓝ	Too sharp a shock in change from "2nd" to "3rd".	.	.	.	1	.	3	4	.	2	.	.	.	⑤	.	.	.	.	.	.	.	.	.	.

Road Testing (Cont'd)

Numbers are arranged in order of probability. Perform inspections starting with number one and working up. Circled numbers indicate that the transaxle must be removed from the vehicle.

Reference		ON VEHICLE											OFF VEHICLE											
		Oil level	Control cable	Inhibitor switch and wiring	Throttle wire	Engine idling rpm	Line pressure	Control valve	Governor valve	Oil quality	Ignition switch and starter motor	Engine adjustment, brake inspection	Oil pump	High clutch	Low clutch	Reverse clutch	Low & reverse brake	Band brake	Transaxle one-way clutch	Final drive	Solenoids	Oil passage leak	Park linkage	Torque converter
Ⓞ	Too sharp a shock in change from "3rd" to "4th".	.	.	.	1	.	3	4	.	2	.	.	.	.	.	.	.	⑤	.	.	.	.	.	.
Ⓟ	Almost no shock or clutches slipping in change from "1st" to "2nd".	1	2	.	3	.	4	6	.	5	.	.	.	.	.	.	.	⑦	.	.	.	.	⑧	.
Ⓠ	Almost no shock or slipping in change from "2nd" to "3rd". Engine races extremely fast.	1	2	.	3	.	4	6	.	5	.	.	.	⑦	.	.	.	.	.	.	.	.	⑧	.
Ⓡ	Almost no shock or slipping in change from "3rd" to "4th".	1	2	.	3	.	4	6	.	5	.	.	.	.	.	.	.	⑦	.	.	.	.	⑧	.
	Vehicle braked by gear change from "1st" to "2nd".	.	.	.	.	.	.	2	.	1	.	.	.	③	.	④	⑤	.	⑥	.	.	.	.	.
	Vehicle braked by gear change from "2nd" to "3rd".	.	.	.	.	.	.	2	.	1	.	.	.	.	.	.	.	③	.	.	.	.	.	.
	Vehicle braked by gear change from "3rd" to "4th".	.	.	.	.	.	.	2	.	1	.	.	.	.	③	.	.	.	.	.	.	.	.	.
Ⓢ	Maximum speed not attained. Acceleration poor.	1	2	.	.	.	4	5	6	3	.	7	⑧	⑨	.	.	.	⑩	.	.	.	.	.	⑪
Ⓣ	Failure to change gear from "4th" to "3rd".	.	.	.	1	.	.	3	4	2	.	.	.	.	⑤	.	.	⑥	.	.	.	.	⑦	.
Ⓤ	Failure to change gear from "3rd" to "2nd" or from "4th" to "2nd".	.	.	.	1	.	.	3	4	2	.	.	.	.	.	.	.	⑤	.	.	.	.	⑥	.
Ⓥ	Failure to change gear from "2nd" to "1st" or from "3rd" to "1st".	.	.	.	1	.	.	3	4	2	.	.	.	.	.	.	.	⑥	⑤	.	.	.	.	.
	Gear change shock felt during deceleration by releasing accelerator pedal.	.	1	.	2	.	3	4	5	.	.	.	.	.	.	.	.	.	.	.	.	⑥	⑦	.
	Too high a change point from "4th" to "3rd", from "3rd" to "2nd", from "2nd" to "1st".	.	1	.	2	.	3	4	5	.	.	.	.	.	.	.	.	.	.	.	.	.	⑥	.
Ⓦ	Kickdown does not operate when depressing pedal in "4th" within kickdown car speed.	.	.	.	1	.	.	3	4	2	.	.	.	.	⑥	.	.	⑤	.	.	.	.	⑦	.
	Kickdown operates or engine overruns when depressing pedal in "4th" beyond kickdown vehicle speed limit.	.	1	.	2	.	3	5	6	4	.	.	.	⑦	.	.	.	⑧	.	.	.	.	⑨	.
Ⓧ	Races extremely fast or slips in changing from "4th" to "3rd" when depressing pedal.	.	.	.	1	.	2	4	.	3	.	.	.	.	⑤	.	.	⑥	.	.	.	.	.	⑦
Ⓨ	Races extremely fast or slips in changing from "3rd" to "2nd" when depressing pedal.	.	.	.	1	.	2	4	.	3	.	.	.	⑤	.	.	.	⑥	.	.	.	.	.	.

Road Testing (Cont'd)

Numbers are arranged in order of probability. Perform inspections starting with number one and working up. Circled numbers indicate that the transaxle must be removed from the vehicle.

Reference		ON VEHICLE												OFF VEHICLE														
		Oil level	Control cable	Inhibitor switch and wiring	Throttle wire	Engine idling rpm	Line pressure	Control valve	Governor valve	Oil quality	Ignition switch and starter motor	Engine adjustment, brake inspection	O.D. control switch and wiring	O.D. indicator switch	Oil pump	High clutch	Low clutch	Reverse clutch	Low & reverse brake	Band brake	Transaxle one-way clutch	Final drive	Solenoids	Oil passage leak	Park linkage	Torque converter	Planetary gear	Lubrication
Ⓩ	Vehicle will not run in any range.	1	2	.	.	.	3	5	.	4	.	.	.	.	⑥	.	.	.	.	.	.	.	.	⑧	⑩	⑨	.	.
(A1)	Transmission noise in "D", "2", "1" and "R" ranges.	1	.	.	.	.	2	.	.	.	.	.	.	.	③	.	.	.	.	.	.	④	.	.	.	.	⑤	⑥	.
(A2)	Failure to change from "3rd" to "2nd" when changing lever into "2" range.	.	1	.	.	.	2	4	.	3	.	.	.	.	.	.	.	.	.	⑤	.	.	.	⑥	.	.	.	.
	Gear change from "2nd" to "3rd" in "2" range.	.	1	.	.	.	2	3	.	.	.	.	.	.	.	.	.	.	.	.	.	.	.	④	.	.	.	.
(A3)	Engine brake does not operate in "1" range.	.	1	.	.	.	2	4	.	3	.	.	.	.	.	.	.	.	⑤	.	.	.	.	⑥	.	.	.	.
	Gear change from "1st" to "2nd" in "1" range.	.	1	.	.	.	2	3	.	.	.	.	.	.	.	.	.	.	.	.	.	.	.	④	.	.	.	.
(A4)	Does not change from "2nd" to "1st" in "1" range.	1	2	.	.	.	.	4	5	3	.	.	.	.	.	.	.	.	⑦	⑥	.	.	.	⑧	.	.	.	.
(A5)	Large shock changing from "2nd" to "1st" in "1" range.	.	.	.	1	.	.	4	.	3	.	2	.	.	.	.	.	.	⑤	.	.	.	.	.	.	.	.	.
	Transaxle overheats.	1	.	.	.	.	2	5	.	4	.	3	.	.	⑥	⑨	⑪	⑫	⑬	⑩	.	⑯	.	.	⑭	.	⑦	⑮	⑧
	Oil shoots out during operation. White smoke emitted from exhaust pipe during operation.	1	.	.	2	.	4	6	.	3	.	5	.	.	⑥	⑨	⑪	⑫	⑬	⑩	.	⑯	.	.	⑭	.	⑦	⑮	⑧
	Offensive smell at oil charging pipe.	1	.	.	.	.	.	.	.	2	.	.	.	.	③	⑥	⑧	⑨	⑩	⑦	.	⑬	.	.	⑪	.	④	⑫	⑤
(A6)	Torque converter is not locked up.	.	.	.	.	.	3	1	2	.	.	.	.	.	⑤	.	.	.	.	.	.	.	.	⑥	.	.	④	.	.
(A7)	Lock-up piston slip.	.	.	.	.	.	1	.	.	.	.	.	.	.	②	.	.	.	.	.	.	.	.	④	.	.	③	.	.
	Lock-up point is extremely high or low.	.	.	.	.	.	.	1	2	.	.	.	.	.	.	.	.	.	.	.	.	.	.	③	.	.	.	.	.
	Engine is stopped at R.D. 2 and 1 ranges.	.	.	.	.	.	.	1	.	.	.	.	.	.	.	.	.	.	.	.	.	.	.	②	.	.	③	.	.
(A8)	Torque converter lock-up pressure is not normal.	.	.	.	1	.	2	3	.	.	.	.	.	.	④	.	.	.	.	.	.	.	.	.	.	.	⑤	.	.
	Transaxle shifts to overdrive even if O.D. control switch is turned to "OFF".	.	.	.	.	.	.	.	.	.	.	.	1	.	.	.	.	.	.	.	.	.	.	②	.	.	.	.	.
	Lamp inside O.D. control switch glows even if transaxle is shifted out of O.D.	.	.	.	.	.	.	.	.	.	.	.	2	1	.	.	.	.	.	.	.	.	.	.	.	.	.	.	.

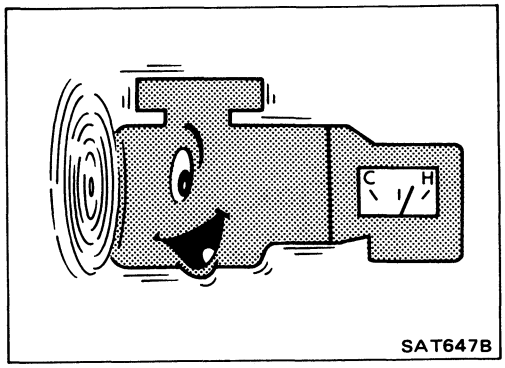

SAT647B

Stall Testing

STALL TEST PROCEDURE

1. Check A/T and engine fluid levels. If necessary, add fluid.
2. Warm up engine until engine oil and A.T.F. reach operating temperature after vehicle has been driven approx. 10 minutes.

   A.T.F. operating temperature:
   50 - 80°C (122 - 176°F)

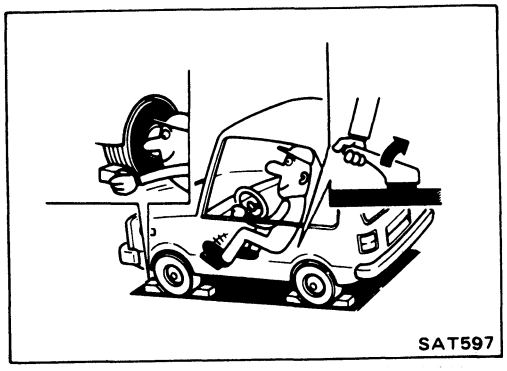
SAT597

3. Set parking brake and block wheels.
4. Install a tachometer where it can be seen by driver during test.

- **It is good practice to put a mark on point of specified engine rpm on indicator.**

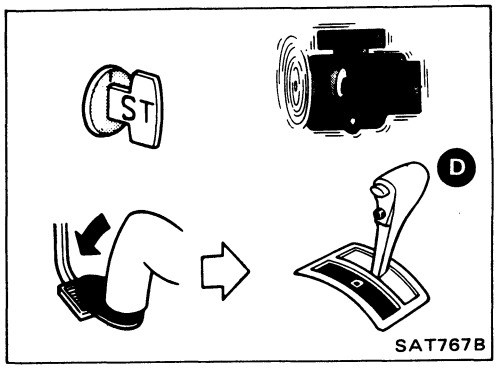

SAT767B

5. Start engine, apply foot brake, and place selector lever in "D" range.

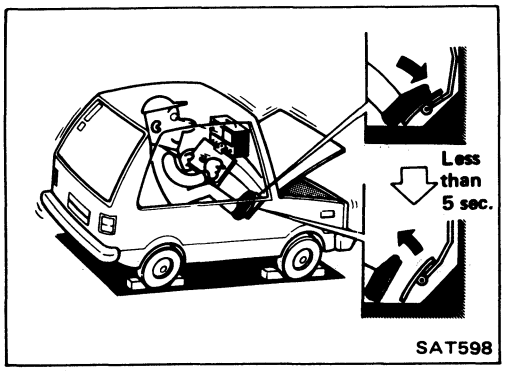

SAT598

6. Accelerate to wide-open throttle gradually while applying foot brake.
7. Quickly note the engine stall revolution and immediately release throttle.

- **During test, never hold throttle wide-open for more than 5 seconds.**

  Stall revolution standard:
  1,950 - 2,250 rpm

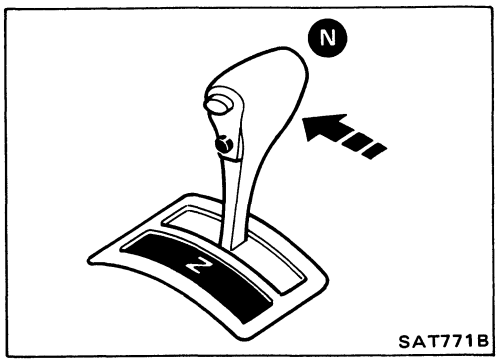

SAT771B

8. Shift selector lever to "N".
9. Cool off A.T.F.

- **Run engine at idle for at least one minute.**

10. Perform stall tests in the same manner as in steps 5 through 9 with selector lever in "2", "1" and "R", respectively.

Stall Testing (Cont'd)

STALL TEST ANALYSIS

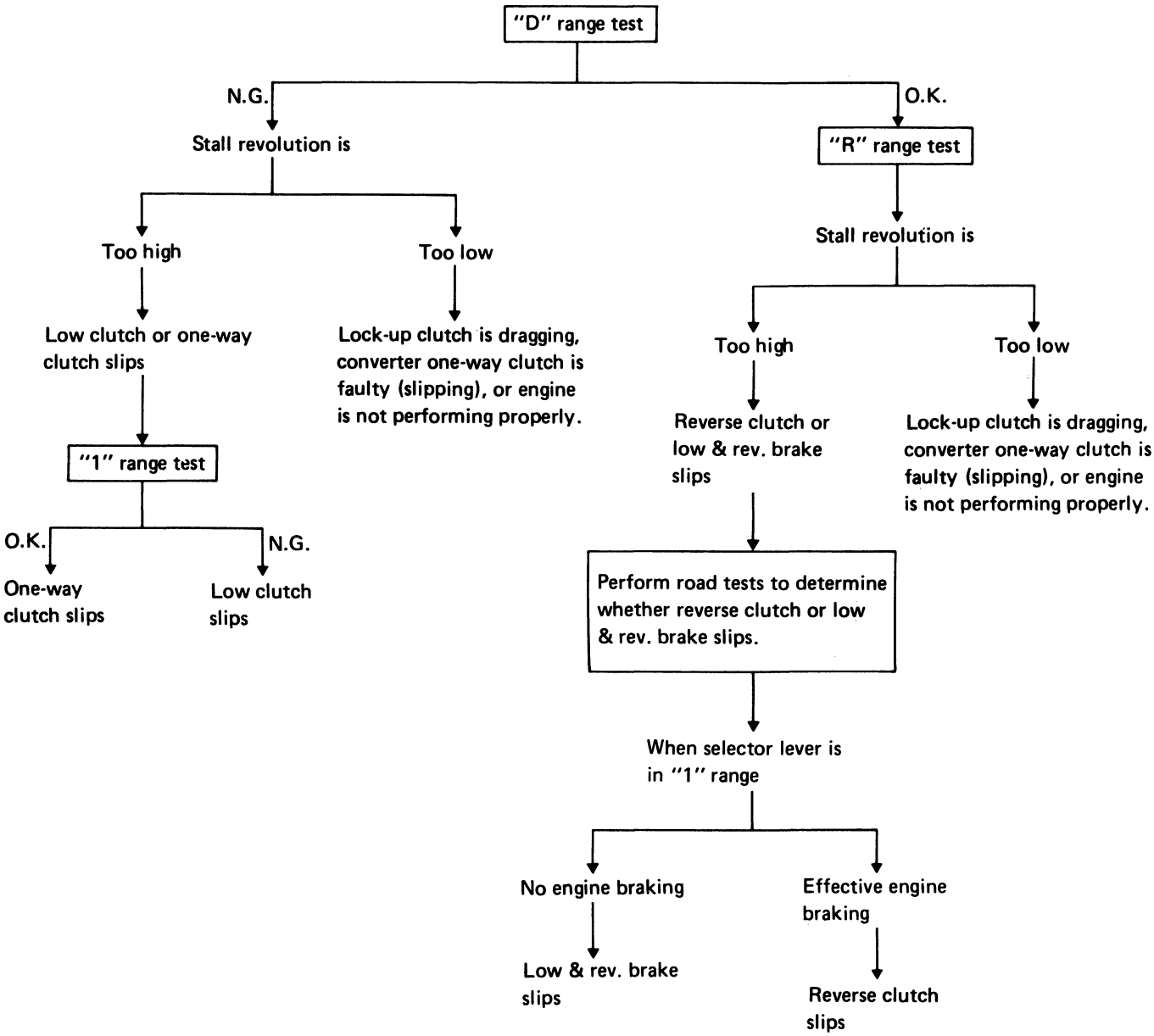

If one-way clutch converter is frozen, vehicle will have poor high-speed performance and low engine rpm when raced in "N" range.

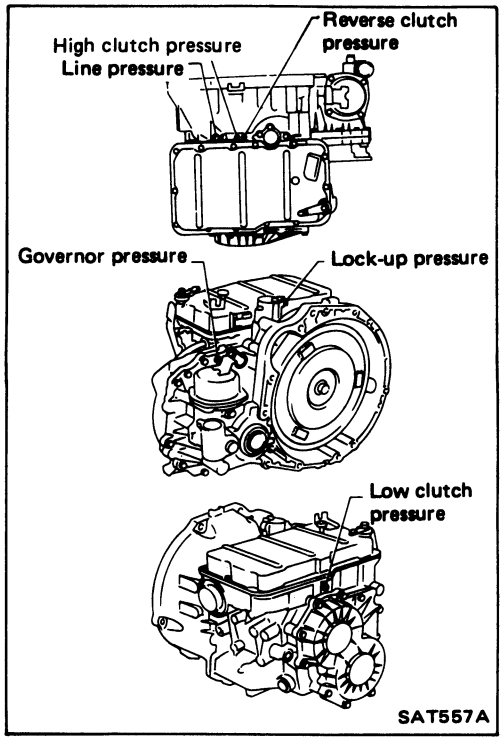

Pressure Testing

- Location of line pressure test port
- **Always replace line pressure plugs as they are self-sealing bolts.**

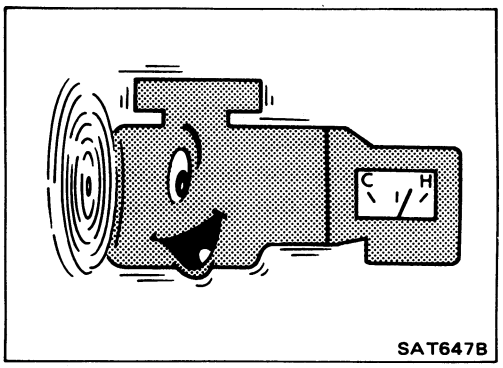

LINE PRESSURE TEST PROCEDURE

1. Check A/T and engine fluid levels. If necessary, add fluid.
2. Warm up engine until engine oil and A.T.F. reach operating temperature after vehicle has been driven approx. 10 minutes.

   A.T.F. operating temperature:
   50 - 80°C (122 - 176°F)

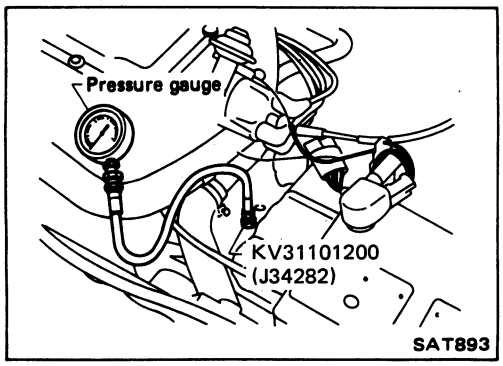

3. Install pressure gauge to line pressure port.

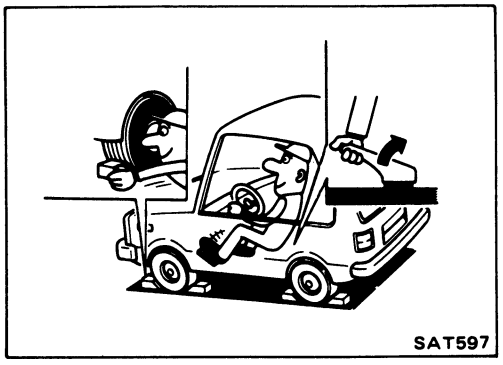

4. Set parking brake and block wheels.
- **Continue to depress brake pedal fully while line pressure test at stall speed is performed.**

Pressure Testing (Cont'd)

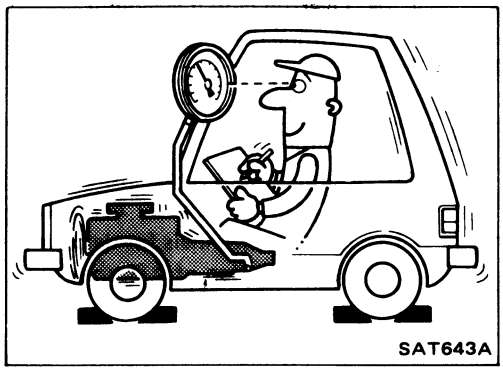
SAT643A

Line pressure standard

Engine speed rpm	Line pressure kPa (kg/cm^2, psi)
	D, 2, 1 and R ranges
Idle	Approx. 392 (4.0, 57)
Stall	Approx. 1,373 (14.0, 199)

5. Start engine and measure line pressure at idle and stall speed.
- **When measuring line pressure at stall speed, follow the stall test procedure.**

JUDGEMENT BY LINE PRESSURE

- **If line pressure does not rise, first check to make sure that throttle wire is connected properly.**

1) When line pressure while idling is low at all positions ("D", "2", "1", "R" and "P"), the problem may be due to:
- Wear on interior of oil pump
- Oil leakage at or around oil pump, control valve body, transmission case or governor
- Sticking pressure regulator valve
- Sticking pressure modifier valve

2) When line pressure while idling is low at a particular position, the problem may be due to the following:
- If oil leaks at or around low and reverse brake circuit, line pressure becomes low in "R" range but is normal in "P", "D", "2" or "1" range.

3) When line pressure is high while idling, pressure regulator valve may have stuck.

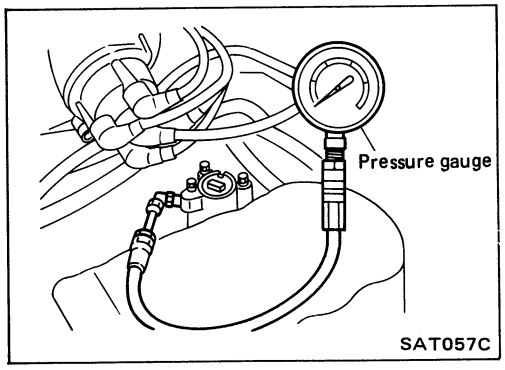

SAT057C

LOCK-UP TEST

- Install pressure gauge to lock-up pressure port. Shift selector lever in "D" range.

Condition	Torque converter lock-up pressure kPa (kg/cm^2, psi)
Lock-up "ON"	49 (0.5, 7) or less
Lock-up "OFF"	196 (2.0, 28) or more

- If lock-up pressure is not within specifications, refer to Trouble-shooting chart (A6).

Schematic

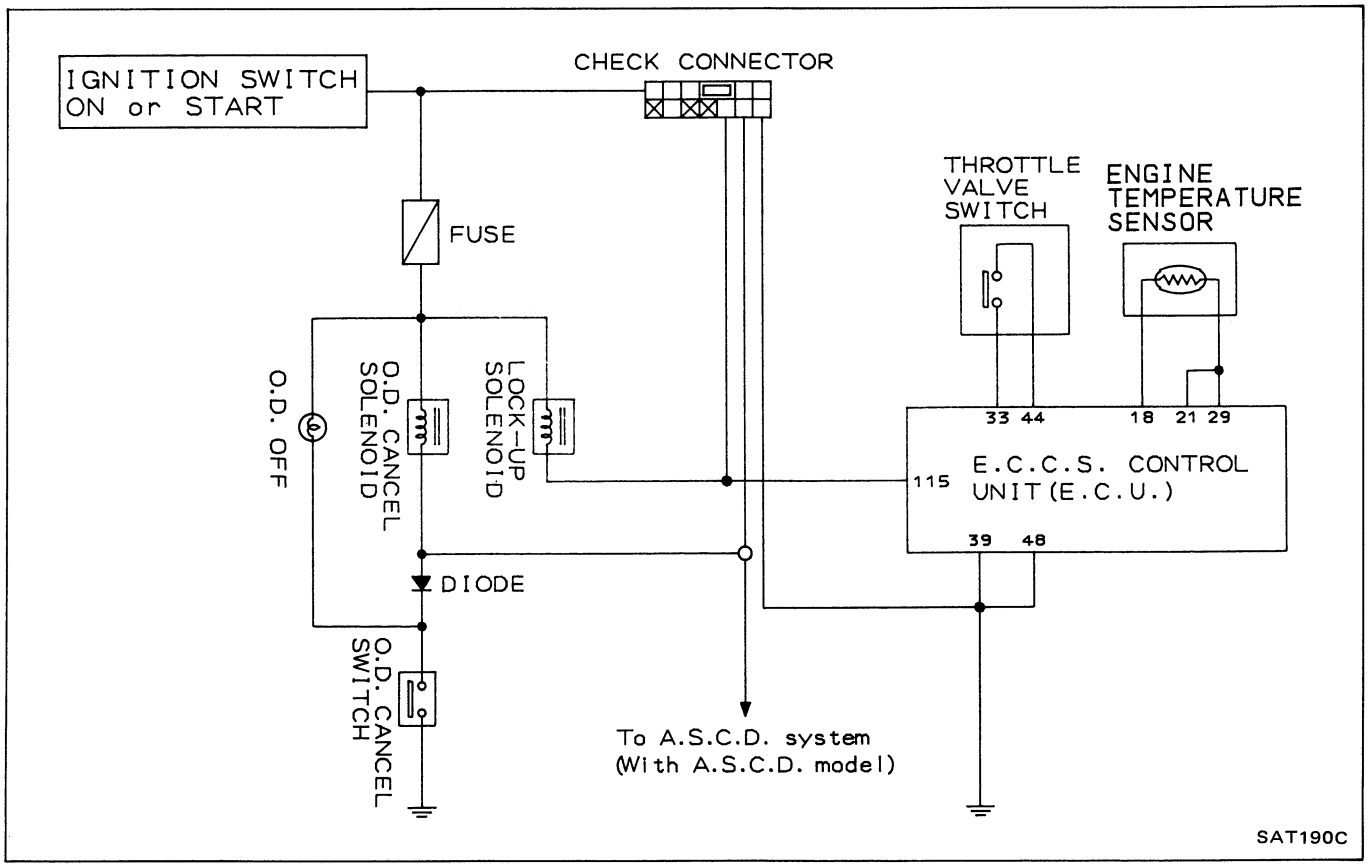
IGNITION SWITCH
ON or START
CHECK CONNECTOR
FUSE
THROTTLE
VALVE
SWITCH
ENGINE
TEMPERATURE
SENSOR
O.D. OFF
O.D. CANCEL
SOLENOID
LOCK-UP
SOLENOID
33 44
18 21 29
115
E.C.C.S. CONTROL
UNIT (E.C.U.)
39 48
DIODE
O.D. CANCEL
SWITCH
To A.S.C.D. system
(With A.S.C.D. model)
SAT190C

Wiring Diagram — Overdrive Control System

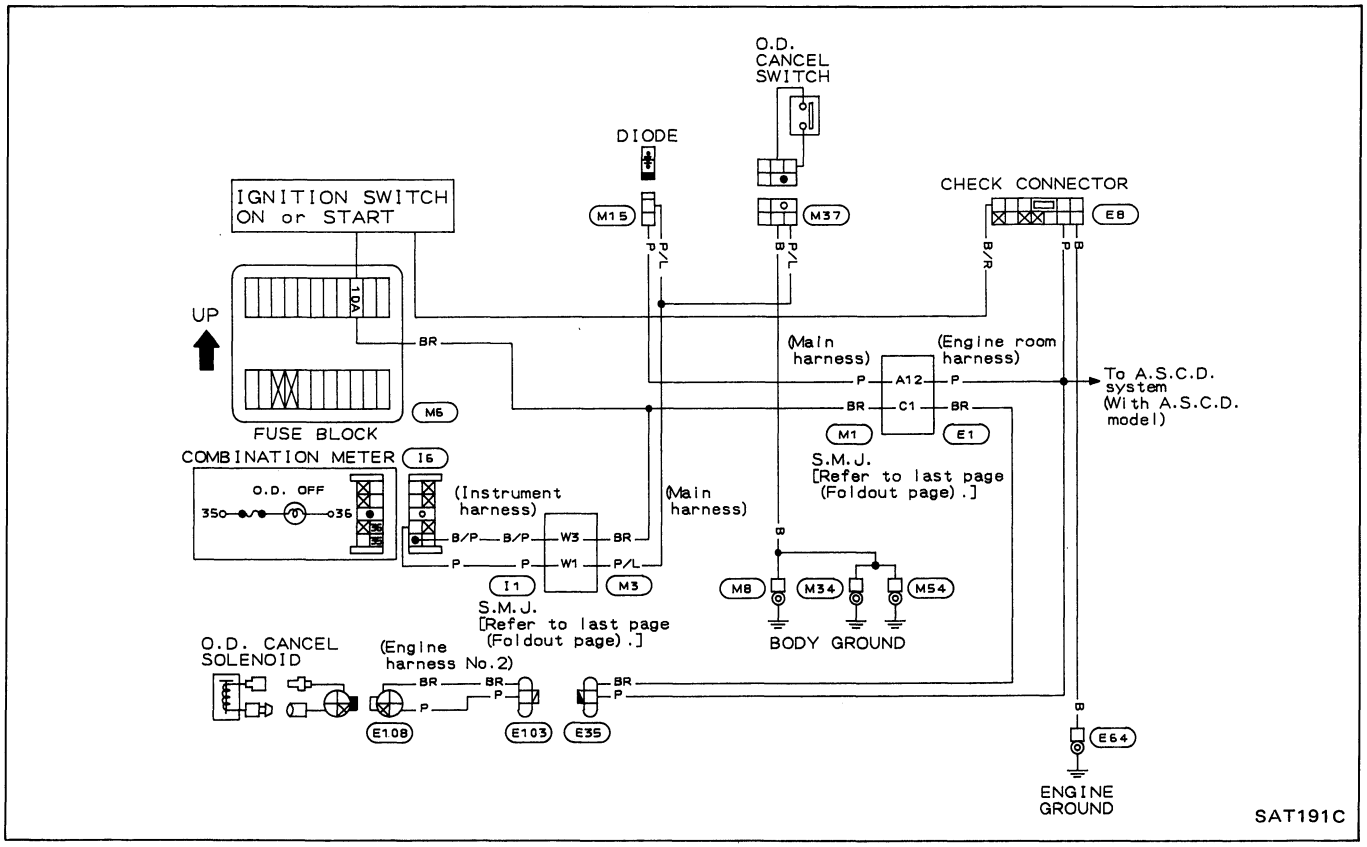

Wiring Diagram — Lock-up Release System

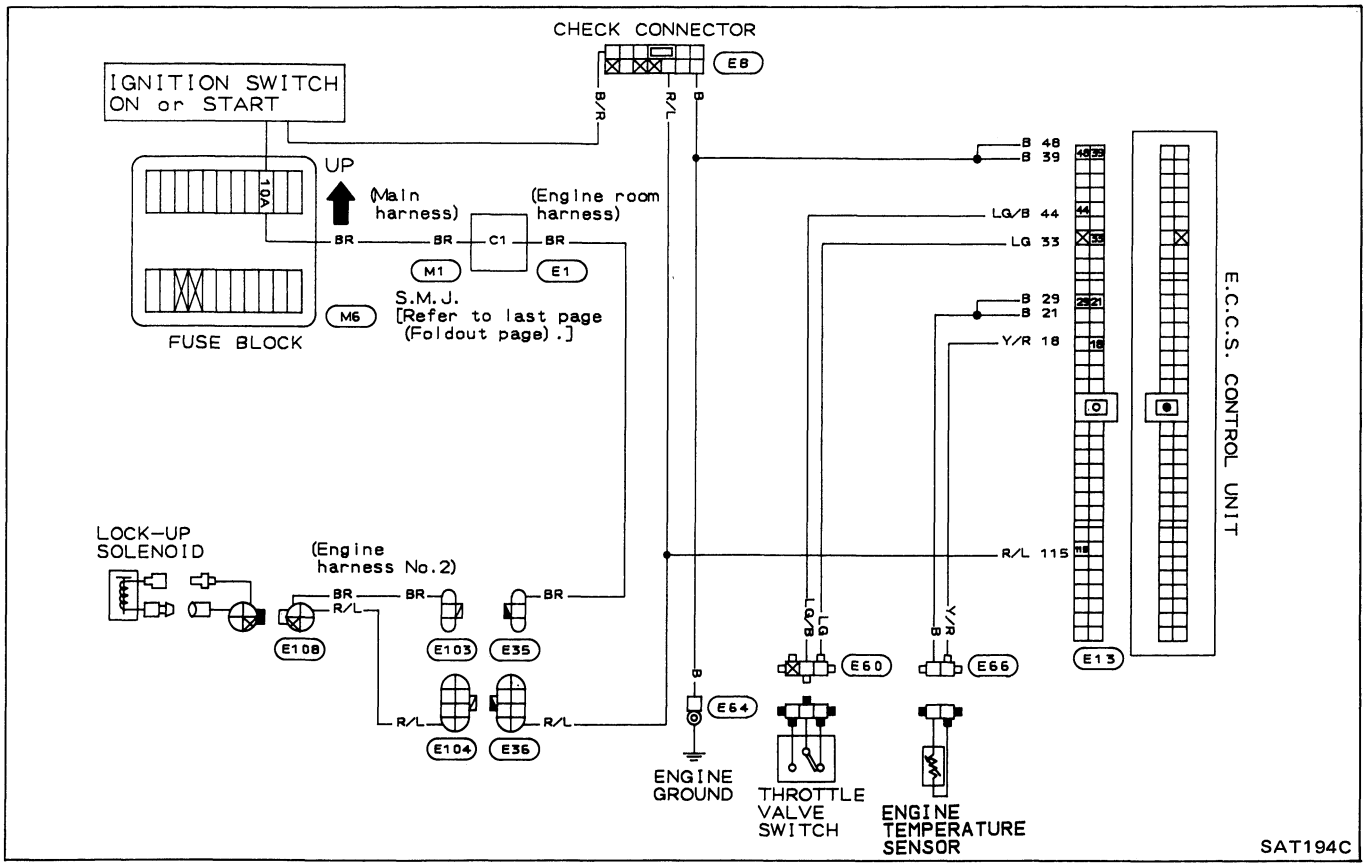

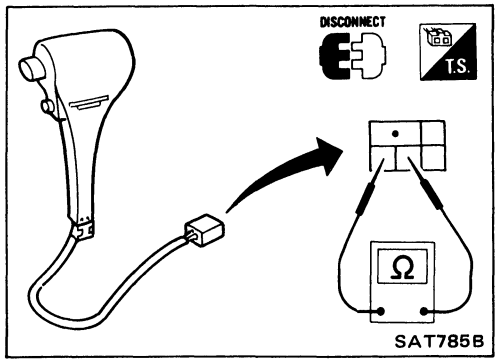

Component Check

OVERDRIVE CONTROL SWITCH

- Check continuity between two terminals.

Switch position	Continuity
ON	No
OFF	Yes

Removal

- Remove battery and bracket.
- Remove air duct.
- Disconnect heater hose from dash panel.

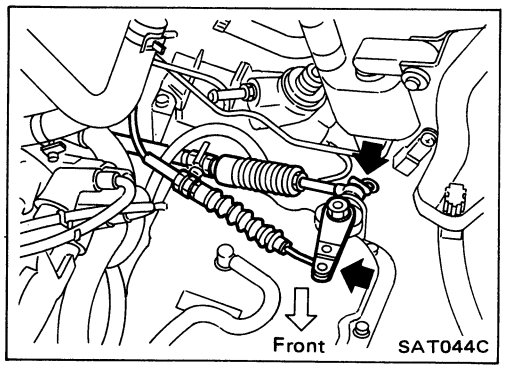

- Disconnect control cable and throttle wire from A/T.
- Remove starter motor.
- Disconnect drive shaft — Refer to section FA.

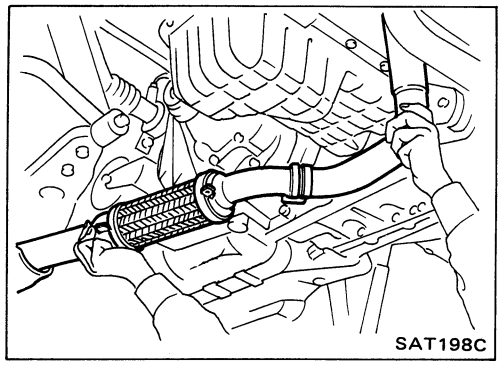

- Remove front exhaust tube.

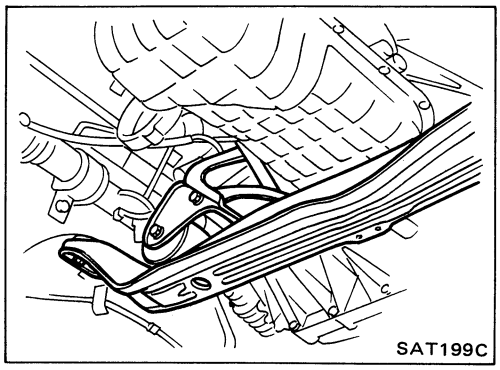

— **2WD model** —

- Support A/T with transmission jack.
- Remove center member, buffer rod and rear mounting.

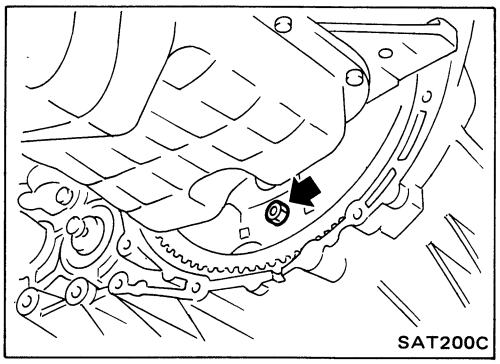

- Remove bolts securing torque converter to drive plate.
- Remove bolts by turning crankshaft.

Removal (Cont'd)

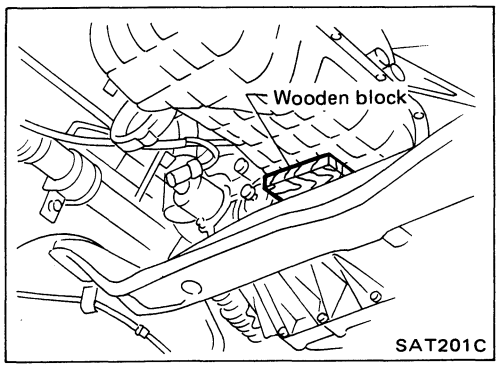

- Reinstall center member in order to support engine when removing A/T.
- Insert wooden block between engine oil pan and center member.

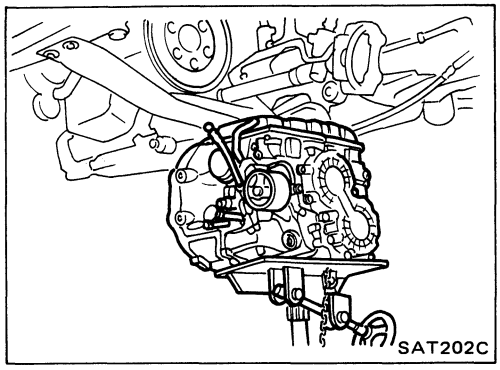

- Remove L.H. transaxle mounting.
- Remove bolts fixing A/T to engine.
- Remove A/T from engine.

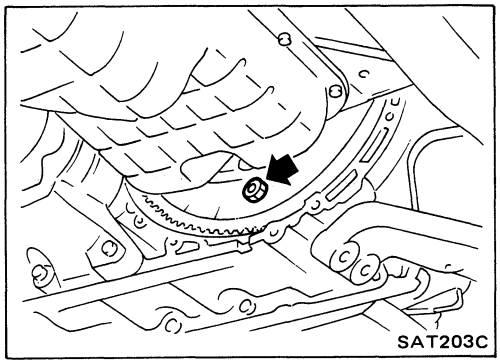

— 4WD model —

- Remove propeller shaft.
- Remove buffer rod.
- Remove bolts securing torque converter to drive plate.
- Remove bolts by turning crankshaft.

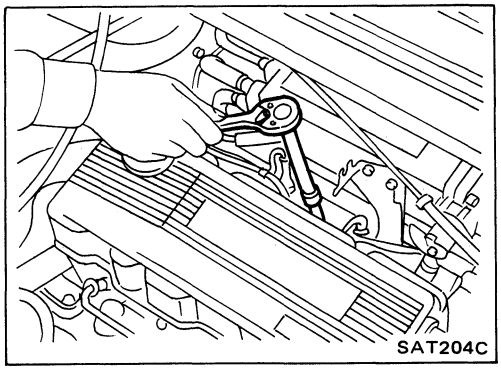

- Remove bolts fixing gusset to transfer under intake manifold.
- Remove bolts from intake manifold side by using socket wrench with long extension.

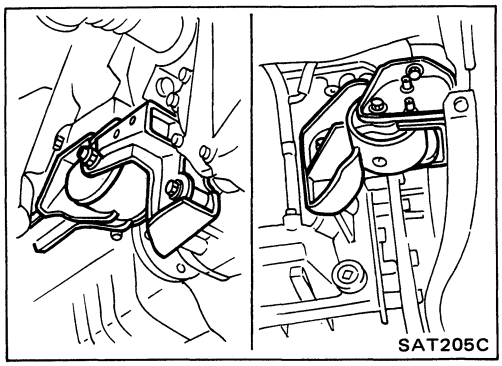

- Support A/T and transfer with transmission jack.
- Remove rear transfer mounting and L.H. transaxle mounting.

Removal (Cont'd)

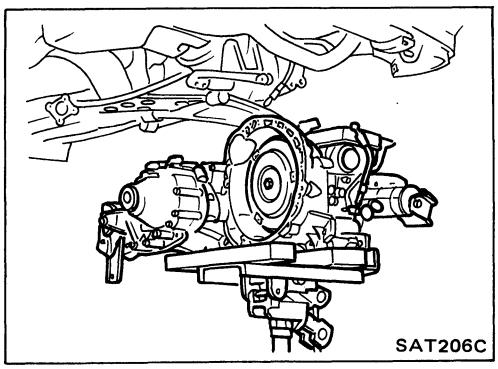

- Remove bolts fixing A/T to engine
- Remove A/T and transfer assembly.

Installation

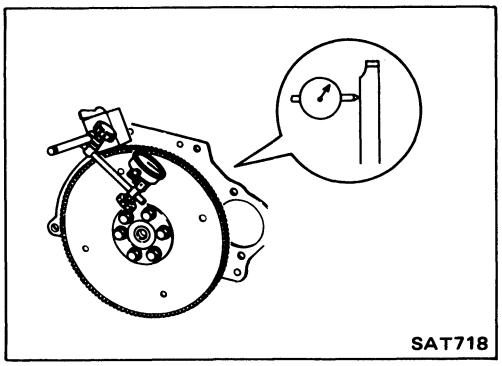

- Drive plate runout

  Maximum allowable runout:

  0.5 mm (0.020 in)

  If this runout is out of allowance, replace drive plate with ring gear.

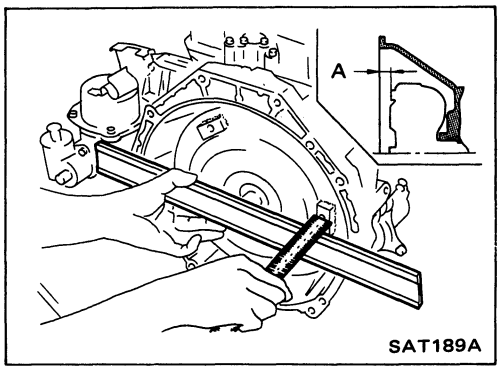

- When connecting torque converter to transaxle, measure distance "A" to be certain that they are correctly assembled.

  Distance "A": 19.0 mm (0.748 in) or more
- Install converter to drive plate.
- **After converter is installed to drive plate, rotate crankshaft several turns and check to be sure that transaxle rotates freely without binding.**

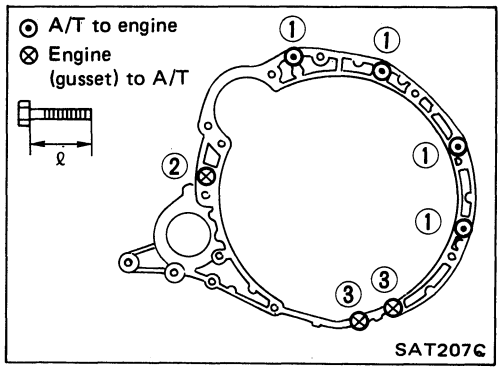

- Tighten bolts securing transaxle.

2WD model

Bolt No.	Tightening torque N·m (kg-m, ft-lb)	ℓ mm (in)
1	39 - 44 (4.0 - 4.5, 29 - 33)	45 (1.77)
2	39 - 44 (4.0 - 4.5, 29 - 33)	40 (1.57)
3	30 - 40 (3.1 - 4.1, 22 - 30)	40 (1.57)

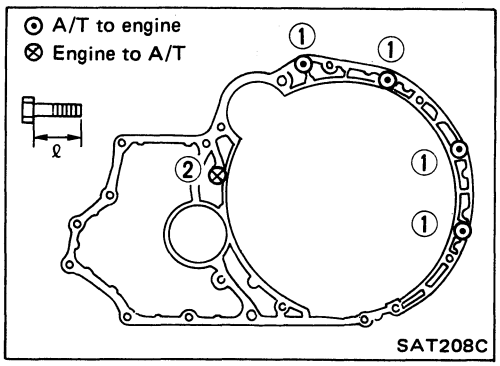

4WD model

Bolt No.	Tightening torque N·m (kg-m, ft-lb)	ℓ mm (in)
1	39 - 44 (4.0 - 4.5, 29 - 33)	45 (1.77)
2	39 - 44 (4.0 - 4.5, 29 - 33)	40 (1.57)

- Reinstall any part removed.

Installation (Cont'd)

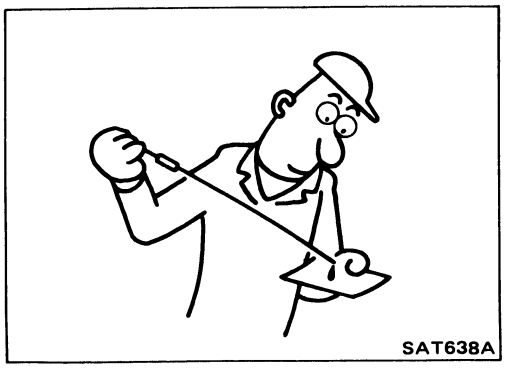

- Check fluid level in transaxle.
- Move selector lever through all positions to be sure that transaxle operates correctly.
  With parking brake applied, rotate engine at idling. Move selector lever through "N" to "D", to "2", to "1" and to "R". A slight shock should be felt by hand gripping selector each time transaxle is shifted.
- Perform road test. — Refer to "Road Testing".

NOTE

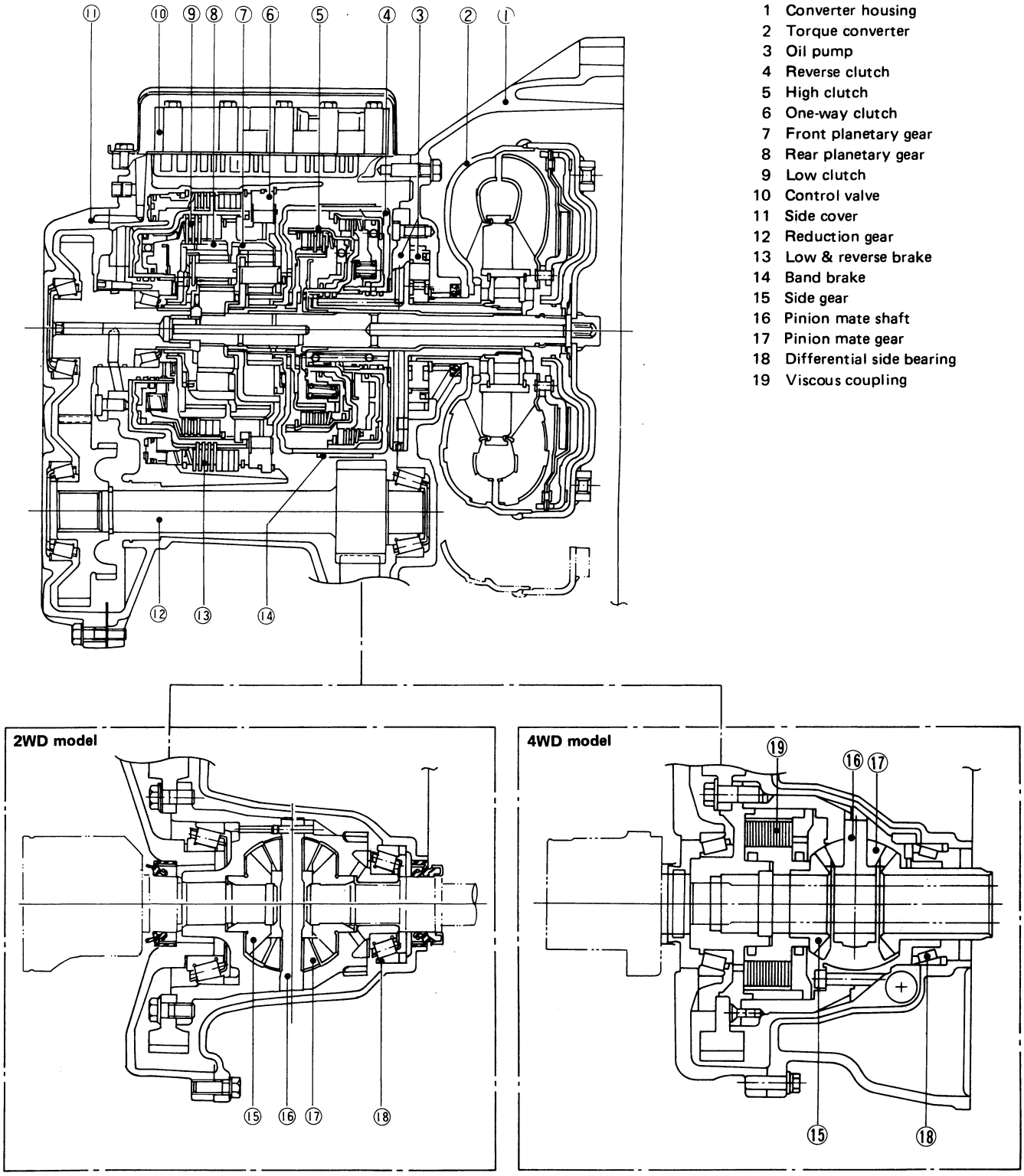

1 Converter housing
2 Torque converter
3 Oil pump
4 Reverse clutch
5 High clutch
6 One-way clutch
7 Front planetary gear
8 Rear planetary gear
9 Low clutch
10 Control valve
11 Side cover
12 Reduction gear
13 Low & reverse brake
14 Band brake
15 Side gear
16 Pinion mate shaft
17 Pinion mate gear
18 Differential side bearing
19 Viscous coupling

SAT059C

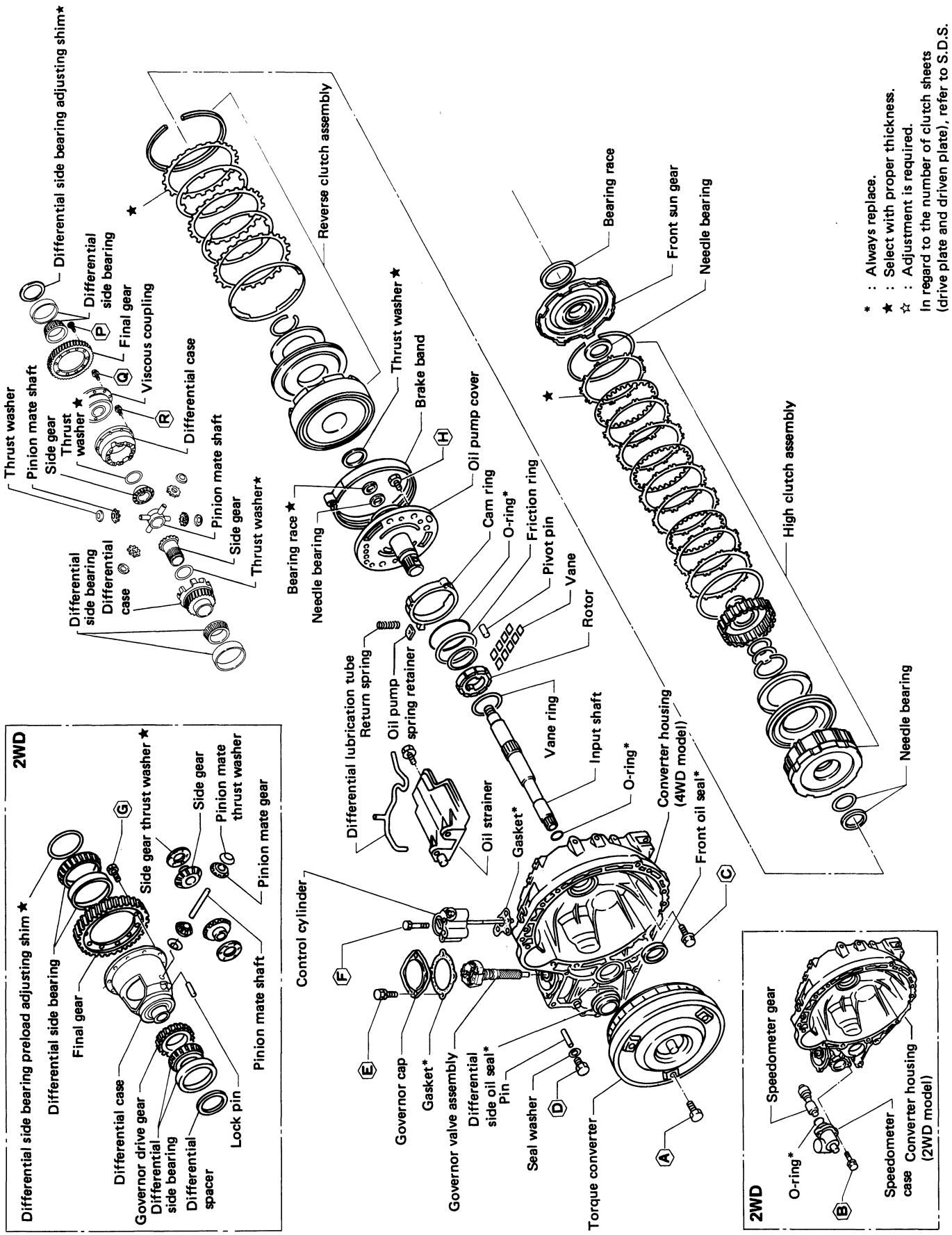
Differential side bearing adjusting shim★
Differential side bearing
Final gear
Viscous coupling
Differential case
Thrust washer
Pinion mate shaft
Side gear
Thrust washer ★
Pinion mate shaft
Side gear
Thrust washer★
Differential side bearing
Differential case
Reverse clutch assembly
Thrust washer ★
Brake band
Oil pump cover
Bearing race ★
Needle bearing
Cam ring
O-ring*
Friction ring
Pivot pin
Vane
Rotor
Differential lubrication tube
Return spring
Oil pump spring retainer
Vane ring
Input shaft
O-ring*
Oil strainer
Gasket*
Converter housing (4WD model)
Front oil seal*
Control cylinder
Governor cap
Gasket*
Governor valve assembly
Differential side oil seal*
Pin
Seal washer
Torque converter
Bearing race
Front sun gear
Needle bearing
High clutch assembly
Needle bearing
2WD
Differential side bearing preload adjusting shim ★
Differential side bearing
Final gear
Differential case
Governor drive gear
Differential side bearing
Differential spacer
Lock pin
Side gear thrust washer ★
Side gear
Pinion mate thrust washer
Pinion mate gear
Pinion mate shaft
2WD
Speedometer gear
O-ring*
Speedometer case
Converter housing (2WD model)
* : Always replace.
★ : Select with proper thickness.
☆ : Adjustment is required.
In regard to the number of clutch sheets (drive plate and driven plate), refer to S.D.S.

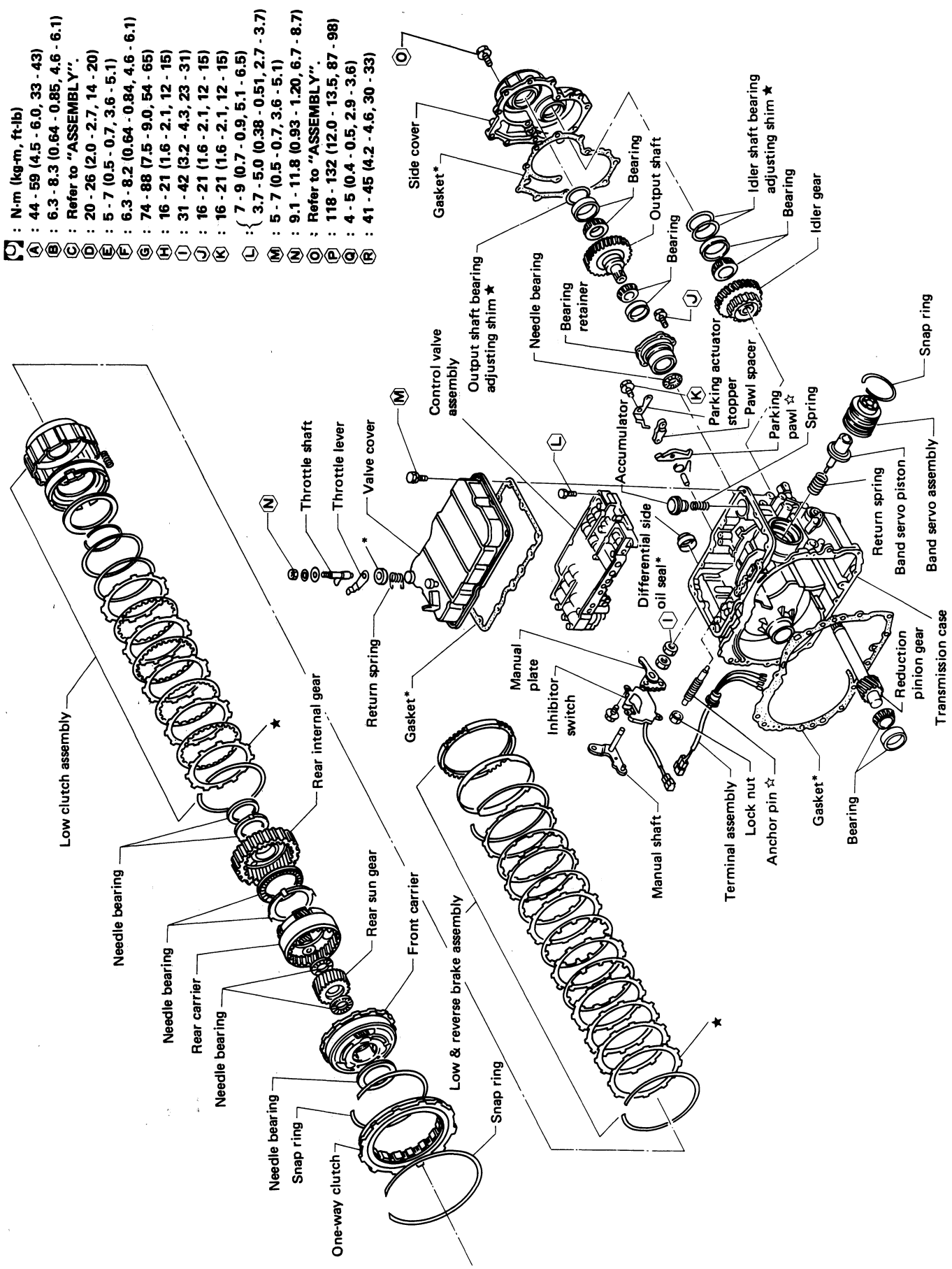
: N·m (kg-m, ft-lb)
Ⓐ : 44 - 59 (4.5 - 6.0, 33 - 43)
Ⓑ : 6.3 - 8.3 (0.64 - 0.85, 4.6 - 6.1)
Ⓒ : Refer to "ASSEMBLY".
Ⓓ : 20 - 26 (2.0 - 2.7, 14 - 20)
Ⓔ : 5 - 7 (0.5 - 0.7, 3.6 - 5.1)
Ⓕ : 6.3 - 8.2 (0.64 - 0.84, 4.6 - 6.1)
Ⓖ : 74 - 88 (7.5 - 9.0, 54 - 65)
Ⓗ : 16 - 21 (1.6 - 2.1, 12 - 15)
Ⓘ : 31 - 42 (3.2 - 4.3, 23 - 31)
Ⓙ : 16 - 21 (1.6 - 2.1, 12 - 15)
Ⓚ : 16 - 21 (1.6 - 2.1, 12 - 15)
Ⓛ : 7 - 9 (0.7 - 0.9, 5.1 - 6.5)
3.7 - 5.0 (0.38 - 0.51, 2.7 - 3.7)
Ⓜ : 5 - 7 (0.5 - 0.7, 3.6 - 5.1)
Ⓝ : 9.1 - 11.8 (0.93 - 1.20, 6.7 - 8.7)
Ⓞ : Refer to "ASSEMBLY".
Ⓟ : 118 - 132 (12.0 - 13.5, 87 - 98)
Ⓠ : 4 - 5 (0.4 - 0.5, 2.9 - 3.6)
Ⓡ : 41 - 45 (4.2 - 4.6, 30 - 33)
Side cover
Gasket*
Bearing
Output shaft
Bearing
Idler shaft bearing adjusting shim ★
Bearing
Idler gear
Output shaft bearing adjusting shim ★
Needle bearing
Bearing retainer
Control valve assembly
Parking actuator stopper
Pawl spacer
Parking pawl ☆
Spring
Snap ring
Accumulator
Throttle shaft
Throttle lever
Valve cover
Return spring
Band servo piston
Band servo assembly
Differential side oil seal*
Return spring
Transmission case
Manual plate
Inhibitor switch
Gasket*
Reduction pinion gear
Low clutch assembly
Rear internal gear
Manual shaft
Terminal assembly
Lock nut
Anchor pin ☆
Gasket*
Bearing
Needle bearing
Needle bearing
Rear carrier
Needle bearing
Rear sun gear
Front carrier
Low & reverse brake assembly
Needle bearing
Snap ring
One-way clutch
Snap ring

SAT724C

Hydraulic Control Circuit

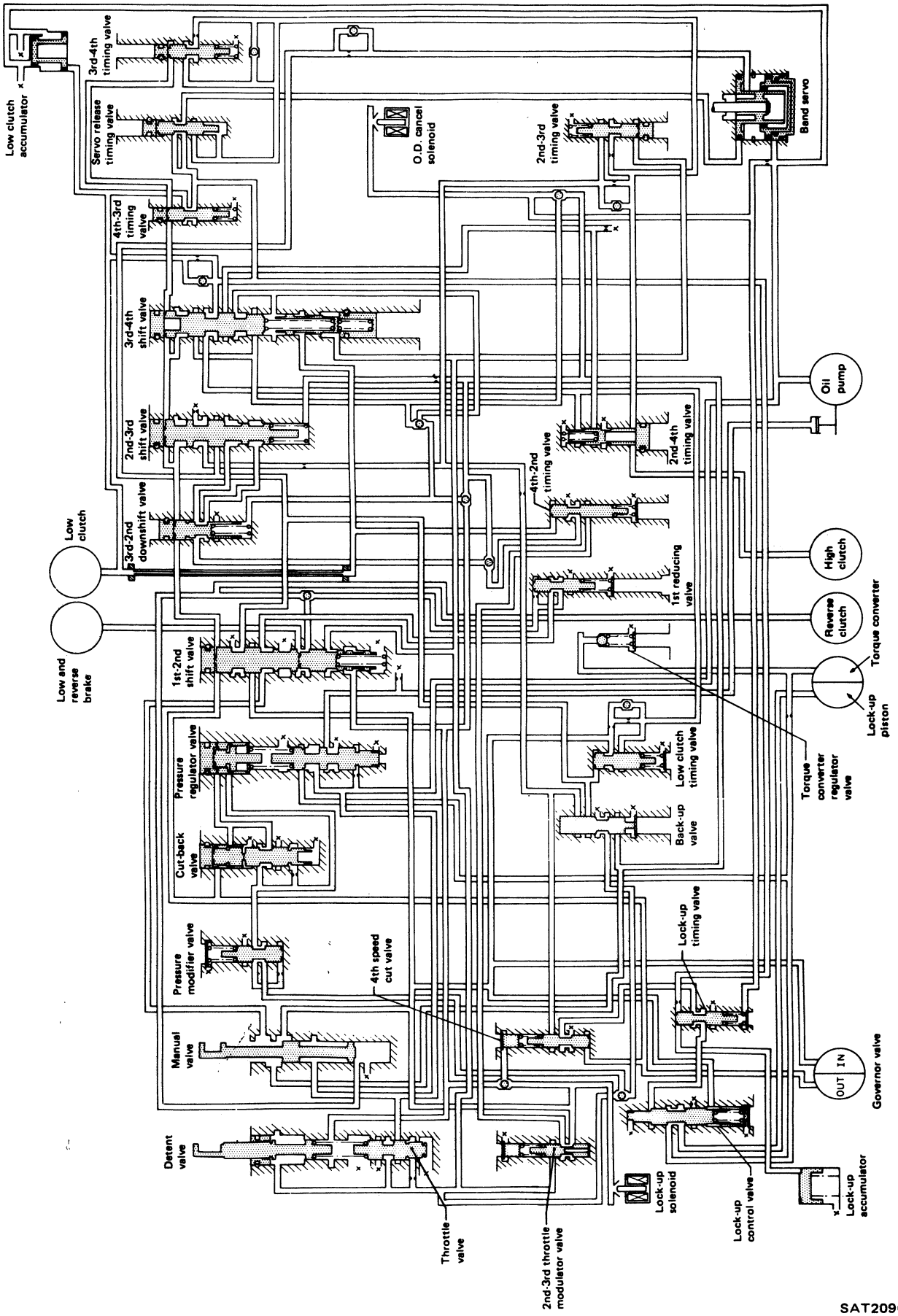

SAT209C

Mechanical Operation

Each part operates as shown in the following table at each gear position.

Range			Reverse clutch	High clutch	Low clutch	Band servo		Low & reverse brake	One-way clutch	Parking pawl	Lock-up
						Operation	Release				
Park										on	
Reverse			on					on			
Neutral											
Drive	D_1	Low			on				on		
	D_2	Second			on	on					
	D_3	Top (3rd)		on	on	(on)	on				
	D_4	O.D. (4th)		on		on					on
2	2_1	Low			on				on		
	2_2	Second			on	on					
1	1_1	Low			on			on	on		
	1_2	Second			on	on					

Oil Channel

OIL CHANNELS IN OIL PUMP COVER

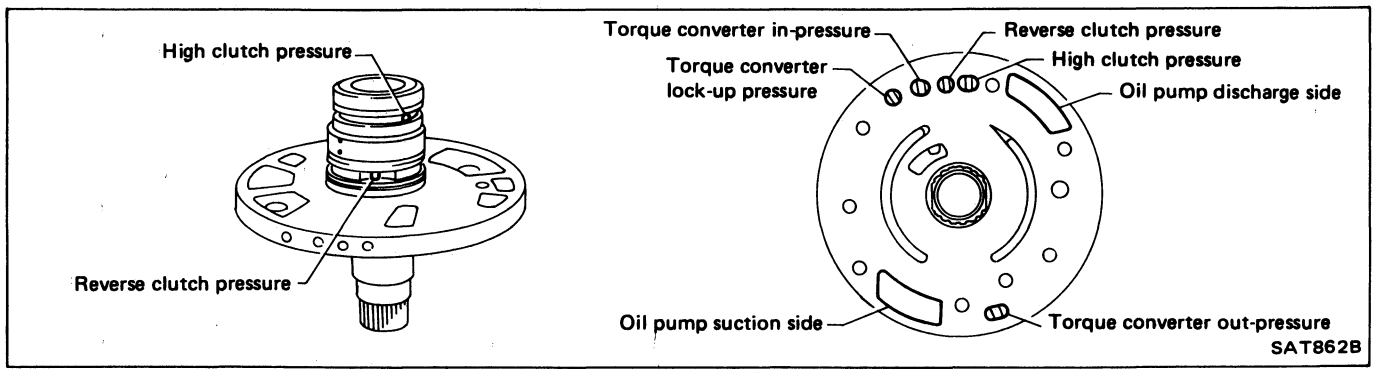

OIL CHANNELS IN TRANSMISSION CASE

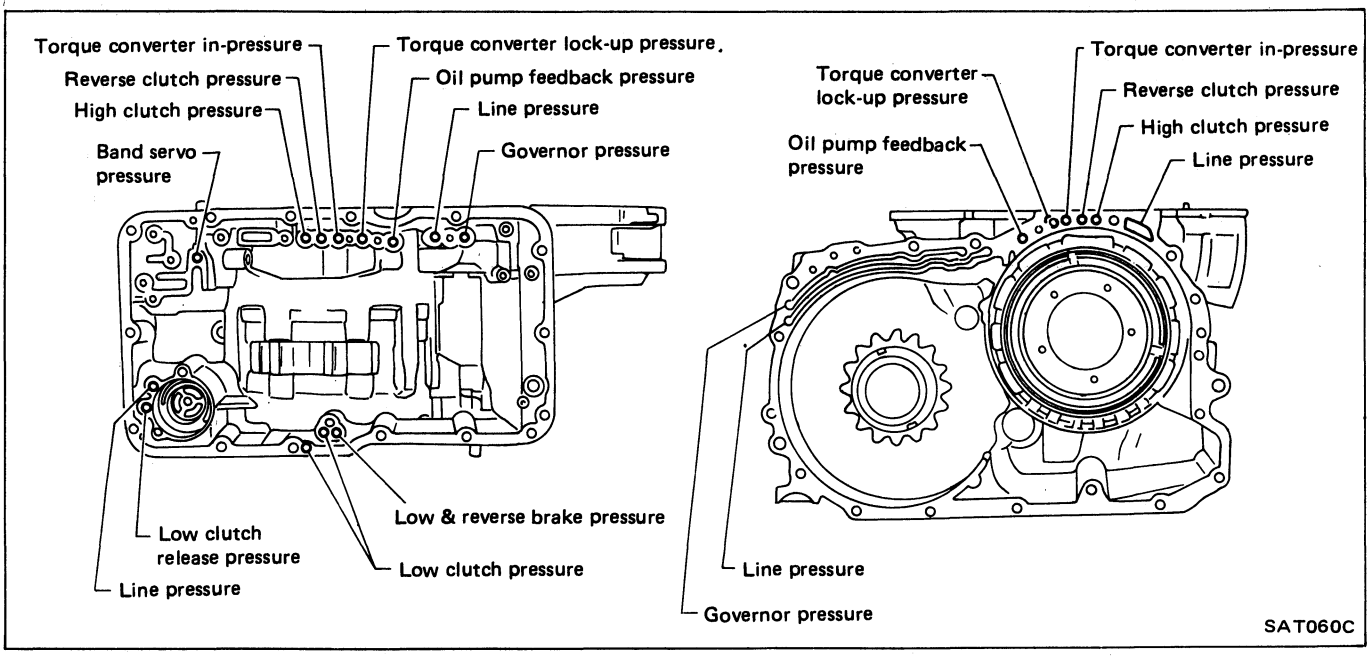

OIL CHANNELS IN CONVERTER HOUSING

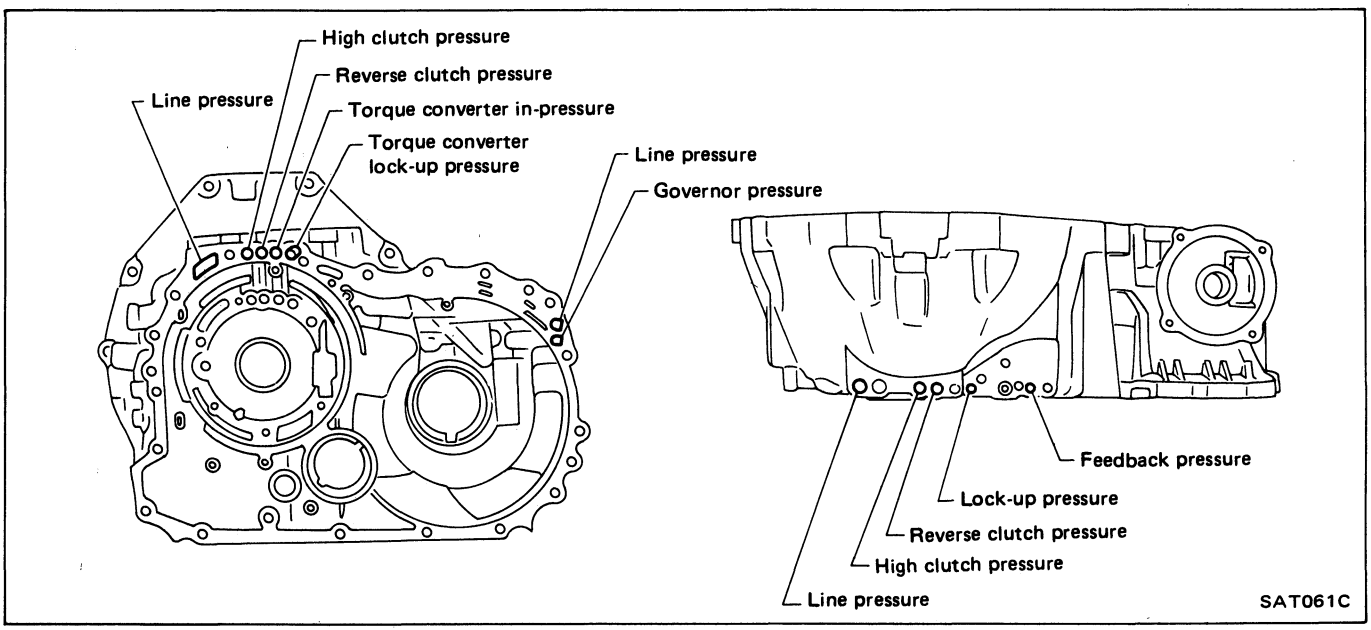

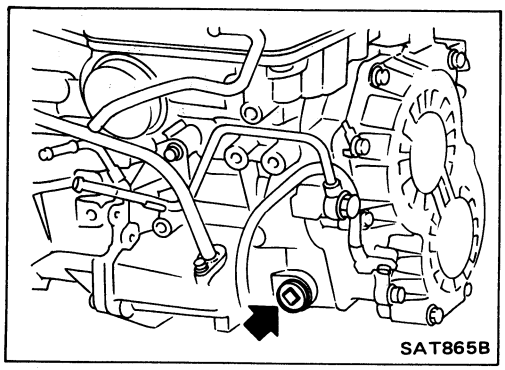

1. Drain A.T.F. through drain hole.

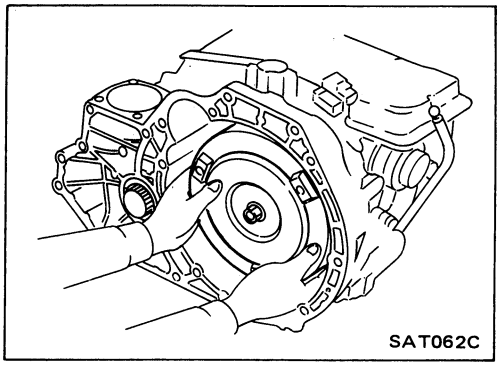

2. Remove torque converter.

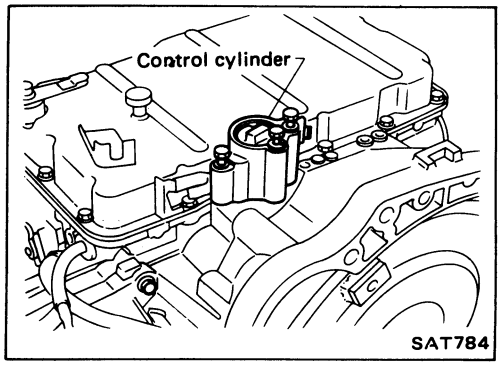

3. Remove control cylinder.

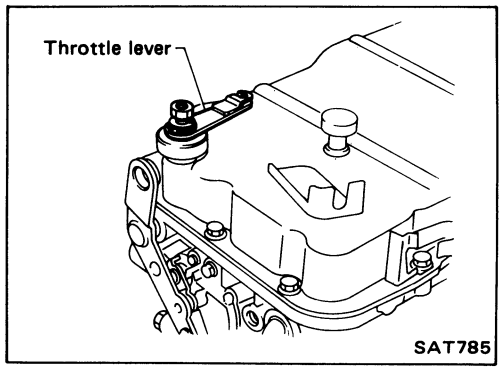

4. Remove throttle lever and valve cover.

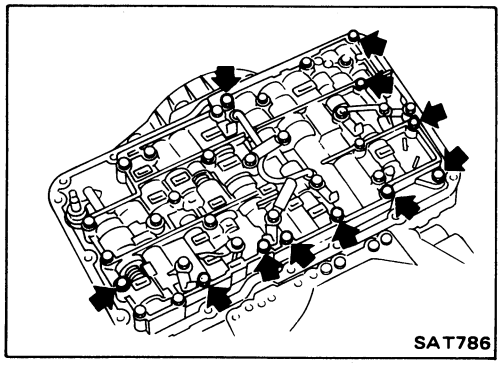

5. Disconnect harness connectors on control valve and remove control valve assembly.

6. Remove terminal assembly.
The terminal retrieving hooks will break if they are forced inward too far. Bend them gently inward while pulling carefully outward on the terminal. Do not pull on the wires.

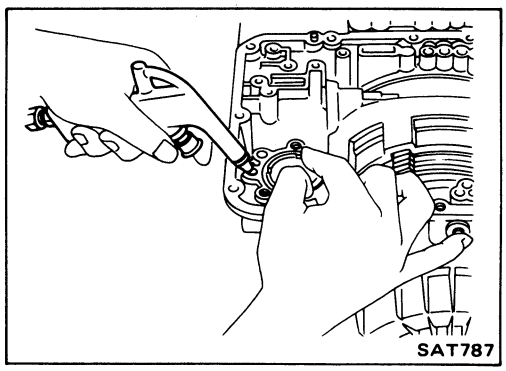

7. Remove accumulator.

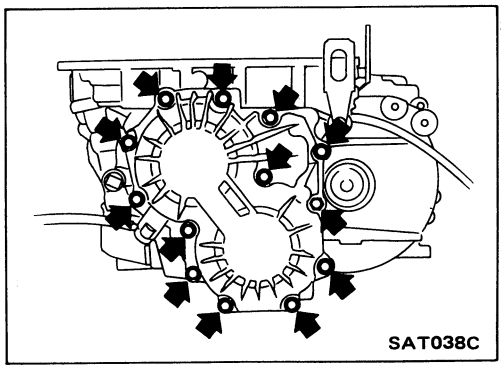

8. Remove side cover.

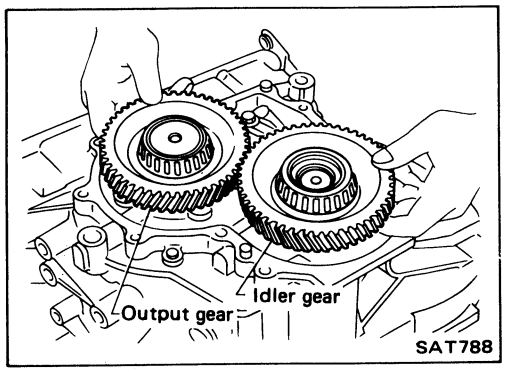

9. Remove output gear.

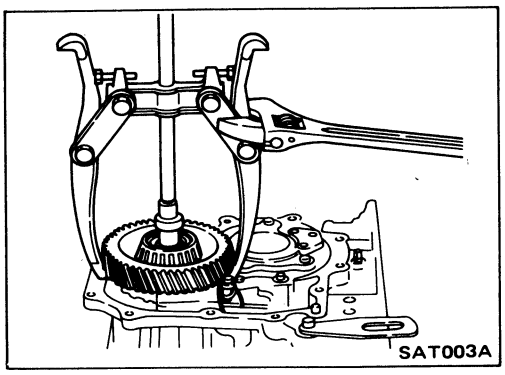

10. Draw out idler gear.

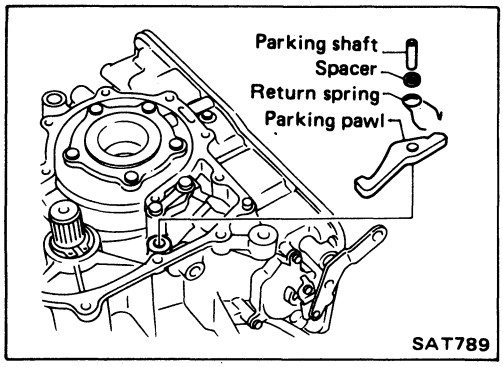

11. Remove parking pawl, return spring, parking shaft and spacer.

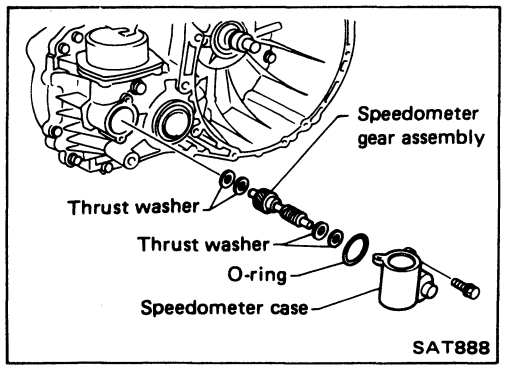

12. Remove speedometer and speedometer gear. (2WD model)

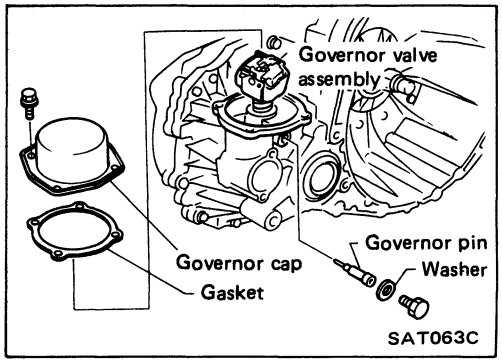

13. Remove governor cap and pin, then draw out governor valve assembly.

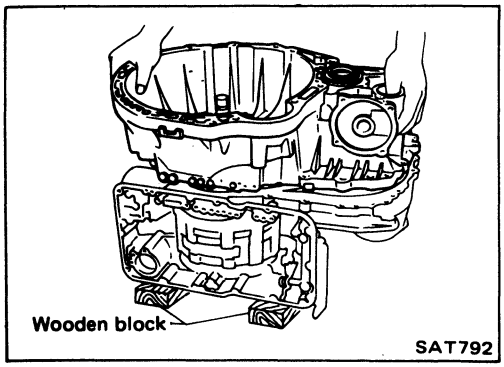

14. Put transaxle assembly on wooden block and remove converter housing.

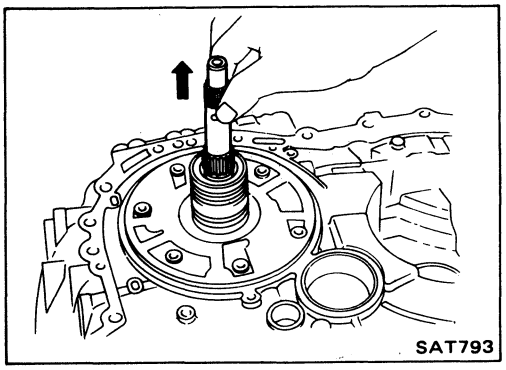

15. Remove final drive assembly and reduction pinion gear.
16. After removing O-ring from input shaft, extract input shaft from converter housing.

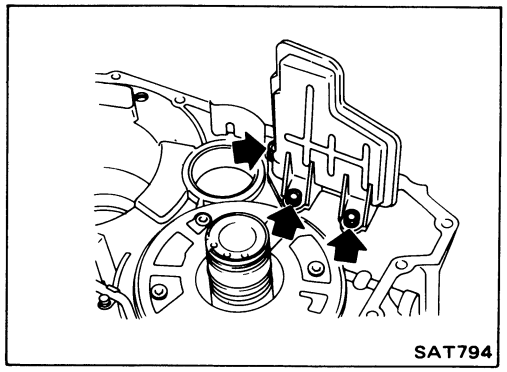

17. Remove oil strainer.

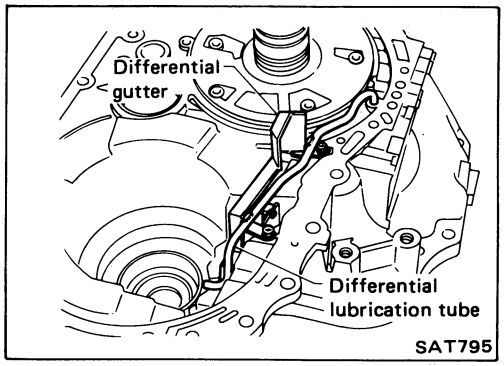

18. Remove differential lubrication tube and gutter. (Differential gutter is equipped on the 2WD model only.)

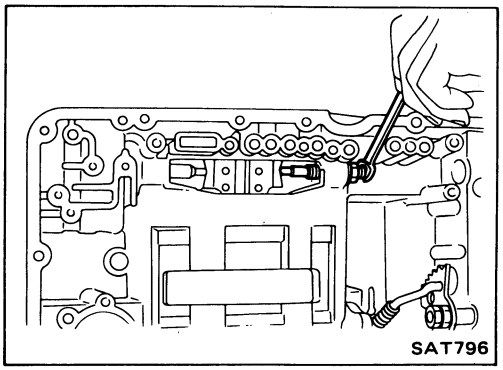

19. Loosen band brake stem lock nut, then back off piston stem.

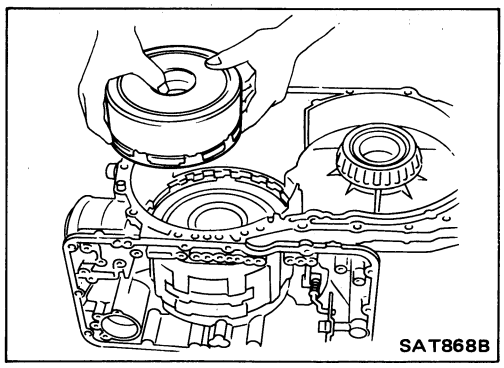

20. Remove brake band and hight clutch & reverse clutch pack.

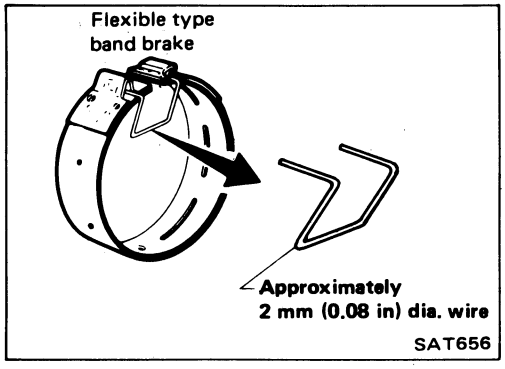

- **To prevent brake linings from cracking or peeling, do not stretch the flexible band unnecessarily. Before removing the brake band, always secure it with a clip as shown in the figure at left.**
  Leave the clip in position after removing the brake band.

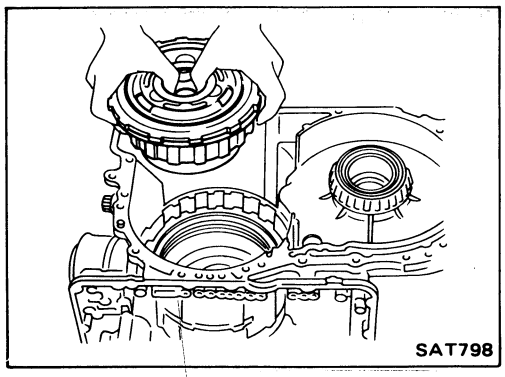

21. Remove one-way clutch, front carrier, rear carrier and low clutch as a set.

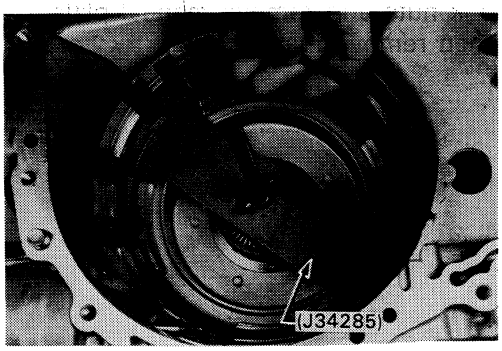

22. Remove low & reverse brake clutches, and detach low & reverse brake retainer snap ring pushing retainer.

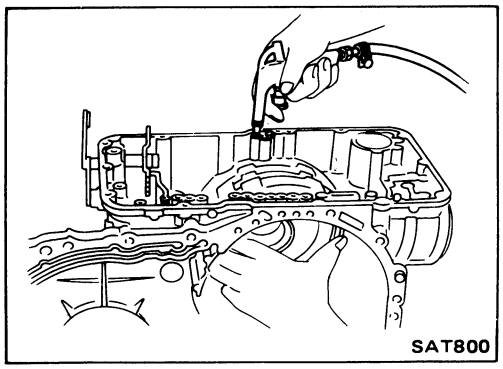

23. Remove low and reverse brake piston with compressed air.

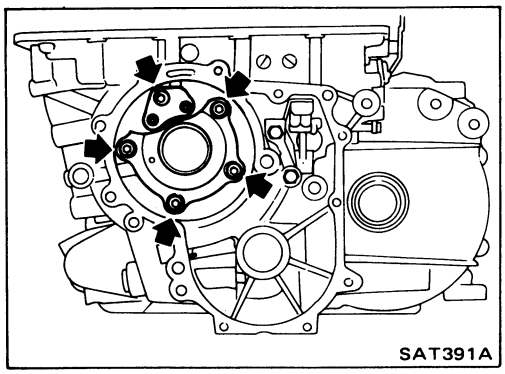

24. Remove bearing retainer assembly.

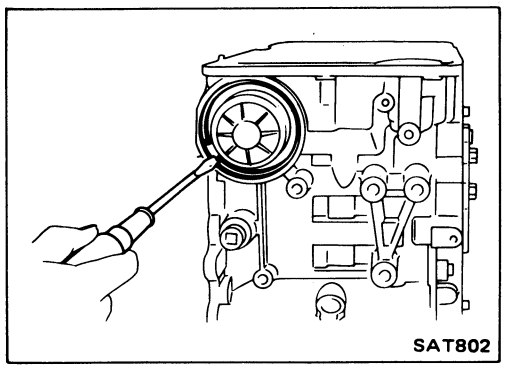

25. Remove band servo snap ring.

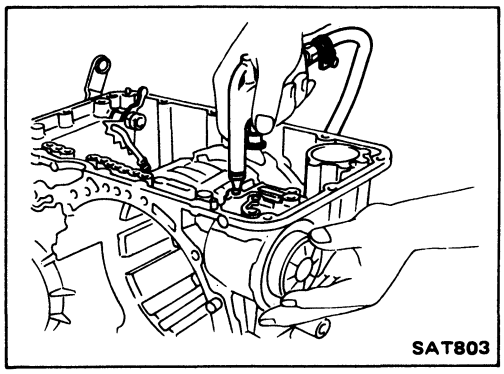

26. Remove band brake servo, retainer and return spring.

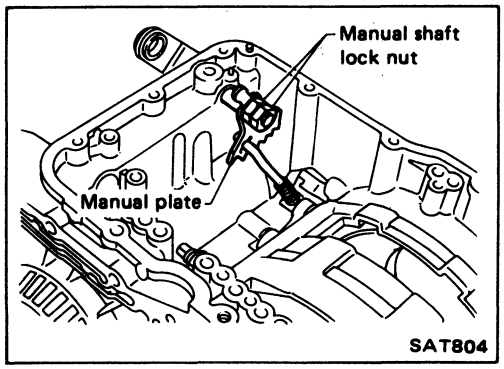

27. Loosen manual shaft lock nuts and remove manual plate.
28. Pull out retaining pin, then remove manual shaft.

NOTE

Oil Pump

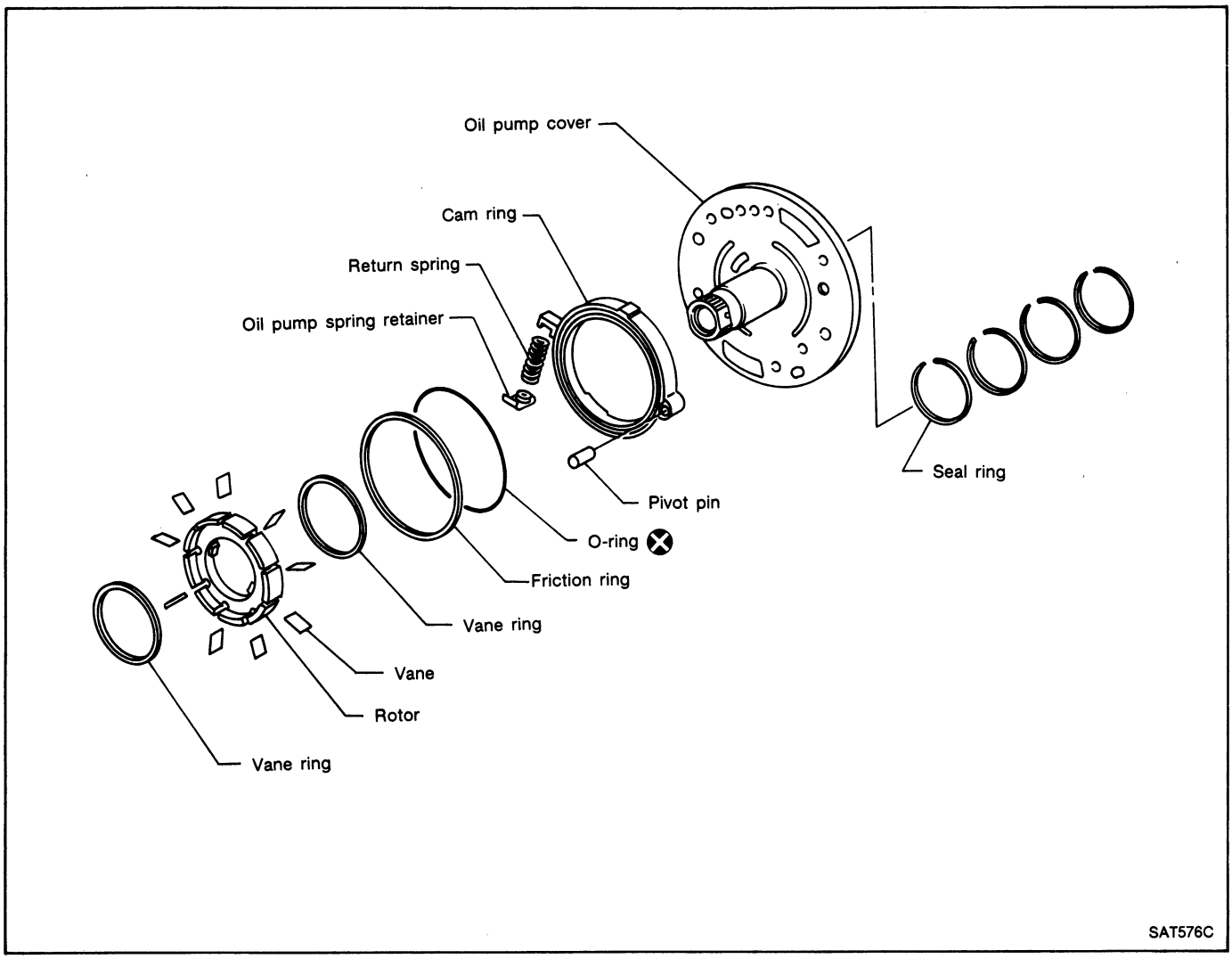

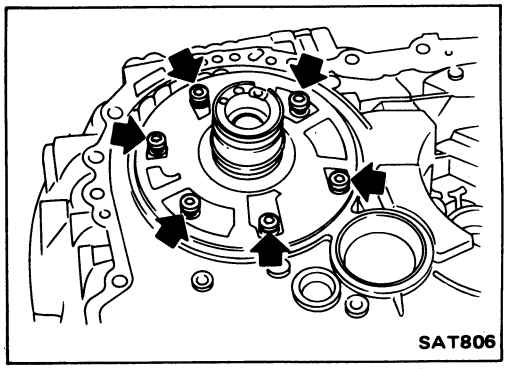

DISASSEMBLY

1. Remove oil pump cover.

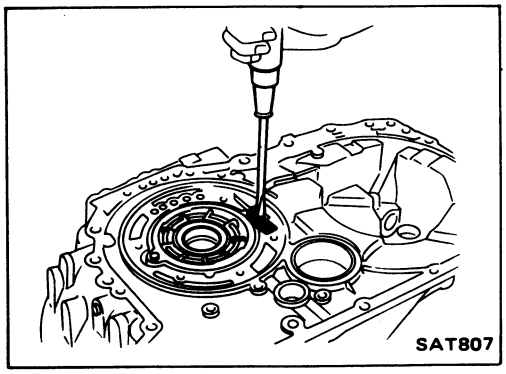

2. Remove return spring taking care not to damage converter housing.

Oil Pump (Cont'd)

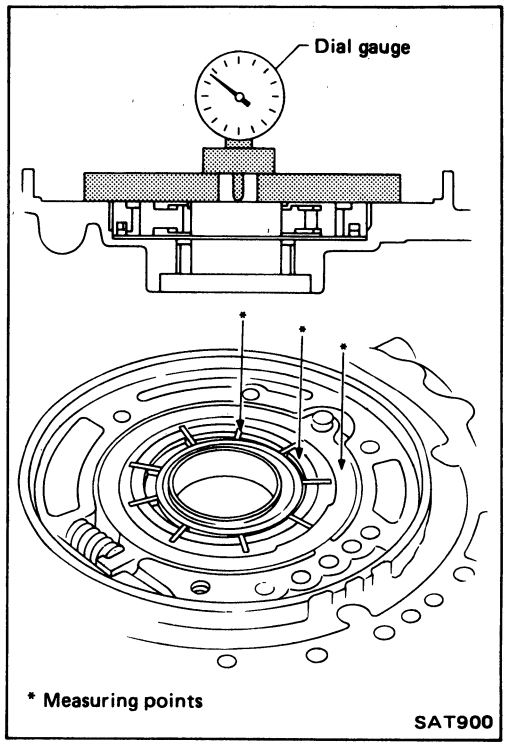

INSPECTION

1. Inspect oil pump cover, cam ring, rotor and vanes for damage and visible wear.
2. Measure clearance between clutch housing and cam ring, rotor and vanes in at least four places along their circumstances. The maximum measured value should be within the specified range.

- **Be sure to remove friction ring and vane ring when measuring clearance.**

  Standard clearance:
  0.010 - 0.024 mm (0.0004 - 0.0009 in)
  Wear limit:
  0.034 mm (0.0013 in)

  If the clearance is out of above specification, replace oil pump as an assembly.

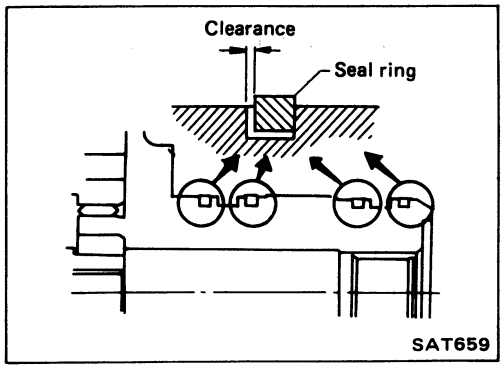

3. Measure clearance between seal ring and ring groove.

   Standard clearance:
   0.10 - 0.25 mm (0.0039 - 0.0098 in)
   Wear limit:
   0.25 mm (0.0098 in)

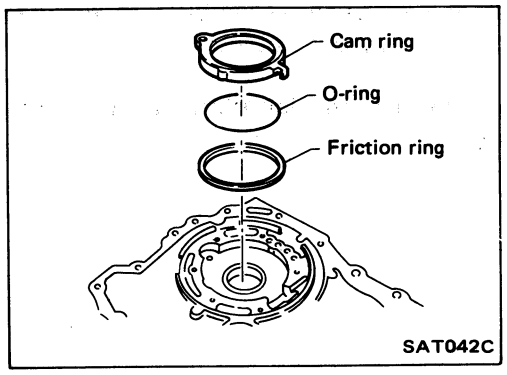

ASSEMBLY

1. Install cam ring, O-ring and friction ring.

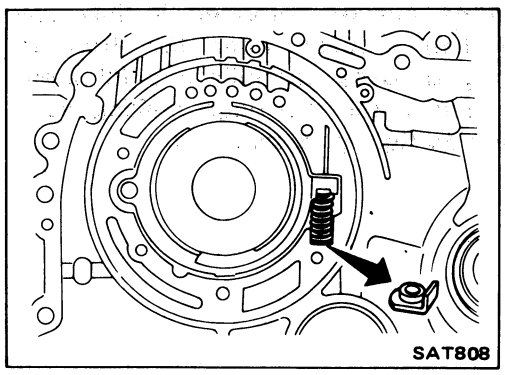

2. Install return spring and spring retainer.

Oil Pump (Cont'd)

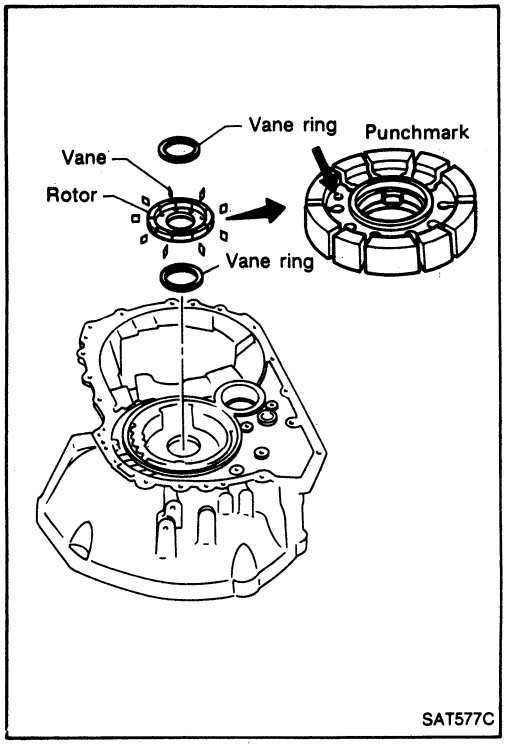

3. Assemble rotor, vanes, rotor support ring and vane rings. Pay attention to direction of rotor.

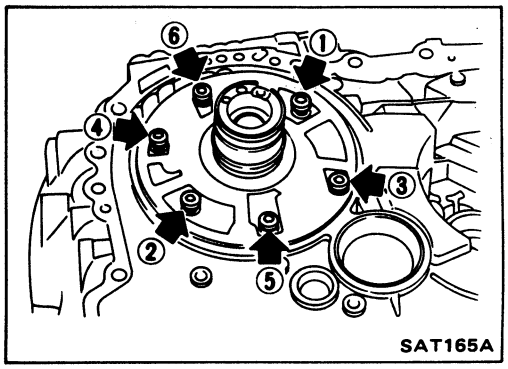

4. Install oil pump cover.
   Tighten down cover evenly in a criss-cross type pattern.

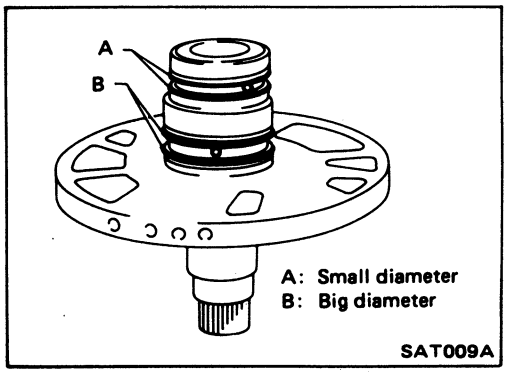

5. Rotate the pump when it has been assembled to ensure that all parts have been correctly assembled.
6. Install seal rings.

Refer to the figure at left for proper locations of the two different types of seal rings.

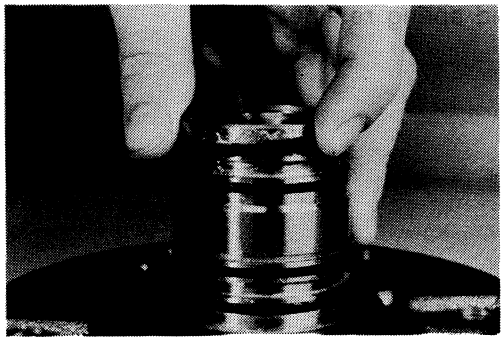

- **These seal rings can be cut or deformed if they are improperly seated in their grooves when the drum is installed. Clean the ring grooves carefully and fill them with petroleum jelly. Then install the rings making sure they fit into the grooves as tightly as possible.**

Control Cylinder

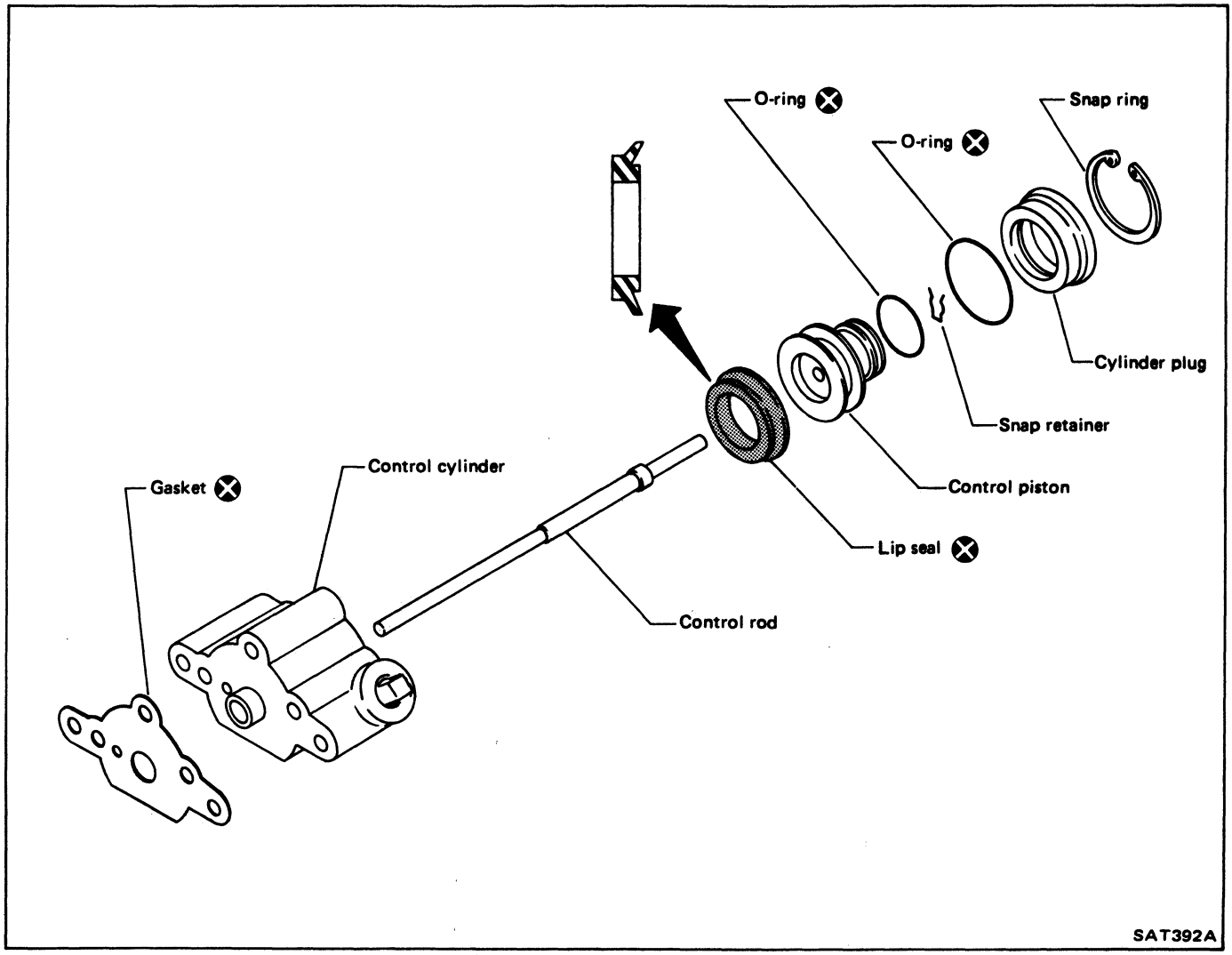

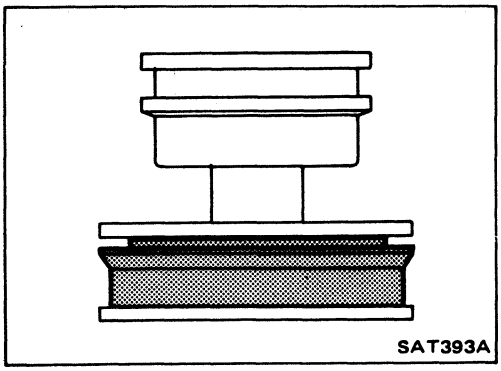

INSPECTION AND ASSEMBLY

- Inspect control cylinder body, control piston and cylinder plug for scratches or damage. Replace if necessary.
- **Pay attention to direction of lip seal.**

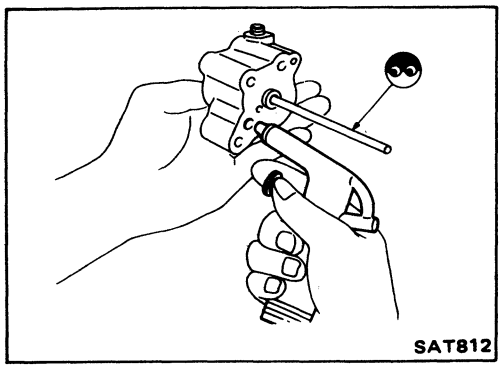

- After assembling, check the operation.

Control Valve Body

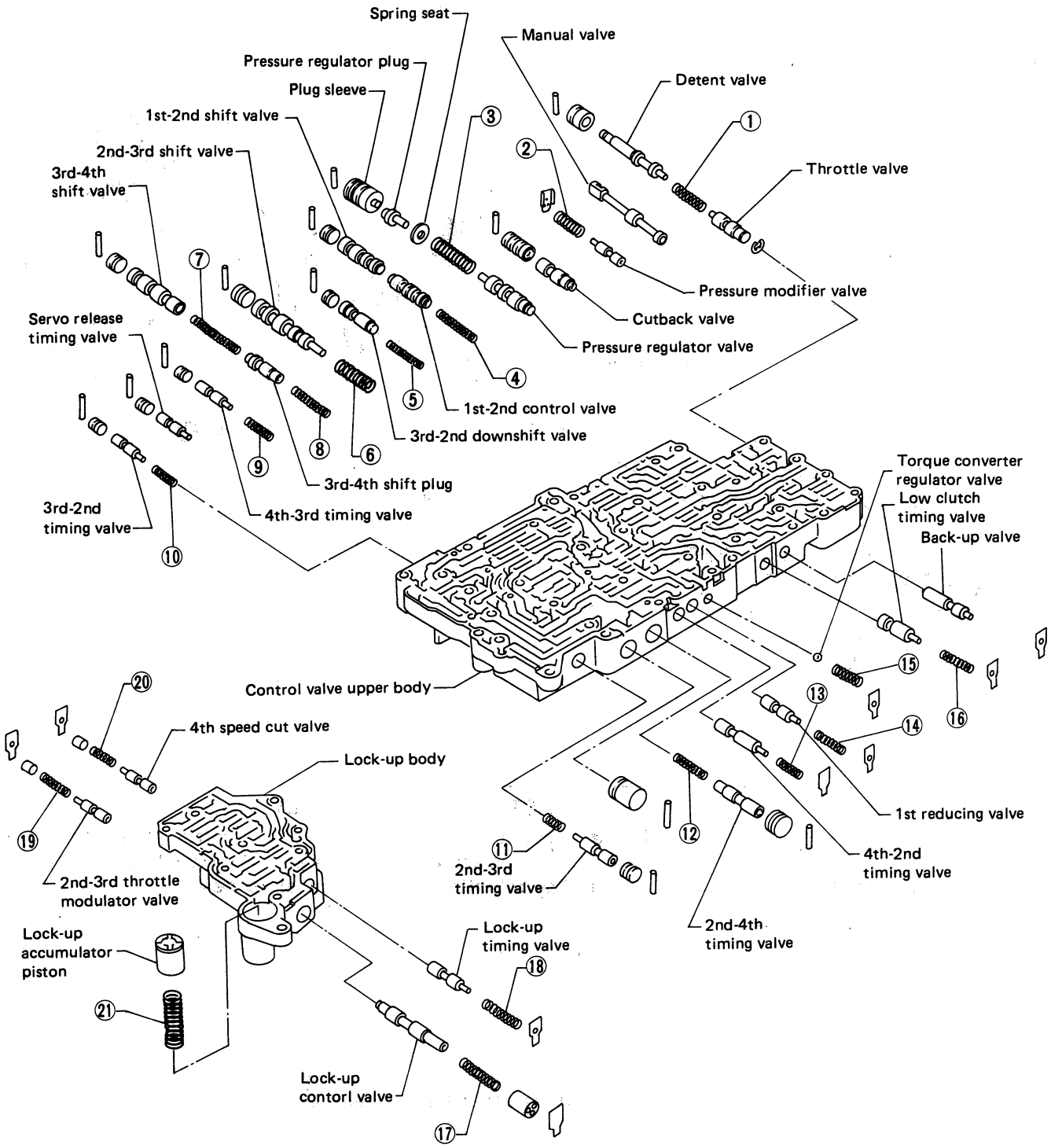

SAT210C

Control Valve Body (Cont'd)

Table of control valve springs

Valve spring	Free length mm (in)
① Throttle valve	34.25 (1.3484)
② Pressure modifier valve	25.5 (1.0039)
③ Pressure regulator valve	43.0 (1.693)
④ 1st-2nd shift valve	48.0 (1.890)
⑤ 3rd-2nd downshift valve	42.0 (1.654)
⑥ 2nd-3rd shift valve	40.9 (1.610)
⑦ 3rd-4th shift valve	60.5 (2.382)
⑧ 3rd-4th shift plug	44.5 (1.752)
⑨ 4th-3rd timing valve	29.7 (1.169)
⑩ 3rd-2nd timing valve	21.4 (0.843)
⑪ 2nd-3rd timing valve	29.7 (1.169)
⑫ 2nd-4th timing valve	34.2 (1.346)
⑬ 4th-2nd timing valve	20.6 (0.811)
⑭ 1st reducing valve	28.1 (1.106)
⑮ Torque converter regulator valve	27.0 (1.063)
⑯ Low clutch timing valve	29.7 (1.169)
⑰ Lock-up control valve	36.0 (1.417)
⑱ Lock-up timing valve	29.7 (1.169)
⑲ 2nd-3rd throttle modulator valve	32.8 (1.291)
⑳ 4th speed cut valve	22.6 (0.890)
㉑ Lock-up accumulator	41.8 (1.646)

Control Valve Body (Cont'd)

DISASSEMBLY

1. Set control valve assembly upside down. Remove lock-up body, then control valve lower body.
- During valve body separation, do not lose the steel balls on valve body.

Number of steel balls:

Upper body	12
Lower body	1

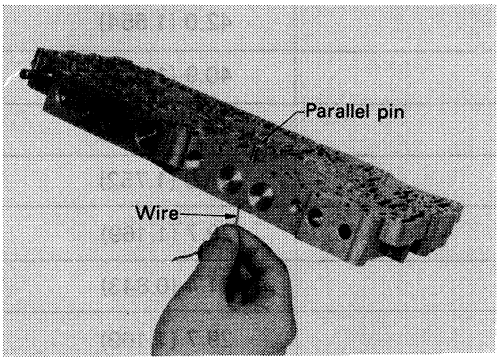

2. To remove parallel pin, push it out with a thin wire.

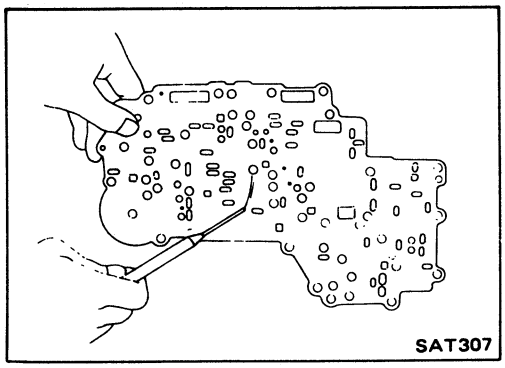

INSPECTION

- Check valves for burning. Replace if necessary.
- Check separator plate for scratches or damage. Replace if necessary. Scratches or score marks can cause oil to by-pass correct oil passages and result in system malfunction.
- Check oil passages in upper and lower valve bodies for varnish deposits, scratches or other damage that would impair valve movement. Check threaded holes and related bolts and screws for stripped threads; replace as needed.
- Check valve springs for damage. Measure their free length. If the free length is out of specification, replace valve springs.

Control Valve Body (Cont'd)

ASSEMBLY

1. Reinstall steel balls in valve body.

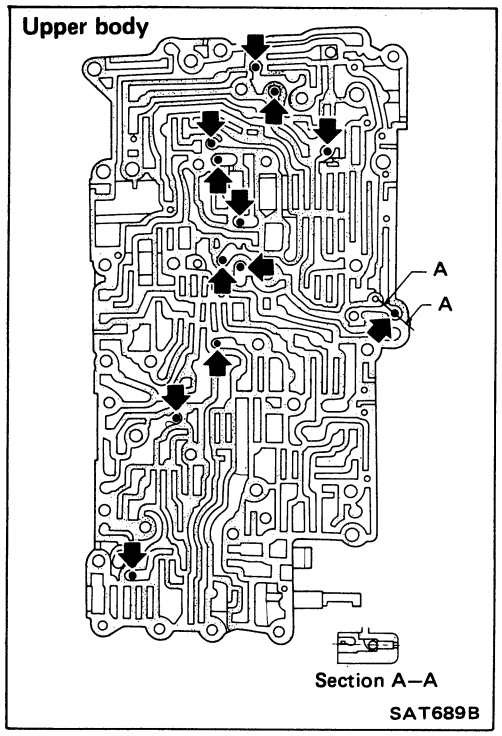

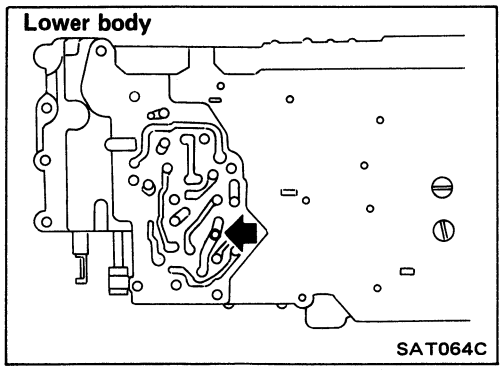

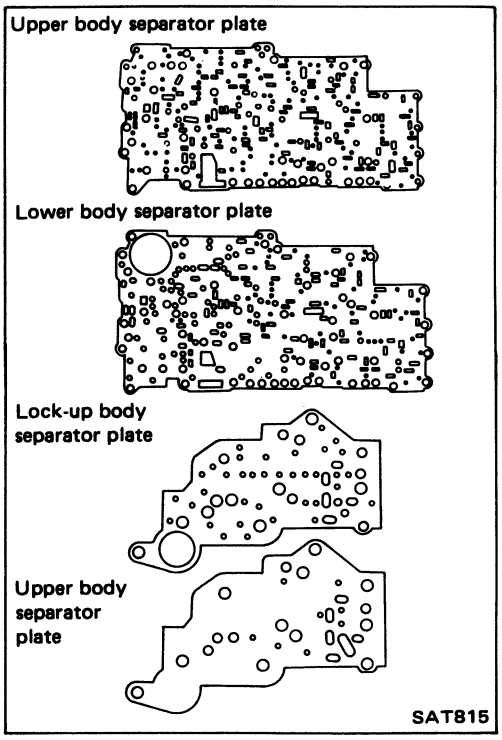

2. Assemble separator plate and lower valve body on upper valve body and lock-up body.

- **Dip gasket in A.T.F. before installation.**
- **Pay attention to the position of gaskets.**

Control Valve Body (Cont'd)

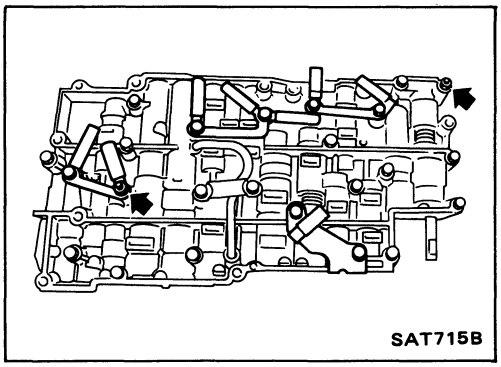

- **Use two reamer bolts as a guide while assembling upper and lower bodies.**
- **Pay attention to the position of harness clamps when installing control valve bolts.**

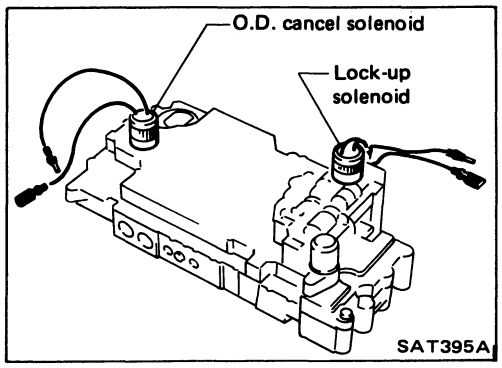

3. Install lock-up solenoid and O.D. cancel solenoid.

High Clutch

For the number of clutch sheets (drive plate and driven plate), refer to the below cross-section.

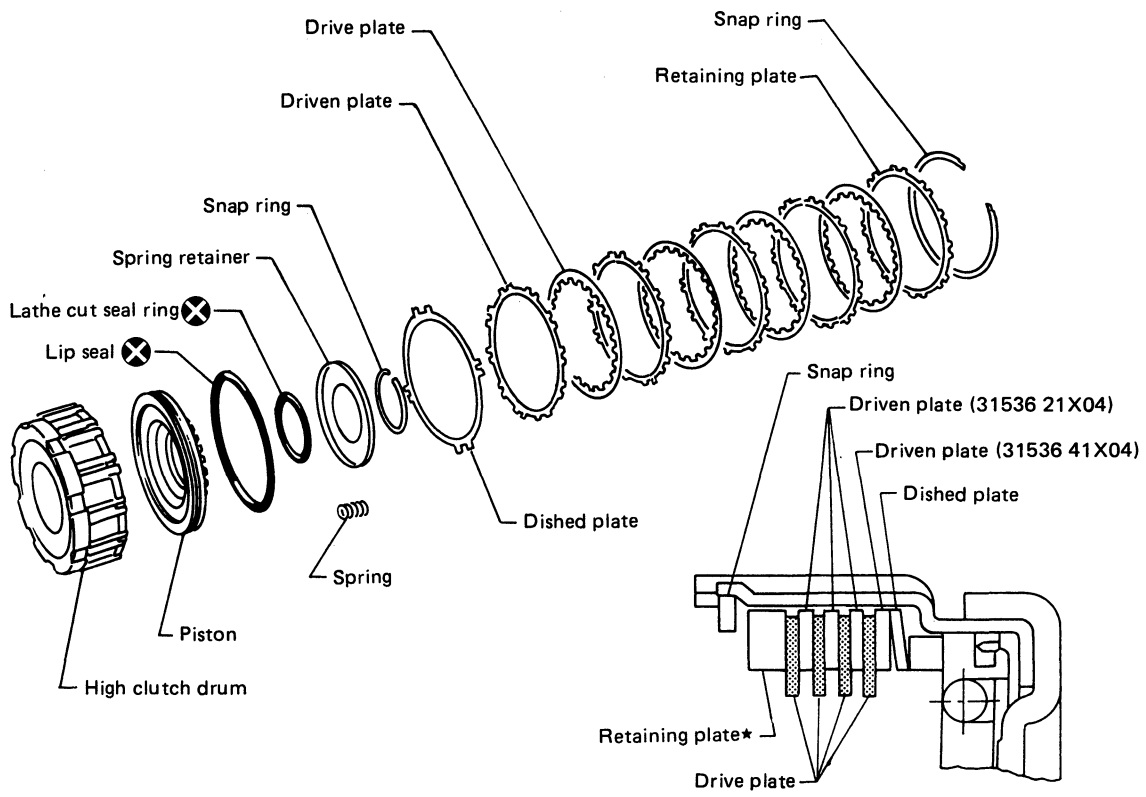

★: Select with proper thickness.

SAT211C

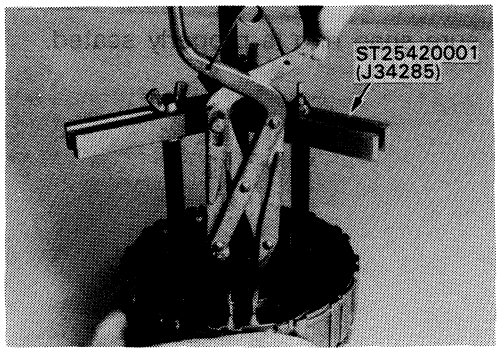

DISASSEMBLY

- Compress clutch springs and remove snap ring from spring retainer.

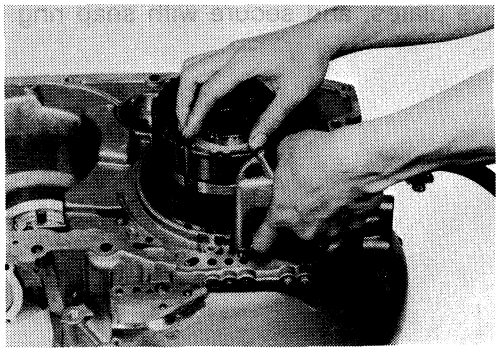

- Place clutch drum onto oil pump, and withdraw clutch piston with compressed air.

High Clutch (Cont'd)

INSPECTION AND ASSEMBLY

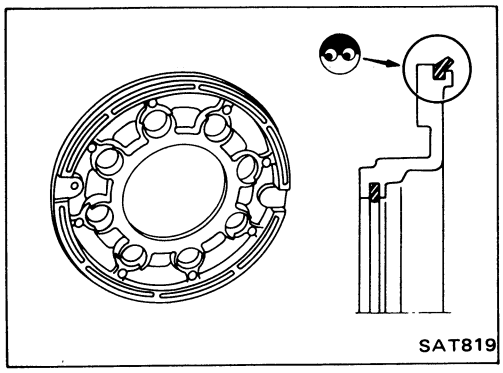

1. Check clutch drive plate facing for wear or damage.
   Standard drive plate thickness:
   1.6 mm (0.063 in)
2. Check for wear on snap ring, weak or broken coil springs, and warped spring retainer.
3. Lubricate clutch drum bushing, and install inner seal and piston seal as illustrated. Be careful not to stretch seals during installation.

- Never assemble clutch dry; always lubricate its components thoroughly.
- Always install piston seal in direction shown in figure at left.

4. Assemble piston, being careful not to allow seal to kink or become damaged during installation.

Use Tool, which does not damage lip seal, to make sure the lip seal goes into place.

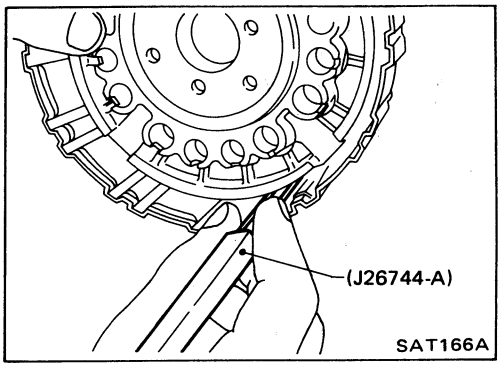

- After installing piston, turn piston by hand to ensure that there is no binding.

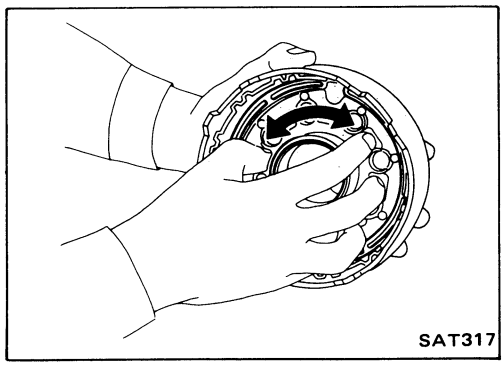

5. Install clutch springs.
6. Reinstall snap ring. Be sure snap ring is properly seated.

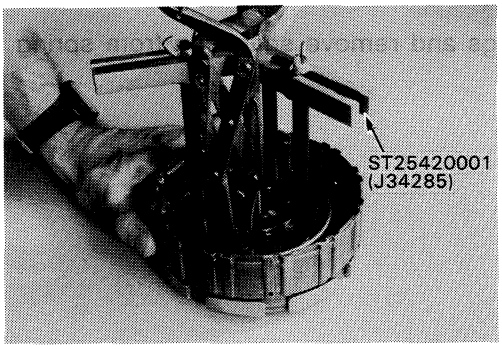

7. Install driven plates, drive plates, and secure with snap ring.

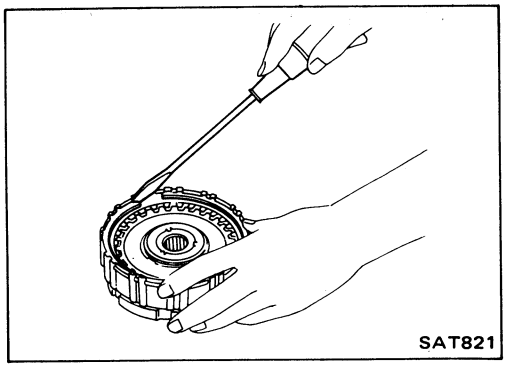

High Clutch (Cont'd)

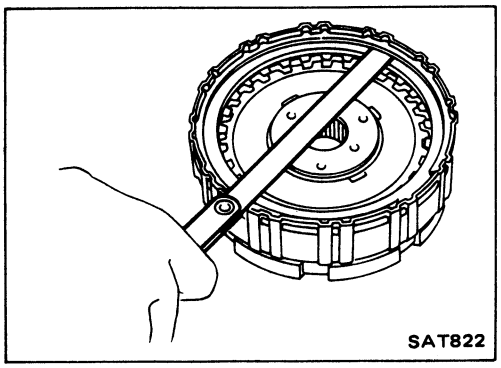

8. Measure clearance between retaining plate and snap ring. Always measure the existing minimum clearance, since snap ring is a wave type.

   Specified clearance:

   Standard

   1.4 - 1.8 mm (0.055 - 0.071 in)

   Allowable limit

   2.6 mm (0.102 in)

   Available retaining plates: Refer to S.D.S.

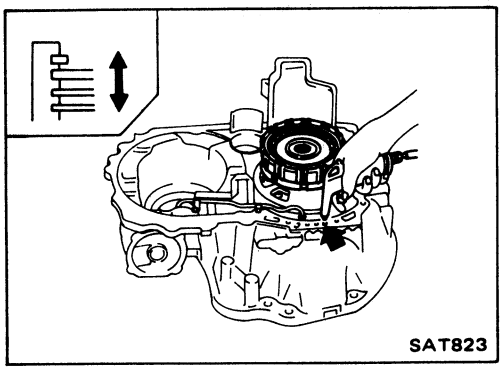

9. Check high clutch operation using compressed air.

Low Clutch

For the number of clutch sheets (drive plate and driven plate), refer to the below cross-section.

Low clutch hub
Piston
Lathe cut seal ring
Spring retainer
Snap ring
Spring
Lip seal
Driven plate
Drive plate
Driven plate
Dished plate
Retaining plate
Snap ring
Drive plate
Dished plate
Retaining plate★
Snap ring

★: Select with proper thickness.

SAT212C

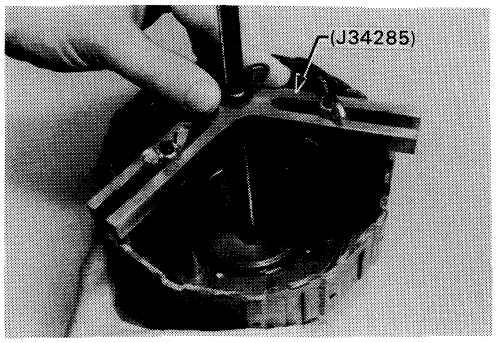

- Use Tool to remove the clutch spring snap ring.

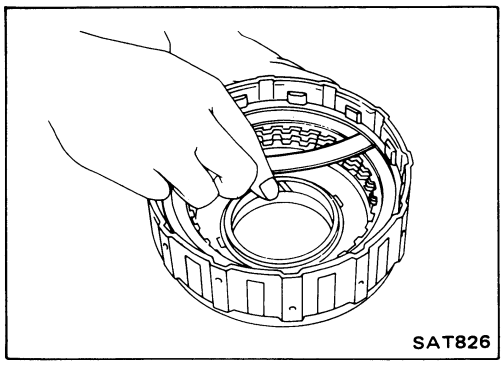

- Service procedures for low clutch are essentially the same as those for high clutch, with the following exception:
  Specified clearance between retaining plate and snap ring:
  Standard
  0.5 - 0.8 mm (0.020 - 0.031 in)
  Allowable limit
  1.8 mm (0.071 in)
  Available retaining plates: Refer to S.D.S.

Low Clutch (Cont'd)

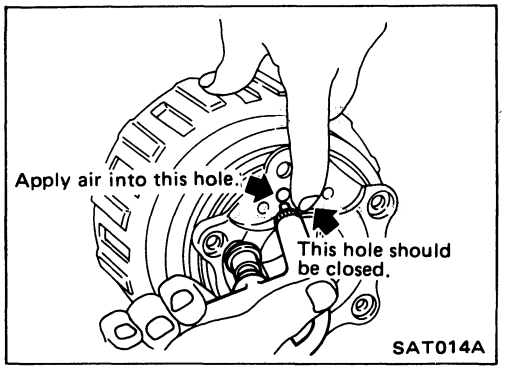

- After assembly, check the operation of clutch.

Reverse Clutch

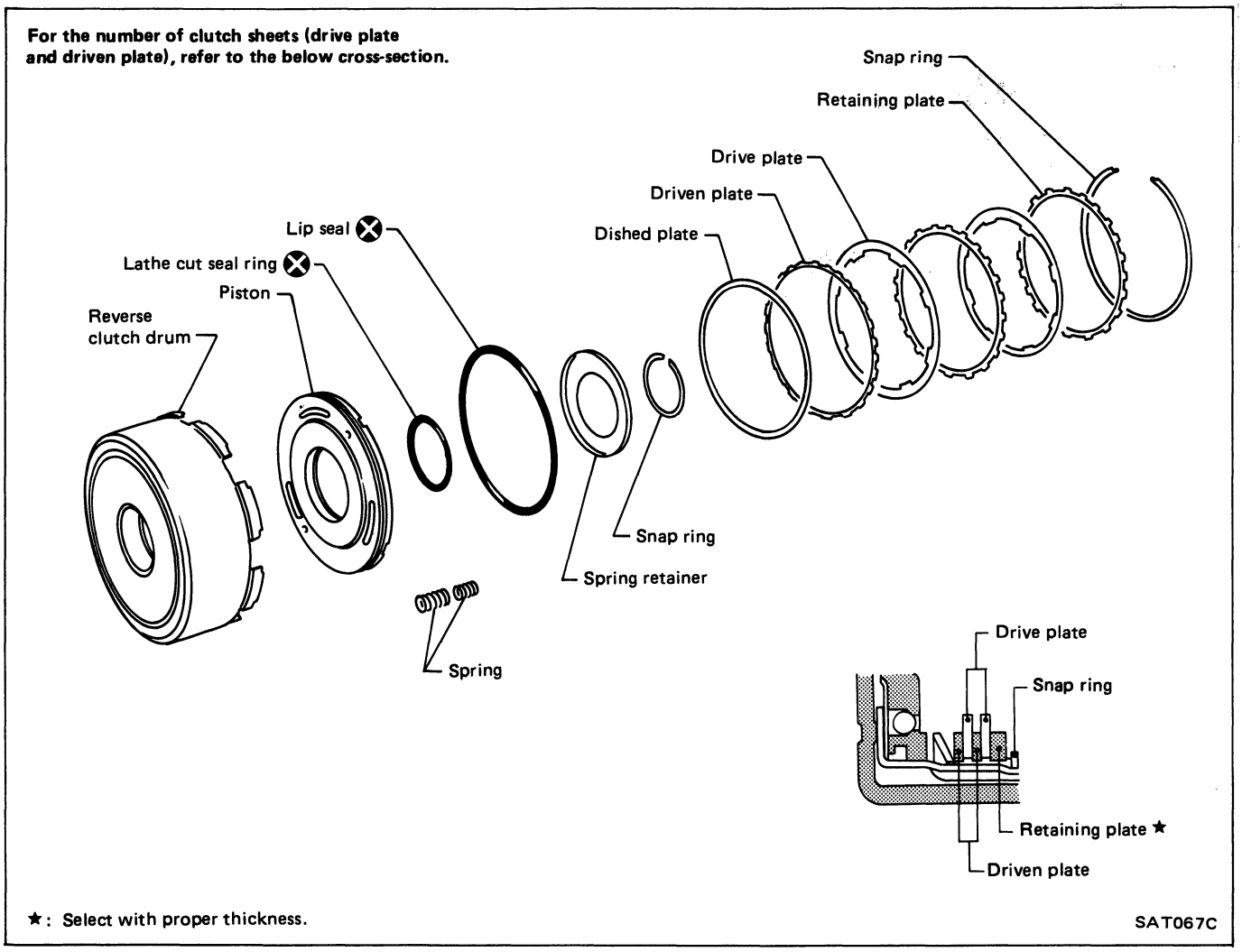

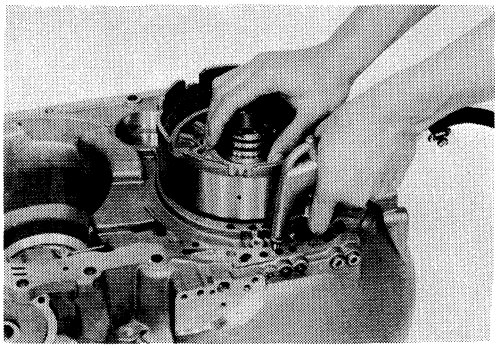

Service procedures for reverse clutch are essentially the same as those for high clutch, with the following exception:

- Remove reverse clutch piston.

Reverse Clutch (Cont'd)

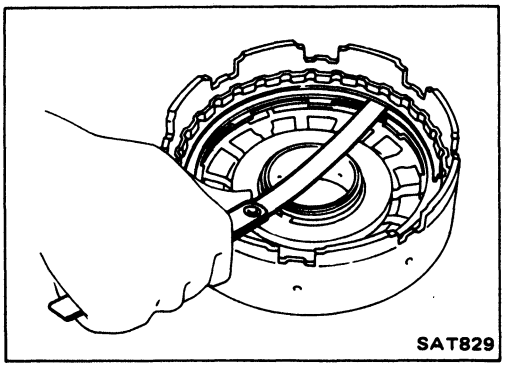

Specified clearance between retaining plate and snap ring:

Standard

0.5 - 0.8 mm (0.020 - 0.031 in)

Allowable limit

1.2 mm (0.047 in)

Available retaining plates: Refer to S.D.S.

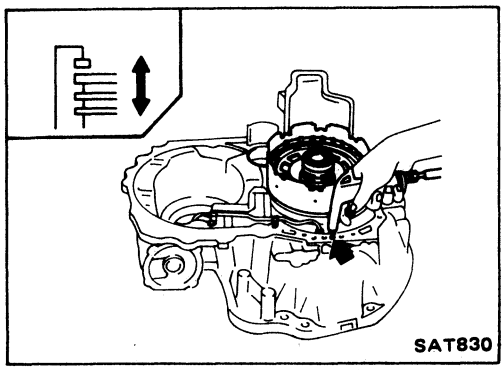

- After assembly, check the operation of clutch.

Low & Reverse Brake

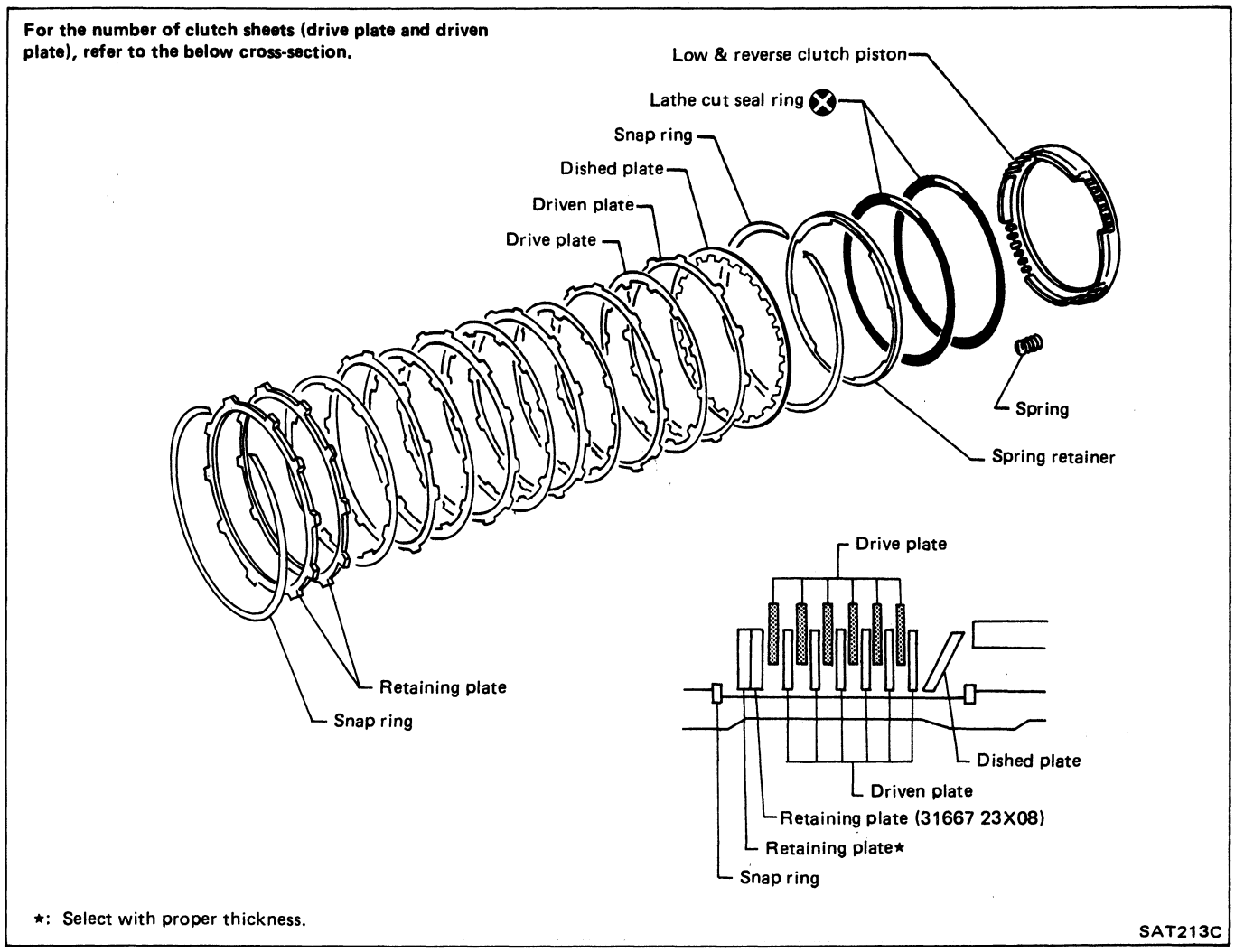

INSPECTION

- Examine low and reverse brake for damaged clutch drive plate facing and worn snap ring.
- Check drive plate facing for wear or damage; if necessary, replace.

Specified clearance between retaining plate and snap ring:

Standard

1.2 - 1.6 mm (0.047 - 0.063 in)

Allowable limit

3.8 mm (0.150 in)

Available retaining plates: Refer to S.D.S.

Brake Band and Band Servo

Snap ring
Return spring
Seal ring ⊗
Accumulator spring retainer
3.8 - 5.1 N·m
(0.39 - 0.52 kg-m, 2.8 - 3.8 ft-lb)
Servo retainer
Seal ring ⊗
Accumulator piston
Servo piston assembly
Seal ring ⊗
Servo cushion spring
Servo piston retainer
Seal ring ⊗

SAT069C

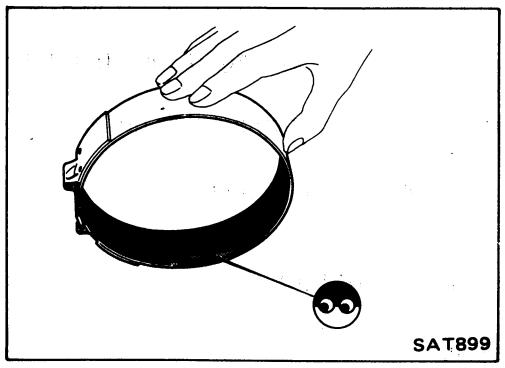

SAT899

INSPECTION

- Inspect band friction material for wear. If cracked, chipped or burnt spots are apparent, replace the band.
- Check band servo components for wear and scoring.

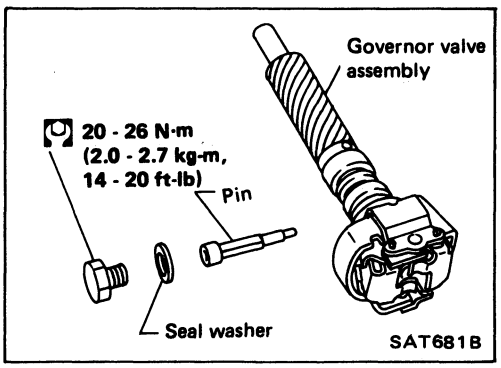

Governor

- **Replace the assemly if damaged because it cannot be disassembled and assembled.**

CONSTRUCTION

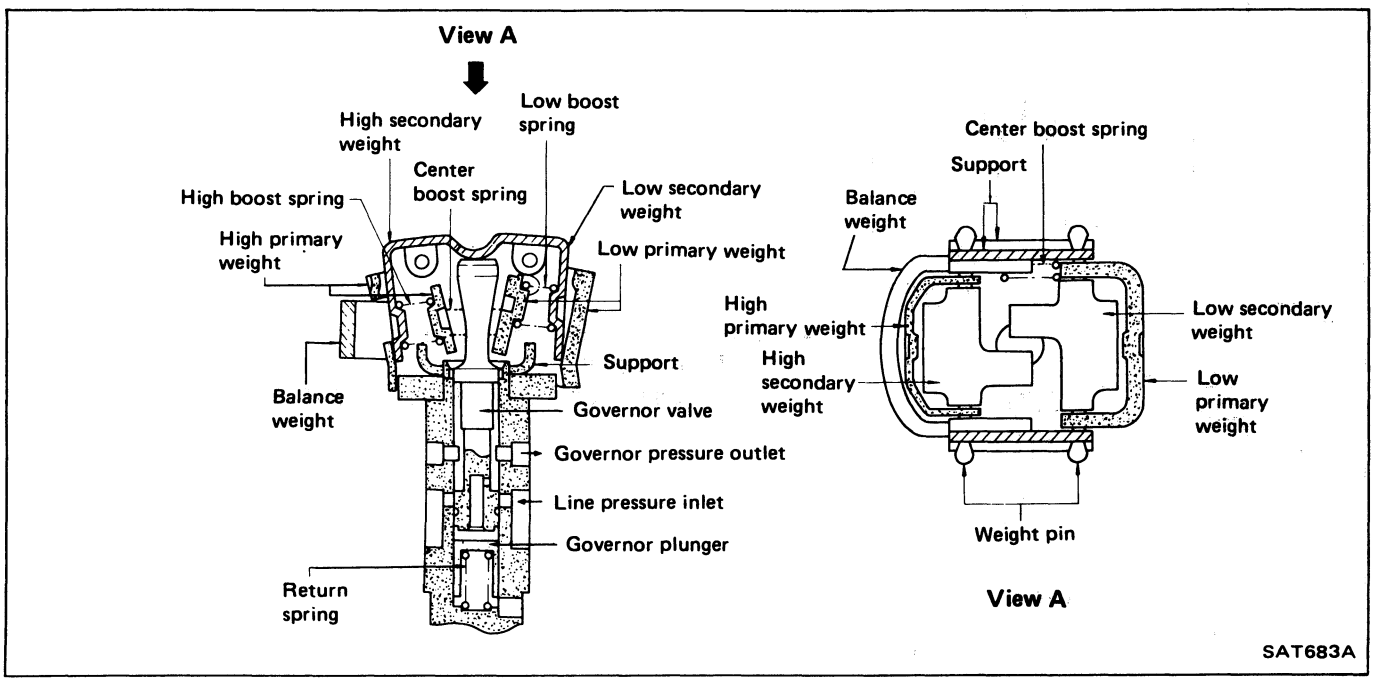

- The governor plunger and the valve are moved upward by the return spring force and the line pressure circuit is shut by the governor valve when driving at low speed.
- There are two secondary weights, that is a low secondary weight and a high secondary weight, on the top of the assembly and they contact the upper end of the governor valve.
- Both secondary weights have primary weights.
- The weights are as follows:
  Low secondary weight ≒ High secondary wight < High primary weight < Low primary weight
- Each secondary weight is pushed downward by centrifugal force when driving at a rather high speed, and governor pressure exsists.

Governor (Cont'd)

INSPECTION

- Make sure that the governor valve moves smoothly when pushing it with your finger.
- Check to see that all springs sit on their original positions.

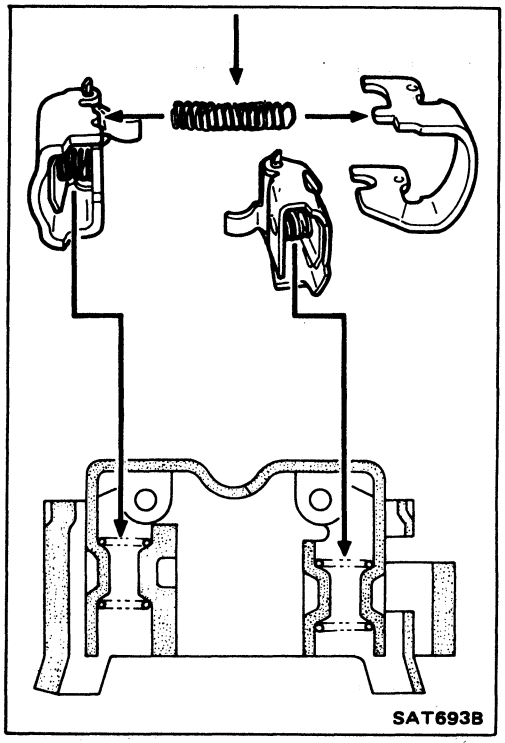

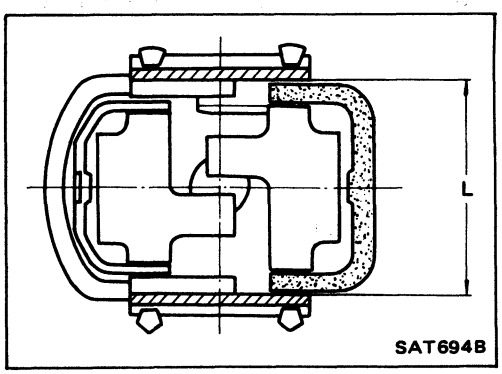

- Check to see that distance "L" is within the specifications.
  Distance "L":
  34.0 - 34.4 mm (1.339 - 1.354 in)

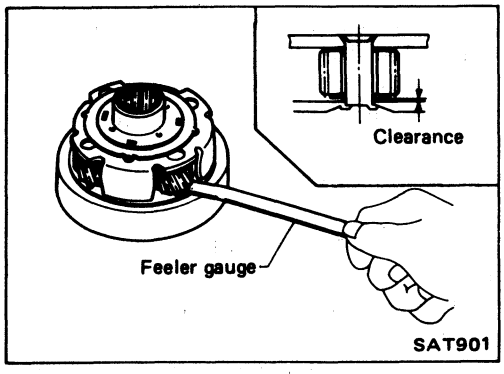

Planetary Carrier

INSPECTION

- Check clearance between pinion washer and planetary carrier with a feeler gauge.
  Standard clearance:
  Front carrier
  0.15 - 0.70 mm (0.0059 - 0.0276 in)
  Rear carrier
  0.20 - 0.70 mm (0.0079 - 0.0276 in)
  Replace if the clearance exceeds 0.80 mm (0.0315 in).
- Check planetary gear sets and bearings for damaged or worn gears.

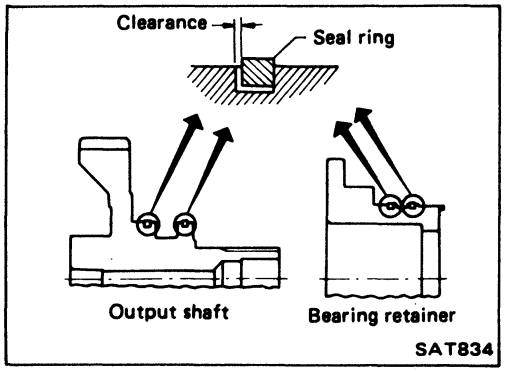

Bearing Retainer and Output Shaft

INSPECTION

Measure clearance between seal ring and ring groove.

Standard clearance:
0.10 - 0.25 mm (0.0039 - 0.0098 in)
Wear limit:
0.25 mm (0.0098 in)

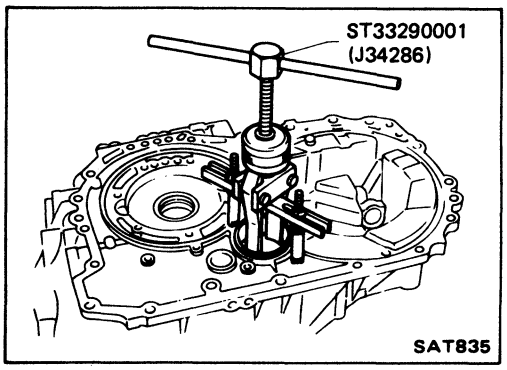

Converter Housing and Transmission Case

BEARING OUTER RACE

- Reduction pinion gear front bearing outer race.

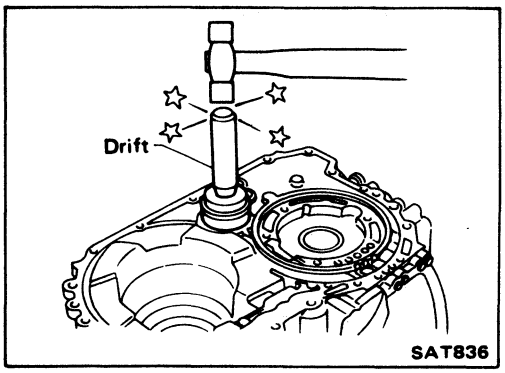

- Differential side bearing outer race

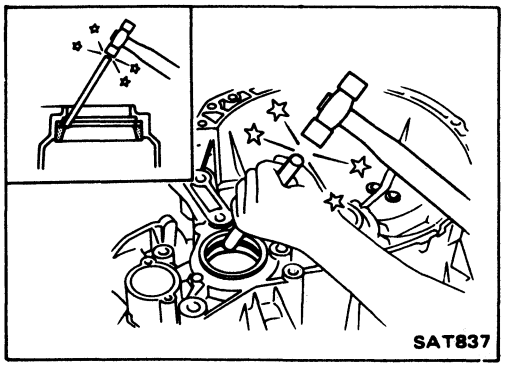

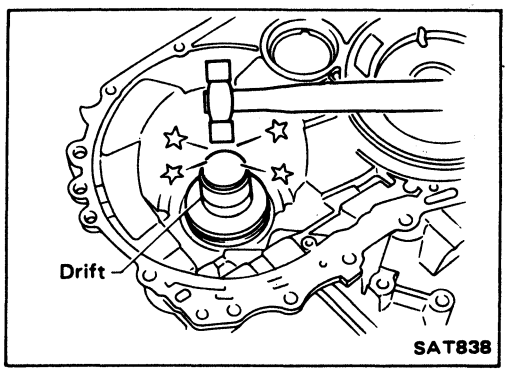

Converter Housing and Transmission Case (Cont'd)

OIL SEAL

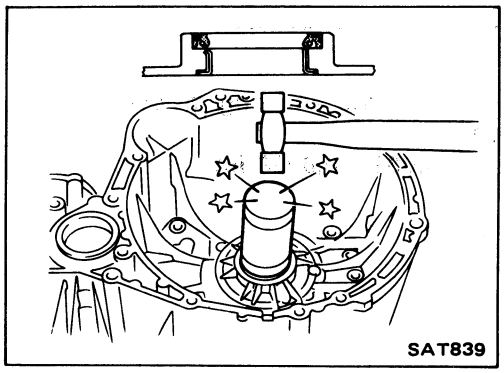

- Torque converter oil seal

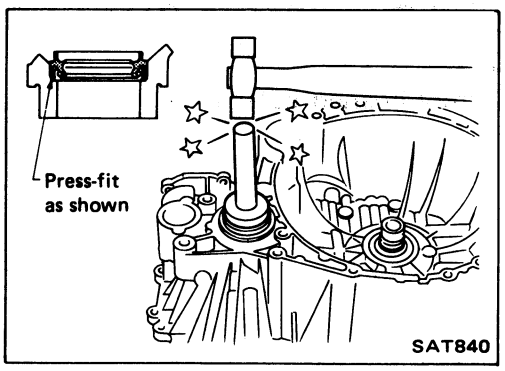

- Differential side oil seal

Final Drive (Front differential) — 2WD

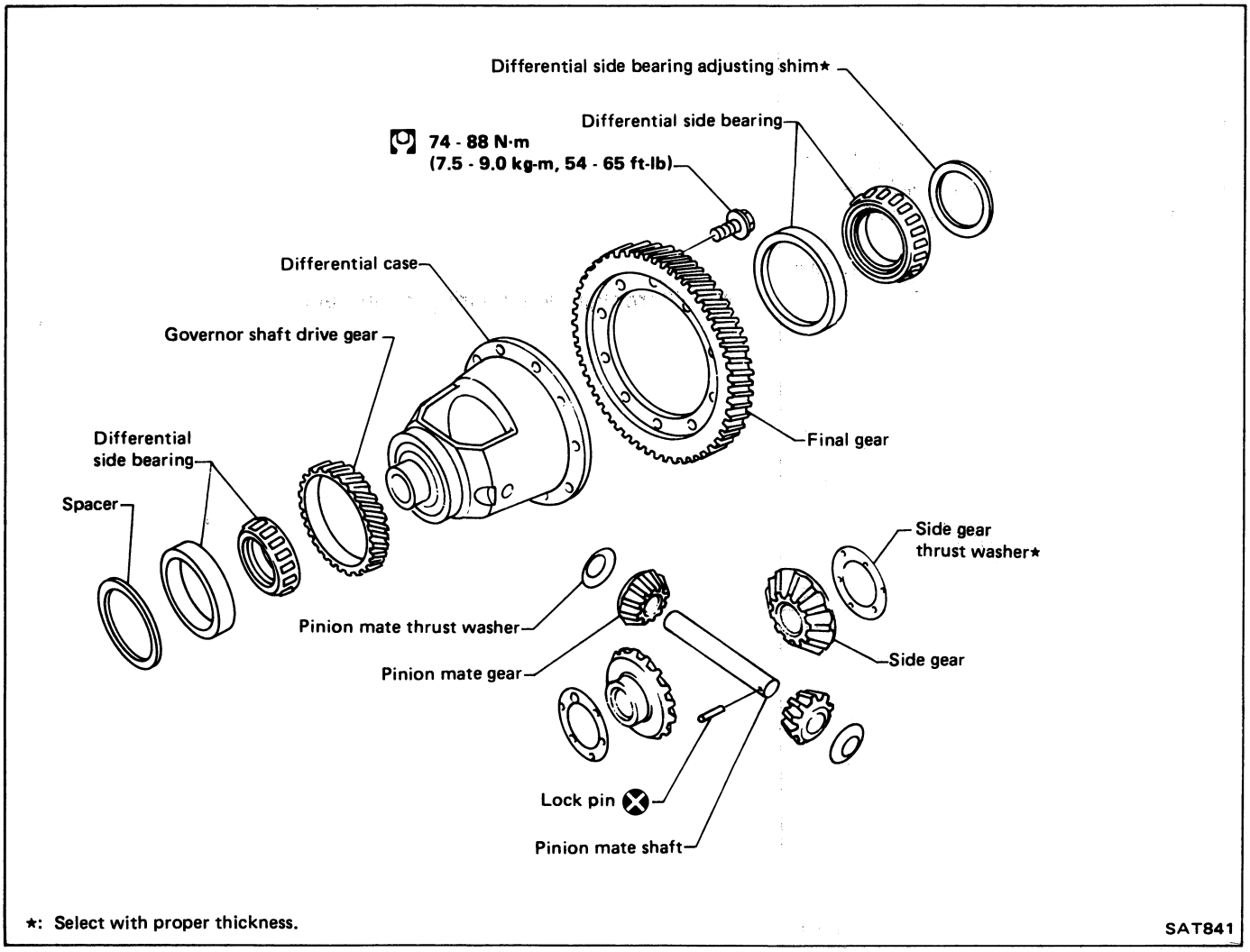

Final Drive (Front differential) — 2WD (Cont'd)

DISASSEMBLY

1. Remove final gear.

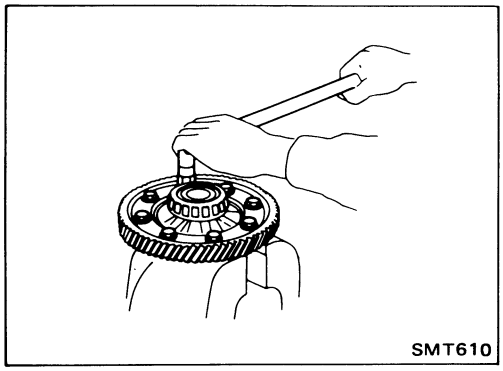
SMT610

2. Drive out pinion mate shaft lock pin and draw out pinion mate shaft.

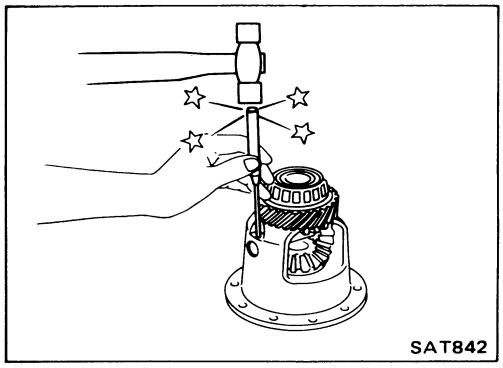
SAT842

3. Remove governor shaft drive gear.

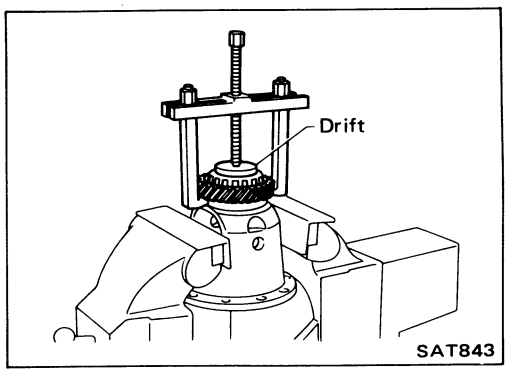

SAT843

4. Drive out differential side bearing outer race and inner cone.

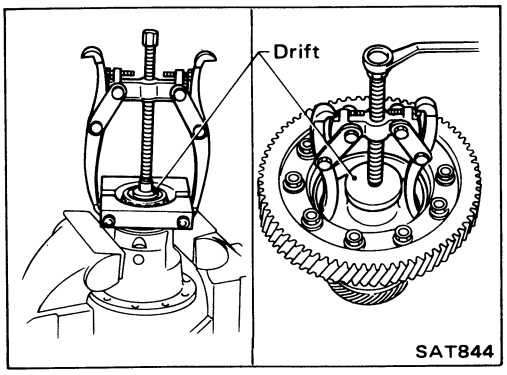

SAT844

INSPECTION

1. Check mating surface of differential case, side gears and pinion mate gears. Replace as required.

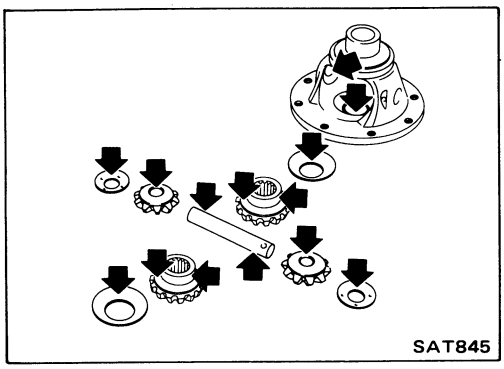
SAT845

Final Drive (Front differential) — 2WD (Cont'd)

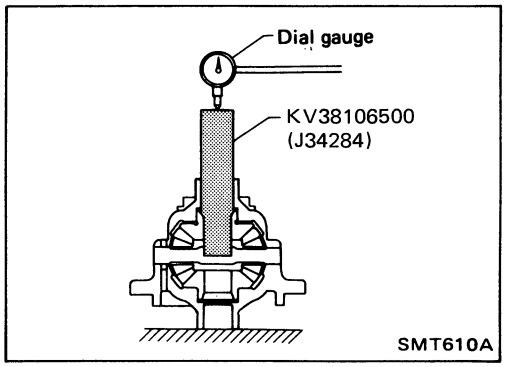

2. Check clearance between side gear and differential case with washer following the procedure below.

a Set Tool and dial gauge on side gear.

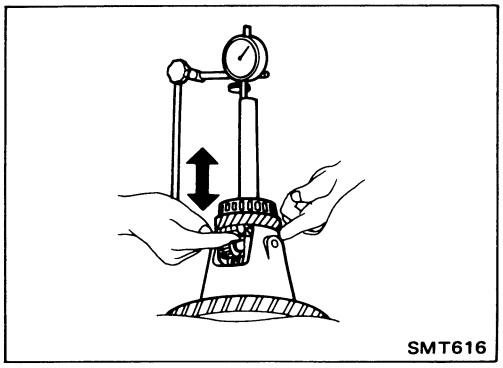

b. Move side gear up and down to measure dial gauge deflection. Always measure gauge deflection on both side gears.

Clearance between side gear and differential case with washer:
0.1 - 0.2 mm (0.004 - 0.008 in)

c. If clearance exceeds the specified value, check for wear and replace necessary parts.

3. Check tapered roller bearings for wear, scratches, pitching or flaking.

ASSEMBLY

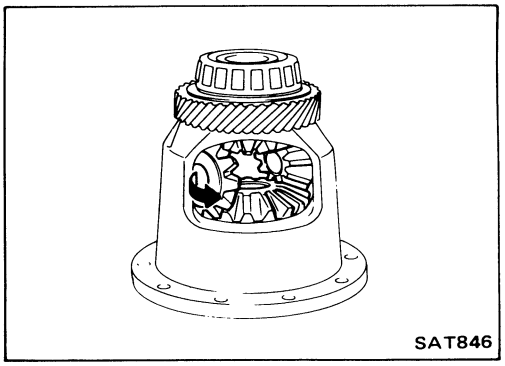

1. Install the side gear and thrust washer in the differential case.
2. Install the pinion mate gear and thrust washer in the differential case while rotating them.

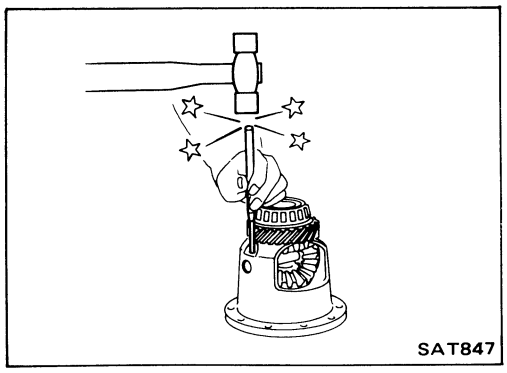

3. Insert pinion mate shaft.

When inserting, be careful not to damage pinion mate washers.

4. Measure clearance between side gear and pinion mate gear, referring to "Inspection". If necessary, adjust.

Side gear to pinion mate clearance:
0.1 - 0.2 mm (0.004 - 0.008 in)
Side gear thrust washer:
Refer to S.D.S.

5. Install pinion mate shaft lock pin using a punch.

Make sure that lock pin is flush with case.

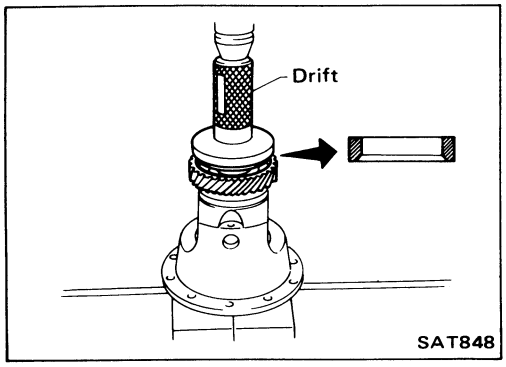

6. Install governor shaft drive gear.

Final Drive (Front differential) — 2WD (Cont'd)

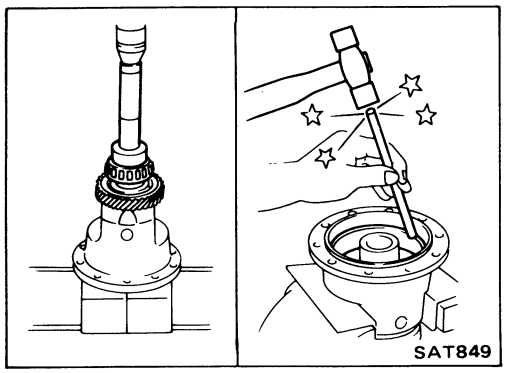

7. Press on differential side bearing inner cone and outer race.
8. Install final gear.

Final Drive (Center differential) — 4WD

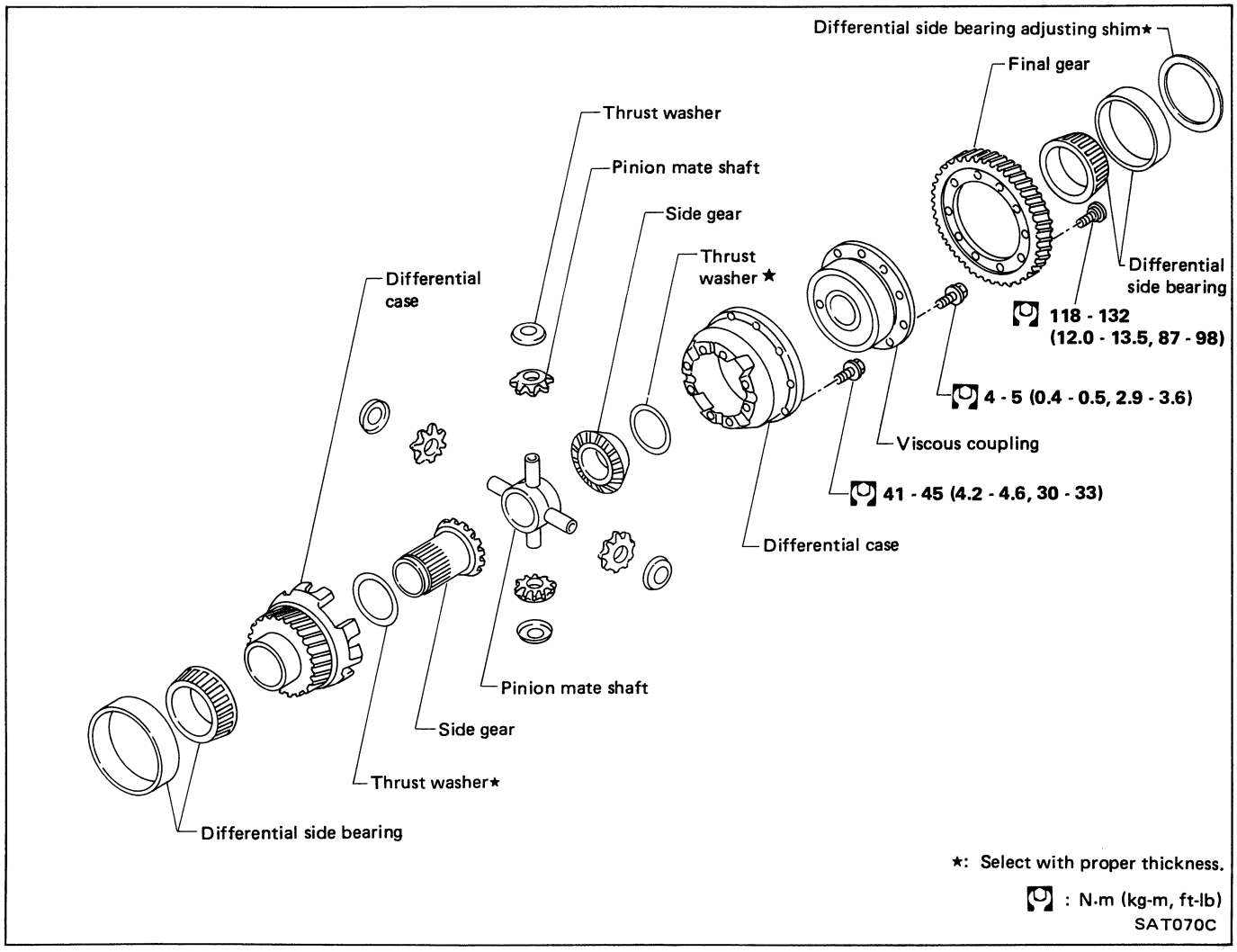

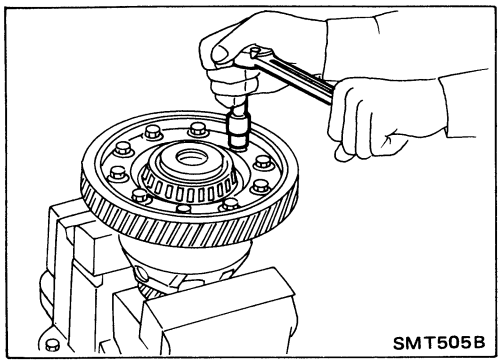

DISASSEMBLY

1. Remove final gear.

Final Drive (Center differential) — 4WD (Cont'd)

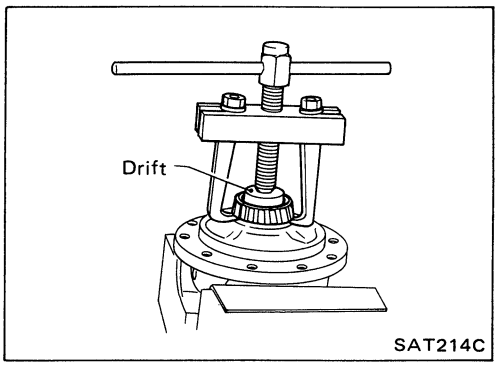

2. Press out differential side bearing.

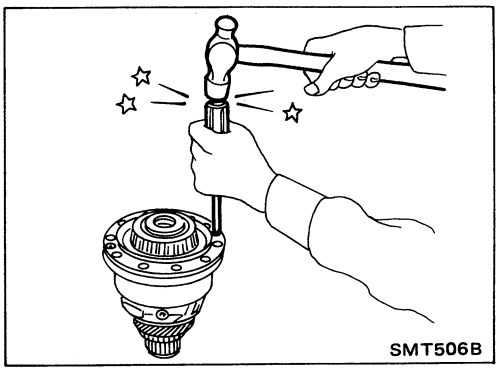

3. Remove viscous coupling.

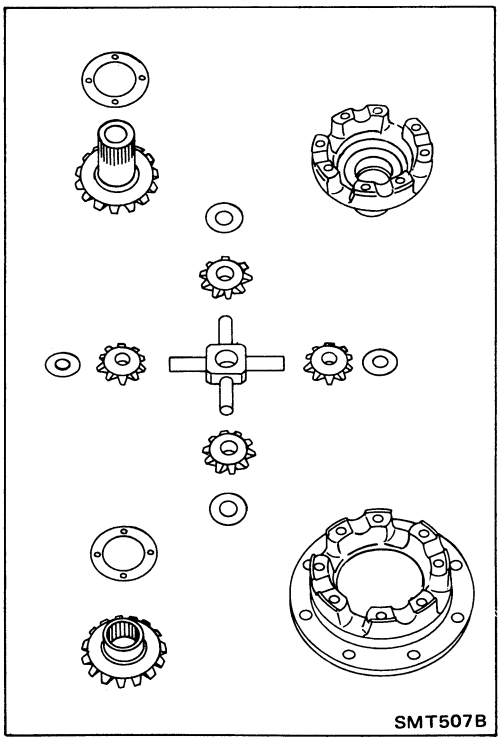

4. Disassemble differential case.

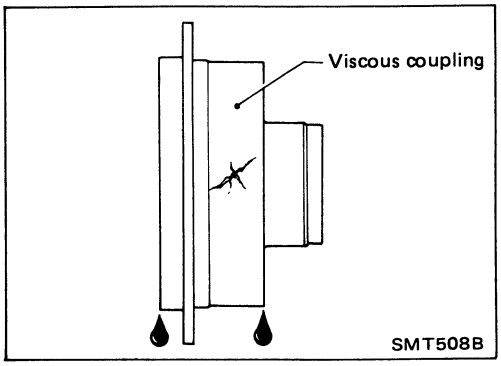

INSPECTION

Viscous coupling

- Check case for cracks.
- Check silicone oil for leakage.

Final Drive (Center differential) — 4WD (Cont'd)

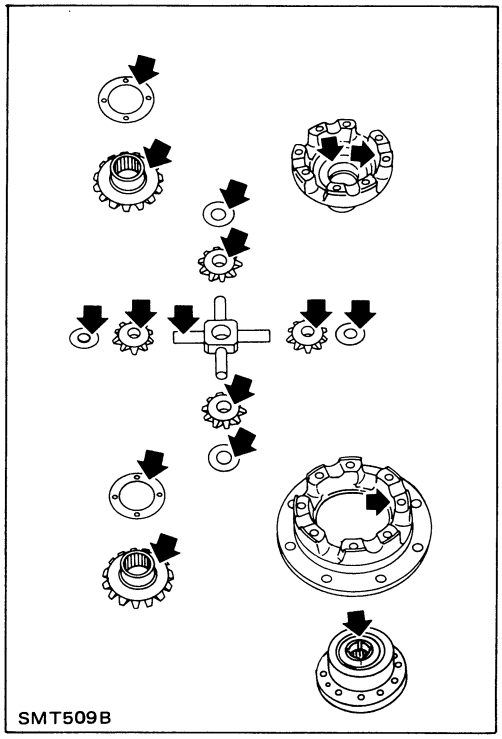
SMT509B

Gear, washer, shaft and case

- Check mating surfaces of differential case, side gear and pinion mate gear.
- Check washers for wear.

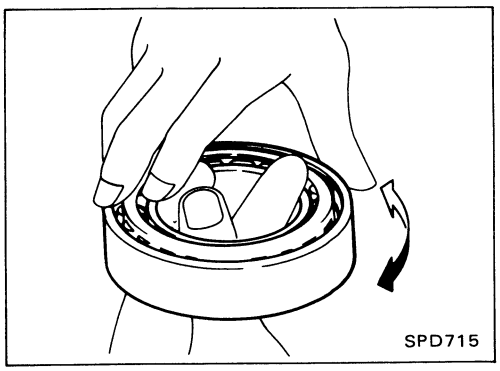
SPD715

Bearing

- Make sure bearing roll freely and are free from noise, cracks, pitting or wear.

When replacing tapered roller bearing, replace outer and inner race as a set.

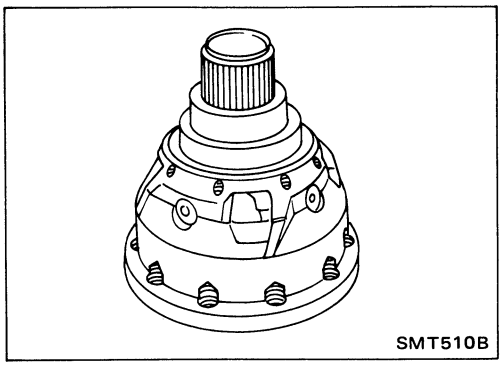
SMT510B

ASSEMBLY

1. Install side gear without thrust washers, pinion mate shaft and pinion mate gear.
2. Install differential case L.H. and R.H.

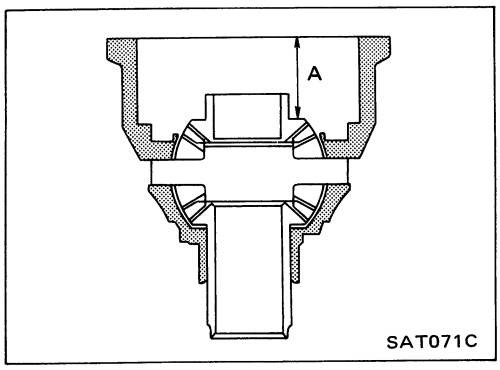

SAT071C

— L.H. side gear —

3. Measure clearance between side gear and viscous coupling following the procedure.

a. Measure dimension A between side gear and differential case.

Final Drive (Center differential) — 4WD (Cont'd)

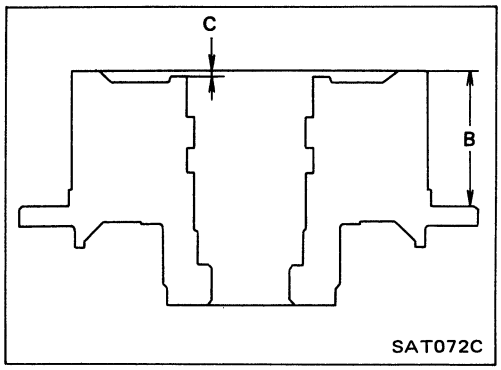

b. Measure dimension B and C of viscous coupling

Clearance between side gear and viscous coupling with washer (A – B + C):
0.03 - 0.14 mm (0.0012 - 0.0055 in)

c. Select side gear thrust washer so clearance between side gear and viscous cupling is within specifications.

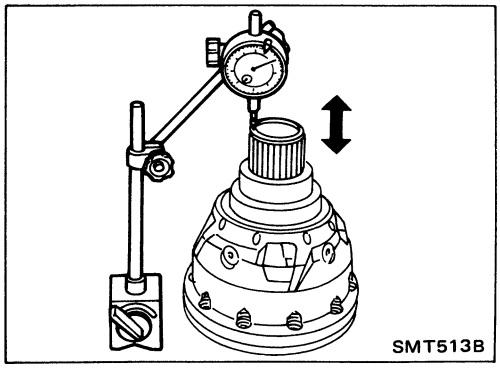

— R.H. side gear —

4. Measure clearance between side gear and differential case following the procedure.

a. Install L.H. side gear thrust washer selected above and differential case assembly.

b. Set dial indicator on side gear.

c. Move R.H. side gear up and down to measure dial indicator deflection.

Clearance between side gear and differential case with washer:
0.03 - 0.14 mm (0.0012 - 0.0055 in)

d. Select side gear thrust washer so clearance between side gear and differential case is within specifications.

Side gear thrust washer: Refer to S.D.S.

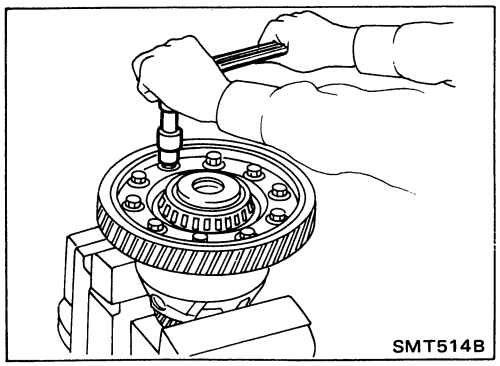

5. Install viscous coupling and final gear.

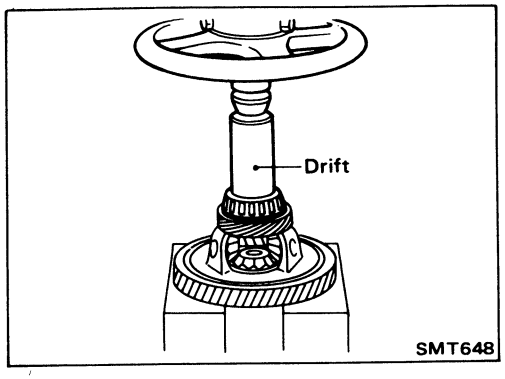

6. Press on differential side bearings.

When installing/assembling needle bearing and bearing race, use the following illustrations as a guide to installation procedures and locations.

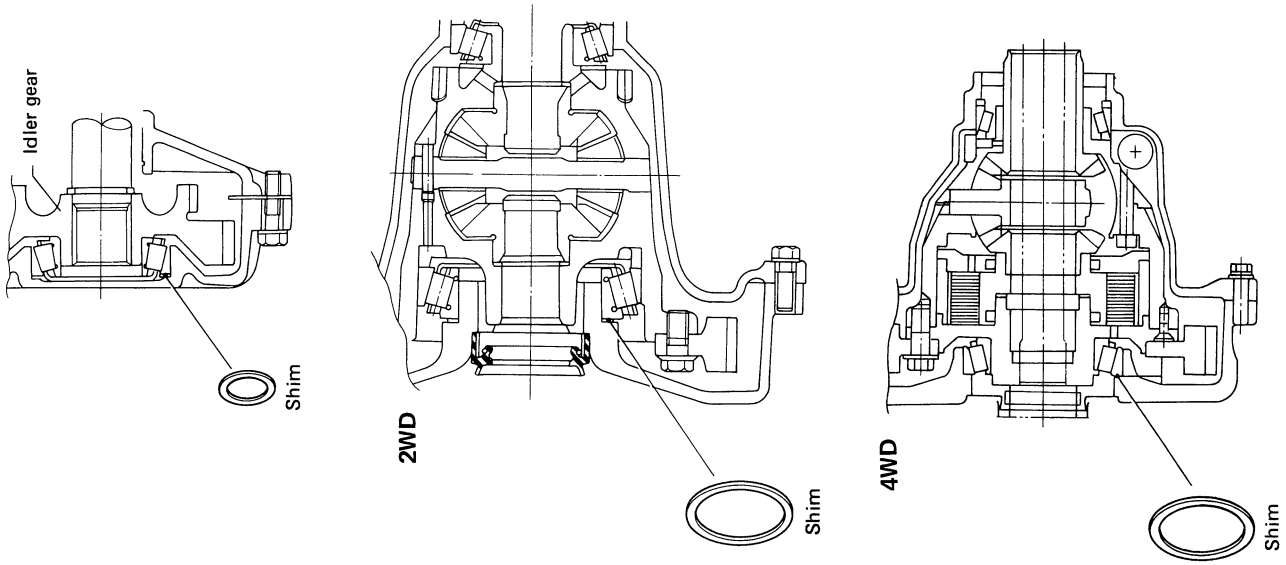

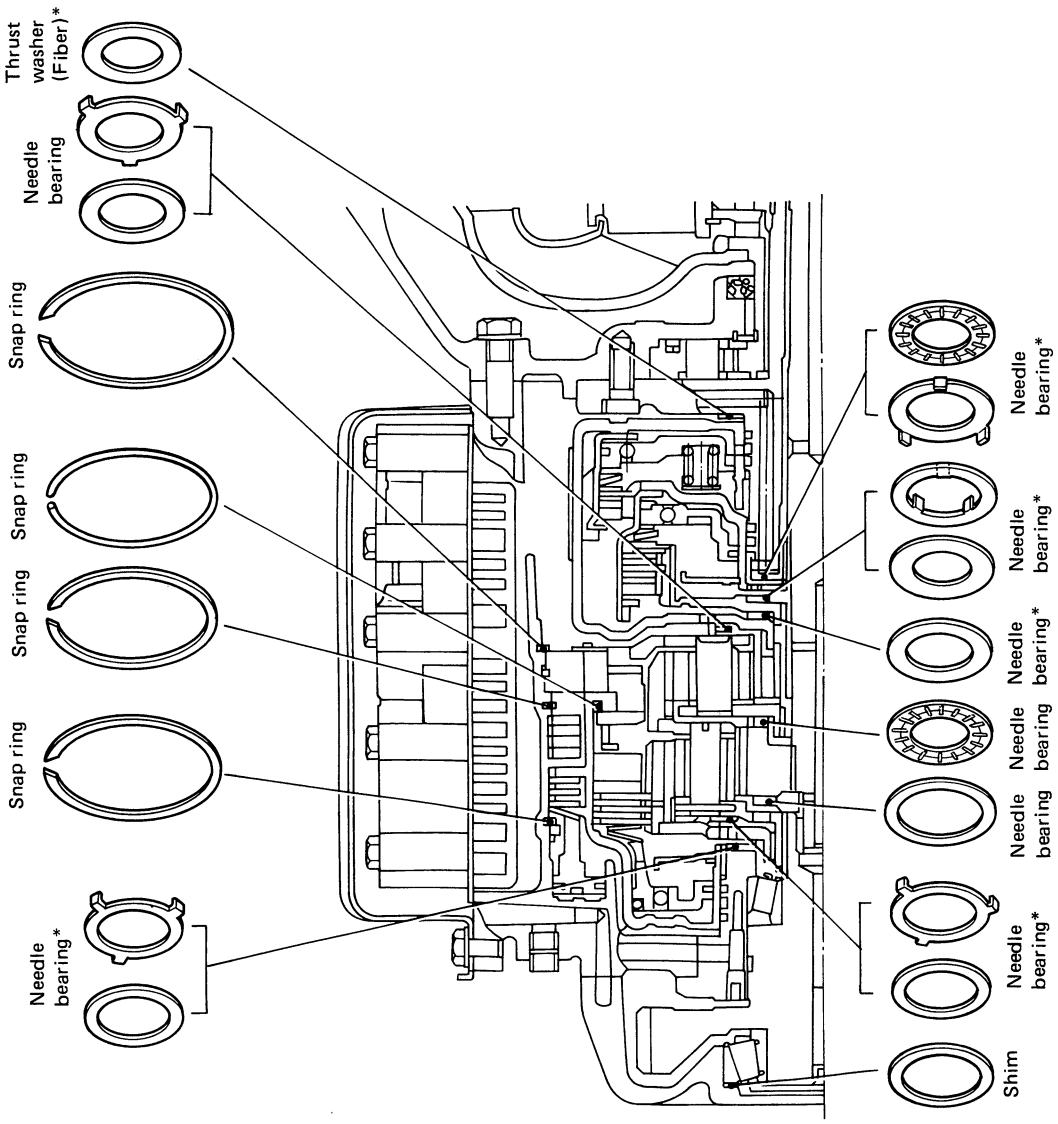

When installing, apply vaseline to parts with "*" so that they will not drop off.

SAT215C

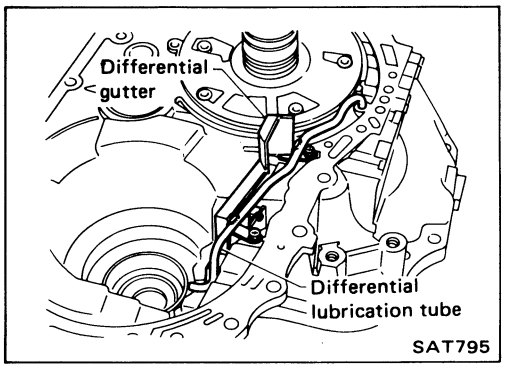

1. Install differential lubrication tube and differential gutter to converter housing.

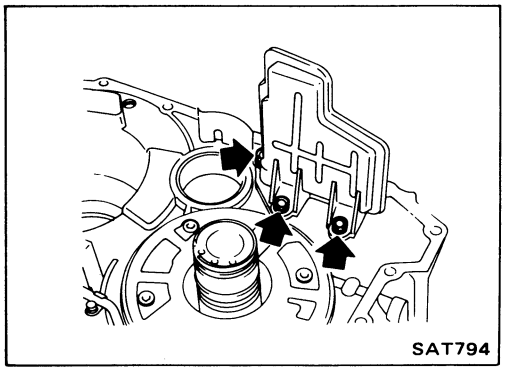

2. Install oil strainer.

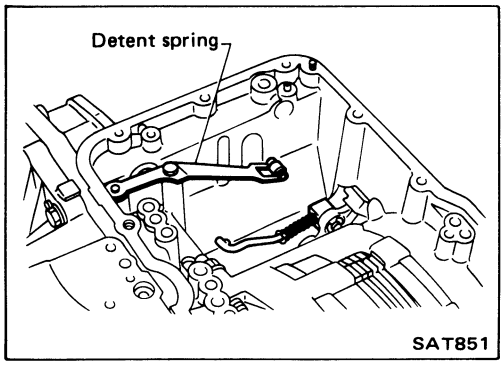

3. Install detent spring assembly.

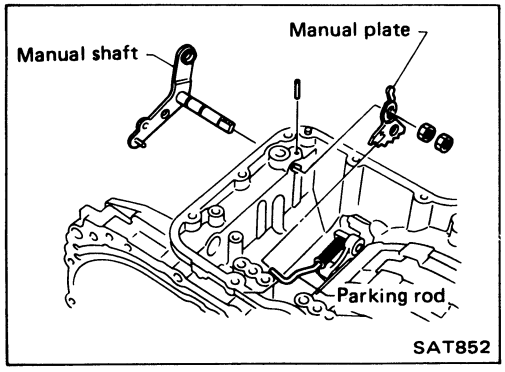

4. Pass parking rod into the hole in the manual plate and then install manual plate on manual shaft.

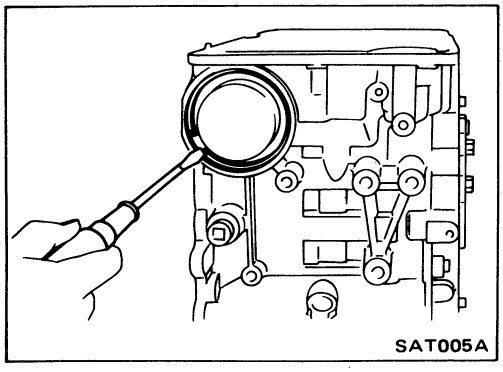

5. Install band brake servo, retainer and return spring and secure with snap ring.

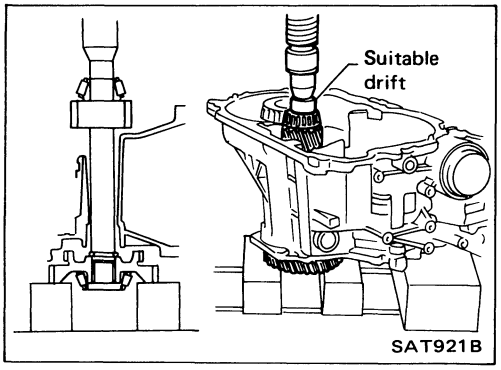

6. Install reduction gear.
a. Position reduction gear in transmission case so that it meshes with idler gear.
b. Press reduction gear into place using a drift, and install idler gear.

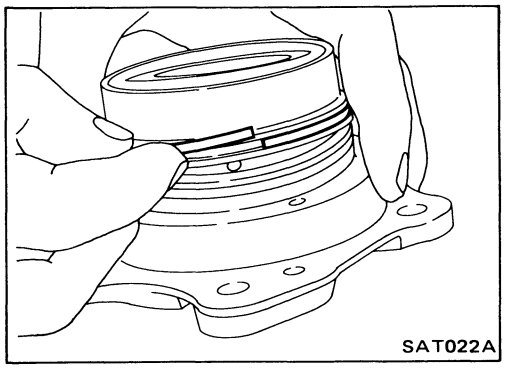

7. Install bearing retainer assembly.
a. Install seal rings onto bearing retainer with great care. Clean the grooves and liberally apply petroleum jelly to hold the rings in place. Otherwise, they could be cut or deformed when the low clutch and carrier assembly are installed.

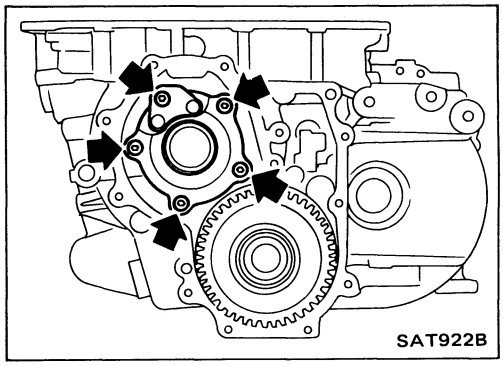

b. Install bearing retainer assembly.

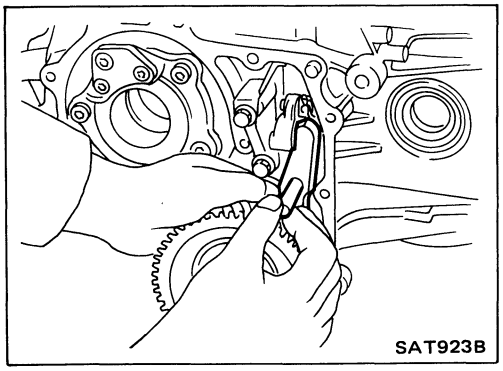

8. Install parking pawl and parking shaft.

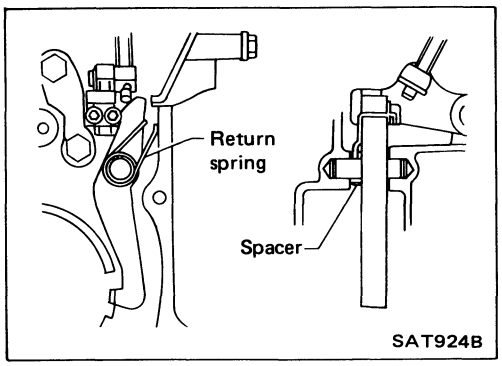

9. Install spacer and return spring.

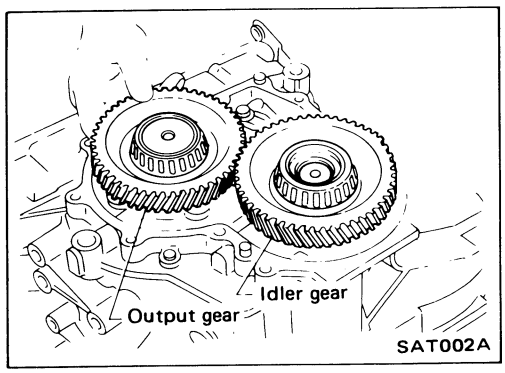

10. Install output gear.

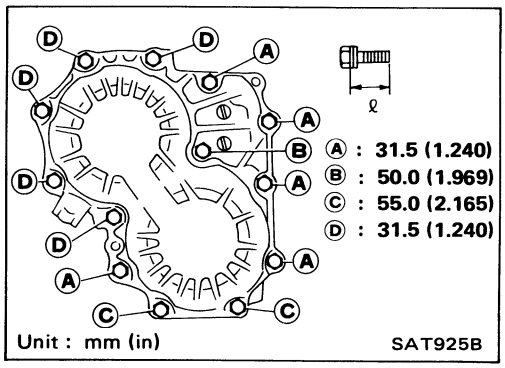

11. Temporarily install side cover and gasket.

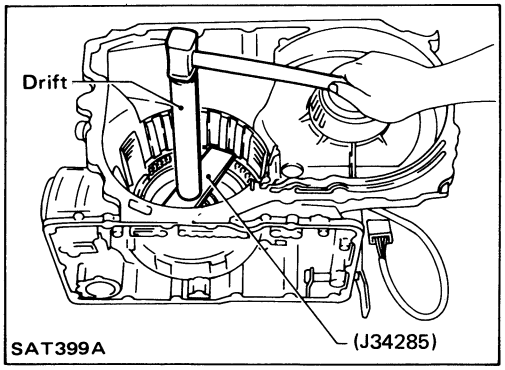

12. Lubricate low and reverse brake piston seal, then install piston by tapping it evenly with Tool.

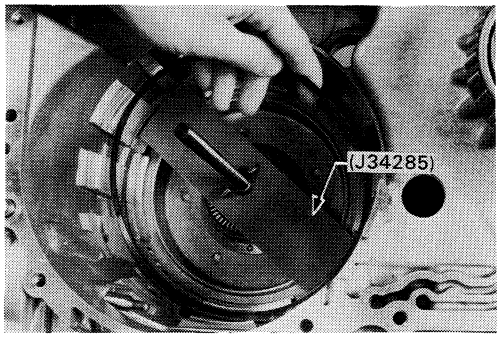

13. Install low and reverse brake retainer, and secure with snap ring.
14. Install low and reverse brake driven & drive plates and retaining plate, then secure with snap ring.

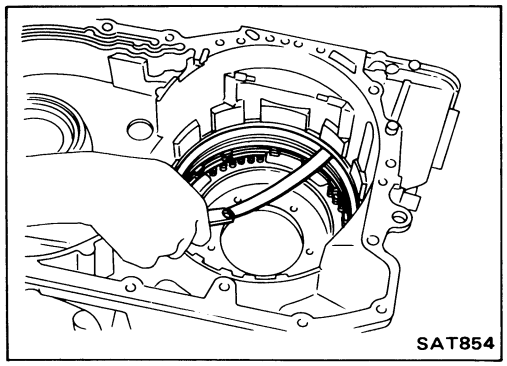

15. After low and reverse brake has been completely assembled, measure clearance between snap ring and retainer plate. If measurement exceeds specifications, it can be adjusted by replacing retainer plate with one of a different thickness.

Low and reverse brake clearance:

Standard

1.2 - 1.6 mm (0.047 - 0.063 in)

Allowable limit

3.8 mm (0.150 in)

Retaining plate of low & reverse brake:

Refer to S.D.S.

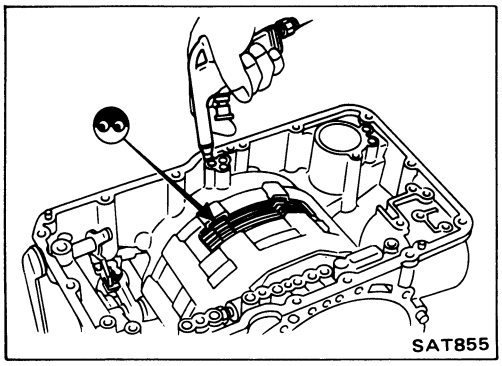

16. Check low & reverse brake operation using air.

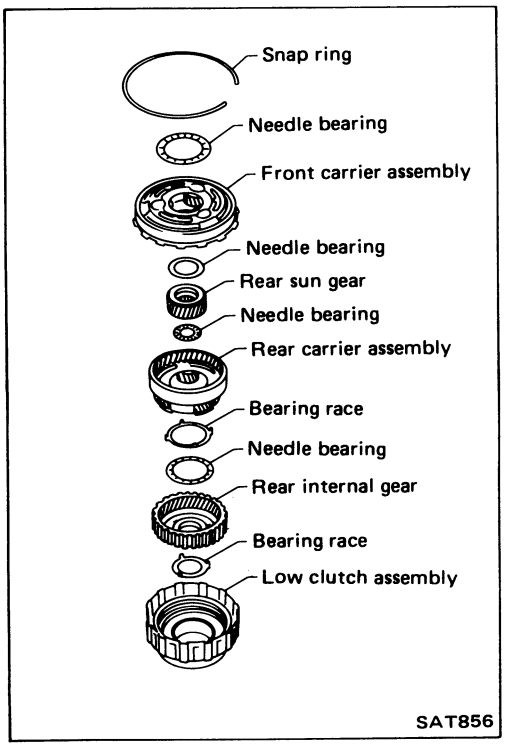

17. Assemble front carrier, rear carrier and low clutch.

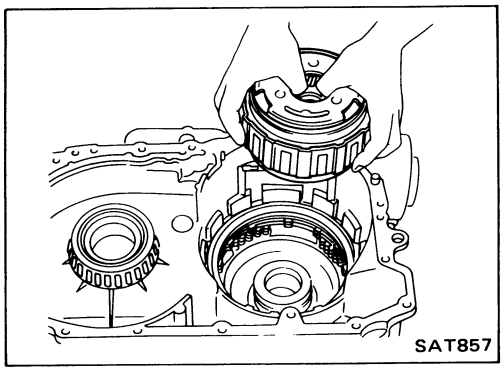

18. Install carrier set.

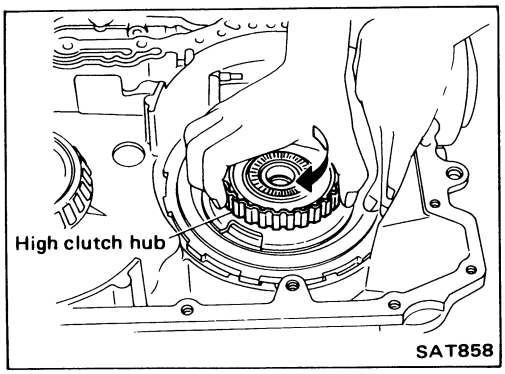

19. Install one-way clutch assembly while rotating front carrier with high clutch hub.

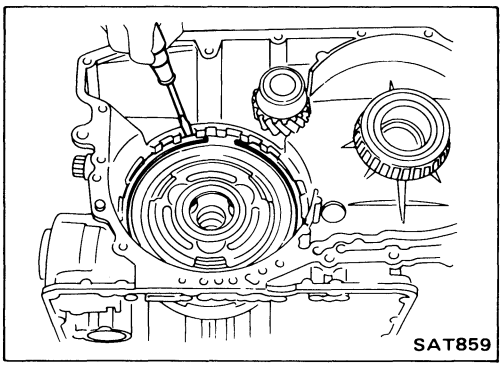

20. Remove high clutch hub, and install clutch snap ring.

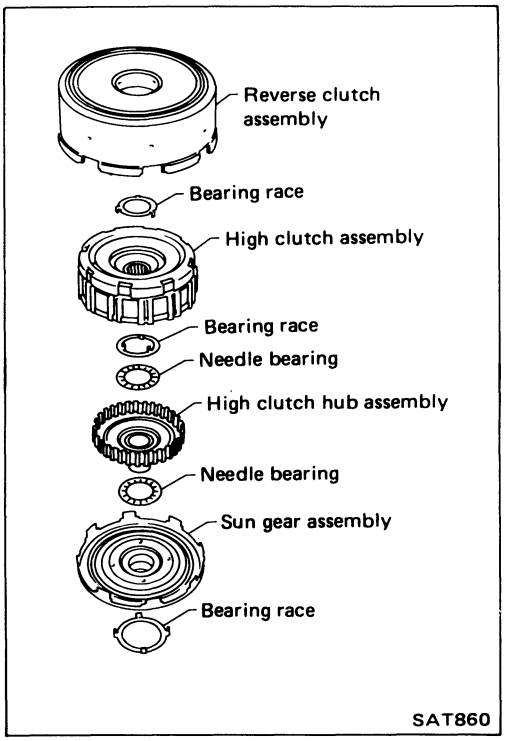

21. Assemble reverse clutch and high clutch.

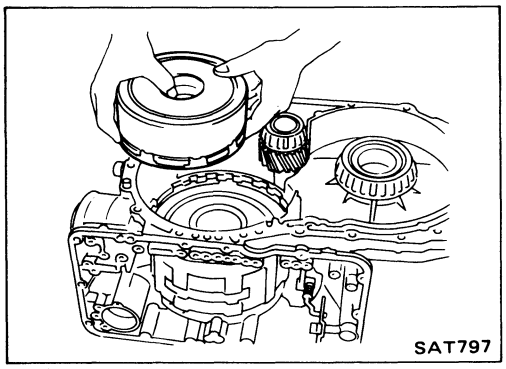

22. Install reverse and high clutch as a pack.

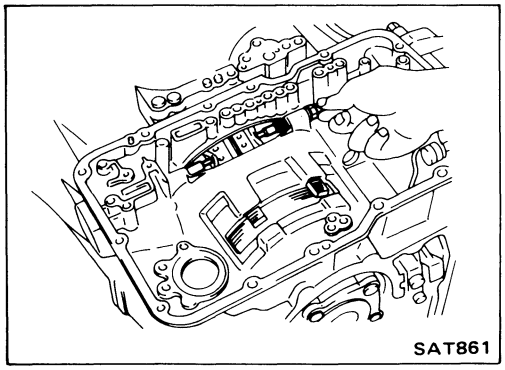

23. Install brake band and anchor pin. Temporarily tighten anchor bolt by hand.

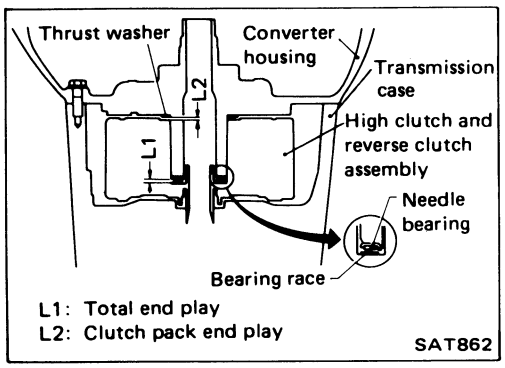

24. Adjust total end play and clutch pack end play as follows:

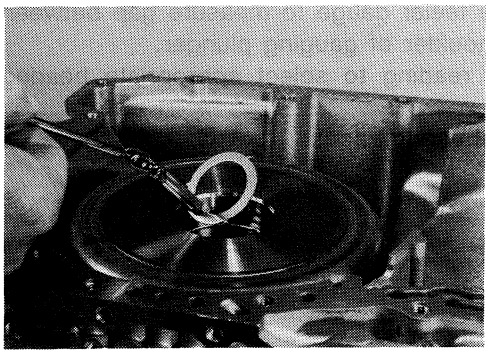

— **Total end play** —

a. Remove thrust bearing race from high clutch drum.

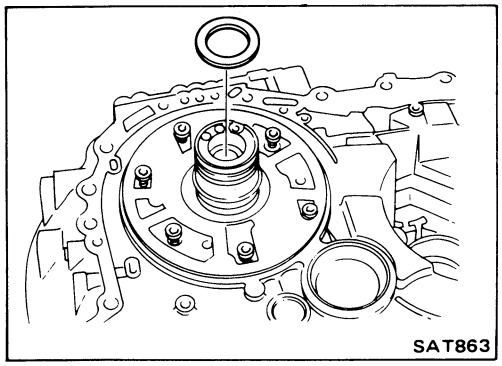

b. Install needle bearing on top of oil pump cover.

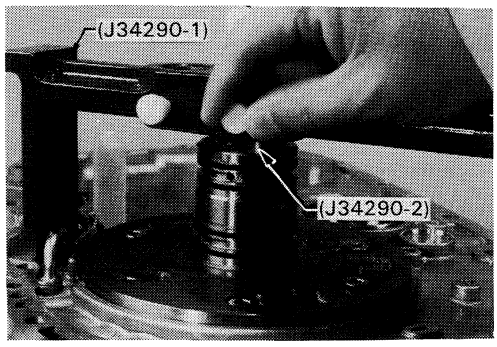

c. Place Tools (bridge and gauging cylinder) on machined gasket surface of converter housing. Allow gauging cylinder to rest on needle bearing and lock it in place with thumb-screw.

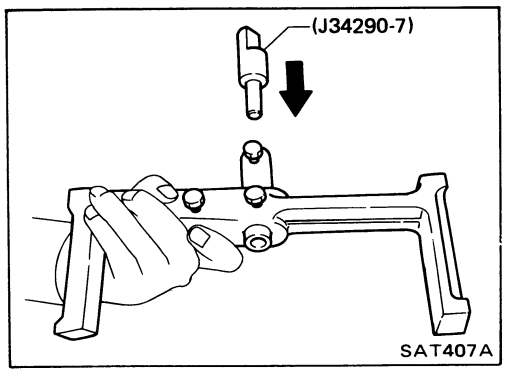

d. Insert Tool (total end play gauging plunger) into gauging cylinder.

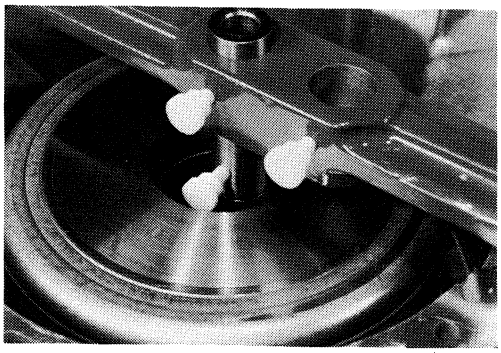

e. Place bridge, legs up, onto machined gasket surface of transaxle case, allowing gauging plunger to rest on surface where bearing race was removed. Lock plunger in place.

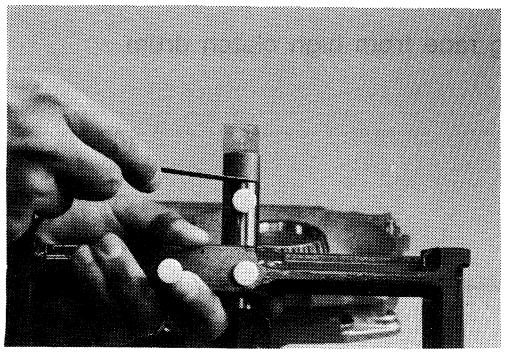

f. Remove bridge and use feeler gauge to measure gap between gauging cylinder and shoulder of gauging plunger.
g. Use your feeler gauge reading to select appropriate bearing race thickness.

Available oil pump bearing races:
Refer to S.D.S.

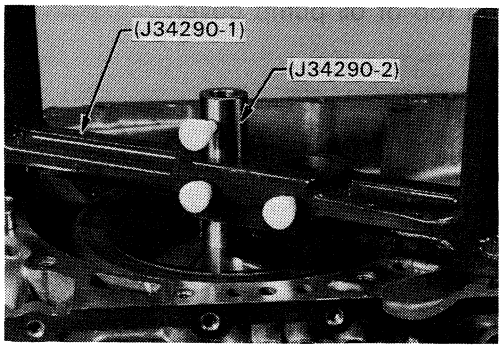

— Clutch pack end play —

a. Place Tools (bridge and gauging cylinder) onto machined gasket surface of transaxle case and allow cylinder to rest on high clutch drum. Lock cylinder into place.

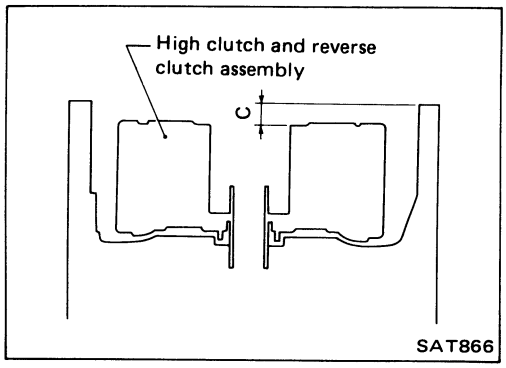

- You are now measuring dimension "C".

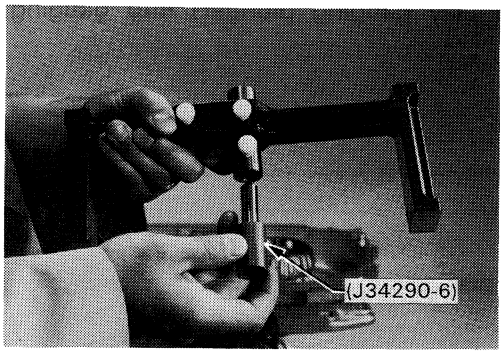

b. Now, insert Tool (clutch pack gauging plunger) into gauging cylinder.

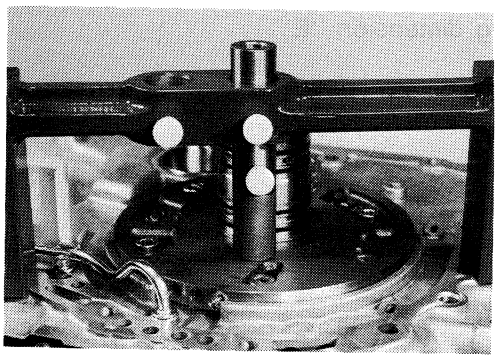

c. Place bridge, gauging cylinder, and gauging plunger onto machined gasket surface of converter housing. Make sure thrust washer is removed. Lock gauging plunger in place.

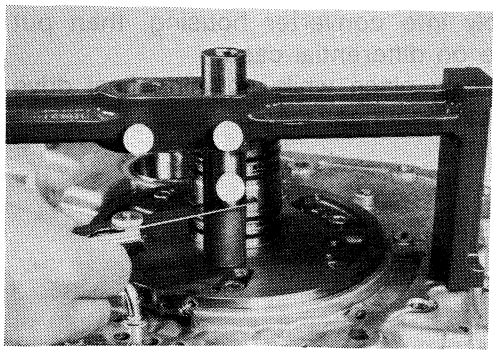

d. Use feeler gauge to measure gap between gauging cylinder and shoulder of gauging plunger.
e. Use your feeler gauge measurment to select correct washer thickness to give proper clutch pack end play.
   Available clutch pack thrust washers:
   Refer to S.D.S.

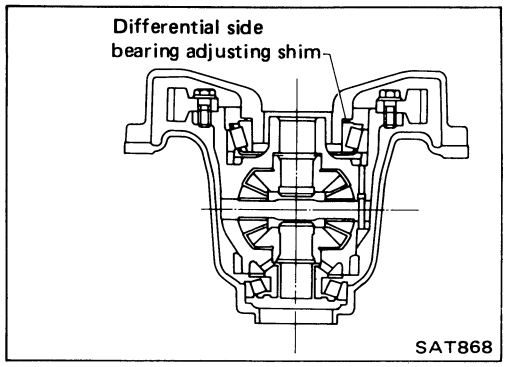

25. Adjust differential side bearing preload as follows:

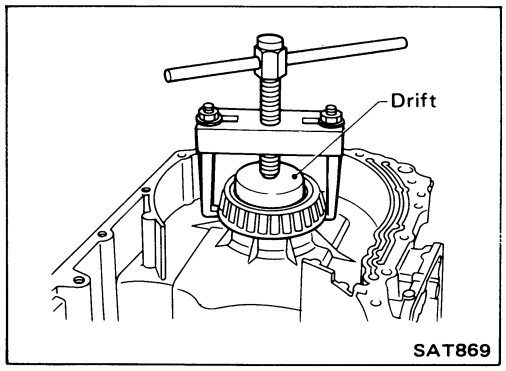

— 2WD model —

a. Remove left side bearing inner cone from transmission case.

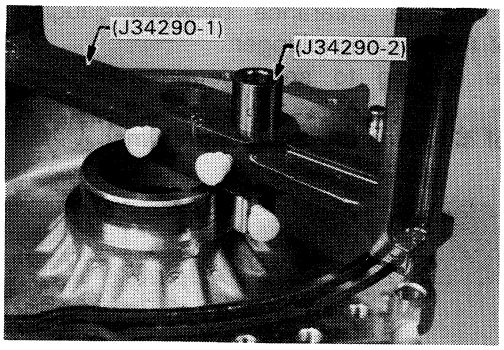

b. Place Tools (bridge and gauging cylinder) on machined gasket surface of transmission case and allow gauging cylinder to rest on bearing mating surface. Lock gauging cylinder in place.

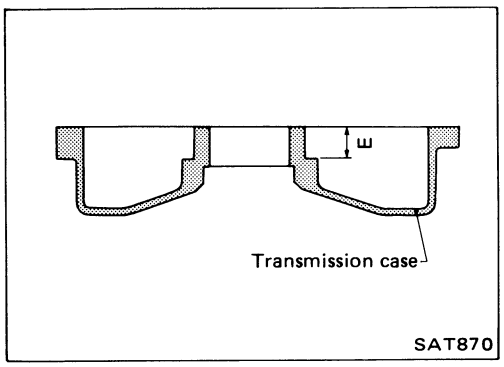

- You are now measuring dimension "E".

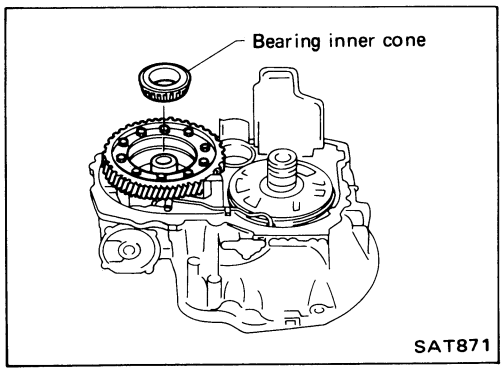

c. Put final drive assembly into converter housing, then put side bearing inner cone on differential case.
d. Hold inner bearing cone in place while spinning final drive assembly in order to seat bearings.

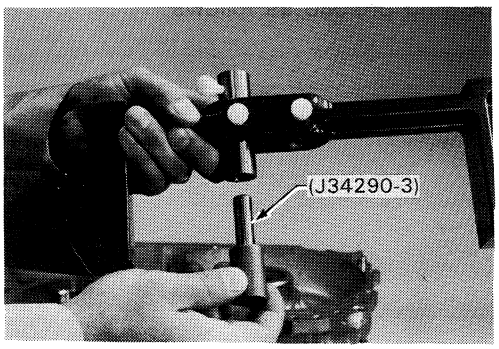

e. Insert Tool (differential side bearing gauging plunger) into gauging cylinder.

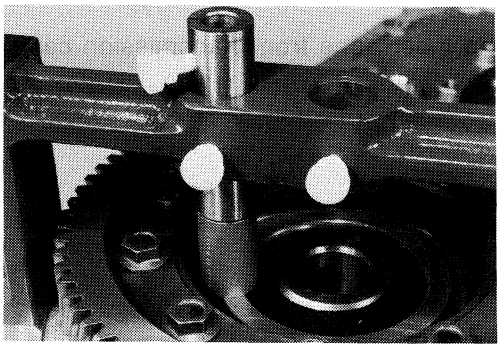

f. Place bridge, gauging cylinder, and gauging plunger onto machined gasket surface of converter housing and allow gauging plunger to rest on surface of bearing inner cone. Lock plunger in place.

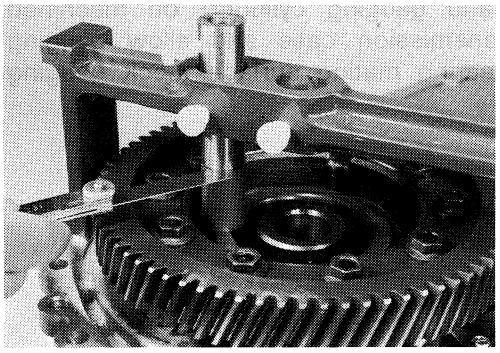

g. Use feeler gauge to measure clearance between gauging cylinder and shoulder of the gauging plunger.
h. Use your feeler gauge reading to select appropriate side bearing preload shim(s).

Available differential side bearing adjusting shims:
Refer to S.D.S.

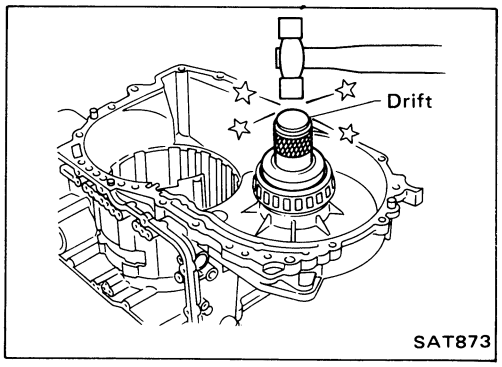

i. Install selected shims and left side bearing inner cone.

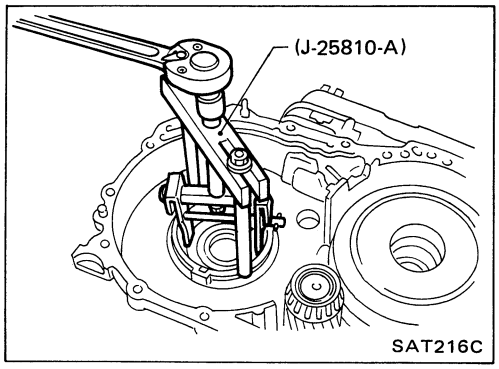

— 4WD model —

a. Remove left side bearing outer race and preload adjusting shims from transmission case.

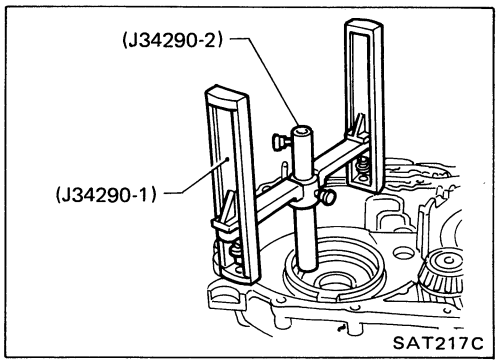

b. Place Tools (bridge and gauging cylinder) on machined gasket surface of transmission case and allow gauging cylinder to drop into bearing race bore until it bottoms. Lock gauging cylinder in place.

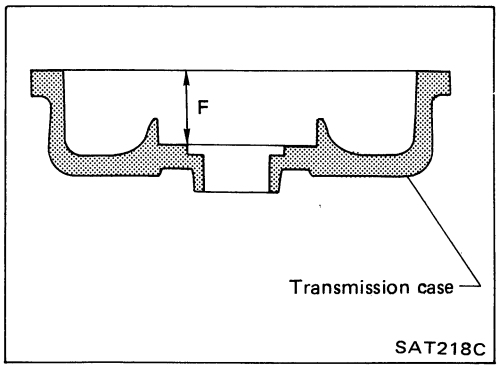

● You are now measuring dimension "F".

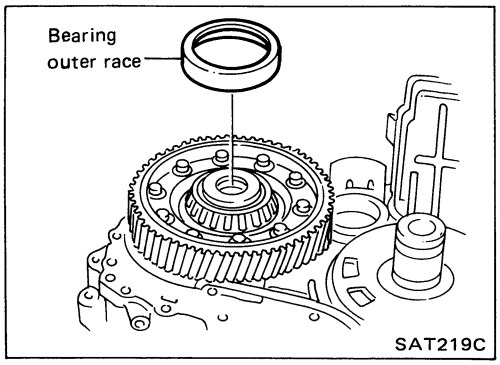

c. Put final drive assembly into converter housing, then put side bearing outer race on differential side bearing.
d. Turn outer race to seat bearing.

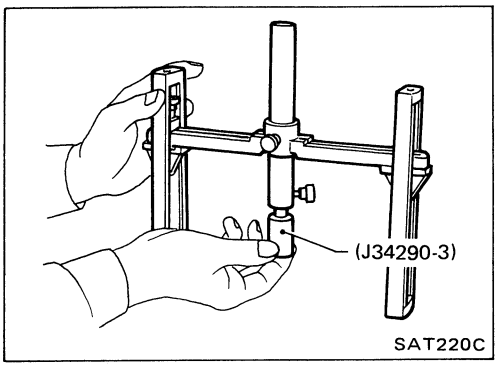

e. Insert Tool (differential side bearing gauging plunger) into gauging cylinder.

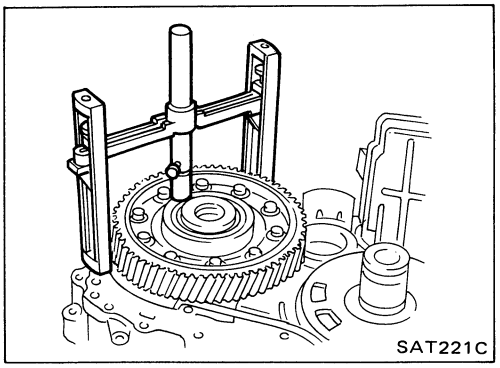

f. Place bridge, gauging cylinder, and gauging plunger onto machined gasket surface of converter housing and allow gauging plunger to drop onto rear surface of side bearing outer race. Lock plunger in place.

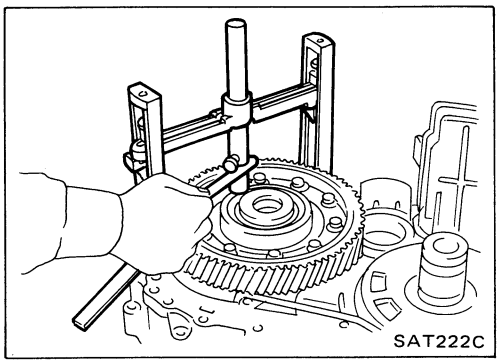

g. Use feeler gauge to measure clearance between gauging cylinder and shoulder of the gauging plunger.
h. Use your feeler gauge reading to select appropriate side bearing preload shim(s).

Available differential side bearing adjusting shims:
Refer to S.D.S.

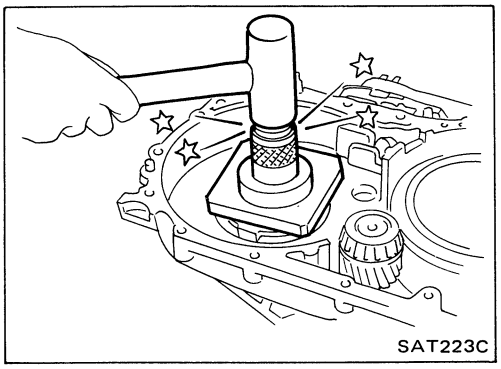

i. Install selected shims and left side bearing outer race.

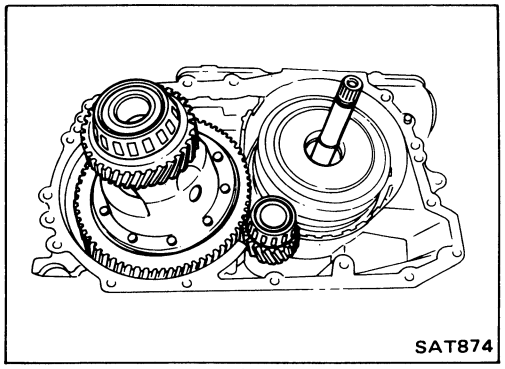

26. Install input shaft.

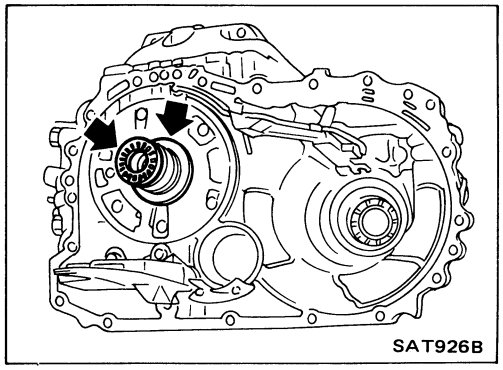

27. Install selected thrust washer and bearing on oil pump cover.

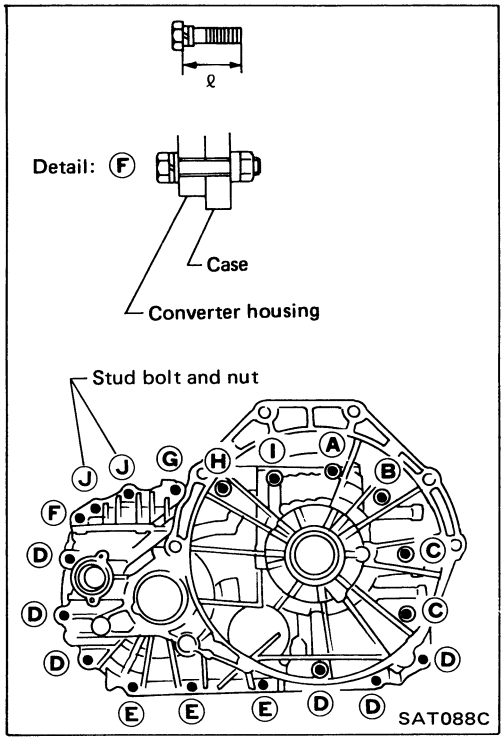

28. Place gasket on transmission case and install converter housing.

Bolt	Tightening torque N·m (kg-m, ft-lb)	ℓ mm (in)
Ⓐ	21 - 23 (2.1 - 2.3, 15 - 17)	31.5 (1.240)
Ⓑ		27 (1.06)
Ⓒ	19 - 23 (1.9 - 2.3, 14 - 17)	
Ⓓ		31.5 (1.240)
Ⓔ	43 - 47 (4.4 - 4.8, 32 - 35)	35 (1.38)
Ⓕ	21 - 25 (2.1 - 2.6, 15 - 19)	50 (1.97)
Ⓖ	43 - 45 (4.4 - 4.6, 32 - 33)	39 (1.54)
Ⓗ	45 - 47 (4.6 - 4.8, 33 - 35)	
Ⓘ		35 (1.38)
Ⓙ *	21 - 25 (2.1 - 2.6, 15 - 19)	–

*: Stud bolt

Always use new bolts at portions Ⓐ, Ⓑ, Ⓗ and Ⓘ as they are self-sealing bolts. Apply A.T.F. to thread of other bolts by that fix converter housing to transmission case when installing them.

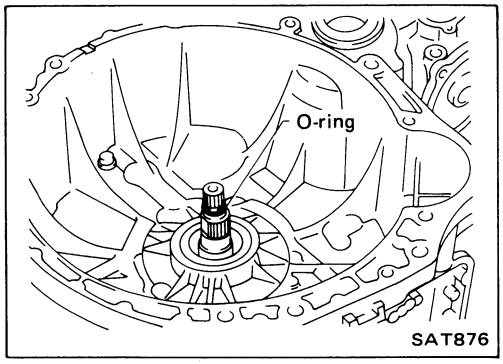

29. Install O-ring onto input shaft.

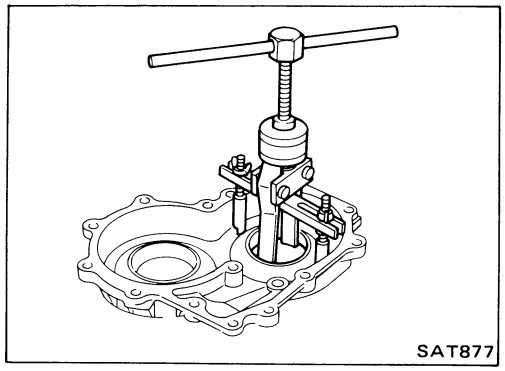

30. Adjust output shaft and idler gear bearing preload as follows:
a. Remove side cover temporarily installed.
b. Remove output gear and idler gear bearing outer races and shims. (The races will interchange, so be sure to keep each race with its correct bearing.)

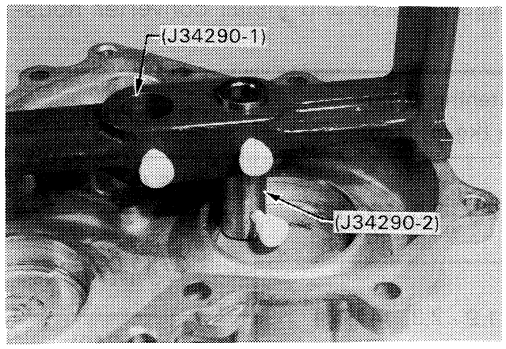

c. Place Tools (bridge and gauging cylinder) onto machined gasket surface of side cover. Allow gauging cylinder to drop into output gear bearing race bore until it bottoms. Lock cylinder in place with the thumbscrew.

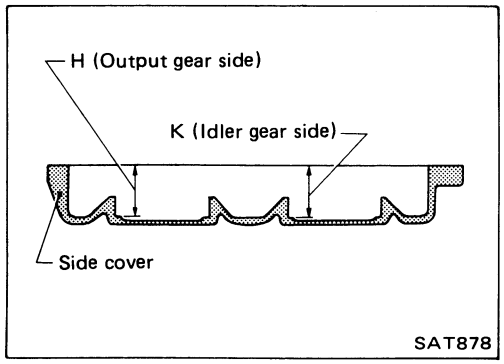

- You are now measuring dimension "H".

d. Put correct bearing races on the output gear and idler gear bearings, and turn races to seat bearings.

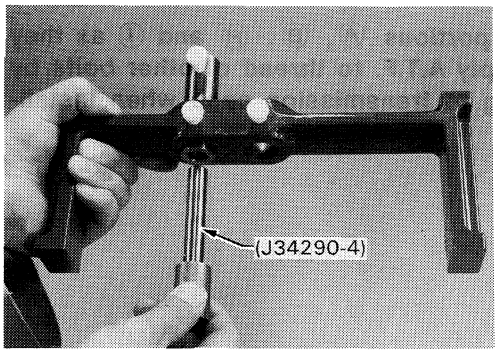

e. Place Tool (output gauging plunger) into the gauging cylinder.

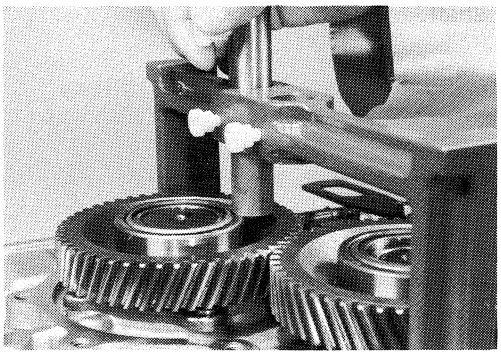

f. Now, place bridge onto machined gasket surface of transmission case and allow gauging plunger to drop onto rear surface of output gear bearing race.

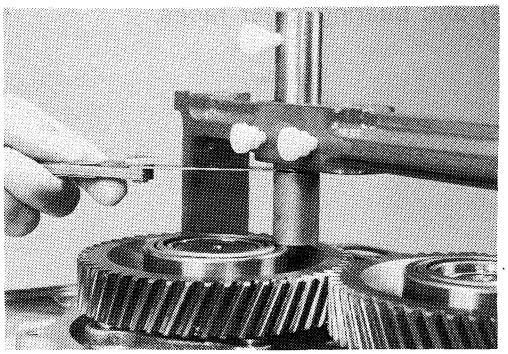

g. Lock gauging plunger in place with thumbscrew. Use feeler gauge to measure gap between gauging cylinder and shoulder of gauging plunger.
h. Use feeler gauge reading to select the correct shim(s).
Available output shaft bearing adjusting shims:
Refer to S.D.S.

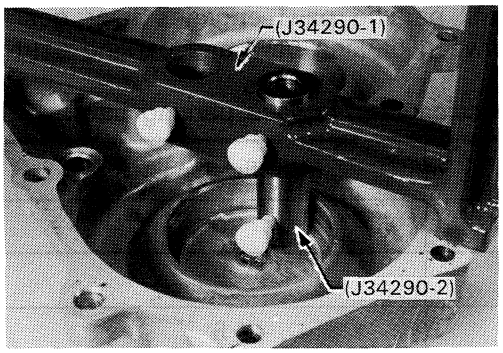

i. Now, measure for the correct preload shims at the idler gear bearing in the same way. Place bridge onto machined surface of side cover and allow gauging cylinder to drop until it contacts idler bearing race mating surface.

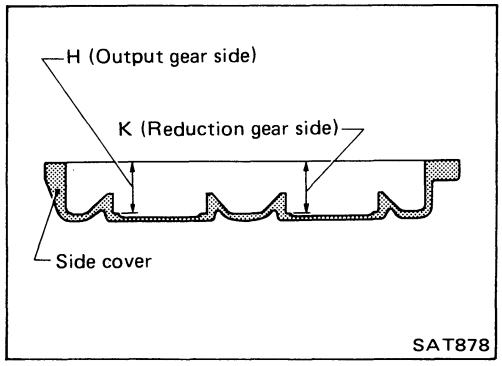

● You are now measuring dimension "K".

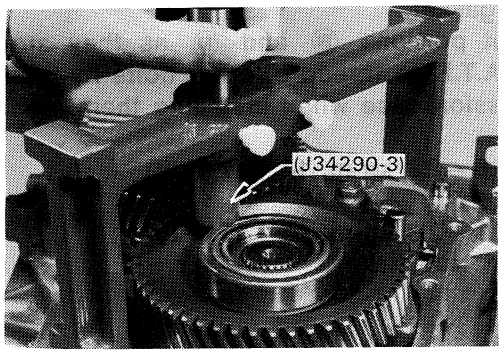

j. Lock gauging cylinder in place. Insert Tool (gauging plunger) into gauging cylinder and place bridge onto machined surface of case, so that gauging plunger meets idler bearing race rear surface.

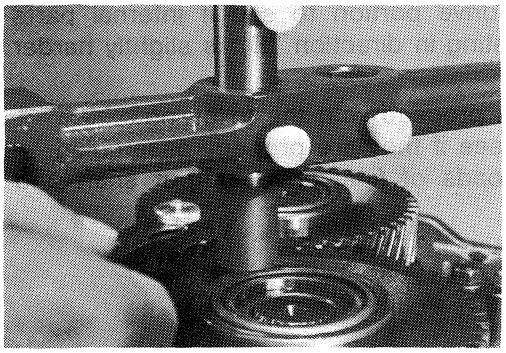

k. Lock gauging plunger in place and use feeler gauge to measure gap between gauging cylinder and gauging plunger.
l. Use your measured distance to select correct shim(s) for idler gear bearing preload.
Available idler gear bearing adjusting shims:
Refer to S.D.S.

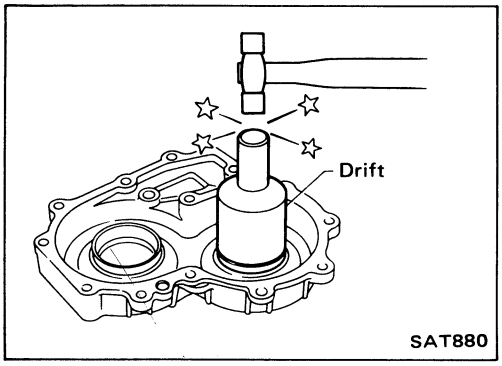

m. Install selected shim(s) and bearing outer races.

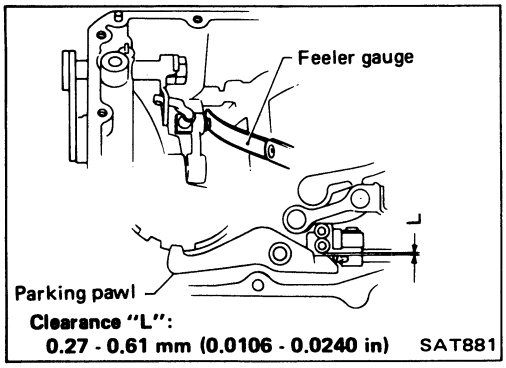

31. Move manual lever until parking pawl engages idler gear. Measure clearance between parking pawl and parking actuator.

If clearance is outside specifications, replace parking pawl.

Part number	Identification letter
31989-21X00	D
31989-21X01	E
31989-21X02	F

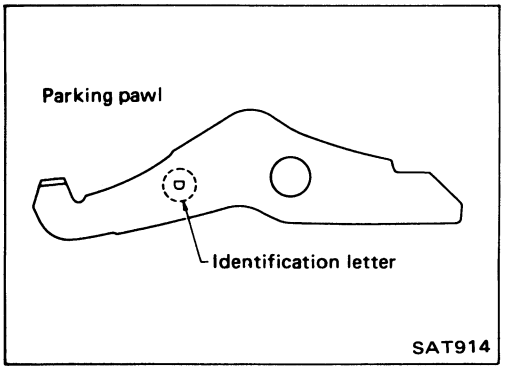

Example:

When parking pawl with identification letter "E" is used:

Clearance "L" is larger.

→ Replace with parking pawl with identification letter "D".

Clearance "L" is smaller.

→ Replace with parking pawl with identification letter "F".

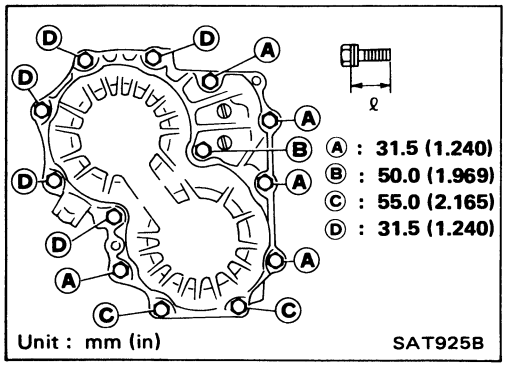

32. Install side cover and gasket.

Always use new bolts at portions Ⓑ and Ⓓ as they are self-sealing bolts. Apply A.T.F. to thread of other bolts by that fix side cover to transmission case when installing them.

Bolts Ⓐ and Ⓒ:

: 19 - 23 N•m (1.9 - 2.3 kg-m, 14 - 17 ft-lb)

Bolts Ⓑ and Ⓓ:

: 21 - 23 N•m (2.1 - 2.3 kg-m, 15 - 17 ft-lb)

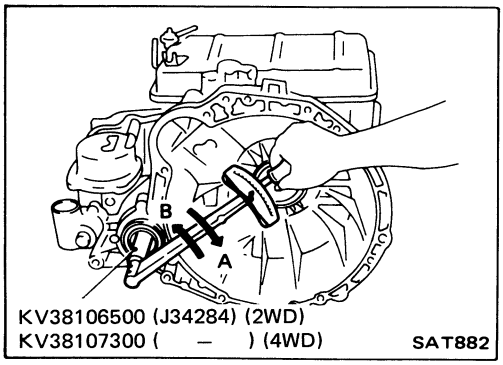

33. Insert Tool into final drive portion to see if internal parts rotates smoothly. Rotating in direction "B" is slightly harder than in direction "A".

If abnormalities are noted, proceed with the following:

- Disassemble parts to see if they are properly assembled.
- Readjust bearing preloads of final drive, output shaft and idler gear.

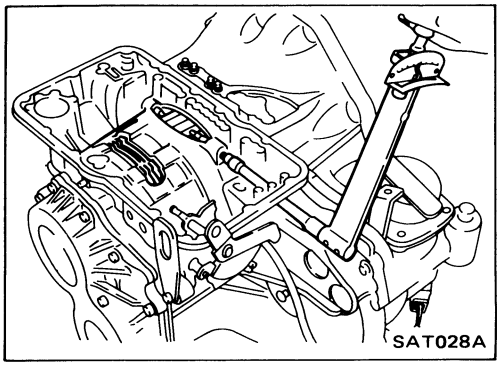

34. Adjust brake band.
a. First tighten anchor end pin.
   Anchor end pin:
   [O]: 4 - 6 N•m (0.4 - 0.6 kg-m, 2.9 - 4.3 ft-lb)
b. Back off anchor end pin "N" turns.
   Number of returning revolutions for anchor end pin "N": 5.25 turn
c. Tighten lock nut while holding anchor end pin stationary.
   Lock nut:
   [O]: 31 - 42 N•m (3.2 - 4.3 kg-m, 23 - 31 ft-lb)

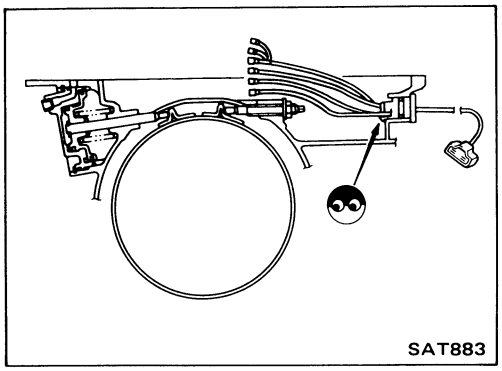

35. Install terminal assembly, paying attention to the direction of its hook.

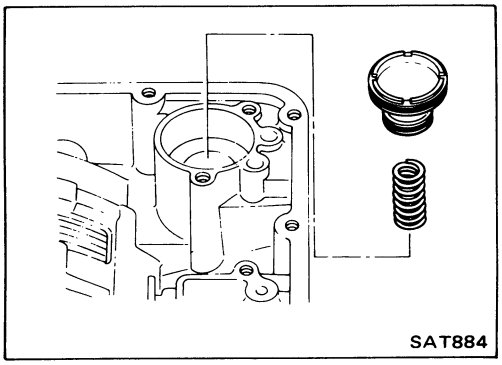

36. Install accumulator and spring.

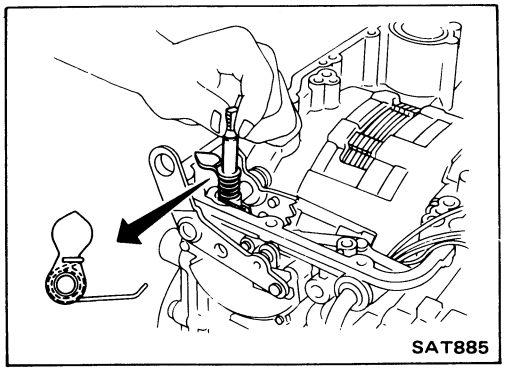

37. Install thottle shaft and return spring.

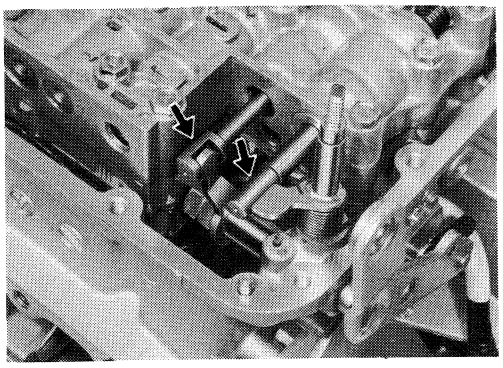

38. Insert manual valve to control valve body.
- **Pay attention to the direction of manual and detent valves' grooves.**

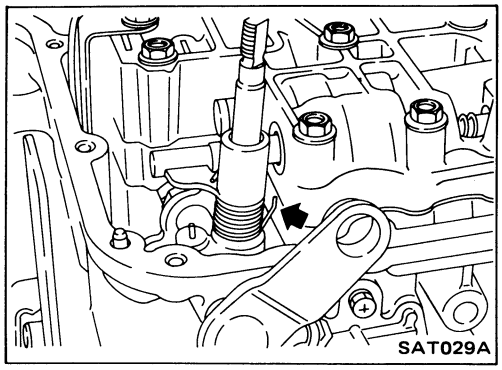

39. Set throttle shaft return spring as shown at left.

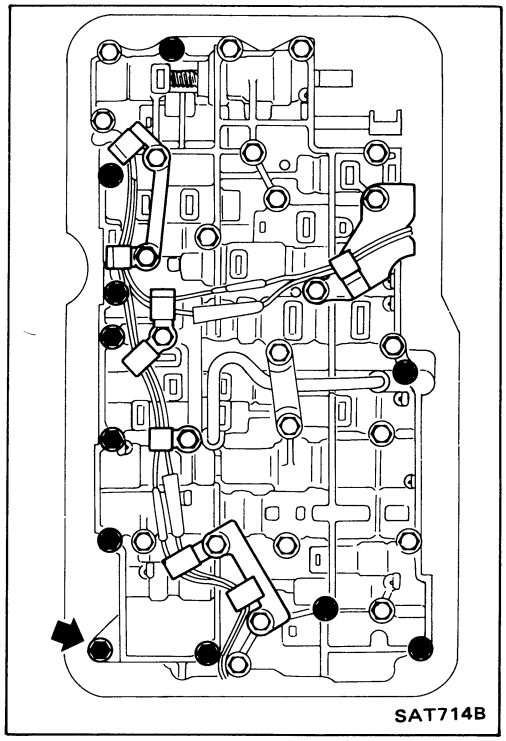

40. Tighten control valve securing bolts.
    Arrow mark:
    [O]: 3.7 - 5.0 N•m (0.38 - 0.51 kg-m, 2.7 - 3.7 ft-lb)
    Others:
    [O]: 7 - 9 N•m (0.7 - 0.9 kg-m, 5.1 - 6.5 ft-lb)

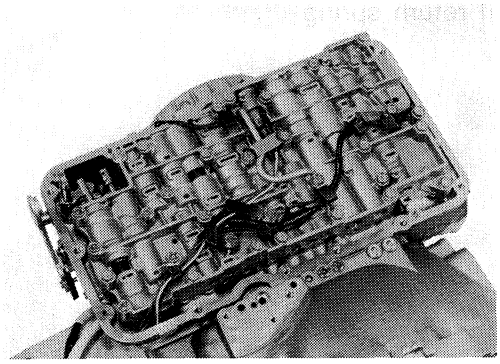

41. Connect harness connectors between terminal assembly and solenoids.

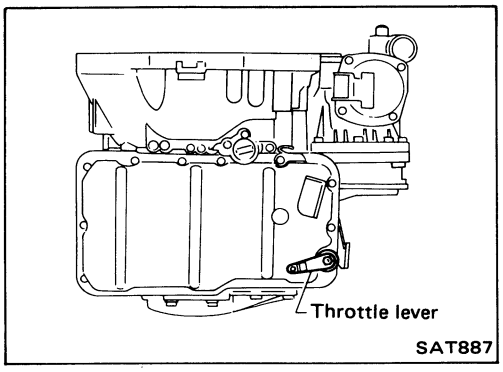

42. Put gasket on transmission case and install valve cover and throttle lever.
- **Always use new valve cover securing bolts as they are self-sealing bolts.**

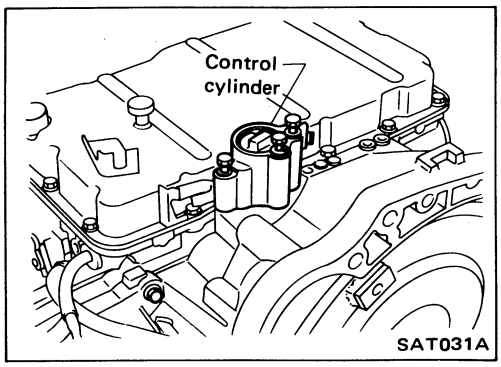

43. Install control cylinder.

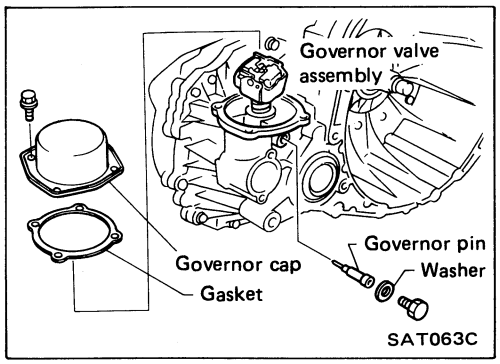

44. Install governor parts.

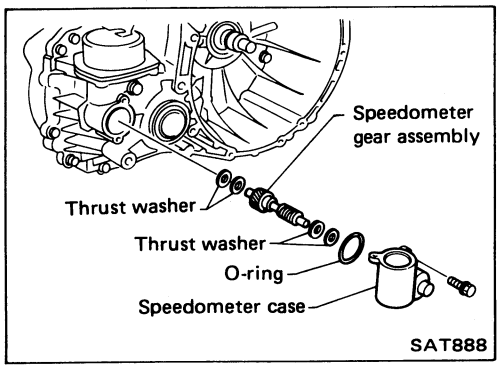

45. Install speedometer parts. (2WD model)

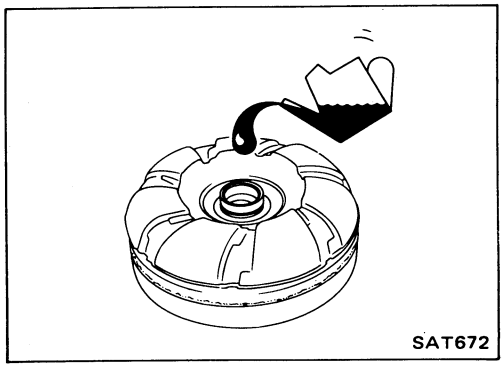

46. Pour approx. 2 liters (2-1/8 US qt, 1-3/4 Imp qt) of A.T.F. into torque converter.
47. Install torque converter to converter housing.
Be careful not to scratch front oil seal.
48. Apply sealant to threads of drain plug and install it in place.
49. Install inhibitor switch to transmission case.
50. Adjust inhibitor switch. Refer to On-vehicle Service.
51. Make sure that manual lever operates smoothly.

Shift Lock Electrical Parts Location

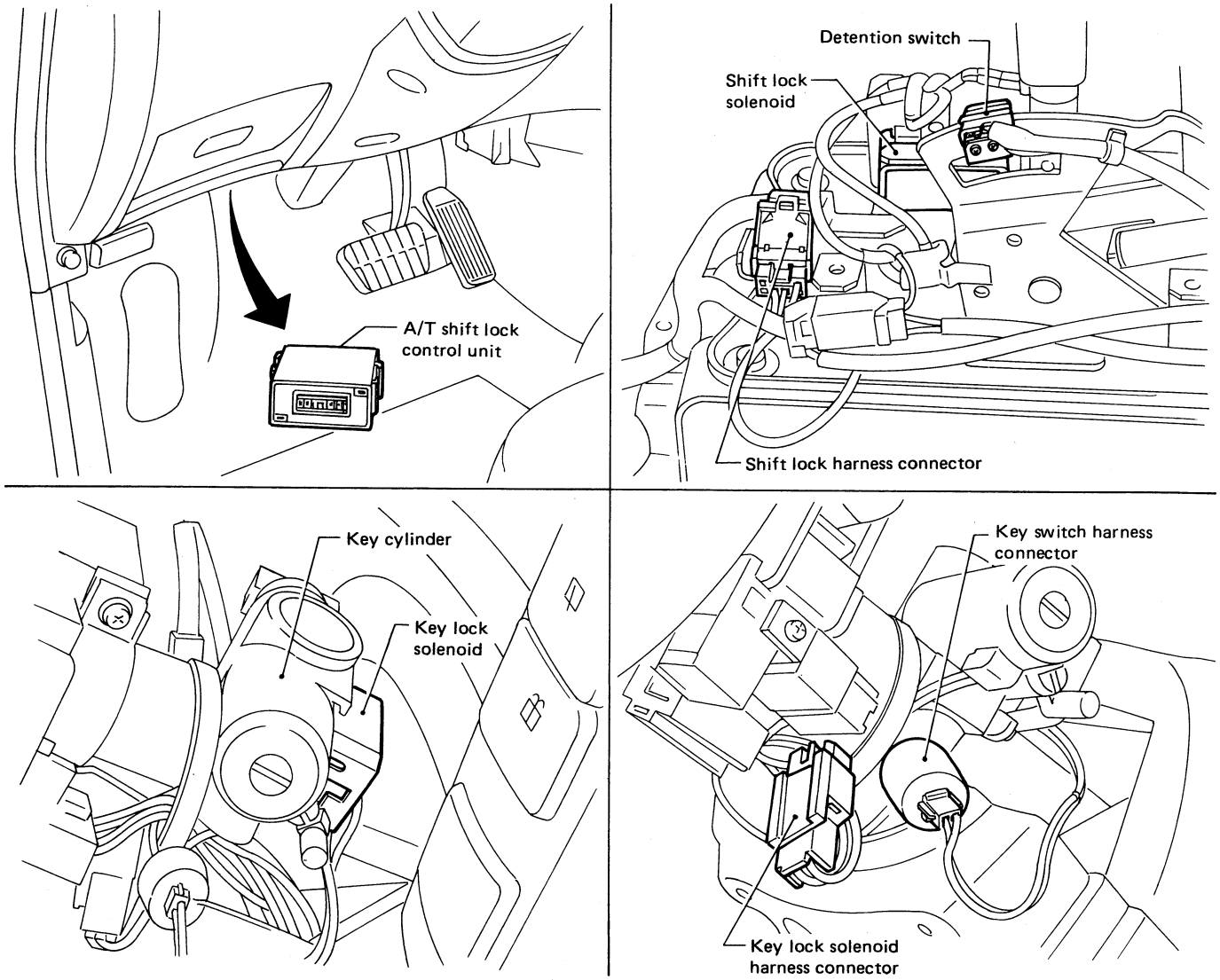

SAT225C

Schematic

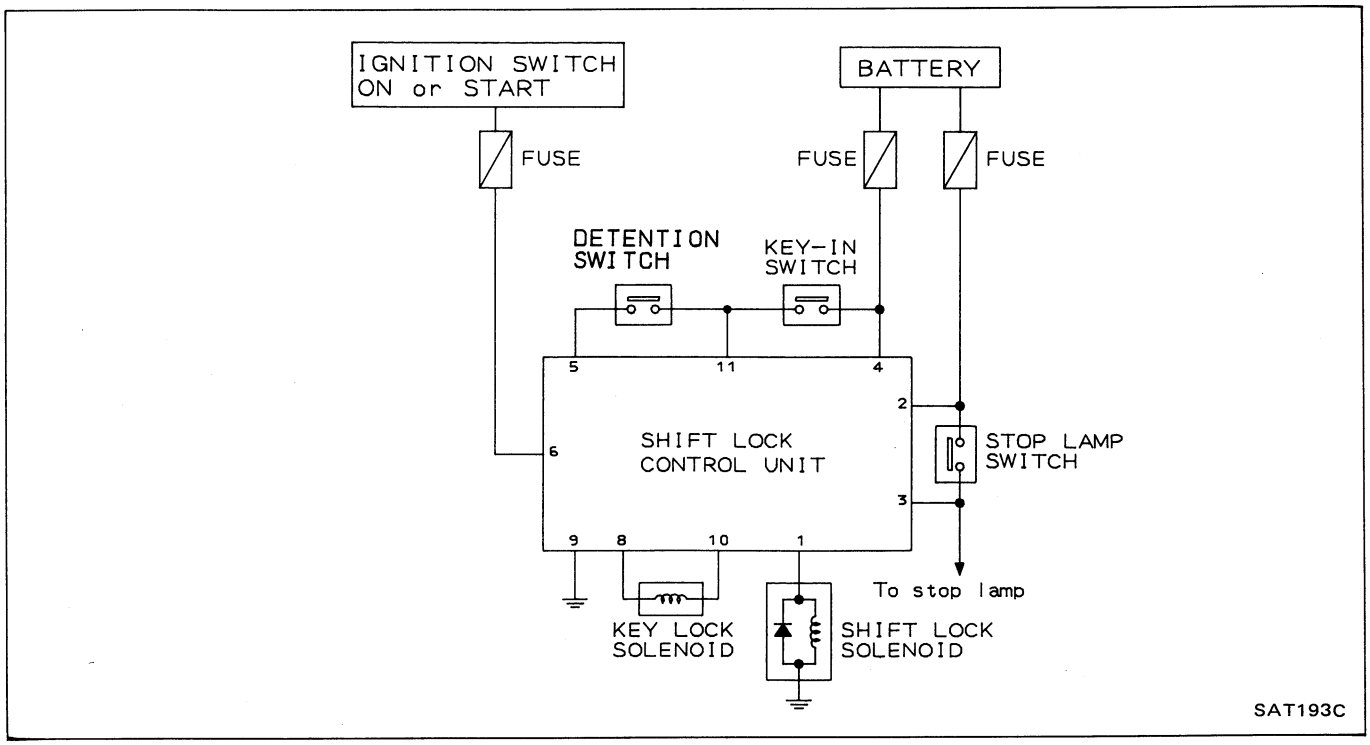

Wiring Diagram

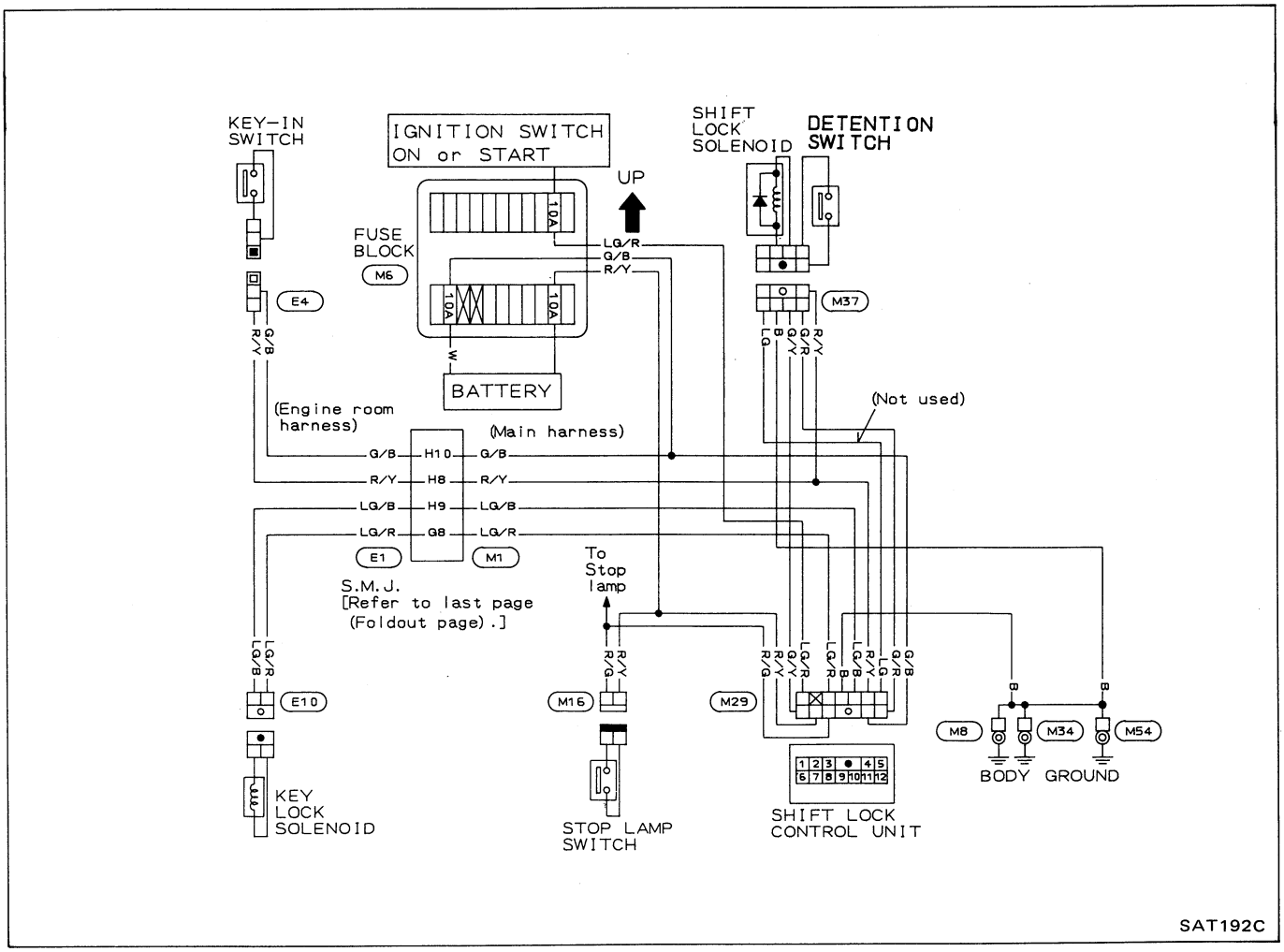

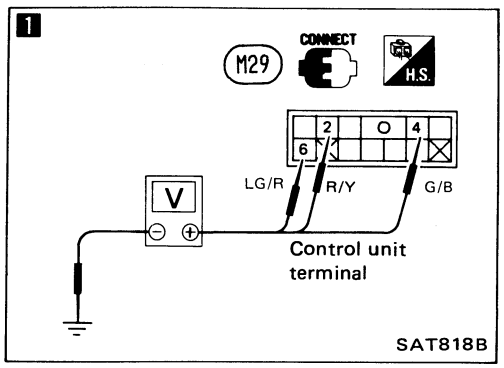

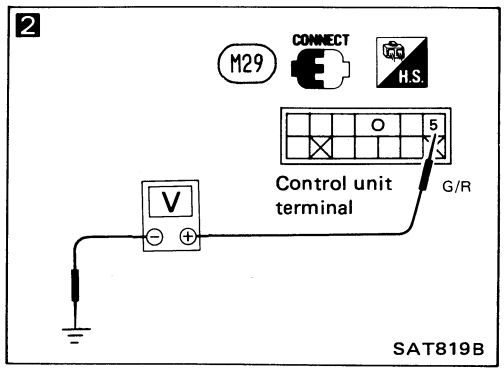

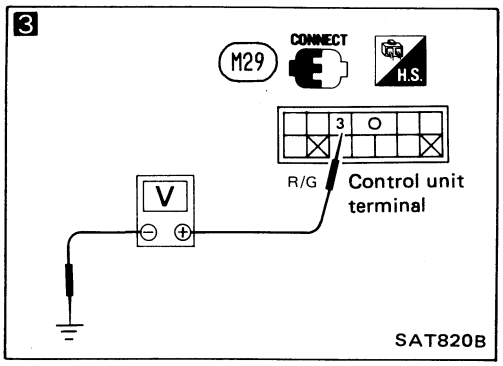

Trouble Diagnoses

DIAGNOSTIC PROCEDURE 1

SYMPTOM:

Selector lever cannot be moved from "P" range when applying brake pedal or can be moved when releasing brake pedal.

1

CHECK POWER SOURCE.

1.

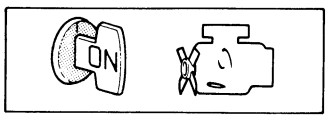

2. Check voltage between control unit terminals ②, ④, ⑥ and ground.
Battery voltage should exist.

N.G. → Check the following items:
- Harness continuity between battery and control unit
- Fuse
- Ignition switch

2

CHECK INPUT SIGNAL (Detention switch).

1.

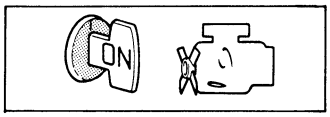

2. Check voltage between control unit terminal ⑤ and ground while setting selector lever in "P" position.

Selector lever release button	Voltage
Not pressed	Battery voltage

N.G. → Check the following items:
- Detention switch – Refer to "COMPONENT CHECK".
- Key switch – Refer to "COMPONENT CHECK".
- Harness continuity between detention switch and control unit.

3

CHECK INPUT SIGNAL (Stop lamp switch).

1.

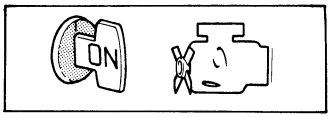

2. Check voltage between control unit terminal ③ and ground while applying brake pedal.
Battery voltage should exist.

N.G. → Check the following items:
- Stop lamp switch
- Harness continuity between stop lamp switch and control unit

O.K. → Ⓐ

Trouble Diagnoses (Cont'd)

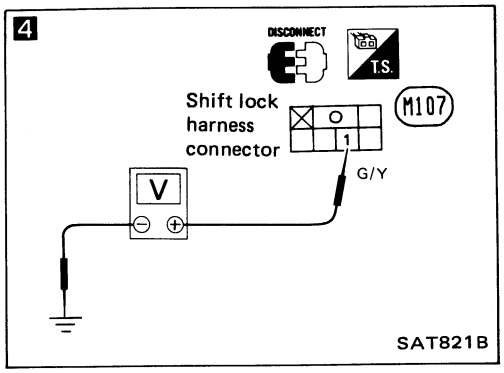

Ⓐ

4

CHECK OUTPUT SIGNAL.

1. 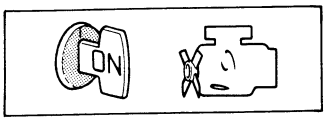

2. Check voltage between shift lock harness connector terminal ① and ground while setting selector lever in "P" position.

Brake pedal	Voltage
Release	Battery voltage
Depress	0V

N.G. → Check harness continuity between control unit and shift lock solenoid.

O.K. ↓

Check shift lock solenoid. (Refer to "COMPONENT CHECK".)

N.G. → Replace A/T shift lock control device assembly.

O.K. ↓

1. Perform control unit input/output signal inspection test.
2. If N.G., recheck harness connector connection.

Trouble Diagnoses (Cont'd)

DIAGNOSTIC PROCEDURE 2

SYMPTOM:

Ignition key cannot be removed when selector lever is set to "P" position or can be removed when selector lever is set to any position except "P".

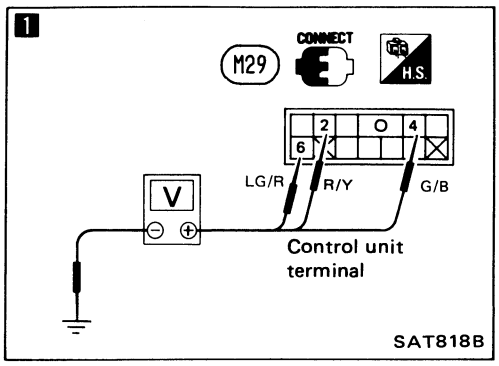

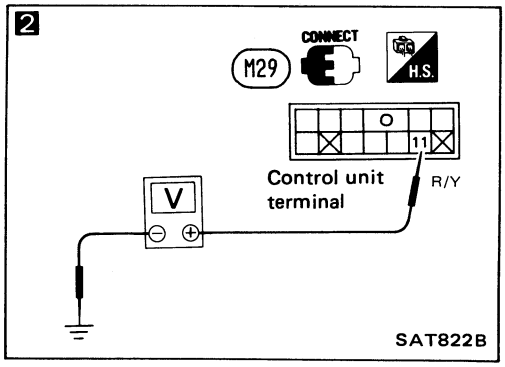

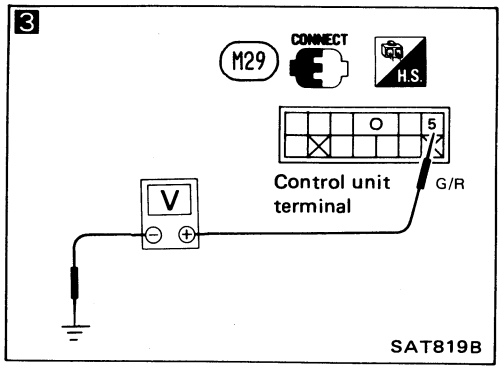

1 CHECK POWER SOURCE.

1.

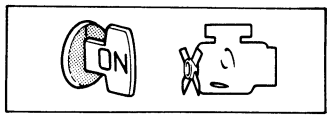

2. Check voltage between control unit terminals ②, ④, ⑥ and ground.
   Battery voltage should exist.

N.G. → Check the following items:
- Harness continuity between battery and control unit
- Fuse
- Ignition switch

O.K. ↓

2 CHECK INPUT SIGNAL (Key switch).

1. Insert ignition key into ignition switch.
2. Check voltage between control unit terminal ⑪ and ground.
   Battery voltage should exist.

N.G. → Check the following items:
- Key switch – Refer to "COMPONENT CHECK".
- Harness continuity between key switch and control unit.

O.K. ↓

3 CHECK INPUT SIGNAL (Detention switch).

1.

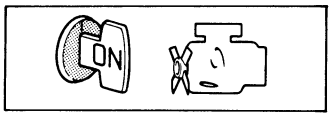

2. Check voltage between control unit terminal ⑤ and ground while setting selector lever in "P" position.

Selector lever release button	Voltage
Release	Battery voltage

3. Check voltage between control unit terminal ⑤ and ground while setting selector lever in any position except "P".
   0V

N.G. → Check the following items:
- Detention switch – Refer to "COMPONENT CHECK".
- Harness continuity between detention switch and control unit.

O.K. ↓

Ⓐ

Trouble Diagnoses (Cont'd)

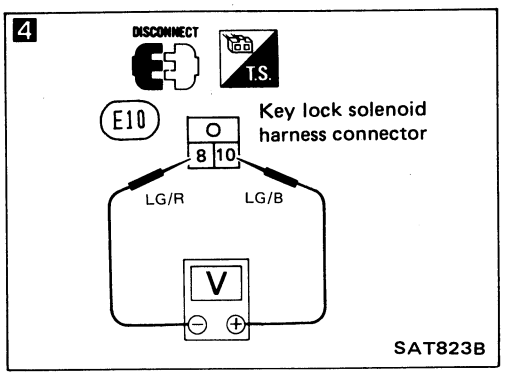

Ⓐ

4

CHECK OUTPUT SIGNAL.

1. 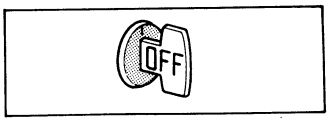

2. Check voltage between terminals ⑧ and ⑩ of key lock solenoid harness connector when turning detention switch ON and OFF.
Battery voltage is momentarily produced.
(Refer to "SHIFT LOCK CONTROL UNIT INSPECTION TABLE".)

N.G. → Check harness continuity between control unit and key lock solenoid.

O.K. ↓

Check key lock solenoid. (Refer to "COMPONENT CHECK".)

N.G. → Replace key lock solenoid.

O.K. ↓

1. Perform control unit input/output signal inspection test.
2. If N.G., recheck harness connector connection.

Trouble Diagnoses (Cont'd)

SHIFT LOCK CONTROL UNIT INSPECTION

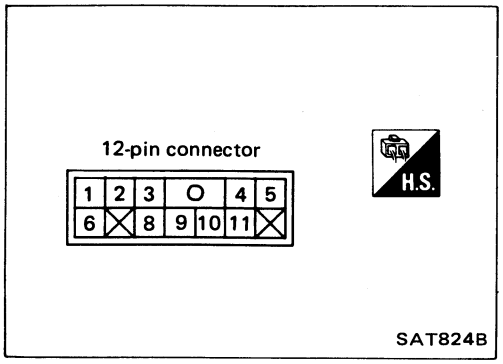

- Measure voltage between each terminal and terminal ⑨ by following "SHIFT LOCK CONTROL UNIT INSPECTION TABLE".
- Pin connector terminal layout.

Trouble Diagnoses (Cont'd)

SHIFT LOCK CONTROL UNIT INSPECTION TABLE
(Data are reference values.)

Terminal No. ⊕	Terminal No. ⊖	Item	Condition		Judgement standard
1	9	Shift lock signal	ON	When setting selector lever in "P" position and releasing brake pedal	Battery voltage
			Except above		0V
2		Power source	OFF		Battery voltage
3		Stop lamp switch	When depressing brake pedal		Battery voltage
			When releasing brake pedal		0V
4		Power source	OFF		Battery voltage
5		Detention switch	When setting selector lever in "P" position and releasing selector lever release button		Battery voltage
			When setting selector lever in "P" position and pushing selector lever release button		0V
6		Ignition signal	ON		Battery voltage
8	10	Key lock signal	When turning detention switch OFF with ignition switch set to LOCK, OFF or ACC		Battery voltage (Approximately 0.1 seconds)
			Except above		0V
9	–	Ground	–		–
10	8	Key unlock signal	When turning detention switch ON with ignition switch set to LOCK, OFF or ACC		Battery voltage (Approximately 0.1 seconds)
			Except above		0V
11	9	Key switch	When inserting key to key cylinder		Battery voltage
			When removing key from key cylinder		0V

Trouble Diagnoses (Cont'd)

COMPONENT CHECK

Shift lock solenoid

- Check operation by applying battery voltage to shift lock harness connector.

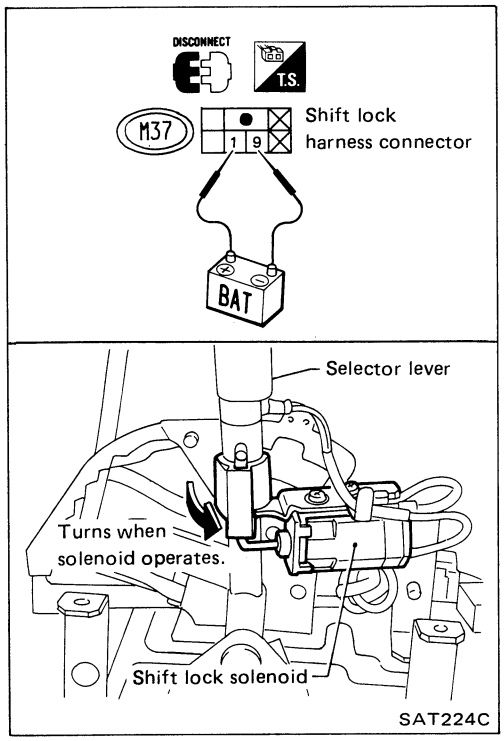

Detention switch

- Check continuity between terminals ⑤ and ⑪ of shift lock harness connector.

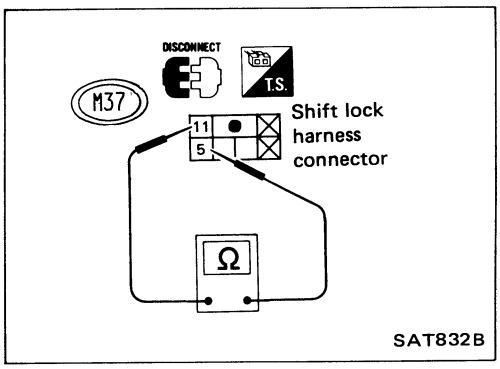

Condition	Continuity
When setting shift lever to "P" position with release button released.	Yes
Except the above	No

Key lock solenoid

- Check operation by applying battery voltage to key lock solenoid harness connector.

Operating sound must be emitted.

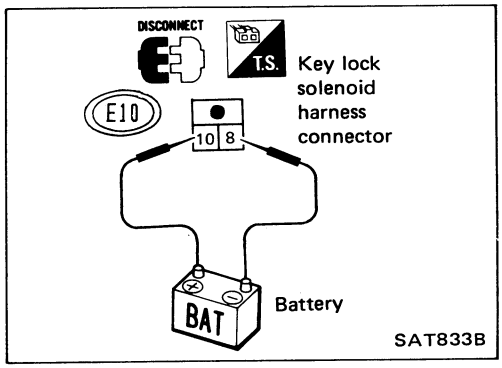

Key switch

- Check continuity between terminals ④ and ① of key switch harness connector.

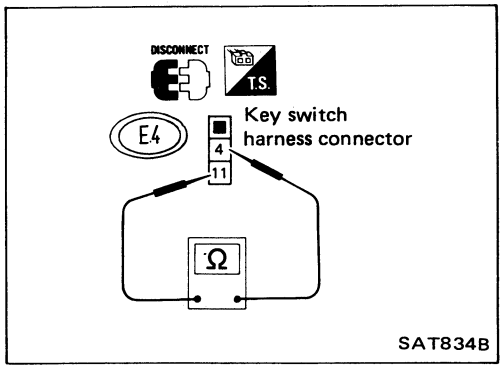

Condition	Continuity
When inserting key into key cylinder	Yes
When removing key from key cylinder	No

General Specifications

Vehicle model	2WD	4WD
Engine model	KA24E	
Automatic transaxle model	RL4F02A	
Automatic transaxle assembly Model code number	23 x 23	23 x 63
Transaxle gear ratio 1st 2nd 3rd 4th Reverse	 2.785 1.545 1.000 0.694 2.272	
Final drive (Center differential gear)	3.876	4.133
Recommended oil	Automatic transmission fluid Type DEXRON™	
Oil capacity (Approximately) ℓ (US qt, Imp qt)	7.4 (7-7/8, 6-1/2)	

Specifications and Adjustment

CLUTCHES AND BRAKES

High clutch		
Number of drive plates	4	
Number of driven plates	3+1	
Thickness of drive plate mm (in)		
Standard	1.6 (0.063)	
Allowable limit	1.4 (0.055)	
Clearance mm (in)		
Standard	1.4 - 1.8 (0.055 - 0.071)	
Allowable limit	2.6 (0.102)	
Thickness of retaining plate	Thickness mm (in)	Part number
	3.6 (0.142)	31537-41X61
	3.8 (0.150)	31537-41X62
	4.0 (0.157)	31537-41X63
	4.2 (0.165)	31537-41X64
	4.4 (0.173)	31537-41X65
	4.6 (0.181)	31537-41X66
	4.8 (0.189)	31537-41X67
	5.0 (0.197)	31537-41X68
Low clutch		
Number of drive plates	6	
Number of driven plates	5	
Thickness of drive plate mm (in)		
Standard	2.0 (0.079)	
Allowable limit	1.8 (0.071)	
Clearance mm (in)		
Standard	0.5 - 0.8 (0.020 - 0.031)	
Allowable limit	1.8 (0.071)	
Thickness of retaining plate	Thickness mm (in)	Part number
	4.8 (0.189)	31597-21X00
	5.0 (0.197)	31597-21X01
	5.2 (0.205)	31597-21X02
	5.4 (0.213)	31597-21X03
	5.6 (0.220)	31597-21X04
	5.8 (0.228)	31597-21X05
	6.0 (0.236)	31597-21X06

Reverse clutch		
Number of drive plates	2	
Number of driven plates	2	
Thickness of drive plate mm (in)		
Standard	2.0 (0.079)	
Allowable limit	1.8 (0.071)	
Clearance mm (in)		
Standard	0.5 - 0.8 (0.020 - 0.031)	
Allowable limit	1.2 (0.047)	
Thickness of retaining plate	Thickness mm (in)	Part number
	4.6 (0.181)	31537-21X60
	4.8 (0.189)	31537-21X61
	5.0 (0.197)	31537-21X62
	5.2 (0.205)	31537-21X63
	5.4 (0.213)	31537-21X64
Low & reverse brake		
Number of drive plates	6	
Number of driven plates	6	
Thickness of drive plate mm (in)		
Standard	2.0 (0.079)	
Allowable limit	1.8 (0.071)	
Clearance mm (in)		
Standard	1.2 - 1.6 (0.047 - 0.063)	
Allowable limit	3.8 (0.150)	
Thickness of retaining plate	Thickness mm (in)	Part number
	3.4 (0.134)	31667-23X00
	3.6 (0.142)	31667-23X01
	3.8 (0.150)	31667-23X02
	4.0 (0.157)	31667-23X03
	4.2 (0.165)	31667-23X04
	4.4 (0.173)	31667-23X05
	4.6 (0.181)	31667-23X06
	4.8 (0.189)	31667-23X07
	5.0 (0.197)	31667-23X08
Brake band		
Piston size mm (in)		
Big dia.	75 (2.95)	
Small dia.	43 (1.69)	
Anchor end pin tightening torque N·m (kg-m, ft-lb)	4 - 6 (0.4 - 0.6, 2.9 - 4.3)	
Number of returning revolutions for anchor end pin	5.25	
Lock nut tightening torque N·m (kg-m, ft-lb)	31 - 42 (3.2 - 4.3, 23 - 31)	

Specifications and Adjustment (Cont'd)

PLANETARY CARRIER

Unit: mm (in)

	Front carrier	Rear carrier
Clearance between pinion washer and planetary carrier Standard	0.15 - 0.70 (0.0059 - 0.0276)	0.20 - 0.70 (0.0079 - 0.0276)
Allowable limit	0.80 (0.0315)	

OIL PUMP, BEARING RETAINER AND OUTPUT SHAFT

Unit: mm (in)

Oil pump clearance	
Cam ring — oil pump cover	
Standard	**0.010 - 0.024 (0.0004 - 0.0009)**
Allowable limit	**0.034 (0.0013)**
Rotor — oil pump cover	
Standard	0.017 - 0.031 (0.0007 - 0.0012)
Allowable limit	**0.034 (0.0013)**
Vane — oil pump cover	
Standard	0.017 - 0.031 (0.0007 - 0.0012)
Allowable limit	**0.034 (0.0013)**
Seal ring clearance	
Standard	**0.10 - 0.25 (0.0039 - 0.0098)**
Allowable limit	**0.25 (0.0098)**

TOTAL END PLAY

Total end play	**0.25 - 0.55 mm (0.0098 - 0.0217 in)**	
Thickness of oil pump housing bearing race	**Thickness mm (in)**	**Part number**
	0.8 (0.031)	**31429-21X00**
	1.0 (0.039)	**31429-21X01**
	1.2 (0.047)	**31429-21X02**
	1.4 (0.055)	**31429-21X03**
	1.6 (0.063)	**31429-21X04**
	1.8 (0.071)	**31429-21X05**
	2.0 (0.079)	**31429-21X06**

CLUTCH PACK END PLAY

Clutch pack end play	**0.4 - 0.8 mm (0.016 - 0.031 in)**	
Thickness of clutch pack thrust washer	**Thickness mm (in)**	**Part number**
	0.7 (0.028)	**31528-21X00**
	0.9 (0.035)	**31528-21X01**
	1.1 (0.043)	**31528-21X02**
	1.3 (0.051)	**31528-21X03**
	1.5 (0.059)	**31528-21X04**
	1.7 (0.067)	**31528-21X05**
	1.9 (0.075)	**31528-21X06**

DIFFERENTIAL SIDE GEAR THRUST WASHER

2WD

Allowable clearance between side gear and differential case with washer	0.1 - 0.2 mm (0.004 - 0.008 in)
Thickness mm(in)	Part number
0.75 - 0.80 (0.0295 - 0.0315)	38424-E3000
0.80 - 0.85 (0.0315 - 0.0335)	38424-E3001
0.85 - 0.90 (0.0335 - 0.0354)	38424-E3002
0.90 - 0.95 (0.0354 - 0.0374)	38424-E3003

4WD (L.H. side gear)

Allowable clearance between side gear and viscous coupling with washer	0.03 - 0.14 mm (0.0012 - 0.0055 in)
Thickness mm (in)	Part number
0.63 (0.0248)	38424-56E00
0.72 (0.0283)	38424-56E01
0.81 (0.0319)	38424-56E02
0.90 (0.0354)	38424-56E03

4WD (R.H. side gear)

Allowable clearance between side gear and differential case with washer	0.02 - 0.08 mm (0.0008 - 0.0031 in)
Thickness mm (in)	Part number
0.75 - 0.80 (0.0295 - 0.0315)	38724-56E00
0.80 - 0.85 (0.0315 - 0.0335)	38724-56E01
0.85 - 0.90 (0.0335 - 0.0354)	38724-56E02
0.90 - 0.95 (0.0354 - 0.0374)	38724-56E03

Specifications and Adjustment (Cont'd)

DIFFERENTIAL SIDE BEARING PRELOAD

Differential side bearing adjusting shim (2WD)

Thickness mm (in)	Part number
0.12 (0.0047)	38453-21X13
0.16 (0.0063)	38453-21X14
0.20 (0.0079)	38453-21X15
0.24 (0.0094)	38453-21X16
0.28 (0.0110)	38453-21X17
0.32 (0.0126)	38453-21X18
0.36 (0.0142)	38453-21X19
0.40 (0.0157)	38453-21X20
0.44 (0.0173)	38453-21X00
0.48 (0.0189)	38453-21X01
0.52 (0.0205)	38453-21X02
0.56 (0.0220)	38453-21X03
0.60 (0.0236)	38453-21X04
0.64 (0.0252)	38453-21X05
0.68 (0.0268)	38453-21X06
0.72 (0.0283)	38453-21X07
0.76 (0.0299)	38453-21X08
0.80 (0.0315)	38453-21X09
0.84 (0.0331)	38453-21X10
0.88 (0.0346)	38453-21X11
0.92 (0.0362)	38453-21X12

Differential side bearing adjusting shim (4WD)

Thickness mm(in)	Part number
0.36 (0.0142)	38753-56E00
0.40 (0.0157)	38753-56E01
0.44 (0.0173)	38753-56E02
0.48 (0.0189)	38753-56E03
0.52 (0.0205)	38753-56E04
0.56 (0.0220)	38753-56E05
0.60 (0.0236)	38753-56E06
0.64 (0.0252)	38753-56E07
0.68 (0.0268)	38753-56E08
0.72 (0.0283)	38753-56E09
0.76 (0.0299)	38753-56E10
0.80 (0.0315)	38753-56E11
0.84 (0.0331)	38753-56E12
0.88 (0.0346)	38753-56E13
0.92 (0.0362)	38753-56E14

OUTPUT SHAFT PRELOAD

Output shaft preload adjusting shim

Thickness mm (in)	Part number
0.12 (0.0047)	31499-21X00
0.16 (0.0063)	31499-21X01
0.20 (0.0079)	31499-21X02
0.24 (0.0094)	31499-21X03
0.28 (0.0110)	31499-21X04
0.32 (0.0126)	31499-21X05
0.36 (0.0142)	31499-21X06
0.40 (0.0157)	31499-21X07
0.44 (0.0173)	31499-21X08
0.48 (0.0189)	31499-21X09
0.52 (0.0205)	31499-21X10
0.56 (0.0220)	31499-21X11
0.60 (0.0236)	31499-21X12
0.64 (0.0252)	31499-21X13
0.68 (0.0268)	31499-21X14
0.72 (0.0283)	31499-21X15
0.76 (0.0299)	31499-21X16
0.80 (0.0315)	31499-21X17
0.84 (0.0331)	31499-21X18
0.88 (0.0346)	31499-21X19
0.92 (0.0362)	31499-21X20
1.44 (0.0567)	31499-21X21
1.96 (0.0772)	31499-21X22

IDLER GEAR PRELOAD

Idler gear preload adjusting shim

Thickness mm (in)	Part number
0.36 (0.0142)	31499-21X06
0.40 (0.0157)	31499-21X07
0.44 (0.0173)	31499-21X08
0.48 (0.0189)	31499-21X09
0.52 (0.0205)	31499-21X10
0.56 (0.0220)	31499-21X11
0.60 (0.0236)	31499-21X12
0.64 (0.0252)	31499-21X13
0.68 (0.0268)	31499-21X14
0.72 (0.0283)	31499-21X15
0.76 (0.0299)	31499-21X16
0.80 (0.0315)	31499-21X17
0.84 (0.0331)	31499-21X18
0.88 (0.0346)	31499-21X19
0.92 (0.0362)	31499-21X20
1.44 (0.0567)	31499-21X21
1.96 (0.0772)	31499-21X22

Specifications and Adjustment (Cont'd)

PARKING PAWL

Clearance "L"	0.27 - 0.61 mm (0.0106 - 0.0240 in)
Identification letter	Part number
D E F	31989-21X00 31989-21X01 31989-21X02

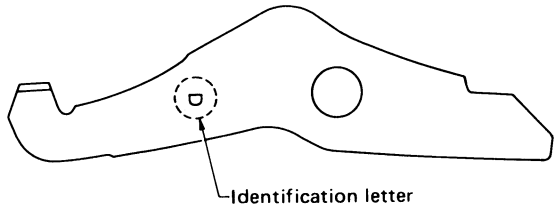

SAT914

REMOVAL AND INSTALLATION

Throttle wire Stroke "L"	39 - 43 mm (1.54 - 1.69 in)
Number of returning revolution for lock nut	2.75 - 3.25
Lock nut tightening torque	8 - 10 N·m (0.8 - 1.0 kg-m, 5.8 - 7.2 ft-lb)
Distance between end of clutch housing and torque converter	19.0 mm (0.748 in) or more
Drive plate runout limit	0.5 mm (0.020 in)

TRANSFER

SECTION TF

CONTENTS

PREPARATION ..... TF- 2
ON-VEHICLE SERVICE ..... TF- 7
REMOVAL AND INSTALLATION ..... TF- 8
MAJOR OVERHAUL TF-10
PRE-DISASSEMBLY INSPECTION TF-12
TOOTH CONTACT TF-15
DISASSEMBLY TF-17
REPAIR FOR COMPONENT PARTS TF-19
ADJUSTMENT TF-30
ASSEMBLY TF-42
SERVICE DATA AND SPECIFICATIONS (S.D.S.) TF-44

SPECIAL SERVICE TOOLS

Tool number (Kent-Moore No.) Tool name	Description	
ST3127S000 (See J25765-A) Preload gauge ① GG91030000 (J25765-A) Torque wrench ② HT62940000 (–) Socket adapter ③ HT62900000 (–) Socket adapter	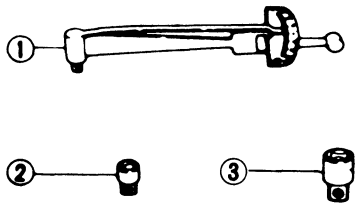	Measuring pinion bearing preload
ST38060002 (J34311) Pinion flange wrench	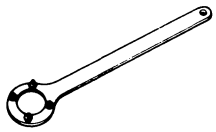	Removing and installing pinion nut
ST30021000 (J22912-01) Puller	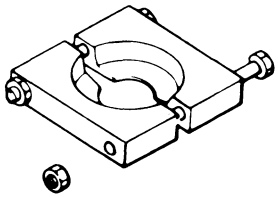	Removing hypoid gear, hypoid gear bearing and countershaft bearing
ST33051001 (–) Puller	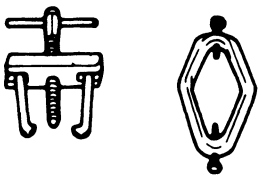	Removing ring gear bearing (R.H. side)
ST33290001 (J34286) Puller		Removing front cover oil seal, pinion oil seal, drive shaft oil seal and hypoid gear bearing outer race
ST33230000 (J35867, J25742-1) Drift	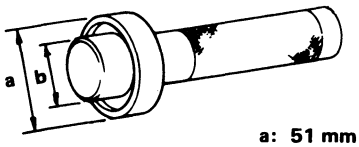 a: 51 mm (2.01 in) dia. b: 28.5 mm (1.122 in) dia.	Installing drive shaft oil seal
KV38100300 (–) Drift	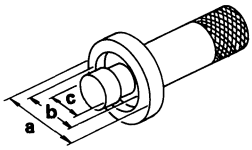 a: 56 mm (2.20 in) dia. b: 50 mm (1.97 in) dia. c: 36 mm (1.42 in) dia.	Installing hypoid gear bearing

Tool number (Kent-Moore No.) Tool name	Description	
ST30613000 ① (J35870) ② (J35868) Drift	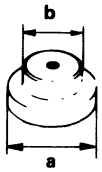 a: 72 mm (2.83 in) dia. b: 48 mm (1.89 in) dia.	① Installing ring gear oil seal. (Use with KV40101630.) ② Installing pinion rear bearing outer race
KV40101630 (J35870) Drift	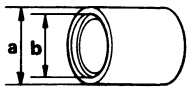 a: 68 mm (2.68 in) dia. b: 61 mm (2.40 in) dia.	Installing ring gear oil seal (Use with ST30613000.)
KV40100621 ① (J25273) ② (J35868) Drift	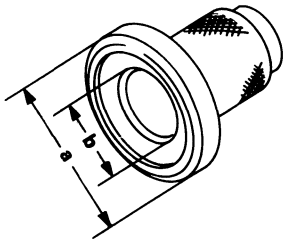 a: 76 mm (2.99 in) dia. b: 69 mm (2.72 in) dia.	① Installing pinion oil seal ② Installing ring gear bearing (R.H. side)
KV38104100 ① (–) ② (J35871) Drift	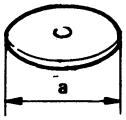 a: 54 mm (2.13 in) dia.	① Removing and installing ring gear bearing ② Installing hypoid gear bearing inner race
ST33061000 (J8107-2) Drift	 a: 28.5 mm (1.122 in) dia. b: 38 mm (1.50 in) dia.	Removing hypoid gear bearing
ST37750000 (J25863-01) Drift	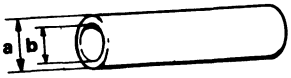 a: 40 mm (1.57 in) dia. b: 31 mm (1.22 in) dia.	Installing countershaft bearing inner race
ST30621000 ① (J35869) ② (J25742-5) Drift	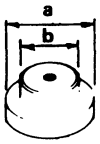 a: 79 mm (3.11 in) dia. b: 59 mm (2.32 in) dia.	① Installing hypoid gear bearing outer race (Use with ST30611000.) ② Installing pinion front bearing outer race

Tool number (Kent-Moore No.) Tool name	Description
ST30611000 (J25742-1) Drift	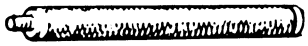 Installing hypoid gear bearing outer race (Use with ST30621000.)
ST30901000 (J26010-01) Drift	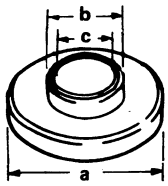 Installing pinion front bearing inner race a: 79 mm (3.11 in) dia. b: 45 mm (1.77 in) dia. c: 35 mm (1.38 in) dia.
ST33200000 (J26082) Drift	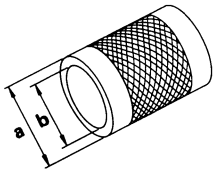 Installing hypoid gear (Use with KV38102510.) Installing companion flange a: 60 mm (2.36 in) dia. b: 44.5 mm (1.752 in) dia.
KV38102510 (–) Drift	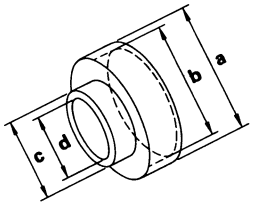 Installing hypoid gear (Use with ST33200000.) a: 71 mm (2.80 in) dia. b: 65 mm (2.56 in) dia. c: 55 mm (2.17 in) dia. d: 45 mm (1.77 in) dia.
(J34286) Puller	Removing hypoid gear bearing outer race
(J35866) Drift	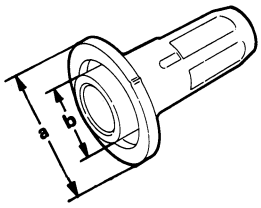 Installing front cover oil seal a: 95 mm (3.74 in) dia. b: 58 mm (2.28 in) dia.
(J35864) Drift	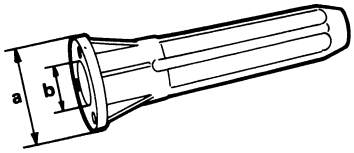 Installing shift shaft oil seal a: 34.6 mm (1.362 in) dia. b: 15.1 mm (0.594 in) dia.

Tool number (Kent-Moore No.) Tool name	Description	
(J34108) Puller	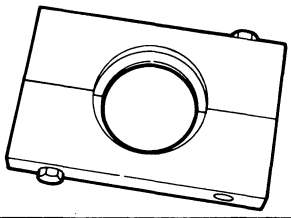	Removing pinion front bearing inner race
(J35865) Transfer case holding fixture	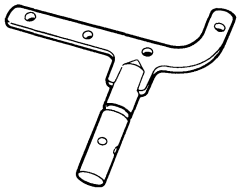	Holding transfer case (Use with J3289-20.)
(J3289-20) Bench mount fixture	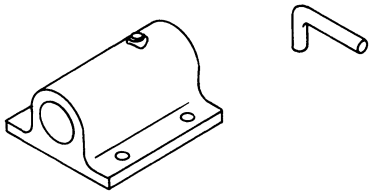	Holding transfer case (Use with J35865.)
(J34309) Differential shim selector	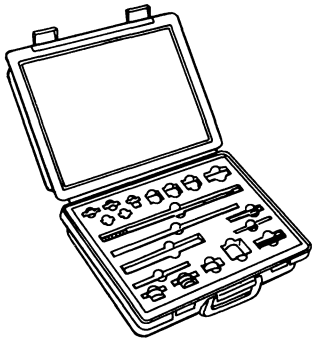	Selecting pinion sleeve shim
(J25269-18) Countershaft discs (2 Req'd)	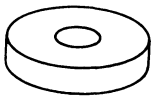	Selecting pinion sleeve shim
(J34291) Shim setting gauge set	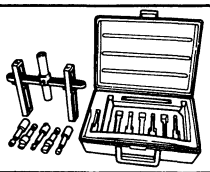	Selecting countershaft shim and hypoid gear shim
(J34291-15) Plunger-shim setting gauge	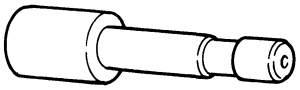	Selecting countershaft shim and hypoid gear shim

COMMERCIAL SERVICE TOOL

Tool name	Description
Puller	Removing ring gear bearing (L.H. side) 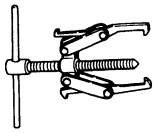

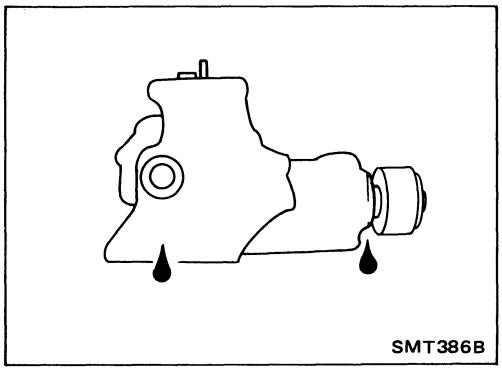

Checking Transfer Oil

- Check transfer oil for leakage.

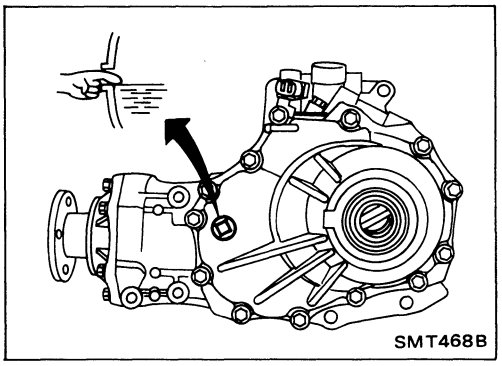

- Check oil level.

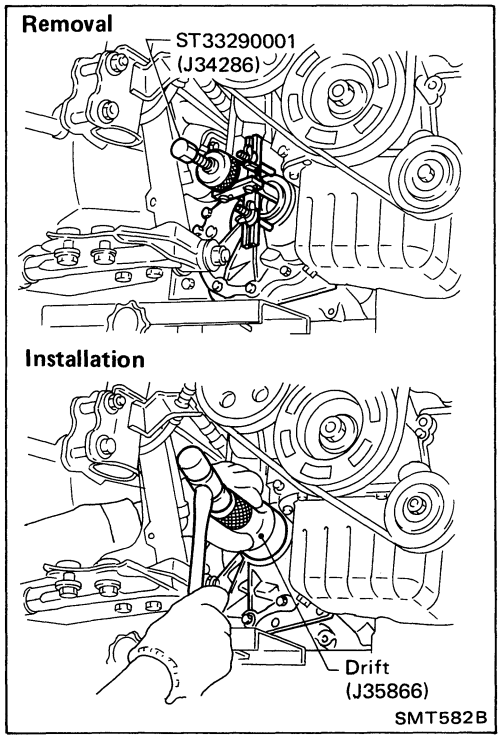

Replacing Oil Seal

FRONT COVER OIL SEAL

- Lubricate transfer front cover oil seal lips with multi-purpose grease before installing drive shaft.

Be careful not to damage transfer front cover oil seal when installing drive shaft.

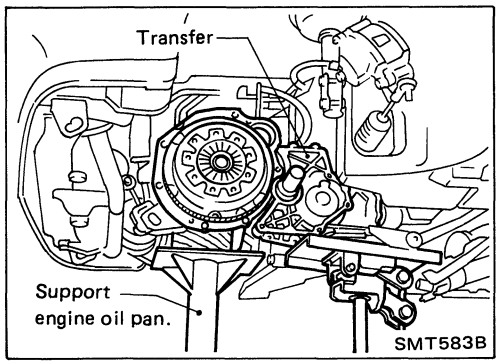

Removal

— M/T model —

1. Remove transfer breather clamp.
2. Support engine by placing a jack under oil pan.

CAUTION:

Do not place jack under oil pan drain plug.

3. Remove transaxle — Refer to section MT.
4. Lower transfer while supporting with jack.

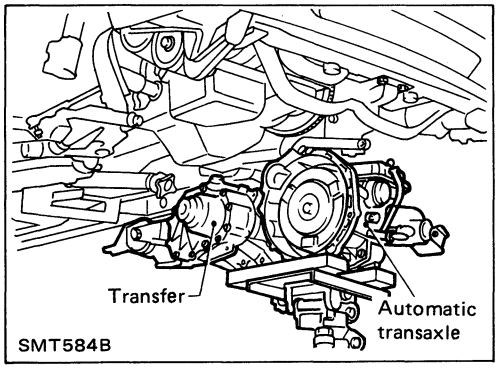

— A/T model —

- Remove and install transfer unit with transaxle. — Refer to section AT.

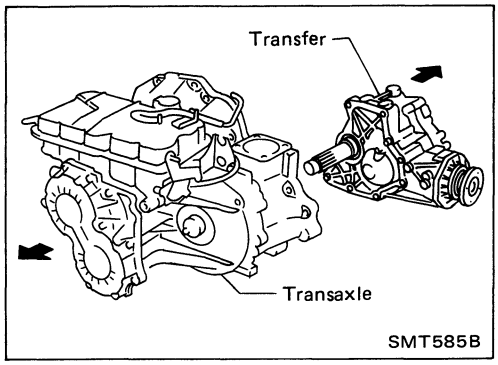

- Separate transfer from transaxle.

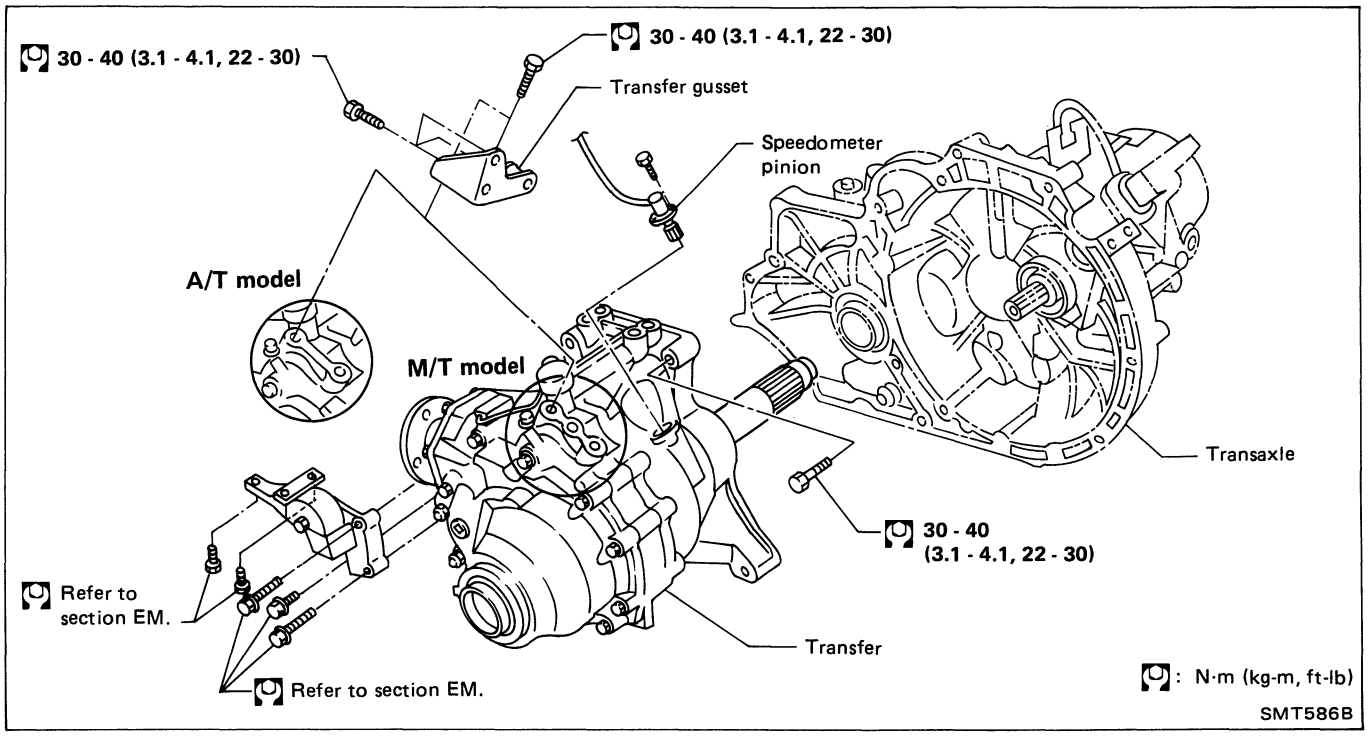

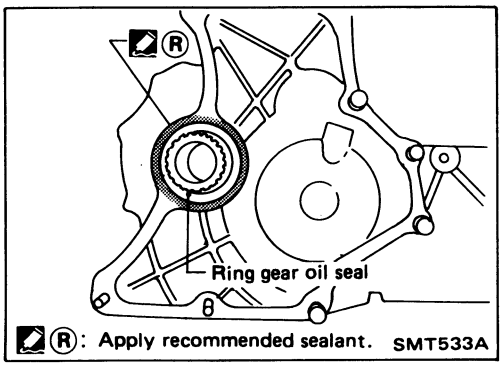

Installation

- Lubricate transfer side oil seal lip in transaxle and transfer front cover oil seal with multi-purpose grease before installing transfer and drive shaft.
- Apply recommended sealant on transfer case as shown at left.

  Recommended sealant:

  Nissan genuine part (KP510-00150) or equivalent
- **Be careful not to damage transaxle oil seal when inserting spline portion of transfer ring gear and connect shaft into transaxle.**

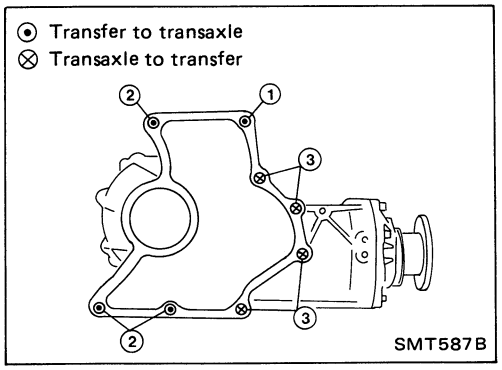

- Tighten bolt securing transfer.

Bolt No.	Tightening torque N·m (kg-m, ft-lb)	ℓ mm (in)
1	30 - 40 (3.1 - 4.1, 22 - 30)	65 (2.56)
2	30 - 40 (3.1 - 4.1, 22 - 30)	85 (3.35)
3	30 - 40 (3.1 - 4.1, 22 - 30)	65 (2.56)

- **Be careful not to damage drive shaft oil seal and transfer front cover oil seal when installing drive shaft.**
- Refill with recommended gear oil.

Gear oil for transfer is different from that for transaxle.

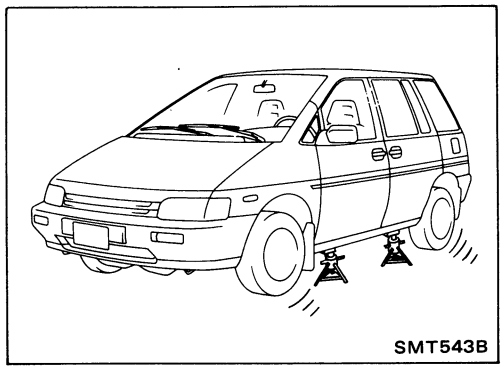

CAUTION:

Ensure transfer shift position is in 4WD after installing transfer unit on vehicle with the following procedures.

a. Jack up all wheels and drive vehicle at engine idle speed.

b. Check rear wheel revolution.

Be careful of rotating wheels.

WARNING:

Never drive vehicle with transfer unit in 2WD position.

Case and Shift Control Components

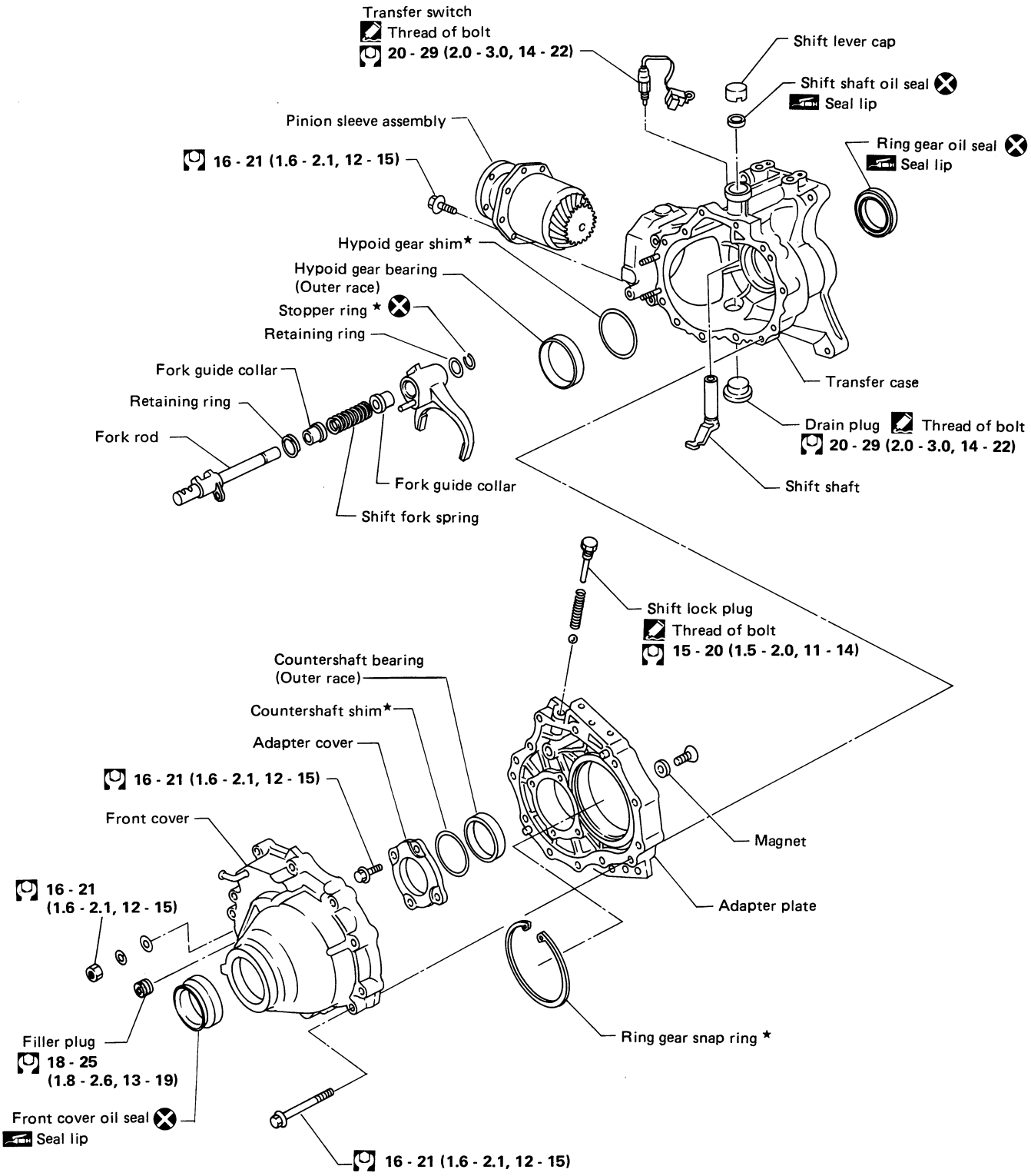

★ : Select with proper thickness.

: N·m (kg-m, ft-lb)

SMT588B

Gear Components

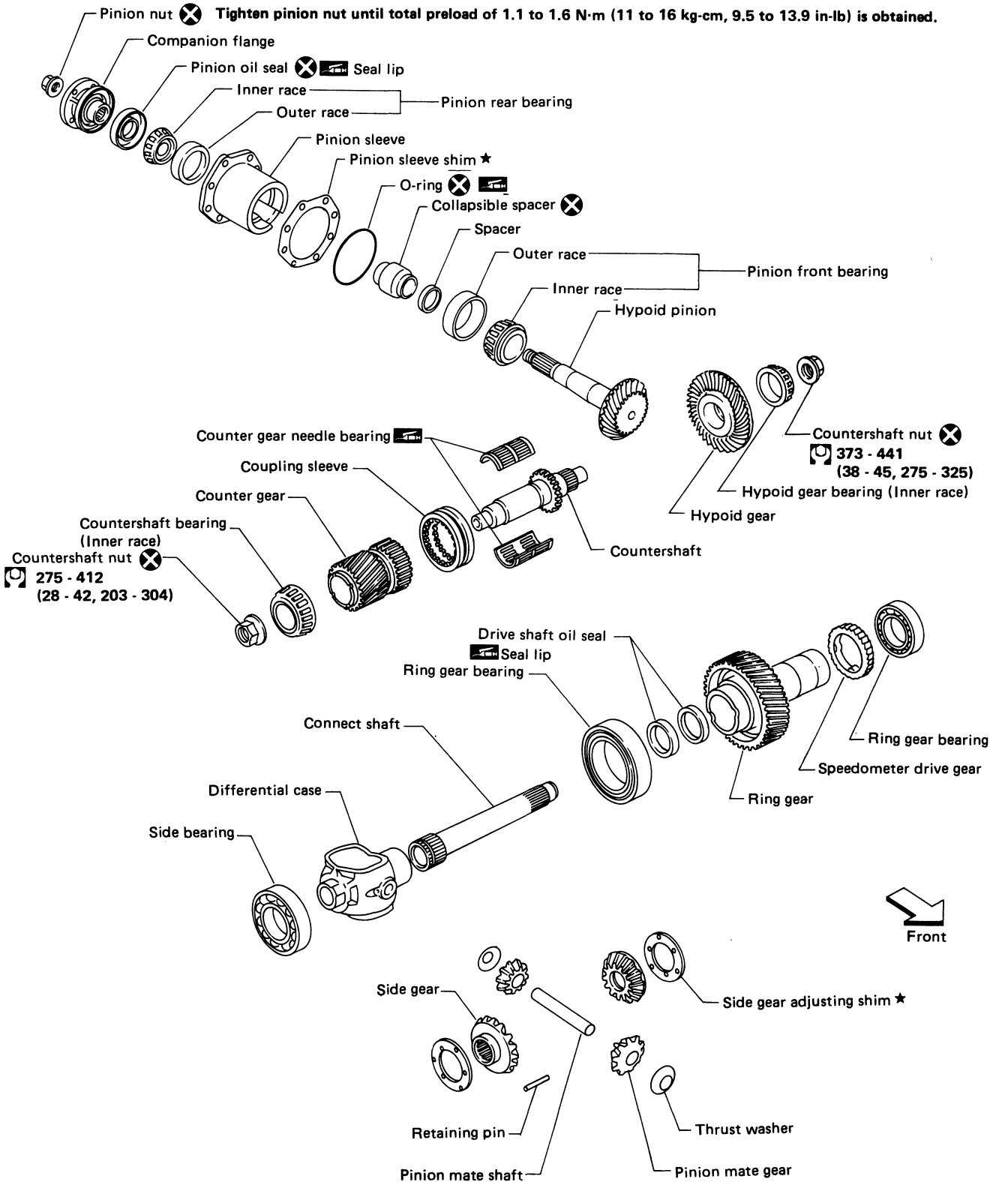

★: Select with proper thickness.

: N·m (kg-m, ft-lb)

SMT471B

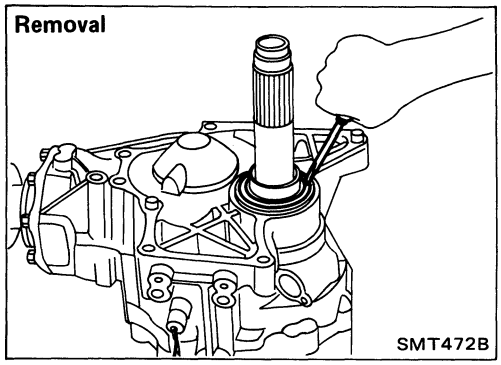

Oil seal

RING GEAR OIL SEAL

- Check ring gear oil seal for oil leakage.

Be careful not to damage ring gear when removing ring gear oil seal.

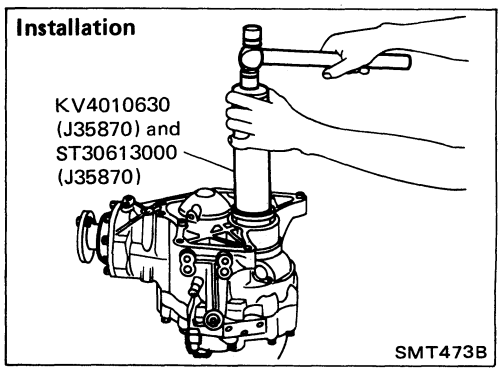

Apply multi-purpose grease to seal lip of oil seal before installing.

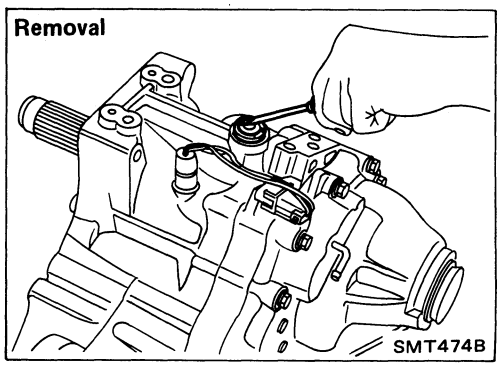

SHIFT SHAFT OIL SEAL

- Check shift shaft oil seal for leakage.

Be careful not to damage shift shaft when removing shift shaft oil seal.

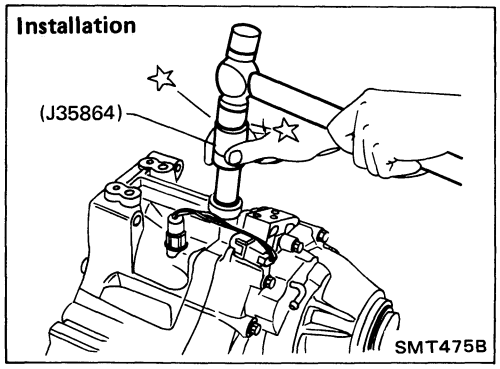

Apply multi-purpose grease to seal lip of oil seal before installing.

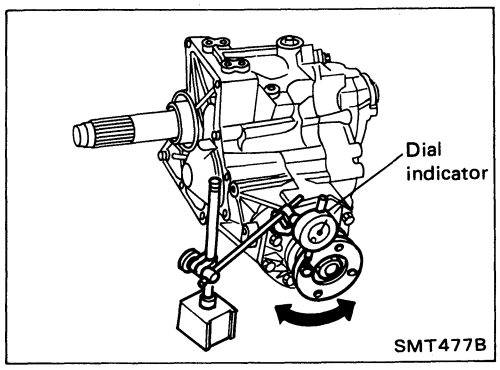

Gear Components

1. Check hypoid gear-to-pinion backlash.

a. Install a bolt and nut in one bolt hole of companion flange.

b. Measure hypoid gear-to-pinion backlash.

Hypoid gear-to-pinion backlash
(at bolt hole of companion flange):
0.10 - 0.15 mm (0.0039 - 0.0059 in)

c. If not within specification, adjust hypoid pinion height.

Gear Components (Cont'd)

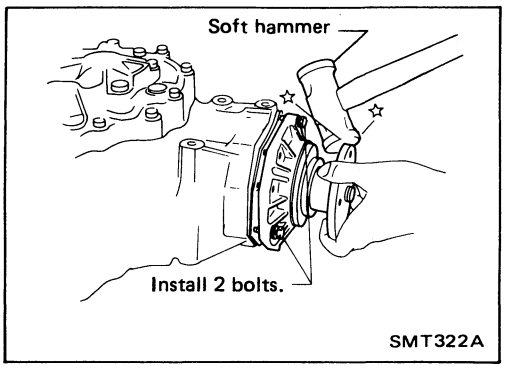

2. Remove pinion sleeve assembly by tapping.
Install 2 bolts through pinion sleeve and onto transfer case to prevent the pinion sleeve assembly from dropping. Do not tighten bolts.

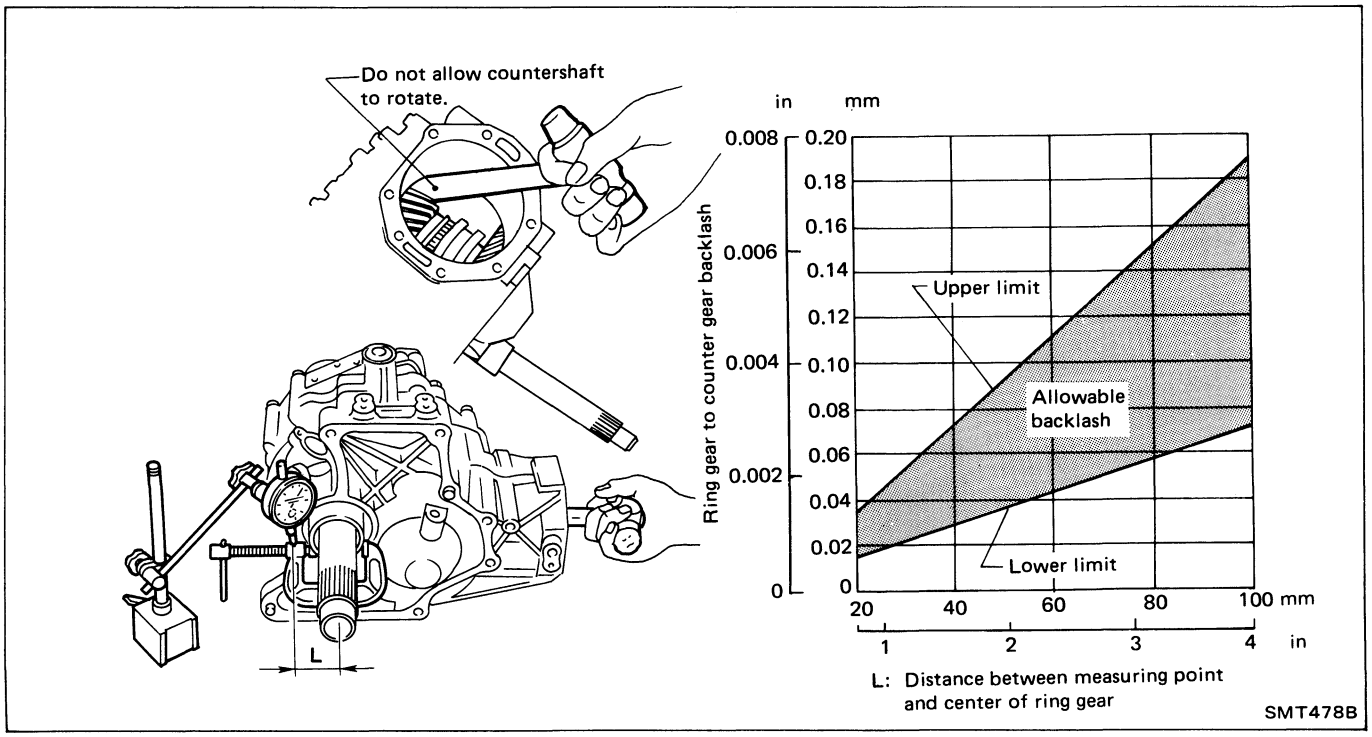

3. Check ring gear-to-counter gear backlash.
Ring gear-to-counter gear backlash:
0.02 - 0.04 mm (0.0008 - 0.0016 in)
If not within specification, disassemble and check transfer case, adapter plate, ring gear and countershaft components. Replace if necessary.

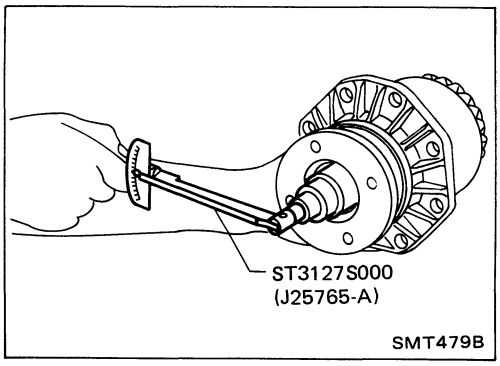

4. Check pinion bearing preload.
a. Turn hypoid pinion several times in both directions to seat bearings correctly.
b. Measure preload with Tool.
Pinion bearing preload:
1.1 - 1.6 N•m
(11 - 16 kg-cm, 9.5 - 13.9 in-lb)
If not within specification, disassemble and adjust it — Refer to "REPAIR FOR COMPONENT PARTS".

Gear Components (Cont'd)

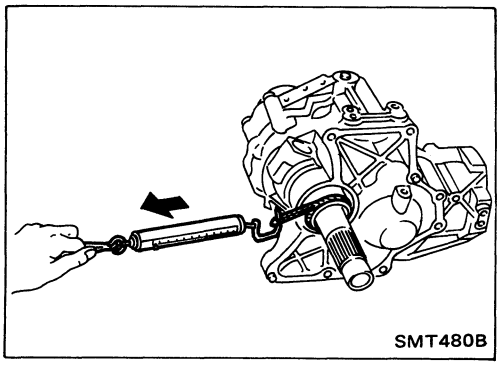

5. Check countershaft bearing preload.
a. Wind a strong line onto ring gear shaft.
b. Turn ring gear several times in both directions to seat bearing correctly.
c. Measure countershaft bearing preload.

   Countershaft bearing preload
   (at outer diameter of ring gear spline):
   88 - 235 N (9 - 24 kg, 20 - 53 lb)

   If not within specification, disassemble and adjust countershaft bearing preload — Refer to "ADJUSTMENT" and check countershaft, hypoid gear and ring gear bearings.
6. Check tooth contact — Refer to "TOOTH CONTACT".

Check the gear tooth contact pattern to verify correct contact of the hypoid gear and pinion.
A hypoid gear set not positioned properly may be noisy, have short life or both.

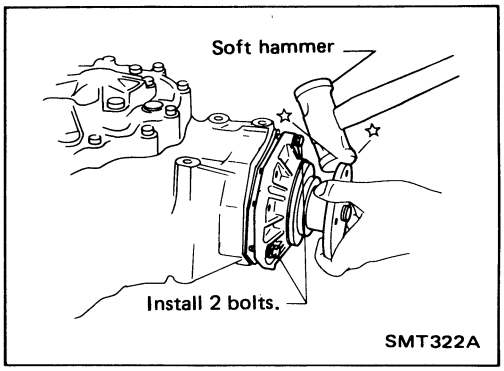

1. Remove pinion sleeve by lightly tapping.
Install 2 bolts through pinion sleeve and onto transfer case to prevent the pinion sleeve from dropping. Do not tighten bolts.
2. Thoroughly clean hypoid gear and pinion teeth.

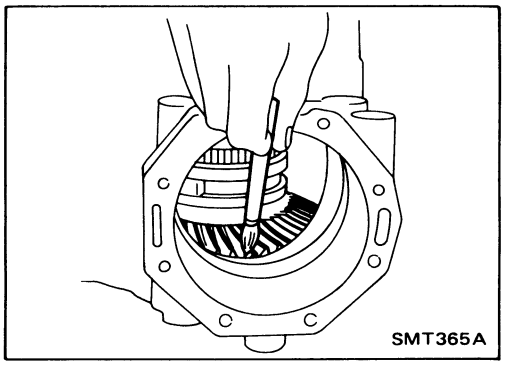

3. Sparingly apply a mixture of powdered ferric oxide and oil or equivalent to 3 or 4 teeth of hypoid gear.

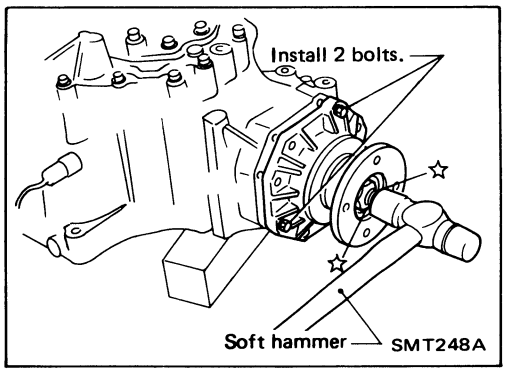

4. Install pinion sleeve shim and sleeve assembly.
- **Install 2 bolts through pinion sleeve and onto transfer case. Do not tighten bolts. These bolts will guide pinion sleeve into case.**
- **After installing pinion sleeve, tighten bolts to the specified torque.**

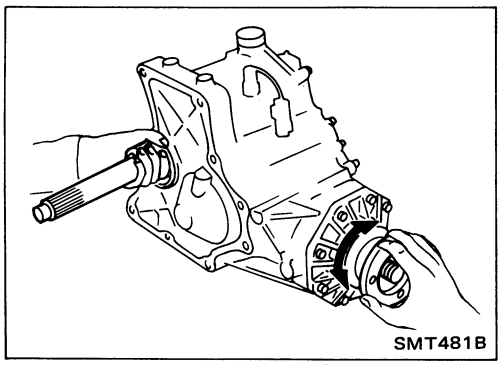

5. Hold ring gear spline steady by hand and rotate companion flange back and forth.
6. Remove pinion sleeve assembly.
7. Compare contact marks left on hypoid gear to those in the following illustration.

Tooth Pattern Interpretation

TOOTH PATTERN	
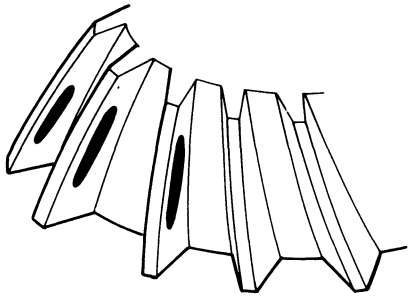 Correct Pattern SMT364A	After adjustment, check hypoid gear to pinion gear backlash – Refer to "PRE-DISASSEMBLY INSPECTION."
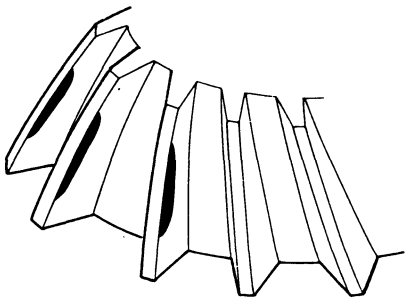 SMT464A	**Adjustment** 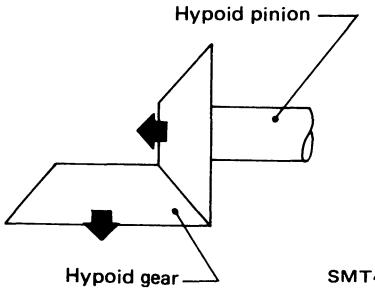 SMT469A
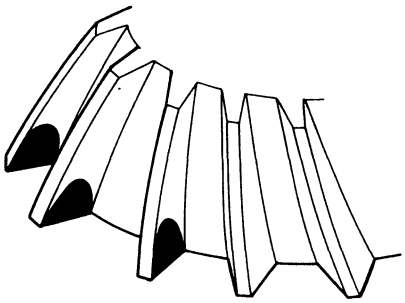 SMT465A	a. Increase thickness of countershaft shim and decrease thickness of hypoid gear shim. **Do not change total thickness of countershaft shim and hypoid gear shim.** b. Decrease thickness of pinion sleeve shim.
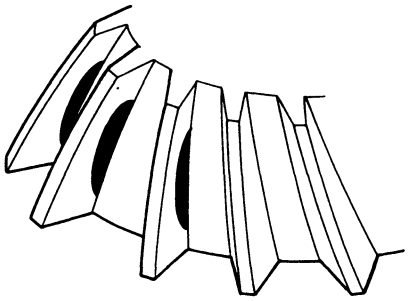 SMT466A	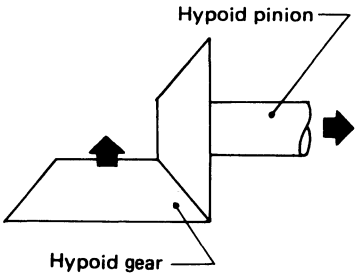 SMT468A
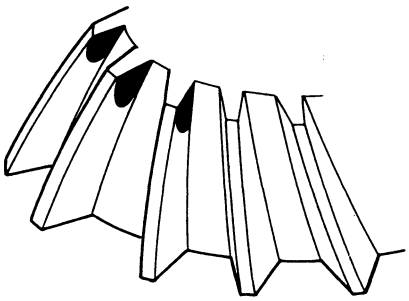 SMT467A	a. Increase thickness of hypoid gear shim and decrease thickness of countershaft shim. **Do not change total thickness of countershaft shim and ring gear shim.** b. Increase thickness of pinion sleeve shim.

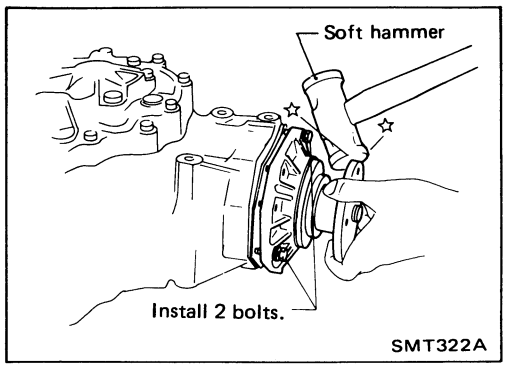

1. Remove pinion sleeve by lightly tapping.
Install 2 bolts through pinion sleeve and onto transfer case to prevent the pinion sleeve from dropping. Do not tighten bolts.

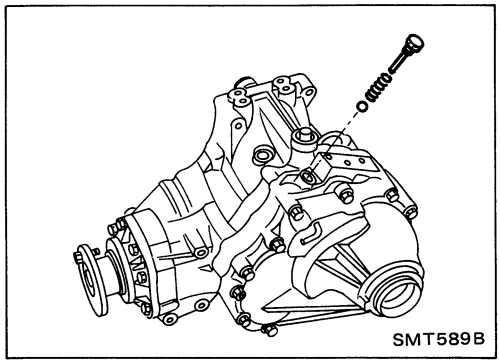

2. Remove shift lock plug, check ball and spring.

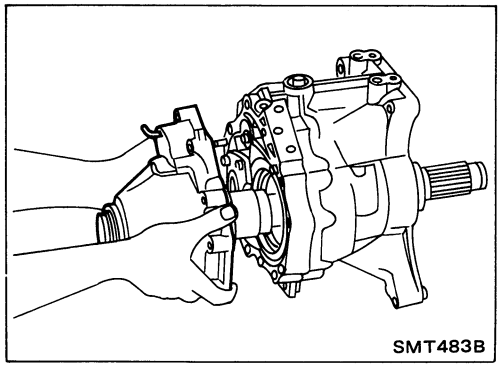

3. Remove all front cover bolts and then remove front cover with front differential by lightly tapping.

4. Remove adapter plate by lightly tapping.

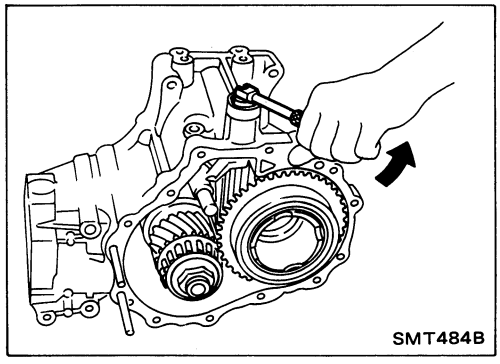

5. Separate shift lever from fork rod.

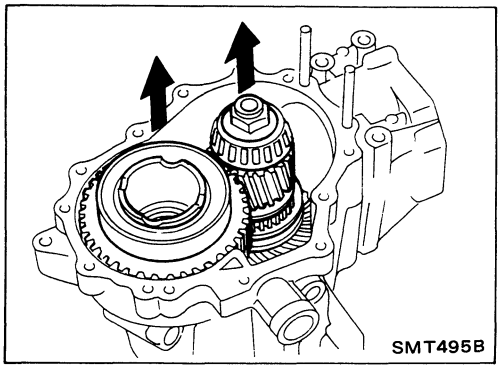

6. Remove ring gear, countershaft and shift fork assembly as a set.

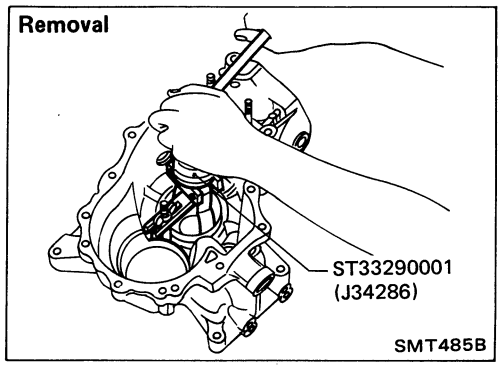

Transfer Case and Front Cover

REMOVAL AND INSTALLATION

- Hypoid gear bearing outer race

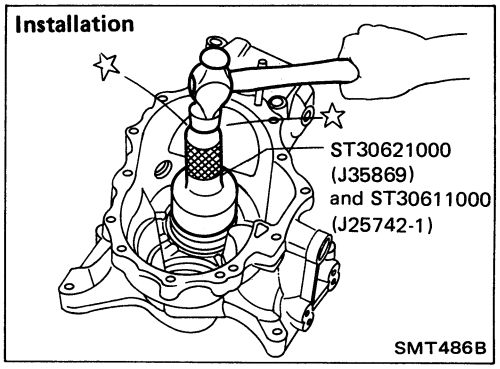

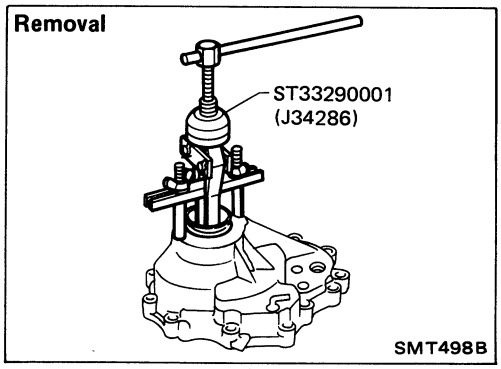

- Front cover oil seal

Install front cover oil seal after assembly.

- Shift shaft oil seal — Refer to "PRE-DISASSEMBLY INSPECTION".
- Ring gear oil seal — Refer to "PRE-DISASSEMBLY INSPECTION".

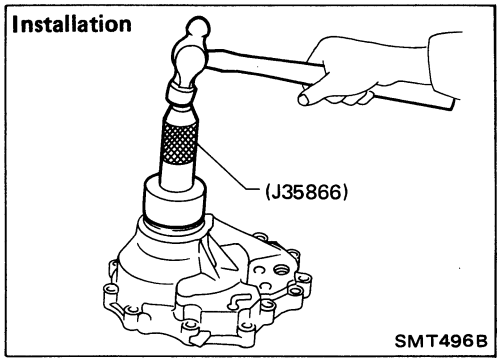

Shift Fork and Fork Rod

DISASSEMBLY

1. Remove stopper ring (C-ring).

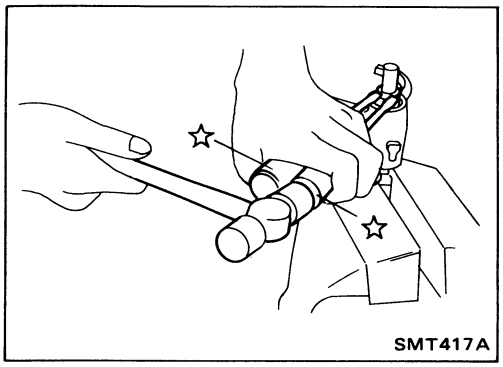

Shift Fork and Fork Rod (Cont'd)

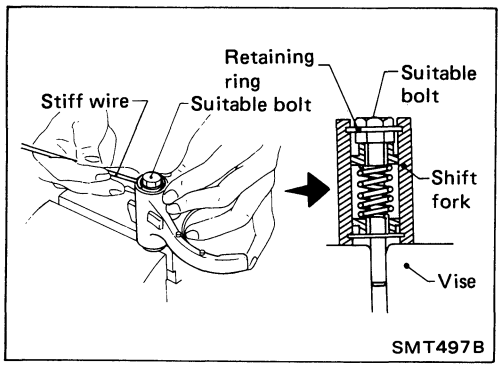

2. Remove retaining ring.

Compress shift fork spring with suitable bolt.

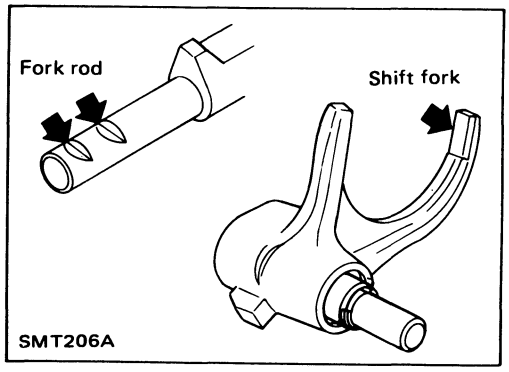

INSPECTION

- Check contact surface and sliding surface for wear, scratches, projections or other damage. Replace if necessary.

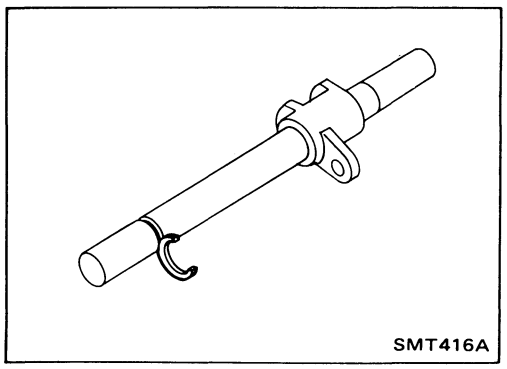

ASSEMBLY

- Select proper stopper ring (C-ring) that will minimize clearance of groove in fork rod.

  Allowable clearance of groove:
  0 - 0.25 mm (0 - 0.0098 in)

Stopper ring

Parts number	Thickness mm (in)
32812-03E00	1.5 (0.059)
32812-10R00	1.7 (0.067)
32812-10R01	1.9 (0.075)
32812-10R02	2.1 (0.083)

Ring Gear

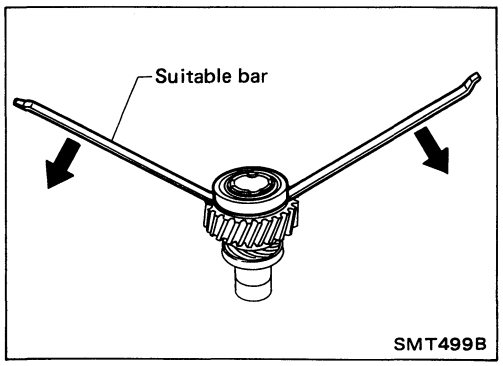

DISASSEMBLY

1. Pull out ring gear bearings.

Ring Gear (Cont'd)

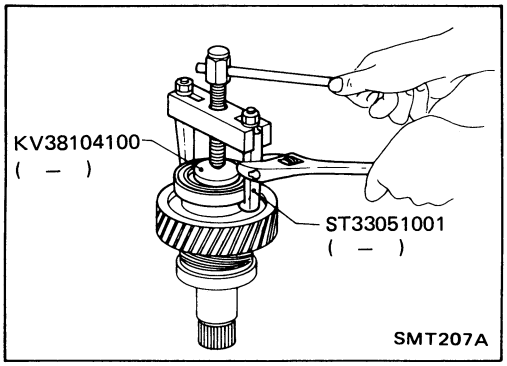

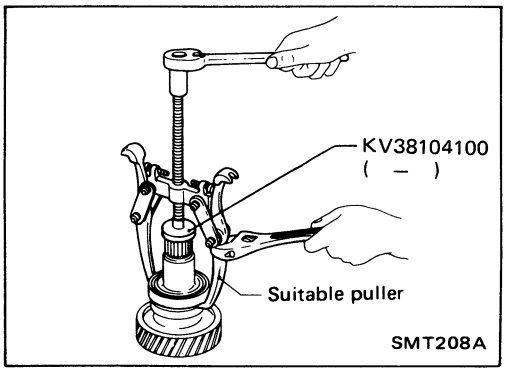

2. Remove speedometer drive gear.

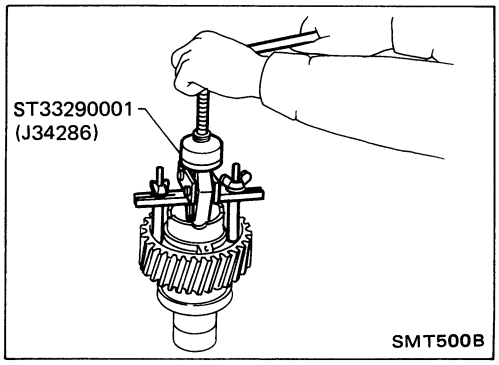

3. Remove drive shaft oil seal.

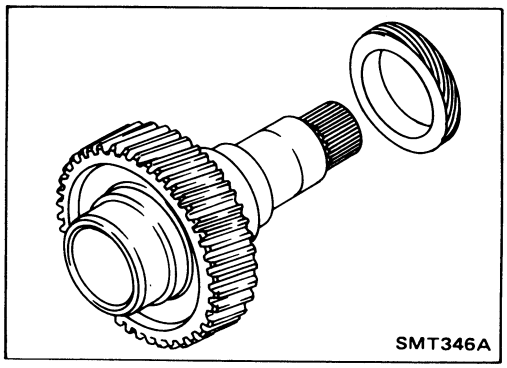

INSPECTION

Gear and shaft

- Check gears for excessive wear, chips or cracks.
- Check shaft for cracks or wear.

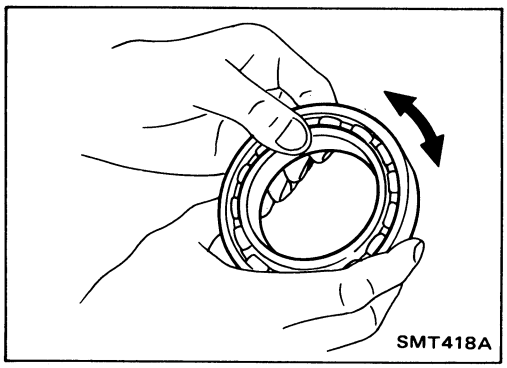

Bearings

- Make sure bearings roll freely and are free from noise, crack, pitting or wear.

Ring Gear (Cont'd)

ASSEMBLY

1. Install speedometer drive gear.
2. Press on ring gear bearings.

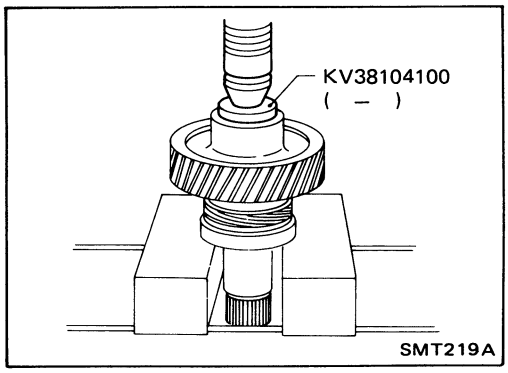

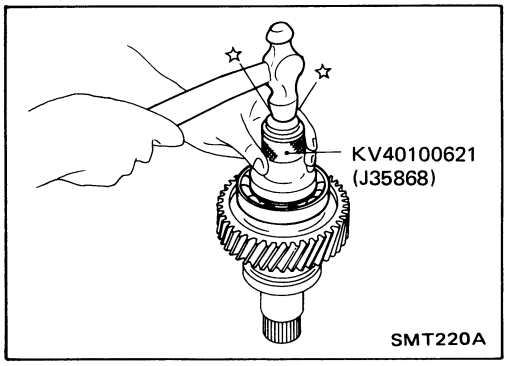

3. Install drive shaft oil seal.

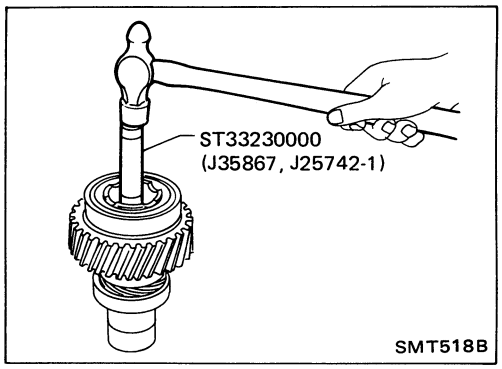

Countershaft

DISASSEMBLY

1. Before disassembly, check counter gear end play.

   Counter gear end play:

   0.15 - 0.35 mm (0.0059 - 0.0138 in)

   If not within specification, disassemble and check contact surface of countershaft, counter gear, counter gear needle bearings and countershaft bearing.

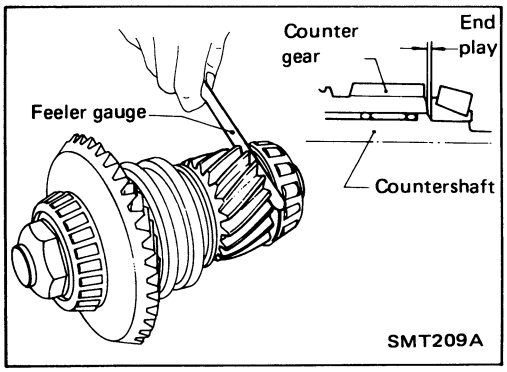

2. Remove countershaft nuts.

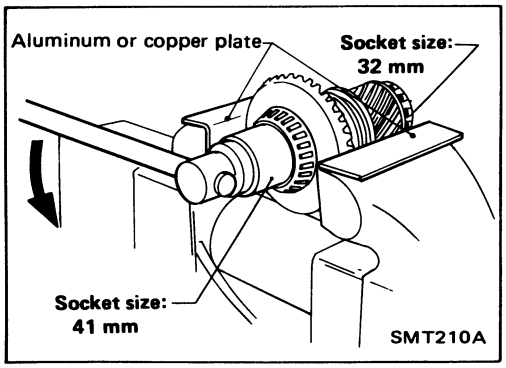

Countershaft (Cont'd)

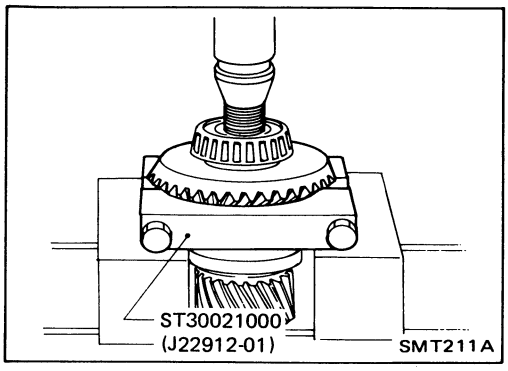

3. Press out hypoid gear together with hypoid gear bearing.

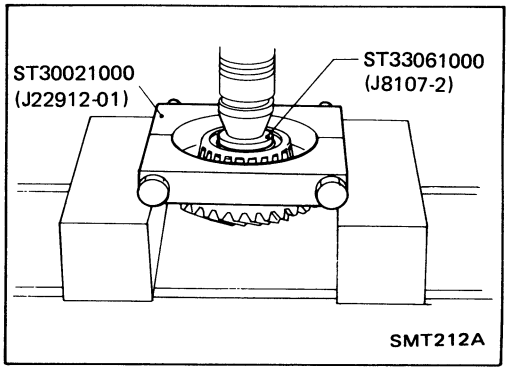

4. Press out hypoid gear bearing.

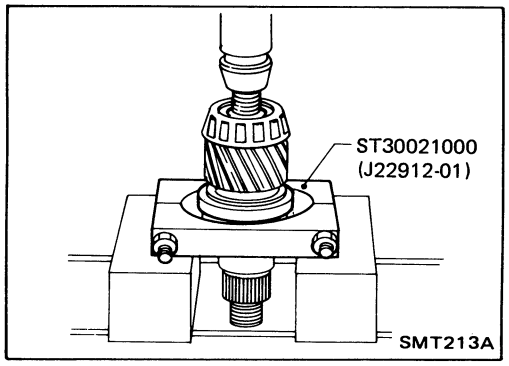

5. Press out counter gear, coupling sleeve and countershaft bearing, then remove counter gear needle bearings.

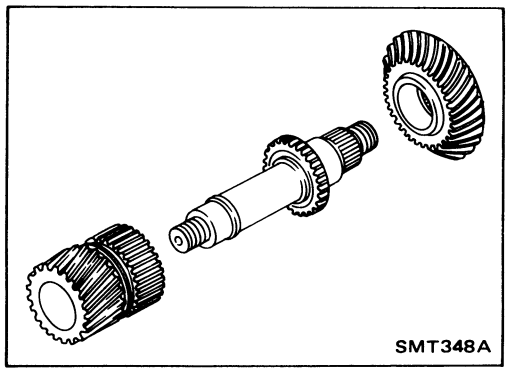

INSPECTION

Gears and shaft

- Check gears for excessive wear, chips or cracks.

When replacing hypoid gear, replace hypoid gear and hypoid pinion as a set.

- Check shaft for cracks or wear.

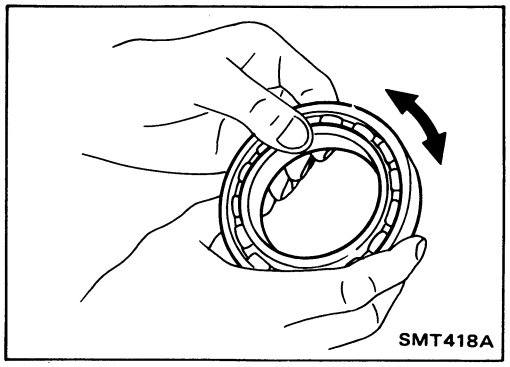

Bearings

- Make sure bearings roll freely and are free from noise, crack, pitting or wear.

When replacing tapered roller bearing, replace outer and inner race as a set.

Countershaft (Cont'd)

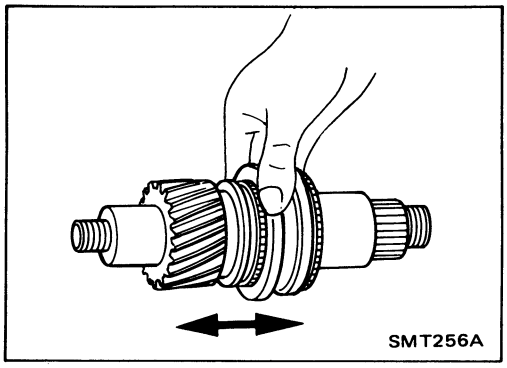

- Check coupling sleeve for unrestrictive movement on counter gear.

ASSEMBLY

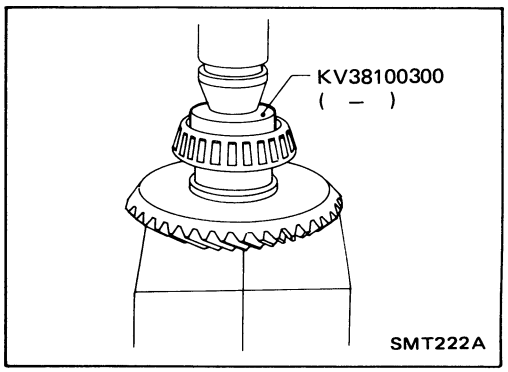

1. Press on hypoid gear bearing.

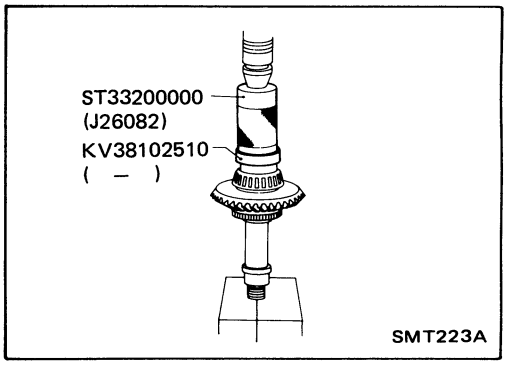

2. Press on hypoid gear together with hypoid gear bearing.

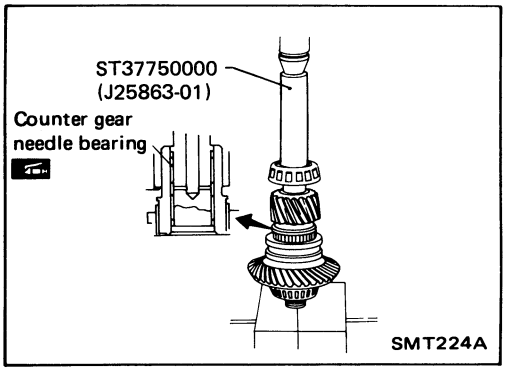

3. Install counter gear needle bearings, counter gear and coupling sleeve.

Before installing, apply multi-purpose grease to counter gear needle bearings.

4. Press on countershaft bearing.

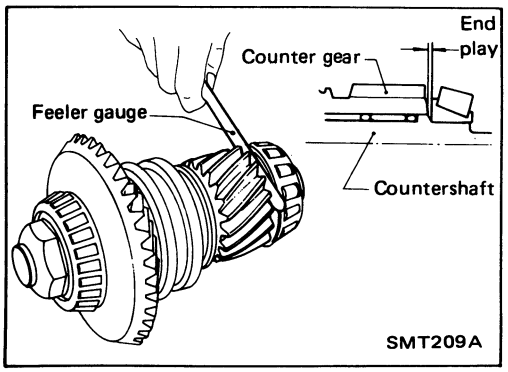

5. For final check, measure counter gear end play.

Countershaft (Cont'd)

6. Install new countershaft nuts and tighten them.

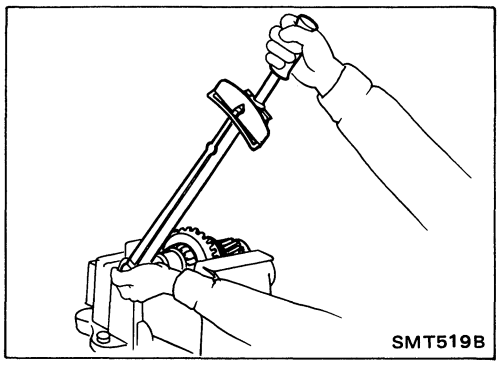

Pinion Sleeve

DISASSEMBLY

1. Before disassembly, check pinion bearing preload — Refer to "PRE-DISASSEMBLY INSPECTION".
2. Remove pinion nut.

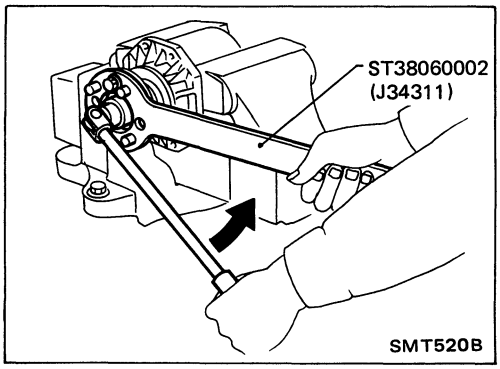

3. Press out hypoid pinion together with front inner race, collapsible spacer and spacer.

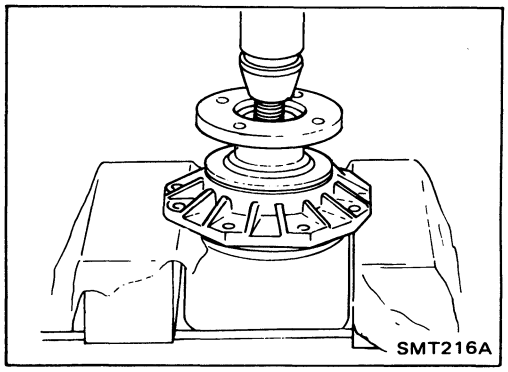

4. Pull out pinion oil seal and remove pinion rear bearing inner cone.

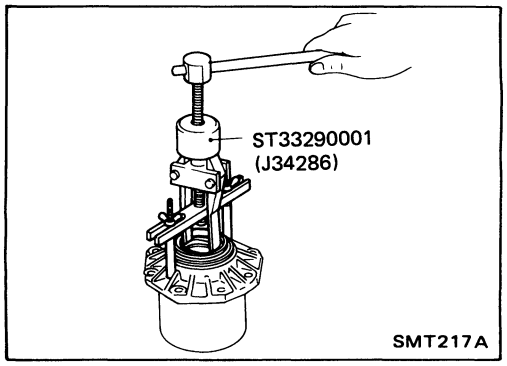

5. Remove bearing outer races with brass drift.

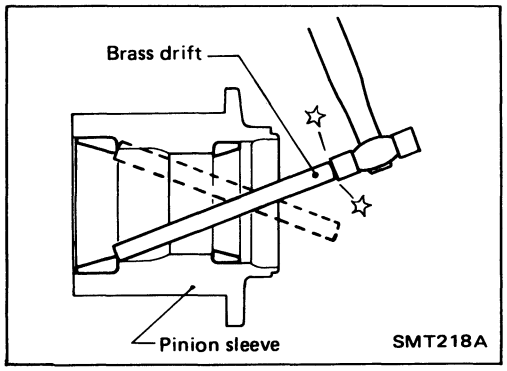

Pinion Sleeve (Cont'd)

6. Remove pinion front bearing inner cone.

Always replace after removing.

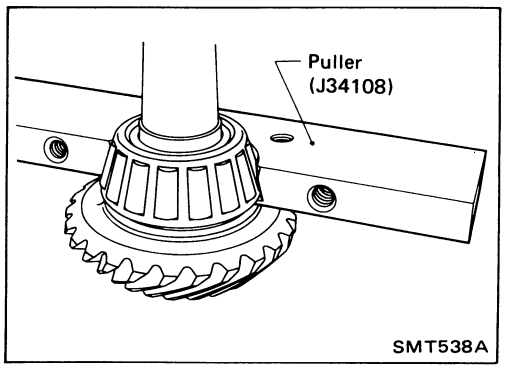

INSPECTION

Gear and shaft

- Check gears for excessive wear, chips or cracks.

When replacing hypoid pinion, replace hypoid gear and hypoid pinion as a set.

- Check shaft for cracks or wear.

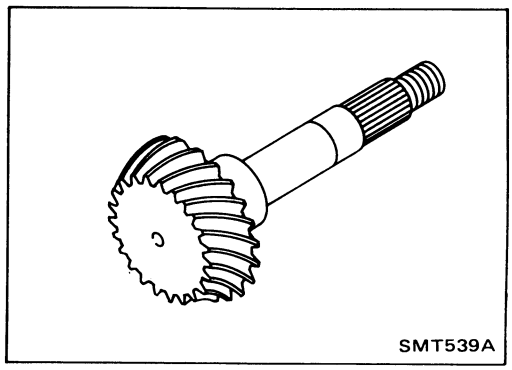

Bearing

- Make sure bearings roll freely and are free from noise, crack, pitting or wear.

When replacing tapered roller bearing, replace outer and inner race as a set.

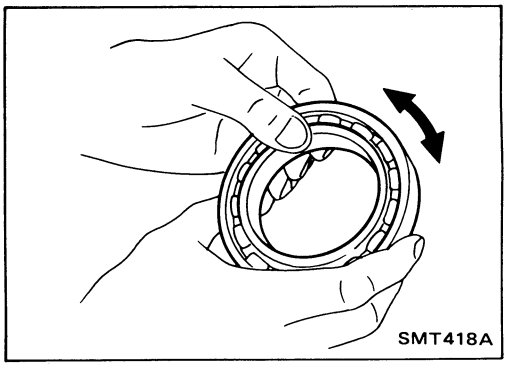

ASSEMBLY

Press fit front and rear bearing outer races.

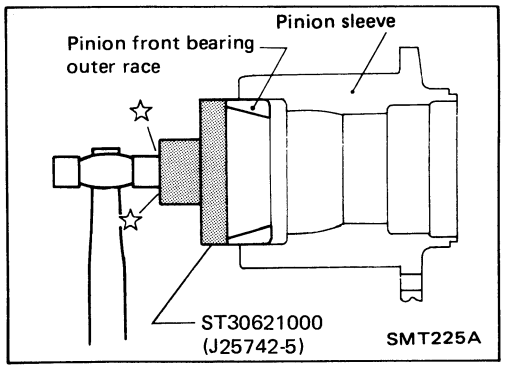

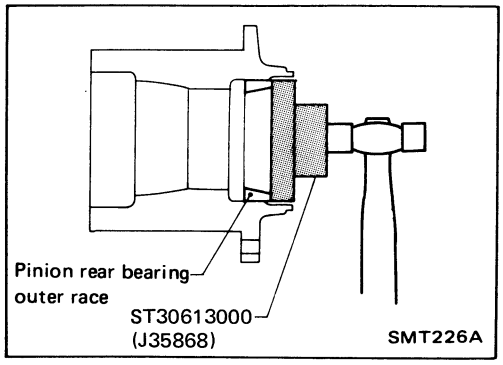

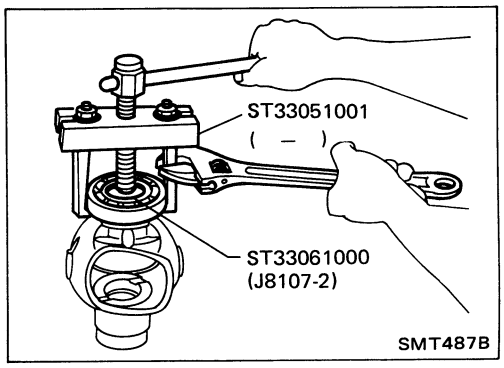

Front Differential

DISASSEMBLY

1. Remove front differential side bearing.

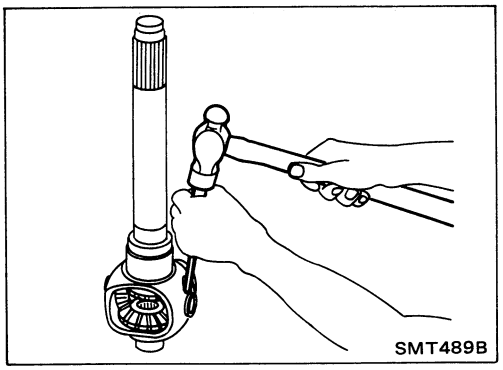

2. Drive out pinion mate shaft retaining pin.
3. Remove pinion mate shaft, pinion mate gear and side gear.

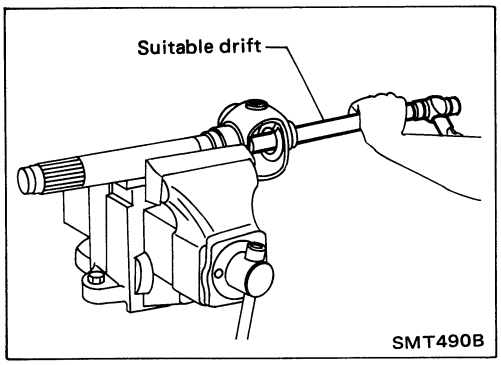

3. Remove connect shaft.

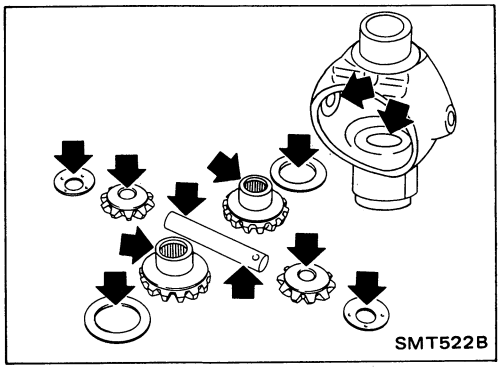

INSPECTION

Gear, washer, shaft and case

- Check mating surfaces of differential case, side gears and pinion mate gears.
- Check washers for wear.

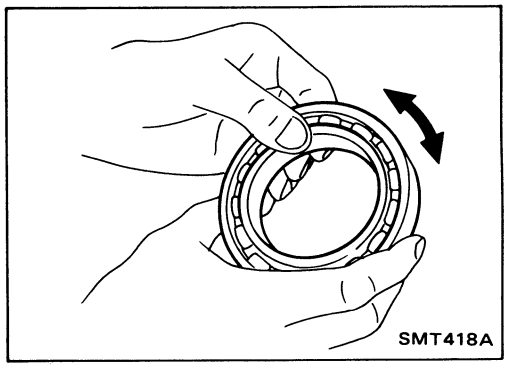

Bearing

- Make sure bearings roll freely and are free from noise, cracks, pitting or wear.

Front Differential (Cont'd)

ASSEMBLY

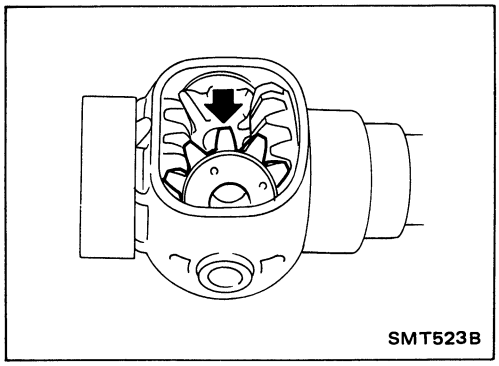

1. Fit side gear thrust washers and side gears, then install pinion mate washers and pinion mate gears in case.

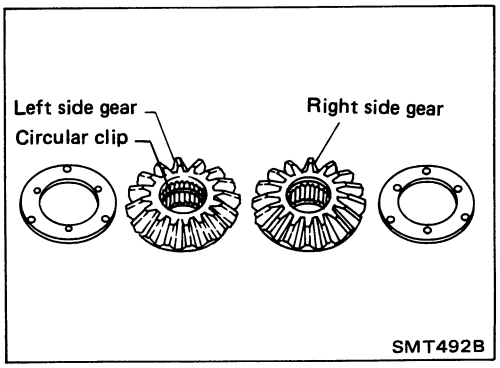

Take care to install left and right side gear correctly.

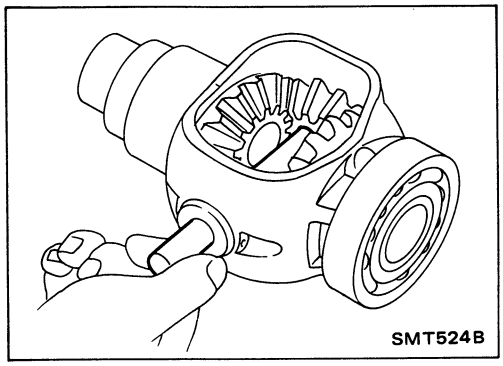

2. Insert pinion mate shaft.

When installing, be careful not to damage pinion mate thrust washers.

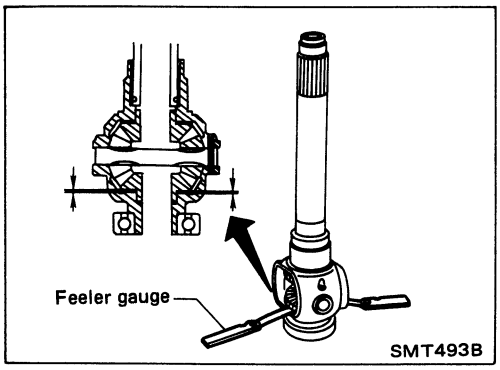

3. Measure clearance between side gear and differential case with washers.

   Clearance between side gear and differential case with washers:
   0.05 - 0.20 mm (0.0020 - 0.0079 in)

   If not within specification, adjust clearance by changing thickness of side gear thrust washers.

   Side gear thrust washer:
   Refer to S.D.S.

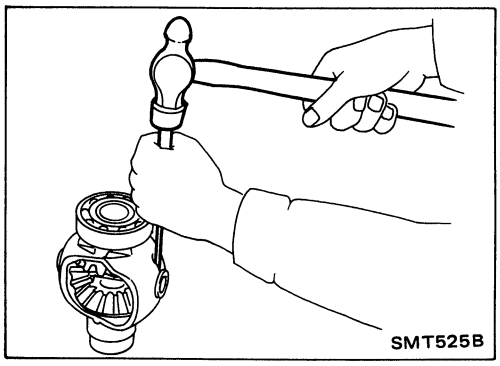

4. Install retaining pin.

Make sure that retaining pin is flush with case.

Front Differential (Cont'd)

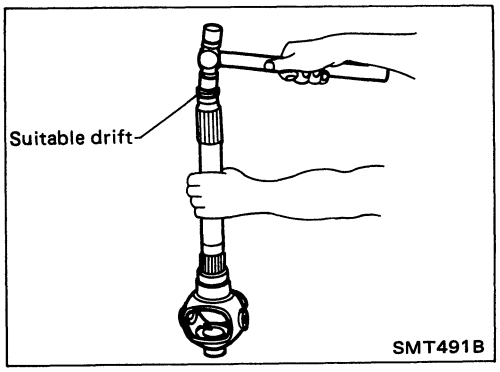

5. Install connect shaft by lightly tapping.

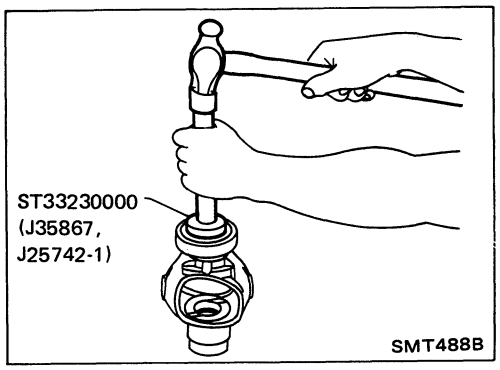

6. Press on differential side bearing.

It is necessary to adjust ring gear end play, countershaft bearing preload, hypoid gear and hypoid pinion height, front differential case end play when replacing any part in chart below.

Adjustment Application Chart

Determine the required adjustment

X: Necessary
Blank: Not necessary

Adjustment / Adjusting method / Replaced part	Ring gear end play	Countershaft bearing preload	Hypoid gear height	Hypoid pinion height	Front differential case end play
	Ring gear snap ring	Countershaft shim and Hypoid gear shim	Hypoid gear shim	Pinion sleeve shim	Front differential side bearing adjusting shim
Transfer case set (Transfer case, adapter plate and front cover)	X	X	X	X	X
Ring gear	X				X
Ring gear bearing	X				
Hypoid gear set (Hypoid gear and pinion)		X	X	X	
Countershaft		X			
Hypoid gear bearing		X	X	X	
Countershaft bearing		X			
Hypoid pinion bearing				X	
Pinion sleeve				X	
Front differential case					X
Front differential side bearing					X

Adjustment Procedure

For quiet and reliable transfer case gear operation, the following adjustments must be made:

- **Selection of pinion sleeve shim.**
- **Adjustment of pinion bearing preload.**
- **Selection of countershaft shim.**
- **Selection of hypoid gear shim.**
- **Selection of ring gear snap ring.**
- **Selection of front differential side bearing shim.**
- **Check of hypoid gear-to-pinion backlash.**
- **Check of tooth contact.**

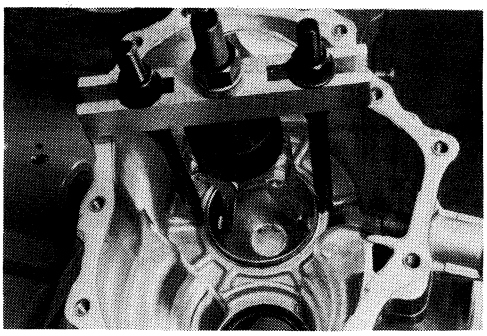

SELECTION OF PINION SLEEVE SHIM

1. Make sure that all parts are clean and that the bearings are well lubricated.
2. Remove countershaft case side bearing outer race and shims. Use Tool J34286.

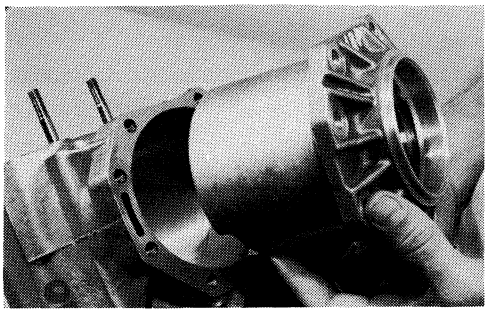

3. Reinstall pinion sleeve only, do not install pinion sleeve shims.

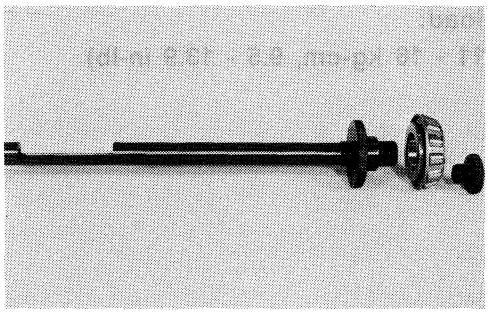

4. Assemble pinion bearings onto J34309 (differential shim selector).

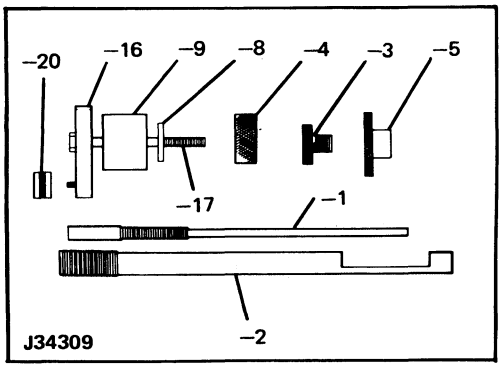

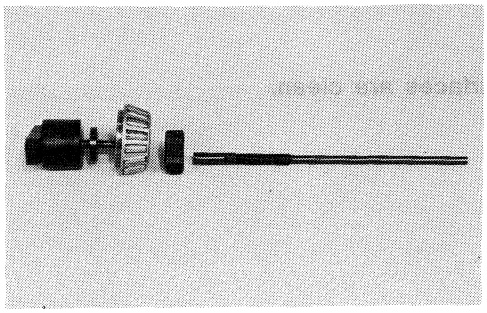

- Pinion rear bearing — make sure J34309-3 (pinion rear bearing seat) is secured to bearing in its proper position.
- Pinion front bearing — J34309-8 (front pinion pilot) is used to center the front pinion bearing only. J34309-4 (front pinion bearing locking seat) is used to lock bearing to assembly.

Adjustment Procedure (Cont'd)

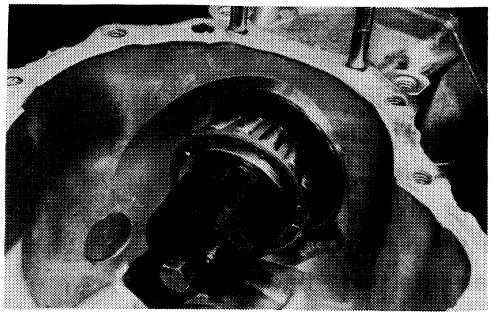

5. Place J34309-1 (gauge screw) with the pinion front bearing inner race installed into pinion sleeve.

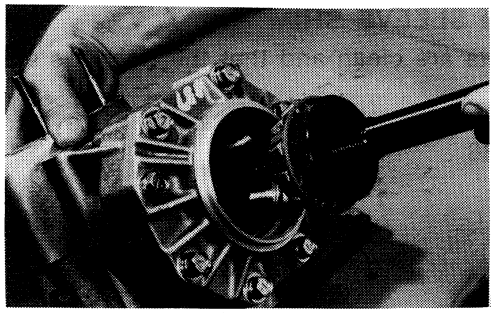

6. Assemble pinion rear bearing inner race and J34309-2 (gauge anvil) together with the J34309-1 (gauge screw) in pinion sleeve. Make sure that J34309-16 (pinion height gauge plate), will turn a full 360 degrees, and tighten two sections together by hand.

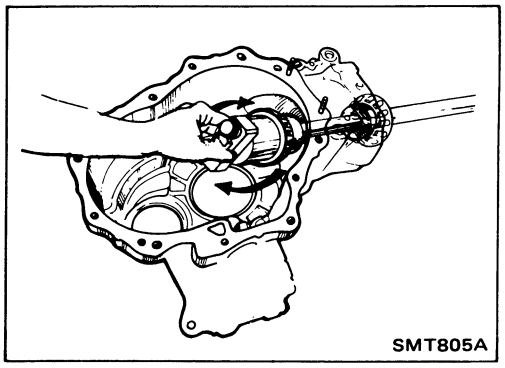

7. Turn assembly several times to seat bearings.

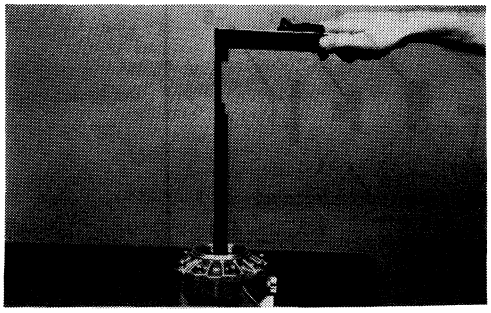

8. Measure turning torque at end of J34309-2 (gauge anvil).
   Pinion bearing preload:
   1.1 - 1.6 N•m (11 - 16 kg-cm, 9.5 - 13.9 in-lb)

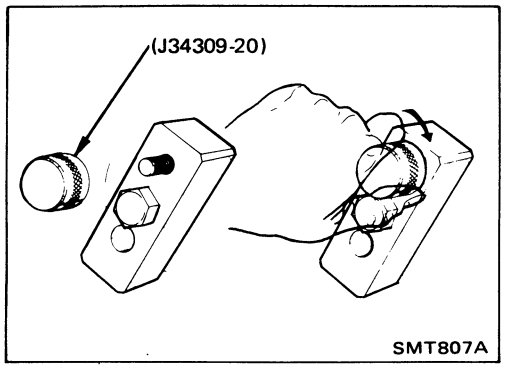

9. Place J34309-20 (pinion height adapter) onto gauge plate and tighten it by hand.

CAUTION:
Make sure all machined surfaces are clean.

Adjustment Procedure (Cont'd)

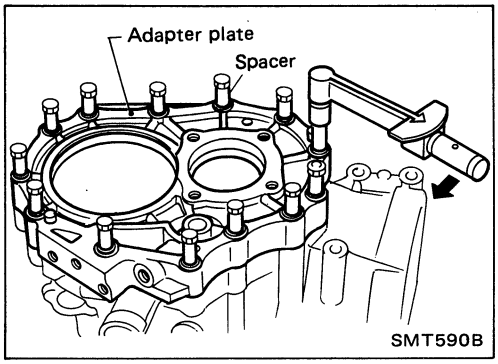

10. Reinstall adapter plate onto transfer case.

Temporarily install spacers and tighten bolts to the specified torque.

Spacer: 25 mm (0.98 in)

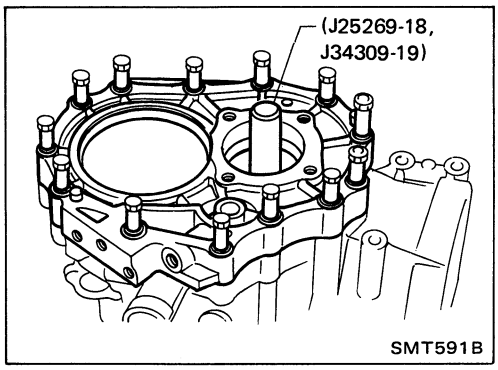

11. Position the transfer case so that pinion is on a horizontal plane. Install the J25269-18 (countershaft bearing disc) and J34309-19 (shaft arbor).

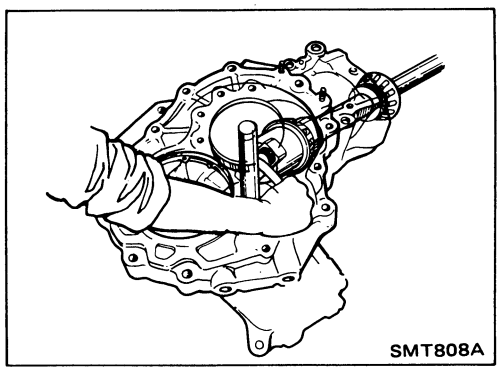

12. Select correct standard pinion sleeve shim, by measuring the gap between J34309-20 (pinion height adapter) and J34309-19 (arbor). A feeler gauge is to be used for this measurement.

It is a good idea to double-check final dimensions of your selected feeler gauge stock with a micrometer or an accurate caliper.

Example – Measurement was .80 mm + 3 on pinion head

.80 mm feeler gauge reading
– .03

.77 mm will be the size pinion sleeve shim you select

13. Write down your exact total measure.
14. Correct pinion sleeve shim reading by referring to pinion head number.

Pinion Head Height Number	Add or Remove from the Standard Pinion Height Washer Thickness Measurement
–6	add 0.06 mm (0.0024 in)
–5	add 0.05 mm (0.0020 in)
–4	add 0.04 mm (0.0016 in)
–3	add 0.03 mm (0.0012 in)
–2	add 0.02 mm (0.0008 in)
–1	add 0.01 mm (0.0004 in)
0	use the selected washer thickness
+1	subtract 0.01 mm (0.0004 in)
+2	subtract 0.02 mm (0.0008 in)
+3	subtract 0.03 mm (0.0012 in)
+4	subtract 0.04 mm (0.0016 in)
+5	subtract 0.05 mm (0.0020 in)
+6	subtract 0.06 mm (0.0024 in)

Adjustment Procedure (Cont'd)

15. Once you have corrected feeler gauge measurement, according to pinion head marking, now select correct shim using the following chart:

Pinion Sleeve Shim

Part Number	Thickness mm (in)
33155-10R00	0.40 (0.0157)
33155-10R01	0.44 (0.0173)
33155-10R02	0.48 (0.0189)
33155-10R03	0.52 (0.0205)
33155-10R04	0.56 (0.0220)
33155-10R05	0.60 (0.0236)
33155-10R06	0.64 (0.0252)
33155-10R07	0.68 (0.0268)
33155-10R08	0.72 (0.0283)
33155-10R09	0.76 (0.0299)

16. Remove the pinion sleeve and adapter plate for later use.

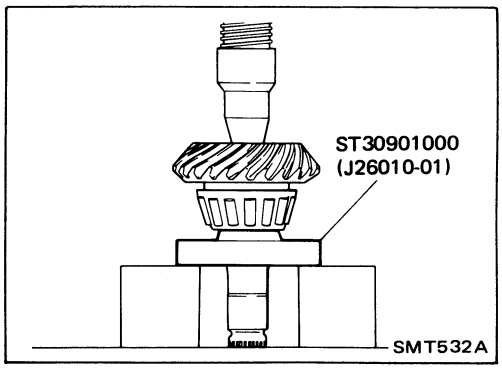

ADJUSTMENT OF PINION BEARING PRELOAD

1. Press on pinion front bearing inner race.

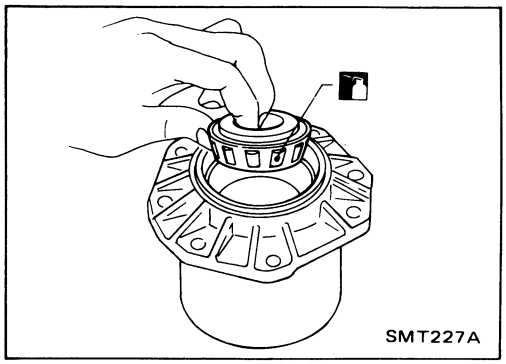

2. Place pinion rear bearing inner race in pinion sleeve.
Before installing, lubricate pinion rear bearing with recommended gear oil.

Adjustment Procedure (Cont'd)

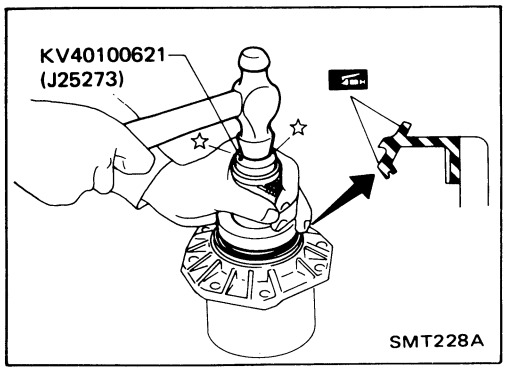

3. Install pinion oil seal.

Before installing, apply multi-purpose grease to seal lip of oil seal.

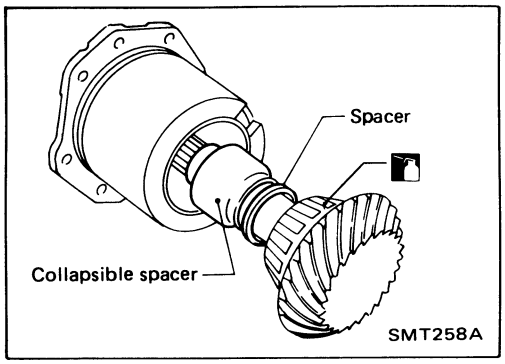

4. Place spacer and new collapsible spacer on hypoid pinion and lubricate pinion front bearing with gear oil, and insert them in pinion sleeve.

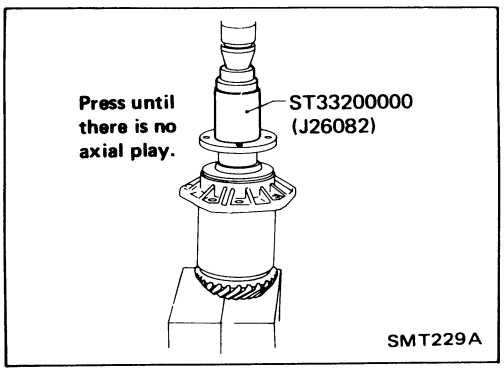

5. Press in companion flange until there is no axial end play.

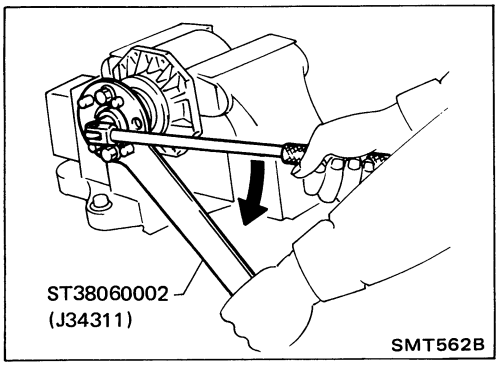

6. Tighten pinion nut slowly to the specified preload. Check bearing preload often to prevent over torque.

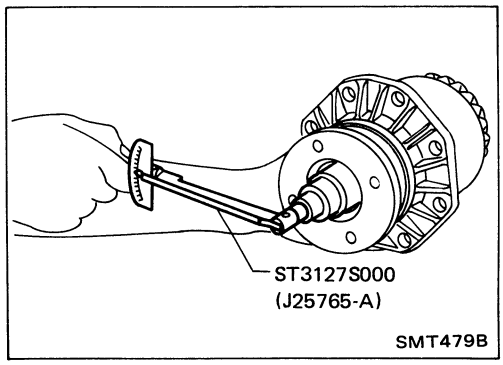

When checking preload, turn drive pinion in both directions several times to seat bearings correctly.

Pinion bearing preload:

1.1 - 1.6 N•m (11 - 16 kg-cm, 9.5 - 13.9 in-lb)

Adjustment Procedure (Cont'd)

SELECTION OF COUNTERSHAFT SHIM
SELECTION OF HYPOID GEAR SHIM

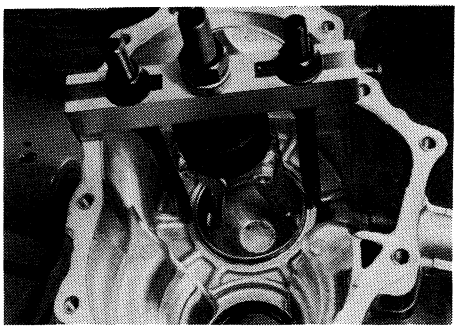

1. Remove the hypoid gear bearing outer race from transfer case.

CAUTION:

Do not mix up the countershaft bearing races.

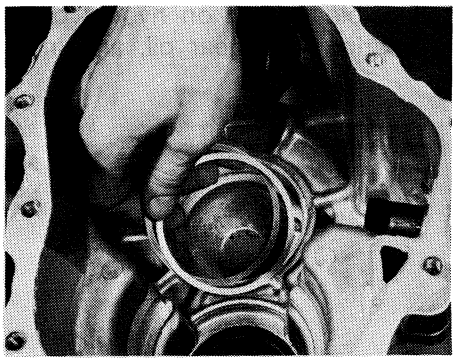

2. Remove shims from behind outer race, and reinstall race.

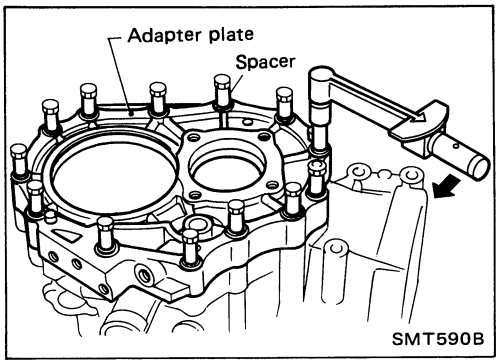

3. Place countershaft into bearing race and reinstall the adapter plate.

Temporarily install spacers and tighten bolts to the specified torque.

Spacer: 25 mm (0.98 in)

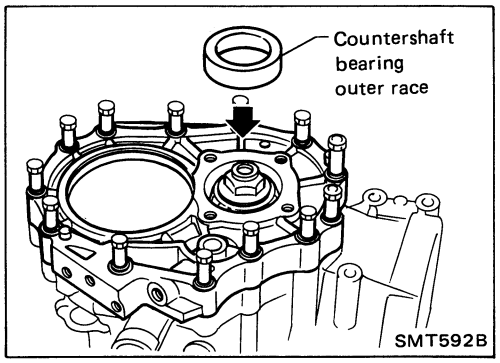

4. Install countershaft bearing outer race into adapter plate and position it atop countershaft.

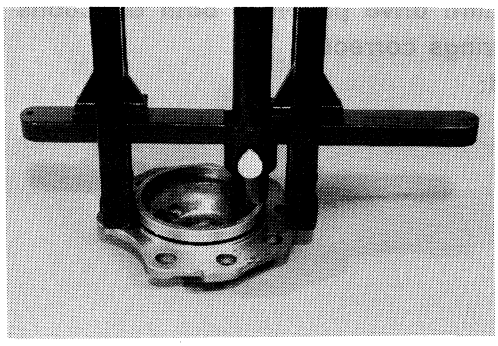

5. Using J34291 (shim setting gauge set), measure to the raised inner portion of the adapter cover. Lock the cylinder in position.

Adjustment Procedure (Cont'd)

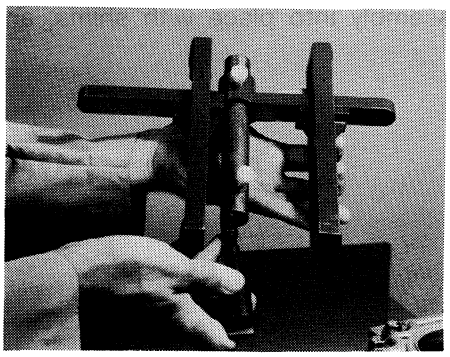

6. Install J34291-15 (gauging plunger) into bridge tool gauging cylinder.

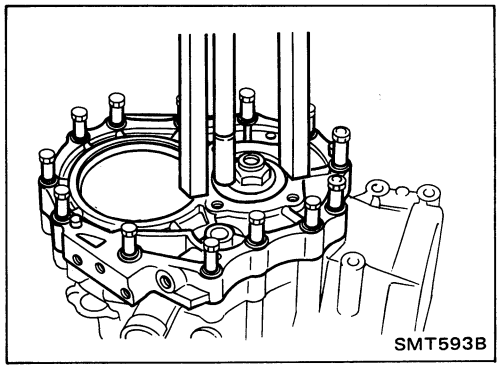

7. Position bridge tool on top of adapter plate and measure to top of countershaft bearing outer race. Lock the plunger into position.

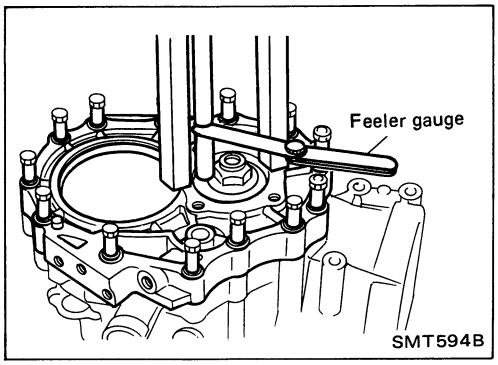

8. Using a feeler gauge, measure gap between cylinder and plunger shoulder. This reading is total preload required on countershaft.

It may be useful to double-check your feeler stock with a micrometer.

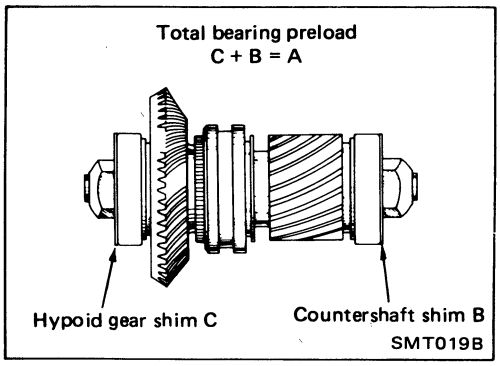

9. Write down the total preload required; we will call this reading Letter "A".

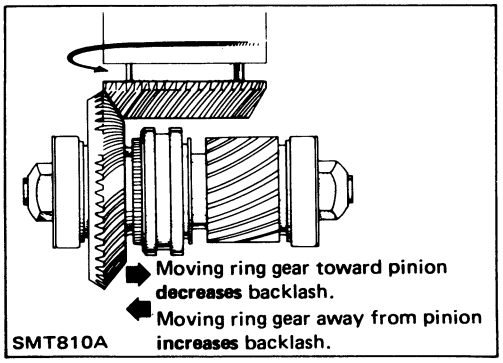

10. To determine placement of the shims, hypoid gear-to-pinion backlash must now be set.

Adjustment Procedure (Cont'd)

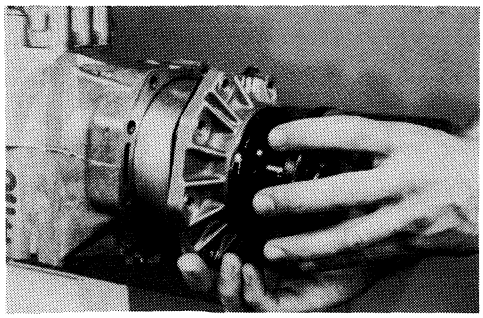

11. Put the pinion sleeve assembly into place with shims, and torque to specification.

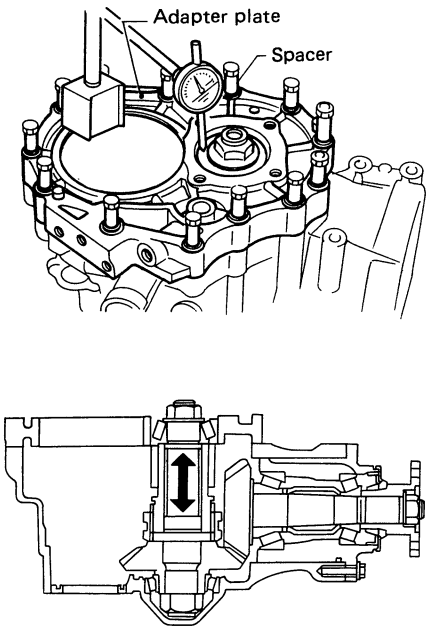

12. Mount a dial indicator to read up and down movement of countershaft.
13. Use countershaft bearing outer race in adapter plate as a guide and move countershaft up and down.

Make sure that you exert pressure against the upper bearing race so that the countershaft will remain straight when you are getting your dial indicator reading.

CAUTION:

It is very important that countershaft moves in a straight line while you make this measurement. Hold countershaft firmly into countershaft bearing outer race and move race with countershaft.

EXAMPLE:

"D" = 1.29 mm (dial indicator reading)
– 0.25 mm

"C" = 1.04 mm (hypoid gear shim)

14. Write down dial indicator reading "D". Then calculate the thickness dimension of hypoid gear shim "C" by using the following equation:

    "C" = "D" – 0.25 mm

EXAMPLE:

2.12 mm = "A"

1.04 mm = "C"

1.08 mm = "B" (countershaft shim)

15. To determine countershaft shim "B", dimension of hypoid gear shim "C" must be subtracted from total preload "A". When you do this, result will be shim required for "B" (countershaft shim).

Adjustment Procedure (Cont'd)

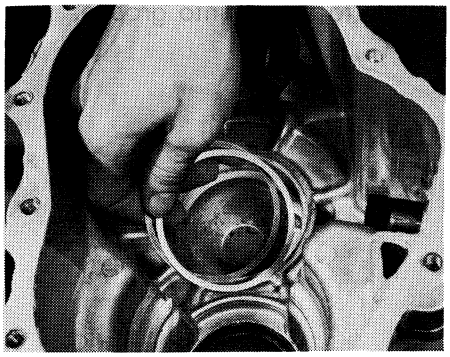

16. Remove pinion sleeve assembly, adapter plate, countershaft and hypoid gear bearing inner race. Install correct size shim into the bearing race housing (Shim C).

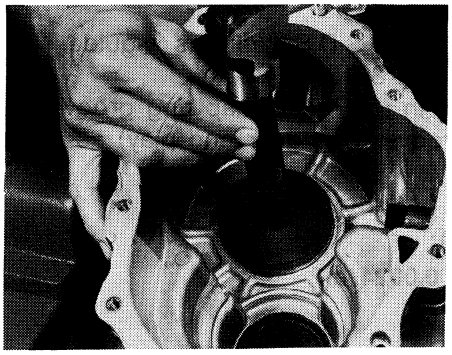

17. Reinstall the countershaft bearing outer race.

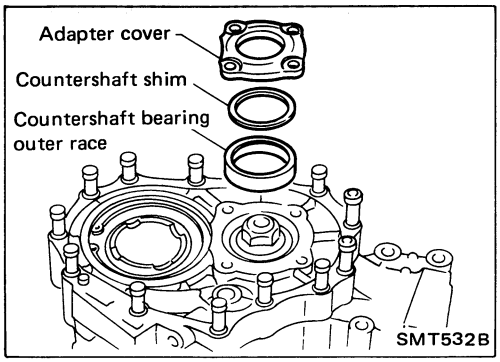

18. Reinstall countershaft, pinion sleeve assembly, adapter plate, and adapter cover with countershaft shims (B) in their correct positions. Torque bolts to specification.

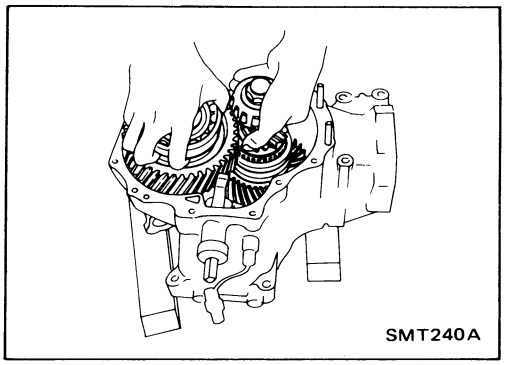

SELECTION OF RING GEAR SNAP RING

1. Install ring gear and countershaft.
2. Install adapter plate.

Temporarily install spacers and tighten bolts to the specified torque.

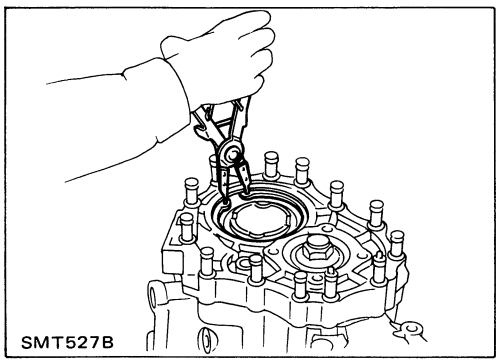

3. Install the thinnest snap ring [Part No. **33138-10R00, Thickness: 3.00 mm (0.1181 in)]** in ring gear snap ring groove.

Adjustment Procedure (Cont'd)

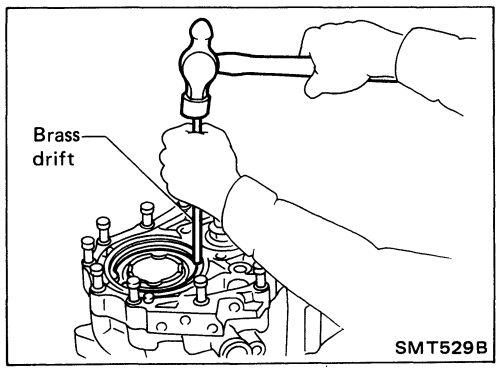

4. Tap ring gear snap ring lightly to seat it into groove.

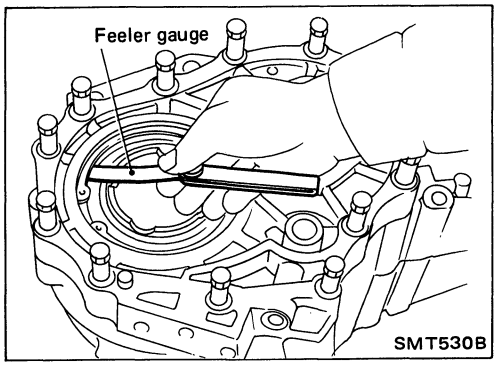

5. Measure clearance of groove.
6. Select proper snap ring using S.D.S. table as a guide.
7. Remove snap ring (Part No. 33138-10R00).
8. Install selected snap ring in ring gear snap ring groove.
9. Measure clearance of groove (ring gear end play) as a final check.

   Allowable clearance of groove (Ring gear end play):

   0 - 0.06 mm (0 - 0.0024 in)

SELECTION OF FRONT DIFFERENTIAL SIDE BEARING SHIM

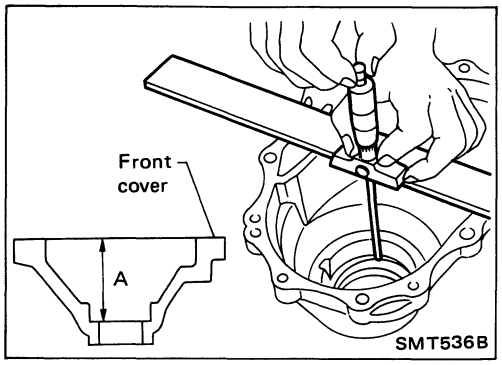

1. Measure factor "A".

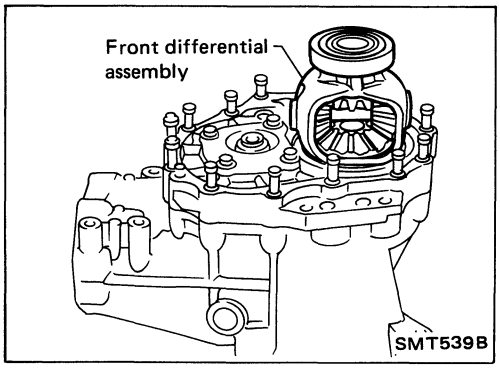

2. Install front differential assembly in adapter plate.

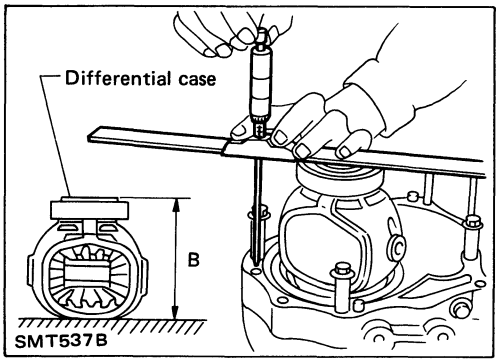

3. Measure factor "B".

Adjustment Procedure (Cont'd)

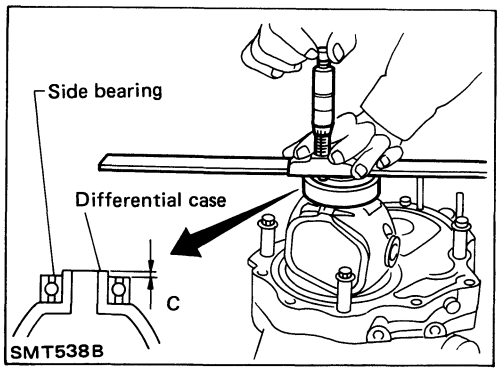

4. Measure factor "C".

   Front differential case end play (A – B + C):
   0.05 - 0.20 mm (0.0020 - 0.0079 in)

   Select proper shims using S.D.S. table as a guide.
5. Install front cover.

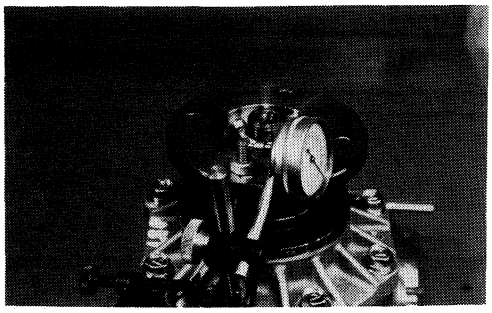

CHECK OF HYPOID GEAR-TO-PINION BACKLASH

Perform a gear backlash check. The backlash should be 0.09 to 0.12 mm (0.0035 to 0.0047 in).

- If backlash is too small, decrease thickness of hypoid gear shim and increase thickness of countershaft shim by the same amount.
- If backlash is too great, reverse the above procedure.

Never change the total amount of shims as it will change the bearing preload.

0.10 mm (0.0039 in) of change in shim thickness from side to side will give approximately 0.05 to 0.07 mm (0.0020 to 0.0028 in) of change in backlash.

Example: If backlash is 0.17 mm (0.0067 in), then you add 0.10 mm (0.0039 in) to hypoid gear side and subtract 0.10 mm (0.0039 in) from the end cover side. The final backlash will be approximately 0.12 mm (0.0047 in), which is within specification range.

CHECK OF TOOTH CONTACT — Refer to "TOOTH CONTACT".

Usually tooth contact pattern will be correct if you have selected the shims accurately.

However, in extremely rare cases you will have to use trial-and-error processes until the tooth contact pattern is right.

The tooth pattern is the best indication of how well a hypoid gear and pinion have been set up.

REMOVAL OF END COVER

REMOVAL OF CASE ADAPTER, RING GEAR AND COUNTERSHAFT

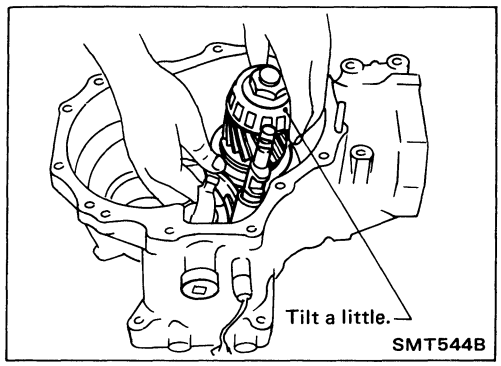

1. Install countershaft and shift fork. Tilt them a little to install ring gear easily.

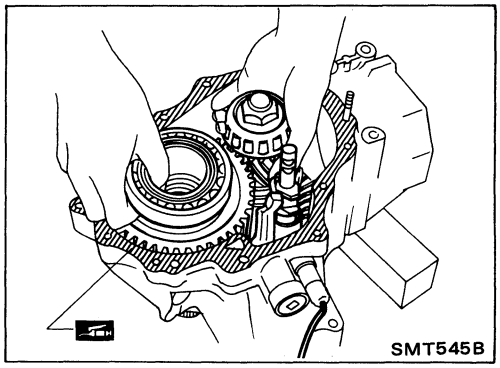

2. Install ring gear and set shift lever on fork rod.
3. Clean adapter plate and transfer case mating surface.
4. Apply recommended sealant to transfer case and adapter plate mating surface.

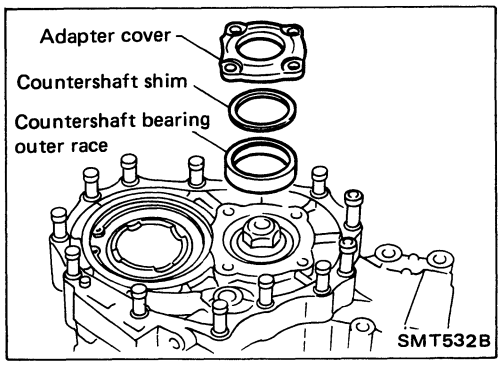

5. Install adapter plate.
6. Install countershaft bearing, countershaft shim and adapter cover.

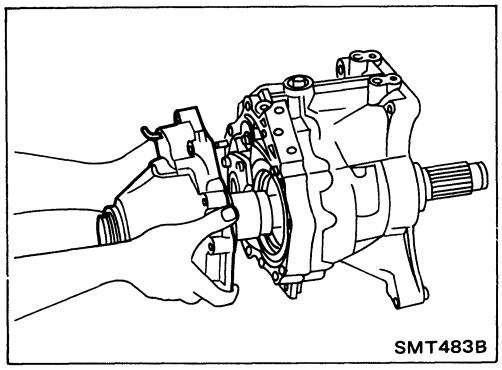

7. Install front differential assembly and front cover.

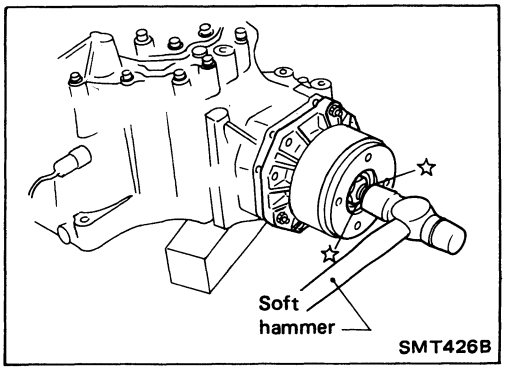

8. Install O-ring on pinion sleeve and then install pinion sleeve shim and pinion sleeve.
9. Install front cover oil seal.

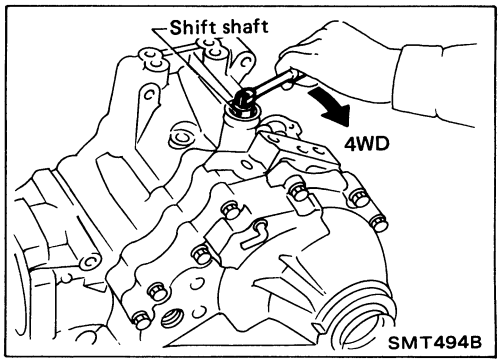

10. Shift the lever to 4WD position after assembling.

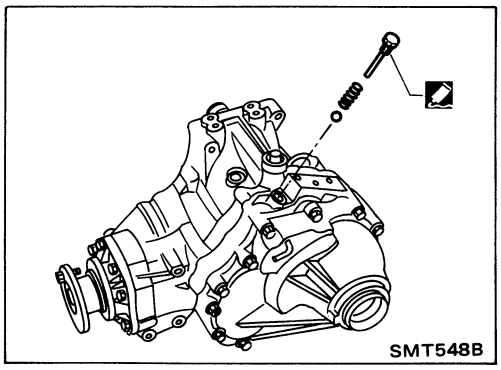

11. Install check ball, spring and shift lock plug.
Apply recommended sealant to shift lock plug thread.
Recommended sealant:
Nissan genuine part (KP610-00250) or equivalent

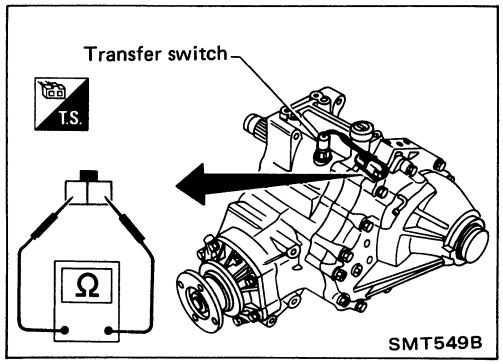

12. Check transfer switch continuity after shifting to 4WD position.

Transfer switch:

Transfer position	Continuity
2WD	Yes
4WD	No

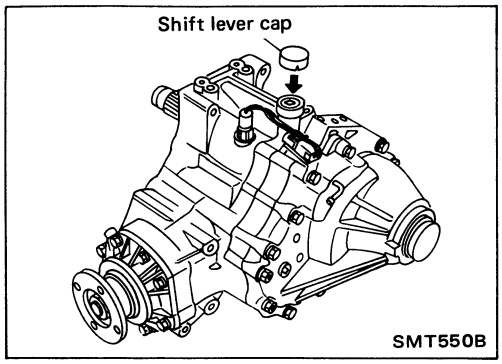

13. Install shift lever cap.

WARNING:
Never install transfer unit on vehicle with shift lever in 2WD.

General Specifications

Transfer model	FTY10
Gear ratio	0.270
Number of teeth	
Drive gear	47
Counter gear	21
Ring gear	38
Pinion gear	23
Oil capacity ℓ (US qt, Imp qt)	1.6 (1-3/4, 1-3/8)

Inspection and Adjustment

GEAR END PLAY

Unit: mm (in)

Ring gear	0 - 0.06 (0 - 0.0024)
Counter gear	0.15 - 0.35 (0.0059 - 0.0138)

BEARING PRE-LOAD

Hypoid pinion bearing	Adjusting method		Collapsible spacer
	Pre-load	N·m (kg-cm, in-lb) *2	1.1 - 1.6 (11 - 16, 9.5 - 13.9)
Countershaft bearing	Adjusting method		Shim (counter shaft shim and hypoid gear shim)
	Pre-load	N (kg, lb)*1	88 - 235 (9 - 24, 20 - 53)
		mm (in)	0.20 - 0.26 (0.0079 - 0.0102)
Total pre-load		N·m (kg-cm, in-lb) *2	2.0 - 3.9 (20 - 40, 17 - 35)

*1: at right gear spline outer diameter
*2: at pinion nut

GEAR BACKLASH

Unit: mm (in)

Ring gear-to-counter gear*1	0.02 - 0.04 (0.0008 - 0.0016)
Hypoid gear-to-pinion*2	0.10 - 0.15 (0.0039 - 0.0059)

*1: at ring gear spline
*2: at bolt hole of companion flange

AVAILABLE SNAP RING

Shift fork stopper ring

Unit: mm (in)

Allowable clearance	0 - 0.25 (0 - 0.0098)

Thickness mm (in)	Part number
1.5 (0.059)	32812-03E00
1.7 (0.067)	32812-10R00
1.9 (0.075)	32812-10R01
2.1 (0.083)	32812-10R02

Ring gear snap ring

Thickness mm (in)	Part number
4.00 (0.1575)	33138-56E00
4.04 (0.1591)	33138-56E01
4.08 (0.1606)	33138-56E02
4.12 (0.1622)	33138-56E03
4.16 (0.1638)	33138-56E04
4.20 (0.1654)	33138-56E05
4.24 (0.1669)	33138-56E06
4.28 (0.1685)	33138-56E07
4.32 (0.1701)	33138-56E08
4.36 (0.1717)	33138-56E09
4.40 (0.1732)	33138-56E10
4.44 (0.1748)	33138-56E11
4.48 (0.1764)	33138-56E12
4.52 (0.1780)	33138-56E13
4.56 (0.1795)	33138-56E14
4.60 (0.1811)	33138-56E15
4.64 (0.1827)	33138-56E16

Inspection and Adjustment (Cont'd)

Table for selecting suitable ring gear snap ring

Unit: mm (in)

Measured clearance	Thickness of suitable snap ring
0.00 - 0.04 (0.0000 - 0.0016)	4.00 (0.1575)
0.04 - 0.08 (0.0016 - 0.0031)	4.04 (0.1591)
0.08 - 0.12 (0.0031 - 0.0047)	4.08 (0.1606)
0.12 - 0.16 (0.0047 - 0.0063)	4.12 (0.1622)
0.16 - 0.20 (0.0063 - 0.0079)	4.16 (0.1638)
0.20 - 0.24 (0.0079 - 0.0094)	4.20 (0.1654)
0.24 - 0.28 (0.0094 - 0.0110)	4.24 (0.1669)
0.28 - 0.32 (0.0110 - 0.0126)	4.28 (0.1685)
0.32 - 0.36 (0.0126 - 0.0142)	4.32 (0.1701)
0.36 - 0.40 (0.0142 - 0.0157)	4.36 (0.1717)
0.40 - 0.44 (0.0157 - 0.0173)	4.40 (0.1732)
0.44 - 0.48 (0.0173 - 0.0189)	4.44 (0.1748)
0.48 - 0.52 (0.0189 - 0.0205)	4.48 (0.1764)
0.52 - 0.56 (0.0205 - 0.0220)	4.52 (0.1780)
0.56 - 0.60 (0.0220 - 0.0236)	4.56 (0.1795)
0.60 - 0.64 (0.0236 - 0.0252)	4.60 (0.1811)
0.64 - 0.68 (0.0252 - 0.0268)	4.64 (0.1827)

AVAILABLE SHIM

Countershaft shim

Unit: mm (in)

Thickness	Part number
0.40 (0.0157)	33123-56E00
0.44 (0.0173)	33123-56E01
0.48 (0.0189)	33123-56E02
0.52 (0.0205)	33123-56E03
0.56 (0.0220)	33123-56E04
0.60 (0.0236)	33123-56E05
0.64 (0.0252)	33123-56E06
0.68 (0.0268)	33123-56E07
0.72 (0.0283)	33123-56E08
0.76 (0.0299)	33123-56E09
0.92 (0.0362)	33123-56E10
1.32 (0.0520)	33123-56E11

Hypoid gear shim

Unit: mm (in)

Thickness	Part number
0.40 (0.0157)	33147-06R00
0.44 (0.0173)	33147-06R01
0.48 (0.0189)	33147-06R02
0.60 (0.0236)	33147-06R03
0.64 (0.0252)	33147-06R04
0.68 (0.0268)	33147-06R06
0.72 (0.0283)	33147-06R07
0.76 (0.0299)	33147-06R05

Pinion sleeve shim

Unit: mm (in)

Thickness	Part number
0.40 (0.0157)	33155-10R00
0.44 (0.0173)	33155-10R01
0.48 (0.0189)	33155-10R02
0.52 (0.0205)	33155-10R03
0.56 (0.0220)	33155-10R04
0.60 (0.0236)	33155-10R05
0.64 (0.0252)	33155-10R06
0.68 (0.0268)	33155-10R07
0.72 (0.0283)	33155-10R08
0.76 (0.0299)	33155-10R09

Front differential side bearing adjusting shim

Unit: mm (in)

Side bearing end play	0.05 - 0.20 (0.0020 - 0.0079)

Thickness mm (in)	Part number
0.40 (0.0157)	33147-06R00
0.44 (0.0173)	33147-06R01
0.48 (0.0189)	33147-06R02
0.60 (0.0236)	33147-06R03
0.64 (0.0252)	33147-06R04
0.68 (0.0268)	33147-06R06
0.72 (0.0283)	33147-06R07
0.76 (0.0299)	33147-06R05

Inspection and Adjustment (Cont'd)

AVAILABLE WASHER

Front differential side gear thrust washer

Unit: mm (in)

Clearance between side gear and differential case	0.1 - 0.2 (0.004 - 0.008)

Thickness mm (in)	Part number
0.75 - 0.80 (0.0295 - 0.0315)	38424-E3000
0.80 - 0.85 (0.0315 - 0.0335)	38424-E3001
0.85 - 0.90 (0.0335 - 0.0354)	38424-E3002
0.90 - 0.95 (0.0354 - 0.0374)	38424-E3003

PROPELLER SHAFT & DIFFERENTIAL CARRIER

SECTION PD

CONTENTS

PREPARATION ..... PD- 2
PROPELLER SHAFT ..... PD- 5
ON-VEHICLE SERVICE (Final drive) ..... PD- 8
REMOVAL AND INSTALLATION (Final drive) PD-10
FINAL DRIVE (Model R180 and R180V) PD-12
DISASSEMBLY PD-13
INSPECTION PD-18
ADJUSTMENT (Model R180 and R180V) PD-19
ASSEMBLY PD-26
VISCOUS LIMITED SLIP DIFFERENTIAL CASE PD-31
SERVICE DATA AND SPECIFICATIONS (S.D.S.) PD-34

SPECIAL SERVICE TOOLS

Tool number (Kent-Moore No.) Tool name	Description	
ST38060002 (–) Drive pinion flange wrench	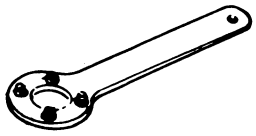	Removing and installing propeller shaft lock nut, and drive pinion lock nut.
KV38100800 (–) Differential attachment	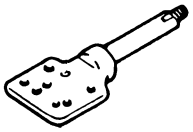	Mounting final drive (To use, make a new hole.)
ST3090S000 (–) Drive pinion rear inner race puller set ① ST30031000 (J22912-01) Puller ② ST30901000 (–) Base	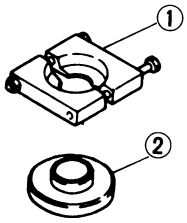	Removing and installing drive pinion rear cone
ST3306S001 Differential side bearing puller set ① ST33051001 (–) Body ② ST33061000 (J8107-2) Adapter	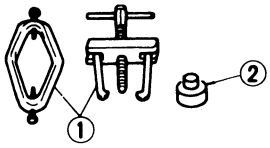	Removing and installing differential side bearing inner cone
ST30611000 (J25742-1) Drift	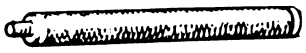	Installing pinion rear bearing outer race
ST30701000 (J25742-2) Drift	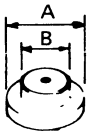	Installing pinion front bearing outer race **A: 61.5 mm (2.421 in) dia.** **B: 41 mm (1.61 in) dia.**
ST30720000 (–) Oil seal drift	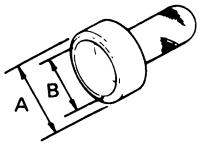	Installing front oil seal **A: 77 mm (3.03 in) dia.** **B: 55 mm (2.17 in) dia.**
KV38100500 (–) Gear carrier front oil seal drift	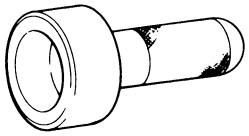	Installing front oil seal

Tool number (Kent-Moore No.) Tool name	Description	
ST3065001 (J25749-4) Pilot bearing drift	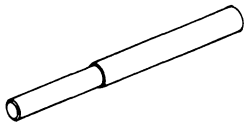	Removing pinion front bearing inner cone
ST30621000 (–) Drift	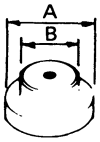	Installing side bearing outer race and pinion rear bearing outer race **A: 79 mm (3.11 in) dia.** **B: 59 mm (2.32 in) dia.**
ST33720000 (J25817) Differential side retainer guide	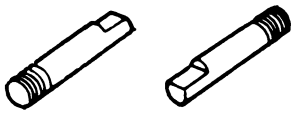	Installing side retainer
ST33270000 (–) Side oil seal drift	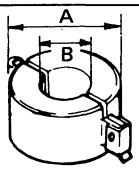	Installing side oil seal **A: 62 mm (2.44 in) dia.** **B: 28 mm (1.10 in) dia.**
ST3127S000 (See J25765-A) Preload gauge ① GG91030000 (J25765) Torque wrench ② HT62940000 (–) Socket adapter ③ HT62900000 (–) Socket adapter	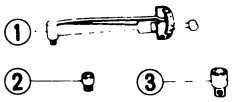	Measuring pinion bearing preload and total preload
KV38100200 (J26233) Gear carrier side oil seal drift	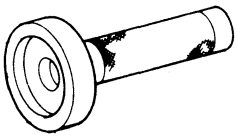	Installing side oil seal
(J34309) Differential shim selector	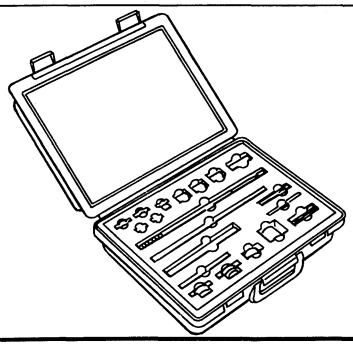	Adjusting bearing preload and gear height

Tool number (Kent-Moore No.) Tool name	Description	
(J25269-4) Side bearing discs (2 Req'd)	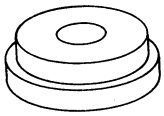	Selecting pinion height adjusting washer
(J25269-18) Side bearing discs (2 Req'd)	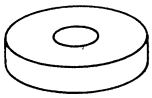	Selecting pinion height adjusting washer
(J8129) Spring gauge	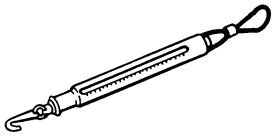	Measuring carrier turning torque

COMMERCIAL SERVICE TOOLS

Tool number (Kent-Moore No.) Tool name	Description	
ST33200000 (–) Final mounting member insulator drift	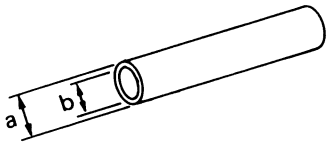	Removing insulator **A: 60 mm (2.36 in) dia.** **B: 44.5 mm (1.752 in) dia.**
Final mounting member insulator drift	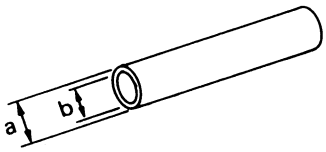	Removing and installing insulator **A: 80 mm (3.15 in) dia.** **B: 72 mm (2.83 in) dia.**
KV40104710 (–) Final mounting member insulator drift	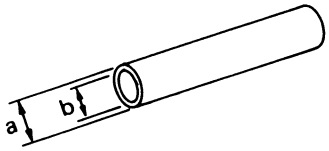	Installing insulator **A: 76 mm (2.99 in) dia.** **B: 68 mm (2.68 in) dia.**

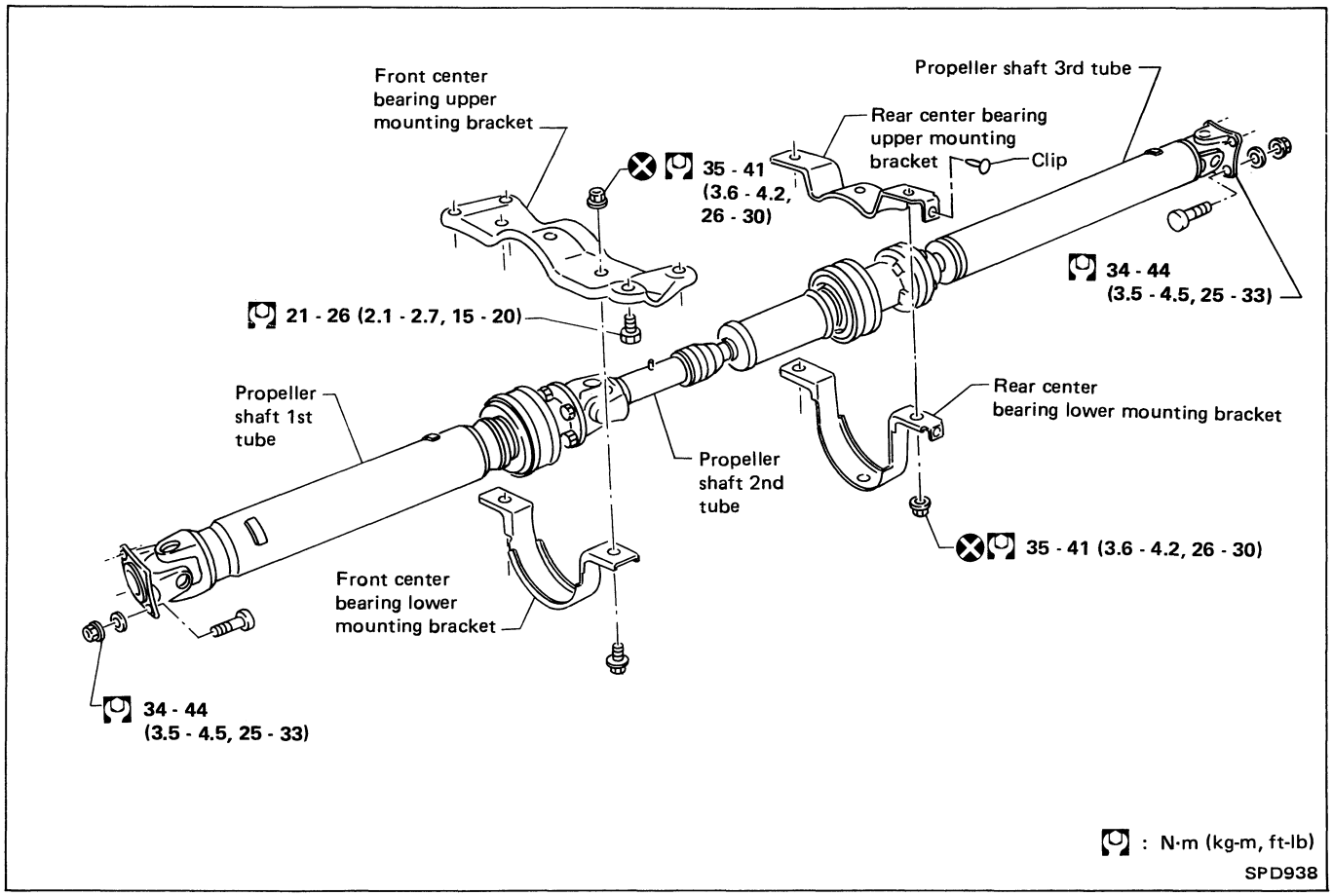

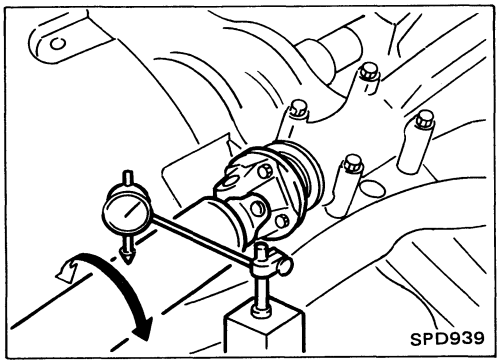

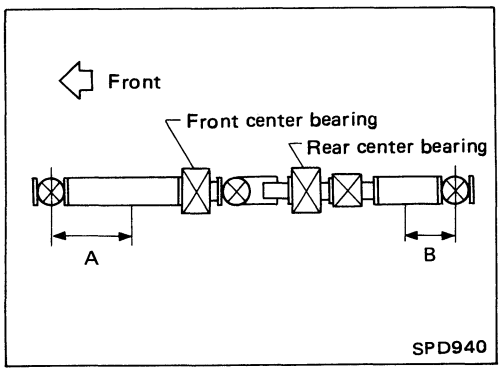

On-vehicle Service

PROPELLER SHAFT VIBRATION

If vibration is present at high speed, inspect propeller shaft runout first.

1. Raise rear wheels.
2. Measure propeller shaft runout at indicated points by rotating final drive companion flange with hands.
   Runout limit: 0.6 mm (0.024 in)

Propeller shaft runout measuring points:
Distance "A"
359 mm (14.13 in)
Distance "B"
370 mm (14.57 in)

On-vehicle Service (Cont'd)

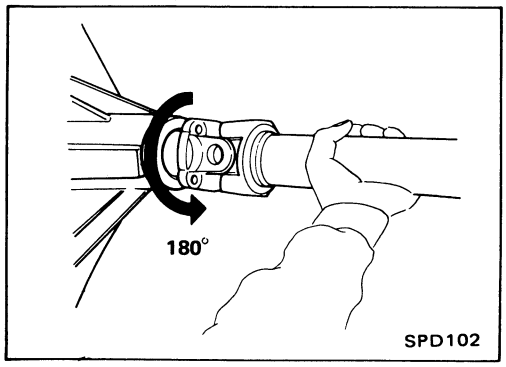

3. If runout exceeds specifications, disconnect propeller shaft at final drive companion flange; then rotate companion flange 180 degrees and reconnect propeller shaft.
   Runout limit: 0.6 mm (0.024 in)
4. Check runout again. If runout still exceeds specifications, replace propeller shaft assembly.
5. Perform road test.

APPEARANCE CHECKING

- Inspect propeller shaft tube surface for dents or cracks. If damaged, replace propeller shaft assembly.
- If center bearing is noisy or damaged, replace center bearing.

Removal and Installation

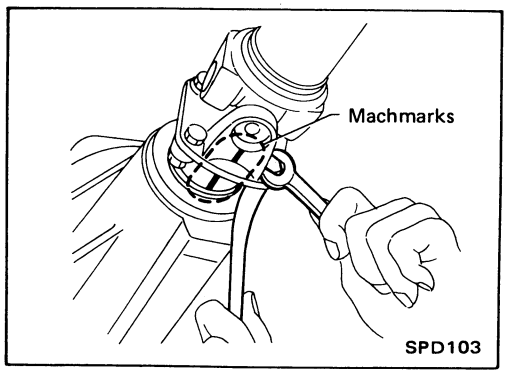

- Put matchmarks on flanges and separate propeller shaft from final drive.

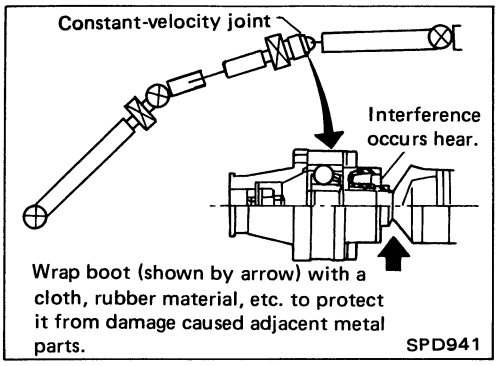

- Before removing/installing propeller shaft or moving it from one place to another, wrap boot located at constant-velocity joint with a cloth or rubber material to protect it against damage, as shown in figure at left.

Inspection

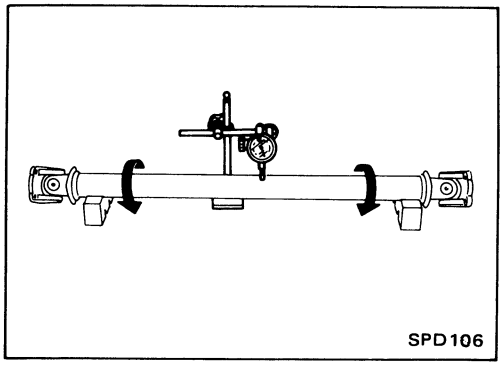

- Inspect propeller shaft runout. If runout exceeds specifications, replace propeller shaft assembly.
  Runout limit: 0.6 mm (0.024 in)

Inspection (Cont'd)

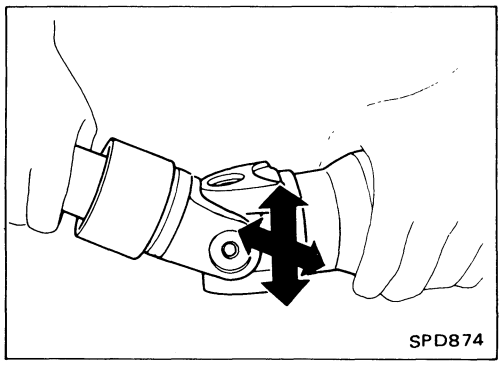

- Inspect journal axial play.
  If the play exceeds specifications, replace propeller shaft assembly.
  Journal axial play:
  0 mm (0 in)

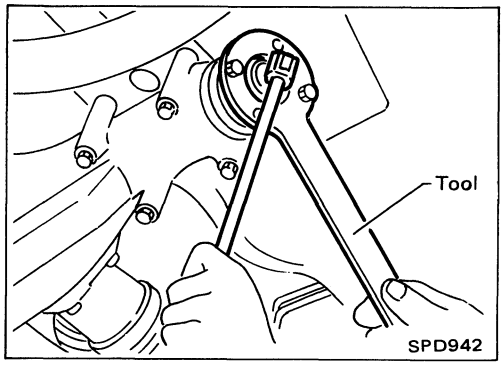

Front Oil Seal Replacement

1. Remove propeller shaft.
2. Loosen drive pinion nut with Tool.
   Tool number: ST38060002 (—)

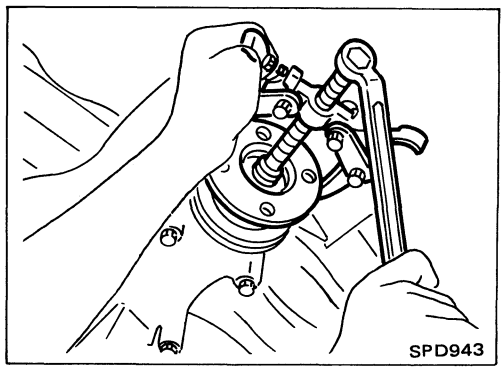

3. Remove companion flange.

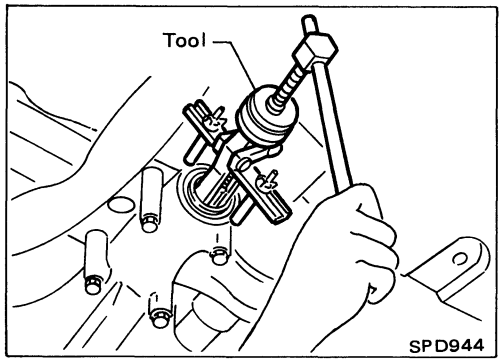

4. Remove front oil seal.

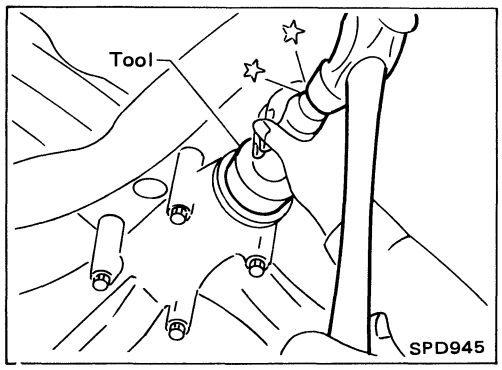

5. Apply multi-purpose grease to sealing lips of oil seal. Press front oil seal into carrier.
6. Install companion flange and drive pinion nut.
7. Install propeller shaft.

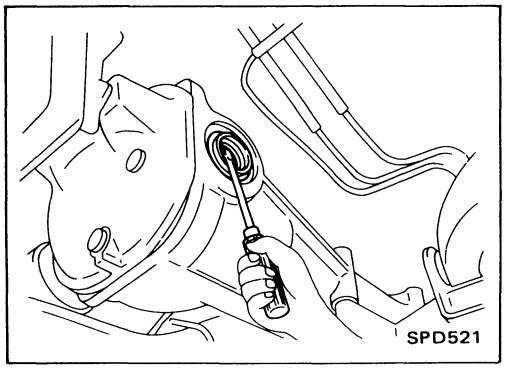

Side Oil Seal Replacement

1. Remove drive shafts.
   Refer to RA section.
2. Remove oil seal.

Side Oil Seal Replacement (Cont'd)

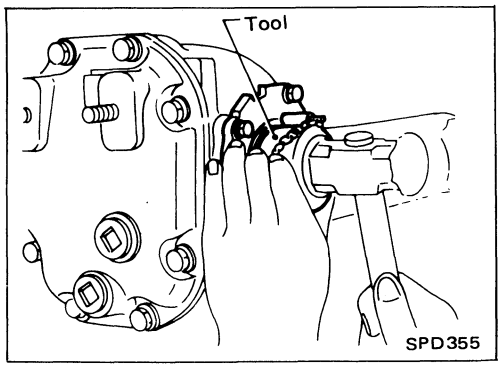

3. Apply multi-purpose grease to sealing lips of oil seal. Press-fit oil seal into carrier with Tool.
   Tool number: ST33270000 (—)
4. Install drive shafts.

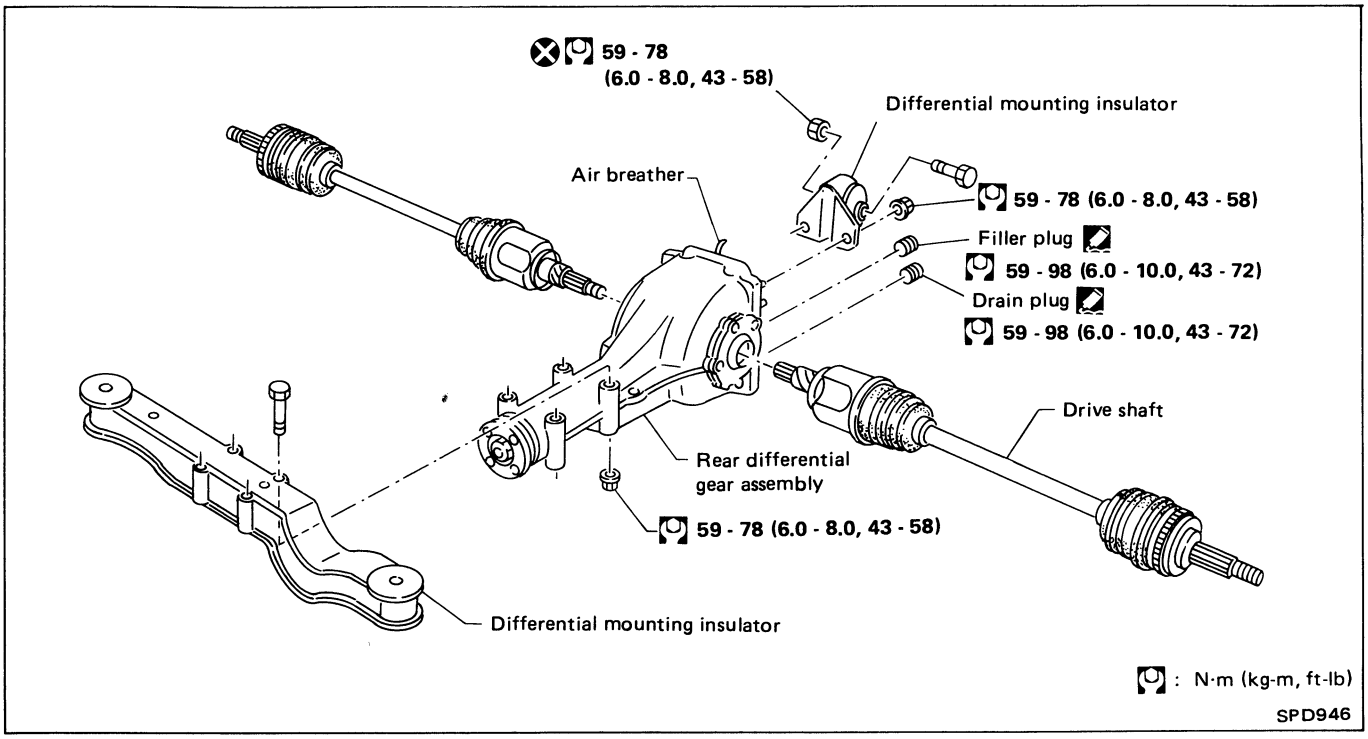

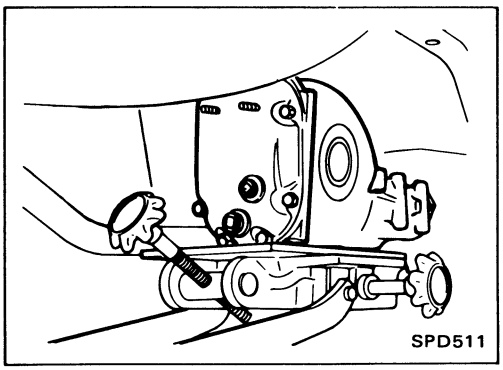

Removal

- Remove propeller shaft.
- Remove drive shafts.
  Refer to RA section.
- Disconnect breather hose from final drive side in advance.
- Support final drive with jack and disconnect differential mounting bracket from final drive.
- Disconnect final drive from mounting member.
- Remove final drive by moving it slightly foward and down.
- Remove final drive mounting member from body.

CAUTION:
Be careful not to damage spline, joint and front oil seal when removing propeller shaft.

Final Drive Mounting Member

- Check member for deformation or cracks.
  Replace if necessary.
- Check insulator for deformation or cracks.

If necessary, replace insulator.

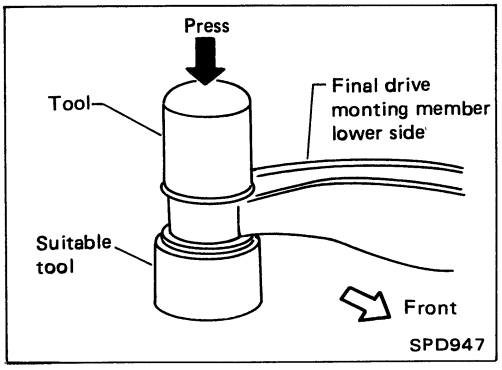

- If bracket insulator is deformed or cracked, replace it with Tool and a suitable tool.
  Tool number: KV40104710 (—) or equivalent

Final Drive Mounting Member (Cont'd)

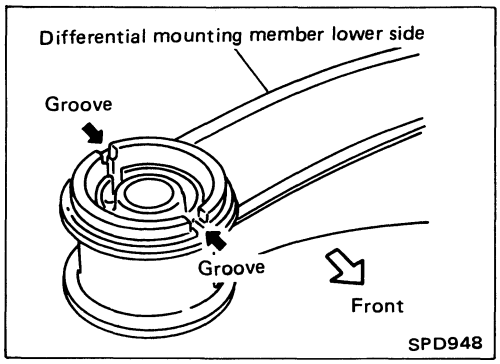

- Install the insulator as shown in the figure at left.

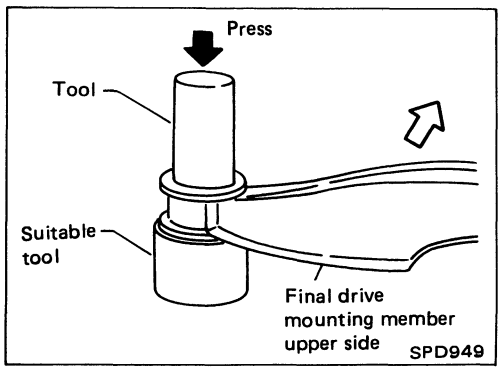

- Install bracket insulator with Tool and a suitable tool. Be sure to install in its proper place.
  Tool number: ST33200000 (—) or equivalent

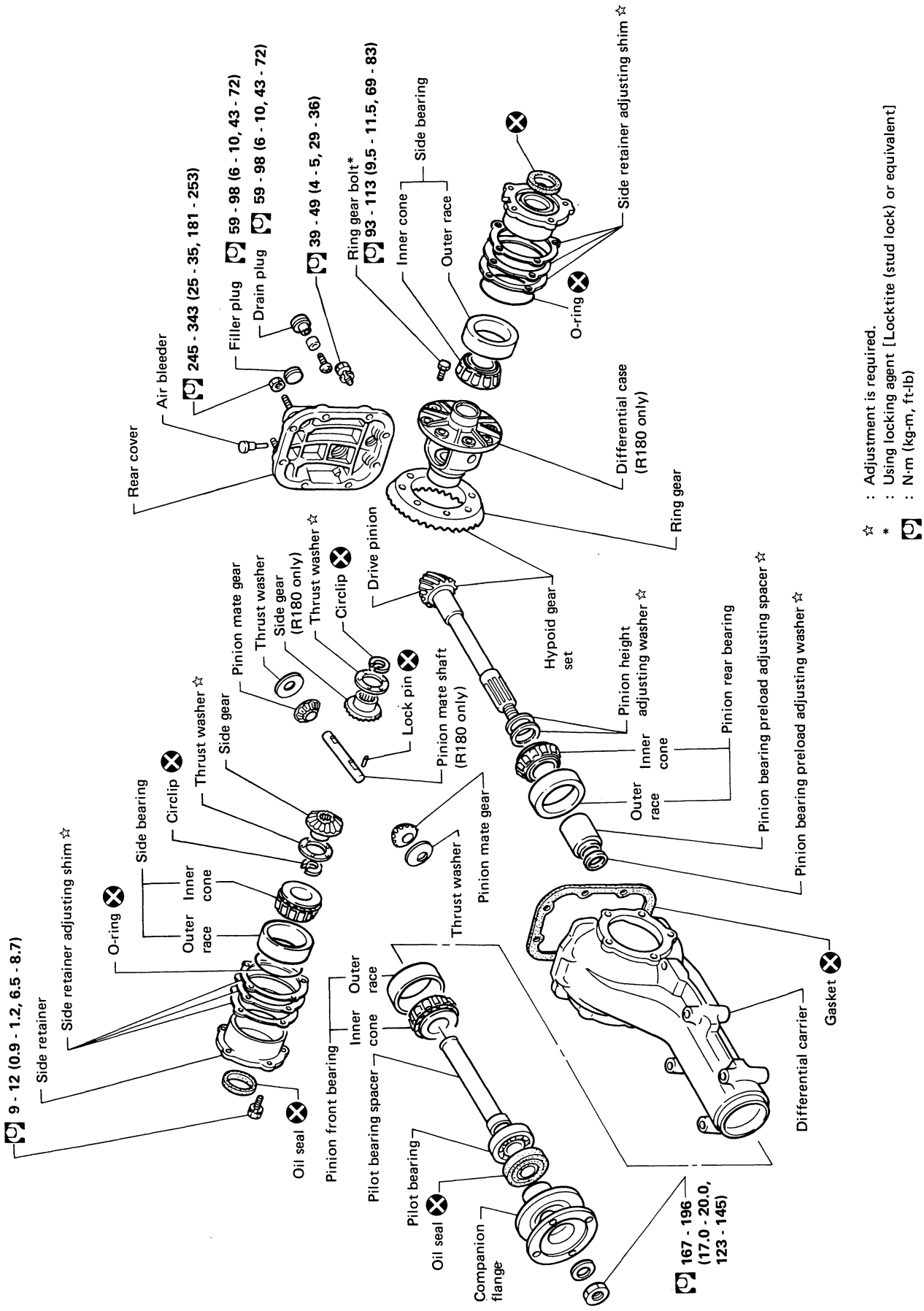
Rear cover
Air bleeder
245 - 343 (25 - 35, 181 - 253)
Filler plug
59 - 98 (6 - 10, 43 - 72)
Drain plug
59 - 98 (6 - 10, 43 - 72)
39 - 49 (4 - 5, 29 - 36)
Ring gear bolt*
93 - 113 (9.5 - 11.5, 69 - 83)
Inner cone
Outer race
Side bearing
Side retainer adjusting shim ☆
O-ring
Differential case (R180 only)
Ring gear
Drive pinion
Hypoid gear set
Pinion height adjusting washer ☆
Pinion rear bearing
Pinion bearing preload adjusting spacer ☆
Pinion bearing preload adjusting washer ☆
Pinion mate gear
Thrust washer
Side gear (R180 only)
Thrust washer ☆
Circlip
Lock pin
Pinion mate shaft (R180 only)
Side gear
Thrust washer ☆
Circlip
Side bearing
Inner cone
Outer race
O-ring
Side retainer adjusting shim ☆
Side retainer
9 - 12 (0.9 - 1.2, 6.5 - 8.7)
Oil seal
Pinion front bearing
Outer race
Inner cone
Pilot bearing spacer
Pilot bearing
Oil seal
Companion flange
167 - 196 (17.0 - 20.0, 123 - 145)
Thrust washer
Pinion mate gear
Gasket
Differential carrier
☆ : Adjustment is required.
* : Using locking agent [Locktite (stud lock) or equivalent]
: N·m (kg-m, ft-lb)

SPD963

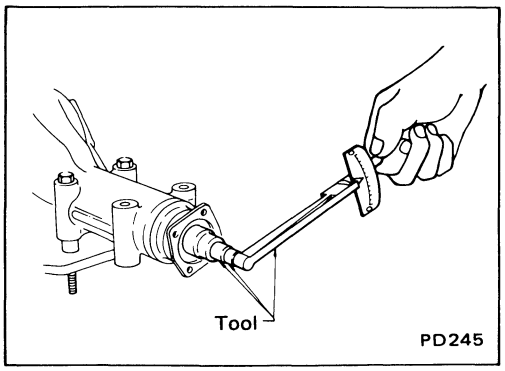

Pre-inspection

Before disassembling final drive, perform the following inspection.

- Total preload

1) Turn drive pinion in both directions several times to set bearing rollers.
2) Check total preload with Tool.
   Tool number: ST3127S000 (See J25765-A)
   Total preload:
   1.0 - 2.3 N•m
   (10 - 23 kg-cm, 8.7 - 20 in-lb)

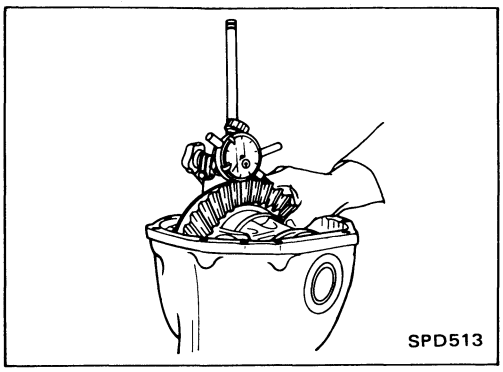

- Ring gear to drive pinion backlash
  Check ring gear-to-drive pinion backlash with a dial indicator at several points.
  Ring gear-to-drive pinion backlash:
  0.13 - 0.18 mm (0.0051 - 0.0071 in)

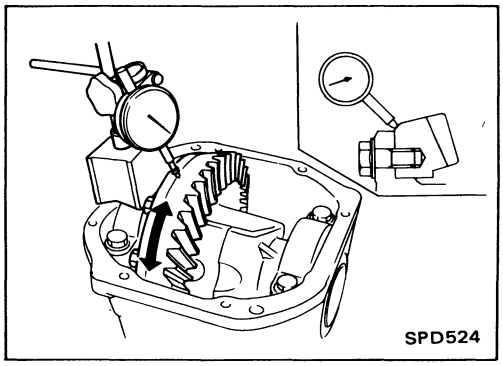

- Ring gear runout
  Check runout of ring gear with a dial indicator.
  Runout limit:
  0.05 mm (0.0020 in)
- Tooth contact
  Check tooth contact. (Refer to ADJUSTMENT.)

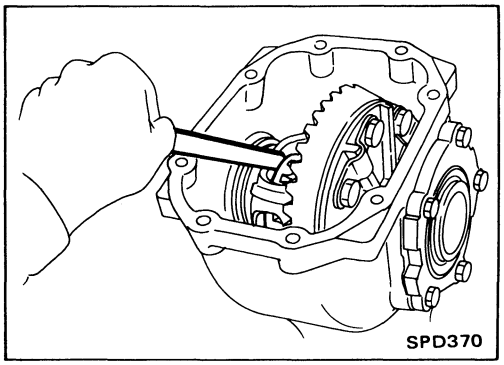

- Side gear to pinion mate gear backlash (R180 only)
  Using a feeler gauge, measure clearance between side gear thrust washer and differential case.
  Clearance between side gear thrust washer and differential case:
  0.10 - 0.20 mm (0.0039 - 0.0079 in)

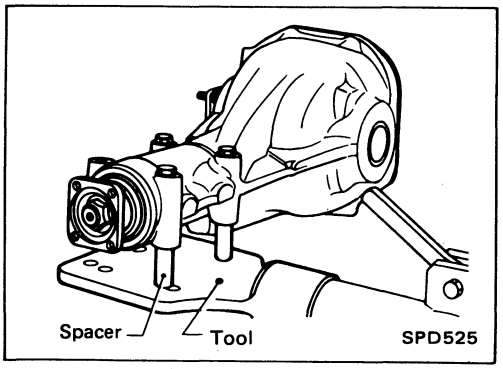

Differential Carrier

1. Using three 20 mm (0.79 in) spacers, mount final drive on Tool.
   Tool number: KV38100800 (—)

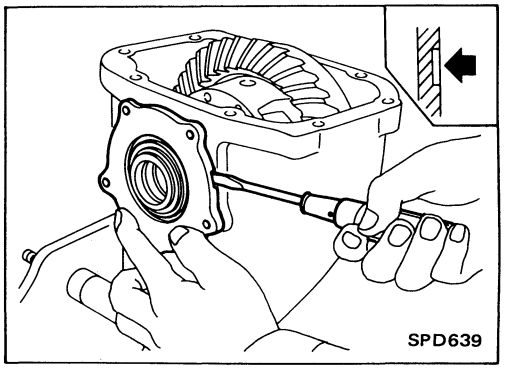

2. Mark side retainers for identification. Remove side retainers. **Be careful not to confuse right and left side retainers and shims.**

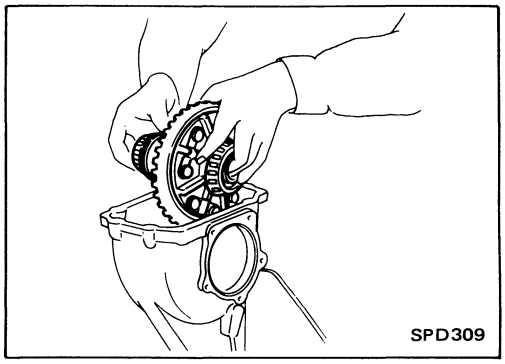

3. Extract differential case from final drive housing.

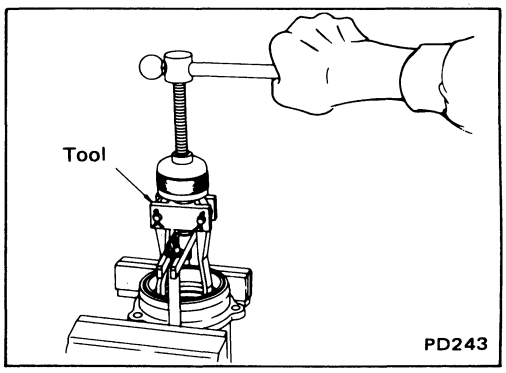

4. Remove side outer races.
   Tool number: ST33290001 (J34286)

Be careful to keep the side bearing outer races together with their respective inner cones — do not mix them up.

5. Remove side oil seal.

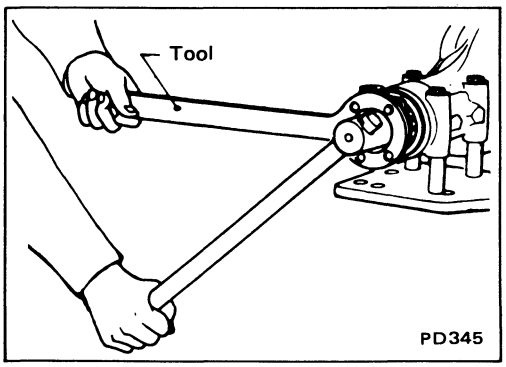

6. Loosen drive pinion nut.
   Tool number: ST38060002 (—)

Differential Carrier (Cont'd)

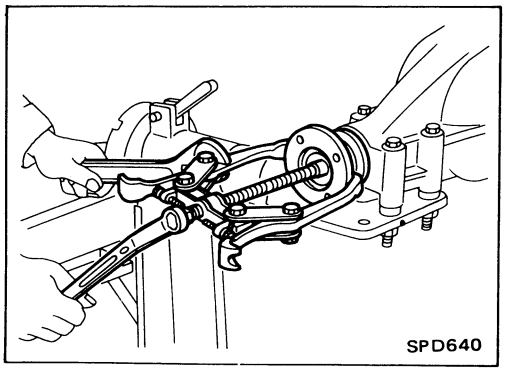

7. Remove companion flange with puller.

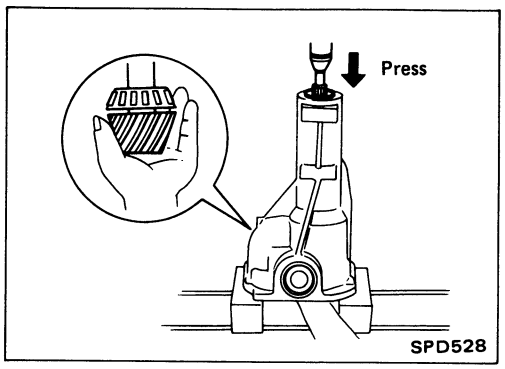

8. Take out drive pinion together with pinion rear bearing inner cone, drive pinion bearing spacer and pinion bearing adjusting washer.
9. Remove front oil seal.

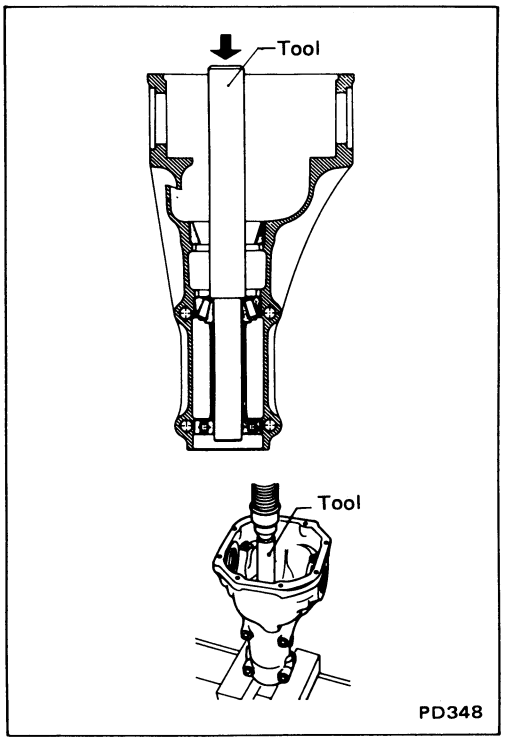

10. Remove pilot bearing together with pilot bearing spacer and pinion front bearing inner cone with Tool.
    Tool number: ST30650001 (J25749-A)

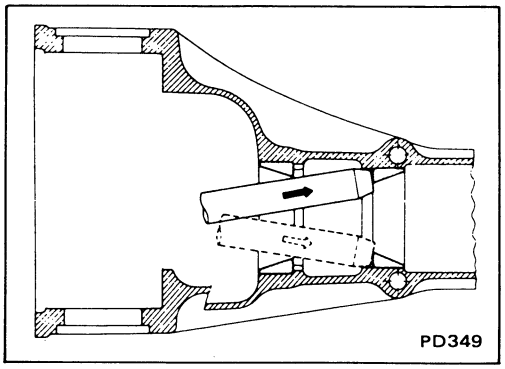

11. Remove pinion front and rear bearing outer races with brass drift.

Differential Carrier (Cont'd)

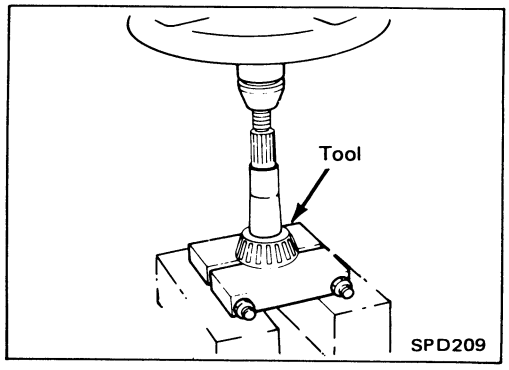

12. Remove pinion rear bearing inner cone and drive pinion adjusting washer.
    Tool number: ST30031000 (J22912-01)

Differential Case

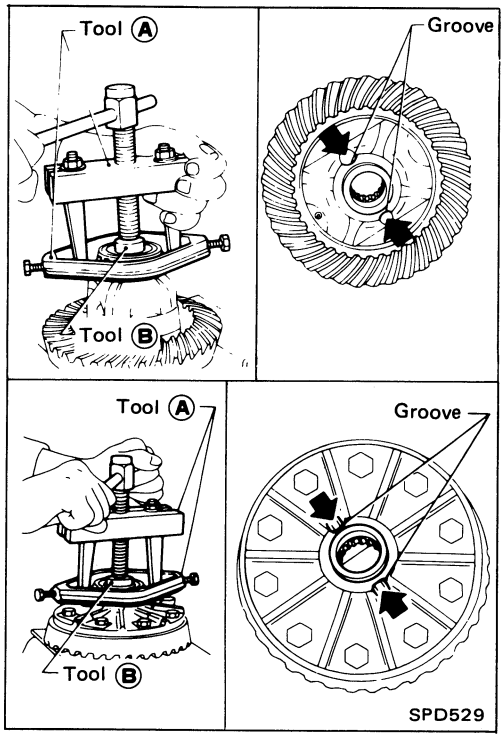

1. Remove side bearing inner cones.

To prevent damage to bearing, engage puller jaws in grooves.

Tool number:
- **Ⓐ ST33051001 (—)**
- **Ⓑ ST33061000 (J8107-2)**

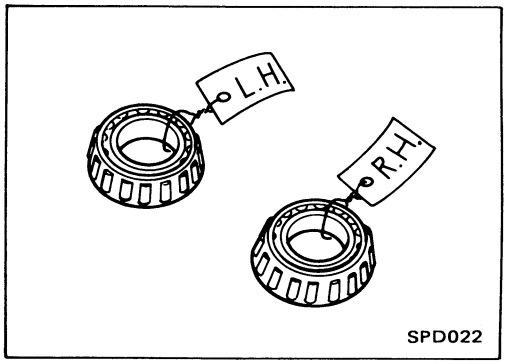

Be careful not to confuse the right and left hand parts.

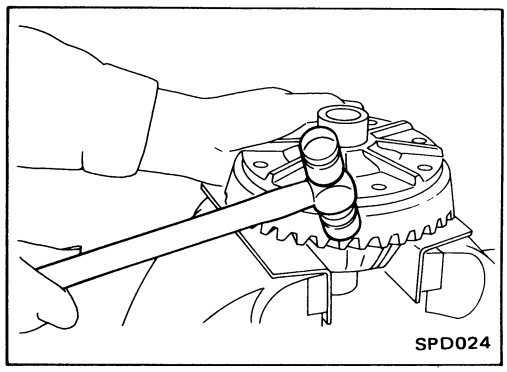

2. Loosen ring gear bolts in a criss-cross fashion.
3. Tap ring gear off differential case with a soft hammer.

Tap evenly all around to keep ring gear from binding.

Differential Case (Cont'd)

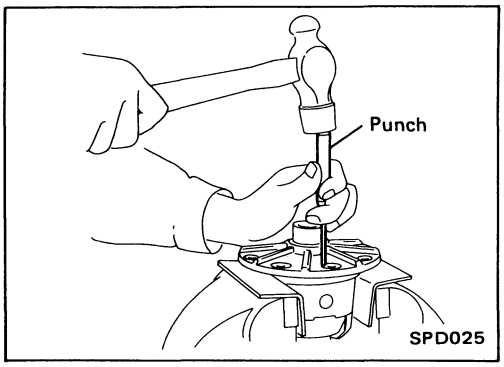

4. Punch off pinion mate shaft lock pin from ring gear side.
Lock pin is calked at pin hole mouth on differential case.

Ring Gear and Drive Pinion

Check gear teeth for scoring, cracking or chipping.
If any damaged part is evident, replace ring gear and drive pinion as a set (hypoid gear set).

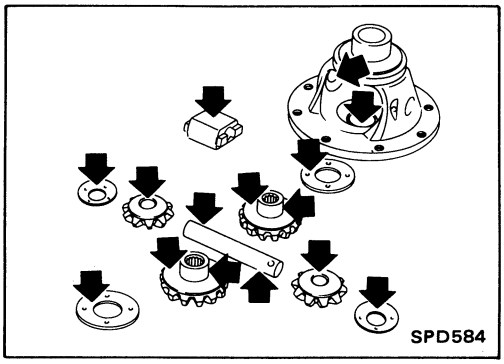

Differential Case Assembly

Check mating surfaces of differential case, side gears, pinion mate gears, pinion mate shaft, thrust block and thrust washers.

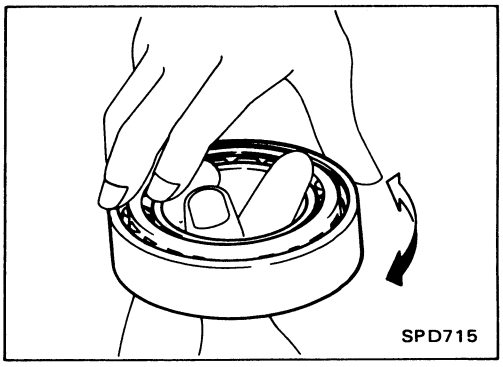

Bearing

1. Thoroughly clean bearing.
2. Check bearing for wear, scratches, pitting or flaking.
   Check tapered roller bearing for smooth rotation. If damaged, replace outer race and inner cone as a set.

For quiet and reliable final drive operation, the following five adjustments must be made correctly:

1. Side bearing preload.
2. Pinion gear height.
3. Pinion bearing preload.
4. Ring gear-to-pinion backlash. (Refer to ASSEMBLY.)
5. Ring and pinion gear tooth contact pattern.

Side Bearing Preload

A selection of carrier side bearing preload shims is required for successful completion of this precedure.

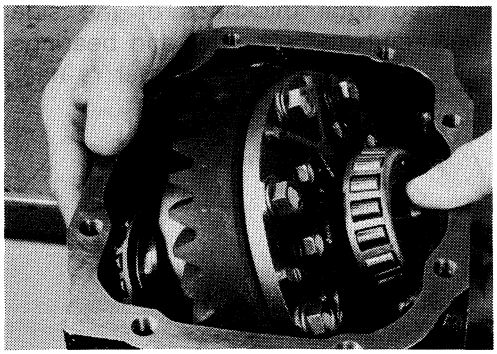

1. Make sure all parts are clean and that the bearings are well lubricated with light oil or Dexron™ type automatic transmission fluid.
2. Install differential carrier and side bearing assembly into the final drive housing.

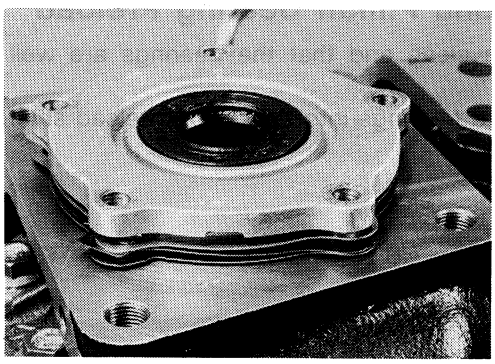

3. Place all of original side bearing preload shims onto the side bearing retainer that goes at the ring gear end of the carrier.

4. Install both bearing retainers onto the final drive housing and torque the retainer bolts.
   Bolt torque specification:
   9 - 12 N•m (0.9 - 1.2 kg-m, 6.5 - 7.2 ft-lb)

Side Bearing Preload (Cont'd)

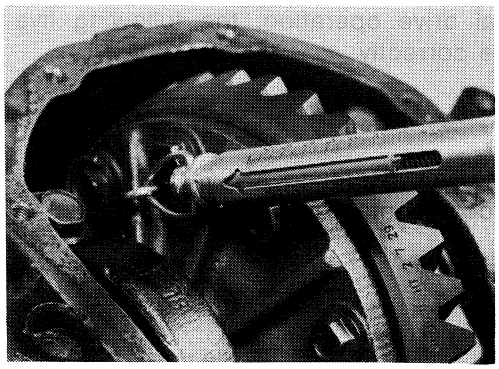

5. Turn the carrier several times to seat the bearings.
6. Measure the carrier turning torque with a spring gauge, J-8129, at the ring gear retaining bolt.

   Turning torque specification:

   34.3 - 39.2 N (3.5 - 4.0 kg, 7.7 - 8.8 lb) of pulling force at the ring gear bolt.

7. If the turning torque measured is incorrect, establish the correct bearing preload by adding to or subtracting from the total amount of shim thickness.
   - Increase shim thickness to decrease turning torque on the carrier.
   - Decrease shim thickness to increase turning torque on the carrier.

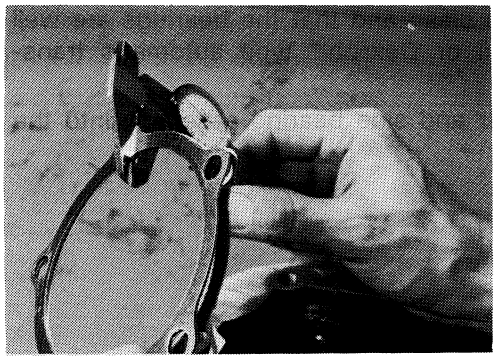

8. Record the correct, selected total thickness of the side bearing preload shims, and remove the carrier and bearings from the final drive housing. Save all shims for later re-use.

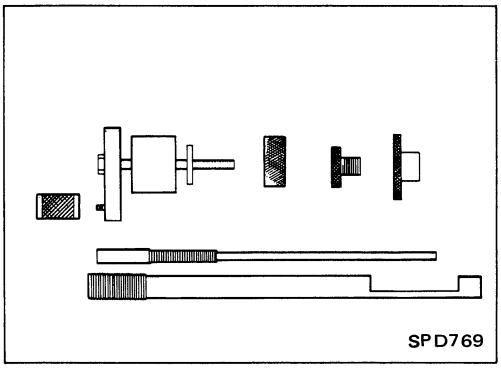

Pinion Gear Height and Pinion Bearing Preload

1. Make sure all parts are clean and that the bearings are well lubricated.
2. Assemble the pinion gear bearings into the pinion preload shim selector tool, J-34309.

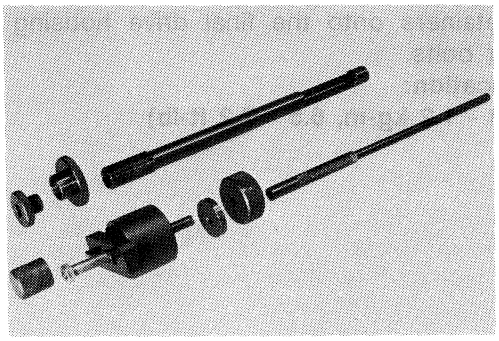

Pinion Gear Height and Pinion Bearing Preload (Cont'd)

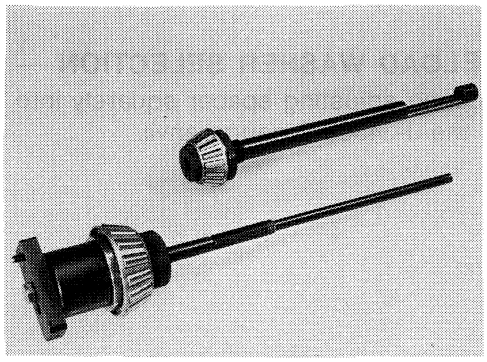

- **Front pinion bearings** — make sure the J-34309-3 front pinion bearing seat is secured tightly against the J-34309-2 gauge anvil. Then turn the front pinion bearing pilot, J-34309-7, to secure the bearing in its proper position.
- **Rear pinion bearing** — the rear pinion bearing pilot, J-34309-8, is used to center the rear pinion bearing only. The rear pinion bearing locking seat, J-34309-4, is used to lock the bearing to the assembly.

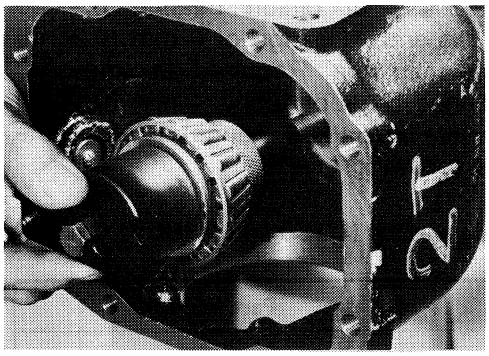

3. Place the pinion preload shim selector tool gauge screw, J-34309-1, with the pinion rear bearing inner cone installed, into the final drive housing.

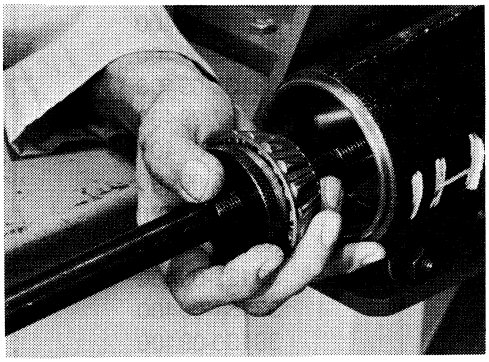

4. Install the J-34309-2 gauge anvil with the front pinion bearing into the final drive housing and assemble it to the J-34309-1 gauge screw. Make sure that the J-34309-16 gauge plate will turn a full 360 degrees, and tighten the two sections by hand.

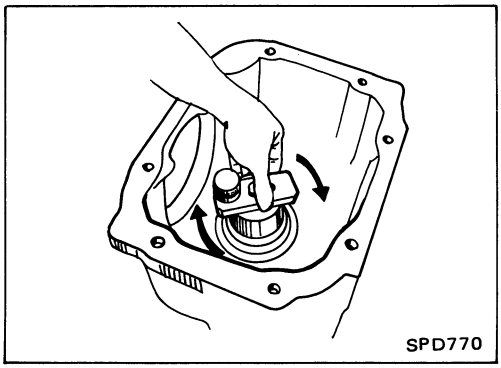

5. Turn the assembly several times to seat the bearings.

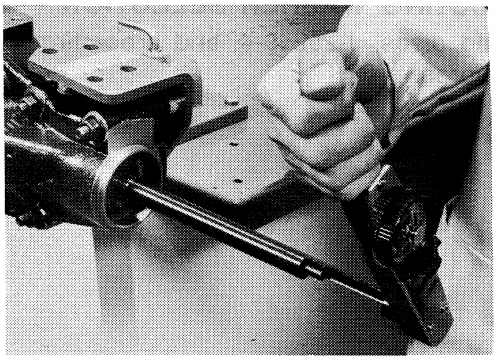

6. Measure the turning torque at the end of the J-34309-2 shaft using torque wrench J-25765-A.

   Turning torque specification:

   1.0 - 1.3 N•m (10 - 13 kg-cm, 8.7 - 11.3 in-lb)

7. Place the J-34309-10 pinion height adapter onto the gauge plate and tighten it by hand.

CAUTION:

Make sure all machined surfaces are clean.

Pinion Gear Height and Pinion Bearing Preload (Cont'd)

— PINION BEARING PRELOAD WASHER SELECTION —

8. Place the solid pinion bearing adjusting spacer squarely into the recessed portion of the J-34309-2 gauge anvil.

9. Select the correct thickness of pinion bearing preload adjusting washer using a standard gauge of 6 mm (0.24 in) and the J-34309-101 feeler gauge. Required thickness of adjusting washer is obtained by subtracting 4 mm (0.16 in) from total measured value (using a gauge). Select the correct washer from the following chart.

Drive pinion bearing adjusting washer (R180 and R180V)

Thickness mm (in)	Part number
2.31 (0.0909)	38141-09400
2.33 (0.0917)	38140-09400
2.35 (0.0925)	38139-09400
2.37 (0.0933)	38138-09400
2.39 (0.0941)	38137-09400
2.41 (0.0949)	38136-09400
2.43 (0.0957)	38135-09400
2.45 (0.0965)	38134-09400
2.47 (0.0972)	38133-09400
2.49 (0.0980)	38132-09400
2.51 (0.0988)	38131-09400
2.53 (0.0996)	38130-09400
2.55 (0.1004)	38129-09400
2.57 (0.1012)	38128-09400
2.59 (0.1020)	38127-09400

10. Set the selected, correct pinion bearing preload adjusting washer aside for use when assembling the pinion and bearings into the final drive housing.

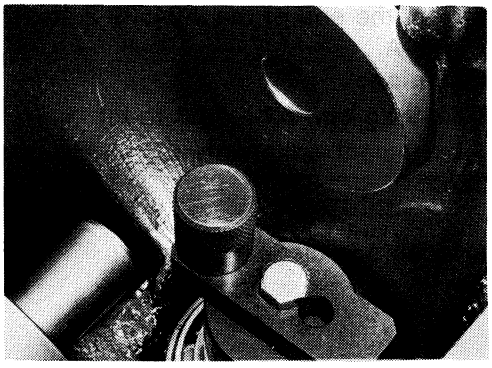

— PINION HEIGHT ADJUSTING WASHER SELECTION —

11. Position the side bearing discs, J-25269-4, and arbor firmly into the side bearings bores.

Pinion Gear Height and Pinion Bearing Preload (Cont'd)

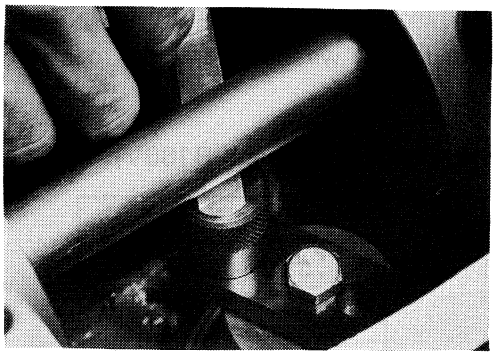

12. Select the correct standard pinion height adjusting washer thickness using a standard gauge of 3 mm (0.12 in) and the J-34309-101 feeler gauge. Measure the distance between the J-34309-10 pinion height adapter and the arbor.

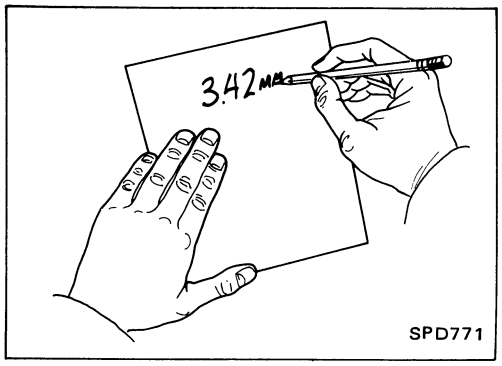

13. Write down the exact total measurement.

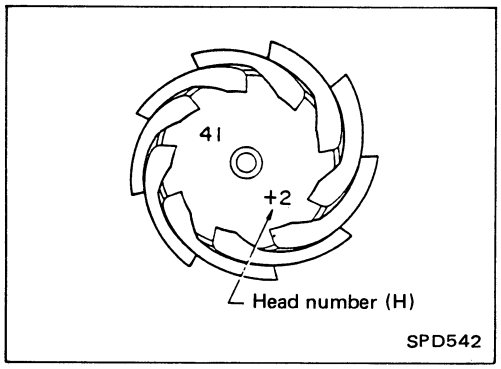

14. Correct the pinion height washer size by referring to the "pinion head number".

There are two numbers painted on the pinion gear. The first one refers to the pinion and ring gear as a matched set and should be the same as the number on the ring gear. The second number is the "pinion head height number," and it refers to the ideal pinion height from standard for quietest operation. Use the following chart to determine the correct pinion height washer.

Pinion head height number	Add or remove from the standard pinion height washer thickness measurement
−6	Add 0.06 mm (0.0024 in)
−5	Add 0.05 mm (0.0020 in)
−4	Add 0.04 mm (0.0016 in)
−3	Add 0.03 mm (0.0012 in)
−2	Add 0.02 mm (0.0008 in)
−1	Add 0.01 mm (0.0004 in)
0	Use the selected washer thickness
+1	Subtract 0.01 mm (0.0004 in)
+2	Subtract 0.02 mm (0.0008 in)
+3	Subtract 0.03 mm (0.0012 in)
+4	Subtract 0.04 mm (0.0016 in)
+5	Subtract 0.05 mm (0.0020 in)
+6	Subtract 0.06 mm (0.0024 in)

Pinion Gear Height and Pinion Bearing Preload (Cont'd)

15. Select the correct pinion height washer from the following chart.

Drive pinion height adjusting washer (R180 and R180V)

Thickness mm (in)	Part No.
3.09 (0.1217)	38154-P6017
3.12 (0.1228)	38154-P6018
3.15 (0.1240)	38154-P6019
3.18 (0.1252)	38154-P6020
3.21 (0.1264)	38154-P6021
3.24 (0.1276)	38154-P6022
3.27 (0.1287)	38154-P6023
3.30 (0.1299)	38154-P6024
3.33 (0.1311)	38154-P6025
3.36 (0.1323)	38154-P6026
3.39 (0.1335)	38154-P6027
3.42 (0.1346)	38154-P6028
3.45 (0.1358)	38154-P6029
3.48 (0.1370)	38154-P6030
3.51 (0.1382)	38154-P6031
3.54 (0.1394)	38154-P6032
3.57 (0.1406)	38154-P6033
3.60 (0.1417)	38154-P6034
3.63 (0.1429)	38154-P6035
3.66 (0.1441)	38154-P6036

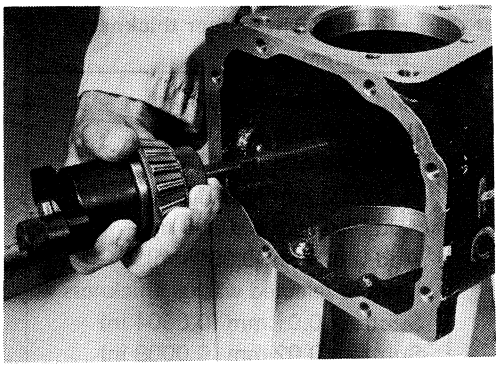

16. Remove the J-34309 pinion preload shim selector tool from the final drive housing and disassemble to retrieve the pinion bearings.

Tooth Contact

Checking of gear tooth contact pattern is necessary to verify correct relationship between ring gear and drive pinion.
Hypoid gear sets which are not positioned properly in relation to one another may be noisy, or have a short life, or both. With a pattern check, the most desirable contact for low noise level and long life can be assured.

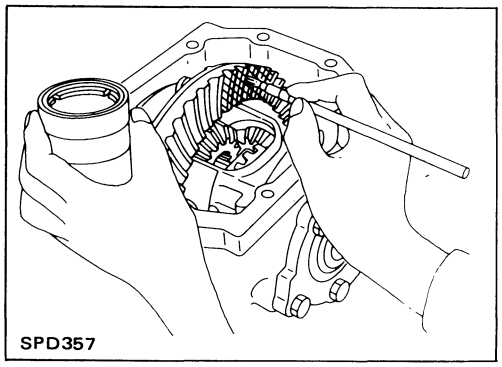

1. Thoroughly clean ring gear and drive pinion teeth.
2. Sparingly apply a mixture of powdered ferric oxide and oil or equivalent to 3 or 4 teeth of ring gear drive side.

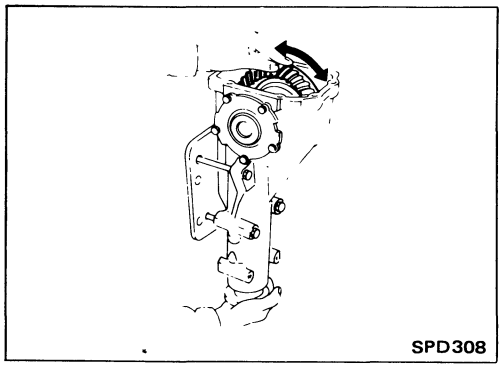

3. Hold companion flange steady by hand and rotate the ring gear in both directions.

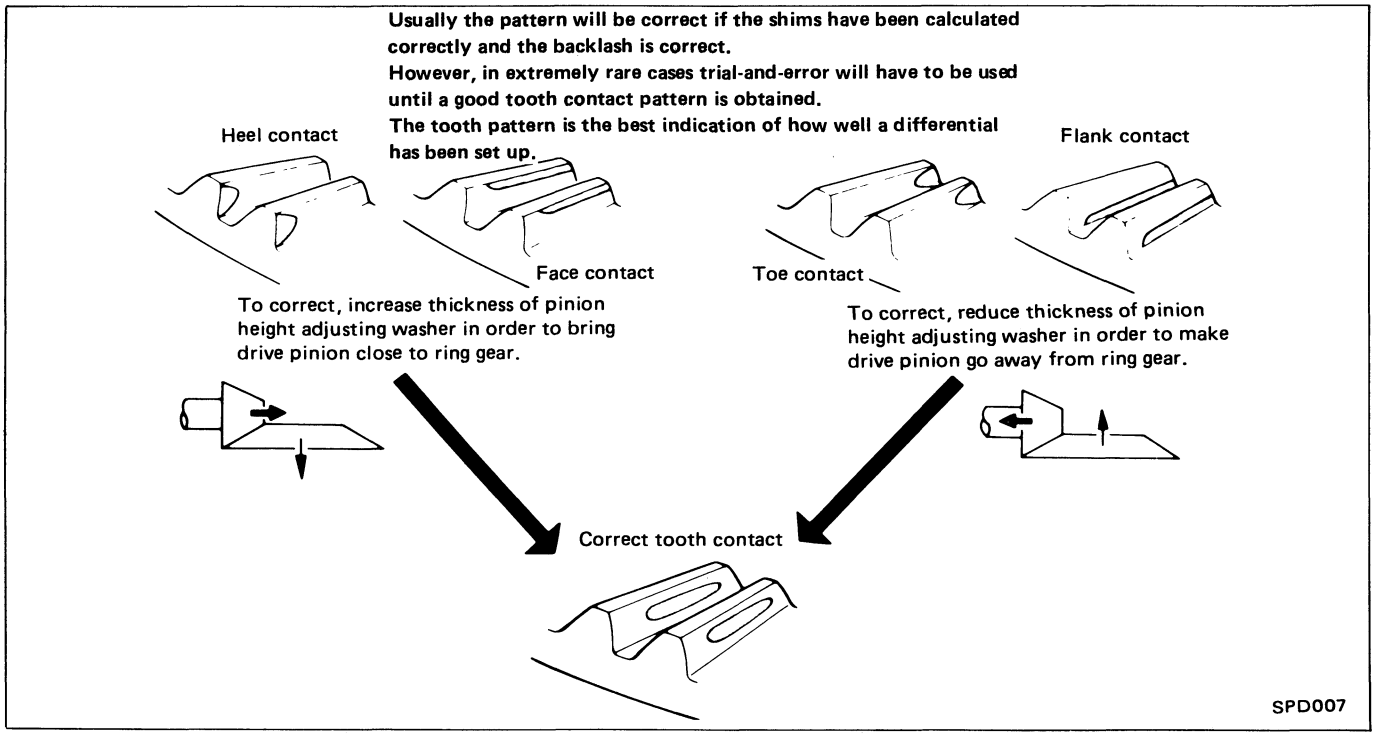

Differential Case

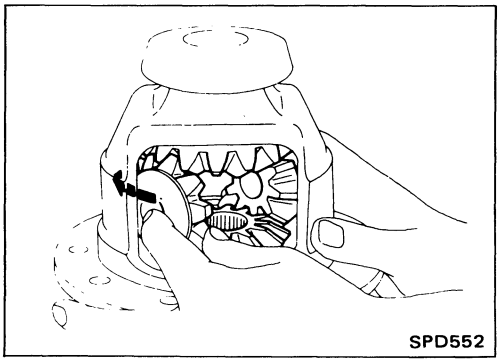

1. Install side gears, pinion mate gears and thrust washers into differential case.

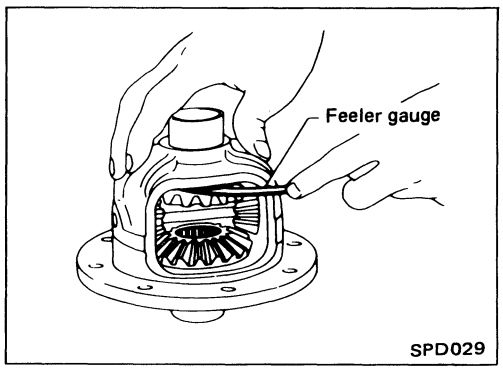

2. Fit pinion mate shaft to differential case so that it meets lock pin holes.
3. Adjust backlash between side gear and pinion mate gear by selecting side gear thrust washer. (Refer to S.D.S.)
   Backlash between side gear and pinion mate gear (Clearance between side gear thrust washer and differential case):
   0.10 - 0.20 mm (0.0039 - 0.0079 in)

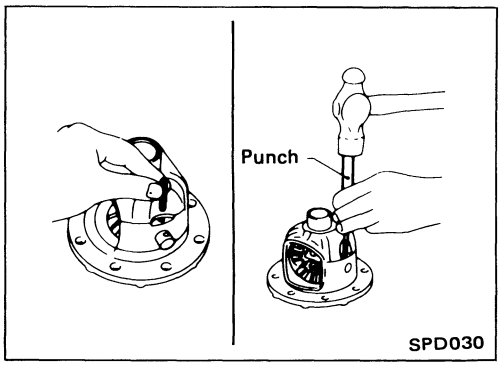

4. Install pinion mate shaft lock pin with a punch.
Make sure lock pin is flush with case.

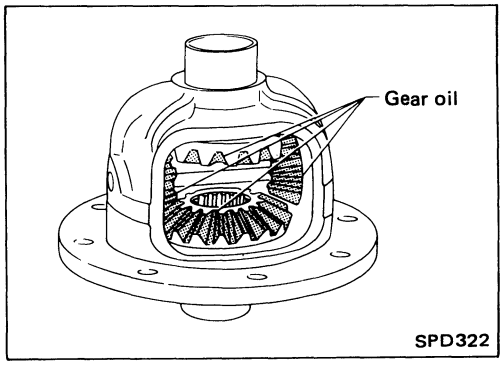

5. Apply gear oil to gear tooth surfaces and thrust surfaces and check to see they turn properly.

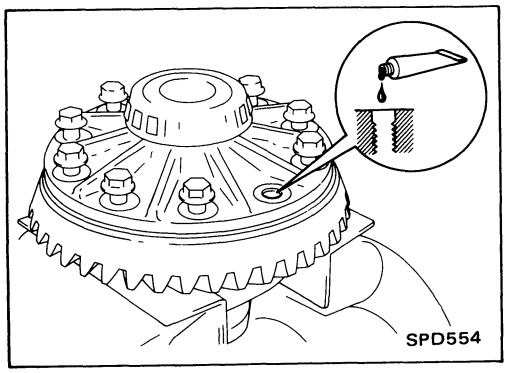

6. Apply locking sealant to ring gear bolts, and install them.
Tighten bolts in a criss-cross fashion, lightly tapping bolt head with a hammer.

Differential Case (Cont'd)

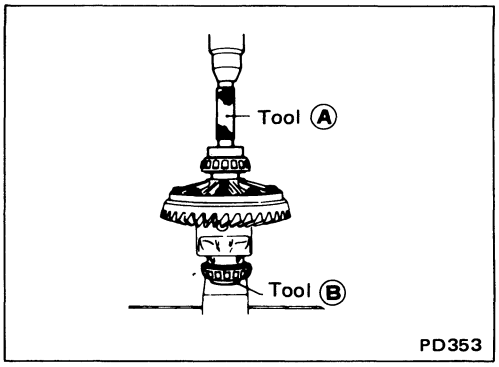

7. Select side bearing adjusting shims.
   Refer to ADJUSTMENT.
8. Install the shims behind each bearing and press on side bearing inner cones with Tool.
   Tool number:
   - **Ⓐ ST33230000 (J25805-01)**
   - **Ⓑ ST33061000 (J8107-2)**

Differential Carrier

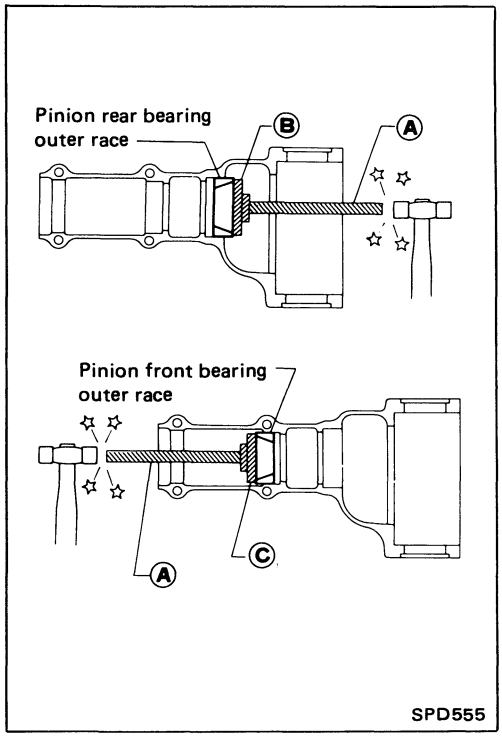

1. Press fit front and rear bearing outer races with Tools.
   Tool number:
   - **Ⓐ ST30611000 (J25742-1)**
   - **Ⓑ ST30621000 (J25742-5)**
   - **Ⓒ ST30701000 (J25742-2)**

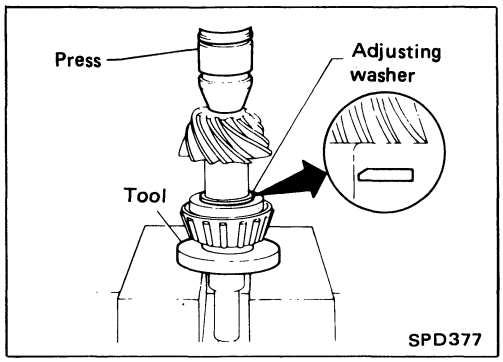

2. Select pinion height adjusting washer, referring to ADJUSTMENT.
3. Install pinion height adjusting washer in drive pinion, and press fit rear bearing inner cone in it with press and Tool.
   Tool number: ST30901000 (—)

Differential Carrier (Cont'd)

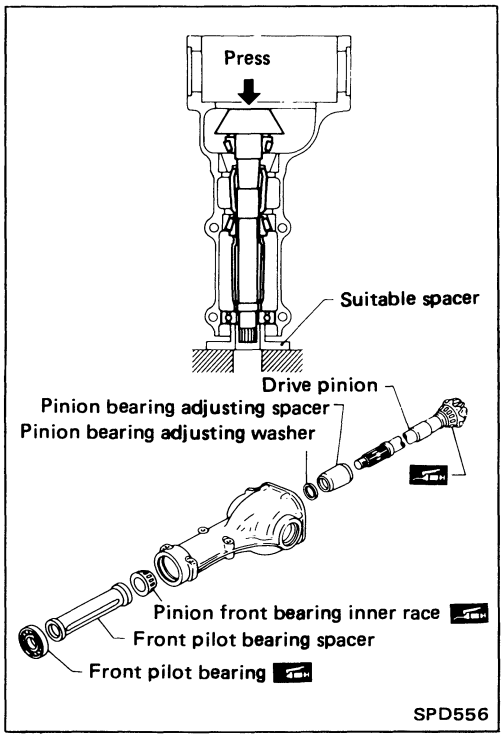

4. Set drive pinion assembly (as shown at left) in differential carrier and install drive pinion, using press and suitable tool.
Stop when drive pinion touches bearing.

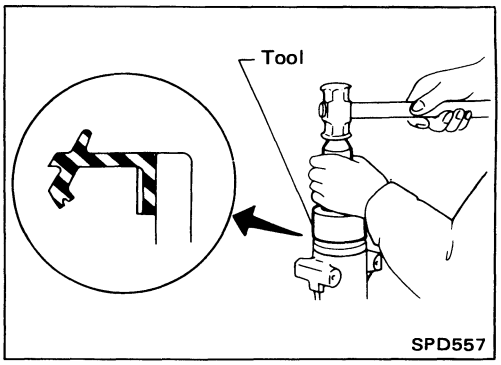

5. Apply multi-purpose grease to cavity at sealing lips of oil seal.
Install front oil seal.
Tool number: ST30720000 (—)

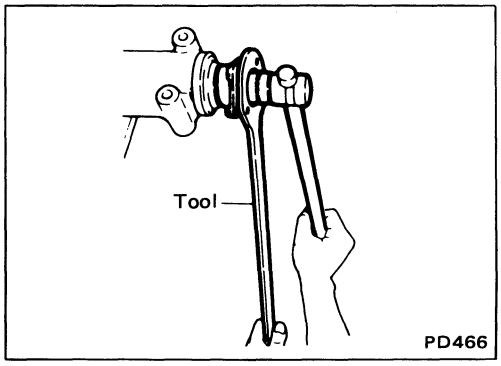

6. Install companion flange, and tighten pinion nut to specified torque.
Ascertain that threaded portion of drive pinion and pinion nut are free from oil or grease.
Tool number: ST38060002 (—)

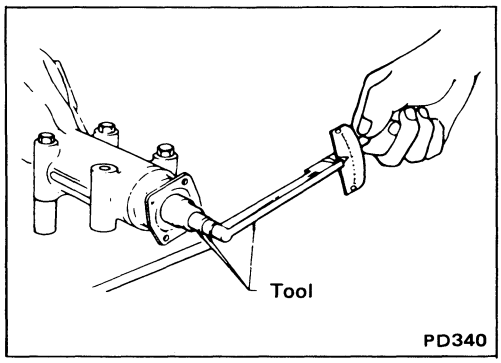

7. Turn drive pinion in both directions several times, and measure pinion bearing preload.
Tool number: ST3127S000 (See J25765-A)
Pinion bearing preload (With oil seal):
0.9 - 1.7 N•m (9 - 17 kg-cm, 7.8 - 14.8 in-lb)
When pinion bearing preload is outside the specifications, replace pinion bearing adjusting washer and spacer with a different thickness.

Differential Carrier (Cont'd)

When pinion bearing preload is outside the specifications, replace pinion bearing adjusting washer and spacer with a different thickness.

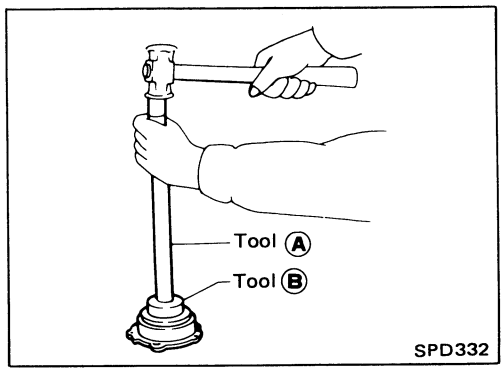

8. Select side retainer adjusting washer.
   Refer to Adjustment.
9. Press-fit side bearing outer race into side retainer.
   Tool number:
   Ⓐ ST30611000 (J25742-1)
   Ⓑ ST30621000 (—)

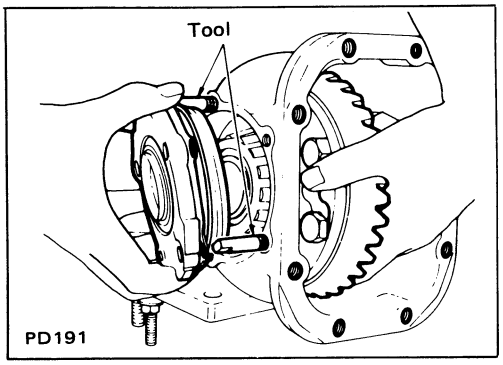

10. Install side oil seal.
11. Install differential case assembly.
12. Place side retainer adjusting shims and O-ring on side retainer, and install them in gear carrier.
    Tool number: ST33720000 (J25817)

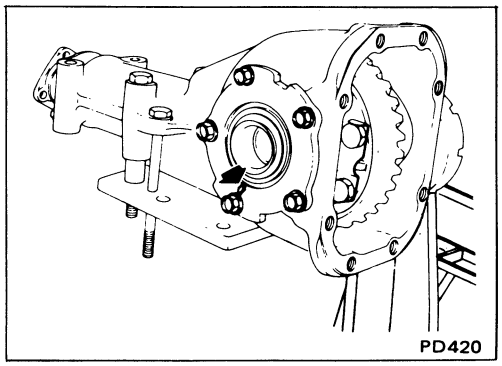

- **Align mark on side retainer and gear carrier.**

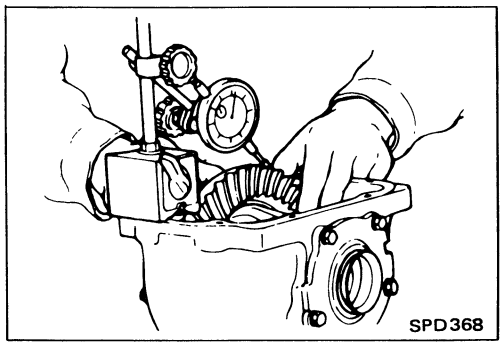

13. Measure ring gear-to-drive pinion backlash with a dial indicator.
    Ring gear-to-drive pinion backlash:
    0.13 - 0.18 mm (0.0051 - 0.0071 in)

- If backlash is too small, decrease thickness of right shim and increase thickness of left shim by the same amount.
- If backlash is too great, reverse the above procedure.

Never change the total amount of shims as it will change the bearing preload.

Differential Carrier (Cont'd)

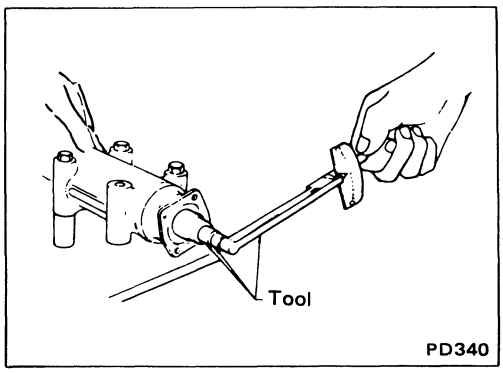

14. Check total preload with Tool.

When checking preload, turn drive pinion in both directions several times to set bearing rollers.

Tool number: ST3127S000 (See J25765-A)

Total preload:

1.0 - 2.3 N•m (10 - 23 kg-cm, 8.7 - 20.0 in-lb)

- If preload is too great, add the same amount of shims from each side.
- If preload is too small, remove the same amount of shims to each side.

Never add or remove a different number of shims for each side as it will change ring gear-to-drive pinion backlash.

15. Recheck ring gear-to-drive pinion backlash because an increase or decrease in thickness of shims will cause change of ring gear-to-drive pinion backlash.

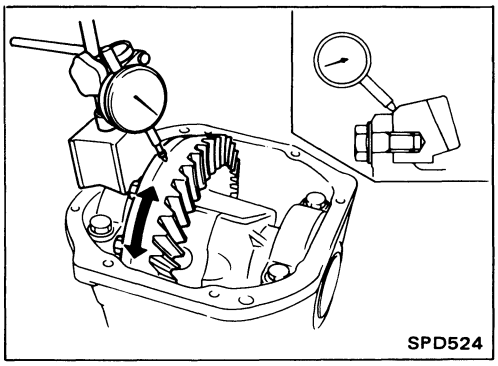

16. Check runout of ring gear with a dial indicator.

Runout limit: 0.05 mm (0.0020 in)

- If backlash varies excessively indifferent places, the variance may have resulted from foreign matter caught between the ring gear and the differential case.
- If the backlash varies greatly when the runout of the ring gear is within a specified range, the hypoid gear set or differential case should be replaced.

17. Check tooth contact.
    Refer to ADJUSTMENT.
18. Install rear cover and gasket.

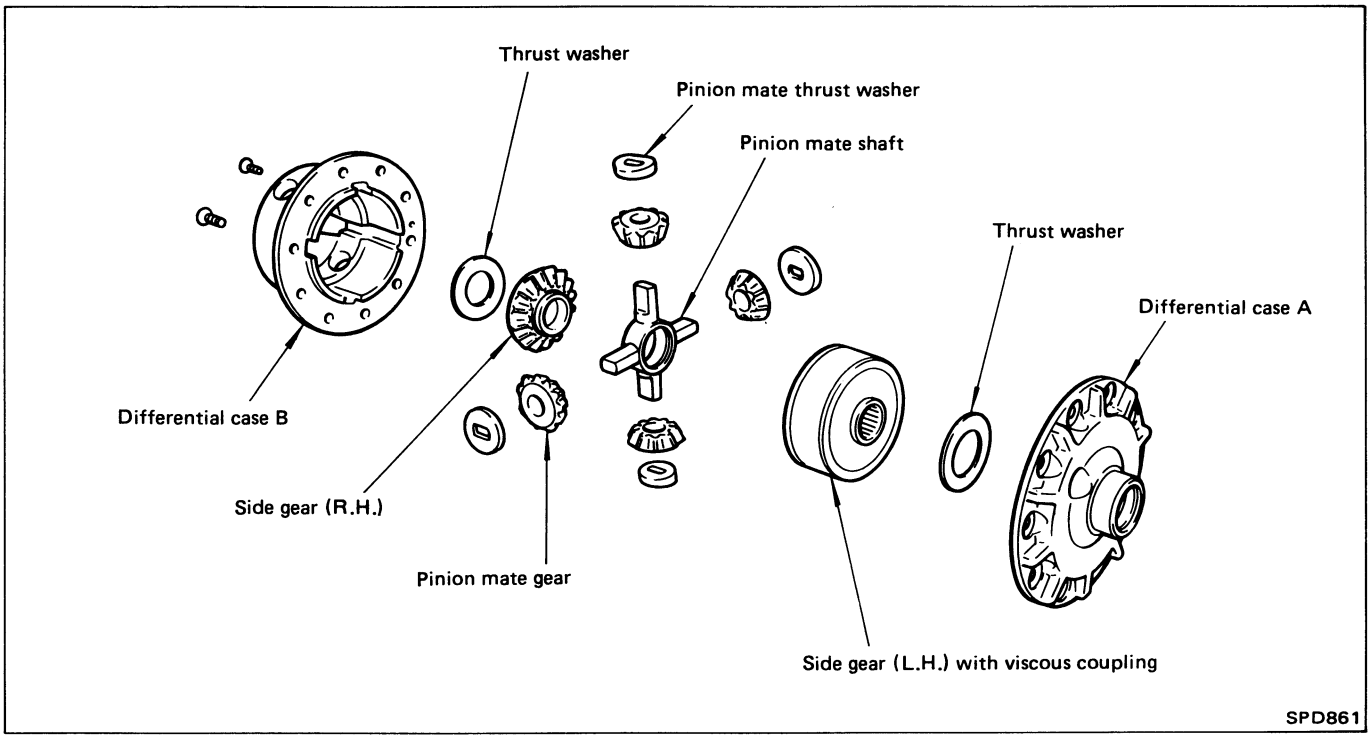

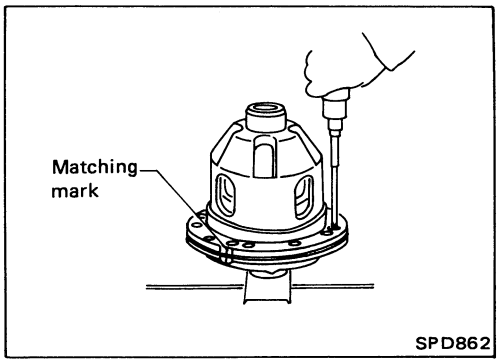

Disassembly and Assembly

1. Loosen screws on differential cases A and B.
2. Separate differential cases A and B.

CAUTION:
Assemble differential case firmly.

Inspection

CONTACT SURFACES

1. Clean the disassembled parts in suitable solvent and blow dry with compressed air.
2. If following surfaces are found to be burred or scratched, smooth with oil stone.

- Differential case A
- Differential case B
- Side gear
- Pinion mate gear
- Pinion mate shaft

3. Check viscous coupling for oil leakage. If necessary, replace it with new one.

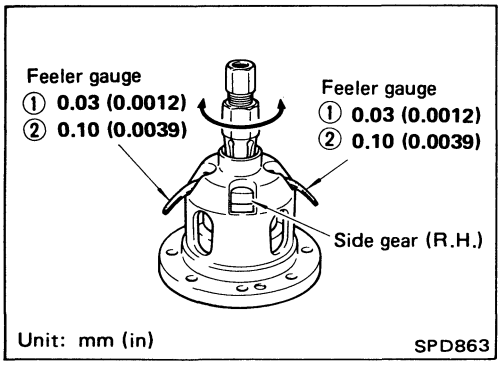

Adjustment

THRUST WASHER SELECTION

Whenever side gears or pinion mate gears are replaced, select suitable thrust washers as follows:

1. Clean side gears and pinion mate gears using white gasoline.
2. Before assembling gears, apply hypoid gear oil to frictional surfaces.
3. Install the previously removed thrust washer on right side gear. On left side gear, install a suitable thrust washer. Temporarily tighten differential cases using two screws.
4. Position differential assembly so that right side gear is on the upper side. Place a 0.03 mm (0.0012 in) feeler gauge (for example) between right side gear and thrust washer.

Do not place feeler gauge at groove side of differential case.

5. Also place a 0.03 mm (0.0012 in) additional feeler gauge between right side gear and thrust washer so that it is positioned diagonal to (180° apart from) the feeler gauge described previously.
6. Rotate right side gear with a suitable tool attached to splines.
   If right side gear cannot be rotated, replace thrust washer used on left side gear with a thinner one.
7. Replace both 0.03 mm (0.0012 in) feeler gauges with 0.10 mm (0.0039 in) gauges. At this point, make sure right side gear does not rotate. If it does, replace thrust washer on left side gear with a thicker one so that right side gear does not rotate.
8. As explained in above example, select suitable thrust washers to ensure that:

a) Both side gears rotate. [0.03 mm (0.0012 in) feeler gauges are used in this case.]
b) Side gear is held stationary. [0.10 mm (0.0039 in) feeler gauges are used in this case.]
   (Refer to S.D.S.)

Trouble-shooting and Diagnoses

Customer complaint: Rear wheels slip and remain stuck in mud or on snowy roads.

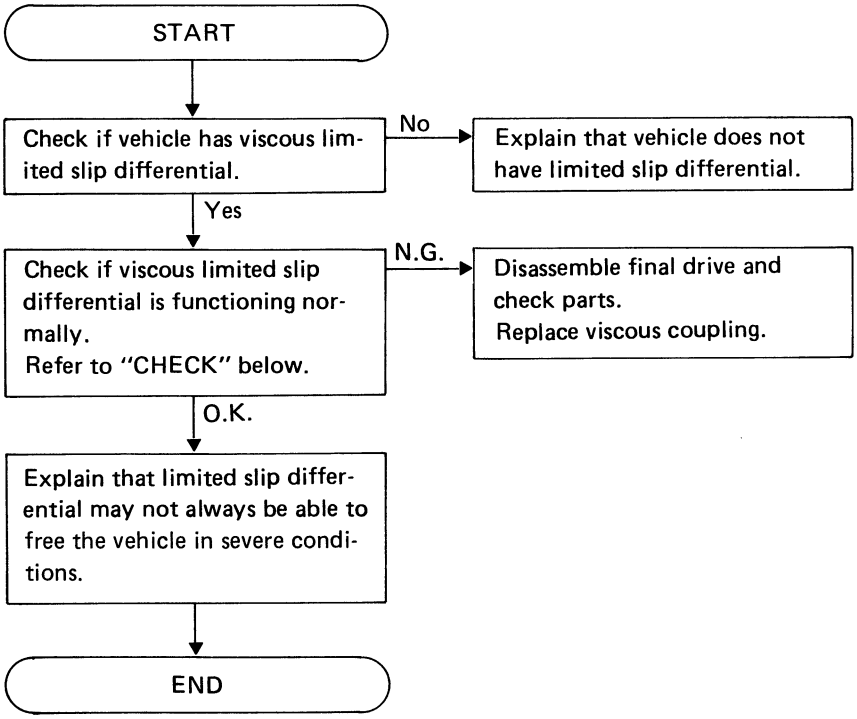

CHECK

1. Drive vehicle to warm up differential oil.
2. Stop engine.
3. Lift both rear wheels off the ground.
4. Shift transaxle gear into neutral.
   Release parking brake.
5. Turn the left wheel in the forward direction in a quick motion while preventing the right wheel from turning.
6. If both rear wheels turn in the same direction simultaneously, viscous limited slip differential is functioning.

CAUTION:

Do not run engine for more than a minute when one wheel (rear) is off the ground or spinning freely.

Propeller Shaft

GENERAL SPECIFICATIONS

Propeller shaft model	4F63A-VL91
Number of joints	4
Coupling method with transfer	Flange type
Type of journal bearings	Shell type (Non-disassembly type)
Shaft length mm (in) (Joint to joint) 1st	718 (28.27)
2nd	325 - 355 (12.80 - 13.98)
3rd	740 (29.13)
Shaft outer diameter mm (in) 1st	63.5 (2.500)
2nd	38 (1.50)
3rd	63.5 (2.500)

SPECIFICATIONS AND ADJUSTMENT

Unit: mm (in)

Propeller shaft model	4F63A-VL91
Propeller shaft runout limit	0.6 (0.024)
Journal axial play	0 (0)

Final Drive

GENERAL SPECIFICATIONS

Final drive model	4WD	Optional for 4WD
	R180	R180V
Ring gear pitch diameter mm (in)	181 (7.13)	
Gear ratio	3.700	
Number of teeth (Ring gear/Drive pinion)	37/10	
Oil capacity (approx.) ℓ (US pt, Imp pt)	1.0 (2-1/8, 1-3/4)	
Differential case	2 pinion	Viscous L.S.D.

SPECIFICATIONS AND ADJUSTMENT

Drive pinion adjustment

Drive pinion bearing adjusting method	Pinion bearing adjusting washer
Drive pinion to ring gear backlash mm (in)	0.13 - 0.18 (0.0051 - 0.0071)

Available pinion height adjusting washer

Thickness mm (in)	Part number
3.09 (0.1217)	38154-P6017
3.12 (0.1228)	38154-P6018
3.15 (0.1240)	38154-P6019
3.18 (0.1252)	38154-P6020
3.21 (0.1264)	38154-P6021
3.24 (0.1276)	38154-P6022
3.27 (0.1287)	38154-P6023
3.30 (0.1299)	38154-P6024
3.33 (0.1311)	38154-P6025
3.36 (0.1323)	38154-P6026
3.39 (0.1335)	38154-P6027
3.42 (0.1346)	38154-P6028
3.45 (0.1358)	38154-P6029
3.48 (0.1370)	38154-P6030
3.51 (0.1382)	38154-P6031
3.54 (0.1394)	38154-P6032
3.57 (0.1406)	38154-P6033
3.60 (0.1417)	38154-P6034
3.63 (0.1429)	38154-P6035
3.66 (0.1441)	38154-P6036

Final Drive (Cont'd)

Drive pinion preload adjustment (With front oil seal)

0.9 - 1.7 N·m (9 - 17 kg-cm, 7.8 - 14.8 in-lb)

Available drive pinion bearing preload adjusting washer

Thickness mm (in)	Part number
2.31 (0.0909)	38141-09400
2.33 (0.0917)	38140-09400
2.35 (0.0925)	38139-09400
2.37 (0.0933)	38138-09400
2.39 (0.0941)	38137-09400
2.41 (0.0949)	38136-09400
2.43 (0.0957)	38135-09400
2.45 (0.0965)	38134-09400
2.47 (0.0972)	38133-09400
2.49 (0.0980)	38132-09400
2.51 (0.0988)	38131-09400
2.53 (0.0996)	38130-09400
2.55 (0.1004)	38129-09400
2.57 (0.1012)	38128-09400
2.59 (0.1020)	38127-09400

Available drive pinion bearing preload adjusting spacer

Length mm (in)	Part number
52.20 (2.0551)	38130-78500
52.40 (2.0630)	38131-78500
52.60 (2.0709)	38132-78500
52.80 (2.0787)	38133-78500
53.00 (2.0866)	38134-78500
53.20 (2.0945)	38135-78500

Total preload adjustment

1.0 - 2.3 N·m (10 - 23 kg-cm, 8.7 - 20.0 in-lb)

Side bearing adjustment

Unit: mm (in)

Side bearing adjustment method	Adjusting shim	
Side gear to pinion mate gear backlash (Clearance between side gear to differential case)	R180	0.10 - 0.20 (0.0039 - 0.0079)
	R180V	0.03 - 0.09 (0.0012 - 0.0035)

Available side bearing adjusting washer

Thickness mm (in)	Part number
0.20 (0.0079)	38453-21100
0.25 (0.0098)	38453-21101
0.30 (0.0118)	38453-21102
0.40 (0.0157)	38453-21103
0.50 (0.0197)	38453-21104

Available side gear thrust washer

	Thickness mm (in)	Part number
Standard type	0.775 (0.0305)	38424-W2000
	0.825 (0.0325)	38424-W2001
	0.875 (0.0344)	38424-W2002
	0.925 (0.0364)	38424-W2003
	0.975 (0.0384)	38424-W2004
Viscous type	0.8 (0.031)	38424-20R00
	0.9 (0.035)	38424-20R10
	1.0 (0.039)	38424-20R02
	1.1 (0.043)	38424-20R03
	1.2 (0.047)	38424-20R04
	1.3 (0.051)	38424-20R05
	1.4 (0.055)	38424-20R06
	1.5 (0.059)	38424-20R07

Ring gear runout

Ring gear runout limit mm (in)	0.05 (0.0020)

FRONT AXLE & FRONT SUSPENSION

SECTION FA

CONTENTS

PRECAUTIONS AND PREPARATION ..... FA- 2
FRONT AXLE AND FRONT SUSPENSION ..... FA- 4
CHECK AND ADJUSTMENT — On-vehicle ..... FA- 6
FRONT AXLE FA-10
FRONT AXLE — Wheel Hub and Knuckle FA-11
FRONT AXLE — Drive Shaft FA-15
FRONT AXLE — Drive Shaft for 2WD (BF86DS86) FA-17
FRONT AXLE — Drive Shaft for 4WD (ZF90DS90 + TS82F) FA-23
FRONT SUSPENSION FA-29
FRONT SUSPENSION — Coil Spring and Strut Assembly FA-30
FRONT SUSPENSION — Stabilizer Bar (2WD model only) FA-32
FRONT SUSPENSION — Transverse Link and Transverse Link Gusset FA-33
FRONT SUSPENSION — Lower Ball Joint FA-34
SERVICE DATA AND SPECIFICATIONS (S.D.S.) FA-36

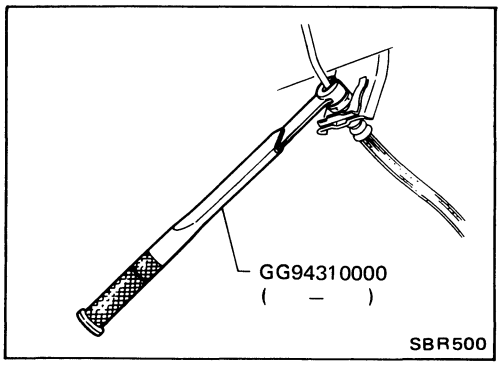

Precautions

- **When installing each rubber part, final tightening must be carried out under unladen condition* with tires on ground.**
  - *** Fuel, radiator coolant and engine oil full. Spare tire, jack, hand tools and mats in designated positions.**
- **When removing each suspension part, check wheel alignment and adjust if necessary.**
- **Use Tool when removing or installing brake tubes.**

Preparation

SPECIAL SERVICE TOOLS

Tool number (Kent-Moore No.) Tool name	Description	
HT72520000 (J25730-A) Ball joint remover	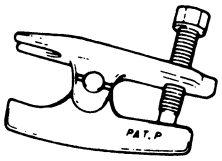	Removing tie-rod outer end and lower ball joint
HT71780000 (–) Spring compressor	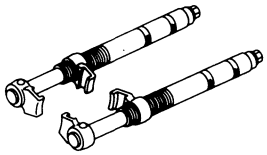	Removing and installing coil spring
ST35652000 (–) Strut attachment	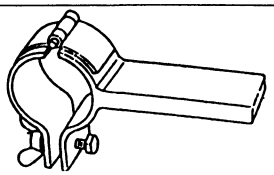	Fixing strut assembly
GG94310000 (–) Flare nut torque wrench	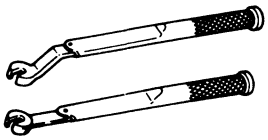	Removing and installing brake piping
KV38106800 (J34297) KV38106700 (J34296) Differential side oil seal protector	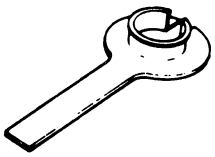	Installing drive shaft

R.H.	KV38106800 (J3497)
L.H.	KV38106700 (J3496)

Preparation (Cont'd)

COMMERCIAL SERVICE TOOLS

Tool name	Description
Wheel bearing drift	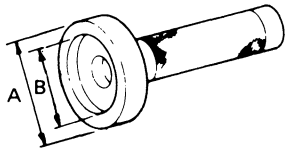 Removing and installing wheel bearing outer race **A : 76 mm (2.99 in) dia.** **B : 72 mm (2.83 in) dia.**
Grease seal drift	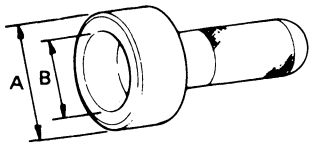 Installing hub grease seal **A : 81 mm (3.19 in) dia.** **B : 76 mm (2.99 in) dia.**
Wheel hub drift	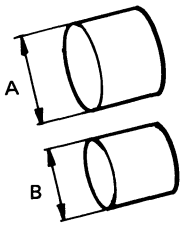 Installing wheel hub **A : 70 mm (2.76 in) dia.** **B : 54 mm (2.13 in) dia.**

2WD model

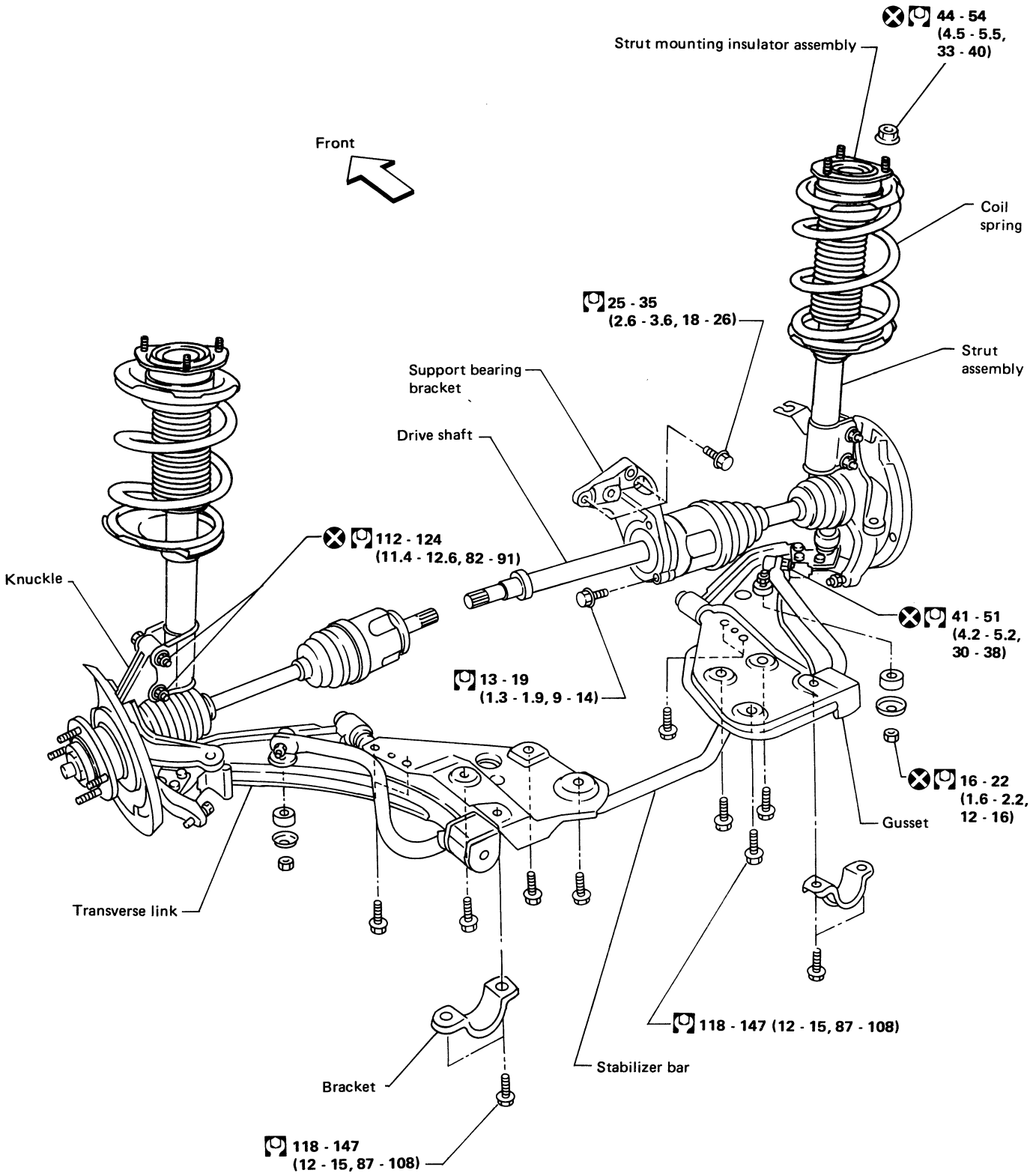

When installing each rubber part, final tightening must be carried out under unladen condition* with tires on ground.
*** Fuel, radiator coolant and engine oil full.**
Spare tire, jack, hand tools and mats in designated positions.

: N·m (kg-m, ft-lb)

SAF692A

4WD model

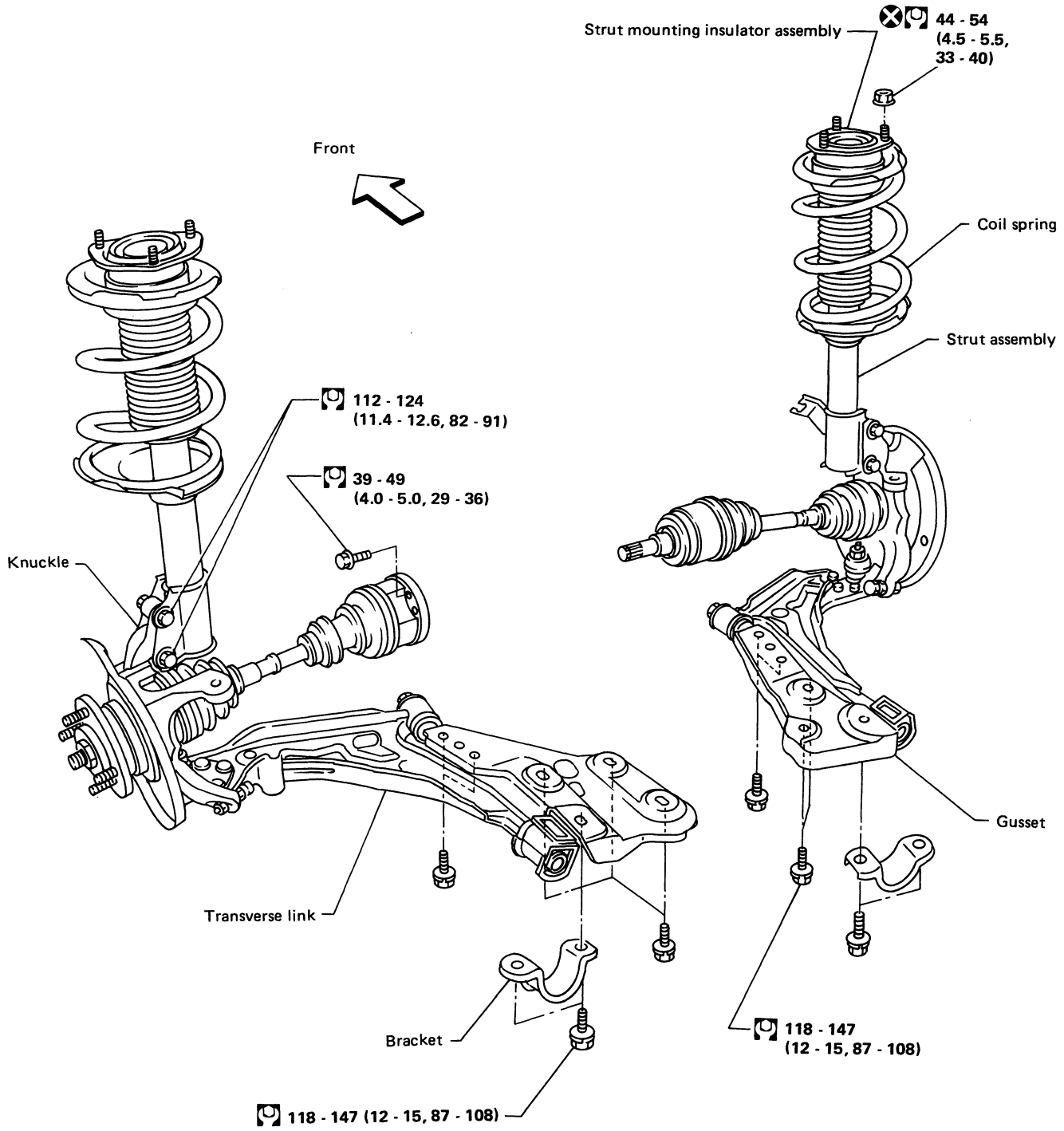

When installing each rubber part, final tightening must be carried out under unladen condition* with tires on ground.
*** Fuel, radiator coolant and engine oil full.**
Spare tire, jack, hand tools and mats in designated positions.

: N·m (kg-m, ft-lb)

SFA693A

Front Axle and Front Suspension Parts

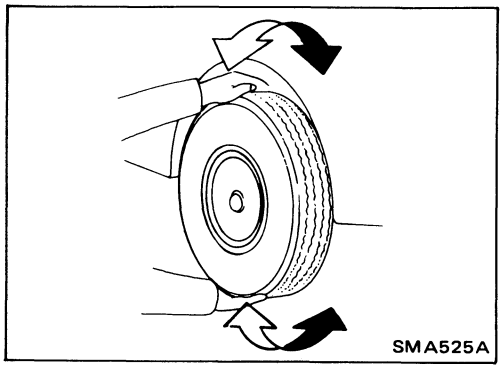
SMA525A

- Check front axle and front suspension parts for looseness, cracks, wear or other damage.

(1) Shake each front wheel to check for excessive play.

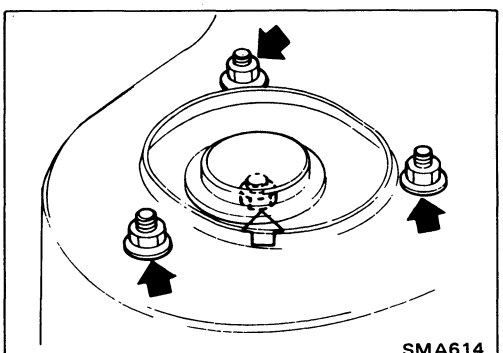
SMA614

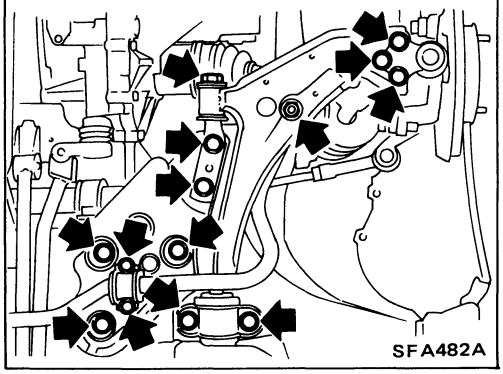
SFA482A

(2) Make sure that cotter pin is inserted.
(3) Retighten all nuts and bolts to the specified torque.
Tightening torque: Refer to page FA-29.
(4) Check front axle and front suspension parts for wear, cracks or other damage.

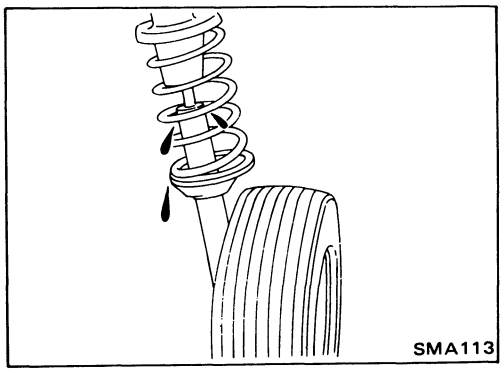
SMA113

- Check strut (shock absorber) for oil leakage or other damage.

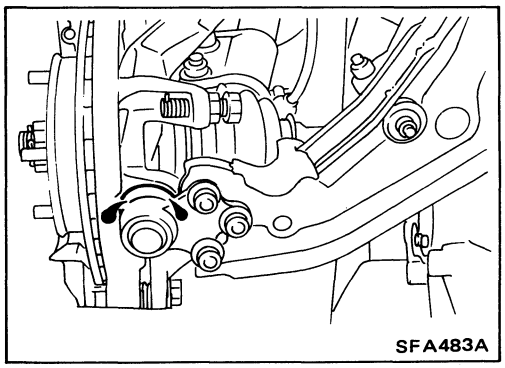
SFA483A

- Check suspension ball joint for grease leakage and ball joint dust cover for cracks or other damage.

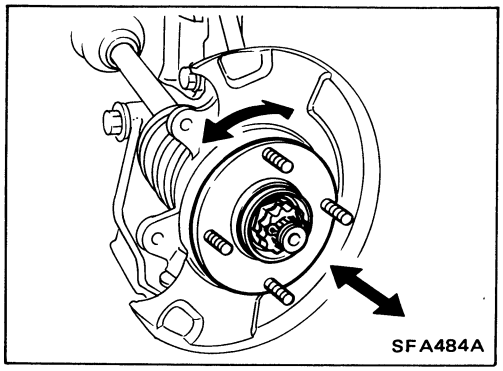

Front Wheel Bearing

- Check that wheel bearings operate smoothly.
- Check axial end play.

  Axial end play: 0.05 mm (0.0020 in) or less
- If axial end play is not within specification or wheel bearing does not turn smoothly, replace wheel bearing assembly. Refer to FRONT AXLE — Wheel Hub and Knuckle.
- Adjust wheel bearing preload if there is any axial end play or wheel bearing does not turn smoothly.

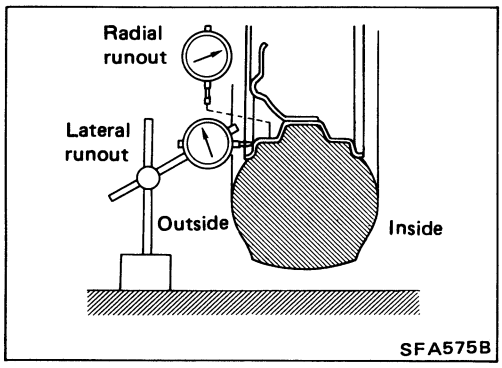

Front Wheel Alignment

Before checking front wheel alignment, be sure to make a preliminary inspection (Unladen).
"Unladen"
Fuel, radiator coolant and engine oil full. Spare tire, jack, hand tools and mats in designated positions.

PRELIMINARY INSPECTION

1. Check tires for wear and improper inflation.
2. Check wheel runout.

   Refer to S.D.S.
3. Check front wheel bearings for looseness.
4. Check front suspension for looseness.
5. Check steering linkage for looseness.
6. Check that front shock absorbers work properly by using the standard bounce test.
7. Check vehicle posture (Unladen).

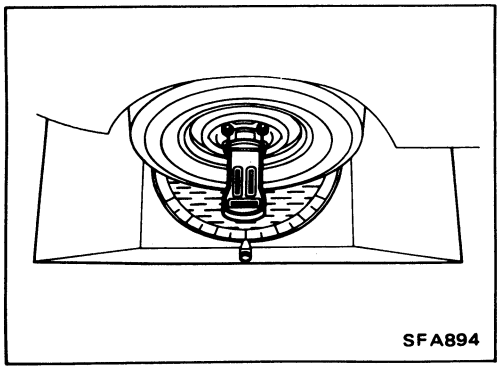

CAMBER, CASTER AND KINGPIN INCLINATION

- **Camber, caster and kingpin inclination are preset at factory and cannot be adjusted.**
- **Measure camber, caster and kingpin inclination of both right and left wheels with a suitable alignment gauge and adjust in accordance with the following procedures.**

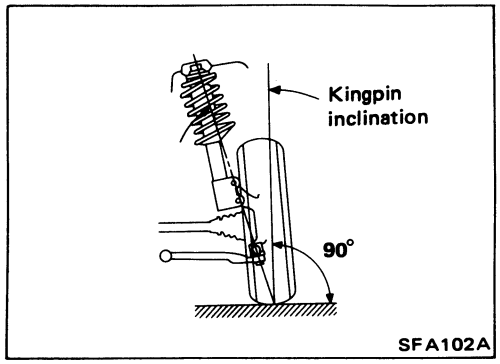

Kingpin inclination (Unladen):

2WD	**13°35' - 15°05'**
4WD	**13°15' - 14°45'**

Front Wheel Alignment (Cont'd)

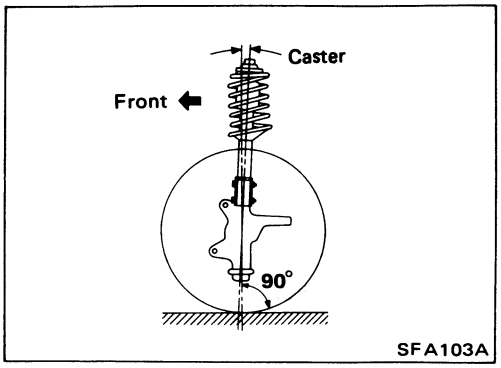

Caster (Unladen):

2WD –15' to 1°15'
4WD –5' to 1°25'

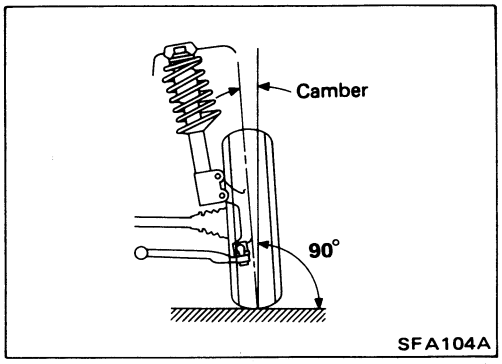

Camber (Unladen):

2WD –25' to 1°05'
4WD –35' to 55'

TOE-IN

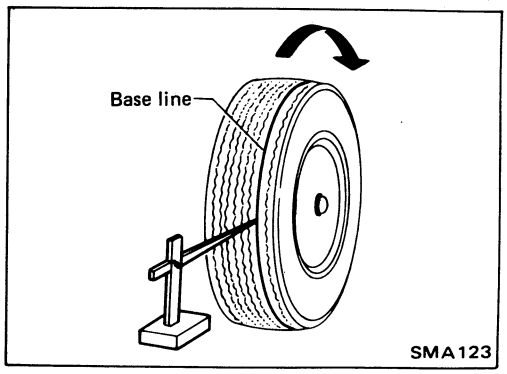

1. Draw a base line across the tread.

After lowering front of vehicle, move it up and down to eliminate friction, and set steering wheel in straight-ahead position.

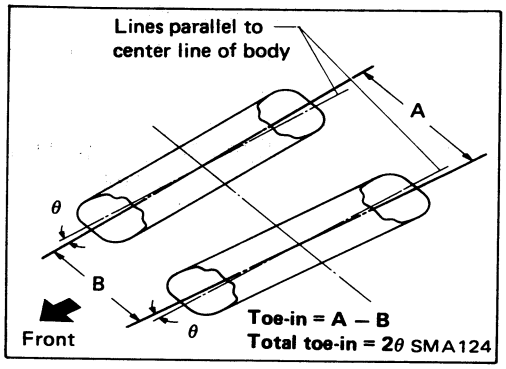

2. Measure toe-in.

Measure distance "A" and "B" at the same height as hub center.

Toe-in (Unladen):

A — B 0 - 4 mm (0 - 0.16 in)
2θ 0' - 24'

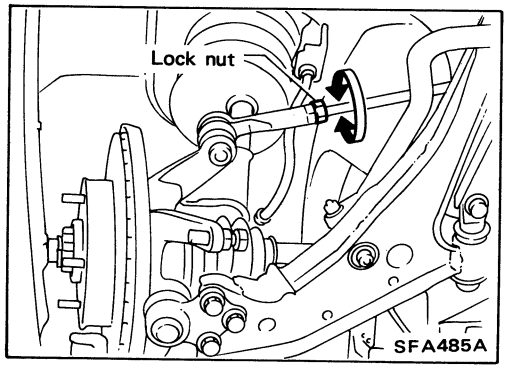

3. Adjust toe-in by varying the length of steering tie-rods.
(1) Loosen lock nuts.
(2) Adjust toe-in by turning tie-rod tubes forwards or backwards.

Front Wheel Alignment (Cont'd)

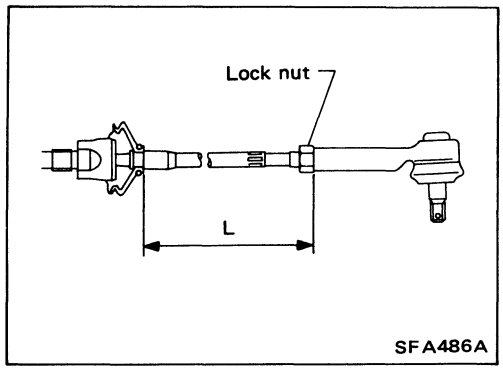

Standard length "L":
Refer to ST section.

(3) Tighten lock nuts, then torque them.
Refer to ST section.

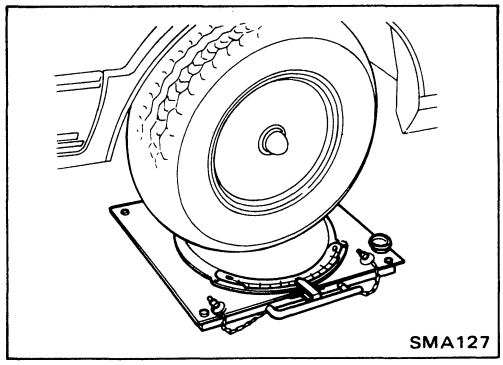

FRONT WHEEL TURNING ANGLE

1. Set wheels in straight-ahead position and then move vehicle forward until front wheels rest on turning radius gauge properly.

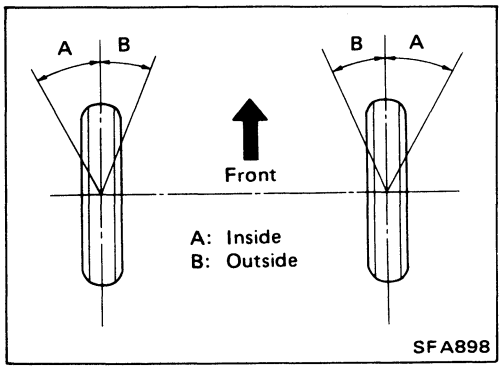

2. Rotate steering wheel all the way right and left; measure turning angle.

Wheel turning angle:

		2WD	4WD
Full turns	Inside wheel	37° - 41°	36° - 40°
	Outside wheel	28° - 32°	28° - 32°

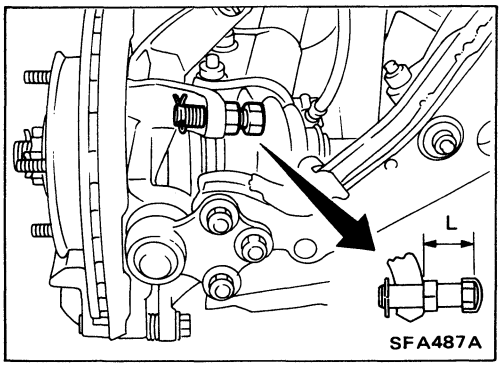

3. Adjust by stopper bolt if necessary.
   Standard length "L":
   2WD 24.2 mm (0.953 in)
   4WD 25.0 mm (0.984 in)

Drive Shaft

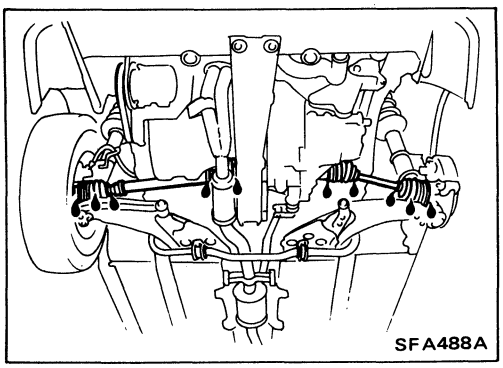

- Check for grease leakage or other damage.

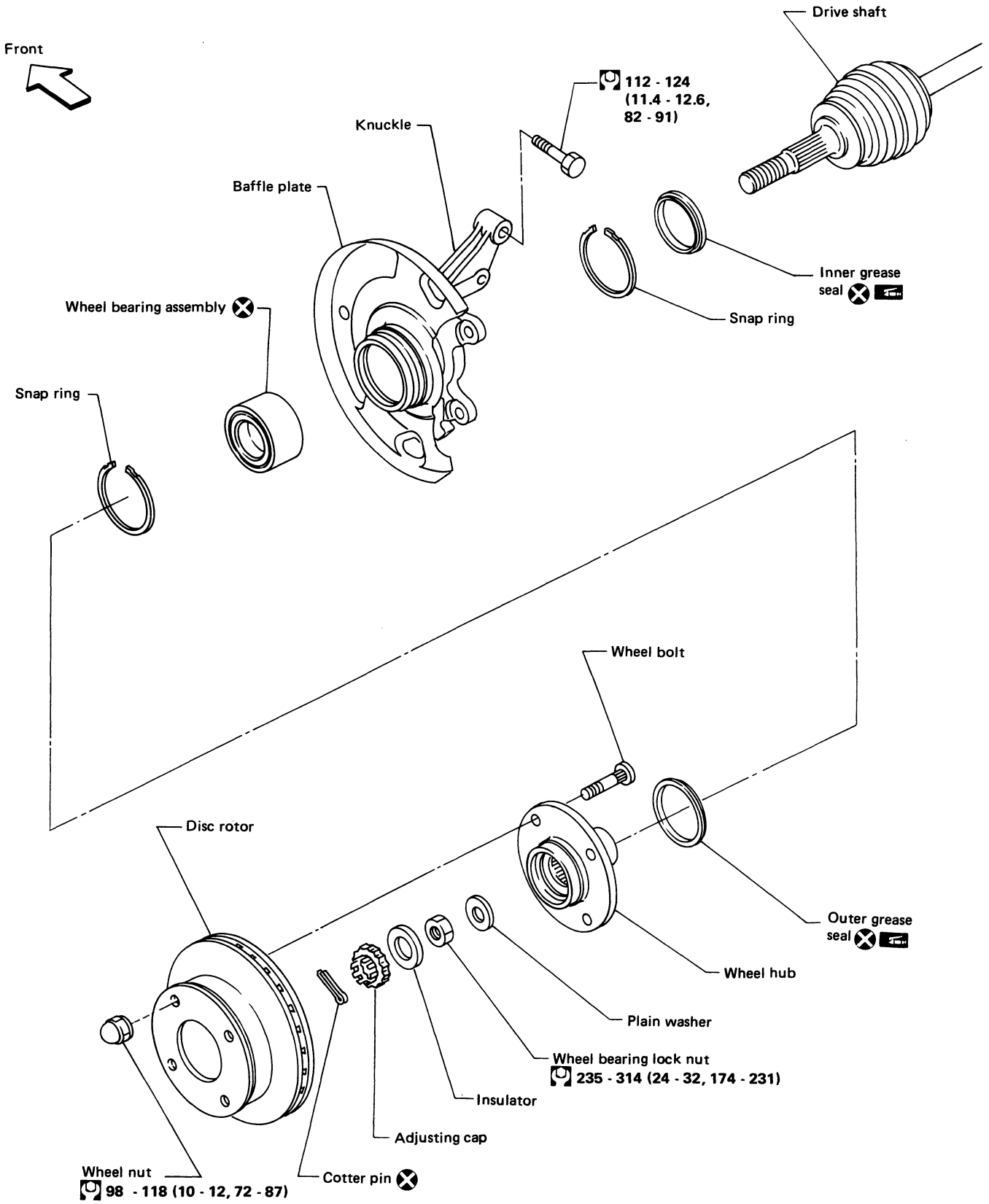

CAUTION:

- **When replacing wheel bearing, replace inner and outer wheel bearings at the same time to prevent mix use of bearings of different brands.**
- **Install inner race of wheel bearing at the same position as they were installed before disassembly.**

: N·m (kg-m, ft-lb)

SFA694A

Removal

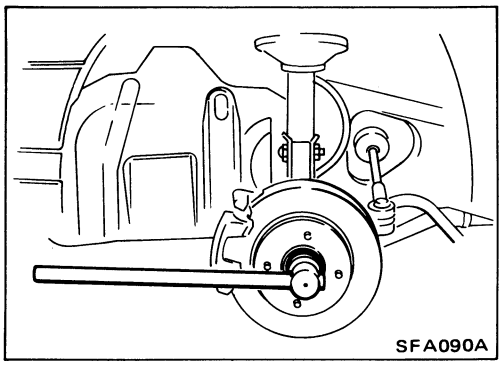

- Remove wheel bearing lock nut while depressing brake pedal.

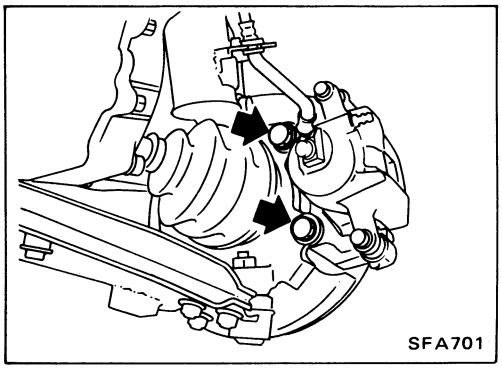

- Remove brake caliper assembly.

Brake hose need not be disconnected from brake caliper. Be careful not to depress brake pedal, or piston will pop out. Make sure brake hose is not twisted.

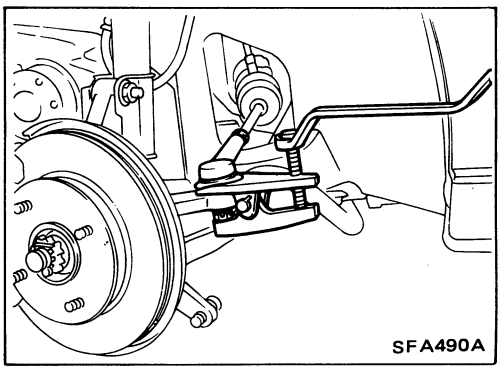

- Separate tie-rod from knuckle with Tool.

Install stud nut conversely on stud bolt to prevent damage to stud bolt.

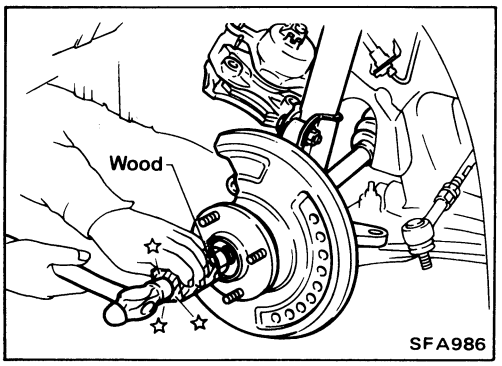

- Separate drive shaft from knuckle with Tool.

When removing drive shaft, cover boots with waste cloth to prevent damage to them.

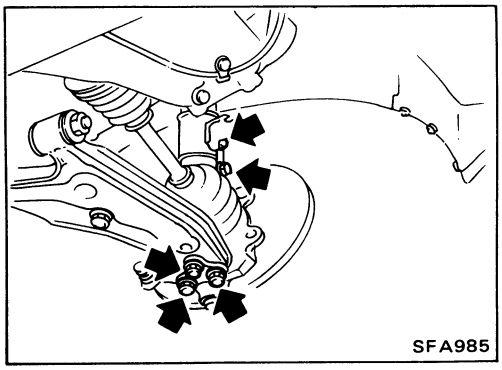

- Remove bolts and nuts as shown at left.

Make a matching mark before removing adjusting pin.

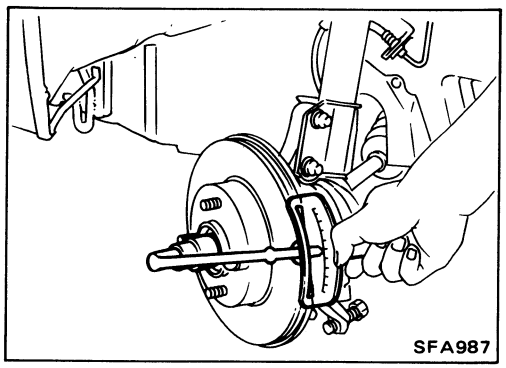

Installation

- Install knuckle with wheel hub.
- Tighten wheel bearing lock nut.
  [O]: 235 - 314 N•m
  (24 - 32 kg-m, 174 - 231 ft-lb)

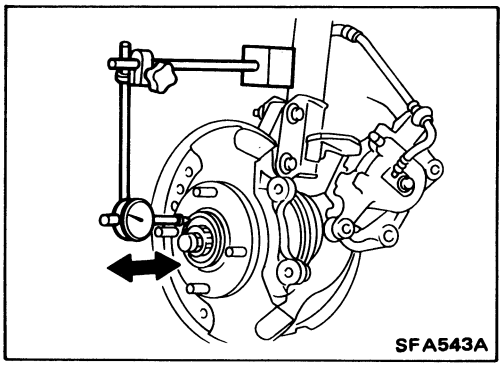

- Check wheel bearing axial end play.
  Axial end play: 0.05 mm (0.0020 in) or less.

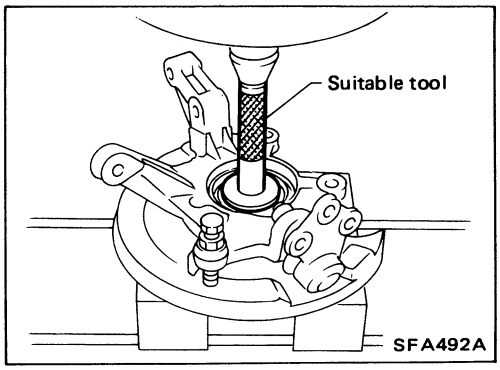

Disassembly

CAUTION:
When removing wheel hub or wheel bearing from knuckle, replace wheel bearing assembly (outer race, inner races and grease seals) with a new one.

WHEEL HUB

- Drive out hub with inner race (outside) from knuckle with suitable tool.

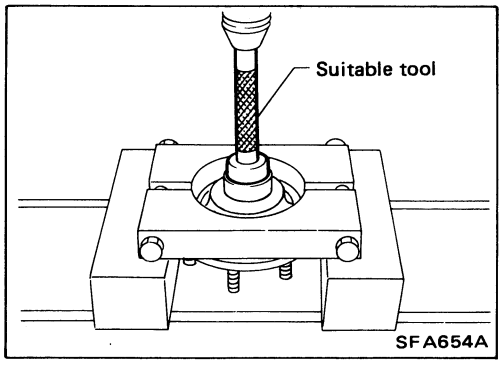

WHEEL BEARING

When replacing wheel bearing, replace wheel bearing assembly (inner races and outer race).

- Remove bearing inner race (outside), then remove outer grease seal.

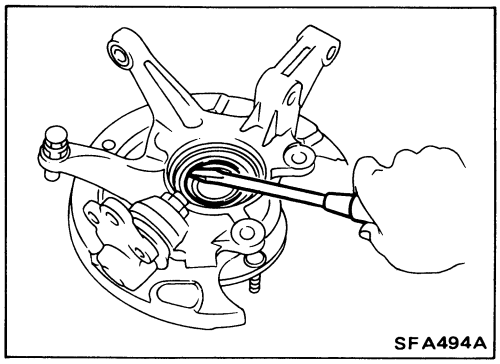

- Remove inner grease seal from knuckle.

Disassembly (Cont'd)

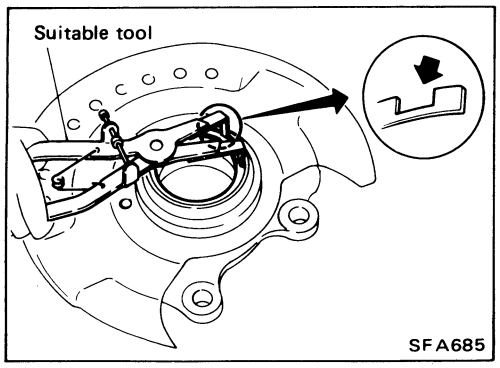

- Remove inner and outer snap rings.

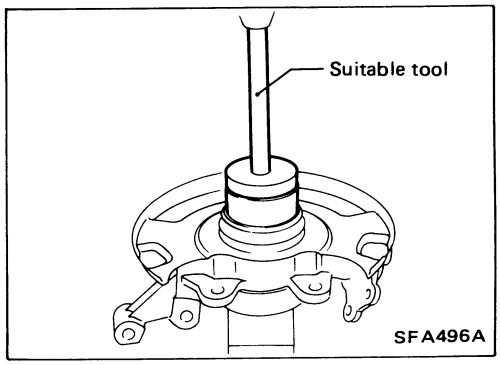

- Press out bearing outer race.

Inspection

WHEEL HUB AND KNUCKLE

- Check wheel hub and knuckle for cracks by using a magnetic exploration or dyeing test.

SNAP RING

- Check snap ring for wear or cracks.
  Replace if necessary.

Assembly

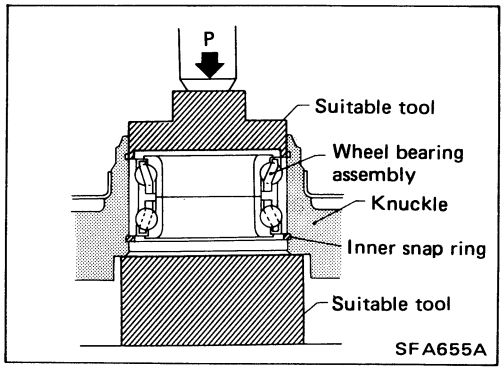

1. Install inner snap ring into groove of knuckle.
2. Press new wheel bearing assembly into knuckle.
   Maximum load P:
   29 kN (3 t, 3.3 US ton, 3.0 Imp ton)

CAUTION:

- **Do not press inner race of wheel bearing assembly.**
- **Do not apply oil or grease to mating surfaces of wheel bearing outer race and knuckle.**

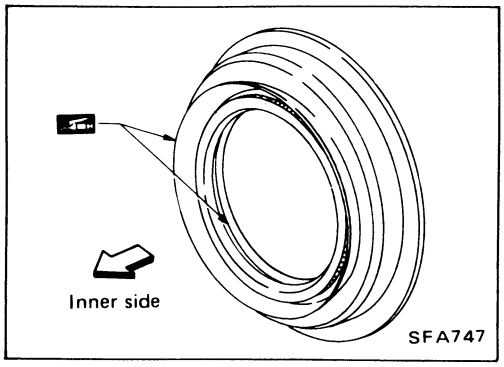

3. Pack grease seal lip with multi-purpose grease.

Assembly (Cont'd)

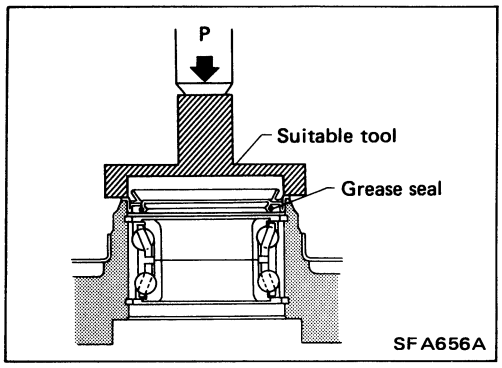

4. Install outer snap ring into groove of knuckle.
5. Install outer grease seal.

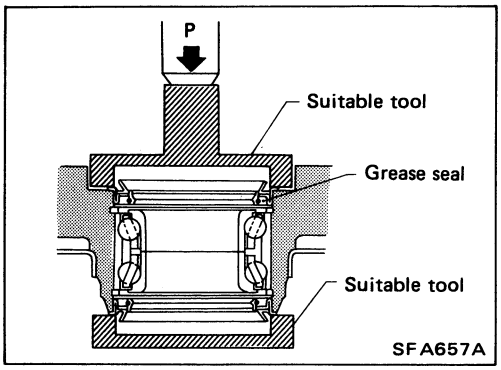

6. Install inner grease seal.

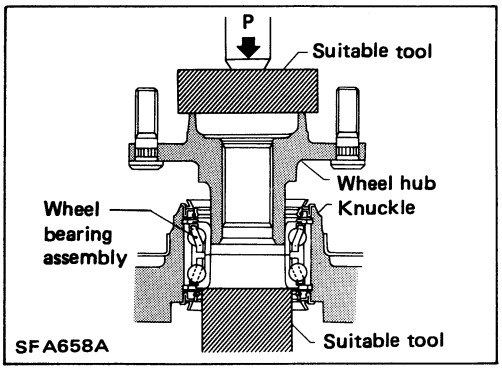

7. Press wheel hub into knuckle.
   Maximum load P:
   29 kN (3 ton, 3.3 US ton, 3.0 Imp ton)

Be careful not to damage grease seal.

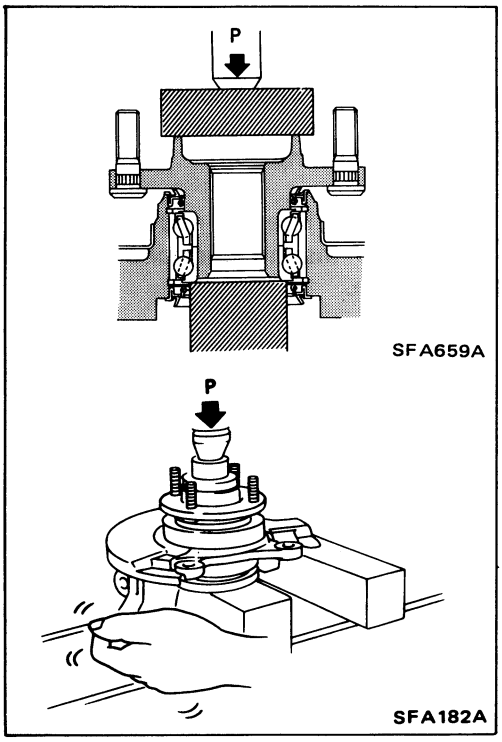

8. Check bearing preload.
(1) Add load P with press.
   Load P:
   34.3 - 49.0 kN
   (3.5 - 5.0 ton, 3.9 - 5.5 US ton, 3.44 - 4.92 Imp ton)
(2) Spin knuckle several turns in both directions.
(3) Make sure that wheel bearings operate smoothly.

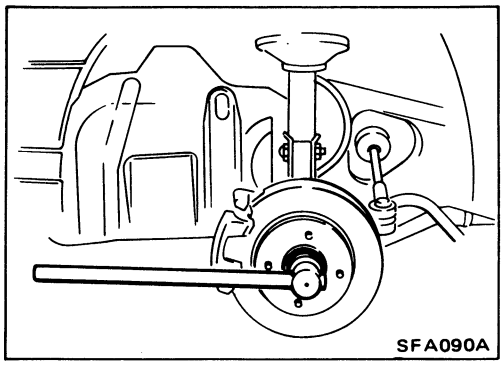

Removal

- Remove wheel bearing lock nut while depressing brake pedal.
- Remove brake caliper assembly.

Brake hose need not be disconnected from brake caliper.
Be careful not to depress brake pedal, or piston will pop out.
Make sure brake hose is not twisted.

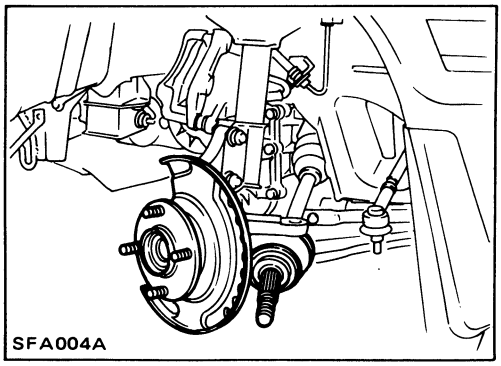

- Remove tie-rod ball joint.
- Separate drive shaft from knuckle by slightly tapping it.

When removing drive shaft, cover boots with waste cloth to prevent damage to them.
Refer to FRONT AXLE — Wheel Hub and Knuckle.
For A/T models, remove left drive shaft after removing right drive shaft.

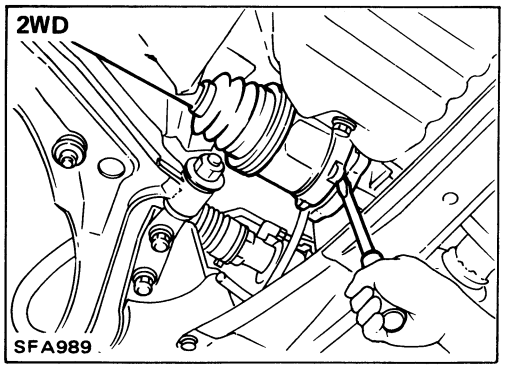

1. Remove right drive shaft from transaxle.

FOR 2WD (With support bearing)

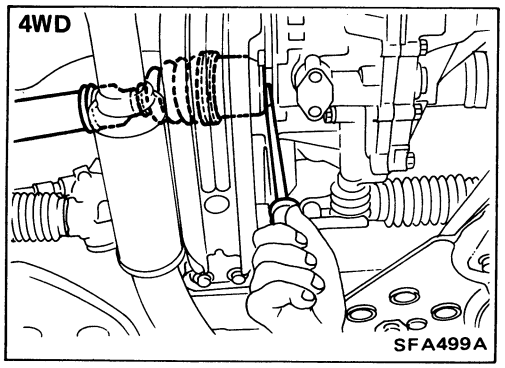

FOR 4WD (Without support bearing)

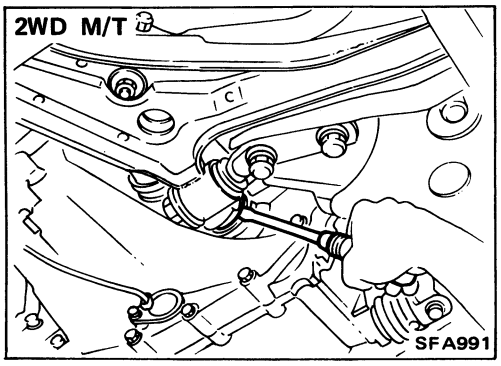

2. Remove left drive shaft from transaxle.

FOR 2WD M/T MODELS

Removal (Cont'd)

FOR 2WD A/T MODELS

- Remove left drive shaft with a screwdriver.

Be careful not to damage pinion mate shaft and side gear.

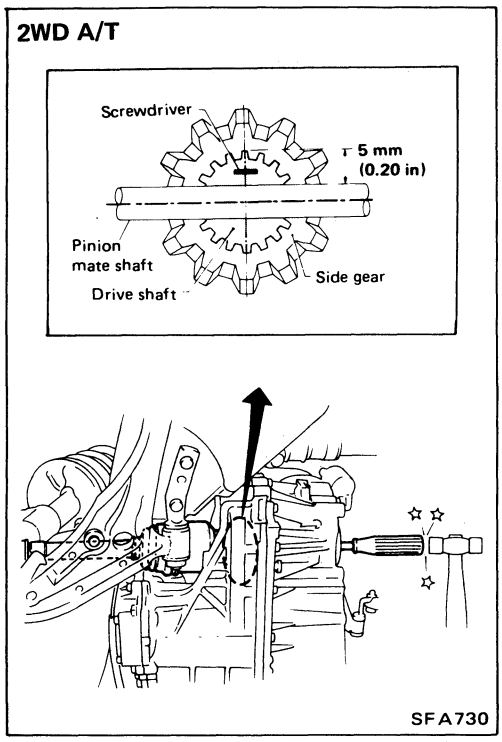

FOR 4WD MODELS

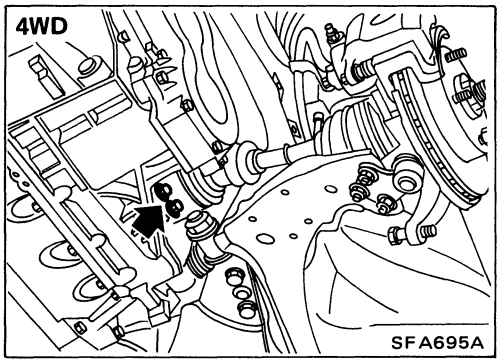

Installation

TRANSAXLE SIDE

1. Drive a new oil seal to transaxle. Refer to section MT or AT.
2. Set Tool along the inner circumference of oil seal (transaxle side).

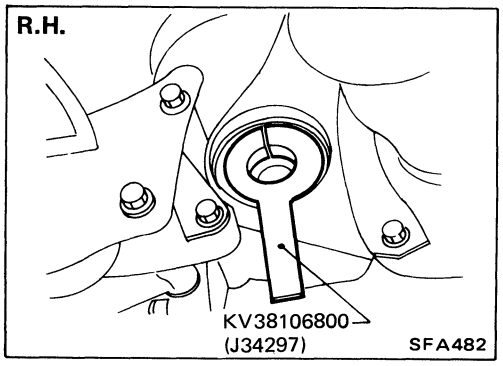

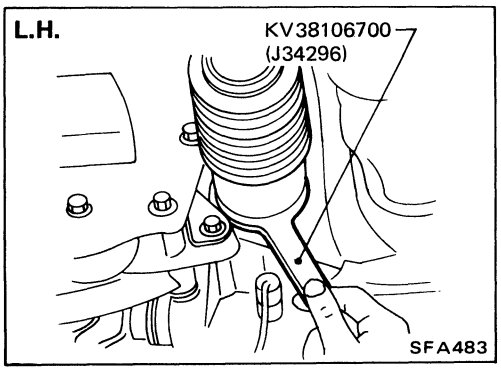

3. Insert drive shaft into transaxle. Be sure to properly align the serrations and then withdraw Tool.
4. Push drive shaft, then press-fit circular clip on the drive shaft into circular clip groove of side gear.

- **After its insertion, try to pull the flange out of the slide joint by hand. If it pulls out, the circular clip is not properly meshed with the side gear.**

WHEEL SIDE

- Install knuckle to strut assembly.
- Tighten wheel bearing lock nut.

Adjust bearing preload. Refer to Method B in FRONT AXLE — Wheel Hub and Knuckle.

Components

Circular clip:
Make sure circular clip is properly meshed with side gear (transaxle side) and joint assembly (wheel side), and will not come out.

Drive shaft joint grease:
Use Nissan Genuine Grease or equivalent after every overhaul.

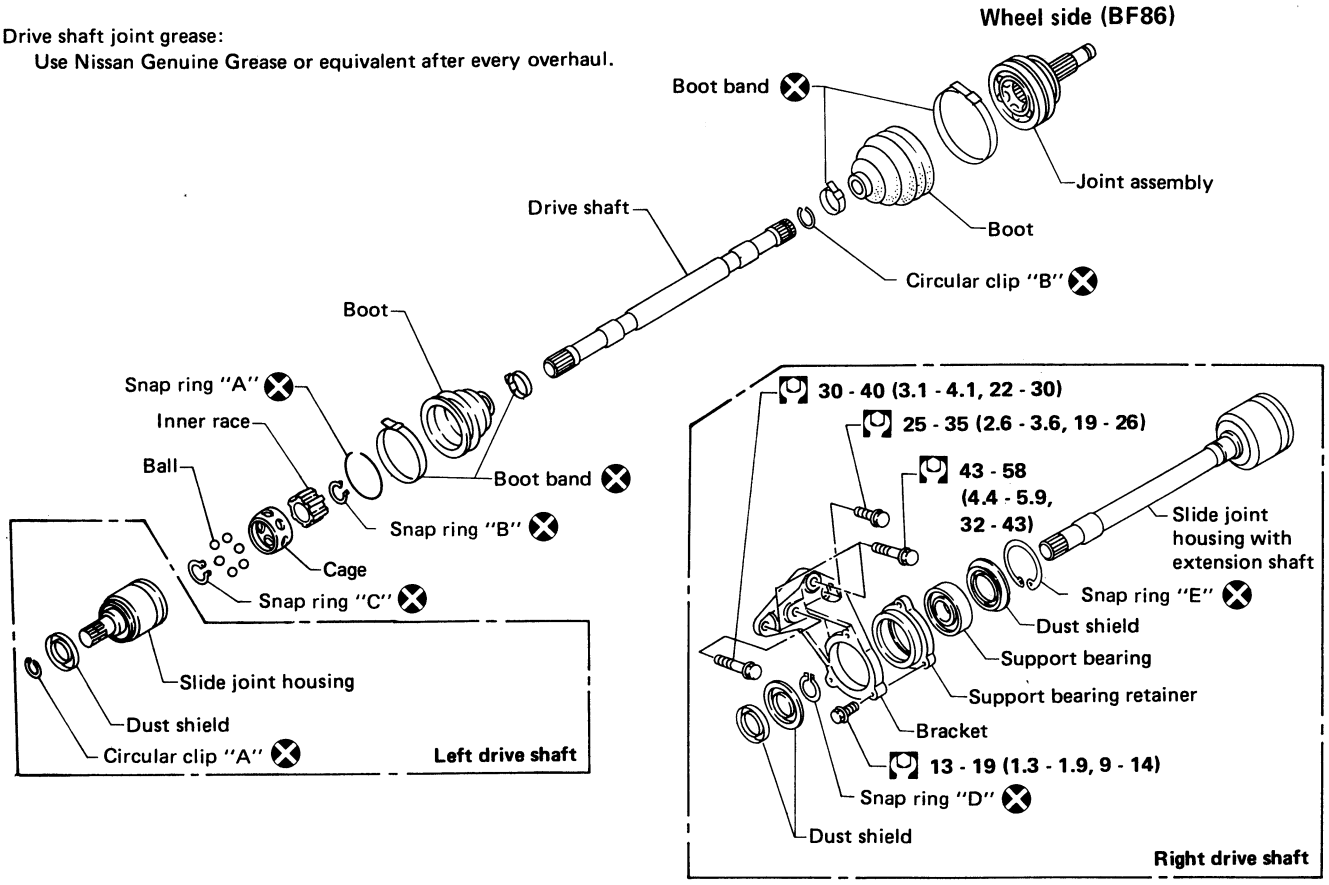

Be careful not to damage boots. Use suitable protector or cloth during removal and installation.

: N·m (kg-m, ft-lb)

SFA148A

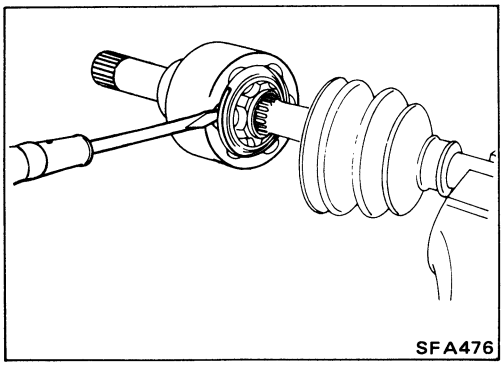

SFA476

Disassembly

TRANSAXLE SIDE (DS86)

1. Remove boot bands.
2. Put matching marks on slide joint housing and inner race, before separating joint assembly.
3. Pry off snap ring "A" with a screwdriver, and pull out slide joint housing.

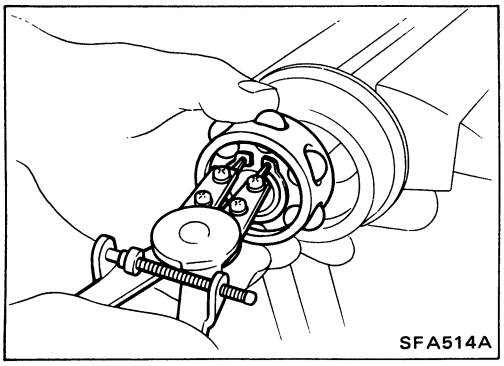

SFA514A

4. Put matching marks on inner race and drive shaft.
5. Pry off snap ring "C", then remove ball cage, inner race and balls as a unit.
6. Pry off snap ring "B".
7. Draw out boot.

Cover drive shaft serration with tape so as not to damage the boot.

Disassembly (Cont'd)

WHEEL SIDE (BF86)

CAUTION:

The joint on the wheel side cannot be disassembled.

- Before separating joint assembly, put matching marks on drive shaft and joint assembly.
- Separate joint assembly with suitable tool.

Be careful not to damage threads on drive shaft.

- Remove boot bands.

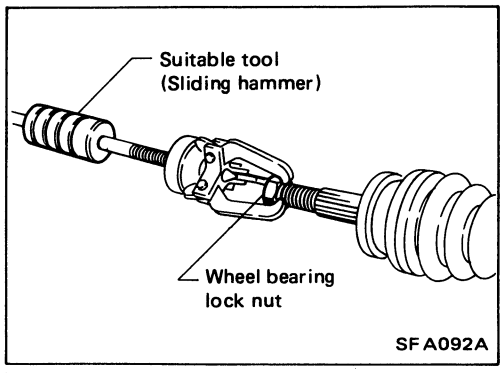

SUPPORT BEARING

- Remove dust shield.

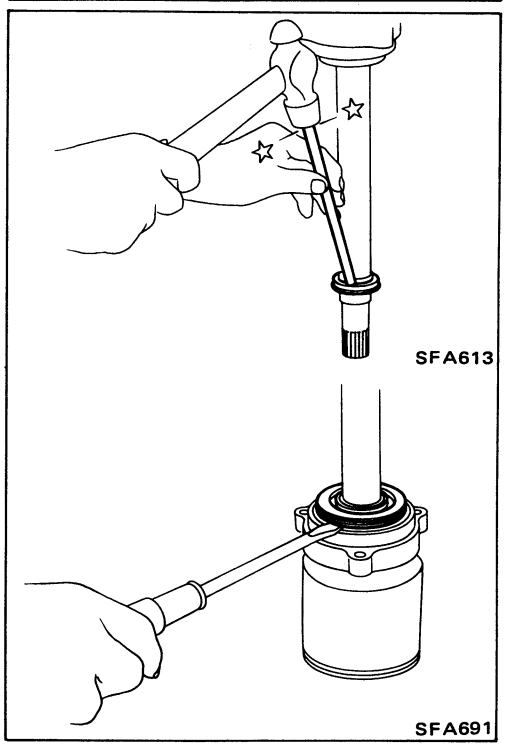

- Pry off snap ring.

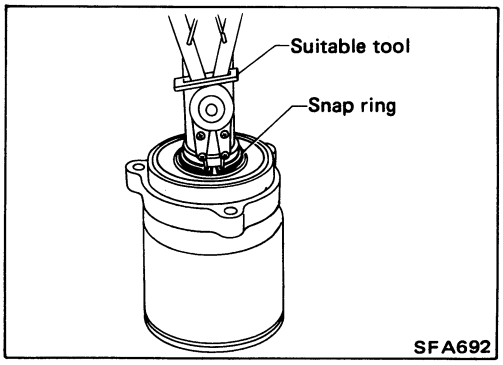

- Press support bearing assembly out of drive shaft.

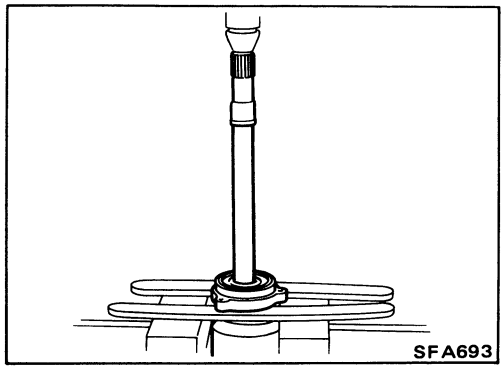

Disassembly (Cont'd)

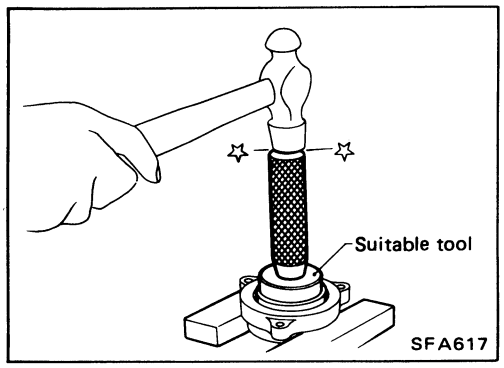

- Press support bearing out of retainer.

Inspection

Thoroughly clean all parts in cleaning solvent, and dry with compressed air. Check parts for evidence of deformation or other damage.

DRIVE SHAFT

Replace drive shaft if it is twisted or cracked.

BOOT

Check boot for fatigue, cracks, or wear. Replace boot with new boot bands.

JOINT ASSEMBLY (Transaxle side)

- Replace any parts of double offset joint which show signs of scorching, rust, wear or excessive play.
- Check serration for deformation. Replace if necessary.
- Check slide joint housing for any damage. Replace if necessary.

JOINT ASSEMBLY (Wheel side)

Replace joint assembly if it is deformed or damaged.

SUPPORT BEARING

Make sure wheel bearing rolls freely and is free from noise, cracks, pitting or wear.

SUPPORT BEARING BRACKET

Check support bearing bracket for cracks with a magnetic exploration or dyeing test.

Assembly

- **After drive shaft has been assembled, ensure that it moves smoothly over its entire range without binding.**
- **Use Nissan Genuine Grease or requivalent after every overhaul.**

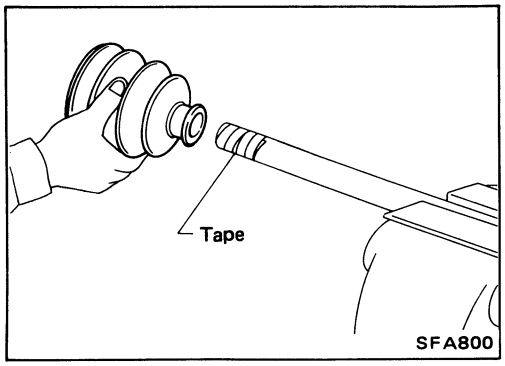

WHEEL SIDE (BF86)

1. Install boot and new small boot band on dirve shaft.

Cover dirve shaft serration with tape so as not to damage boot during installation.

Assembly (Cont'd)

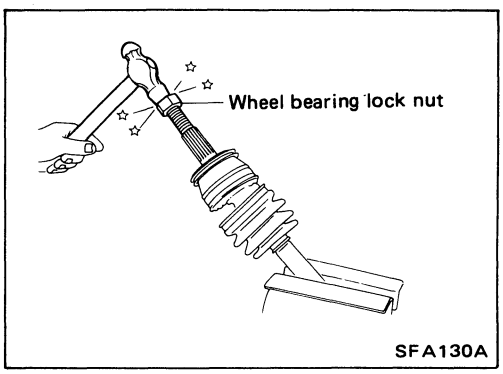

2. Set joint assembly onto dirve shaft by lightly tapping it. Install joint assembly securely, ensuring marks which were made during disassembly are properly aligned.

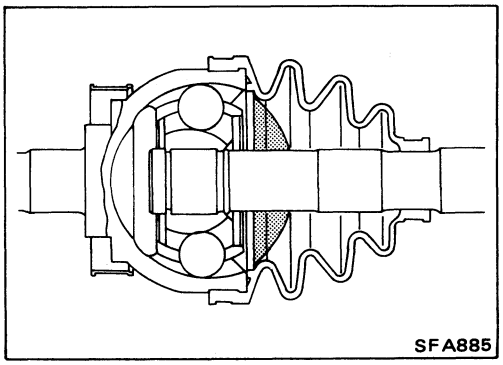

3. Pack drive shaft with specified amount of grease.
   Specified amount of grease:
   110 - 130 g (3.88 - 4.59 oz)

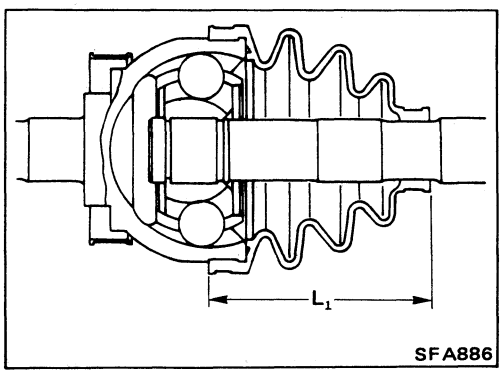

4. Set boot so that it does not swell and deform when its length is "L_1".
   Length "L_1":
   97 - 99 mm (3.82 - 3.90 in)

Make sure that boot is properly installed on the drive shaft groove.

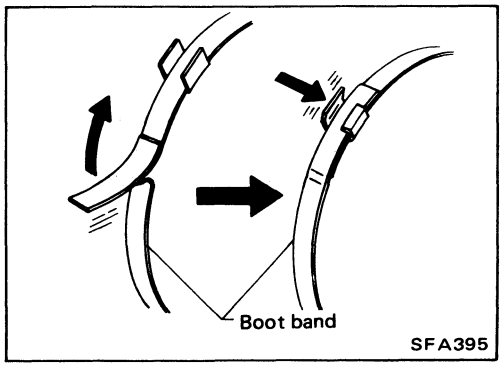

5. Lock new larger and smaller boot bands securely with a suitable tool.

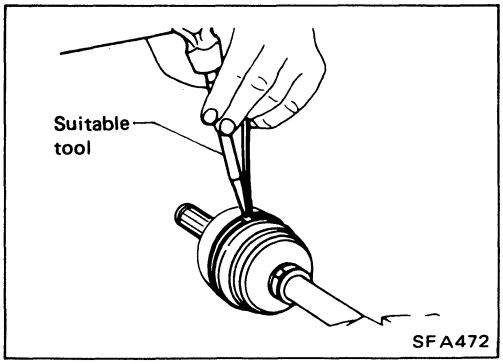

Assembly (Cont'd)

TRANSAXLE SIDE (DS86)

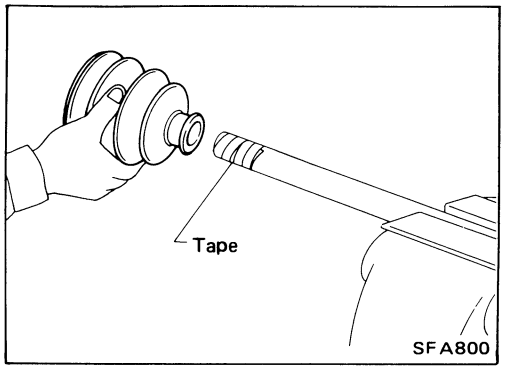

1. Install boot and new small boot band on drive shaft.

Cover drive shaft serration with tape so as not to damage boot during installation.

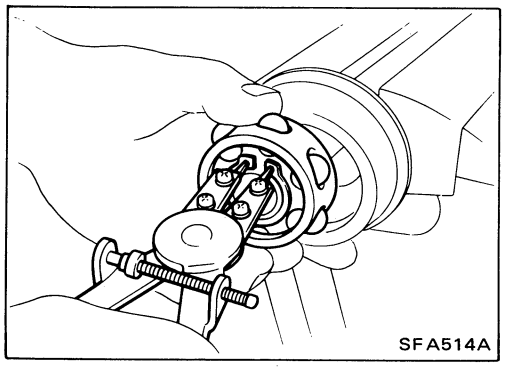

2. Install new snap ring "B", then securely install ball cage, inner race and balls as a unit, making sure the marks which were made during disassembly are properly aligned.
3. Install new snap ring "C".

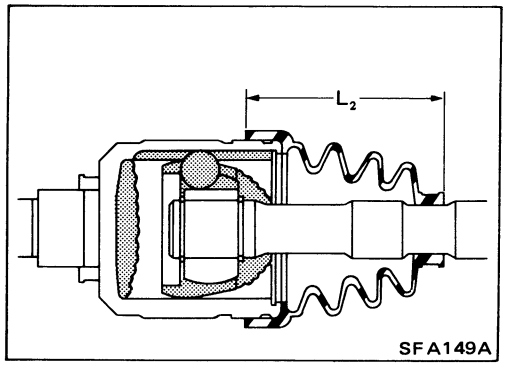

4. Pack drive shaft with specified amount of grease.
   Specified amount of grease:
   140 - 160 g (4.94 - 5.64 oz)
5. Install slide joint housing, then install new snap ring "A".
6. Set boot so that it does not swell and deform when its length is "L_2".
   Length "L_2":
   99.5 - 101.5 mm (3.917 - 3.996 in)

Make sure that boot is properly installed on the drive shaft groove.

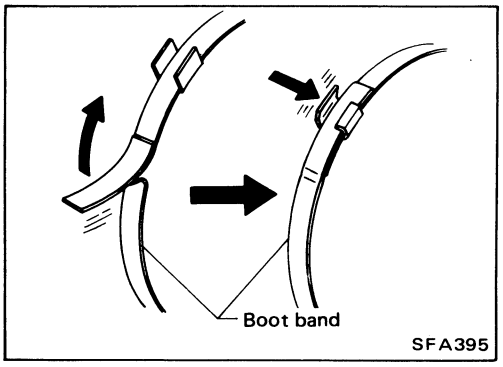

7. Lock new larger and smaller boot bands securely with a suitable tool.

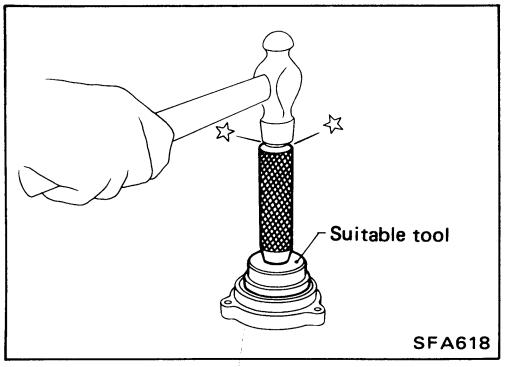

SUPPORT BEARING

- Press bearing into retainer.

Assembly (Cont'd)

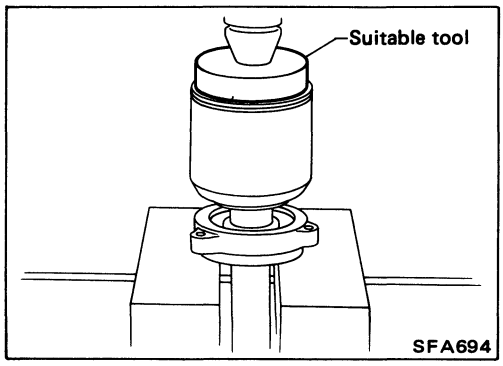

- Press drive shaft into bearing.

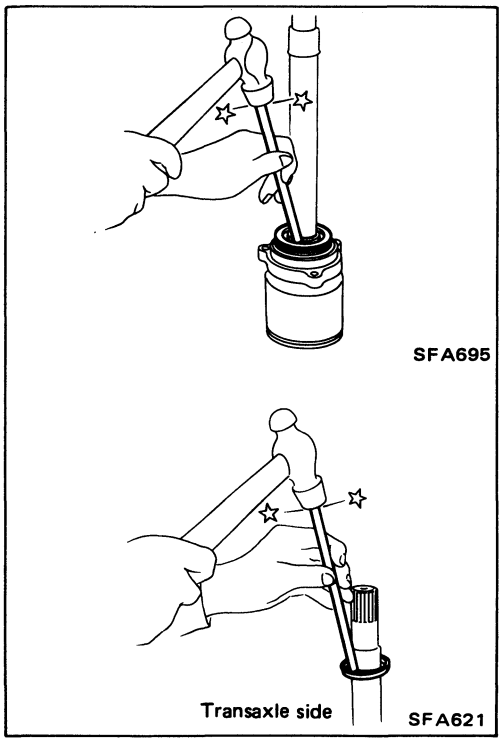

- Install snap ring.
- Install new dust shields.

Components

Circular clip:
Make sure circular clip is properly meshed with side gear (transaxle side) and joint assembly (wheel side), and will not come out.

Drive shaft joint grease:
Use Nissan Genuine Grease or equivalent after every overhaul.

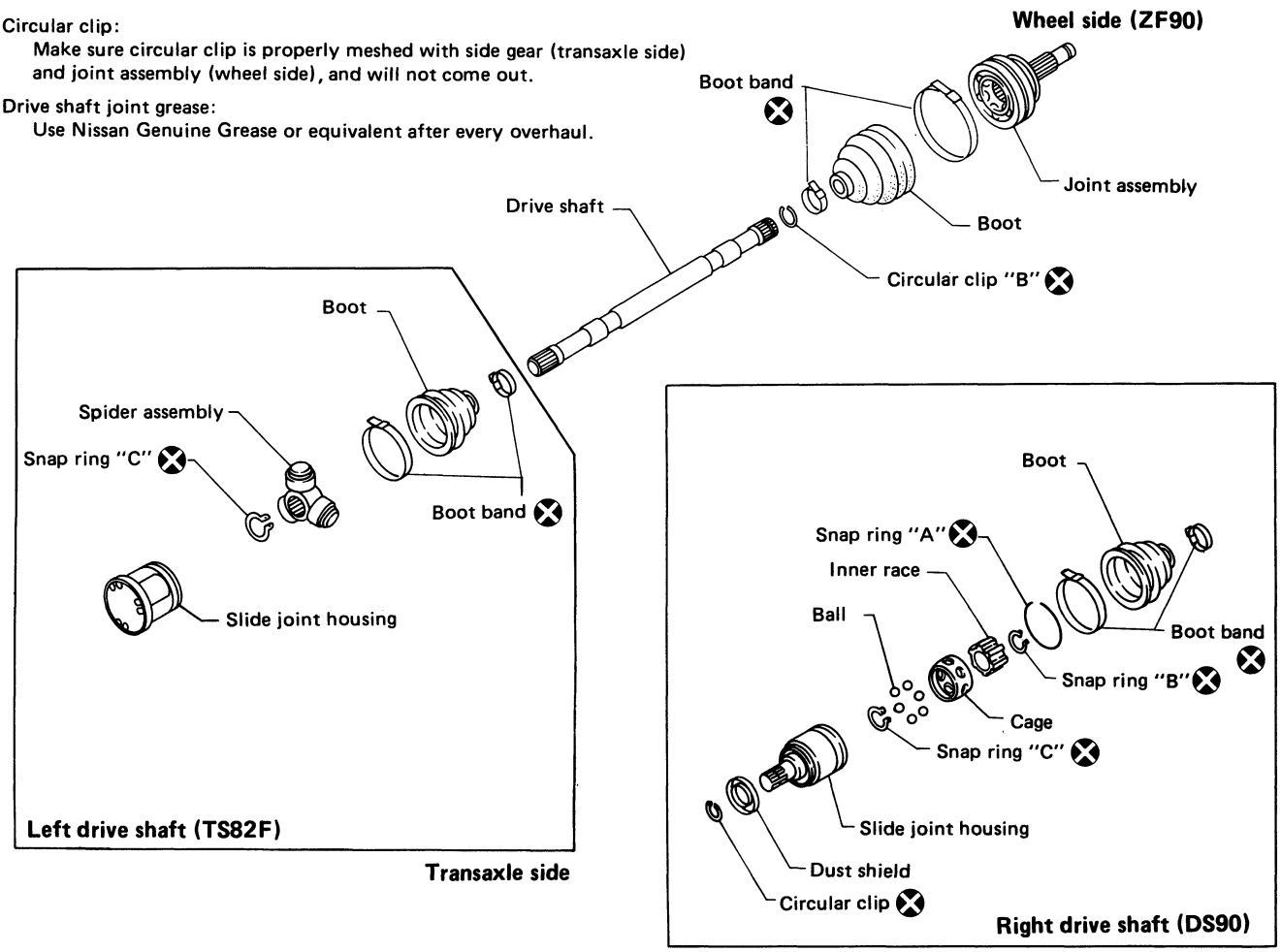

Be careful not to damage boots. Use suitable protector or cloth during removal and installation.

SFA696A

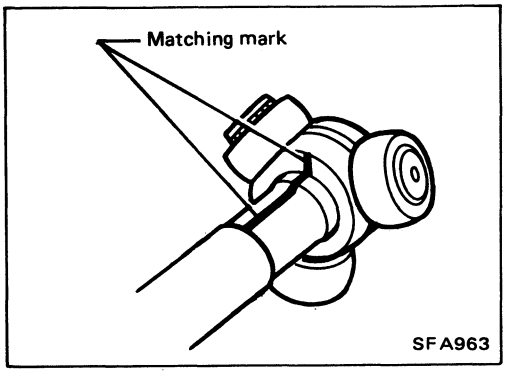

SFA963

Disassembly

TRANSAXLE SIDE [Left drive shaft (TS82F)]

1. Remove boot bands.
2. Put matching marks on slide joint housing and drive shaft before separating joint assembly.
3. Put matching marks on spider assembly and drive shaft.

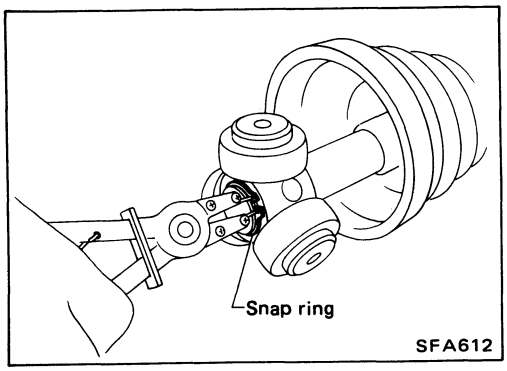

SFA612

4. Pry off snap ring, then remove spider assembly.

CAUTION:
Do not disassemble spider assembly.

5. Draw out boot.

Cover drive shaft serration with tape so as not to damage the boot.

Disassembly (Cont'd)

TRANSAXLE SIDE [Right drive shaft (DS90)]

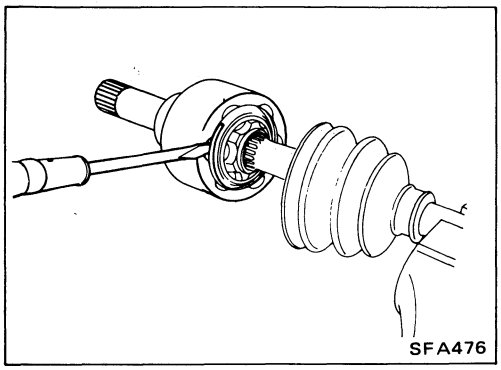

1. Remove boot bands.
2. Put matching marks on slide joint housing and inner race, before separating joint assembly.
3. Pry off snap ring "A" with a screwdriver, and pull out slide joint housing.

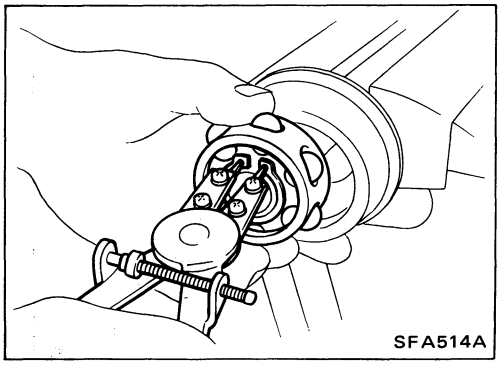

4. Put matching marks on inner race and drive shaft.
5. Pry off snap ring "C", then remove ball cage, inner race and balls as a unit.
6. Pry off snap ring "B".
7. Draw out boot.

Cover drive shaft serration with tape so as not to damage the boot.

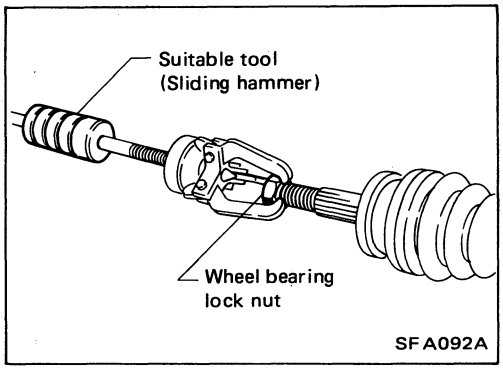

WHEEL SIDE (ZF90)

CAUTION:

The joint on the wheel side cannot be disassembled.

- Before separating joint assembly, put matching marks on drive shaft and joint assembly.
- Separate joint assembly with suitable tool.

Be careful not to damage threads on drive shaft.

- Remove boot bands.

Inspection

Thoroughly clean all parts in cleaning solvent, and dry with compressed air. Check parts for evidence of deformation or other damage.

DRIVE SHAFT

Replace drive shaft if it is twisted or cracked.

BOOT

Check boot for fatigue, cracks, or wear. Replace boot with new boot bands.

JOINT ASSEMBLY — Transaxle side [Left drive shaft (TS82F)]

- Check spider assembly for needle bearing and washer damage.
  Replace spider assembly if necessary.
- Check roller surfaces for scratches, wear or other damage. Replace if necessary.
- Check serration for deformation. Replace if necessary.
- Check slide joint housing for any damage. Replace if necessary.

Disassembly (Cont'd)

JOINT ASSEMBLY — Transaxle side [Right drive shaft (DS90)]

- Replace any parts of double offset joint which show signs of scorching, rust, wear or excessive play.
- Check serration for deformation. Replace if necessary.
- Check slide joint housing for any damage. Replace if necessary.

JOINT ASSEMBLY — Wheel side (ZF90)

Replace joint assembly if it is deformed or damaged.

Assembly

- **After drive shaft has been assembled, ensure that it moves smoothly over its entire range without binding.**
- **Use Nissan Genuine Grease or equivalent after every overhaul.**

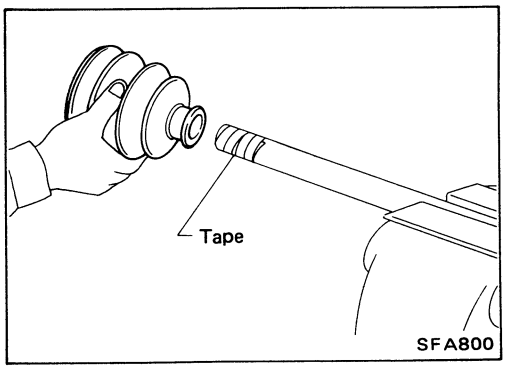

WHEEL SIDE (ZF90)

1. Install boot and new small boot band on drive shaft.
Cover drive shaft serration with tape so as not to damage boot during installation.

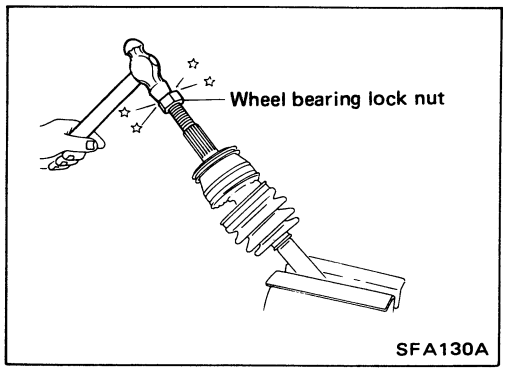

2. Set joint assembly onto drive shaft by lightly tapping it. Install joint assembly securely, ensuring marks which were made during disassembly are properly aligned.

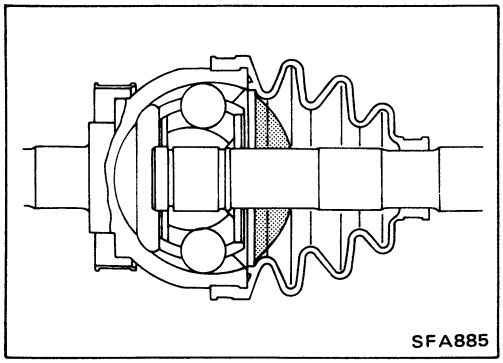

3. Pack drive shaft with specified amount of grease.
Specified amount of grease:
155 - 175 g (5.47 - 6.17 oz)

Assembly (Cont'd)

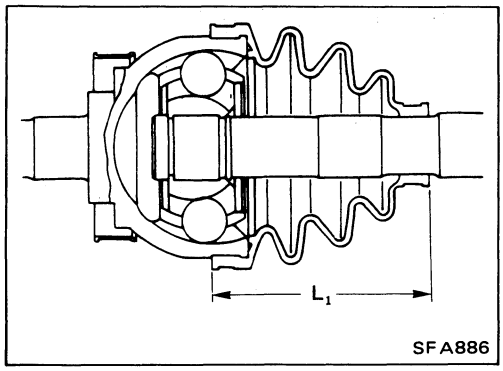

4. Set boot so that it does not swell and deform when its length is "L_1".
   Length "L_1":
   96 - 98 mm (3.78 - 3.86 in)

Make sure that boot is properly installed on the drive shaft groove.

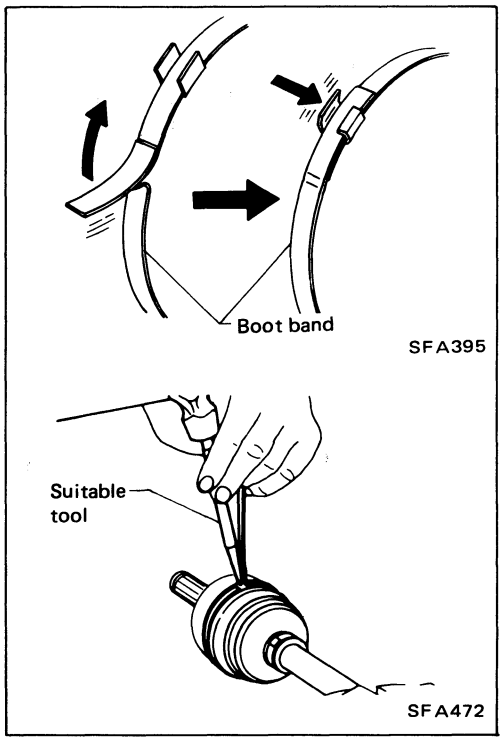

5. Lock new larger and smaller boot bands securely with a suitable tool.

TRANSAXLE SIDE [Left drive shaft (TS82F)]

1. Install boot and new small boot band on drive shaft.

Cover drive shaft serration with tape so as not to damage boot during installation.

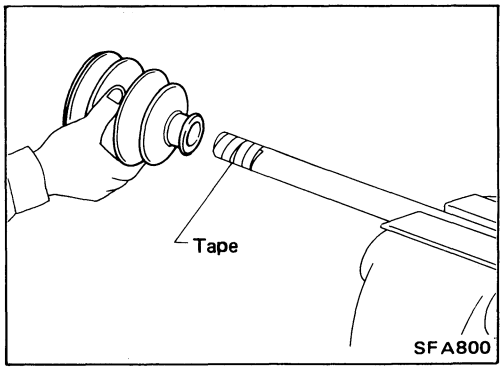

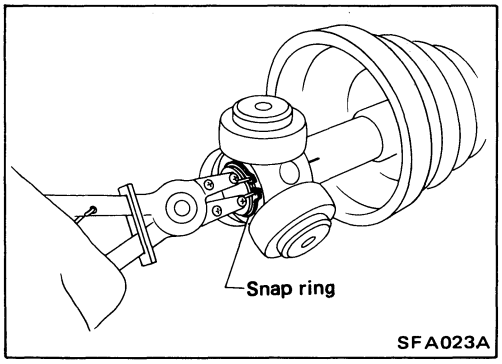

2. Install spider assembly securely, making sure the marks which were made during disassembly are properly aligned.
3. Install new snap ring.

Assembly (Cont'd)

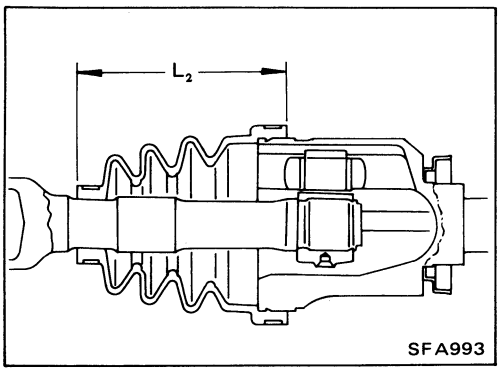

4. Pack drive shaft with specified amount of grease.
   Specified amount of grease:
   185 - 195 g (6.52 - 6.88 oz)
5. Install slide joint housing.
6. Set boot so that it does not swell and deform when its length is "L_2".
   Length "L_2":
   110.5 - 112.5 mm (4.35 - 4.43 in)

Make sure that boot is properly installed on the drive shaft groove.

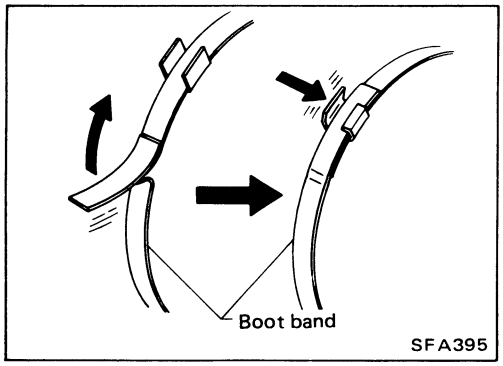

7. Lock new larger and smaller boot bands securely with a suitable tool.

TRANSAXLE SIDE [Right drive shaft (DS90)]

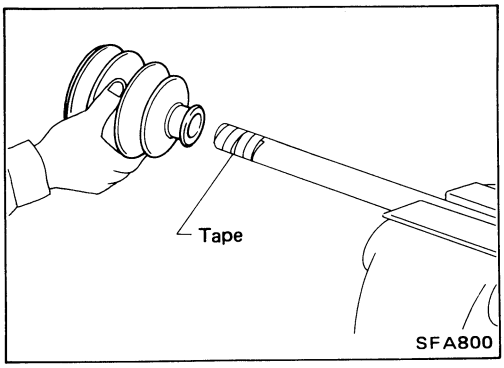

1. Install boot and new small boot band on drive shaft.

Cover drive shaft serration with tape so as not to damage boot during installation.

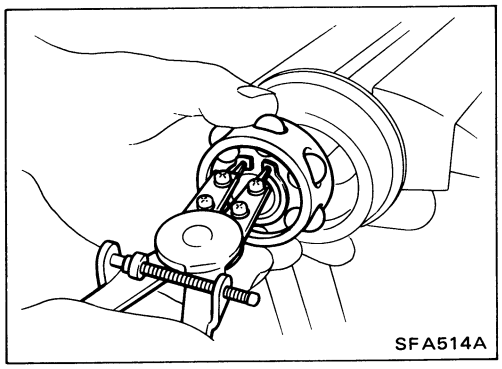

2. Install new snap ring "B", then securely install ball cage, inner race and balls as a unit, making sure the marks which were made during disassembly are properly aligned.
3. Install new snap ring "C".

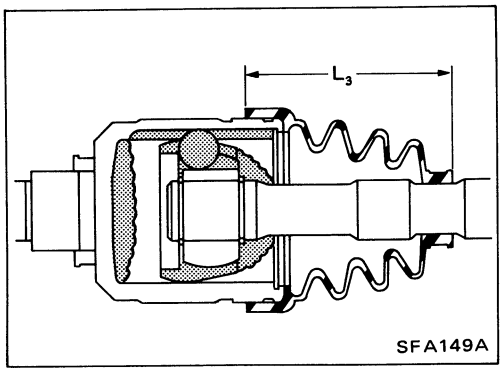

4. Pack drive shaft with specified amount of grease.
   Specified amount of grease:
   165 - 175 g (5.82 - 6.17 oz)
5. Install slide joint housing, then install new snap ring "A".
6. Set boot so that it does not swell and deform when its length is "L_3".
   Length "L_3": 97 - 99 mm (3.82 - 3.90 in)

Make sure that boot is properly installed on the drive shaft groove.

Assembly (Cont'd)

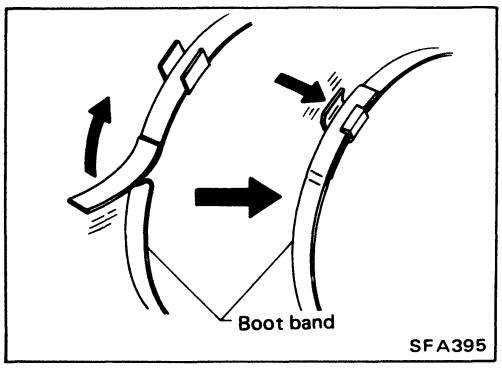

7. Lock new larger and smaller boot bands securely with a suitable tool.

CAUTION:
When disassembling and assembling, be careful not to damage piston rod.

***When installing, final tightening needs to be carried out at curb weight with tires on ground.**

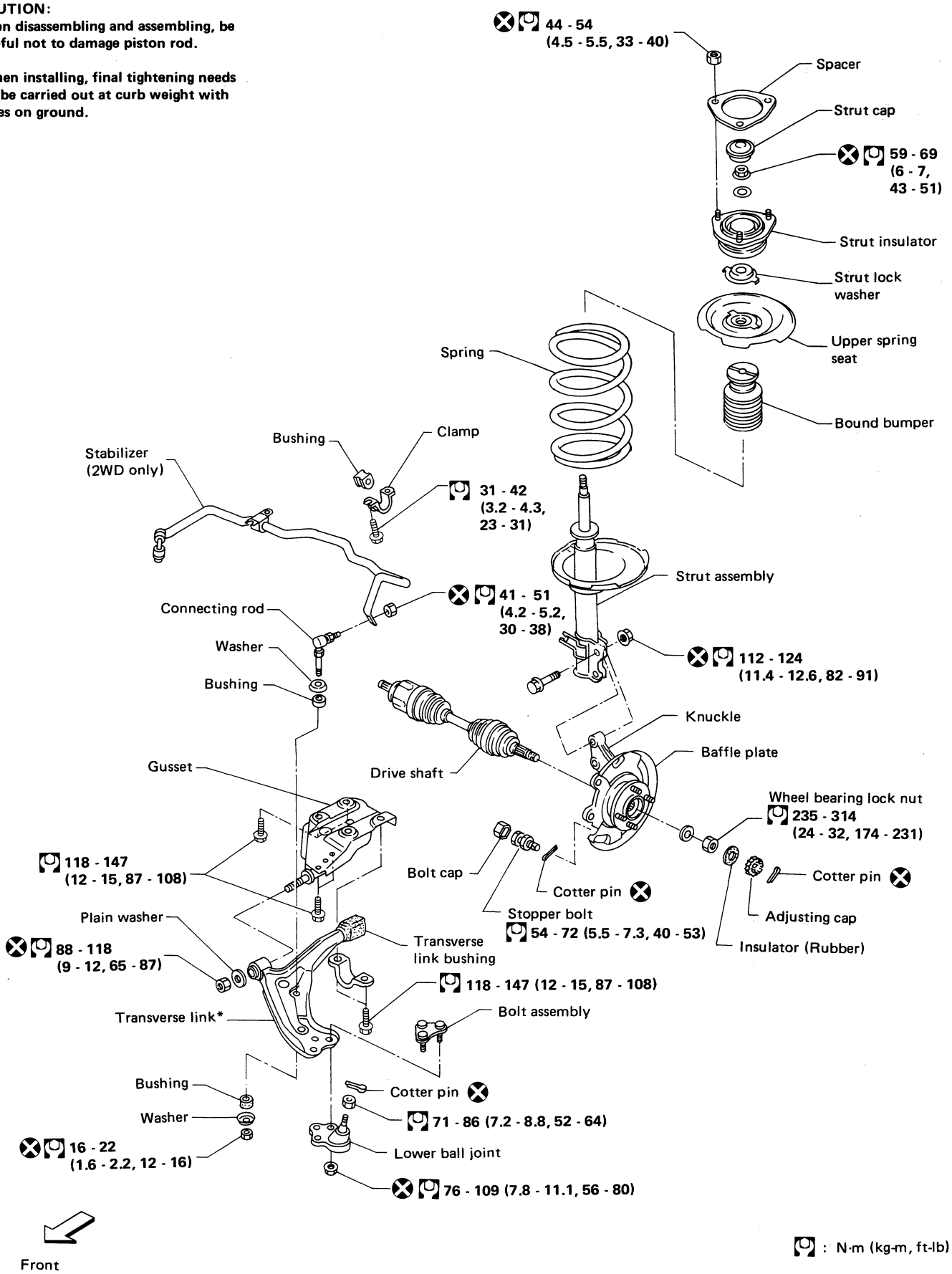

: N·m (kg-m, ft-lb)

SFA697A

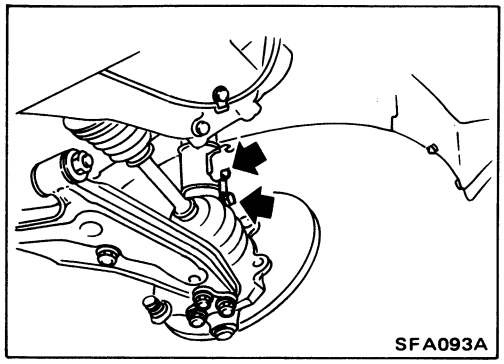

Removal and Installation

- Remove strut assembly fixing bolts and nuts (to hood ledge).

Do not remove piston rod lock nut on vehicle.
Put matching marks on strut lower bracket.

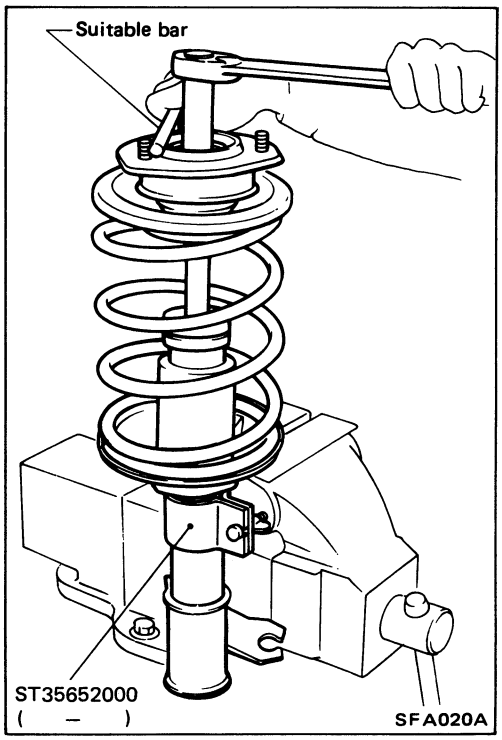

Disassembly

1. Set strut assembly on vise with Tool, then loosen piston rod lock nut.
- **Do not remove piston rod lock nut.**

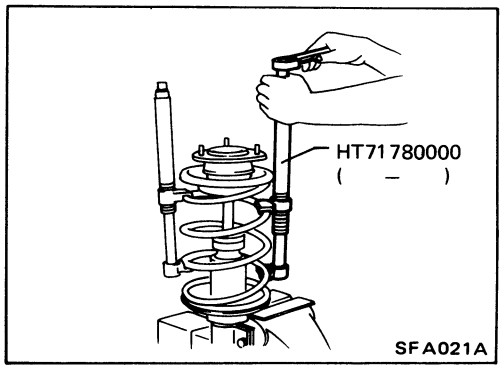

2. Compress spring with Tool so that the strut mounting insulator can be turned by hand.

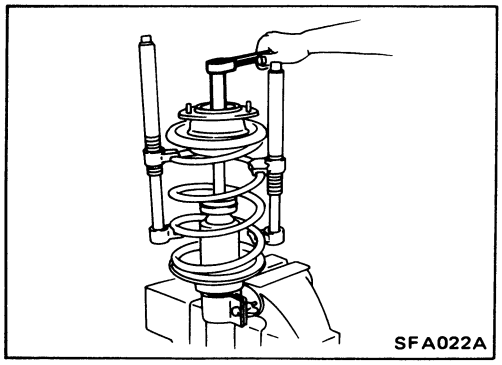

3. Remove piston rod lock nut.

Inspection

STRUT ASSEMBLY

- If oil is oozing from the gland packing or welded portions, replace the strut assembly.
- Inspect piston rod for cracks, deformation or other damage. Replace strut assembly if necessary.
- Inspect threads for cracks or other damage. Replace strut assembly if necessary.

STRUT MOUNTING INSULATOR

Check cemented rubber-to-metal portion for melting or cracks. Check rubber parts for deterioration.

THRUST SEAT

Check for cracks, deformation or other damage. Replace if necessary.

COIL SPRING

Check for cracks, deformation or other damage. Replace if necessary.

Assembly

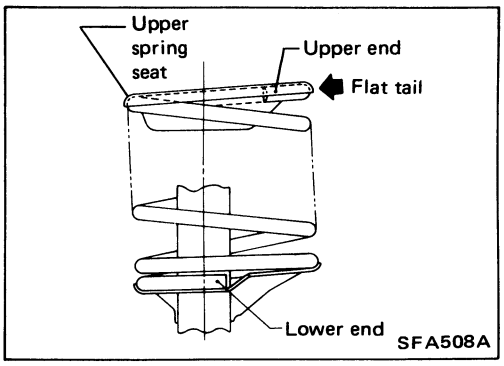

- When installing coil spring on strut, it must be positioned as shown in the figure at left.

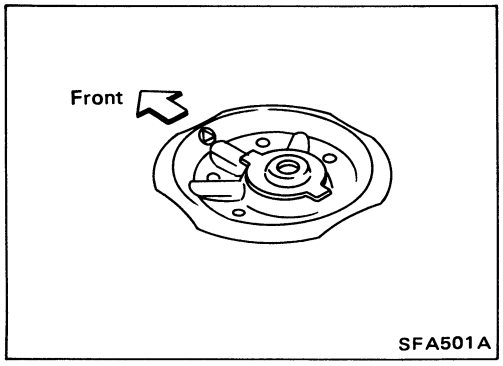

- When installing upper spring seat, make sure that it is positioned as shown in the figure at left.

Removal and Installation

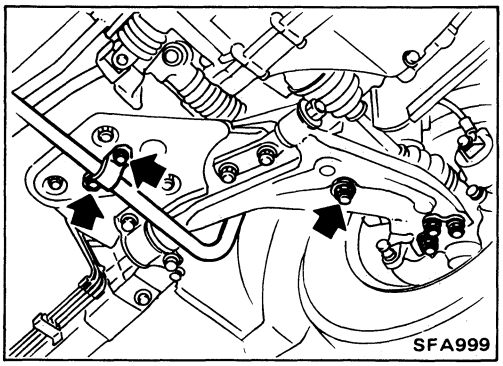

- Remove stabilizer bar.

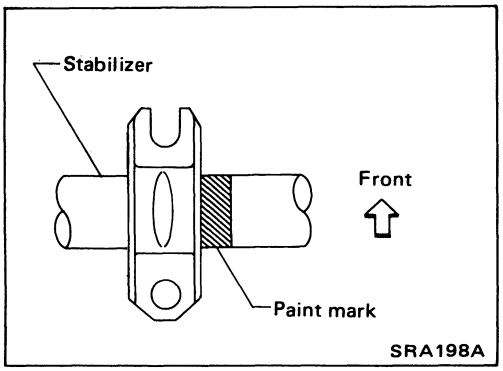

- When installing stabilizer, make sure that paint mark and clamp face in their correct directions.

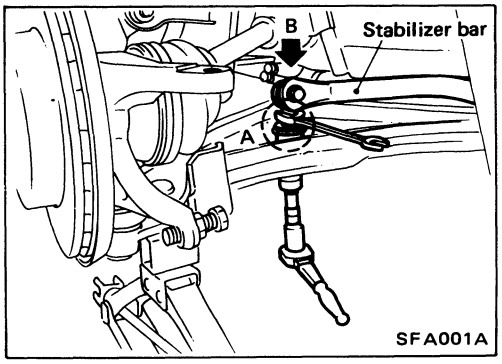

- When removing and installing stabilizer bar, fix portion A.

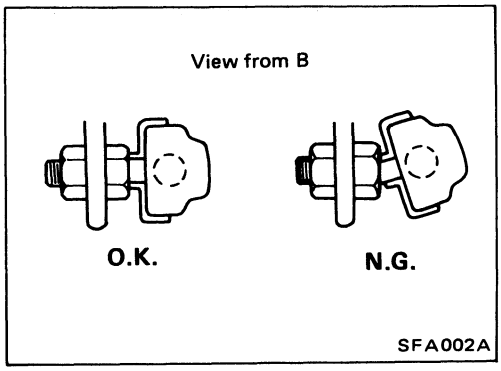

- Install stabilizer bar with ball joint socket properly placed.

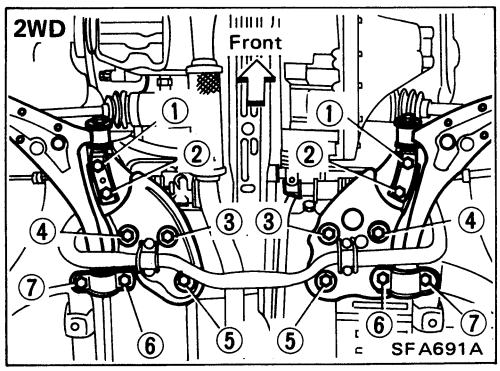

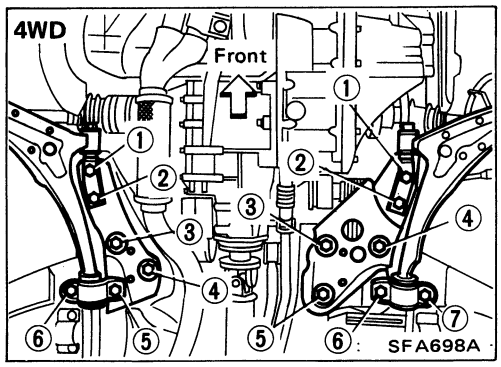

Removal and Installation

TRANSVERSE LINK AND GUSSET

- Remove stabilizer bar.
- Remove fixing bolts.
- Install bolts in order of number.

  Tightening torque:

  Refer to page FA-29.
- During installation, final tightening must be carried out at curb weight with tires on the ground.
- After installation, check wheel alignment.
  Refer to CHECK AND ADJUSTMENT.

Inspection

- Check transverse link for damage, cracks or deformation. Replace it if necessary.
- Check rubber bushing for damage, cracks and deformation. Replace transverse link if necessary.
- Check transverse link gusset for damage, cracks or deformation. Replace it if necessary.

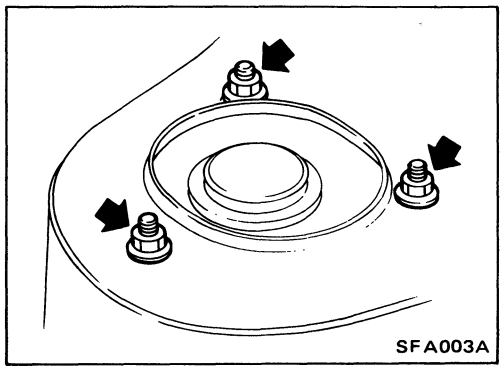
SFA003A

Removal and Installation

1. Remove wheel bearing lock nut.
2. Remove tie-rod ball joint.
3. Loosen (do not remove) strut mounting nuts.

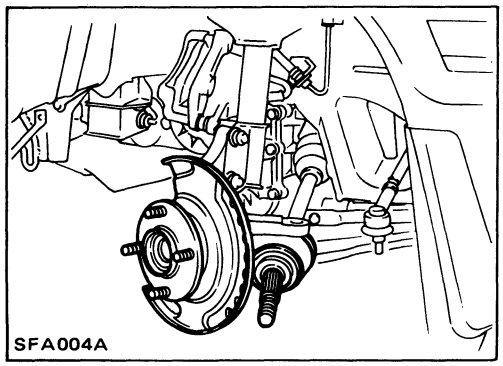
SFA004A

4. Remove nut securing lower ball joint to transverse link.
5. Separate drive shaft from knuckle by slightly tapping drive shaft end.

Cover boots with waste cloth so as not to damage them when removing drive shaft.

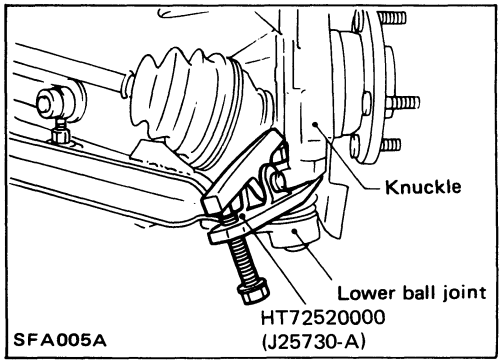

SFA005A

6. Remove lower ball joint from knuckle with Tool.

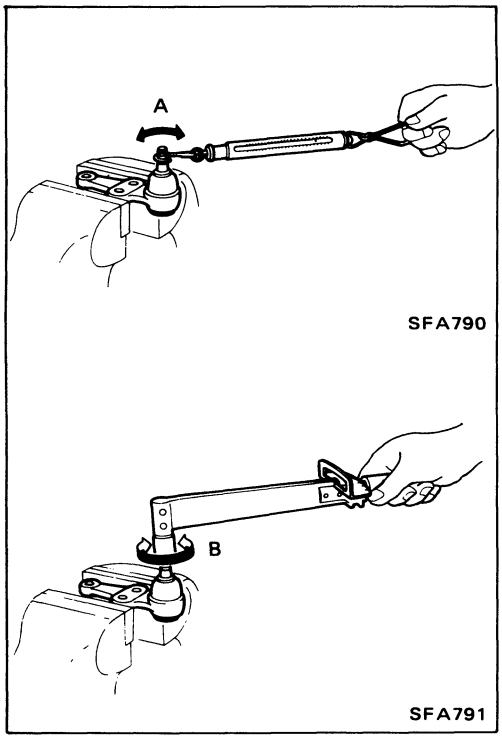

SFA790

SFA791

Inspection

- Check ball joint for play. If ball stud is worn, play in axial direction is excessive or joint is hard to swing, replace lower ball joint.

Before checking, turn ball joint at least 10 revolutions so that ball joint is properly broken in.

Turning torque "A":
(measuring point: cotter pin hole of ball stud)
7.8 - 54.9 N (0.8 - 5.6 kg, 1.8 - 12.3 lb)
Turning torque "B":
0.5 - 3.4 N•m (5 - 35 kg-cm, 4.3 - 30.4 in-lb)

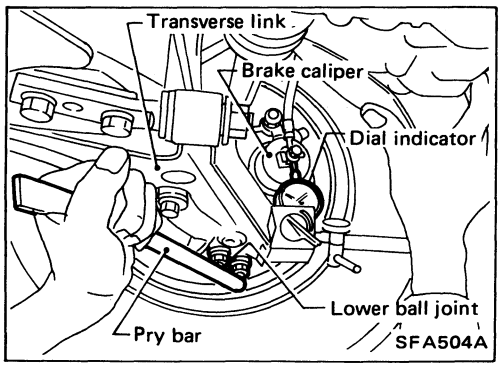

Inspection (Cont'd)

Vertical end play "C":
0 mm (0 in)

Procedure

(1) Jack up front of vehicle and set the stands.
(2) Clamp dial indicator onto transverse link and place indicator tip on lower edge of brake caliper.
(3) Make sure front wheels are straight and brake pedal is depressed.
(4) Place a pry bar between transverse link and stopper road wheel.
(5) While raising and releasing pry bar, observe maximum dial indicator value.
(6) Replace transverse link or lower ball joint if ball joint movement is beyond specification.

- Check dust cover for damage.
  Replace dust cover and dust cover clamp if necessary.

General Specifications

COIL SPRING

Item \ Model	2WD		4WD	
	M/T	A/T	M/T	A/T
Wire diameter mm (in)	14.0 (0.551)		14.6 (0.575)	
Coil diameter mm (in)	160 (6.30)			
Free length mm (in)	351.5 (13.84)	360 (14.17)	351 (13.82)	358 (14.09)
Spring constant N/mm (kg/mm, lb/in)	24.0 (2.45, 137.2)		28.4 (2.9, 162)	
Identification color	Pink x 1 White x 1	Light green x 1 White x 2	Light blue x 1 White x 1	Pink x 1 Light blue x 2

STRUT

Item \ Model	2WD	4WD
Piston rod diameter mm (in)	22 (0.87)	
Piston inner diameter mm (in)	32 (1.26)	
Stroke mm (in)	155.5 (6.12)	
Damping force [at 0.3 m (1.0 ft)/sec.] N (kg, lb) Expansion	686 - 941 (70 - 96, 154 - 212)	1,206 - 1,618 (123 - 165, 271 - 364)
Compression	118 - 216 (12 - 22, 26 - 49)	373 - 569 (38 - 58, 84 - 128)

General Specifications (Cont'd)

FRONT STABILIZER BAR (2WD only)

Stabilizer diameter mm (in)	30 (1.18)
Identification color	White

DRIVE SHAFT

Item \ Model	2WD	4WD	
		Left side	Right side
Joint type Transaxle side	DS86	TS82F	DS90
Wheel side	BF86	ZF90	
Diameter mm (in) Transaxle side D_1	28 (1.10)	–	28 (1.10)
Wheel side D_2	28 (1.10)		
Grease name	Nissan genuine grease or equivalent		
Specified amount of grease g (oz) Transaxle side	140 - 160 (4.94 - 5.64)	185 - 195 (6.52 - 6.88)	165 - 175 (5.82 - 6.17)
Wheel side	110 - 130 (3.88 - 4.59)	155 - 175 (5.47 - 6.17)	

Wheel side
BF86 and ZF90

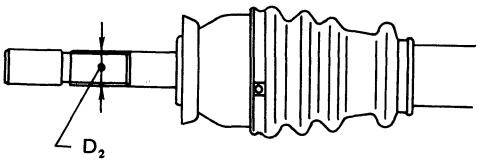

Transaxle side
DS86 and DS90

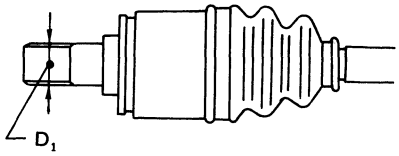

TS82F

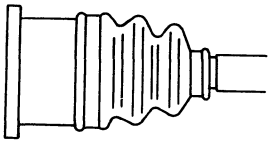

SFA699A

Inspection and Adjustment

WHEEL ALIGNMENT (Unlanden*1)

Item \ Model		2WD	4WD
Camber	degree	−25′ to 1°05′	−35′ to 55′
Caster	degree	−15′ to 1°15′	−5′ to 1°25′
Toe-in	mm (in)	0 - 4 (0 - 0.16)	0 - 4 (0 - 0.16)
(Total toe-in)	degree	0′ - 24′	0′ - 24′
Kingpin inclination	degree	13°35′ - 15°05′	13°15′ - 14°45′
Front wheel turning angle Full turn*2 Inside/Outside	degree	37° - 41°/28° - 32°	36° - 40°/28° - 32°

*1: Tankful of fuel, radiator coolant and engine oil full. Spare tire, jack, hand tools, mats in designated position.
*2: On power steering models, wheel turning force (at circumference of steering wheel) of 98 to 147 N (10 to 15 kg, 22 to 33 lb) with engine idle.

WHEEL BEARING

Wheel bearing axial end play mm (in)	0.05 (0.0020) or less
Wheel bearing lock nut Tightening tirque N·m (kg-m, ft-lb)	235 - 314 (24 - 32, 174 - 231)

LOWER BALL JOINT

Swing force (Measuring point: cotter pin hole of ball stud) N (kg, lb)	7.8 - 54.9 (0.8 - 5.6, 1.8 - 12.3)
Turning torque N·m (kg-cm, in-lb)	0.49 - 3.43 (5.0 - 35, 4.3 - 30.4)
Vertical end play mm (in)	0 (0)

WHEEL RONOUT (Radial and lateral)

Wheel type	Radial runout	Lateral runout
Aluminum wheel mm (in)	0.3 (0.012) or less	
Steel wheel mm (in)	0.5 (0.020) or less	0.8 (0.031) or less

REAR AXLE & REAR SUSPENSION

SECTION RA

CONTENTS

PRECAUTIONS AND PREPARATION ..... RA- 2

2WD

REAR AXLE AND REAR SUSPENSION ..... RA- 4
CHECK AND ADJUSTMENT — On-vehicle ..... RA- 5
REAR AXLE AND REAR SUSPENSION ASSEMBLY ..... RA- 8
REAR AXLE — Wheel Hub ..... RA- 9
REAR SUSPENSION RA-11
REAR SUSPENSION — Coil Spring and Strut Assembly RA-12
REAR SUSPENSION — Stabilizer Bar RA-17
REAR SUSPENSION — Parallel Link and Radius Rod RA-18

4WD

REAR AXLE AND REAR SUSPENSION RA-19
CHECK AND ADJUSTMENT — On-vehicle RA-20
REAR AXLE AND REAR SUSPENSION ASSEMBLY RA-23
REAR AXLE RA-24
REAR AXLE — Wheel Hub and Knuckle RA-25
REAR AXLE — Drive Shaft RA-29
REAR AXLE — Drive Shaft (ZF90TS79C) RA-30
REAR SUSPENSION RA-34
REAR SUSPENSION — Coil Spring and Strut Assembly RA-35
REAR SUSPENSION — Stabilizer Bar RA-37
REAR SUSPENSION — Parallel Link and Radius Rod RA-38
REAR SUSPENSION — Differential Mounting Bracket RA-39

2WD & 4WD

SERVICE DATA AND SPECIFICATIONS (S.D.S.) RA-40

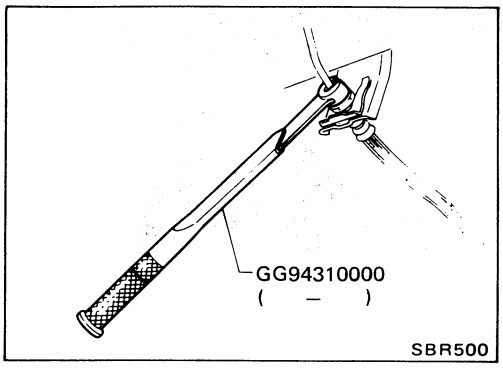

Precautions

- When installing each rubber part, final tightening must be carried out under unladen condition* with tires on ground.
  - * Fuel, radiator coolant and engine oil full. Spare tire, jack, hand tools, and mats in designated positions.
- Use Tool when removing or installing brake tubes.
- When removing each suspension part, check wheel alignment and adjust if necessary.
- Do not jack up at the parallel links.

Preparation

SPECIAL SERVICE TOOLS

Tool number (Kent-Moore No.) Tool name	Description	
ST35490000 (J26083) Gland packing wrench	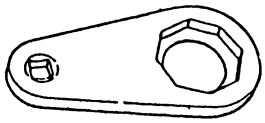	Removing and installing gland packing
KV401021S0 (–) Bearing race drift	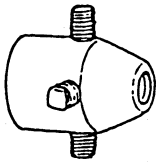	Installing wheel bearing outer race
HT71780000 (–) Spring compressor	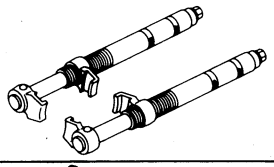	Removing and installing coil spring
ST35652000 (–) Strut attachment	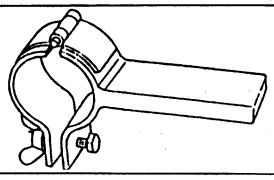	Fixing strut assembly
GG94310000 (–) Flare nut torque wrench	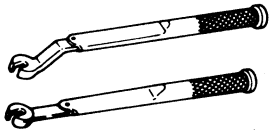	Removing and installing brake piping
ST30031000 (J22912-01) Bearing puller	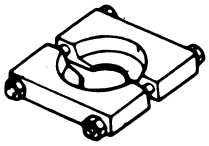	Removing inner race of wheel bearing

Preparation (Cont'd)

COMMERCIAL SERVICE TOOLS (For 4WD)

Tool name	Description
Wheel bearing drift	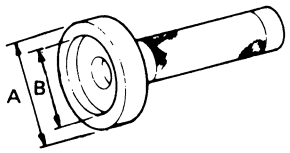 Removing and installing wheel bearing outer race **A : 76 mm (2.99 in) dia.** **B : 72 mm (2.83 in) dia.**
Grease seal drift	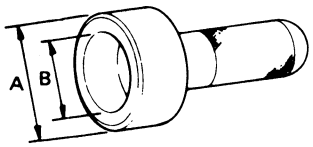 Installing hub grease seal **A : 81 mm (3.19 in) dia.** **B : 76 mm (2.99 in) dia.**
Wheel hub drift	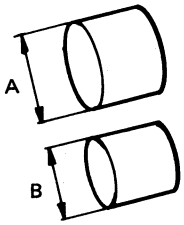 Installing wheel hub **A : 70 mm (2.76 in) dia.** **B : 54 mm (2.13 in) dia.**

When installing each rubber part, final tightening must be carried out under unladen condition* with tires on ground.

* Fuel, radiator coolant and engine oil full. Spare tire, jack, hand tools and mats in designated positions.

CAUTION:

Do not jack up at the parallel links, radius rods.

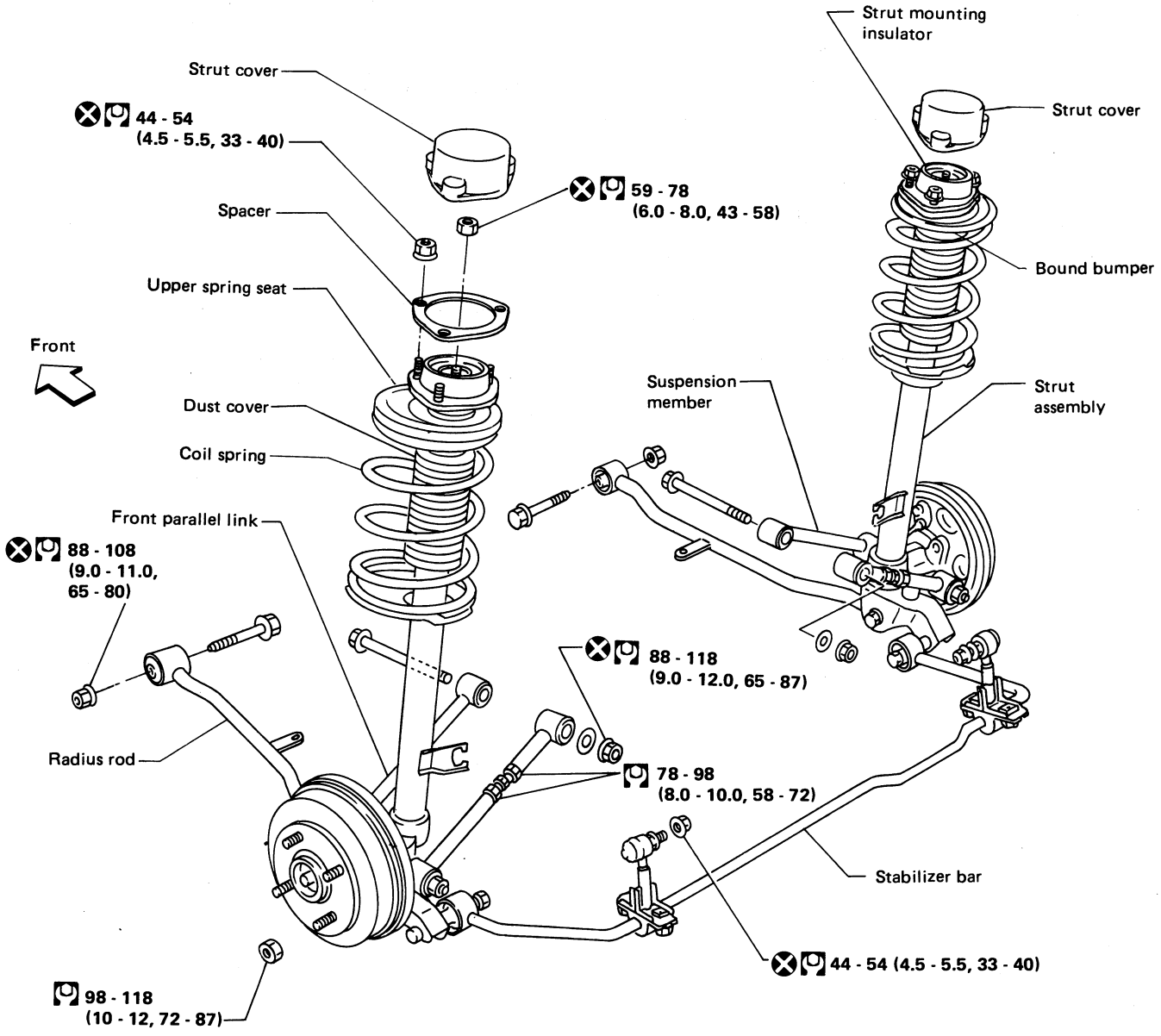

: N·m (kg-m, ft-lb)

SRA164A

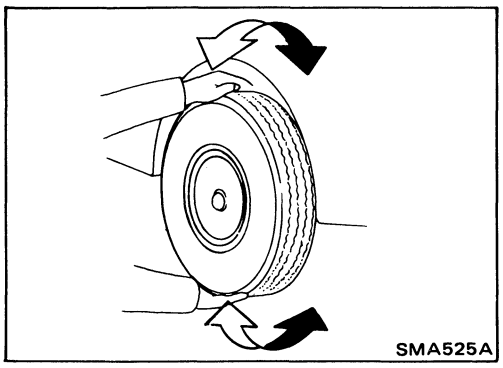

Rear Axle and Rear Suspension Parts

- Check axle and suspension parts for looseness, wear or damage.

(1) Shake each rear wheel.

(2) Retighten all nuts and bolts to the specified torque.
Tightening torque: Refer to page RA-11.

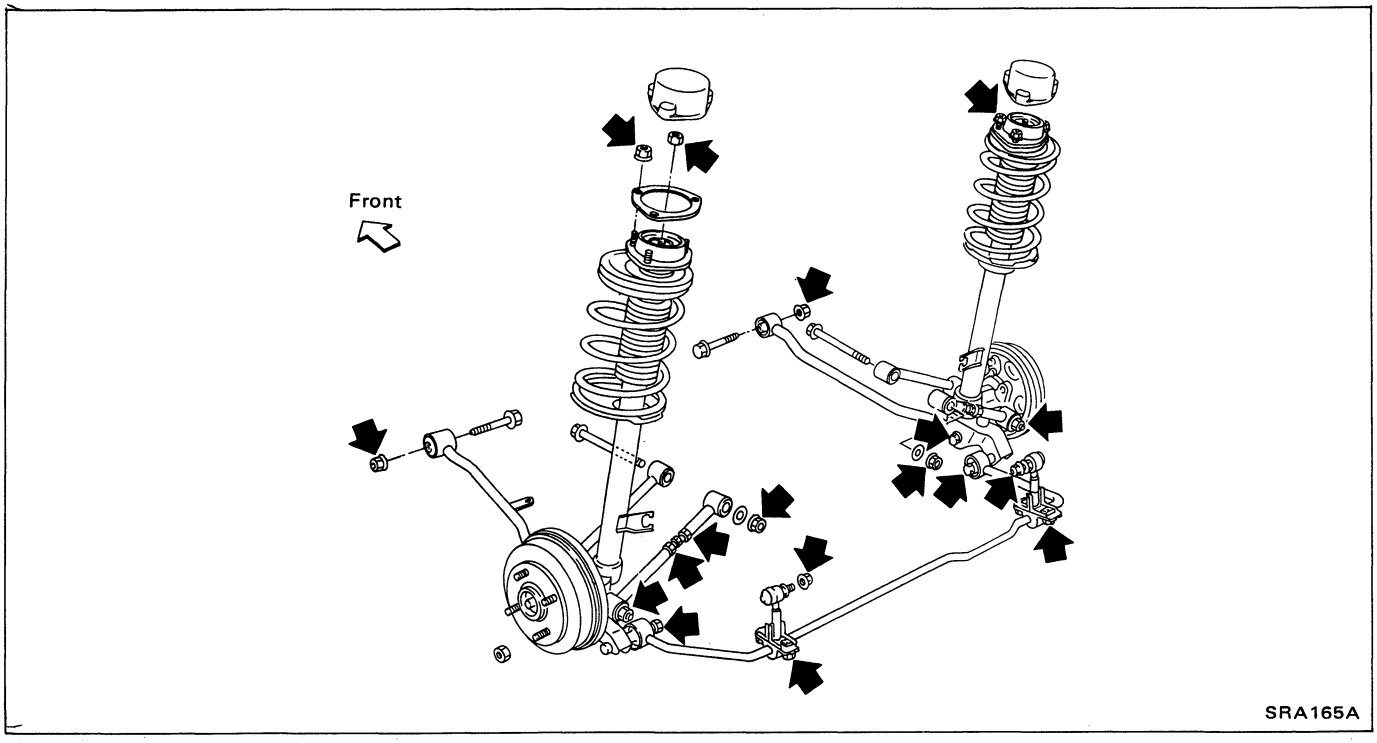

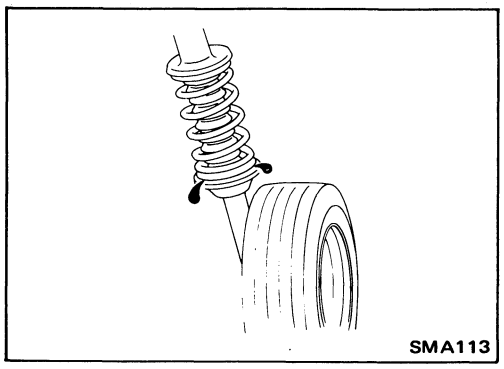

(3) Check strut (shock absorber) for oil leakage or other damage.

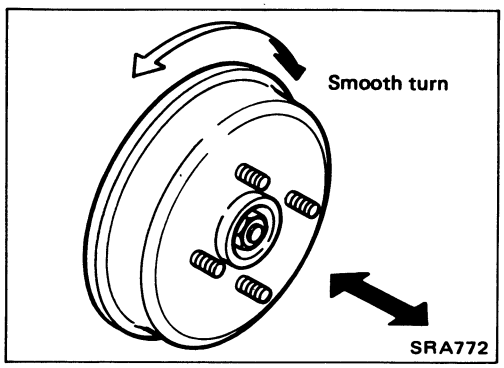

Rear Wheel Bearing

- Check tightening torque of wheel bearing lock nut.
  [O]: 186 - 255 N•m
  (19 - 26 kg-m, 137 - 188 ft-lb)
- Check that wheel bearings operate smoothly.
- Check axial end play.
  Axial end play:
  0.05 mm (0.0020 in) or less

If there is any axial end play or wheel bearing does not turn smoothly, replace wheel bearing assembly.
Refer to REAR AXLE—Wheel Hub.

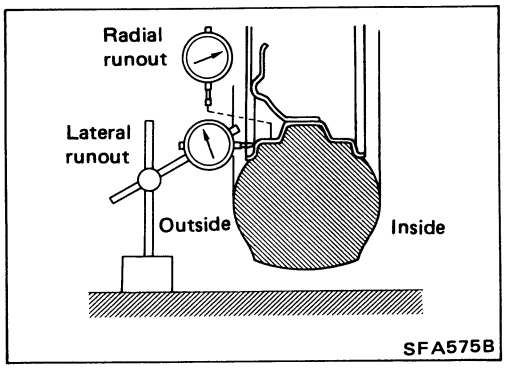

Rear Wheel Alignment

PRELIMINARY INSPECTION

Make following checks. Adjust, repair or replace if necessary.

- Check tires for wear and for improper inflation.
- Check rear wheel bearings for looseness.
- Check wheel runout.
  Lateral and radial runout:
  Steel wheel
  0.5 mm (0.020 in) or less
  Aluminum wheel
  0.3 mm (0.012 in) or less
- Check that rear strut (shock absorber) works properly.
- Check rear axle and rear suspension parts for looseness.
- Check vehicle posture (Unladen).
  "Unladen":
  Fuel tank, radiator and engine oil full. Spare tire, jack, hand tools and mats in designated positions.

CAMBER

Camber is preset at factory and cannot be adjusted.

Camber:

–45′ to 45′

If the camber is not within specification, inspect and replace any damaged or worn rear suspension parts.

Rear Wheel Alignment (Cont'd)

TOE-OUT

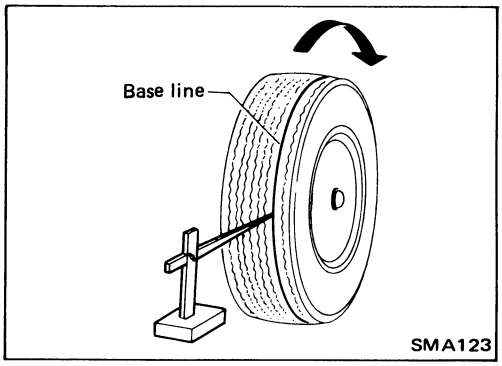

1. Draw a base line across the tread.

After lowering rear of vehicle, move it up and down to eliminate friction.

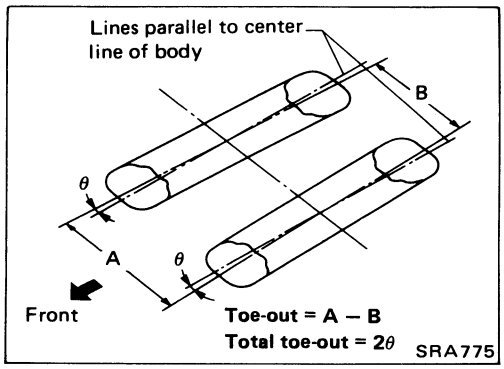

2. Measure toe-out.

Measure distance "A" and "B" at the same height as hub center.

Toe-out:

A – B	**2 - 6 mm (0.08 - 0.24 in)**
2θ	**12' - 36'**

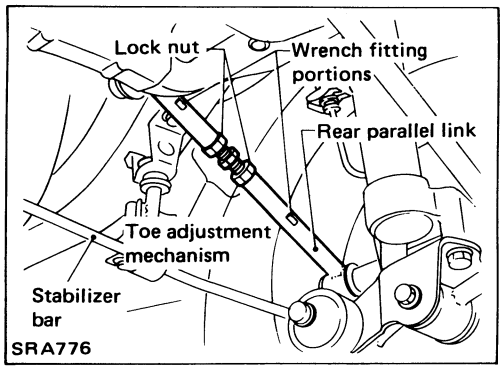

3. Adjust toe-out by varying the lengths of rear parallel links.

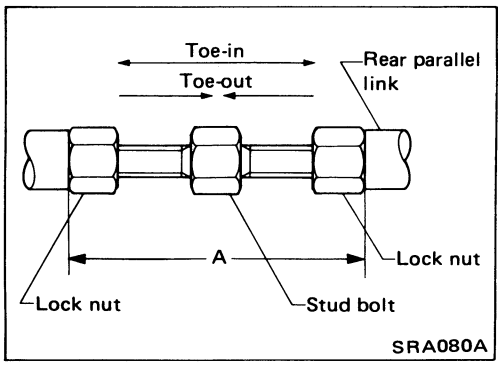

- Adjust left and right rear parallel links to the same length "A".

Tighten lock nut while holding rear parallel link with wrench to prevent bushing from twisting.

Standard length "A":

50 - 55 mm (1.97 - 2.17 in)

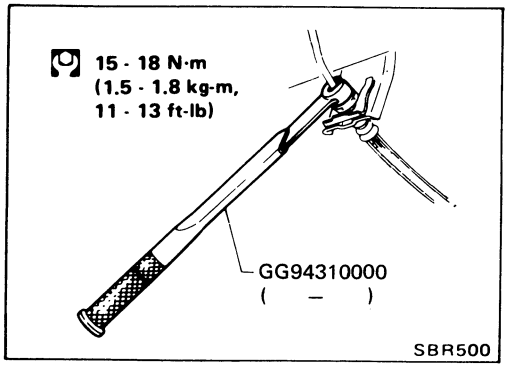

Removal and Installation

CAUTION:

Do not jack up at the parallel links or radius rods.

- Disconnect brake hydraulic line and parking brake cable at equalizer.

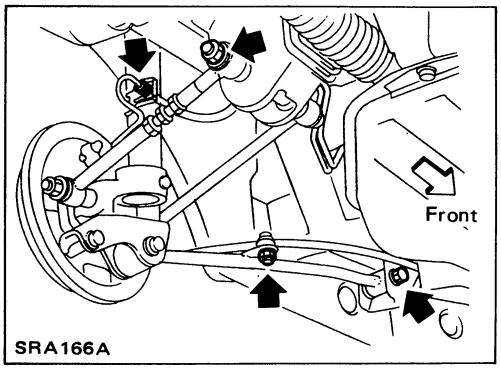

- **Remove left suspension assembly.**

1) Remove parallel link fixing bolt, radius rod fixing bolt, stabilizer fixing bolt, stabilizer connecting rod brackets and parking brake cable fixing bolts.

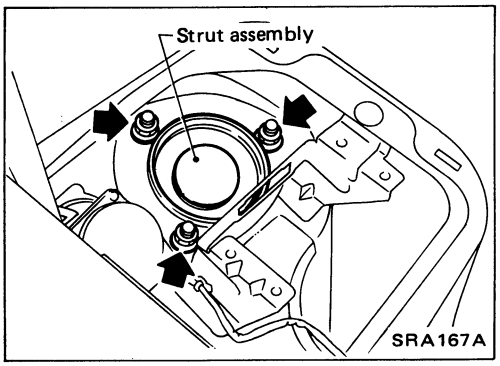

2) Remove rear speaker grill and rear speaker. Refer to section BF.
3) Remove strut securing nuts (Upper side).
   Then pull out strut assembly.

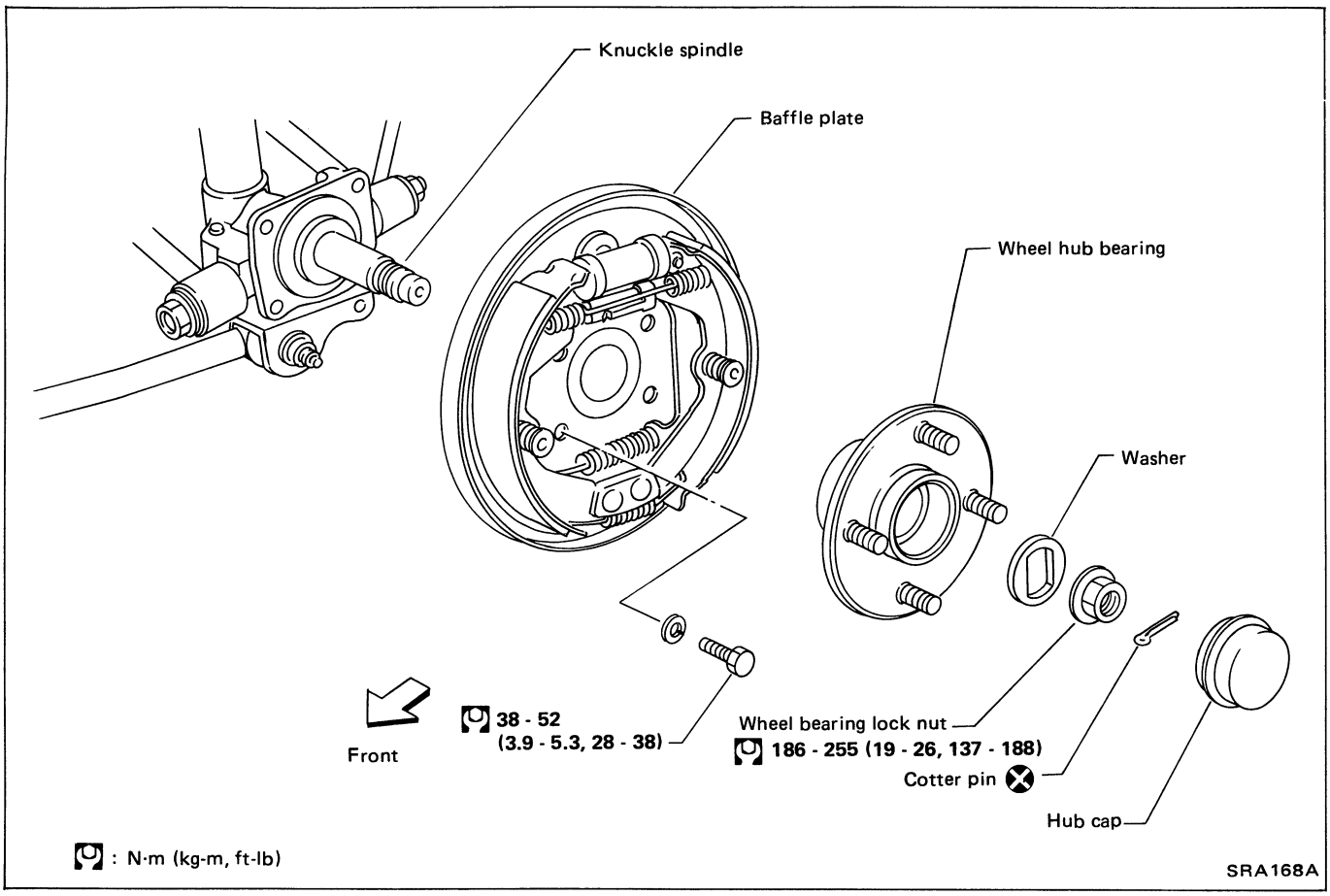

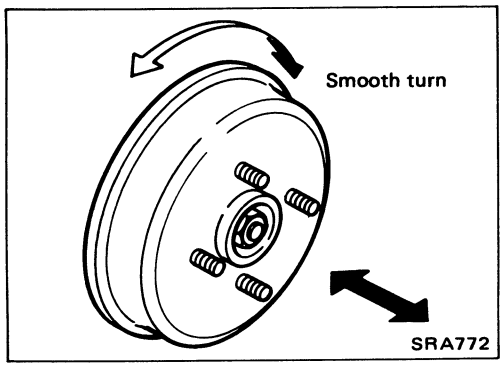

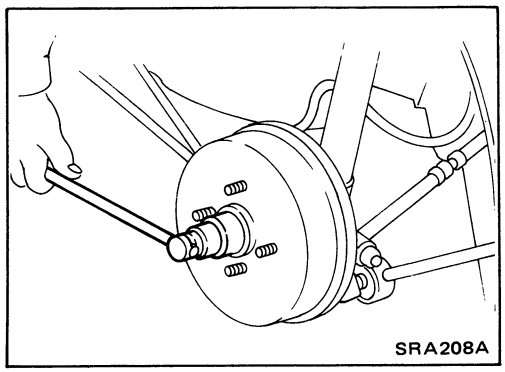

Removal

CAUTION:

Wheel hub bearing usually does not require maintenance. If any of the following symptoms are noted, replace wheel hub bearing assembly.

- **Growling noise is emitted from wheel hub bearing during operation.**
- **Wheel hub bearing drags or turns roughly when hub is turned with your hand after bearing lock nut is tightened to specified torque.**
- **After wheel hub bearing is removed from knuckle spindle.**
- Remove wheel bearing lock nut.

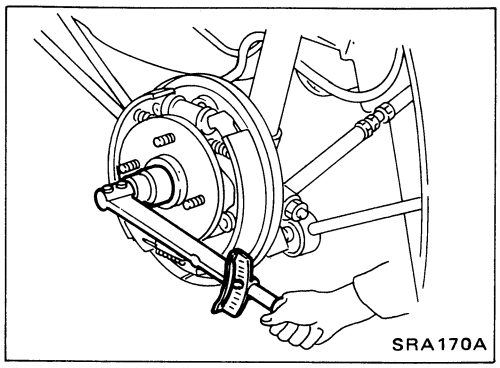

Installation

- Install wheel hub with rotor disc.
- Tighten wheel bearing lock nut.
  [O]: 186 - 255 N•m
  (19 - 26 kg-m, 137 - 188 ft-lb)

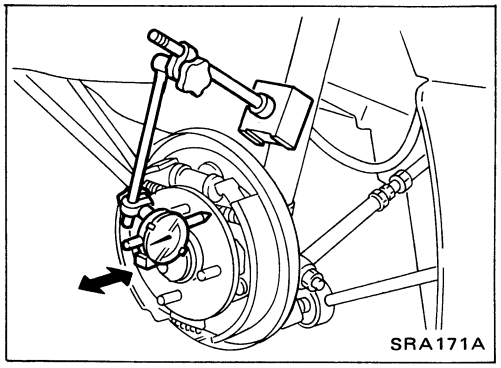

- Check wheel bearing axial end play.
  Axial end play:
  0.05 mm (0.0020 in) or less

When installing each rubber part, final tightening must be carried out under unladen conditon* with tires on ground.

* Fuel, radiator coolant and engine oil full. Spare tire, jack, hand tools and mats in designated positions.

CAUTION:

Do not jack up at the parallel links, radius rods.

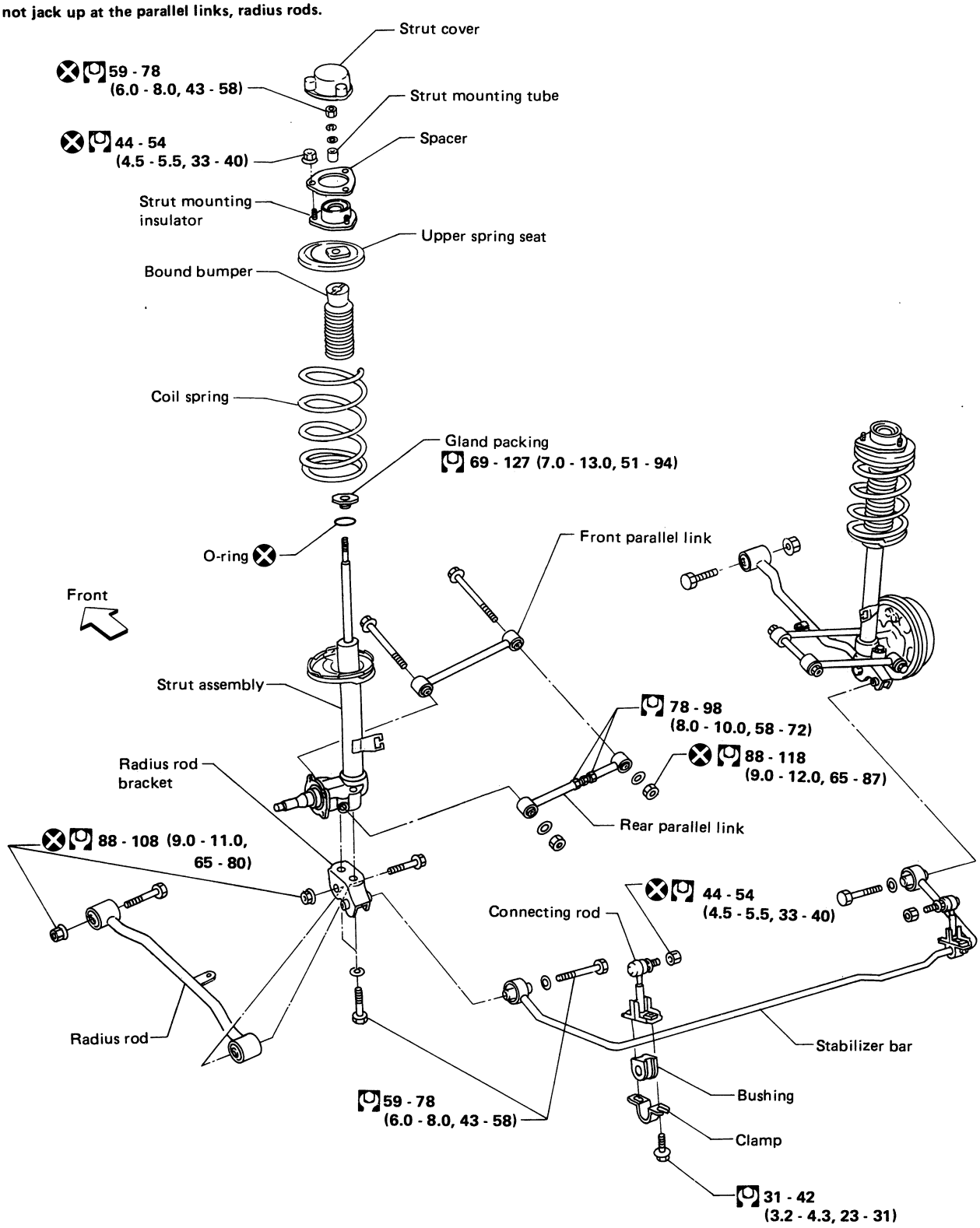

: N·m (kg-m, ft-lb)

SRA172A

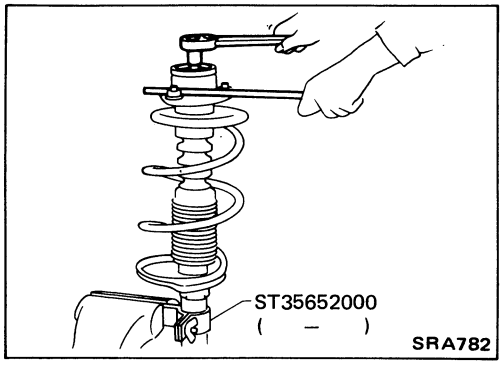

Disassembly

1. Set strut assembly on vise with attachment, then loosen piston rod lock nut.
- **Do not remove piston rod lock nut.**

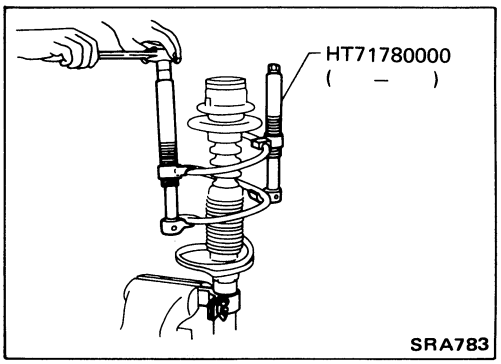

2. Compress spring with suitable tool so that the strut mounting insulator can be turned by hand.

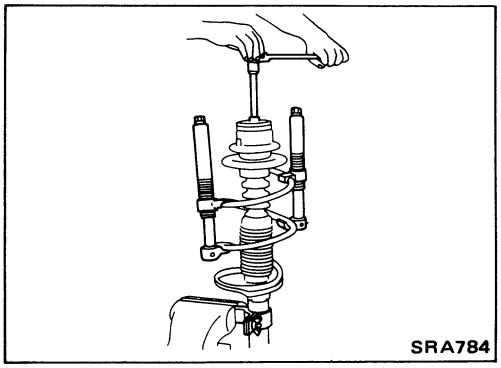

3. Remove piston rod lock nut.

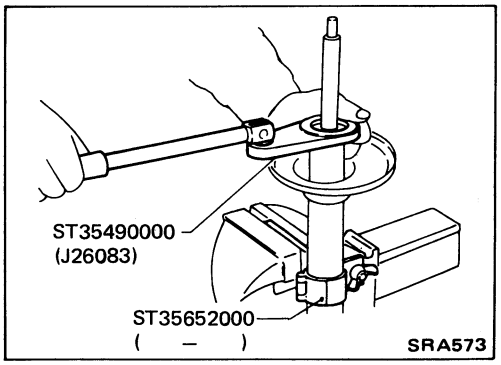

4. Remove gland packing with Tool.
- **Avoid getting dirt and dust into gland packing portion.**
5. Retract piston rod by pushing it down until it bottoms. Then, slowly withdraw piston rod from cylinder together with piston guide.

Inspection

Wash all parts, except nonmetallic parts, with solvent; then dry with compressed air.
Blow dirt and dust off of nonmetallic parts with compressed air.

STRUT ASSEMBLY

- **If oil is oozing from the gland packing, the strut need not be replaced.**
  If oil leakage is evident on spring seat, check piston rod gland packing and O-ring.
  If oil leakage occurs on welded portion of outer strut casing, replace strut assembly.
- **If the shock absorber is malfunctioning, replace it as a shock absorber kit-cartridge.**

GLAND PACKING

Check gland packing for oil leakage. Replace gland packing if necessary.

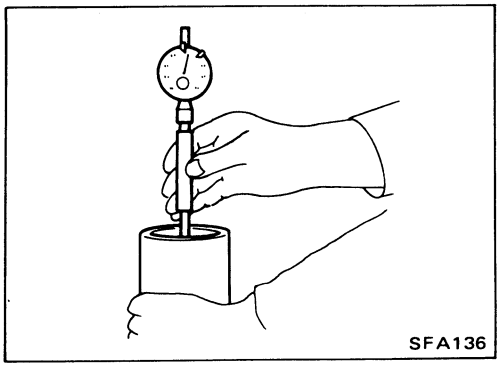

INNER CYLINDER

- Check inner cylinder for cracks, deformation or other damage. For inner cylinder damage, replace shock absorber kit-cartridge.
  Inner diameter:
  Refer to S.D.S.

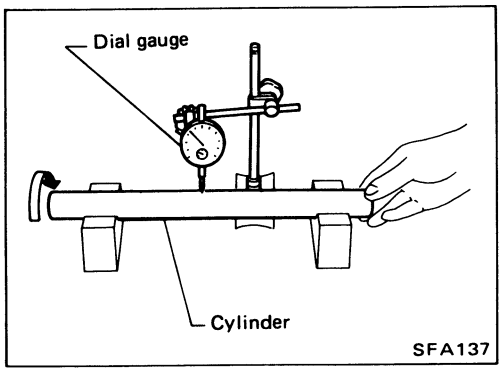

Maximum runout:
0.2 mm (0.008 in)

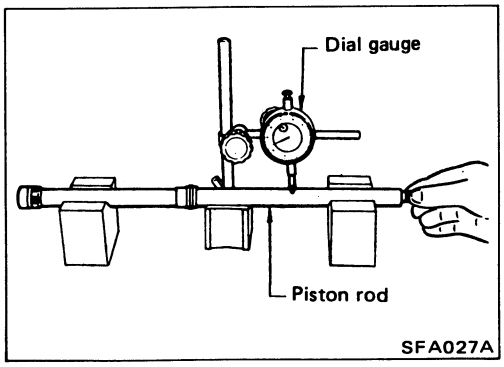

PISTON ROD

- Check piston rod for cracks, deformation or other damage. Replace shock absorber kit-cartridge, if necessary.
- Check threads for cracks or other damage. Replace shock absorber kit-cartridge, if necessary.
  Rod diameter:
  Refer to S.D.S.
  Maximum runout: 0.1 mm (0.004 in)

STRUT MOUNTING INSULATOR

Check cemented rubber-to-metal portion for melting or cracks. Check rubber parts for deterioration.

Inspection (Cont'd)

COIL SPRING

Check for cracks, deformation or other damage. Replace if necessary.

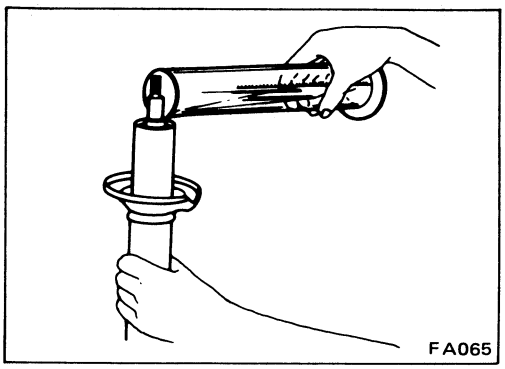

Assembly

Before assembly, keep away from dust.

- Add correct amount of fluid. [Except shock absorber kit-cartridge]

Use "NISSAN GENUINE STRUT FLUID" or equivalent.
Oil capacity is very important since performance of strut varies with amount of fluid in strut.

Capacity: 280 m ℓ (9.5 US fl oz, 9.9 Imp fl oz)

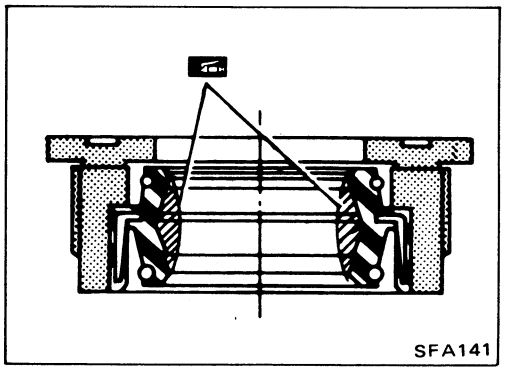

- Lubricate sealing lip of gland packing with multi-purpose grease.

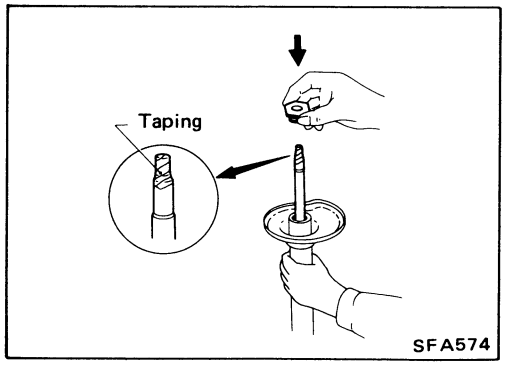

- Install gland packing.

Cover piston rod with tape to prevent damage to oil seal lip.

- Tighten gland packing to the specified torque (Refer to the following chart.) with Tool.

Assembly (Cont'd)

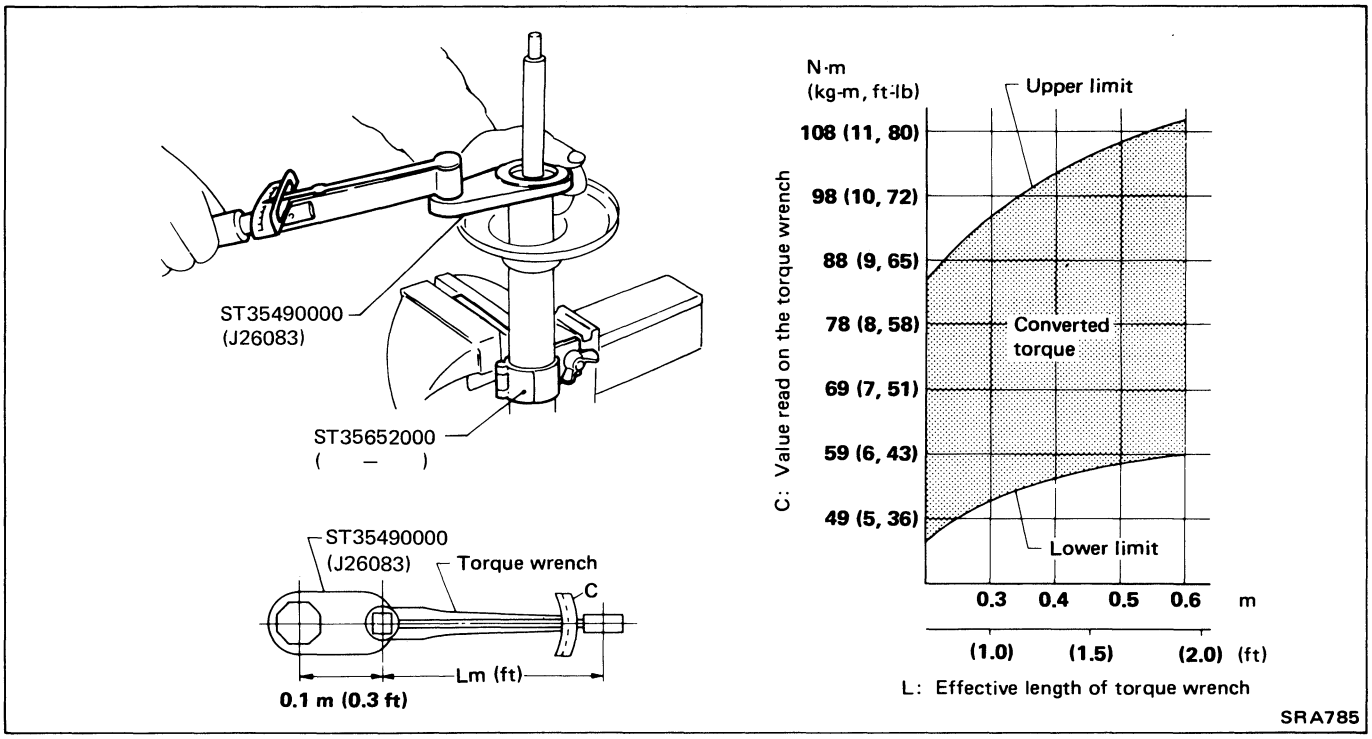

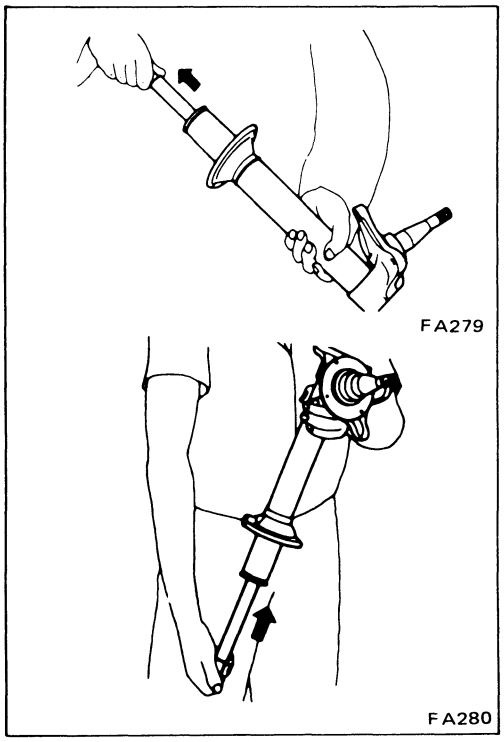

- Repeat procedures (as shown at left) several times so that air will be thoroughly bled from strut [Except shock absorber kit-cartridge].

- Locate upper spring seat as shown.

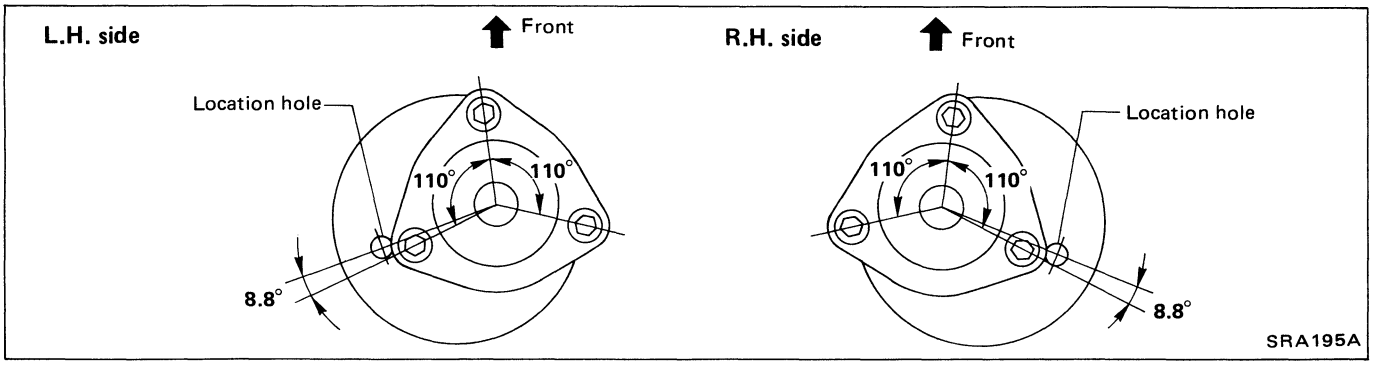

Assembly (Cont'd)

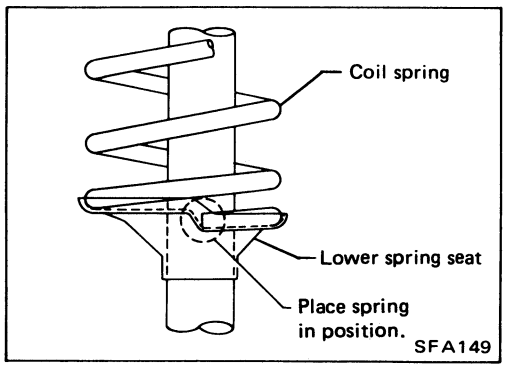

- After placing coil spring in position on lower spring seat, release spring compressor gradually.

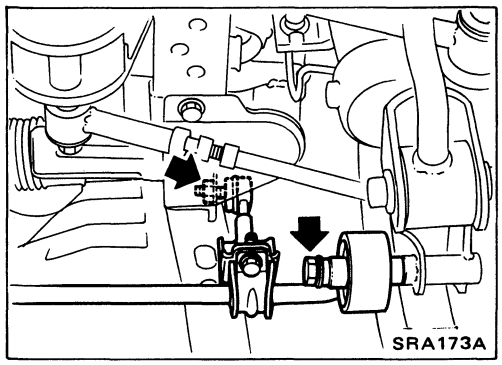

Removal and Installation

- Remove stabilizer bar.

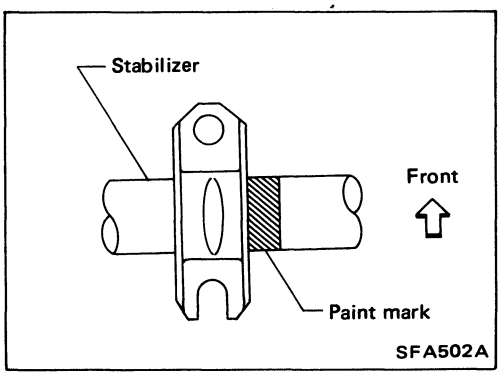

- When installing stabilizer, make sure that paint mark and clamp face in their correct directions.

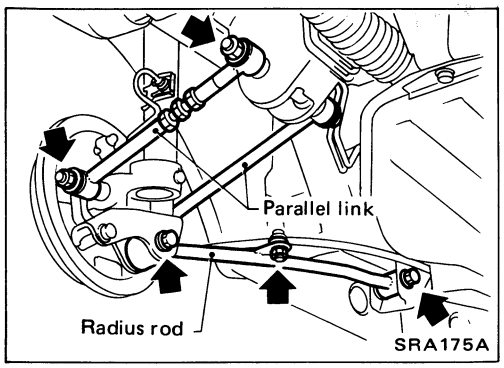

Removal and Installation

- Remove bolts and nuts as shown at left.

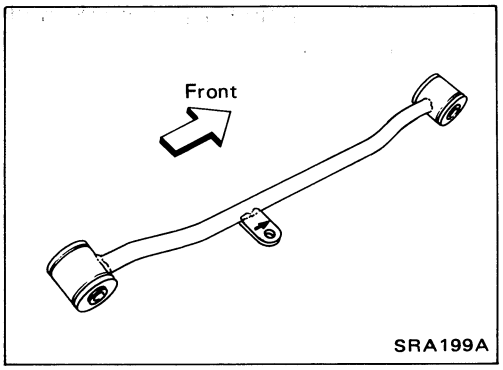

- When installing, final tightening must be carried out at curb weight with tires on ground.
- Insert the radius rod so that the arrow points toward the front.

Inspection

PARALLEL LINK

- Check parallel link for damage, cracks and deformation; replace parallel link if necessary.
- Check rubber bushing for damage, cracks and deformation; replace parallel link if necessary.

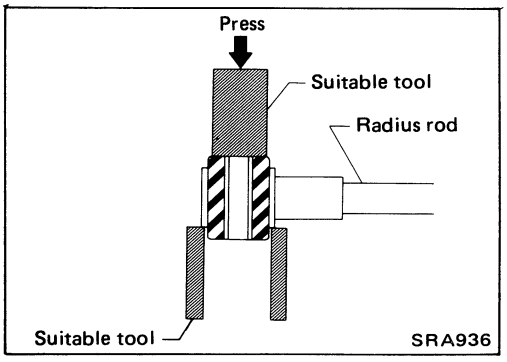

RADIUS ROD

- Check radius rod insulator for deformation or cracks. Replace if necessary.
- If radius rod insulator is deformed or cracked, replace it with a suitable tool.

When installing each rubber part, final tightening must be carried out under unladen conditon* with tires on ground.

* Fuel, radiator coolant and engine oil full. Spare tire, jack, hand tools and mats in designated positions.

CAUTION:

Do not jack up at the parallel links, radius rods.

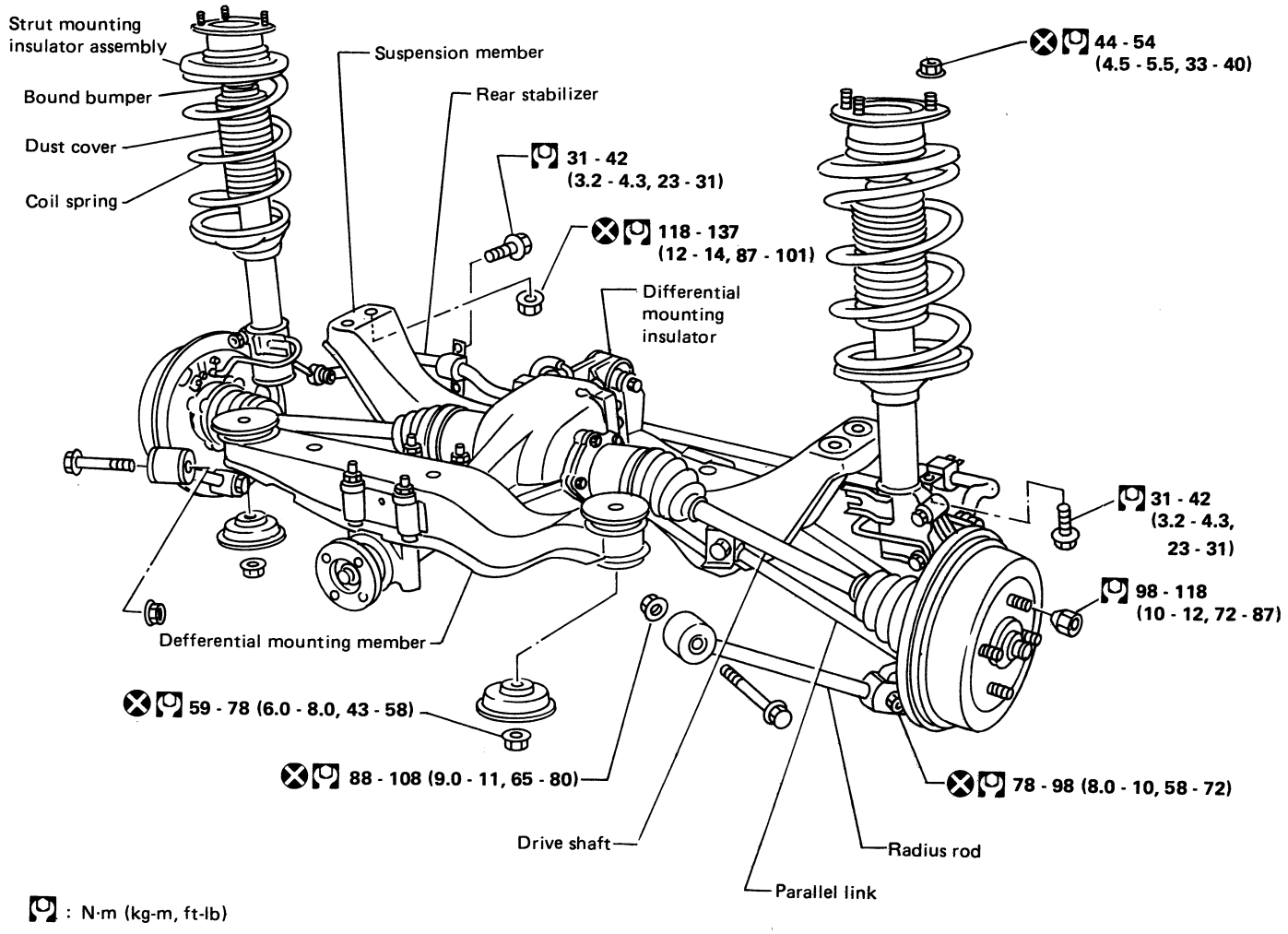

: N·m (kg-m, ft-lb)

SRA176A

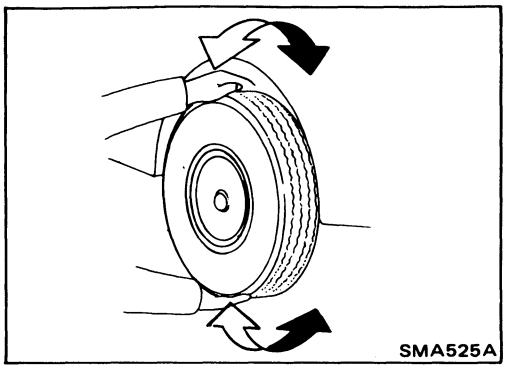

Rear Axle and Rear Suspension Parts

- Check axle and suspension parts for looseness, wear or damage.

(1) Shake each rear wheel.

(2) Retighten all nuts and bolts to the specified torque.
Tightening torque: Refer to page RA-34.

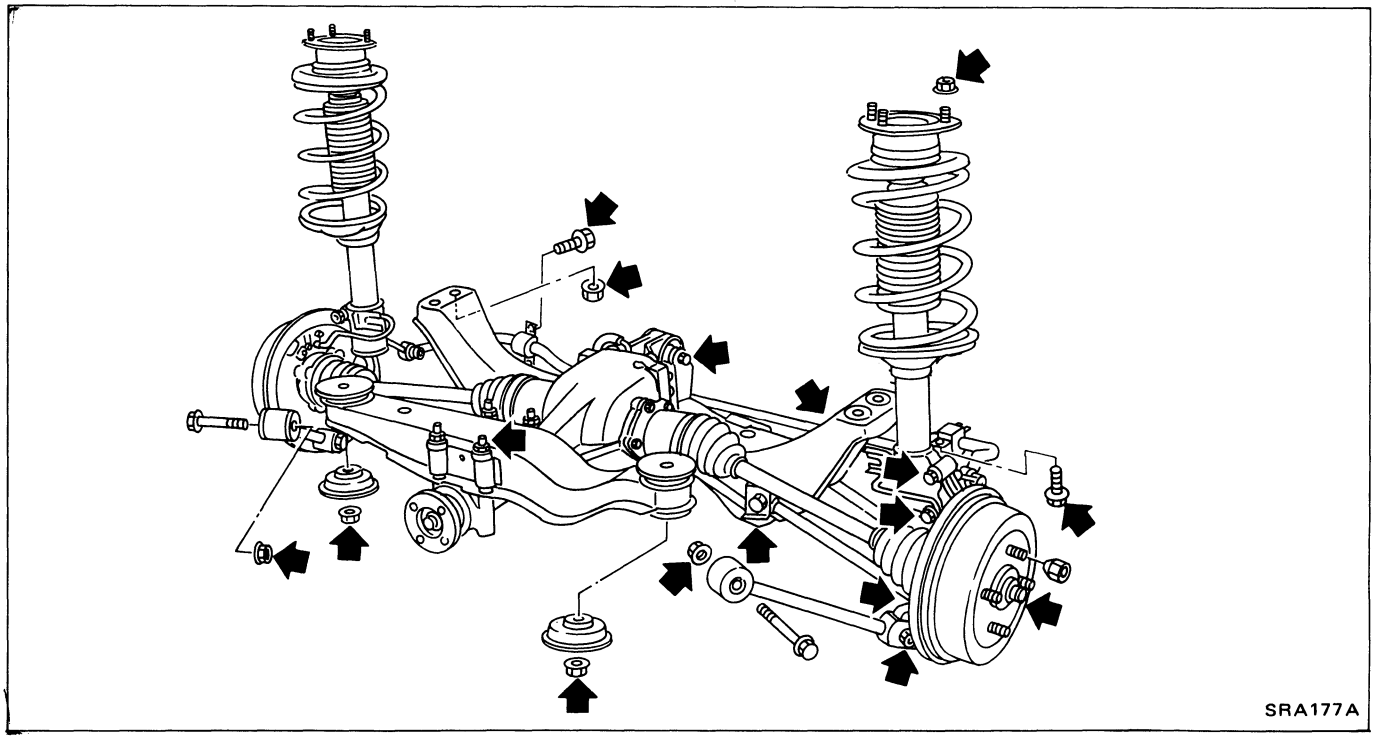

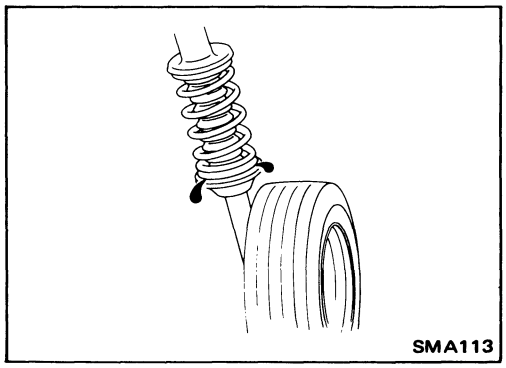

(3) Check strut (shock absorber) for oil leakage or other damage.

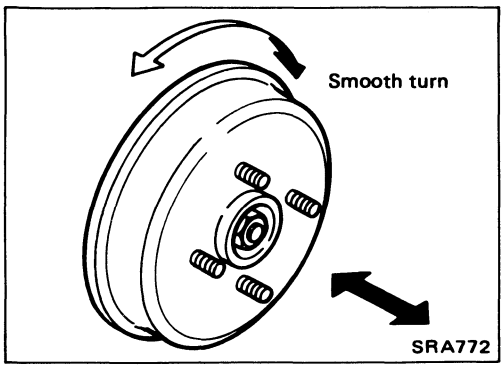

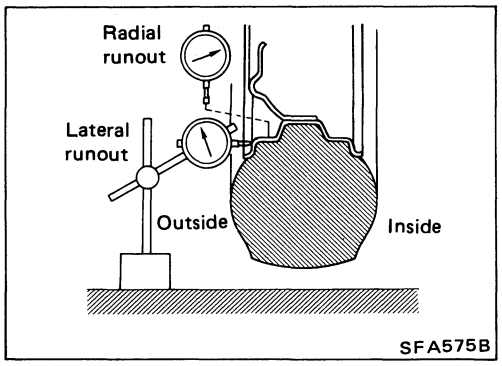

Rear Wheel Bearing

- Check tightening torque of wheel bearing lock nut.

  [O] : 235 - 314 N·m (24 - 32 kg-m, 174 - 231 ft-lb)
- Check that wheel bearings operate smoothly.
- Check axial end play.

  Axial end play: 0.05 mm (0.0020 in) or less

If there is any axial end play or wheel bearing does not turn smoothly, replace wheel bearing assembly.

Refer to REAR AXLE — Wheel Hub and Knuckle.

Rear Wheel Alignment

PRELIMINARY INSPECTION

Make following checks. Adjust, repair or replace if necessary.

- Check tires for wear and proper inflation.
- Check rear wheel bearings for looseness.
- Check wheel runout.

  Lateral runout: 1.0 mm (0.039 in) or less
- Check if rear strut (shock absorber) works properly.
- Check rear axle and rear suspension parts for looseness.
- Check vehicle posture (Unladen).

  "Unladen":

  Fuel tank, radiator and engine oil full. Spare tire, jack, hand tools and mats in designated positions.

CAMBER

Camber is preset at factory and cannot be adjusted.

Camber: –55′ to 35′

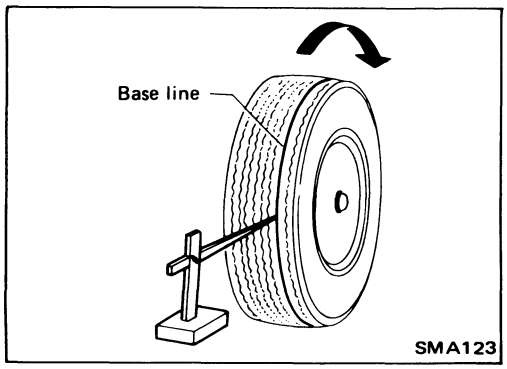

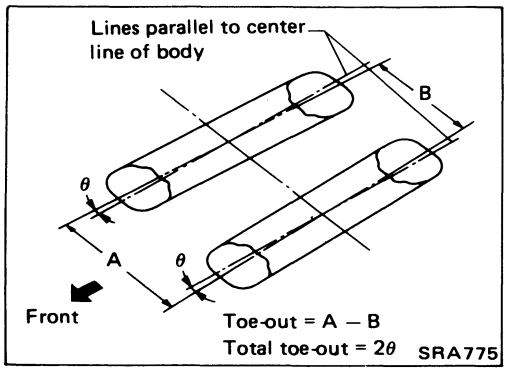

TOE-OUT

1. Draw a base line across the tread.

After lowering rear of vehicle, move it up and down to eliminate friction.

2. Measure toe-out.

Measure distance "A" and "B" at the same height as hub center.

Toe-out:

A – B 0 - 4 mm (0 - 0.16 in)

2θ 0′ - 24′ (Total toe-out)

Rear Wheel Alignment (Cont'd)

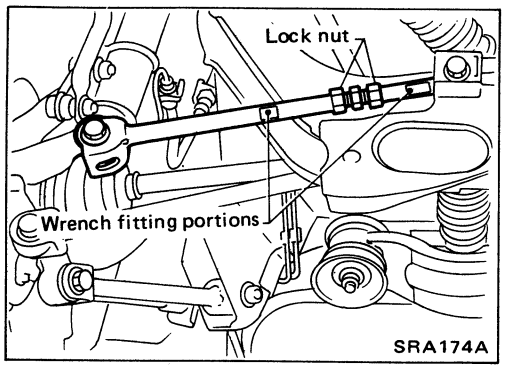

3. Adjust toe-out by varying the lengths of rear parallel links.

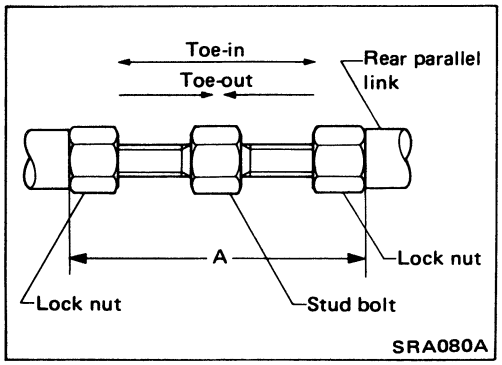

- Adjust left and right rear parallel links to the same length "A".

Tighten lock nut while holding rear parallel link with wrench to prevent bushing from twisting.

Standard length "A":

50 - 55 mm (1.97 - 2.17 in)

Drive Shaft

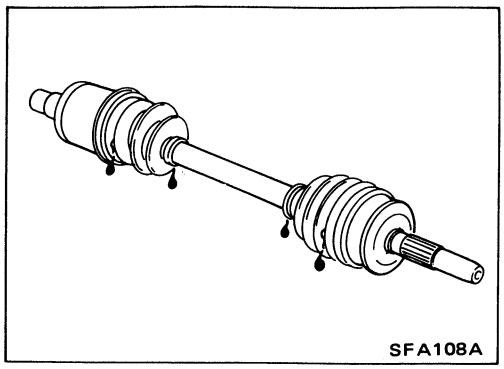

- Check for grease leakage or other damage.

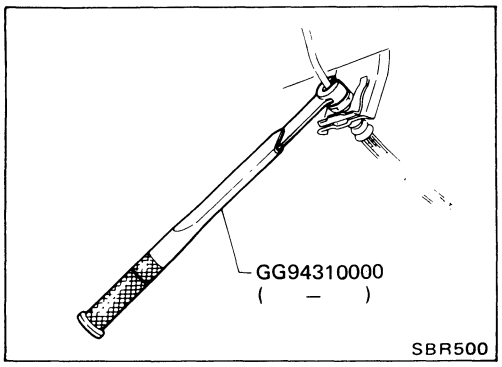

Removal and Installation

CAUTION:

Do not jack up at the parallel links or radius rods.

- Disconnect brake hydraulic line and parking brake cable at equalizer.

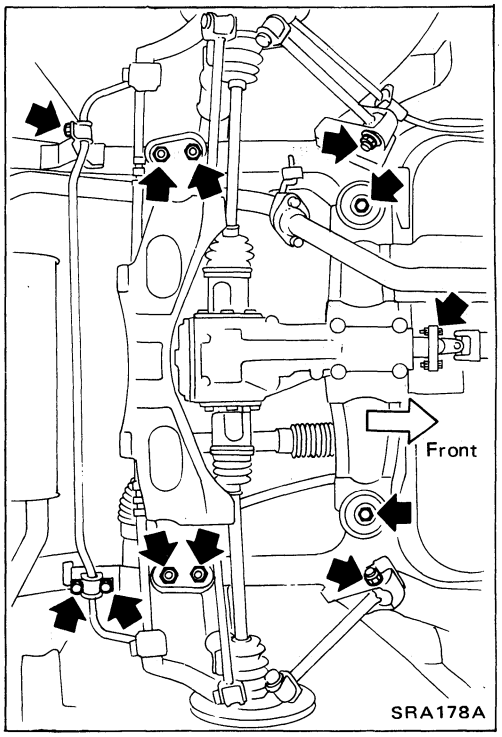

- **Remove left suspension assembly.**

1) Remove propeller shaft fixing bolt, radius rod fixing bolt, stabilizer fixing bolt, differential mounting member fixing nut and suspention member fixing nuts.

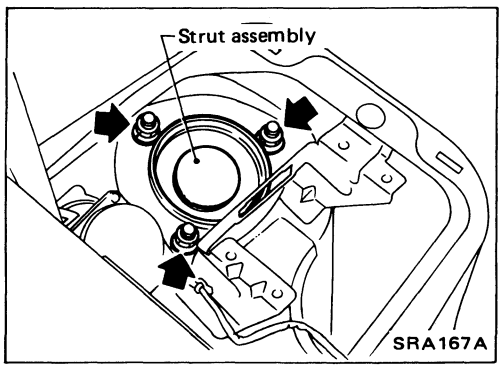

2) Remove rear seat and parcel shelf. Refer to section BF.
3) Remove strut securing nuts (Upper side).
   Then pull out strut assembly.

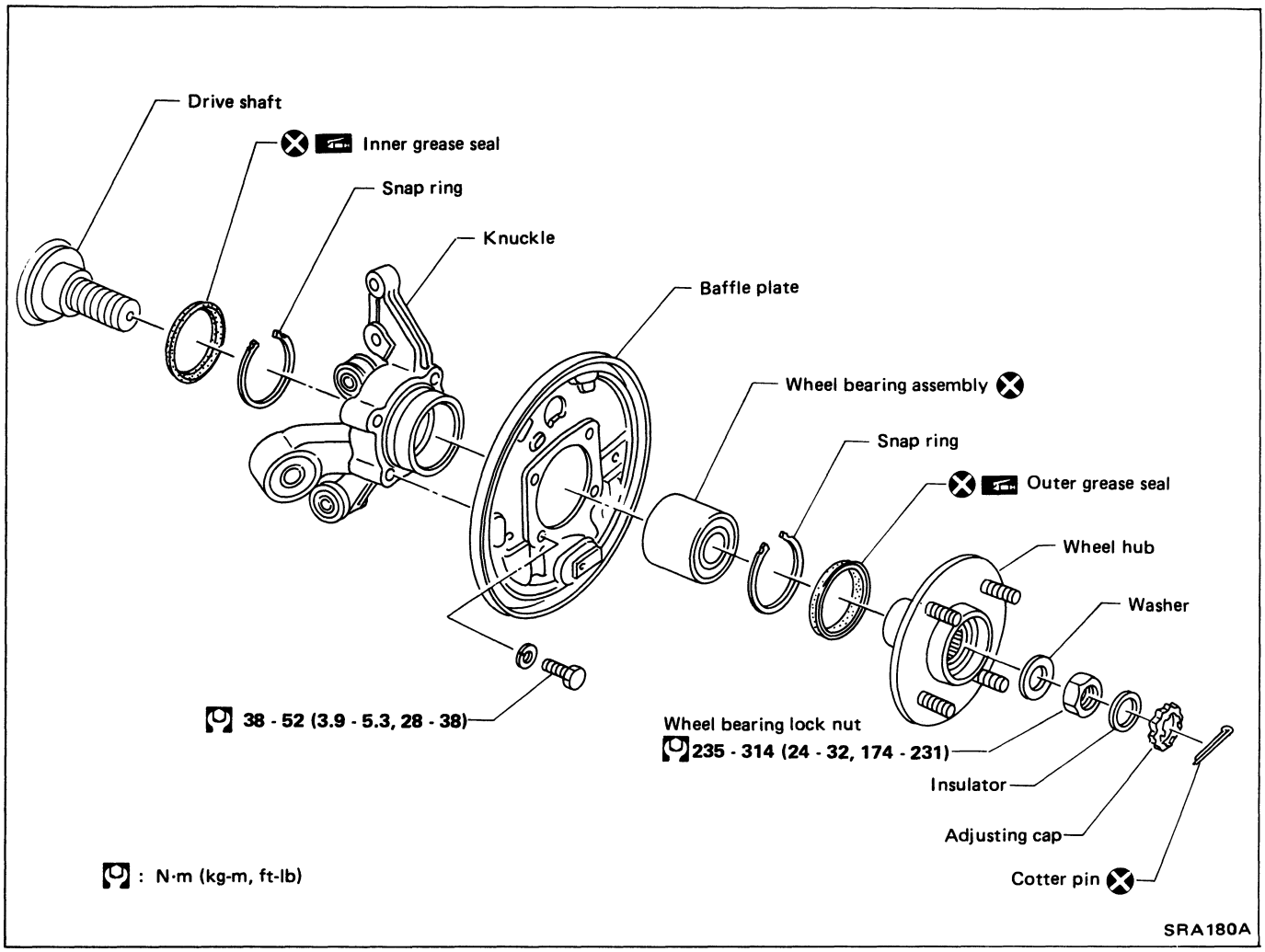
Drive shaft
Inner grease seal
Snap ring
Knuckle
Baffle plate
Wheel bearing assembly
Snap ring
Outer grease seal
Wheel hub
Washer
38 - 52 (3.9 - 5.3, 28 - 38)
Wheel bearing lock nut
235 - 314 (24 - 32, 174 - 231)
Insulator
Adjusting cap
Cotter pin
: N·m (kg-m, ft-lb)
SRA180A

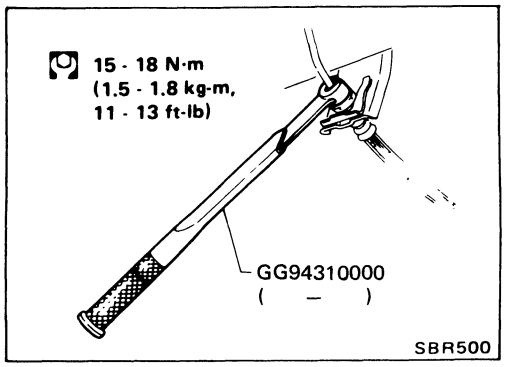

Removal

- Remove wheel bearing lock nut.
- Disconnect brake hydraulic line and parking brake cable.

CAUTION:

Use Tool when removing or installing brake tubes.

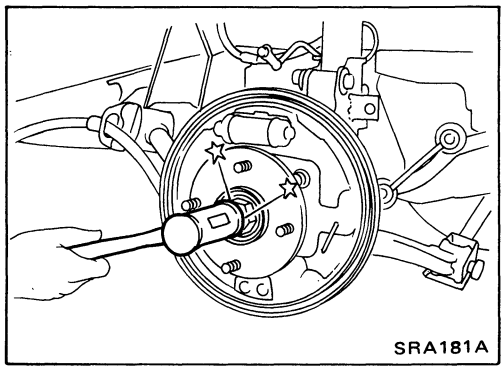

- Separate drive shaft from knuckle by slightly tapping it.

Cover boots with waste cloth so as not to damage them when removing drive shaft.

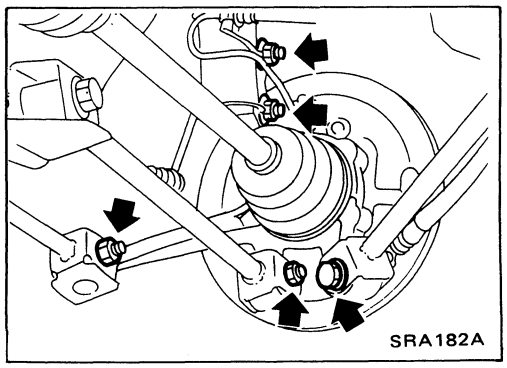

- Remove bolts and nuts as shown at left.

Installation

- Install knuckle with wheel hub.
- Tighten wheel bearing lock nut.

  : 235 - 314 N·m
  (24 - 32 kg-m, 174 - 231 ft-lb)

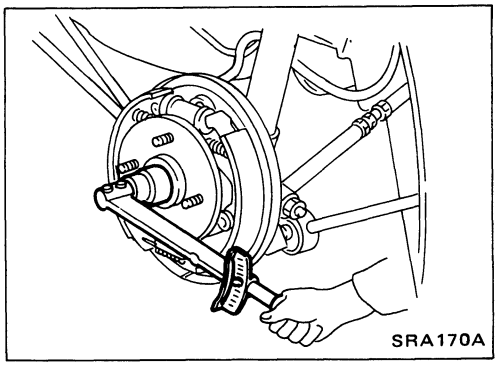

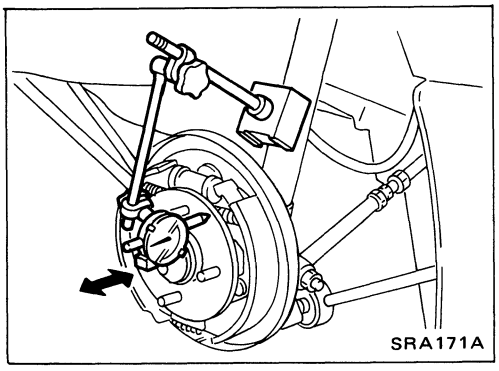

- Check wheel bearing axial end play.

  Axial end play: 0.05 mm (0.0020 in) or less

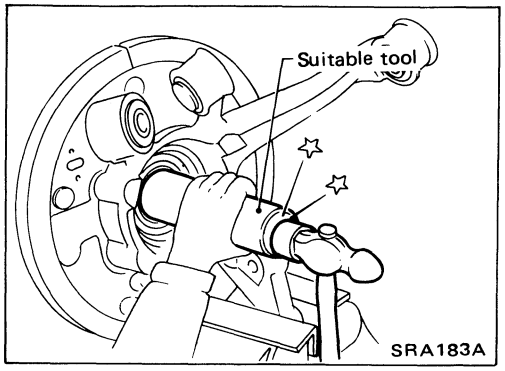

Disassembly

CAUTION:

When removing wheel hub or wheel bearing from knuckle, replace wheel bearing assembly (outer race, inner races and grease seal) with a new one.

WHEEL HUB

- Drive out hub with inner race (Outside) from knuckle with Tool.

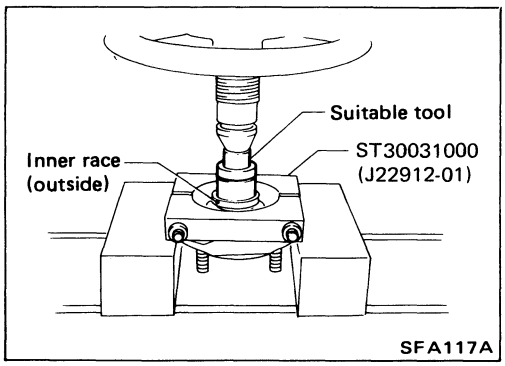

WHEEL BEARING

- Drive out bearing inner race (Outside), then remove outer grease seal.

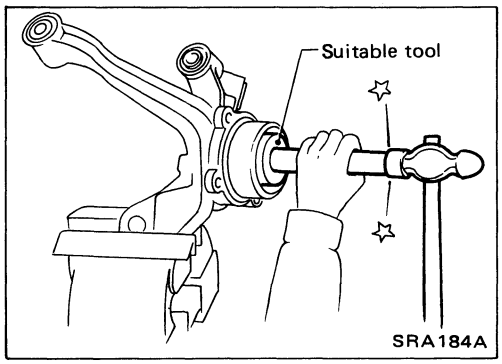

- Drive out bearing inner race (Inside) with inner grease seal.

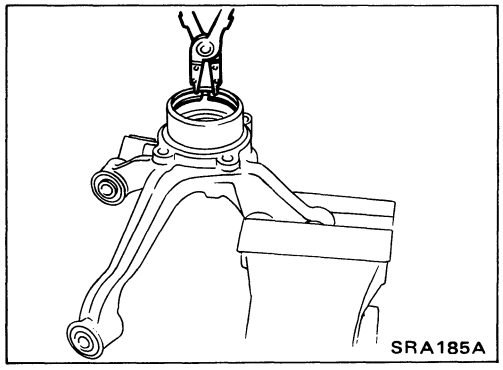

- Remove inner and outer snap rings.

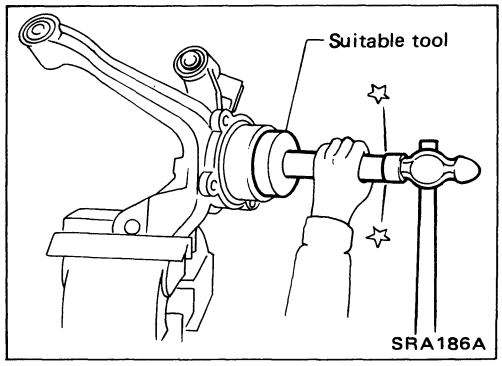

- Drive out bearing outer race.

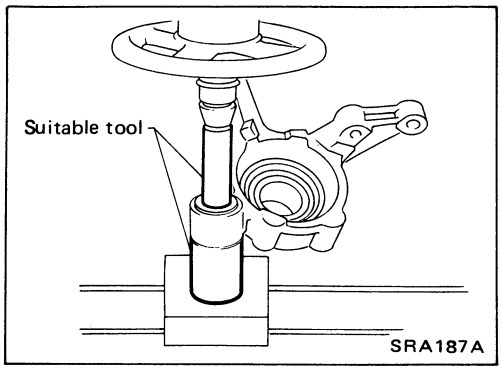

Inspection

WHEEL HUB AND KNUCKLE

- Check wheel hub for cracks by using a magnetic exploration or dyeing test.
- Check rubber bushings for wear or other damage.

If necessary, replace radius rod bushing with a suitable tool.

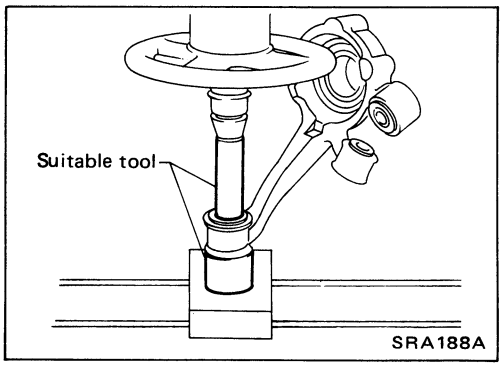

If necessary, replace transverse link bushing with a suitable tool.

SNAP RING

Check snap rings for wear or cracks.
Replace if necessary.

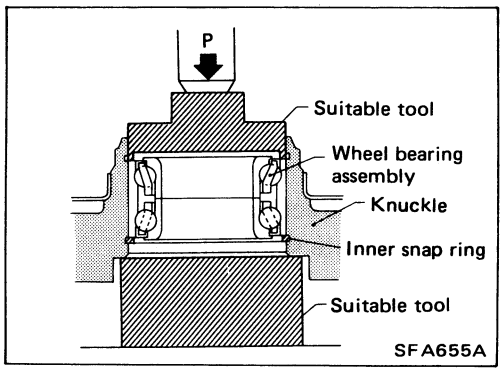

Assembly

1. Install inner snap ring into groove of knuckle.
2. Press new wheel bearing assembly into knuckle from outside of knuckle.

CAUTION:

- **Do not apply oil or grease to mating surfaces of wheel bearing outer race and knuckle.**

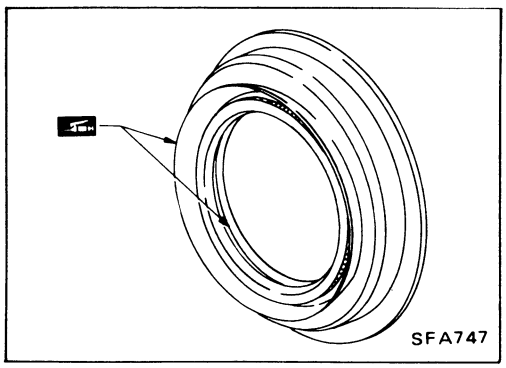

3. Pack grease seal lip with multi-purpose grease.

Assembly (Cont'd)

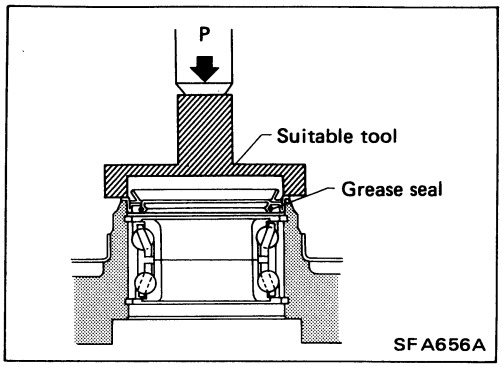

4. Install outer snap ring into groove of knuckle.
5. Install outer grease seal.

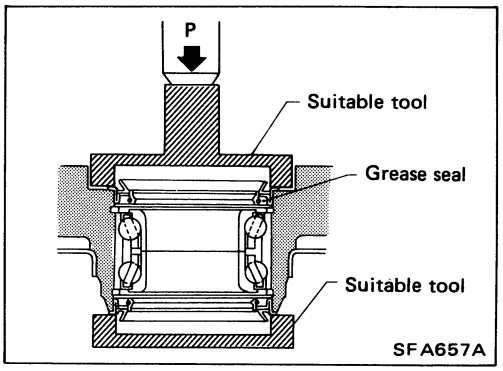

6. Install inner grease seal.

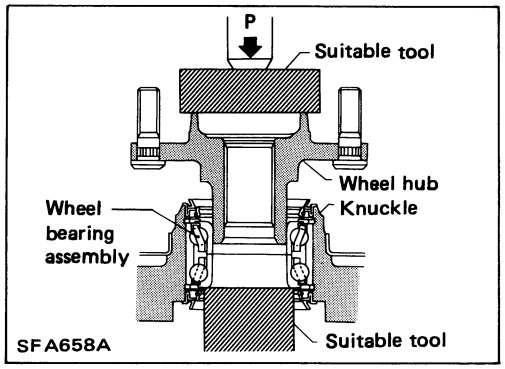

7. Press hub into knuckle.

Maximum load P:

29 kN (3 ton, 3.3 US ton, 3.0 Imp ton)

Be careful not to damage grease seal.

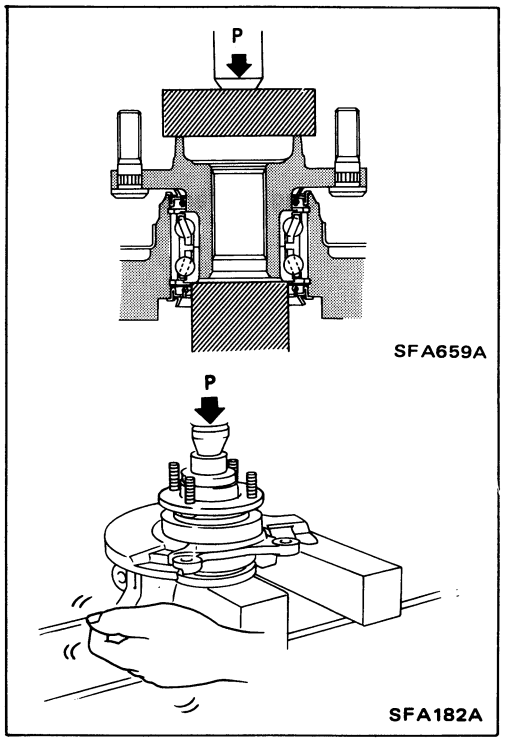

8. Check bearing preload.

(1) Add load P with a press.

Load P:

34.3 - 49.0 kN (3.5 - 5.0 ton, 3.9 - 5.5 US ton, 3.44 - 4.92 Imp ton)

(2) Spin knuckle several turns in both directions.

(3) Make sure that wheel bearings operate smoothly.

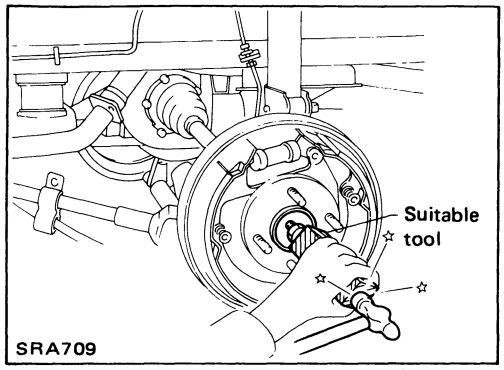

Removal and Installation

- Remove wheel bearing lock nut.
- Separate drive shaft from knuckle by slightly tapping it.

Cover boots with cloth so as not to damage them when removing drive shaft.

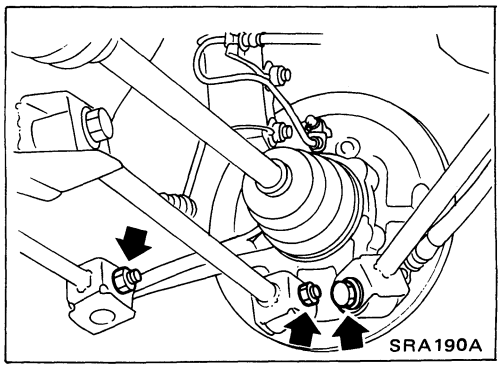

- Remove parallel link and radius rod fixing bolts.

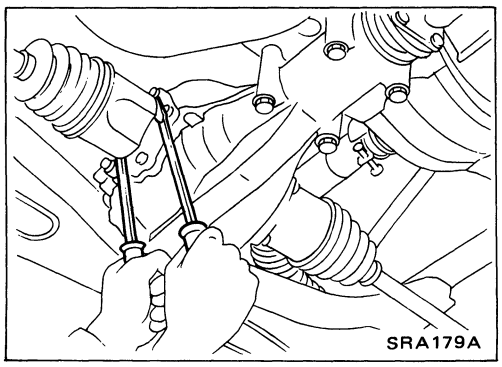

- Extract drive shaft from final drive gear by prying it with a suitable tool.

CAUTION:

Be careful not to damage oil seal of final drive gear. Make sure that circular clip is properly meshed with side gear and will not come out.

Components

Circular clip:
Make sure circular clip is properly installed with side gear (final drive side) and joint assembly (wheel side), and will not come out.
Drive shaft joint grease:
Use Nissan Genuine Grease or equivalent after every overhaul.

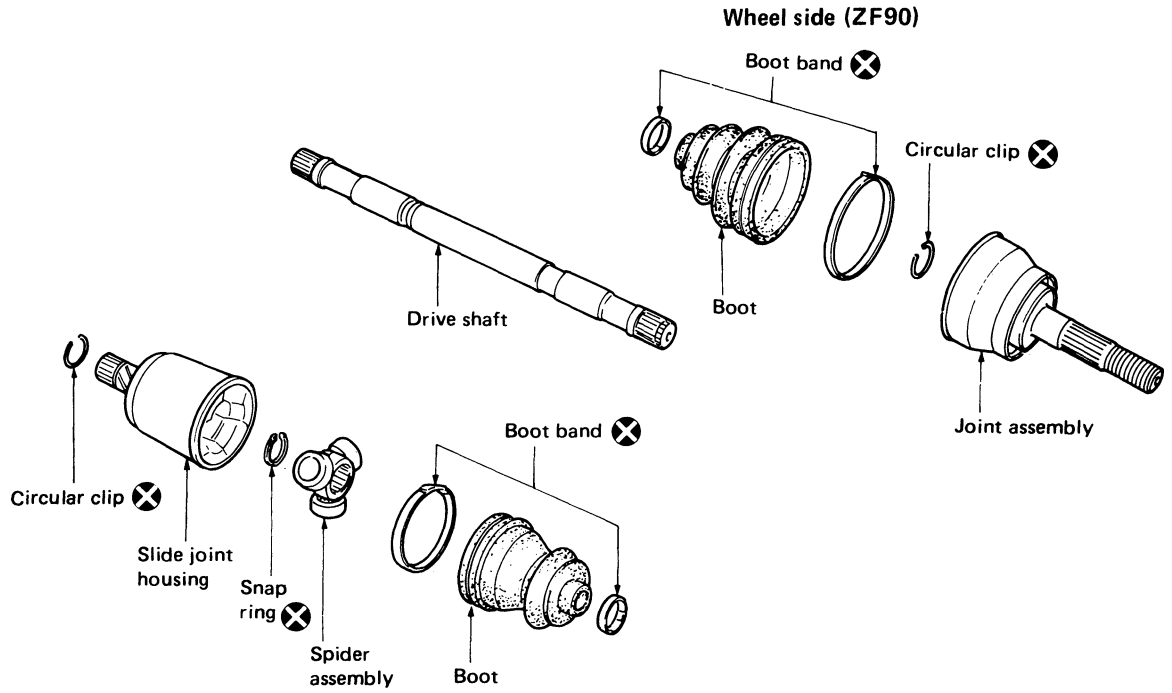

Be careful not to damage boots. Use suitable protector or cloth during removal and installation.

SRA002A

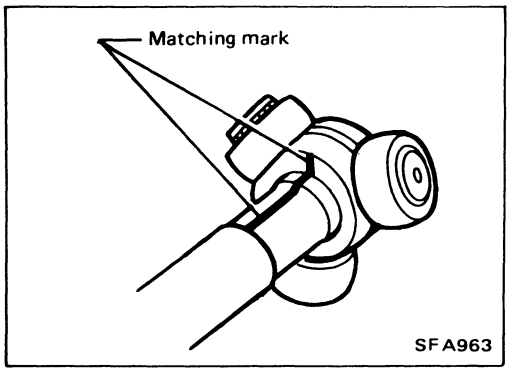

Disassembly

FINAL DRIVE SIDE (TS79C)

1. Remove boot bands.
2. Put matching marks on slide joint housing and drive shaft before separating joint assembly.
3. Put matching marks on spider assembly and drive shaft.

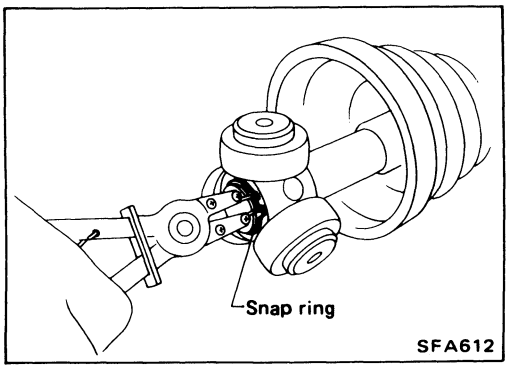

4. Pry off snap ring, then remove spider assembly.

CAUTION:
Do not disassemble spider assembly.

5. Draw out boot.

Cover drive shaft serration with tape so as not to damage the boot.

Disassembly (Cont'd)

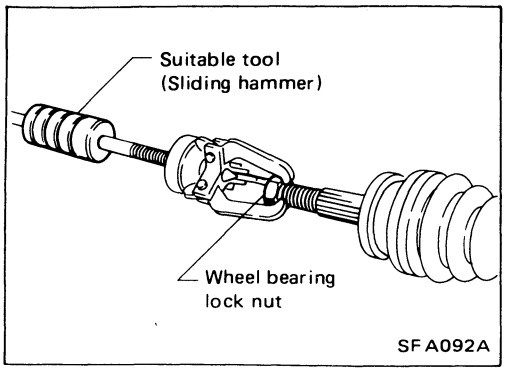

WHEEL SIDE (ZF90)

CAUTION:

The joint on the wheel side cannot be disassembled.

- Before separating joint assembly, put matching marks on drive shaft and joint assembly.
- Separate joint assembly with suitable tool.

Be careful not to damage threads on drive shaft.

- Remove boot bands.

Inspection

Thoroughly clean all parts in cleaning solvent, and dry with compressed air. Check parts for evidence of deformation or other damage.

DRIVE SHAFT

Replace drive shaft if it is twisted or cracked.

BOOT

Check boot for fatigue, cracks, or wear. Replace boot with new boot bands.

JOINT ASSEMBLY (Final drive side)

- Check spider assembly for needle bearing and washer damage. Replace spider assembly if necessary.
- Check roller surfaces for scratches, wear or other damage. Replace if necessary.
- Check serration for deformation. Replace if necessary.
- Check slide joint housing for any damage. Replace if necessary.

JOINT ASSEMBLY (Wheel side)

Replace joint assembly if it is deformed or damaged.

Assembly

- **After drive shaft has been assembled, ensure that it moves smoothly over its entire range without binding.**
- **Use Nissan Genuine Grease or equivalent after every overhaul.**

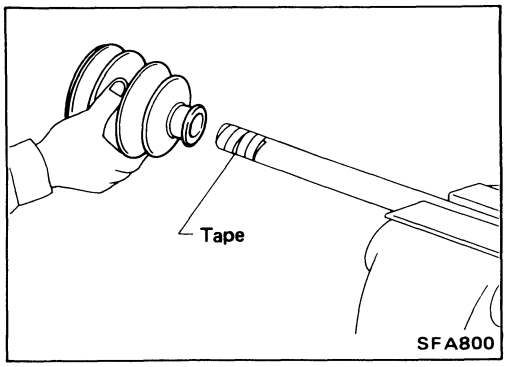

WHEEL SIDE (ZF90)

1. Install boot and new small boot band on drive shaft.

Cover drive shaft serration with tape so as not to damage boot during installation.

Assembly (Cont'd)

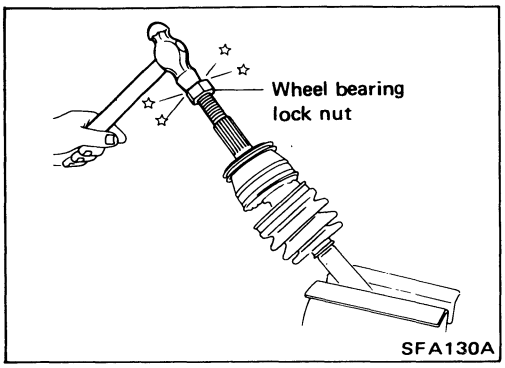

2. Set joint assembly onto drive shaft by lightly tapping it. Install joint assembly securely, ensuring marks which were made during disassembly are properly aligned.

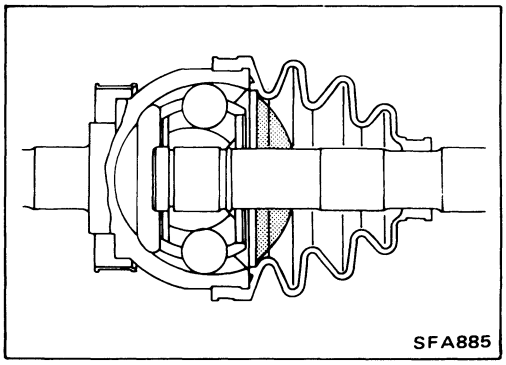

3. Pack drive shaft with specified amount of grease.

   Specified amount of grease:

   155 - 175 g (5.47 - 6.17 oz)

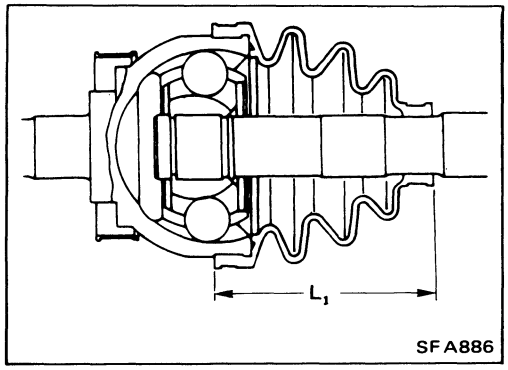

4. Set boot so that it does not swell and deform when its length is "L_1".

   Length "L_1":

   96 - 98 mm (3.78 - 3.86 in)

Make sure that boot is properly installed on the drive shaft groove.

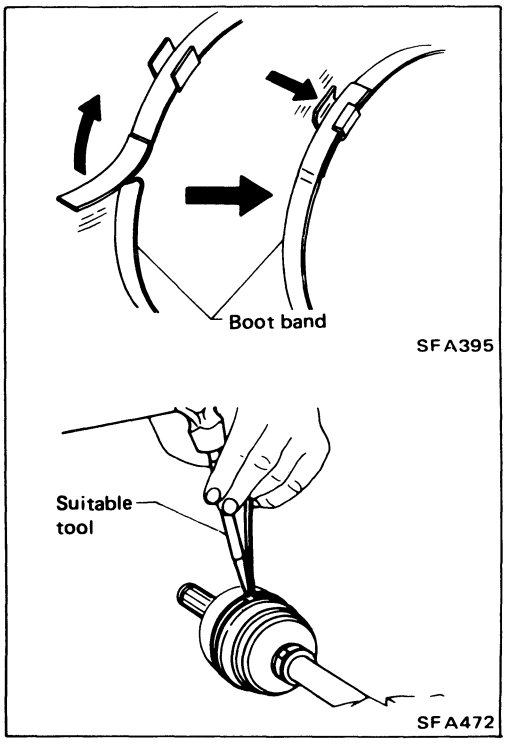

5. Lock new larger and smaller boot bands securely with a suitable tool.

Assembly (Cont'd)

FINAL DRIVE SIDE (TS79C)

1. Install boot and new small boot band on drive shaft.

Cover drive shaft serration with tape so as not to damage boot during installation.

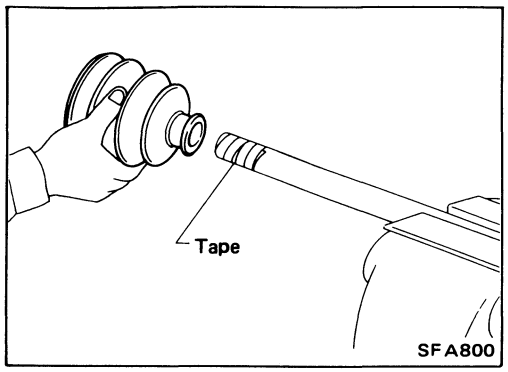

2. Install spider assembly securely, making sure the marks which were made during disassembly are properly aligned.
3. Install new snap ring.

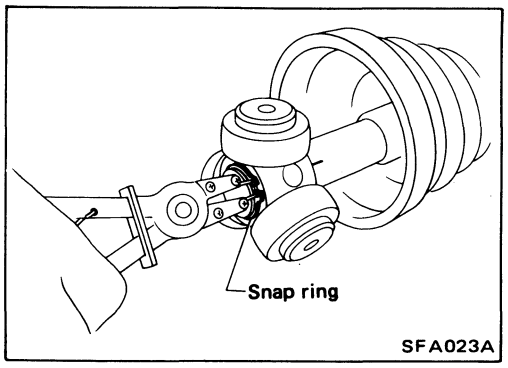

4. Pack drive shaft with specified amount of grease.

   Specified amount of grease:

   220 - 240 g (7.76 - 8.46 oz)
5. Install slide joint housing.
6. Set boot so that it does not swell and deform when its length is "L_2".

   Length "L_2":

   101.5 - 103.5 mm (4.00 - 4.07 in)

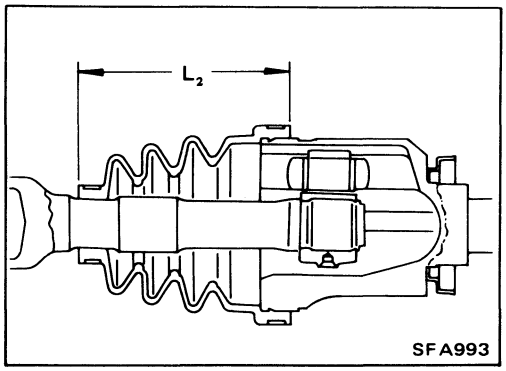

Make sure that boot is properly installed on the drive shaft groove.

7. Lock new larger and smaller boot bands securely with a suitable tool.

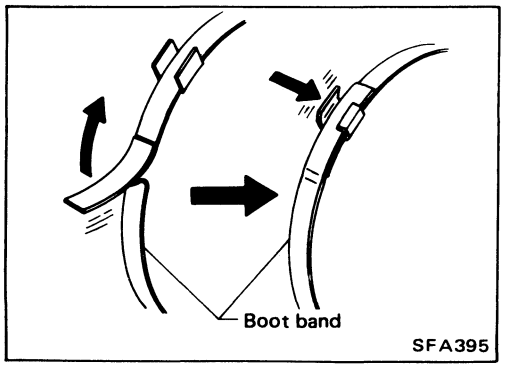

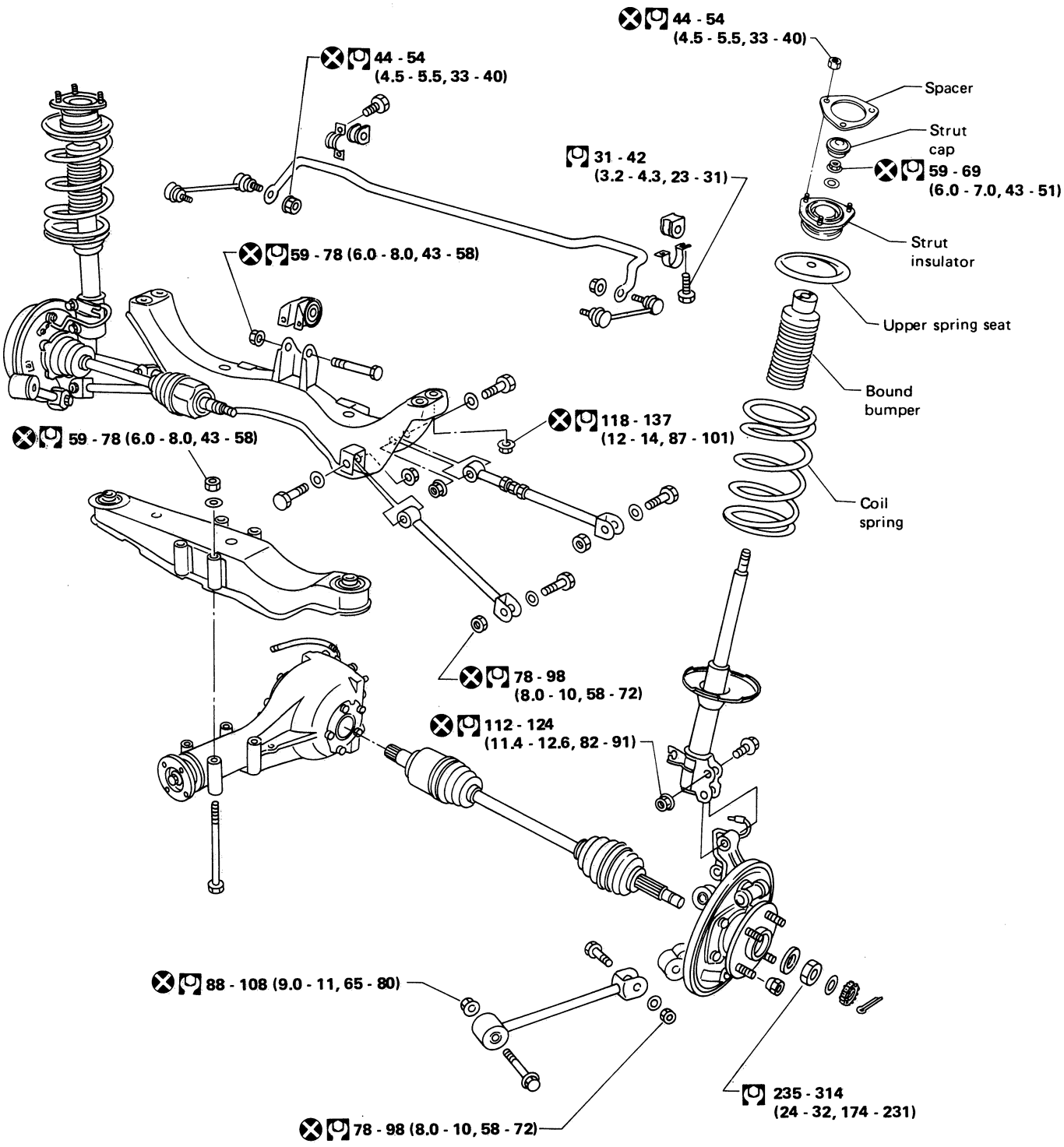
44 - 54
(4.5 - 5.5, 33 - 40)
44 - 54
(4.5 - 5.5, 33 - 40)
Spacer
Strut cap
59 - 69
(6.0 - 7.0, 43 - 51)
31 - 42
(3.2 - 4.3, 23 - 31)
Strut insulator
59 - 78 (6.0 - 8.0, 43 - 58)
Upper spring seat
Bound bumper
118 - 137
(12 - 14, 87 - 101)
59 - 78 (6.0 - 8.0, 43 - 58)
Coil spring
78 - 98
(8.0 - 10, 58 - 72)
112 - 124
(11.4 - 12.6, 82 - 91)
88 - 108 (9.0 - 11, 65 - 80)
235 - 314
(24 - 32, 174 - 231)
78 - 98 (8.0 - 10, 58 - 72)

: N·m (kg-m, ft-lb)

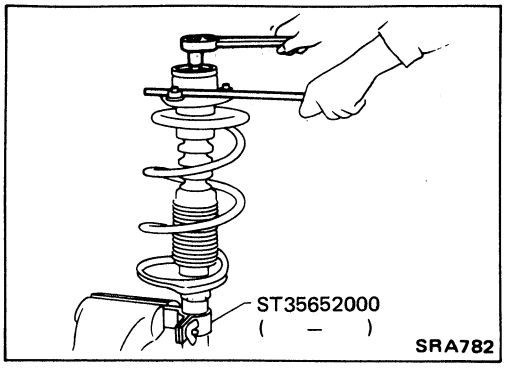

Disassembly

1. Set strut assembly on vice with attachment, then loosen piston rod lock nut.
- **Do not remove piston rod lock nut.**

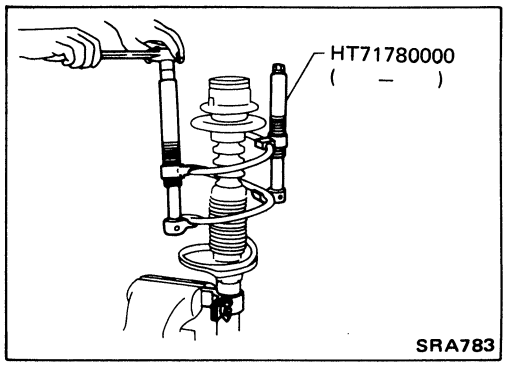

2. Compress spring with suitable tool so that the strut mounting insulator can be turned by hand.

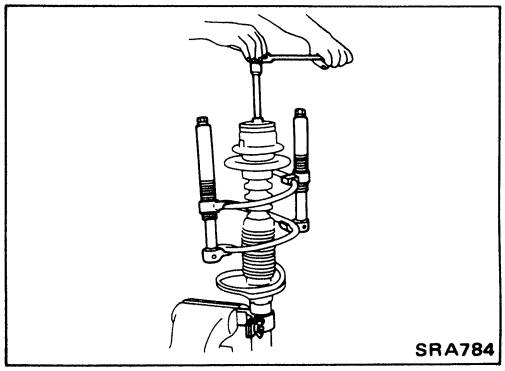

3. Remove piston rod lock nut.

Inspection

STRUT ASSEMBLY

- If oil leakage occurs on welded or gland packing portion, replace strut assembly.
- Inspect piston rod for cracks, deformation or other damage. Replace strut assembly if necessary.
- Inspect threads for cracks or other damage. Replace strut assembly if necessary.

STRUT MOUNTING INSULATOR

Check cemented rubber-to-metal portion for melting or cracks. Check rubber parts for deterioration.

SPRING SEAT

Check for cracks, deformation or other damage. Replace if necessary.

COIL SPRING

Check for cracks, deformation or other damage. Replace if necessary.

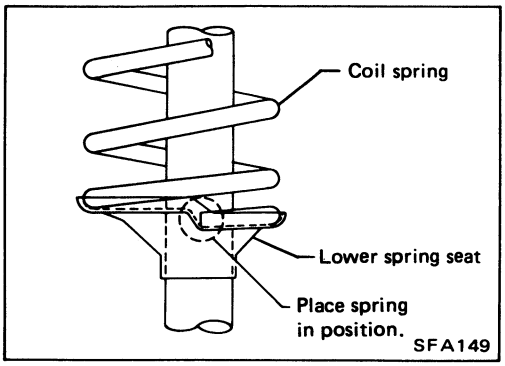

Assembly

- After placing coil spring in position on lower spring seat, release spring compressor gradually.

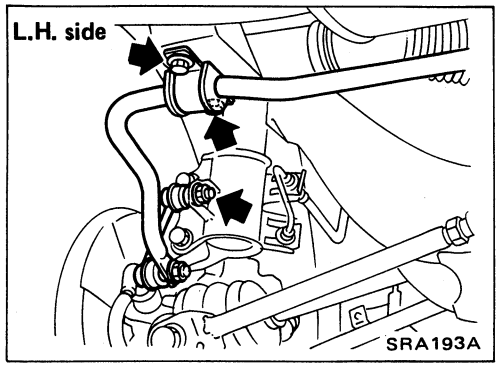

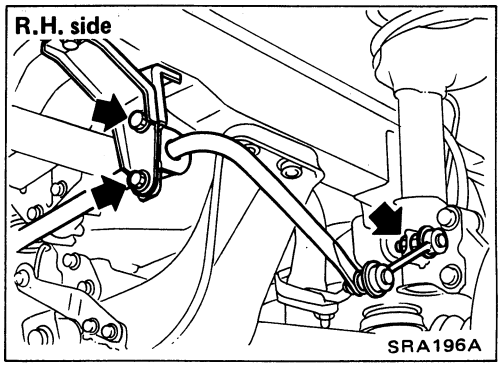

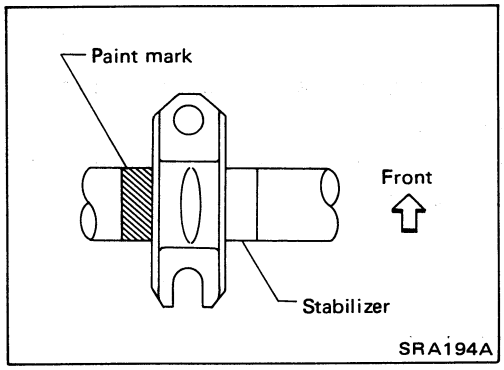

Removal and Installation

- Remove stabilizer bar.

- When installing stabilizer, make sure that paint mark and clamp face in their correct directions.

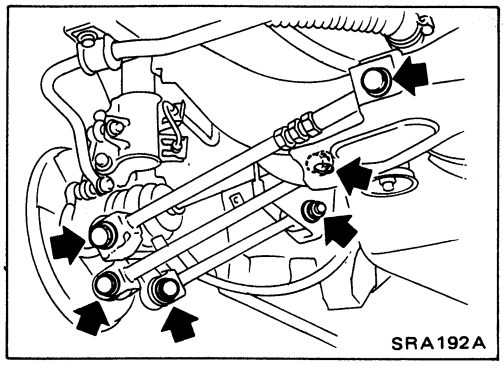

Removal and Installation

- Remove bolts and nuts as shown at left.
- When installing, final tightening must be carried out at curb weight with tires on ground.

Inspection

PARALLEL LINK

- Check parallel link for damage, cracks and deformation; replace parallel link if necessary.
- Check rubber bushing for damage, cracks and deformation; replace parallel link if necessary.

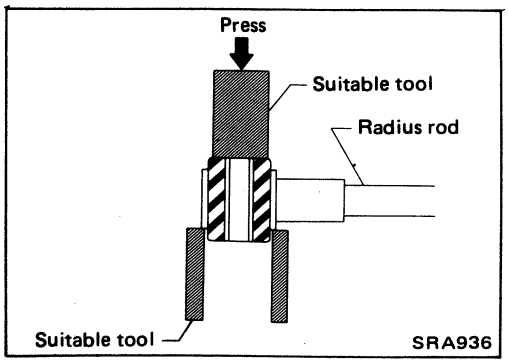

RADIUS ROD

- Check radius rod insulator for deformation or cracks. Replace if necessary.
- If radius rod insulator is deformed or cracked, replace it with a suitable tool.

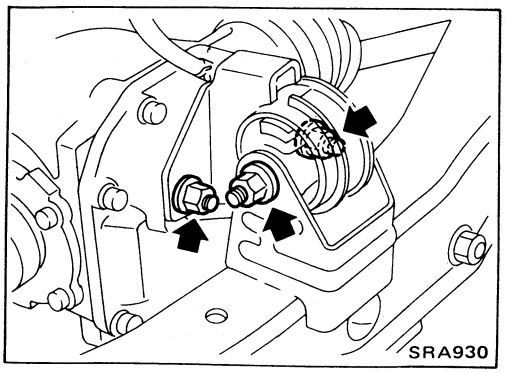

Removal and Installation

- Support differential carrier with jack, then remove differential mounting bracket fixing bolts and nuts.

Inspection

- Check differential mounting bracket for deformation or cracks. Replace if necessary.
- Check insulator for deformation or cracks.

If necessary, replace insulator.

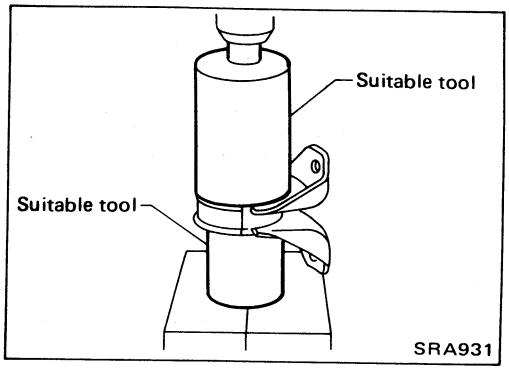

- If bracket insulator is deformed or cracked, replace it with a suitable tool.

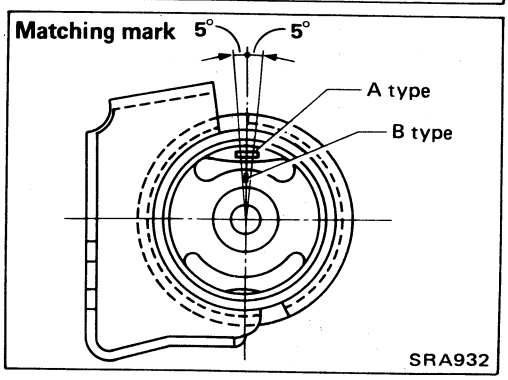

- Install the insulator as shown in the figure at left.

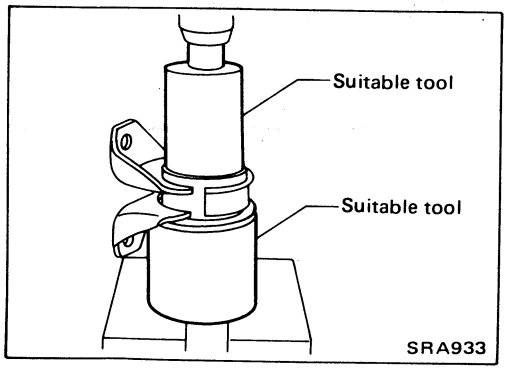

- Install bracket insulator with a suitable tool. Be sure to install in its proper place.

General Specifications

COIL SPRING

Item \ Model	2WD		4WD	
	5 passenger	7 passenger	5 passenger	7 passenger
Wire diameter mm (in)	12.8 (0.504)	12.1 - 13.1 (0.476 - 0.516)	12.7 (0.500)	12.0 - 13.0 (0.472 - 0.512)
Coil diameter mm (in)	150 (5.91)			
Free length mm (in)	388.5 (15.30)	397.5 (15.65)	383.5 (15.10)	390.0 (15.35)
Spring constant N/mm (kg/mm, lb/in)	17.7 (1.8, 101)	17.7 - 23.5 (1.8 - 2.4, 101 - 134)	17.7 (1.8, 101)	17.7 - 23.5 (1.8 - 2.4, 101 - 134)
Identification color	Orange x 1 Purple x 1	Light green x 1 Purple x 1	Light blue x 1 Purple x 1	Pink x 1 Purple x 1

STRUT

Item \ Model	2WD	4WD
Piston rod diameter mm (in)	20 (0.79)	22 (0.87)
Stroke mm (in)	179 (7.05)	184 (7.24)
Damping force N (kg, lb) [at 0.3 m (1.0 ft)/sec.] Expansion	402 - 579 (41 - 59, 90 - 130)	922 - 1,236 (94 - 126, 207 - 278)
Compression	98 - 177 (10 - 18, 22 - 40)	245 - 382 (25 - 39, 55 - 86)
Oil capacity mℓ (US fl oz, Imp fl oz)	280 (9.5, 9.9)	–

DRIVE SHAFT (4WD model)

Joint type Final drive side	TS79C
Wheel side	ZF90
Diameter mm (in) Final drive side "D_1"	26 (1.02)
Wheel side "D_2"	28 (1.10)
Grease name Final drive side	Nissan Genuine Grease or equivalent
Wheel side	Nissan Genuine Grease or equivalent
Specified amount g (oz) of grease Final drive side	220 - 240 (7.76 - 8.46)
Wheel side	155 - 175 (5.47 - 6.17)

Final drive side

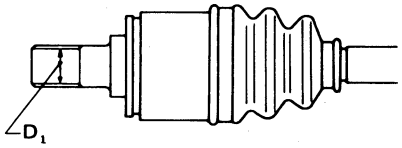

SFA563

Wheel side

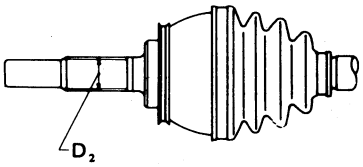

SFA726

General Specifications (Cont'd)

REAR STABILIZER BAR

Item \ Model	2WD	4WD
Stabilizer diameter mm (in)	20 (0.79)	18 (0.71)
Identification color	Light green	Yellow

RADIUS ROD

Item \ Model	2WD	4WD
Radius rod diameter mm (in)	23.2 (0.913)	19 (0.75)

Inspection and Adjustment

WHEEL ALIGNMENT (Unladen*)

Item \ Model		2WD	4WD
Camber	degree	−45′ to 45′	−55′ to 35′
Toe-out	mm (in)	2 - 6 (0.08 - 0.24)	0 - 4 (0 - 0.16)
	(Total) degree	12′ - 36′	0′ - 24′

*Tankful of fuel, radiator coolant and engine oil full
Spare tire, jack, hand tools, mats in designated position

WHEEL BEARING

Item \ Model	2WD	4WD
Wheel bearing axial end play mm (in)	0.05 (0.0020) or less	
Wheel bearing lock nut Tightening torque N·m (kg-m, ft-lb)	186 - 255 (19 - 26, 137 - 188)	235 - 314 (24 - 32, 174 - 231)

BRAKE SYSTEM

SECTION BR

CONTENTS

PRECAUTIONS AND PREPARATION ..... BR- 2
CHECK AND ADJUSTMENT ..... BR- 3
BRAKE HYDRAULIC LINE ..... BR- 4
BRAKE PEDAL AND BRACKET ..... BR- 6
BRAKE BOOSTER ..... BR- 8
VACUUM PIPING BR-10
MASTER CYLINDER BR-12
DUAL LOAD SENSING VALVE BR-13
FRONT DISC BRAKE (CL25VA) — Caliper BR-16
FRONT DISC BRAKE (CL25VA) — Rotor BR-19
REAR DRUM BRAKE (LT23B, LT26C) BR-20
PARKING BRAKE CONTROL BR-23
SERVICE DATA AND SPECIFICATIONS (S.D.S.) BR-25

Precautions

- **Recommended fluid is brake fluid "DOT 3".**
- **Never reuse drained brake fluid.**
- **Be careful not to splash brake fluid on painted areas.**
- **To clean or wash all parts of master cylinder, disc brake caliper and wheel cylinder, use clean brake fluid.**
- **Never use mineral oils such as gasoline or kerosene. They will ruin rubber parts of the hydraulic system.**

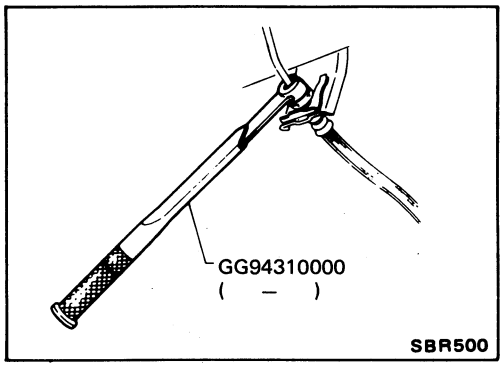

- **Use Tool when removing and installing brake tube.**

WARNING:

- **Clean brake pads and shoes with a waste cloth, then wipe with a dust collector.**

Preparation

SPECIAL SERVICE TOOL

Tool number (Kent-Moore No.) Tool name	Description	
GG94310000 (–) Flare nut torque wrench	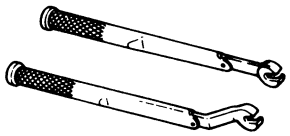	Removing and installing each brake piping
KV991V0010 (–) Brake fluid pressure gauge	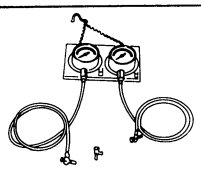	Measuring brake fluid pressure

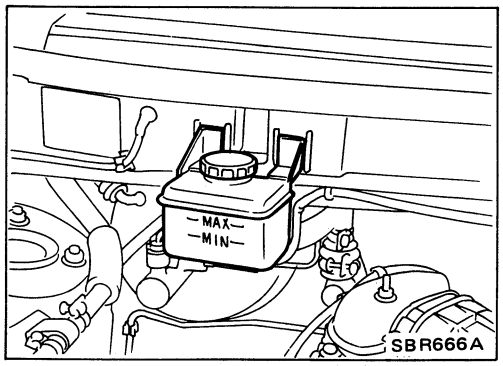

Checking Brake Fluid Level

- Check fluid level in reservoir tank. It should be between Max. and Min. lines on reservoir tank.
- If fluid level is extremely low, check brake system for leaks.

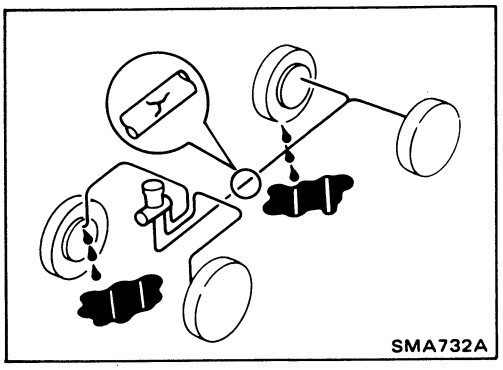

Checking Brake System

- Check brake lines (tubes and hoses) for cracks, deterioration or other damage. Replace any damaged parts.
  If leakage occurs around joints, retighten or, if necessary, replace damaged parts.
- Check for oil leakage by fully depressing brake pedal.

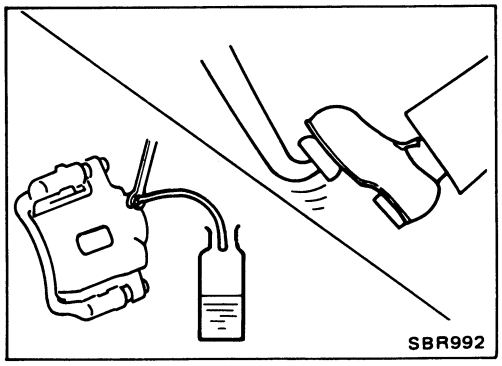

Changing Brake Fluid

1. Drain brake fluid from each air bleeder valve.
2. Refill until new brake fluid comes out of each air bleeder valve.
   Use same procedure as in bleeding hydraulic system to refill brake fluid.
   Refer to Bleeding Procedure.

- **Refill with recommended brake fluid "DOT 3".**
- **Never reuse drained brake fluid.**
- **Be careful not to splash brake fluid on painted areas.**

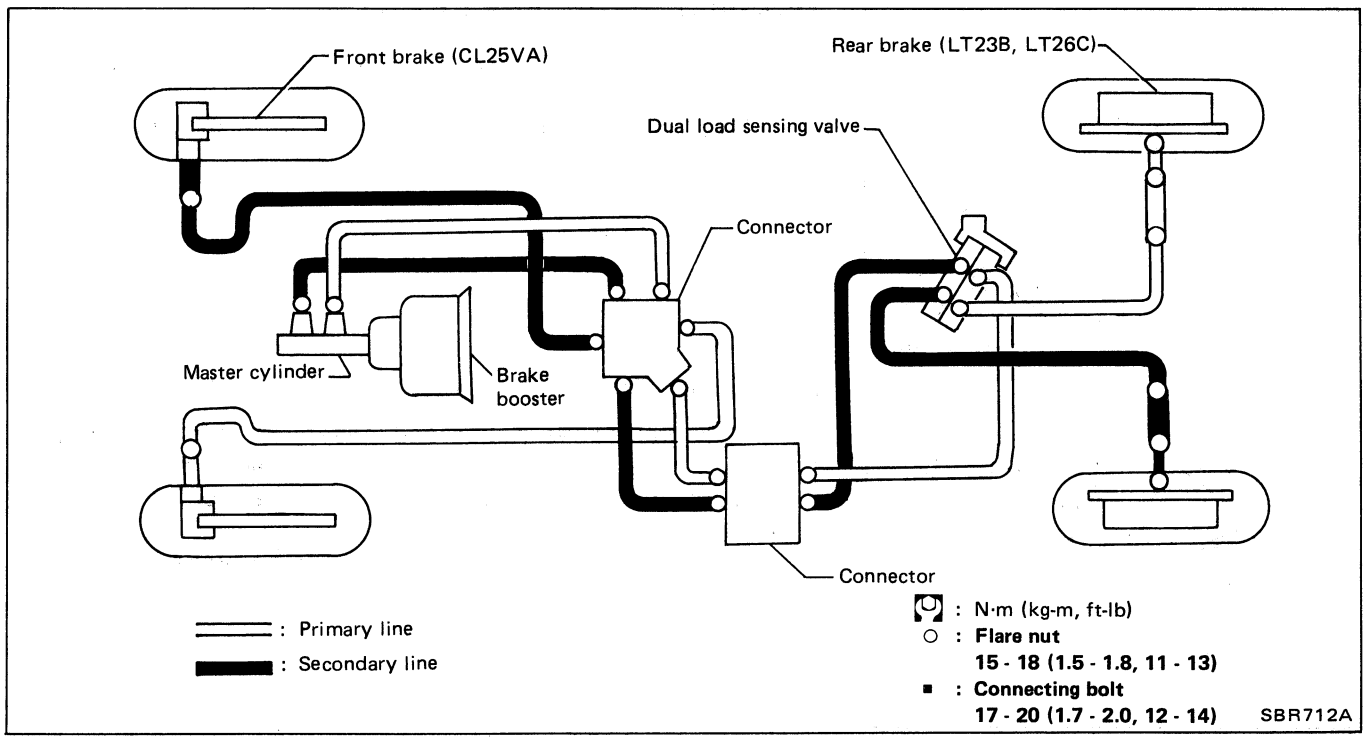

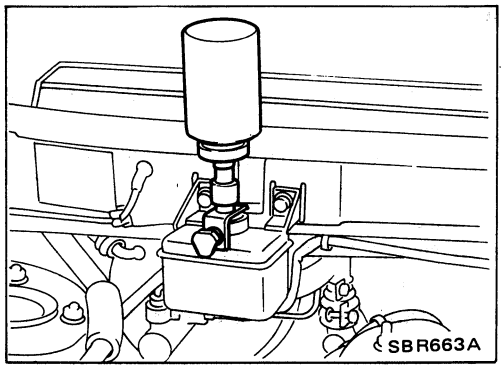

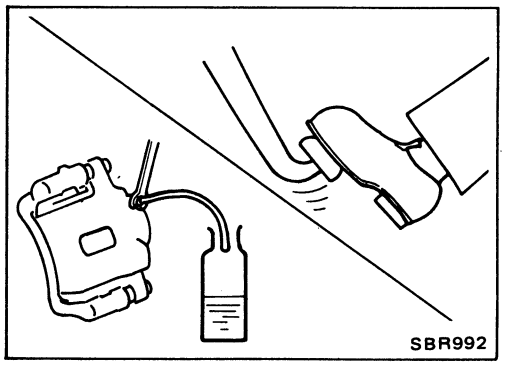

Bleeding Procedure

CAUTION:

- **Carefully monitor brake fluid level at reservoir during bleeding operation.**
- **Fill reservoir with recommended brake fluid. Make sure it is full at all times while bleeding air out of system.**
- **Place a container beneath reservoir to avoid spillage of brake fluid.**

- Bleed air according to the following procedure.
  Left rear wheel cylinder
  ↓
  Right front caliper
  ↓
  Right rear wheel cylinder
  ↓
  Left front caliper

- **To bleed air out of lines, wheel cylinders and calipers, use the following procedure.**

1) Connect a transparent vinyl tube to air bleeder valve.
2) Fully depress brake pedal several times.
3) With brake pedal depressed, open air bleeder valve to release air.
4) Close air bleeder valve.
5) Release brake pedal slowly.
6) Repeat steps 2) through 5) until clear brake fluid comes out of air bleeder valve.

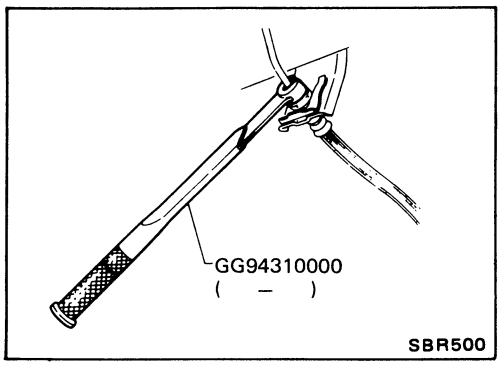

Removal and Installation

1. To remove brake hose, first remove flare nut securing brake tube to hose, then withdraw lock spring.
2. Cover openings to prevent entrance of dirt whenever disconnecting hydraulic line.
3. All hoses must be free from excessive bending, twisting and pulling.
4. After installing brake lines, check for oil leakage by fully depressing brake pedal.

Inspection

Check brake lines (tubes and hoses) for cracks, deterioration or other damage. Replace any damaged parts.
If leakage occurs around joints, retighten or, if necessary, replace damaged parts.

Removal and Installation

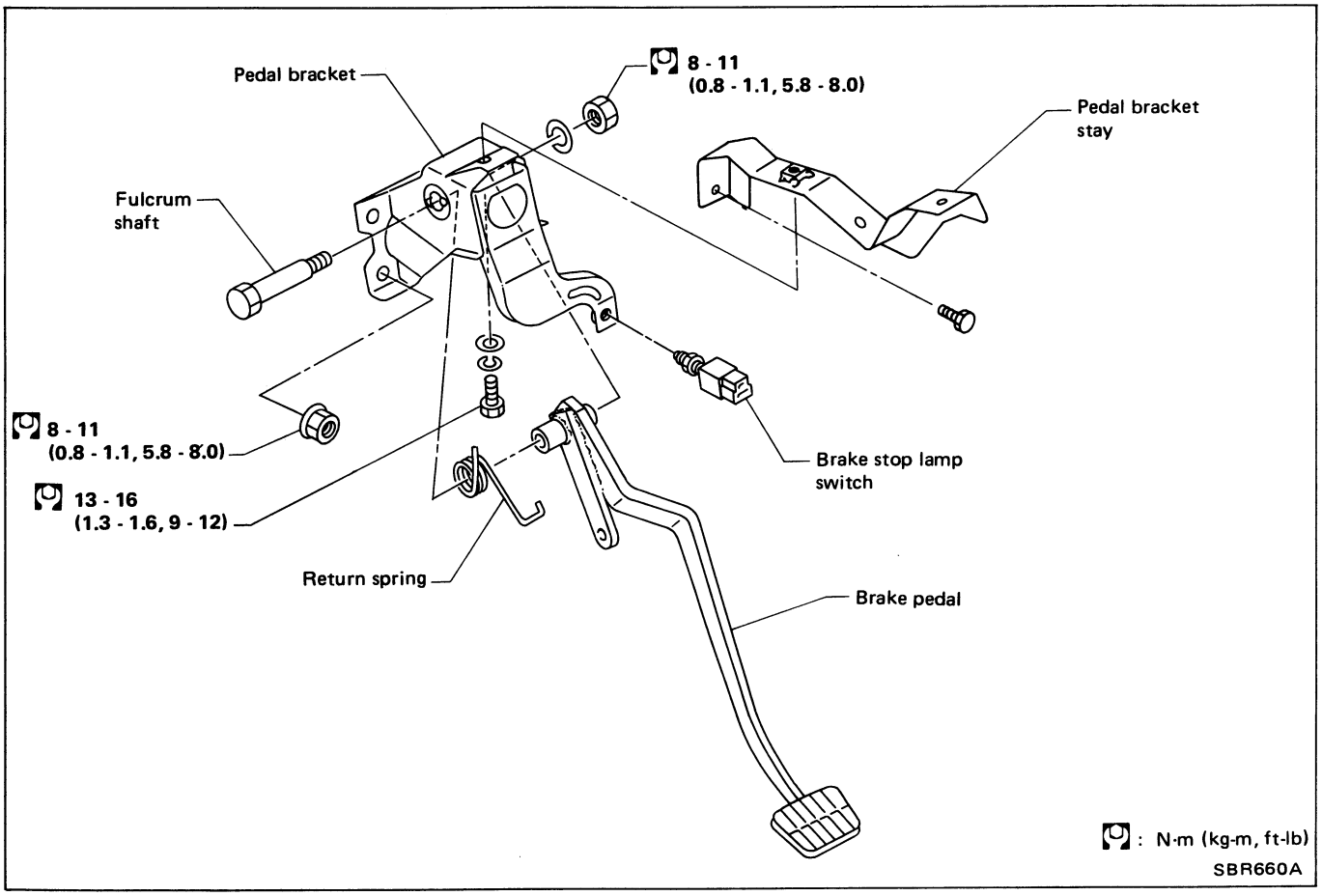

Inspection

Check brake pedal for the following items.

- Brake pedal bend
- Clevis pin deformation
- Crack of any welded portion

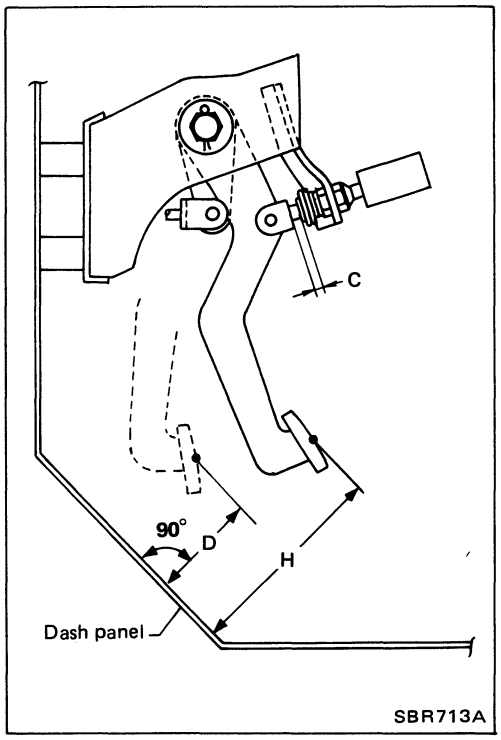

Adjustment

Check brake pedal free height from dash panel. Adjust if necessary.

H: Free height
Refer to S.D.S.

D: Depressed height
Refer to S.D.S.
Under force of 490 N (50 kg, 110 lb) with engine running

C: Clearance between pedal stopper and threaded end of stop lamp switch
0.3 - 1.0 mm (0.012 - 0.039 in)

Pedal free play at clevis pin:
1 - 3 mm (0.04 - 0.12 in)

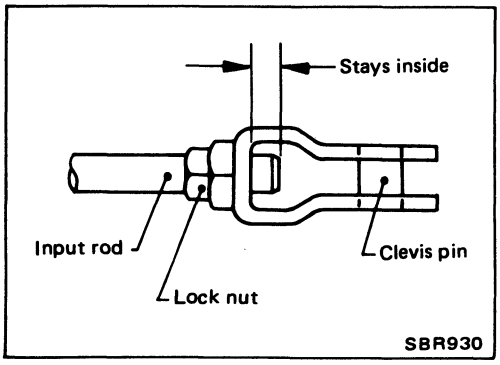

1. Adjust pedal free height with brake booster input rod. Then tighten lock nut.

Make sure that tip of input rod stays inside.

2. Adjust clearance "C" with stop lamp switch. Then tighten lock nuts.
3. Check pedal free play.

Make sure that stop lamp is off when pedal is released.

4. Check brake pedal's depressed height while engine is running.
   If depressed height is below specified value, check brake system for leaks, accumulation of air or any damage to components (master cylinder, wheel cylinder, etc.); then make necessary repairs.

Removal and Installation

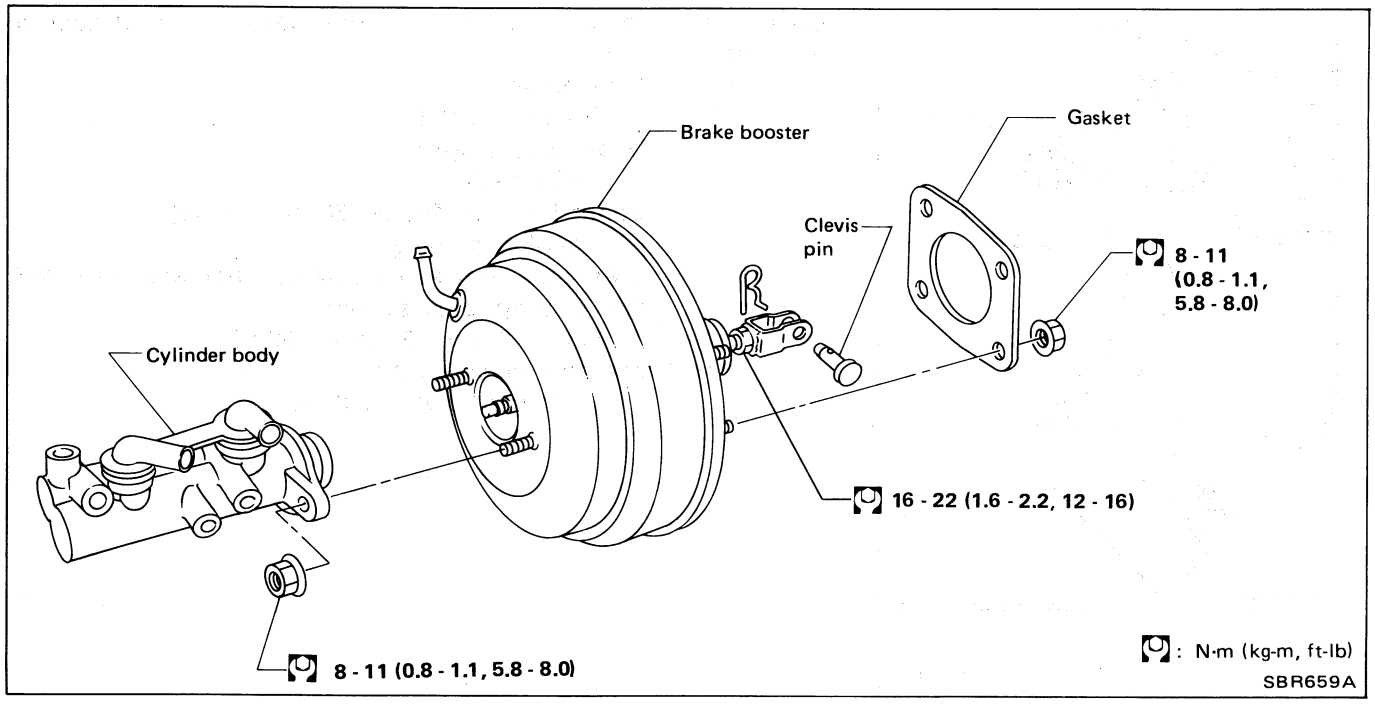

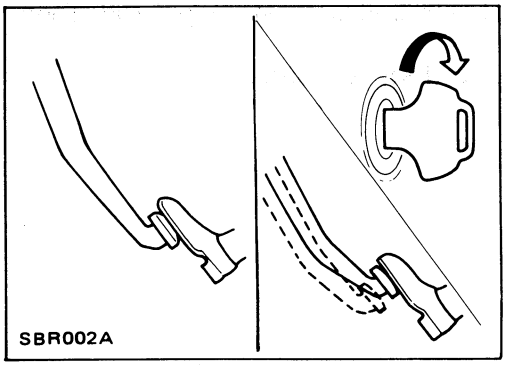

Inspection

OPERATING CHECK

- Depress brake pedal several times with engine off, and check that there is no change in pedal stroke.
- Depress brake pedal, then start engine. If pedal goes down slightly, operation is normal.

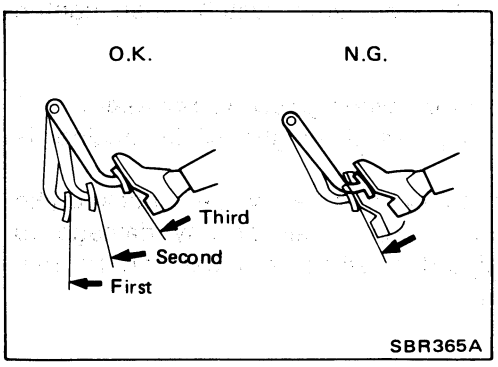

AIRTIGHT CHECK

- Start engine, and stop it after one or two minutes. Depress brake pedal several times slowly. If pedal goes further down the first time and gradually rises after second or third time, booster is airtight.
- Depress brake pedal while engine is running, and stop engine with pedal depressed. If there is no change in pedal stroke after holding pedal down **30 seconds**, brake booster is airtight.

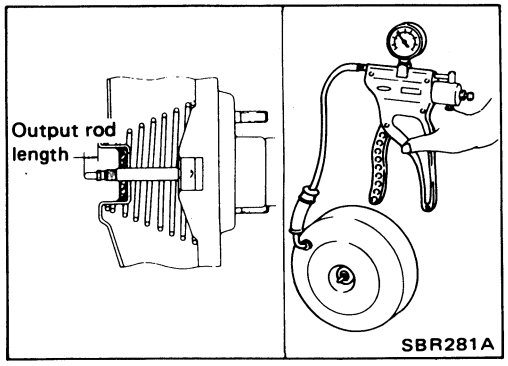

OUTPUT ROD LENGTH CHECK

1. Supply brake booster with vacuum of –66.7 kPa (–500 mmHg, –19.69 inHg) using a handy vacuum pump.
2. Check output rod length.

   Specified length:

   10.275 - 10.525 mm (0.4045 - 0.4144 in)

Inspection (Cont'd)

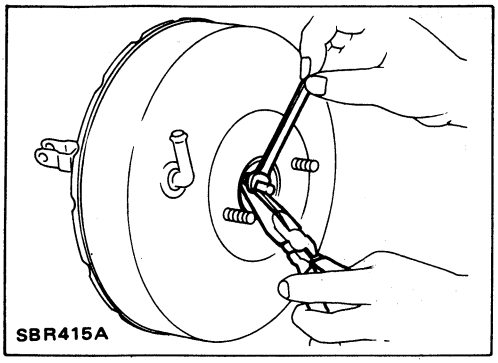

3. Adjust rod length if necessary.
4. If rod length is without specification, replace brake booster.

Removal and Installation

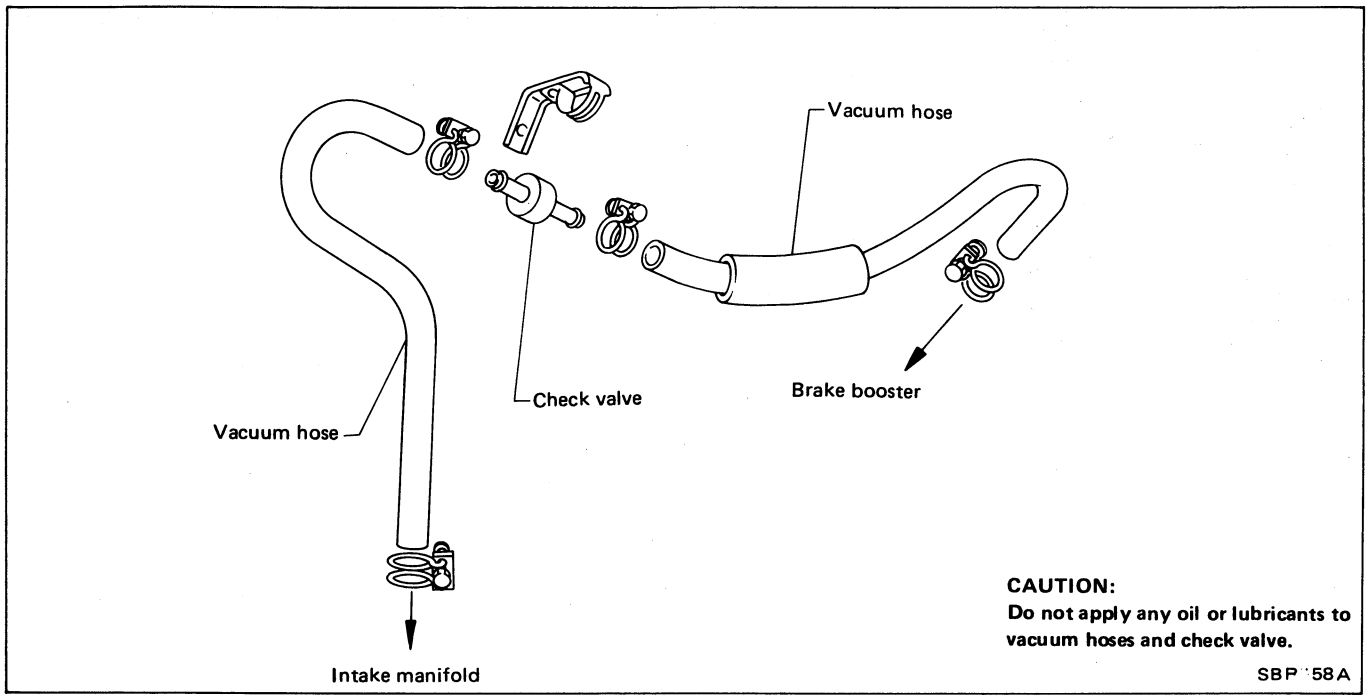

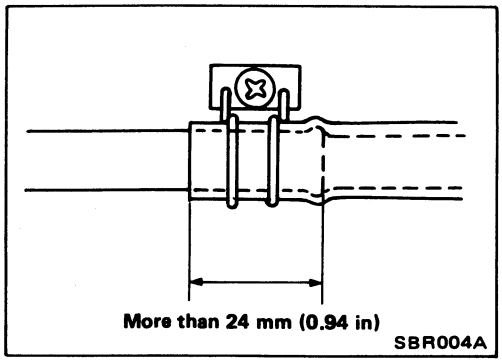

- Insert vacuum tube into vacuum hose more than 24 mm (0.94 in).

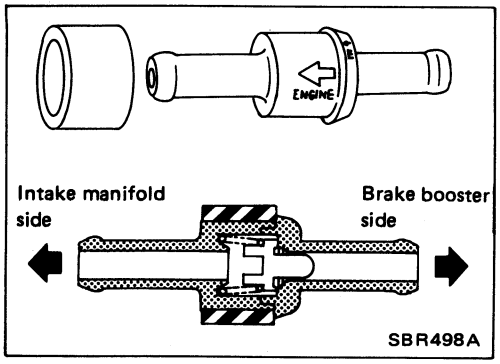

- Install check valve, paying attention to its direction.

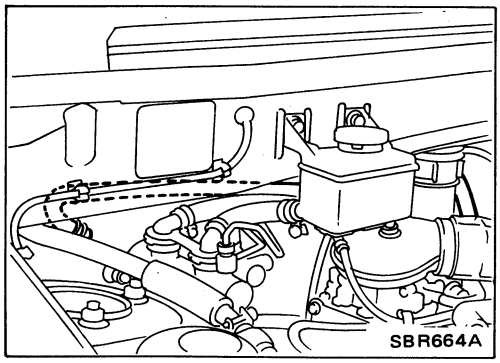

Inspection

HOSES AND CONNECTORS

- Check vacuum lines, connections and check valve for airtightness, chafing and deterioration.

Inspection (Cont'd)

CHECK VALVE

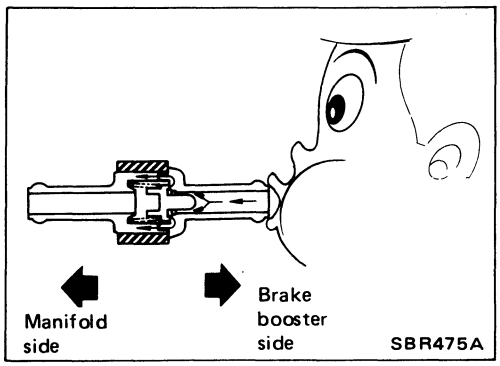

- When pressure is applied to brake booster side of check valve and valve does not open, replace check valve with a new one.

Removal and Installation

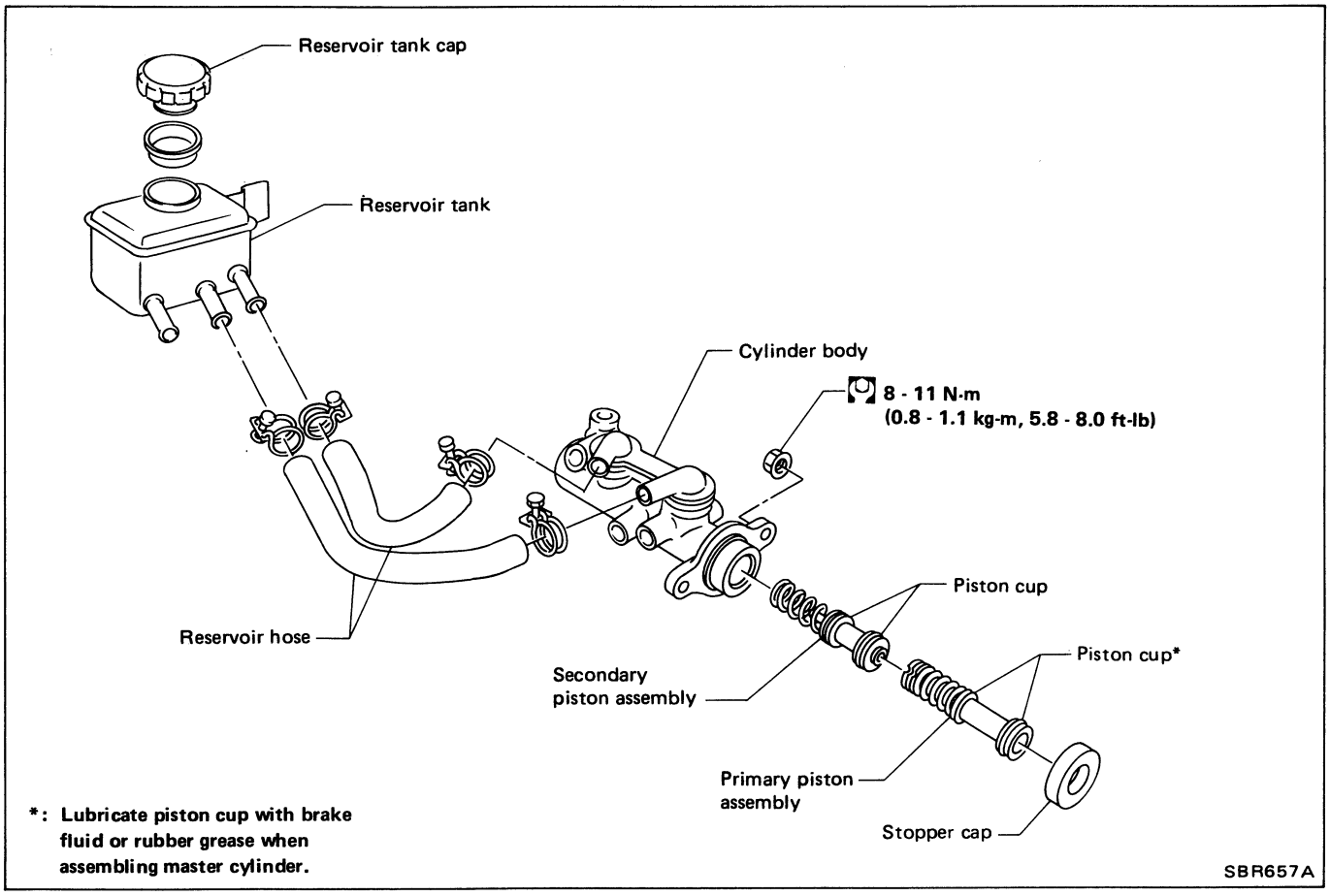

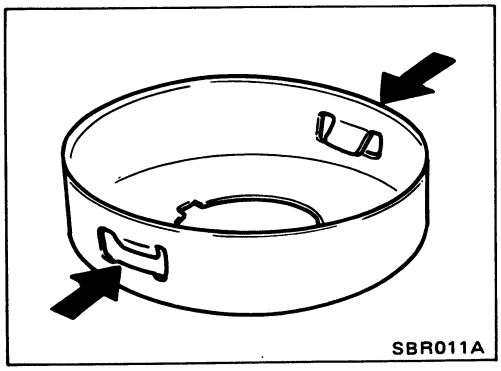

- Replace stopper cap if claw is damaged or deformed.
- Bend claws inward when installing stopper cap.

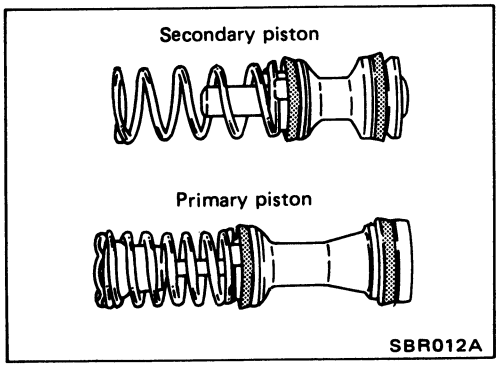

- Pay attention to direction of piston cups in figure at left.
- Check parts for wear or damage. Replace if necessary.

Removing Load Sensing Valve

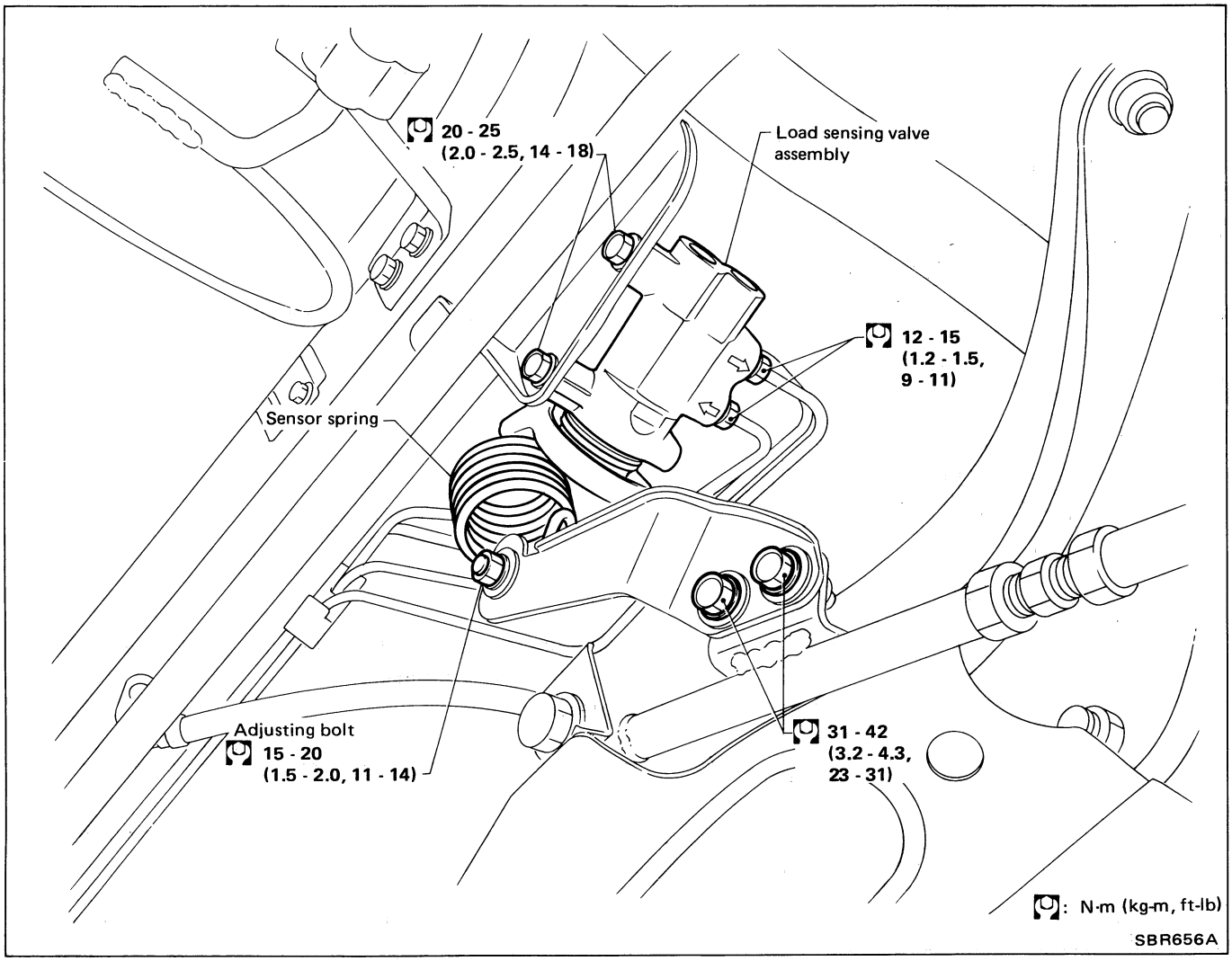

- Replace damaged Load Sensing Valve as an assembly.
- When disassembling, apply multi-purpose grease to all rubbing areas.

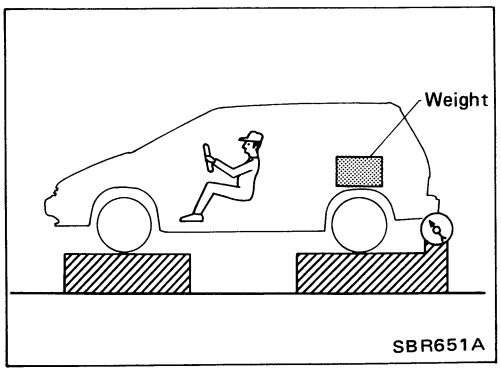

Inspection

1. With one person aboard, set rear axle load to 6,865 N (700 kg, 1,544 lb) by using weight in luggage room.

Inspection (Cont'd)

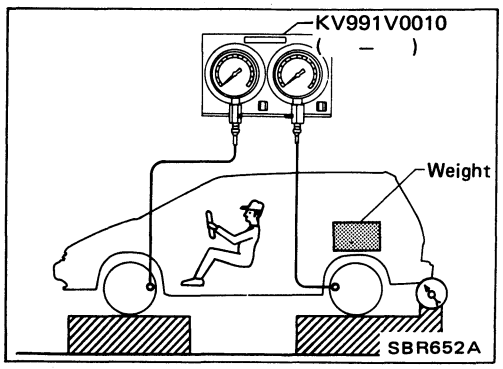

2. Install pressure gauge on front and rear brake air bleeders.

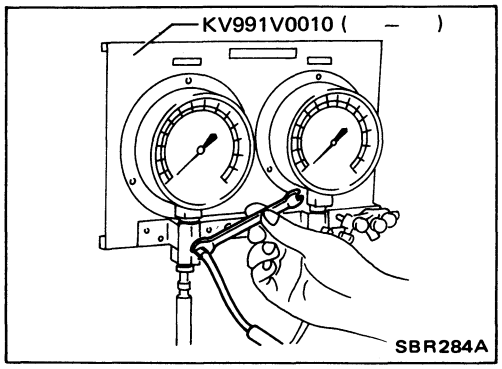

3. Bleed air from front and rear brake lines.

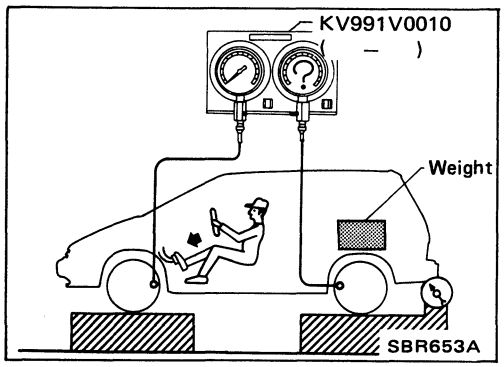

4. Raise front brake pressure to 4,904 kPa (50 kg/cm^2, 711 psi) and check rear brake pressure.

Rear brake pressure:

Unit: kPa (kg/cm^2, psi)

Item / Wheel model	5 passenger model	7 passenger model
2WD	3,138 - 4,119 (32 - 42, 455 - 597)	2,844 - 3,825 (29 - 39, 412 - 555)
4WD	2,550 - 3,531 (26 - 36, 370 - 512)	2,354 - 3,334 (24 - 34, 341 - 483)

Inspection (Cont'd)

5. Raise front brake pressure to 9,807 kPa (100 kg/cm^2, 1,422 psi) and check rear brake pressure.

Rear brake pressure:

Unit: kPa (kg/cm^2, psi)

Wheel model \ Item	5 passenger model	7 passenger model
2WD	3,138 - 4,119 (32 - 42, 455 - 597)	2,844 - 3,825 (29 - 39, 412 - 555)
4WD	2,550 - 3,531 (26 - 36, 370 - 512)	2,354 - 3,334 (24 - 34, 341 - 483)

CAUTION:

- **Depress pedal slowly when raising front brake pressure.**
- **Check rear brake pressure 2 seconds after front brake pressure reaches specified value.**

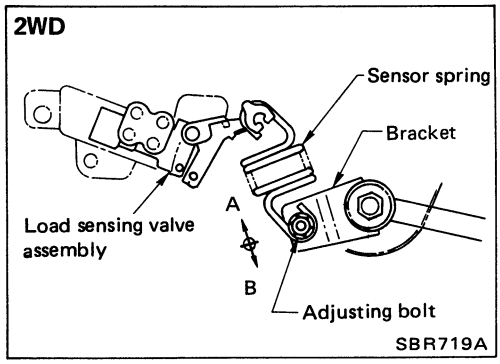

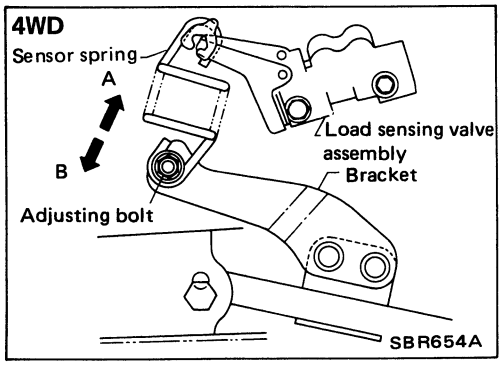

6. If rear brake pressure is not within specification, adjust sensor spring length by adjusting bolt.
   - When rear brake pressure is below specification, adjust bracket to direction "B".
   - When rear brake pressure is above specification, adjust bracket to direction "A".
7. Repeat steps 4. through 6.
8. If pressure is outside specified range after spring length is adjusted, replace Load Sensing Valve assembly.

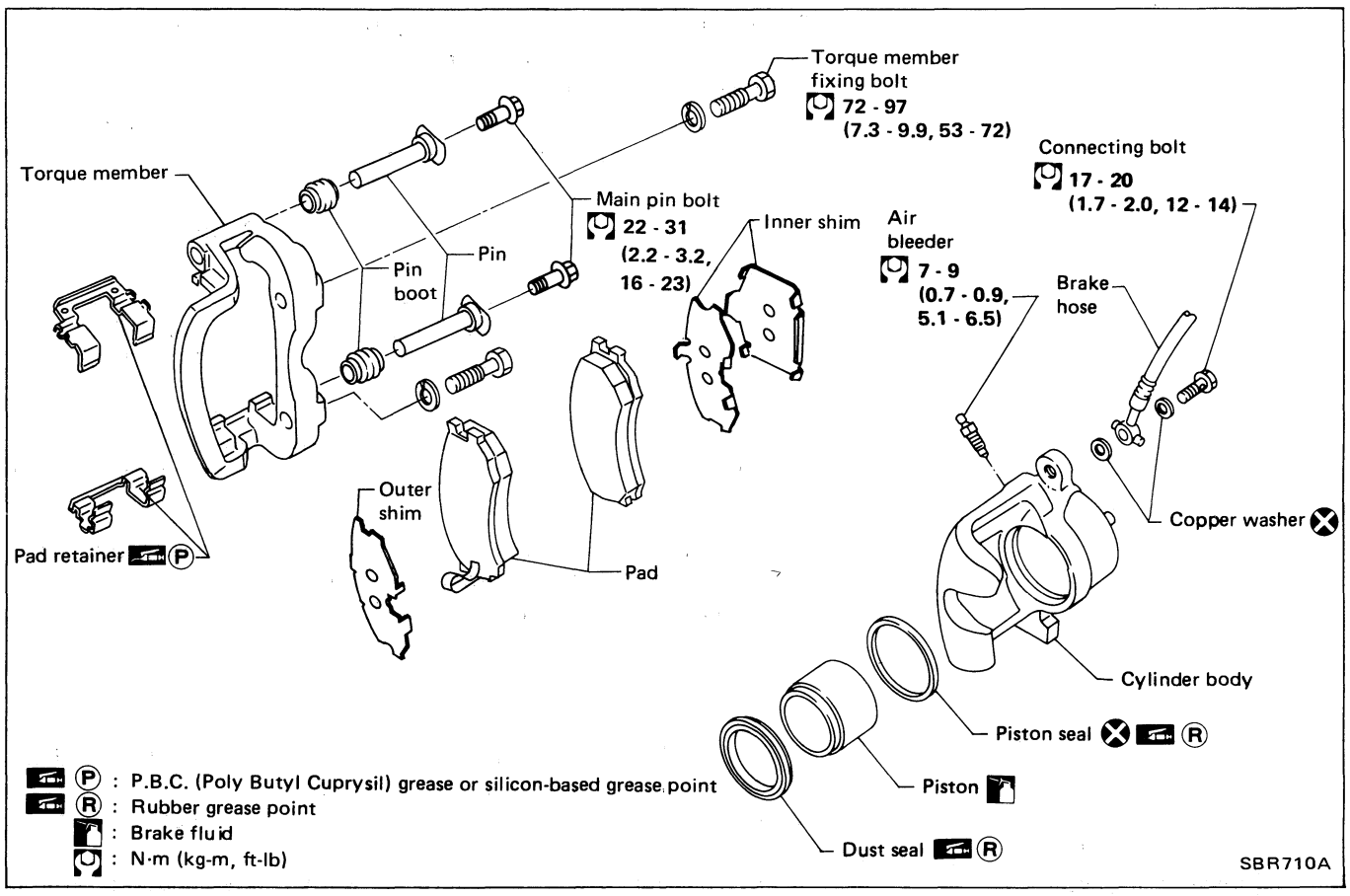

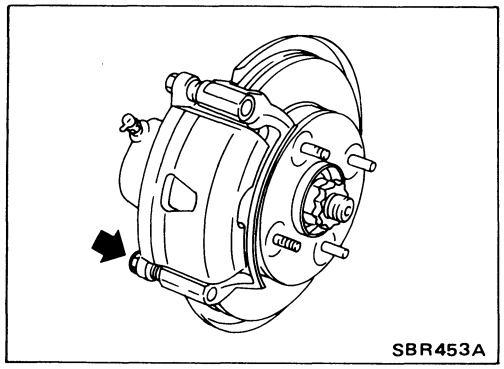

Pad Replacement

1. Remove pin bolt.

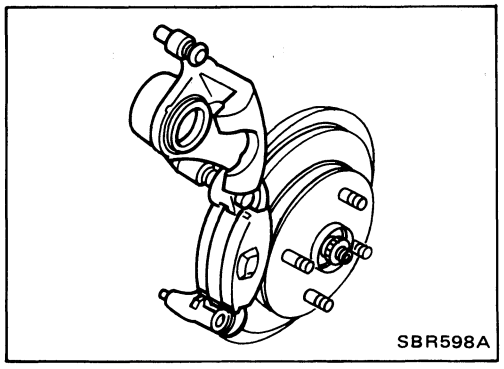

2. Swing cylinder body upward. Then remove pad retainer, and inner and outer shims.

CAUTION:

- **When cylinder body is swung up, do not depress brake pedal because piston will pop out.**
- **Be careful not to damage dust seal or get oil on rotor. Always replace shims when replacing pads.**

Removal and Installation

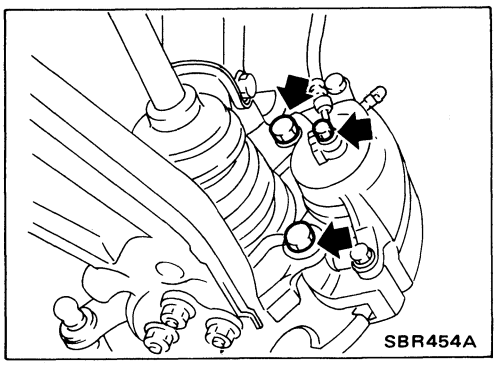

- Remove torque member fixing bolts and connecting bolt.

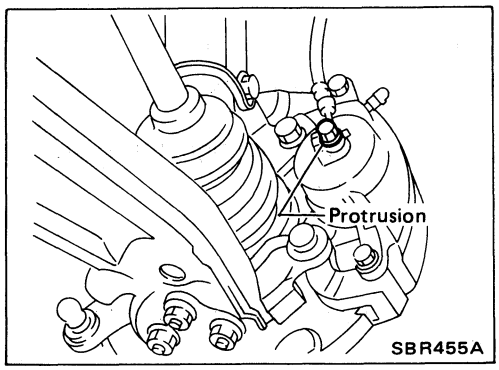

- Install brake hose to caliper at protrusions securely.

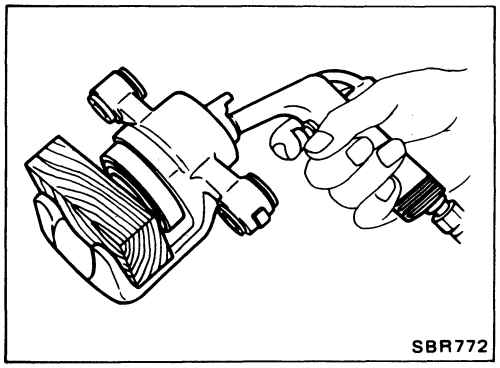

- Push out piston with dust seal using compressed air.

Inspection

INSPECTION OF BRAKE DRAG FORCE

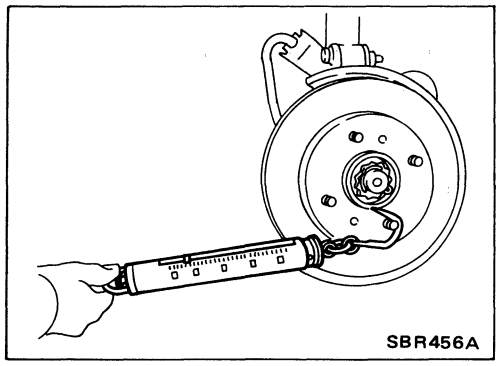

1. Swing cylinder body upward.
2. Make sure that wheel bearing is adjusted properly. Refer to section FA.
3. Measure rotating force (F_1).

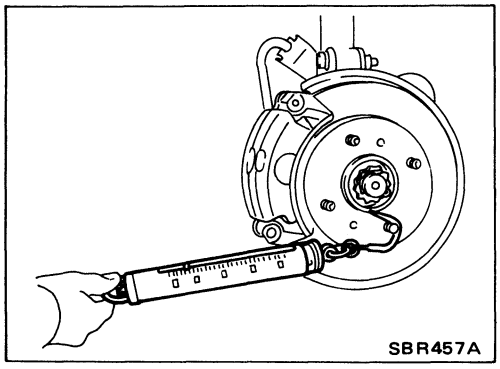

4. Install caliper with pads to the original position.
5. Depress brake pedal for 5 seconds.
6. Release brake pedal and rotate disc rotor 10 revolutions.
7. Measure rotating force (F_2).
8. Calculate brake drag force by subtracting F_1 from F_2.
   Maximum brake drag force ($F_2 - F_1$):
   114.7 N (11.7 kg, 25.8 lb)
   If it is not within specification, check main pins and retainer boots in caliper.

Inspection (Cont'd)

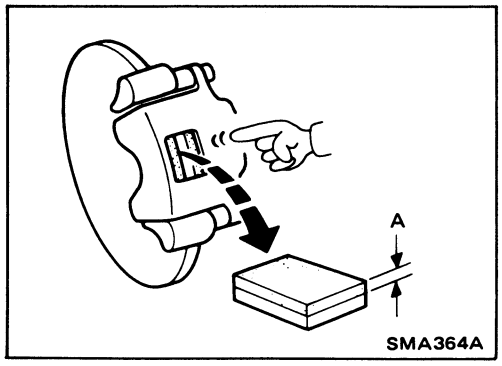

DISC PAD

Check disc pad for wear or damage.

Pad standard thickness (A):
11.0 mm (0.433 in)
Pad wear limit (A):
2.0 mm (0.079 in)

CYLINDER BODY

- Check inside surface of cylinder for scoring, rust, wear, damage or foreign materials. Replace if any such condition exists.
- Eliminate minor damage from rust or foreign materials by polishing surface with fine emery paper.

CAUTION:
Use brake fluid to clean.

PISTON

Check piston for scoring, rust, wear, damage or foreign materials. Replace if any condition exists.

CAUTION:
Piston sliding surface is plated. Do not polish with emery paper even if rust or foreign materials are stuck to sliding surface.

PIN, PIN BOLT AND PIN BOOT

Check for wear, cracks or other damage. Replace if any condition exists.

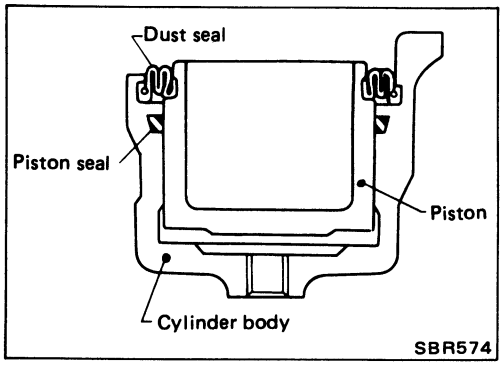

Assembly

- Insert piston seal into groove on cylinder body.
- With dust seal fitted to piston, install piston into cylinder body.

CAUTION:
- **Secure dust seal properly.**

Inspection

RUBBING SURFACE

Check rotor for roughness, cracks or chips.

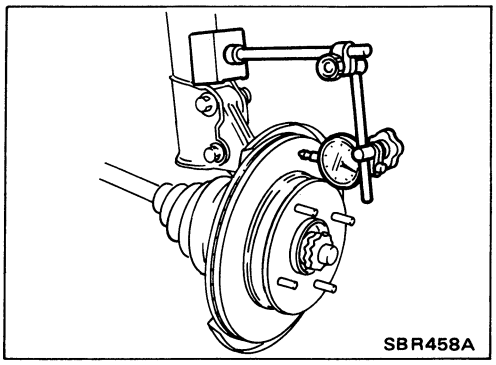

RUNOUT

Adjust wheel bearing preload. Check runout using a dial indicator.

Rotor repair limit:
Maximum runout
(Total indicator reading at center of rotor pad contact surface)
0.07 mm (0.0028 in)

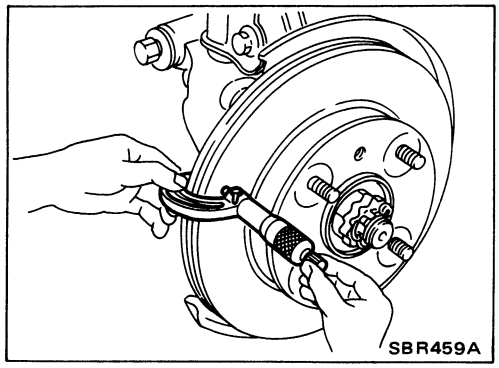

THICKNESS

- Measure thickness of brake disc at least four points to determine maximum worn area.

Standard thickness:
22.0 mm (0.866 in)
Minimum thickness:
20.0 mm (0.787 in)

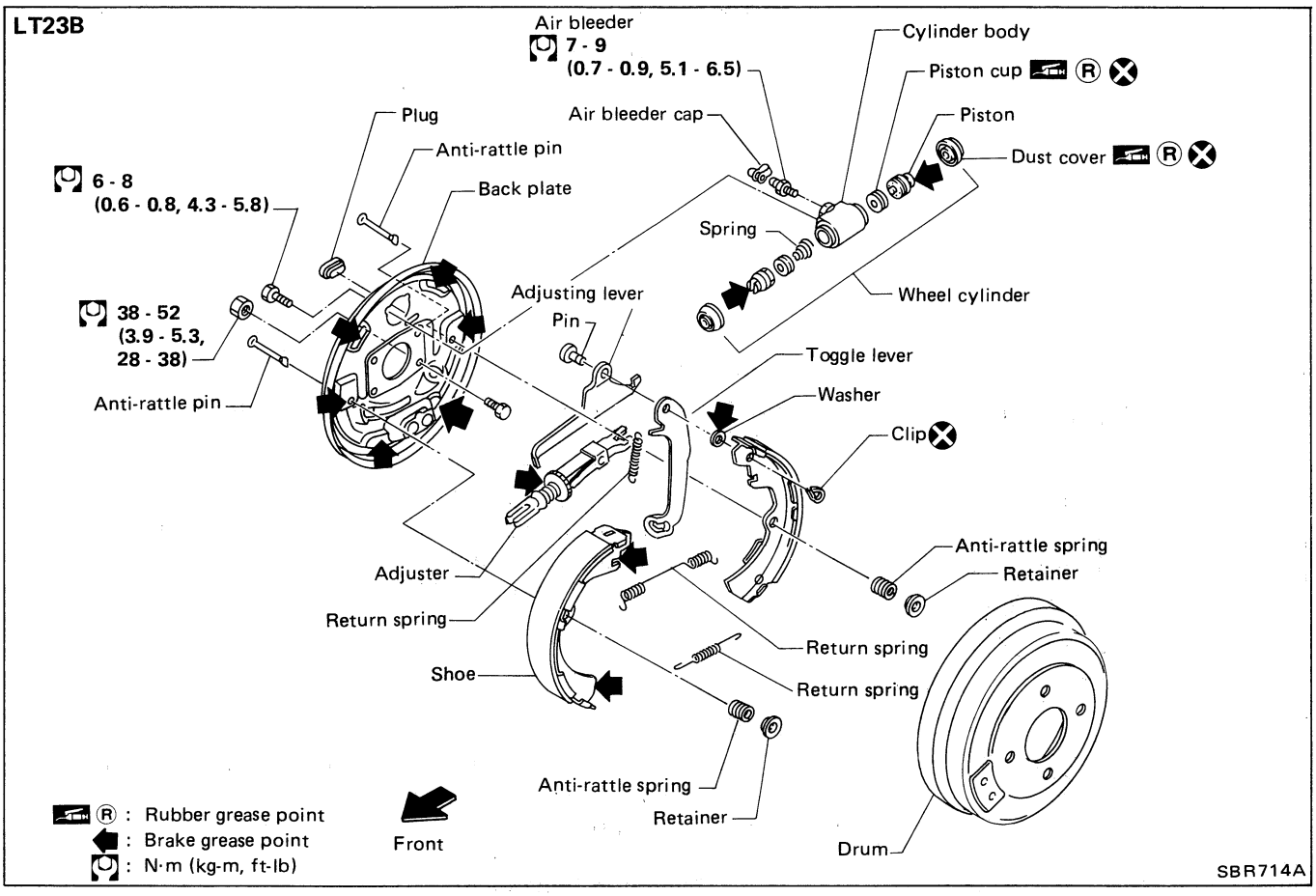
LT23B
Air bleeder
7 - 9
(0.7 - 0.9, 5.1 - 6.5)
Cylinder body
Piston cup
Piston
Dust cover
Plug
Air bleeder cap
Anti-rattle pin
Back plate
6 - 8
(0.6 - 0.8, 4.3 - 5.8)
Spring
Wheel cylinder
Adjusting lever
Pin
38 - 52
(3.9 - 5.3,
28 - 38)
Toggle lever
Washer
Anti-rattle pin
Clip
Anti-rattle spring
Retainer
Adjuster
Return spring
Return spring
Shoe
Return spring
Anti-rattle spring
Retainer
: Rubber grease point
: Brake grease point
: N·m (kg-m, ft-lb)
Front
Drum
SBR714A

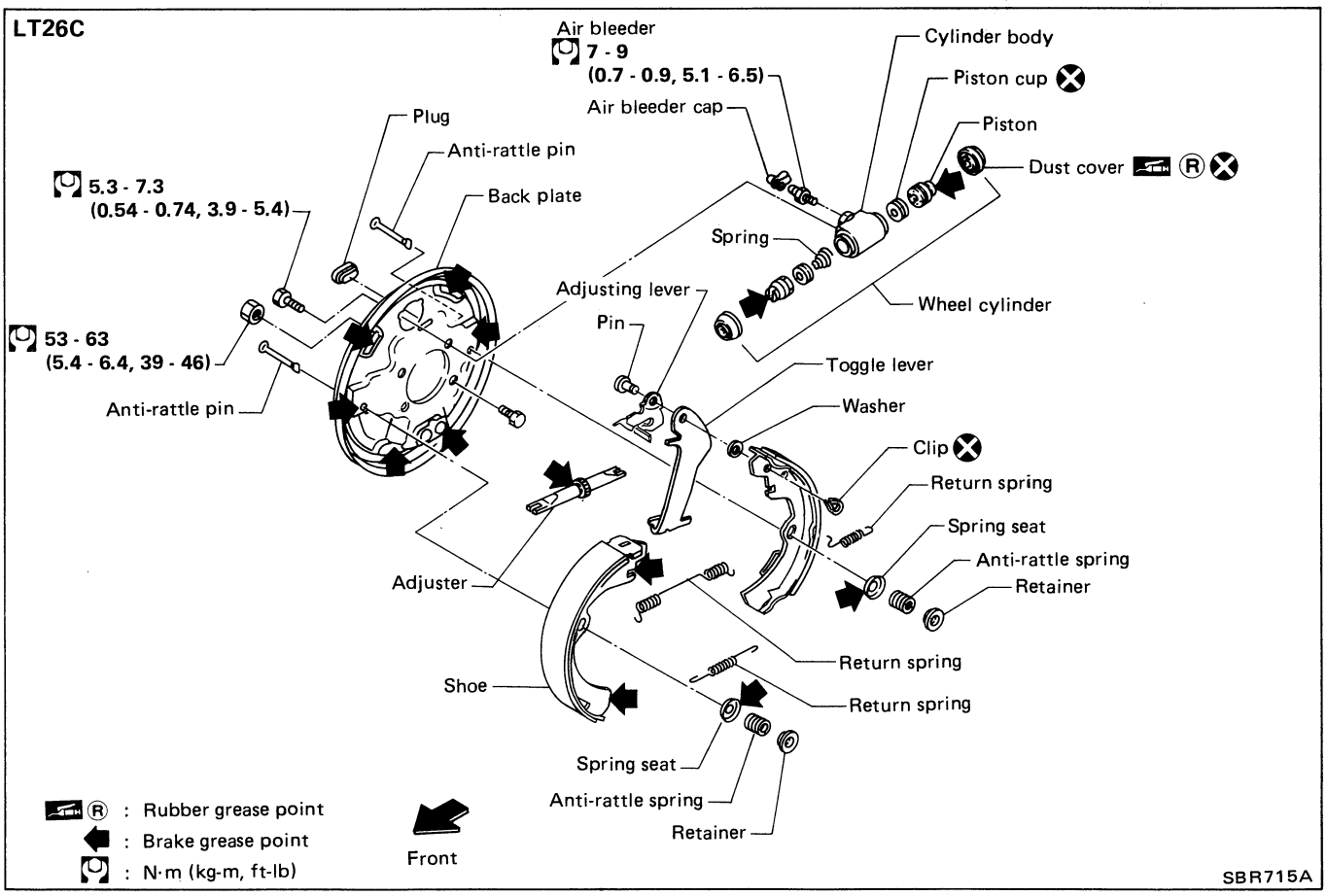
LT26C
Air bleeder
7 - 9
(0.7 - 0.9, 5.1 - 6.5)
Cylinder body
Piston cup
Air bleeder cap
Piston
Plug
Anti-rattle pin
Dust cover
5.3 - 7.3
(0.54 - 0.74, 3.9 - 5.4)
Back plate
Spring
Adjusting lever
Wheel cylinder
Pin
53 - 63
(5.4 - 6.4, 39 - 46)
Toggle lever
Anti-rattle pin
Washer
Clip
Return spring
Spring seat
Anti-rattle spring
Adjuster
Retainer
Return spring
Shoe
Return spring
Spring seat
Anti-rattle spring
Retainer
: Rubber grease point
: Brake grease point
: N·m (kg-m, ft-lb)
Front
SBR715A

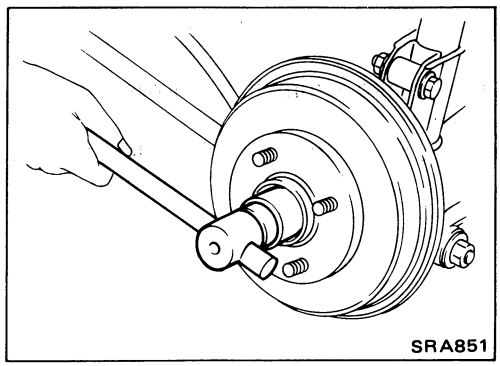
SRA851

Brake Drum Removal

- Release parking brake control lever fully.
- Remove hub cap and wheel bearing lock nut.
  Refer to section RA.

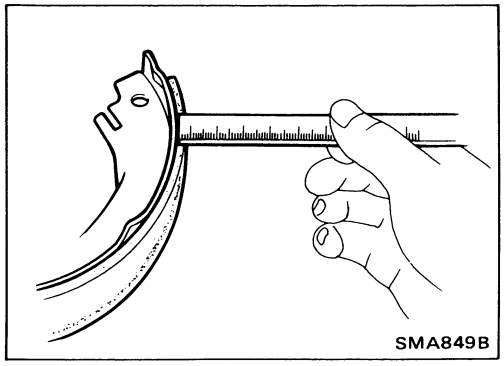
SMA849B

Shoe Replacement

- Measure lining thickness.
  Standard thickness:
  4.5 mm (0.177 in)
  Lining wear limit:
  1.5 mm (0.059 in)

Before installing new shoes, rotate nut until adjuster rod is at its shortest point.
After installation, adjust shoe-to-drum clearance. Refer to Removal and Installation.

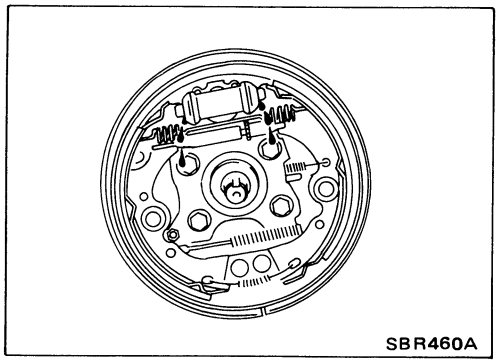
SBR460A

Wheel Cylinder Inspection

- Check wheel cylinder for leakage.
- Check for wear, damage and loose conditions.
  Replace if any condition exists.

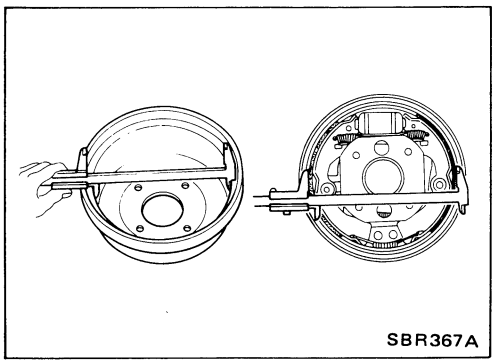
SBR367A

Removal and Installation

When installing, measure brake drum inside diameter and diameter of brake shoes. Check that difference between diameters is correct shoe clearance.

Shoe clearance:
0.35 - 0.55 mm (0.0138 - 0.0217 in)

If necessary, adjust by rotating adjuster.

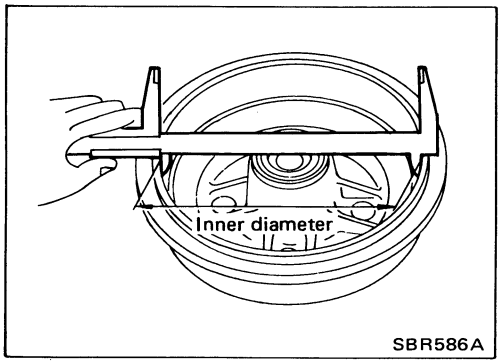

SBR586A

Drum Inspection

Standard inner diameter:
LT23B 228.6 mm (9 in)
LT26C 260.0 mm (10.24 in)
Maximum inner diameter:
LT23B 230.0 mm (9.06 in)
LT26C 261.5 mm (10.30 in)
Out-of-roundness (Ellipticity):
0.03 mm (0.0012 in) or less
Radial runout (Total indicator reading):
0.05 mm (0.0020 in) or less

Drum Inspection (Cont'd)

- Contact surface should be finefinished with No. 120 to 150 emery paper.
- Using a drum lathe, lathe brake drum if it shows scoring, partial wear or stepped wear.
- After brake drum has been completely reconditioned or replaced, check drum and shoes for proper contact pattern.

Removal and Installation

2WD

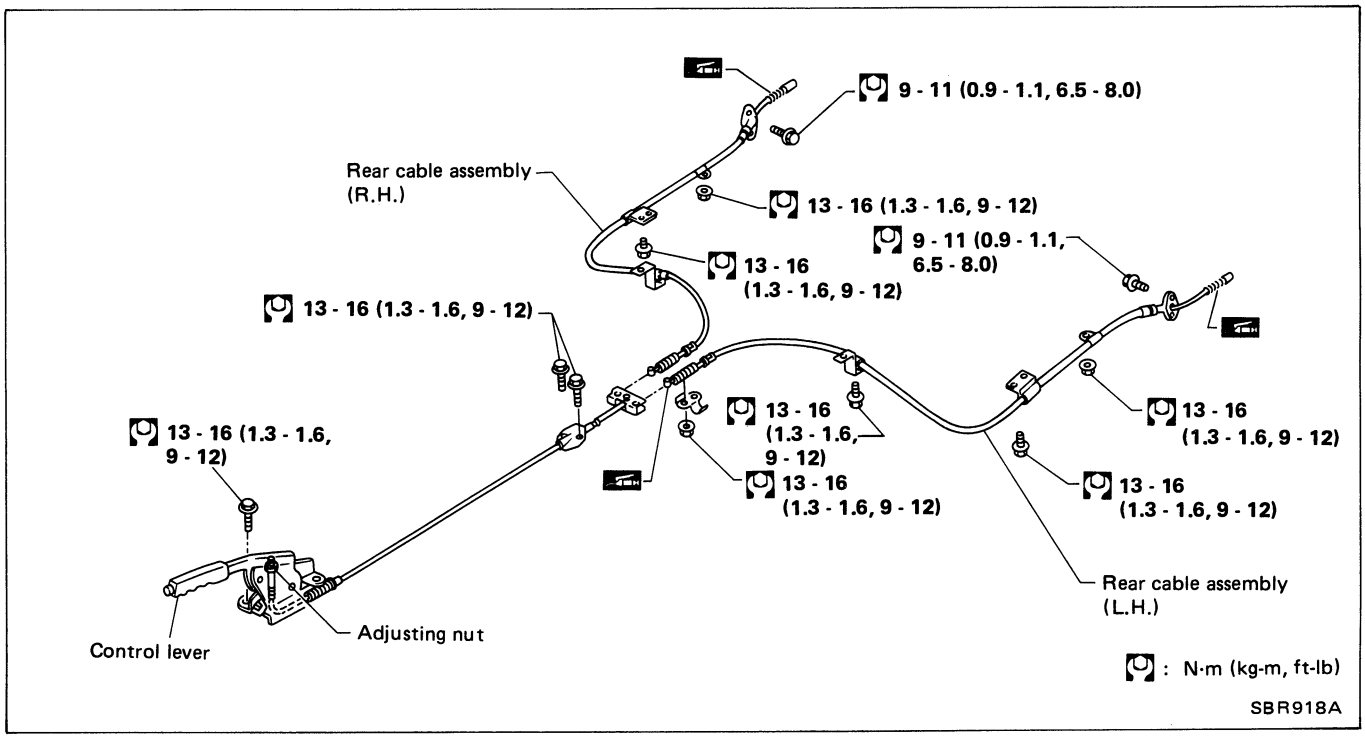

4WD

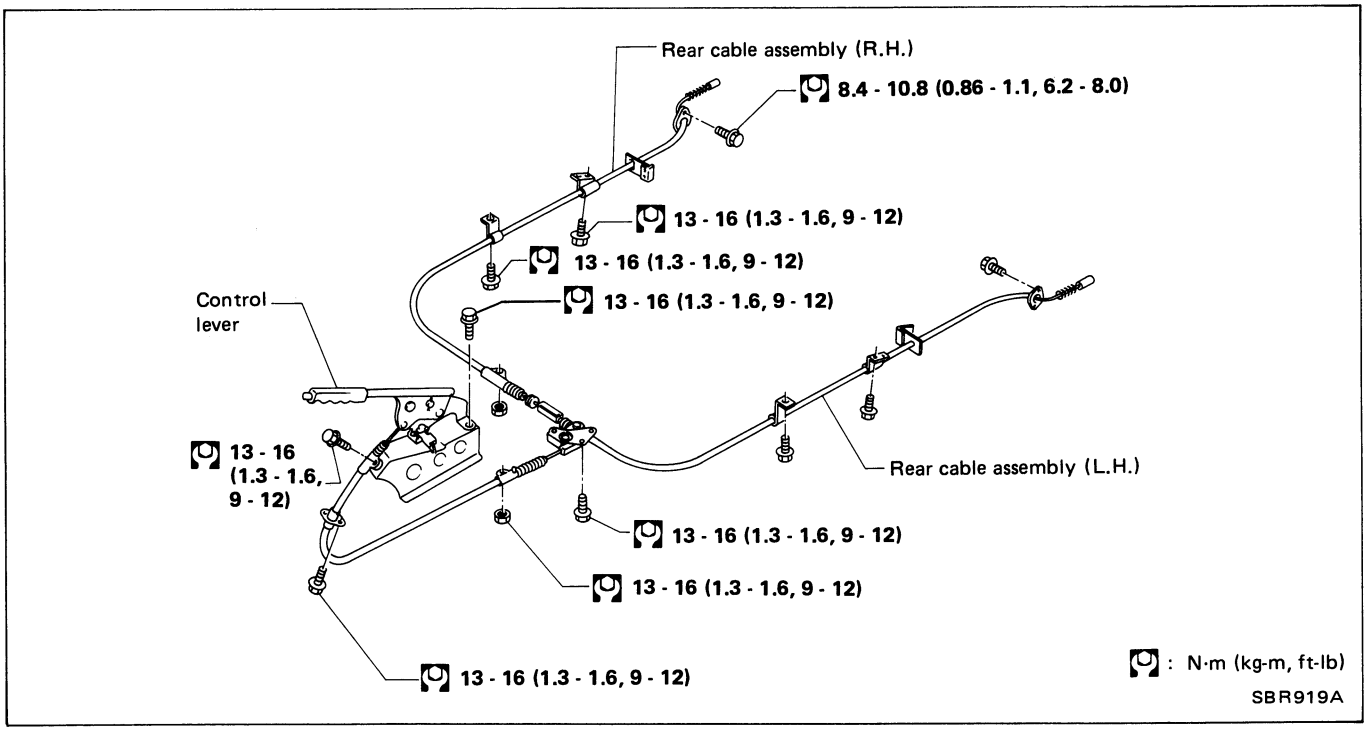

- Before removing parking brake control, remove console box.
- Make sure there is no free play after installing.

Inspection

1. Check control lever for wear or other damage. Replace if necessary.
2. Check parking brake cables and lamp switch. Replace if necessary.
3. Check parts at each connecting portion for deformation or damage, and if found, replace.

Adjustment

Adjust control lever stroke as follows:

—2WD—

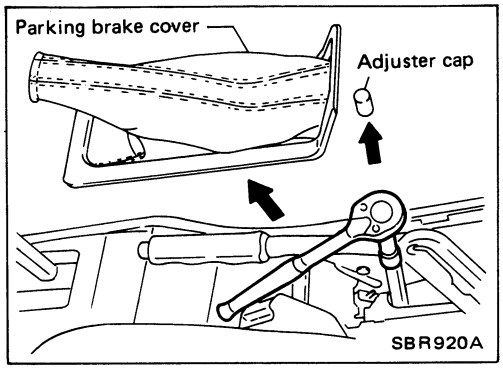

1. Remove parking brake cover and adjuster cap.
2. Adjust control lever by turning adjusting nut.

—4WD—

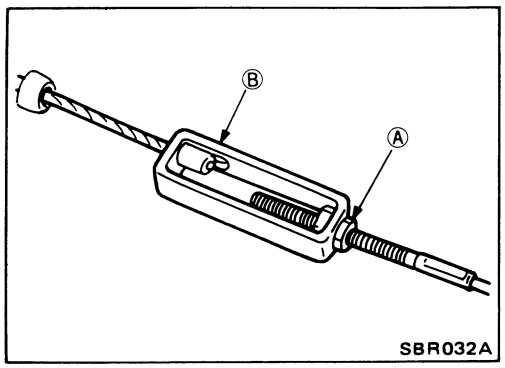

1. Loosen lock nut Ⓐ and rotate adjuster Ⓑ.
2. Tighten look nut Ⓐ.

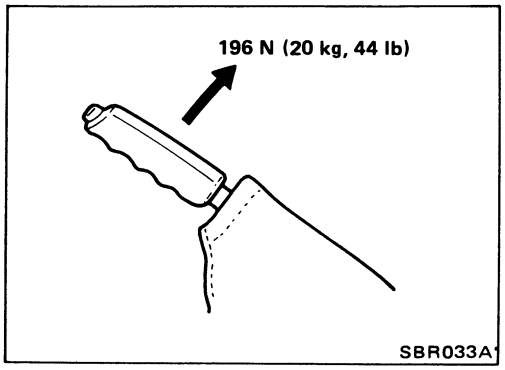

3. Pull control lever with specified amount of force. Check lever stroke and ensure smooth operation.

   Number of notches:

   2WD 10 - 11

   4WD 12 - 13

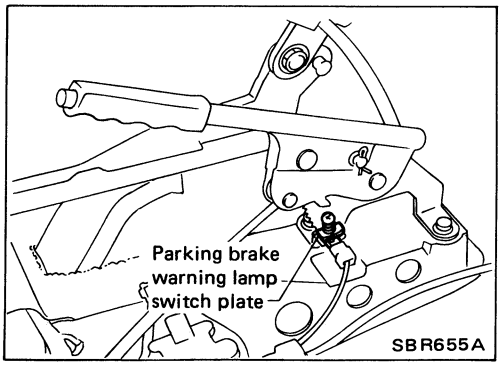

4. Bend parking brake warning lamp switch plate so that brake warning lamp comes on when ratchet at parking brake lever is pulled "A" notches and goes out when fully released.

   Number of notches "A": 1 - 2

General Specifications

Item \ Model	2WD 5 passengers	4WD and 2WD 7 passengers
Front brake Brake model	CL25VA	
Cylinder bore diameter mm (in)	57.2 (2.252)	
Pad mm (in) Length x width x thickness	125.6 x 45.3 x 11.0 (4.94 x 1.783 x 0.433)	
Rotor outer diameter x thickness	257 x 22 (10.12 x 0.87)	
Rear brake Brake model	LT23B	LT26C
Wheel cylinder bore diameter mm (in)	20.64 (13/16)	
Lining mm (in) Length x width x thickness	219.4 x 40.0 x 4.5 (8.64 x 1.575 x 0.177)	249.6 x 5.5 x 40.0 (9.83 x 0.217 x 1.575)
Drurm inner diameter mm (in)	228.6 (9)	260.0 (10.24)
Master cylinder mm (in) Cylinder bore diameter	23.81 (15/16)	
Control valve Valve model	Dual load sensing valve	
Split point kPa (kg/cm^2, psi) x reducing ratio	Variable x 0.3	
Brake booster Booster model	M195T	
Diaphragm diameter mm (in)	Primary: 208 (8.19) Secondary: 180 (7.09)	
Recommended brake fluid	DOT 3	

Inspection and Adjustment

DISC BRAKE

Unit: mm (in)

Brake model	CL25VA
Pad wear limit Minimum thickness	2.0 (0.079)
Rotor repair limit Minimum thickness	20.0 (0.787)
Maximum runout	0.07 (0.0028)

DRUM BRAKE

Unit: mm (in)

Brake model	LT23B	LT26C
Lining wear limit Minimum thickness	1.5 (0.059)	
Drum repair limit Maximum inner diameter	230.0 (9.06)	261.5 (10.30)
Out-of-roundness	0.03 (0.0012)	
Radial runout	0.05 (0.0020)	

BRAKE PEDAL

Unit: mm (in)

Free height "H" M/T	165 - 175 (6.50 - 6.89)
A/T	174 - 184 (6.85 - 7.24)
Depressed height "D" mm (in) [under force of 490 N (50 kg, 110 lb) with engine runing]	90 (3.54) or more
Clearance between switches and pedal stopper bracket "C" mm (in)	0.3 - 1.0 (0.012 - 0.039)
Pedal free play at clevis pin mm (in)	1 - 3 (0.04 - 0.12)

PARKING BRAKE

Type	Center lever
Number of notches [under force of 196 N (20 kg, 44 lb)]	2WD: 10 - 11 4WD: 12 - 13
Number of notches when warning lamp switch comes on	1 - 2

STEERING SYSTEM

SECTION ST

CONTENTS

PRECAUTIONS ..... ST- 2
PREPARATION ..... ST- 3
ON-VEHICLE INSPECTION ..... ST- 5
ON-VEHICLE INSPECTION (Power steering) ..... ST- 7
STEERING WHEEL AND STEERING COLUMN ST-10
POWER STEERING GEAR AND LINKAGE (Model PR26SC) ST-15
POWER STEERING OIL PUMP ST-28
SERVICE DATA AND SPECIFICATIONS (S.D.S.) ST-32

- Before disassembly, thoroughly clean the outside of the unit.
- Disassembly should be done in a clean work area. It is important to prevent the internal parts from becoming contaminated by dirt or other foreign matter.
- When disassembling parts, be sure to place them in order in a parts rack so they can be reinstalled in their proper positions.
- Use nylon cloths or paper towels to clean the parts; common shop rags can leave lint that might interfere with their operation.
- Before inspection or reassembly, carefully clean all parts with a general purpose, non-flammable solvent.
- Before assembly, apply a coat of recommended A.T.F.* to hydraulic parts. Vaseline may be applied to O-rings and seals. Do not use any grease.
- Replace all gaskets, seals and O-rings. Avoid damaging O-rings, seals and gaskets during installation. Perform functional tests whenever designated.

*: Automatic transmission fluid

SPECIAL SERVICE TOOLS

Tool number (Kent-Moore No.) Tool name	Description	
KV48100700 (J26364) Torque adapter		Measuring pinion rotating torque
ST27180001 (J25726-A) Steering wheel puller	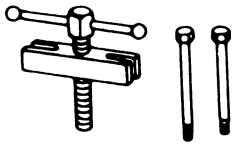	Removing and installing steering wheel
HT72520000 (J25730-A) Ball joint remover	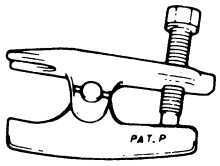	Removing ball joint
ST27091000 (J26357) Pressure gauge	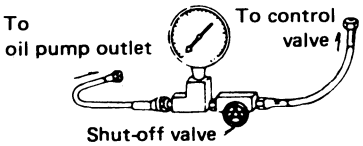	Measuring oil pressure
KV48102500 (–) Pressure gauge adapter	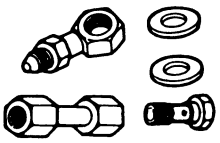	Measuring oil pressure
ST3127S000 (See J25765-A) ① GG91030000 (J25765-A) Torque wrench ② HT62940000 (–) Socket adapter ③ HT62900000 (–) Socket adapter	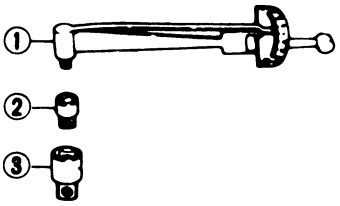	Measuring turning torque
KV48104400 (–) Rack seal ring reformer	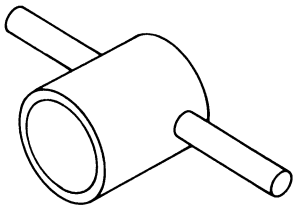	Reforming teflon ring

COMMERCIAL SERVICE TOOLS

Tool name	Description	
Rear oil seal drift	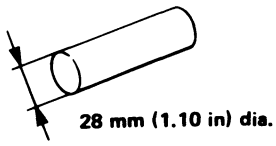	Installing rear oil seal
Pinion oil seal drift	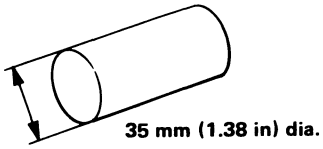	Installing pinion oil seal
Oil pump attachment	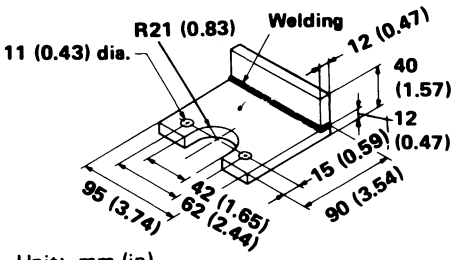 Unit: mm (in) SST481A	Disassembling and assembling oil pump

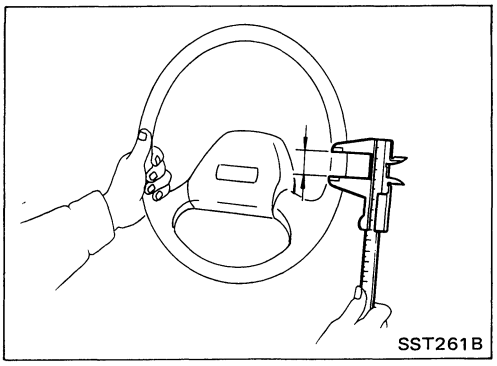

Checking Steering Wheel Play

- With wheels in a straight-ahead position, check steering wheel play.

  Steering wheel play:
  35 mm (1.38 in) or less
- If it is not within specification, check rack and pinion assembly.

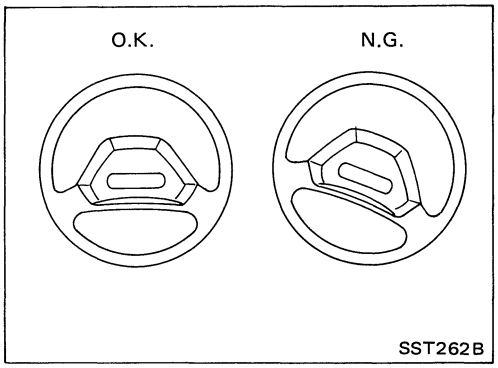

Checking Neutral Position on Steering Wheel

Pre-checking

- Verify that the steering gear is centered before removing the steering wheel.

Checking

- Check that the steering wheel is in the neutral position when driving straight ahead.
- If it is not in the neutral position, remove the steering wheel and reinstall it correctly.
- If the neutral position is between two serrated teeth, loosen tie-rod lock nut and move tie-rod in the opposite direction by the same amount on both left and right sides to compensate for error in the neutral position.

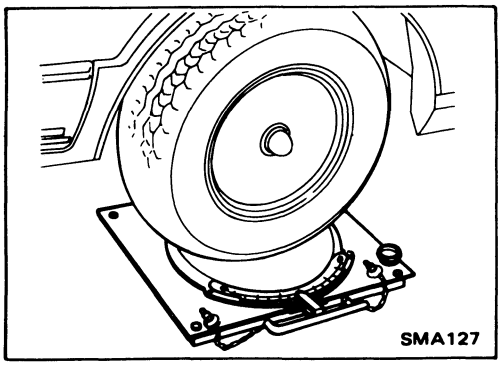

Front Wheel Turning Angle

- Rotate steering wheel all the way right and left; measure turning angle.

  Turning angle of full turns:
  Refer to section FA for S.D.S.

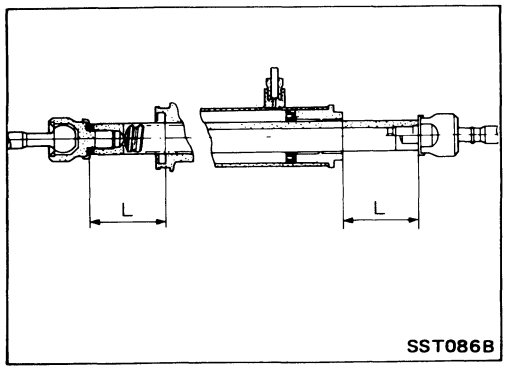

- If it is not within specification, check rack stroke.

  Measured length "L":
  Refer to S.D.S.

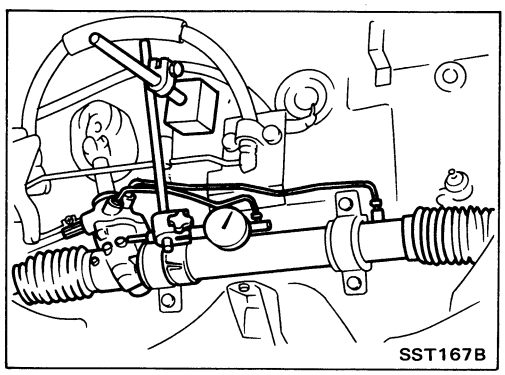

Checking Gear Housing Movement

- Check the movement of steering gear housing during stationary steering. The maximum allowable movement is as follows:

  Movement of gear housing:

  ±2 mm (±0.08 in) (on dry paved surface) or less

Apply a force of 49 N (5 kg, 11 lb) to steering wheel to check the gear housing movement.

On models equipped with power steering, turn off ignition key while checking.

- If movement exceeds the limit, replace mount insulator after confirming proper installation of gear housing clamps.

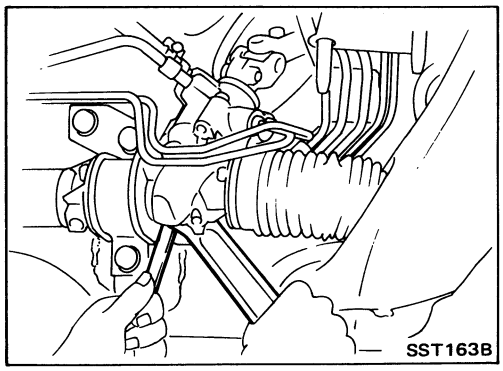

Adjusting Rack Retainer

- Perform this driving test on a flat road.

1. Check whether vehicle moves in a straight line when steering wheel is released.
2. Check whether steering wheel returns to neutral position when steering wheel is released from a slightly turned (approx. 20°) position.

- If any abnormality is found, correct it by resetting adjusting screw.

Checking and Adjusting Drive Belts

Refer to section MA for Drive Belt Inspection.

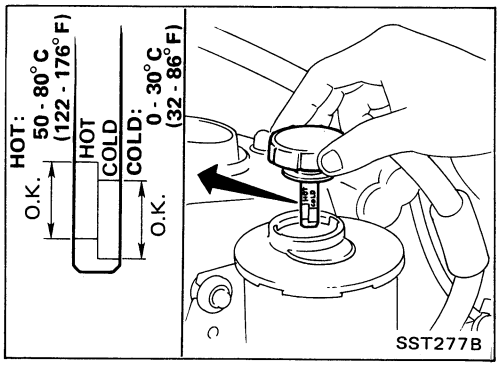

Checking Fluid Level

Check fluid level.

Fluid level should be checked using "HOT" range on dipstick at fluid temperatures of 50 to 80°C (122 to 176°F) or using "COLD" range on dipstick at fluid temperatures of 0 to 30°C (32 to 86°F).

CAUTION:

- **Do not overfill.**
- **Recommended fluid is Automatic Transmission Fluid "DEXRON™ Type".**

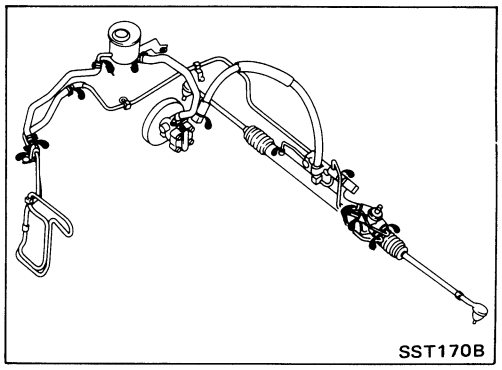

Checking Fluid Leakage

Check the lines for improper attachment and for leaks, cracks, damage, loose connections, chafing or deterioration.

1. Run engine at idle speed or 1,000 rpm.
   Make sure temperature of fluid in oil tank rises to 60 to 80°C (140 to 176°F).
2. Turn steering wheel right-to-left several times.
3. Hold steering wheel at each "lock" position for five seconds and carefully check for fluid leakage.

CAUTION:

Do not hold the steering wheel in a locked position for more than 15 seconds.

4. If fluid leakage at connectors is noticed, loosen flare nut and then retighten.

Do not overtighten connector as this can damage O-ring, washer and connector.

Bleeding Hydraulic System

1. Raise front end of vehicle until wheels clear ground.
2. Add fluid into oil tank to specified level. Meanwhile, quickly turn steering wheel fully to right and left and lightly touch steering stoppers.
   Repeat steering wheel operation until fluid level no longer decreases.
3. Start engine.
   Repeat step 2 above.

- Incomplete air bleeding will cause the following to occur. When this happens, bleed air again.

Bleeding Hydraulic System (Cont'd)

a. Generation of air bubbles in reservoir tank
b. Generation of clicking noise in oil pump
c. Excessive buzzing in oil pump

While the vehicle is stationary or while turning the steering wheel slowly, fluid noise may occur in the valve or oil pump. This noise is inherent in this steering system, and it will not affect performance or durability of the system.

Checking Steering Wheel Turning Force

1. Park vehicle on a level, dry surface and set parking brake.
2. Start engine.
3. Warm up power steering fluid to adequate operating temperature.
   Temperature of fluid:
   Approximately 60 - 80°C (140 - 176°F)

Tires need to be inflated to normal pressure.

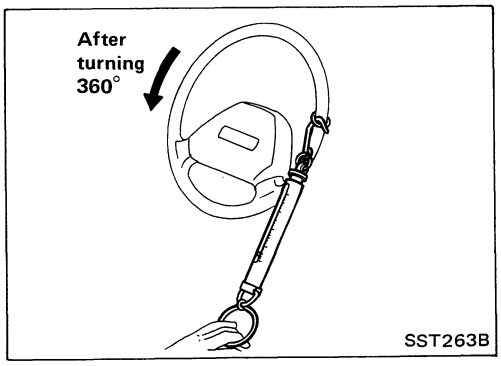

4. Check steering wheel turning force with engine idling when steering wheel has been turned 360° from neutral position.
   Steering wheel turning force:
   39 N (4 kg, 9 lb) or less

Checking Hydraulic System

Before starting, check belt tension, driving pulley and tire pressure.

1. Set Tool. Open shut-off valve. Then bleed air. (See "Bleeding Hydraulic System".)
2. Run engine.

Make sure temperature of fluid in tank rises to 60 to 80°C (140 to 176°F).

Checking Hydraulic System (Cont'd)

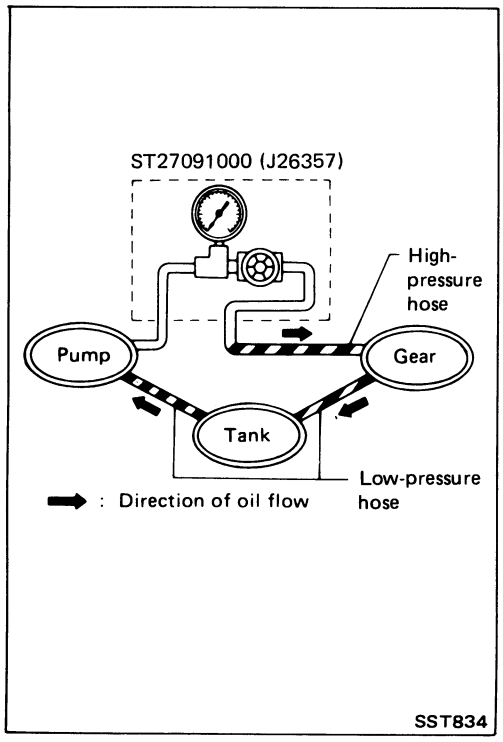

WARNING:
Warm up engine with shut-off valve fully opened. If engine is started with shut-off valve closed, oil pressure in oil pump will increase to relief pressure, resulting in an abnormal rise in oil temperature.

3. Check pressure with steering wheel fully turned to left and right positions with engine idling at 1,000 rpm.

CAUTION:
Do not hold the steering wheel in a locked position for more than 15 seconds.

Oil pump maximum standard pressure:
7,649 - 8,238 kPa
(78 - 84 kg/cm^2, 1,109 - 1,194 psi) at idling

4. If oil pressure is below the standard pressure, slowly close shut-off valve and check pressure.

- When pressure reaches standard pressure, gear is damaged.
- When pressure remains below standard pressure, pump is damaged.

CAUTION:
Do not close shut-off valve for more than 15 seconds.

5. If oil pressure is higher than standard pressure, pump is damaged.
6. After checking hydraulic system, remove Tool and add fluid as necessary, then completely bleed air out of system.

For U.S.A.

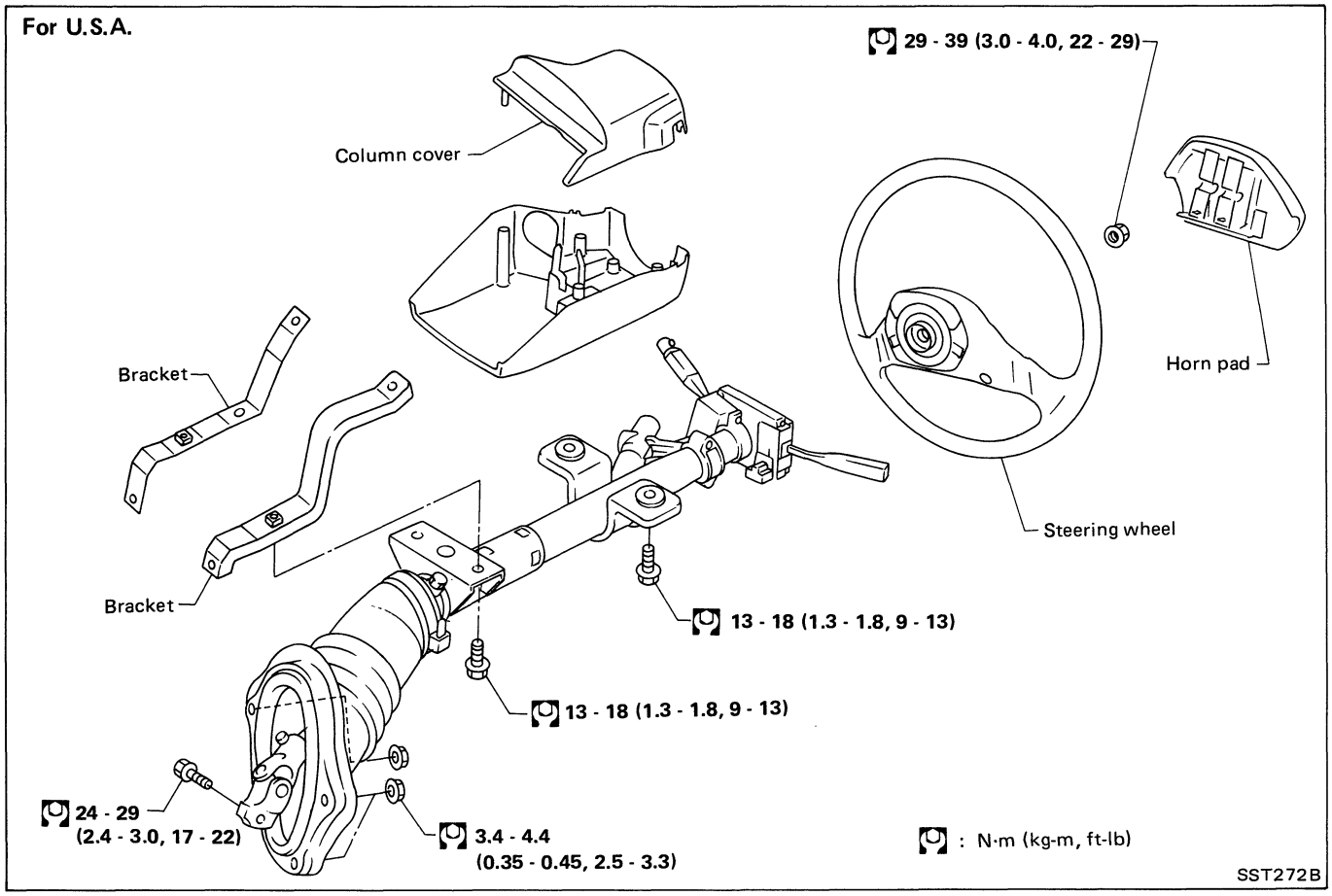

For CANADA

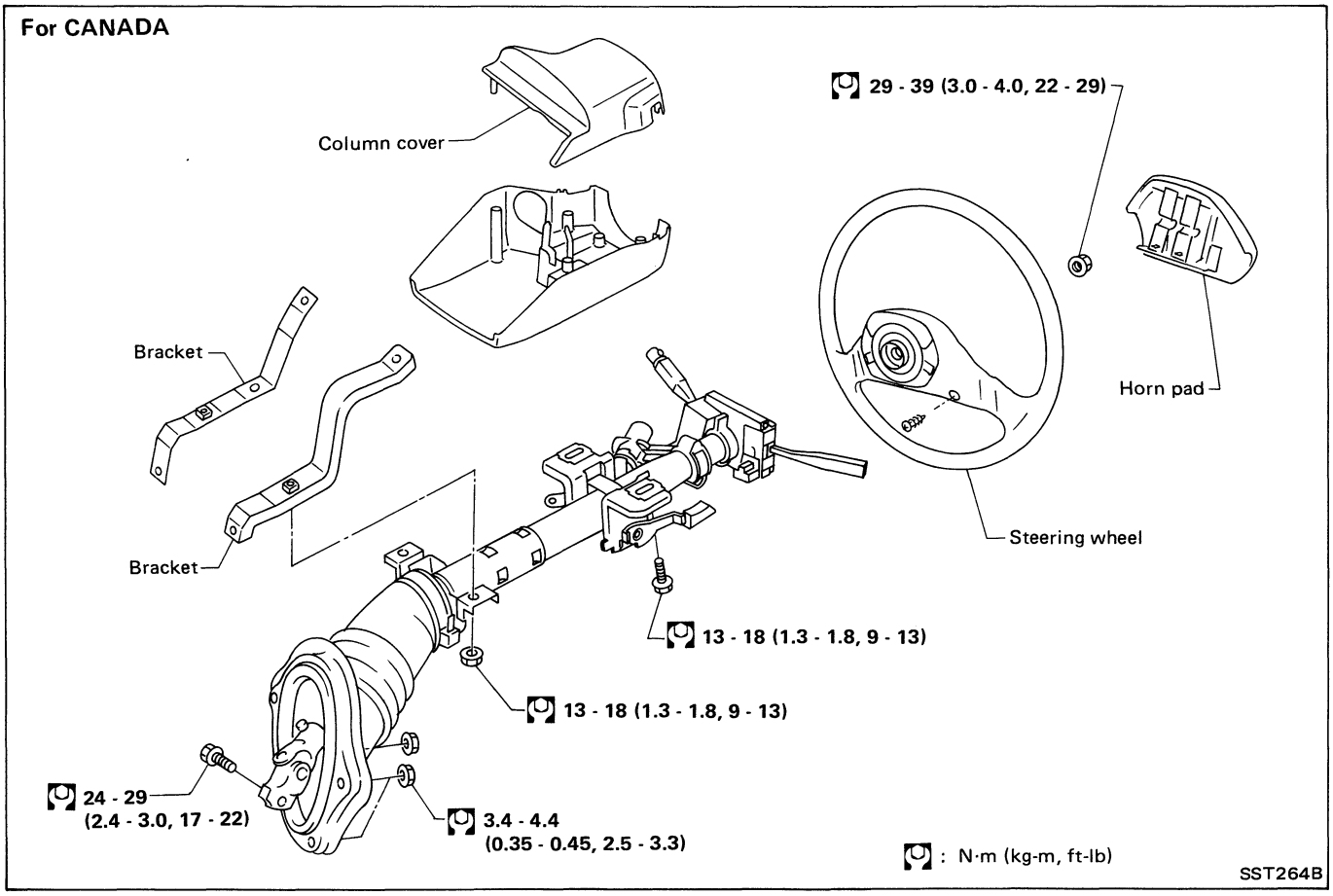

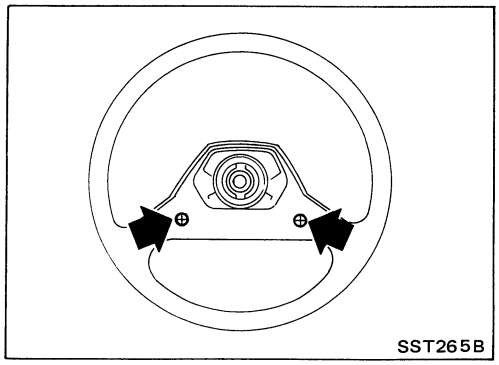

Removal

STEERING WHEEL

- Pull out horn pad.

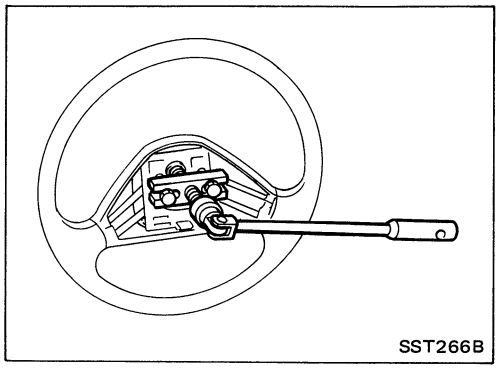

- Remove steering wheel with Tool.

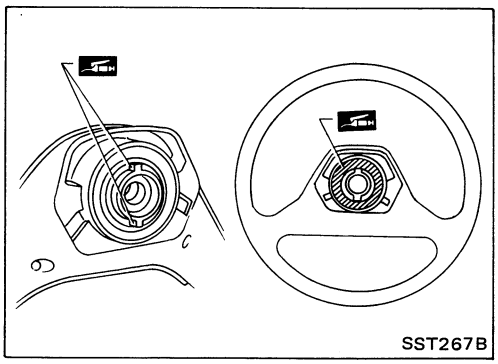

Installation

STEERING WHEEL

- When installing steering wheel, apply multi-purpose grease to entire surface of turn signal cancel pin (both portions) and also to horn contact slip ring.

STEERING COLUMN

- When installing steering column, fingertighten all lower bracket and clamp retaining bolts; then tighten them securely. Do not apply undue stress to steering column.

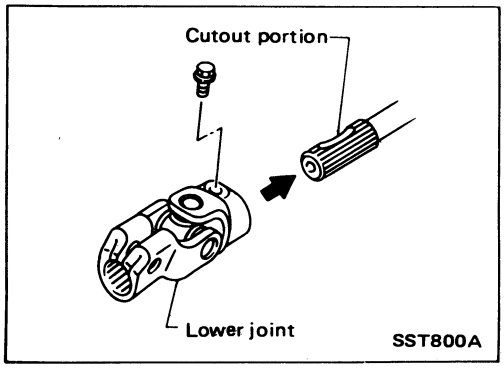

- When attaching coupling joint, be sure tightening bolt faces cutout portion.

CAUTION:

After installing steering column, turn steering wheel to make sure it moves smoothly and that the number of turns from the straight forward position to left and right locks are equal.
Be sure that the steering wheel is in a neutral position when driving straight ahead.

Disassembly and Assembly

For U.S.A.

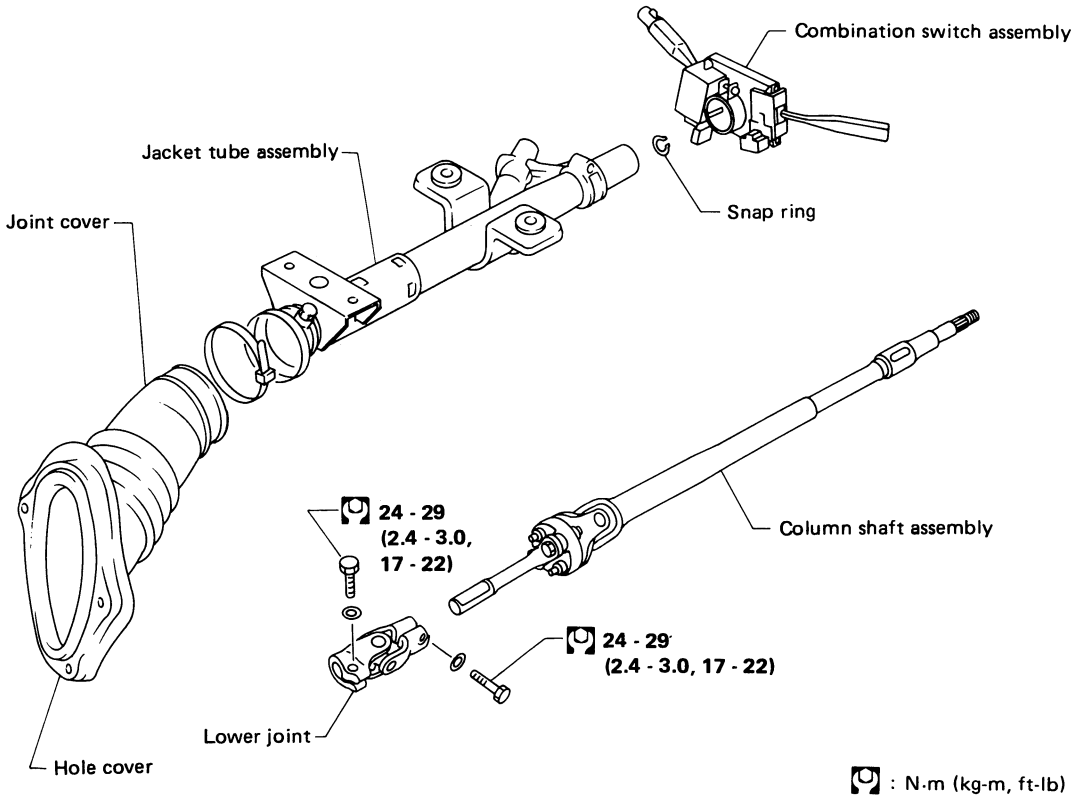

SST172B

For CANADA

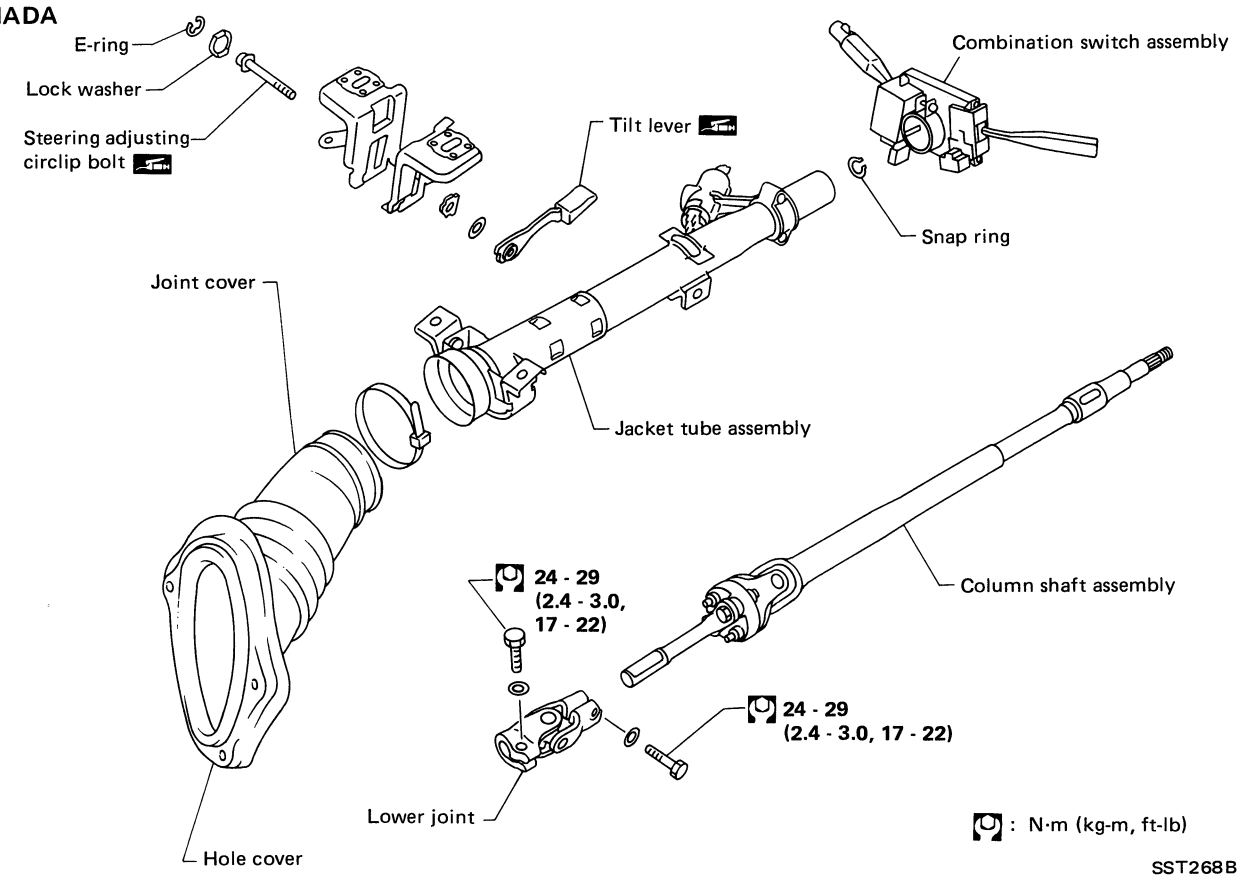

SST268B

Disassembly and Assembly (Cont'd)

- When disassembling and assembling, unlock steering lock with key.
- Ensure that rounded surface of snap ring faces toward bearing when snap ring is installed.

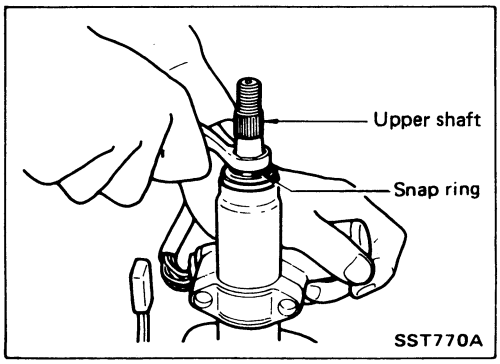

- Install snap ring on upper shaft with box wrench.

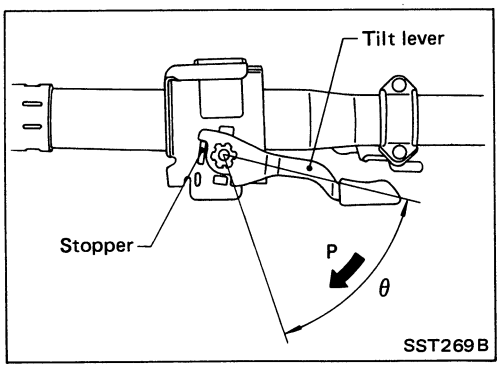

Tilt mechanism (For CANADA)

Adjust tilt lever as follows:

(1) When tilt lever contacts stopper, tighten adjusting bolt securely.
(2) Turn tilt lever by 90° (θ) in direction "P" to check that steering column moves smoothly without binding.
(3) Return tilt lever to position θ. Make sure there is no free play (=0) of steering column when steering wheel is pushed down by force.
(4) Install lock washer and E-ring.

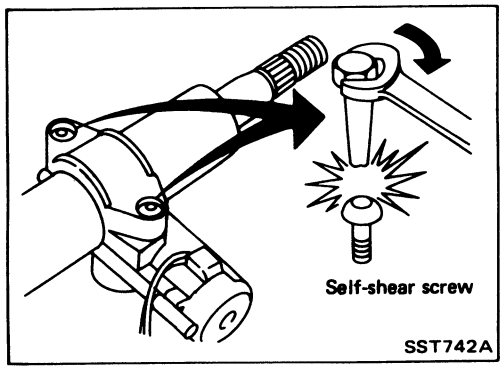

- Steering lock

a) Break self-shear type screws with a drill or other appropriate tool.
b) Install self-shear type screws and then cut off self-shear type screw heads.

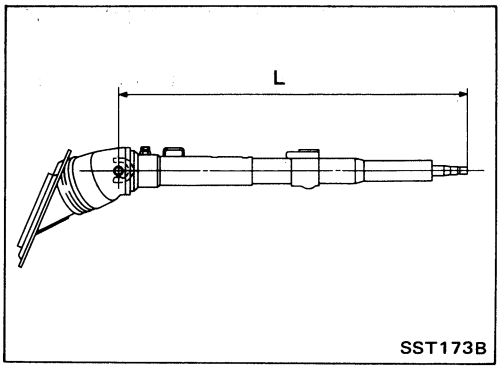

Inspection

- When steering wheel can not be rotated smoothly, check the steering column for the following matters and replace damaged parts.

a. Check column bearings for damage or unevenness. Lubricate with recommended multi-purpose grease or replace steering column as an assembly, if necessary.

b. Check jacket tube for deformation or breakage. Replace if necessary.

- When the vehicle is involved in a light collision, check steering column length "L". If it is not within specifications, replace steering column as an assembly.

  Steering column length "L":

  625.2 - 626.8 mm (24.61 - 24.68 in)

Removal and Installation

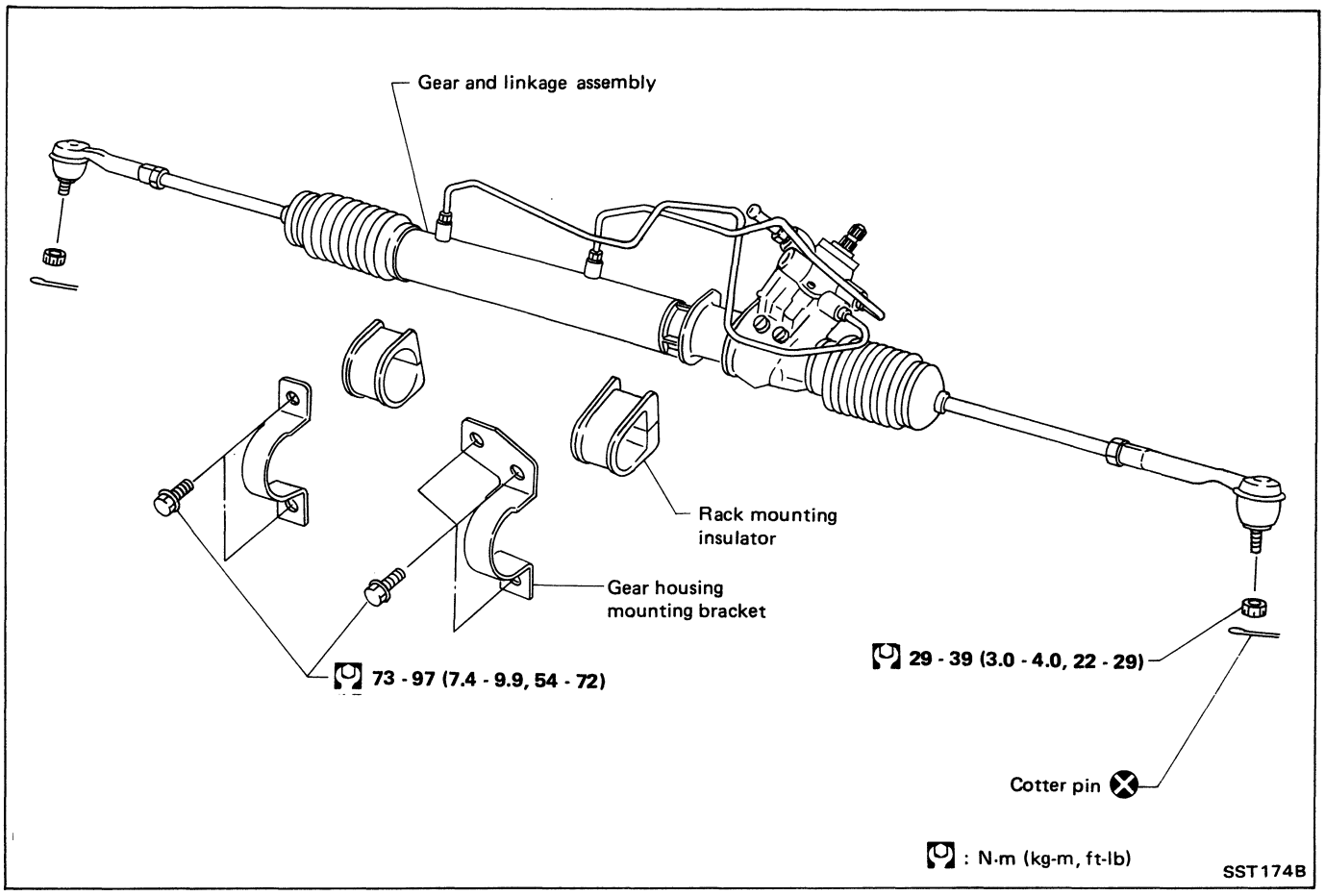

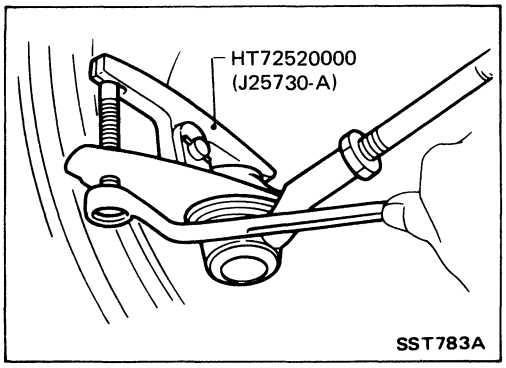

- Detach tie-rod outer sockets from knuckle arms with Tool.

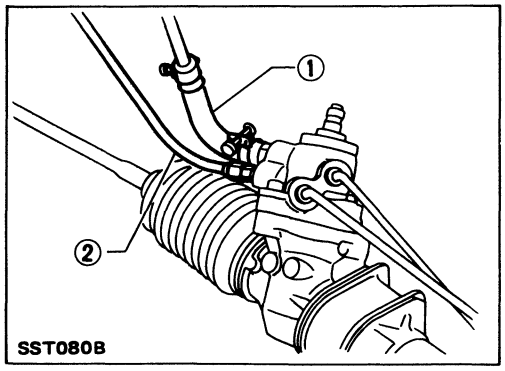

- Install pipe connector.
  - ① Low-pressure side
    : 27 - 39 N·m (2.8 - 4.0 kg-m, 20 - 29 ft-lb)
  - ② High-pressure side
    : 15 - 25 N·m (1.5 - 2.5 kg-m, 11 - 18 ft-lb)

Removal and Installation (Cont'd)

- Observe specified tightening torque when tightening high-pressure and low-pressure pipe connectors. Excessive tightening can damage threads or damaged connector O-ring.
- The O-ring in low-pressure pipe connector is larger than that in high-pressure connector. Take care to install the proper O-ring.

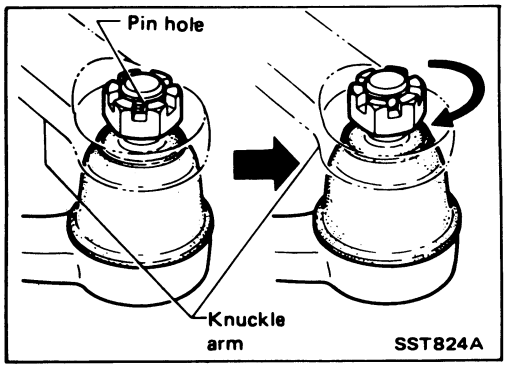

- Initially, tighten nut on tie-rod outer socket and knuckle arm to 29 to 39 N•m (3 to 4 kg-m, 22 to 29 ft-lb). Then tighten further to align nut groove with first pin hole so that cotter pin can be installed.

CAUTION:
Tightening torque must not exceed 49 N•m (5 kg-m, 36 ft-lb).

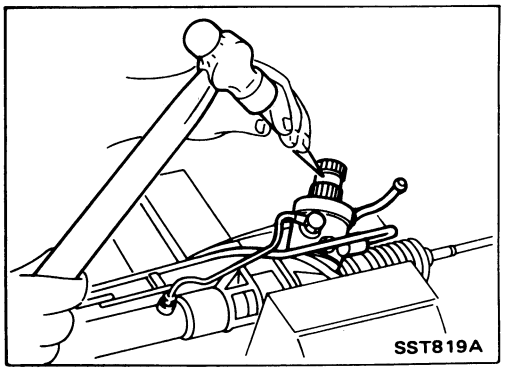

- Before removing lower joint from gear, set gear in neutral (wheels in straight-ahead position). After removing lower joint, put matching mark on pinion shaft and pinion housing to record neutral position of gear.
- To install, set left and right dust boots to equal deflection, and attach lower joint by aligning matching marks of pinion shaft and pinion housing.

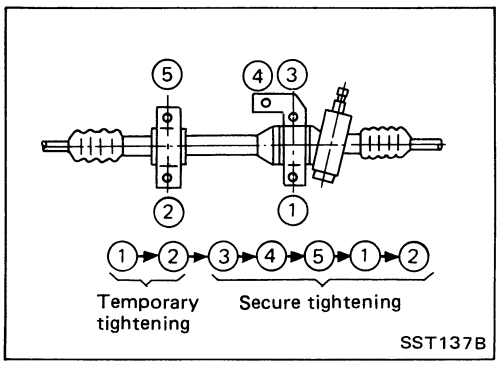

- Tighten gear housing mounting bracket bolts in the order shown.

Disassembly and Assembly

The table below lists four ways to repair oil leaks in the steering gear, depending on the location of the leak. **See the following figure for oil leak locations.**

Position of oil leak / Item	① Rear housing cover and rear housing	② Boot	③ Boot	④ Gear housing tube
Operation	■ Replacement • Rear oil seal • Pinion oil seal • O-ring • Snap ring	■ Replacement • Rack oil seal • Boot clamp	■ Replacement • Rack oil seal • O-ring • Back-up collar • Boot clamp	■ Replacement • Gear housing tube • Copper washer
Procedure	Remove gear from vehicle. Measure rack starting force and pinion rotating torque. Replace parts described above.	Replace rack oil seal.	Replace parts described above.	Replace gear housing tube.
	Measure pinion rotating torque. Adjust adjusting screw. Measure rack starting force and pinion rotating torque.			
Service parts to be prepared	• Pinion seal kit	• Gear housing seal kit	• Rack oil seal • Pinion seal kit	• Gear housing seal kit

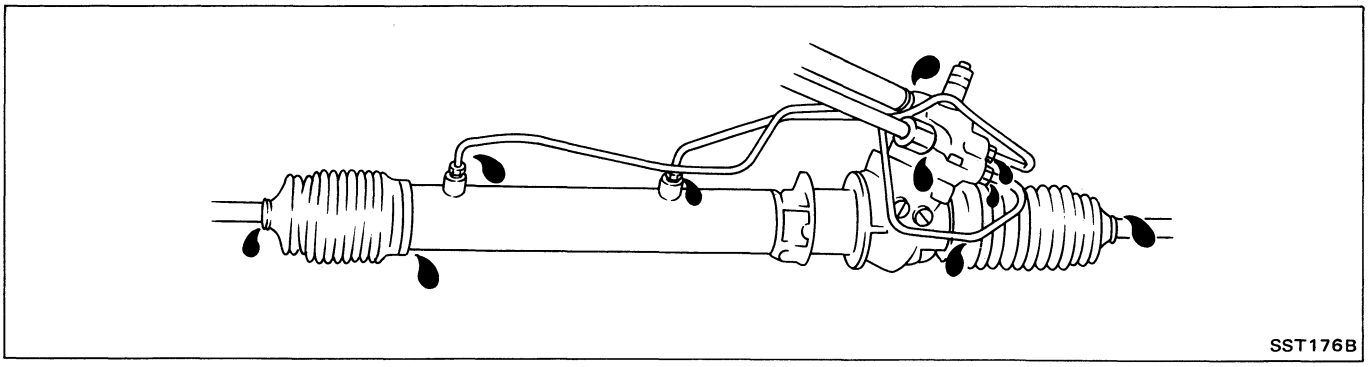

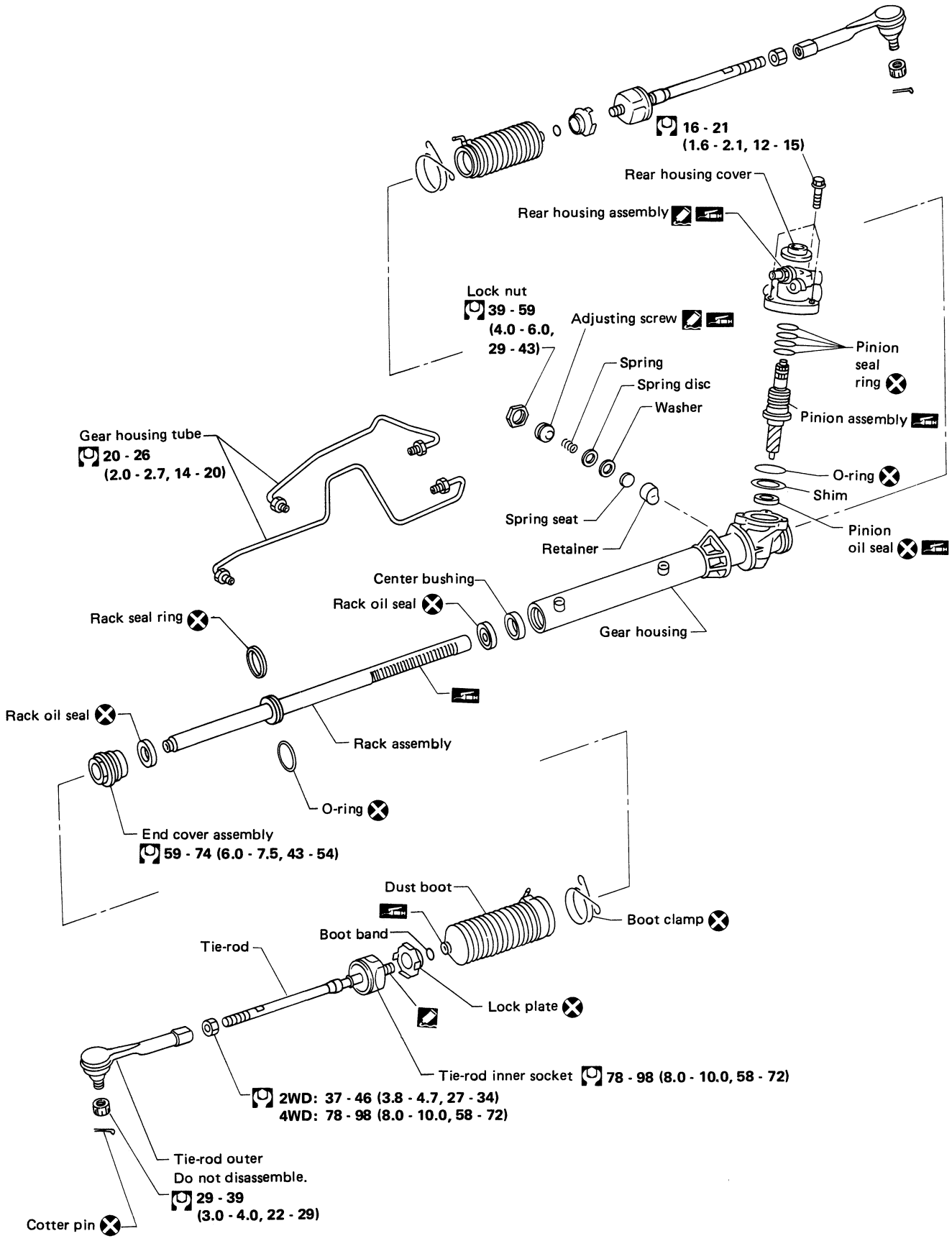

: N·m (kg-m, ft-lb)

SST270B

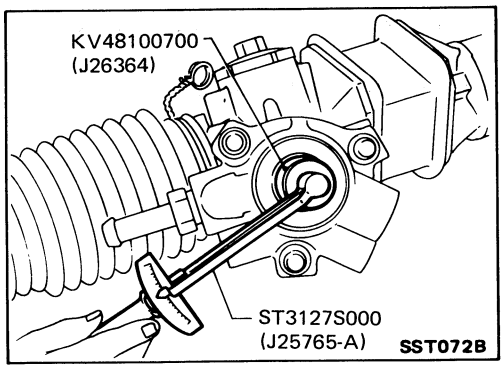

Disassembly

1. Prior to disassembling, measure pinion rotating torque. Record the pinion rotating torque as a reference.
- **Before measuring, disconnect gear housing tube and drain fluid.**
- **Use soft jaws when holding steering gear housing. Handle gear housing carefully, as it is made of aluminum. Do not grip cylinder in a vise.**
2. Remove pinion gear.
- **Be careful not to damage pinion gear when removing pinion seal ring.**
3. Remove tie-rod outer sockets and boots.
4. Loosen tie-rod inner socket by prying up staked portion, and remove socket.
5. Remove retainer.
6. Remove pinion assembly.

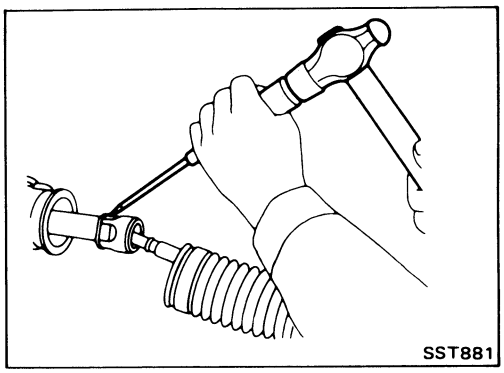

7. Drill staked portion of gear housing end with drill of 2 to 2.5 mm (0.079 to 0.098 in) diameter, until the staking is eliminated.

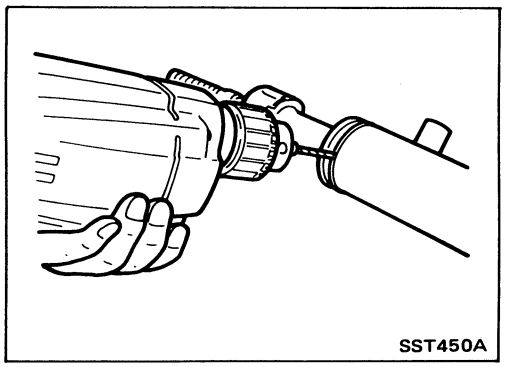

8. Remove end cover assembly with suitable tool.
9. Draw out rack assembly.

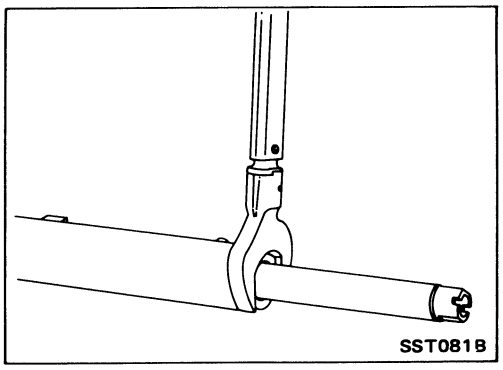

10. Remove rack seal ring.
- Using a heat gun, heat rack seal to approximately 40°C (104°F).
- Remove rack seal ring. Be careful not to damage rack.
- Replace rack seal ring and O-ring with new ones.

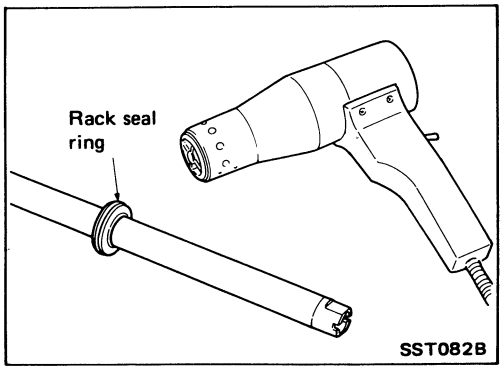

Disassembly (Cont'd)

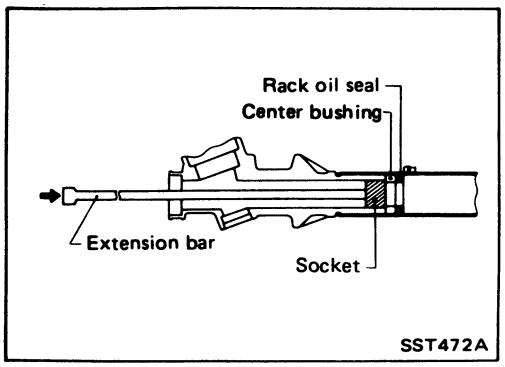

11. Remove center bushing and rack oil seal using tape wrapped socket and extension bar.

Do not scratch inner surfaces of pinion housing.

Assembly

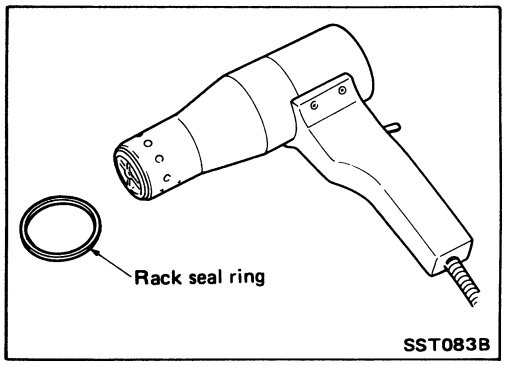

1. Using a heat gun, heat rack seal ring (made of Teflon) to approximately 40°C (104°F) and install it onto rack with your hand.

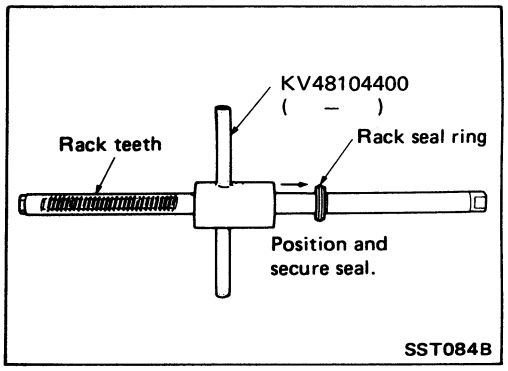

- Using Tool, compress periphery of rack seal ring (made of Teflon) to position and secure it on rack.

Always insert the tool from the rack gear side.

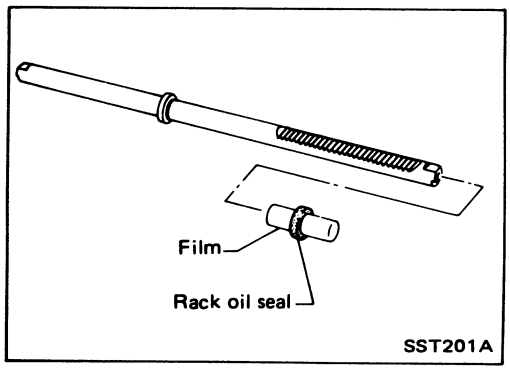

2. Insert rack oil seal.
- Place plastic film into rack oil seal to prevent damage by rack teeth.
- Always remove plastic film after rack oil seal is positioned properly.
- Make sure lips of rack oil seal face each other.

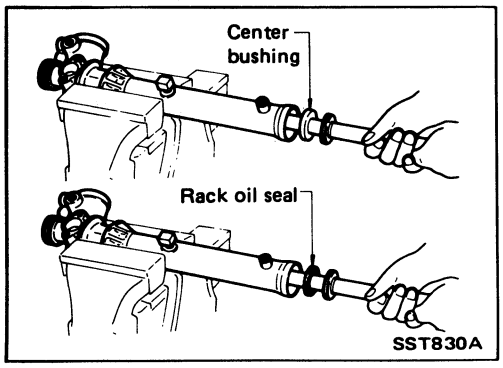

3. Install center bushing and rack oil seal with rack assembly.

Assembly (Cont'd)

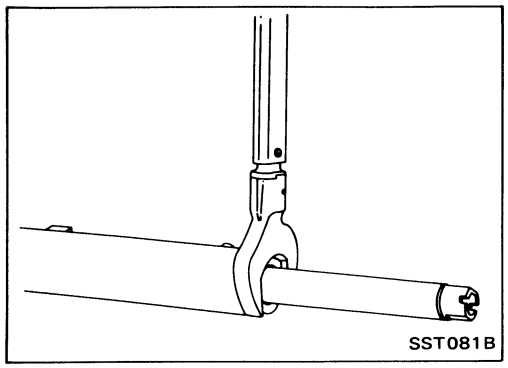

4. Tighten end cover assembly with suitable tool.

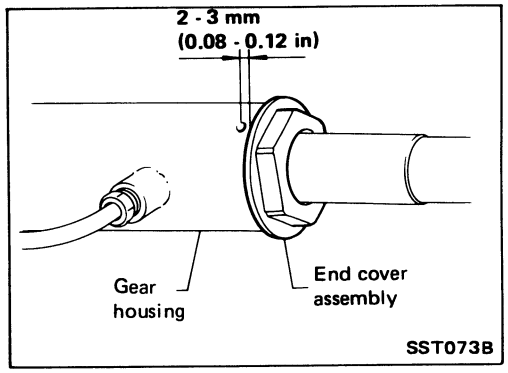

5. Fasten end cover assembly to gear housing by staking.

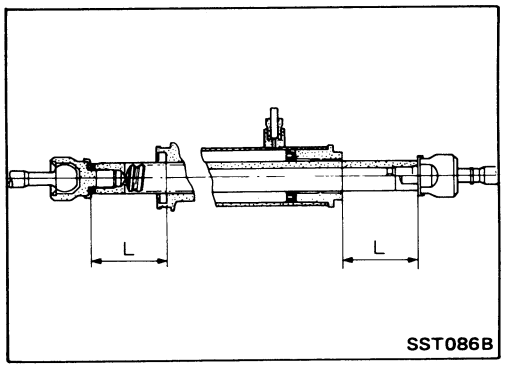

6. Set rack gear in neutral position.
   Measured length "L":
   Refer to S.D.S.

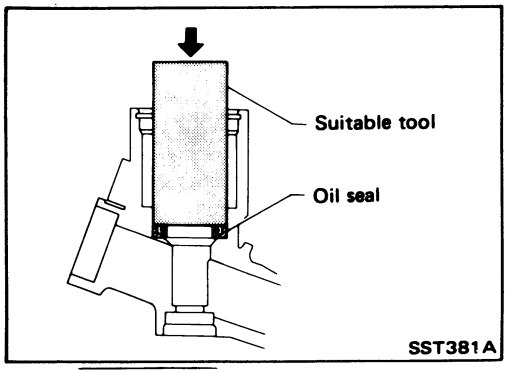

7. Coat seal lip of oil seal with multi-purpose grease and install new pinion oil seal to pinion housing of gear housing with suitable tool.
   - Make sure lip of oil seal faces up when installed.

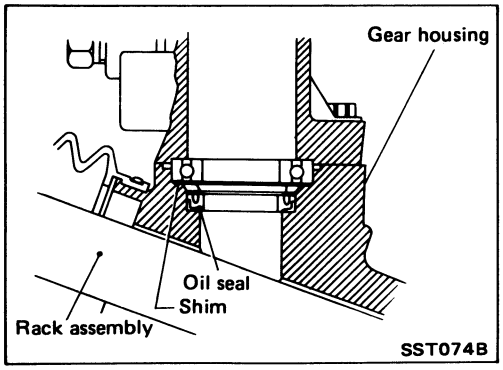

8. Install pinion bearing adjusting shim(s).
   - Whenever pinion assembly, gear housing and rear housing are disassembled, replace shim(s) with new ones. Always use the same number of shim(s) when replacing.

Assembly (Cont'd)

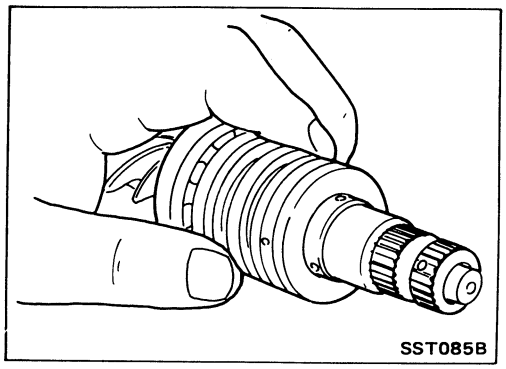

9. Install pinion seal ring on pinion gear assembly.
- Using a heat gun, heat pinion seal ring to approximately 40°C (104°F) before installing it onto pinion gear assembly.
- Make sure pinion seal ring is properly settled in valve groove.

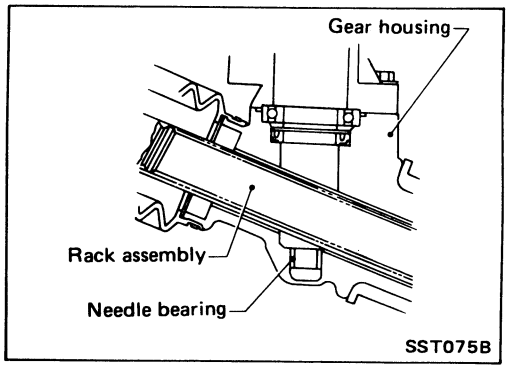

10. Apply a coat of multi-purpose grease to needle bearing roller and oil seal lip before installing pinion assembly in gear housing.

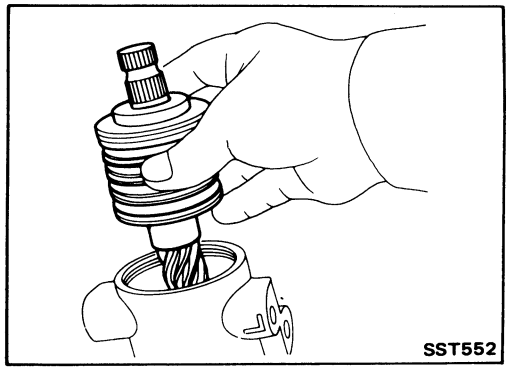

11. Install pinion assembly to pinion housing of gear housing.
Be careful not to damage pinion oil seal.

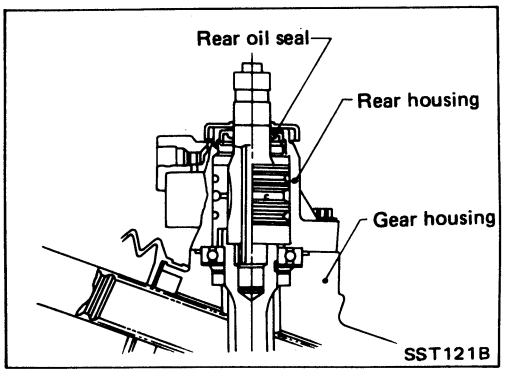

12. Apply a coat of multi-purpose grease to rear oil seal lip before installing rear housing.

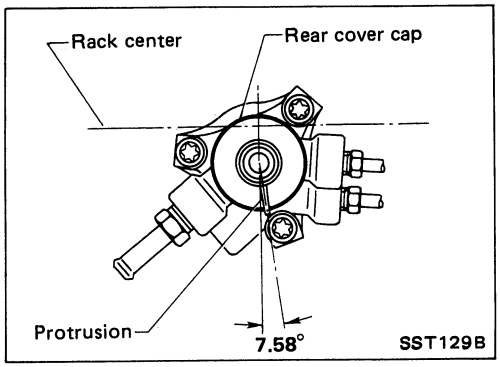

13. Install rear cover cap so that protrusion of rear housing cover is positioned as shown in figure at left.
Be careful not to damage worm ring and oil seal.

Assembly (Cont'd)

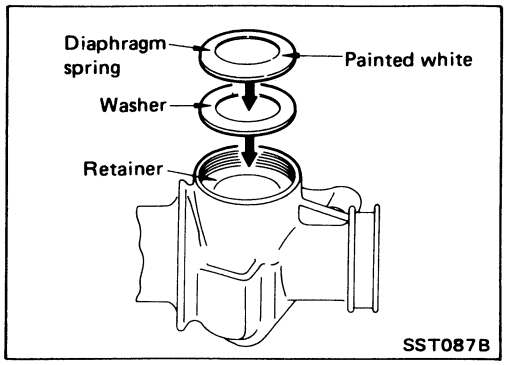

14. Install diaphragm spring at retainer.
- Always install retainer, spring washer and diaphragm spring in that order.
- Make sure convex end (painted white) of diaphragm spring faces outward when installing.

15. Install retainer spring and adjusting screw temporarily.

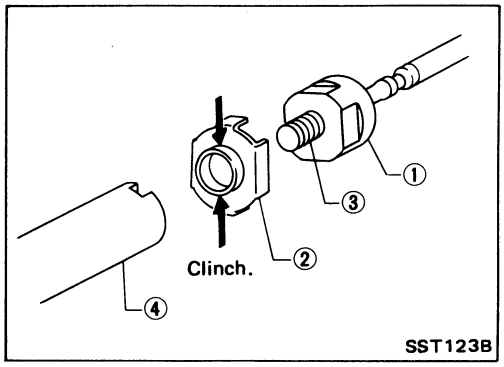

16. Install new lock plate.
- Attach lock plate ② to side rod inner socket ①.
- Apply locking sealant to inner socket threads ③. Screw inner socket into rack ④ and tighten to specified torque.
- Clinch two places of lock plate at rack's groove.

CAUTION:
To prevent scratching the boot, remove burrs from lock plate.

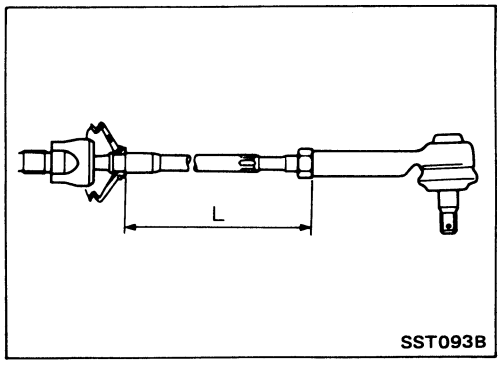

17. Tighten outer socket lock nut.
Tie-rod length "L":
Refer to S.D.S.

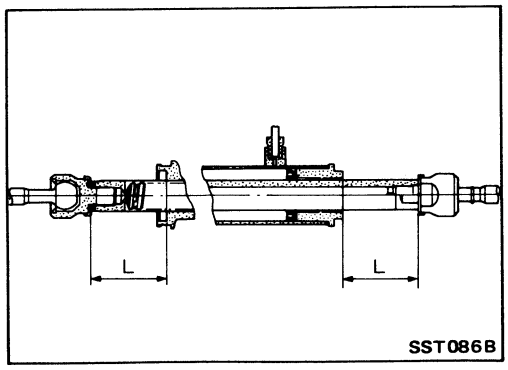

18. Measure rack stroke.
Measured length "L":
Refer to S.D.S.

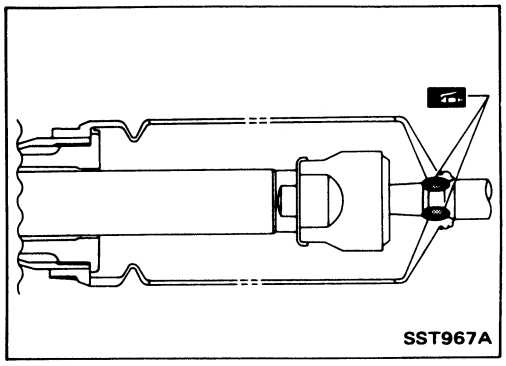

19. Before installing boot, coat the contact surfaces between boot and tie-rod with grease.

Assembly (Cont'd)

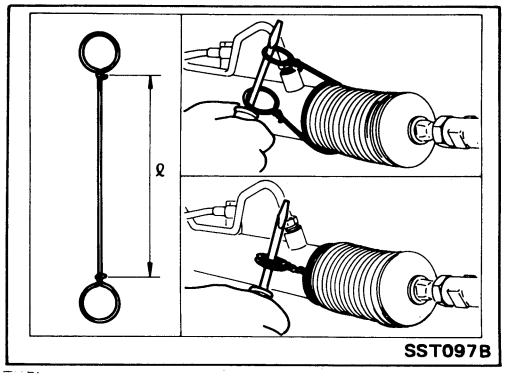

20. Install boot clamps.
- To install, wrap boot clamp around boot groove twice. Tighten clamp by twisting rings at both ends 4 to 4-1/2 turns with screwdriver while pulling with a force of approx. 98 N (10 kg, 22 lb).

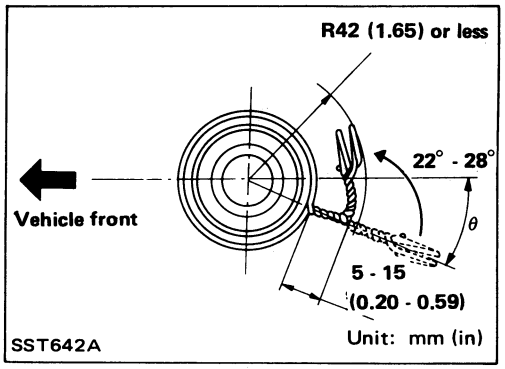

- Install boot clamp so that it is to the rear of the vehicle when gear housing is attached to the body. (This will prevent interference with other parts.)

  θ : **2WD 45° - 65°**
  4WD 35° - 55°

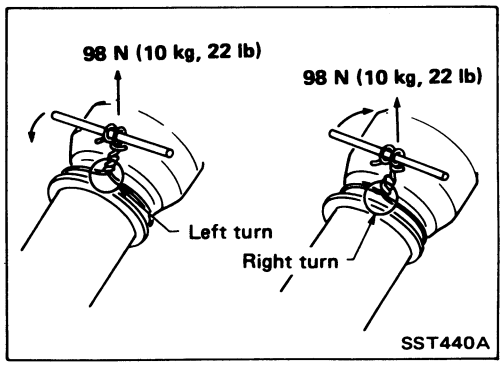

- Twist boot clamp in the direction shown in figure at left.

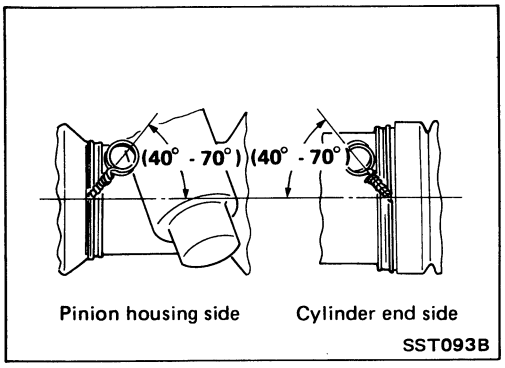

- After twisting boot clamp, bend twisted and diagonally so it does not contact boot.

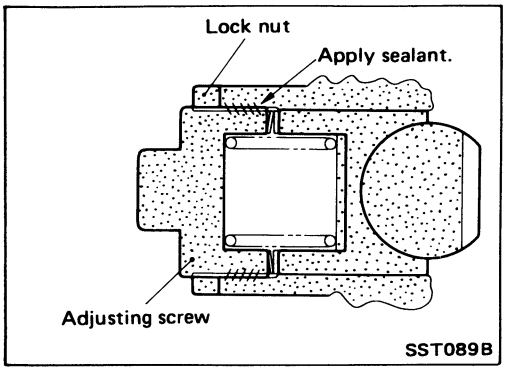

Adjustment

Adjust pinion rotating torque as follows:
1. Set gears to Neutral without fluid in the gear.
2. Coat the adjusting screw with locking sealant and screw it in.
3. Lightly tighten lock nut.
4. Tighten adjusting screw to a torque of 4.9 to 5.9 N•m (50 to 60 kg-cm, 43 to 52 in-lb).
5. Loosen adjusting screw, then retighten it to 0.05 to 0.20 N•m (0.5 to 2 kg-cm, 0.43 to 1.74 in-lb).
6. Move rack over its entire stroke several times.

Adjustment (Cont'd)

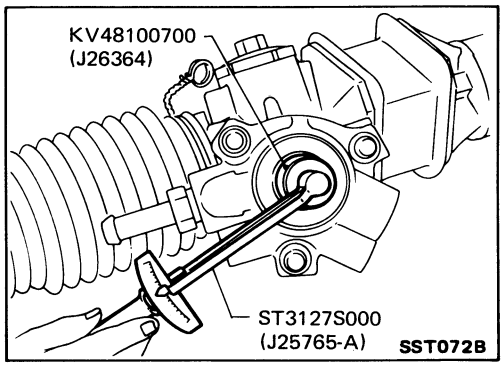

7. Measure pinion rotating torque within the range of 180° from neutral position.
   Stop the gear at the point of maximum torque.
8. Loosen adjusting screw, then retighten it to 4.9 to 5.9 N•m (50 to 60 kg-cm, 43 to 52 in-lb).
9. Loosen adjusting screw by 40° to 60°.

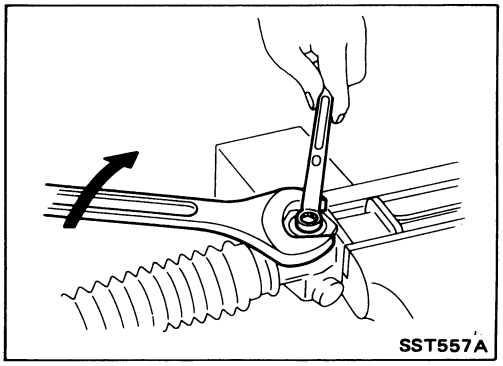

10. Prevent adjusting screw from turning, and tighten lock nut to specified torque.

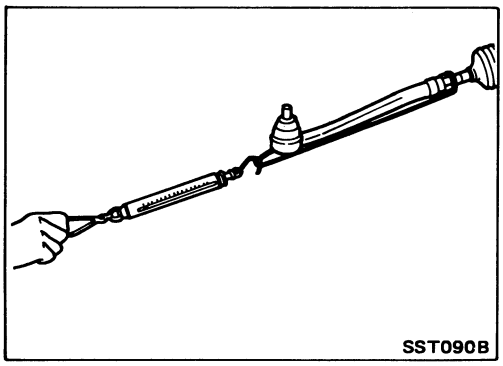

11. Check steering gear for rack sliding frictional force.
    Around neutral point of rack stroke
    ±5.5 mm (±0.217 in):
    122.6 - 166.7 N (12.5 - 17 kg, 27.6 - 37.5 lb)
    Except for neutral point:
    122.6 - 186.3 N (12.5 - 19 kg, 27.6 - 41.9 lb)

    If sliding frictional force is out of specification, repeat the adjustment procedure, starting from No. 4.
    After the readjustment, if sliding force is still out of specification, steering gear is damaged.

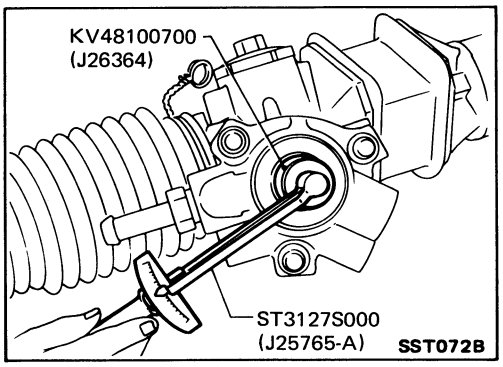

12. Measure pinion rotating torque within the range of ±100° from the neutral point.
    Average rotating torque
    [(Max. measured value + Min. measured value) x 0.5]:
    0.8 - 1.3 N•m (8 - 13 kg-cm, 6.9 - 11.3 in-lb)
    Maximum torque increment:
    Less than 0.4 N•m (4 kg-cm, 3.5 in-lb)
    Except for above mentioned measuring range:
    Maximum rotating torque
    1.9 N•m (19 kg-cm, 16 in-lb)
    Maximum torque increment
    Less than 0.6 N•m (6 kg-cm, 5.2 in-lb)

- If pinion rotating torque is not within specification, readjust it.
- After the readjustment, if pinion rotating torque is still out of specification, steering gear is damaged.

Inspection

Thoroughly clean all parts in cleaning solvent or automatic transmission fluid "DEXRON™ Type", and blow dry with compressed air, if available.

BOOT

Check condition of boot. If cracked excessively, replace it.

RACK

Thoroughly examine rack gear. If damaged, cracked or worn, replace it.

PINION ASSEMBLY

- Thoroughly examine pinion gear. If pinion gear is damaged, cracked or worn, replace it.
- Inspect bearings to see that they roll freely and are free from cracked, pitted, or worn balls, rollers and races. Replace if necessary.

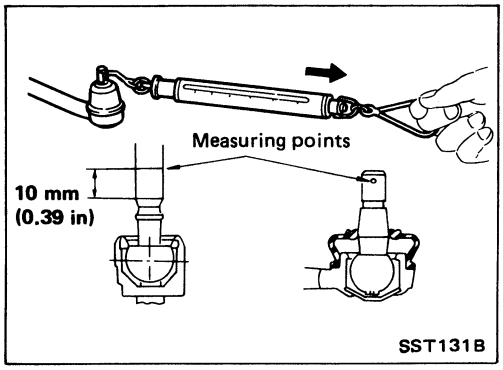

TIE-ROD OUTER AND INNER SOCKET

- Check ball joint for swinging force.
  Tie-rod outer ball joint:
  3.24 - 69.63 N (0.33 - 7.1 kg, 0.73 - 15.66 lb)
  Tie-rod inner ball joint:
  2.9 - 205.9 N (0.3 - 21 kg, 0.7 - 46.3 lb)

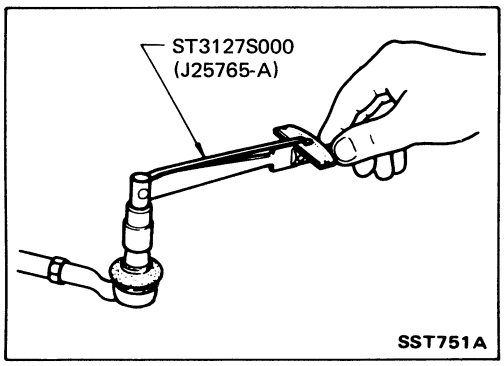

- Check ball joint for rotating torque.
  Tie-rod outer ball joint:
  0.15 - 2.94 N•m
  (1.5 - 30.0 kg-cm, 1.3 - 26.0 in-lb)

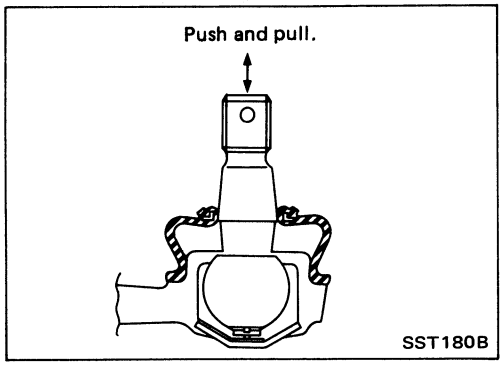

- Check ball joint for axial end play.
  Tie-rod outer ball joint:
  0.5 mm (0.020 in) or less
  Tie-rod inner ball joint:
  0 mm (0 in)
- Check condition of dust cover. If cracked excessively, replace it.

Inspection (Cont'd)

GEAR HOUSING CYLINDER

Check gear housing cylinder for scratches or other damage. Replace if necessary.

Disassembly and Assembly

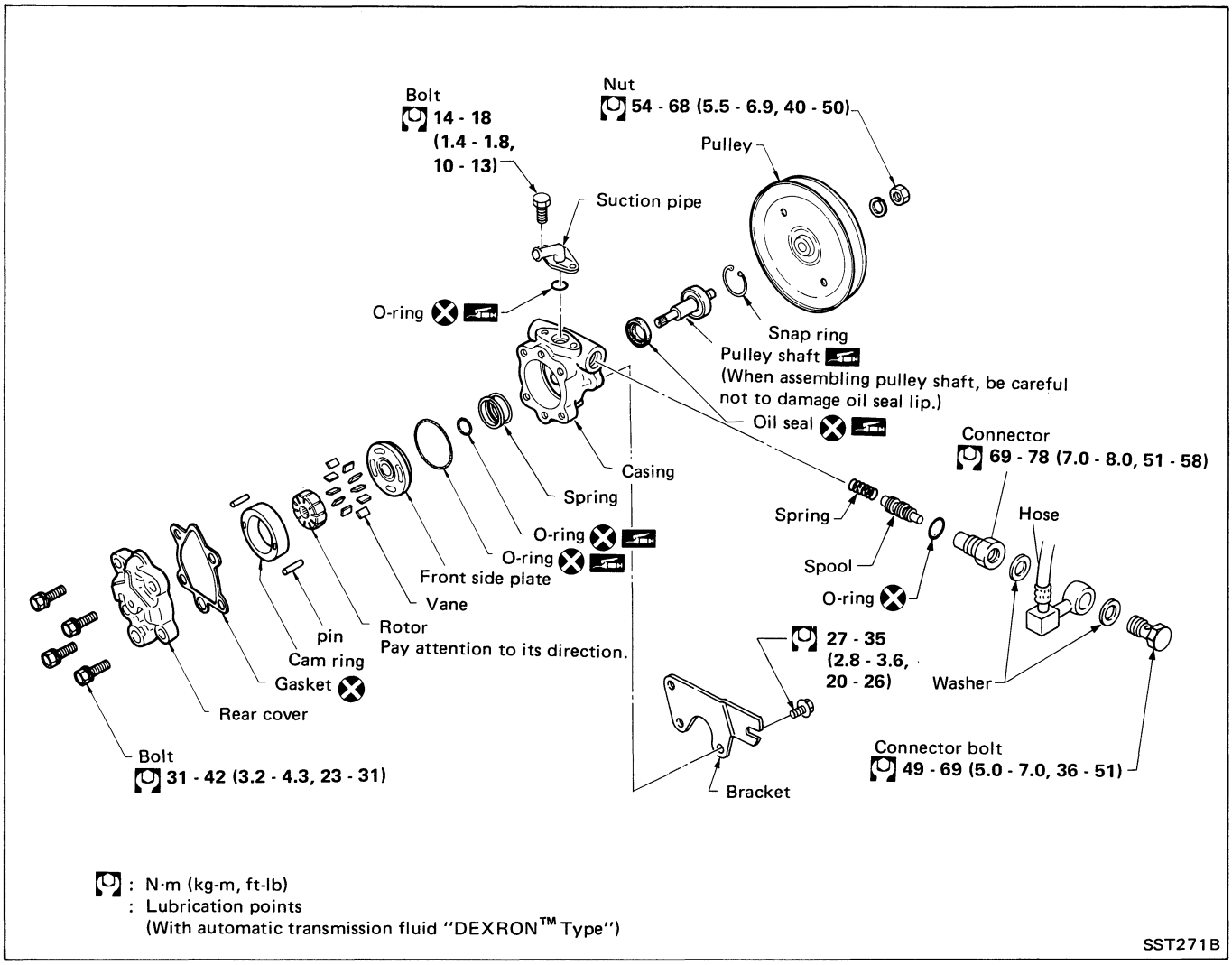

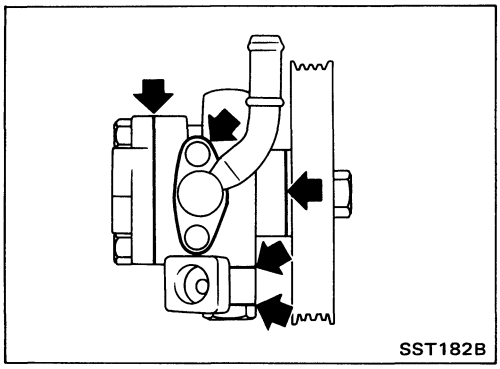

Pre-disassembly Inspection

Disassemble the power steering oil pump only if the following items are found.

- Oil leak from any point shown in the figure
- Deformed or damaged pulley

Disassembly

CAUTION:

- **Parts which can be disassembled are strictly limited. Never disassemble parts other than those specified.**
- **Disassemble in as clean a place as possible.**
- **Clean your hands before disassembly.**
- **Do not use rags; use nylon cloths or paper towels.**
- **Follow the procedures and cautions in the Service Manual.**
- **When disassembling and reassembling, do not let foreign matter enter or contact the parts.**

Disassembly (Cont'd)

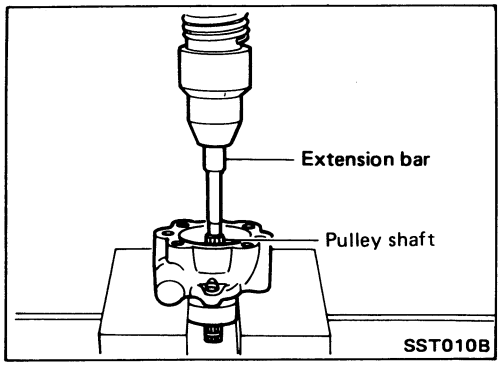

- Remove snap ring, then draw pulley shaft out.

Be careful not to drop pulley shaft.

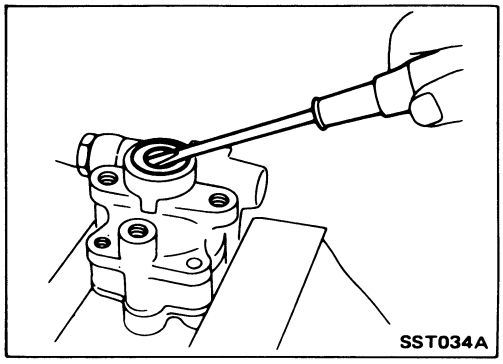

- Remove oil seal.

Be careful not to damage front housing.

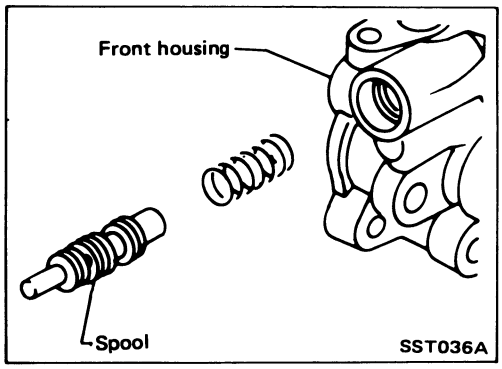

- Remove connector.

Be careful not to drop spool.

Inspection

PULLEY AND PULLEY SHAFT

- If pulley is cracked or deformed, replace it.
- If an oil leak is found around pulley shaft oil seal, replace the seal.
- If serration of pulley or pulley shaft is deformed or worn, replace it.

Assembly

Assemble oil pump in the reverse order of disassembly, noting the following instructions.

- Before installation, coat the O-rings and oil seal with A.T.F.
- Make sure O-rings and oil seal are properly installed.
- When assembling vanes to rotor, rounded surfaces of vanes must face cam case side.
- Always install new O-rings and oil seal.
- Be careful of oil seal direction.

Assembly (Cont'd)

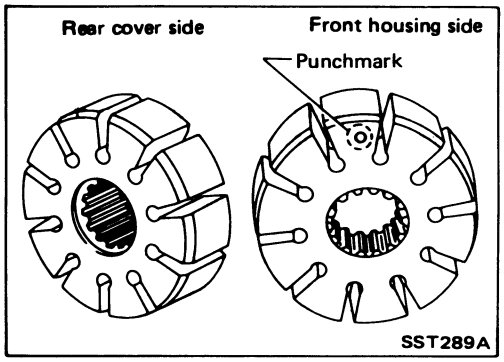

- Pay attention to the direction of rotor.

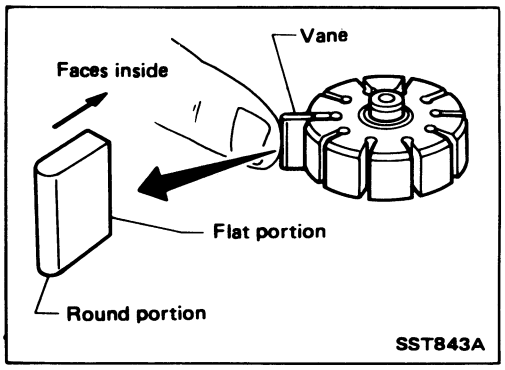

- Install vanes properly.

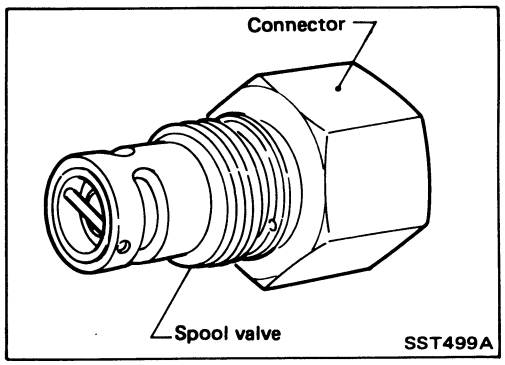

CAUTION:
Do not remove spool valve from connector.

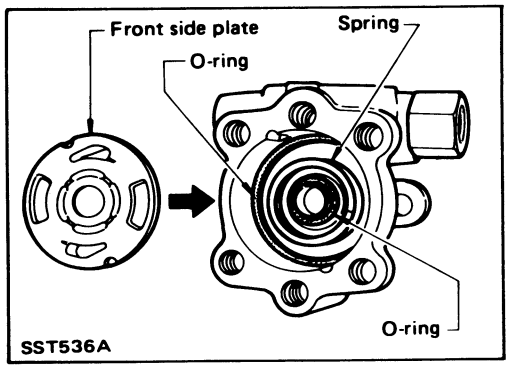

- Apply A.T.F. to O-ring.

Assembly (Cont'd)

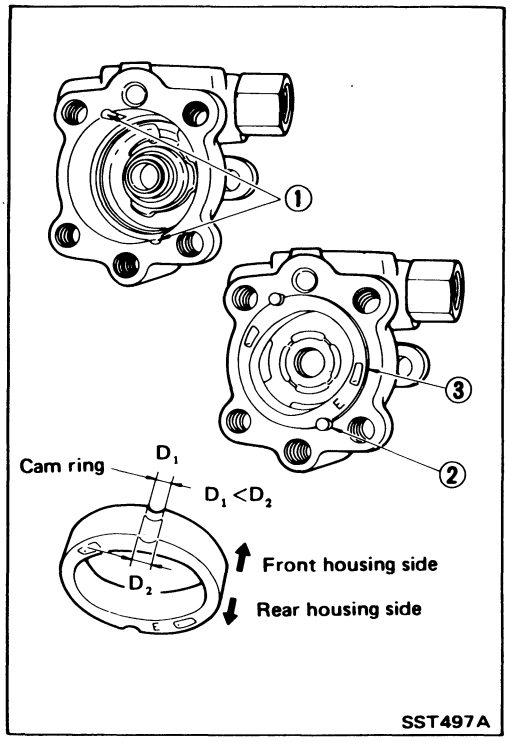

- Insert pin ② into pin groove ① of front housing and rotor. Then install cam ring ③ as shown at left.

General Specifications

Model		2WD	4WD
Steering model		Power steering	
Steering gear type		PR26SC	
Turn of steering wheel (Lock to lock)		3.3	3.1
Steering column type	U.S.A.	Collapsible, non-tilt	
	CANADA	Collapsible, tilt	

Inspection and Adjustment

GENERAL

Steering wheel axial play mm (in)	0 (0)
Steering wheel play mm (in)	0 - 35 (0 - 1.38)

STEERING COLUMN

Steering column length "L" mm (in)	625.2 - 626.8 (24.61 - 24.68)

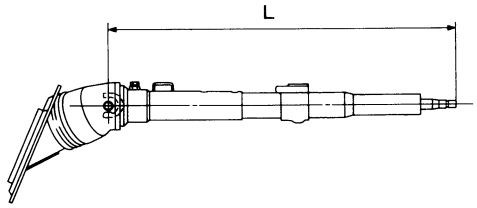

SST173B

STEERING GEAR AND LINKAGE

Item \ Steering gear type	PR26SC 2WD	PR26SC 4WD
Tie-rod outer ball joint Swinging force* N (kg, lb)	3.24 - 69.63 (0.33 - 7.1, 0.73 - 15.66)	
Rotating torque N·m (kg-cm, in-lb)	0.15 - 2.94 (1.5 - 30.0, 1.3 - 26.0)	
Axial end play mm (in)	0.5 (0.020)	
Tie-rod inner ball joint Swinging force* N (kg, lb)	2.9 - 205.9 (0.3 - 21, 0.7 - 46.3)	
Axial end play mm (in)	0 (0)	
Tie-rod standard length "L" mm (in)	180 (7.09)	174.9 (6.89)

*: Measuring point

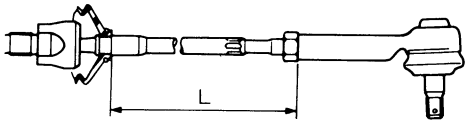

SST093B

Pinion gear preload (Average) N·m (kg-cm, in-lb)	0.78 - 1.27 (8.0 - 13.0, 6.9 - 11.3)	
Rack stroke "L" mm (in)	72 (2.83)	63 (2.48)

PR26SC

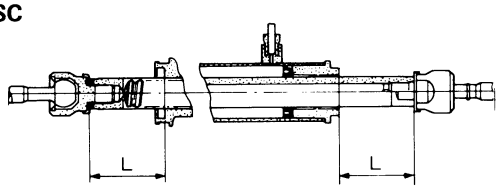

SST086B

Inspection and Adjustment (Cont'd)

POWER STEERING

Rack sliding force N (kg, lb)	166.7 - 255.6 (17.0 - 23.0, 37.5 - 50.7)
Steering wheel turning force (Mesured at one full turn from neutral) N (kg, lb)	39 (4, 9) or less
Normal operating temperature of power steering fluid °C (°F)	60 - 80 (140 - 176)
Fluid capacity (Approximate) ℓ (US qt, Imp qt)	1.0 (1-1/8, 7/8)
Oil pump maximum pressure kPa (kg/cm^2, psi)	7,649 - 8,238 (78 - 84, 1,109 - 1,194)

BODY

SECTION BF

CONTENTS

GENERAL SERVICING
(Including all clips & fasteners) ..... BF- 2
BODY END ..... BF- 6
DOOR
(Including "Power Window and Power Door Lock") BF-11
INSTRUMENT PANEL BF-18
INTERIOR AND EXTERIOR
(In EXTERIOR, including "Weatherstrips") BF-20
SEAT BF-27
AUTOMATIC SEAT BELT SYSTEM BF-32
AUTOMATIC SEAT BELT SYSTEM — Trouble Diagnoses BF-37
WINDSHIELD AND WINDOWS BF-64
REAR AIR SPOILER BF-71
SUN ROOF BF-72
MIRROR — Door Mirror BF-75
BODY ALIGNMENT BF-76

When you read wiring diagrams:
- **Read GI section, "HOW TO READ WIRING DIAGRAMS".**
- **See EL section, "POWER SUPPLY ROUTING" for power distribution circuit.**

When you perform trouble diagnoses, read GI section, "HOW TO FOLLOW FLOW CHART IN TROUBLE DIAGNOSES".

BF

★ **For conventional seat belt, refer to MA section.**

Precautions

- When removing or installing various parts, place a cloth or padding onto the vehicle body to prevent scratches.
- Handle trim, molding, instruments, grille, etc. carefully during removing or installation. Be careful not to soil or damage them.
- Apply sealing compound where necessary when installing parts.
- When applying sealing compound, be careful that the sealing compound does not protrude from parts.
- When replacing any metal parts (for example body outer panel, members, etc.), be sure to take rust prevention measures.

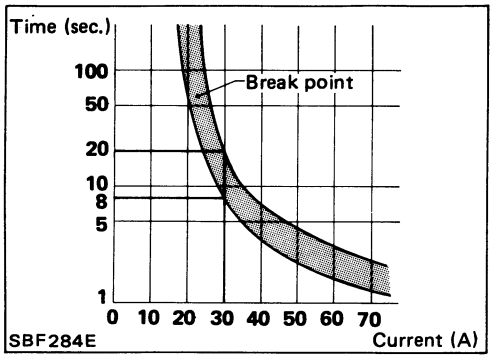

Circuit Breaker Inspection

For example, when current is 30A, the circuit is broken within 8 to 20 seconds.

Circuit breakers are used in the following systems.

- Back door lock
- Power window & power door lock
- Automatic seat belt
- Power sun roof

Clip and Fastener

- Clips and fasteners in BF section correspond to the following numbers and symbols.
- Replace any clips and/or fasteners which are damaged during removal or installation.

No.	Symbol	Shape	Removal & Installation
C101	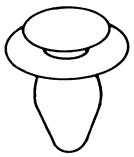 SBF092B	SBF109B	**Removal:** **Remove by bending up with a flat-bladed screwdriver.** 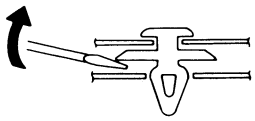 SBF094B
C102	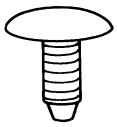 SBF113B	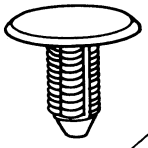 SBF114B 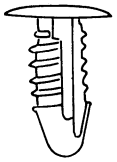 SBF137B	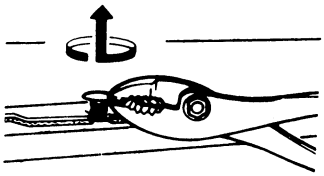 **Removal:** **Pull up by rotating.** SBF115B

Clip and Fastener (Cont'd)

No.	Symbol	Shape	Removal & Installation
C105	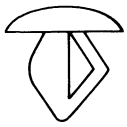 SBF141B	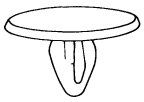 SBF142B	**Removal:** **Tilt clip as indicated by arrow, then draw out.** 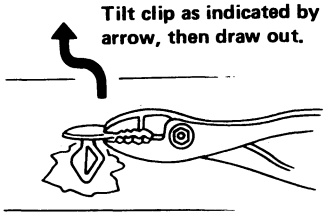 SBF143B
C106	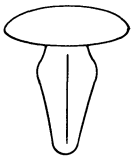 SBF089B	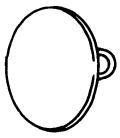 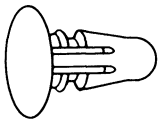 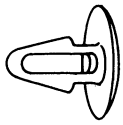 SBF090B	**Removal:** **Remove with a flat-bladed screwdrivers or plier.** 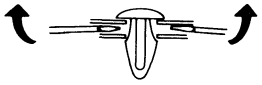 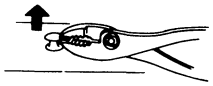 SBF091B
C203	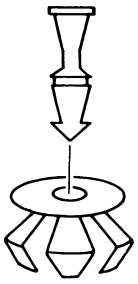 SBF318C	SBF319C	**Push center pin to catching position. (Do not remove center pin by hitting it.)** Push 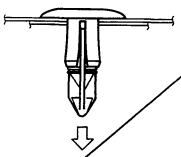 Push 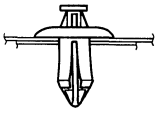 **Installation:** SBF708E
CE103	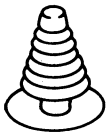 SBF103B	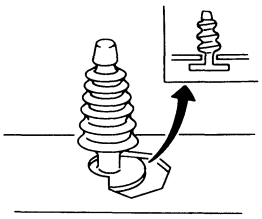 SBF104B	**Removal:** 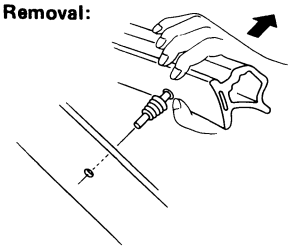 SBF147B
CE114	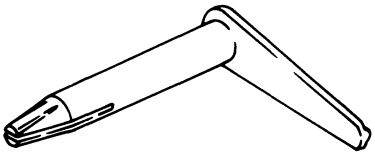 SBF353C		—

Clip and Fastener (Cont'd)

No.	Symbol	Shape	Removal & Installation
CF119	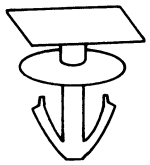 SBF419D	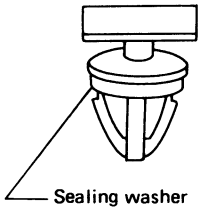 SBF420D	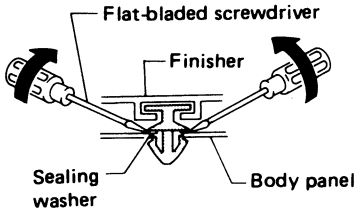 SBF421D
CG101	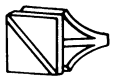 SBF144B	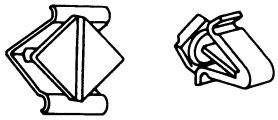 SBF145B	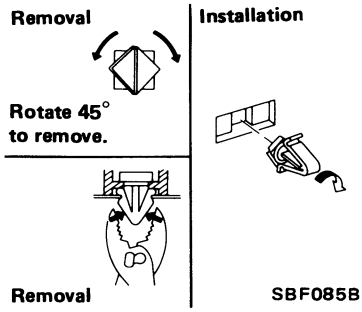 SBF085B
CS102	SBF138B	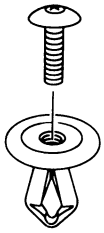 SBF139B	**Removal:** **Screw out with a Phillips screwdriver.** 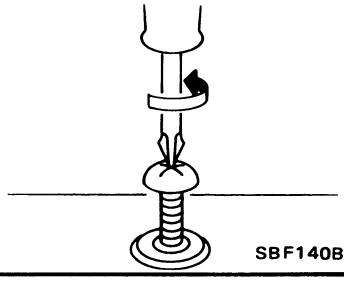 SBF140B
CR103	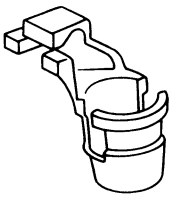 SBF768B		**Removal:** **Holder portion of clip must be spread out to remove rod.** 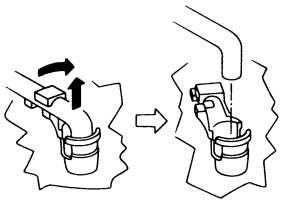 SBF770B

NOTE

Body Front End

- Hood adjustment: Adjust at hinge portion.
- Hood lock adjustment: After adjusting, check hood lock control operation. Apply a coat of grease to hood locks engaging mechanism.
- Hood opener: Do not attempt to bend cable forcibly. Doing so increases effort required to unlock hood.

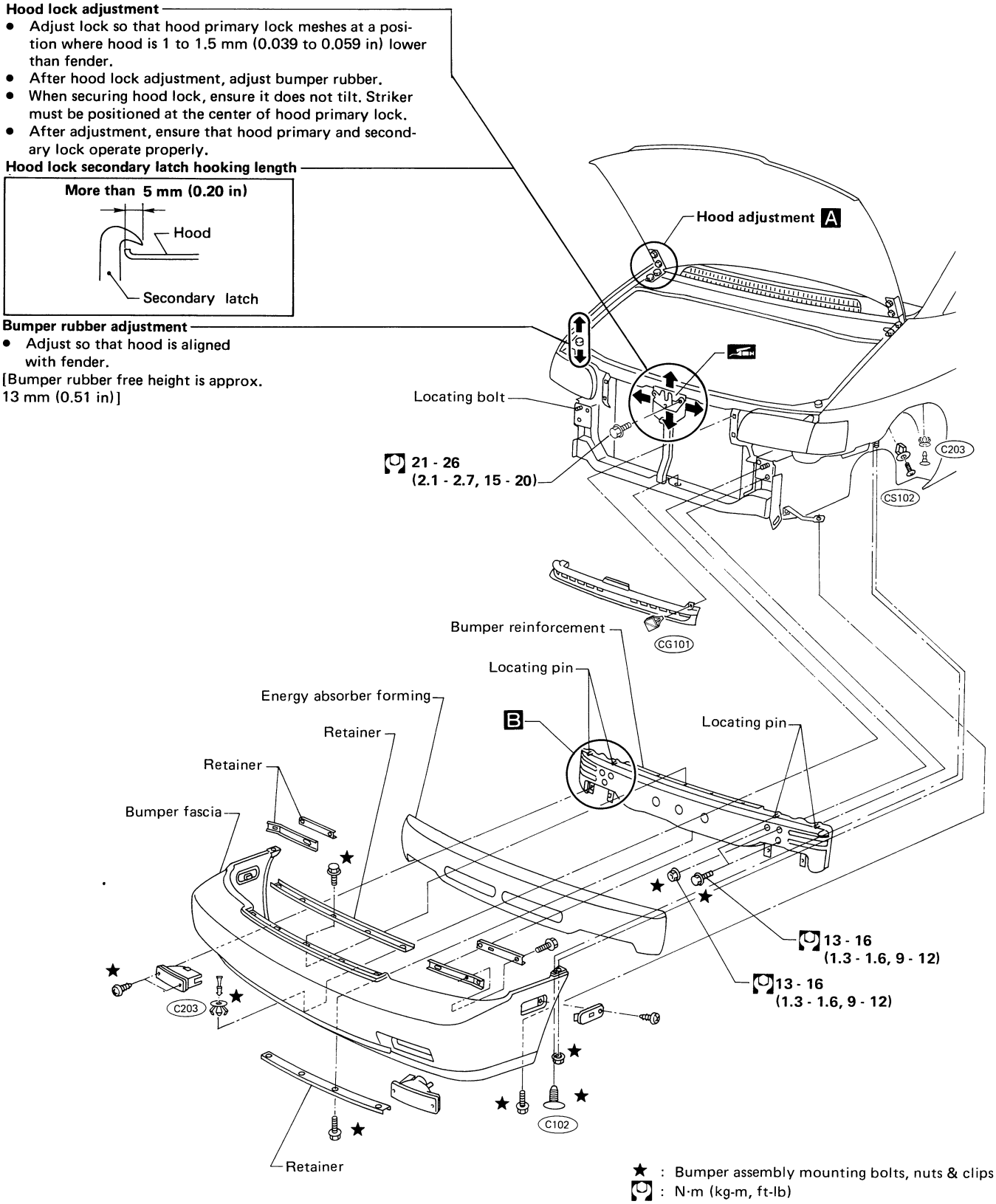

★ : Bumper assembly mounting bolts, nuts & clips
: N·m (kg-m, ft-lb)

Body Front End (Cont'd)

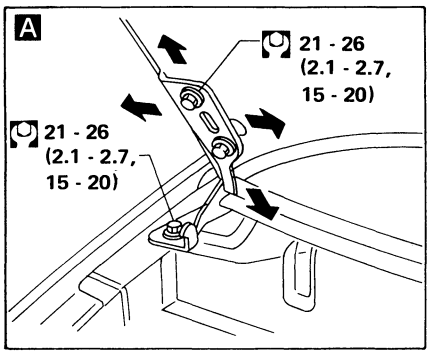

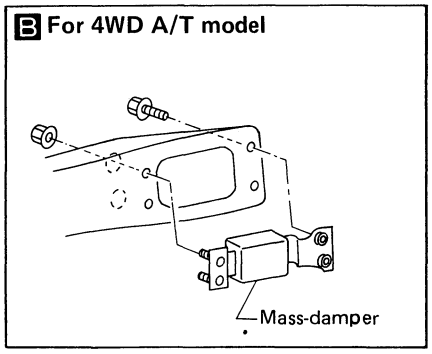

Bumper height

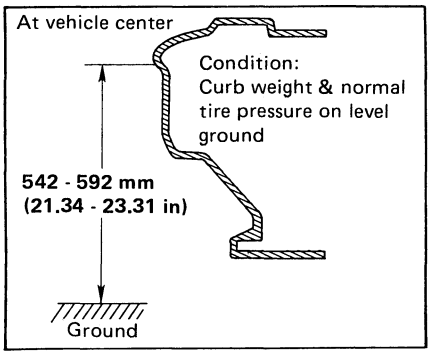

SBF700E

Body Rear End and Opener

- Back door adjustment: Adjust at hinge for proper back door fit.
- Back door lock system adjustment: Adjust lock & striker so that they are in the center. After adjustment, check back door lock operation.
- Before removing bumper, remove rear combination lamp finisher. Refer to "Exterior" for removal procedures.
- Opener cable: Do not attempt to bend cable using excessive force.
- After installation, make sure that back door and fuel filler lid open smoothly.

WARNING:

a. Be careful not to scratch back door stay when installing back door. A scratched stay may cause gas leakage.

b. The contents of the back door stay are under pressure. Do not take apart, puncture, apply heat or allow fire near it.

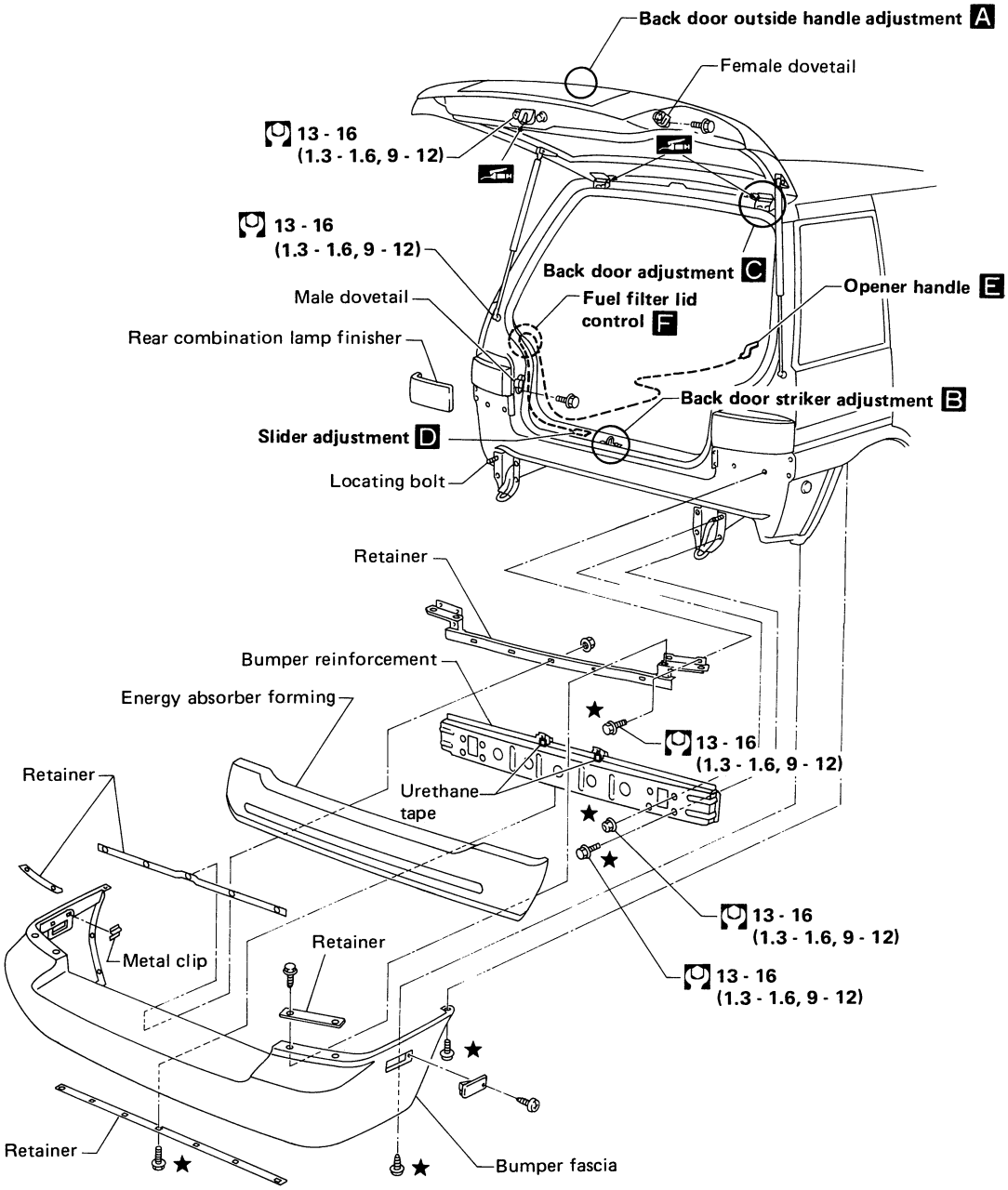

★ : Bumper assembly mounting bolts & nuts
: N·m (kg-m, ft-lb)

Body Rear End and Opener (Cont'd)

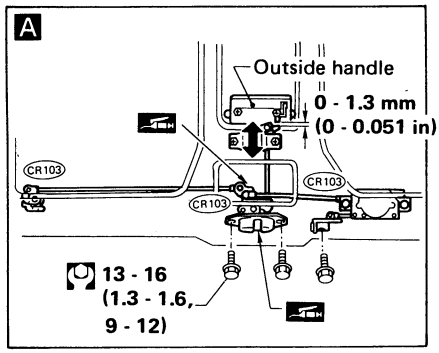

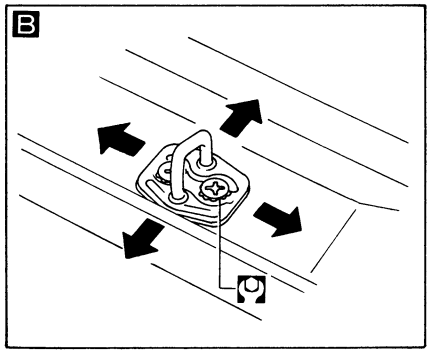

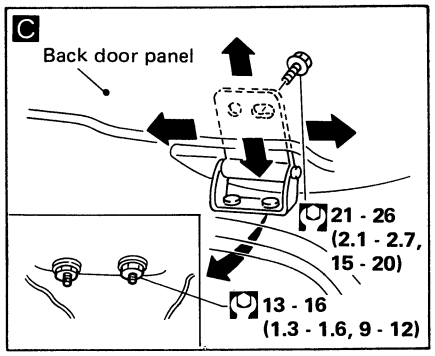

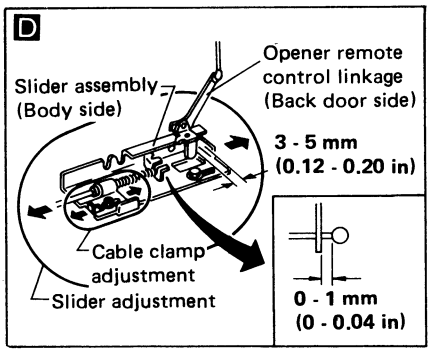

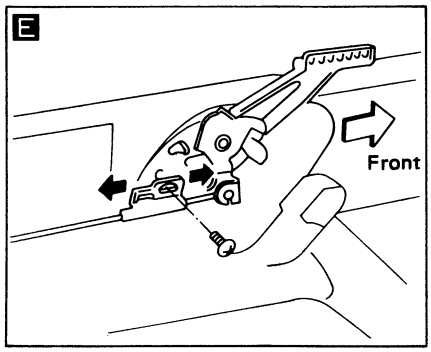

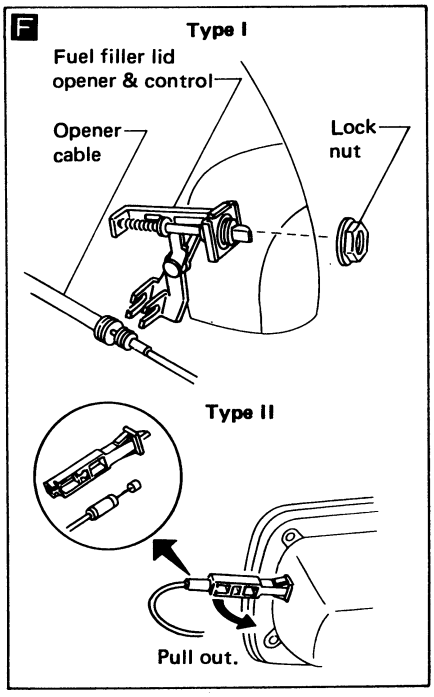

Bumper height

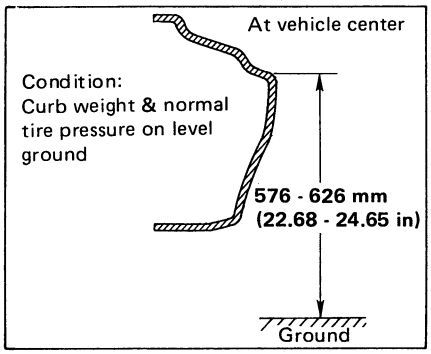

SBF701E

Body Rear End and Opener (Cont'd)

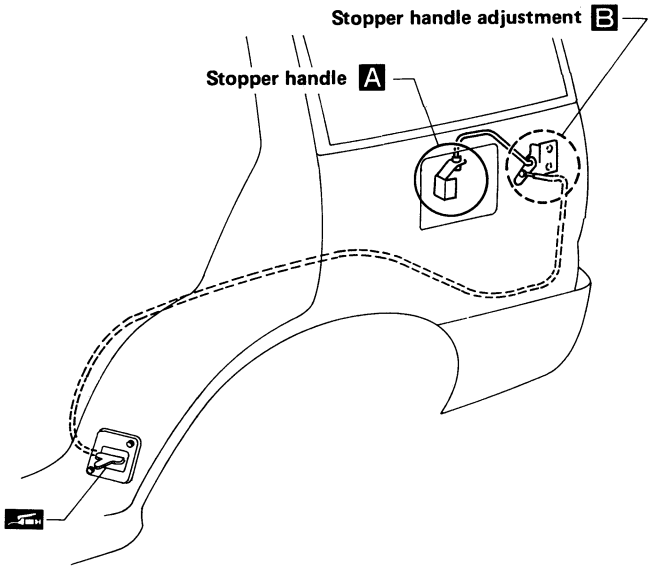

- Adjust so that handle contacts pawl when handle is pulled out.

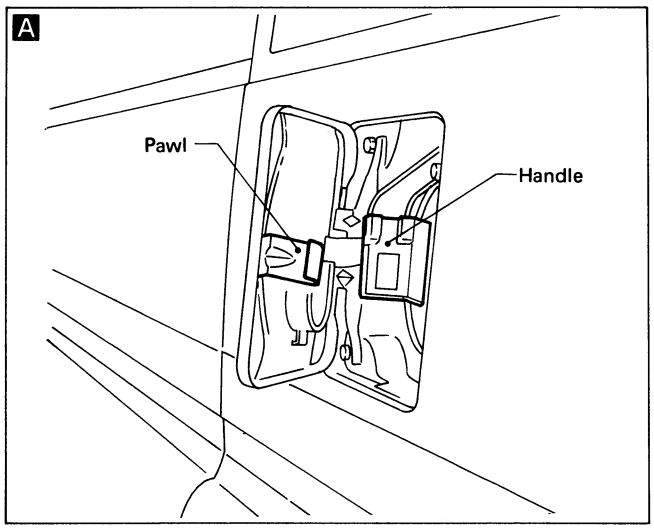

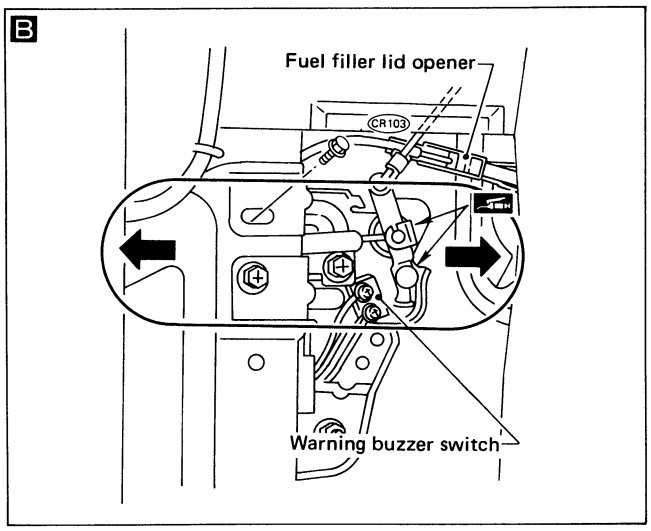

Stopper bracket adjustment

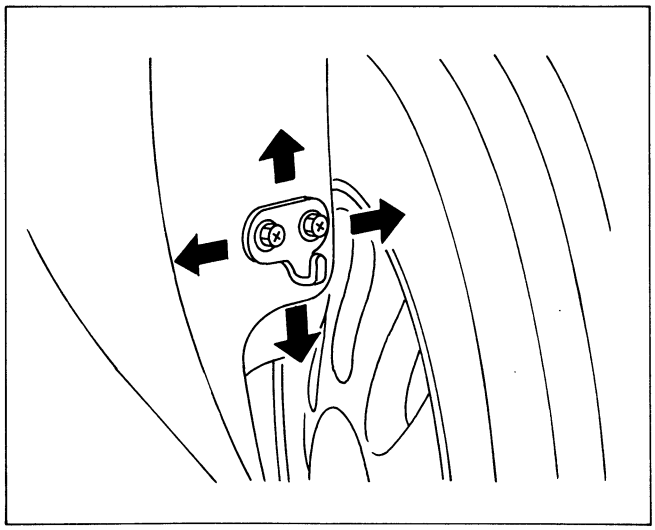

SBF843E

Front Door

Outside handle adjustment B

Window guide rail adjustment-①

Door adjustment A

CR103

CR103

CR103

3.7 - 5.0 (0.38 - 0.51, 2.7 - 3.7)

Window guide rail adjustment-②

Door glass adjustment
- Adjust guide rail mounting position by rotating it.

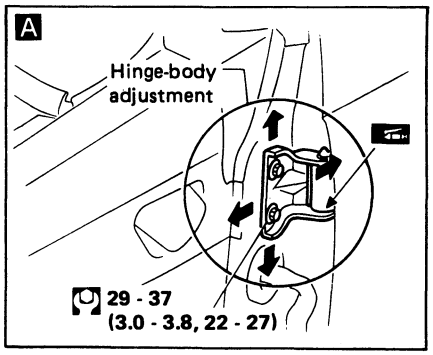

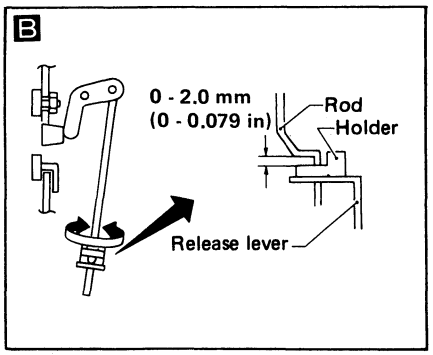

Striker adjustment

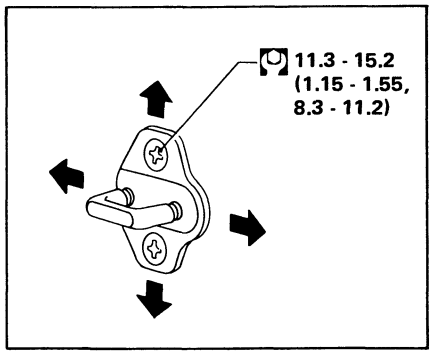

: N·m (kg-m, ft-lb)

SBF476E

Rear Door

12 - 16 (1.2 - 1.6, 9 - 12)

Upper roller adjustment A

3.7 - 5.0 (0.38 - 0.51, 2.7 - 3.7)

Outside handle adjustment E

5.1 - 6.5 (0.52 - 0.66, 3.8 - 4.8)

Male dovetail

Door lock adjustment D

21 - 26 (2.1 - 2.7, 15 - 20)

Waist roller adjustment B

21 - 26 (2.1 - 2.7, 15 - 20)

Window guide rail adjustment-②

Door glass adjustment
- Adjust guide rail mounting position by rotating it.

Lower roller adjustment C

Window guide rail adjustment-①

Lower dovetail adjustment

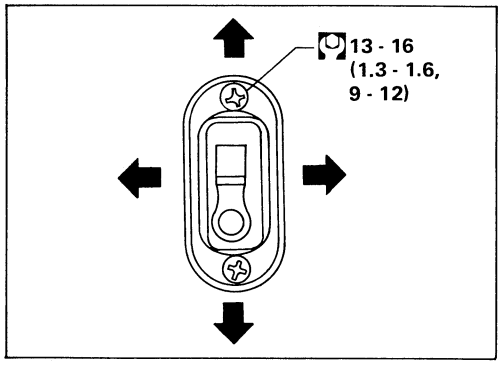

Striker adjustment

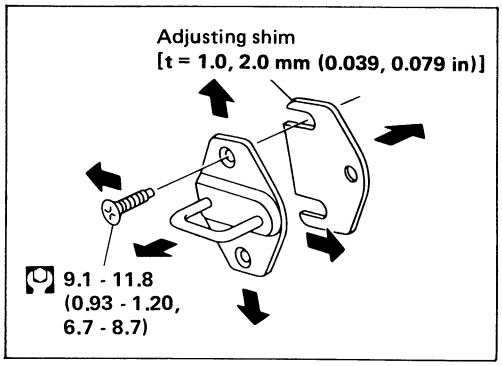

: N·m (kg-m, ft-lb)

Rear Door (Cont'd)

A

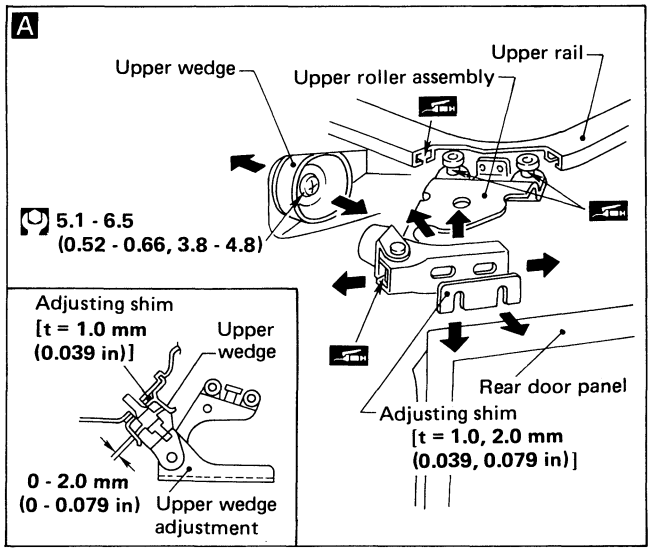

B

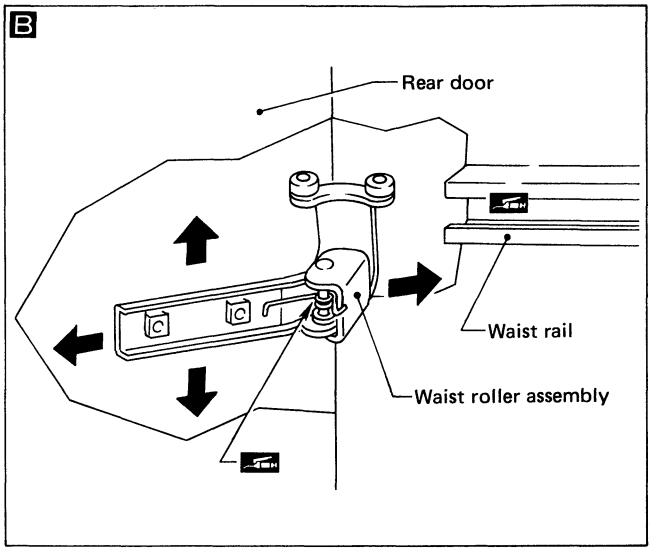

C

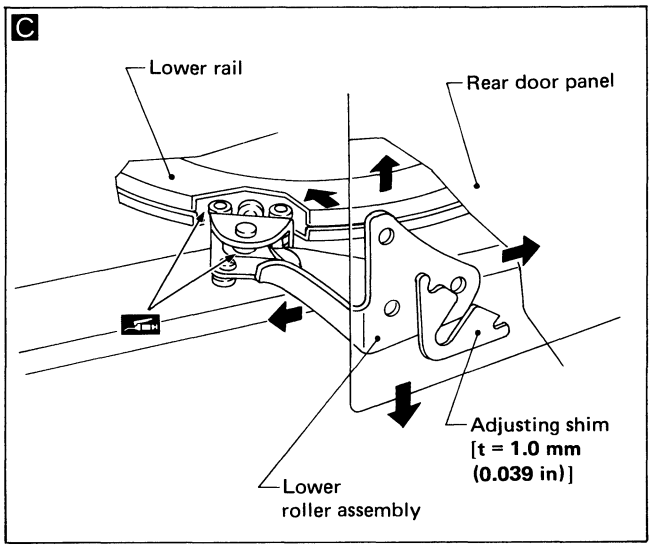

D

1. Separate lock wire and rod.
2. Pull inner wire out and then release allowing it to return.
3. Adjust rod so that rod holder hole in wire end is aligned with engagement portion of rod end.
4. Check that release lever stopper comes in contact with base plate.

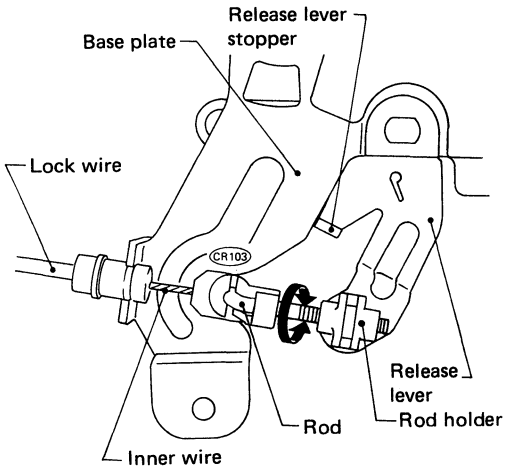

E

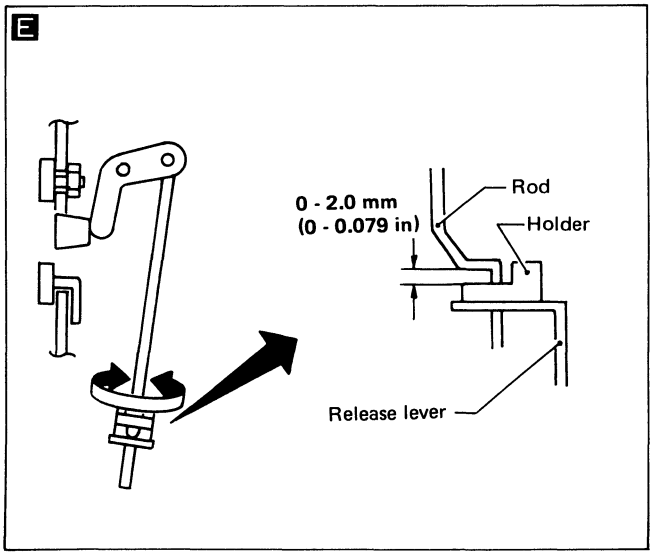

SBF702E

Power Door Lock

WIRING DIAGRAM

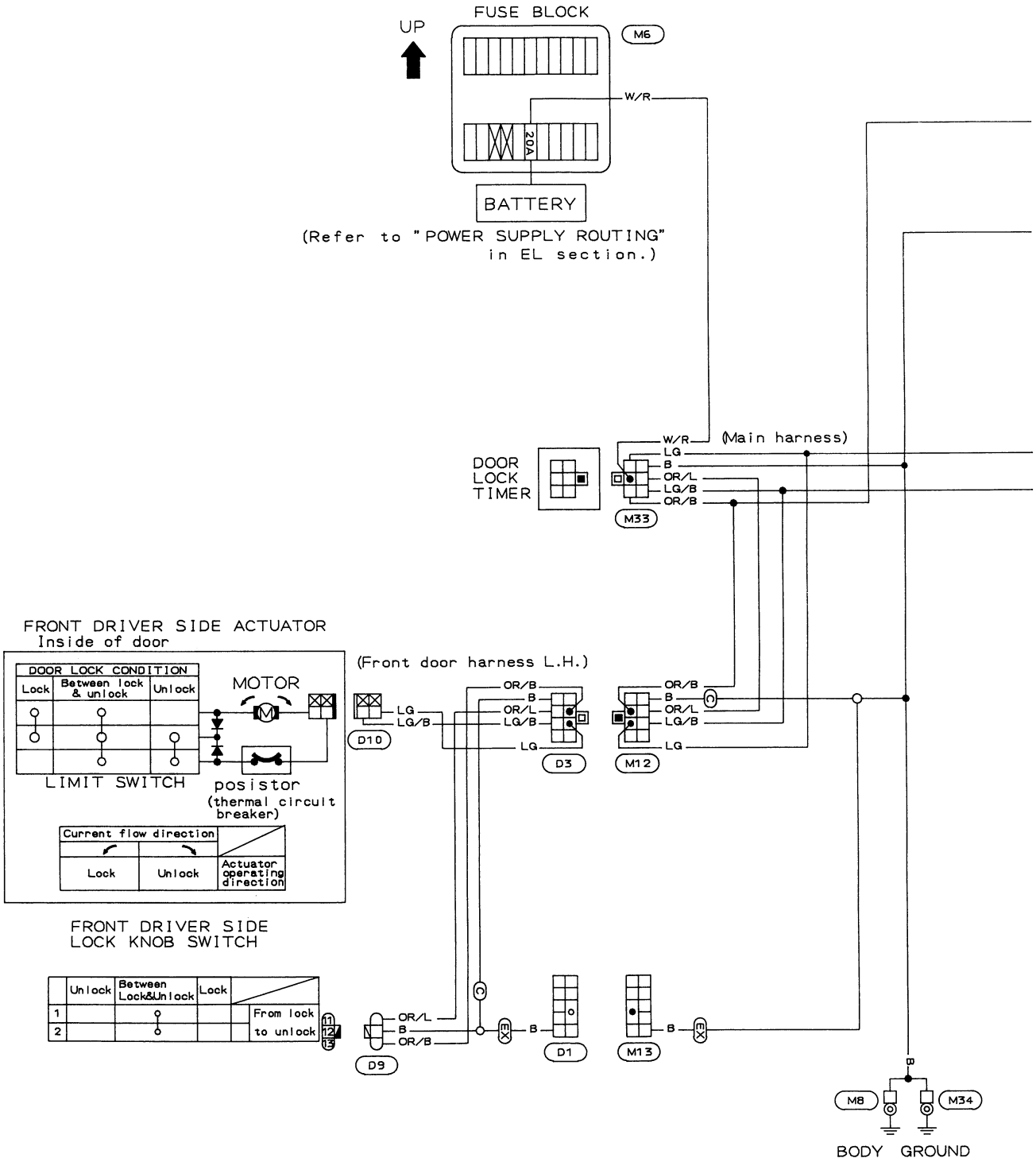

Power Door Lock (Cont'd)

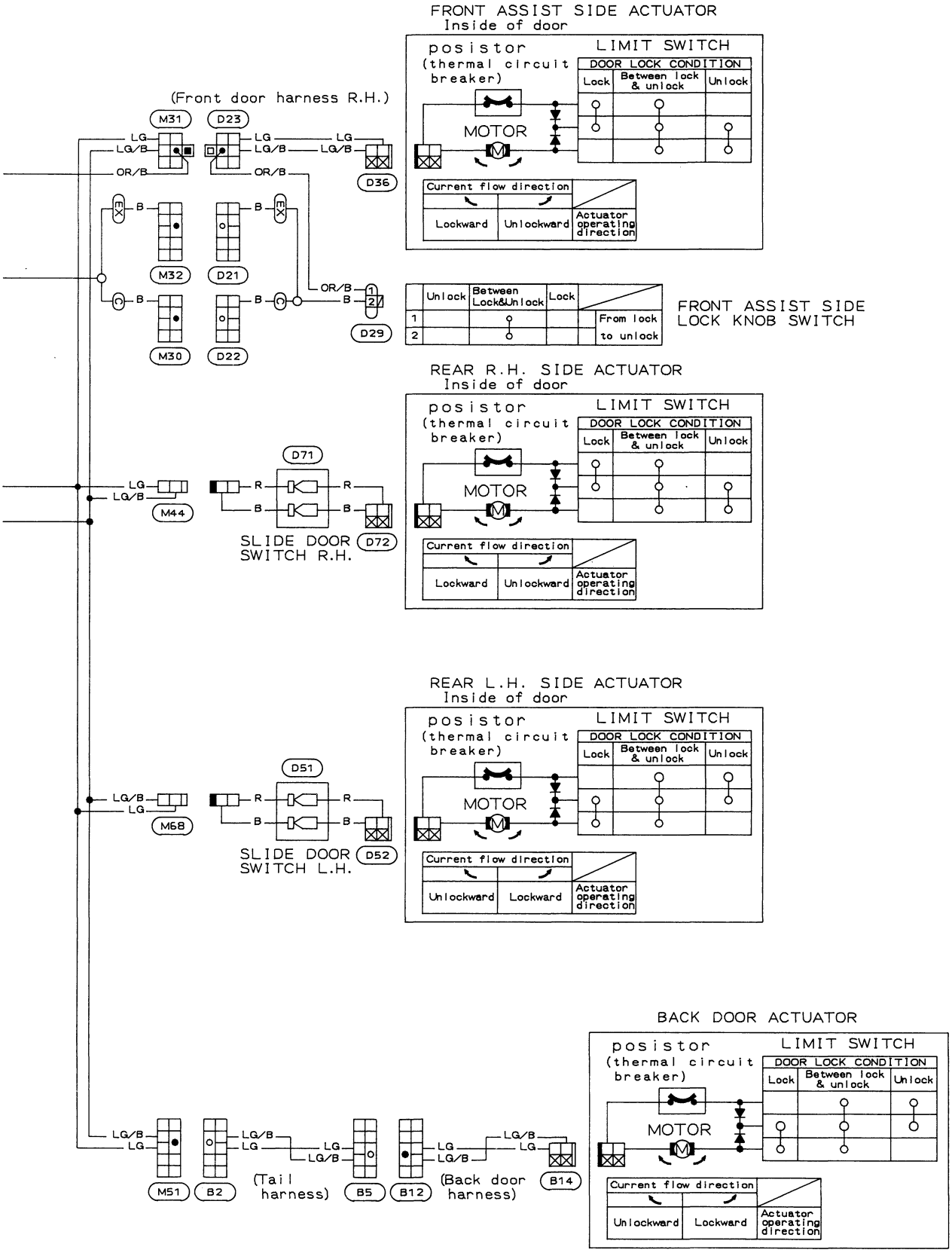

SBF779E

Power Window

WIRING DIAGRAM

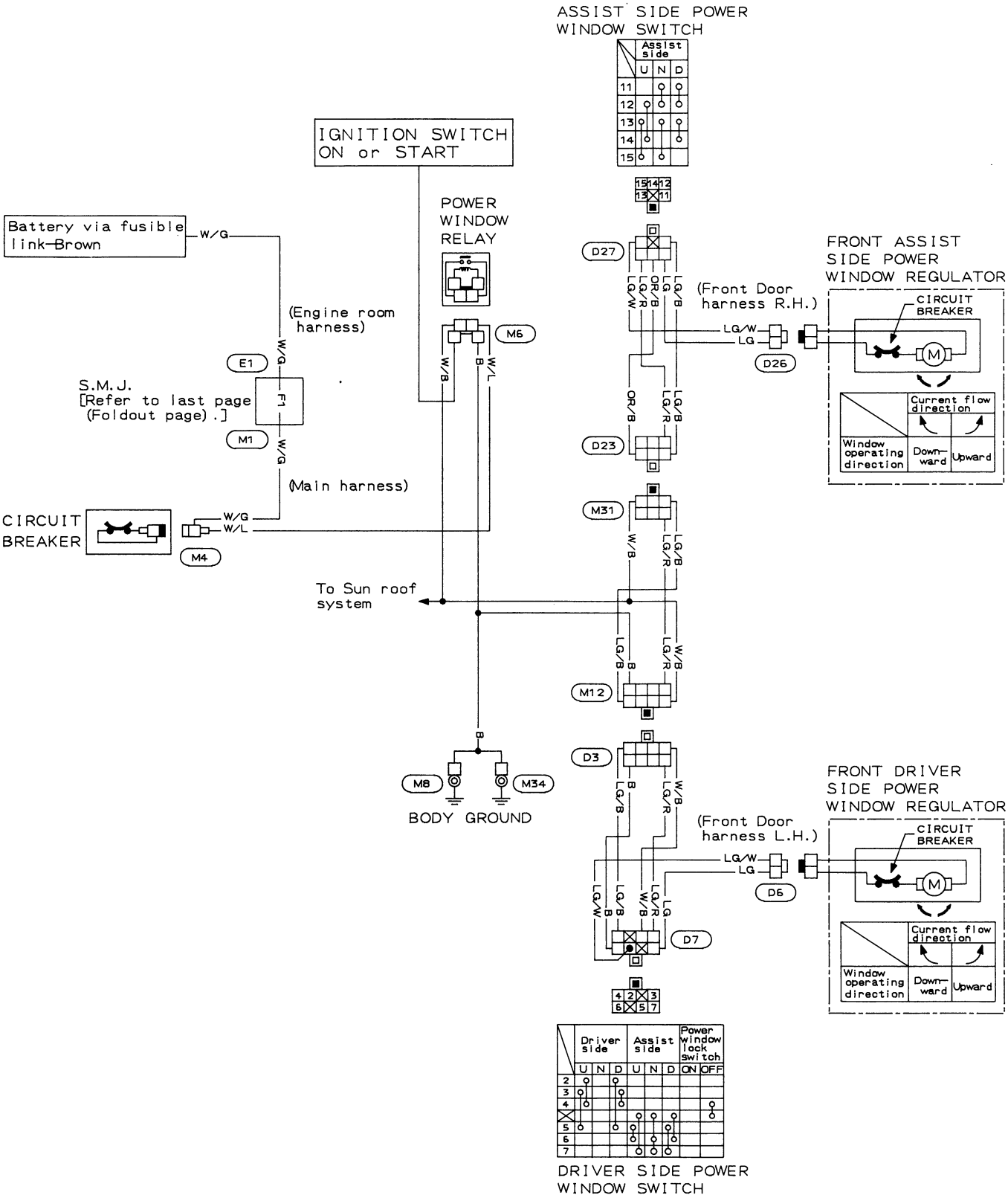

SBF778E

NOTE

- When removing instrument panel assembly, remove combination meter, A/C or heater control, cluster lid for radio and S.M.J. first.

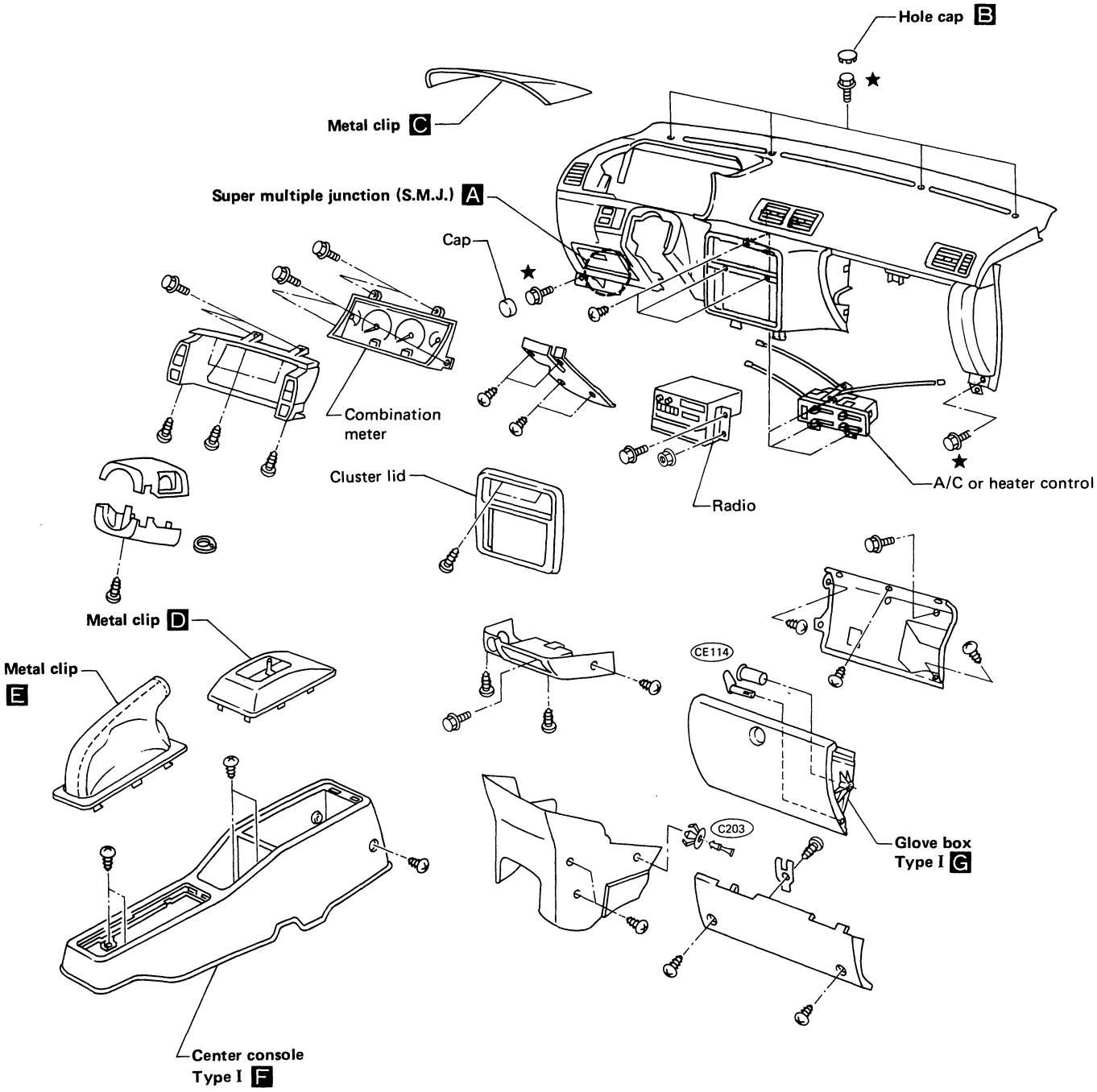

★: Instrument panel assembly mounting bolts

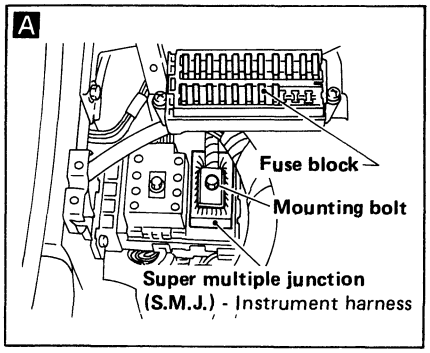
A
Fuse block
Mounting bolt
Super multiple junction
(S.M.J.) - Instrument harness

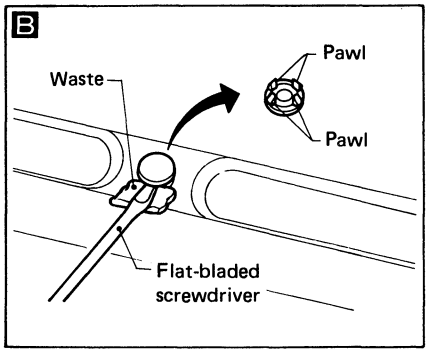
B
Waste
Pawl
Pawl
Flat-bladed
screwdriver

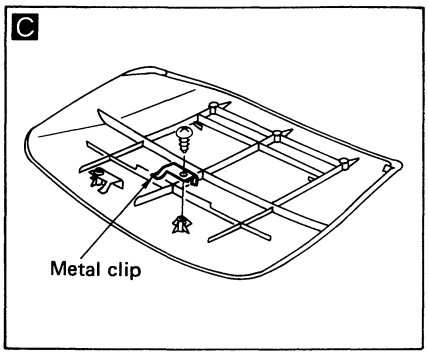
C
Metal clip

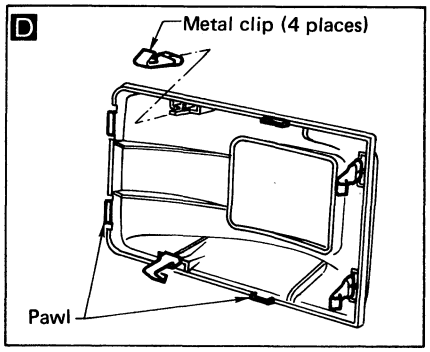
D
Metal clip (4 places)
Pawl

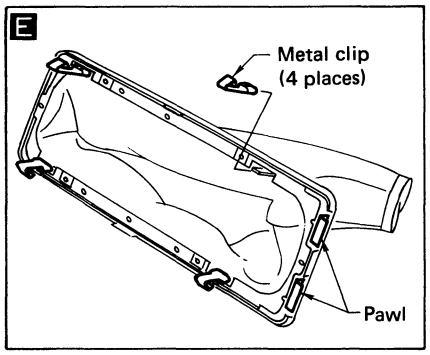
E
Metal clip
(4 places)
Pawl

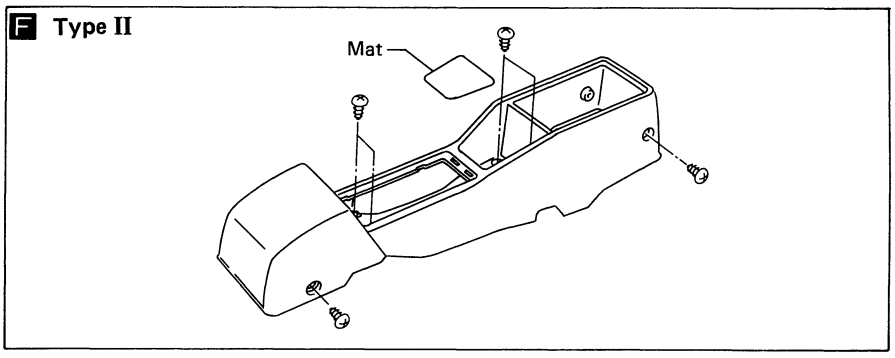
F Type II
Mat

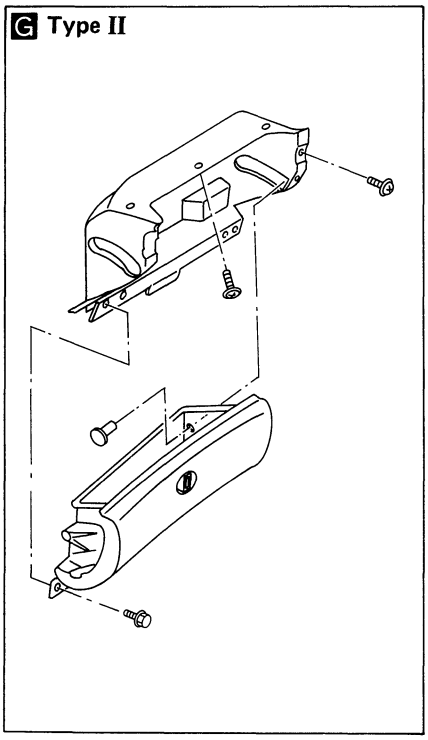
G Type II

SBF703E

Interior

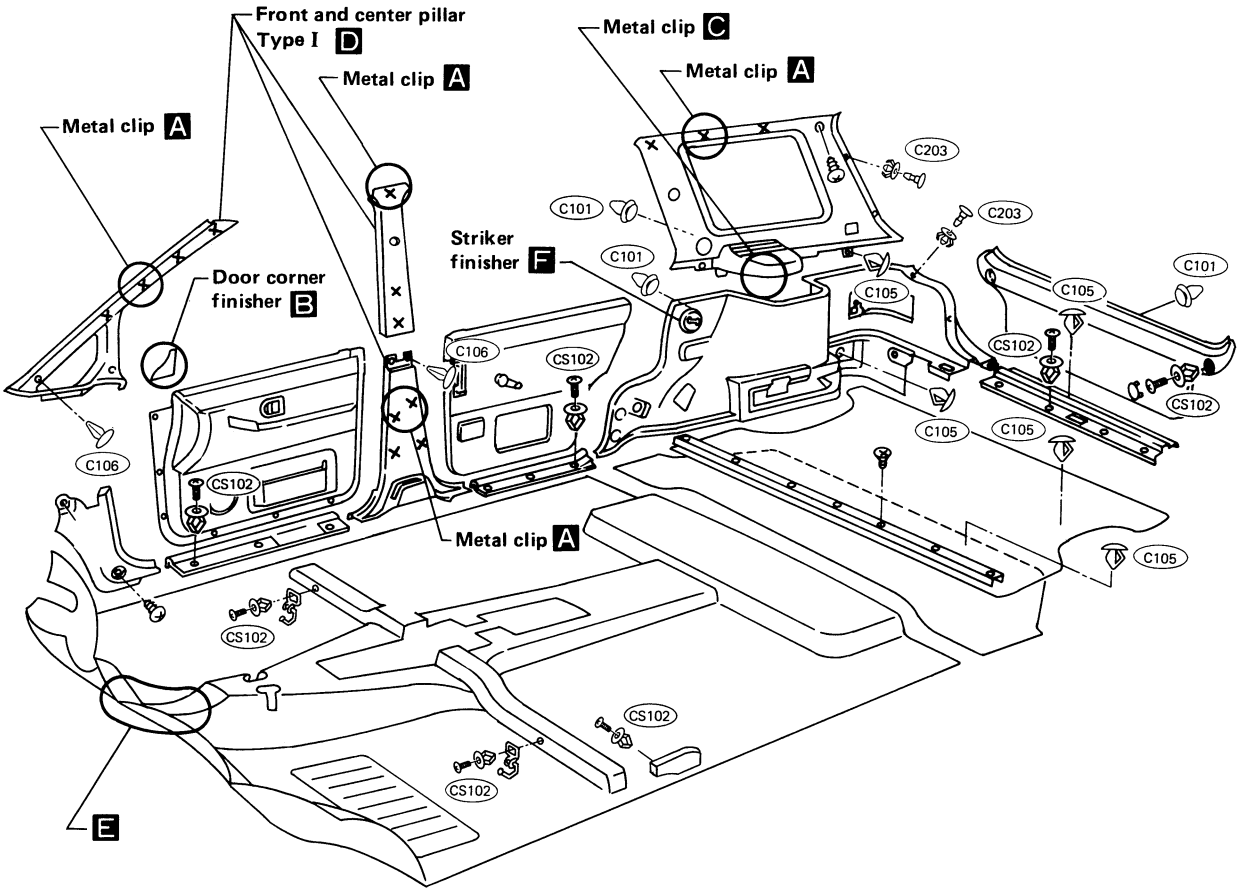
Front and center pillar
Type I D
Metal clip A
Metal clip A
Metal clip C
Metal clip A
Metal clip A
Door corner
finisher B
Striker
finisher F
C203
C203
C101
C101
C101
C105
C105
C105
C105
C105
C106
C106
CS102
CS102
CS102
CS102
CS102
CS102
CS102
E

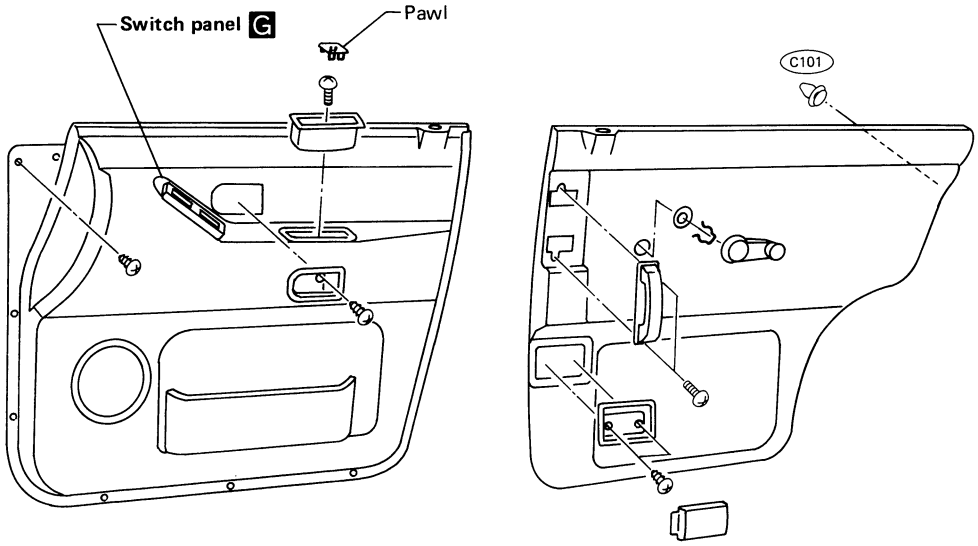
Switch panel G
Pawl
C101

Interior (Cont'd)

A

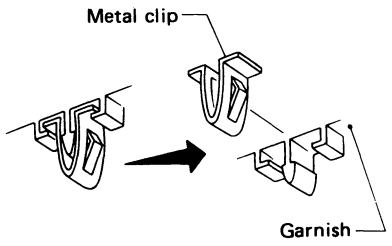

B

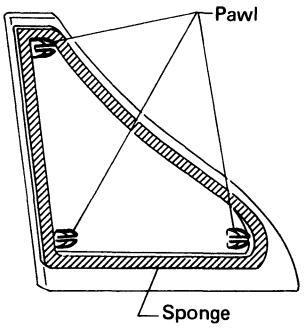

C

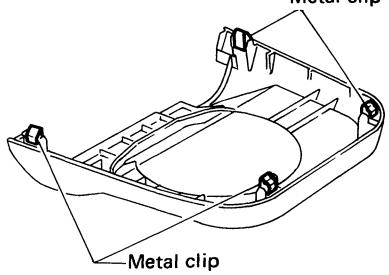

D Type II

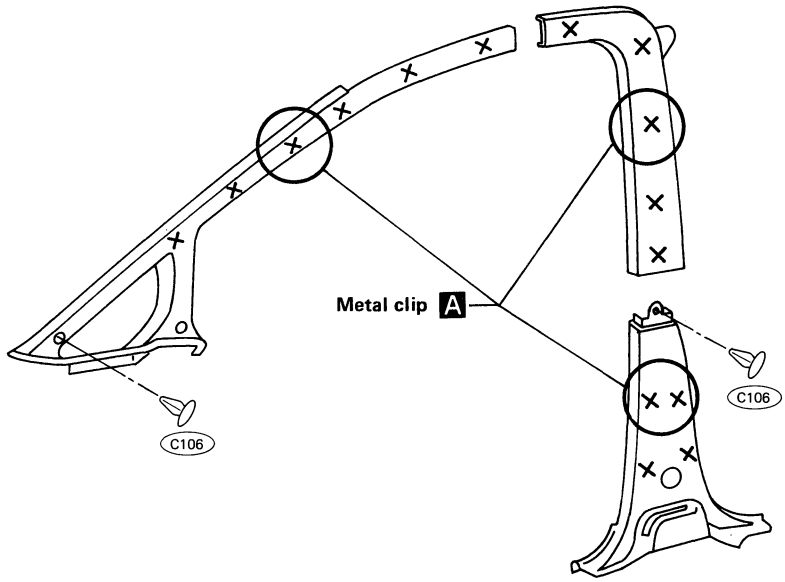

E

When removing or installing carpet, instrument panel has to be removed or carpet has to be cut at the portion shown by arrow, as carpet is a one-piece design.

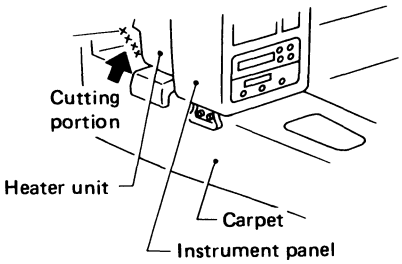

F

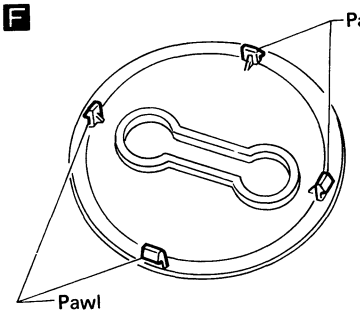

G

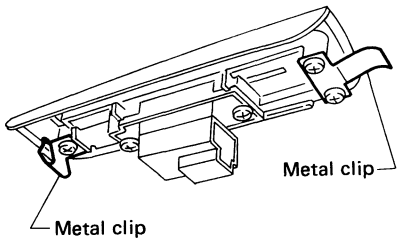

SBF704E

Interior (Cont'd)

ROOF TRIM

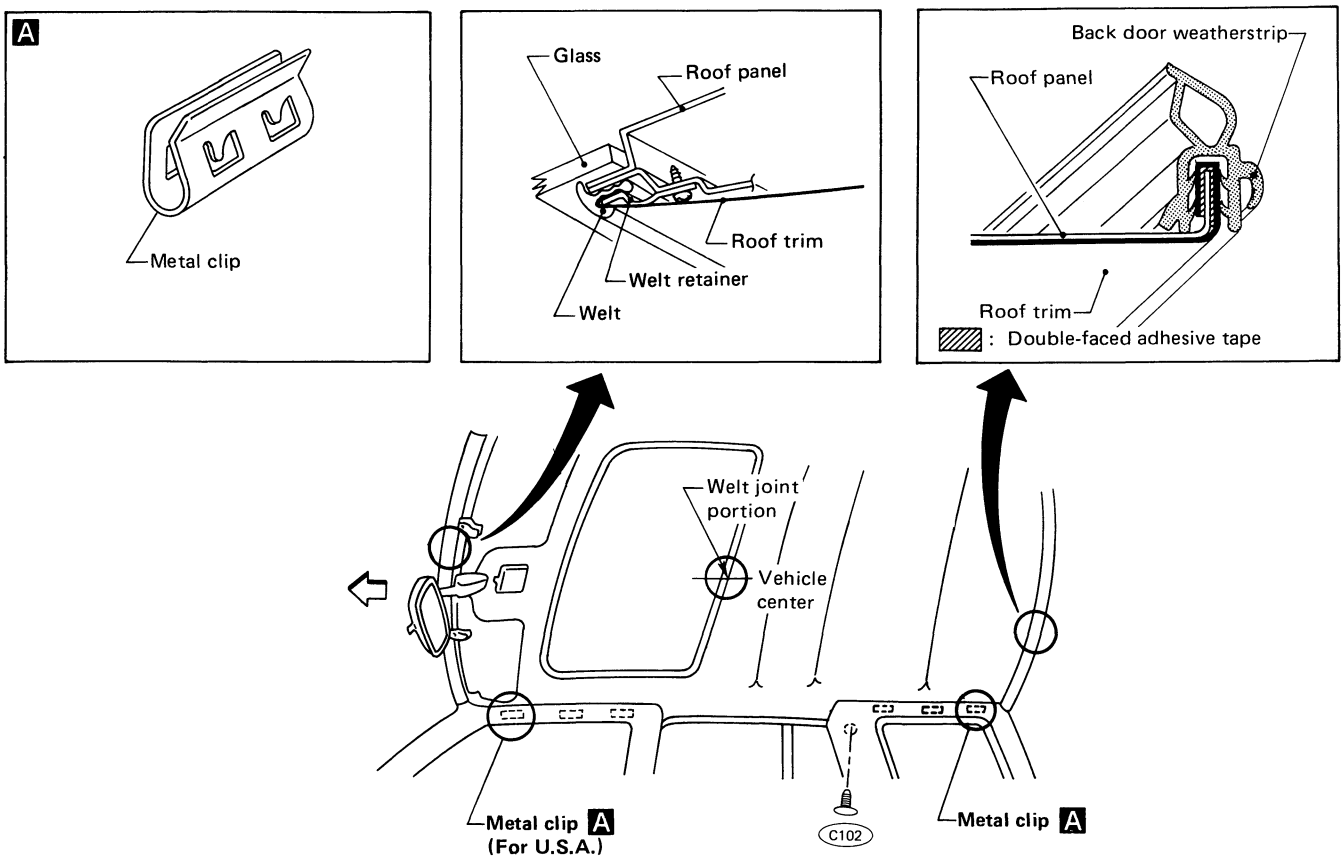

Roof trim installation

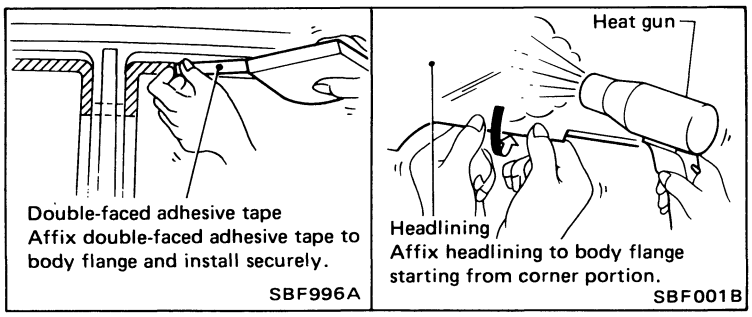

SBF709E

Exterior

- Apply sealing compound where necessary while installing parts.
- When applying sealing compound, be careful that the sealing compound does not protrude from parts.

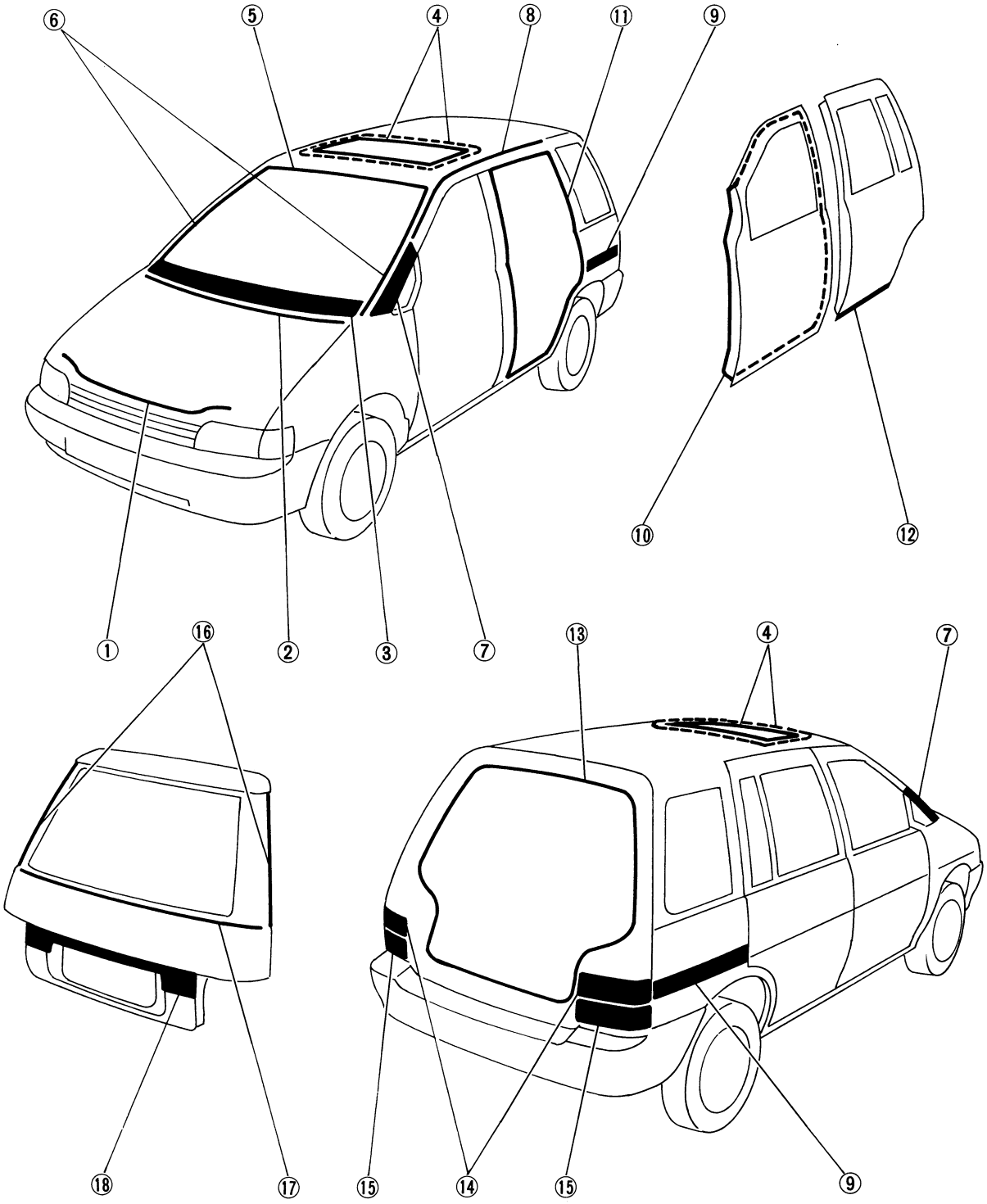

SBF481E

Exterior (Cont'd)

① Hood front sealing rubber

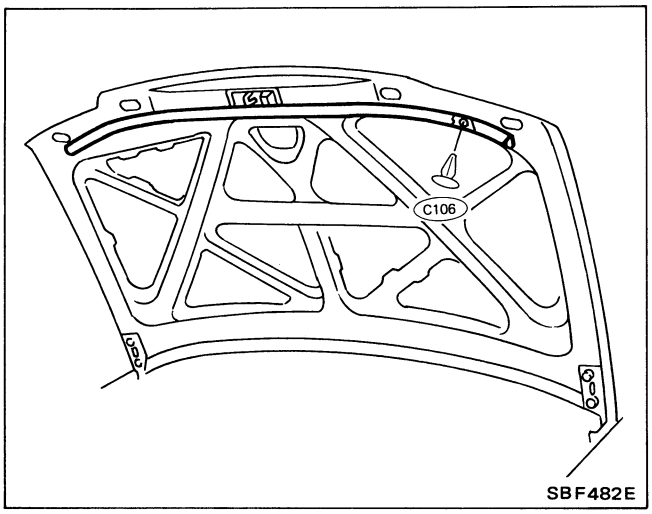

② ③ Hood rear sealing rubber & cowl top grille

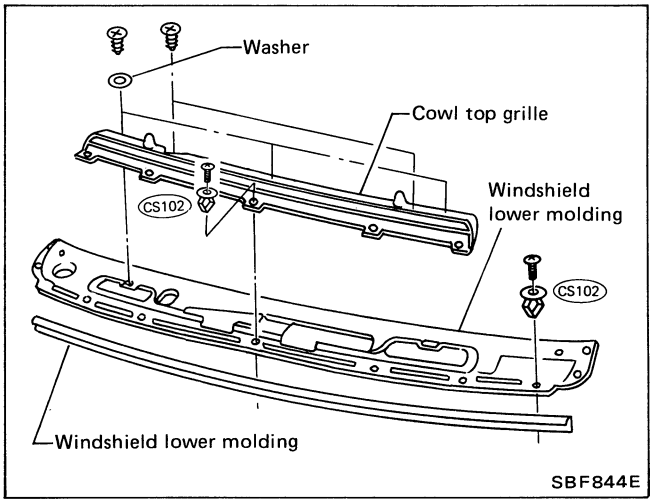

④ Sun roof frame weatherstrip and sun roof lid weatherstrip

Sun roof lid weatherstrip is bonded to lid.
Apply primer before bonding it.

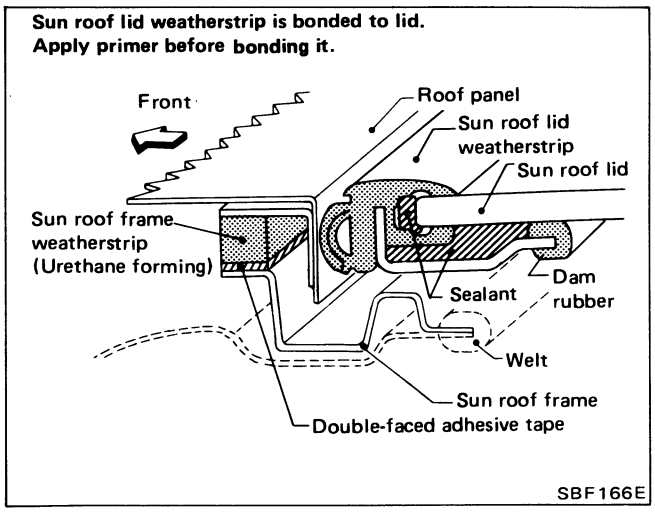

⑤ Windshield upper molding

Method 1

Cut off top portion of molding and clean glass and panel surfaces.

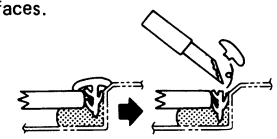

Apply sealant to top portion of molding.

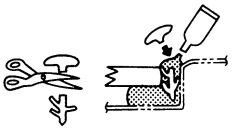

Cut off lower portion of new molding

Finish well to give it a good appearance.

Method 2

1. Cut off sealant at glass end.
2. Clean the side on which panel was mounted.
3. Set molding fastener and apply sealant & primer to body panel, and apply primer to molding.

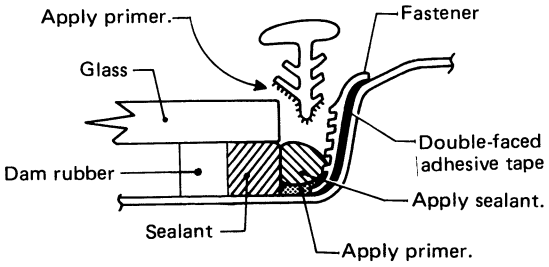

4. Install molding by aligning the molding mark located on center with vehicle center.
   Be sure to install tightly so that there is no gap around the corner.

SBF301C

⑥ Windshield side molding

It is mounted with screws.

Exterior (Cont'd)

⑦ Front pillar finisher

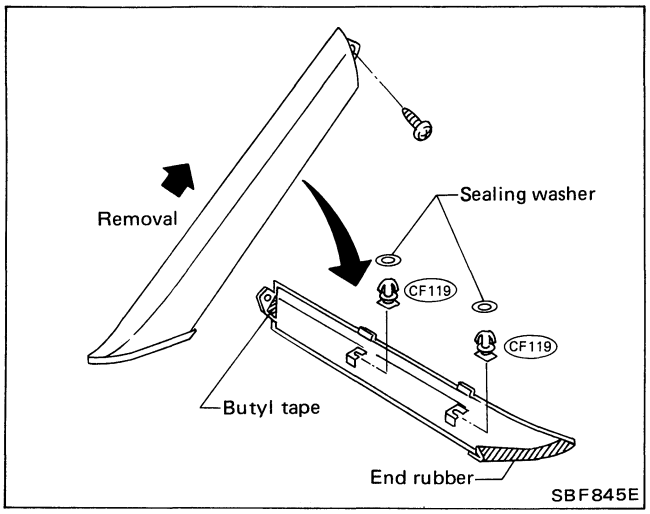

⑧ Body side drip molding

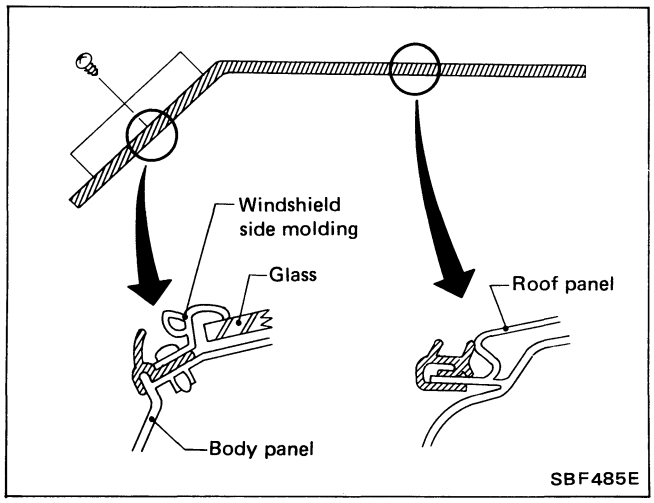

⑨ Waist rail finisher

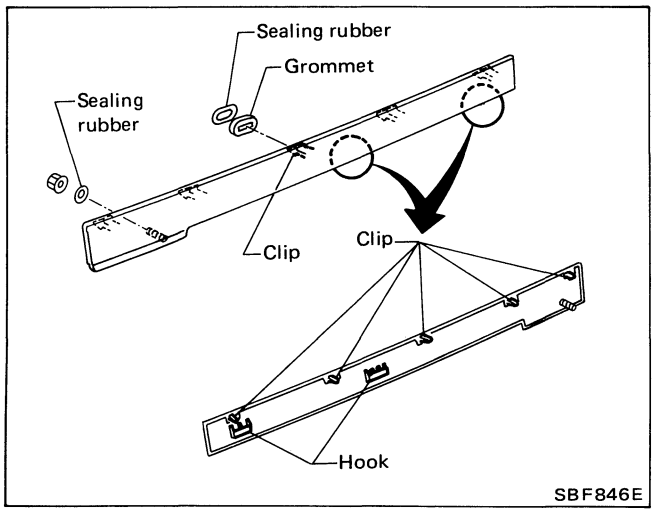

⑩ Front door weatherstrip

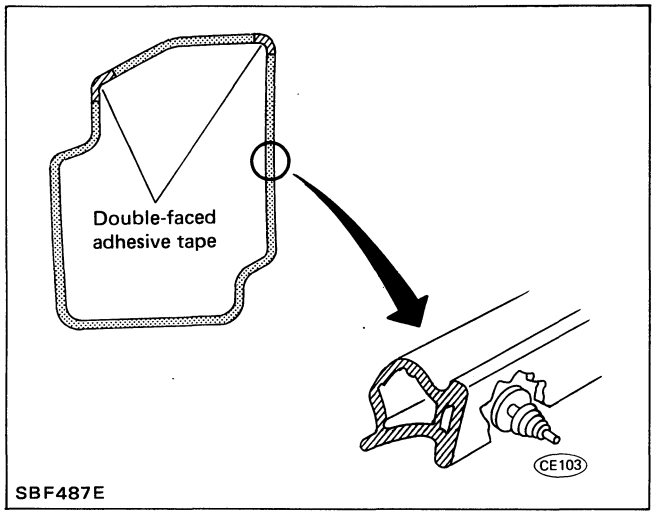

⑪ Rear door weatherstrip

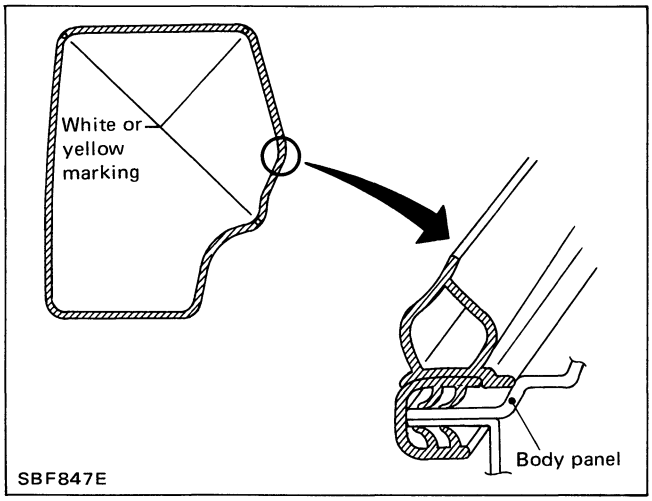

⑫ Rear door lower seal

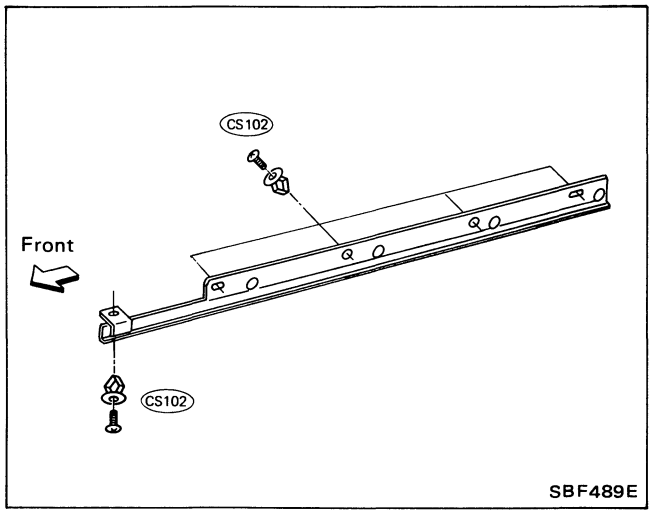

Exterior (Cont'd)

⑬ Back door opening weatherstrip

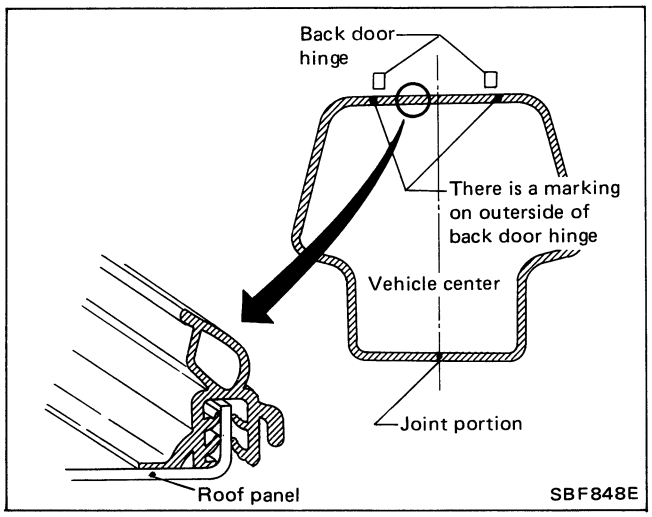

⑭ Rear combination lamp

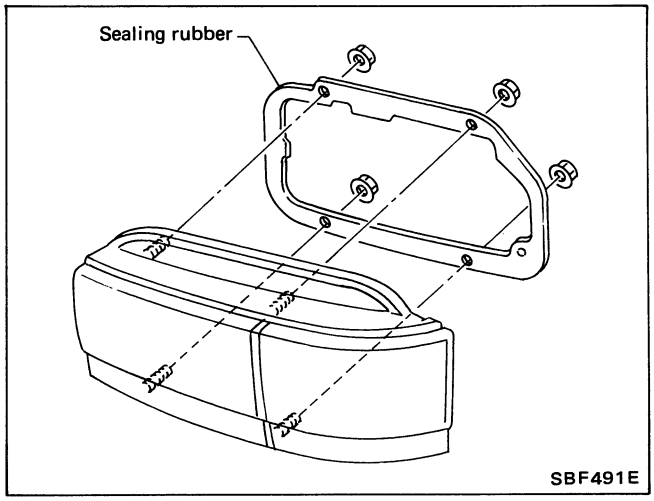

⑮ Rear combination lamp finisher

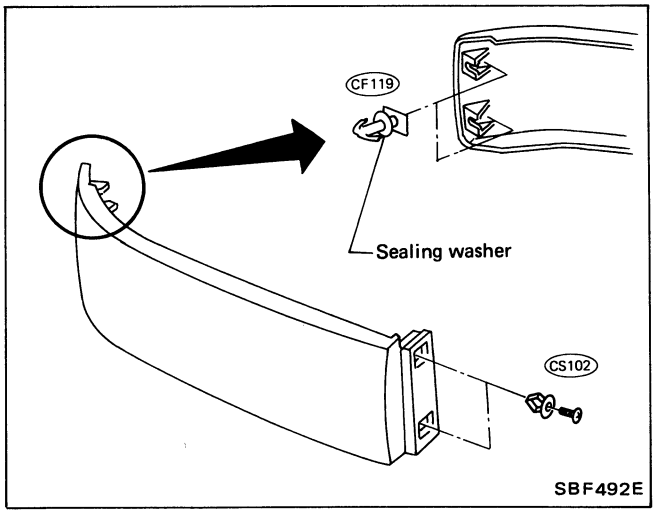

⑯ Back door window side molding

It is mounted with screws.

⑰ Back door window lower molding

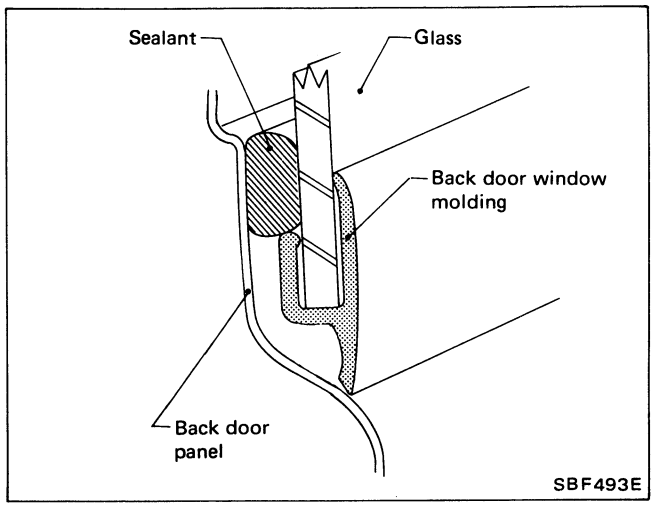

⑱ Back door finisher

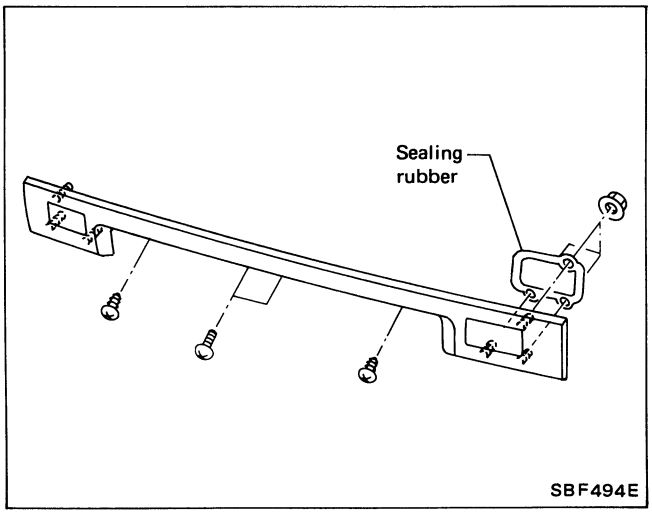

- When removing or installing the seat trim, carefully handle it to keep dirt out and avoid damage.

Front Seat

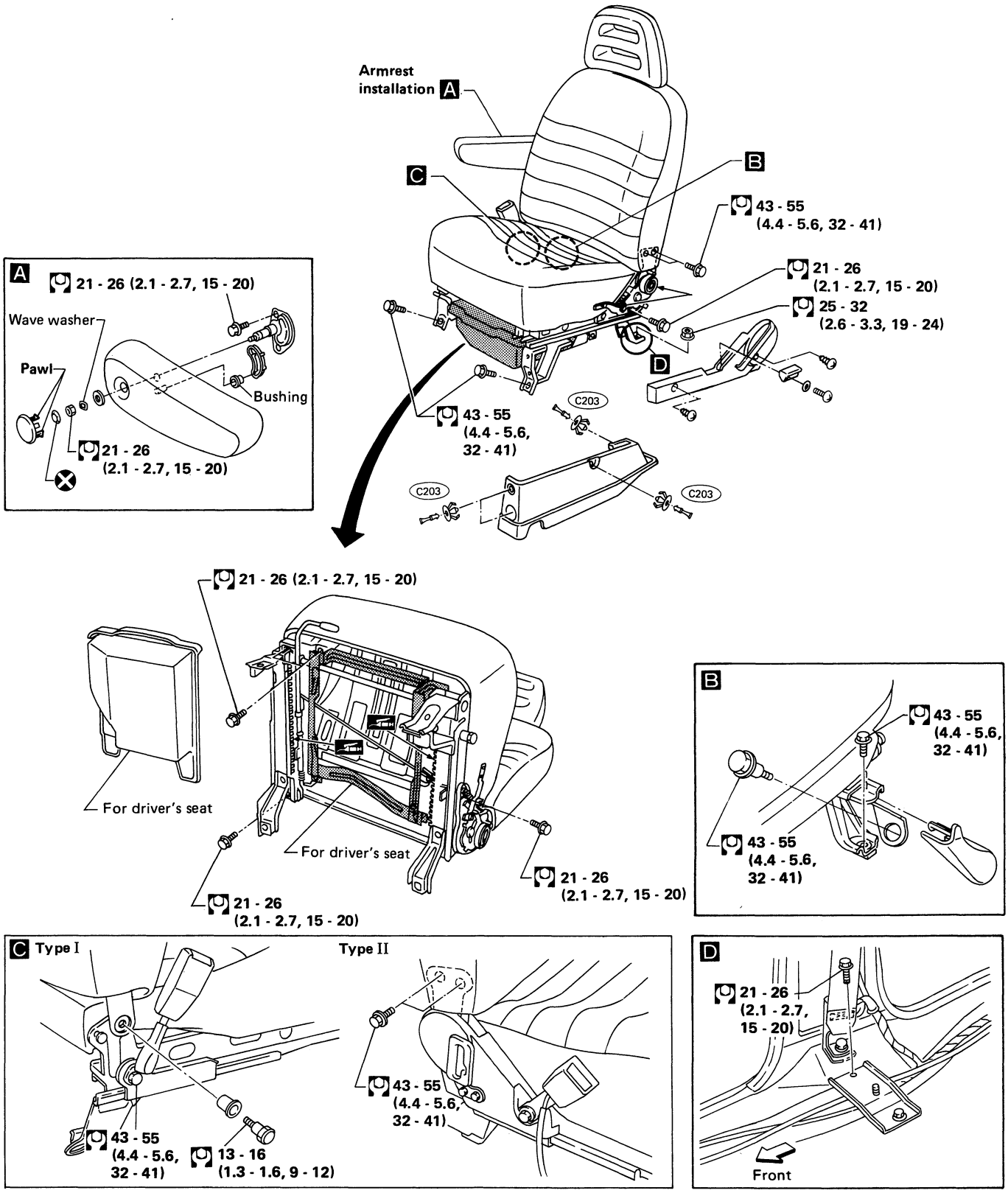

: N·m (kg-m, ft-lb)

SBF705E

2nd Seat

TYPE I

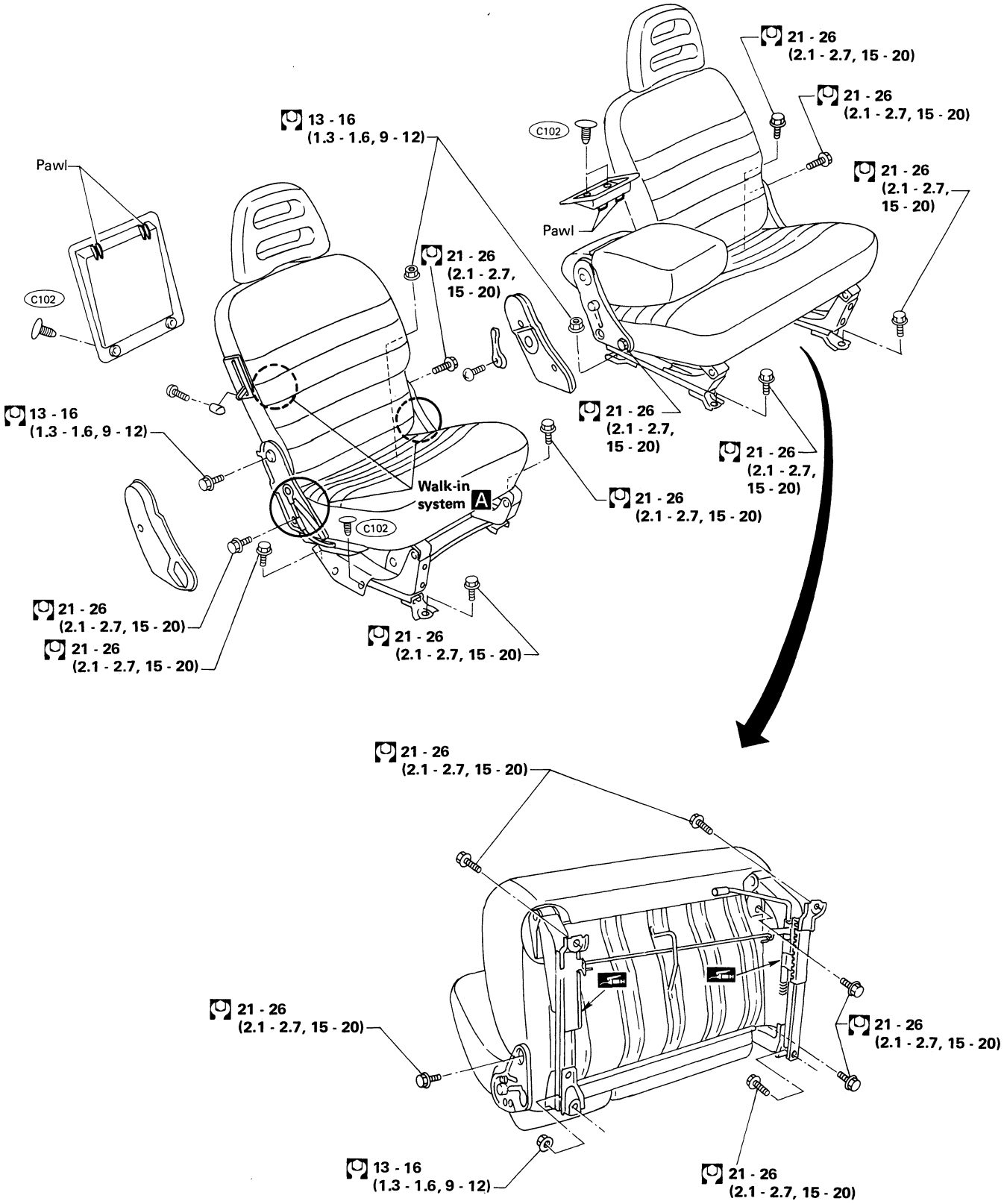

2nd Seat (Cont'd)

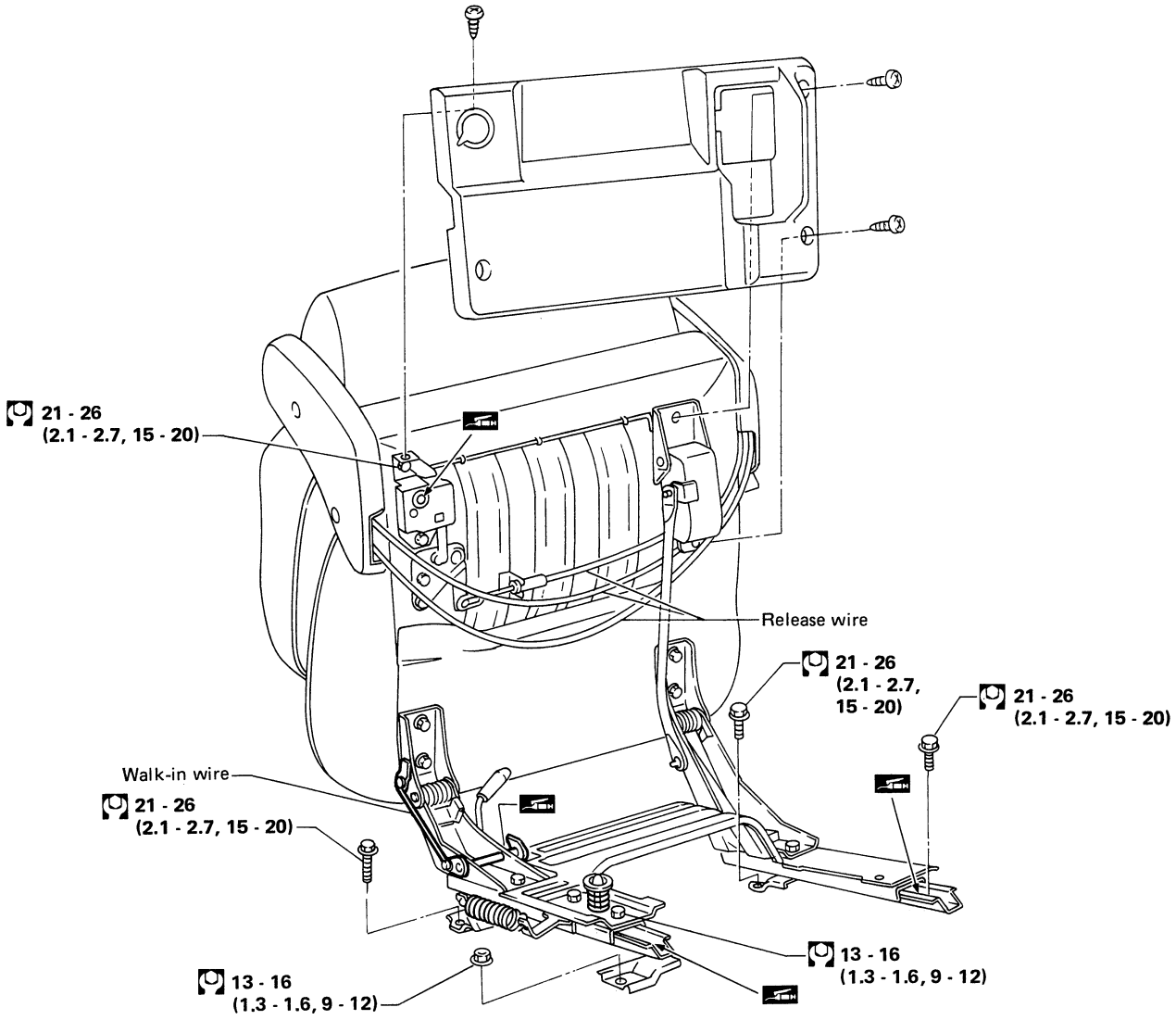

: N·m (kg-m, ft-lb)

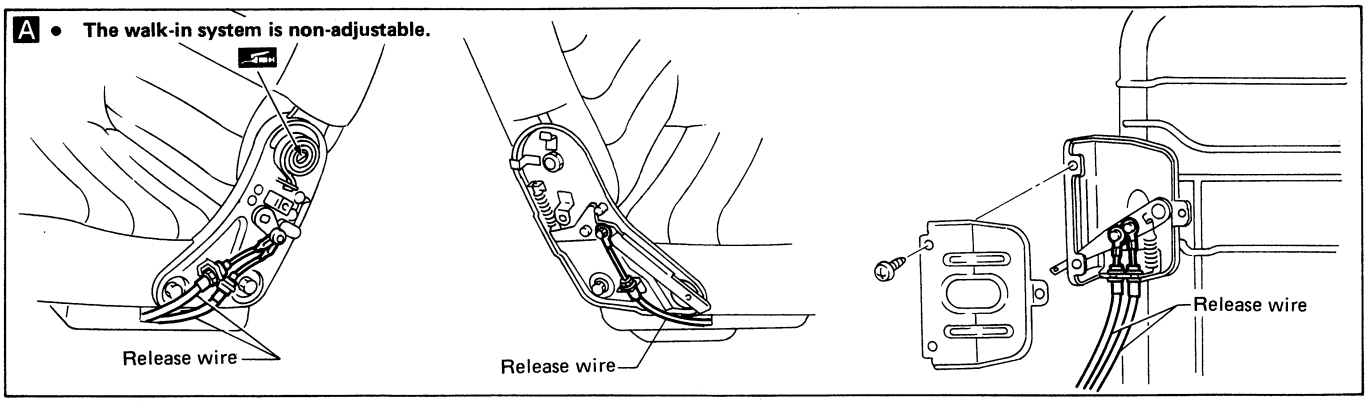

SBF849E

2nd Seat (Cont'd)

TYPE II

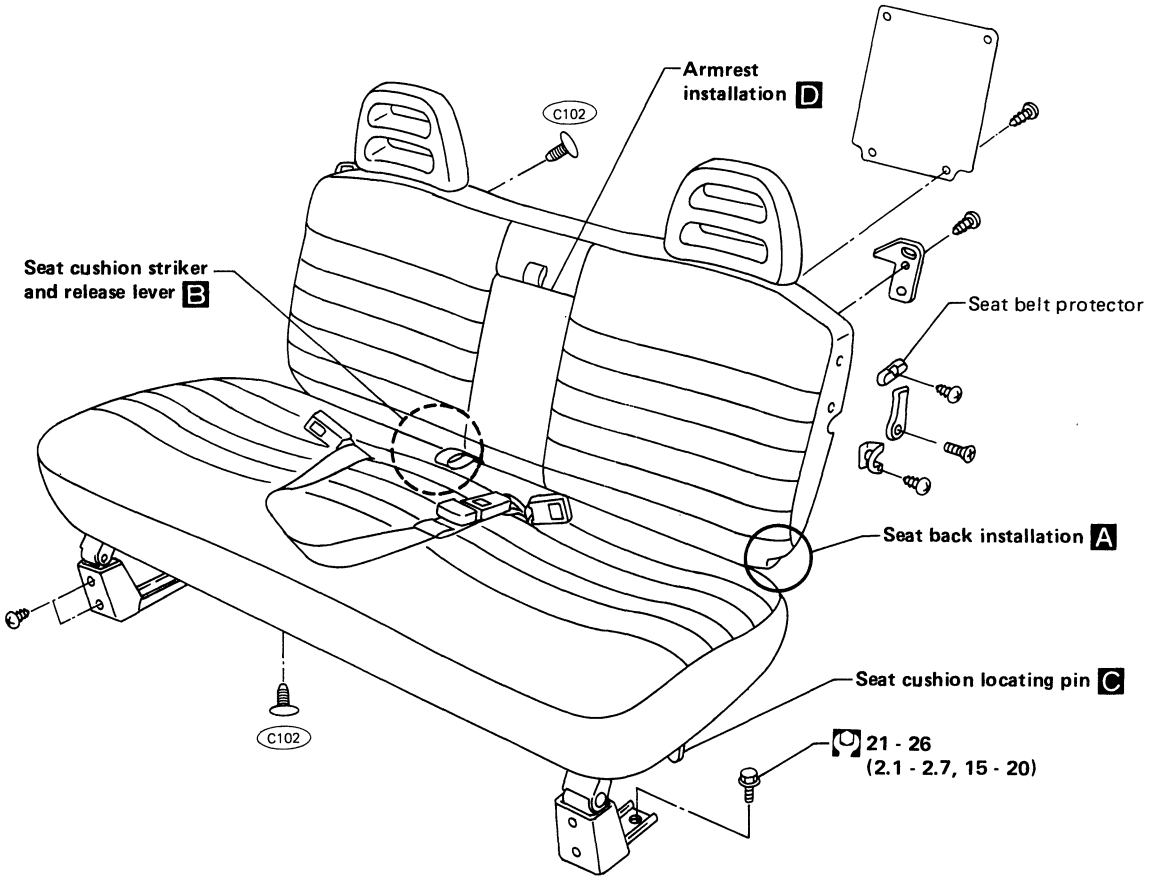

: N·m (kg-m, ft-lb)

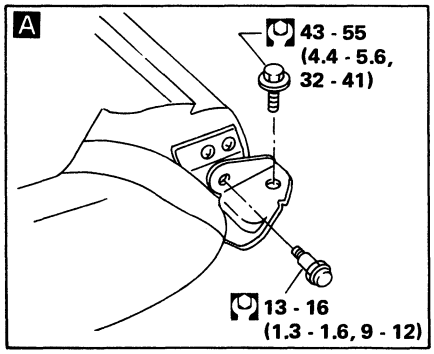

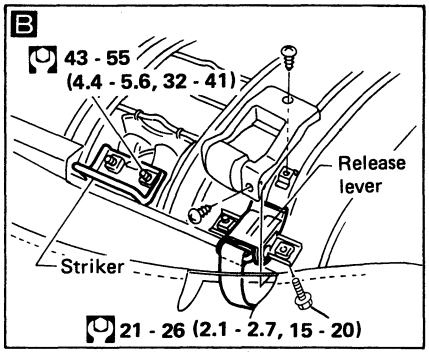

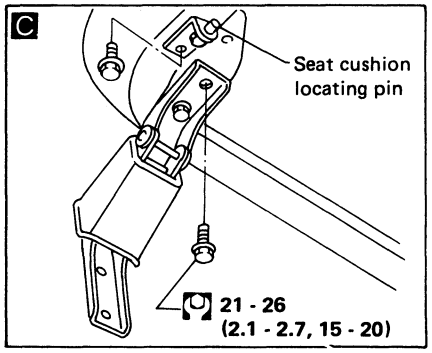

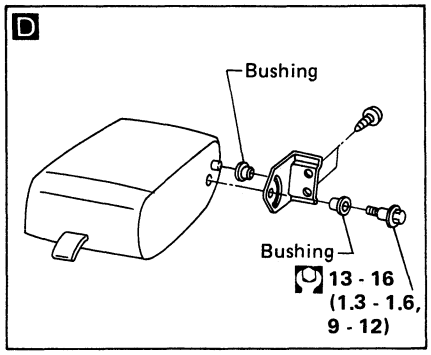

Seat back striker adjustment

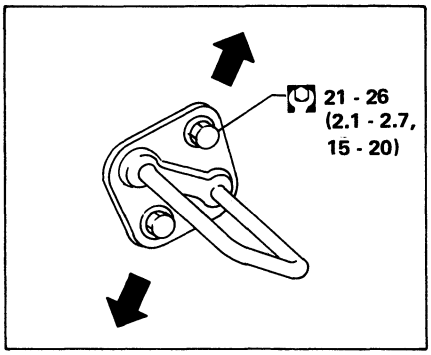

Seat cushion striker adjustment

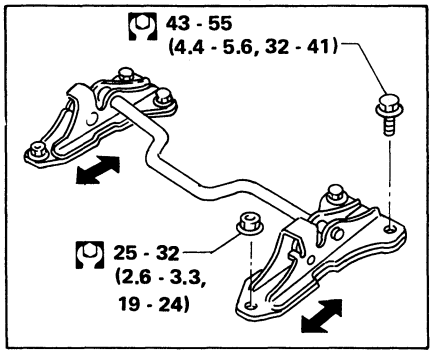

SBF706E

3rd Seat

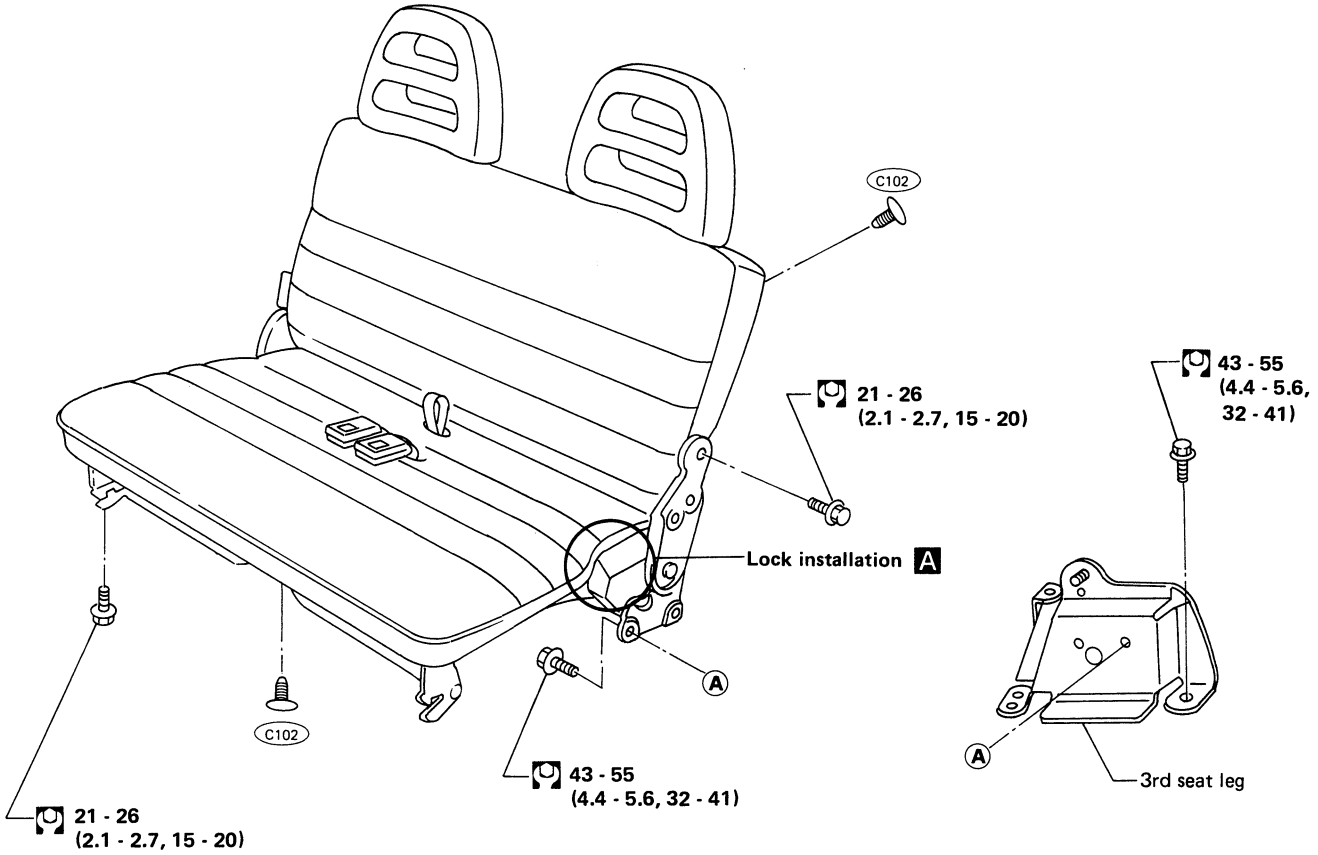

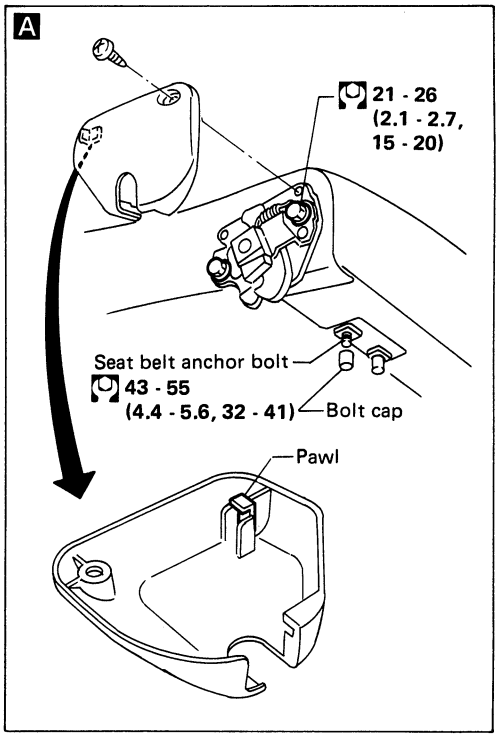

Striker adjustment

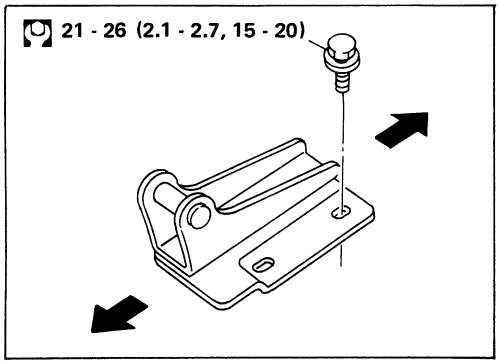

: N·m (kg-m, ft-lb)

SBF850E

Unit Location

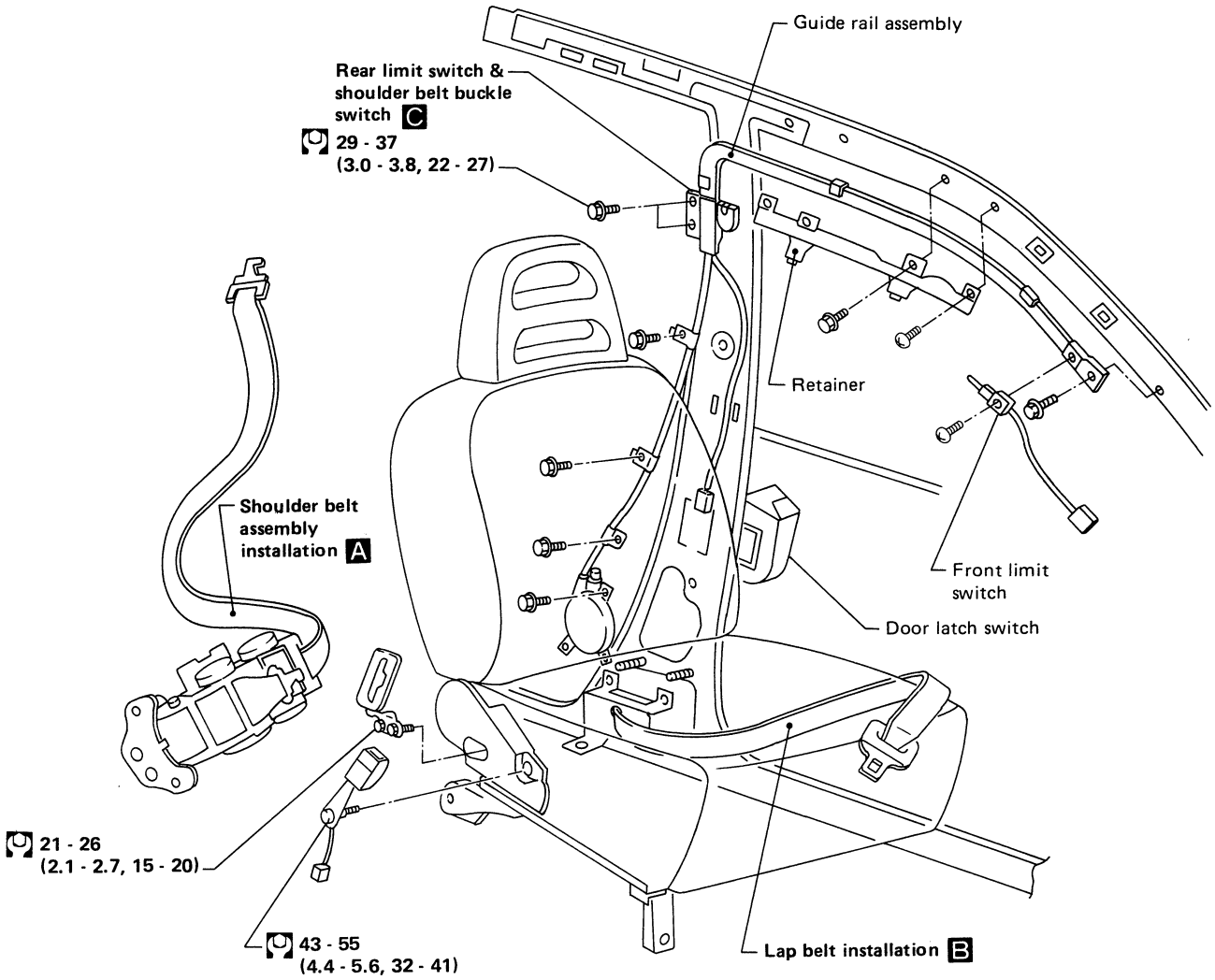

Control unit

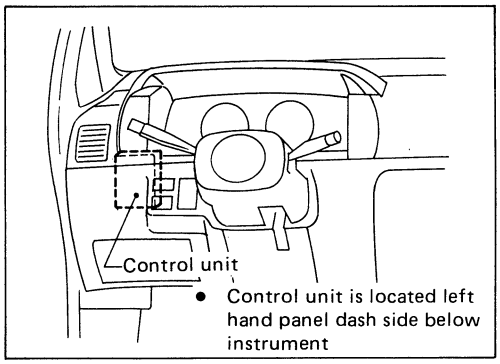

: N·m (kg-m, ft-lb)

Unit Location (Cont'd)

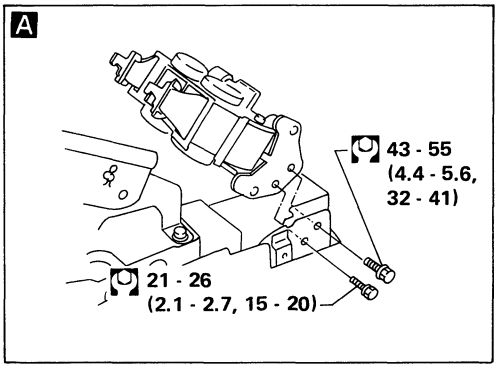

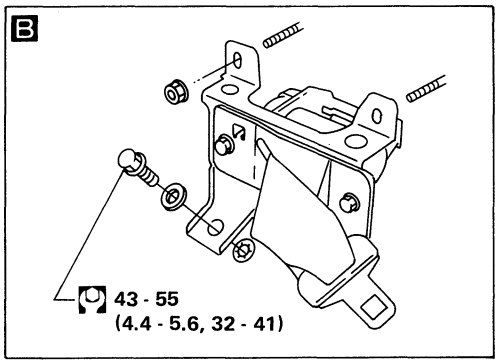

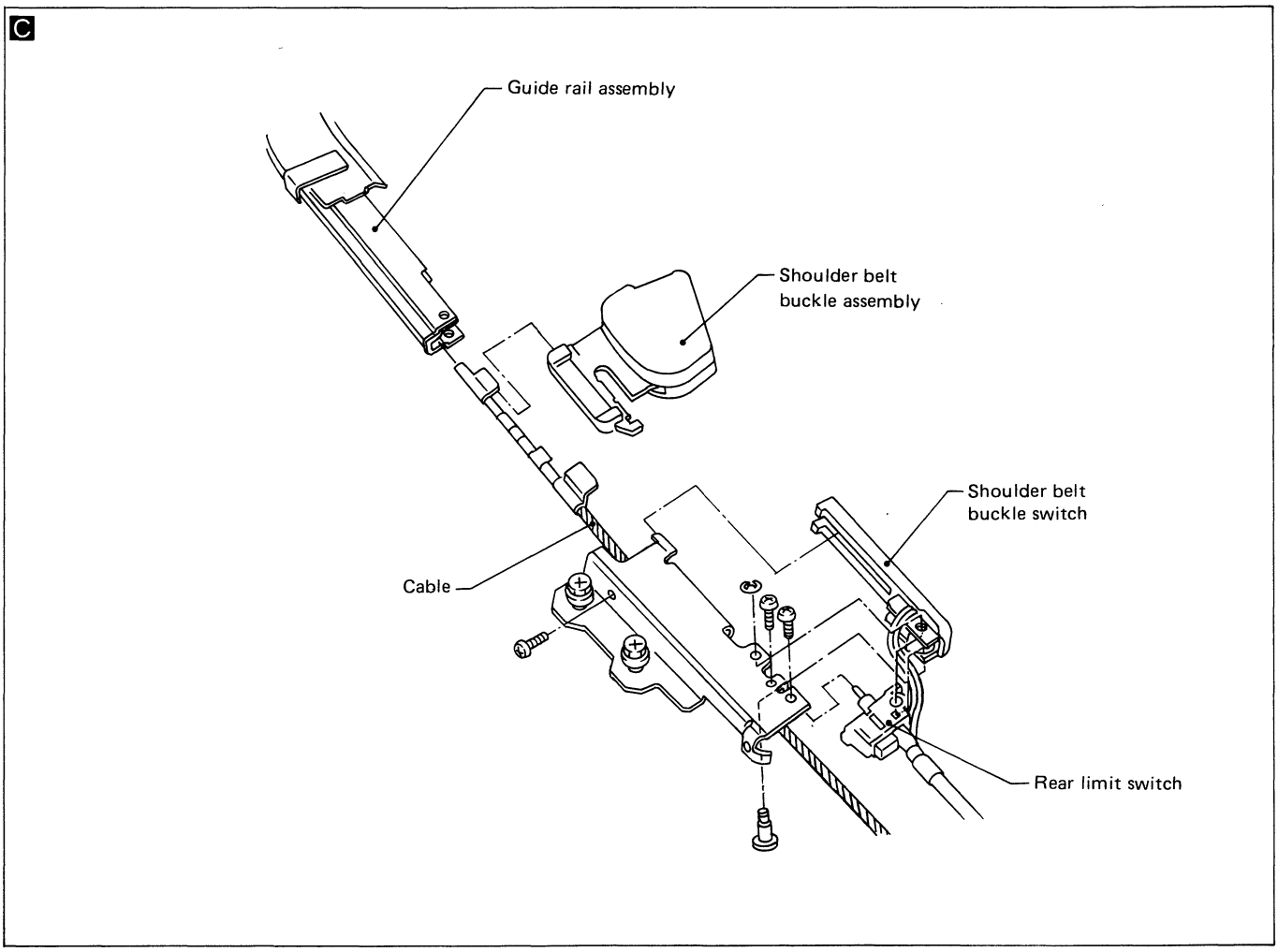

SBF707E

Wiring Diagram

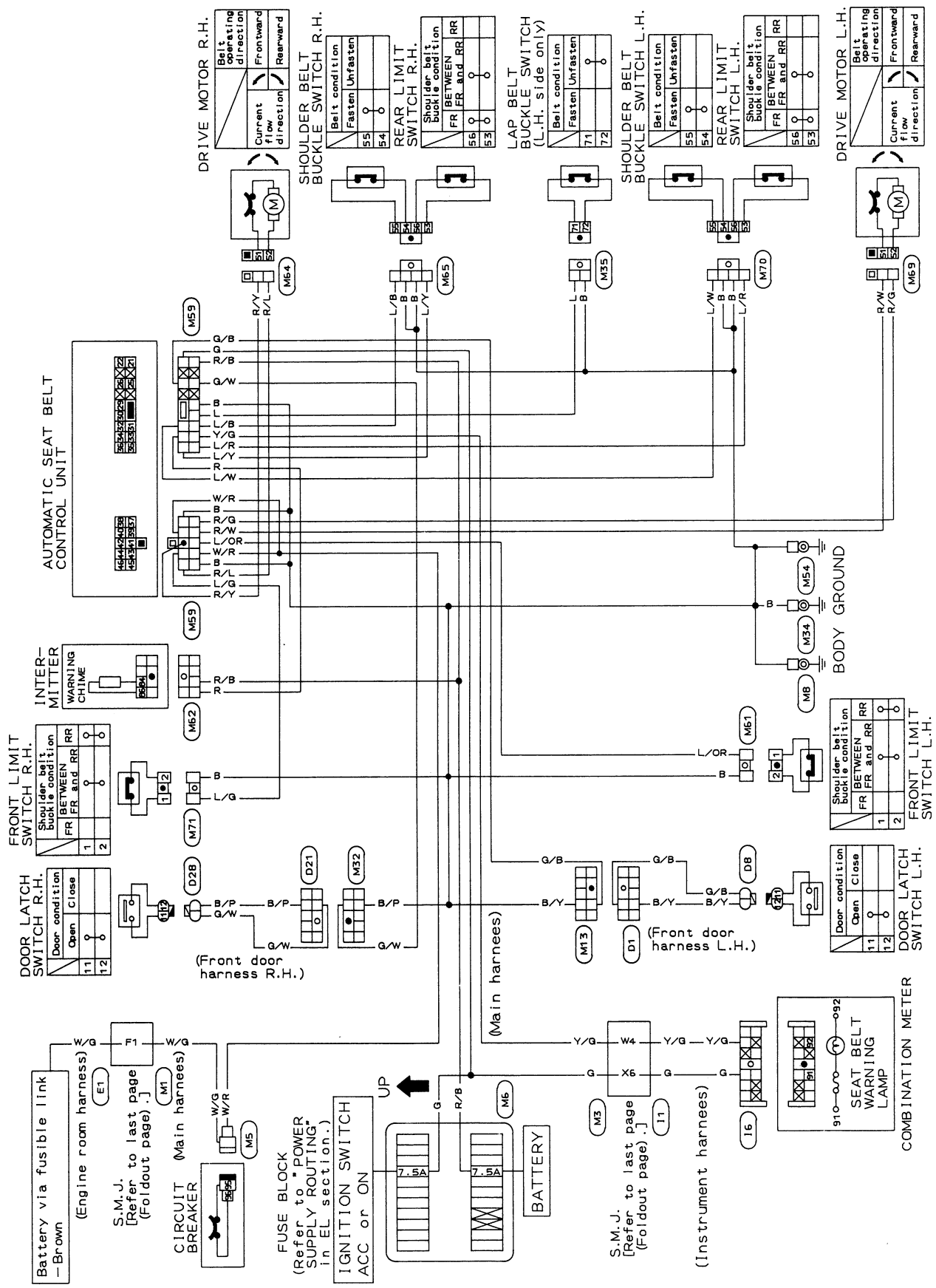

SBF780E

Description

FUNCTION

Shoulder belt buckle is mainly operated while ignition switch is "ON".

Condition (A): Ignition switch is "ON".

When door is opened, shoulder belt buckle is moved frontward and when door is closed, buckle is moved rearward.

Condition (B): Ignition switch is "OFF".

When door is opened, shoulder belt buckle is moved frontward. When the door is closed, buckle will remain in this position.

(Voltage of output signal is approximate value.)

Input signal	Ignition switch	OFF	OFF	ON	ON	ON	ON	ON	ON	OFF	OFF	OFF	OFF
	Door latch switch	OFF	ON	OFF	OFF	OFF	ON	ON	ON	OFF	ON	ON	OFF
	Front limit switch	OFF	OFF	OFF	ON	ON	ON	ON	OFF	ON	ON	ON	ON
	Rear limit switch	ON	ON	ON	ON	OFF	OFF	ON	ON	OFF	OFF	ON	ON
Output signal	Drive motor power source for frontward operation	0V	0V	0V	0V	0V	12V	12V	0V	0V	12V	12V	0V
	Drive motor power source for rearward operation	0V	0V	12V	12V	0V	0V	0V	0V	0V	0V	0V	0V
Shoulder belt buckle	Function	Stop	Stop	Start to move	Moving	Stop	Start to move	Moving	Stop	Stop	Start to move	Moving	Stop
	Position	Front	Front	Front	Between Front & Rear	Rear	Rear	Between Front & Rear	Front	Rear	Rear	Between Front & Rear	Between Front & Rear

TIMER (Ignition switch either "ON" or "OFF")

If limit switch does not operate (when accomplishing frontward operation, front limit switch can not be turned "OFF" or when accomplishing rearward operation, rear limit switch can not be turned "OFF"), control unit will continue to supply power to drive motor for 15 seconds and control unit will stop supplying power.

QUICK WARNING (Ignition switch "ON")

If front limit switch is not turned "OFF" after accomplishing frontward operation, control unit will stop supplying power 15 seconds later and warning lamp will flash and chime will operate rapidly for approximately 6 seconds.

REAR LOCK

If quick warning functions twice successively while ignition switch is "ON", shoulder belt buckle will move to rear position when the door is closed as normal but will remain in rear position even if door is opened. This function is canceled when ignition switch is "OFF".

Description (Cont'd)

WARNING

Priority	Warning item	Ignition switch	Indication of warning (Indicating time is approximate value.)
1	Shoulder anchors are not at rear lock position.	ON	Lamp: ON / OFF — 1 sec. — Continues flashing Chime: ON / OFF
		OFF → ON	Lamp: ON / OFF — 1 sec. — Continues flashing Chime: ON / OFF Anchor: Not rear / Rear — 6 sec.
			Lamp: ON / OFF — 6 sec. Chime: ON / OFF Anchor: Not rear / Rear — Within 6 sec.
2	Shoulder belts are not fastened.	ON	Lamp: ON / OFF Chime: ON / OFF Belts: Unfastened / Fastened — 100 sec.
			Lamp: ON / OFF Chime: ON / OFF Belts: Unfastened / Fastened — Within 6 sec.
3	Driver side lap belt is not fastened.	OFF → ON	Lamp: ON / OFF Chime: ON / OFF Belts: Unfastened / Fastened — 6 sec.
			Lamp: ON / OFF — 6 sec. Chime: ON / OFF Belts: Unfastened / Fastened — Within 6 sec.
4	Normal (All belts are fastened and shoulder anchors are in rear lock position.)	OFF → ON	Lamp: ON / OFF Chime: ON / OFF — 6 sec.

Contents

Symptom Chart BF-38
Preliminary Check BF-39
Main Power Supply and Ground Circuit Check BF-43
Harness Layout BF-44
Circuit Diagram for Quick Pinpoint Check BF-46
Diagnostic Procedure 1
(Check motor circuit and stop signals.) BF-47
Diagnostic Procedure 2
(Check door switch circuit.) BF-50
Diagnostic Procedure 3
(Check front limit switch circuit.) BF-52
Diagnostic Procedure 4
(Check rear limit switch circuit.) BF-54
Diagnostic Procedure 5
(Check shoulder belt switch circuit.) BF-56
Diagnostic Procedure 6
(Check lap belt switch circuit.) BF-58
Diagnostic Procedure 7
(Check warning chime circuit.) BF-60
Diagnostic Procedure 8
(Check warning lamp circuit.) BF-61
Electrical Components Inspection BF-62

Since left and right component parts are basically the same, harness layout and methods for electrical components inspection are shown for one side only.
Although methods for checking component parts on both sides are described in the flow chart, making it easier to troubleshoot, apply checking procedures to either side that have malfunction during trouble diagnoses. For those methods enclosed by double rectangulars, however, component parts on both sides must be checked as problems occurring on either side cannot be easily determined by a symptom.

Symptom Chart

Procedure	Reference page		SYMPTOM	No operation has made. (No warning indicated and no buckles movement performed)	Shoulder belt buckle in L.H. or R.H. side does not move.	Shoulder belt buckle moves frontwards only. (not rearwards)	Shoulder belt buckle moves rearwards only. (not frontwards)	Warnings indicate incorrectly or do not function.	Quick warning operates.
Electrical Components Inspection	BF-62	R.H. side	Motor	○	○				
	BF-62		Shoulder belt buckle switch	○				○	
	BF-62		Door latch switch	○		○	○		
	BF-62		Rear limit switch	○	○	○		○	
	BF-62		Front limit switch	○	○		○		○
	BF-63	L.H. side	Lap belt switch	○				○	
	BF-62		Motor	○	○				
	BF-62		Shoulder belt buckle switch	○				○	
	BF-62		Door latch switch	○		○	○		
	BF-62		Rear limit switch	○	○	○		○	
	BF-62		Front limit switch	○	○		○		○
	—		Warning chime	○				○	
	—		Warning lamp	○				○	
Diagnostic Procedure	BF-61		Procedure 8					○	
	BF-60		Procedure 7					○	
	BF-58		Procedure 6					○	
	BF-56		Procedure 5					○	
	BF-54		Procedure 4	○	○	○		○	
	BF-52		Procedure 3	○	○		○		○
	BF-50		Procedure 2			○	○		
	BF-47		Procedure 1	○	○				
Main Power Supply and Ground Circuit Check	BF-43		Procedure 2		○				
	BF-43		Procedure 1	○					
Preliminary Check	BF-41		Procedure 2					○	
	BF-39		Procedure 1		○	○	○		

Preliminary Check

PROCEDURE 1

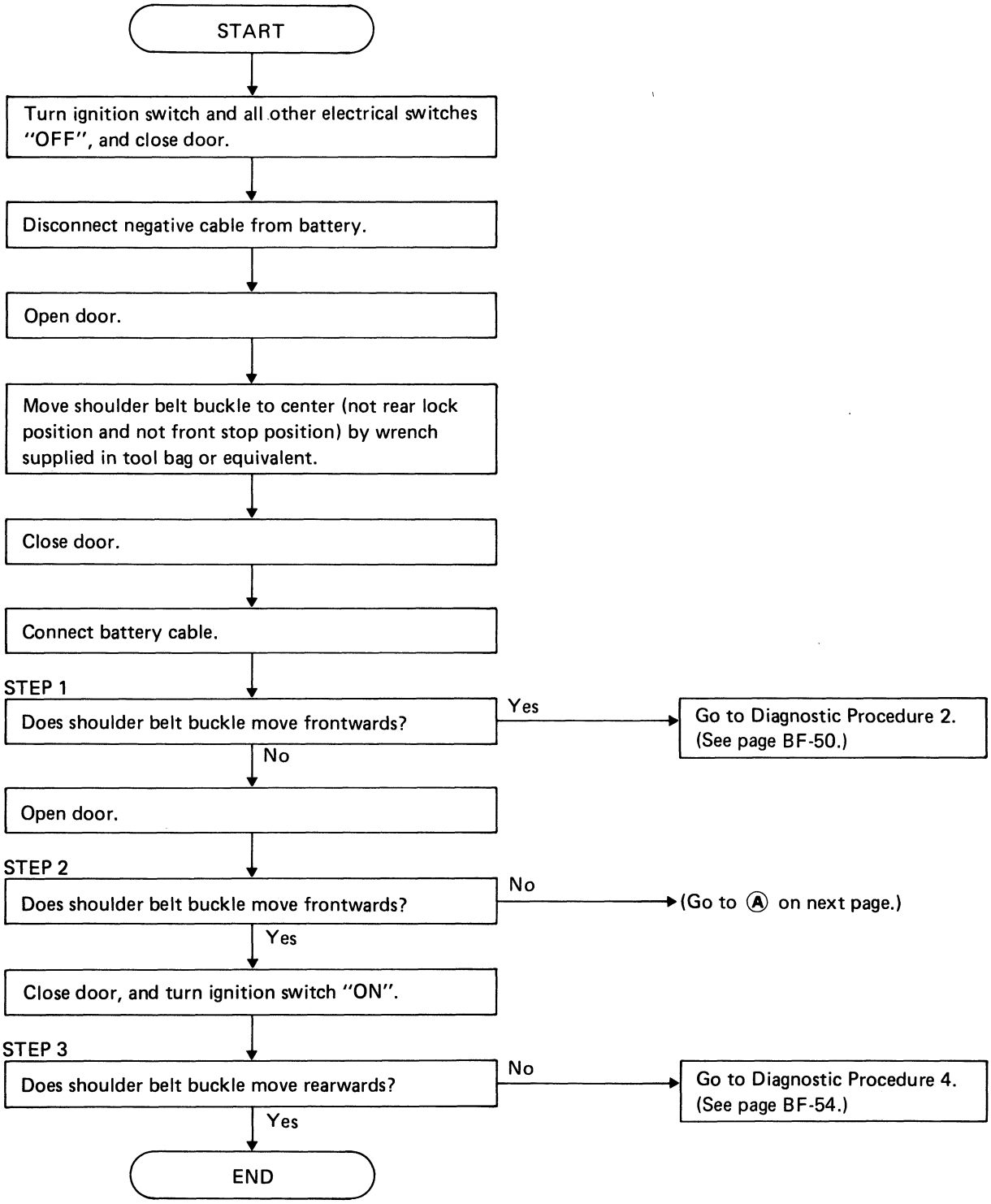

Preliminary Check (Cont'd)

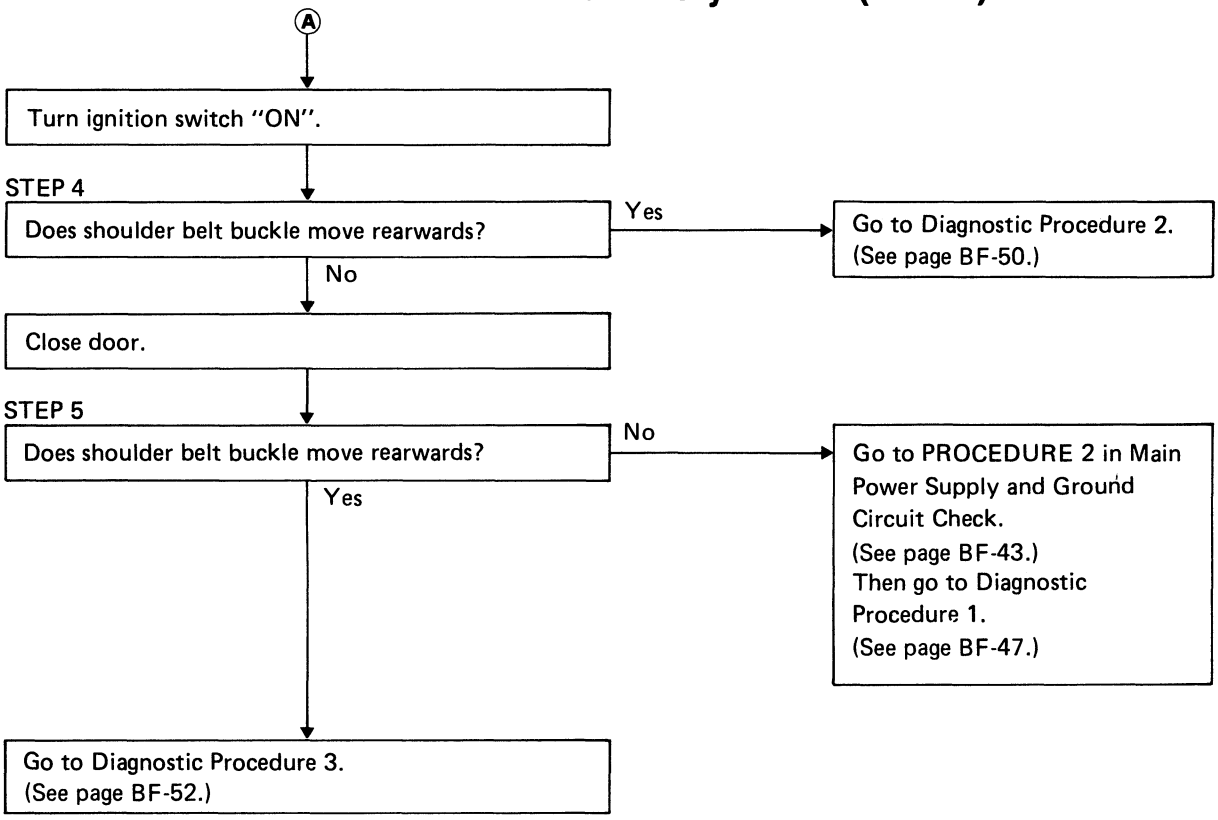

Preliminary Check (Cont'd)

PROCEDURE 2

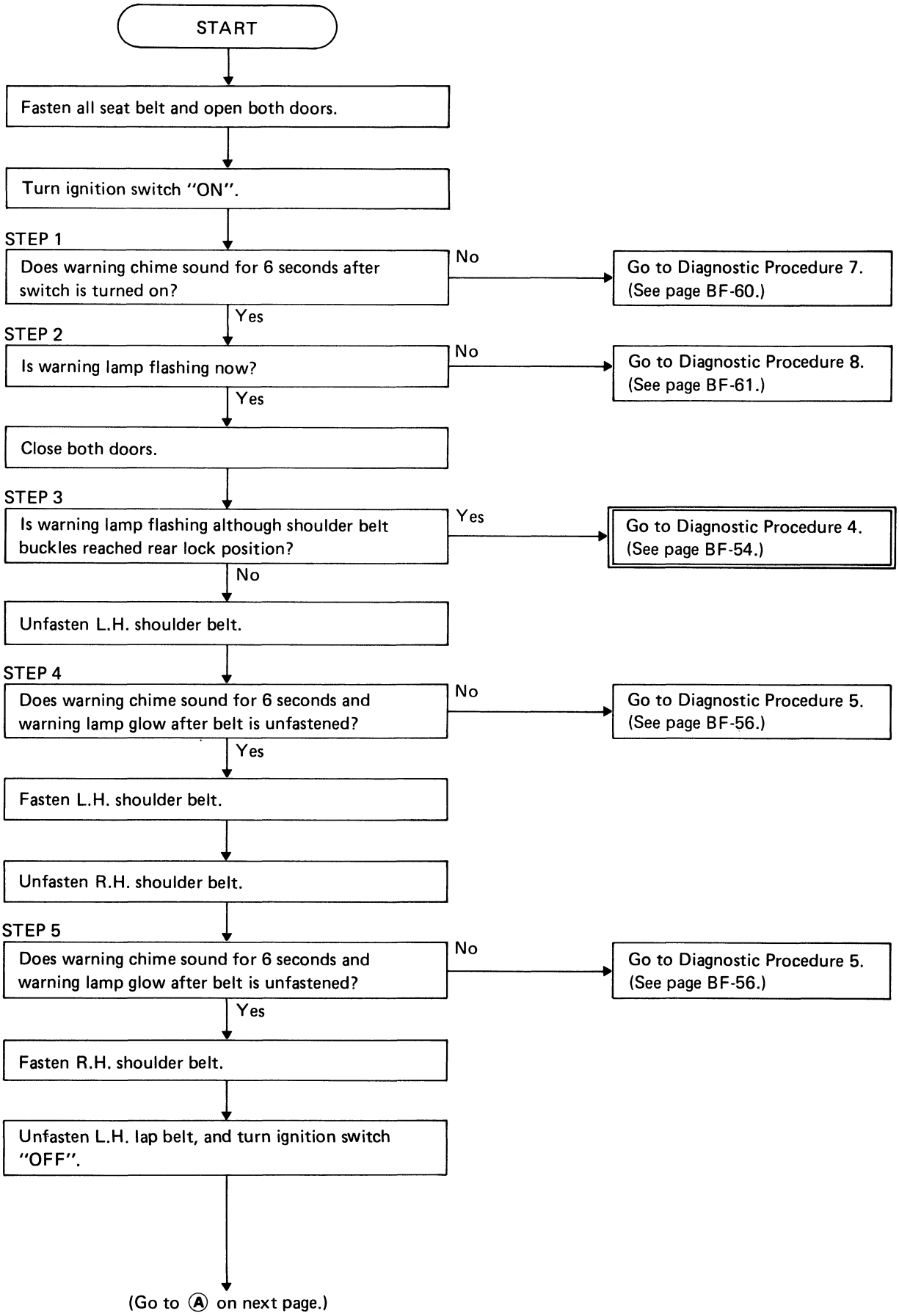

(Go to Ⓐ on next page.)

Preliminary Check (Cont'd)

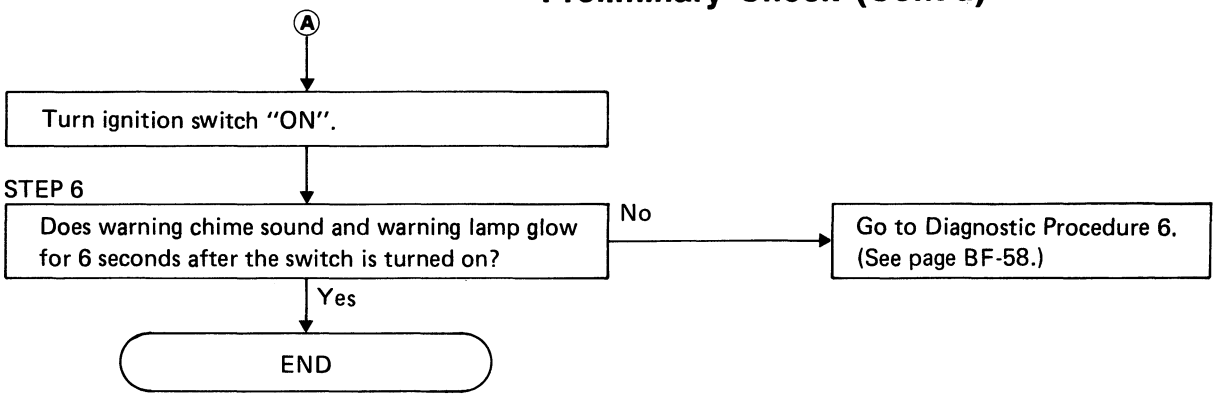

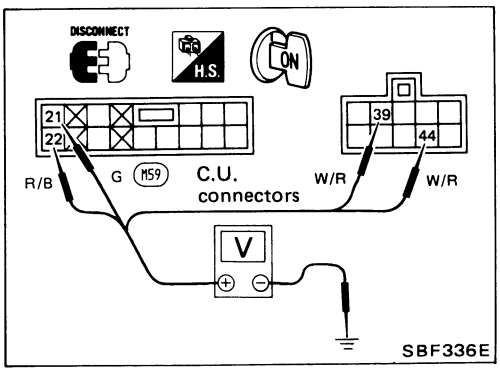

Main Power Supply and Ground Circuit Check

PROCEDURE 1

Main power supply

Terminals	Battery voltage existence condition	
	Ignition switch "ON"	Other than ignition switch "ON"
㉑ - Ground	Yes	No
㉒ - Ground	Yes	Yes
㊴ - Ground	Yes	Yes
㊹ - Ground	Yes	Yes

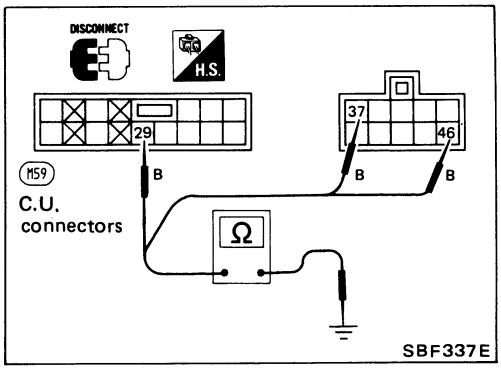

Ground circuit

Terminals	Continuity
㉙ - Ground	Yes
㊲ - Ground	Yes
㊻ - Ground	Yes

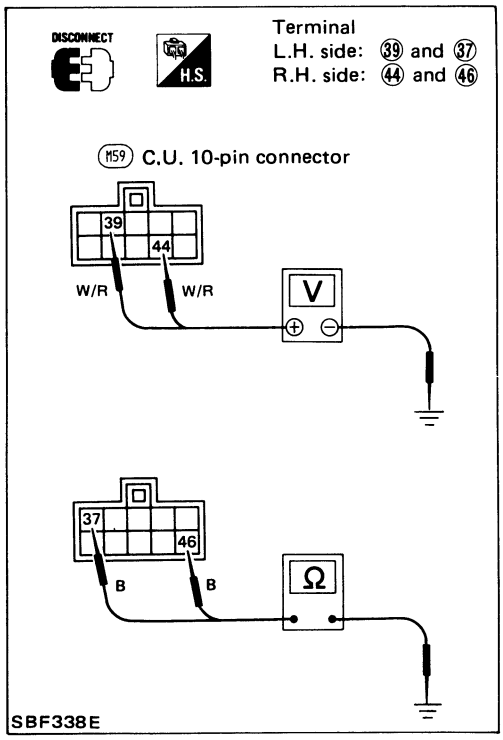

PROCEDURE 2

Power supply for motor drive

	Terminals	Battery voltage existence
L.H. side	㊴ - Ground	Yes
R.H. side	㊹ - Ground	Yes

Ground circuit for motor drive

	Terminals	Continuity
L.H. side	㊲ - Ground	Yes
R.H. side	㊻ - Ground	Yes

Harness Layout

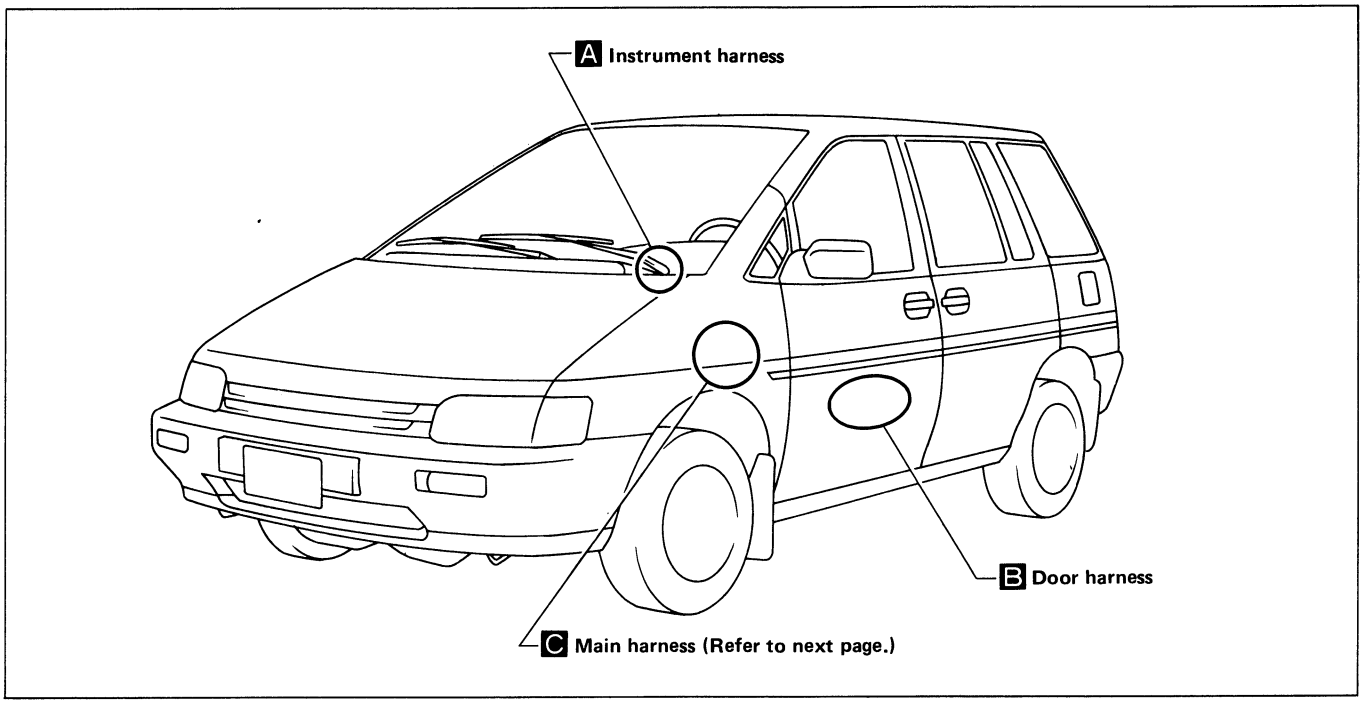

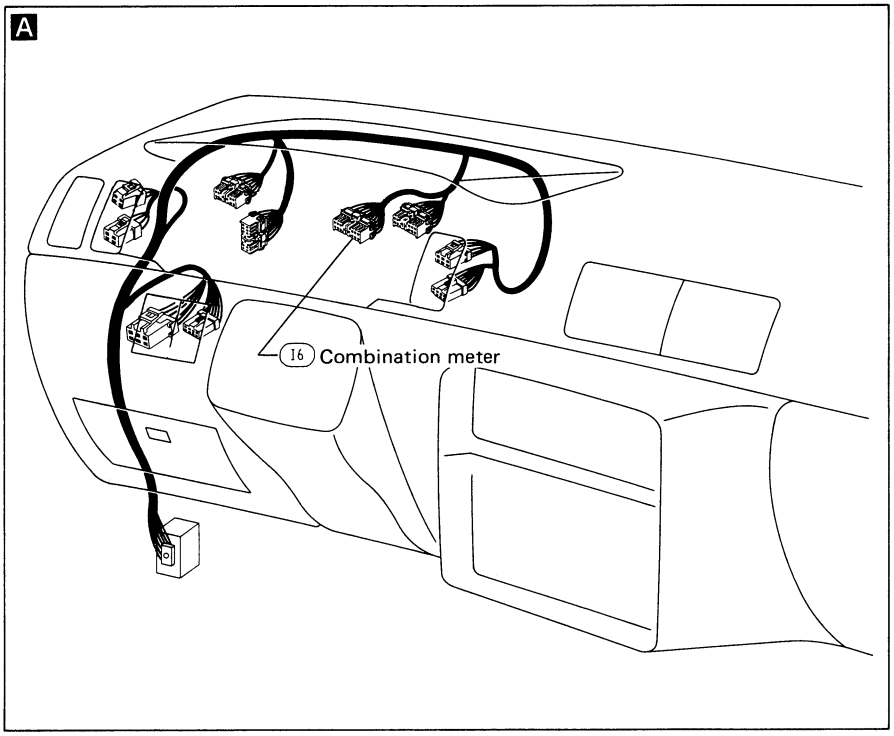

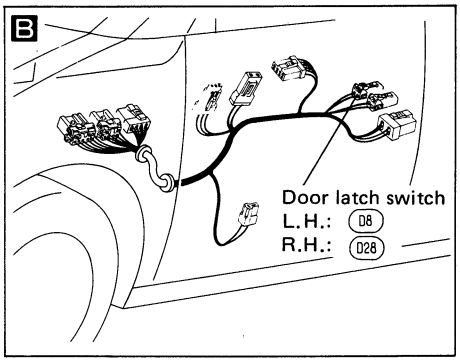

SBF827E

Harness Layout (Cont'd)

C

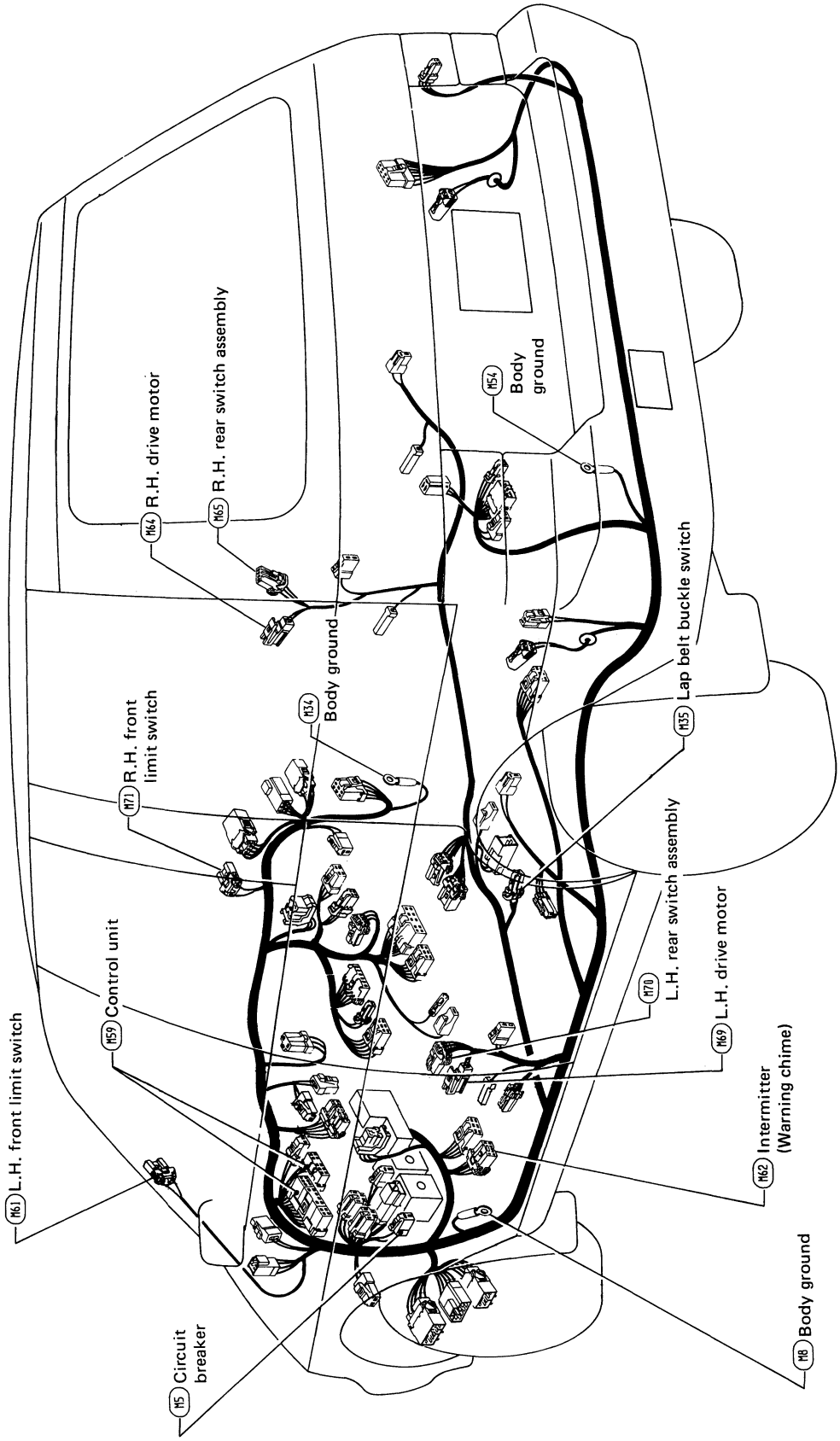

SBF853E

Circuit Diagram for Quick Pinpoint Check

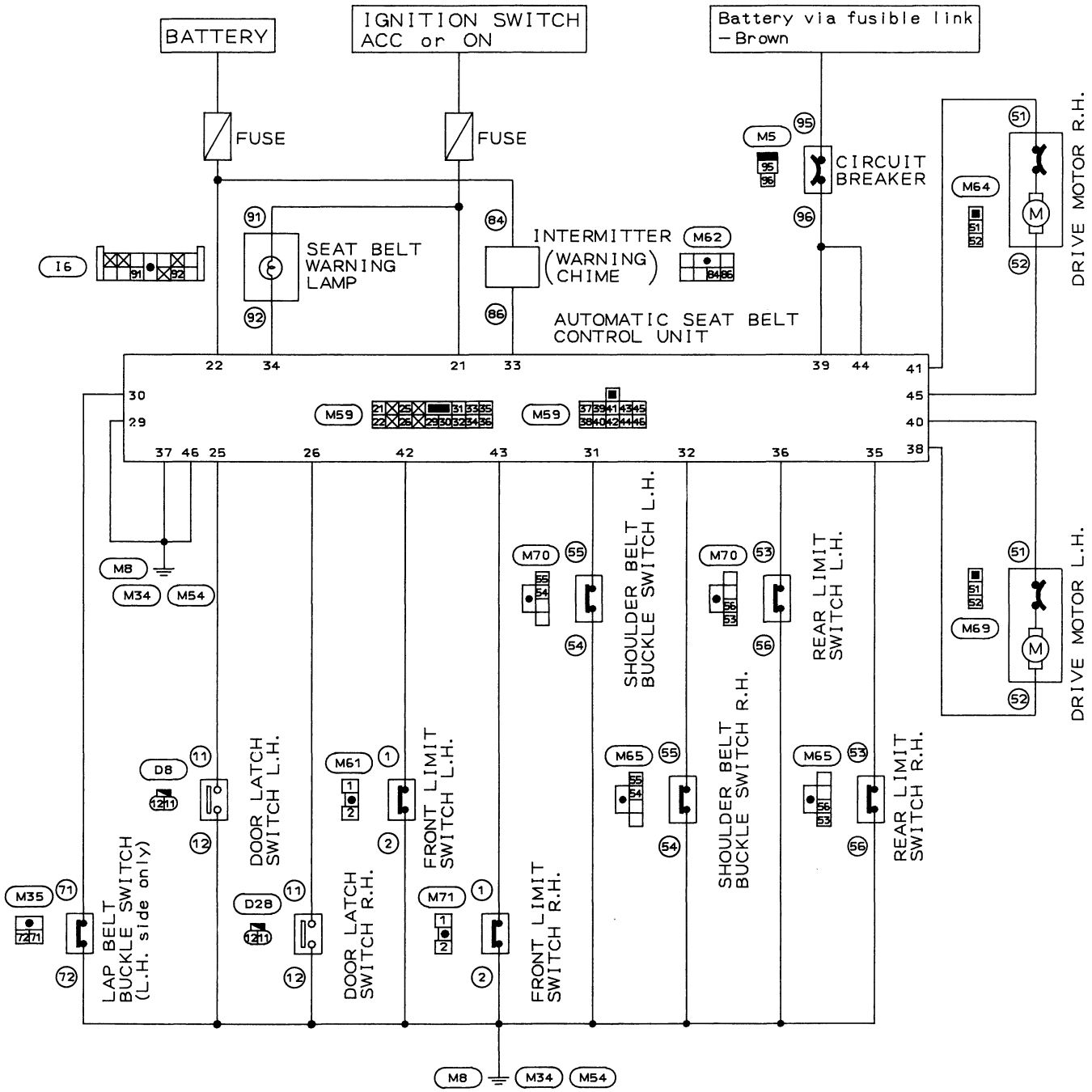

SBF781E

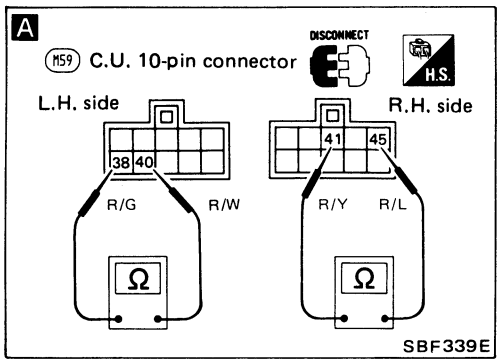

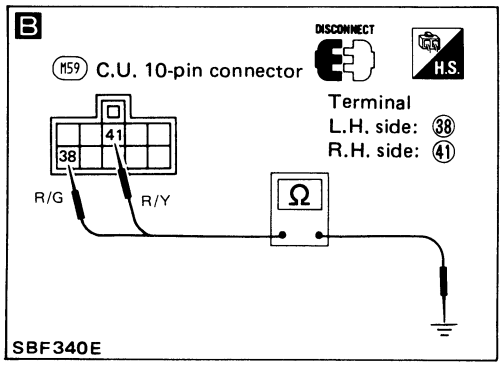

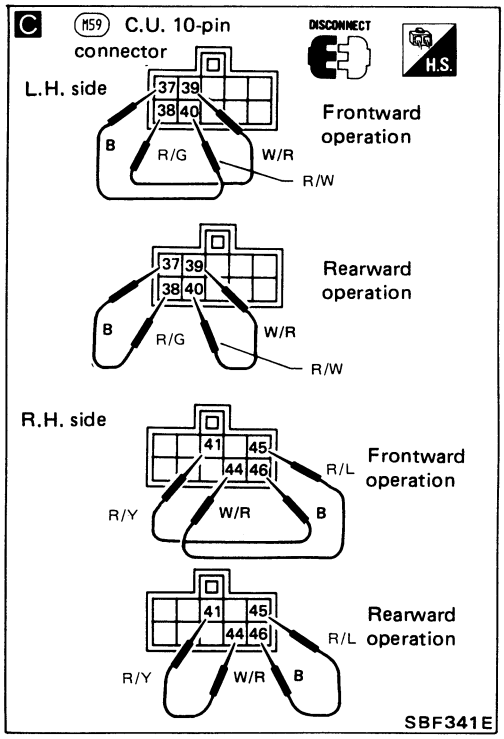

Diagnostic Procedure 1

START

A

CHECK MOTOR CIRCUIT.
1) Disconnect 10-pin connector from control unit.
2) Check continuity.

	Terminals
L.H. side	38 - 40
R.H. side	41 - 45

Continuity should exist.

N.G. → (Go to Ⓐ on next page.)

O.K. ↓

B

Does continuity exist?

	Terminals
L.H. side	38 - Ground
R.H. side	41 - Ground

Yes → (Go to Ⓑ on next page.)

No ↓

C

CHECK MOTOR OPERATION.
Check shoulder belt buckle movement.

O.K. → (Go to Ⓒ on page BF-49.)

N.G. ↓

Go to DRIVE MOTOR ASSEMBLY in Electrical Components Inspection. (See page BF-62.)

N.G. → Replace drive motor assembly.

O.K. ↓

Replace guide rail assembly.

Diagnostic Procedure 1 (Cont'd)

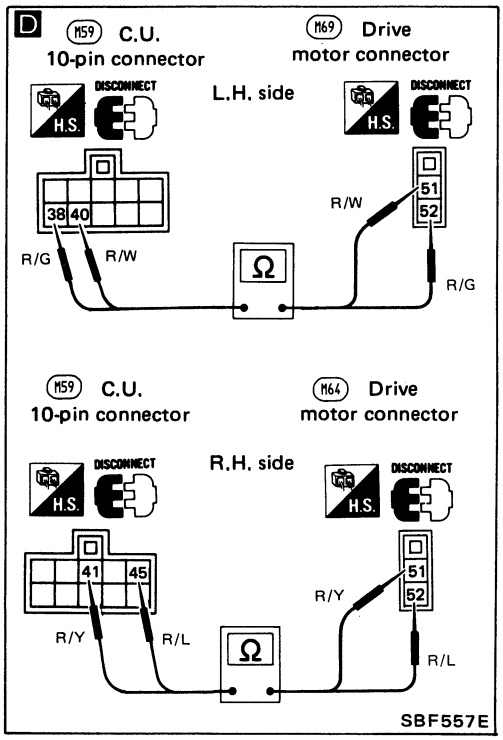

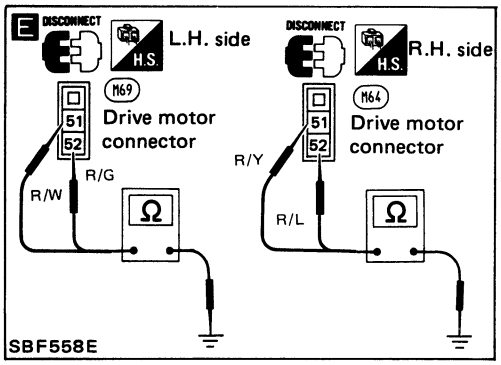

Ⓐ

D

1) Disconnect connector from drive motor assembly.
2) Check continuity.

	Terminals
L.H. side	㊳ - ㊷
	㊵ - ㊶
R.H. side	㊶ - ㊶
	㊺ - ㊷

Continuity should exist.

N.G. → Repair harness.

O.K. ↓

Check drive motor harness for open circuit.

N.G. → Repair drive motor harness.

O.K. ↓

Replace drive motor.

Ⓑ

E

1) Disconnect connector from drive motor assembly.
2) Does continuity exist in at least one point?

	Terminals
L.H. side	㊶ - Ground
	㊷ - Ground
R.H. side	㊶ - Ground
	㊷ - Ground

Yes → Repair harness. There will be incorrect grounding.

No ↓

Check drive motor harness for incorrect grounding.

N.G. → Repair drive motor harness.

O.K. ↓

Replace drive motor assembly.

Diagnostic Procedure 1 (Cont'd)

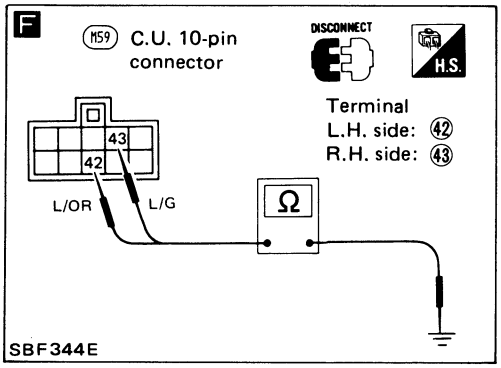

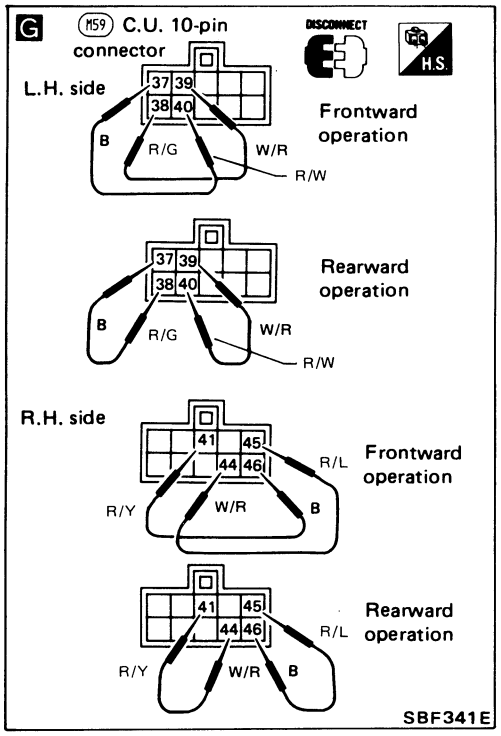

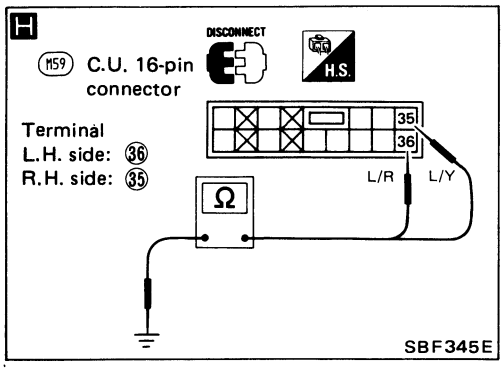

Ⓒ

F

CHECK STOP SIGNAL.
1) Move shoulder belt buckle to center (not rear lock position and not front).
2) Check continuity.

	Terminals
L.H. side	42 - Ground
R.H. side	43 - Ground

Continuity should exist.
G Refer to figure G to move shoulder belt buckle.

N.G. → Go to Diagnostic Procedure 3 (See page BF-52.) and return to next step.

O.K. ↓

H

1) Disconnect 16-pin connector from control unit.
2) Check continuity.

	Terminals
L.H. side	36 - Ground
R.H. side	35 - Ground

Continuity should exist.

N.G. → Go to Diagnostic Procedure 4 (See page BF-54.) and return to next step.

O.K. ↓

Is this the second time?

Yes → Replace control unit.

No ↓

Reinstall any part removed.

Go to PROCEDURE 1 (START) in Preliminary Check. (See page BF-39.)

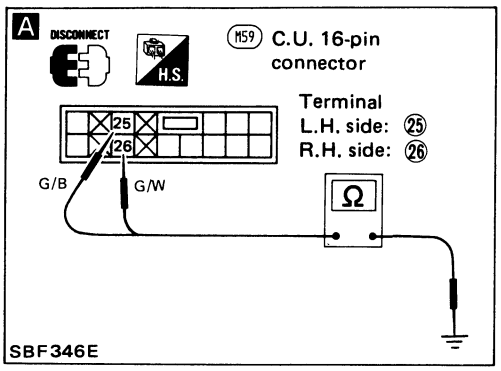

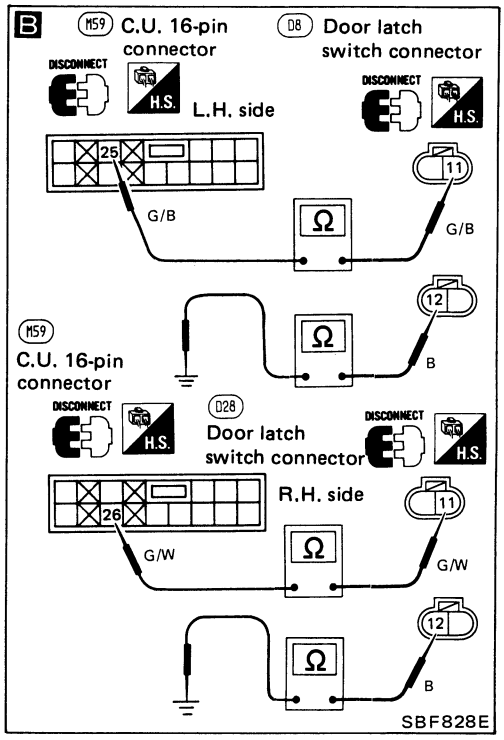

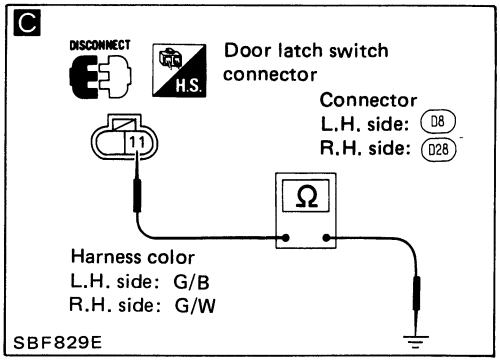

Diagnostic Procedure 2

START

A

CHECK DOOR SWITCH CIRCUIT.
1) Disconnect 16-pin connector from control unit.
2) Check continuity.

	Terminals	Door condition	Continuity
L.H. side	25 - Ground	Open	Yes
		Close	No
R.H. side	26 - Ground	Open	Yes
		Close	No

O.K. → (Go to A on next page.)

N.G. ↓

B

1) Disconnect door latch switch connector.
2) Check continuity.

	Terminals
L.H. side	25 - 11 12 - Ground (M8, M34, M54)
R.H. side	26 - 11 12 - Ground (M8, M34, M54)

Continuity should exist.

N.G. → Repair harness.

O.K. ↓

C

Does continuity exist?

	Connector	Terminals
L.H. side	D8	11 - Ground
R.H. side	D28	11 - Ground

Yes → Repair harness.
There will be incorrect grounding between terminals 25 and 11 or 26 and 11.

No ↓

Go to DOOR LATCH SWITCH in Electrical Components Inspection. (See page BF-62.)

O.K. → Reinstall any part removed. → Go to PROCEDURE 1 (START) in Preliminary Check. (See page BF-39.)

N.G. ↓

Check door latch switch harness for open and short circuit.

N.G. → Repair door latch switch harness.

O.K. ↓

Replace door lock assembly.

Diagnostic Procedure 2 (Cont'd)

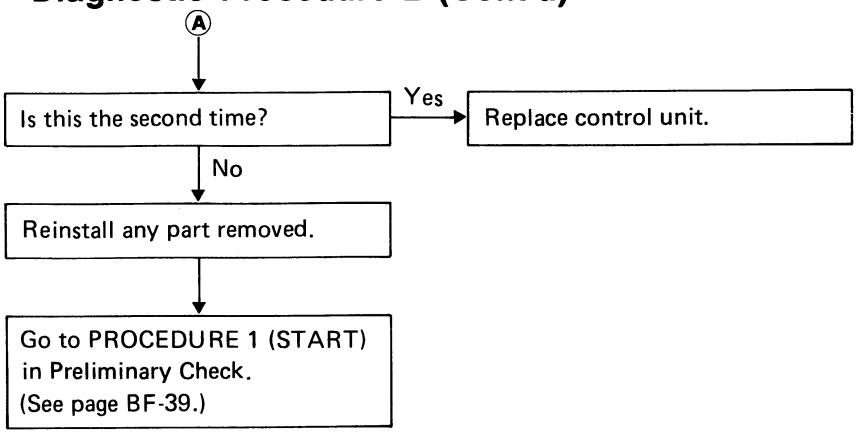

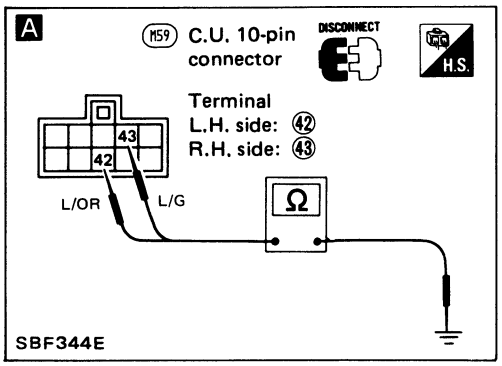

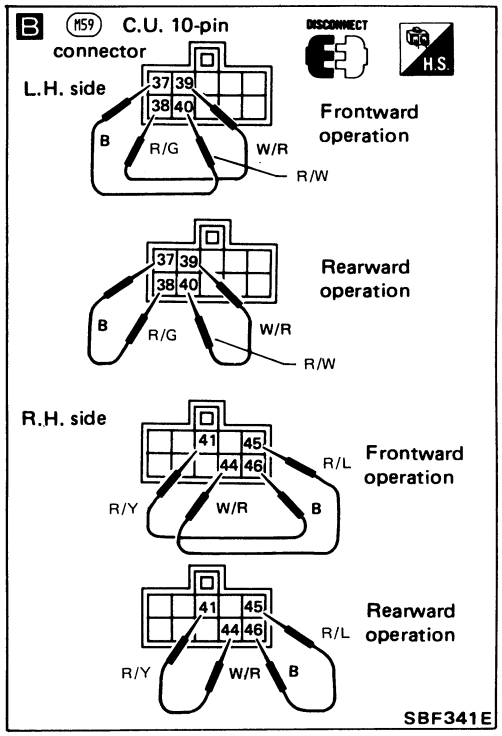

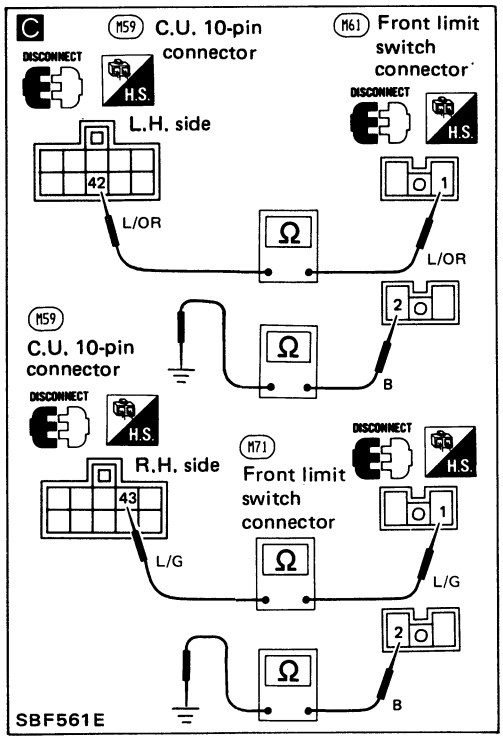

Diagnostic Procedure 3

START

A

CHECK FRONT LIMIT SWITCH CIRCUIT.

1) Disconnect 10-pin connector from control unit.
2) Check continuity.

	Terminals	Shoulder belt buckle position	Continuity
L.H. side	42 - Ground	At front	No
		Not at front	Yes
R.H. side	43 - Ground	At front	No
		Not at front	Yes

B Refer to figure B to move shoulder belt buckle.

O.K. → (Go to B on next page.)

N.G. ↓

C

1) Disconnect connector from front limit switch.
2) Check continuity.

	Terminals
L.H. side	42 - 1 2 - Ground (M8), (M34), (M54)
R.H. side	43 - 1 2 - Ground (M8), (M34), (M54)

Continuity should exist.

N.G. → Repair harness.

O.K. ↓

(Go to A on next page.)

Diagnostic Procedure 3 (Cont'd)

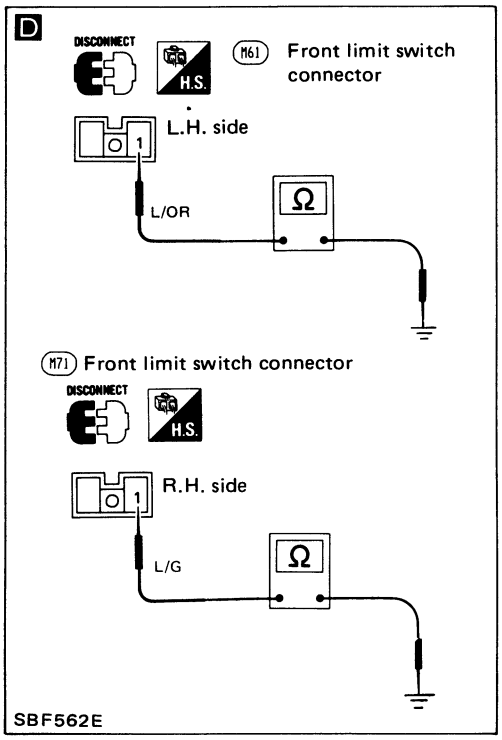

Ⓐ

D

Does continuity exist?

	Connector	Terminals
L.H. side	M61	1 - Ground
R.H. side	M71	1 - Ground

Yes → Repair harness. There will be incorrect grounding between terminals 42 and 1 or 43 and 1.

No ↓

Go to FRONT LIMIT SWITCH in Electrical Components Inspection. (See page BF-62.)

O.K. → Replace guide rail assembly.

N.G. ↓

Check front limit witch harness for open and short circuit.

N.G. → Repair front limit switch harness.

O.K. ↓

Replace front limit switch.

Ⓑ

Is this the second time?

Yes → Replace control unit.

No ↓

Reinstall any part removed.

Go to PROCEDURE 1 (START) in Preliminary Check. (See page BF-39.)

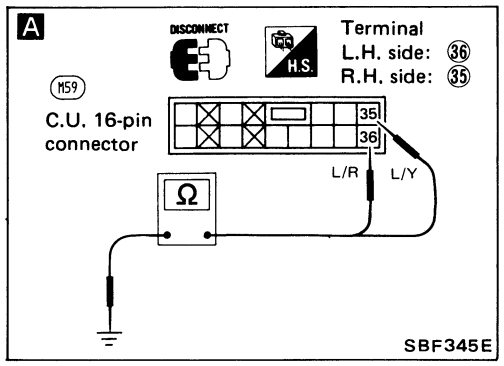

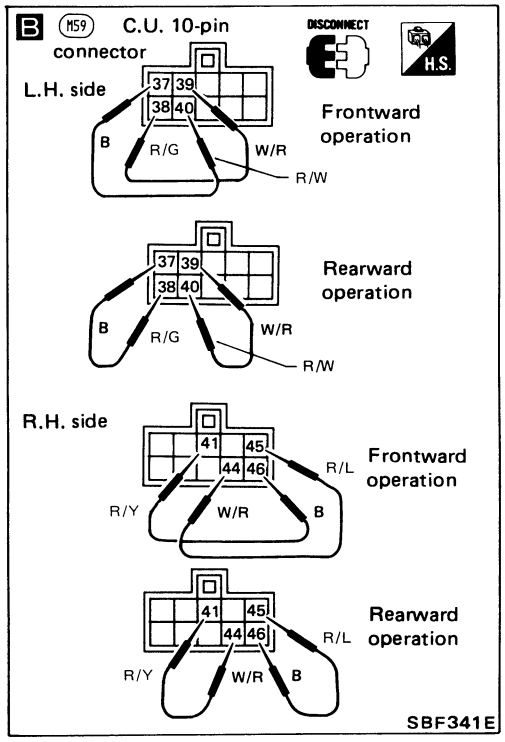

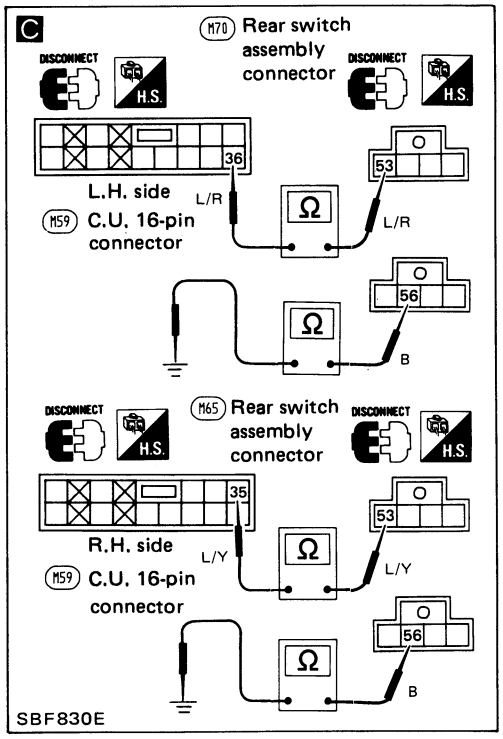

Diagnostic Procedure 4

START

A

CHECK REAR LIMIT SWITCH CIRCUIT.

1) Disconnect 16-pin connector from control unit.
2) Check continuity.

	Terminals	Shoulder belt buckle position	Continuity
L.H. side	36 - Ground	At rear	No
		Not at rear	Yes
R.H. side	35 - Ground	At rear	No
		Not at rear	Yes

B Refer to figure B to move shoulder belt buckle.

O.K. → (Go to B on next page.)

N.G.

C

1) Disconnect connector from rear switch assembly.
2) Check continuity.

	Terminals
L.H. side	36 - 53 56 - Ground (M8, M34, M54)
R.H. side	35 - 53 56 - Ground (M8, M34, M54)

Continuity should exist.

N.G. → Repair harness.

O.K.

(Go to A on next page.)

Diagnostic Procedure 4 (Cont'd)

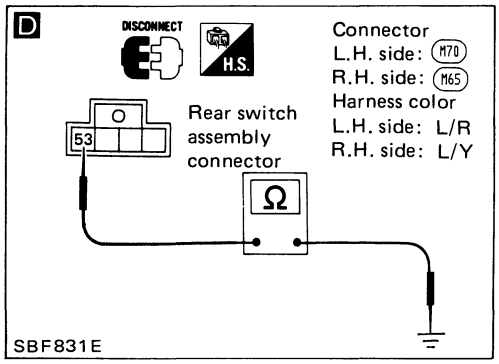

Ⓐ

D

Does continuity exist?

	Connector	Terminals
L.H. side	M70	53 - Ground
R.H. side	M65	53 - Ground

Yes → Repair harness. There will be incorrect grounding between terminals 36 and 53 or 35 and 53.

No ↓

Go to REAR LIMIT SWITCH in Electrical Components Inspection. (See page BF-62.)

O.K. → (Go to Ⓑ below.)

N.G. ↓

Check rear limit switch harness for open or short circuit.

N.G. → Repair rear limit switch harness.

O.K. ↓

Replace rear switch assembly.

Ⓑ

Is this the second time?

Yes → Replace control unit.

No ↓

Reinstall any part removed.

↓

Go to PROCEDURE 1 (STEP 3) (See page BF-39.) or PROCEDURE 2 (STEP 3) (See page BF-41.) in Preliminary Check.

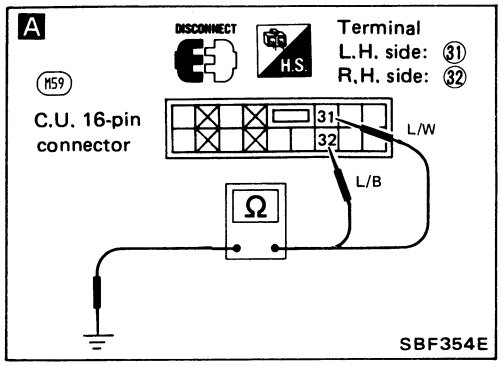

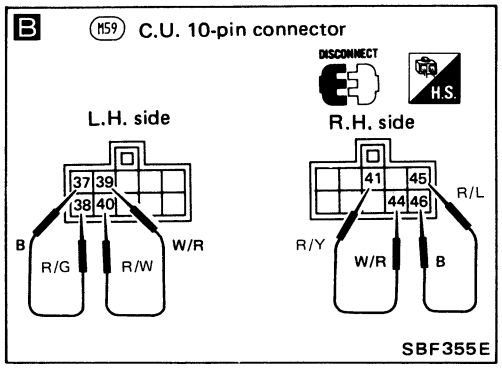

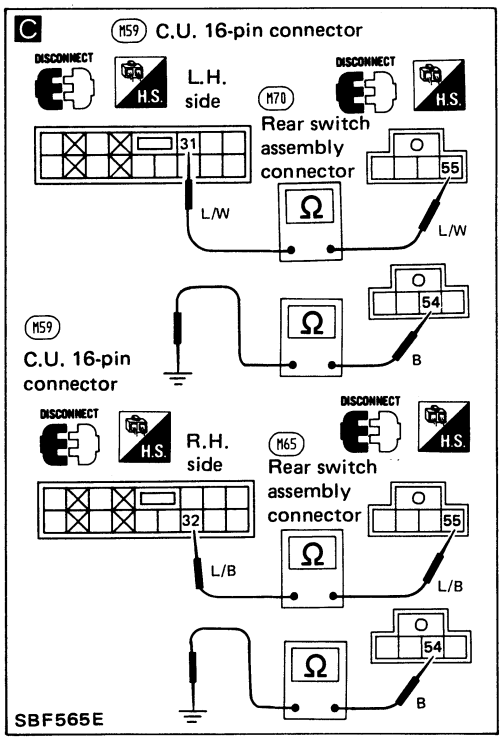

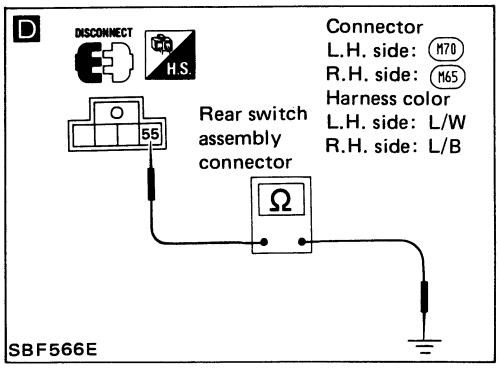

Diagnostic Procedure 5

START

A

CHECK SHOULDER BELT BUCKLE SWITCH CIRCUIT.

1) Disconnect 16-pin connector from control unit.
2) Check continuity when shoulder belt buckle is at rear lock position.

	Terminals	Shoulder belt	Continuity
L.H. side	31 - Ground	Fasten	Yes
		Unfasten	No
R.H. side	32 - Ground	Fasten	Yes
		Unfasten	No

B If shoulder belt buckle is not rear lock position, do as figure B to move it to rear.

O.K. → (Go to B on next page.)

N.G. ↓

C

1) Disconnect connector from rear switch assembly.
2) Check continuity.

	Terminals
L.H. side	31 - 55 54 - Ground (M8), (M34), (M54)
R.H. side	32 - 55 54 - Ground (M8), (M34), (M54)

Continuity should exist.

N.G. → Repair harness.

O.K. ↓

D

Does continuity exist?

	Connector	Terminals
L.H. side	M70	55 - Ground
R.H. side	M65	55 - Ground

Yes → Repair harness.
There will be incorrect grounding between terminals 31 and 55 or 32 and 55.

No ↓

Go to SHOULDER BELT BUCKLE SWITCH in Electrical Components Inspection.
(See page BF-62.)

O.K. → (Go to B on next page.)

N.G. ↓

(Go to A on next page.)

Diagnostic Procedure 5 (Cont'd)

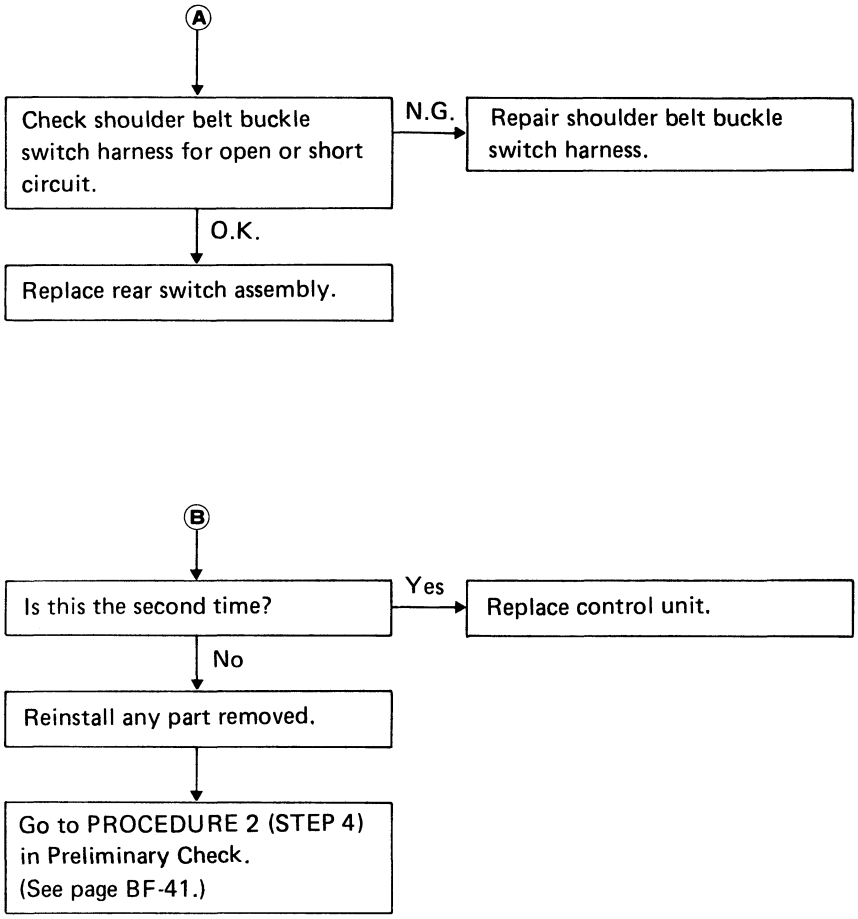

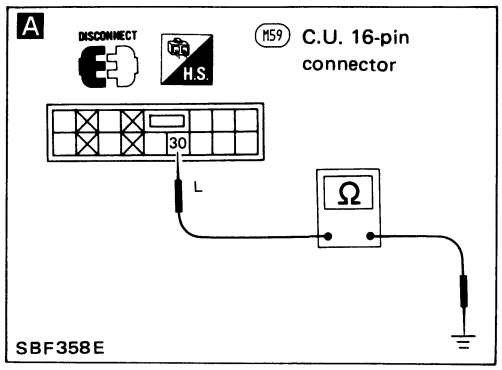

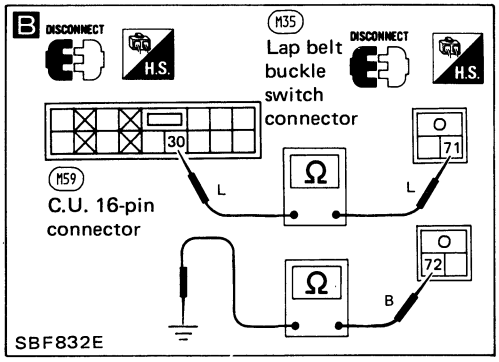

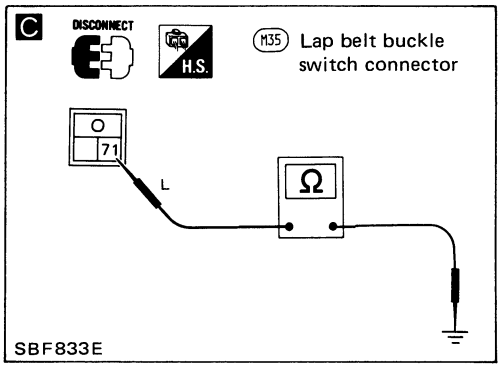

Diagnostic Procedure 6

START

A

CHECK LAP BELT BUCKLE SWITCH CIRCUIT (L.H. only).
1) Disconnect 16-pin connector from control unit.
2) Check continuity.

Terminals	Lap belt	Continuity
30 - Ground	Fasten	No
	Unfasten	Yes

O.K. → (Go to Ⓐ on next page.)

N.G. ↓

B

1) Disconnect lap belt switch connector.
2) Check continuity.

Terminals
30 - 71
72 - Ground (M8, M34, M54)

Continuity should exist.

N.G. → Repair harness.

O.K. ↓

C

Does continuity exist?

Terminals
71 - Ground

Yes → Repair harness. There will be incorrect grounding.

No ↓

Go to LAP BELT BUCKLE SWITCH in Electrical Components Inspection. (See page BF-63.)

O.K. → (Go to Ⓐ on next page.)

N.G. ↓

Check lap belt buckle switch harness for open and short circuit.

N.G. → Repair lap belt buckle switch harness.

O.K. ↓

Replace shoulder belt buckle assembly.

Diagnostic Procedure 6 (Cont'd)

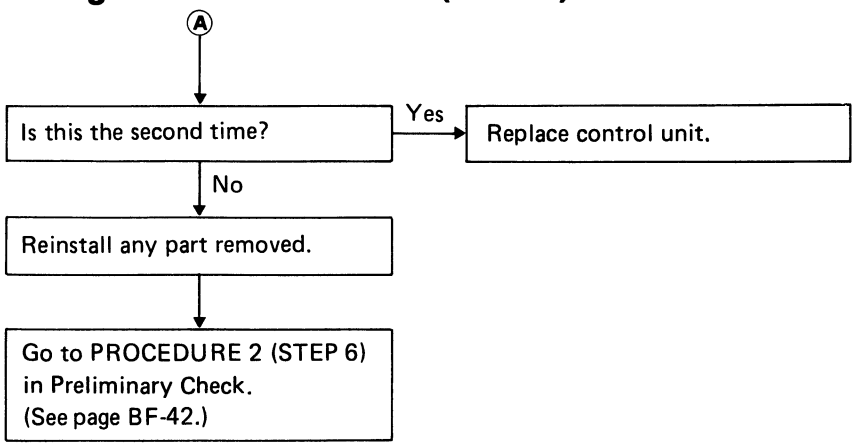

Diagnostic Procedure 7

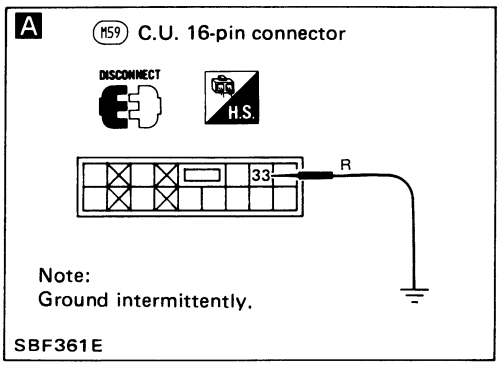

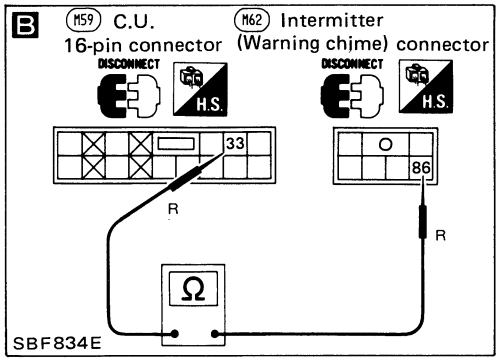

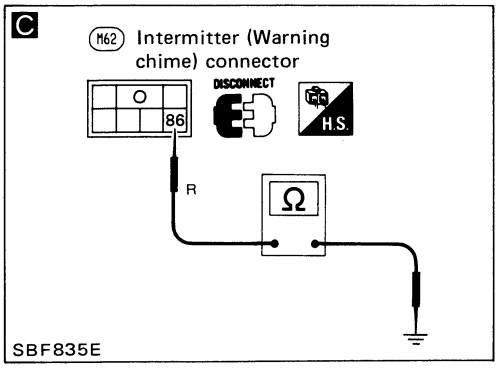

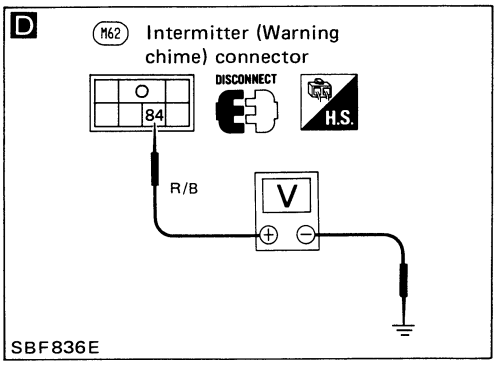

START

A

CHECK WARNING CHIME CIRCUIT.
1) Disconnect 16-pin connector from control unit.
2) Check warning chime.

Terminals	Method	Result
33 - Ground	Ground inter-mittently.	Sound

O.K. → (Go to A below.)

N.G. ↓

B

1) Disconnect connector(s) from intermitter (warning chime).
2) Check continuity.

Terminals
33 - 86
Continuity should exist.

N.G. → Repair harness.

O.K. ↓

C

Does continuity exist?

Terminals
86 - Ground

Yes → Repair harness. There will be incorrect grounding.

No ↓

D

Check battery voltage existence.

Terminals
84 - Ground
Battery voltage should exist.

N.G. → Repair harness. For details, refer to POWER SUPPLY ROUTING in EL section.

O.K. ↓

Is this the first time? Yes → Replace warning chime.

No ↓ (A)

Is this the second time? Yes → Replace control unit.

No ↓

Reinstall any part removed.

↓

Go to PROCEDURE 2 (START) in Preliminary Check. (See page BF-41.)

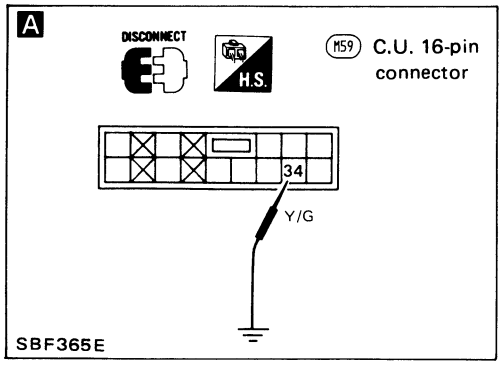

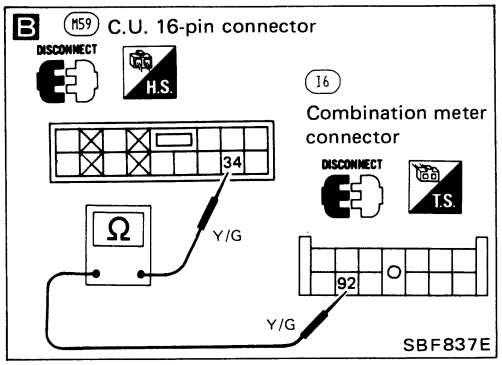

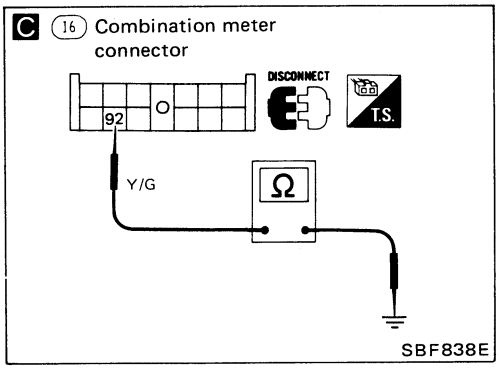

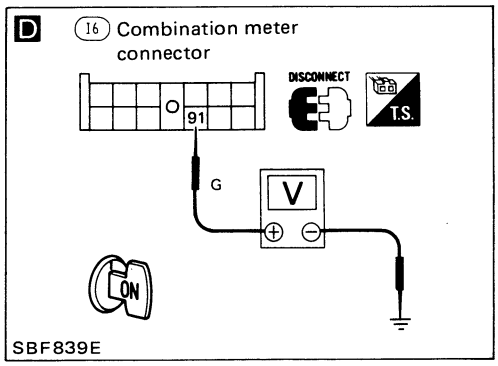

Diagnostic Procedure 8

START

A

CHECK WARNING LAMP CIRCUIT.
1) Disconnect 16-pin connector from control unit.
2) Check warning lamp.

Terminals	Result
34 - Ground	Glow

O.K. → (Go to A below.)

N.G. ↓

B

1) Disconnect connector from combination meter.
2) Check continuity.

Terminals
34 - 92
Continuity should exist.

N.G. → Repair harness.

O.K. ↓

C

Does continuity exist?

Terminals
92 - Ground

Yes → Repair harness. There will be incorrect grounding.

No ↓

D

Check battery voltage existence.

Terminals
91 - Ground
Battery voltage should exist.

N.G. → Repair harness. For details, refer to POWER SUPPLY ROUTING in EL section.

O.K. ↓

Is warning lamp bulb burn out? → Yes → Replace bulb.

No ↓ (A)

Is this the second time? → Yes → Replace control unit.

No ↓

Reinstall any part removed.

↓

Go to PROCEDURE 2 (START) in Preliminary Check. (See page BF-41.)

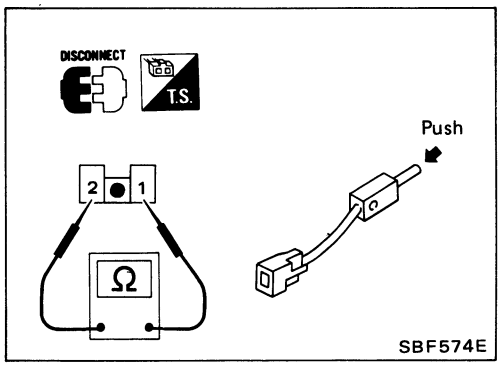

Electrical Components Inspection

FRONT LIMIT SWITCH

Condition	Continuity
Pushed	No
Released	Yes

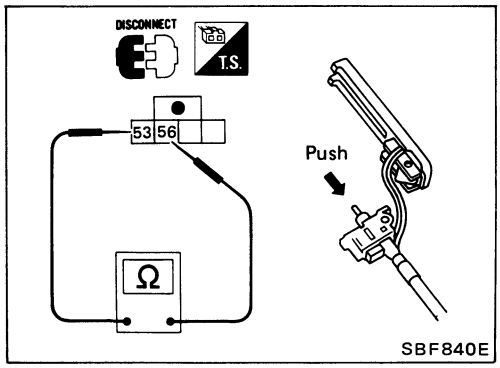

REAR LIMIT SWITCH

Condition	Continuity
Pushed	No
Released	Yes

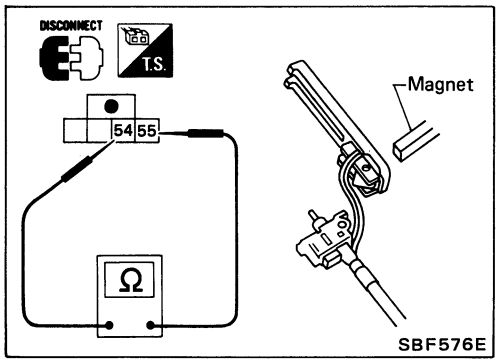

SHOULDER BELT BUCKLE SWITCH

Condition	Continuity
Move magnet toward buckle switch.	Yes
Move magnet away buckle switch.	No

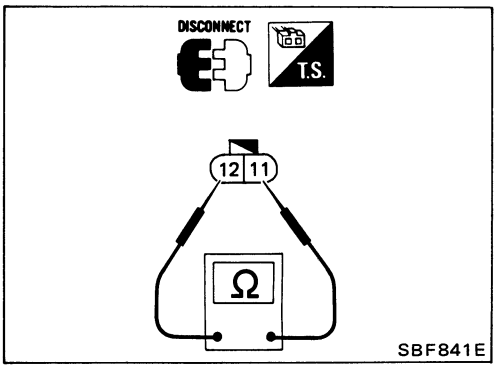

DOOR LATCH SWITCH
(Built-in door lock assembly)

Door condition	Continuity
Open	Yes
Closed	No

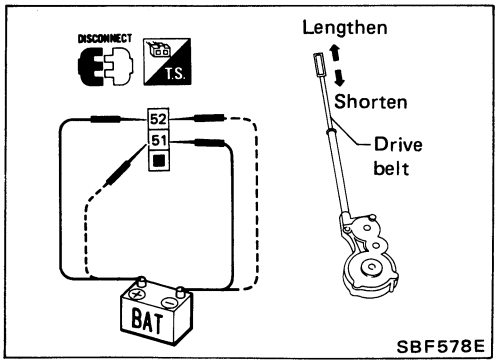

DRIVE MOTOR ASSEMBLY

Terminals		Drive belt operation
⊕	⊖	
52	51	Lengthen
51	52	Shorten

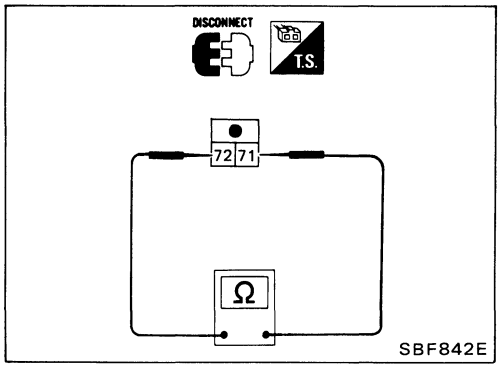

Electrical Components Inspection (Cont'd)

LAP BELT BUCKLE SWITCH

(Built-in lap belt buckle for L.H. side)

Condition	Continuity
Fastened	No
Unfastened	Yes

Windshield

REMOVAL

After removing moldings, remove glass.

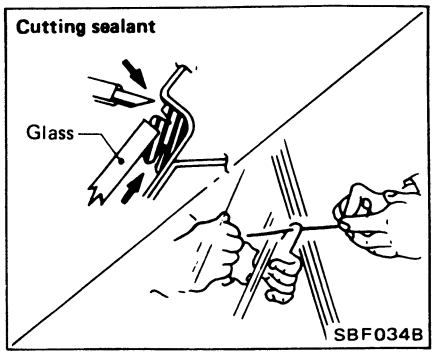

CAUTION:
Be careful not to scratch glass when removing.

INSTALLATION

- **Use genuine Nissan Sealant kit or equivalent. Follow instructions furnished with it.**
- **After installation, the vehicle should remain stationary for about 24 hours.**
- **Do not use sealant which is more than 12 months past its production date.**
- **Do not leave cartridge unattended with its cap open.**
- **Keep primers and sealant in a cool, dry place. Nissan recommends that they are stored in a refrigerator.**
- **Be sure to install moldings.**

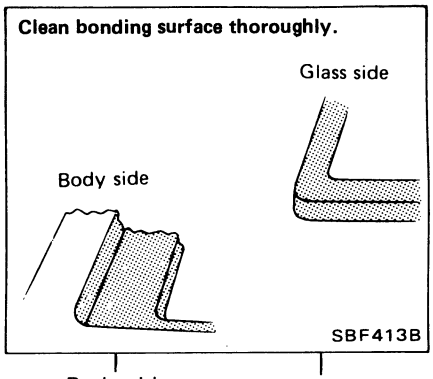

WARNING:
Keep heat or open flames away as primers are flammable.

Body side

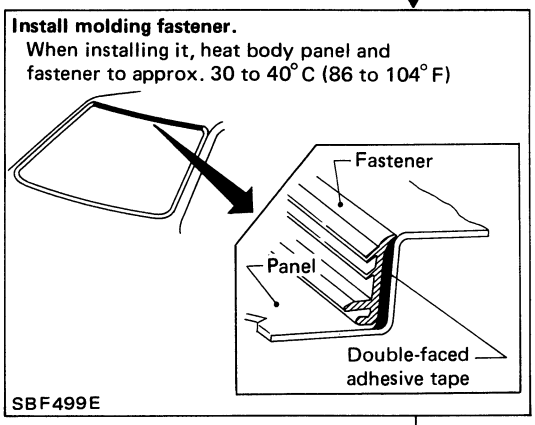

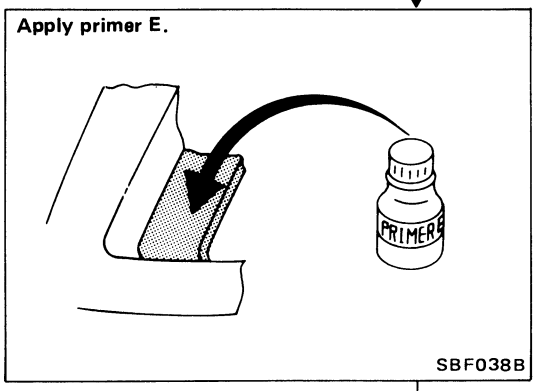

CAUTION:
Allow primers to dry for 10 to 15 minutes before proceeding to the next step.

Ⓐ

Glass side

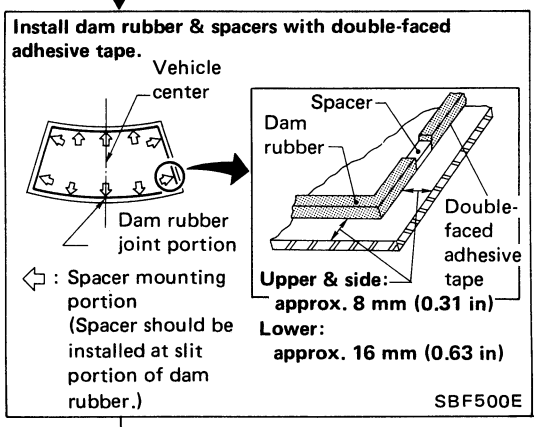

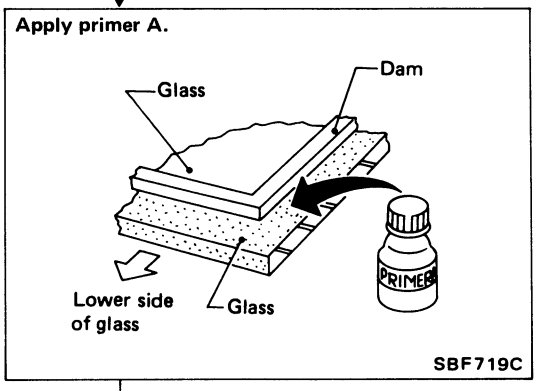

CAUTION:
Do not apply primer A to windshield opening flanges.

Ⓑ

Windshield (Cont'd)

Ⓐ

Install spacers with double-faced adhesive tape.

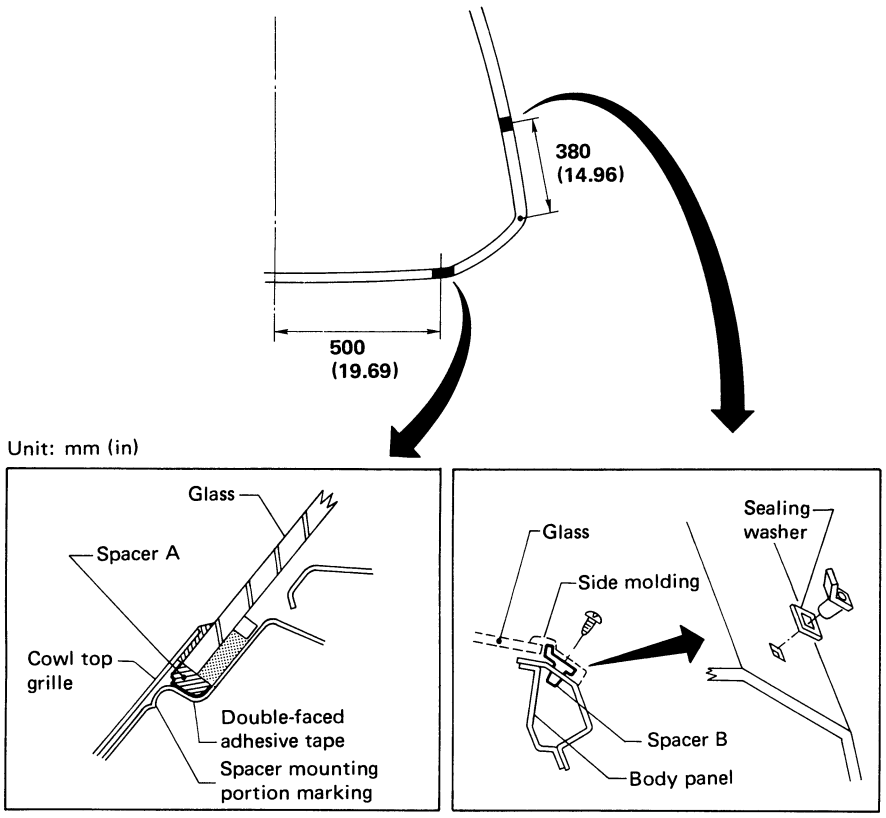

SBF501E

Ⓑ

Apply sealant evenly.

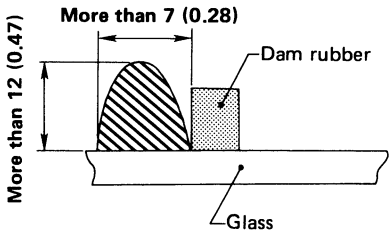

Unit: mm (in)

SBF920D

CAUTION:
Windshield glass should be installed within 15 minutes of applying sealant: sealant starts to harden 15 minutes after it is applied.

Set glass in position and press glass lightly and evenly.

Ⓐ

Windshield (Cont'd)

Ⓐ

Apply additional sealant uniformly to the lower portion of glass, as shown below:

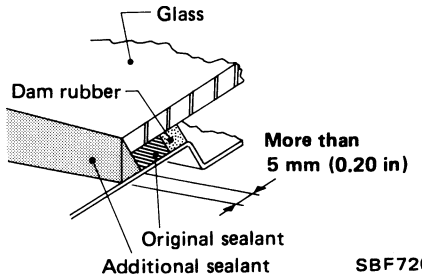

Check for water leakage.

CAUTION:
For sealant drying time, refer to "Drying Time for Sealant".

Apply sealant to upper & side molding fixing portion.

Install moldings.
(For details, refer to "Exterior".)

CAUTION:
Molding must be installed securely so that it is in position and leaves no gap.

Front Side Window

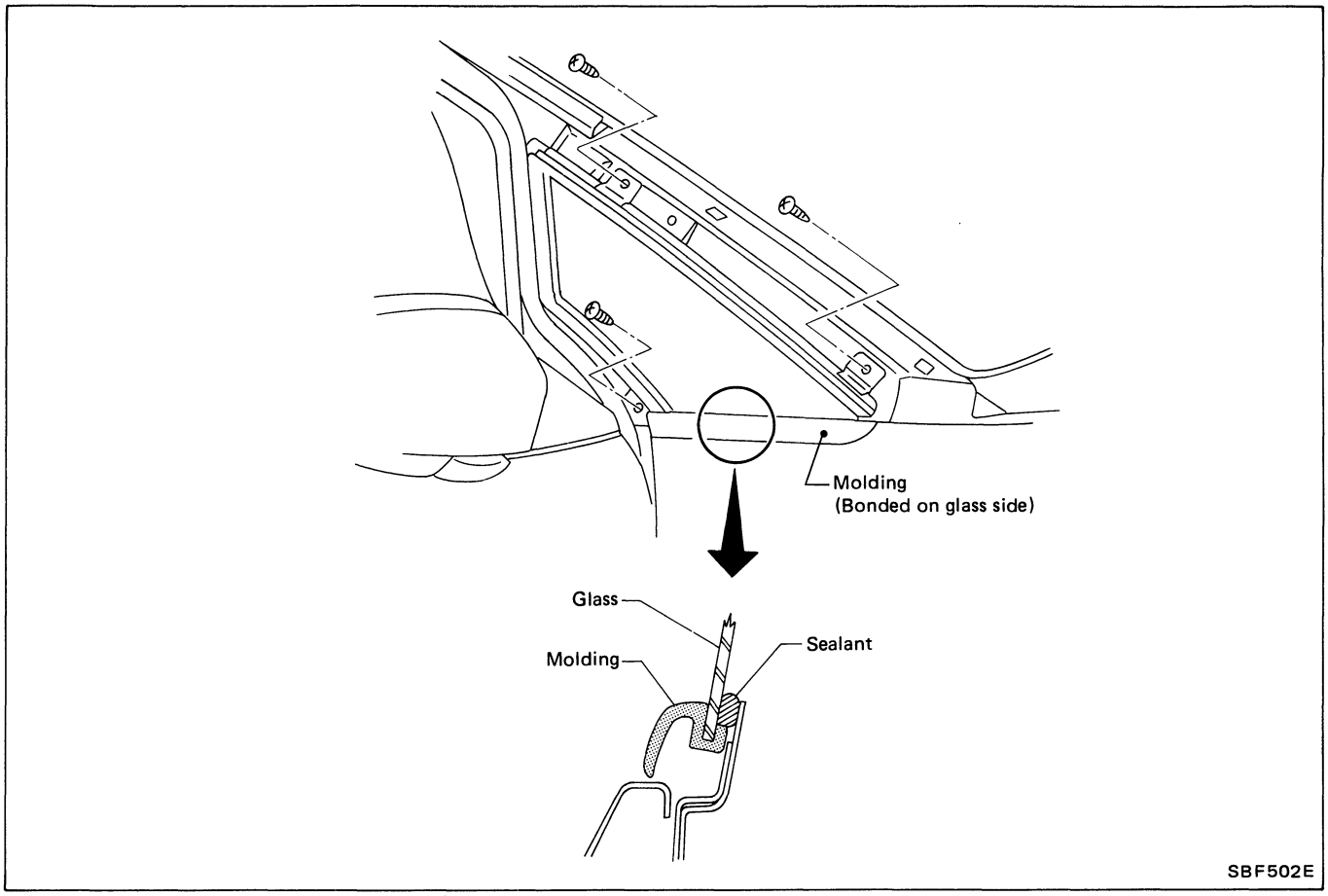

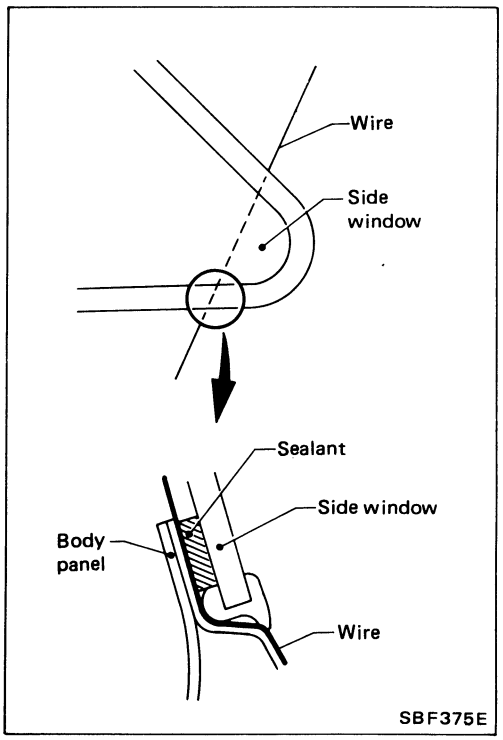

Rear Side Window

Side window is a molded type. During removal or installation, observe the following instructions.

1. Cut sealant in the same manner as that outlined under "Windshield".
2. Be careful not to scratch molding when cutting sealant. If molding is scratched, repair.
3. Remove clips and locating pins which have been exposed from vehicle body.

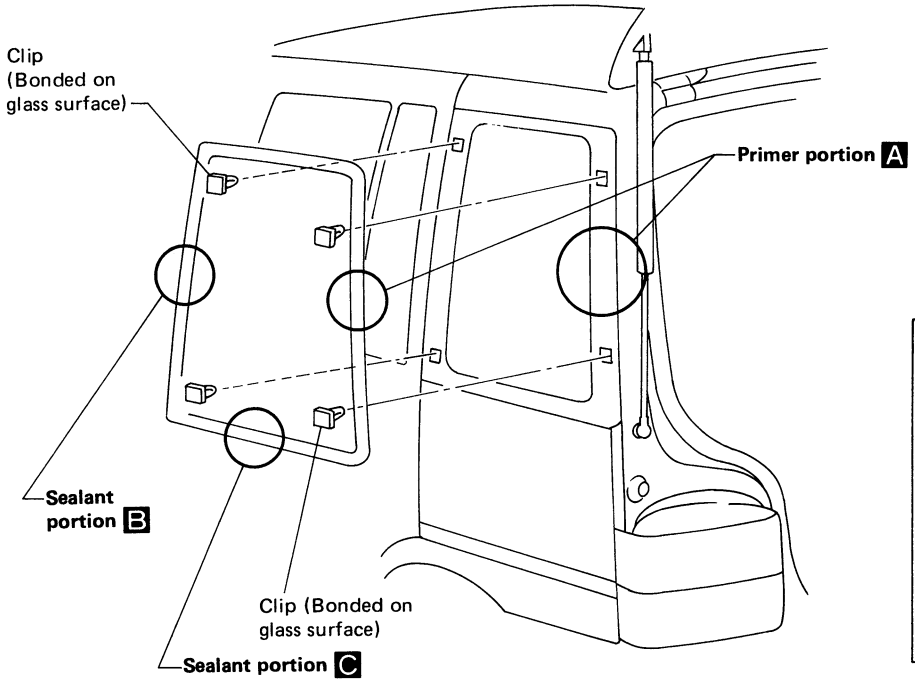

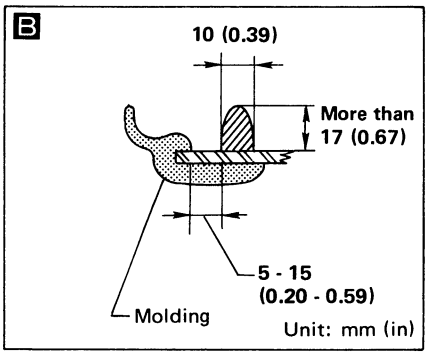

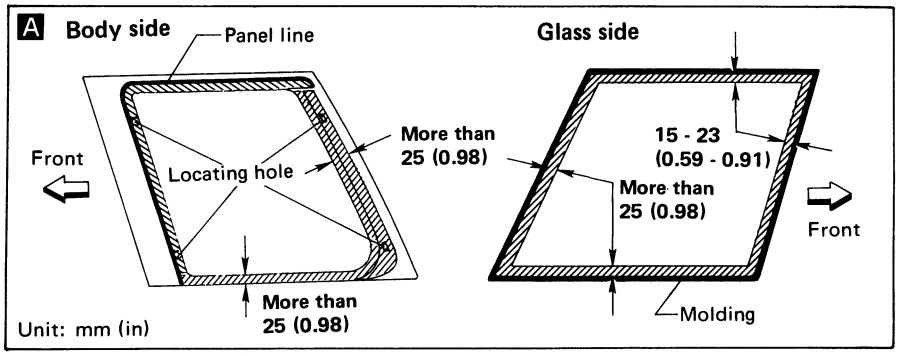

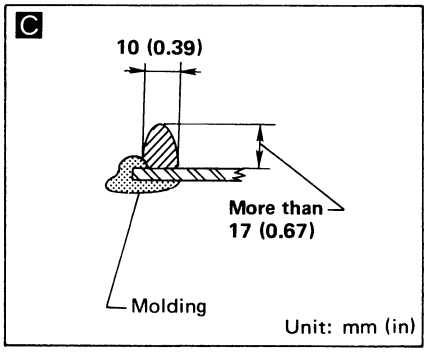

SBF851E

Back Door Window

- Construction and removal/reinstallation method of back door window are basically the same as those of windshield.
- Spacer position is changed. Moreover, there are locating pins in lower portion of glass. For details, refer to following figure.
- For sealant drying period, refer to "Drying Time for Sealant".
- For details of molding, refer to "Exterior".

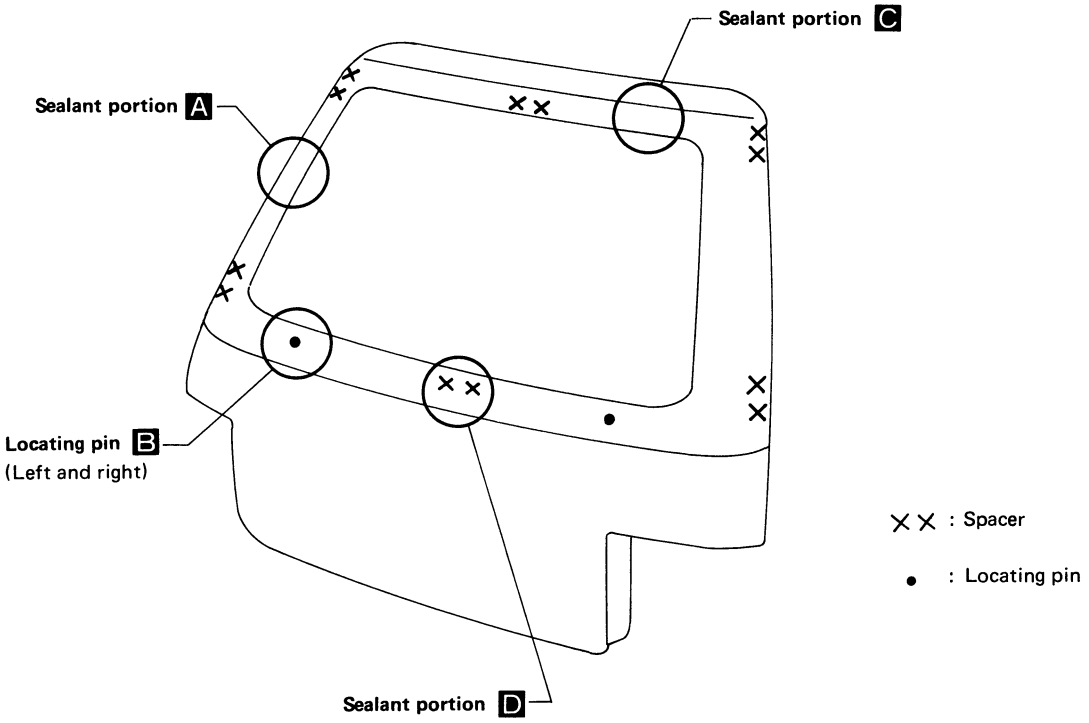

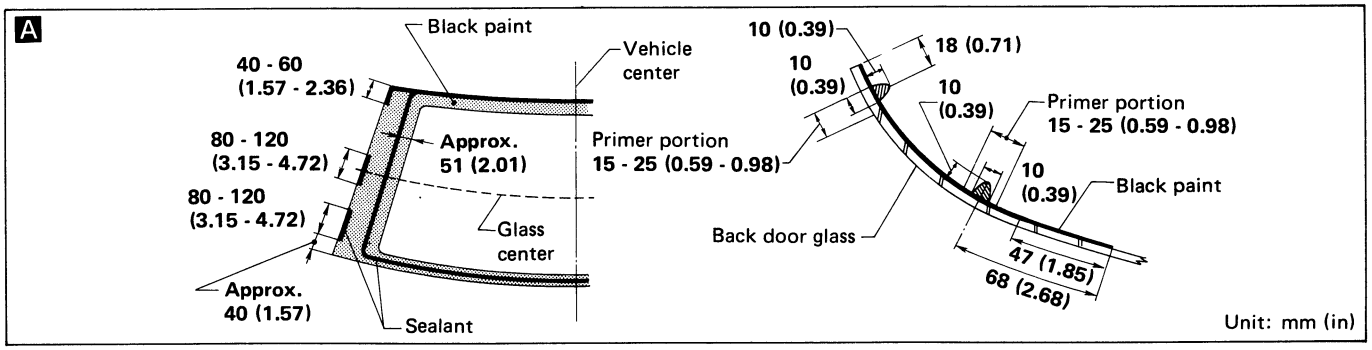

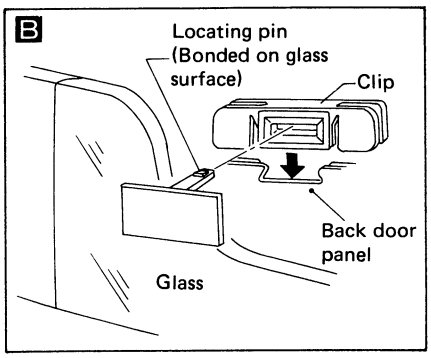

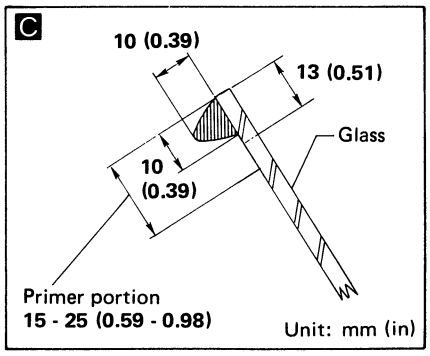

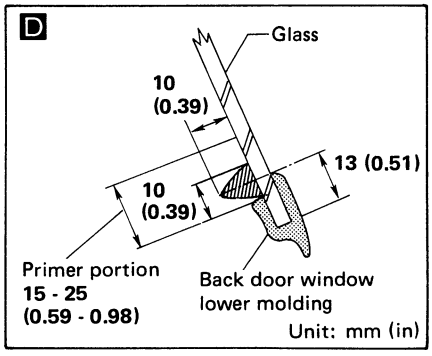

SBF504E

Drying Time for Sealant

Reference: Time required for sealant to dry to desired hardness

Unit: days

Temperature °C (°F) \ Relative humidity %	90	50	25
40 (104)	1.5	2.5	5.0
25 (77)	2.5	4.0	7.5
5 (41)	5.0	13.0	20.5

CAUTION:

Advise the user of the fact that vehicle should not be driven on rough roads or surfaces until sealant has properly vulcanized.

Repairing Water Leaks for Windshield and Rear Window

Leaks can be repaired without removing and reinstalling glass.

If water is leaking between caulking material and body or between glass and caulking material, determine the extent of the leak by applying water while pushing glass outward.

To stop the leak, apply primer and then sealant to the leak point.

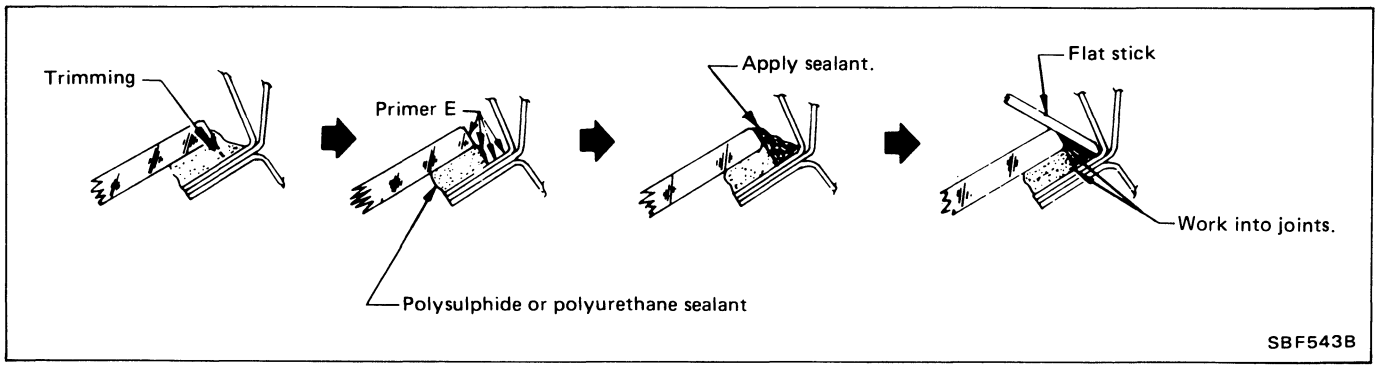

Afterwards, install molding securely.

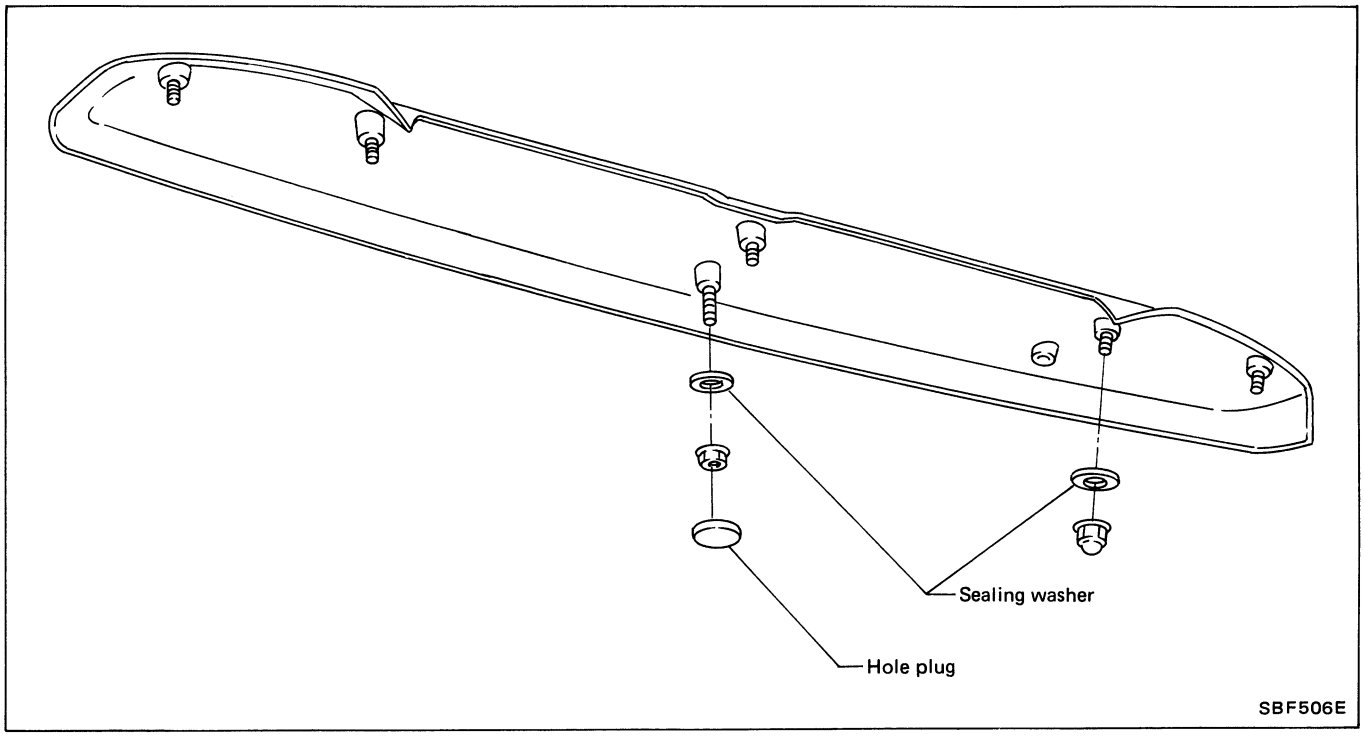
Sealing washer
Hole plug
SBF506E

- After any adjustment, check sun roof operation and lid alignment.
- Handle finisher plate and glass lid with care so not to damage it.
- It is desirable for easy installation to mark each point before removal.

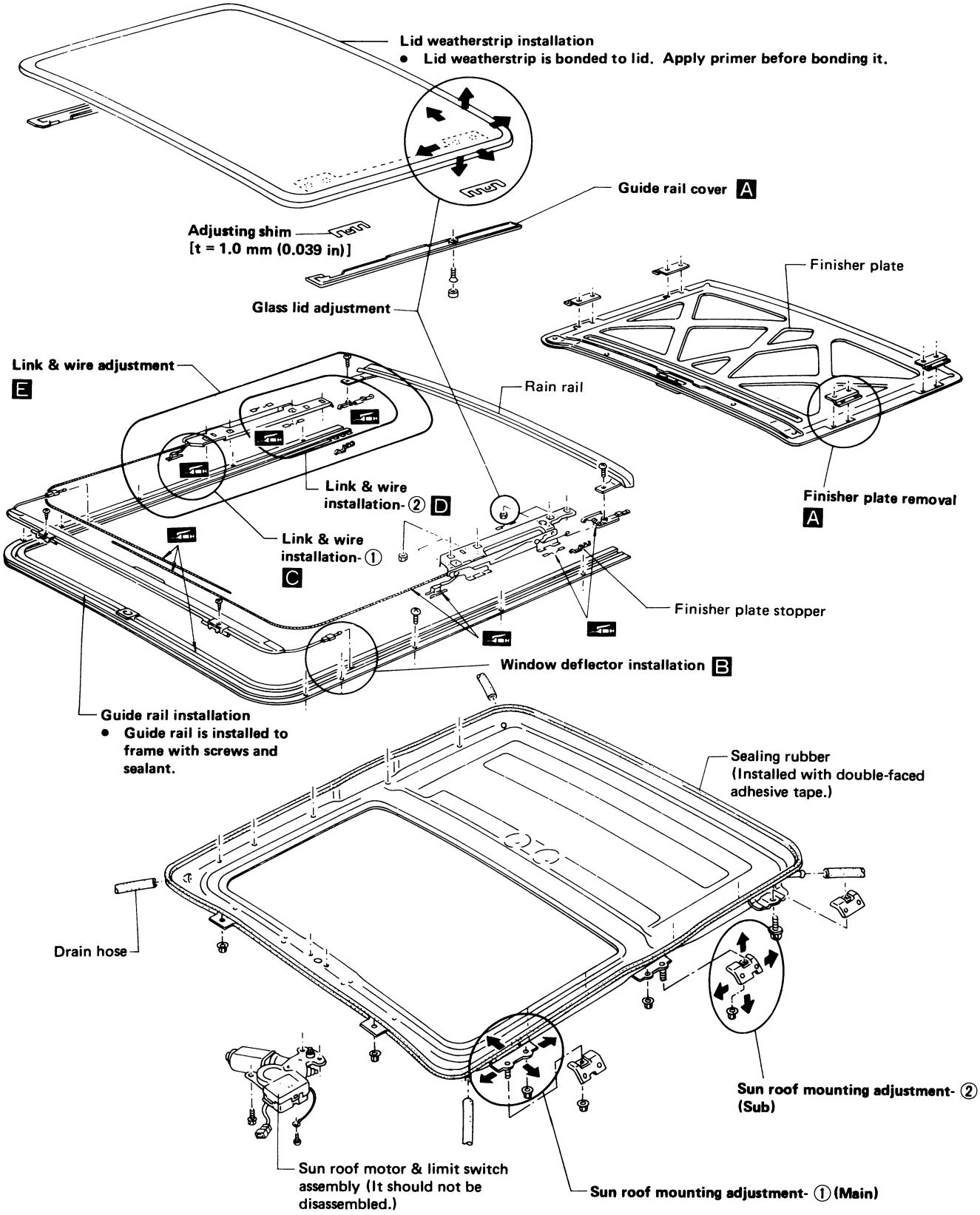

Finisher plate removal A

Remove guide rail cover and pull up pawl by loosening retaining screw, then draw out finisher plate with sun roof lid open.

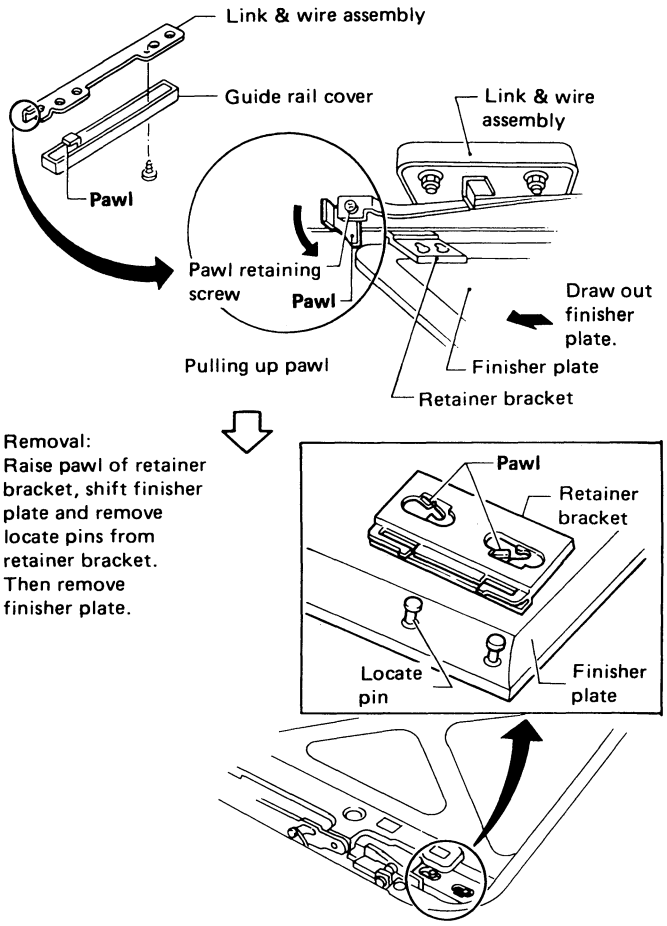

Wind deflector installation B

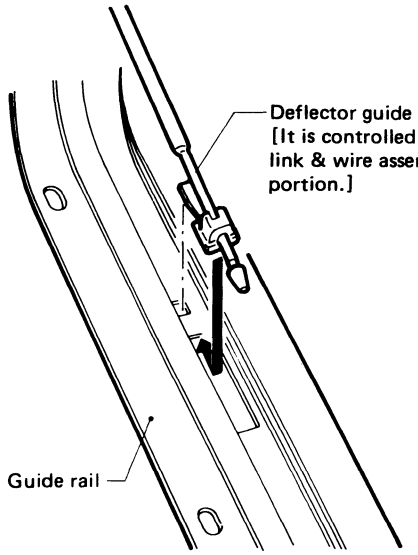

Link & wire installation-① C

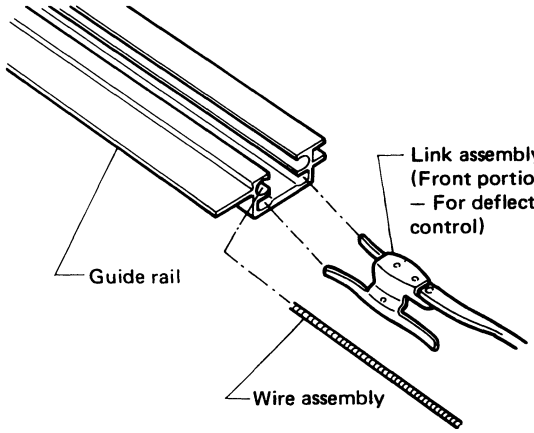

Link & wire installation-② D

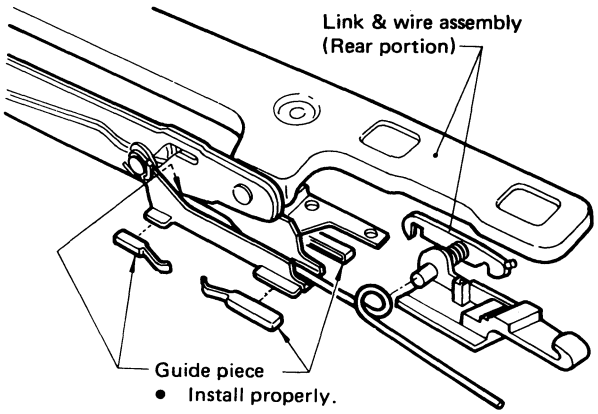

Link & wire adjustment E

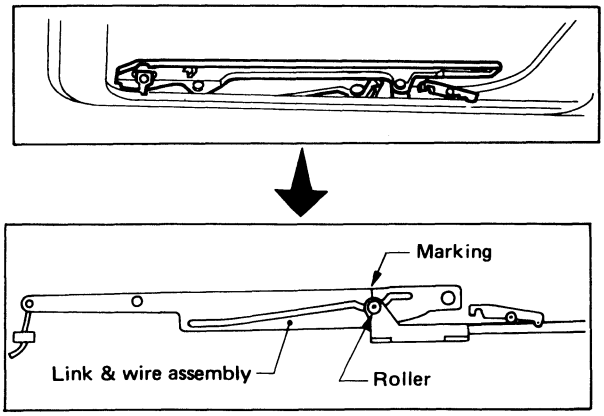

When installing motor & limit switch assembly, set motor & limit switch assembly to fully closed condition using the vehicle's harness and switch first. And adjust link & wire assembly's position as the roller line up at the marking. Then install the motor & limit switch assembly.

SBF852E

Wiring Diagram

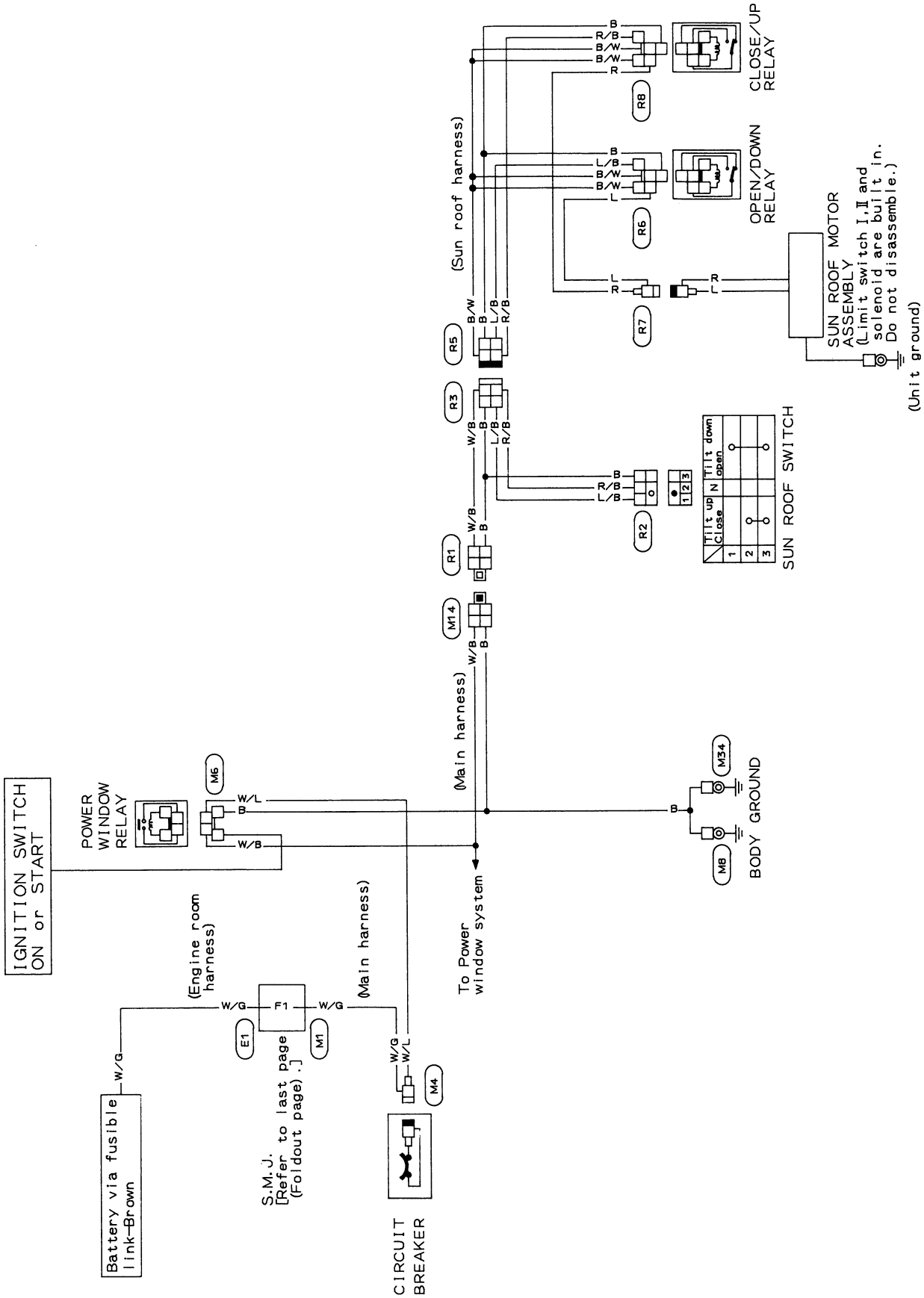

SBF782E

Door Mirror

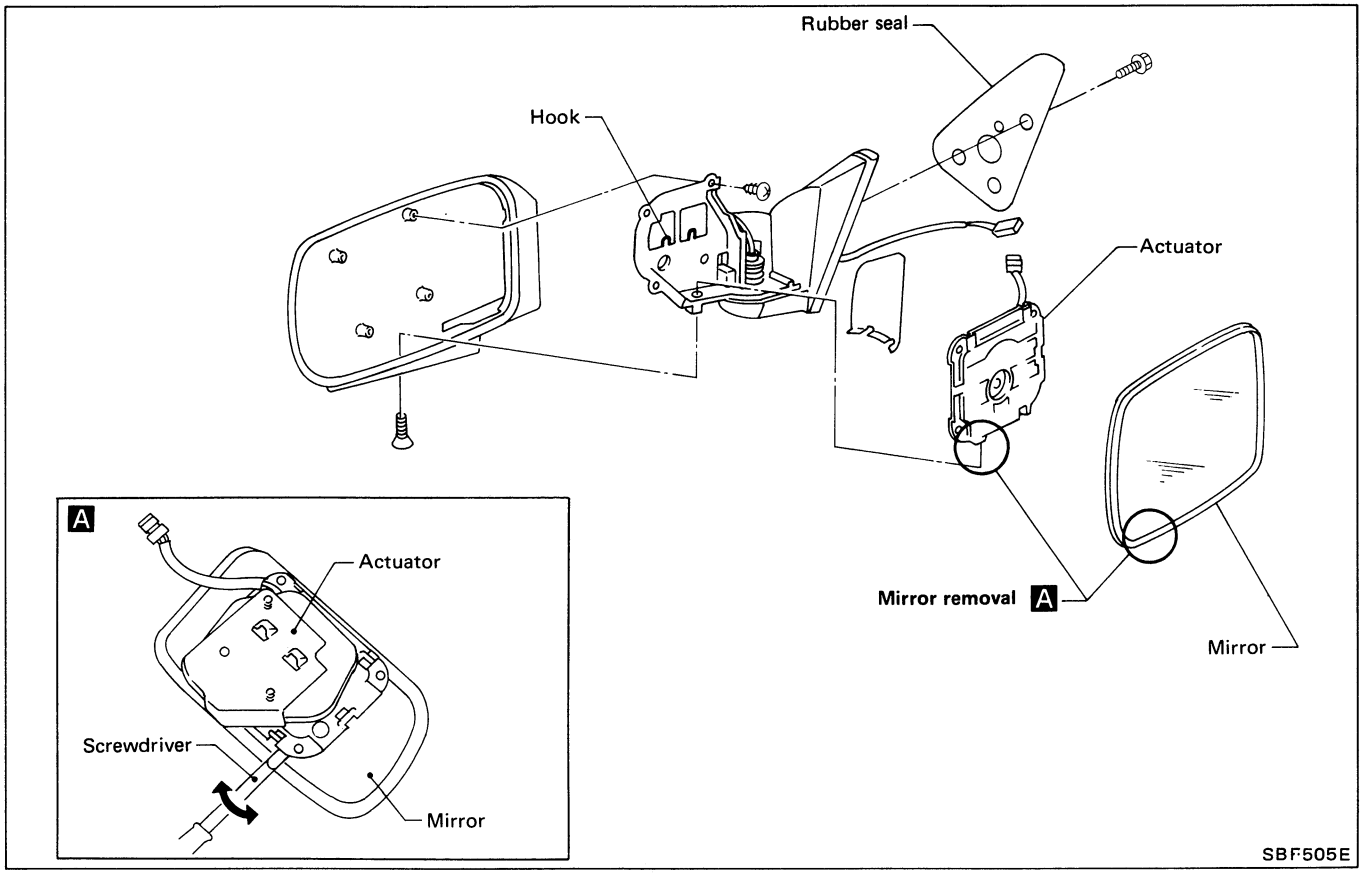

Wiring Diagram

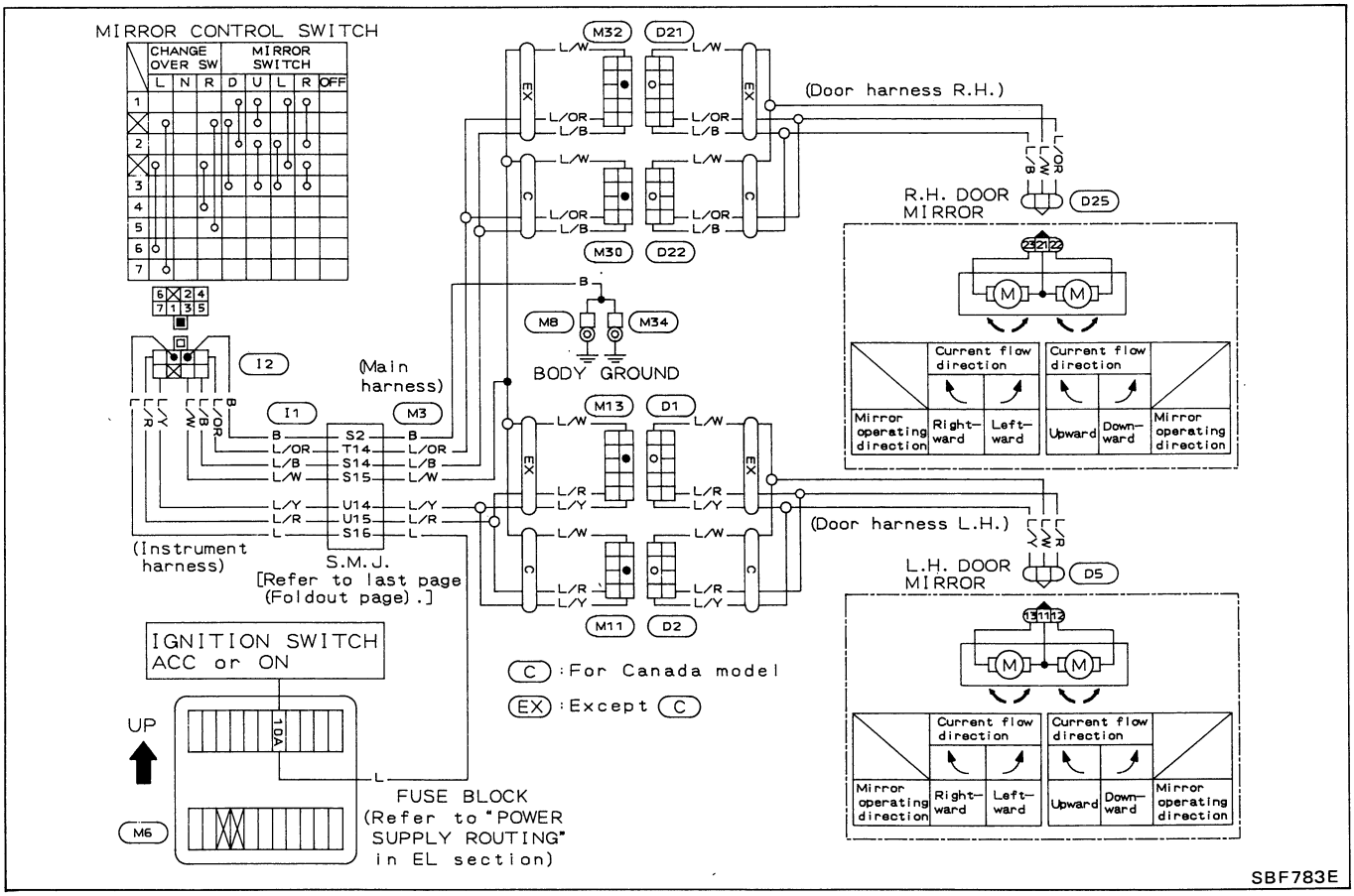

- All dimensions indicated in figures are actual ones.
- When a tram tracking gauge is used, adjust both pointers to equal length and check the pointers and gauge itself to make sure there is no free play.
- When a measuring tape is used, check to be sure there is no elongation, twisting or bending.
- Measurements should be taken at the center of the mounting holes.
- An asterisk (*) following the value at the measuring point indicates that the measuring point on the other side is symmetrically the same value.
- The coordinates of the measurement points are the distances measured from the standard line of "X", "Y" and "Z".

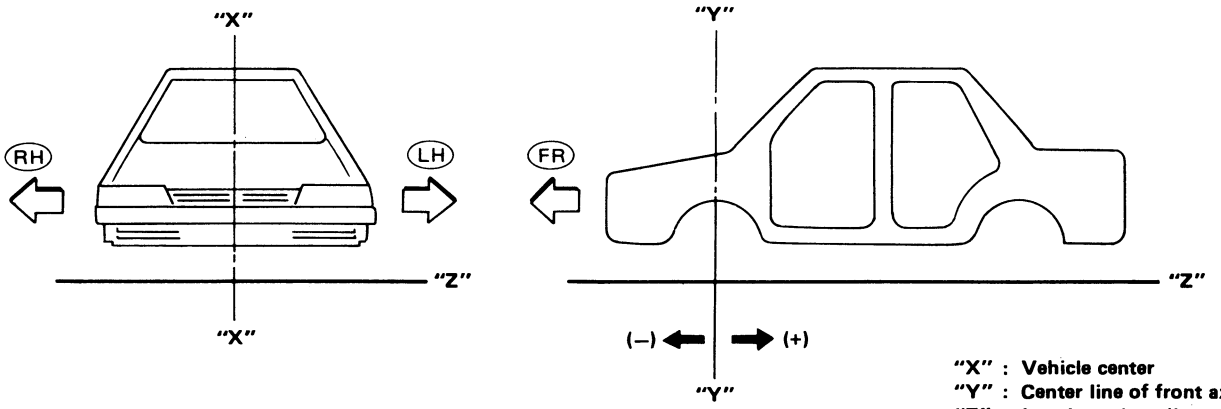

"X" : Vehicle center
"Y" : Center line of front axle
"Z" : Imaginary base line
[200 mm below datum line
("0Z" at design plan)]

(LH) : L.H. side
(RH) : R.H. side

Engine Compartment

MEASUREMENT

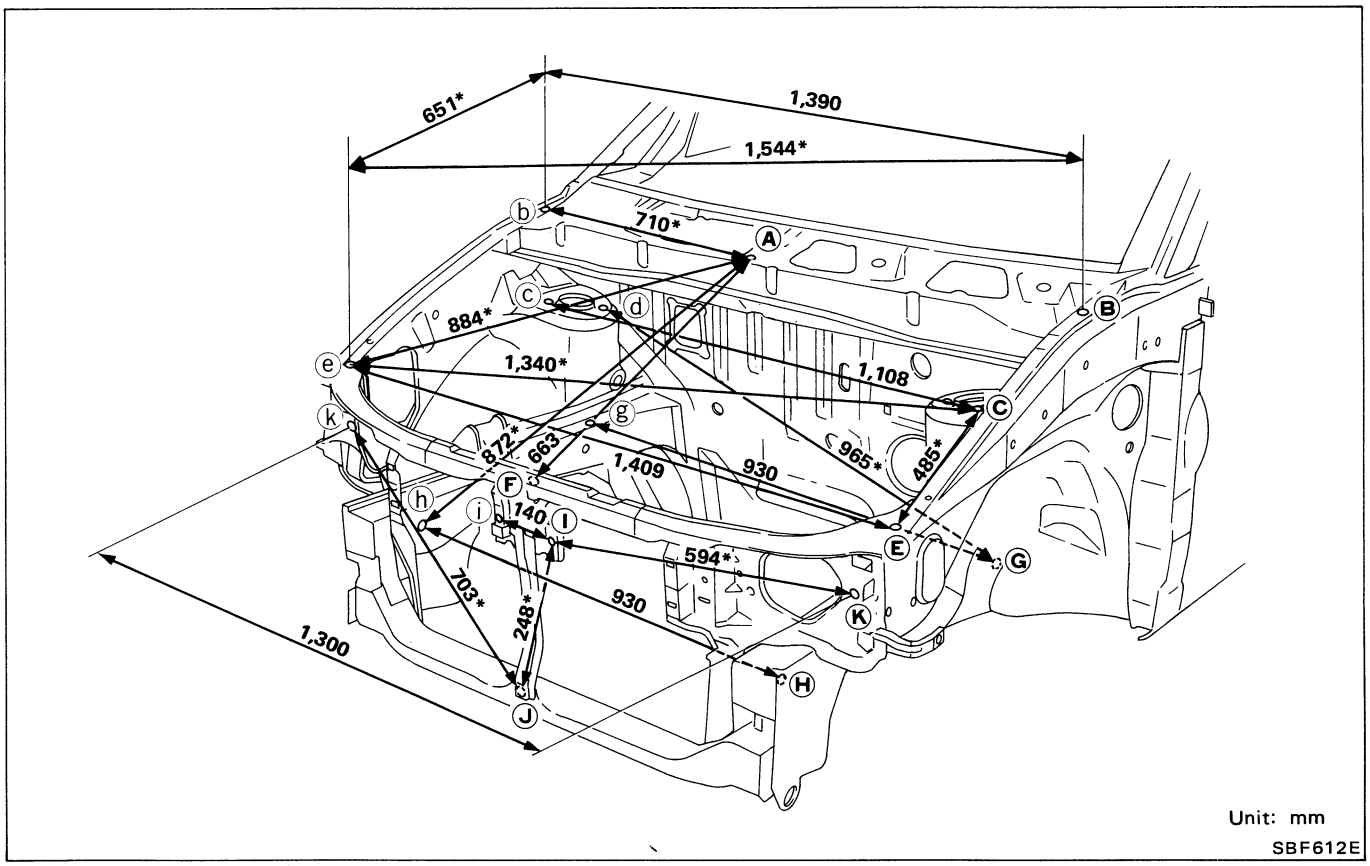

Engine Compartment (Cont'd)

MEASUREMENT POINTS

Unit: mm

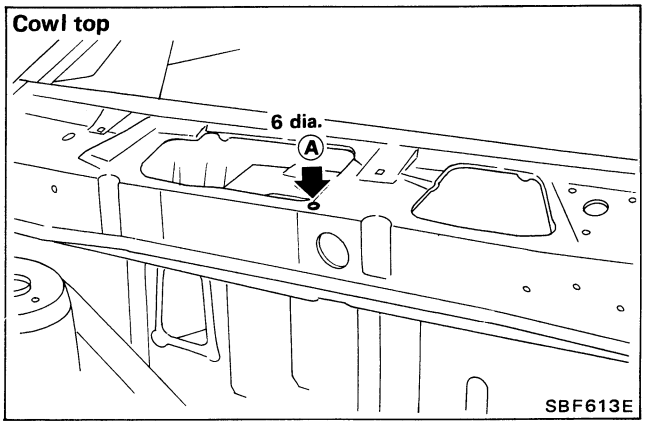

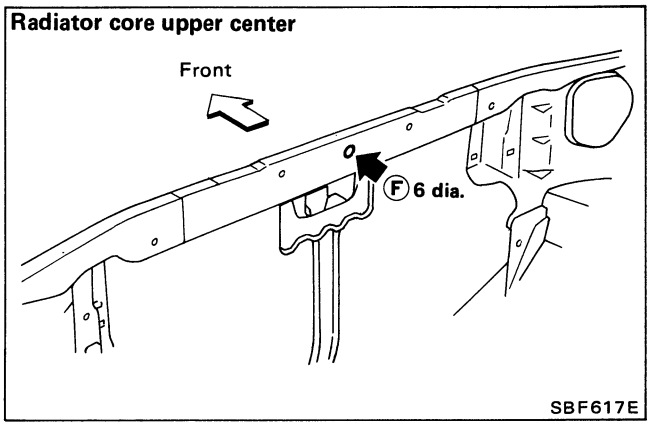

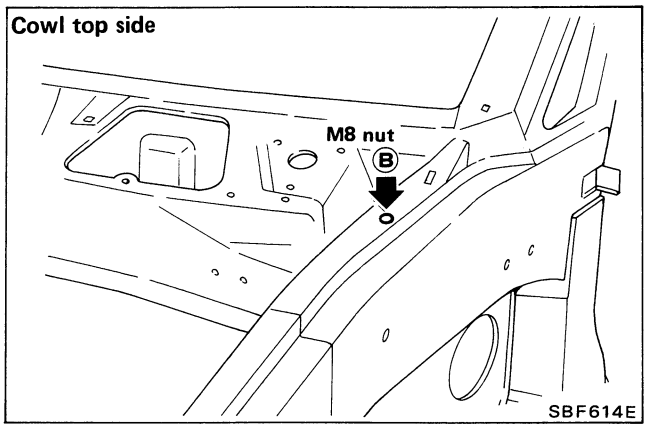

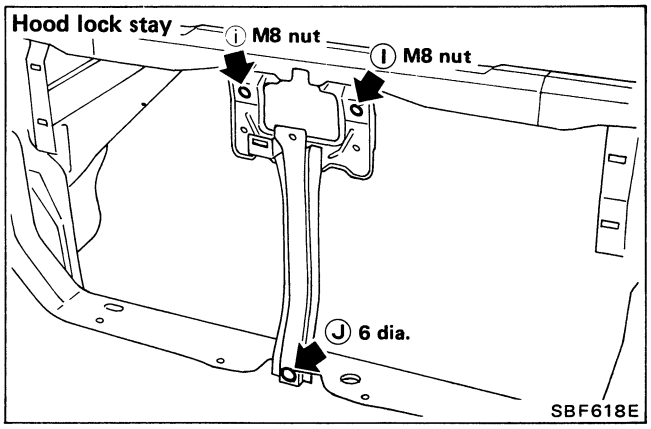

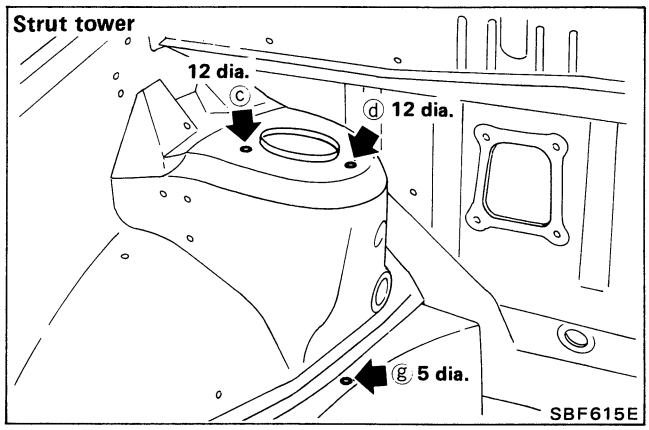

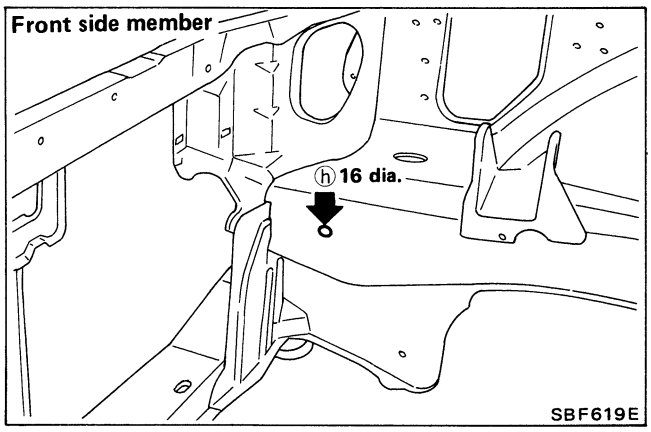

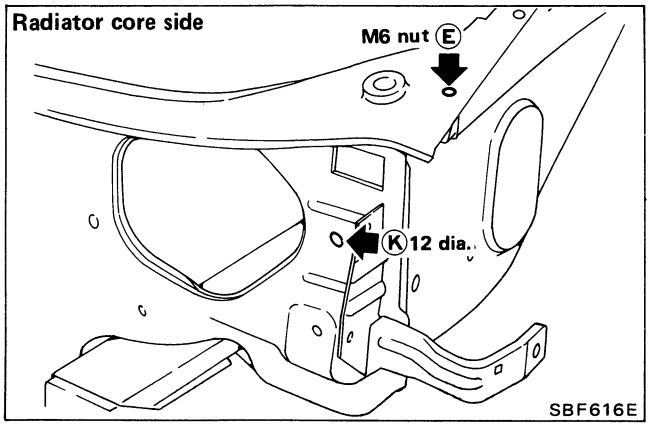

Underbody — 2WD

MEASUREMENT

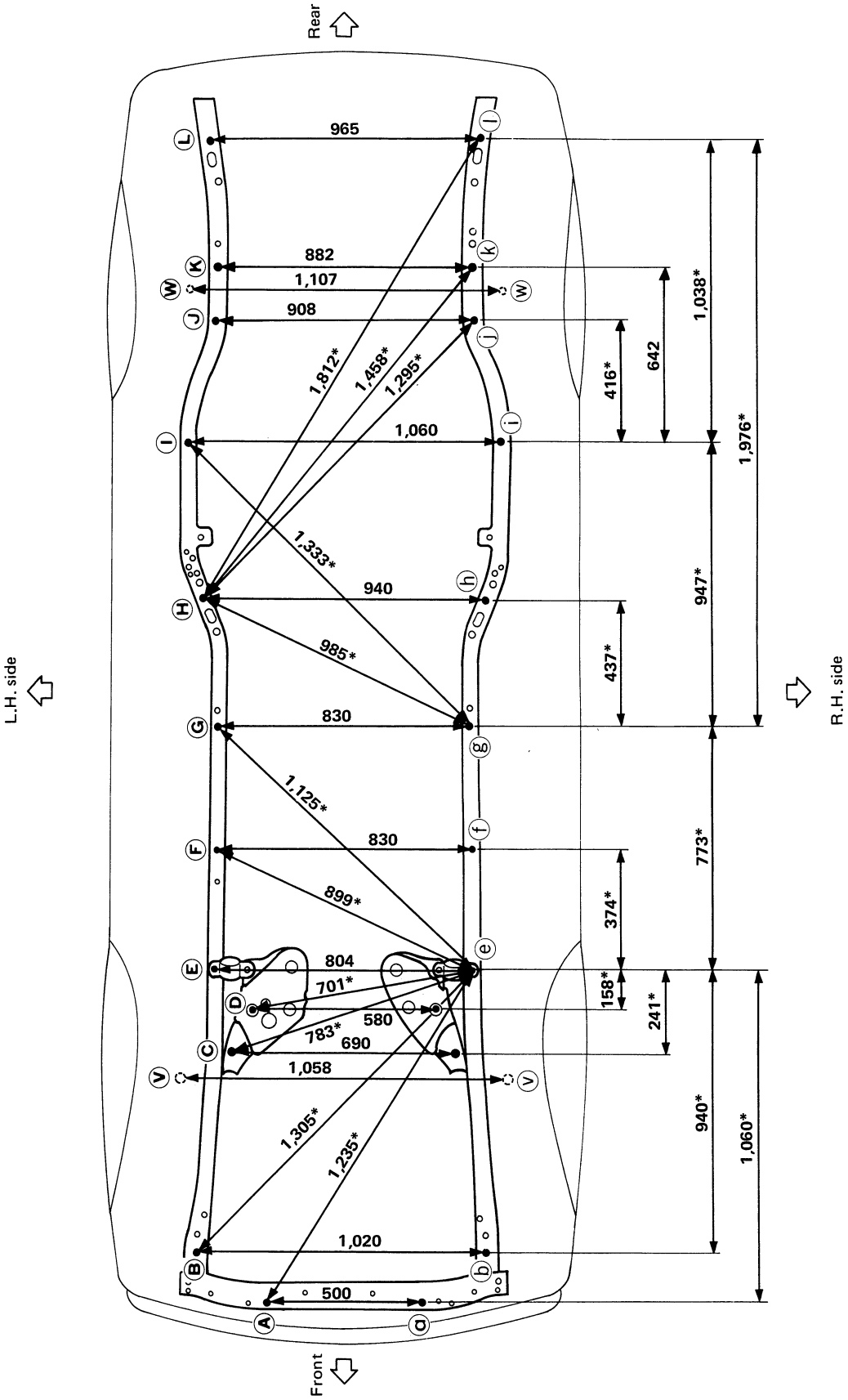

All dimensions indicated in this figure are actual ones.
(There are no projected dimensions.)

SBF819E

Underbody — 2WD (Cont'd)

MEASUREMENT POINTS

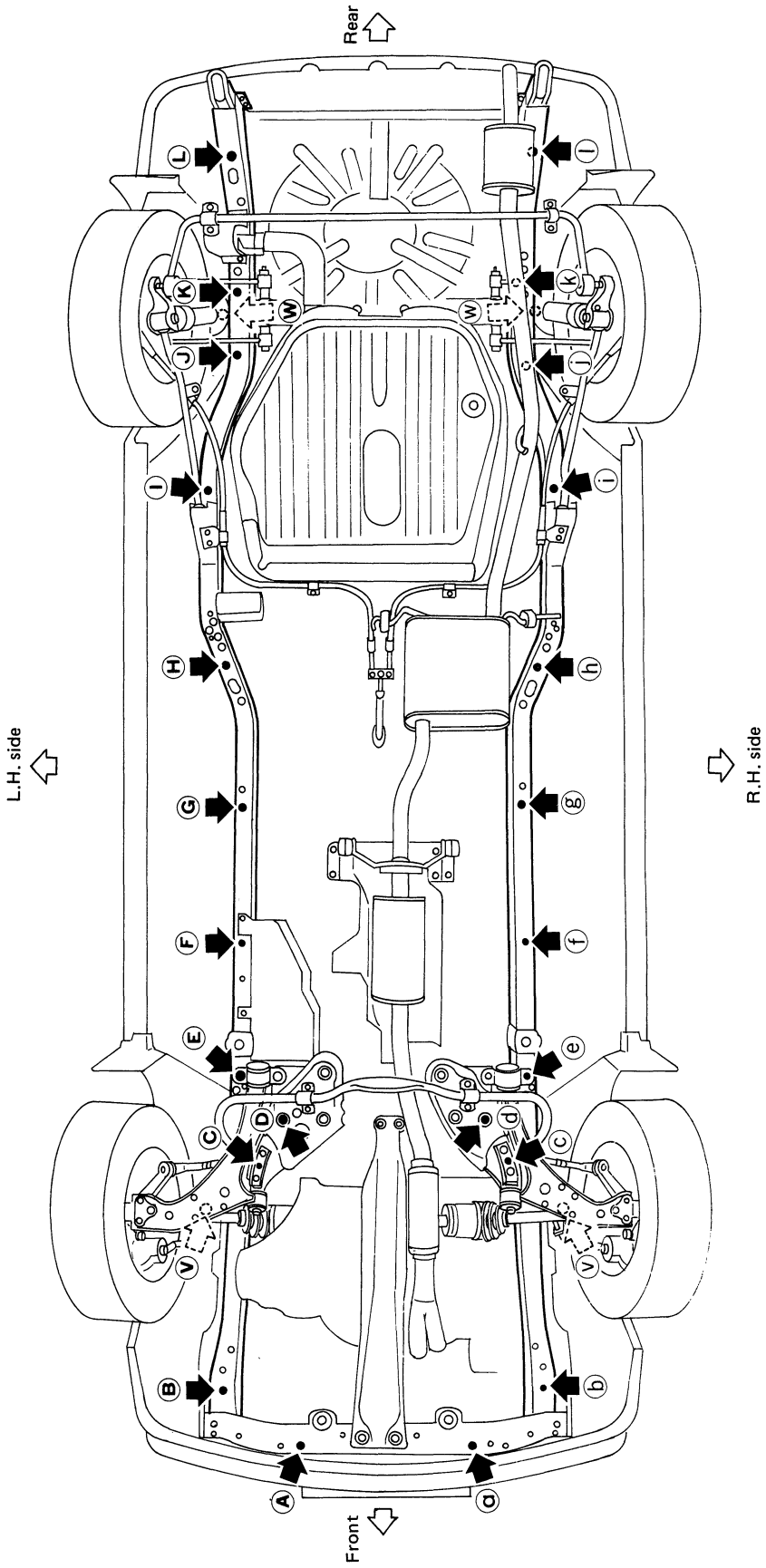

SBF820E

Underbody — 2WD (Cont'd)

Unit: mm

Front and rear strut tower centers

Coordinates:

Ⓥ, ⓥ
X: 529
Y: 13.5
Z: 706

Ⓦ, ⓦ
X: 553.7
Y: 2,658.6
Z: 749.1

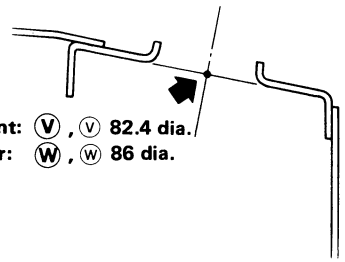

SBF119C

Front side member and front extension

2WD

Coordinates:

Ⓐ, ⓐ
X: 250
Y: –670
Z: 158.1

Ⓑ, ⓑ
X: 510
Y: –535
Z: 304.5

Ⓒ, ⓒ
X: 345
Y: 144
Z: 96

Ⓓ, ⓓ
X: 290
Y: 266.9
Z: 118.8

Ⓔ, ⓔ
X: 402
Y: 377.8
Z: 106.2

Ⓕ, ⓕ
X: 415
Y: 750
Z: 142.1

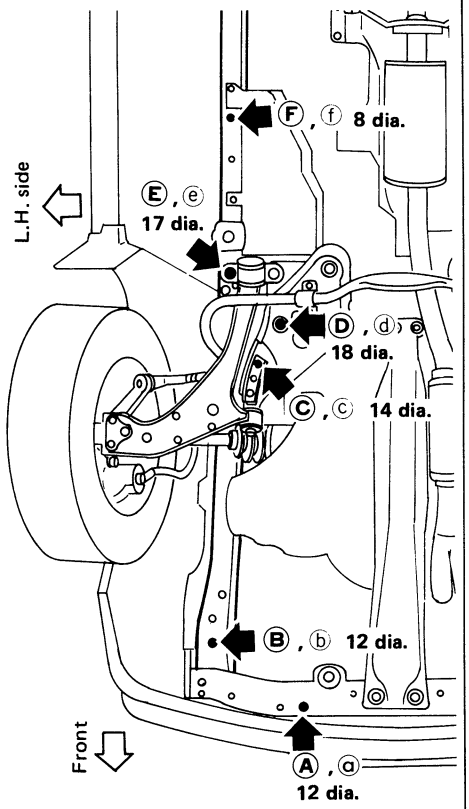

SBF620E

Center side member and rear extension

2WD

Coordinates:

Ⓖ, ⓖ
X: 415
Y: 1,150
Z: 148.8

Ⓗ, ⓗ
X: 469.9
Y: 1,581
Z: 193.8

Ⓘ, ⓘ
X: 530
Y: 2,090
Z: 159.6

Ⓙ, ⓙ
X: 454
Y: 2,485
Z: 264.2

Ⓚ, ⓚ
X: 441
Y: 2,717.5
Z: 264.2

Ⓛ, ⓛ
X: 482.4
Y: 3,120
Z: 280

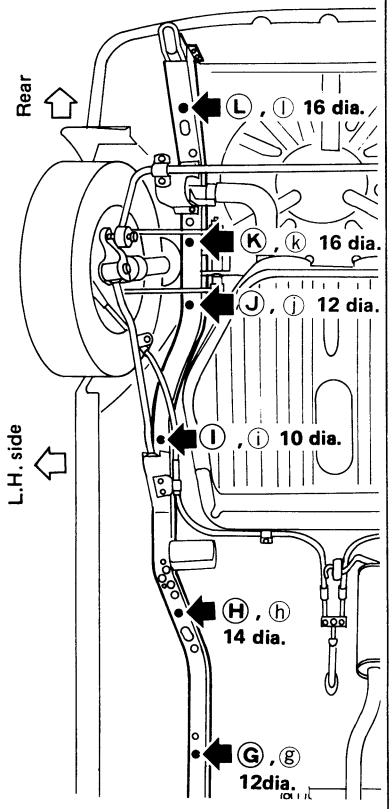

SBF821E

Underbody — 4WD

MEASUREMENT

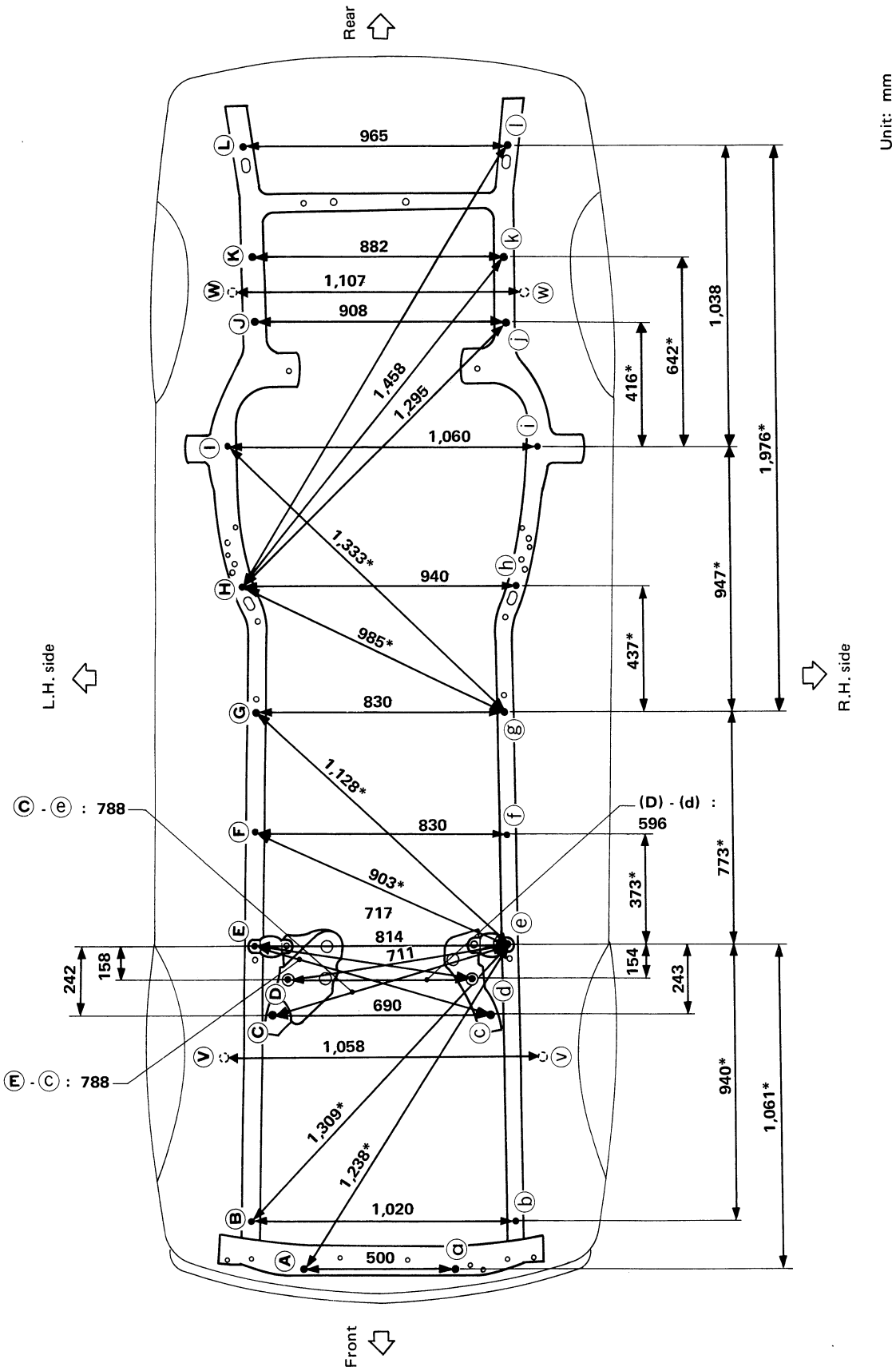

All dimensions indicated in this figure are actual ones.
(There are no projected dimensions.)

SBF822E

Underbody — 4WD (Cont'd)

MEASUREMENT POINTS

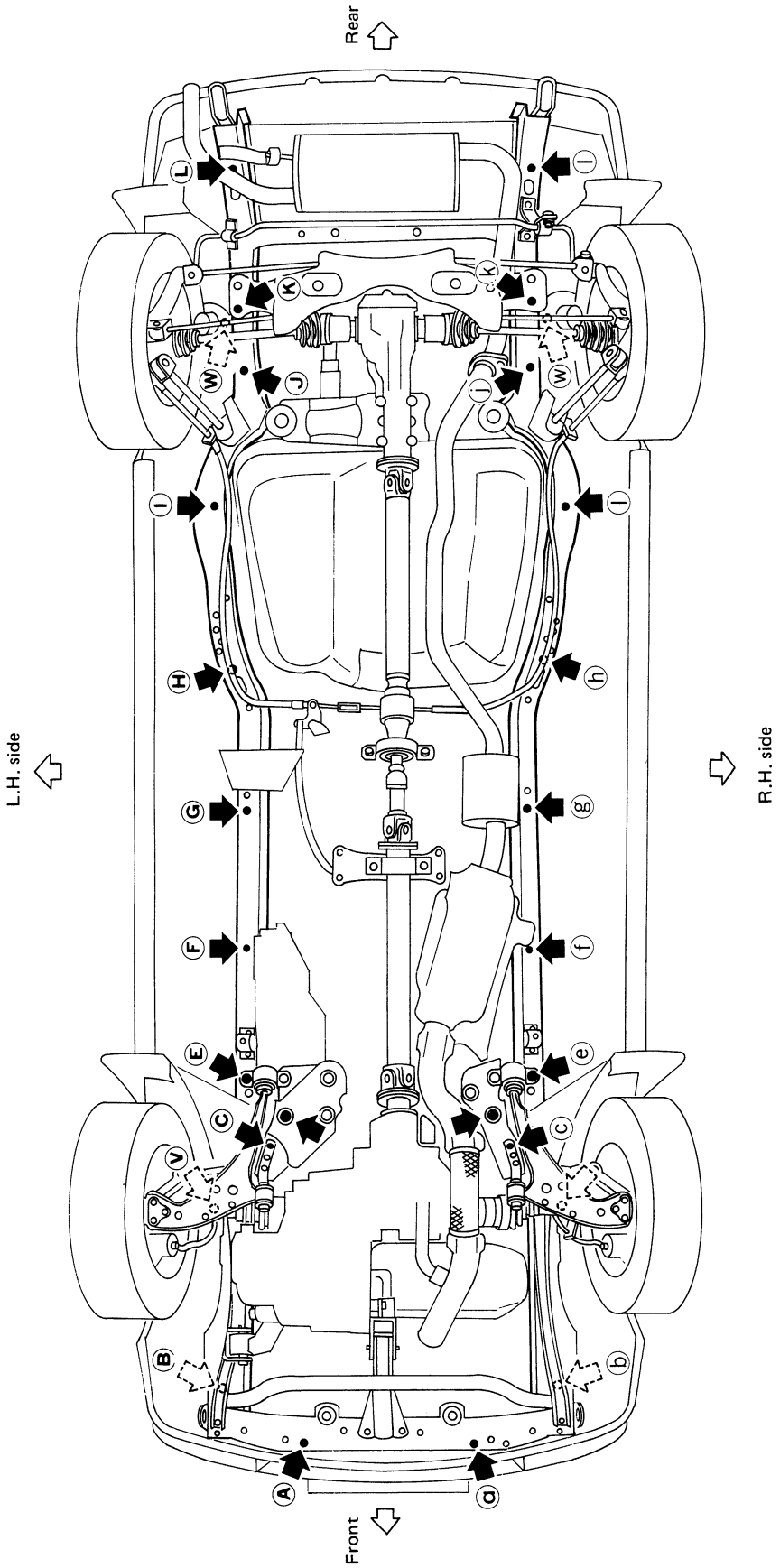

SBF823E

Underbody — 4WD (Cont'd)

Unit: mm

Front and rear strut tower centers

Coordinates:

Ⓥ, ⓥ
X: 529
Y: 13.5
Z: 706

Ⓦ, ⓦ
X: 553.7
Y: 2,658.6
Z: 749.1

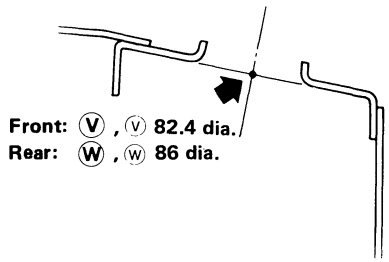

SBF119C

Front side member and front extension 4WD

Coordinates:

Ⓐ, ⓐ
X: 250
Y: −670
Z: 158.1

Ⓑ, ⓑ
X: 510
Y: −535
Z: 304.5

Ⓒ
X: 345
Y: 144
Z: 110

ⓒ
X: 345
Y: 144
Z: 110.9

Ⓓ
X: 295
Y: 268.9
Z: 125.7

ⓓ
X: 301
Y: 268.9
Z: 126.6

Ⓔ, ⓔ
X: 407
Y: 378.4
Z: 106.3

Ⓕ, ⓕ
X: 415
Y: 750
Z: 139.9

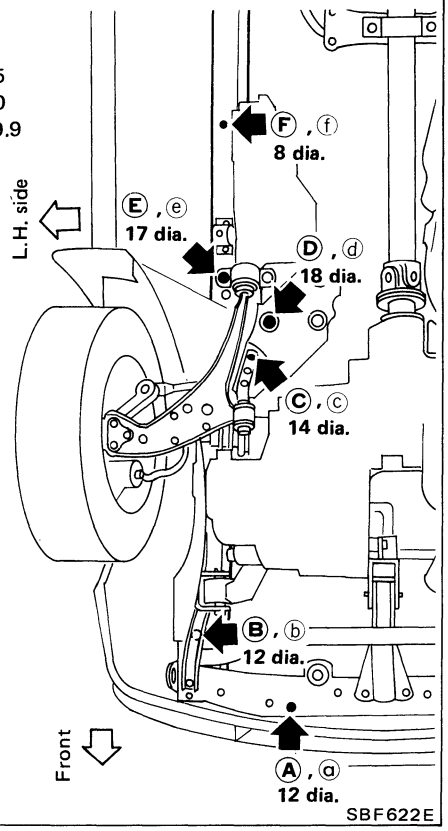

SBF622E

Center side member and front extension 4WD

Coordinates:

Ⓖ, ⓖ
X: 415
Y: 1,150
Z: 148.8

Ⓗ, ⓗ
X: 469.9
Y: 1,581
Z: 193.8

Ⓘ, ⓘ
X: 530
Y: 2,090
Z: 159.6

Ⓙ, ⓙ
X: 454
Y: 2,485
Z: 264.2

Ⓚ, ⓚ
X: 441
Y: 2,717.5
Z: 264.2

Ⓛ, ⓛ
X: 482.4
Y: 3,120
Z: 280

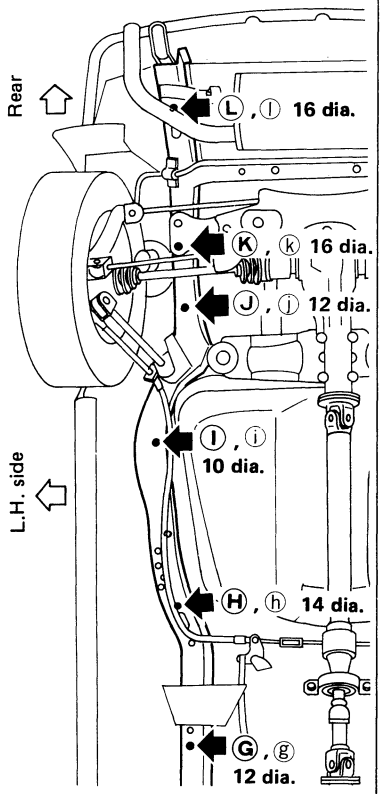

SBF824E

HEATER & AIR CONDITIONER

SECTION HA

CONTENTS

AIR FLOW AND COMPONENT LAYOUT ..... HA- 2
DOOR CONTROL ..... HA- 5
HEATER ELECTRICAL CIRCUIT ..... HA- 7
PRECAUTIONS ..... HA- 8
PRECAUTIONS FOR REFRIGERANT CONNECTION ..... HA- 9
PREPARATION HA-10
DISCHARGING, EVACUATING, CHARGING AND CHECKING HA-13
SERVICE PROCEDURES HA-20
A/C PERFORMANCE TEST HA-23
COMPRESSOR OIL — For DKS-16H (DIESEL-KIKI make) HA-28
COMPRESSOR — Model DKS-16H (DIESEL-KIKI make) HA-30
A/C ELECTRICAL CIRCUIT HA-37
A/C COMPONENT LAYOUT HA-38
TROUBLE DIAGNOSES HA-39
SERVICE DATA AND SPECIFICATIONS (S.D.S.) HA-56

When you read wiring diagrams:
- **Read GI section, "HOW TO READ WIRING DIAGRAMS".**
- **See EL section, "POWER SUPPLY ROUTING" for power distribution circuit.**

When you perform trouble diagnoses, read GI section "HOW TO FOLLOW FLOW CHART IN TROUBLE DIAGNOSES."

Air Flow

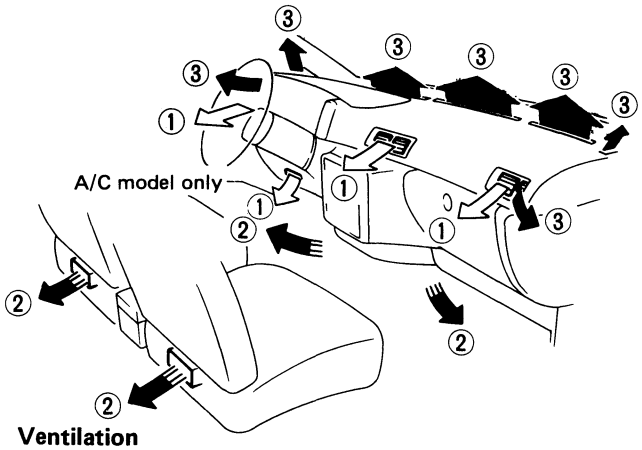

Ventilation

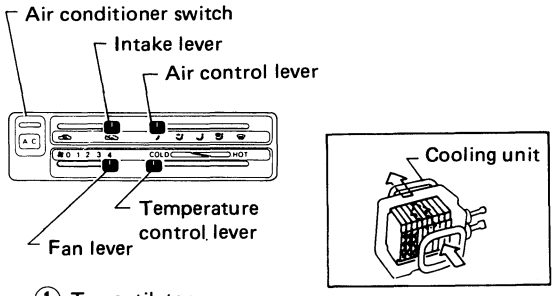

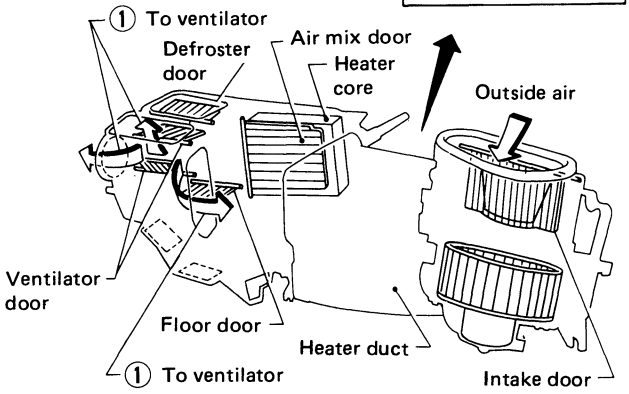

Bi-level

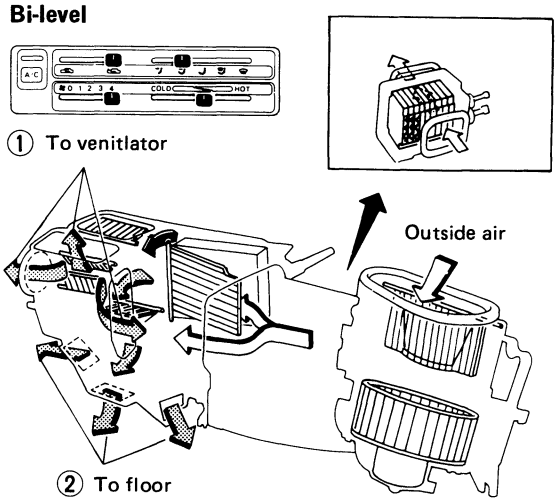

Floor

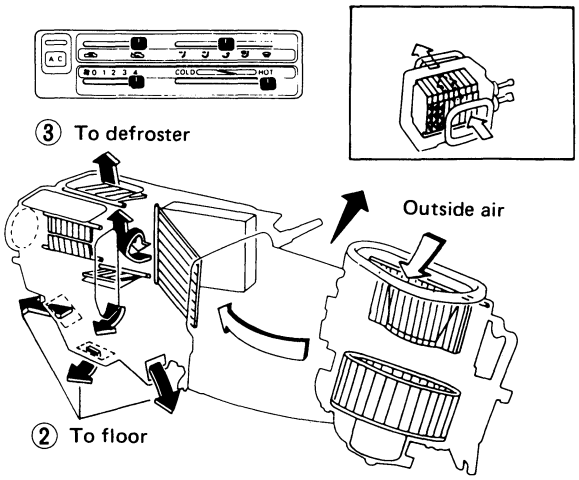

Floor and defroster

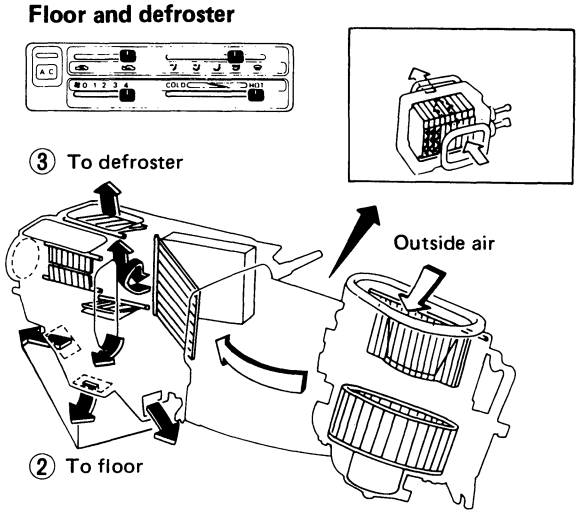

Defroster

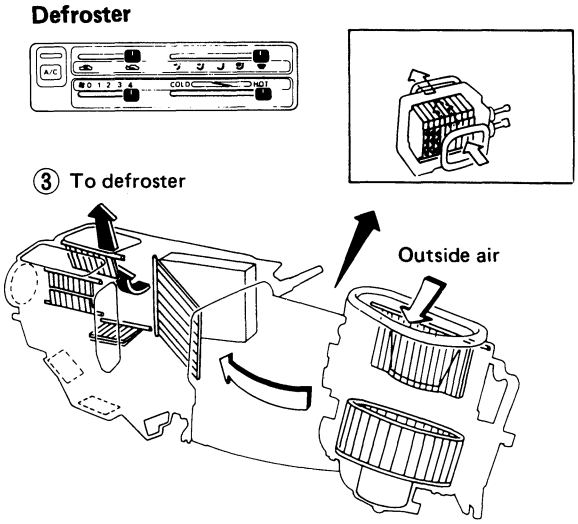

: Air passed through heater core

: Mixed air (+)

: Air not passed through heater core

RHA677A

Air Flow (Cont'd)

AIR DISTRIBUTION RATIOS

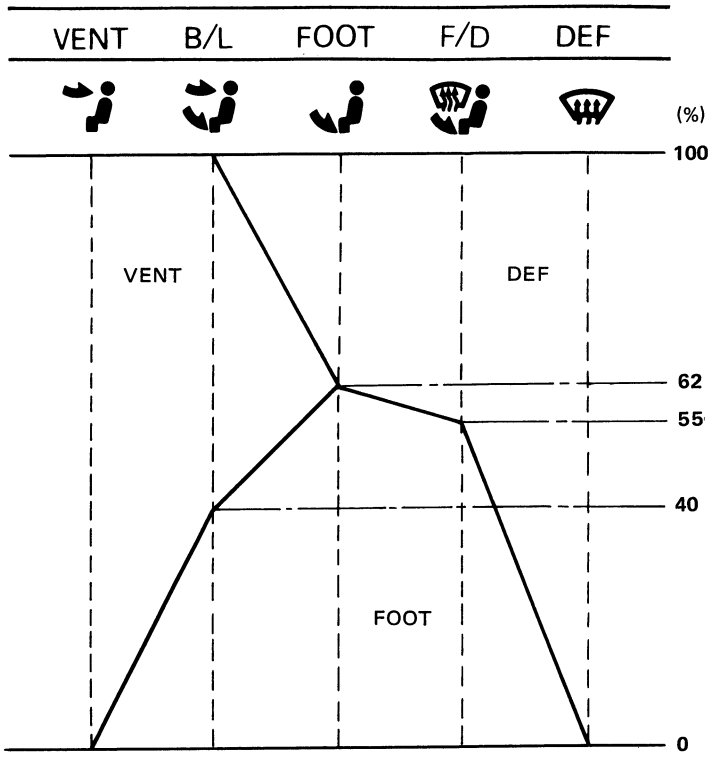

RHA875A

Component Layout

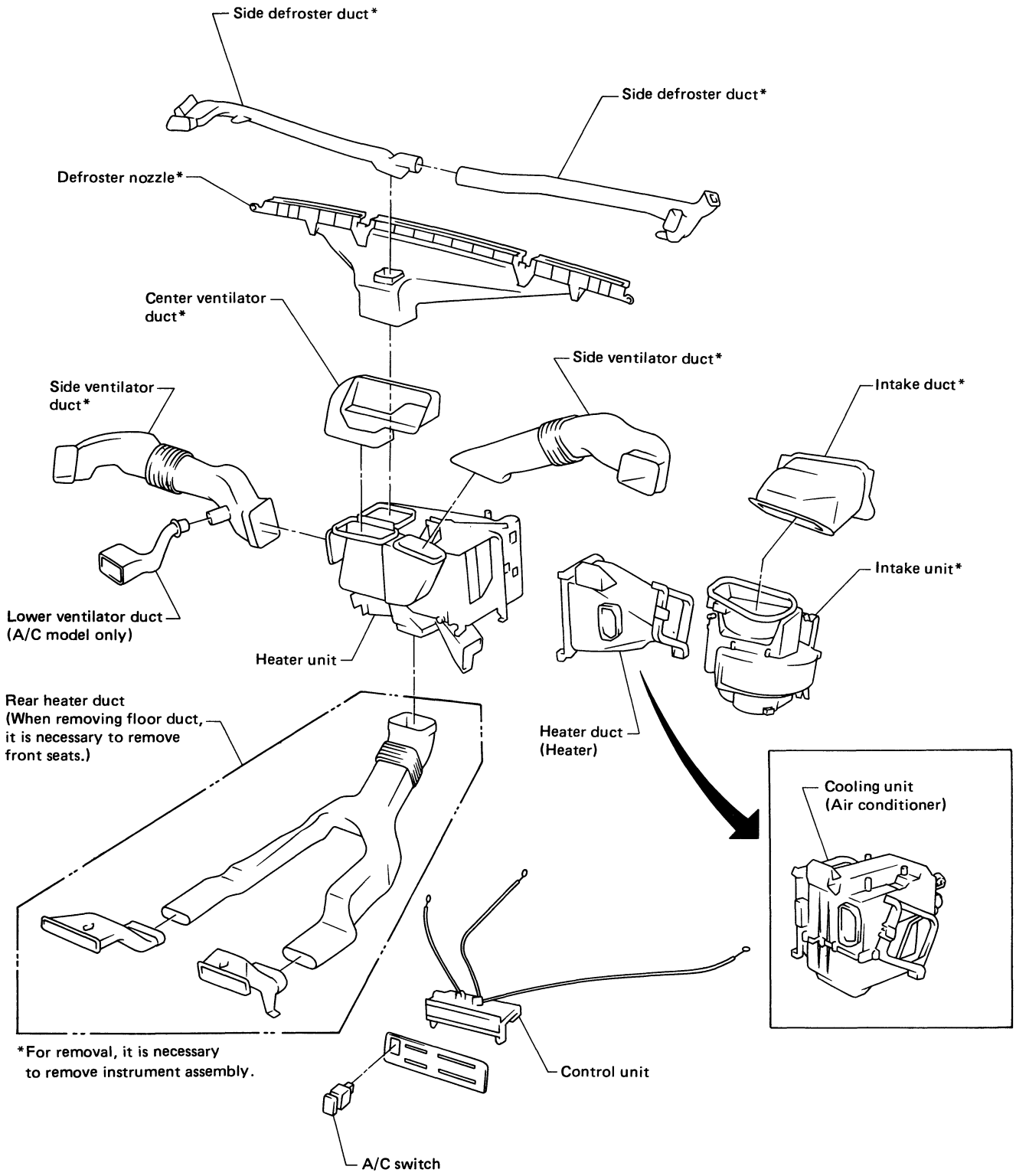

RHA680A

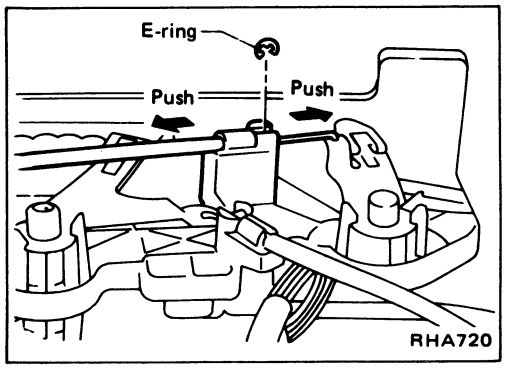

Control Cable and Rod Adjustment

- **When disconnecting control cable, remove E-ring and take off cable while pushing the cable outer in direction of arrow.**

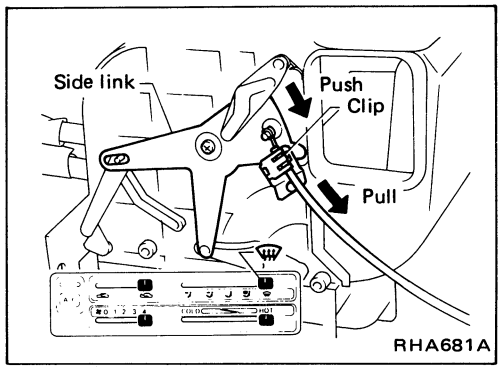

AIR CONTROL CABLE

- Clamp the cable while pulling cable outer and pushing side link in direction of arrow.

WATER COCK CONTROL ROD

- **When adjusting water cock control rod, first disconnect temperature control cable from air mix door lever. Reconnect and readjust temperature control cable.**

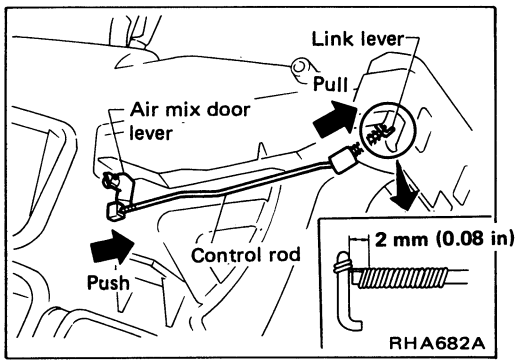

1. Push air mix door lever in direction of arrow.
2. Pull control rod of water cock in direction of arrow so as to give a clearance of about 2 mm (0.08 in) between ends of rod and link lever. Connect rod to door lever.

After connecting control rod, check it operates properly.

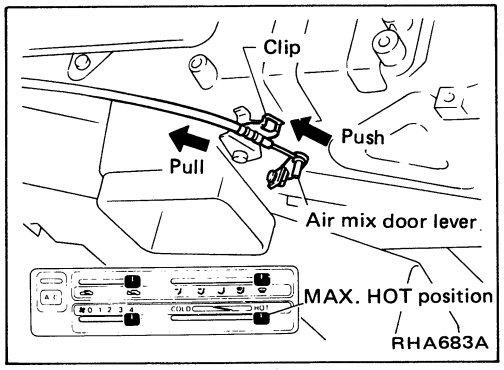

TEMPERATURE CONTROL CABLE

- Clamp cable while pulling cable outer and pushing air mix door lever in direction of arrow.

Control Cable and Rod Adjustment (Cont'd)

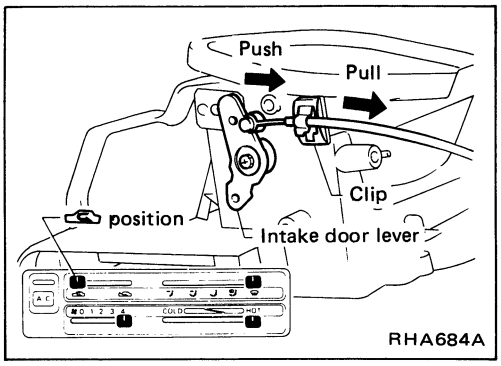

INTAKE DOOR CONTROL CABLE

- Clamp cable while pulling cable outer and pushing intake door lever in direction of arrow.

Wiring Diagram

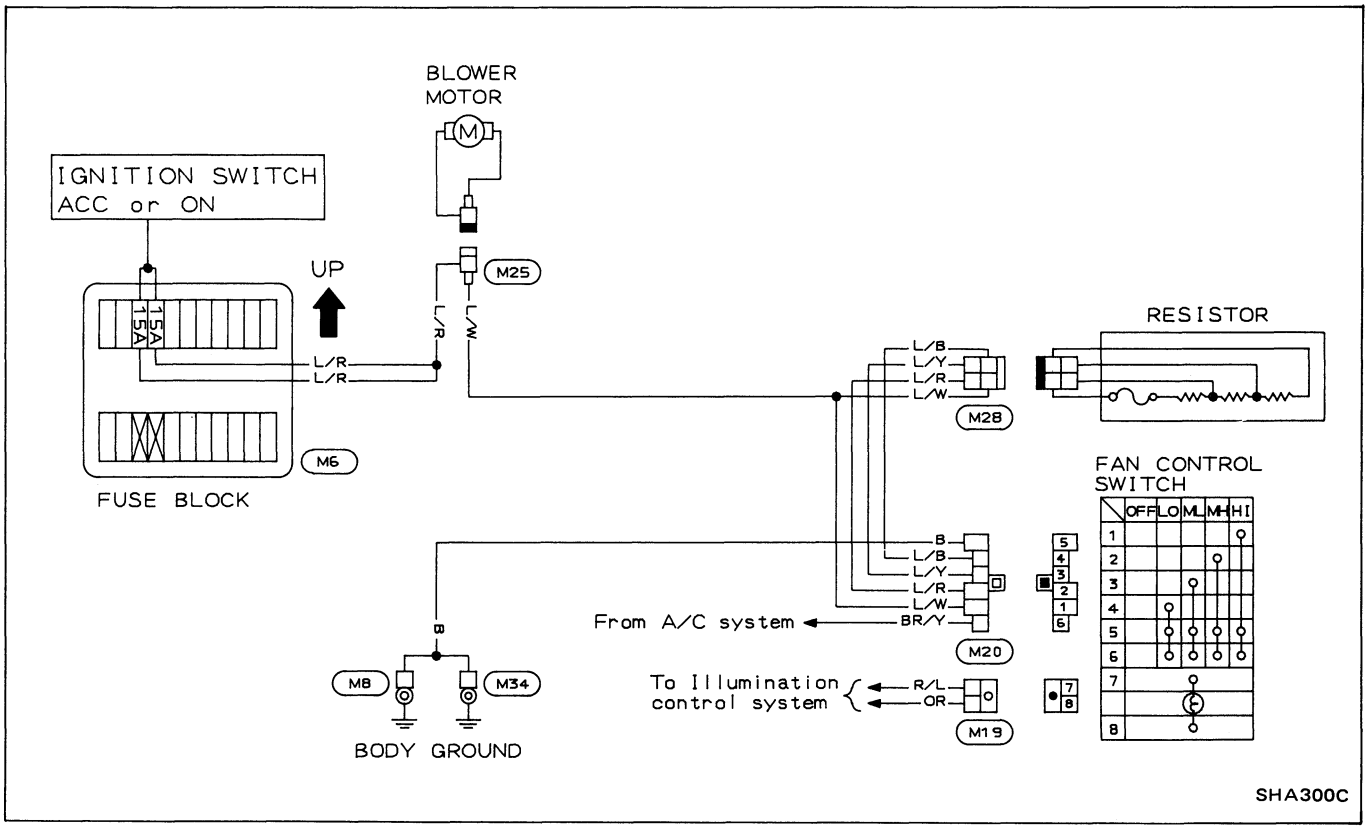

Schematic

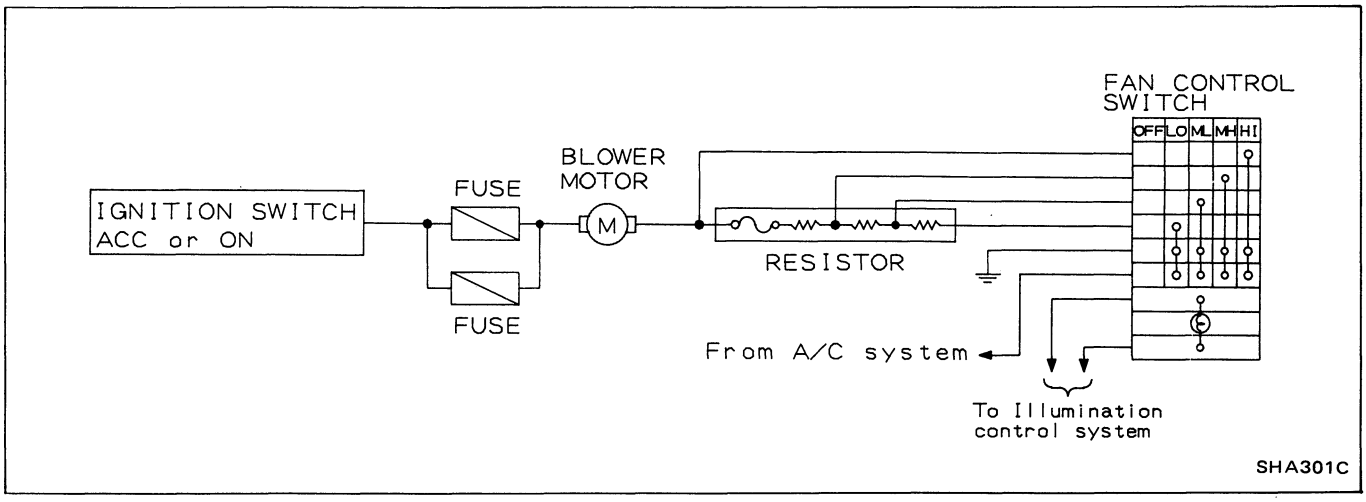

WARNING:

- **Always wear eye protection when working around the system.**
- **Always be careful that refrigerant does not come in contact with your skin.**
- **Keep refrigerant containers stored below 40°C (104°F) and never drop them from high places.**
- **Work in well-ventilated area because refrigerant gas evaporates quickly and breathing may become difficult due to lack of oxygen.**
- **Keep refrigerant away from open flames because poisonous gas will be produced if it burns.**
- **Do not increase can temperature beyond 40°C (104°F) in charging.**
- **Do not heat refrigerant can with an open flame. There is danger that can will explode.**

CAUTION:

- **Do not use steam to clean surface of condenser or evaporator. Be sure to use cold water or compressed air.**
- **Compressed air must never be used to clean a dirty line. Clean with refrigerant gas.**

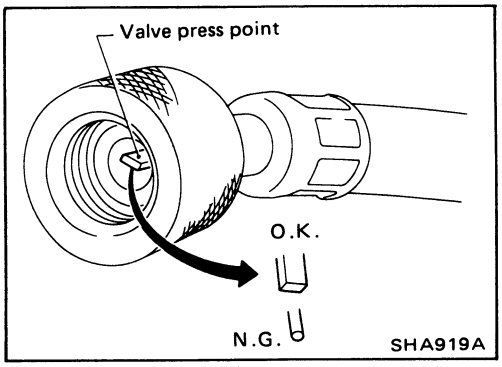

- **Do not use manifold gauge whose press point shape is different from that shown. Otherwise, insufficient evacuation may occur.**

- **Do not over-tighten service valve cap.**
- **Do not allow refrigerant to rush out. Otherwise, compressor oil will be discharged along with refrigerant.**

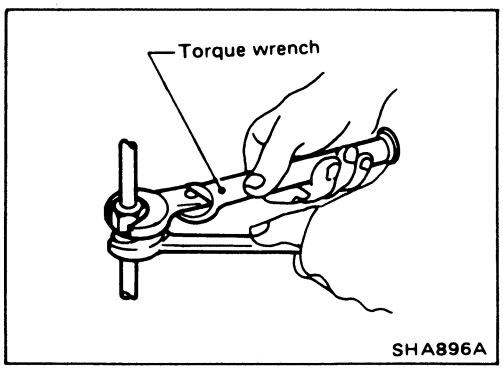

WARNING:
Gradually loosen discharge side hose fitting, and remove it after remaining pressure has been released.
CAUTION:
When replacing or cleaning refrigerant cycle components, observe the following.

- **Do not leave compressor on its side or upside down for more than 10 minutes, as compressor oil will enter low pressure chamber.**
- **When connecting tubes, always use a torque wrench.**

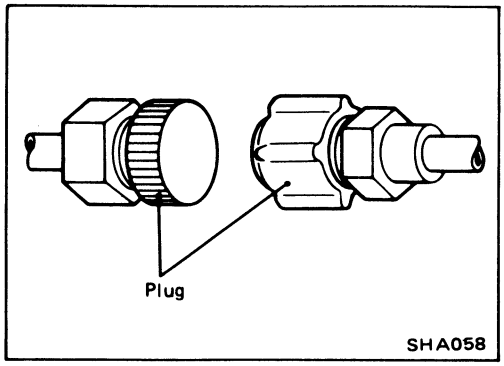

- **After disconnecting tubes, plug all openings immediately to prevent entrance of dirt and moisture.**

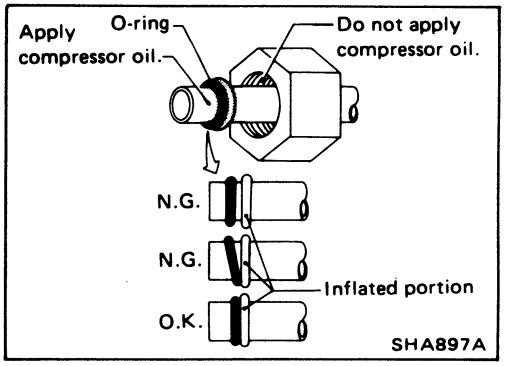

- **Always replace used O-rings.**
- **When connecting tube, apply compressor oil to portions shown in illustration. Be careful not to apply oil to threaded portion.**
- **O-ring must be closely attached to inflated portion of tube.**

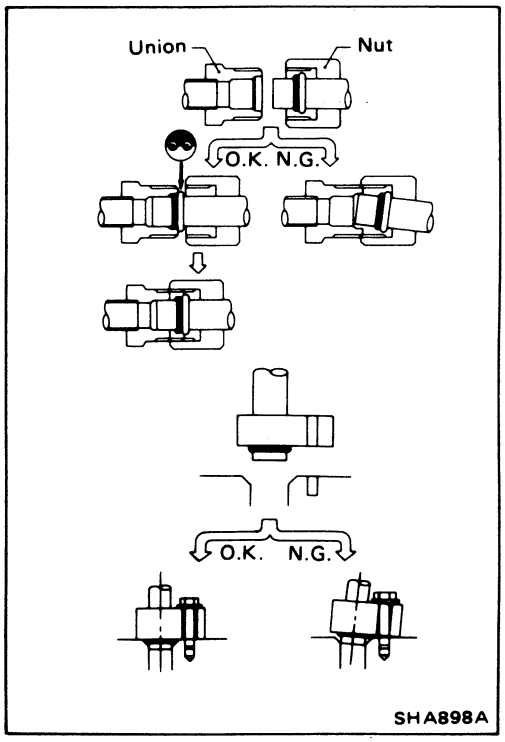

- **After inserting tube into union until O-ring is no longer visible, tighten nut to specified torque.**
- **After connecting line, conduct leak test and make sure that there is no leakage from connections. When the gas leaking point is found, disconnect that line and replace the O-ring. Then tighten connections of seal seat to the specified torque.**

SPECIAL SERVICE TOOLS

Tool number (Kent-Moore No.) Tool name	Description	
KV99232022 (J26571-A) Clutch disc puller	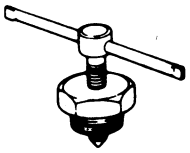	Removing clutch disc
KV99235140 (J37876) Shaft seal remover and installer	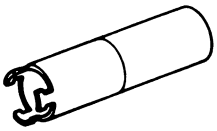	Removing and installing shaft seal.
KV99241420 (J37881) Blind cover set ① KV99241400 (–) ② KV99211100 (–) ③ KV99211300 (–)	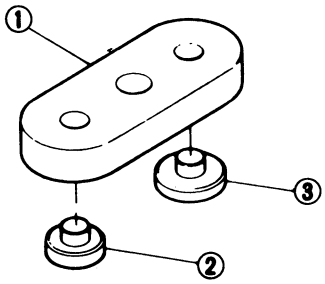	Blind cover
KV994C1552 (J37880) Charge nozzle	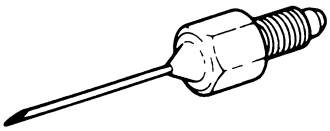	Using charge refrigerant
KV99231010 (J37877) or Clutch disc wrench KV99103900 (–)	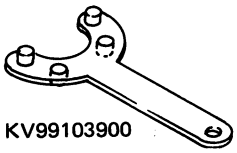	Removing shaft nut and clutch disc
KV99233040 (J26720-A) Puller pilot	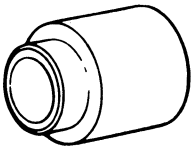	Removing pulley
KV99234160 (J37879) Pulley installer	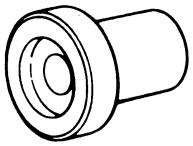	Installing pulley

Tool number (Kent-Moore No.) Tool name	Description	
KV99267420 (J37878) Shaft seal guide	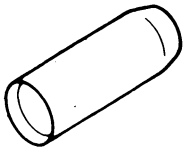	Installing shaft seal
KV99235160 (J37882) Nut wrench		Removing lock nut

SERVICE TOOLS

Tool name	Description	
Manifold gauge	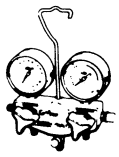	Discharging and charging refrigerant
Charging hose	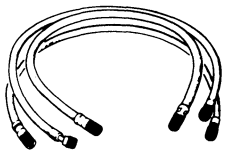	Discharging, evacuating and checking refrigerant
Charge valve	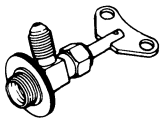	Discharging and charging refrigerant
Thermometer	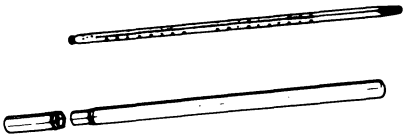	Checking temperature
Vacuum pump	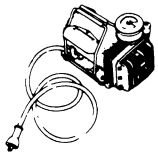	Evacuating refrigerant
Electric leak detector	**Nominal sensitivity:** **15 - 25 g (0.53 - 0.88 oz)/year** 	Checking refrigerant leaks

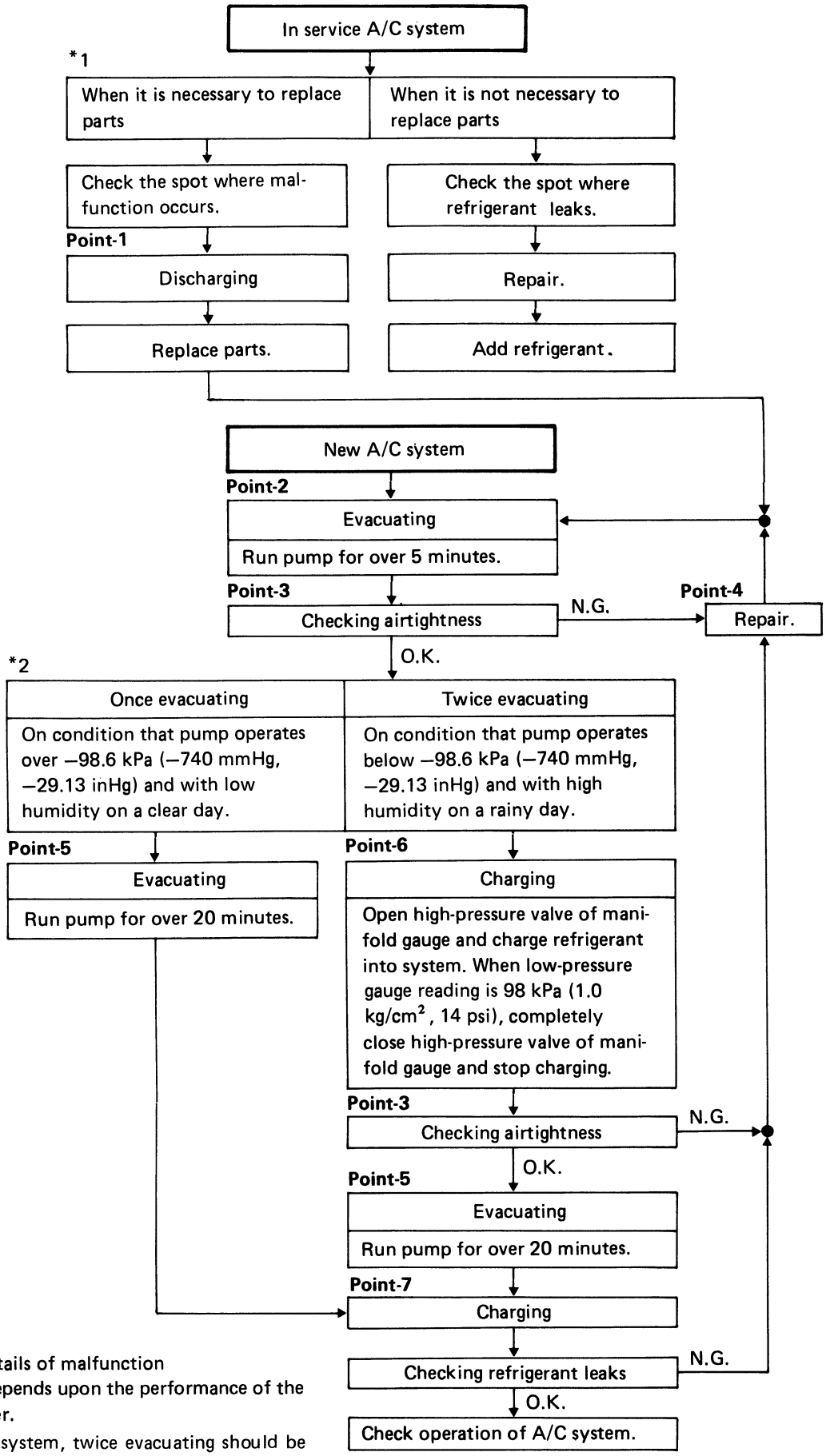

*1: Depending on the details of malfunction

*2: Working operation depends upon the performance of the pump and the weather.
When servicing A/C system, twice evacuating should be done under any condition.

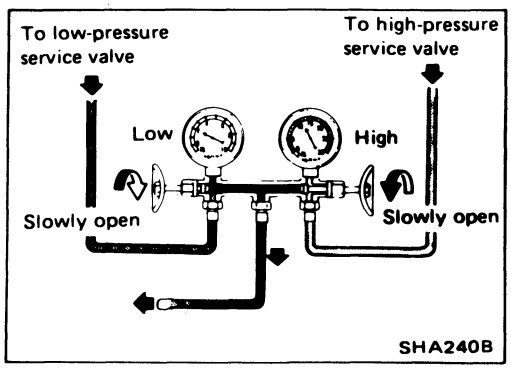

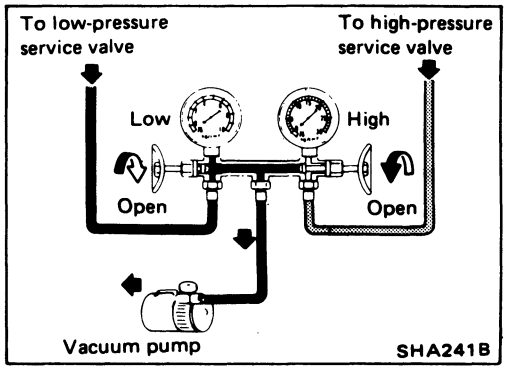

Elevation m (ft)	Vacuum of system* kPa (mmHg, inHg)
0 (0)	101.3 (760, 29.92)
300 (1,000)	98.0 (735, 28.94)
600 (2,000)	94.6 (710, 27.95)
900 (3,000)	91.3 (685, 26.97)

*: Values show reading of the low-pressure gauge.

Point-1

Discharging

Slowly open the valves to discharge only refrigerant. If they are opened quickly, compressor oil will also be discharged.

Point-2

Evacuating the System

1. Start pump, then open both valves and run pump for over 5 minutes.
2. When low gauge has reached approx. 98.6 to 101.3 kPa (740 to 760 mmHg, 29.13 to 29.92 inHg), completely close both valves of gauge and stop vacuum pump.

a. The low-pressure gauge reads lower by 3.3 kPa (25 mmHg, 0.98 inHg) per 300 m (1,000 ft) elevation. Perform evacuation according to the following table.

b. The rate ascension of the low-pressure gauge should be less than 3.3 kPa (25 mmHg, 0.98 inHg) in 5 minutes.

Point-3

Checking Airtightness

1. Close both low and high-pressure valves and leave them unattended for approx. 5 to 10 minutes.
2. Make sure the pointer of the low-pressure gauge does not deflect toward the "0" direction.
3. If the pointer deflects, gas leakage is present. Repair as outlined under Point-4.

Point-4

Repair

If a malfunction is noticed under Point-3 above, locate and repair the leaking point using the following table as a guide.

Leak at/around pipe connection	Leak at/around gauge manifold
• O-ring fouled, damaged or deformed • Oil not applied to pipe connections during installation • Pipe connections not properly tightened (too tight or too loose)	• Malfunctioning charging hose • Gauge improperly installed • Malfunctioning valve • Malfunctioning packing, etc.

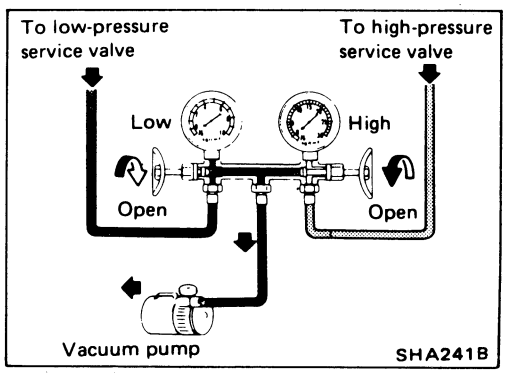

Point-5

Evacuating the System

1. Close manifold gauge valve securely and disconnect charging hose from refrigerant can.
2. Connect center charging hose to vacuum pump.
3. Start pump, then open both valves and run pump for over 20 minutes.

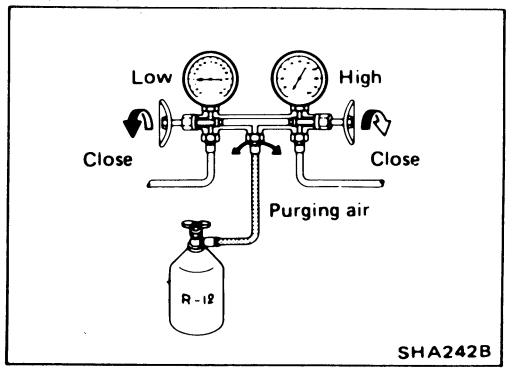

Point-6

Charging

1. Close manifold gauge valves securely and disconnect charging hose from vacuum pump.
2. Purge air from center charging hose.
1) Connect center charging hose to refrigerant can through charge valve.
2) Break seal of refrigerant can and purge air.

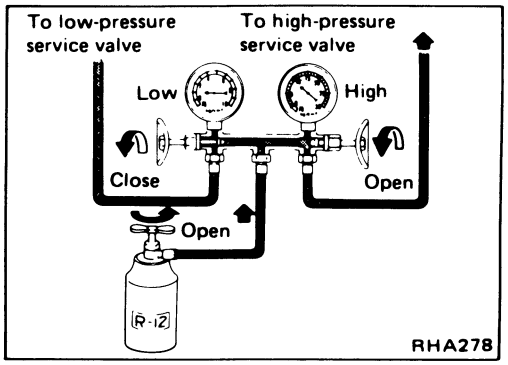

3. Charge refrigerant into system.

WARNING:

Ensure that engine is off.

1) Open high-pressure valve of manifold gauge and charge refrigerant into system.

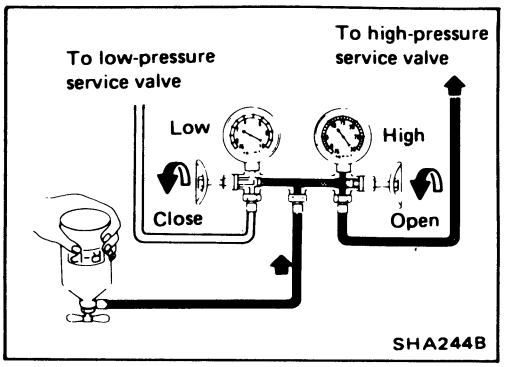

CAUTION:

If charging liquefied refrigerant into the system with the can turned upside down to reduce charging time, charge it only through high-pressure (discharge) service valve. After charging, the compressor should always be turned several times manually.

2) When low-pressure gauge reading is 98 kPa (1.0 kg/cm^2, 14 psi), completely close high-pressure valve of manifold gauge and stop charging.

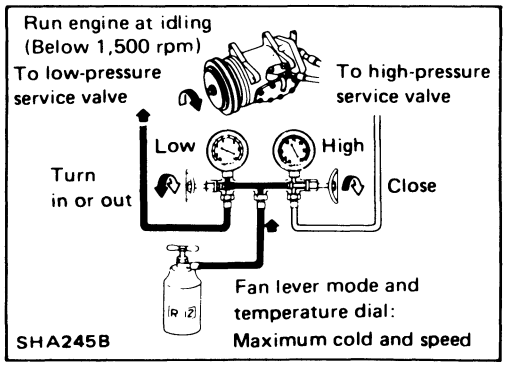

Point-7

Charging

1. Open manifold gauge low-pressure valve and charge refrigerant into system.

WARNING:
Ensure that engine is off.

2. When refrigerant charging speed slows down, start engine — air conditioning system ON, maximum cold temperature set, maximum blower speed set, can in upright position. Monitor sight glass. Charge is complete when sight glass is clear.

Cycling clutch systems will produce bubbles in sight glass when clutch engages. Therefore, allow 5 seconds after clutch engages to determine if bubbles continue, and, if so, add refrigerant to clear sight glass.

WARNING:
Never charge refrigerant through high-pressure side (discharge side) of system since this will force refrigerant back into refrigerant can and it may explode.

3. Charge refrigerant while controlling low-pressure gauge reading at 275 kPa (2.8 kg/cm^2, 40 psi) or less by turning in or out low-pressure valve of manifold gauge.

- **Be sure to purge air from charging hose when replacing can with a new one.**

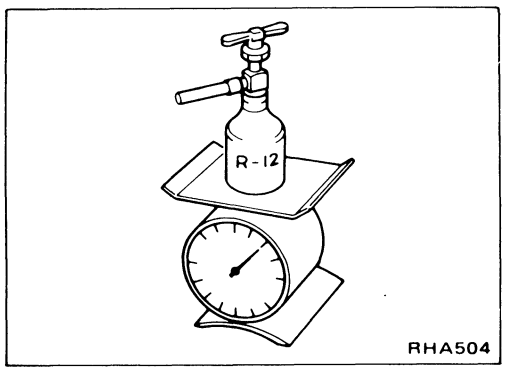

4. Charge the specified amount of refrigerant into system by weighing charged refrigerant with scale. Overcharging will cause discharge pressure to rise.

   Refrigerant amount:
   0.9 - 1.1 kg (2.0 - 2.4 lb)

Point-7

Charging (Cont'd)

The state of the bubbles in the sight glass can only be used for checking whether the amount of charged refrigerant is small or not. The amount of charged refrigerant should be correctly judged by means of the discharge pressure.

5. After charging, be sure to install valve cap on service valve.
6. Confirm that there are no leaks in system by checking with a leak detector.

- When refrigerant charging is performed with a charging cylinder, charging station, or automatic charging equipment with engine off, charge only through high pressure side. After specified refrigerant amount has entered the system, close high-pressure valve on gauge set. Start engine, return to idle speed, operate A/C at maximum temperature setting, high blower. Observe sight glass to confirm complete charge.

Overcharging will result in increased high pressures, and reduced performance.

Checking Refrigerant Level

CONDITION

- Door window: Open
- A/C switch: ON
- TEMP. lever position: Max. COLD
- FAN lever position: 4
- Check sight glass after a lapse of about five minutes.

Check item \ Amount of refrigerant	Almost no refrigerant	Insufficient	Suitable	Too much refrigerant
Temperature of high-pressure and low-pressure lines.	Almost no difference between high-pressure and low-pressure side temperature.	High-pressure side is warm and low-pressure side is fairly cold.	High-pressure side is hot and low-pressure side is cold.	High-pressure side is abnormally hot.
State in sight glass.	Bubbles flow continuously. Bubbles will disappear and something like mist will flow when refrigerant is nearly gone.	The bubbles are seen at intervals of 1 - 2 seconds.	Almost transparent. Bubbles may appear when engine speed is raised and lowered.	No bubbles can be seen.
			No clear difference exists between these two conditions.	
	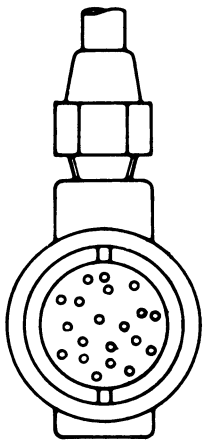 AC256	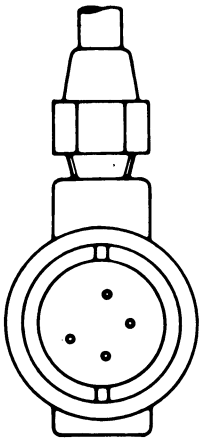 AC257	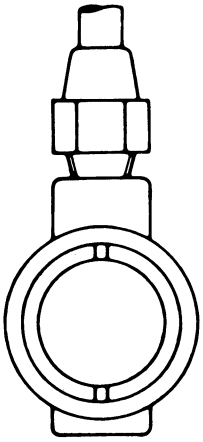 AC258	
Pressure of system.	High-pressure side is abnormally low.	Both pressures on high and low-pressure sides are slightly low.	Both pressures on high and low-pressure sides are normal.	Both pressures on high and low-pressure sides are abnormally high.
Repair.	Stop compressor immediately and conduct an overall check.	Check for gas leakage, repair as required, replenish and charge system.		Discharge refrigerant from service valve of low pressure side.

a. The bubbles seen through the sight glass are influenced by the ambient temperature. Since the bubbles are hard to show up in comparatively low temperatures below 20°C (68°F), it is possible that a slightly larger amount of refrigerant would be filled, if supplied according to the sight glass. Recheck the amount when it exceeds 20°C (68°F). In higher temperature the bubbles are easy to show up.

b. When the screen in the receiver drier is clogged, the bubbles will appear even if the amount or refrigerant is normal. In this case, the outlet side pipe of the receiver drier becomes considerably cold.

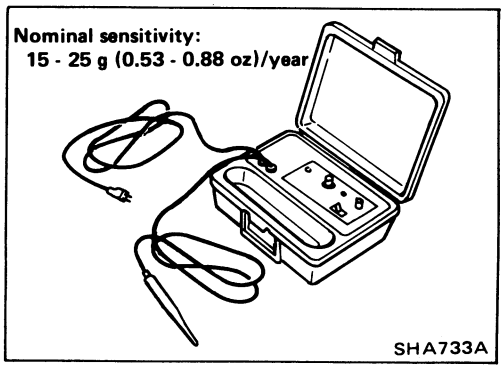

Checking Refrigerant Leaks

ELECTRIC LEAK DETECTOR

The leak detector is a delicate device that detects small amounts of halogen.

To use the device properly, read the manufacturer's manuals. Also perform the specified maintenance and inspections.

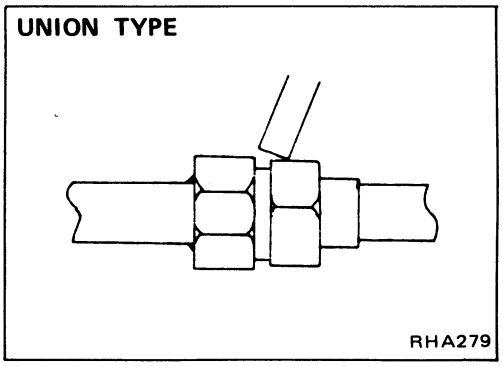

GENERAL PRECAUTIONS FOR HANDLING LEAK DETECTOR

Place the probe on connection fitting and wait for 5 seconds or more.

To check cooling unit, wait for 10 seconds or more.

If a leak is detected, keep the probe as still as possible for one more minute.

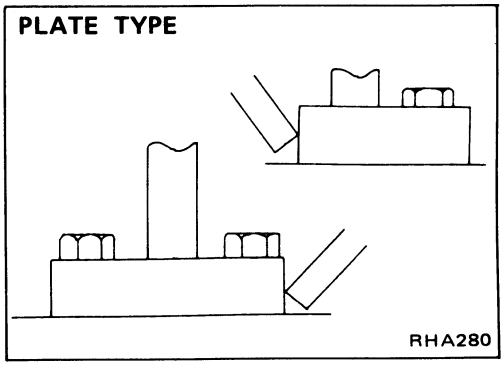

When testing single-bolt flange, place the probe on the opposite side of the fitting.

MEASUREMENT STANDARD

If any leak is noted with a detector having a nominal sensitivity of 15 to 25 g (0.53 to 0.88 oz)/year, that leak must be repaired.

- The nominal sensitivity of the detector is determined under the assumption that all the leaking gas is collected by the detector. Accordingly, the quantity of gas actually leaking can amount to five to ten times the indicated value. Generally speaking, leakage of 150 to 200 g (5.29 to 7.05 oz) of refrigerant can cause insufficient cooling.
- Oil deposited during assembling must be wiped off before inspection. Refrigerant easily dissolves in oil, and the presence of oil can cause an error in measurement.
  This precaution is important when checking a used car for refrigerant leakage.
- If oil is noted at or around connections, it indicates that refrigerant is leaking.

Refrigeration Cycle

REFRIGERANT FLOW

The refrigerant flows in the standard pattern, that is, through the compressor, the condenser, the receiver drier, through the evaporator, and back to the compressor.
The refrigerant evaporation through the evaporator coil is controlled by an externally equalized expansion valve, located inside the evaporator case.

FREEZE PROTECTION

The compressor cycles on and off to maintain the evaporator temperature within a specified range. When the evaporator coil temperature falls below a specified point, the thermo control amplifier interrupts the compressor operation. When the evaporator coil temperature rises above the specification, the thermo control amplifier allows compressor operation.

REFRIGERANT SYSTEM PROTECTION

Dual-pressure switch

The refrigerant system is protected against excessively high or low pressures by the dual-pressure switch, located on the receiver drier. If the system pressure rises above, or falls below the specifications, the dual-pressure switch opens to interrupt the compressor operation.

Fusible plug

Open at temperature above 105°C (221°F), thereby discharging refrigerant to the atmosphere. If this plug is melted and opened, check the refrigerant line and replace receiver drier.

Pressure relief valve

The refrigerant system is also protected by a pressure relief valve, located on the end of high flexible hose near compressor. When the pressure of refrigerant in the system increases to an abnormal level [more than 3,727 kPa (38 kg/cm^2, 540 psi)], the release port on the pressure relief valve automatically opens and releases refrigerant into the atmosphere.

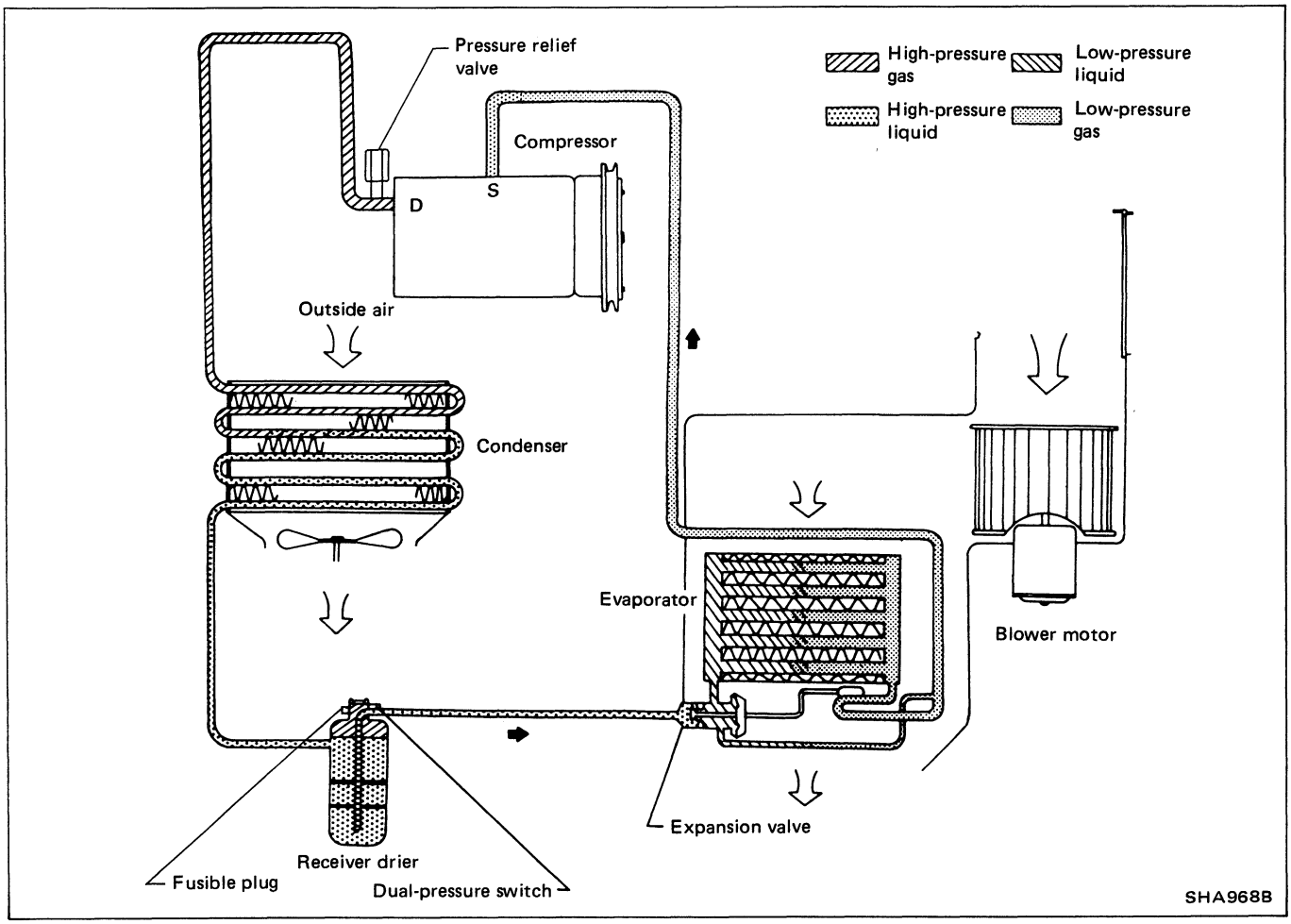

Refrigerant Lines

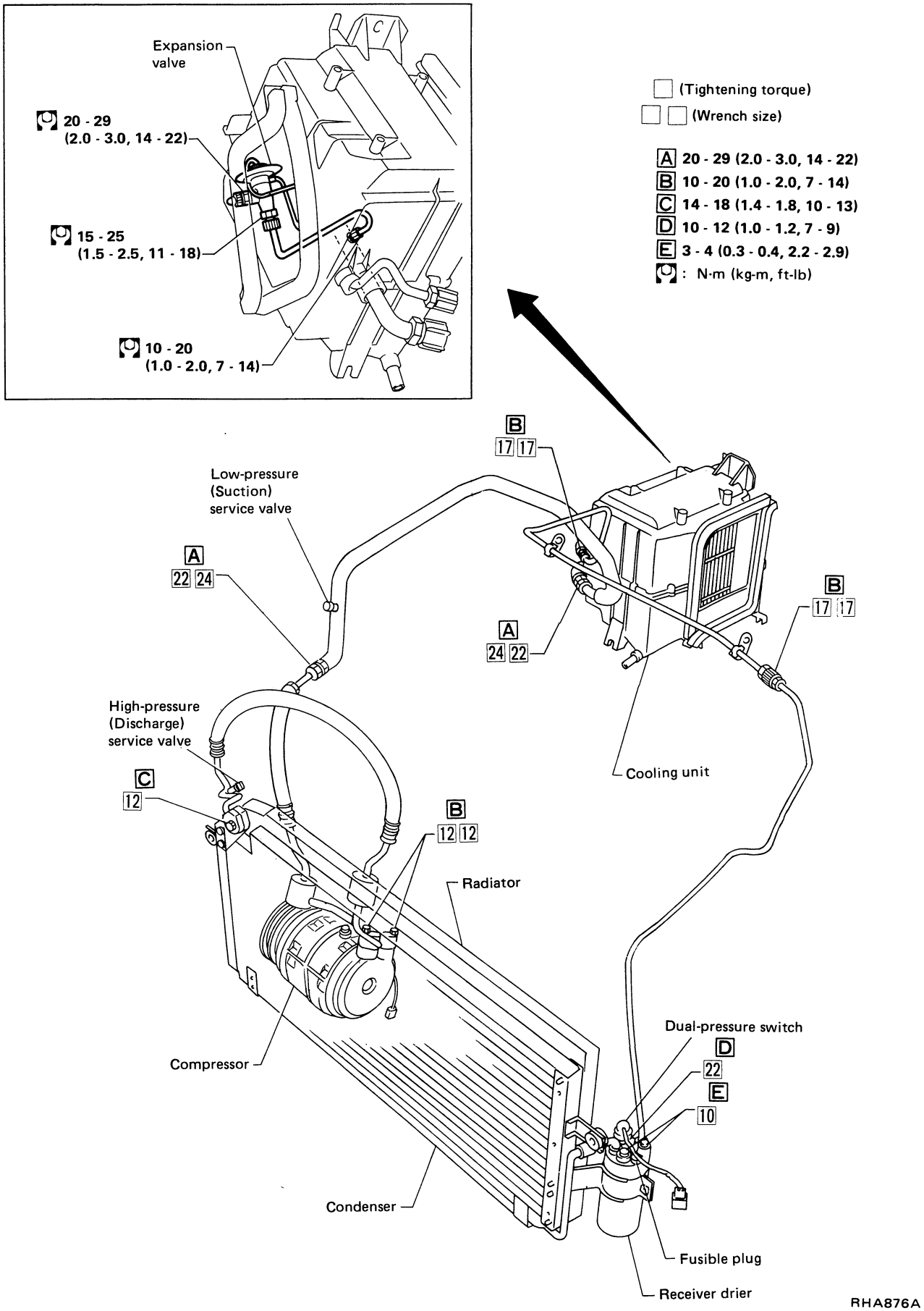

Compressor Mounting

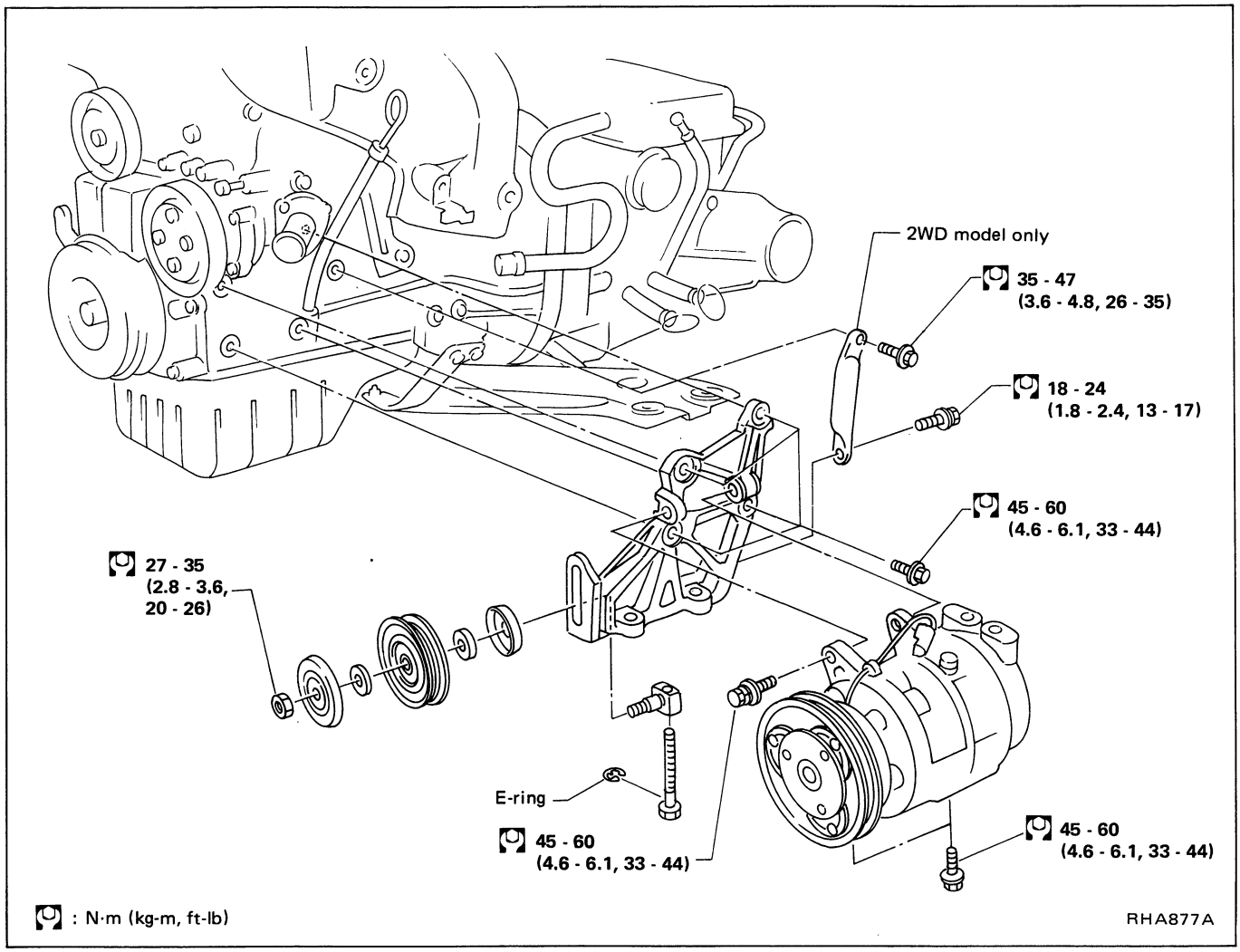

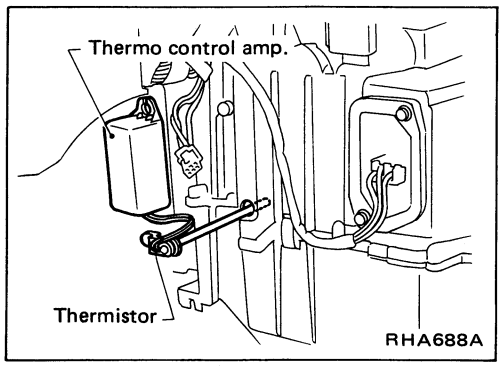

Thermo Control Amp.

REPLACEMENT

Remove screws, which secure thermistor locating stay, from front of cooling unit. Replace thermo control amp. assembly with a new one. (Cooling unit need not be removed during the replacement.)

Belt Tension

- **Refer to MA section.**

Fast Idle Control Device (F.I.C.D.)

- **Refer to EF & EC section.**

Performance Chart

TEST CONDITION

Testing must be performed as follows:

Vehicle location: Indoors or in the shade (in a well ventilated place)
Doors: Closed
Door window: Open
Hood: Open
TEMP. lever position: Max. COLD
Air control lever position: (Ventilation)
INTAKE lever position: (Recirculation)
FAN lever position: Max. position
Engine speed: 1,500 rpm
Time required before starting testing after air conditioner starts operating: More than 10 minutes

TEST READING

Recirculating-to-discharge air temperature table

Inside air (Recirculating air) at blower assembly inlet		Discharge air temperature at center ventilator °C (°F)
Relative humidity %	Air temperature °C (°F)	
50 - 60	20 (68)	2.5 - 3.6 (37 - 38)
	25 (77)	7.0 - 8.4 (45 - 47)
	30 (86)	12.2 - 14.0 (54 - 57)
	35 (95)	17.6 - 19.7 (64 - 67)
	40 (104)	23.0 - 25.4 (73 - 78)
60 - 70	20 (68)	3.6 - 3.8 (38 - 39)
	25 (77)	8.4 - 9.7 (47 - 49)
	30 (86)	14.0 - 15.8 (57 - 60)
	35 (95)	19.7 - 21.8 (67 - 71)
	40 (104)	25.4 - 27.7 (78 - 82)

Ambient air temperature-to-compressor pressure table

Ambient air		High-pressure (Discharge side) kPa (kg/cm^2, psi)	Low-pressure (Suction side) kPa (kg/cm^2, psi)
Relative humidity %	Air temperature °C (°F)		
50 - 70	20 (68)	1,069 - 1,295 (10.9 - 13.2, 155 - 188)	147 - 186 (1.5 - 1.9, 21 - 27)
	25 (77)	1,295 - 1,559 (13.2 - 15.9, 188 - 226)	186 - 226 (1.9 - 2.3, 27 - 33)
	30 (86)	1,510 - 1,834 (15.4 - 18.7, 219 - 266)	226 - 275 (2.3 - 2.8, 33 - 40)
	35 (95)	1,736 - 2,089 (17.7 - 21.3, 252 - 303)	265 - 318.7 (2.7 - 3.25, 38 - 46.2)
	40 (104)	1,952 - 2,363 (19.9 - 24.1, 283 - 343)	304 - 363 (3.1 - 3.7, 44 - 53)

Performance Test Diagnoses

Characteristics revealed by the manifold gauge readings for the air conditioning system are shown in the following table.
For how to do the performance test, refer to the item "Performance Chart".

In the following table, the portion smeared with ink on each gauge scale indicates the range showing that the air conditioning system is in good order. This range is described in Performance Chart.

Condition		Probable cause	Corrective action
INSUFFICIENT REFRIGERANT CHARGE			
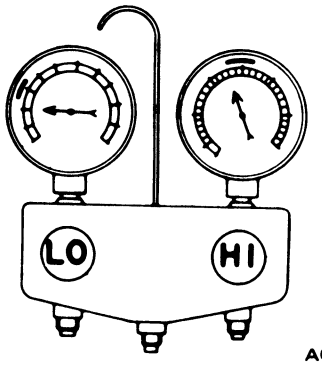 AC352A	Insufficient cooling. Bubbles appear in sight glass.	Refrigerant is low, or leaking slightly.	1. Leak test. 2. Repair leak. 3. Charge system. **Evacuate, as necessary, and recharge system.**
ALMOST NO REFRIGERANT			**Stop compressor immediately.**
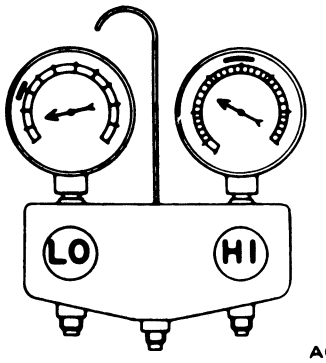 AC353A	No cooling action. A lot of bubbles or something like mist appears in sight glass.	Serious refrigerant leak.	1. Leak test. 2. Discharge system. 3. Repair leak(s). 4. Replace receiver drier if necessary. 5. Check oil level. 6. Evacuate and recharge system.
MALFUNCTIONING EXPANSION VALVE			
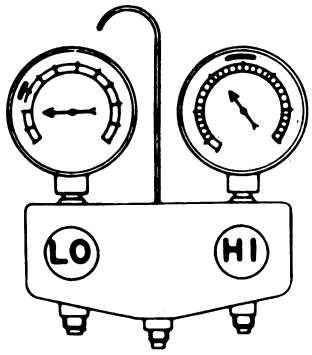 AC354A	Slight cooling. Sweat or frosting on expansion valve inlet.	Expansion valve restricts refrigerant flow. • Expansion valve is clogged. • Expansion valve is inoperative. Valve stuck closed. Thermal bulb has lost charge.	If valve inlet reveals sweat or frost: 1. Discharge system. 2. Remove valve and clean it. Replace it if necessary. 3. Evacuate system. 4. Charge system. If valve does not operate: 1. Discharge system. 2. Replace valve. 3. Evacuate and charge system.

Performance Test Diagnoses (Cont'd)

Condition		Probable cause	Corrective action
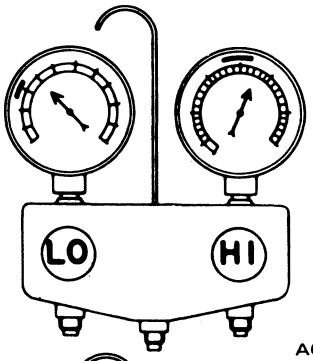 AC355A	Insufficient cooling. Sweat on suction line.	Expansion valve allows too much refrigerant through evaporator.	Check valve for operation. If suction side does not show a pressure decrease, replace valve.
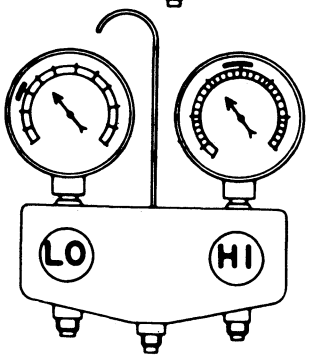 AC356A	No cooling. Sweat or frosting on suction line.	Malfunctioning expansion valve.	1. Discharge system. 2. Replace valve. 3. Evacuate and charge system.
AIR IN SYSTEM			
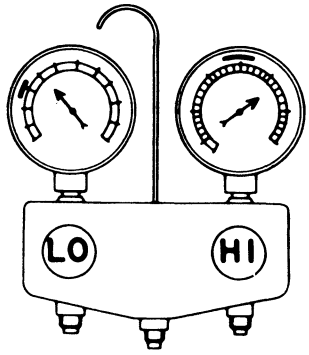 AC359A	Insufficient cooling. Sight glass shows occasional bubbles.	Air mixed with refrigerant in system.	1. Discharge system. 2. Replace receiver drier. 3. Evacuate and charge system.
MOISTURE IN SYSTEM			
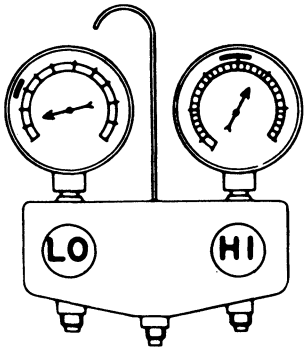 AC360A	After short operation, suction side may show vacuum pressure reading. During this condition, discharge air will be warm. As a warning of this, reading vibrates around 39 kPa (0.4 kg/cm^2, 6 psi).	Drier is saturated with moisture. Moisture has frozen in expansion valve. Refrigerant flow is restricted.	1. Discharge system. 2. Replace receiver drier (twice if necessary). 3. Evacuate system completely. (Repeat 30-minutes evacuating three times.) 4. Recharge system.

Performance Test Diagnoses (Cont'd)

Condition		Probable cause	Corrective action
MALFUNCTIONING CONDENSER			
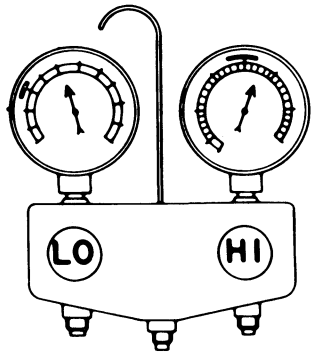 AC361A	No cooling action: engine may overheat. Bubbles appear in sight glass of drier. Suction line is very hot.	Usually a malfunctioning condenser.	• Check fan belt and fluid coupling. • Check radiator fan motor. • Check condenser for dirt accumulation. • Check engine cooling system for overheating. • Check for refrigerant overcharging. **If pressure remains high in spite of all above actions taken, remove and inspect the condenser for possible oil clogging.**
HIGH-PRESSURE LINE BLOCKED			
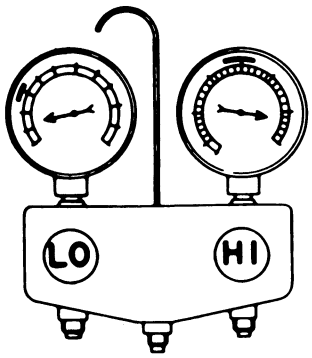 AC362A	Insufficient cooling. Frosted high-pressure liquid line.	Drier clogged, or restriction in high-pressure line.	1. Discharge system. 2. Remove receiver drier or strainer and replace it. 3. Evacuate and charge system.
MALFUNCTIONING COMPRESSOR			
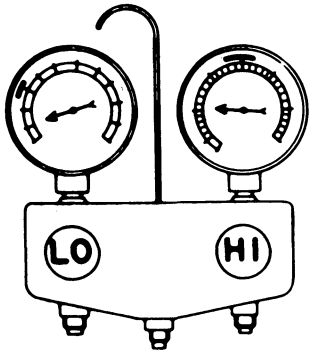 AC363A	Insufficient cooling.	Internal problem in compressor, or damaged gasket and valve.	1. Discharge system. 2. Remove and check compressor. 3. Repair or replace compressor. 4. Check oil level. 5. Replace receiver drier. 6. Evacuate and charge system.

Performance Test Diagnoses (Cont'd)

Condition		Probable cause	Corrective action
TOO MUCH OIL IN SYSTEM (Excessive) 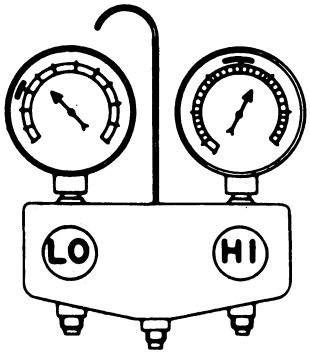 AC364A	Insufficient cooling.	Too much oil circulates with refrigerant, causing the cooling capacity of the system to be reduced.	**Refer to COMPRESSOR OIL** for correcting oil level.

Checking and Adjusting

The oil used to lubricate the compressor is circulating with the refrigerant.
Whenever replacing any component of the system or a large amount of gas leakage occurs, add oil to maintain the original amount of oil.

OIL CAPACITY

Unit: mℓ (US fl oz, Imp fl oz)

Applied model	All models
Capacity	
Total in system	200 (6.8, 7.0)
Amount of oil which can be drained	130 (4.4, 4.6)*
Compressor (Service parts) charging amount	200 (6.8, 7.0)

*: All oil cannot be drained from system.

OIL RETURN OPERATION

Before checking and adjusting oil level, operate compressor at engine idling speed, with controls set for maximum cooling and high blower speed, for 20 to 30 minutes in order to return oil to compressor.

CHECKING AND ADJUSTING FOR USED COMPRESSOR

1. After oil return operation, stop the engine and discharge refrigerant, and then remove compressor from the vehicle.
2. Remove oil drain plug, drain compressor oil from compressor oil sump and measure the amount.

Oil is sometimes hard to extract when compressor is cooled. Remove oil while compressor is warm [maintained to 40 to 50°C (104 to 122°F)].

3. If the amount is less than 130 mℓ (4.4 US fl oz, 4.6 Imp fl oz), some refrigerant may have leaked out. Conduct leak tests on connections of each system, and if necessary, repair or replace malfunctioning parts.
4. Check the purity of the oil and then adjust oil level following the procedure below.
   (a) When oil is clean;

Unit: mℓ (US fl oz, Imp fl oz)

Amount of oil drained	Adjusting procedure
Above 130 (4.4, 4.6)*	Oil level is right. Pour in same amount of oil as was drained out.
Below 130 (4.4, 4.6)	Oil level may be low. Pour in 130 mℓ (4.4 US fl oz, 4.6 Imp fl oz) of oil.

*: If amount of oil drained is much greater than under normal circumstances, flush air conditioner system with refrigerant. Then pour 200 mℓ (6.8 US fl oz, 7.0 Imp fl oz) of oil into air conditioner system.

   (b) When oil contains chips or foreign material; After air conditioner system has been flushed with refrigerant, replace receiver drier. Then pour 200 mℓ (6.8 US fl oz, 7.0 Imp fl oz) of oil into air conditioner system.

CHECKING AND ADJUSTING FOR COMPRESSOR REPLACEMENT

200 mℓ (6.8 US fl oz, 7.0 Imp fl oz) of oil is charged in compressor (service parts). So it is necessary to drain the proper amount of oil from new compressor. Follow the procedure below.

1. After oil return operation, drain compressor oil from used compressor and measure the amount.
   (It is the same procedure as CHECKING AND ADJUSTING FOR USED COMPRESSOR.)

Checking and Adjusting (Cont'd)

2. Check the purity of the oil and then adjust oil level following the procedure below.
   (a) Oil is clean;

Unit: mℓ (US fl oz, Imp fl oz)

Amount of oil drained from used compressor	Draining amount of oil from new compressor
Above 130 (4.4, 4.6)*	200 (6.8, 7.0) – [Amount of oil drained + 25 (0.8, 0.9)]
Below 130 (4.4, 4.6)	130 (4.4, 4.6)

*: If amount of oil drained is much greater than under normal circumstances, flush air conditioner system with refrigerant. Then install new compressor. [200 mℓ (6.8 US fl oz, 7.0 Imp fl oz) of oil is charged in compressor service parts.]

Example:

Unit: mℓ (US fl oz, Imp fl oz)

Amount of oil drained from used compressor	Draining amount of oil from new compressor
145 (4.9, 5.1)	30 (1.0, 1.1)
95 (3.2, 3.3)	130 (4.4, 4.6)

   (b) When oil contains chips or foreign material; After air conditioner system has been flushed with refrigerant, replace receiver drier. Then install new compressor. [200 mℓ (6.8 US fl oz, 7.0 Imp fl oz) of oil is charged in compressor service parts.]

Precautions

- Plug all openings to prevent moisture and foreign matter from entering.
- Do not leave compressor on its side or upside down for more than 10 minutes.
- When replacing or repairing compressor, check compressor oil level in system.
- When replacing with a new compressor, drain specified oil from new compressor. Refer to COMPRESSOR OIL.
- Be sure there is no oil or dirt on frictional surface of clutch disc and pulley.
- When replacing compressor clutch, be careful not to scratch shaft or bend pulley.
- When replacing compressor clutch assembly, do not forget BREAK-IN OPERATION.
- When storing a compressor, be sure to fill it with refrigerant to prevent rust formation. Add refrigerant at the low-pressure side and purge air at the high-pressure side, while rotating shaft by hand.
- Replace shaft seal, seal seat, oil seal and O-ring as a set.
- When installing shaft seal, seal seat, oil seal, O-ring and gaskets, apply compressor oil sparingly to the contact surface. Do not reuse them.
- After replacement or repairs, conduct a Leak Test.

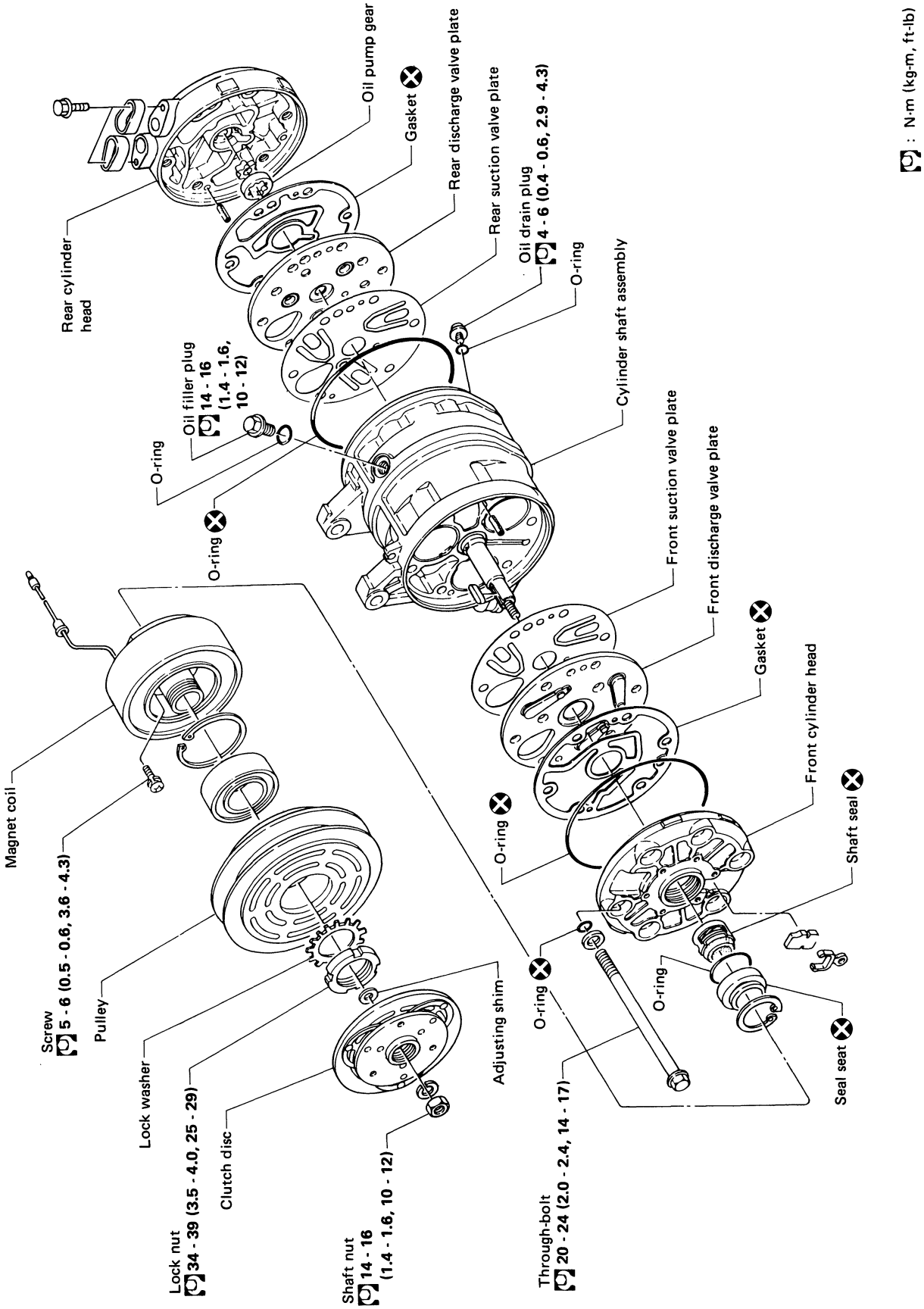
Rear cylinder head
Oil pump gear
Gasket
Rear discharge valve plate
Rear suction valve plate
Oil drain plug
4 - 6 (0.4 - 0.6, 2.9 - 4.3)
O-ring
Cylinder shaft assembly
Oil filler plug
14 - 16
(1.4 - 1.6,
10 - 12)
O-ring
O-ring
Front suction valve plate
Front discharge valve plate
Gasket
Front cylinder head
Shaft seal
Magnet coil
O-ring
Screw
5 - 6 (0.5 - 0.6, 3.6 - 4.3)
Pulley
Lock washer
Clutch disc
Lock nut
34 - 39 (3.5 - 4.0, 25 - 29)
Shaft nut
14 - 16
(1.4 - 1.6, 10 - 12)
Adjusting shim
O-ring
O-ring
Through-bolt
20 - 24 (2.0 - 2.4, 14 - 17)
Seal seat
: N·m (kg-m, ft-lb)

RHA558A

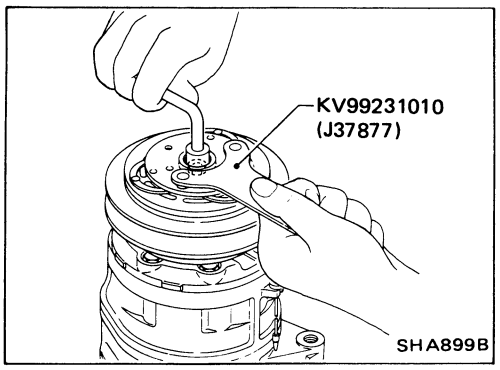

Compressor Clutch

REMOVAL

- When removing shaft nut, hold clutch disc with clutch disc wrench.

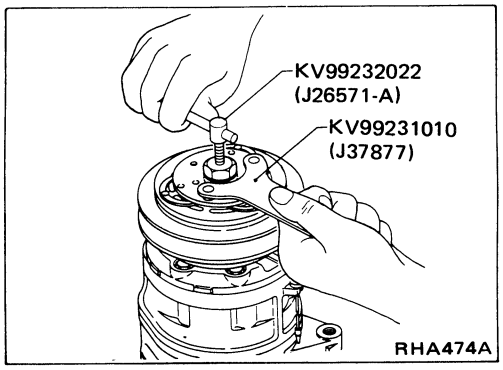

- Using clutch disc puller, clutch disc can be removed easily.

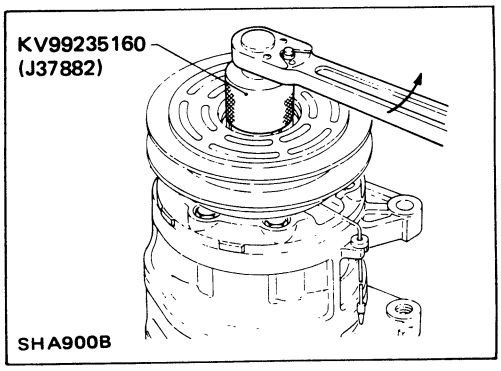

- Bend down pawl of lock washer.
- When removing pulley, remove lock nut with nut wrench.

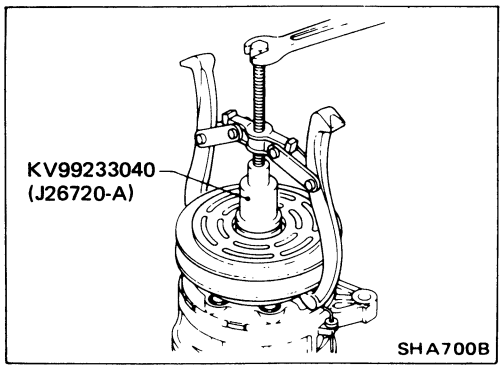

- Remove the pulley by hand. If difficult, use puller pilot.

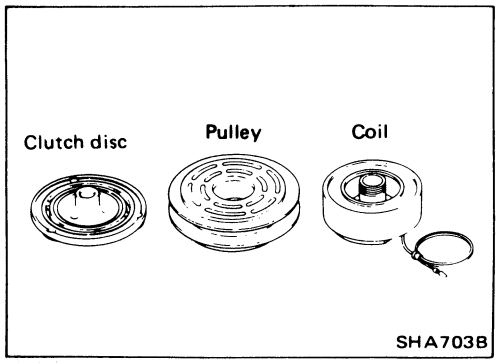

INSPECTION

Clutch disc

If the contact surface shows signs of damage due to excessive heat, the drive plate and pulley should be replaced.

Pulley

Check the appearance of the pulley assembly. If the contact surface of the pulley shows signs of excessive grooving due to slippage, both the pulley and drive plate should be replaced. The contact surfaces of the pulley assembly should be cleaned with a suitable solvent before reinstallation.

Coil

Check coil for loose connection or cracked insulation.

Compressor Clutch (Cont'd)

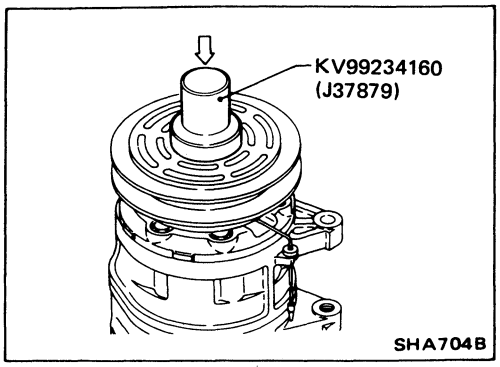

INSTALLATION

- Install the key in the keyway on the compressor drive shaft.
- Install the coil to compressor (lead wire up) and tighten the mounting screws.
- Install the lead wire with its holder into the hold.

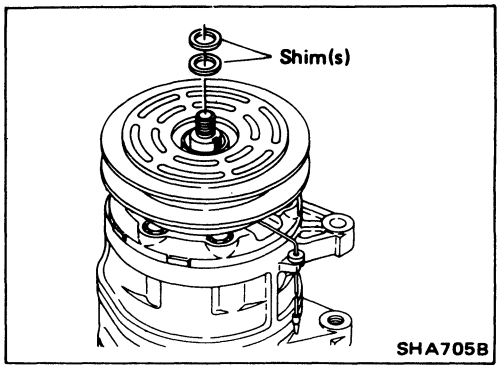

- Install lock washer and nut with nut wrench.
- Bend one pawl of the lock washer up against the nut to prevent the nut from loosening.

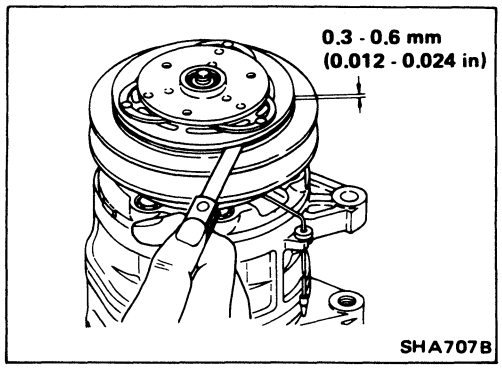

- Check to ensure that the clutch clearance is between 0.3 to 0.6 mm (0.012 to 0.024 in). Adjust the clearance using shim(s) as necessary.

BREAK-IN OPERATION

When replacing compressor clutch assembly, do not forget break-in operation, accomplished by engaging and disengaging the clutch about thirty times.

Break-in operation raises the level of transmitted torque.

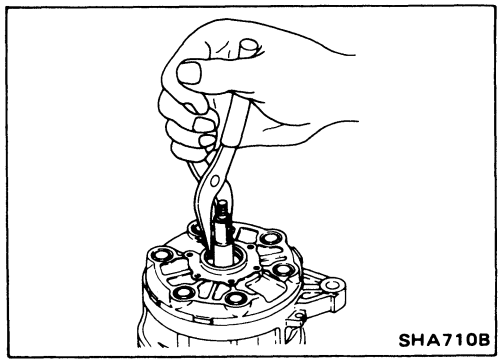

Shaft Seal Assembly

The shaft seal assembly is a precision-part, with it's critical parts finished to extremely close tolerances and, as such, must be handled with great care. Its slip face demands particularly careful handling.

REMOVAL

- Remove the magnetic clutch assembly, as outlined in **"Compressor Clutch-REMOVAL"**.
- Using Internal Snap Ring Pliers, remove the seal seat/compressor snap ring.
- Remove and discard seal seat.
- Using a suitable piece of wire, remove the O-ring from the inside groove of the shaft seal housing. Discard the O-ring.

Shaft Seal Assembly (Cont'd)

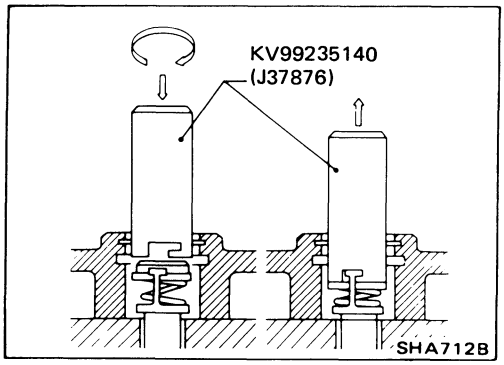

- Remove the shaft seal as follows: Turning clockwise, engage the remover hook with the shaft seal hook, and slowly draw out the seal. Discard the shaft seal.
- Check the shaft and inside of the compressor neck for dirt of foreign material and ensure these areas are perfectly clean before installing new shaft seal.

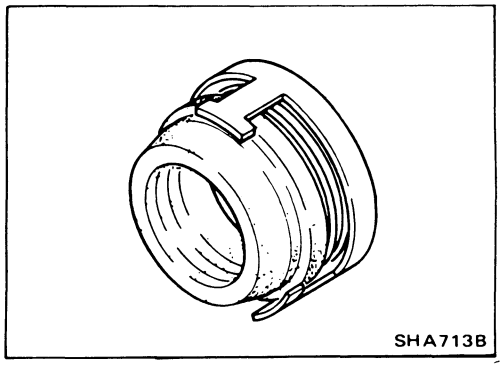

INSPECTION

- Shaft seal assembly should not be reused. Always use a new shaft seal kit on reassembling the compressor. Be extremely careful to ensure that the face of the shaft of the shaft seal to be installed is not scratched or damaged in anyway. Make sure the seal seat and shaft seal are free of lint and dirt that could damage the shaft seal surface.

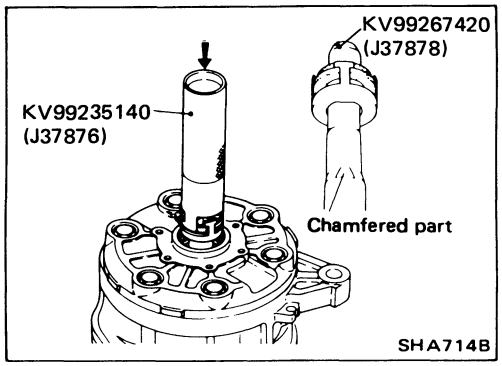

INSTALLATION

Clean the sealed section of the compressor. Apply clean compressor oil to the new shaft seal and the drive shaft. If the slip faces are dirty, clean them with thinners and after drying the cleaned faces, apply clean compressor oil.
Fit the new O-ring with clean compressor oil to the groove inside the compressor neck. Apply clean compressor oil to the seal seat.

Cylinder Heads (Front & Rear)

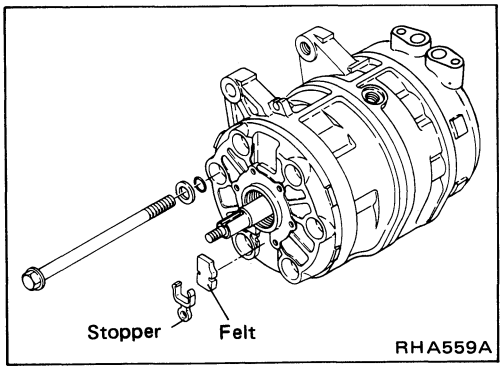

DISASSEMBLY

- Remove the compressor clutch assembly, as outlined in "Compressor Clutch-REMOVAL".
- Remove the oil filler plug and drain plug, and then draw out the oil.
- Remove the shaft seal assembly, as outlined in "Shaft Seal Assembly-REMOVAL".
- Remove the felt, stopper and six through-bolts securing the head, using a wrench.
- Alternately tap four projections on the circumference of the front head with a screwdriver and a plastic mallet, and remove the front cylinder head.

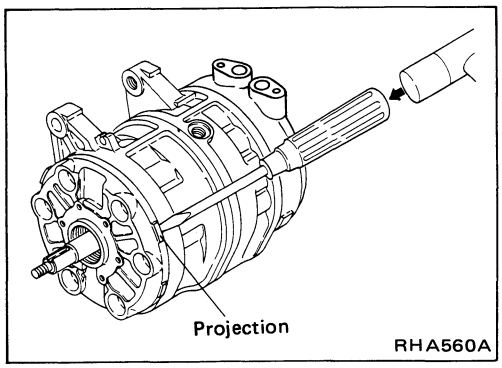

Cylinder Heads (Front & Rear)(Cont'd)

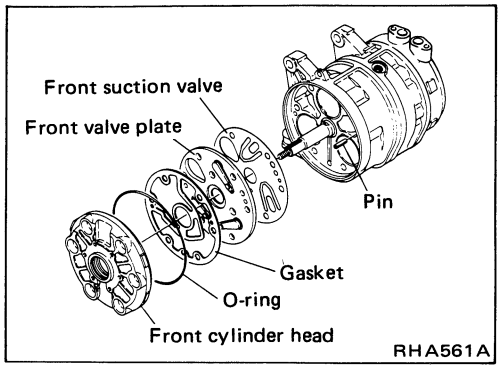

- Remove and discard the O-ring from the front cylinder head.
- Remove all gasket material from the front cylinder head and front valve plate.

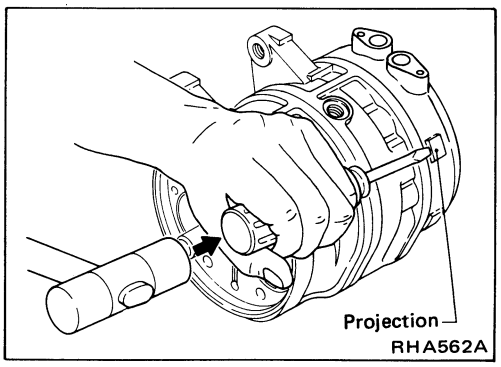

- Alternately tap four projections on the circumference of the rear head with a screwdriver and a plastic mallet, and remove the rear cylinder head.

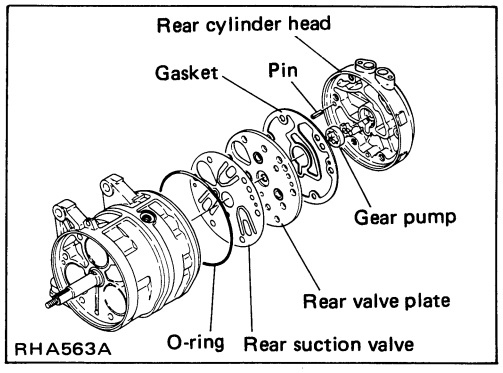

- Remove the gear pump from the rear cylinder head or drive shaft end.
  Remove all gasket material from the rear cylinder head and rear valve plate.
  Remove and discard the O-ring from the rear side of the cylinder shaft assembly.

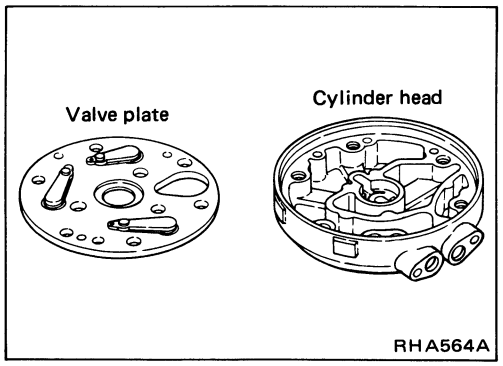

INSPECTION

Check the front and rear valve plates for scratched, bent or otherwise damaged parts. Inspect both cylinder heads and both valve plate assemblies for nicks or burrs on the sealingsurfaces. Clean, or replace if badly damaged. Make sure that all passages in the valve plate are unobstructed. If either the cylinder head or valve plate is cracked, it must be replaced.

INSTALLATION

- Installation is the reverse of removal.
- Tighten bolts or plugs to specified torques.

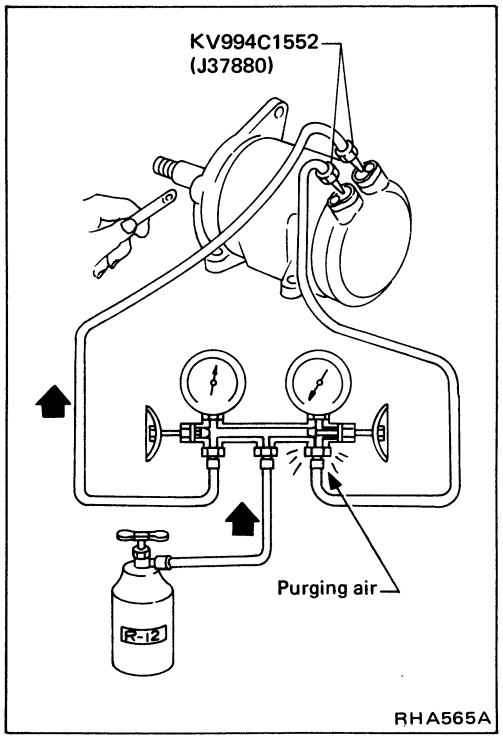

Leak Test

- Charge refrigerant from suction side and evacuate air from discharge side. Then conduct leak test.

Wiring Diagram

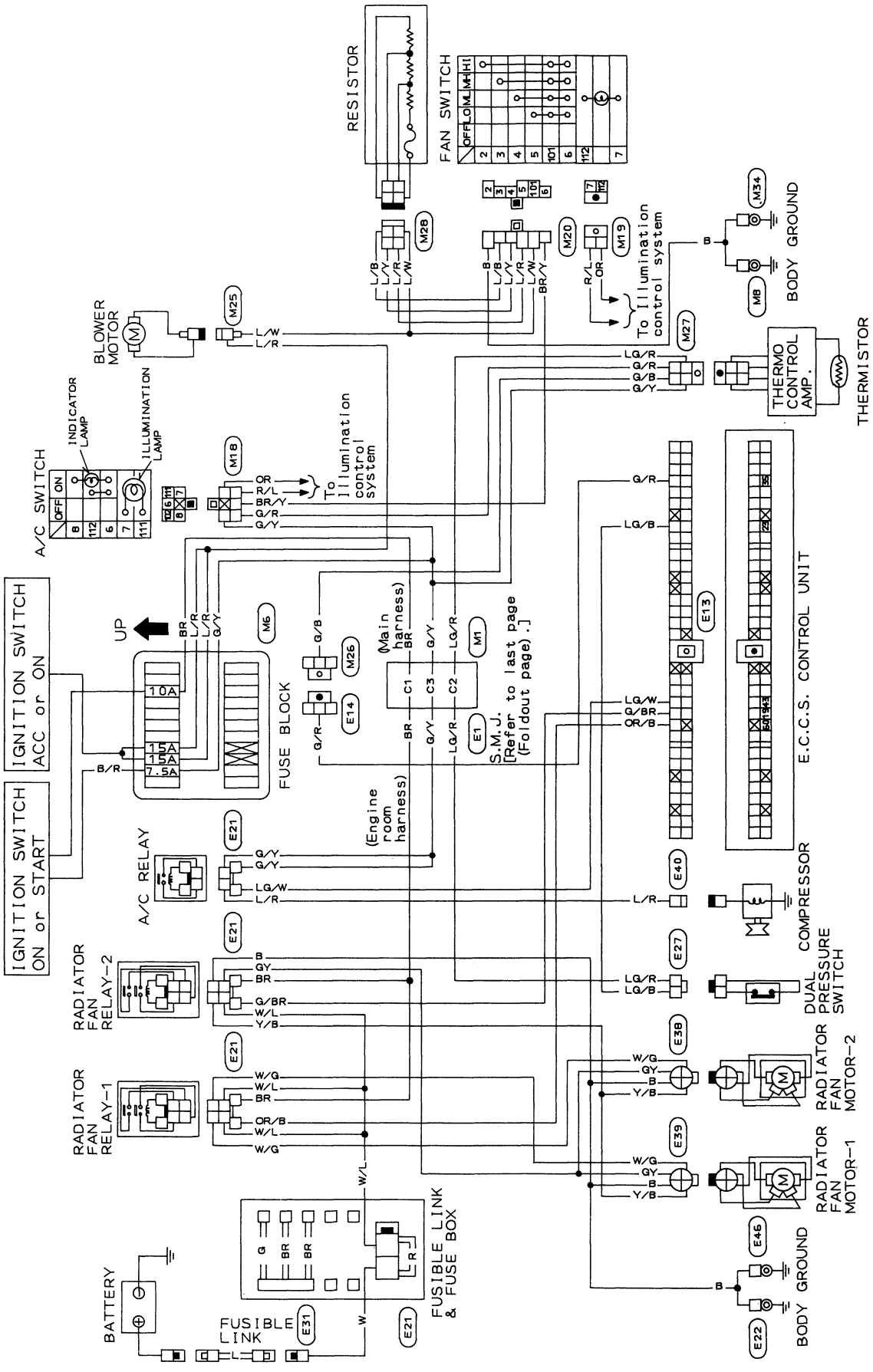

PASSENGER COMPARTMENT

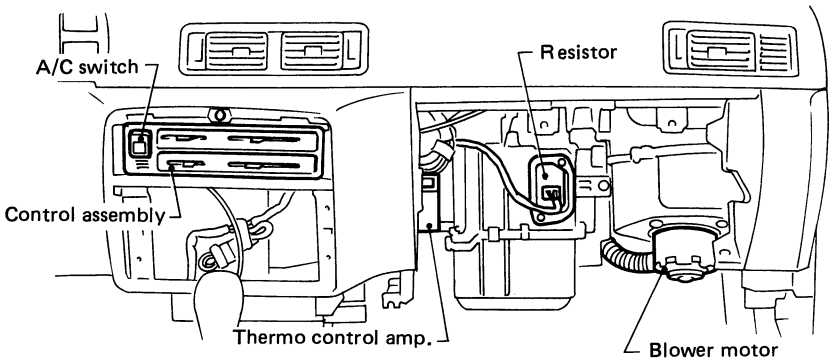

ENGINE COMPARTMENT

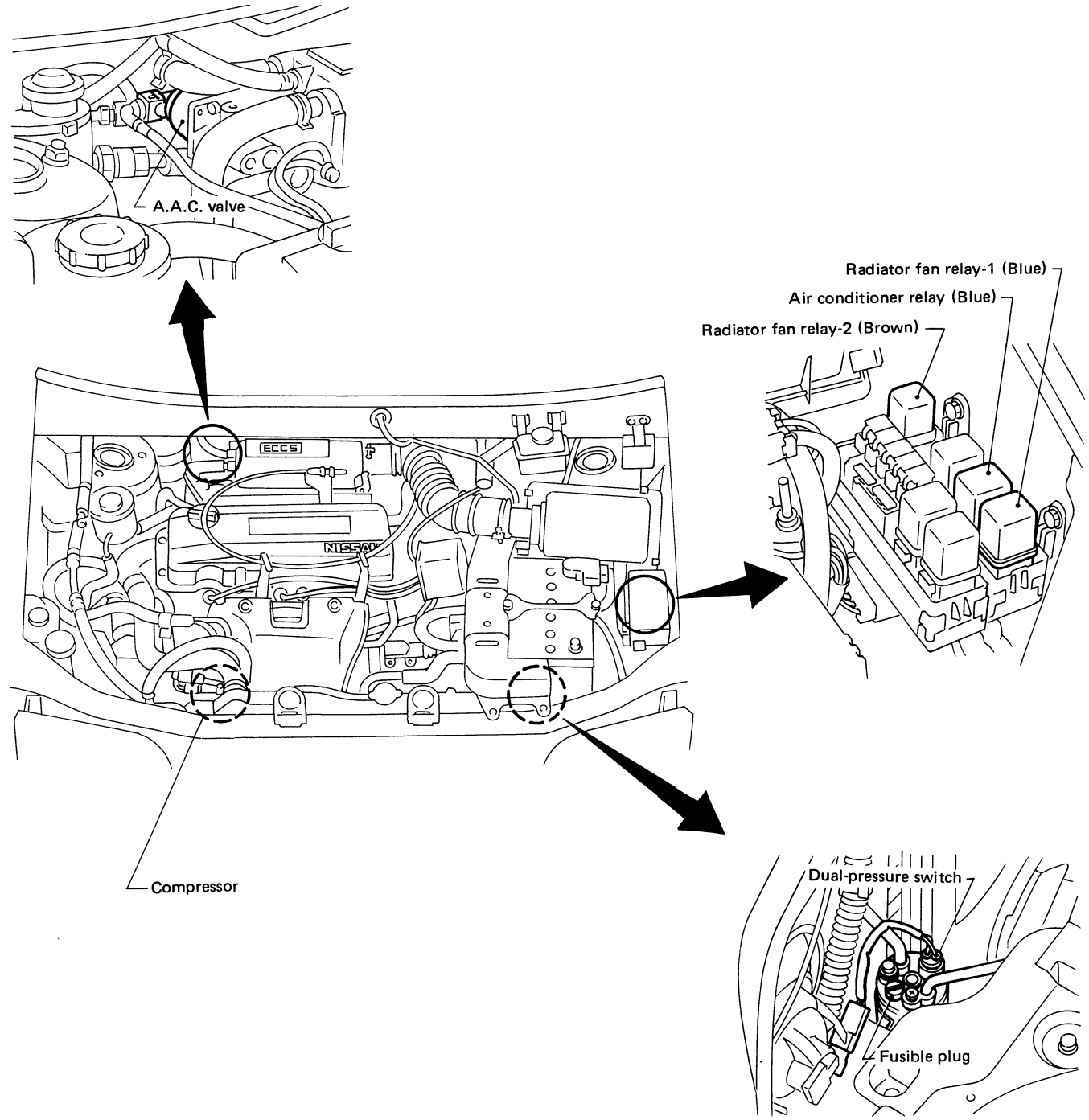

RHA878A

Contents

How to Perform Trouble Diagnoses for Quick and Accurate Repair HA-40
Symptom Chart HA-41
Preliminary Check HA-42
PRELIMINARY CHECK 1
(A/C does not blow cold air.) HA-42
PRELIMINARY CHECK 2
(Noise) HA-43
Main Power Supply and Ground Circuit Check HA-44
Harness Layout for A/C System HA-45
Circuit Diagram for Quick Pinpoint Check HA-46
Diagnostic Procedure 1
(SYMPTOM: Blower motor does not rotate.) HA-47
Diagnostic Procedure 2
(SYMPTOM: Magnet clutch does not operate with A/C switch and fan switch are ON.) HA-49
Electrical Components Inspection HA-53

How to Perform Trouble Diagnoses for Quick and Accurate Repair

WORK FLOW

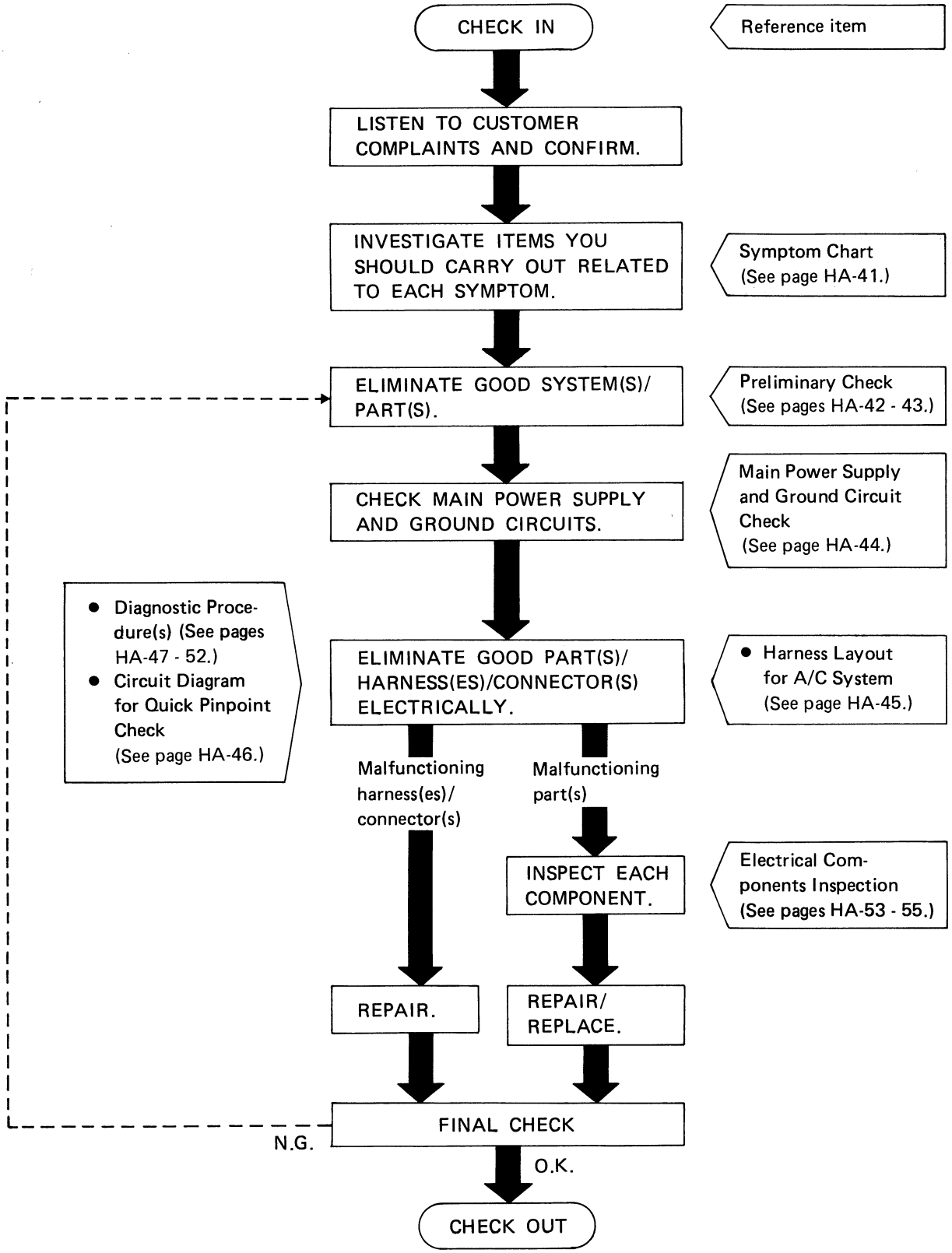

Symtom Chart

DIAGNOSTIC TABLE

PROCEDURE	Preliminary Check		Diagnostic Procedure		Main Power Supply and Ground Circuit Check			Electrical Components Inspection								
REFERENCE PAGE	HA-42	HA-43	HA-47 - 48	HA-49 - 52	HA-44	HA-44	HA-44	HA-53	HA-53	HA-54	HA-53	HA-55	HA-54	HA-54	–	–
SYMPTOM	Preliminary check 1	Preliminary check 2	Diagnostic procedure 1	Diagnostic procedure 2	15A fuses	7.5A fuse	Thermo control amp.	Blower motor	Resistor	A/C switch	Fan switch	A/C relay	Thermo control amp.	Dual-pressure switch	Compressor (Magnet clutch)	Harness
A/C does not blow cold air.	❶		○		○	○	○	○	○	○	○	○	○	○	○	○
Blower motor does not rotate.	❶		❷		○			○	○		○					○
Magnet clutch does not operate when A/C switch and fan switch are ON.	❶			❷		○	○			○	○	○	○	○	○	○
Noise		❶														

❶, ❷ : The number means checking order.
○ : As for checking order, refer to each flow chart. (It depends on malfunctioning portion.)

Preliminary Check

PRELIMINARY CHECK 1

A/C does not blow cold air.

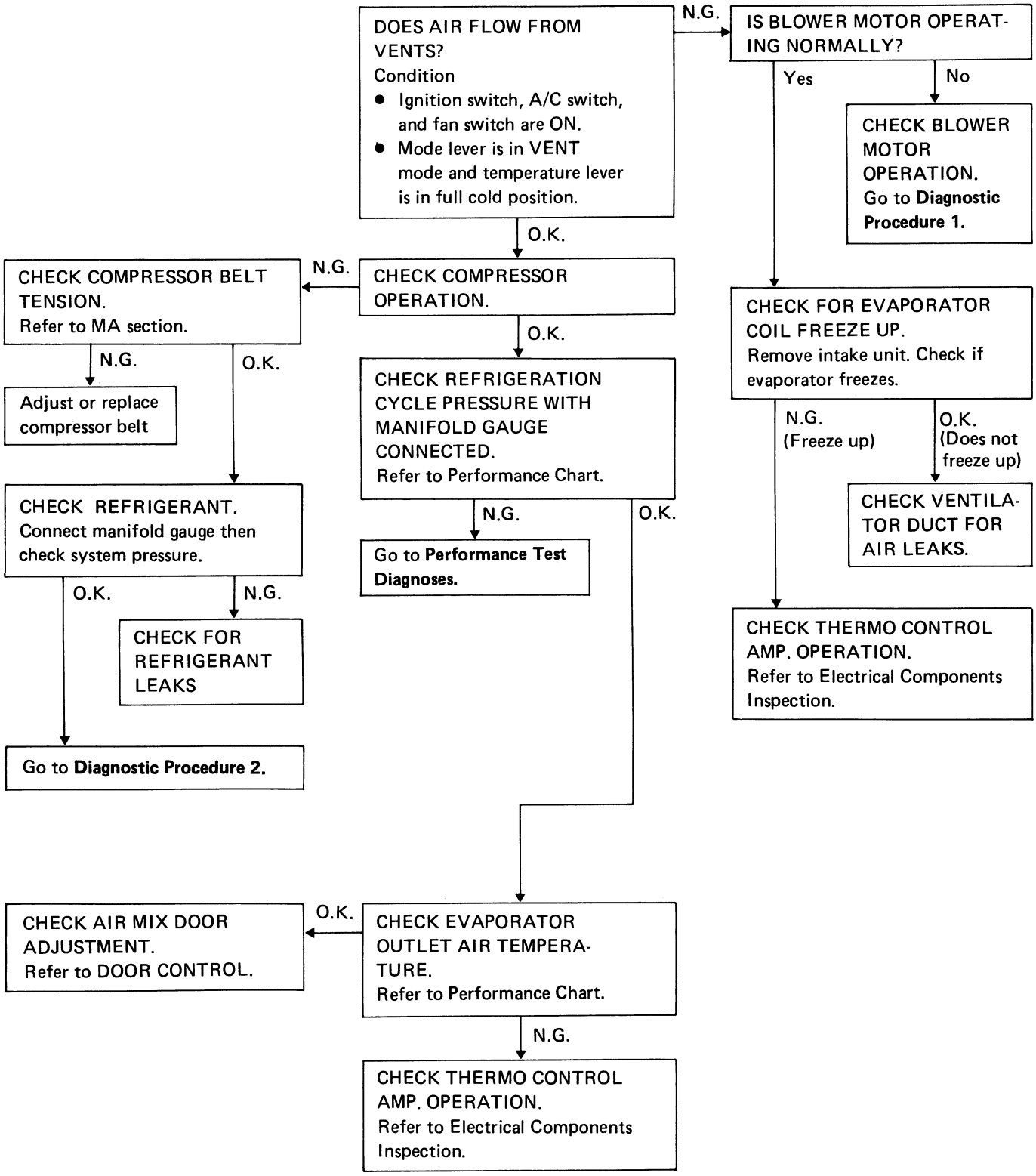

Preliminary Check (Cont'd)

PRELIMINARY CHECK 2

Noise

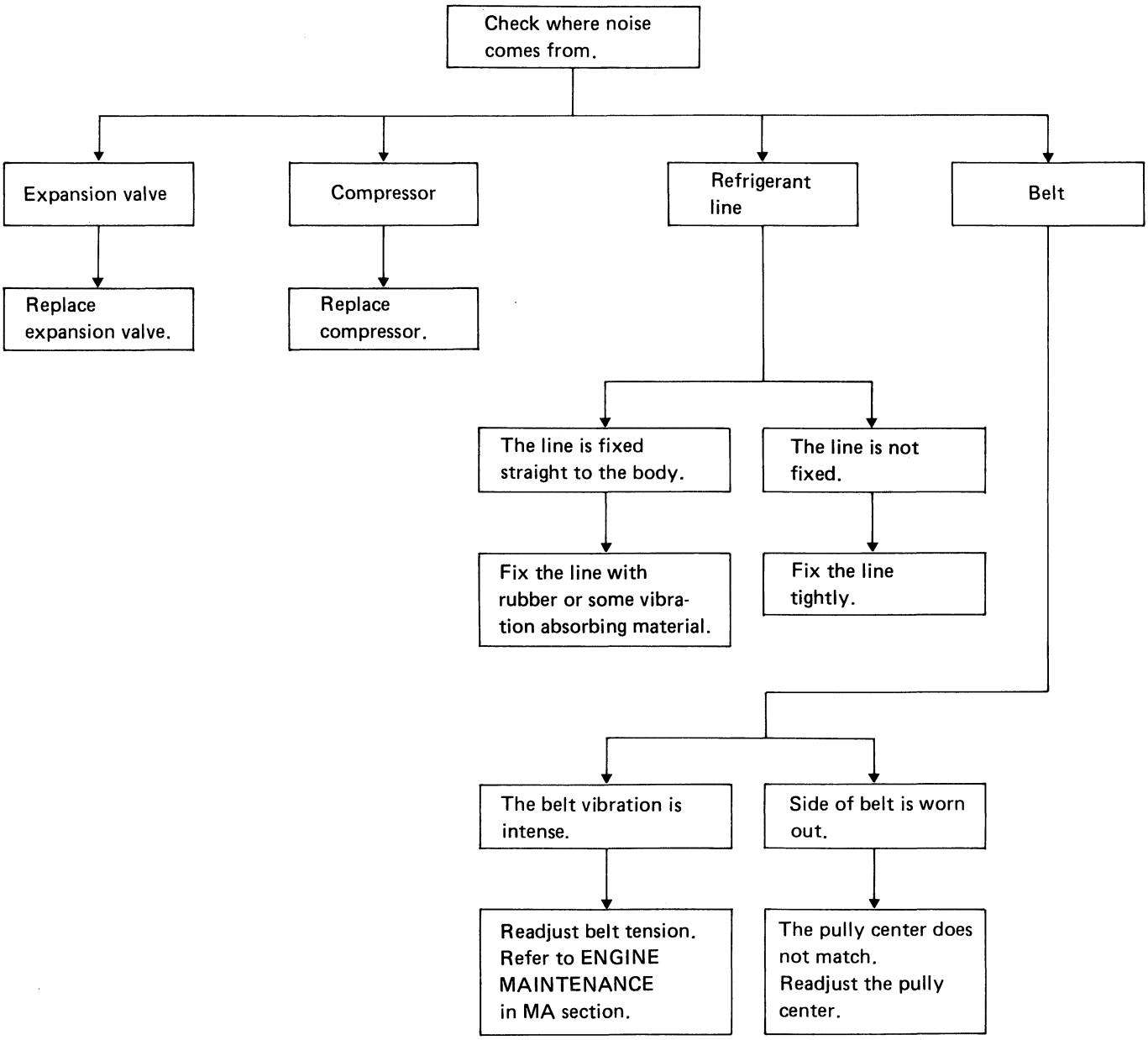

Main Power Supply and Ground Circuit Check

POWER SUPPLY CIRCUIT CHECK FOR A/C SYSTEM

Check power supply circuit for air conditioning system.
Refer to "POWER SUPPLY ROUTING" in EL section and A/C ELECTRICAL CIRCUIT.

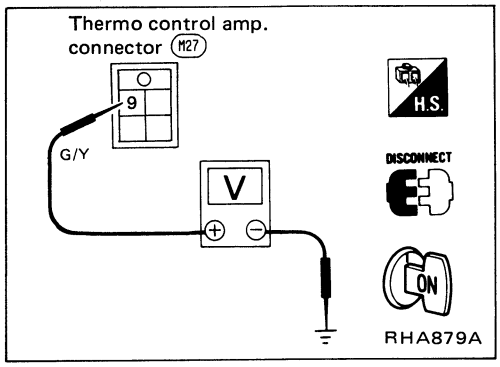

THERMO CONTROL AMP. CHECK

Check power supply circuit for thermo control amp. with ignition switch ON.

1. Disconnect thermo control amp. harness connector.
2. Connect voltmeter from harness side.
3. Measure voltage across terminal No. ⑨ and body ground.

Voltmeter terminal		Voltage
⊕	⊖	
⑨	Body ground	Approx. 12V

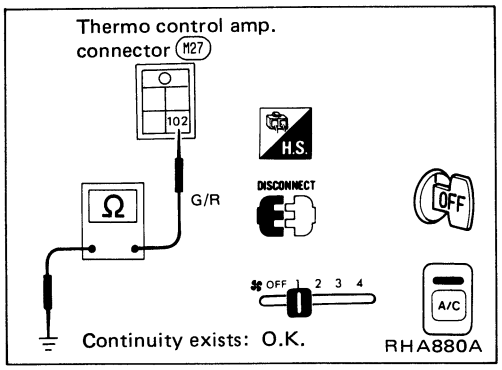

Check body ground circuit for thermo control amp. with ignition switch OFF, A/C switch ON and fan switch ON.

1. Disconnect thermo control amp. harness connector.
2. Connect ohmmeter from harness side.
3. Check for continuity between terminal No. ⑩② and body ground.

Ohmmeter terminal		Continuity
⊕	⊖	
⑩②	Body ground	Yes

Harness Layout for A/C System

PASSENGER COMPARTMENT

Main harness

- (M18) : A/C switch
- (M19) : Fan switch illumination
- (M20) : Fan switch
- (M27) : Thermo control amp.
- (M28) : Resistor
- (M25) : Blower motor

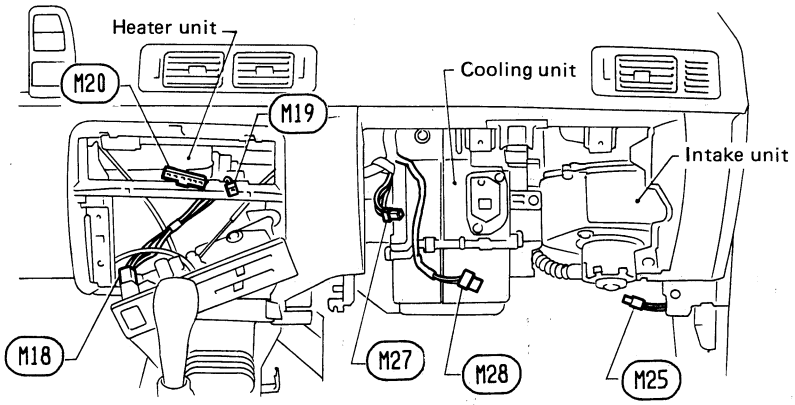

ENGINE COMPARTMENT

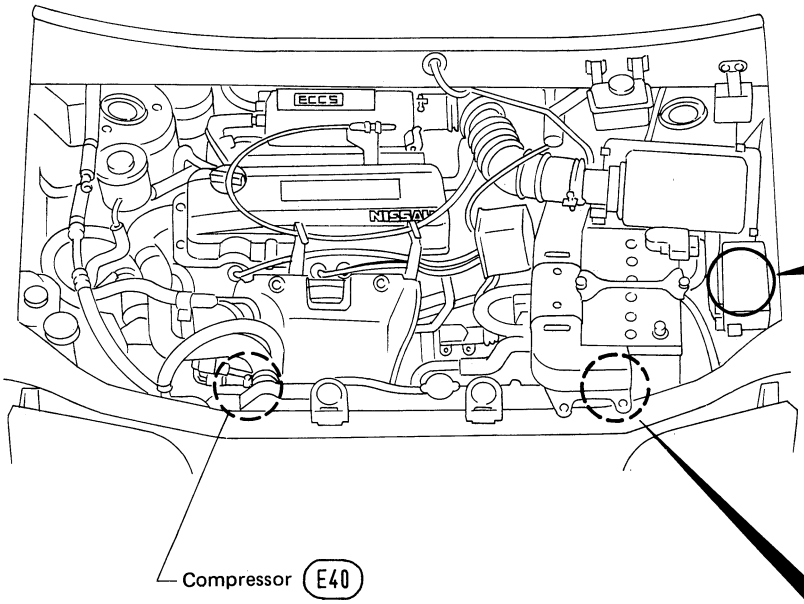

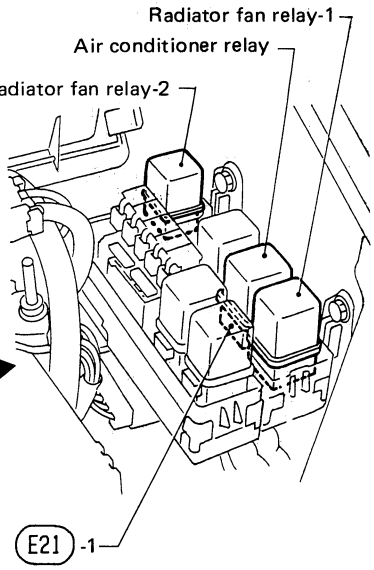

Engine room harness

- (E21) -1 : Air conditioner relay
- (E27) : Dual-pressure switch
- (E40) : Compressor

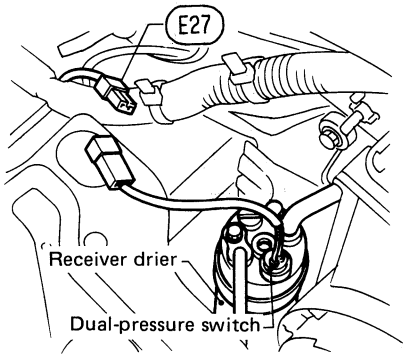

RHA881A

Circuit Diagram for Quick Pinpoint Check

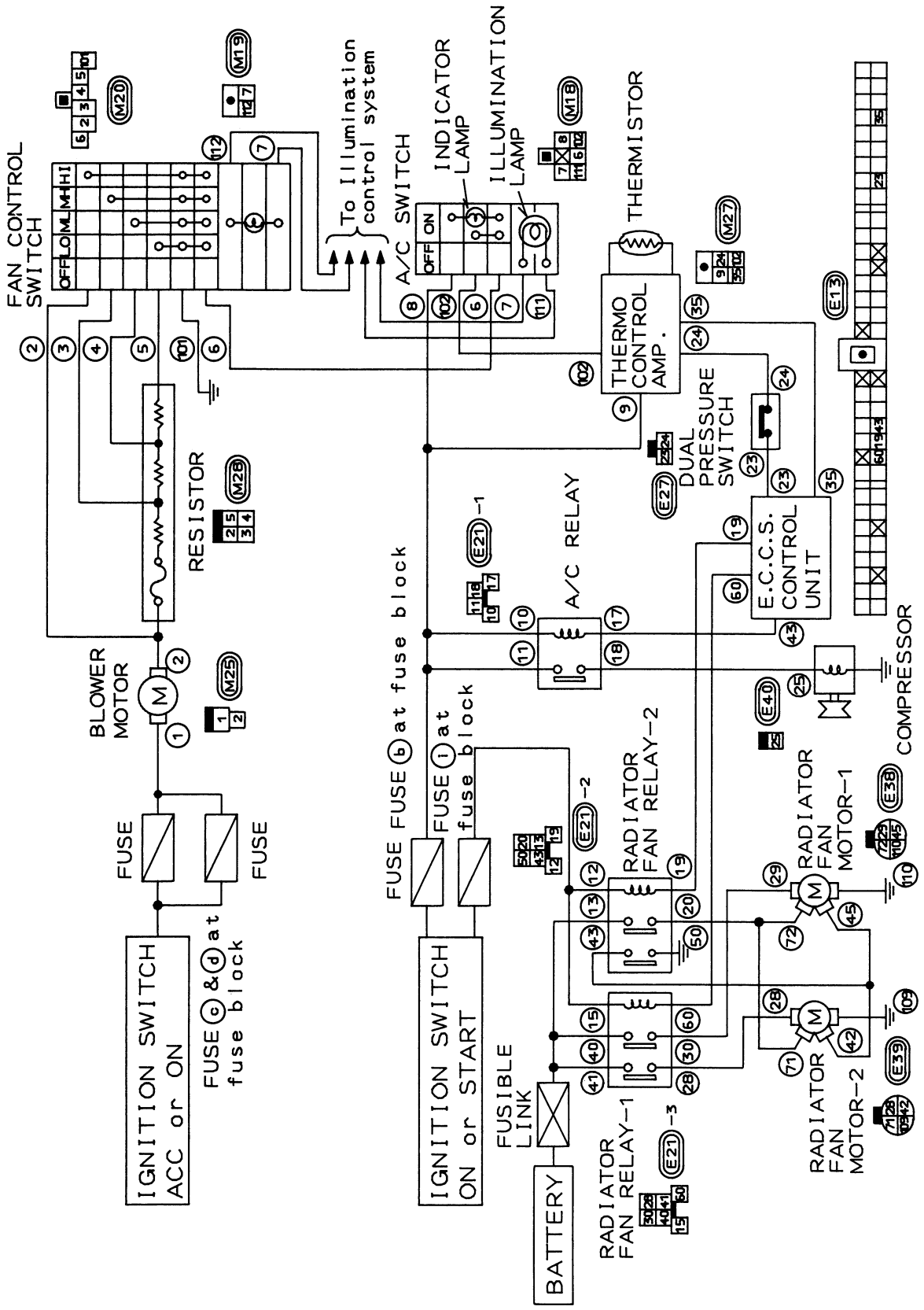

- All connectors shown in this illustration are unit side connectors.
- The unit side connectors with a double circle " ◎ " are connected to the harness side connectors shown in the "HARNESS LAYOUT FOR A/C SYSTEM". (See page HA-45.)
- The terminal numbers in the connector coincide with the circuit numbers surrounded by a single circle " ○ ".
- For fuse arrangement refer to CIRCUIT DIAGRAM at last page (Foldout page).

SHA590C

	INCIDENT	Flow chart No.
1	Fan fails to rotate.	1
2	Fan does not rotate at 1-speed.	2
3	Fan does not rotate at 2-speed.	3
4	Fan does not rotate at 3-speed.	4
5	Fan does not rotate at 4-speed.	5

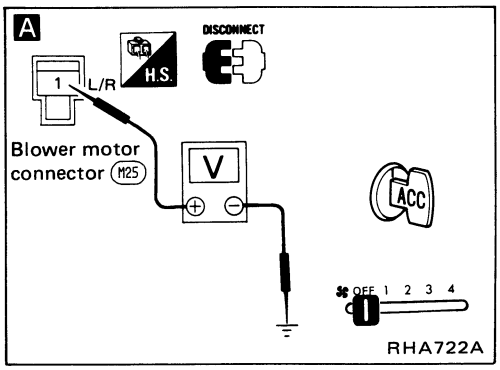

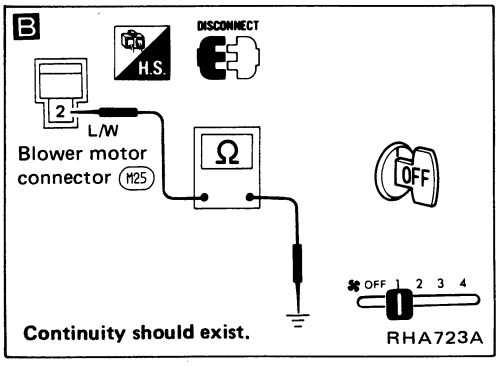

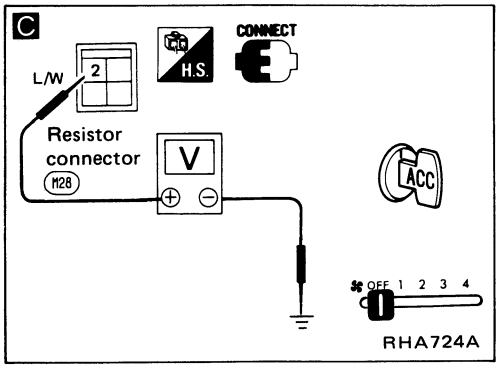

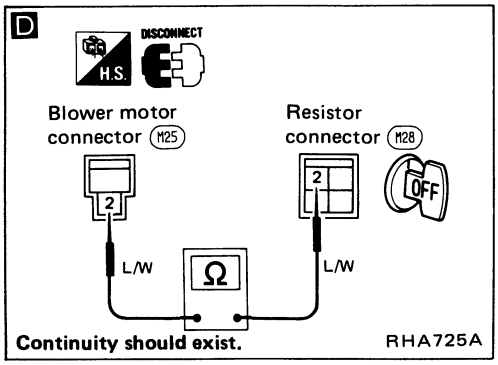

Diagnostic Procedure 1

SYMPTOM: Blower motor does not rotate.

- **Perform PRELIMINARY CHECK 2 before referring to the following flow chart.**

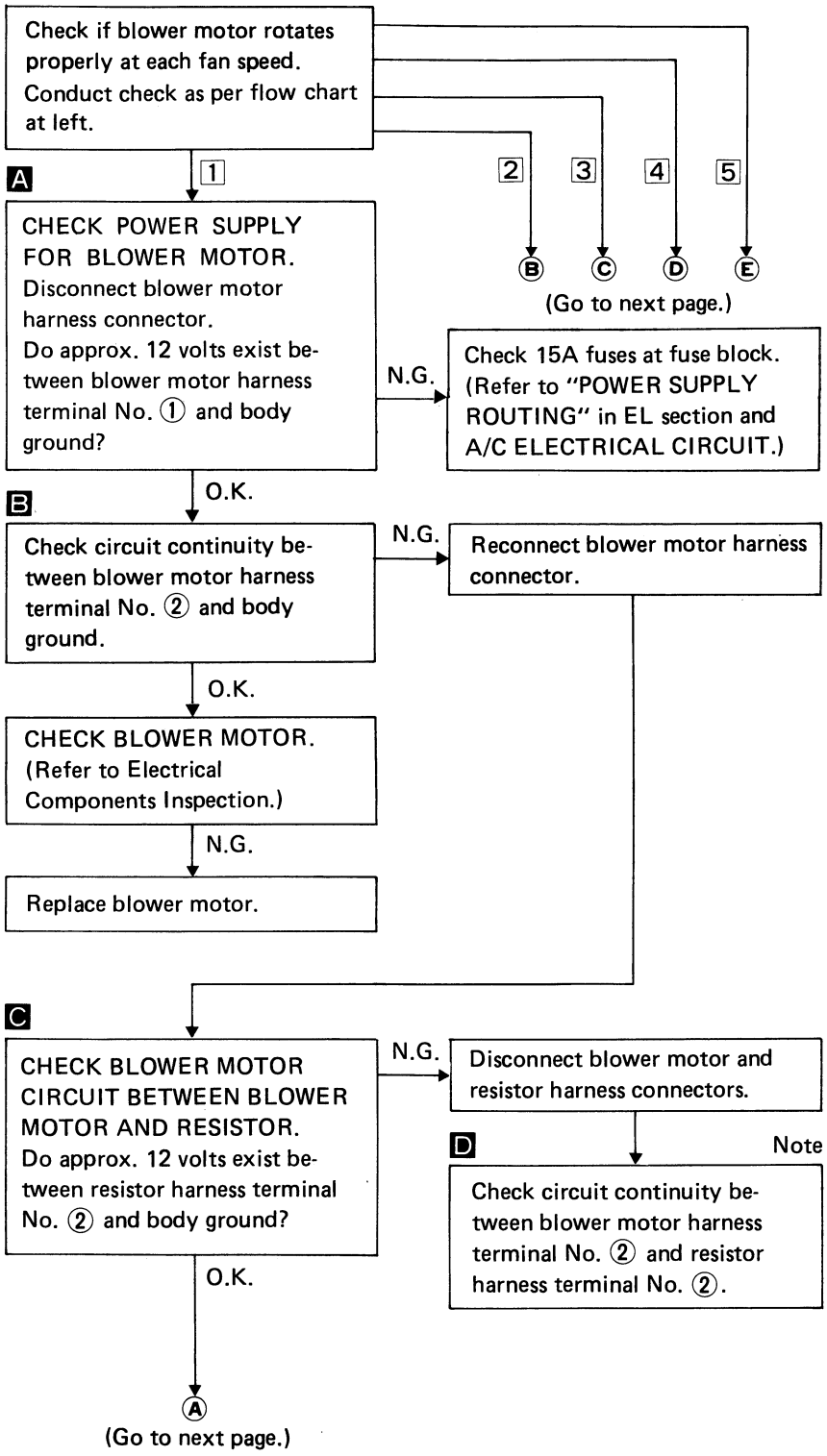

Note:
If the result is N.G. after checking circuit continuity, repair harness or connector.

Diagnostic Procedure 1 (Cont'd)

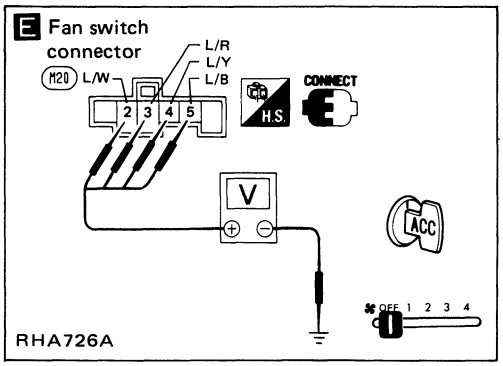

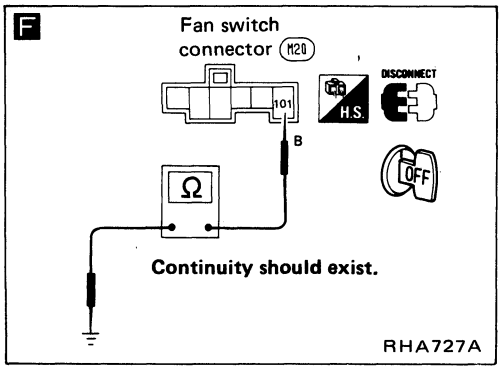

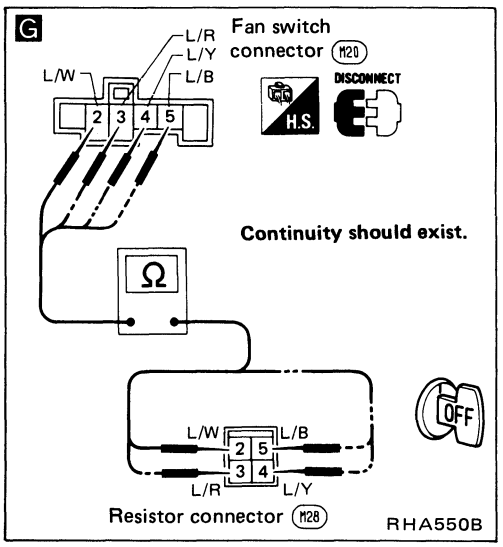

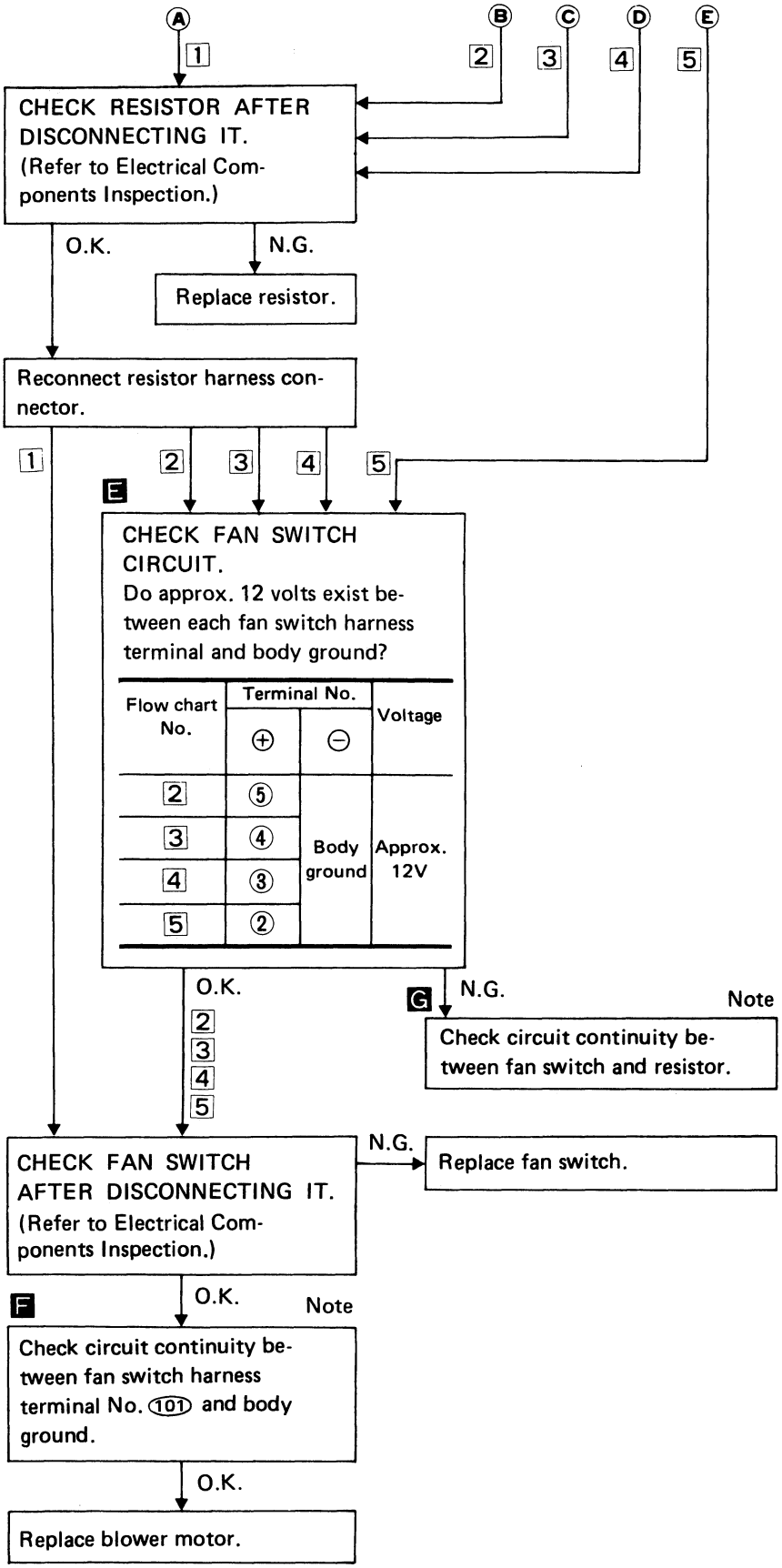

Note:
If the result is N.G. after checking circuit continuity, repair harness or connector.

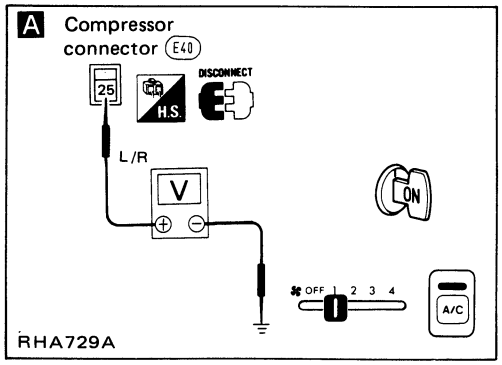

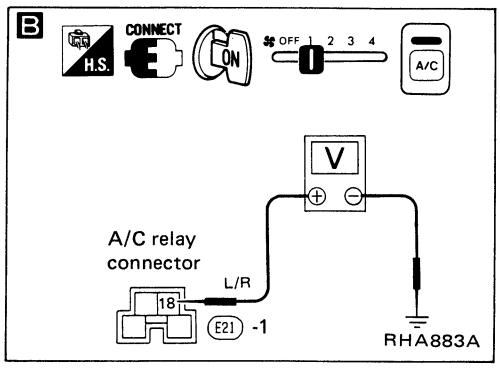

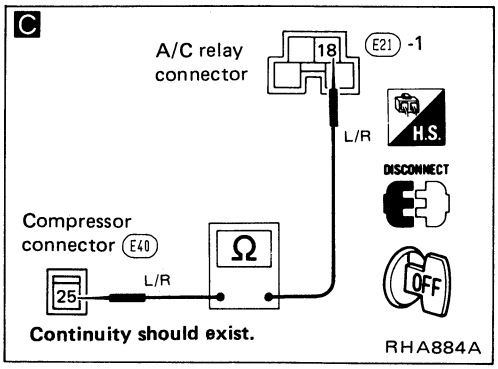

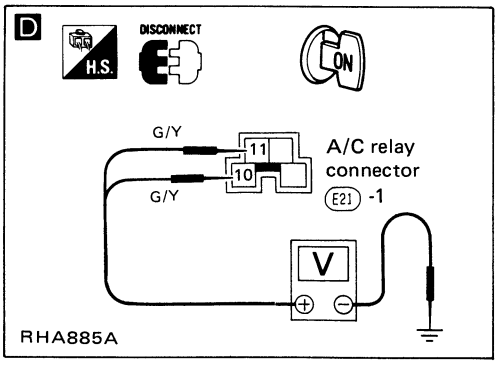

Diagnostic Procedure 2

SYMPTOM: Magnet clutch does not operate when A/C switch and fan switch are ON.

- **Perform PRELIMINARY CHECK 1 before referring to the following flow chart.**

A

CHECK POWER SUPPLY FOR COMPRESSOR.
Disconnect compressor harness connector.
Do approx. 12 volts exist between compressor harness terminal No. ㉕ and body ground?

N.G. → **B**

O.K. ↓

Check magnet clutch coil.

O.K. ↓

Replace magnet clutch.
Refer to COMPRESSOR – Model DKS-16H (DIESEL-KIKI make).

B

CHECK A/C RELAY OPERATION.
Do approx. 12 volts exist between A/C relay harness terminal No. ⑱ and body ground?

N.G. → **D**

O.K. ↓

Disconnect A/C relay harness connector.

C Note

Check circuit continuity between A/C relay harness terminal No. ⑱ and compressor harness terminal No. ㉕ .

D

CHECK POWER SUPPLY FOR A/C RELAY.
Disconnect A/C relay.
Do approx. 12 volts exist between A/C relay harness terminal No. ⑩ , ⑪ and body ground?

O.K. → CHECK A/C RELAY AFTER DISCONNECTING IT.

N.G. ↓

CHECK POWER SUPPLY CIRCUIT AND 7.5A FUSE AT FUSE BLOCK.
(Refer to "POWER SUPPLY ROUTING" in EL section and A/C ELECTRICAL CIRCUIT.)

CHECK A/C RELAY AFTER DISCONNECTING IT.
(Refer to Electrical Components Inspection.)

N.G. → Replace A/C relay.

O.K. ↓

Reconnect A/C relay.

Ⓐ

(Go to next page.)

Note:
If the result is N.G. after checking circuit continuity, repair harness or connector.

Diagnostic Procedure 2 (Cont'd)

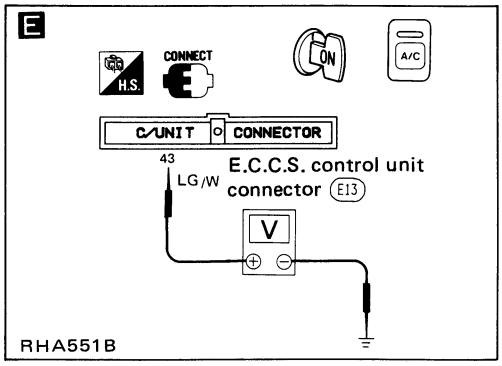

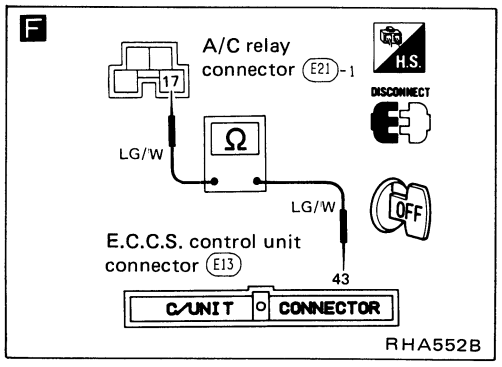

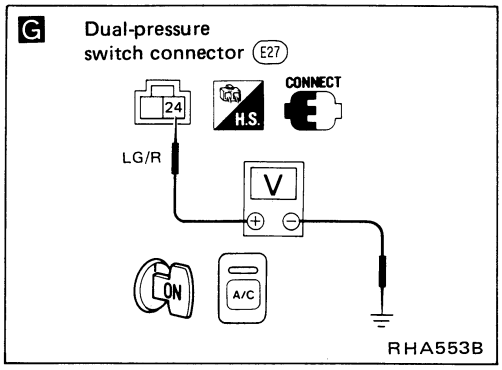

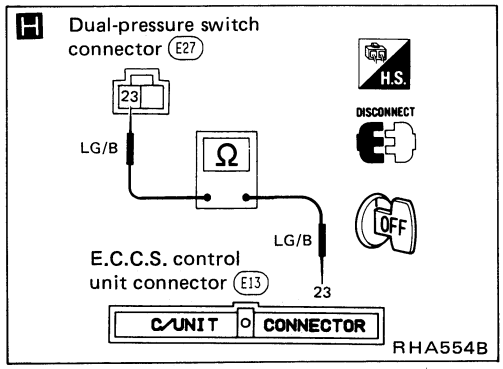

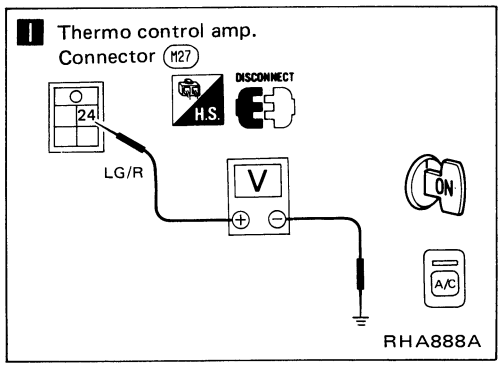

Ⓐ

E CHECK COIL SIDE CIRCUIT OF A/C RELAY.
Do approx. 12 volts exist between E.C.C.S. control unit harness terminal No. 43 and body ground?

N.G. → **F** Check circuit continuity between A/C relay harness terminal No. 17 and E.C.C.S. control unit harness terminal No. 43.

O.K. ↓

Disconnect dual-pressure switch harness connector.

G CHECK VOLTAGE FOR DUAL-PRESSURE SWITCH.
Do approx. 12 volts exist between dual-pressure switch harness terminal No. 24 and body ground?

N.G. → **H** Note: Check circuit continuity between E.C.C.S. control unit harness terminal No. 23 and dual-pressure switch harness terninal No. 23.

O.K. ↓

CHECK DUAL-PRESSURE SWITCH.
(Refer to Electrical Components Inspection.)

N.G. ↓

Replace dual-pressure switch.

O.K. ↓

I CHECK VOLTAGE FOR THERMO CONTROL AMP.
Do approx. 8 to 9 volts exist between thermo control amp. harness terminal No. 24 and body ground?

N.G. → Ⓒ

O.K. → Ⓑ

(Go to next page.)

Note:
If the result is N.G. after checking circuit continuity, repair harness or connector.

Diagnostic Procedure 2 (Cont'd)

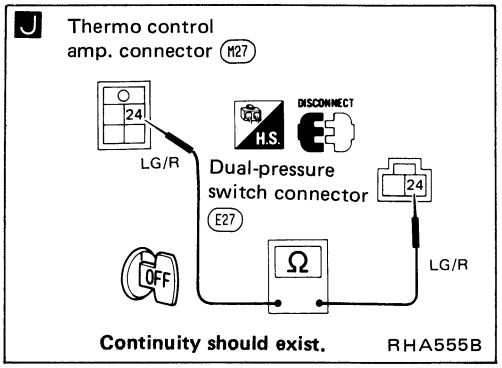

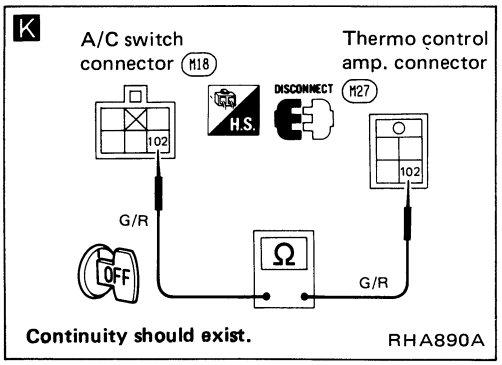

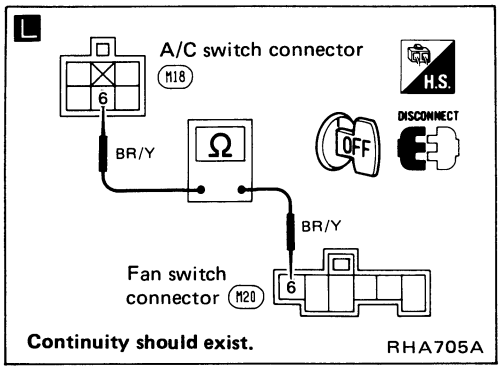

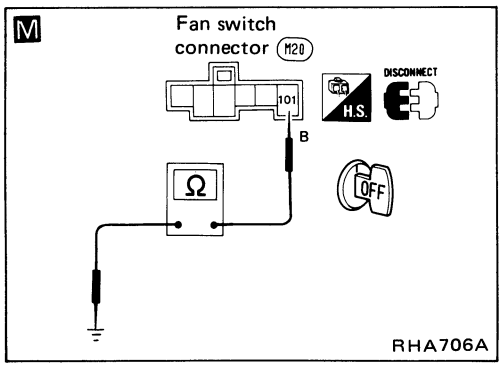

Ⓑ

CHECK POWER SUPPLY FOR THERMO CONTROL AMP.
Go to Main Power Supply and Ground Circuit Check.

N.G. → **CHECK POWER SUPPLY CIRCUIT AND 7.5A FUSE AT FUSE BLOCK.**
(Refer to "POWER SUPPLY ROUTING" in EL section and A/C ELECTRICAL CIRCUIT.)

O.K. ↓

CHECK BODY GROUND CIRCUIT FOR THERMO CONTROL AMP.
Go to Main Power Supply and Ground Circuit Check.

N.G. → Disconnect A/C switch harness connector.

O.K. ↓

Replace thermo control amp.

Ⓒ

J

Check circuit continuity between dual-pressure switch harness terminal No. ㉔ and thermo control amp. harness terminal No. ㉔.

↓

K — Note

Check circuit continuity between thermo control amp. harness terminal No. ⑩② and A/C switch harness terminal No. ⑩②.

O.K. ↓

Disconnect fan switch harness connector

↓

L — Note

Check circuit continuity between A/C switch harness terminal No. ⑥ and fan switch harness terminal No. ⑥.

O.K. ↓

M — Note

CHECK BODY GROUND CIRCUIT FOR FAN SWITCH.
Does continuity exist between fan switch harness terminal No. ⑩① and body ground?

O.K. ↓

Ⓓ

(Go to next page.)

Note:
If the result is N.G. after checking circuit continuity, repair harness or connector.

Diagnostic Procedure 2 (Cont'd)

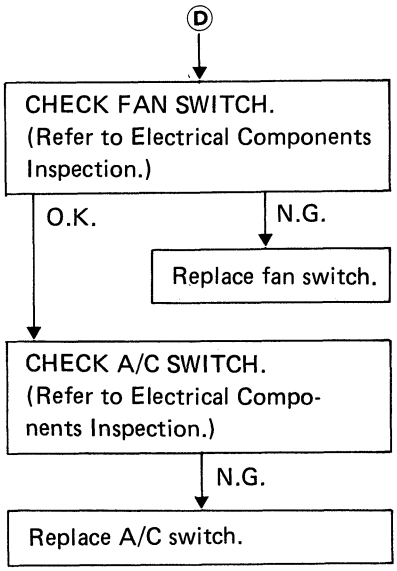

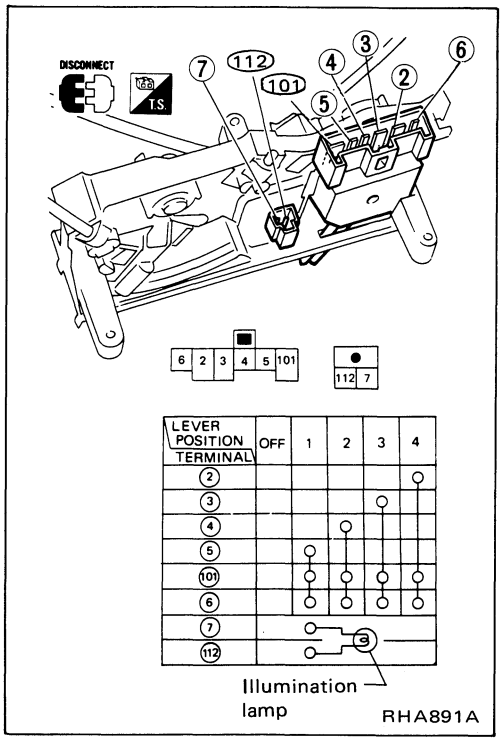

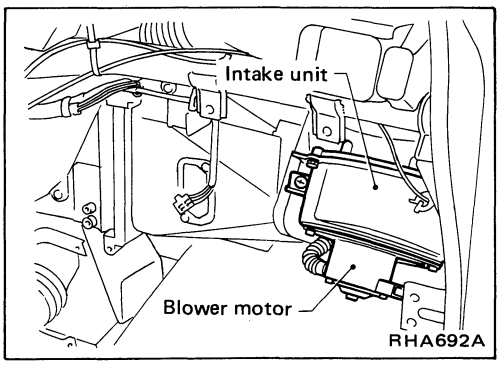

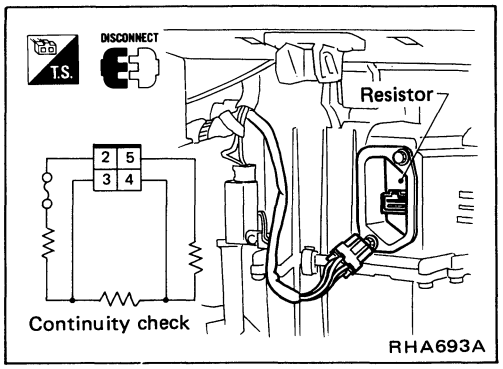

Electrical Components Inspection

FAN SWITCH

Check continuity between terminals at each switch position.

BLOWER MOTOR

Confirm smooth rotation of the blower motor.

- Ensure that there are no foreign particles inside the intake unit.

BLOWER RESISTOR

Check continuity between terminals.

Electrical Components Inspection (Cont'd)

A/C SWITCH

Check continuity between terminals at each switch position.

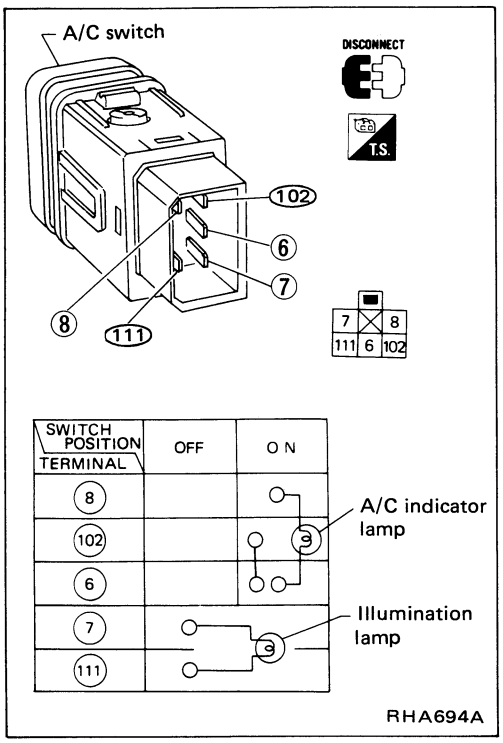

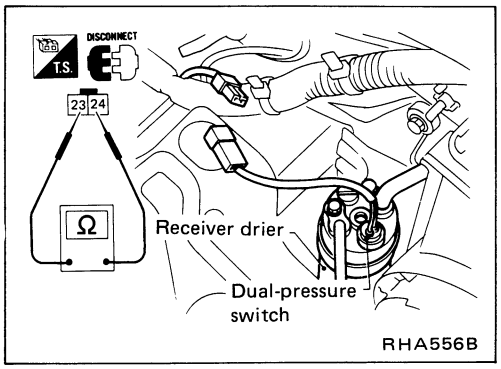

DUAL-PRESSURE SWITCH

High-pressure side line pressure kPa (kg/cm², psi)	Operation	Continuity
Decreasing to 177 - 216 (1.8 - 2.2, 26 - 31) Increasing to 2,452 - 2,844 (25 - 29, 356 - 412)	Turn OFF	Does not exist
Increasing to 177 - 235 (1.8 - 2.4, 26 - 34) Decreasing to 1,863 - 2,256 (19 - 23, 270 - 327)	Turn ON	Exists

Electrical Components Inspection (Cont'd)

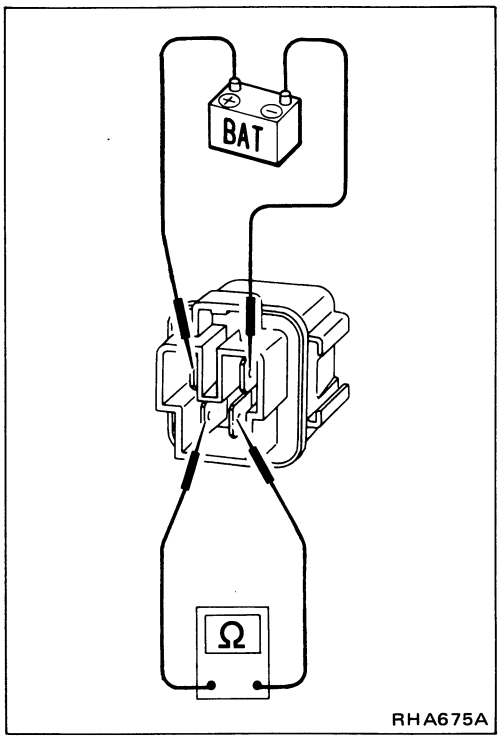

RHA675A

A/C RELAY

Check curcuit continuity between terminals by supplying 12 volts to coil side terminal of A/C relay.

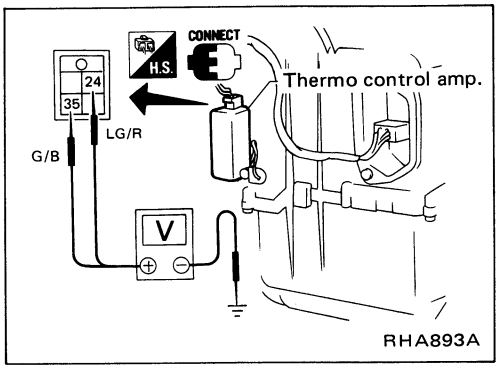

RHA893A

THERMO COFNTROL AMP.

1. Run engine, and operate A/C system.
2. Connect the vofltmeter from harness side.
3. Check thermo control amp. operation as shown in the tables.

Compressor operation

Evaporator outlet air temperature °C (°F)	Thermo amp. operation	Terminal No.
		㉔
Decreasing to 1.5 - 2.5 (35 - 37)	Turn OFF	Approx. 12V
Increasing to 3.5 - 4.5 (38 - 40)	Turn ON	Approx. 0V

Radiator fan motor operation

Evaporator outlet air temperature °C (°F)	Thermo amp. operation	Terminal No.
		㉟
Decreasing to 4.0 - 6.0 (39 - 43)	Turn OFF	Approx. 12V
Increasing to 7.0 - 9.0 (45 - 48)	Turn ON	Approx. 0V

General Specifications

COMPRESSOR

Model	DIESEL-KIKI make DKS-16H
Type	Swash plate
Displacement cm^3 (cu in)/Rev.	167 (10.19)
Cylinder bore x stroke mm (in)	37.0 x 25.8 (1.457 x 1.016)
Direction of rotation	Clockwise (viewed from drive end)
Drive belt	Poly V

LUBRICATION OIL

Model	DIESEL-KIKI make DKS-16H
Type	SUNISO 5GS
Capacity mℓ (US fl oz, Imp fl oz) Total in system	200 (6.8, 7.0)
Amount of oil which can be drained	130 (4.4, 4.6)
Compressor (Service parts) charging amount	200 (6.8, 7.0)

REFRIGERANT

Type	R-12
Capacity kg (lb)	0.9 - 1.1 (2.0 - 2.4)

Inspection and Adjustment

ENGINE IDLING SPEED (When A/C is ON.)

- **Refer to EF & EC section.**

BELT TENSION

- **Refer to Checking Drive Belts (MA section).**

COMPRESSOR

Model	DKS-16H
Clutch disc-pulley clearance mm (in)	0.3 - 0.6 (0.012 - 0.024)

ELECTRICAL SYSTEM

SECTION EL

When you read wiring diagrams:
- **Read GI section, "HOW TO READ WIRING DIAGRAMS".**

CONTENTS

HARNESS CONNECTOR ..... EL- 2
STANDARDIZED RELAY ..... EL- 3
POWER SUPPLY ROUTING ..... EL- 5
BATTERY ..... EL- 7
STARTING SYSTEM EL-15
STARTING SYSTEM — Starter — EL-17
CHARGING SYSTEM EL-25
CHARGING SYSTEM — Alternator — EL-27
COMBINATION SWITCH EL-33
HEADLAMP EL-35
EXTERIOR LAMP EL-41
INTERIOR LAMP EL-45
METER AND GAUGES EL-48
WARNING LAMPS AND BUZZER EL-53
WIPER AND WASHER EL-58
HORN, CIGARETTE LIGHTER AND CLOCK EL-62
REAR WINDOW DEFOGGER EL-63
AUDIO EL-66
AUTOMATIC SPEED CONTROL DEVICE (A.S.C.D.) EL-69
LOCATION OF ELECTRICAL UNITS EL-77
HARNESS LAYOUT EL-81
SUPER MULTIPLE JUNCTION (S.M.J.) EL-91

WIRING DIAGRAM REFERENCE CHART

E.C.C.S. (CA20E) ..... EF & EC SECTION
ENGINE AND EMISSION CONTROL (CA20S) ..... EF & EC SECTION
LOCK-UP CONTROL ..... AT SECTION
O.D. CONTROL ..... AT SECTION
ELECTRIC DOOR MIRROR, SUN ROOF, DOOR LOCK, POWER WINDOW, HEATING SEAT ..... BF SECTION
HEATER AND AIR CONDITIONER ..... HA SECTION

Description

HARNESS CONNECTOR

- All harness connectors have been modified to prevent accidental looseness or disconnection.
- The connector can be disconnected by pushing or lifting the locking section.

CAUTION:

Do not pull the harness when disconnecting the connector.

[Example]

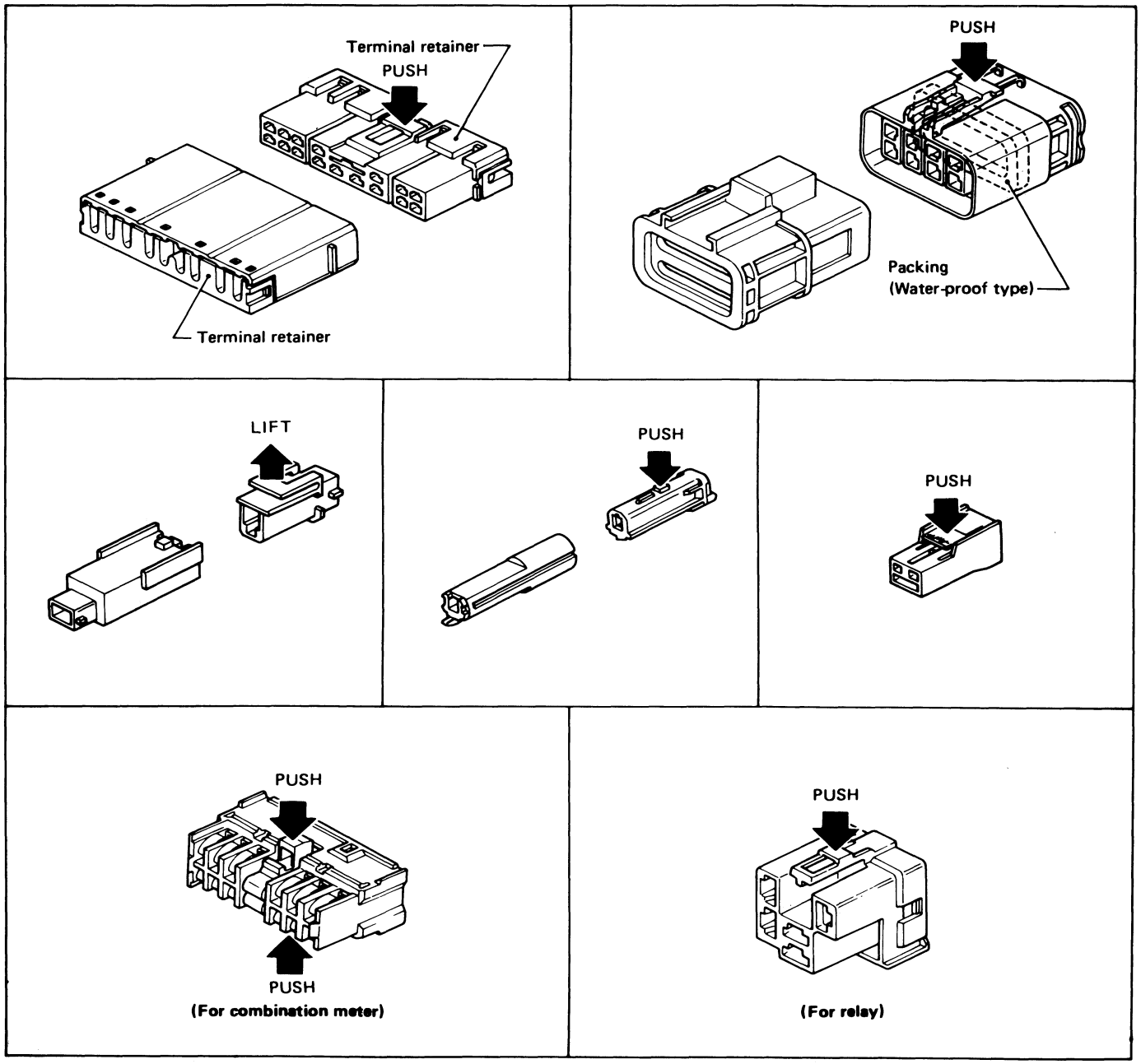

SEL769D

Description

NORMAL OPEN, NORMAL CLOSED AND MIXED TYPE RELAYS

Relays can mainly be divided into three types: normal open, normal closed and mixed type relays.

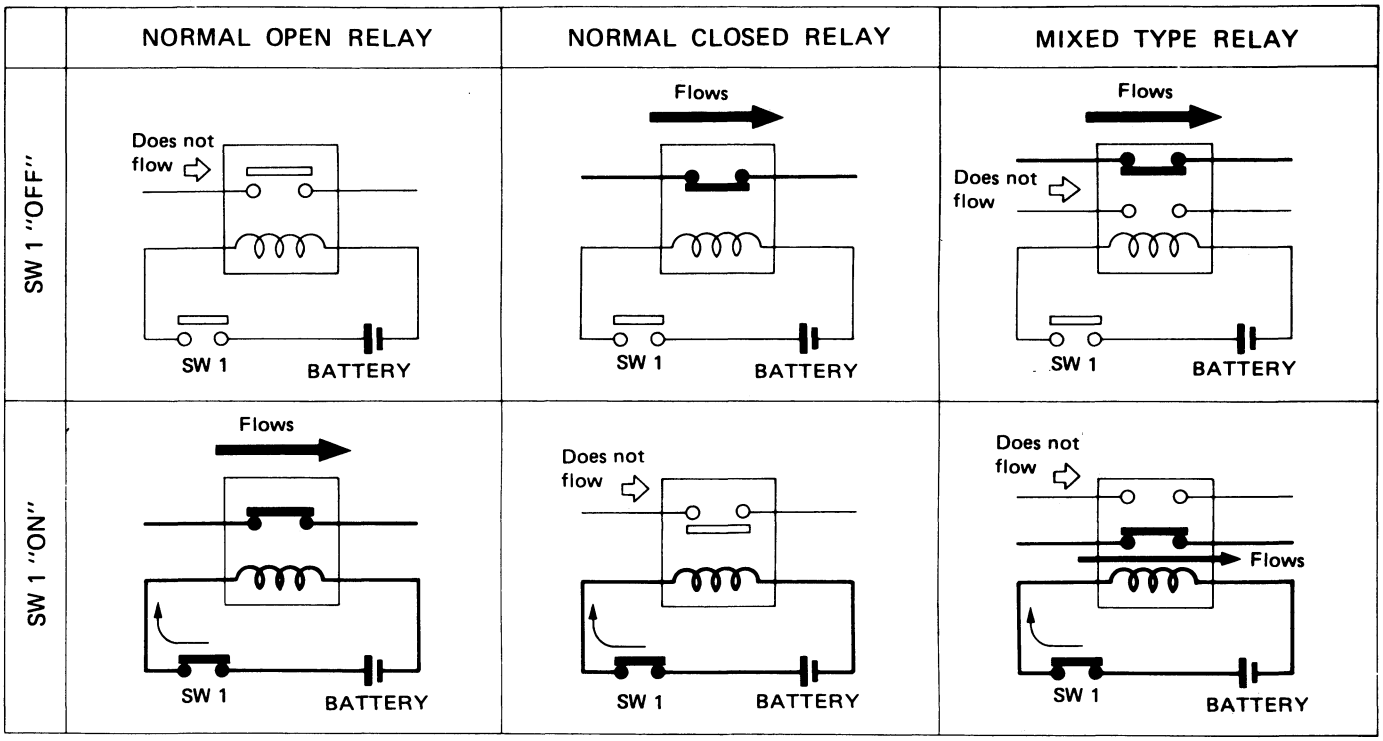

SEL881H

TYPE OF STANDARDIZED RELAYS

1M ..... 1 Make
1T ..... 1 Transfer
2M ..... 2 Make
1M·1B ..... 1 Make 1 Break

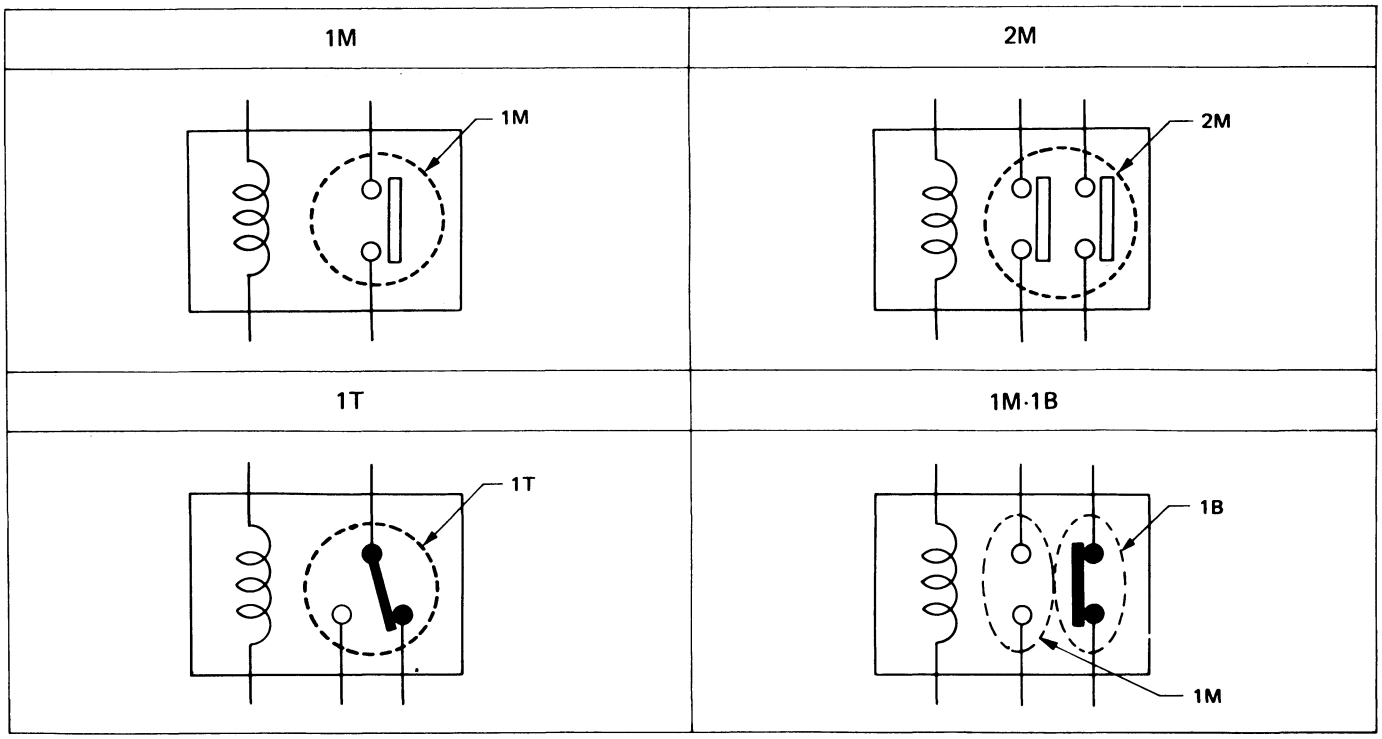

SEL882H

Type	Outer view	Circuit	Connector symbol and connection	Case color
1T	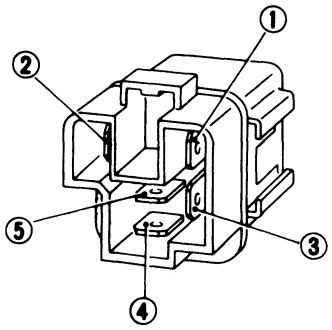	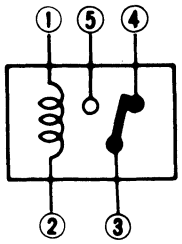	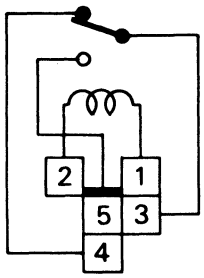	BLACK
1M	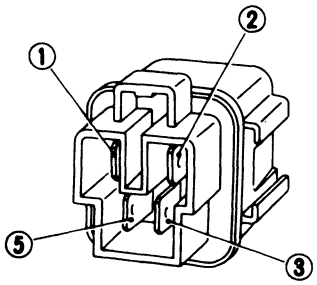	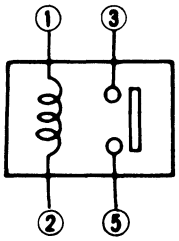	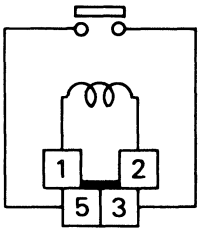	BLUE or GREEN
2M	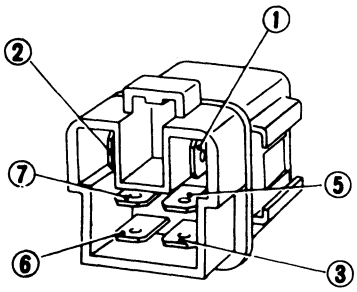	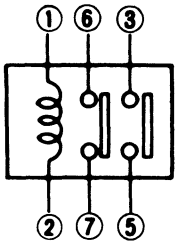	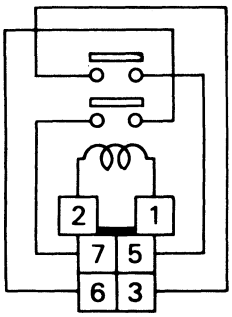	BROWN
1M·1B	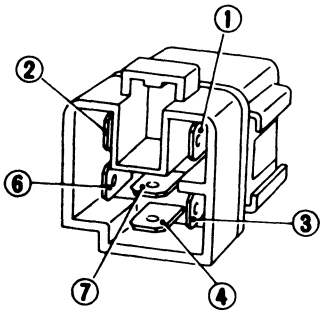	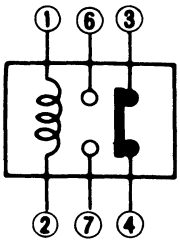	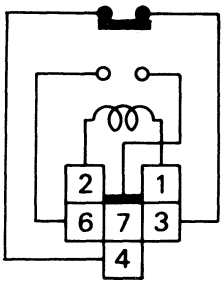	GRAY

SEL883H

Wiring Diagram

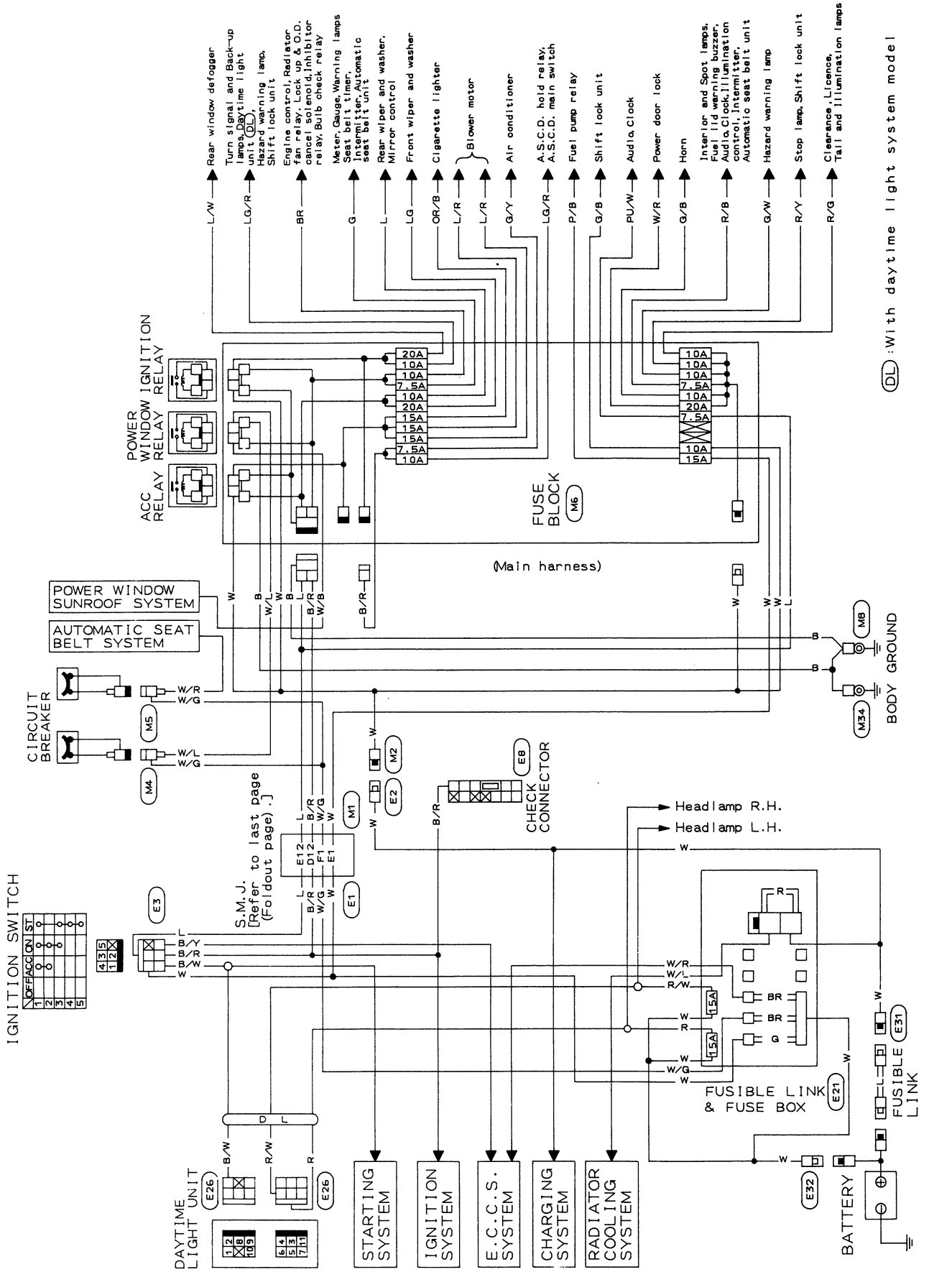

SEL688M

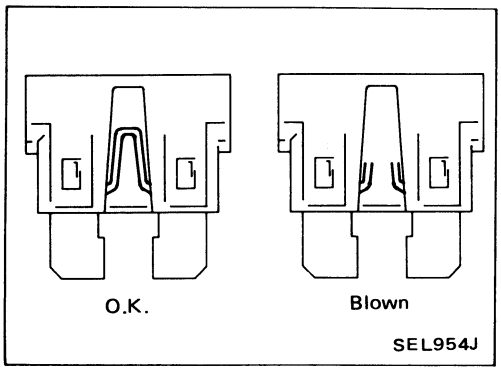

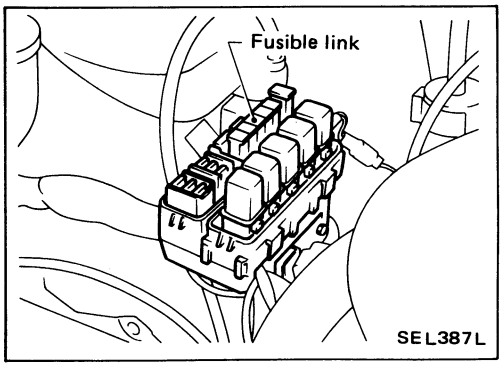

Fuse

a. If fuse is blown, be sure to eliminate cause of problem before installing new fuse.
b. Use fuse of specified rating. Never use fuse of more than specified rating.
c. Do not install fuse in oblique direction; always insert it into fuse holder properly.
d. Remove fuse for clock if vehicle is not used for a long period of time.

Fusible Link

A melted fusible link can be detected by visual inspection. If its condition is questionable, use circuit tester or test lamp.

CAUTION:

a. If fusible link should melt, it is possible that critical circuit (power supply or large current carrying circuit) is shorted. In such a case, carefully check and eliminate cause of problem.

b. Never wrap periphery of fusible link with vinyl tape. Extreme care should be taken with this link to ensure that it does not come into contact with any other wiring harness or vinyl or rubber parts.

FUSIBLE LINK (WIRE TYPE) VARIATION

Color	Maximum amperage (A)
Brown	15
Green	20
Red	30
Black	35
Gray	40

*Temperature condition: Less than 80°C (176°F)

CAUTION:

a. **If it becomes necessary to start the engine with a booster battery and jumper cables, use a 12-volt booster battery.**
b. **After connecting battery cables, ensure that they are tightly clamped to battery terminals for good contact.**
c. **Never add distilled water through the hole used to check specific gravity.**

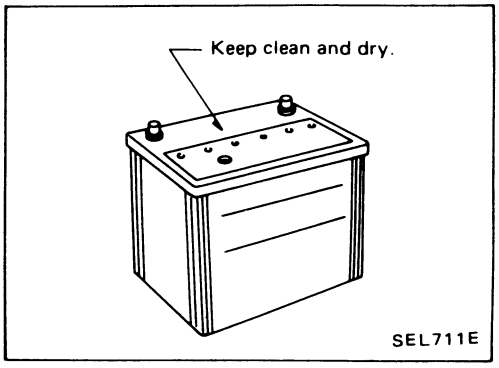

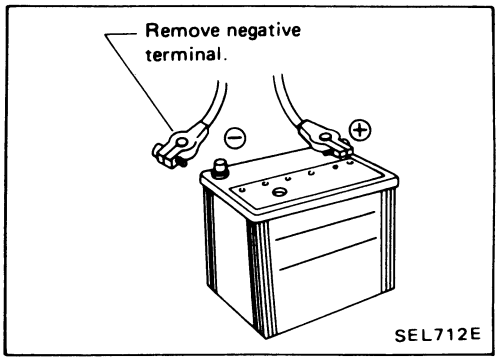

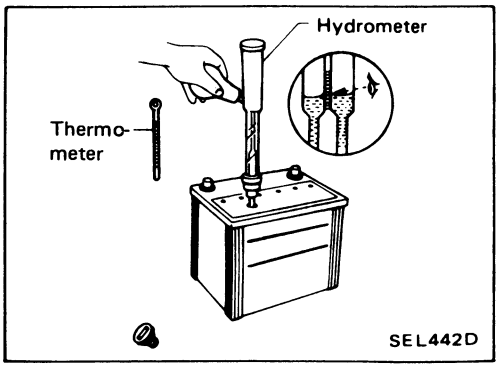

How to Handle Battery

METHODS OF PREVENTING OVER-DISCHARGE

The following precautions must be taken to prevent over-discharging a battery.

- The battery surface (particularly its top) should always be kept clean and dry.
  If the top surface of a battery is wet with electrolyte or water, leakage current will cause the battery to discharge. Always keep the battery clean and dry.

- When the vehicle is not going to be used over a long period of time, disconnect the negative battery terminal. (If the vehicle has an extended storage switch, turn it off.)

- Check the charge condition of the battery.
  Periodically check the specific gravity of the electrolyte. Keep a close check on charge condition to prevent over-discharge.

How to Handle Battery (Cont'd)

CHECKING ELECTROLYTE LEVEL

WARNING:

Do not allow battery fluid to come in contact with skin, eyes, fabrics, or painted surfaces. After touching a battery, do not touch or rub your eyes until you have thoroughly washed your hands. If the acid contacts the eyes, skin or clothing, immediately flush with water for 15 minutes and seek medical attention.

Normally the battery does not require additional water. However, when the battery is used under severe conditions, adding distilled water may be necessary during the battery life.

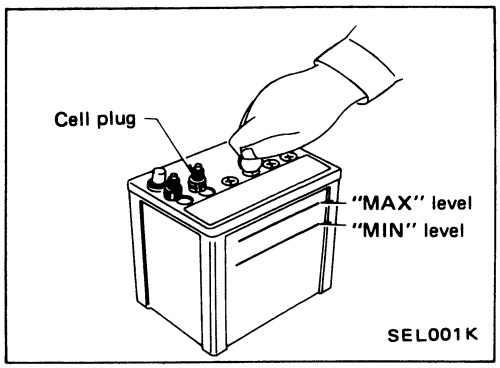

- Remove the cell plug using a suitable tool.
- Add distilled water up to the MAX level.

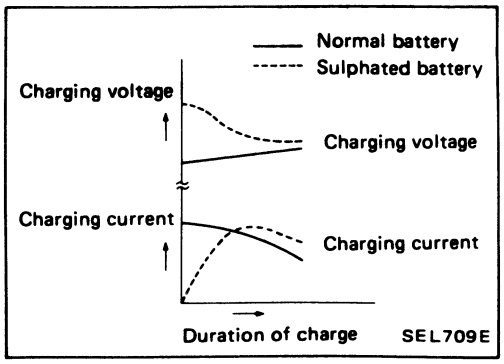

SULPHATION

When a battery has been left unattended for a long period of time and has a specific gravity of less than 1.100, it will be completely discharged, resulting in sulphation on the cell plates.

Compared with a battery discharged under normal conditions, the current flow in a "sulphated" battery is not as smooth although its voltage is high during the initial stage of charging, as shown in the figure at the left.

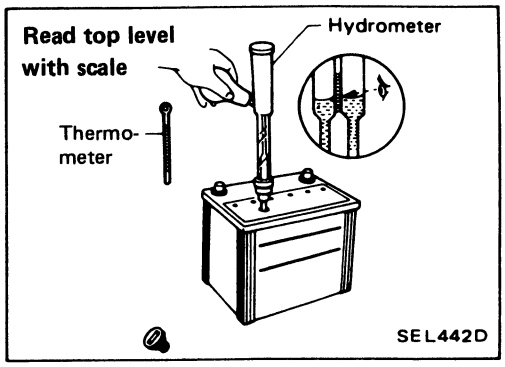

SPECIFIC GRAVITY CHECK

1. Read hydrometer and thermometer indications at eye level.

How to Handle Battery (Cont'd)

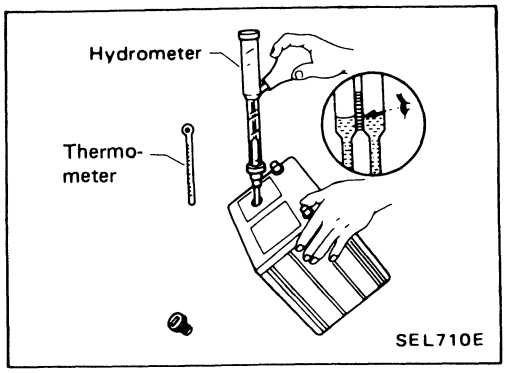

- When electrolyte level is too low, tilt battery case to raise it for easy measurement.

2. Convert into specific gravity at 20°C (68°F).

Example:

- When electrolyte temperature is 35°C (95°F) and specific gravity of electrolyte is 1.230, converted specific gravity at 20°C (68°F) is 1.240.
- When electrolyte temperature is 0°C (32°F) and specific gravity of electrolyte is 1.210, converted specific gravity at 20°C (68°F) is 1.196.

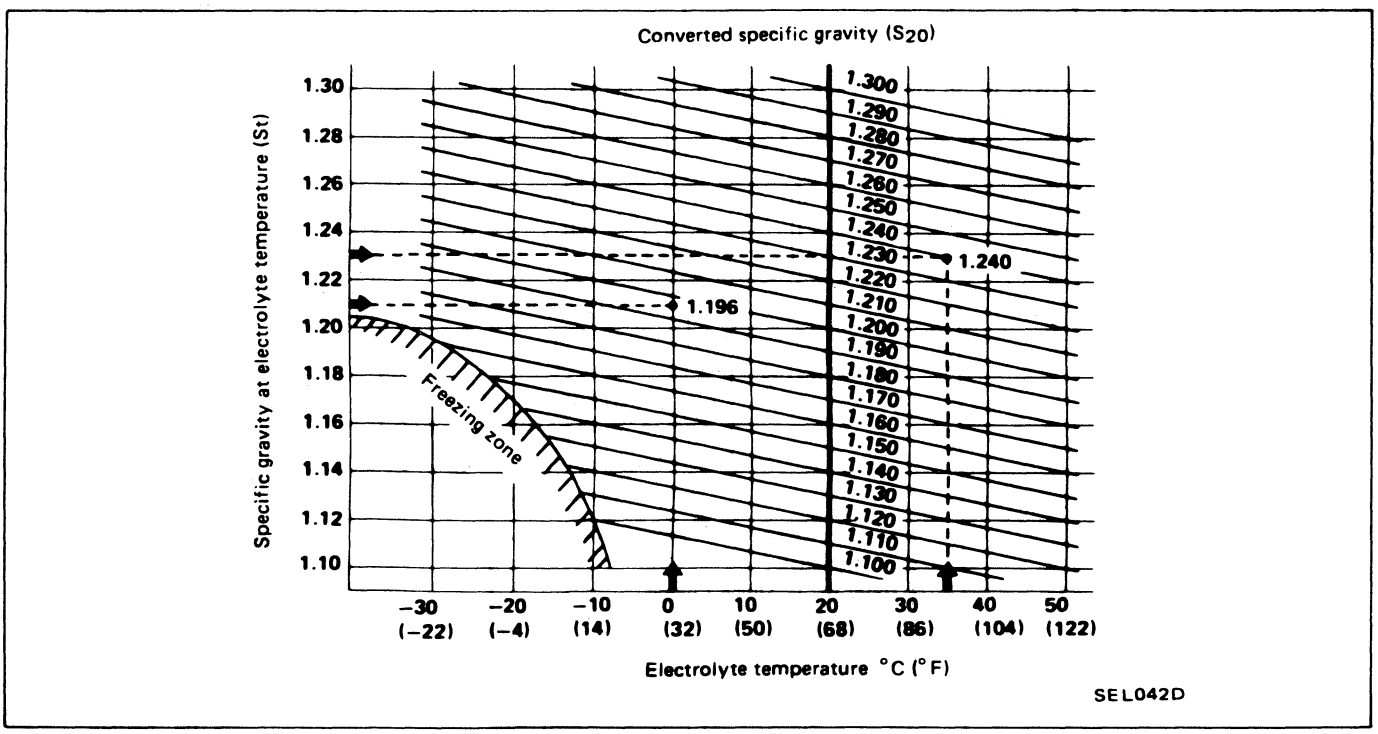

Battery Test and Charging Chart

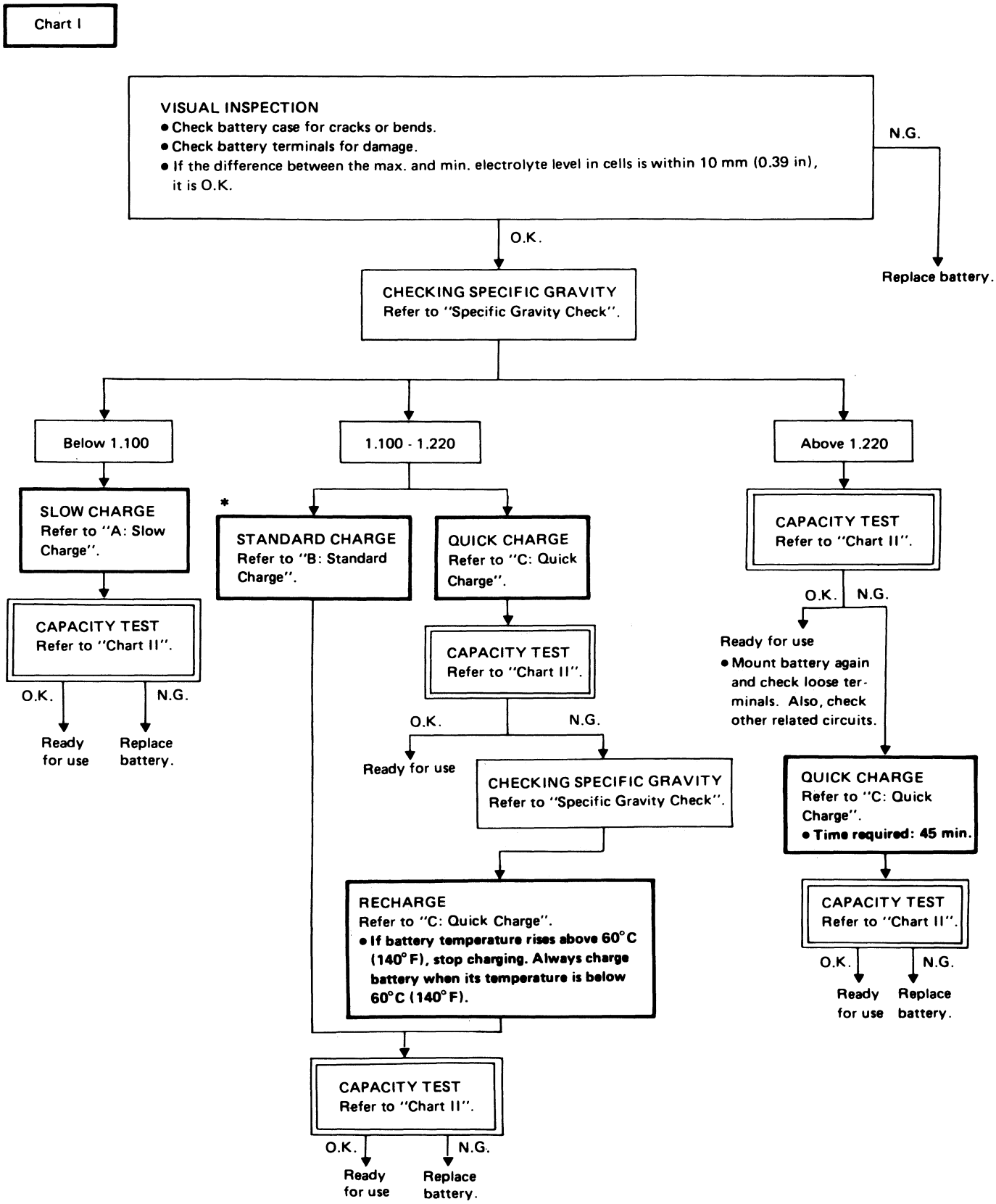

* "STANDARD CHARGE" is recommended in case that the vehicle is in storage after charging.

Battery Test and Charging Chart (Cont'd)

Chart II

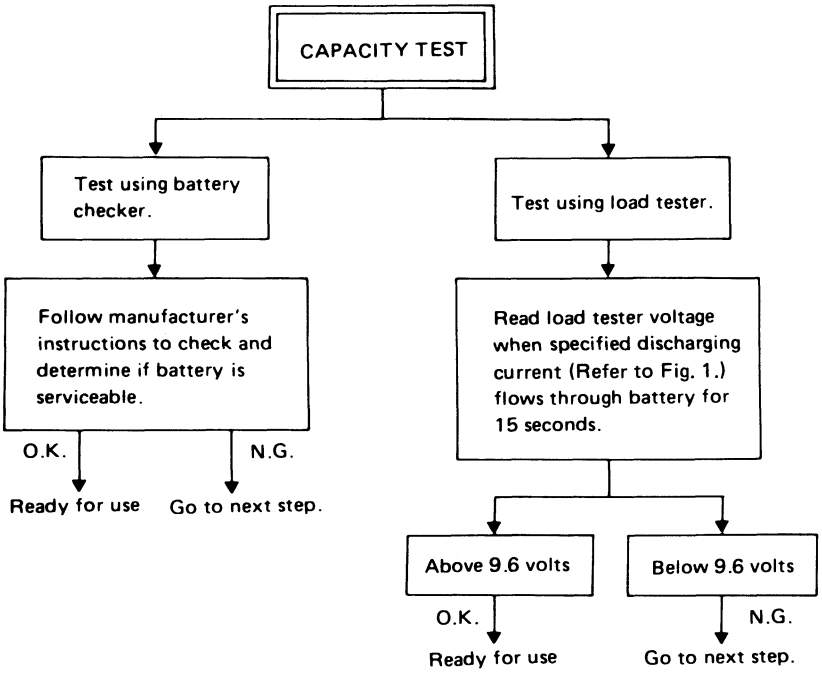

- Check battery type and determine the specified current using the following table.

Fig. 1 DISCHARGING CURRENT (Load tester)

Type	Current (A)
28B19R(L)	90
34B19R(L)	99
46B24R(L)	135
55B24R(L)	135
50D23R(L)	150
55D23R(L)	180
65D26R(L)	195
80D26R(L)	195
75D31R(L)	210
95D31R(L)	240
95E41R(L)	300
130E41R(L)	330

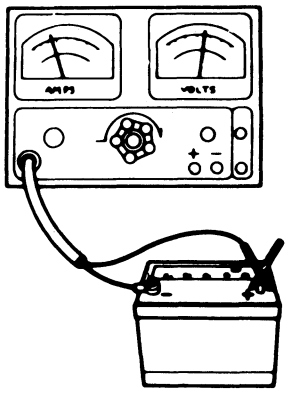

SEL697B

Battery Test and Charging Chart (Cont'd)

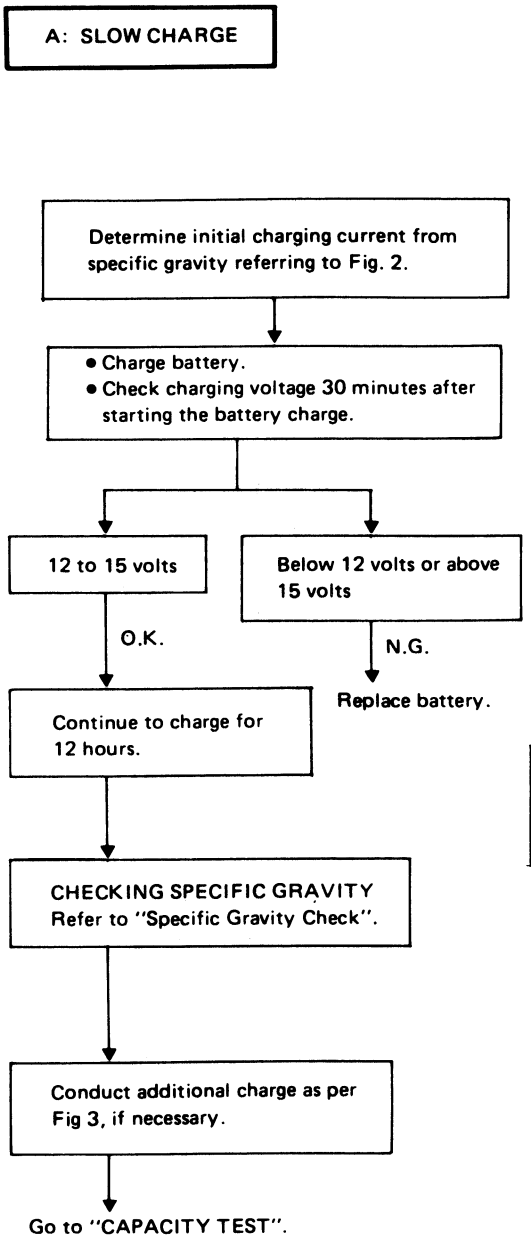

Fig. 2 INITIAL CHARGING CURRENT SETTING (Slow charge)

BATTERY TYPE / CONVERTED SPECIFIC GRAVITY	28B19R(L) 34B19R(L)	46B24R(L) 55B24R(L)	50D23R(L) 55D23R(L)	65D26R(L) 80D26R(L)	75D31R(L)	95D31R(L) 95E41R(L)	130E41R(L)
Below 1.100	4.0 (A)	5.0 (A)	7.0 (A)	8.0 (A)	9.0 (A)	10.0 (A)	14.0 (A)

- Check battery type and determine the specified current using the table shown above.
- After starting charging, adjustment of charging current is not necessary.

Fig. 3 ADDITIONAL CHARGE (Slow charge)

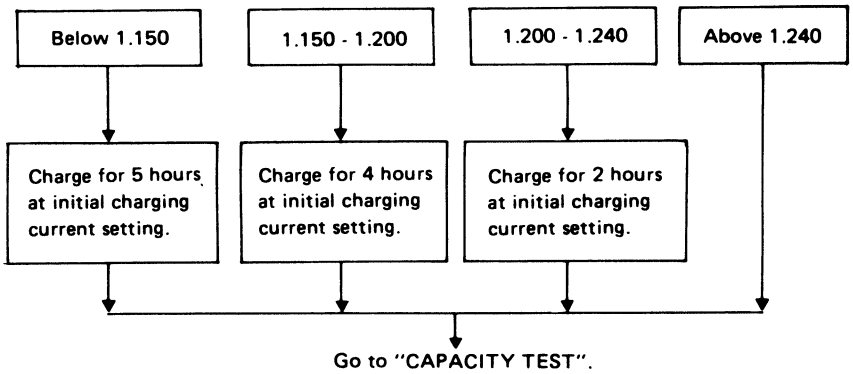

CAUTION:

a. **Set charging current to value specified in Fig. 2. If charger is not capable of producing specified current value, set its charging current as close to that value as possible.**

b. **Keep battery away from open flame while it is being charged.**

c. **When connecting charger, connect leads first, then turn on charger. Do not turn on charger first, as this may cause a spark.**

d. **If battery temperature rises above 60°C (140°F), stop charging. Always charge battery when its temperature is below 60°C (140°F).**

Battery Test and Charging Chart (Cont'd)

B: STANDARD CHARGE

Determine initial charging current from specific gravity, referring to Fig. 4.

↓

Charge battery for 8 hours.

↓

CHECKING SPECIFIC GRAVITY
Refer to "Specific Gravity Check".

↓

Conduct additional charge as per Fig. 5, if necessary.

↓

Go to "CAPACITY TEST".

Fig. 4 INITIAL CHARGING CURRENT SETTING
(Standard charge)

BATTERY TYPE / CONVERTED SPECIFIC GRAVITY	28B19R(L) 34B19R(L)	46B24R(L) 55B24R(L)	50D23R(L) 55D23R(L)	65D26R(L) 80D26R(L)	75D31R(L)	95D31R(L) 95E41R(L)	130E41R(L)
1.100 - 1.130	4.0 (A)	5.0 (A)	6.0 (A)	7.0 (A)	8.0 (A)	9.0 (A)	13.0 (A)
1.130 - 1.160	3.0 (A)	4.0 (A)	5.0 (A)	6.0 (A)	7.0 (A)	8.0 (A)	11.0 (A)
1.160 - 1.190	2.0 (A)	3.0 (A)	4.0 (A)	5.0 (A)	6.0 (A)	7.0 (A)	9.0 (A)
1.190 - 1.220	2.0 (A)	2.0 (A)	3.0 (A)	4.0 (A)	5.0 (A)	5.0 (A)	7.0 (A)

- Check battery type and determine the specified current using the table shown above.
- After starting charging, adjustment of charging current is not necessary.

Fig. 5 ADDITIONAL CHARGE (Standard charge)

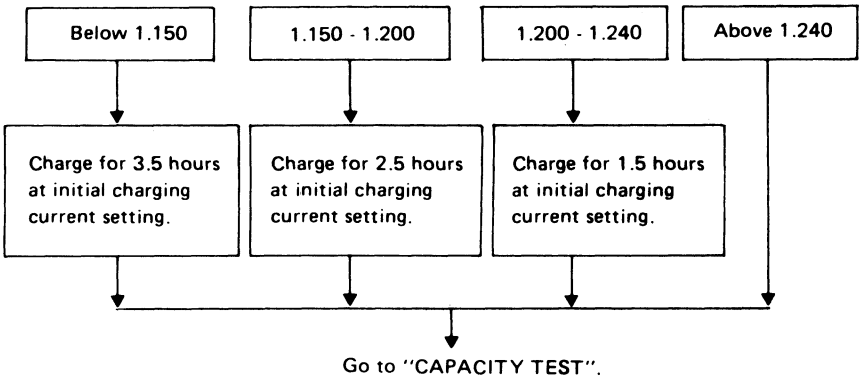

CAUTION:

a. **Do not use standard charge method on a battery whose specific gravity is less than 1.100.**
b. **Set charging current to value specified in Fig. 4. If charger is not capable of producing specified current value, set its charging current as close to that value as possible.**
c. **Keep battery away from open flame while it is being charged.**
d. **When connecting charger, connect leads first, then turn on charger. Do not turn on charger first, as this may cause a spark.**
e. **If battery temperature rises above 60°C (140°F), stop charging. Always charge battery when its temperature is below 60°C (140°F).**

Battery Test and Charging Chart (Cont'd)

C: QUICK CHARGE

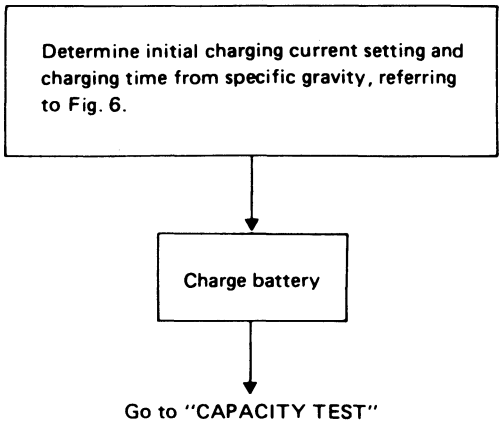

Fig. 6 INITIAL CHARGING CURRENT SETTING AND CHARGING TIME (Quick charge)

BATTERY TYPE / CURRENT [A] / CONVERTED SPECIFIC GRAVITY	28B19R(L) 34B19R(L)	46B24R(L) 55B24R(L) 50D23R(L)	55D23R(L) 65D26R(L) 80D26R(L)	75D31R(L) 95D31R(L) 95E41R(L)	130E41R(L)
	10 (A)	15 (A)	20 (A)	30 (A)	40 (A)
1.100 - 1.130	2.5 hours				
1.130 - 1.160	2.0 hours				
1.160 - 1.190	1.5 hours				
1.190 - 1.220	1.0 hours				
Above 1.220	0.75 hours (45 min.)				

- Check battery type and determine the specified current using the table shown above.
- After starting charging, adjustment of charging current is not necessary.

CAUTION:

a. **Do not use quick charge method on a battery whose specific gravity is less than 1.100.**

b. **Set initial charging current to value specified in Fig. 6. If charger is not capable of producing specified current value, set its charging current as close to that value as possible.**

c. **Keep battery away from open flame while it is being charged.**

d. **When connecting charger, connect leads first, then turn on charger. Do not turn on charger first, as this may cause a spark.**

e. **Be careful of a rise in battery temperature because a large current flow is required during quick-charge operation.**
If battery temperature rises above 60°C (140°F), stop charging. Always charge battery when its temperature is below 60°C (140°F).

f. **Do not exceed the charging time specified in Fig. 6, because charging battery over the charging time can cause deterioration of the battery.**

Service Data and Specifications (S.D.S.)

Applied model		For U.S.A.	For Canada
Type		55D23L	65D26L
Capacity	V-AH	12-60	12-65

Wiring Diagram

M/T MODEL

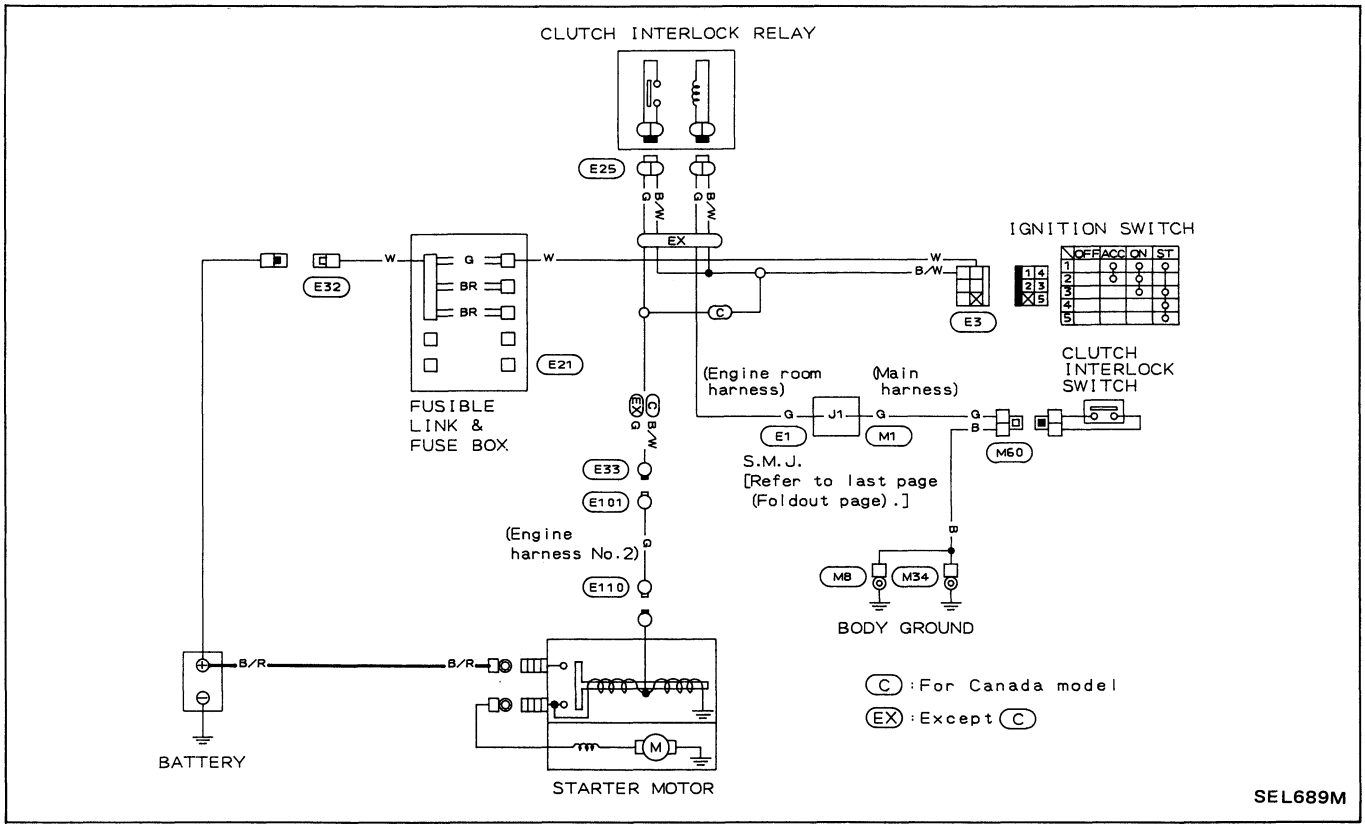

A/T MODEL

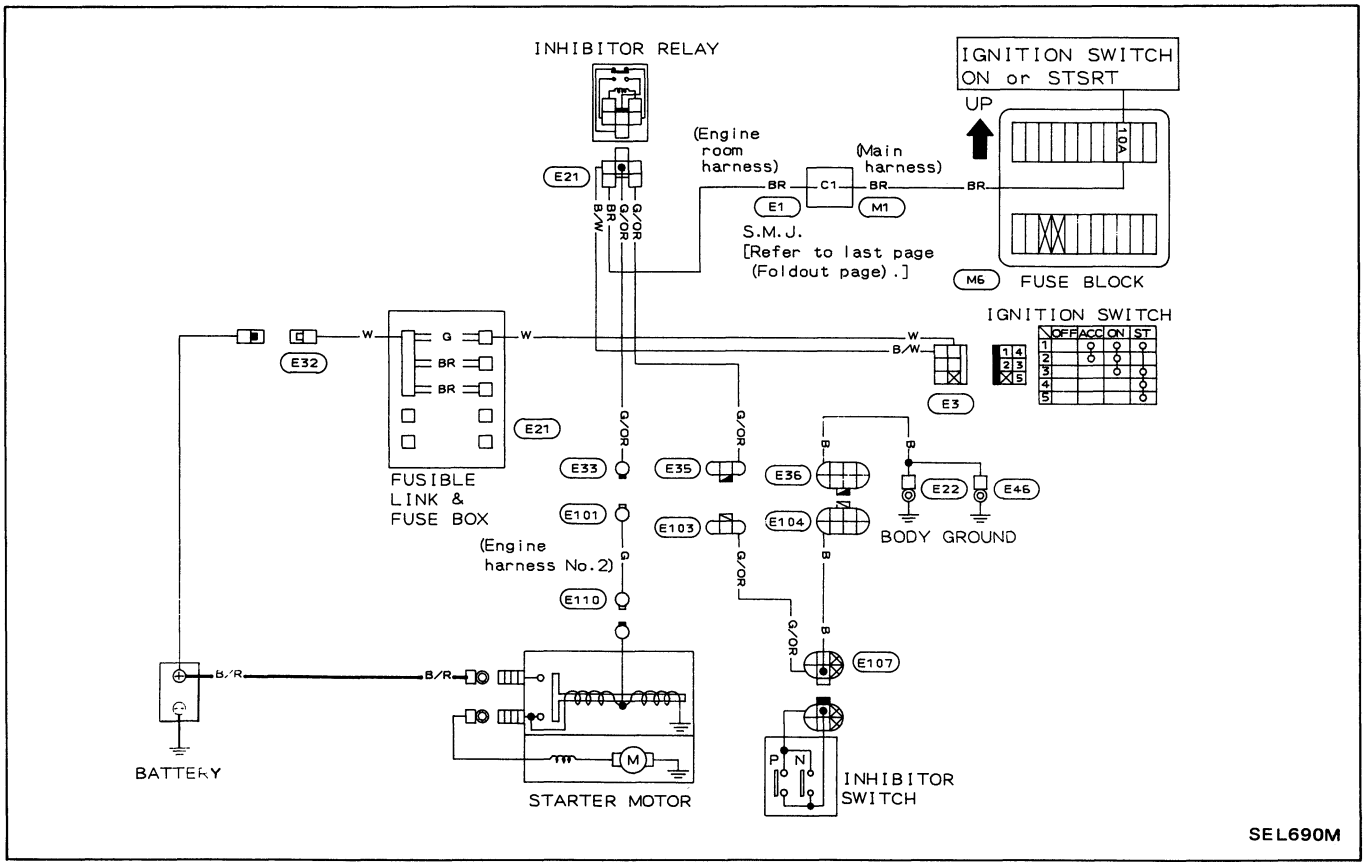

Trouble-shooting

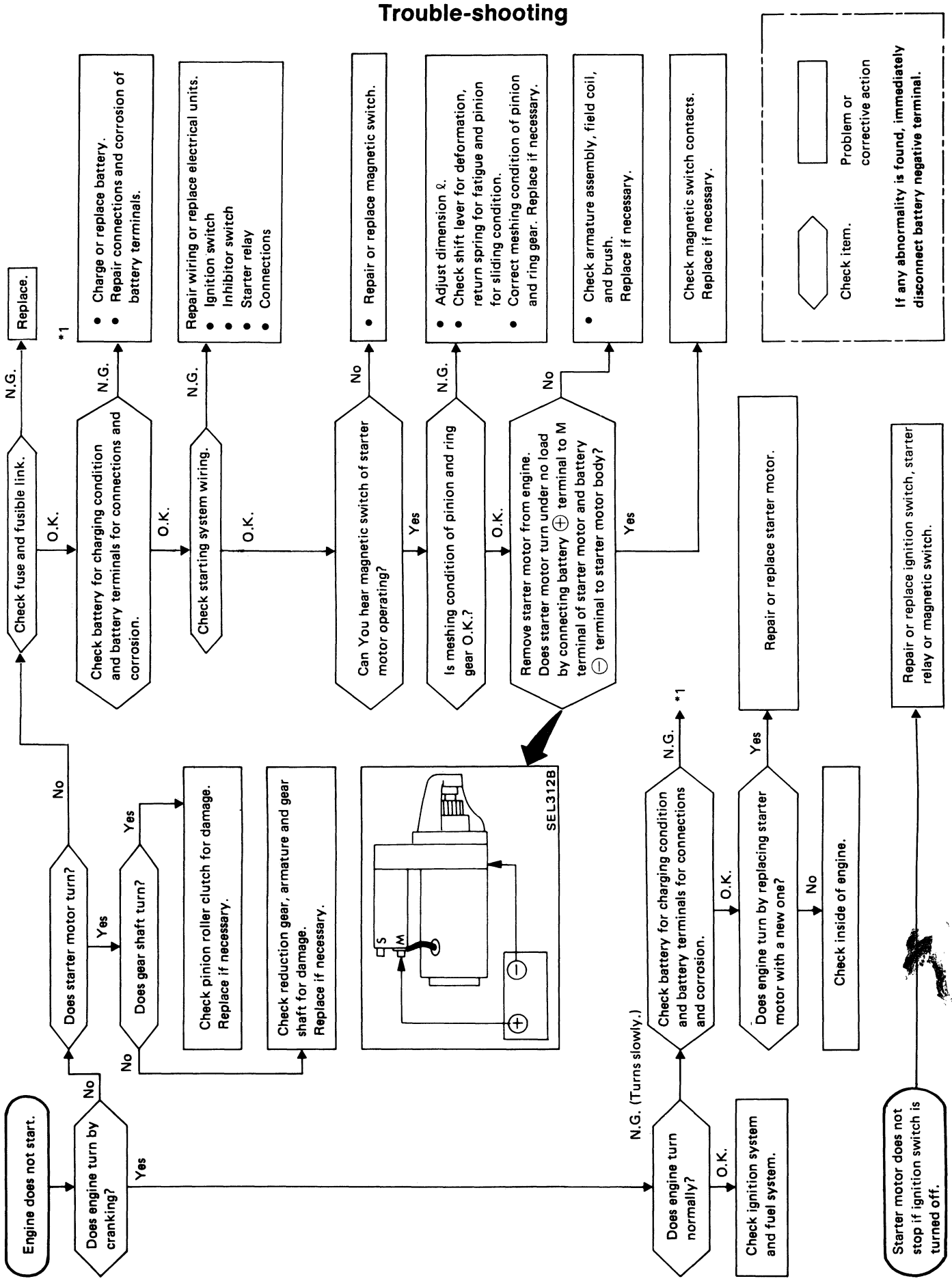

Construction

M1T72281

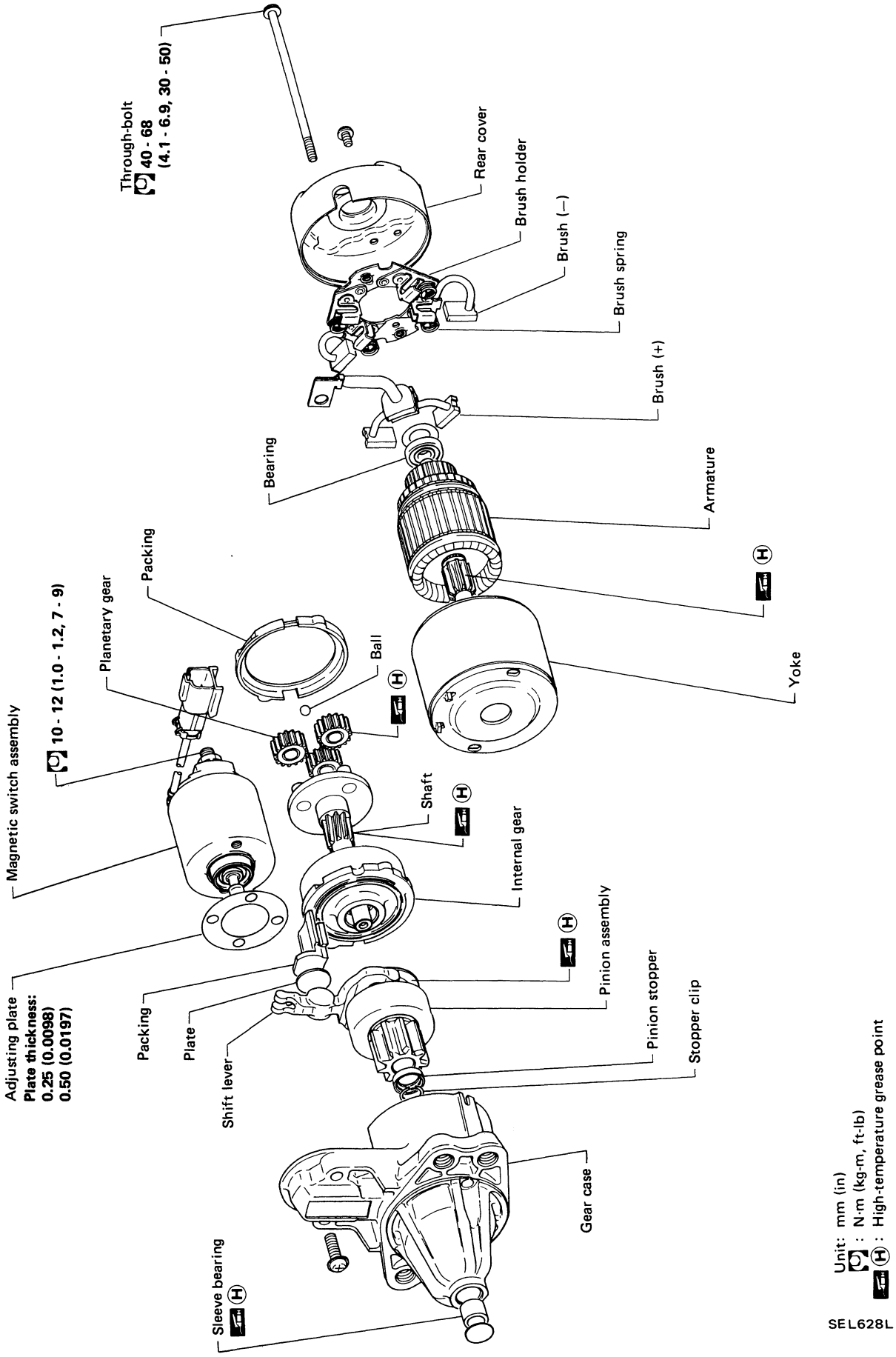

Construction (Cont'd)

S114-525

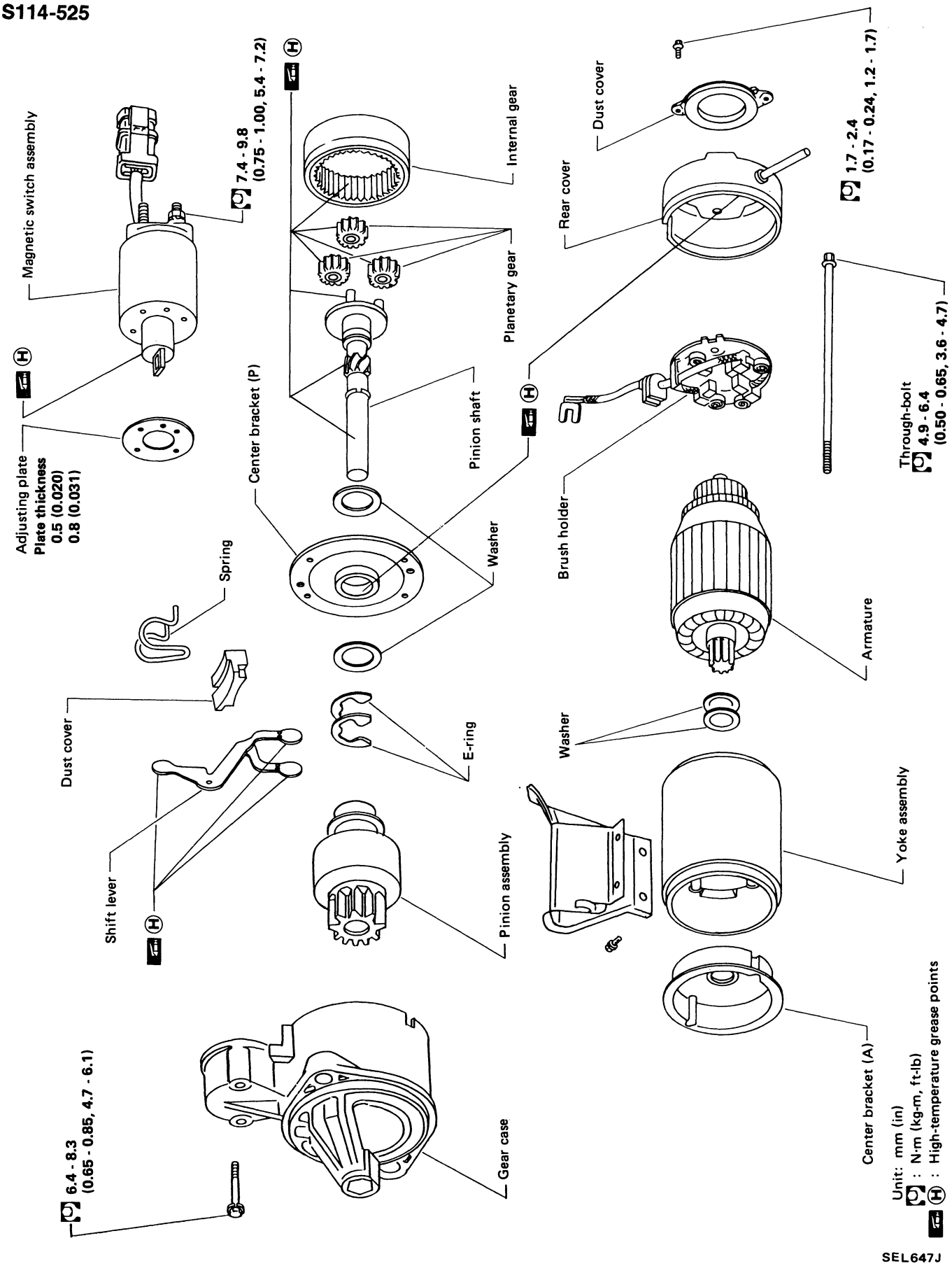

SEL647J

Removal and Installation

REMOVAL

1. Remove air duct between air flow meter and collector.

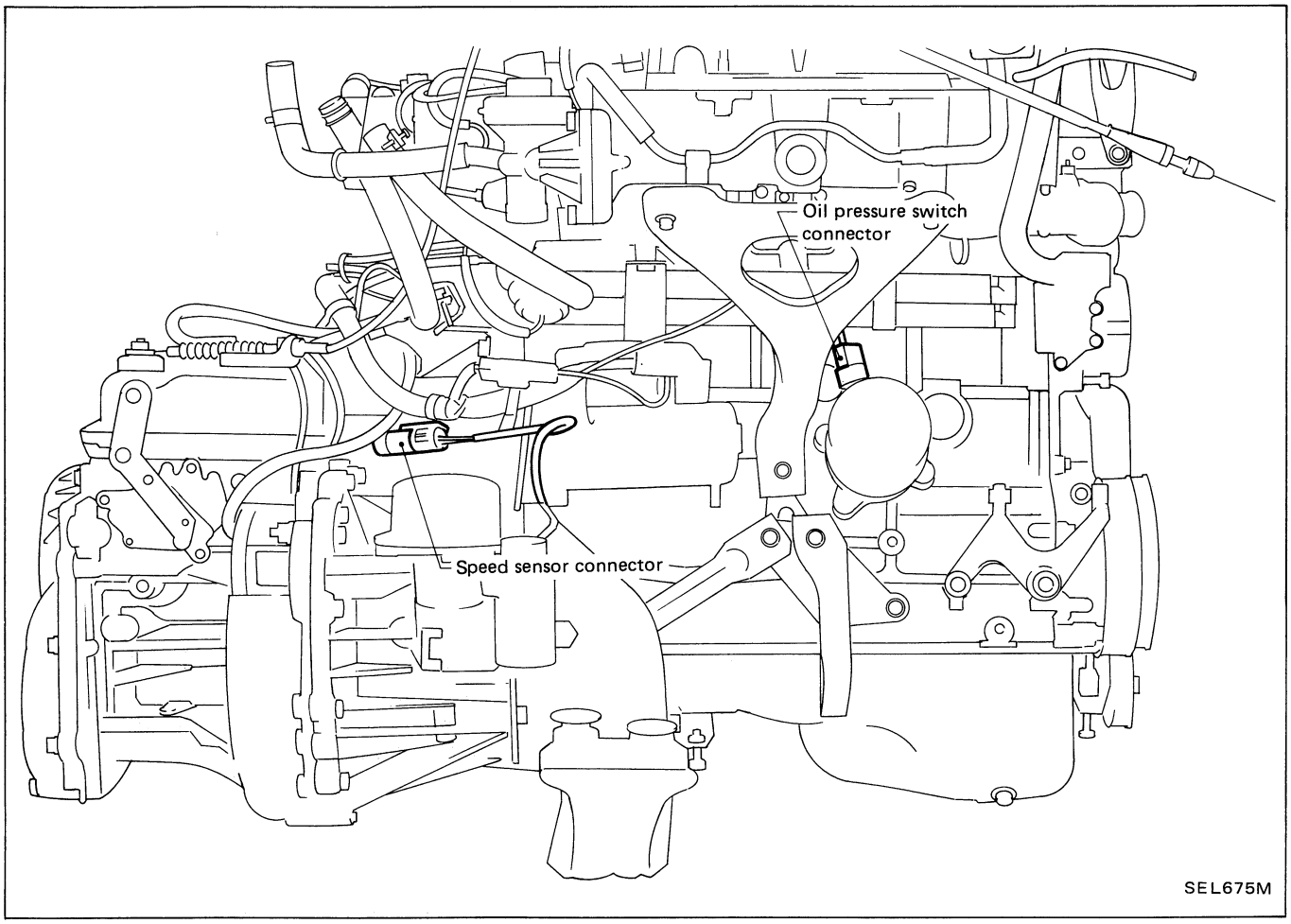

2. Disconnect following connectors:
   - Oil pressure switch connector
   - Speed sensor connector
3. Remove harness clamp.
4. Remove starter fixing bolts and take off starter with harness and cable.
5. Remove starter harness connector and cable.

INSTALLATION

- Installation procedure is in reverse order of removal.

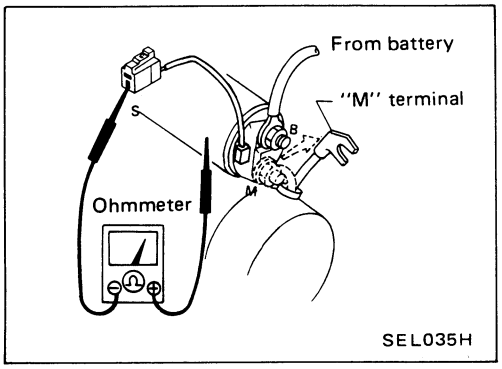

Magnetic Switch Check

- Before starting to check, disconnect battery ground cable.
- Disconnect "M" terminal of starter motor.

1. Continuity test (between "S" terminal and switch body).

- No continuity ... Replace.

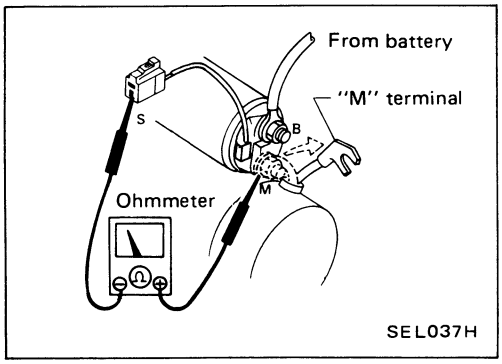

2. Continuity test (between "S" terminal and "M" terminal).

- No continuity ... Replace.

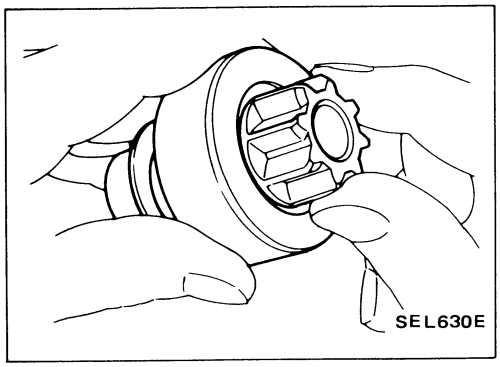

Pinion/Clutch Check

1. Inspect pinion teeth.

- Replace pinion if teeth are worn or damaged. (Also check condition of ring gear teeth.)

2. Check to see if pinion locks in one direction and rotates smoothly in the opposite direction.

- If it does not lock (or locks) in either direction or unusual resistance is evident ... Replace.

3. Inspect reduction gear teeth.

- Replace reduction gear if teeth are worn or damaged. (Also check condition of armature shaft gear teeth.)

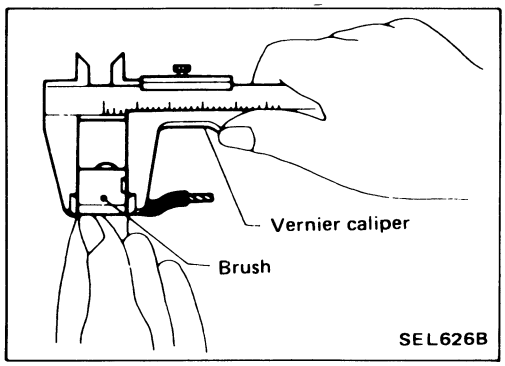

Brush Check

BRUSH

Check brush for wear.

Wear limit length:
Refer to S.D.S.

- Excessive wear ... Replace.

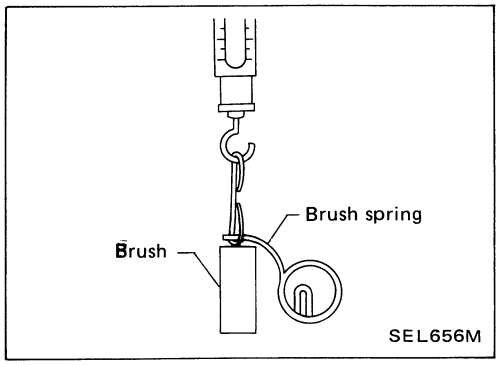

BRUSH SPRING PRESSURE

Check brush spring pressure with brush spring detached from brush.

Spring pressure (with new brush):
Refer to S.D.S.

- Not within the specified values ... Replace.

Brush Check (Cont'd)

BRUSH HOLDER

1. Perform insulation test between brush holder (positive side) and its base (negative side).
- Continuity exists. ... Replace.
2. Check brush to see if it moves smoothly.
- If brush holder is bent, replace it; if sliding surface is dirty, clean.

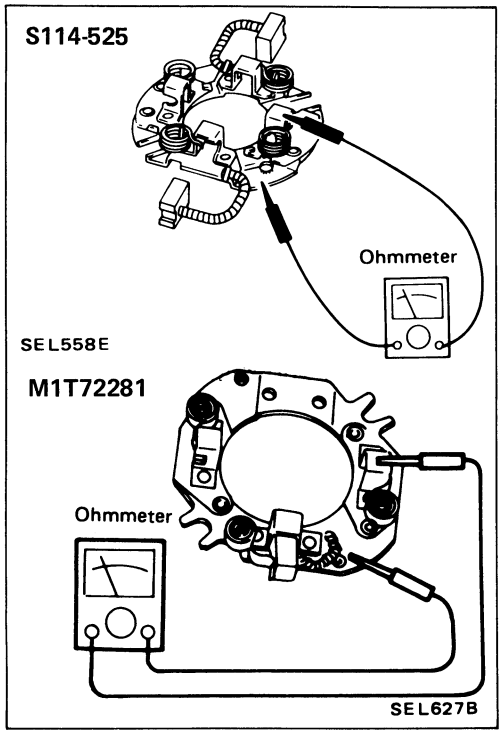

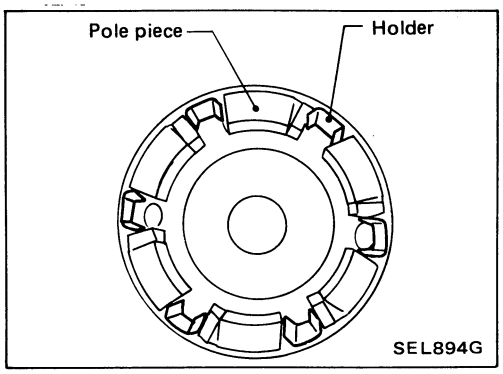

Pole Piece Check (M1T72281)

Pole piece is secured to yoke by bonding agent. Check pole piece to see that it is secured to yoke and for any cracks. Replace malfunctioning parts as an assembly.
Holder may move slightly as it is only inserted and not bonded.

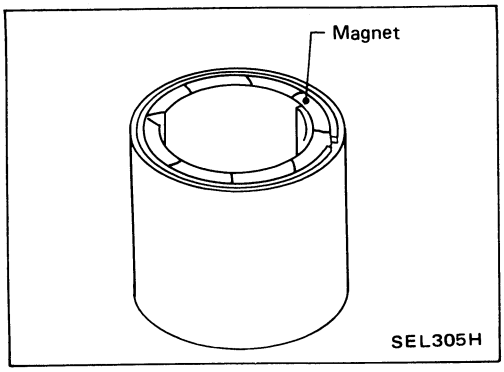

Yoke Assembly Check (S114-525)

Check magnet for cracks. If there is any crack, replace malfunctioning parts as an assembly.

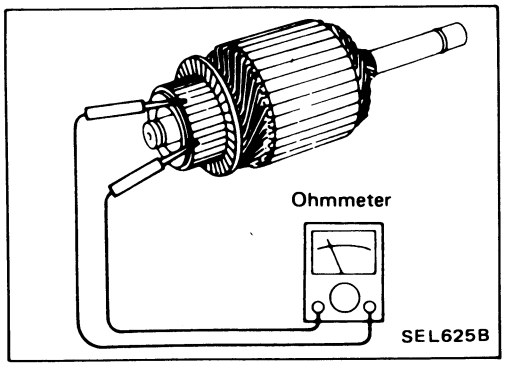

Armature Check

1. Continuity test (between two segments side by side).
- No continuity ... Replace.

Armature Check (Cont'd)

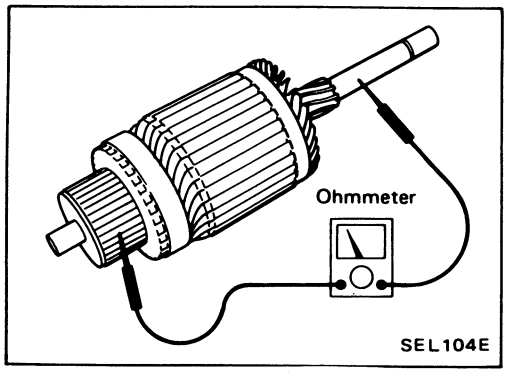

2. Insulation test (between each commutator bar and shaft).
- Continuity exists. ... Replace.

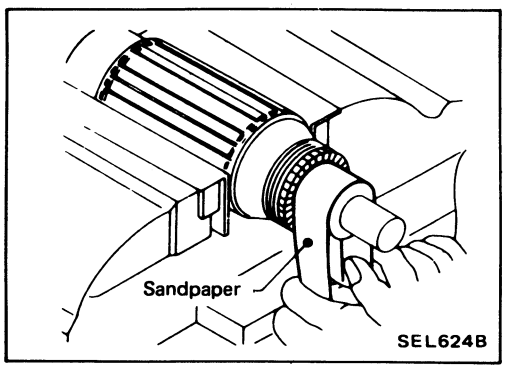

3. Check commutator surface.
- Rough ... Sand lightly with No. 500 - 600 sandpaper.

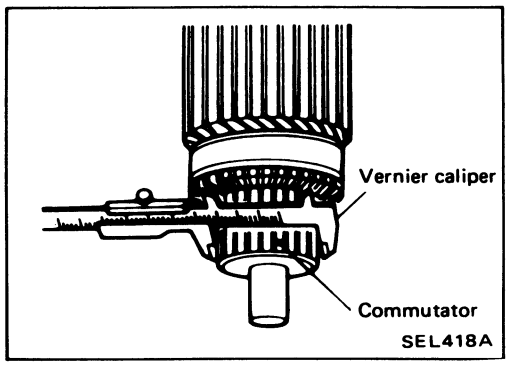

4. Check diameter of commutator.

Commutator minimum diameter:

Refer to S.D.S.

- Less than specified value ... Replace.

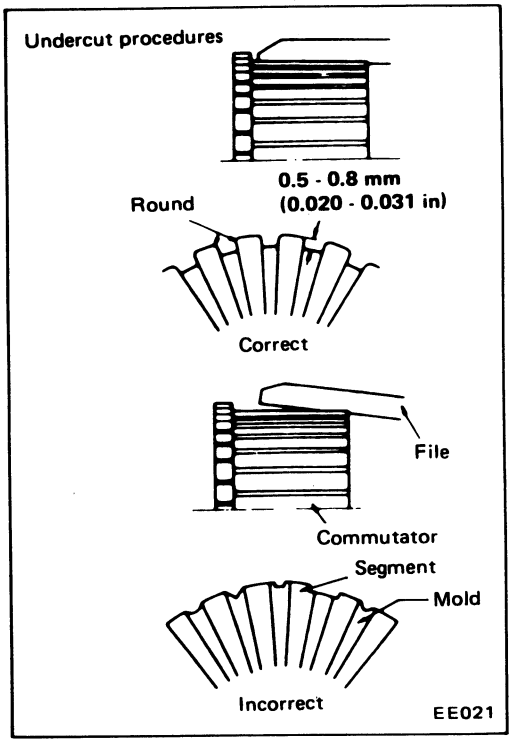

5. Check depth of insulating mold from commutator surface.
- Less than 0.2 mm (0.008 in) ... Undercut to 0.5 to 0.8 mm (0.020 to 0.031 in)

Assembly

Apply high-temperature grease to lubricate the bearing, gears and frictional surface when assembling the starter.
Carefully observe the following instructions.

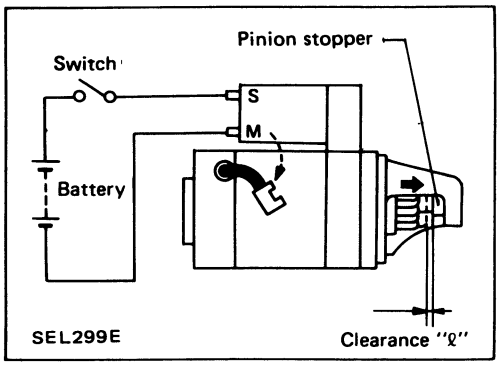

PINION PROTRUSION LENGTH ADJUSTMENT

M1T72281

With pinion driven out by magnetic switch, push pinion back to remove slack and measure clearance " ℓ " between the front edge of the pinion and the pinion stopper.

Clearance " ℓ ":
Refer to S.D.S.

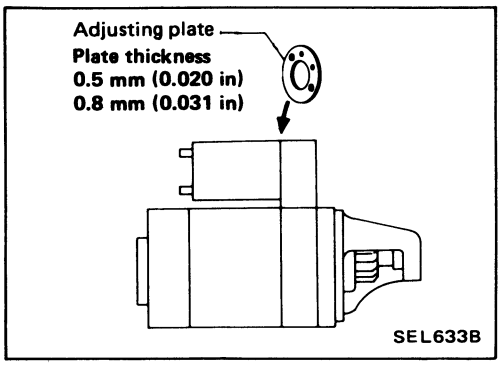

- Not in the specified value ... Adjust with adjusting plate.

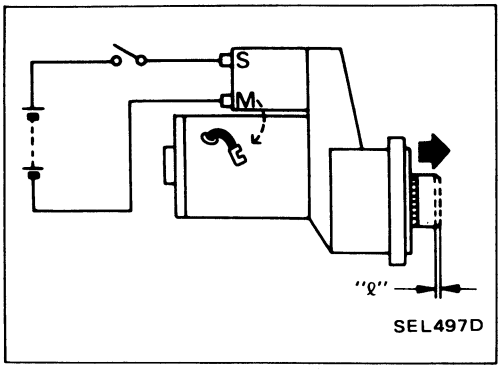

S114-525

Compare movement " ℓ " in height of pinion when it is pushed out with magnetic switch energized and when it is pulled out by hand until it touches stopper.

Movement " ℓ ":
Refer to S.D.S.

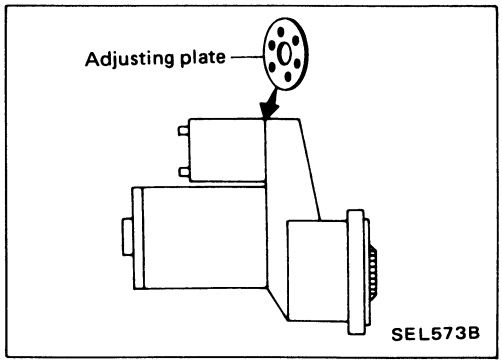

- Not in the specified value ... Adjust by adjusting plate.

Assembly (Cont'd)

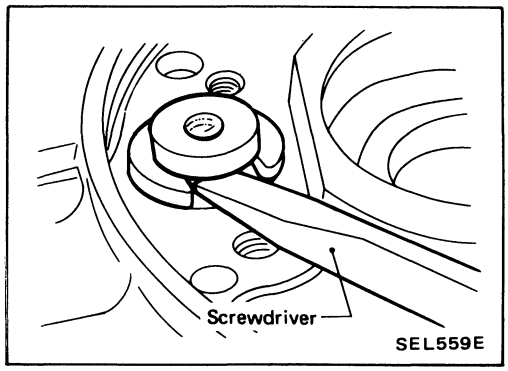

PINION SHAFT THRUST GAP ADJUSTMENT

S114-525

Check thrust gap with a gap gauge by pulling pinion shaft in the axial direction with a screwdriver.

Maximum of thrust gap:
0.5 mm (0.020 in)

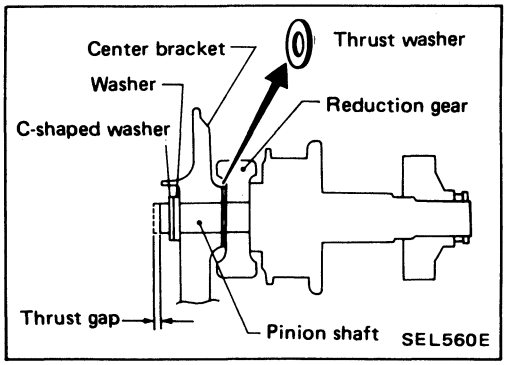

- If thrust gap is over the specified value, adjust it with adjusting plate.

Service Data and Specifications (S.D.S.)

STARTER

			M1T72281	S114-525
Type			MITSUBISHI make	HITACHI make
			Reduction gear	
System voltage		V	12	
No-load	Terminal voltage	V	11.0	
	Current	A	50 - 75	Less than 90
	Revolution	rpm	3,000 - 4,000	More than 2,950
Minimum length of brush		mm (in)	12.0 (0.472)	11.0 (0.433)
Brush spring tension (With new brush)		N (kg, lb)	13.7 - 25.5 (1.4 - 2.6, 3.1 - 5.7)	17.7 - 21.6 (1.8 - 2.2, 4.0 - 4.9)
Minimum diameter of commutator		mm (in)	28.8 (1.134)	32.0 (1.260)
Clearance "ℓ" between pinion front edge and pinion stopper		mm (in)	0.5 - 2.0 (0.020 - 0.079)	–
Movement "ℓ" in height of pinion assembly		mm (in)	–	0.3 - 1.5 (0.012 - 0.059)
Maximum thrust gap of pinion shaft		mm (in)	–	0.5 (0.020)

Wiring Diagram

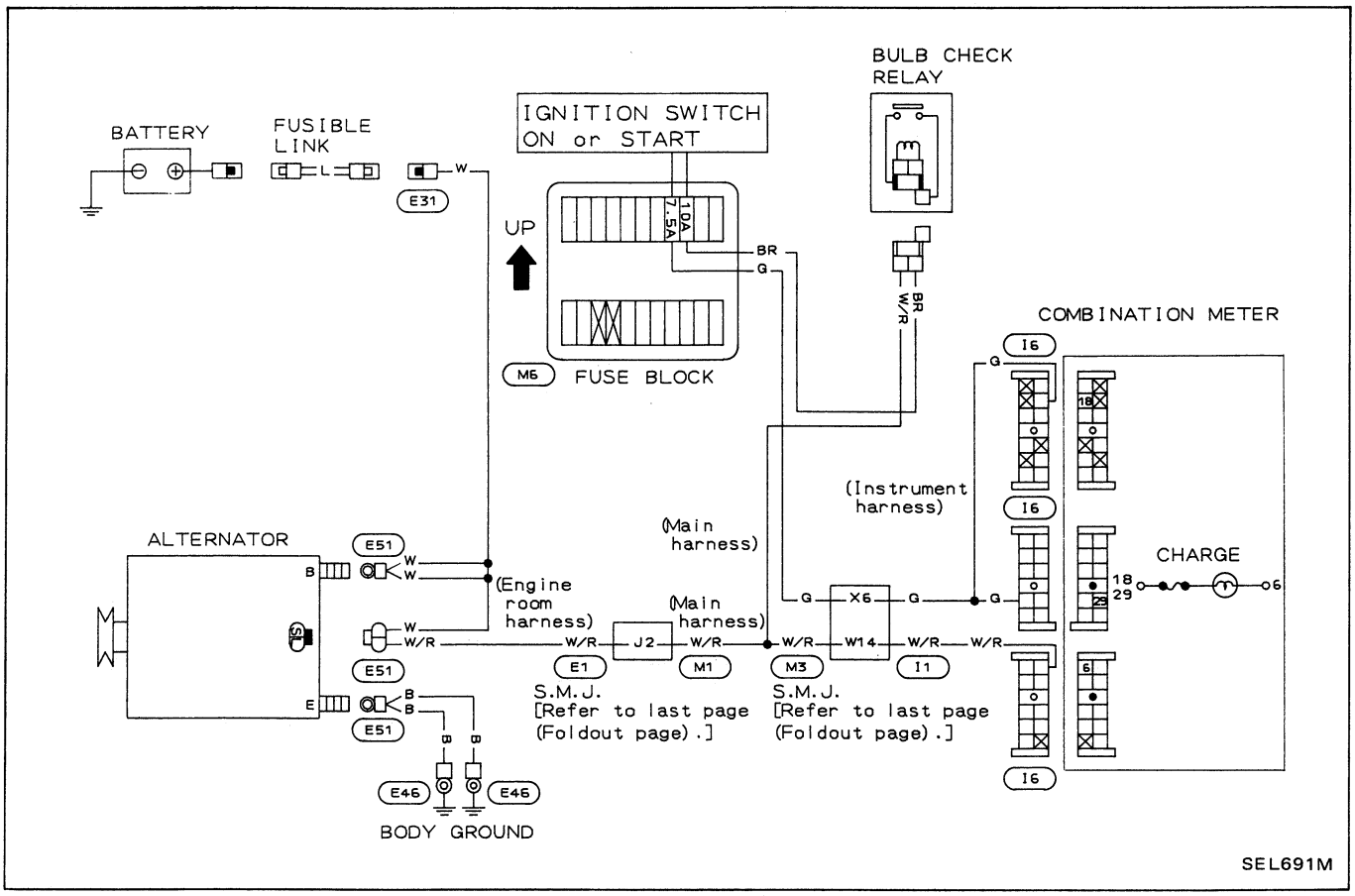

Trouble-shooting

Before conducting an alternator test, make sure that the battery is fully charged. A 30-volt voltmeter and suitable test probes are necessary for the test. The alternator can be checked easily by referring to the Inspection Table.

Before starting trouble-shooting, inspect the fusible link.

WITH IC REGULATOR

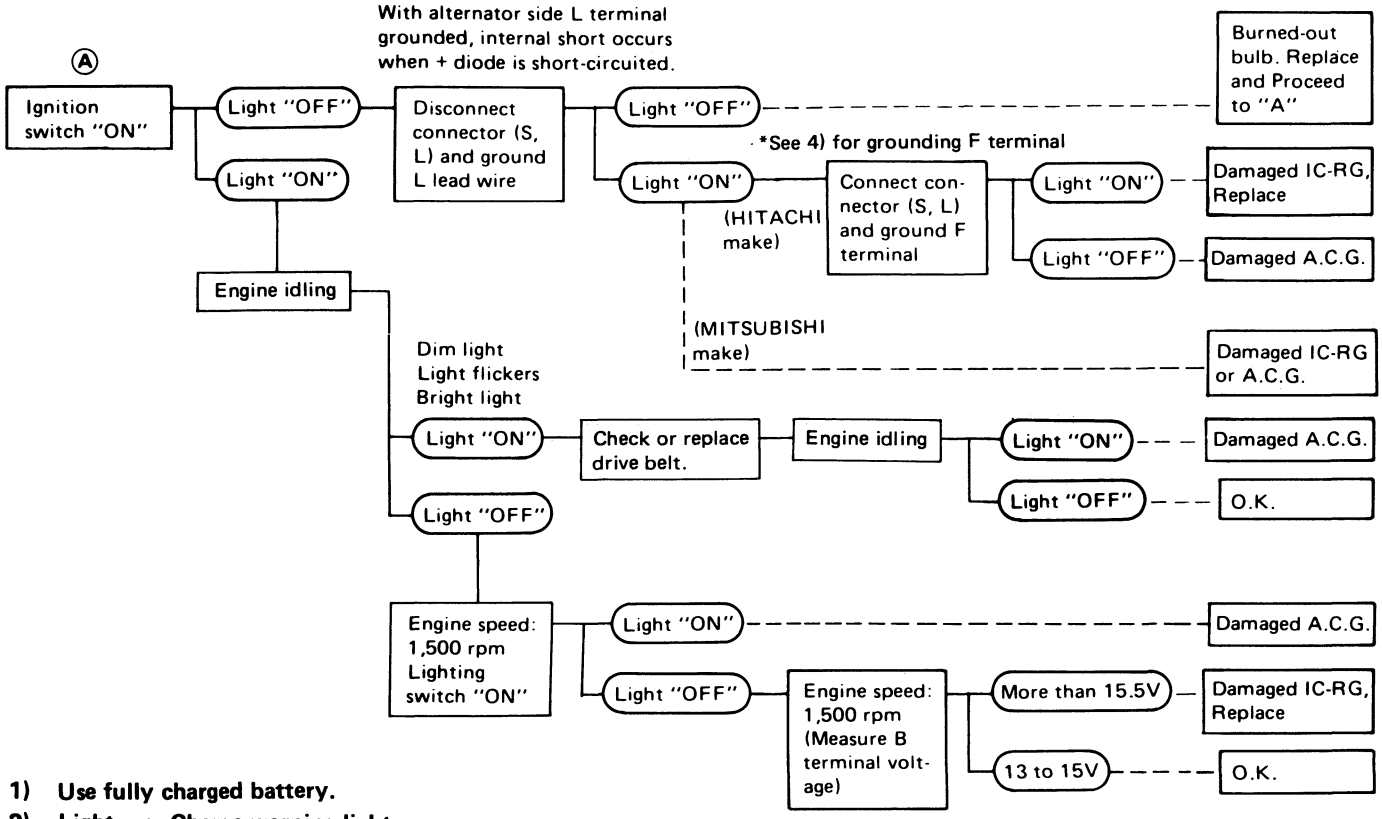

1) **Use fully charged battery.**
2) **Light : Charge warning light**
   A.C.G. : Alternator parts except IC regulator
   IC-RG : IC regulator
   O.K. : IC alternator is in good condition.
3) **When reaching "Damaged A.C.G.", remove alternator from vehicle and disassemble, inspect and correct or replace faulty parts.**
4) ***Method of grounding F terminal (HITACHI make only)**

   Contact tip of wire with brush and attach wire to alternator body.

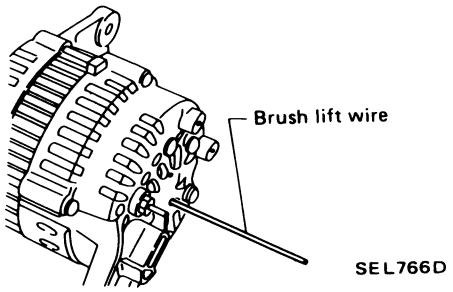

5) **Terminals "S", "L", "B" and "E" are marked on rear cover of alternator.**

Construction

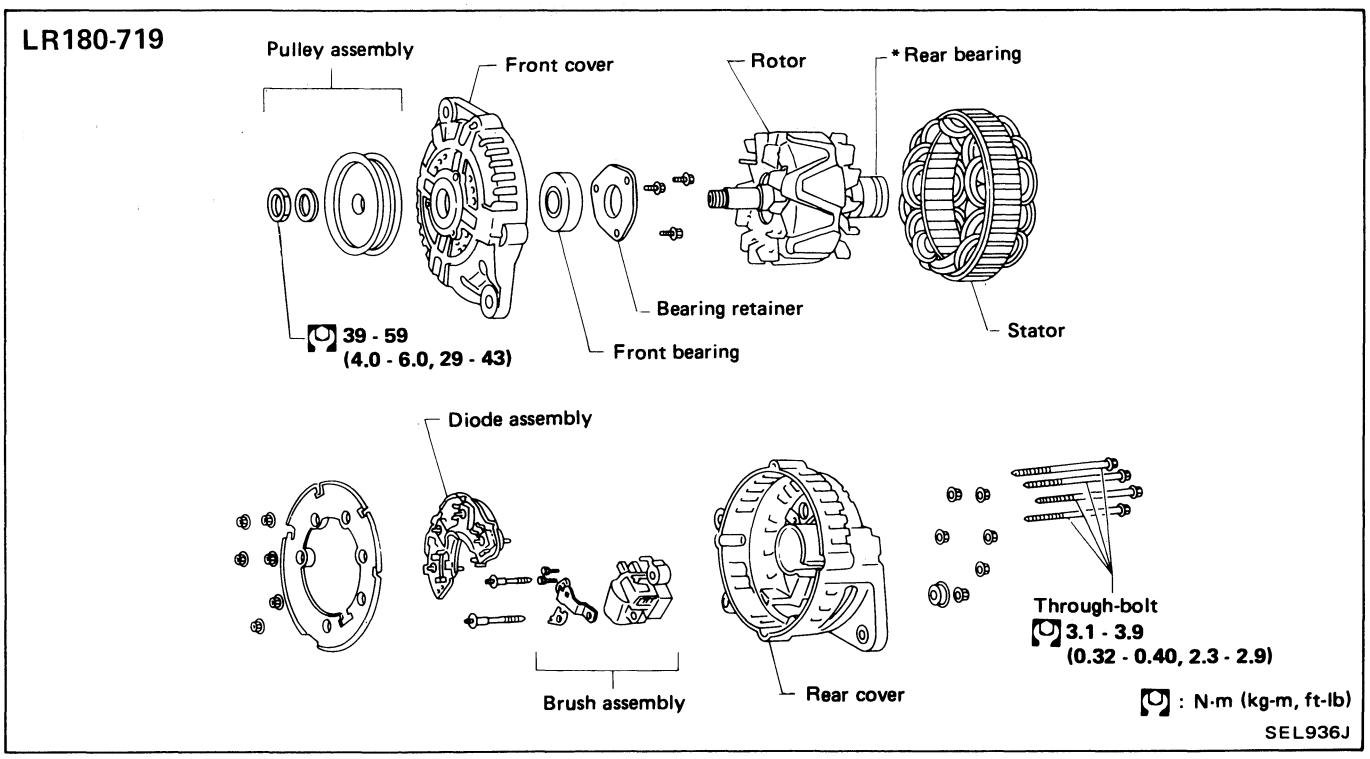

***Rear bearing**

CAUTION:

Rear cover may be hard to remove because a ring is used to lock outer race of rear bearing. Be careful not to lose this ring during removal.

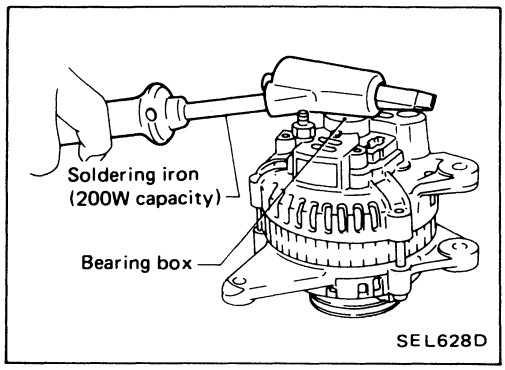

Disassembly

REAR COVER REMOVAL

CAUTION:

Rear cover may be hard to remove because a ring is used to lock outer race of rear bearing. To facilitate removal of rear cover, heat just bearing box section with a 200W soldering iron.
Do not use a heat gun, as it can damage diode assembly.

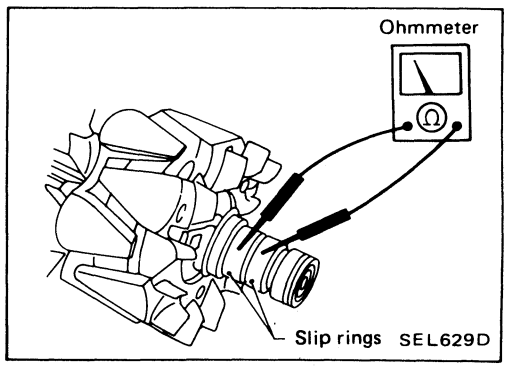

Rotor Slip Ring Check

1. Continuity test
   - No continuity ... Replace rotor.

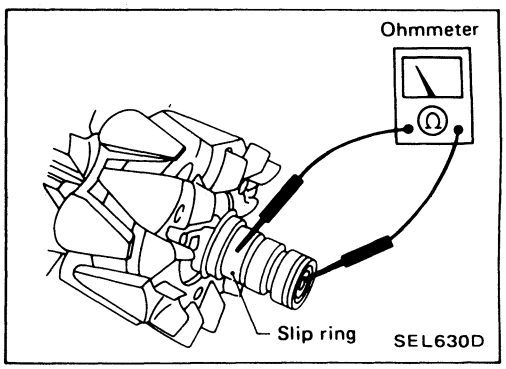

2. Insulator test
   - Continuity exists ... Replace rotor.
3. Check slip ring for wear.

   Slip ring minimum outer diameter:
   Refer to S.D.S.

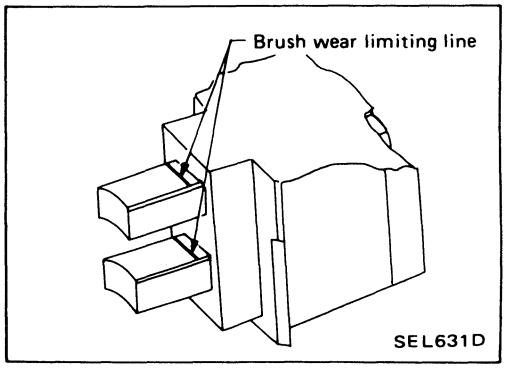

Brush Check

1. Check smooth movement of brush.
   - Not smooth ... Check brush holder and clean.
2. Check brush for wear.
   - Replace brush if it is worn down to the limit line.

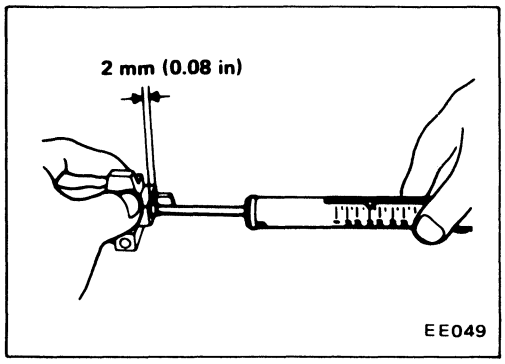

3. Check brush lead wire for damage.
   - Damaged ... Replace.
4. Check brush spring pressure.

   Measure brush spring pressure with brush projected approximately 2 mm (0.08 in) from brush holder.

   Spring pressure:
   Refer to S.D.S.
   - Not within the specified values ... Replace.

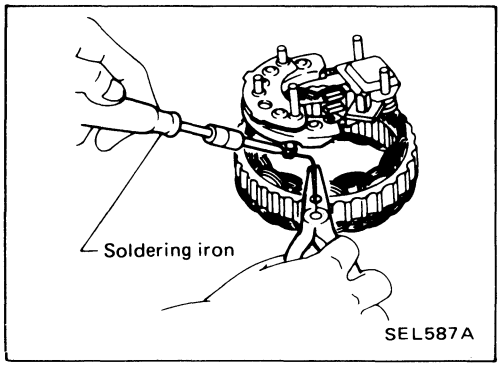

Stator Check

To test the stator or diode, separate them by unsoldering the connecting wires.

CAUTION:

Use only as much heat as required to melt solder. Otherwise, diodes will be damaged by excessive heat.

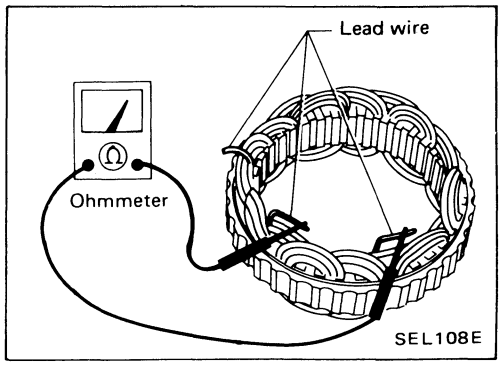

1. Continuity test
   - No continuity ... Replace stator.

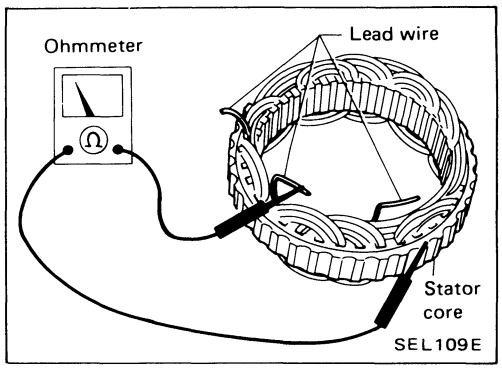

2. Ground test
   - Continuity exists ... Replace stator.

Diode Check

MAIN DIODES

- Use an ohmmeter to check condition of diodes as indicated in chart below.
- If any of the test results is not satisfactory, replace diode assembly.

	Ohmmeter probes		Continuity
	Positive ⊕	Negative ⊖	
Diodes check (Positive side)	Positive diode plate	Diode terminals	Yes
	Diode terminals	Positive diode plate	No
Diodes check (Negative side)	Negative diode plate	Diode terminals	No
	Diode terminals	Negative diode plate	Yes

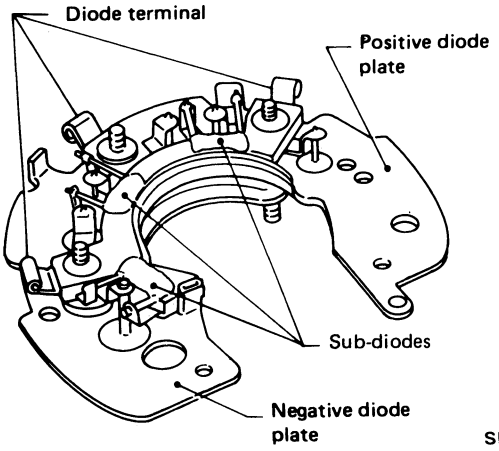

SEL768D

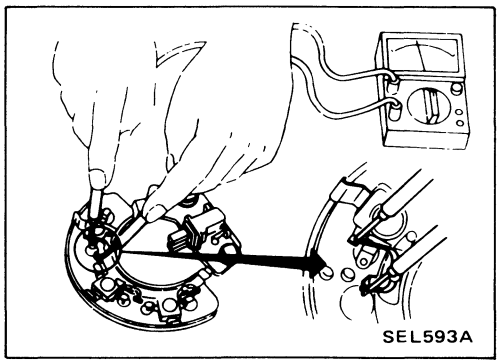

SEL593A

SUB-DIODES

- Attach ohmmeter's probe to each end of diode to check for continuity.
- Continuity is N.G. ... Replace diode assembly.

Assembly

Carefully observe the following instructions.

- When soldering each stator coil lead wire to diode assembly terminal, carry out the operation as fast as possible.

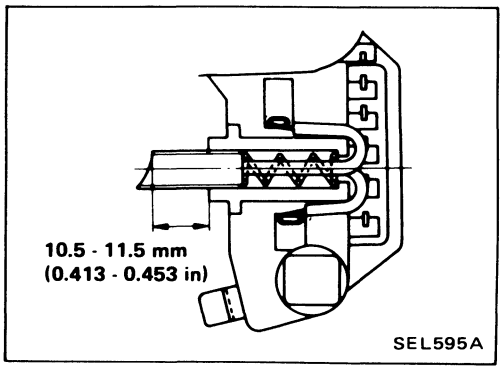

WHEN SOLDERING BRUSH LEAD WIRE

(1) Position brush so that it extends 10.5 to 11.5 mm (0.413 to 0.453 in) from brush holder.

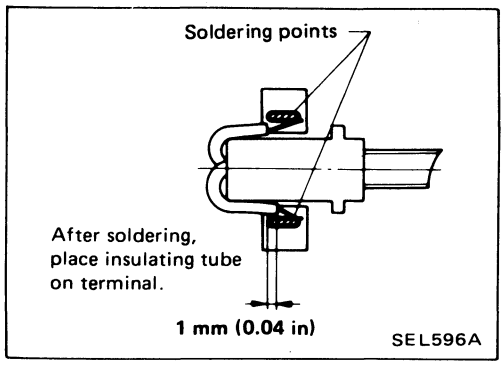

(2) Coil lead wire 1.5 times around terminal groove. Solder outside of terminal.

When soldering, be careful not to let solder adhere to insulating tube as it will weaken the tube and cause it to break.

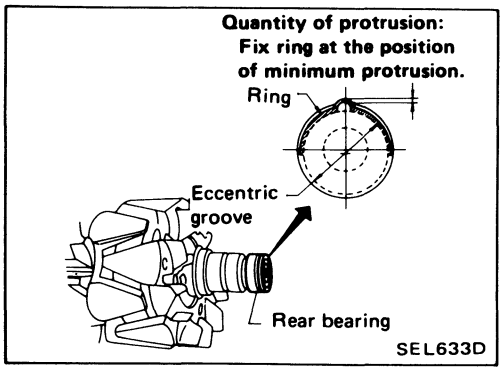

RING FITTING IN REAR BEARING

- Fix ring into groove in rear bearing so that it is as close to the adjacent area as possible.

Assembly (Cont'd)

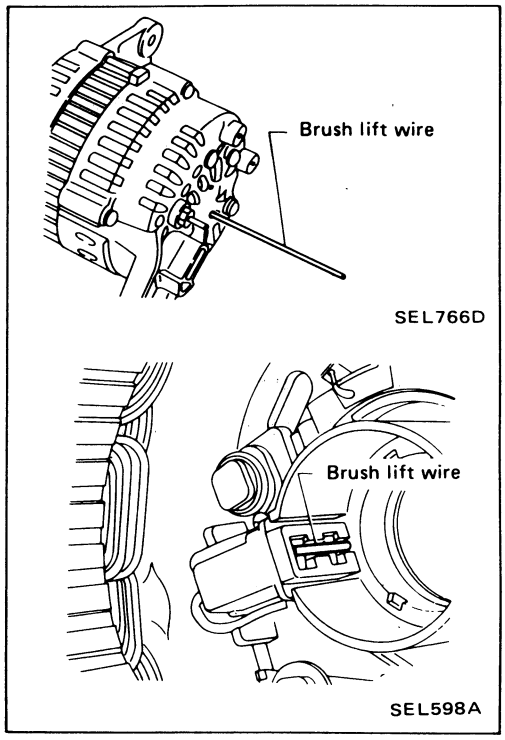

REAR COVER INSTALLATION

(1) Before installing front cover with pulley and rotor with rear cover, push brush up with fingers and retain brush by inserting brush lift wire into brush lift hole from outside.

(2) After installing front and rear sides of alternator, pull out brush lift wire.

Service Data and Specifications (S.D.S.)

ALTERNATOR

Type		LR180-719
		HITACHI
Nominal rating	V-A	12 - 70
Ground polarity		Negative
Minimum revolution under no-load (When 13.5 volts is applied)	rpm	Less than 950
Hot output current	A/rpm	More than 50/2,500 More than 67/5,000
Regulated output voltage	V	14.1 - 14.7
Minimum length of brush	mm (in)	7 (0.28)
Brush spring pressure	N (g, oz)	2.746 - 3.923 (280 - 400, 9.88 - 14.11)
Slip ring minimum outer diameter	mm (in)	30.6 (1.205)

Check

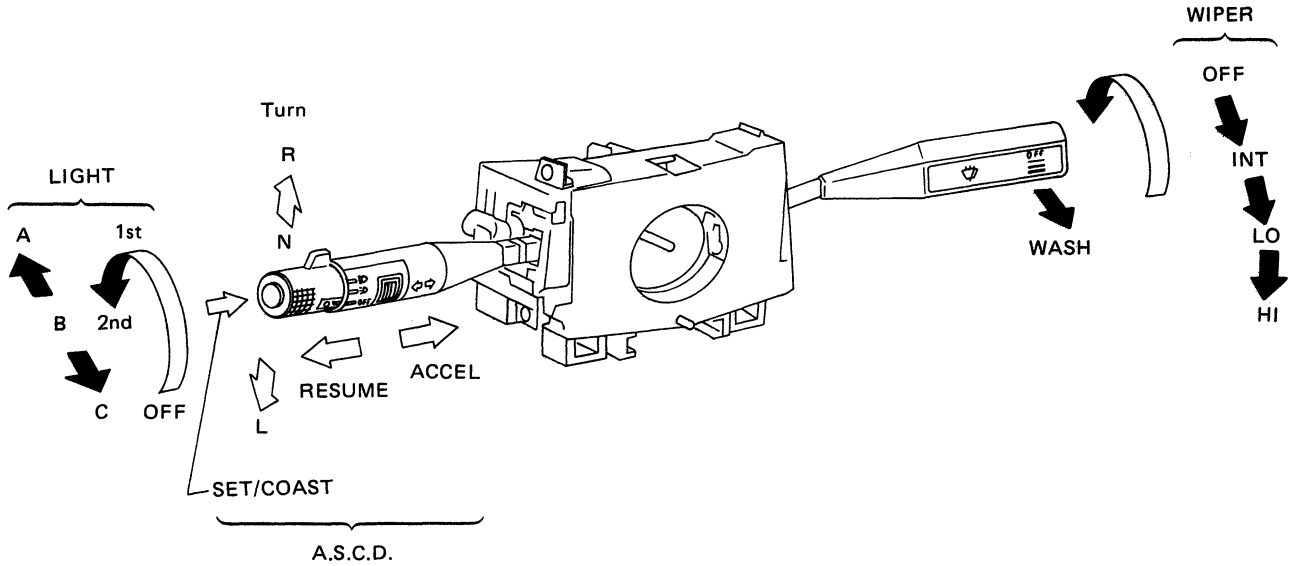

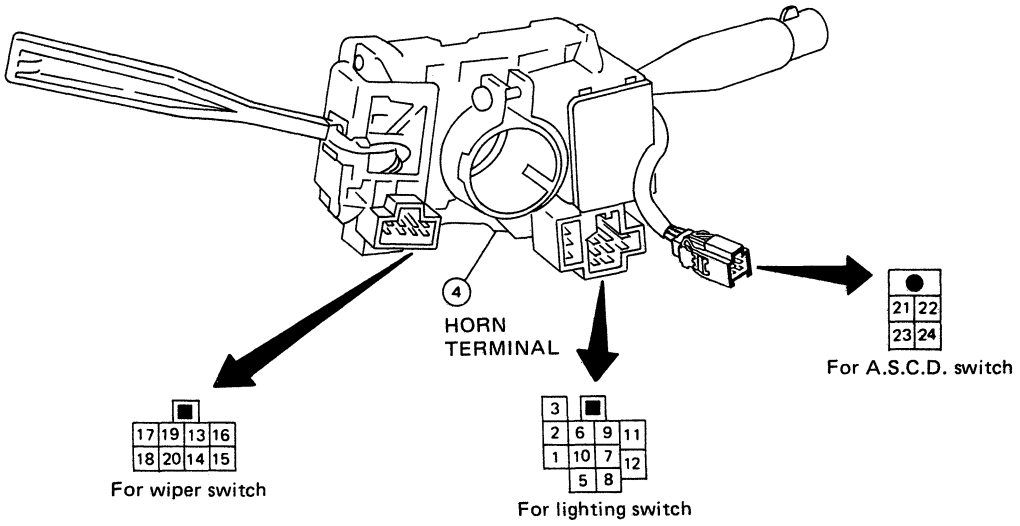

LIGHTING SWITCH

	OFF			1ST			2ND		
	A	B	C	A	B	C	A	B	C
5			○			○	○	○	○
6			○			○	○		○
7								○	
8			○			○	○	○	○
9			○			○	○		○
10								○	
11				○	○	○	○	○	○
12				○	○	○	○	○	○

WIPER SWITCH

	OFF	INT	LO	HI	WASH
13	○	○			
14	○	○	○		
15		○	○	○	
16				○	
17		○	○	○	○
18					○

HORN SWITCH

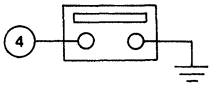

TURN SIGNAL SWITCH

	R	N	L
1	○		○
2	○		
3			○

A.S.C.D. SWITCH

	COAST/SET	RESUME	ACCEL
21	○	○	○
22	○		
23		○	
24			○

SEL714M

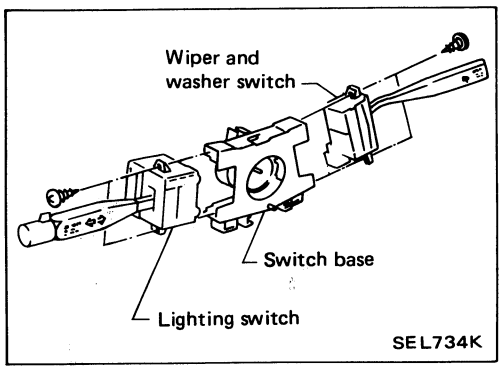

Replacement

- Each switch can be replaced without removing combination switch base.

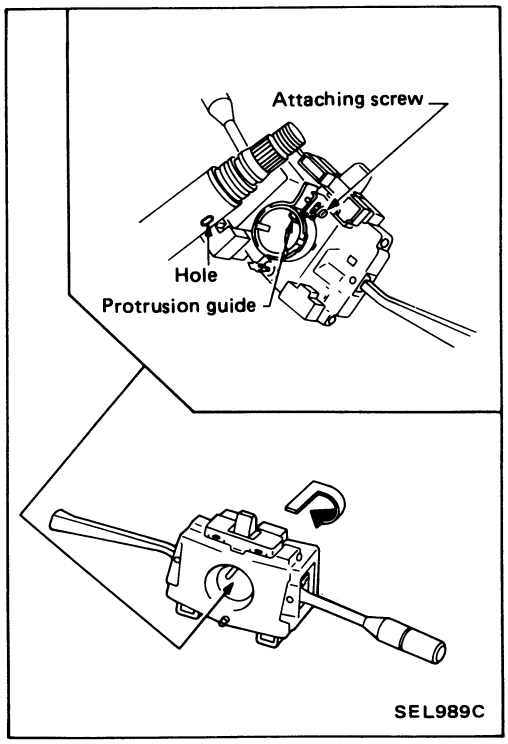

- To remove combination switch base, remove base attaching screw and turn after pushing on it.

Wiring Diagram (Without daytime light system)

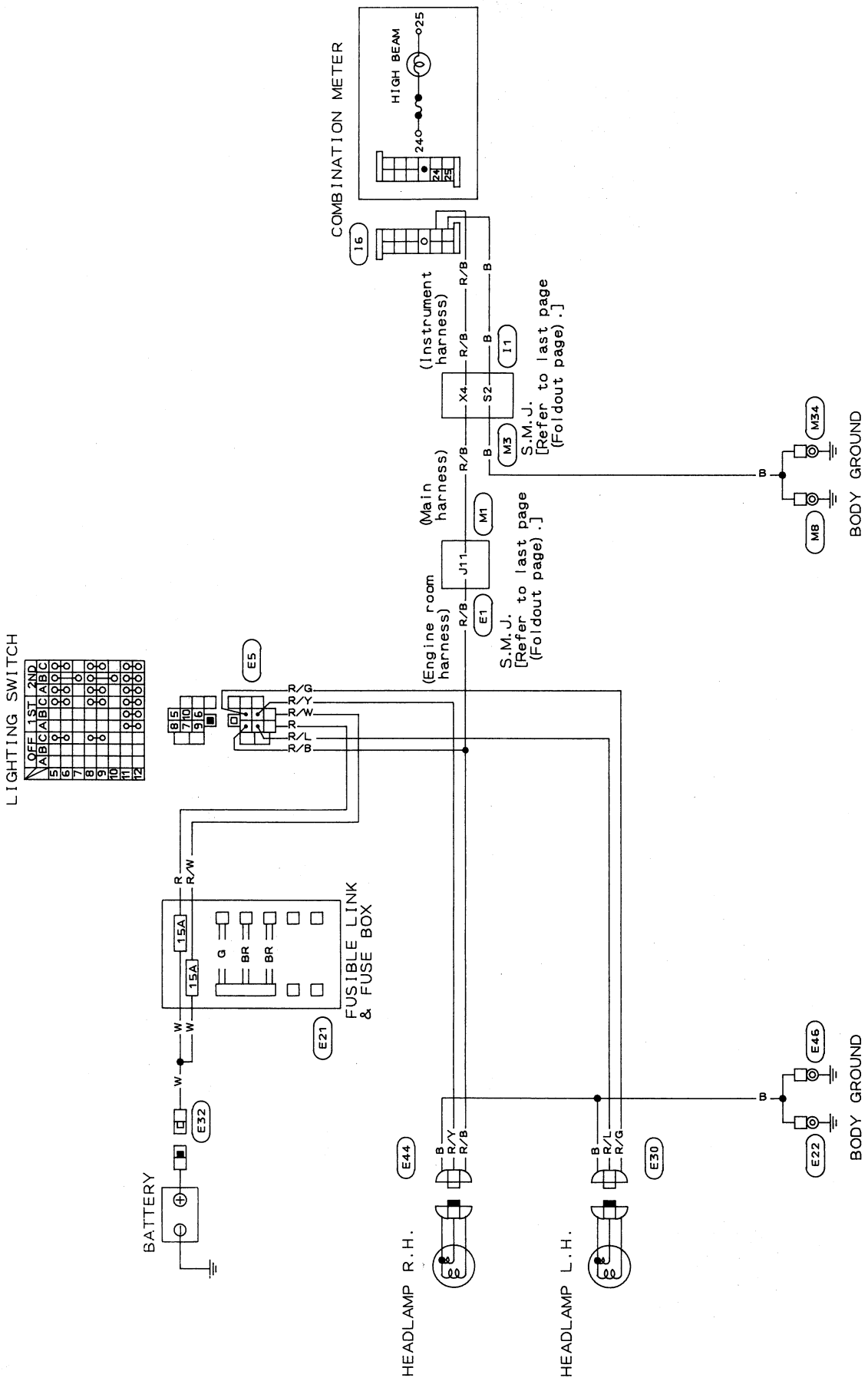

SEL693M

Schematic (Daytime light system equipped model)

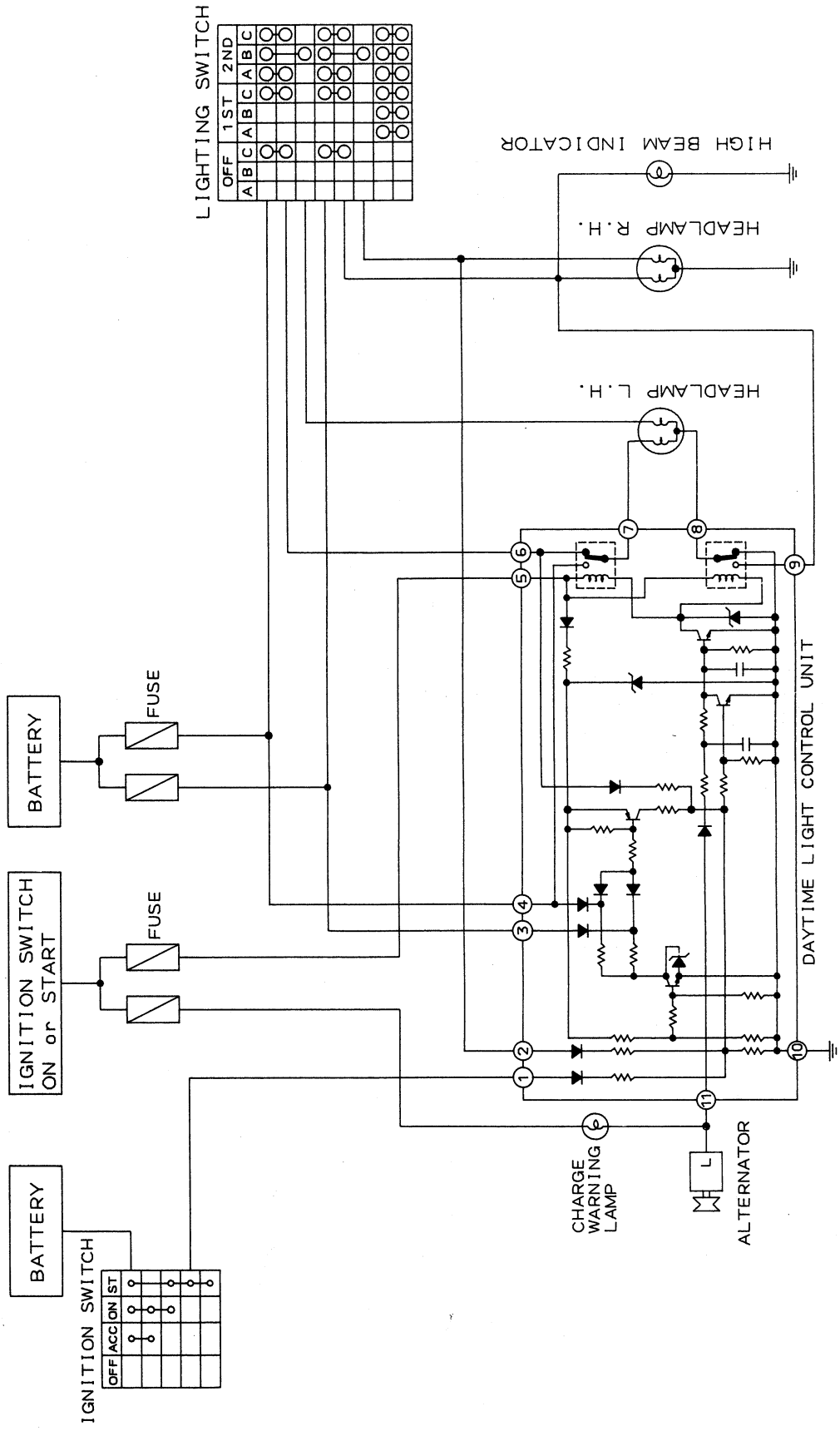

SEL692M

Operation (Daytime light system equipped model)

After starting the engine with the lighting switch in the "OFF" position, the headlamp low beam and clearance, tail, license and instrument illumination lamps automatically turn on. Lighting switch operations other than the above are the same as conventional light systems.

Engine		With engine stopped									With engine running								
Lighting switch		OFF			1ST			2ND			OFF			1ST			2ND		
		A	B	C	A	B	C	A	B	C	A	B	C	A	B	C	A	B	C
Headlamp	High beam	X	X	O	X	X	O	O	X	O	X	X	O	X	X	O	O	X	O
	Low beam	X	X	X	X	X	X	X	O	X	O	O	O	X	X	X	X	O	X
Clearance and tail lamp		X	X	X	O	O	O	O	O	O	O	O	O	O	O	O	O	O	O
License and instrument illumination lamp		X	X	X	O	O	O	O	O	O	O	O	O	O	O	O	O	O	O

O : Lamp "ON"
X : Lamp "OFF"
□ : Added functions

Wiring Diagram (Daytime light system equipped model)

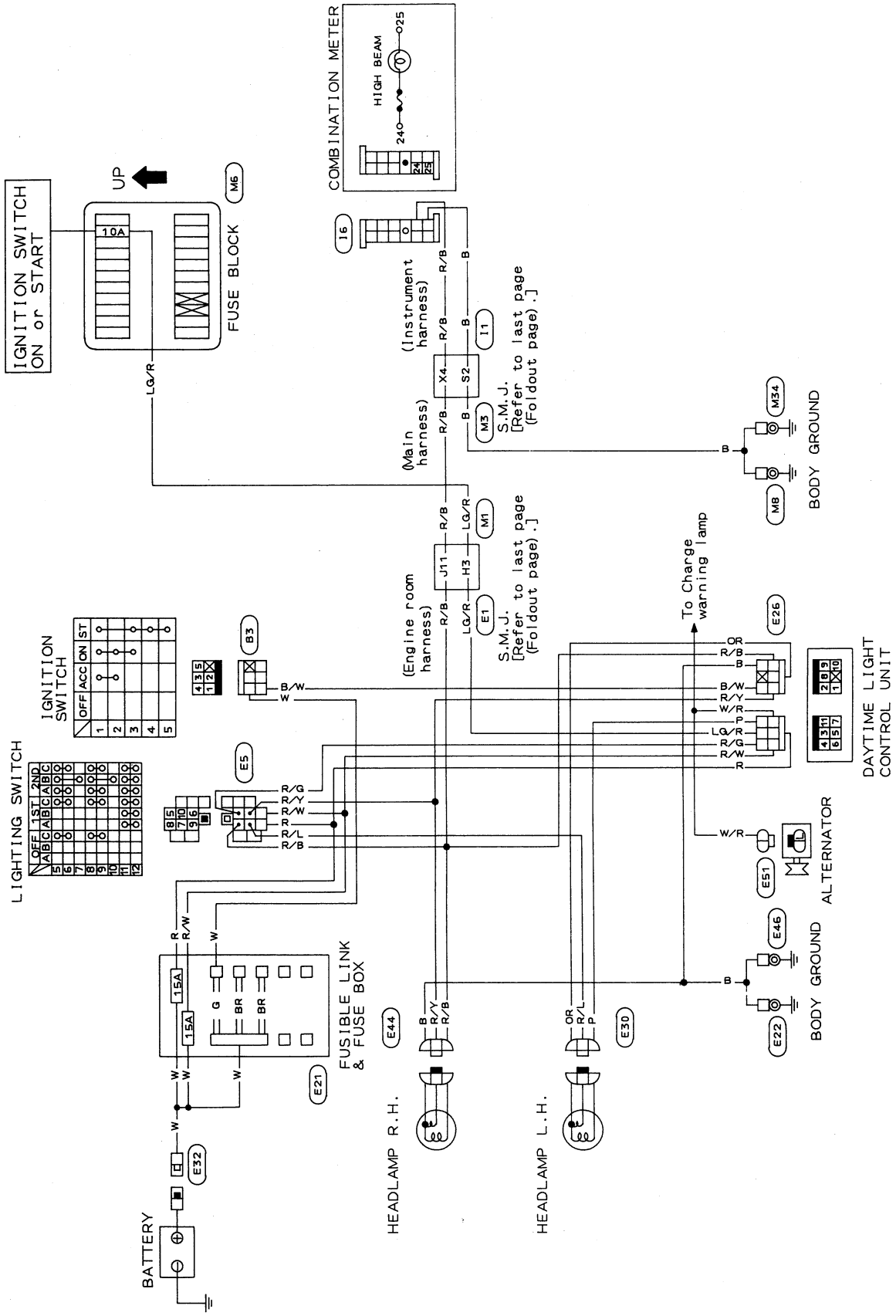

SEL694M

Aiming Adjustment

When performing headlamp aiming adjustment, use an aiming machine, aiming wall screen or headlamp tester. For operating instructions of any aimer, it should be in good repair, calibrated and used according to respective operation manuals supplied with the unit.

If any aimer is not available, aiming adjustment can be done as follows:

For details, refer to the regulations in your own country.

CAUTION:

a. **Keep all tires inflated to correct pressures.**
b. **Place vehicle and tester on one and same flat surface.**
c. **See that there is no load in vehicle (coolant, engine oil filled up to correct level and full fuel tank) other than the driver (or equivalent weight placed in driver's position).**

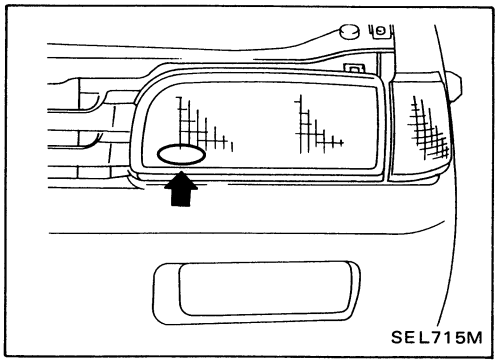

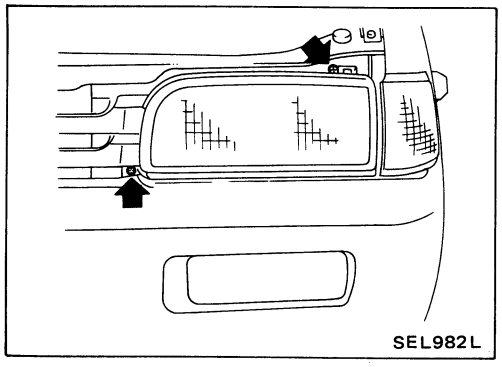

When using a mechanical aimer, adjust adapter legs to the data marked on the headlamps.

Example:

4H2V

- Vertical side: 2
- Horizontal side: 4

LOW BEAM

1. Turn headlamp low beam on.
2. Use adjusting screws to perform aiming adjustment.

- **Before adjusting headlamps, remove covers.**
- **First tighten the adjust screw all the way and then make adjustment by loosening the screw.**

Aiming Adjustment (Cont'd)

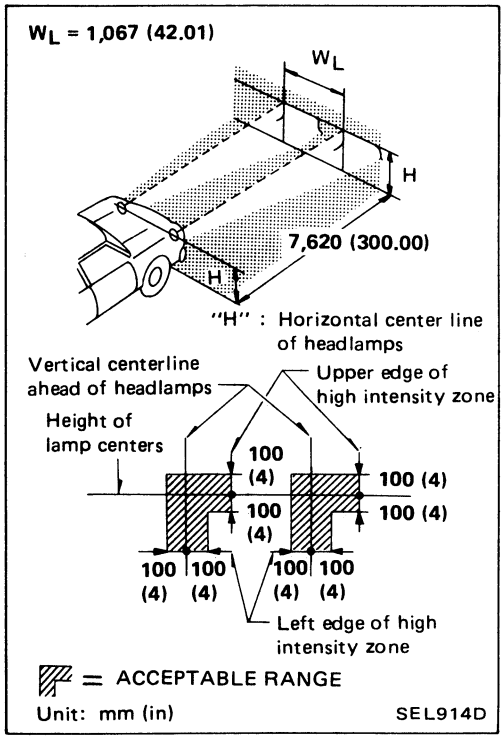

- **Adjust headlamps so that upper edge and left edge of high intensity zone are within the acceptable range as shown at left.**
- **Dotted lines in illustration show center of headlamp.**

"H": Horizontal center line of headlamps

"WL": Distance between each headlamp center

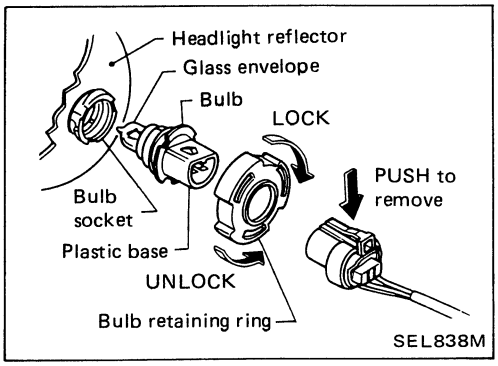

Bulb Replacement

The headlamp is a semi-sealed beam type which uses a replaceable halogen bulb. The bulb can be replaced from the engine compartment side without removing the headlamp body.

- **Grasp only the plastic base when handling the bulb. Never touch the glass envelope.**

1. Disconnect the battery cable.
2. Turn the bulb retaining ring counterclockwise until it is free from the headlight reflector, and then remove it.
3. Disconnect the harness connector from the back side of the bulb.
4. Remove the headlamp bulb carefully. Do not shake or rotate the bulb when removing it.
5. Install in the reverse order of removal.

CAUTION:

- **Do not leave the bulb out of the headlamp reflector for a long period of time as dust, moisture, smoke, etc. may enter the headlamp body and affect the performance of the headlamp. Thus, the headlamp bulb should not be removed from the headlamp reflector until just before a replacement bulb is to be installed.**

Clearance, License and Tail Lamps/Wiring Diagram

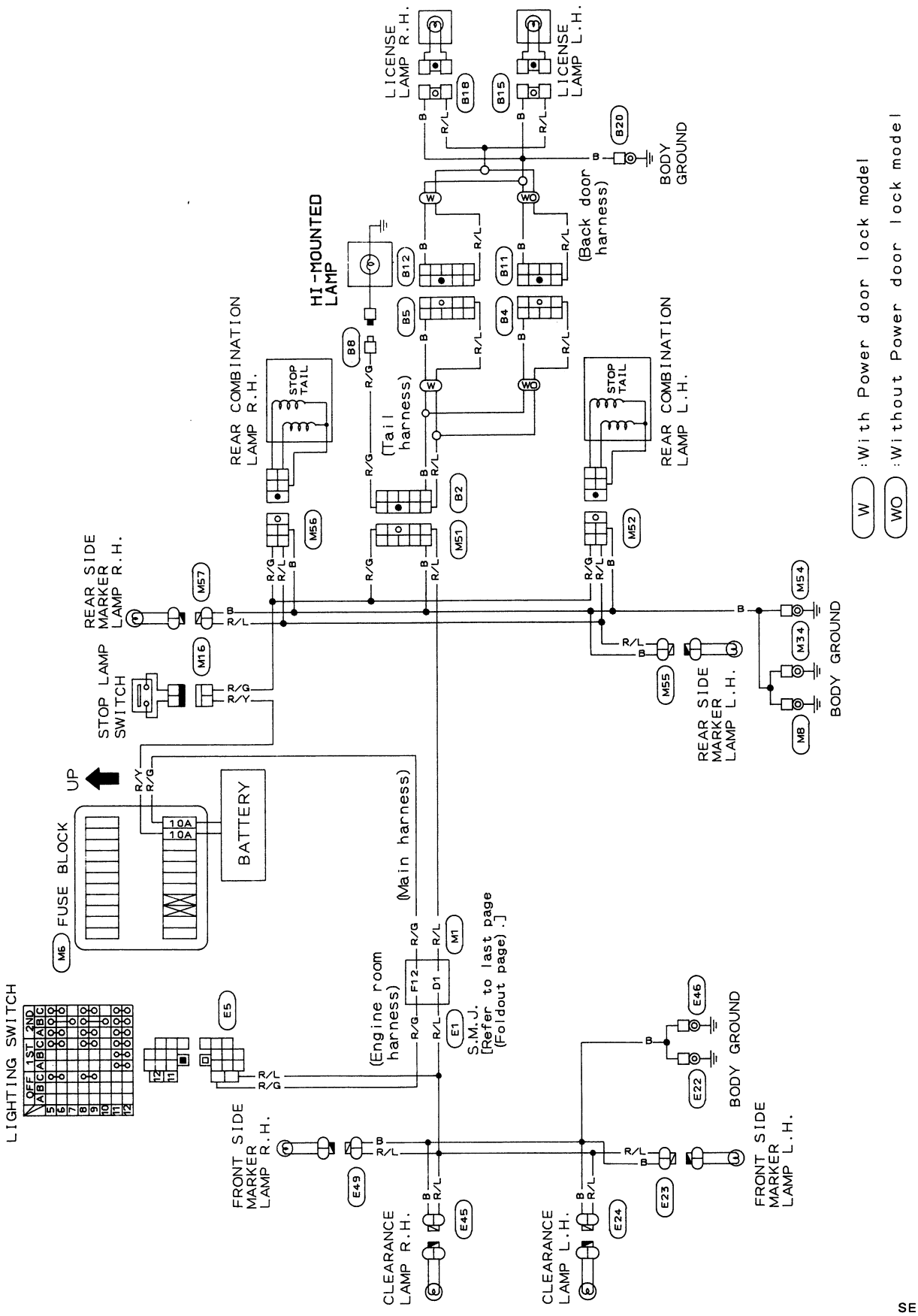

SEL695M

Back-up and Stop Lamps/Wiring Diagram

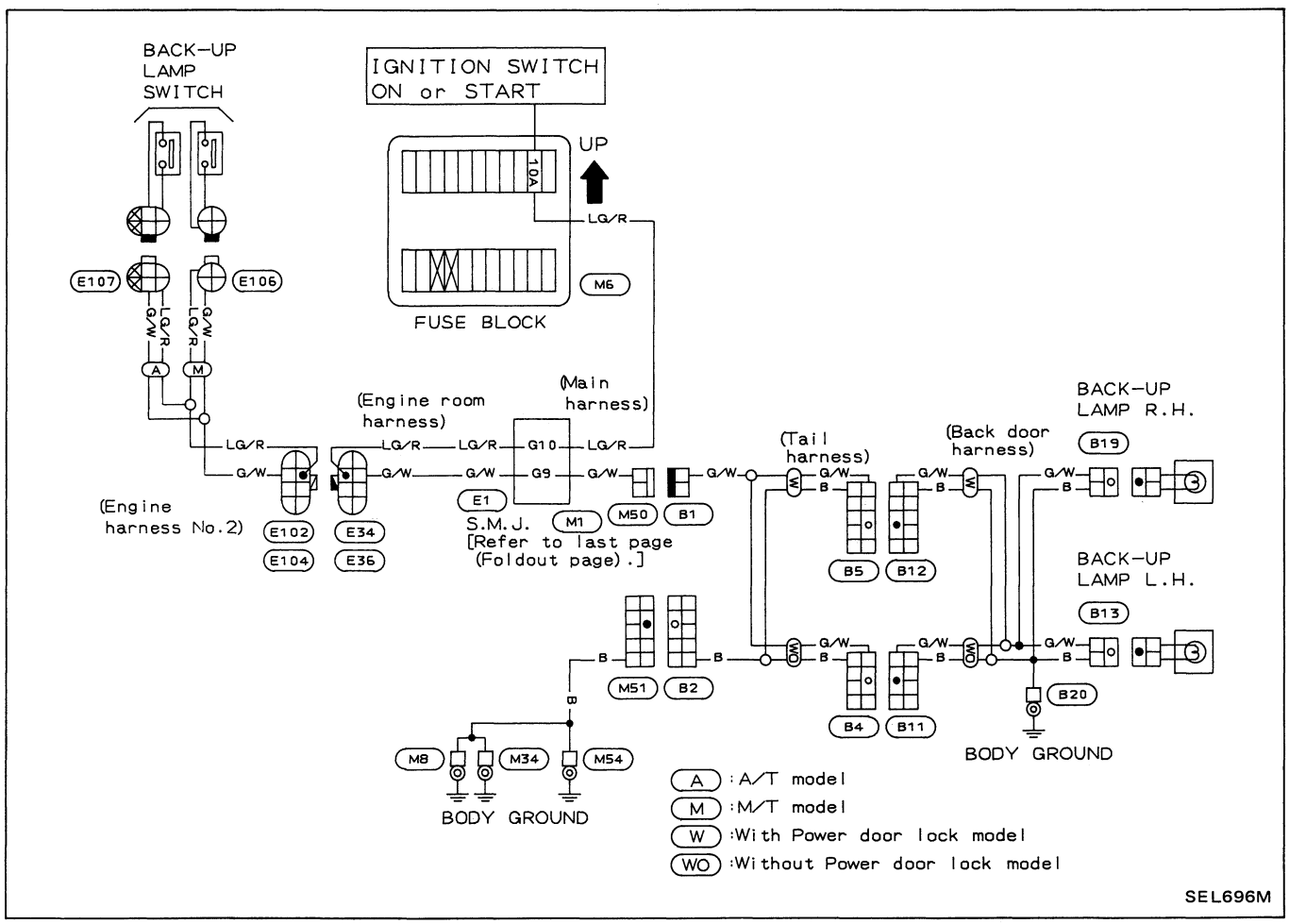

Turn Signal and Hazard Warning Lamps/Wiring Diagram

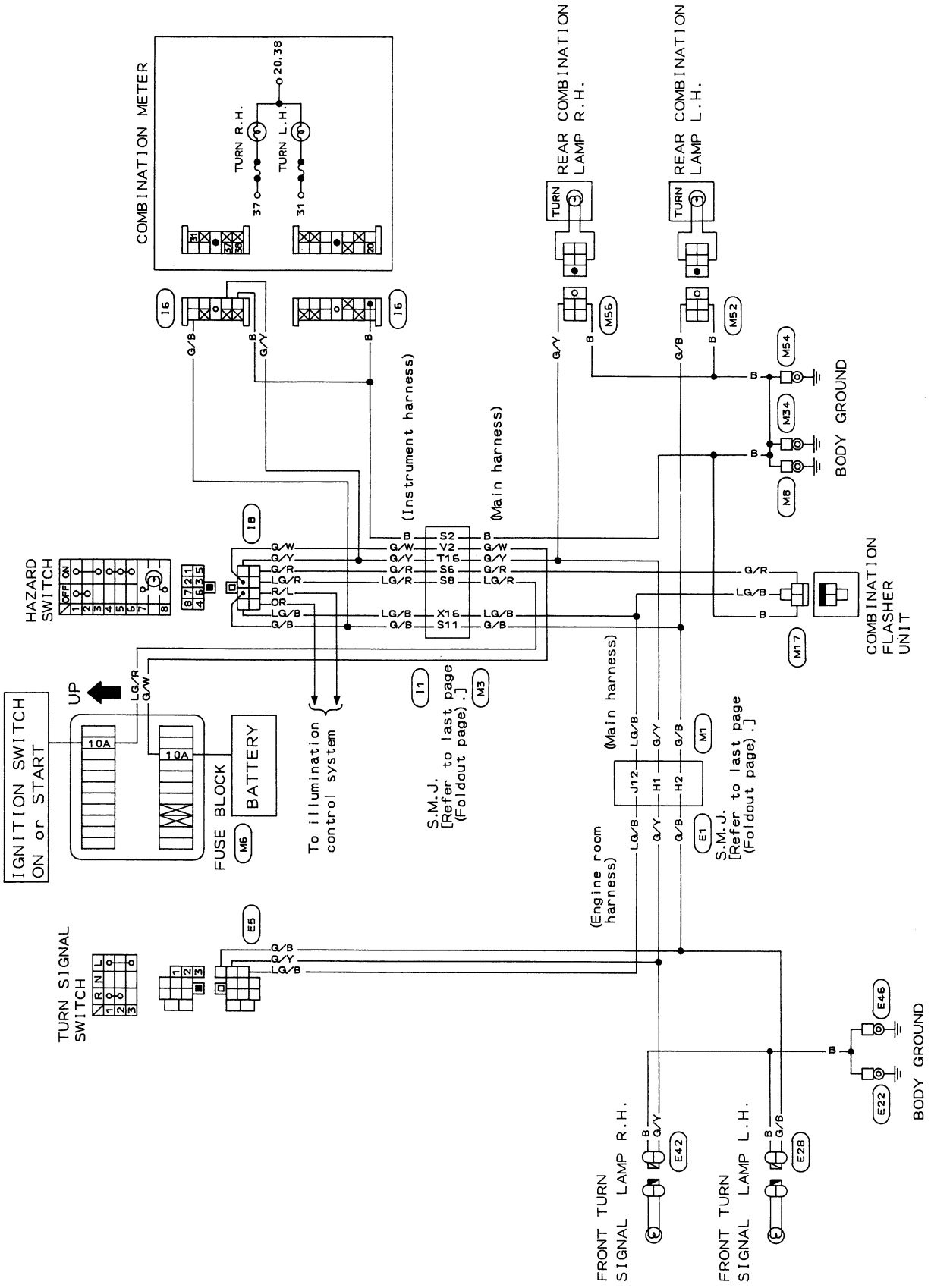

SEL697M

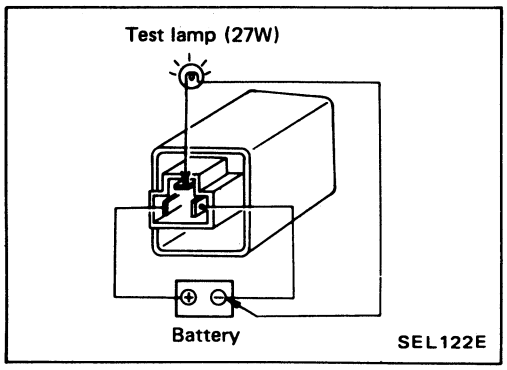

Combination Flasher Unit Check

- Before checking, ensure that bulbs meet specifications.
- Connect a battery and test lamp to the combination flasher unit, as shown. Combination flasher unit is properly functioning if it blinks when power is supplied to the circuit.

Bulb Specifications

Item	Wattage (W)	Bulb No.
Headlamp	65/45	9004
Front clearance lamp	3.8	194
Front turn signal lamp	27	1156
Front side marker lamp	3.8	194
Rear combination lamp		
Turn signal	27	1156
Stop/Tail	27/8	1157
Back-up lamp	27	1156
Rear side marker lamp	3.8	194
License plate lamp	3.8	194
High-mounted stop lamp	27	1156
Interior lamp	10	
Spot lamp	8	

Illumination/Wiring Diagram

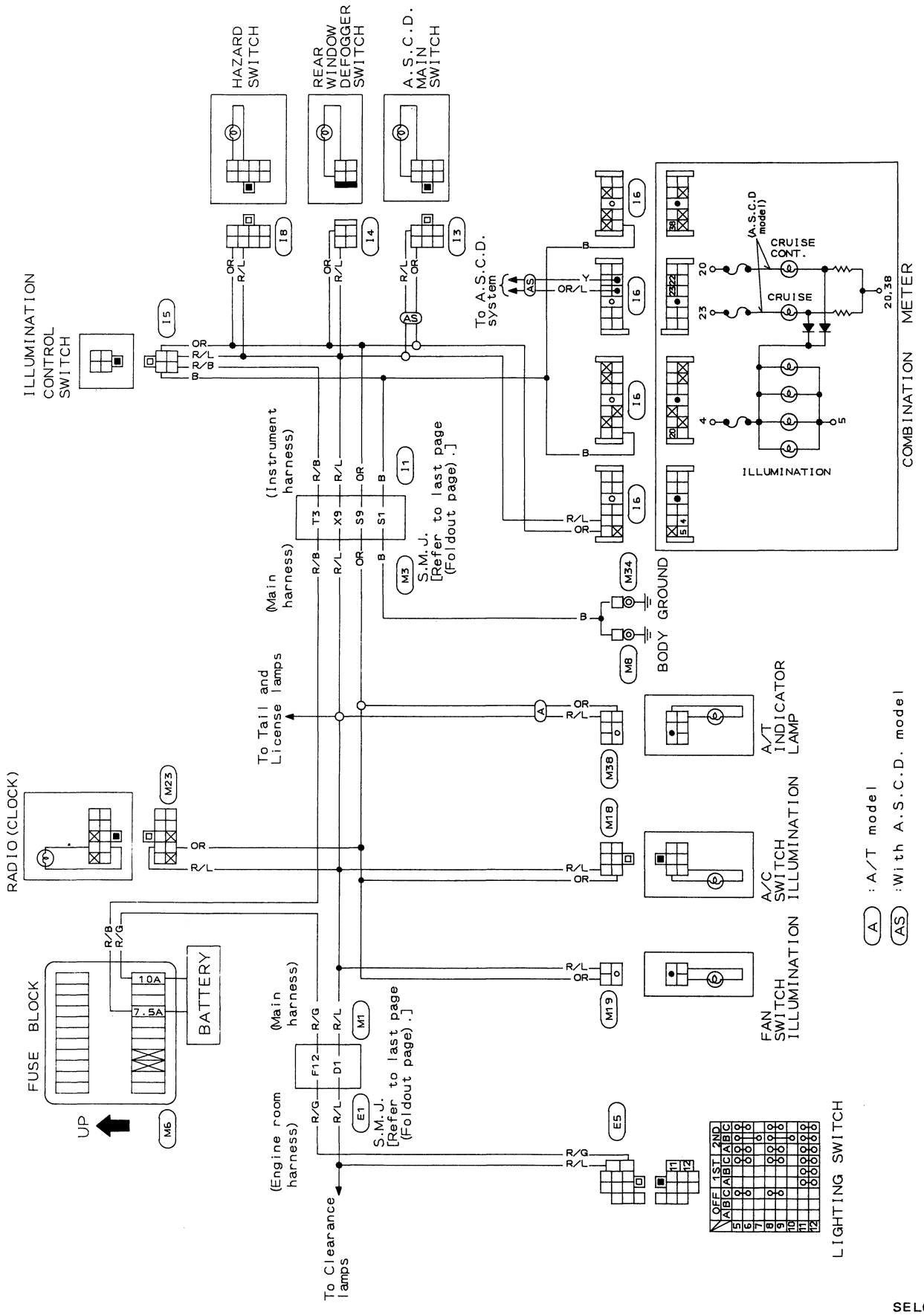

SEL698M

Room Lamp/Wiring Diagram

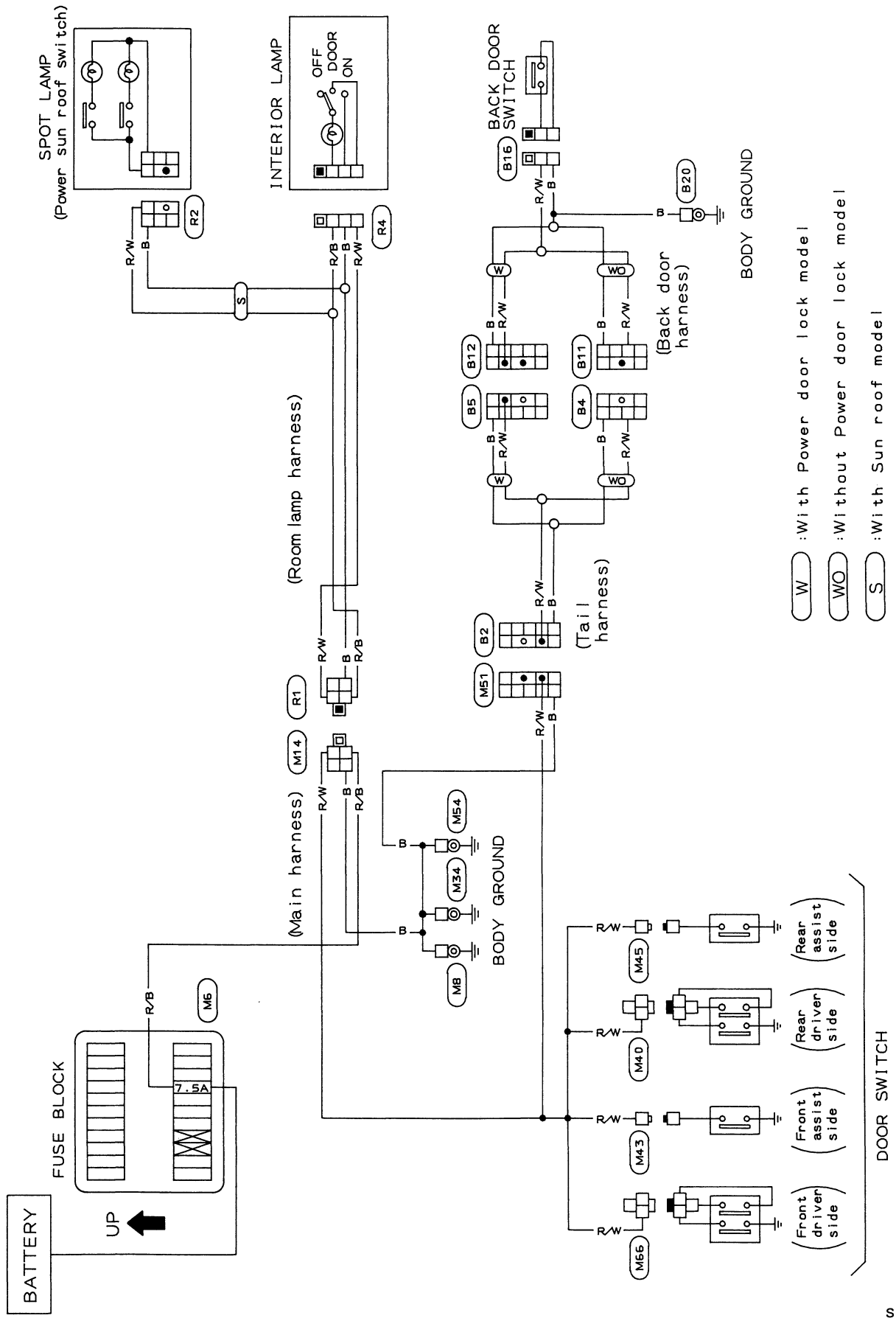

SEL699M

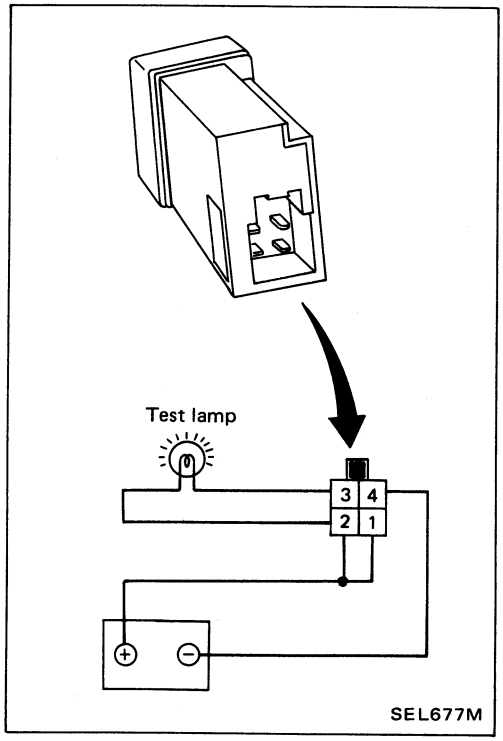

Illumination Control Switch Check

Connect as shown in the figure.
Check if test lamp darkens when DARK switch is pushed, and if it brightens when BRIGHT switch is pushed.

Combination Meter

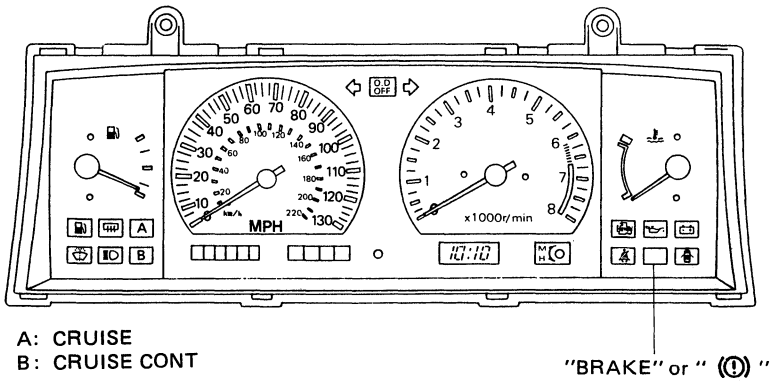

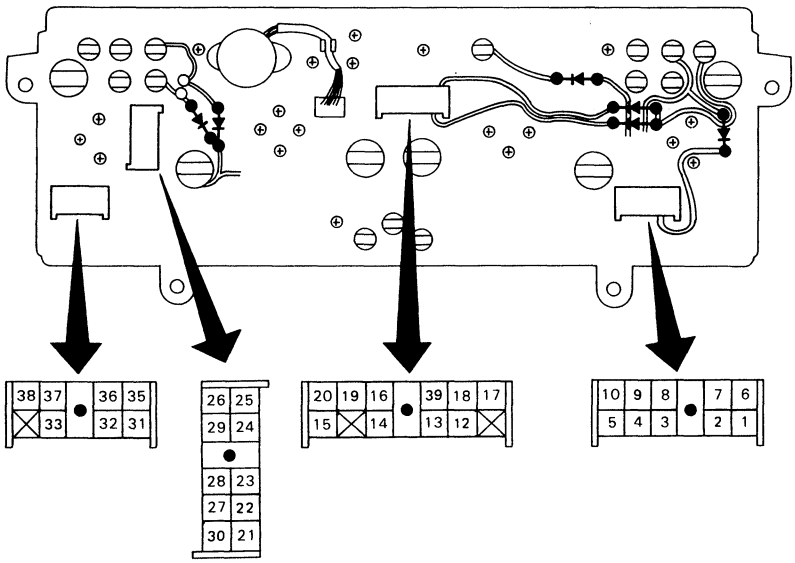

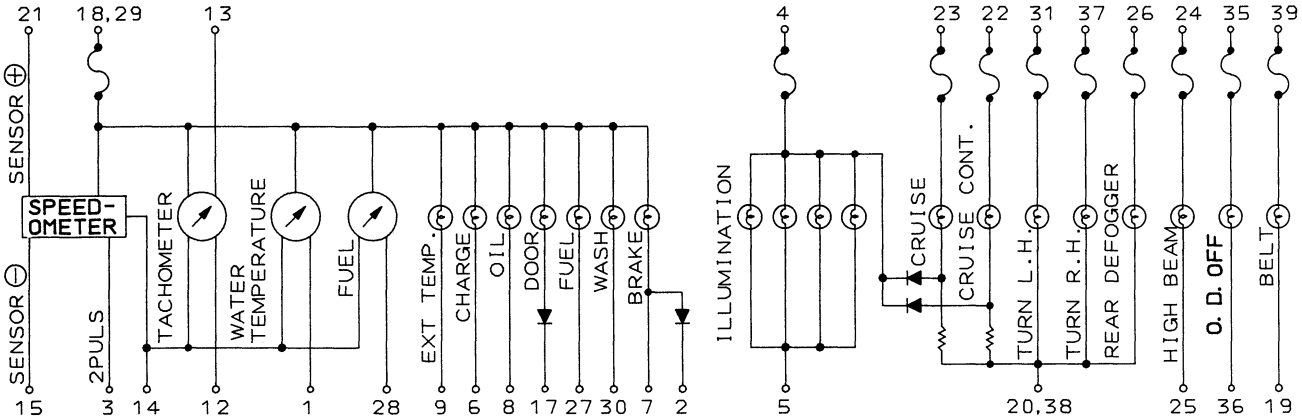

SEL716M

Speedometer, Tachometer, Temp. and Fuel Gauges/Wiring Diagram

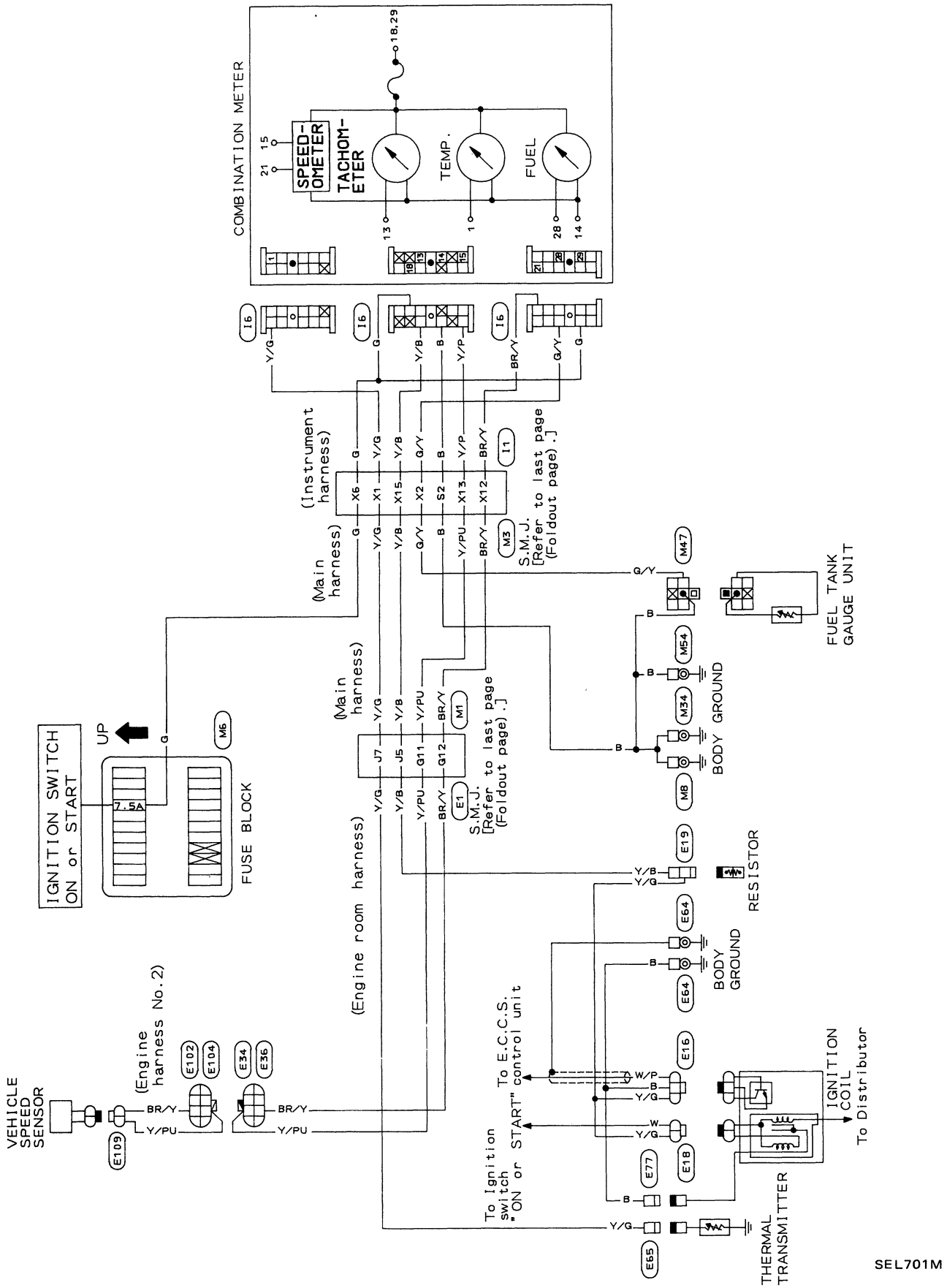

SEL701M

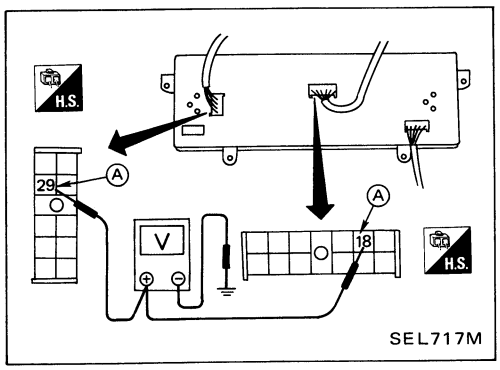

SEL717M

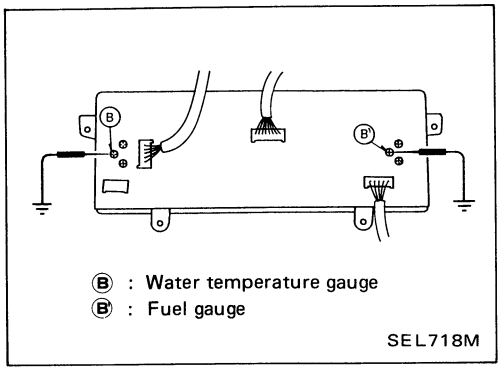

SEL718M

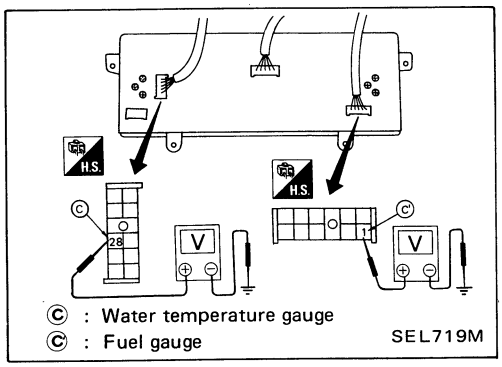

SEL719M

Inspection/Fuel Gauge and Water Temperature Gauge

INSPECTION START

O.K.

CHECK POWER SOURCE.
1) Turn ignition switch "ON".
2) Check voltage between terminal Ⓐ and ground.
Battery voltage should exist.

N.G. → Check the following items.
1) Harness continuity between battery terminal and combination meter
2) Ignition relay
3) Fusible link and fuse
4) Ignition switch

O.K.

CHECK GAUGE OPERATION.
1) Turn ignition switch "ON".
2) Connect terminals Ⓑ (Fuel), Ⓑ' (Temp.) and ground with wire for **less than 10 seconds.**
3) Check operation of gauge.
Gauge should move smoothly to full scale.

N.G. → Repair or replace gauge.

O.K.

Check harness continuity between component and combination meters Ⓒ (Fuel), Ⓒ' (Temp.).

N.G. → Repair or replace.

O.K.

CHECK COMPONENT.
Check gauge units and harness.
Refer to "Fuel Tank Gauge Unit Check" or "Thermal Transmitter Check".

N.G. → Repair or replace.
Refer to FE section. (Fuel gauge)

O.K.

Reinstall any part removed.

INSPECTION END

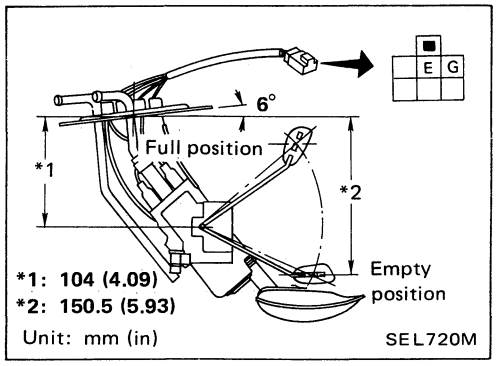

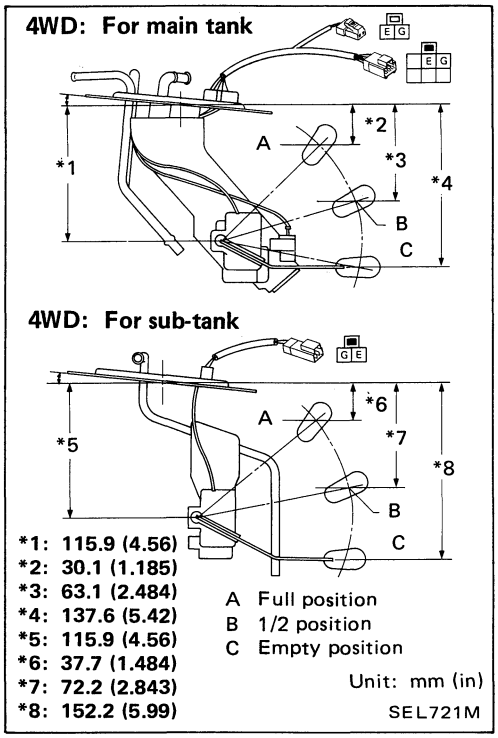

Fuel Tank Gauge Unit Check

- For removal, refer to FE section. Check the resistance between terminals Ⓖ and Ⓔ.

2WD

Ohmmeter (+)	Ohmmeter (–)	Float position	Resistance value (Ω)
G	E	Full*	Approx. 1.3 - 5.7
		1/2	Approx. 26.8 - 33.2
		Empty*	Approx. 75.3 - 84.8

*: When float rod is in contact with stopper.

4WD

Ohmmeter (+)	Ohmmeter (–)	Float position		Resistance value (Ω)
G	E	Full*	Main	Approx. 11.5 - 13.5
			Sub	Approx. 7.4 - 9.2
		1/2	Main	Approx. 48.5 - 59.1
			Sub	Approx. 48.0 - 58.6
		Empty*	Main	Approx. 190.8 - 207.0
			Sub	Approx. 132.4 - 143.8

*: When float rod is in contact with stopper.

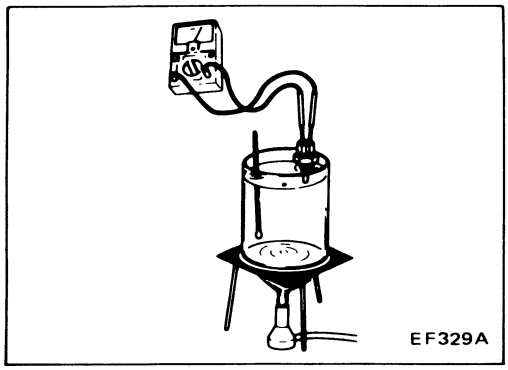

Thermal Transmitter Check

Check the resistance between the terminals of thermal transmitter and body ground.

Water temperature	Resistance
60°C (140°F)	Approx. 70 - 90Ω
100°C (212°F)	Approx. 20 - 24Ω

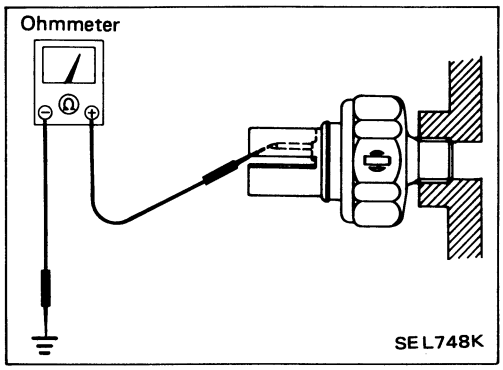

Oil Pressure Switch Check

Check the continuity between the terminals of oil pressure switch and body ground.

	Oil pressure kPa (kg/cm^2, psi)	Continuity
Engine start	More than 10 - 20 (0.1 - 0.2, 1.4 - 2.8)	No
Engine stop	Less than 10 - 20 (0.1 - 0.2, 1.4 - 2.8)	Yes

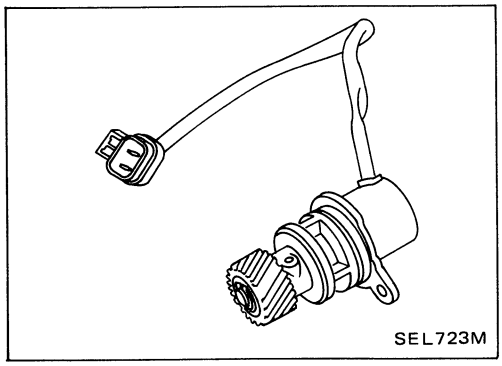

Speed Sensor Signal Check

1. Remove speed sensor from transaxle.
   Location: Refer to "Location of Electrical Units."
2. Turn speedometer pinion quickly and measure voltage across ⓐ and ⓑ.

Warning Lamps and Buzzer/Schematic

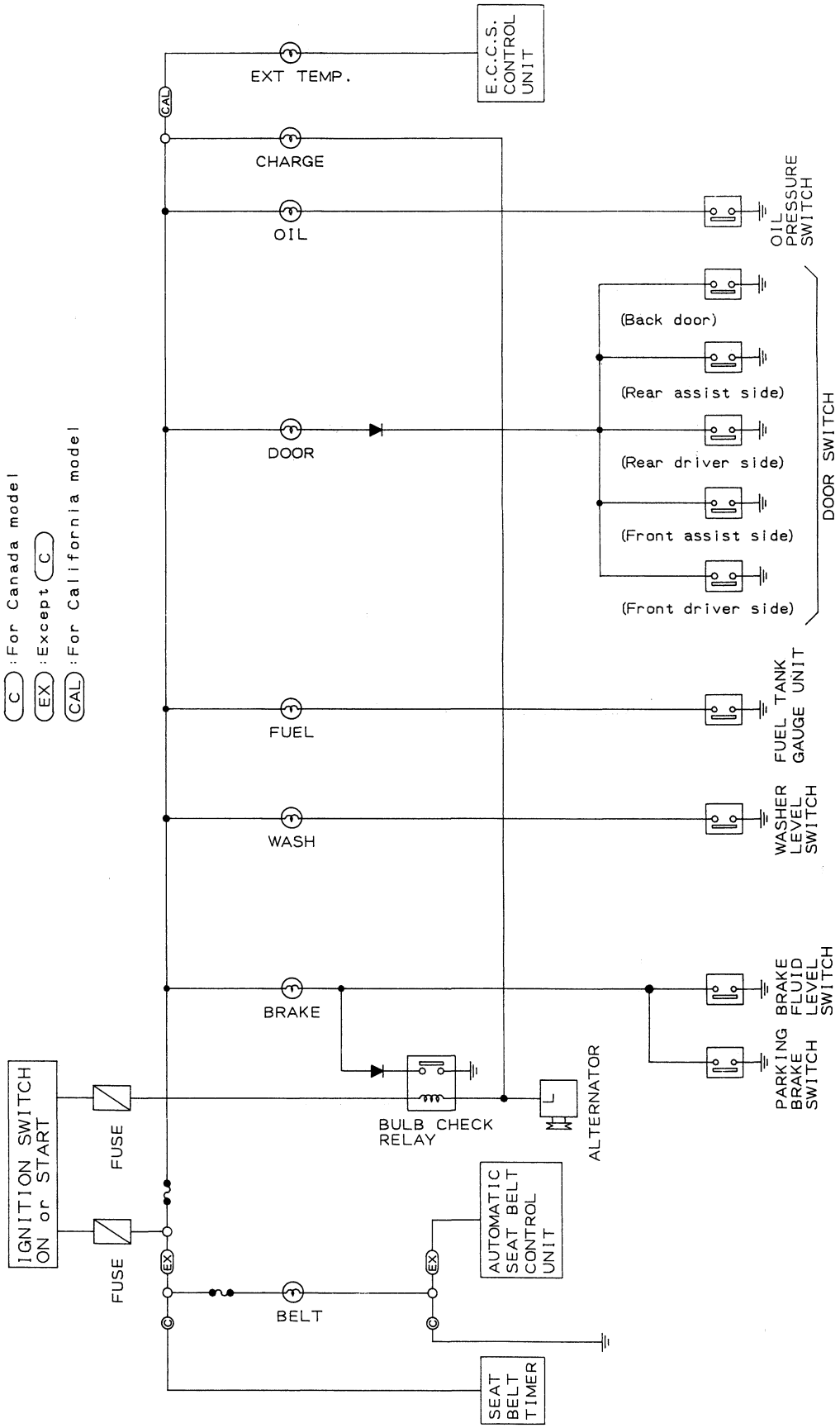

SEL702M

Warning Lamps/Wiring Diagram

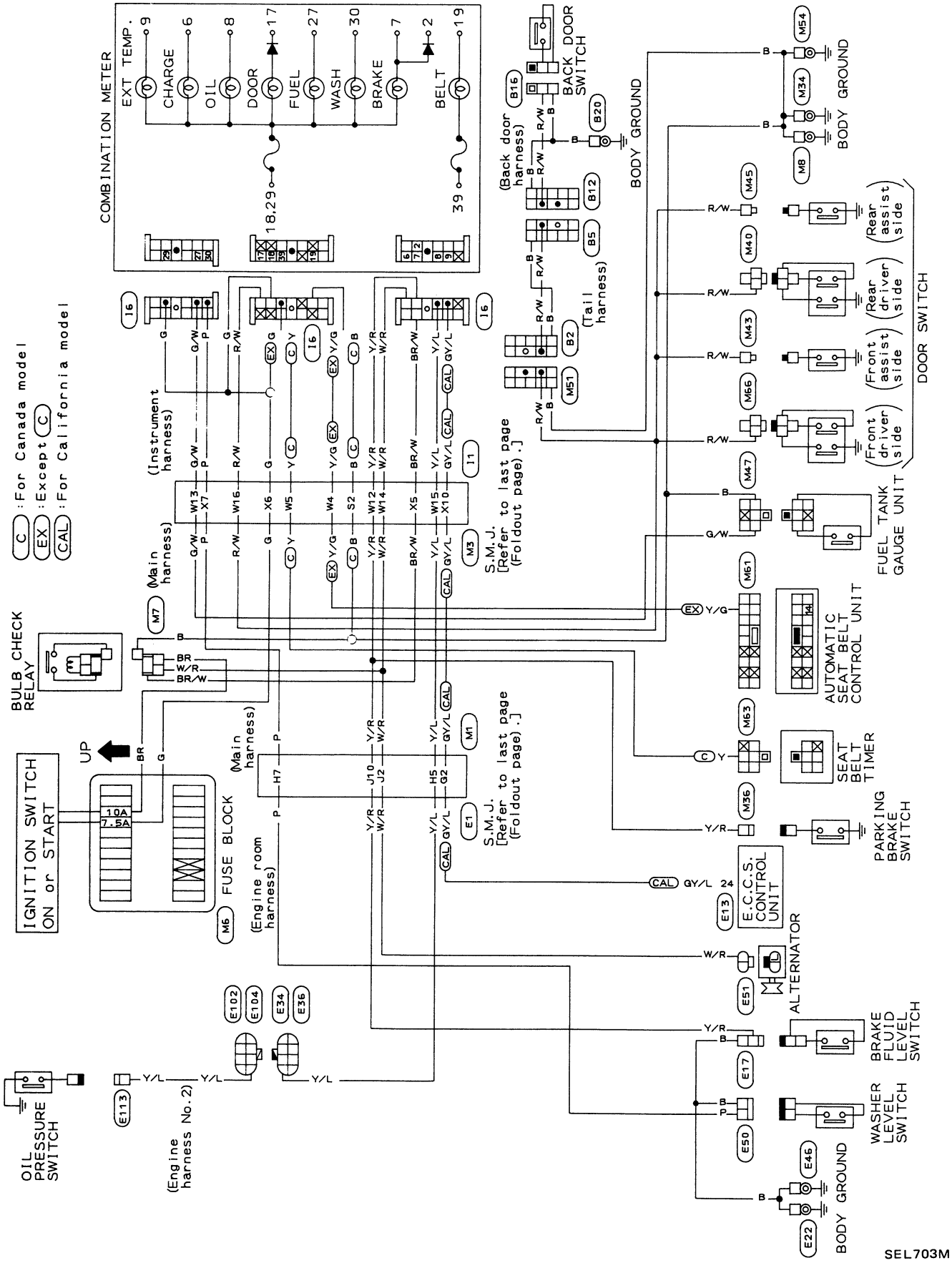

SEL703M

Warning Chime/Wiring Diagram

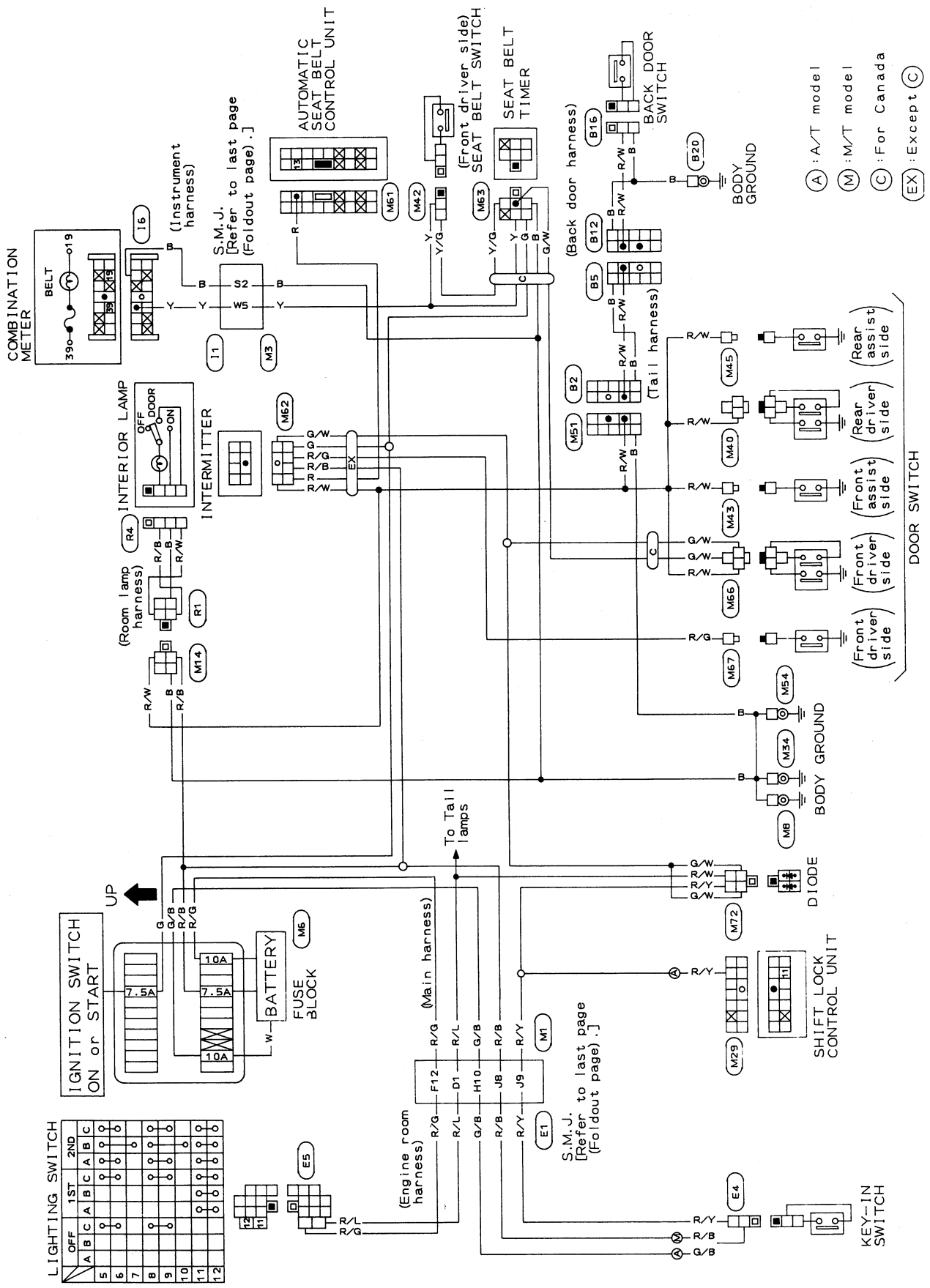

SEL704M

Warning Buzzer/Wiring Diagram

FUEL LID WARNING BUZZER

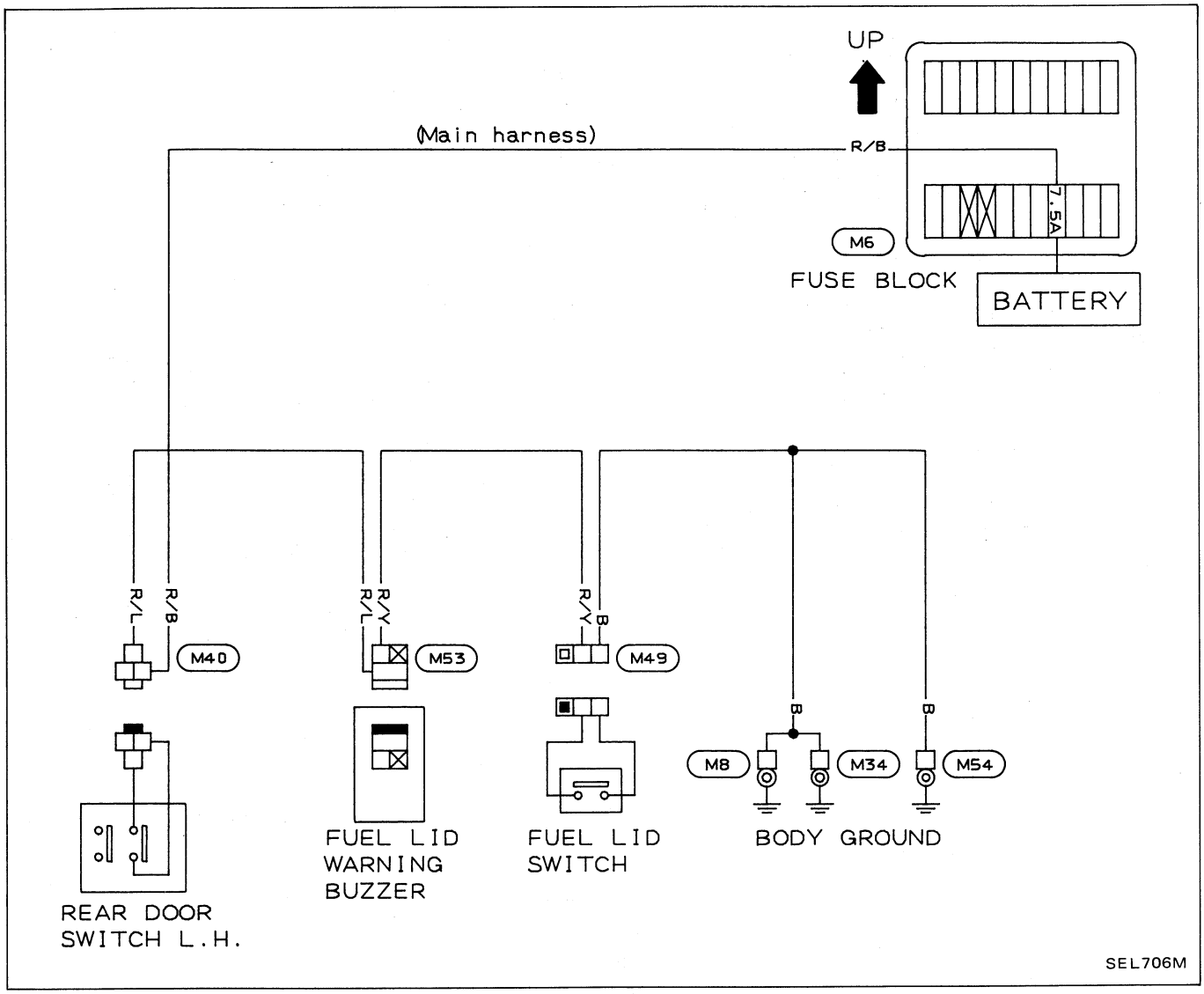

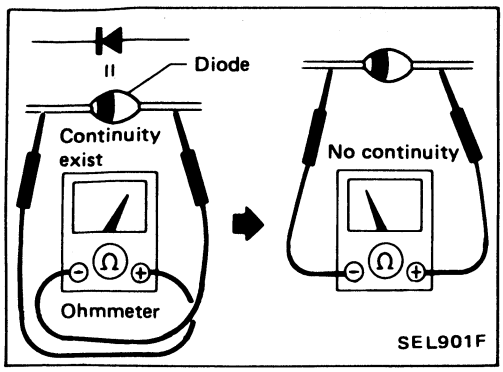

Diode Check

- Check continuity using an ohmmeter.
- Diode is functioning properly if test results are as shown in the figure.

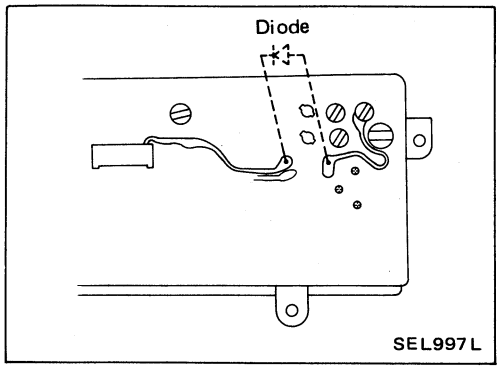

- Diodes for warning lamps are built into the combination meter printed circuit.
  Refer to "Combination Meter" of METER AND GAUGES.

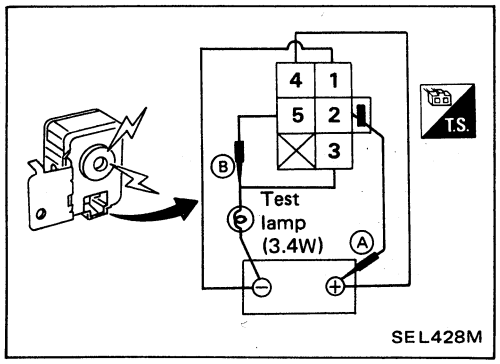

Seat Belt Timer Check

Connect as shown in the figure.

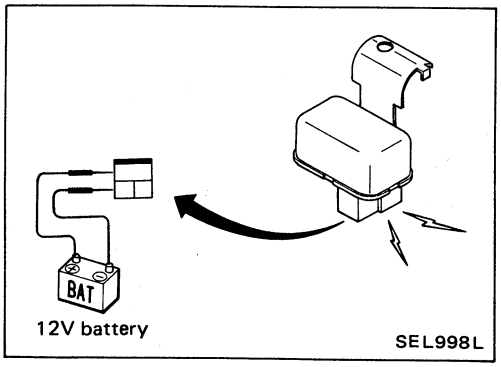

Warning Buzzer Check

Front Wiper and Washer/Wiring Diagram

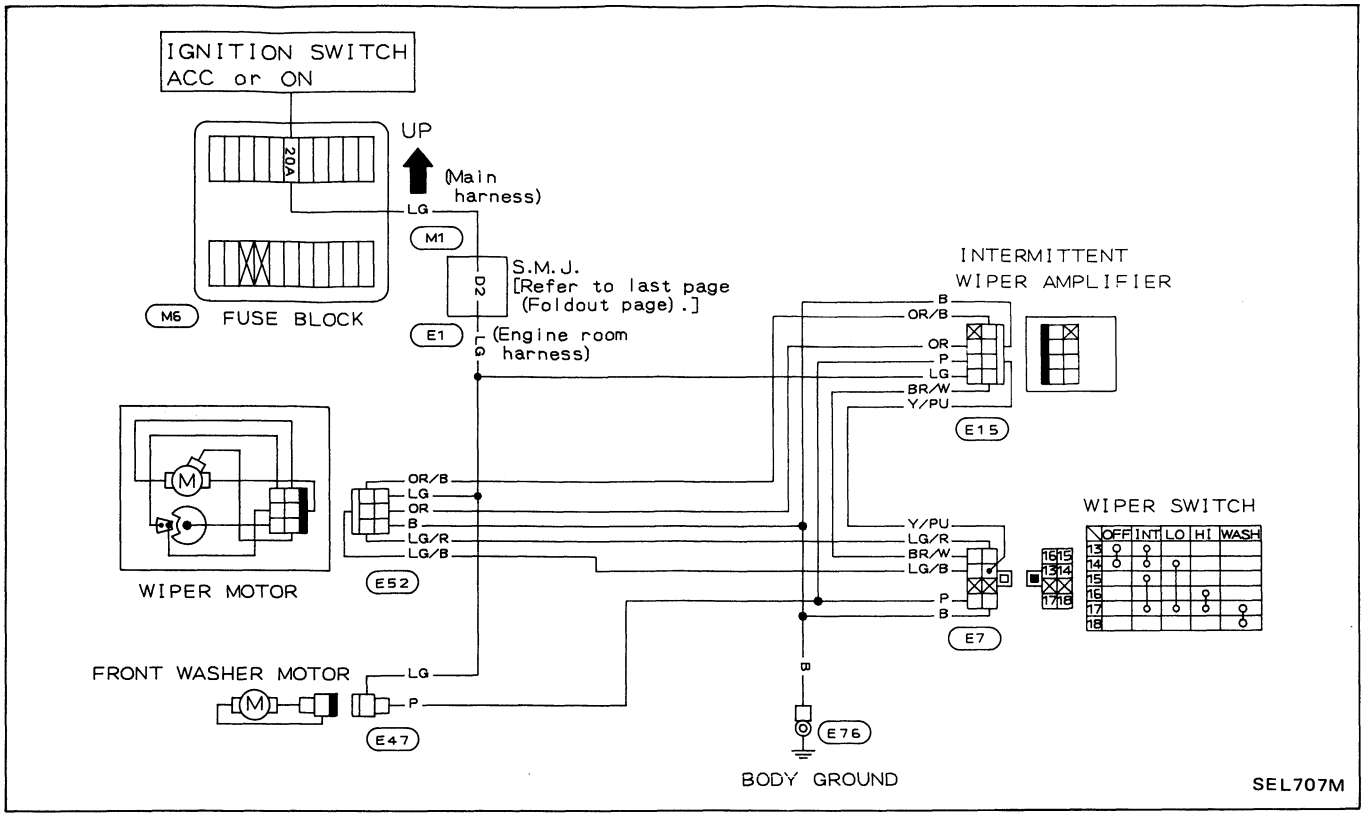

Rear Wiper and Washer/Wiring Diagram

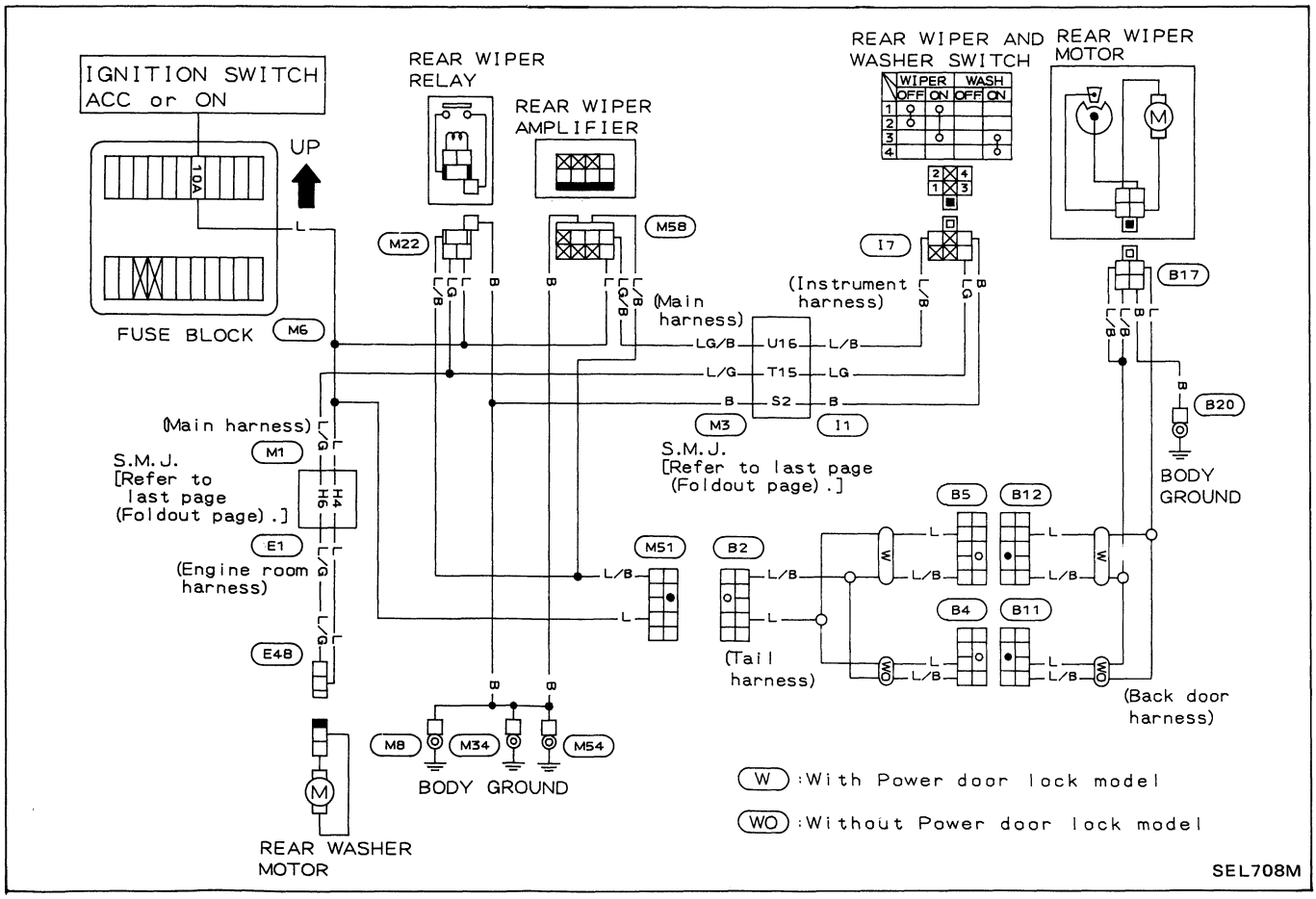

Wiper Removal and Installation

26 - 32 (2.7 - 3.3, 20 - 24)

26 - 32 (2.7 - 3.3, 20 - 24)

Motor link ball joint

Wiper arm link end

Retainer

Connect these links. Turn ball joint to align retainer pawl with "⊔" on arm link before insertion.

: N·m (kg-m, ft-lb)

SEL724M

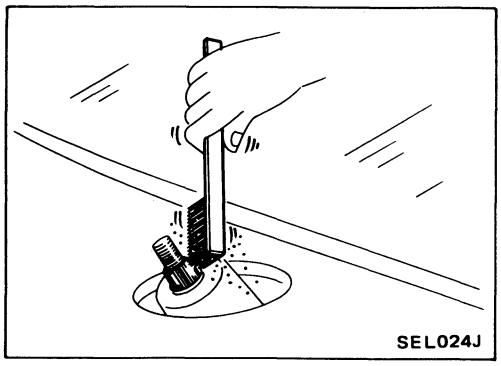

SEL024J

- **Before reinstalling wiper arm, clean up the pivot area as illustrated. This will reduce possibility of wiper arm looseness.**

Wiper Removal and Installation (Cont'd)

INSTALLATION

1. Prior to wiper arm installation, turn on wiper switch to operate wiper motor and then turn it "OFF" (Auto Stop).
2. Lift the blade up and then set it down onto glass surface to set the blade center to clearance "C", "D", "E" or "F" immediately before tightening nut.
3. Eject washer fluid. Turn on wiper switch to operate wiper motor and then turn it "OFF".
4. Ensure that wiper blades stop within clearance "C", "D", "E" or "F".
   Clearance "C": 0 - 10 mm (0 - 0.39 in)
   Clearance "D": 49 - 59 mm (1.93 - 2.32 in)
   Clearance "E": 35 - 45 mm (1.38 - 1.77 in)
   Clearance "F": 24 mm (0.94 in)

- Tighten windshield wiper arm nuts to specified torque.
  Front wiper:
  26 - 32 N•m (2.7 - 3.3 kg-m, 20 - 24 ft-lb)
  Rear wiper:
  6.4 - 12.3 N•m (0.65 - 1.25 kg-m, 4.7 - 9.0 ft-lb)

Front wiper and washer

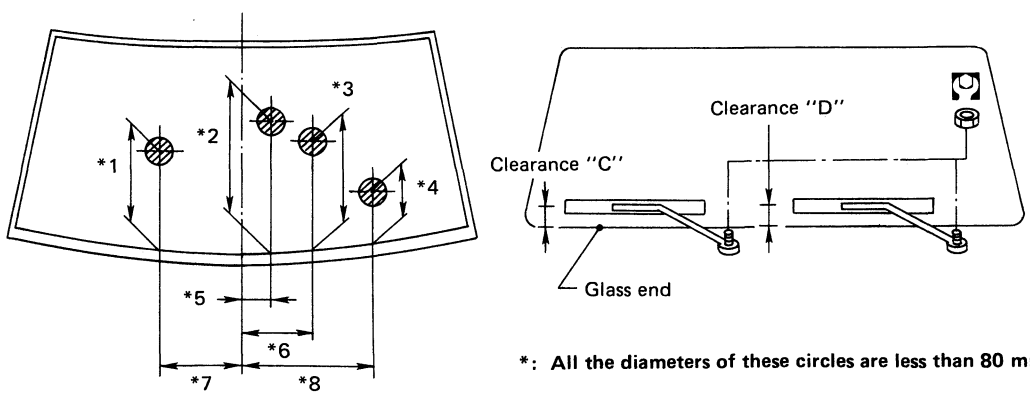

Unit: mm (in)

*1:	420 (16.54)
*2:	450 (17.72)
*3:	440 (17.32)
*4:	250 (9.84)
*5:	20 (0.79)
*6:	180 (7.09)
*7:	350 (13.78)
*8:	400 (15.75)

***: All the diameters of these circles are less than 80 mm (3.15 in).**

SEL725M

Rear wiper and washer

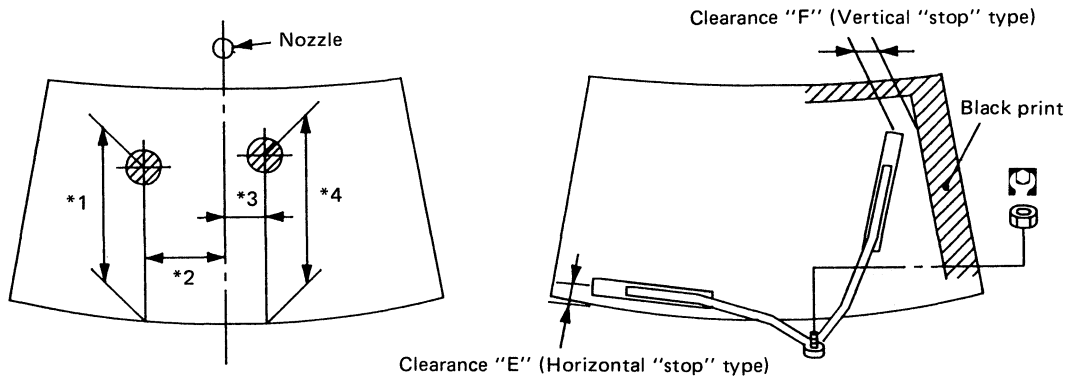

*1:	455 (17.91)
*2:	146 (5.75)
*3:	20 (0.79)
*4:	460 (18.11)

Unit: mm (in)

***: All the diameters of these circles are less than 80 mm (3.15 in).**

SEL726M

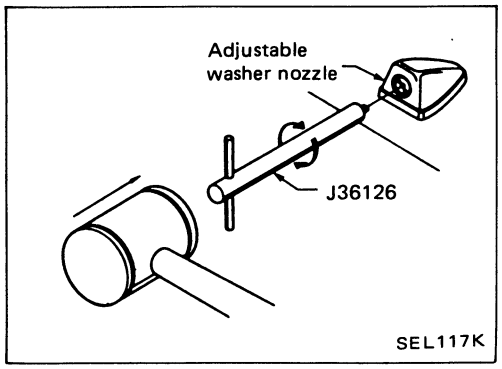

Washer Nozzle Adjustment

- Using Tool J36126, adjust windshield washer nozzle to correct its spray pattern.

Before attempting to turn the nozzle, gently tap the end of the tool to free the nozzle.
This will prevent "rounding out" the small female square in the center of the nozzle.

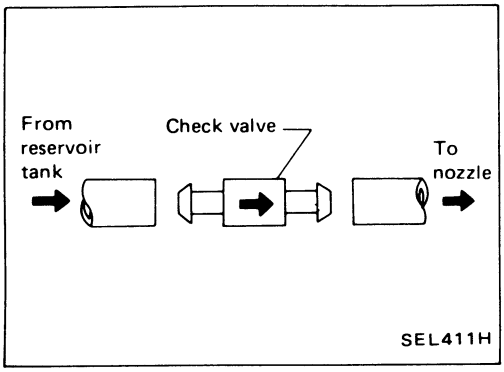

Check Valve

- A check valve is provided in the washer fluid line. Be careful not to connect check valve to washer tube in the wrong direction.

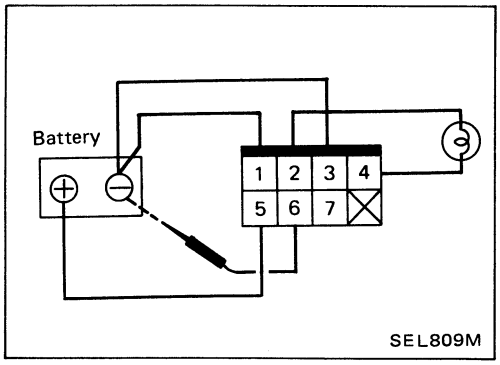

Wiper Amplifier Check

1. Connect as shown in the figure to the left.
2. If test lamp comes on when connected to terminal ⑥ and battery ground, wiper amplifier is normal.

Wiring Diagram

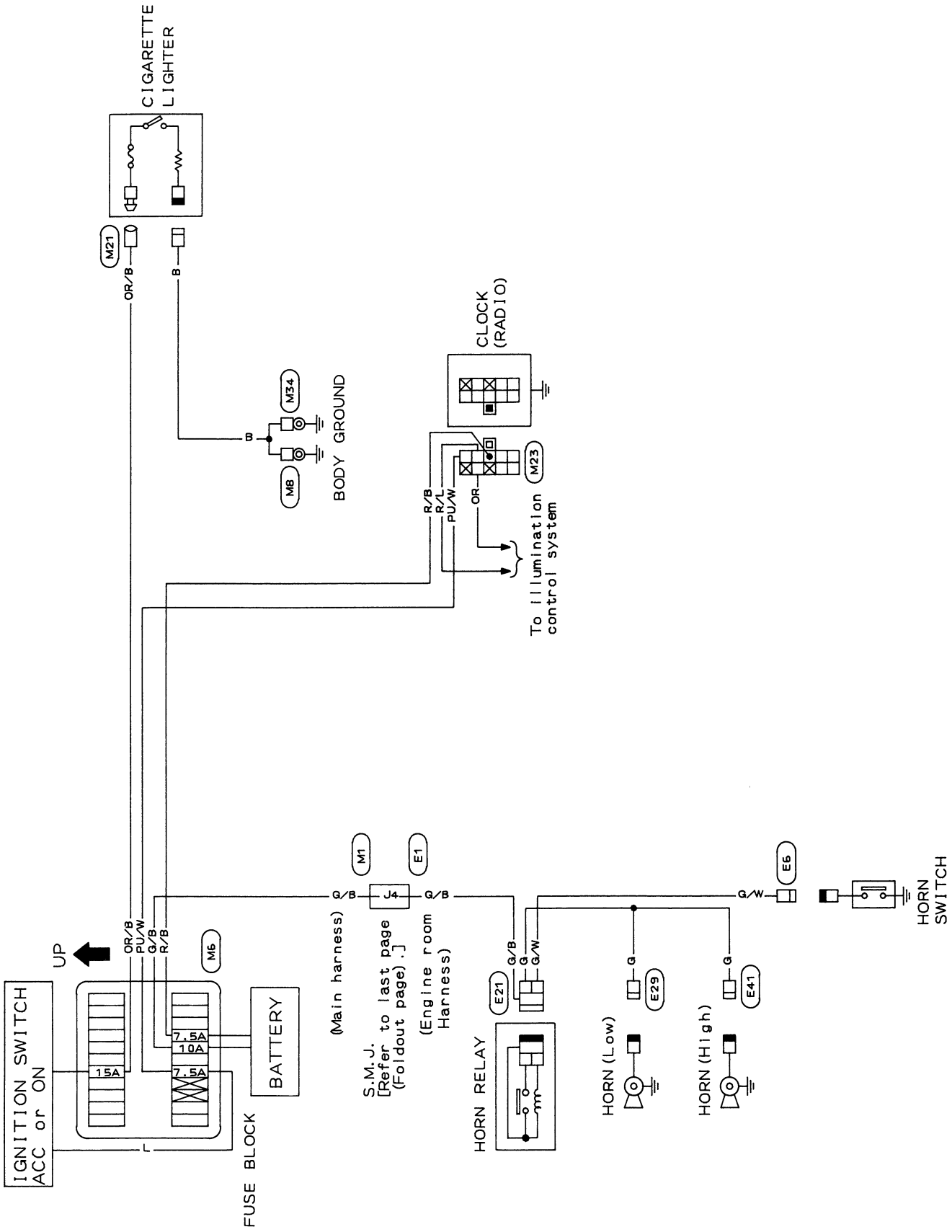

SEL709M

Wiring Diagram

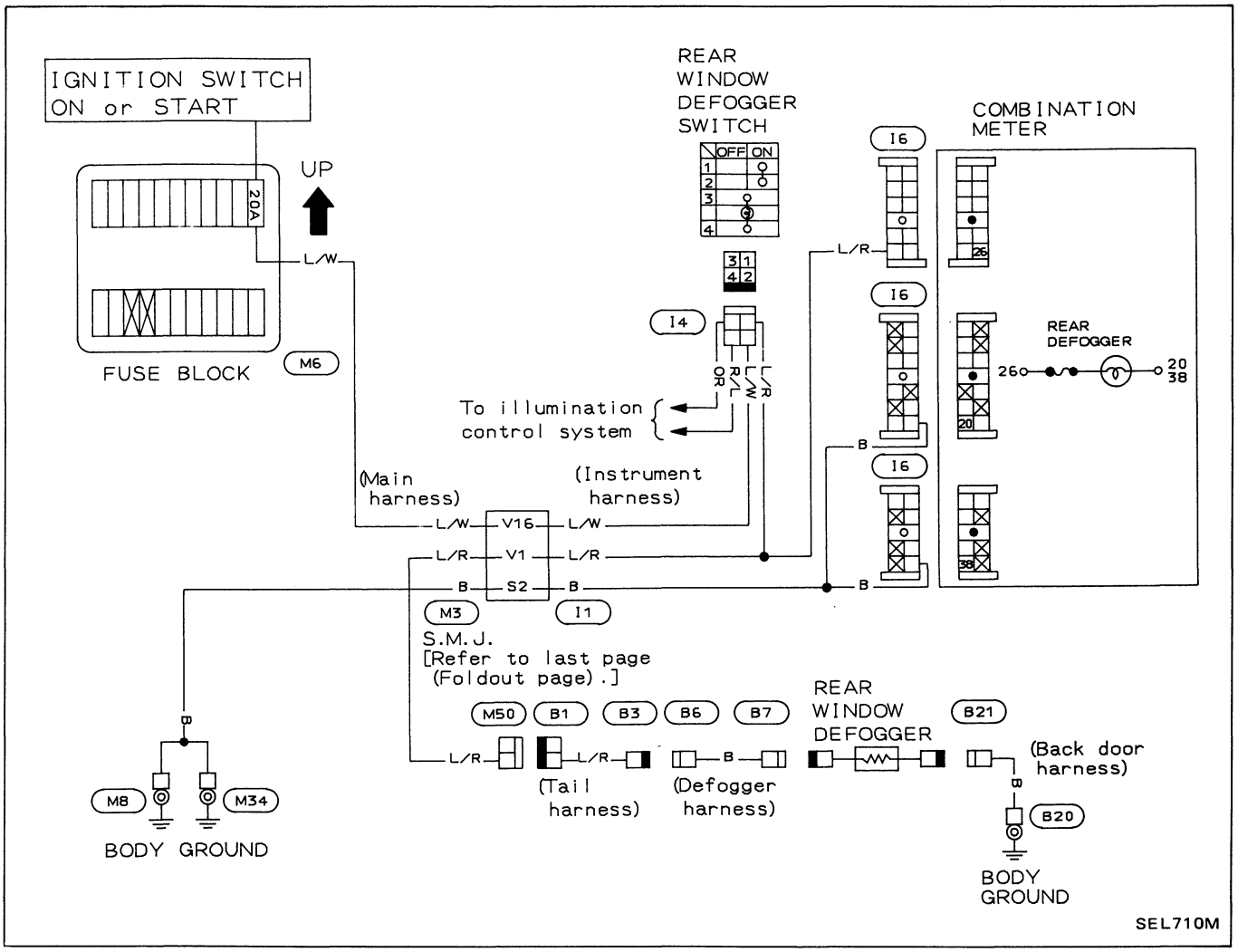

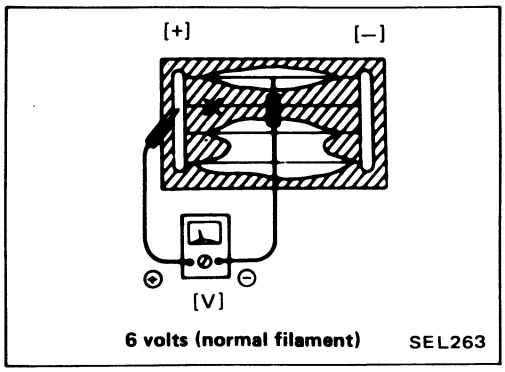

Filament Check

1. Attach probe circuit tester (in volt range) to middle portion of each filament.

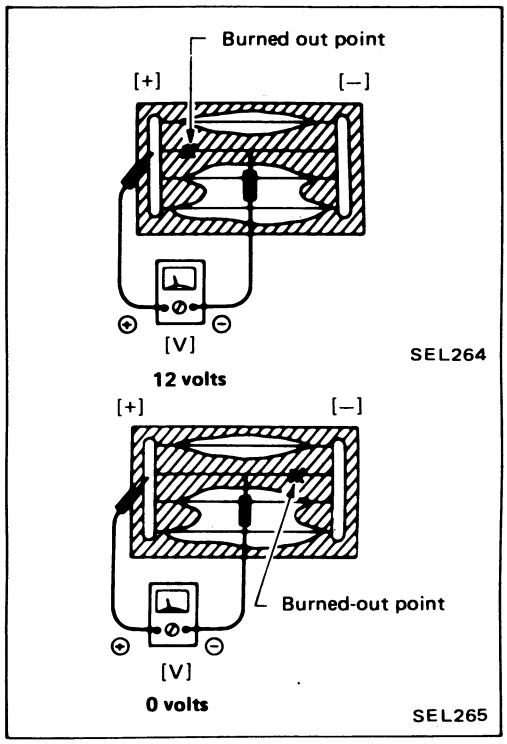

2. If a filament is burned out, circuit tester registers 0 or 12 volts.

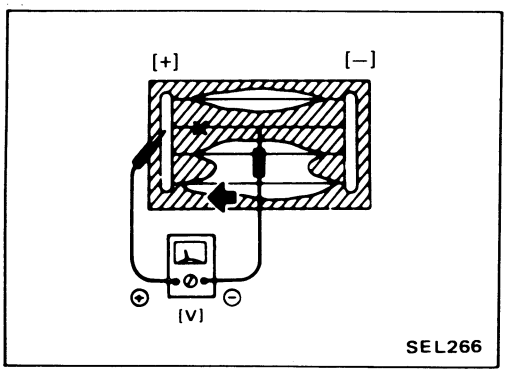

3. To locate burned out point, move probe to left and right along filament to determine point where tester needle swings abruptly.

Filament Repair

REPAIR EQUIPMENT

1. Conductive silver composition (Dupont No. 4817 or equivalent)
2. Ruler 30 cm (11.8 in) long
3. Drawing pen
4. Heat gun
5. Alcohol
6. Cloth

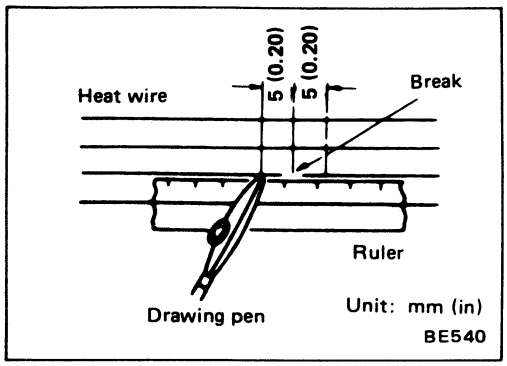

REPAIRING PROCEDURE

1. Wiper broken heat wire and its surrounding area clean with a cloth dampened in alcohol.
2. Apply a small amount of conductive silver composition to tip of drawing pen.

Shake silver composition container before use.

3. Place ruler on glass along broken line. Deposit conductive silver composition on break with drawing pen. Slightly overlap existing heat wire on both sides [preferably 5 mm (0.20 in)] of the break.
4. After repair has been completed, check repaired wire for continuity. This check should be conducted 10 minutes after silver composition is deposited.

Do not touch repaired area while test is being conducted.

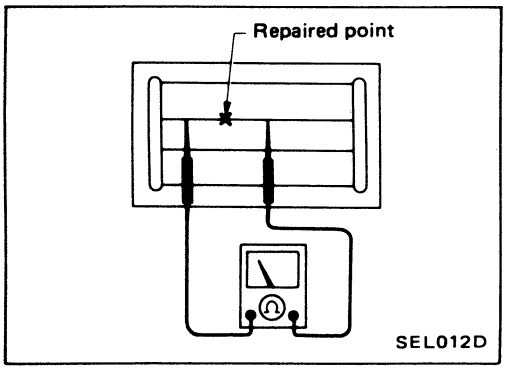

5. Apply a constant stream of hot air directly to the repaired area for approximately 20 minutes with a heat gun. A minimum distance of 3 cm (1.2 in) should be kept between repaired area and hot air outlet. If a heat gun is not available, let the repaired area dry for 24 hours.

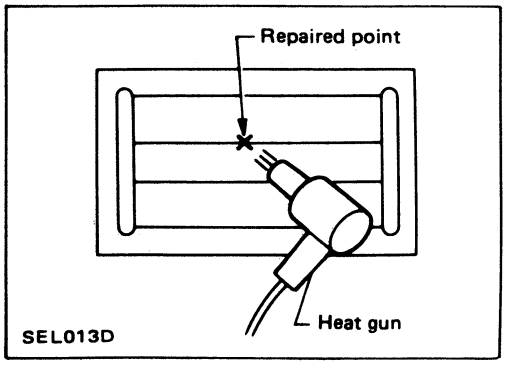

Wiring Diagram

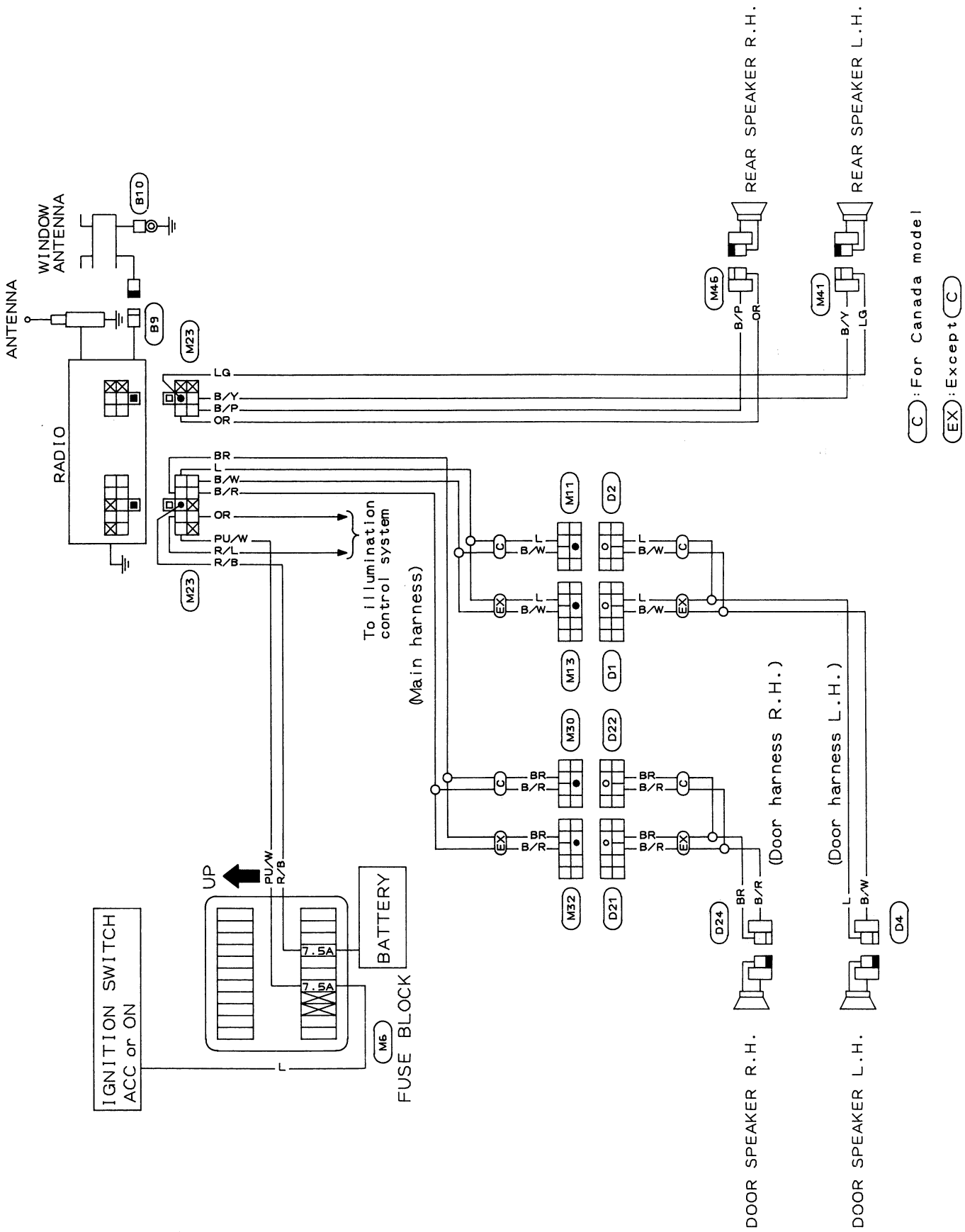

SEL711M

Location of Antenna

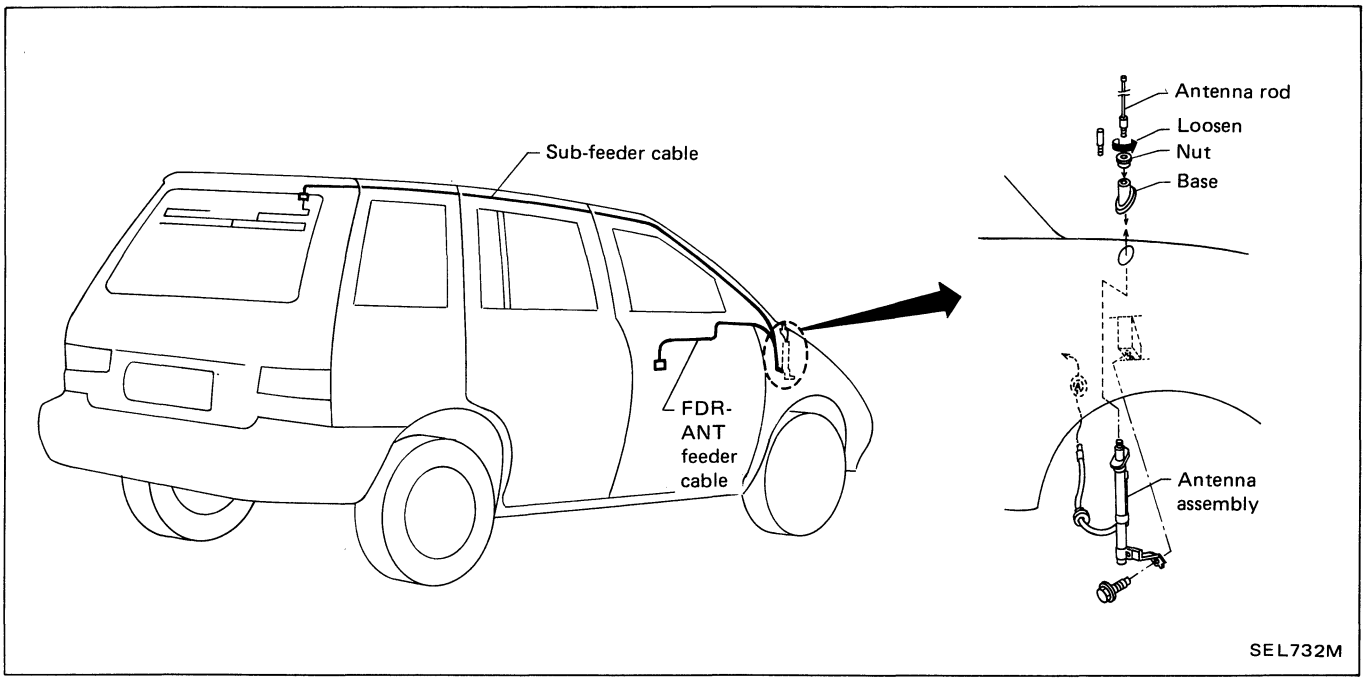

Radio Fuse Check

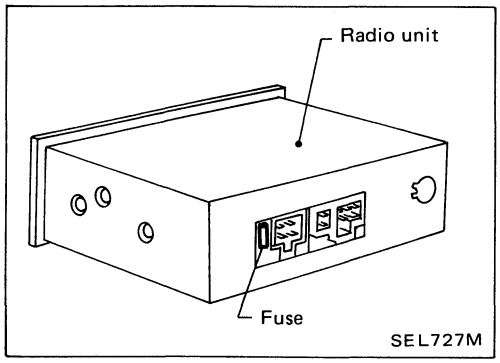

Window Antenna Repair

ELEMENT CHECK

1. Attach probe circuit tester (in ohm range) to antenna terminal on each side.

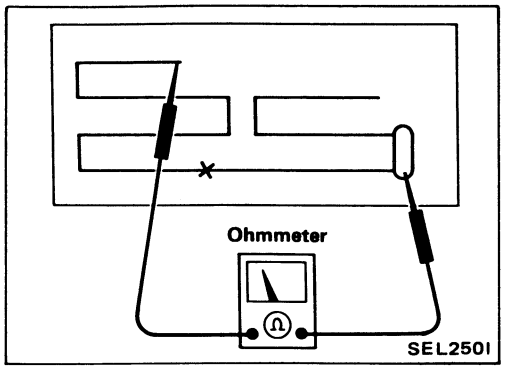

2. If an element is broken, no continuity will exist.

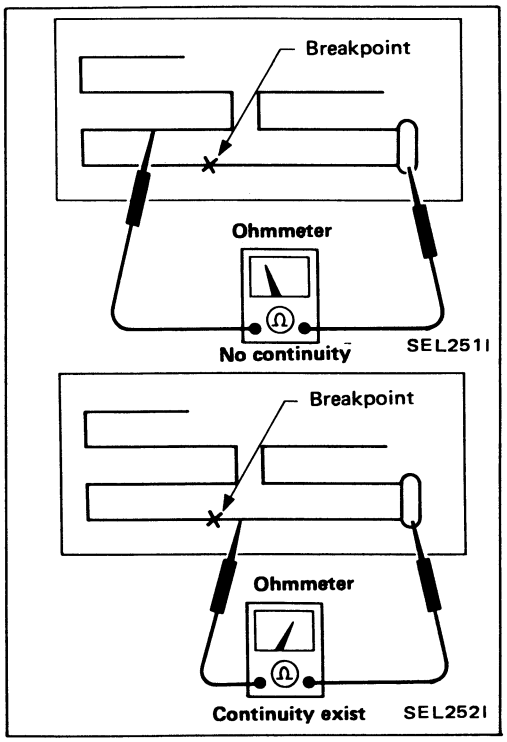

3. To locate broken point, move probe to left and right along element to determine point where tester needle swings abruptly.

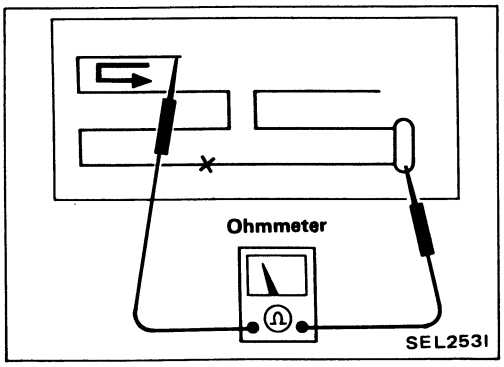

ELEMENT REPAIR

Refer to "Filament Repair" of REAR WINDOW DEFOGGER.

Schematic

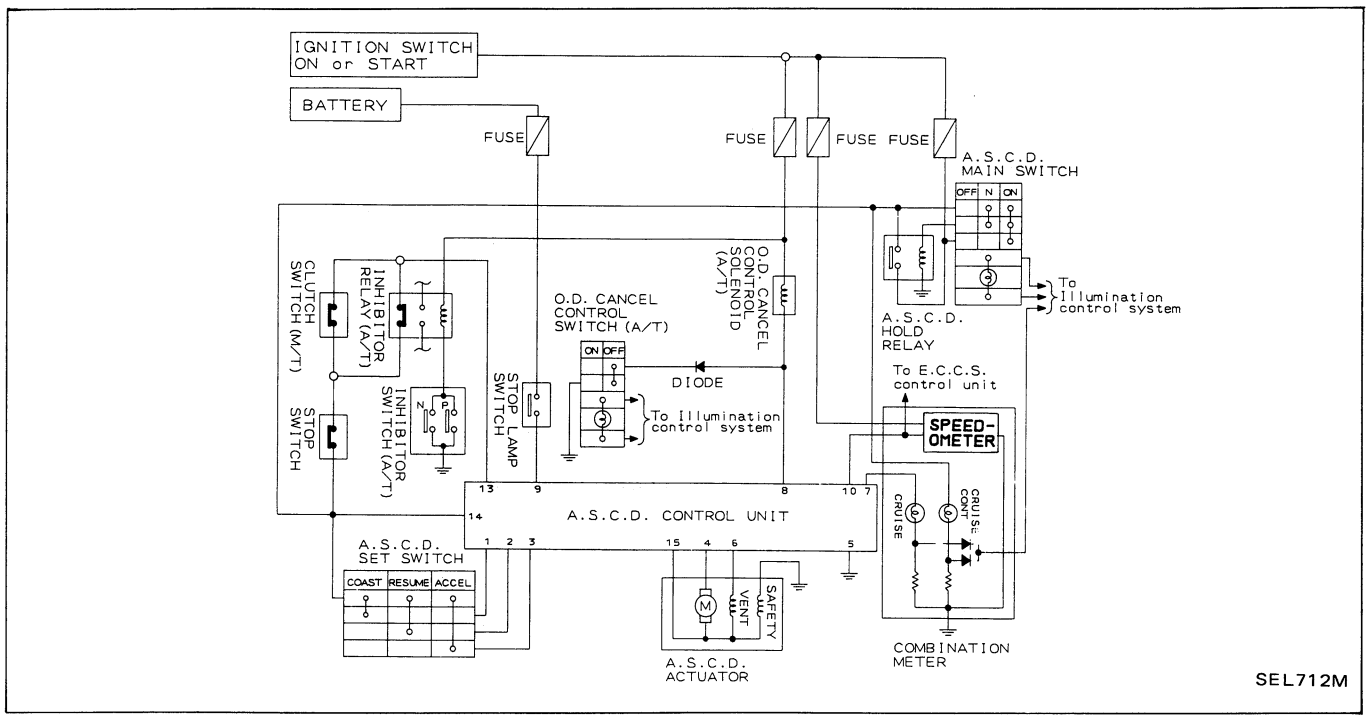

Wiring Diagram

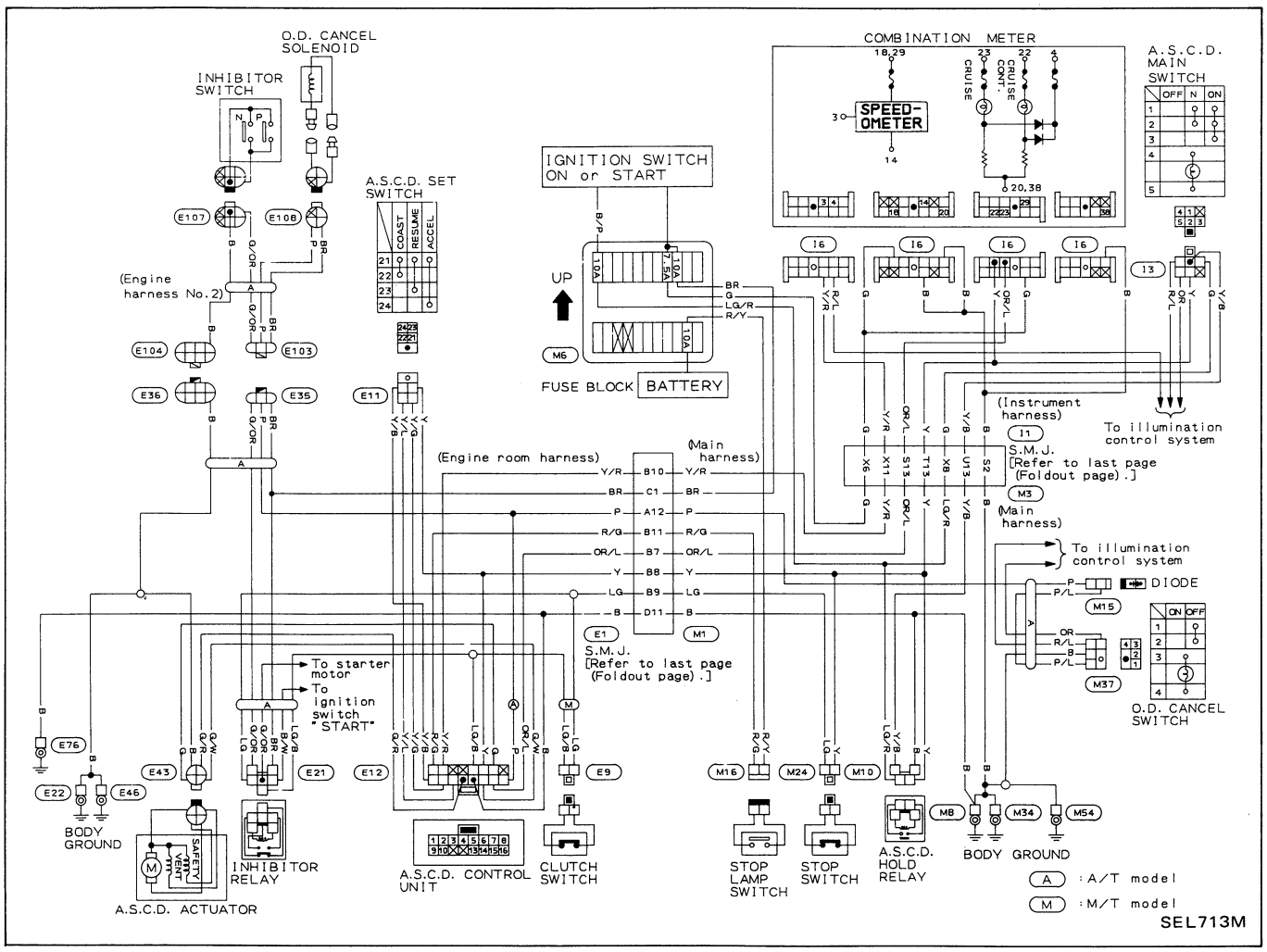

Trouble Diagnoses

Symptom		DIAGNOSTIC PROCEDURE
A.S.C.D. control unit cannot be set properly.		1
Resume switch will not operate.		2
Accelerator switch will not operate.		3
Engine hunts.		4
Large difference between set vehicle speed and actual speed.		5
Set speed cannot be cancelled.		6
A/T model only	• When A.S.C.D. is set while vehicle is operating in "O.D." range, O.D. will be cancelled and shifting to O.D. cannot be made thereafter. • O.D. will not be cancelled even if actual vehicle speed is 6 km/h (4 MPH) lower than set speed. (Set speed cannot be maintained.) • O.D. will not be cancelled even if accelerator switch is turned "ON".	7

PREPARATION FOR TROUBLE-SHOOTING

1. Remove L.H. dash side cover.
2. Remove A.S.C.D. control unit with harness connected.
3. Perform check from harness side using circuit tester, with harness connector connected.

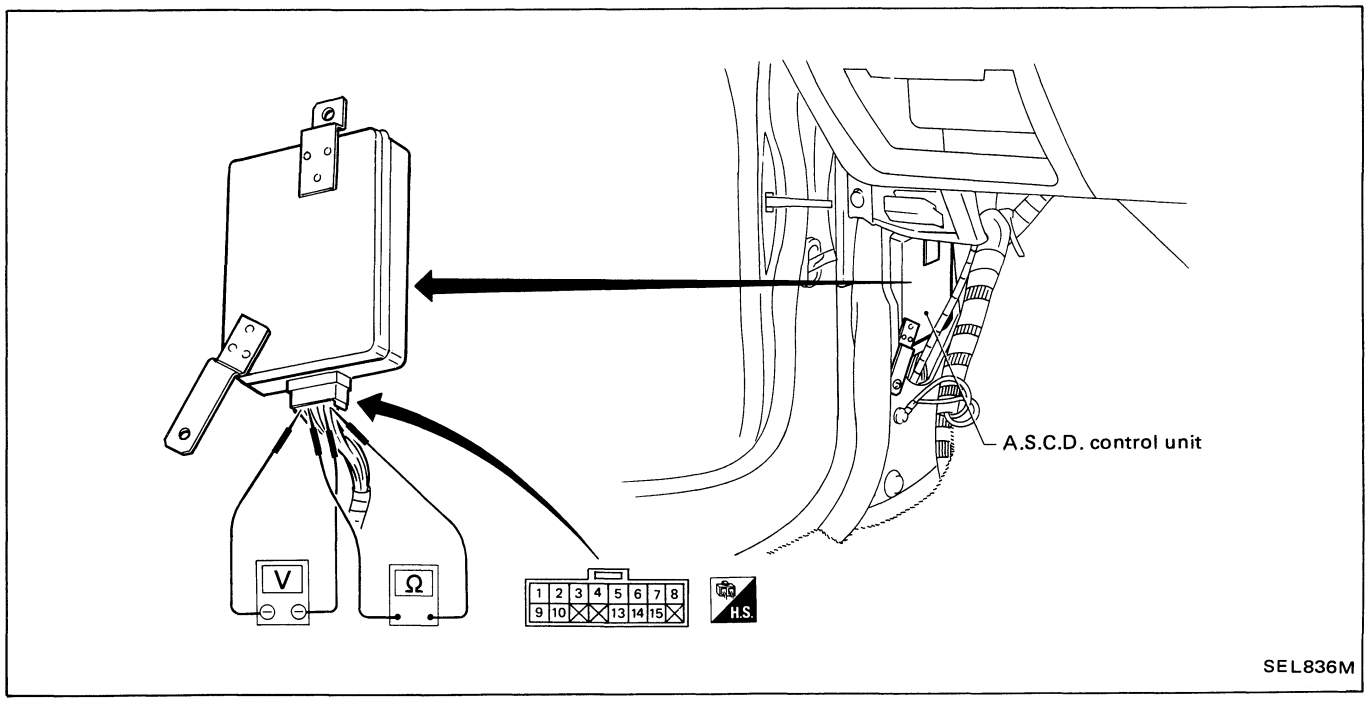

GROUND CIRCUIT CHECK

- Check continuity between ⑤ and body ground.

Trouble Diagnoses (Cont'd)

DIAGNOSTIC PROCEDURE-1

A.S.C.D. control unit cannot be set properly.

Turn A.S.C.D. main switch "OFF" and then "ON" to make sure indicator illuminates.
- N.G. → Check indicator bulb, A.S.C.D. main switch and hold relay.
- O.K. ↓

Check power supply circuit for A.S.C.D. control unit.
- N.G. → Check A.S.C.D. power supply harness.
- O.K. ↓

Check cut-off circuit for A.S.C.D. control unit.
- N.G. → Check A.S.C.D. cancel switch, clutch switch (M/T model), inhibitor relay and inhibitor switch (A/T model).
- O.K. ↓

Check A.S.C.D. set switch circuit for A.S.C.D. control unit.
- N.G. → Check A.S.C.D. set switch and harness between control unit and set switch.
- O.K. ↓

Check speed sensor circuit.
- N.G. → Check speed sensor and harness between A.S.C.D. control unit and speed sensor signal output terminal of combination meter.
- O.K. ↓

Check actuator. Refer to "Actuator Check".
- N.G. → Replace actuator.
- O.K. ↓

Replace A.S.C.D. control unit.

POWER SUPPLY CIRCUIT CHECK

1. Turn A.S.C.D. main switch to "ON".
2. Check voltage between ⑤ and ⑭.

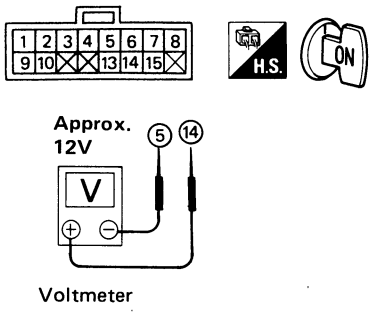

CUT-OFF CIRCUIT CHECK

1. Step on brake pedal.
2. Turn A.S.C.D. main switch to "ON".
3. Check voltage between ⑨ and ⑤.

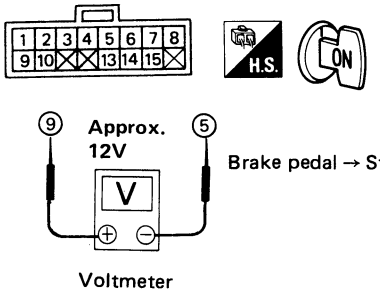

SEL734M

SET SWITCH CIRCUIT CHECK

1. Push A.S.C.D. set switch.
2. Check voltage between ① and ⑤.

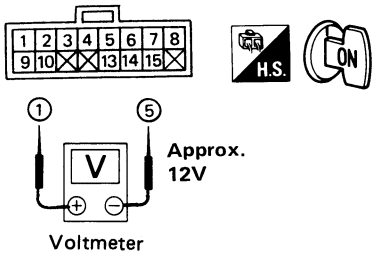

SPEED SENSOR CIRCUIT CHECK

1. Disconnect speed sensor from transmission.
2. Connect a voltmeter between ⑩ and ⑤.
3. Slowly turn speed sensor by hand to make sure voltmeter pointer deflects.

- **Voltmeter pointer deflects twice per rotation of pinion.**

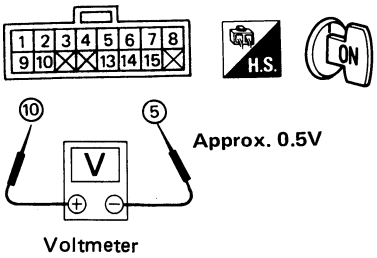

SEL735M

Trouble Diagnoses (Cont'd)

DIAGNOSTIC PROCEDURE-2

Resume switch will not operate.

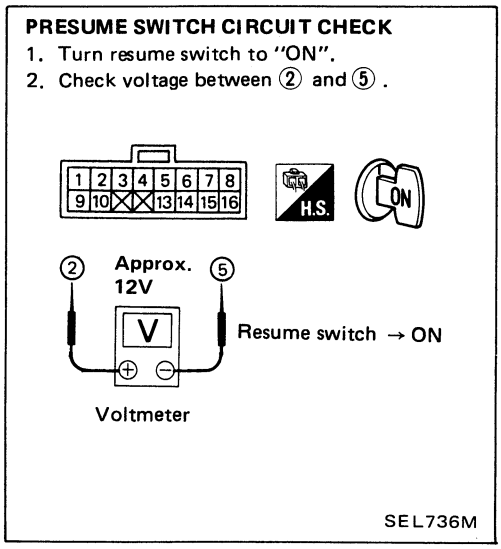

Check resume switch circuit. → N.G. → Check resume switch.

↓ O.K.

Replace A.S.C.D. control unit.

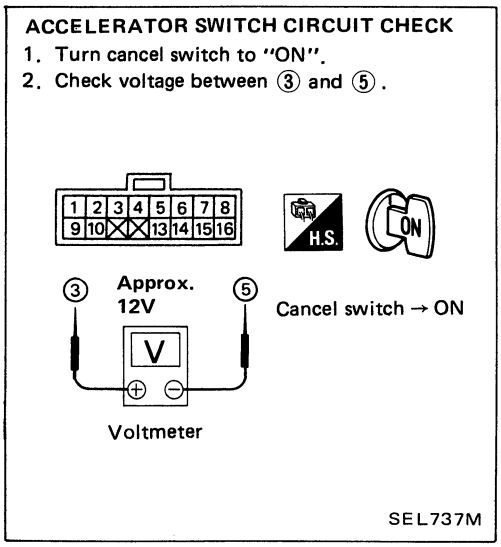

DIAGNOSTIC PROCEDURE-3

Accelerator switch will not operate.

Check accelerator switch circuit. → N.G. → Check accelerator switch.

↓ O.K.

Replace A.S.C.D. control unit.

Trouble Diagnoses (Cont'd)

DIAGNOSTIC PROCEDURE-4

Engine hunts.

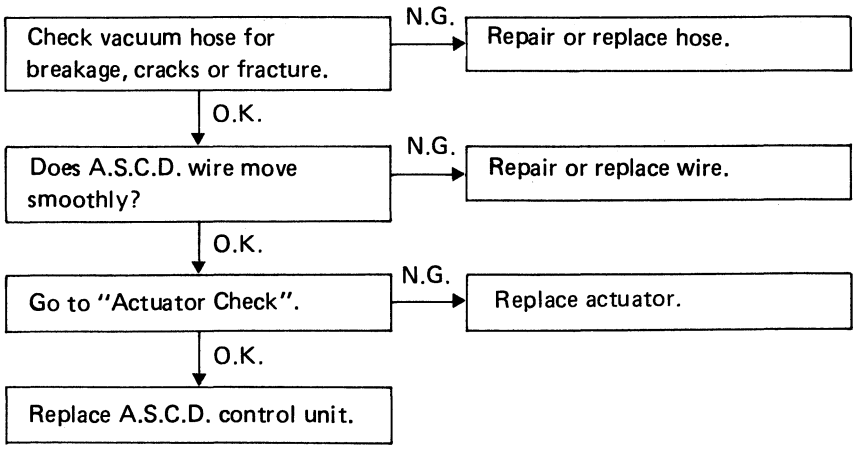

DIAGNOSTIC PROCEDURE-5

Large difference between set vehicle speed and actual speed.

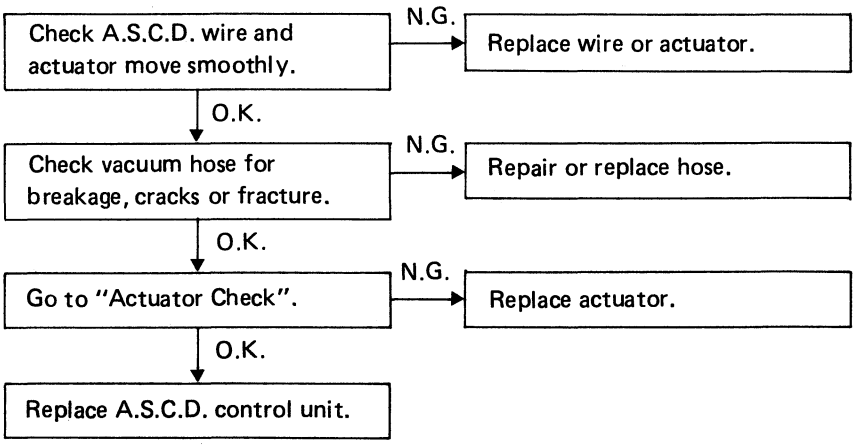

Trouble Diagnoses (Cont'd)

CUT-OFF CIRCUIT CHECK

1. Turn A.S.C.D. main switch to "ON".
2. Turn A.S.C.D. main switch to "ON" again.
3. Step on brake pedal.
4. Step on clutch pedal (M/T) or shift in "N" range (A/T).
5. Check voltage between ⑬ and ⑤.

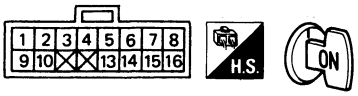

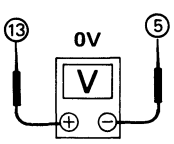

Brake pedal → Step on.
Clutch pedal (M/T) → Step on.
A/T control → "N" range lever (A/T)

Voltmeter

STOP LAMP CIRCUIT CHECK

1. Step on brake pedal.
2. Check voltage between ⑨ and ⑤.

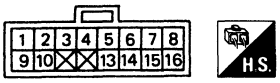

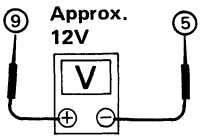

Brake pedal → Step on.

Voltmeter

SEL738M

DIAGNOSTIC PROCEDURE-6

Set speed cannot be canceled.

Check cut-off circuit. → N.G. → Check A.S.C.D. cancel switch, clutch switch (M/T model), inhibitor relay and inhibitor switch (A/T model).

↓ O.K.

Check stop lamp circuit. → N.G. → Check stop lamp switch and power supply harness.

↓ O.K.

Check actuator. Refer to "Actuator Check". → N.G. → Replace actuator.

↓ O.K.

Replace A.S.C.D. control unit

O.D. CANCEL CIRCUIT CHECK FOR A.S.C.D. CONTROL UNIT

1. Turn O.D. control switch to "ON"
2. Measure voltage across ⑧ and ⑤.

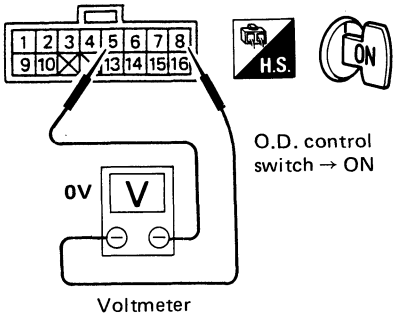

O.D. control switch → ON

Voltmeter

SEL743M

DIAGNOSTIC PROCEDURE-7

A/T model only:

- **When A.S.C.D. is set while vehicle is operating in "O.D." range, O.D. will be cancelled and shifting to O.D. cannot be made thereafter.**
- **O.D. will not be cancelled even if actual vehicle speed is 6 km/h (4 MPH) lower than set speed. (Set speed cannot be maintained.)**
- **O.D. will not be cancelled even if accelerator switch is turned "ON".**

Check O.D. cancel circuit for A.S.C.D. control unit. → N.G. → Check harness between O.D. cancel solenoid, O.D. control switch and A.S.C.D. control unit.

↓ O.K.

Replace A.S.C.D. control unit.

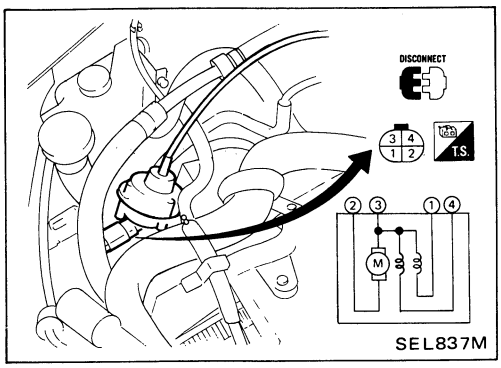

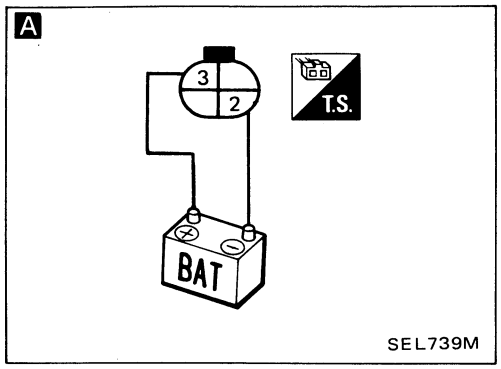

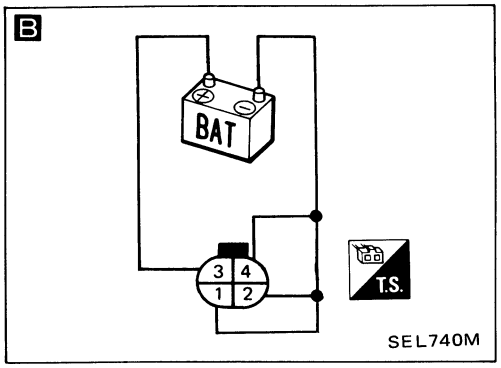

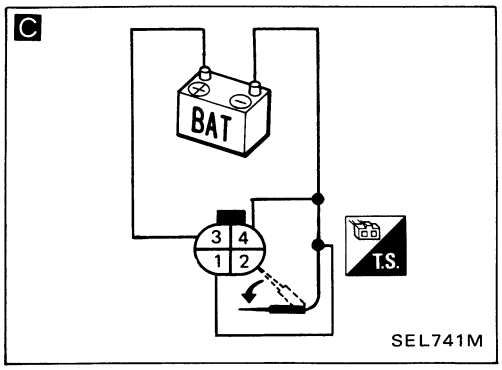

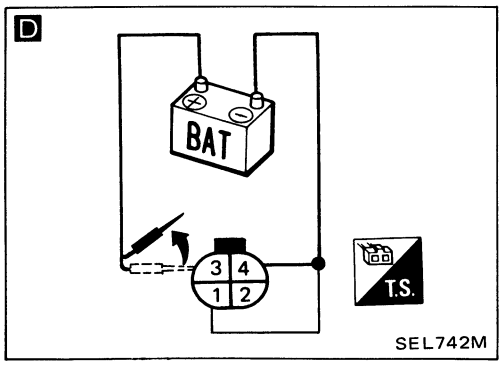

Actuator Check

1. Disconnect connector of actuator from main harness.
2. Check actuator operations as shown.

Check actuator.

O.K.

A Check to see if motor starts when 12V D.C. is applied across ③ and ②.

N.G. → Replace actuator.

O.K.

B Check to see if A.S.C.D. wire is pulled when 12V D.C. is applied across ①, ②, ③ and ④.

N.G. → Replace actuator.

O.K. (Wire is pulled.)

C Check to see if A.S.C.D. wire returns to original position 50 to 60 seconds after disconnecting lead from ②.

N.G. → Replace actuator.

O.K. (Wire does not return.)

D Disconnect lead from ③ to see if A.S.C.D. wire returns immediately.

N.G. → Replace actuator.

O.K. (Wire returns.)

Actuator is O.K.

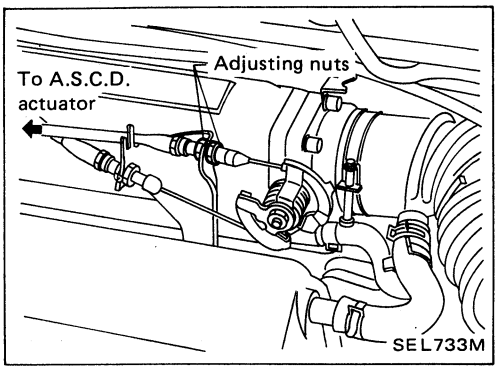

Cable Adjustment

Without depressing the accelerator pedal, adjust the adjusting nuts until there is no cable free play.

CAUTION:

Do not increase tension of cable excessively, as this may cause throttle lever to rotate.

Engine Compartment

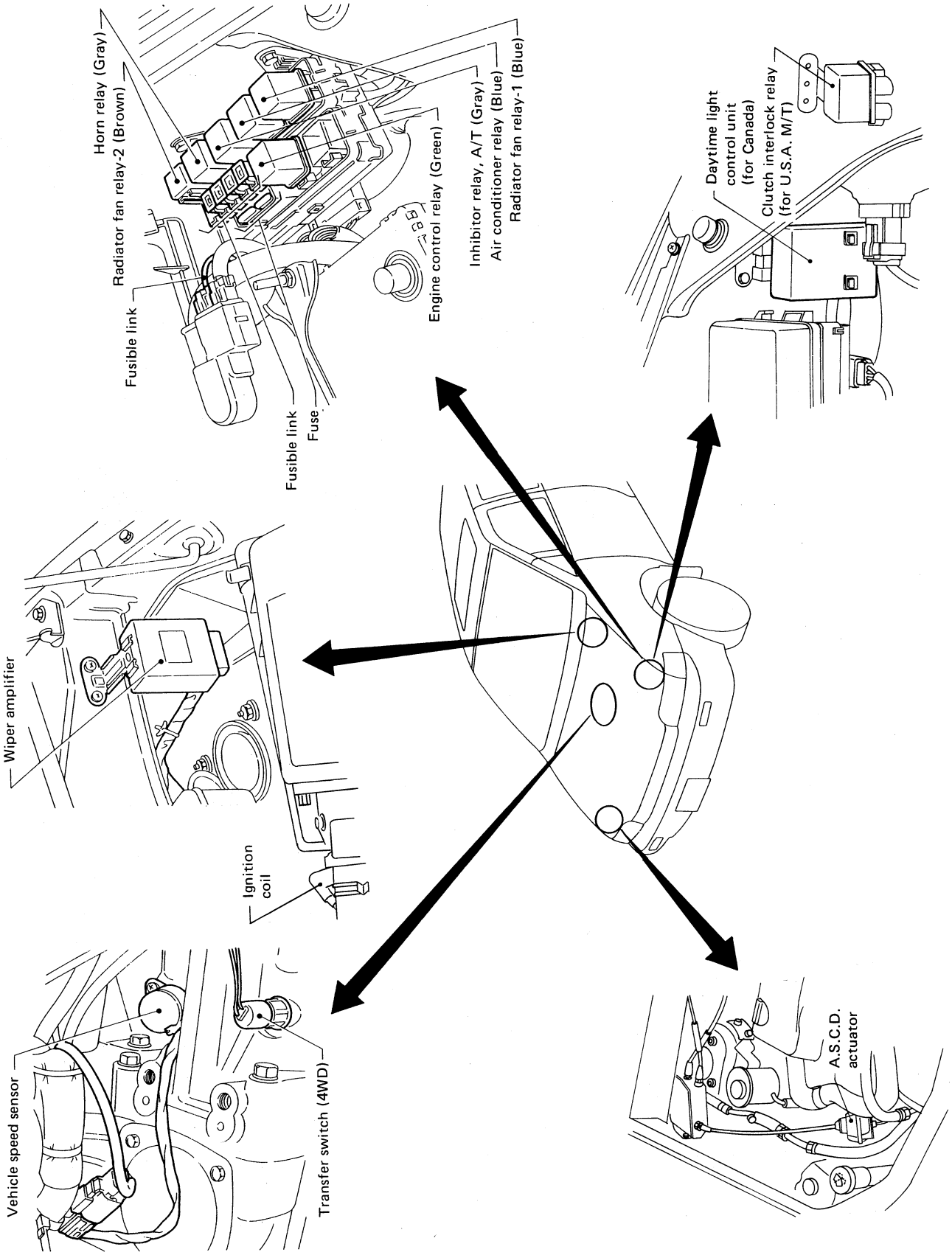

SEL728M

Passenger Compartment

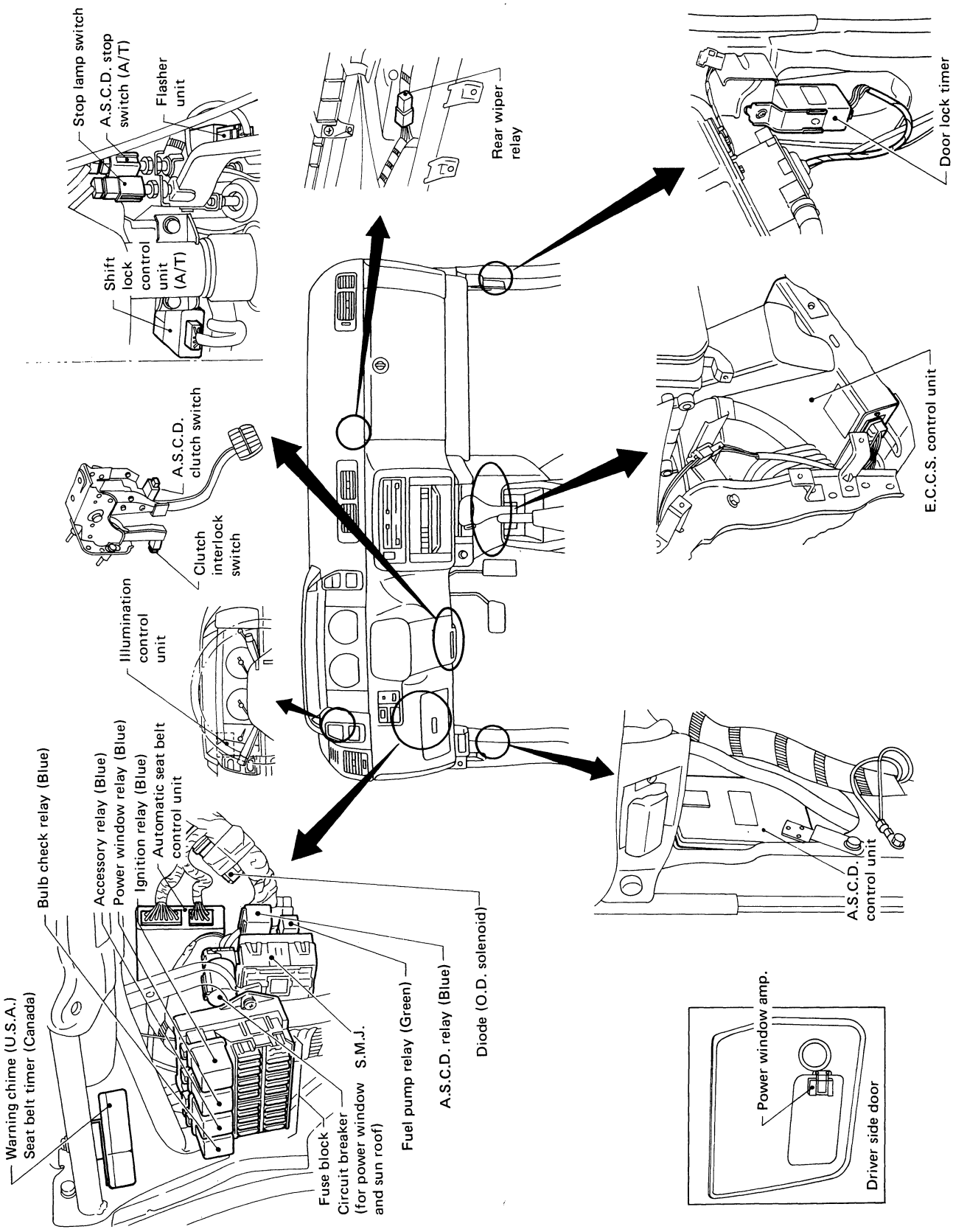

SEL729M

Luggage Compartment

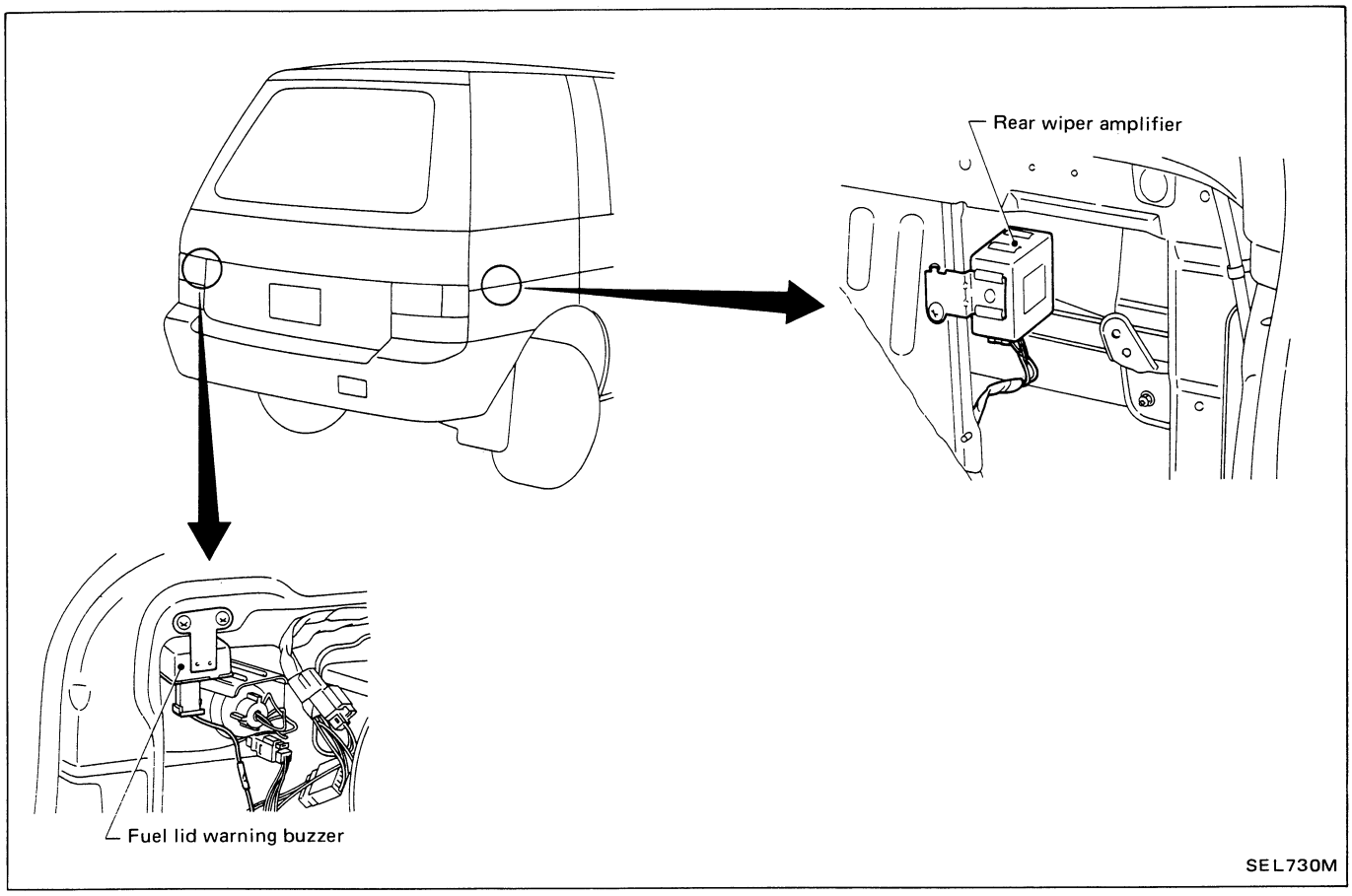

NOTE

Outline

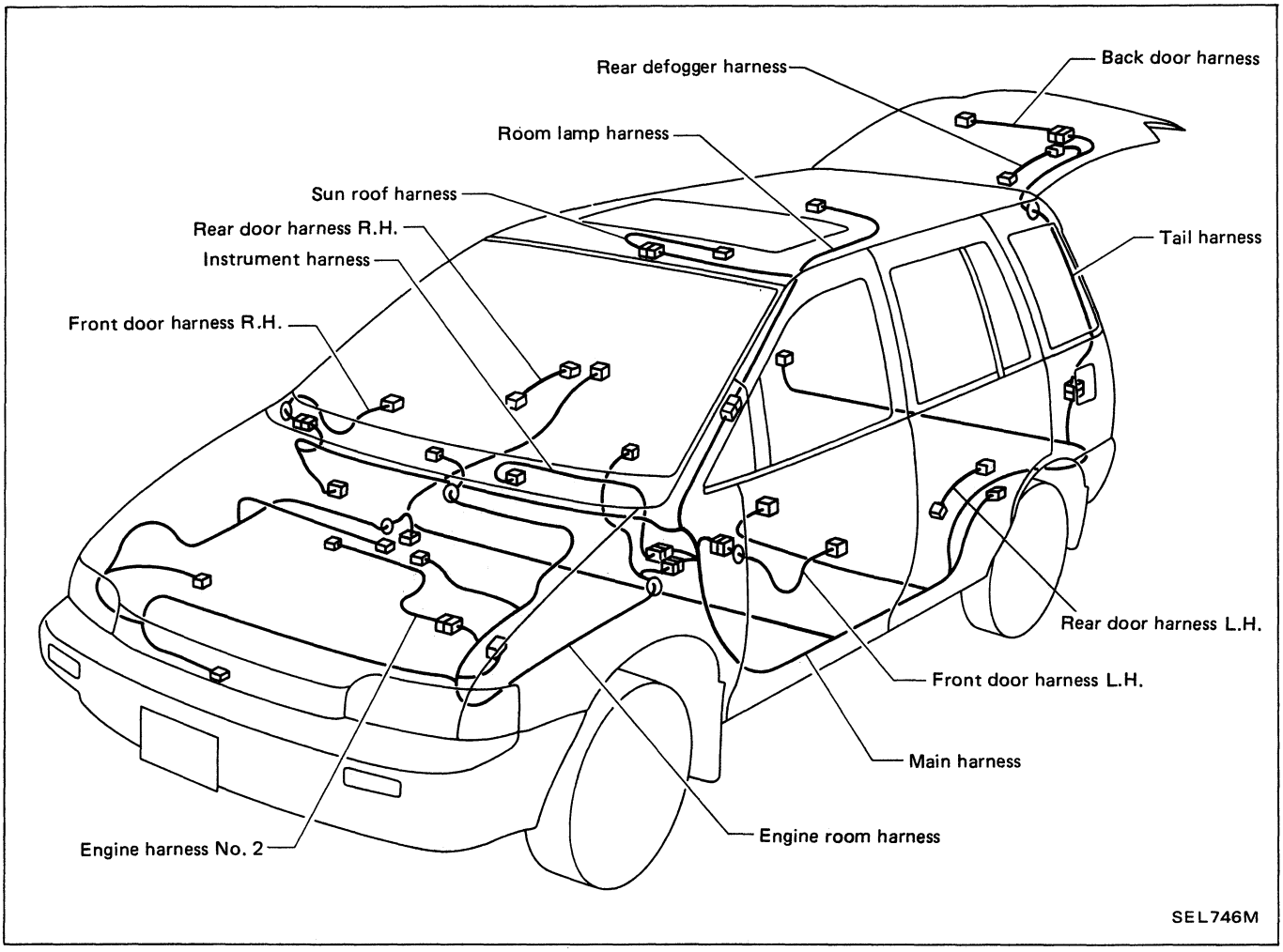
Rear defogger harness
Back door harness
Room lamp harness
Sun roof harness
Rear door harness R.H.
Instrument harness
Tail harness
Front door harness R.H.
Rear door harness L.H.
Front door harness L.H.
Main harness
Engine room harness
Engine harness No. 2
SEL746M

Engine Room Harness

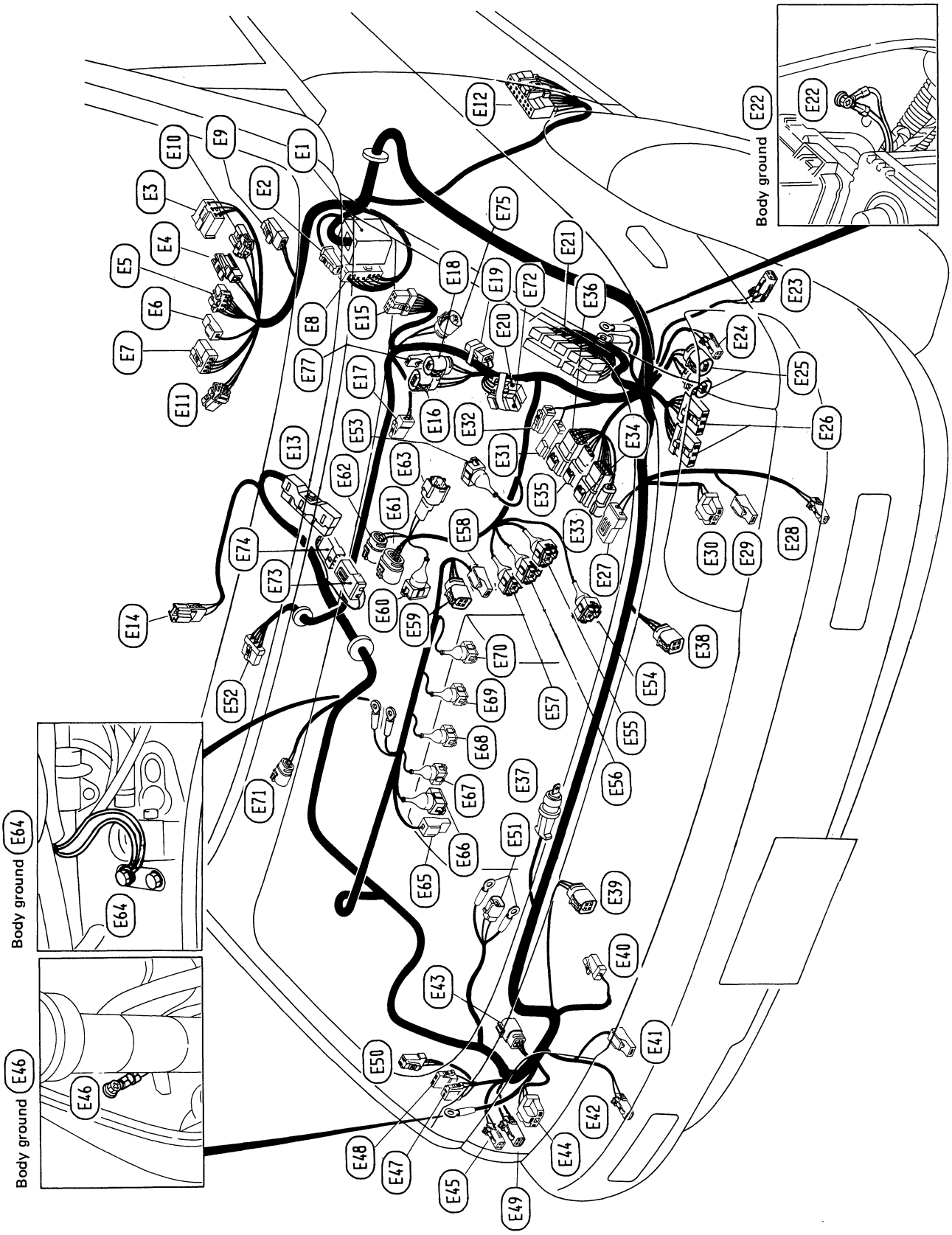

(E1) : To (M1) (S.M.J.)
(E2) : To (M2)
(E3) : Ignition switch
(E4) : Key-in switch
(E5) : Lighting switch
(E6) : Horn switch
(E7) : Wiper switch
(E8) : Check connector
(E9) : Clutch switch
(E10) : Key lock solenoid
(E11) : A.S.C.D. set switch
(E12) : A.S.C.D. control unit
(E13) : E.C.C.S. control unit
(E14) : To (M26)
(E15) : Intermittent wiper amplifier
(E16) : Ignition coil
(E17) : Brake fluid level switch
(E18) : Ignition coil
(E19) : Resistor
(E20) : Resistor & condenser
(E21) : Fusible link & fuse box, relays on bracket (Refer to LOCATION OF ELECTRICAL UNITS.)
(E22) : Body ground
(E23) : Front side marker lamp L.H.
(E24) : Clearance lamp L.H.
(E25) : Clutch interlock relay
(E26) : Daytime light control unit
(E27) : Dual-pressure switch
(E28) : Front turn signal lamp L.H.
(E29) : Horn (Low)
(E30) : Headlamp L.H.
(E31) : Fusible link
(E32) : Battery
(E33) : To (E101) (Gray)
(E34) : To (E102) (Gray) (M/T)
(E35) : To (E103) (Gray) (A/T)
(E36) : To (E104) (Brown) (A/T)
(E37) : Exhaust gas sensor
(E38) : Radiator fan motor-2
(E39) : Radiator fan motor-1
(E40) : Compressor
(E41) : Horn (High)
(E42) : Front turn signal lamp R.H.
(E43) : A.S.C.D. actuator
(E44) : Headlamp R.H.
(E45) : Clearance lamp R.H.
(E46) : Body ground
(E47) : Front washer motor
(E48) : Rear washer motor
(E49) : Front side marker lamp R.H.
(E50) : Washer level switch
(E51) : Alternator
(E52) : Wiper motor
(E53) : Air flow meter
(E54) : A.I.V. control solenoid valve

Resistor (E19)

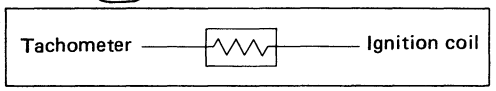

Resistor (E20)

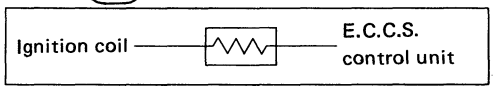

(E55) : S.C.V. control solenoid valve
(E56) : Pressure regulator control solenoid valve
(E57) : E.G.R. control solenoid valve
(E58) : Distributor earth
(E59) : Crank angle sensor
(E60) : Throttle valve switch
(E61) : Throttle sensor
(E62) : Exhaust gas temperature sensor
(E63) : A.A.C. solenoid valve
(E64) : Engine ground
(E65) : Thermal transmitter
(E66) : Engine temperature sensor
(E67) : Fuel injector No. 1
(E68) : Fuel injector No. 2
(E69) : Fuel injector No. 3
(E70) : Fuel injector No. 4
(E71) : Power steering oil pressure switch
(E72) : Resistor
(E73) : Joint connector
(E74) : Joint connector
(E75) : Air temperature sensor
(E77) : Ignition coil earth

Main Harness

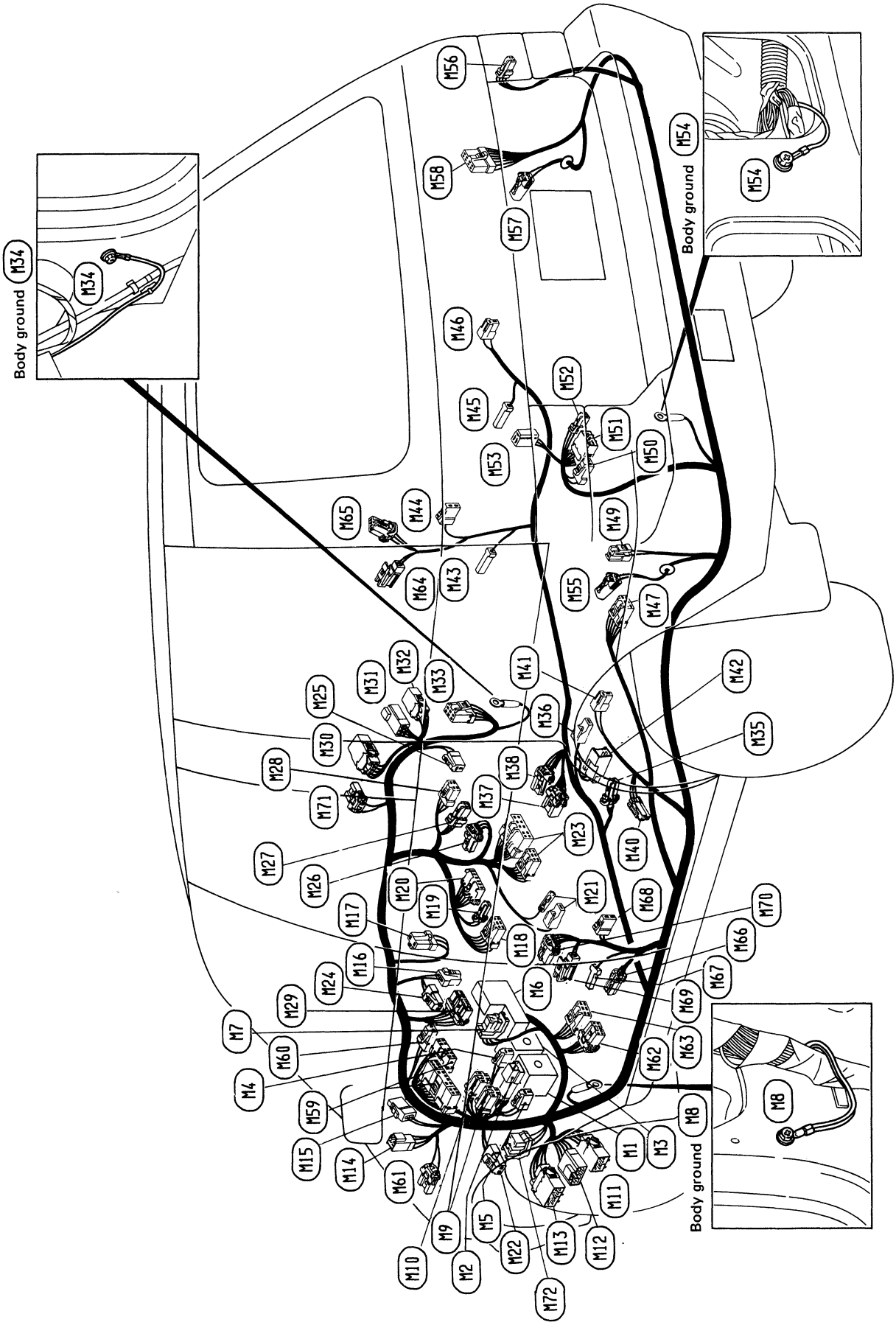

(M1) : To (E1) (S.M.J.)
(M2) : To (E2)
(M3) : To (I1) (S.M.J.)
(M4) : Circuit breaker
(M5) : Circuit breaker (Automatic seat belt)
(M6) : Fuse block
(M7) : Bulb check relay
(M8) : Body ground
(M9) : Fuel pump relay
(M10) : A.S.C.D. hold realy
(M11) : To (D2) (For Canada)
(M12) : To (D3)
(M13) : To (D1) (Except for Canada)
(M14) : To (R1)
(M15) : Diode (A/T)
(M16) : Stop lamp switch
(M17) : Combination flasher unit
(M18) : Air conditioner switch
(M19) : Fan control switch illumination
(M20) : Fan control switch
(M21) : Cigarette lighter
(M22) : Rear wiper relay
(M23) : Radio
(M24) : Stop switch (A.S.C.D.)
(M25) : Blower motor
(M26) : To (E14)
(M27) : Thermo control amplifier
(M28) : Resistor
(M29) : Shift lock control unit
(M30) : To (D22) (For Canada)
(M31) : To (D23)
(M32) : To (D21) (Except for Canada)
(M33) : Door lock timer
(M34) : Body ground
(M35) : Lap belt buckle switch (Automatic seat belt)
(M36) : Parking brake switch
(M37) : Shift lock solenoid, Detent switch
(M38) : O.D. cancel switch, Illumination
(M40) : Rear door switch L.H.
(M41) : Rear speaker L.H.
(M42) : Front seat belt switch-driver side (For Canada)
(M43) : Front door switch passenger side
(M44) : Slide door switch R.H.
(M45) : Rear door switch R.H.
(M46) : Rear speaker R.H.
(M47) : Fuel tank gauge unit
(M49) : Fuel lid switch
(M50) : To (B1)
(M51) : To (B2)
(M52) : Rear combination lamp L.H.
(M53) : Fuel lid warning buzzer
(M54) : Body ground
(M55) : Rear side marker L.H.
(M56) : Rear combination lamp R.H.
(M57) : Rear side marker R.H.
(M58) : Rear wiper amplifier
(M59) : Automatic seat belt control unit
(M60) : Clutch interlock switch
(M61) : Front limit switch L.H. (Automatic seat belt)
(M62) : Intermitter (Except for Canada)
(M63) : Seat belt timer (For Canada)
(M64) : Drive motor R.H. (Automatic seat belt)
(M65) : Shoulder belt buckle switch R.H., Rear limit switch R.H. (Automatic seat belt)
(M66) : Front door switch-driver side
(M67) : Front door switch-driver side
(M68) : Slide door switch L.H.
(M69) : Drive motor L.H. (Automatic seat belt)
(M70) : Shoulder belt buckle switch R.H., Rear limit switch R.H. (Automatic seat belt)
(M71) : Front limit switch R.H. (Automatic seat belt)
(M72) : Diode

Diode (M15)

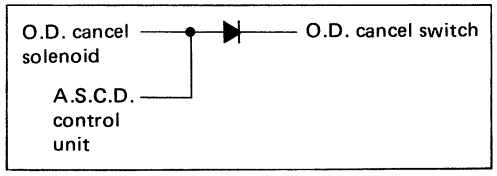

Diode (M72)

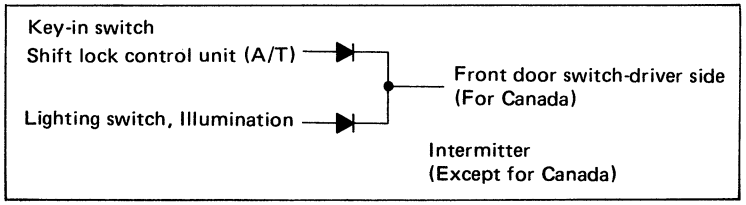

Instrument Harness

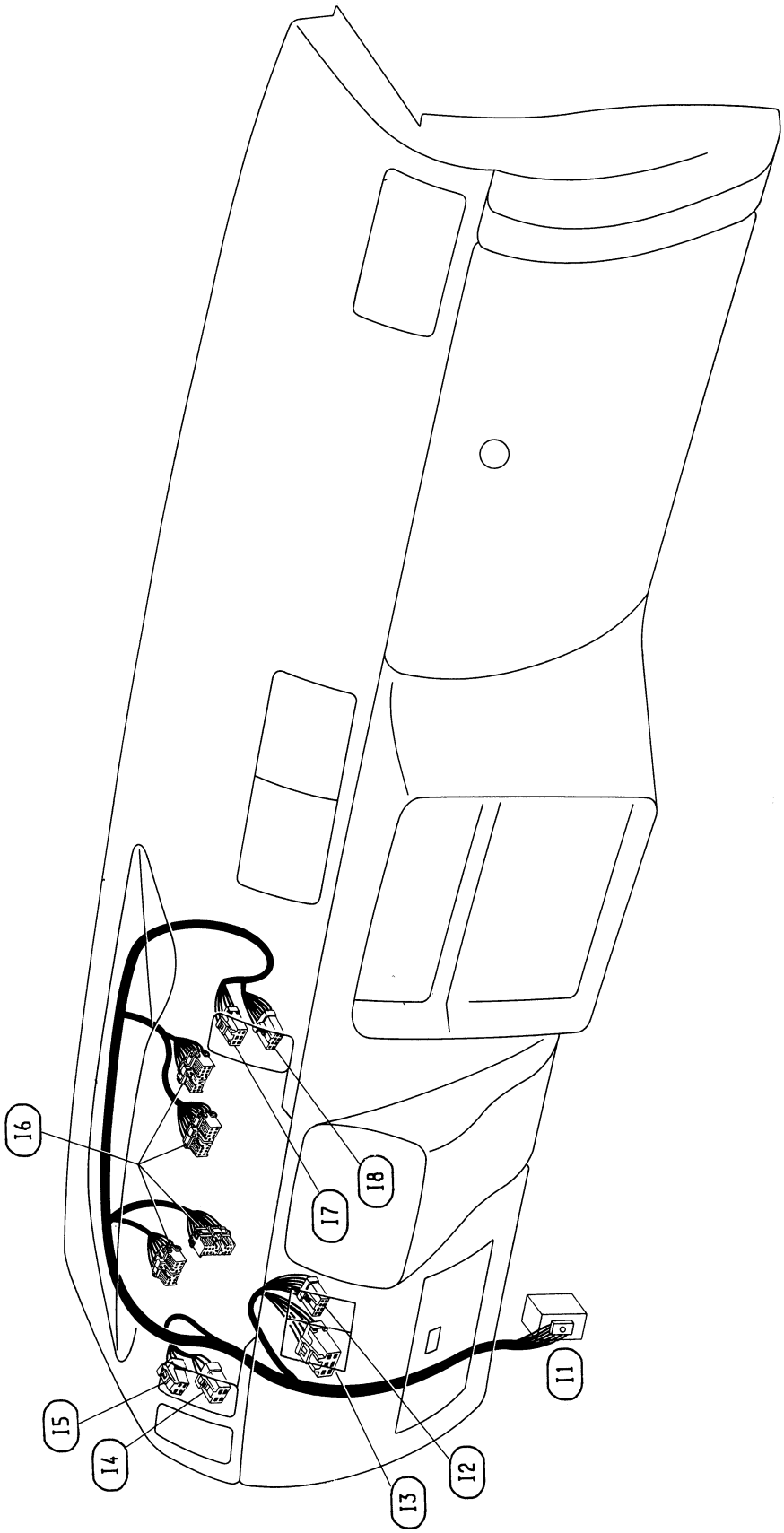

I1 : To H3 (S.M.J.)
I2 : Mirror control switch
I3 : A.S.C.D. main switch
I4 : Rear window defogger switch
I5 : Illumination control switch
I6 : Combination meter
I7 : Rear wiper and washer switch
I8 : Hazard switch

SEL749M

Door Harness

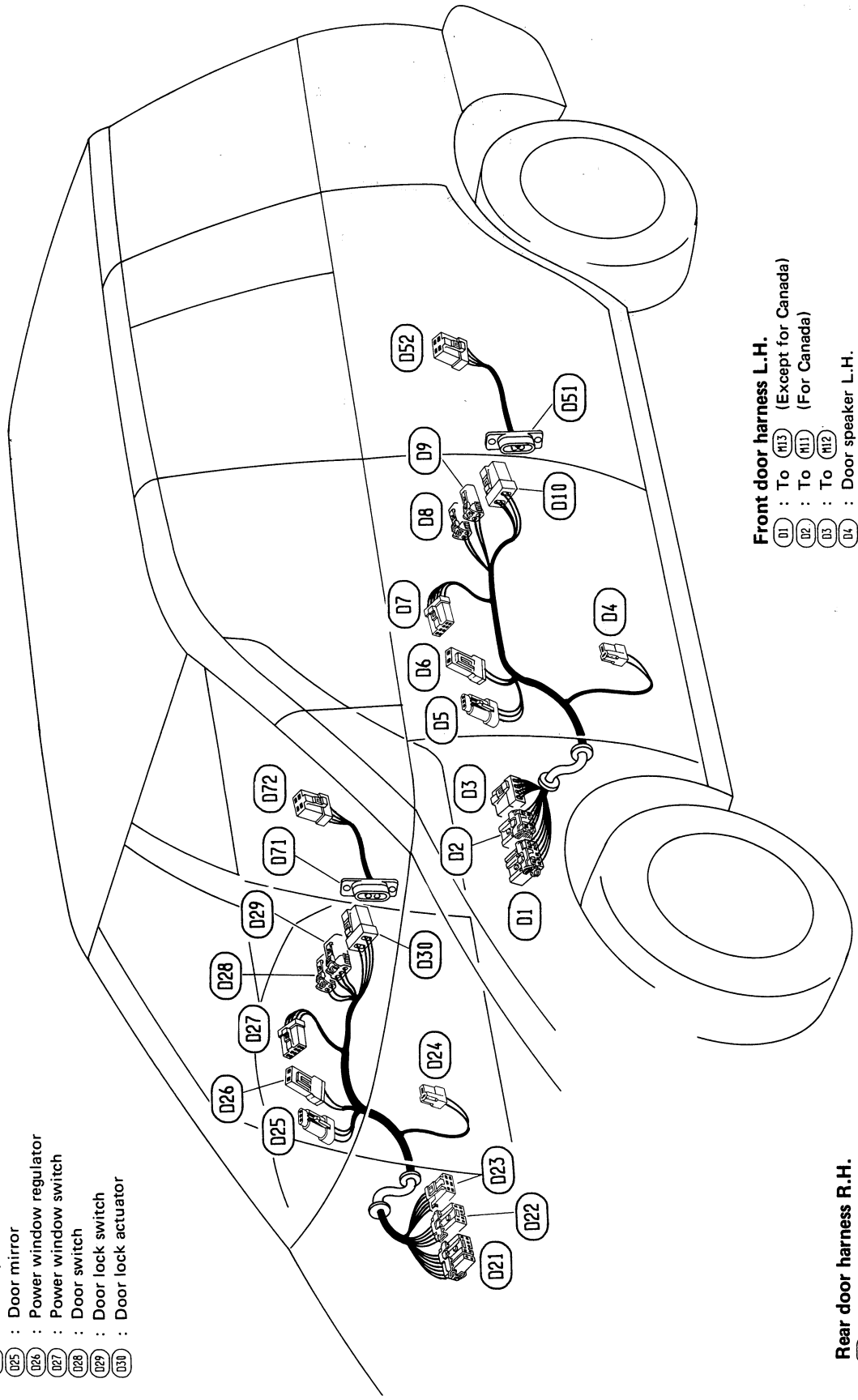

Front door harness R.H.

- D21 : To M32 (Except for Canada)
- D22 : To M30 (For Canada)
- D23 : To M31
- D24 : Door speaker R.H.
- D25 : Door mirror
- D26 : Power window regulator
- D27 : Power window switch
- D28 : Door switch
- D29 : Door lock switch
- D30 : Door lock actuator

Front door harness L.H.

- D1 : To M13 (Except for Canada)
- D2 : To M11 (For Canada)
- D3 : To M12
- D4 : Door speaker L.H.
- D5 : Door mirror
- D6 : Power window regualtor
- D7 : Power window switch
- D8 : Door switch
- D9 : Lock-unlock switch
- D10 : Door lock actuator

Rear door harness R.H.

- D71 : Door switch
- D72 : Door lock actuator

Rear door harness L.H.

- D51 : Door switch
- D52 : Door lock actuator

SEL751M

Room Lamp and Sun Roof Harness

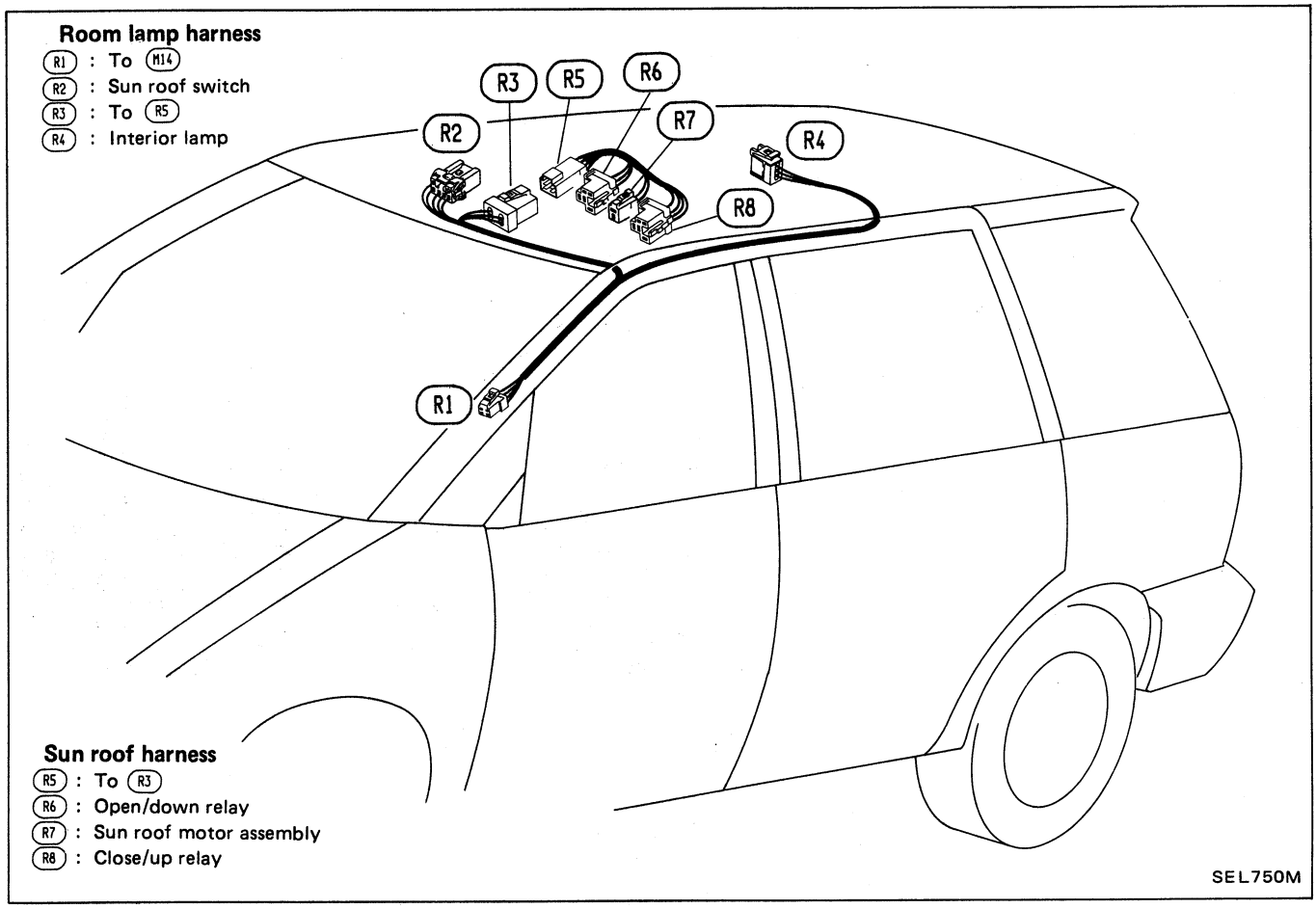

Engine Harness No. 2

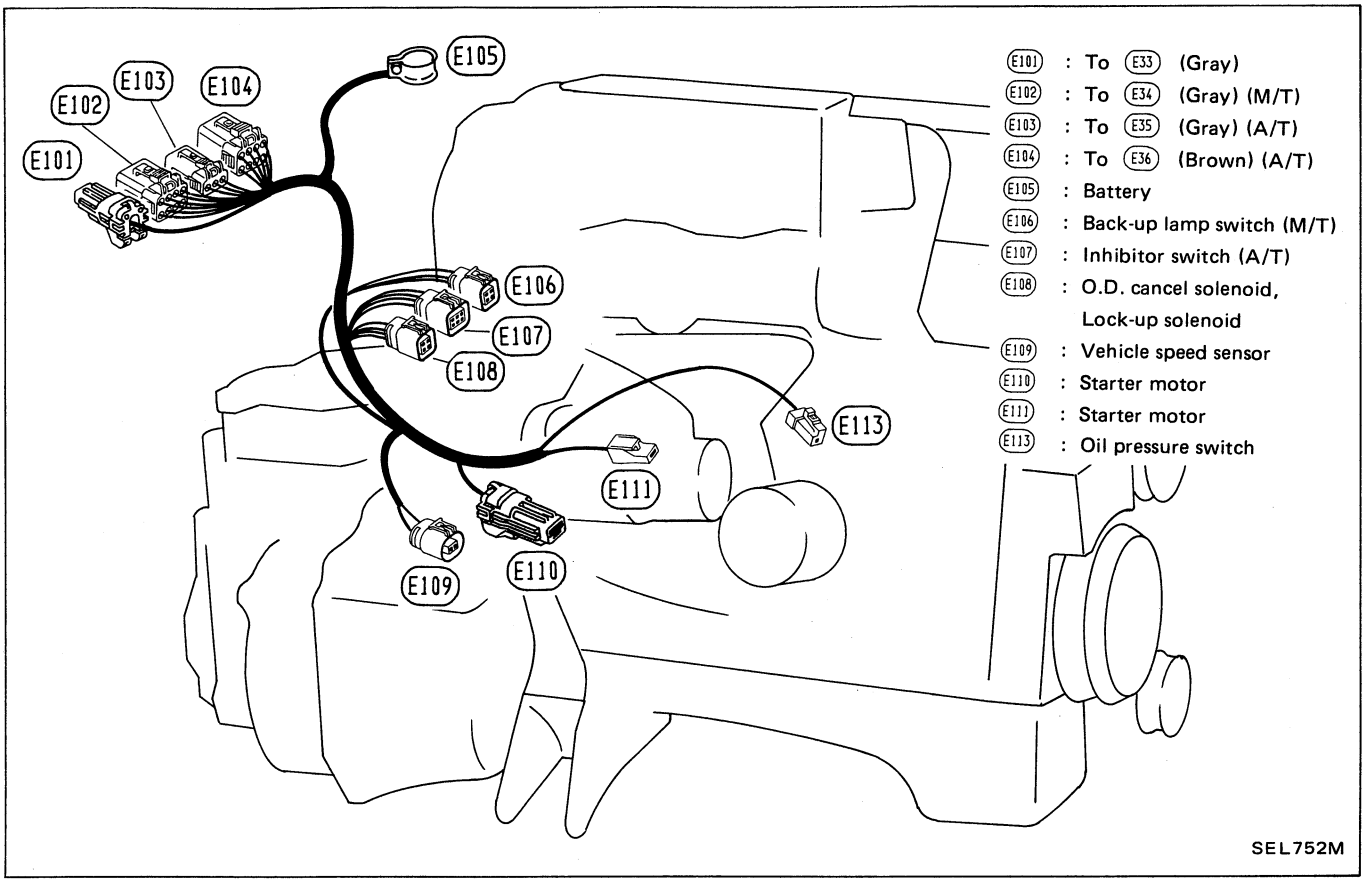

Tail Harness and Back Door Harness

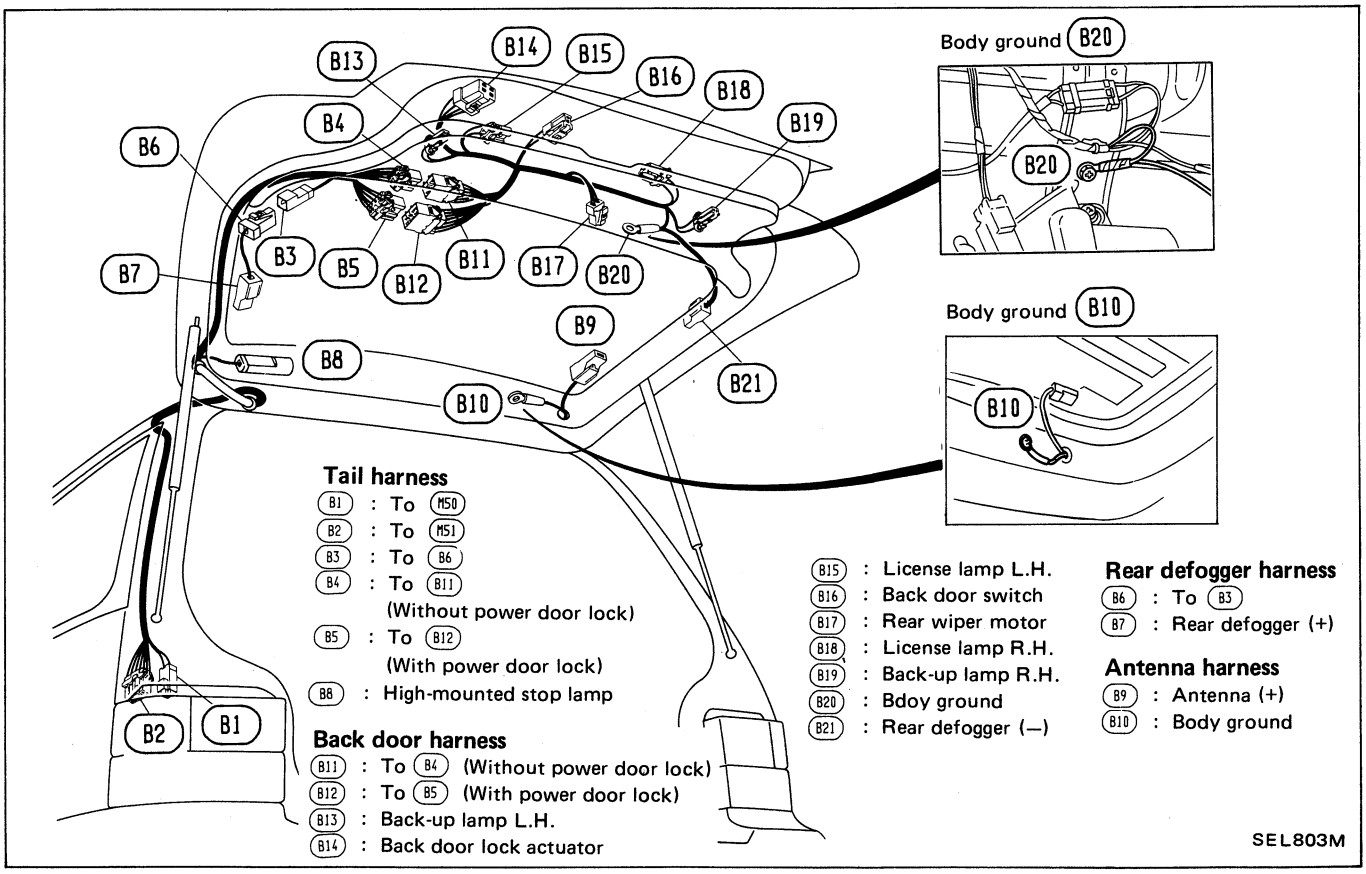

NOTE

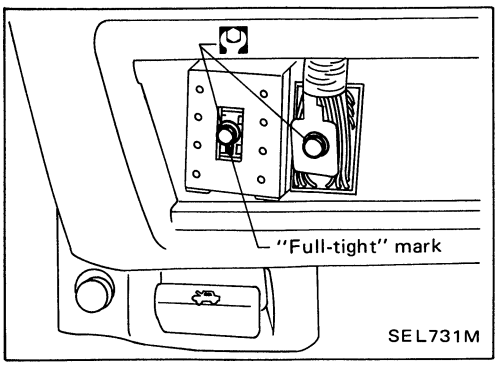

INSTALLATION

To install S.M.J., tighten bolts until orange "full-tight" mark appears and then retighten to specified torque as required.

: 3 - 5 N•m
(0.3 - 0.5 kg-m, 2.2 - 3.6 ft-lb)

CAUTION:

Do not overtighten bolts, otherwise, they may be damaged.

Terminal Arrangement

MAIN HARNESS

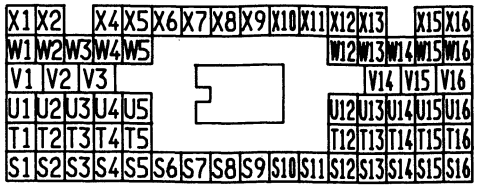

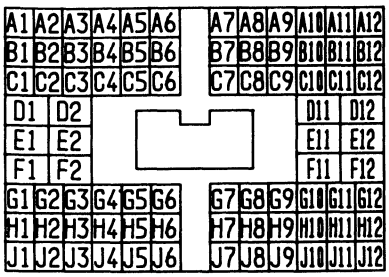

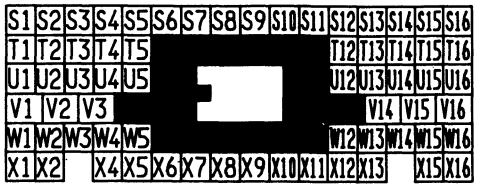

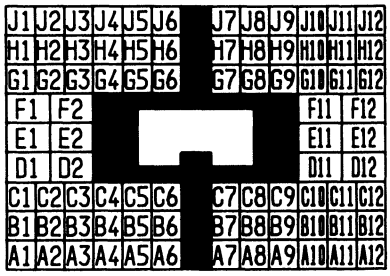

INSTRUMENT HARNESS

ENGINE ROOM HARNESS

SEL287M

1990 NISSAN AXXESS
CIRCUIT DIAGRAM

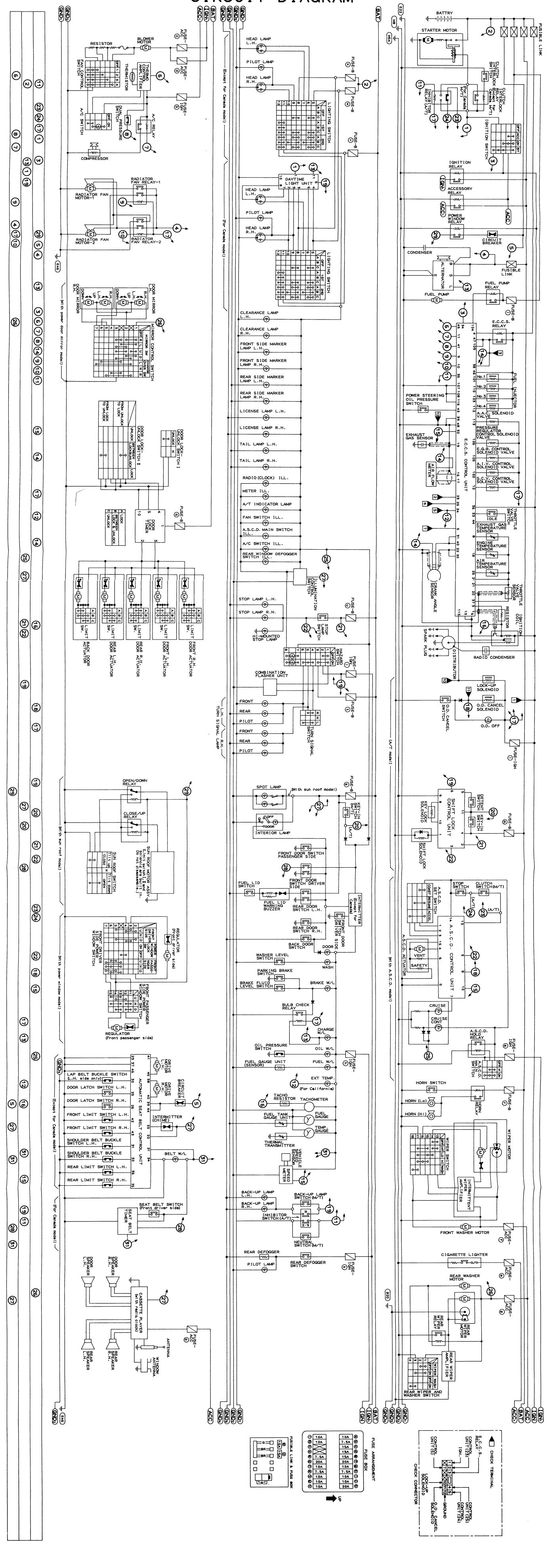

INCH TO METRIC CONVERSION TABLE

(Rounded-off for automotive use)

inches	mm	inches	mm
.100	2.54	.610	15.49
.110	2.79	.620	15.75
.120	3.05	.630	16.00
.130	3.30	.640	16.26
.140	3.56	.650	16.51
.150	3.81	.660	16.76
.160	4.06	.670	17.02
.170	4.32	.680	17.27
.180	4.57	.690	17.53
.190	4.83	.700	17.78
.200	5.08	.710	18.03
.210	5.33	.720	18.29
.220	5.59	.730	18.54
.230	5.84	.740	18.80
.240	6.10	.750	19.05
.250	6.35	.760	19.30
.260	6.60	.770	19.56
.270	6.86	.780	19.81
.280	7.11	.790	20.07
.290	7.37	.800	20.32
.300	7.62	.810	20.57
.310	7.87	.820	20.83
.320	8.13	.830	21.08
.330	8.38	.840	21.34
.340	8.64	.850	21.59
.350	8.89	.860	21.84
.360	9.14	.870	22.10
.370	9.40	.880	22.35
.380	9.65	.890	22.61
.390	9.91	.900	22.86
.400	10.16	.910	23.11
.410	10.41	.920	23.37
.420	10.67	.930	23.62
.430	10.92	.940	23.88
.440	11.18	.950	24.11
.450	11.43	.960	24.38
.460	11.68	.970	24.64
.470	11.94	.980	24.89
.480	12.19	.990	25.15
.490	12.45	1.000	25.40
.500	12.70	2.000	50.80
.510	12.95	3.000	76.20
.520	13.21	4.000	101.60
.530	13.46	5.000	127.00
.540	13.72	6.000	152.40
.550	13.97	7.000	177.80
.560	14.22	8.000	203.20
.570	14.48	9.000	228.60
.580	14.73	10.000	254.00
.590	14.99	20.000	508.00
.600	15.24		

METRIC TO INCH CONVERSION TABLE

(Rounded-off for automotive use)

mm	inches	mm	inches
1	.0394	51	2.008
2	.079	52	2.047
3	.118	53	2.087
4	.157	54	2.126
5	.197	55	2.165
6	.236	56	2.205
7	.276	57	2.244
8	.315	58	2.283
9	.354	59	2.323
10	.394	60	2.362
11	.433	61	2.402
12	472	62	2.441
13	.512	63	2.480
14	.551	64	2.520
15	.591	65	2.559
16	.630	66	2.598
17	.669	67	2.638
18	.709	68	2.677
19	.748	69	2.717
20	.787	70	2.756
21	.827	71	2.795
22	.866	72	2.835
23	.906	73	2.874
24	.945	74	2.913
25	.984	75	2.953
26	1.024	76	2.992
27	1.063	77	3.031
28	1.102	78	3.071
29	1.142	79	3.110
30	1.181	80	3.150
31	1.220	81	3.189
32	1.260	82	3.228
33	1.299	83	3.268
34	1.339	84	3.307
35	1.378	85	3.346
36	1.417	86	3.386
37	1.457	87	3.425
38	1.496	88	3.465
39	1.535	89	3.504
40	1.575	90	3.543
41	1.614	91	3.583
42	1.654	92	3.622
43	1.693	93	3.661
44	1.732	94	3.701
45	1.772	95	3.740
46	1.811	96	3.780
47	1.850	97	3.819
48	1.890	98	3.858
49	1.929	99	3.898
50	1.969	100	3.937

QUICK REFERENCE CHART : AXXESS 1990

ENGINE TUNE-UP DATA

Engine model		KA24E	
Firing order		1-3-4-2	
Idle speed rpm			
M/T		700±50, 750±50*	
A/T (in "N" position)		700±50, 750±50*	
Ignition timing (degree B.T.D.C. at idle speed)		15±2	
Idle "CO" (% at idle speed)		Idle mixture screw is preset and sealed at factory.	
Valve clearance (Hot) mm (in)		Non-adjustable	
High tension cable resistance kΩ/m (kΩ/ft)		Less than 30 (9.14)	
Spark plug			
Type	Standard	ZFR5E-11	
	Hot	ZFR4E-11	
	Cold	ZFR6E-11	
Gap mm (in)		1.0 - 1.1 (0.039 - 0.043)	
Drive belt deflection (Cold) mm (in)		Used belt deflection	Deflection of new belt
		Limit / Deflection after adjustment	
Alternator		8 (0.31) / 6 - 7 (0.24 - 0.28)	5 - 6 (0.20 - 0.24)
Air conditioner compressor		8 (0.31) / 5 - 6 (0.20 - 0.24)	4 - 5 (0.16 - 0.20)
Applied pressed force N (kg, lb)		98 (10, 22)	
Tightening torque		N·m	kg·m / ft·lb
Spark plug		20 - 29	2.0 - 3.0 / 14 - 22
Oil pan drain plug		29 - 39	3.0 - 4.0 / 22 - 29

*: For Canada

CLUTCH PEDAL

Unit: mm (in)

Pedal height	177 - 187 (6.97 - 7.36)
Pedal free travel	1 - 3 (0.04 - 0.12)

WHEEL ALIGNMENT (Unladen*)

Front axle and front suspension

		2WD	4WD
Camber	degree	−25′ to 1°05′	−35′ to 55′
Caster	degree	−15′ to 1°15′	−5′ to 1°25′
Toe-in	mm (in)	0 - 4 (0 - 0.16)	0 - 4 (0 - 0.16)
(Total toe-in)	degree	0′ - 24′	0′ - 24′
Front wheel turning angle Full turn Inside/Outside	degree	37° - 41°/28° - 32°	36° - 40°/28° - 32°

Rear axle and rear suspension

		2WD	4WD
Camber	degree	−45′ to 45′	−55′ to 35′
Toe-out	mm (in)	2 - 6 (0.08 - 0.24)	0 - 4 (0 - 0.16)
(Total toe-out)	degree	12′ - 36′	0′ - 24′

*Tankful of fuel, radiator coolant and engine oil full.
Spare tire, jack, hand tools, mats in designated positions.

FRONT WHEEL BEARING

Wheel bearing lock nut Tightening torque N·m (kg-m, ft-lb)	235 - 314 (24 - 32, 174 - 231)
Wheel bearing end play mm (in)	0.05 (0.0020) or less

REAR WHEEL BEARING

Wheel bearing lock nut Tightening torque N·m (kg-m, ft-lb)	2WD 186 - 255 (19 - 26, 137 - 188) 4WD 235 - 314 (24 - 32, 174 - 231)
Wheel bearing end play mm (in)	0.05 (0.0020) or less

BRAKE

Unit: mm (in)

Applied model		2WD 5 passengers	2WD 7 passengers and 4WD
Disc brake			
Pad minimum thickness		2.0 (0.079)	
Rotor minimum thickness		20.0 (0.787)	
Drum brake			
Lining minimum thickness		1.5 (0.059)	
Drum maximum inner dia.		230.0 (9.06)	261.5 (10.30)
Brake pedal			
Free height	M/T	165 - 175 (6.50 - 6.89)	
	A/T	174 - 184 (6.85 - 7.24)	
Depressed height*1		90 (3.54) or more	
Parking brake Number of notches*2		10 - 11*3	12 - 13*4

*1: Under force of 490 N (50 kg, 110 lb) with engine running
*2: At pulling force 196 N (20 kg, 44 lb)
*3: 2WD only
*4: 4WD only

REFILL CAPACITIES

Unit		Liter	US measure
Fuel tank		65, 60*	17-1/8 gal, 15-7/8 gal*
Coolant	Coolant with reservoir	7.4	7-7/8 qt
	Reservoir	0.6	5/8 qt
Engine	With oil filter	3.5	3-3/4 qt
	Without oil filter	3.1	3-1/4 qt
Transaxle	M/T	4.7	10 pt
	A/T	7.4	7-7/8 qt
Transfer		1.6	1-3/4 qt
Rear differential carrier		1.0	2-1/8 pt
Power steering system		1.0	1-1/8 qt
Air conditioning system	Compressor oil	0.20	6.8 fl oz
	Refrigerant	0.9 - 1.1 kg	2.0 - 2.4 lb

*: For 4WD models

NISSAN MOTOR CO., LTD.
Overseas Service Department
Tokyo, Japan

Edition: January 1989
Printing: August 1989 (02)
Publication No. SM0E-0M11U0
Printed in Japan