SECTION DLK
DOOR & LOCK

CONTENTS

WITH INTELLIGENT KEY SYSTEM

WITHOUT INTELLIGENT KEY SYSTEM

BASIC INSPECTION

DIAGNOSIS AND REPAIR WORK FLOW

Work Flow

INFOID:0000000007905375

OVERALL SEQUENCE

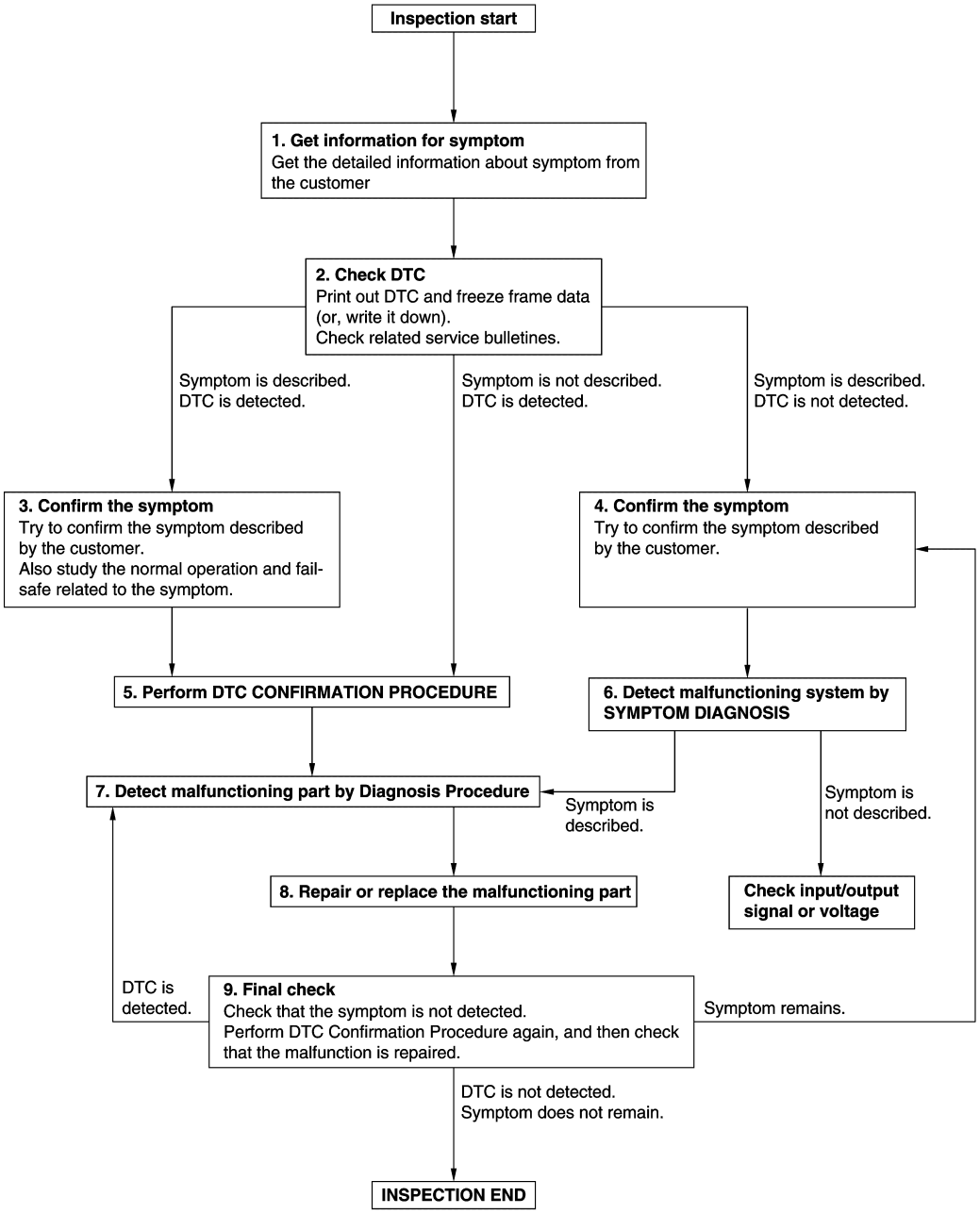

JMKIA8652GB

DETAILED FLOW

1. GET INFORMATION FOR SYMPTOM

1. Get detailed information from the customer about the symptom (the condition and the environment when the incident/malfunction occurs).
2. Check operation condition of the function that is malfunctioning.

>> GO TO 2.

2. CHECK DTC

1. Check DTC.
2. Perform the following procedure if DTC is detected.
- Record DTC and freeze frame data (Print them out using CONSULT.)
- Erase DTC.
- Study the relationship between the cause detected by DTC and the symptom described by the customer.
3. Check related service bulletins for information.

Are any symptoms described and any DTC detected?

Symptom is described, DTC is detected>>GO TO 3.
Symptom is described, DTC is not detected>>GO TO 4.
Symptom is not described, DTC is detected>>GO TO 5.

3. CONFIRM THE SYMPTOM

Try to confirm the symptom described by the customer.
Also study the normal operation and fail-safe related to the symptom.
Verify relation between the symptom and the condition when the symptom is detected.

>> GO TO 5.

4. CONFIRM THE SYMPTOM

Try to confirm the symptom described by the customer.
Verify relation between the symptom and the condition when the symptom is detected.

>> GO TO 6.

5. PERFORM DTC CONFIRMATION PROCEDURE

Perform DTC CONFIRMATION PROCEDURE for the detected DTC, and then check that DTC is detected again. At this time, always connect CONSULT to the vehicle, and check self diagnostic results in real time.
If two or more DTCs are detected, refer to BCS-74, "DTC Inspection Priority Chart" (BCM), and determine trouble diagnosis order.

NOTE:
- Freeze frame data is useful if the DTC is not detected.
- Perform Component Function Check if DTC CONFIRMATION PROCEDURE is not included on Service Manual. This simplified check procedure is an effective alternative though DTC cannot be detected during this check.
  If the result of Component Function Check is NG, it is the same as the detection of DTC by DTC CONFIRMATION PROCEDURE.

Is DTC detected?

YES >> GO TO 7.
NO >> Check according to GI-41, "Intermittent Incident".

6. DETECT MALFUNCTIONING SYSTEM BY SYMPTOM DIAGNOSIS

Detect malfunctioning system according to SYMPTOM DIAGNOSIS based on the confirmed symptom in step 4, and determine the trouble diagnosis order based on possible causes and symptom.

Is the symptom described?

YES >> GO TO 7.
NO >> Monitor input data from related sensors or check voltage of related module terminals using CONSULT.

7. DETECT MALFUNCTIONING PART BY DIAGNOSIS PROCEDURE

Inspect according to Diagnosis Procedure of the system.

Is malfunctioning part detected?

YES >> GO TO 8.
NO >> Check according to GI-41, "Intermittent Incident".

8. REPAIR OR REPLACE THE MALFUNCTIONING PART

1. Repair or replace the malfunctioning part.
2. Reconnect parts or connectors disconnected during Diagnosis Procedure again after repair and replacement.
3. Check DTC. If DTC is detected, erase it.

>> GO TO 9.

9. FINAL CHECK

When DTC is detected in step 2, perform DTC CONFIRMATION PROCEDURE again, and then check that the malfunction is repaired securely.
When symptom is described by the customer, refer to confirmed symptom in step 3 or 4, and check that the symptom is not detected.

Is DTC detected and does symptom remain?

YES-1 >> DTC is detected: GO TO 7.
YES-2 >> Symptom remains: GO TO 4.
NO >> Before returning the vehicle to the customer, always erase DTC.

INSPECTION AND ADJUSTMENT

ADDITIONAL SERVICE WHEN REPLACING CONTROL UNIT

ADDITIONAL SERVICE WHEN REPLACING CONTROL UNIT : Description

INFOID:0000000007772725

Perform the system initialization when replacing BCM, replacing Intelligent Key or registering an additional Intelligent Key.

ADDITIONAL SERVICE WHEN REPLACING CONTROL UNIT : Special Repair Requirement

INFOID:0000000007772726

Refer to CONSULT operation manual for the NATS-IVIS/NVIS.

SYSTEM DESCRIPTION

POWER DOOR LOCK SYSTEM

System Diagram

INFOID:0000000007772727

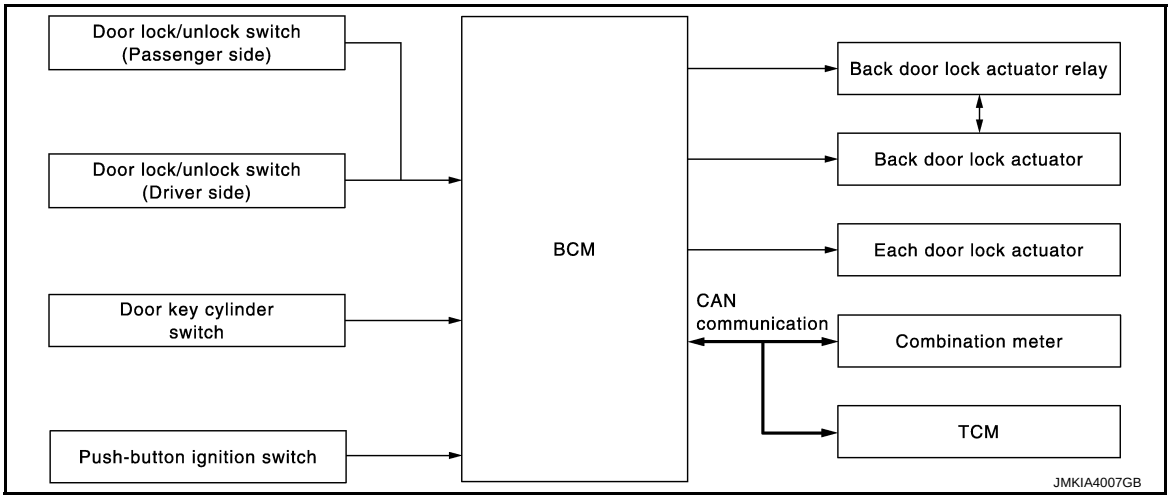

System Description

INFOID:0000000007772728

DOOR LOCK FUNCTION

Door Lock and Unlock Switch

- The door lock and unlock switch (driver side) is build into power window main switch.
- The door lock and unlock switch (passenger side) is build into front power window switch (passenger side).
- Interlocked with the locking operation of door lock and unlock switch, door lock actuators of all doors and fuel lid lock actuator are locked.
- Interlocked with the unlocking operation of door lock and unlock switch, door lock actuators of all doors and fuel lid lock actuator are unlocked.

Door Key Cylinder Switch

- With the door key inserted in the door key cylinder on driver side, turning it to “LOCK”, locks door lock actuator of all doors and fuel lid lock actuator.
- With the door key inserted in the door key cylinder on driver side, turning it to “UNLOCK” once unlocks the driver side door, turning it to “UNLOCK” again within 60 seconds after the first unlock operation unlocks all of the other doors actuator and fuel lid lock actuator. - (SELECTIVE UNLOCK OPERATION)

Selective unlock operation mode can be changed using “DOOR LOCK-UNLOCK SET” mode in “WORK SUPPORT”. Refer to DLK-38, "DOOR LOCK : CONSULT Function (BCM - DOOR LOCK)".

AUTOMATIC DOOR LOCK/UNLOCK FUNCTION (LOCK OPERATION)

The interlock door lock function is the function that locks all doors linked with the vehicle speed or shift position. It has 2 types as per the following items.

Vehicle Speed Sensing Auto Door Lock*1

All doors are locked when the vehicle speed reaches 24 km/h (15 MPH) or more.
BCM outputs the lock signal to all door lock actuators when it detects that the ignition switch is turned ON, all doors are closed and the vehicle speed received from the combination meter via CAN communication becomes 24 km/h (15 miles) or more.

P Range Interlock Door Lock*2

All doors are locked when shifting the selector lever from the P position to any position other than P.
BCM outputs the lock signal to all door lock actuators when it detects that the ignition switch is in the ON position and the shift signal received from the TCM via CAN communication is shifted from the P position to any position other than P.

Setting change of Automatic Door Lock/Unlock Function

The lock operation setting of the automatic door lock/unlock function can be changed.

NOTE:

P range interlock door lock can be selected for M/T models, but automatic door lock/unlock function does not operate.

With CONSULT

The ON/OFF switching of the automatic door lock function and the type selection of the automatic door lock/unlock function can be performed at the WORK SUPPORT setting of CONSULT.

Without CONSULT

The automatic door lock function ON/OFF can be switched by performing the following operation.

1. Close all doors (door switch OFF)
2. Turn ignition switch ON
3. Press and hold the door lock and unlock switch for 5 seconds or more in the lock direction within 20 seconds after turning the ignition switch ON.
4. The switching complete when the hazard lamp blinks.

OFF → ON	: 2 blinks
ON → OFF	: 1 blink

AUTOMATIC DOOR LOCK/UNLOCK FUNCTION (UNLOCK OPERATION)

The automatic door lock/unlock function is the function that unlocks all doors linked with the key position or shift position. It has 2 types as per the following items.

IGN OFF Interlock Door Unlock*1

All doors are unlocked when the power supply position is changed from ON to OFF.
BCM outputs the unlock signal to all door lock actuators when it detects that the power supply position is changed from ignition switch ON to OFF.

P Range Interlock Door Unlock*2

All doors are unlocked when shifting the selector lever from any position other than the P to P position.
BCM outputs the unlock signal to all door lock actuators when it detects that the ignition switch is in the ON position and the shift signal received from TCM via CAN communication is shifted from any position other than the P to P position.

Setting change of Automatic Door Lock/Unlock Function

The unlock operation setting of the automatic door lock/unlock function can be changed.

NOTE:

P range interlock door lock can be selected for M/T models, but automatic door lock/unlock function does not operate.

With CONSULT

The ON/OFF switching of the automatic door lock/unlock function and the type selection of the automatic door lock/unlock function can be performed at the WORK SUPPORT setting of CONSULT.

Without CONSULT

The automatic door lock/unlock function ON/OFF can be switched by performing the following operation.

1. Close all doors below (door switch OFF)
2. Turn ignition switch ON
3. Press and hold the door lock and unlock switch for 5 seconds or more in the unlock direction within 20 seconds after turning the power supply position ON.
4. The switching is complete when the hazard lamp blinks.

OFF → ON	: 2 blinks
ON → OFF	: 1 blink

*1: This function is set to ON before delivery.

*2: This function does not operate on M/T models.

Component Parts Location

INFOID:0000000007772729

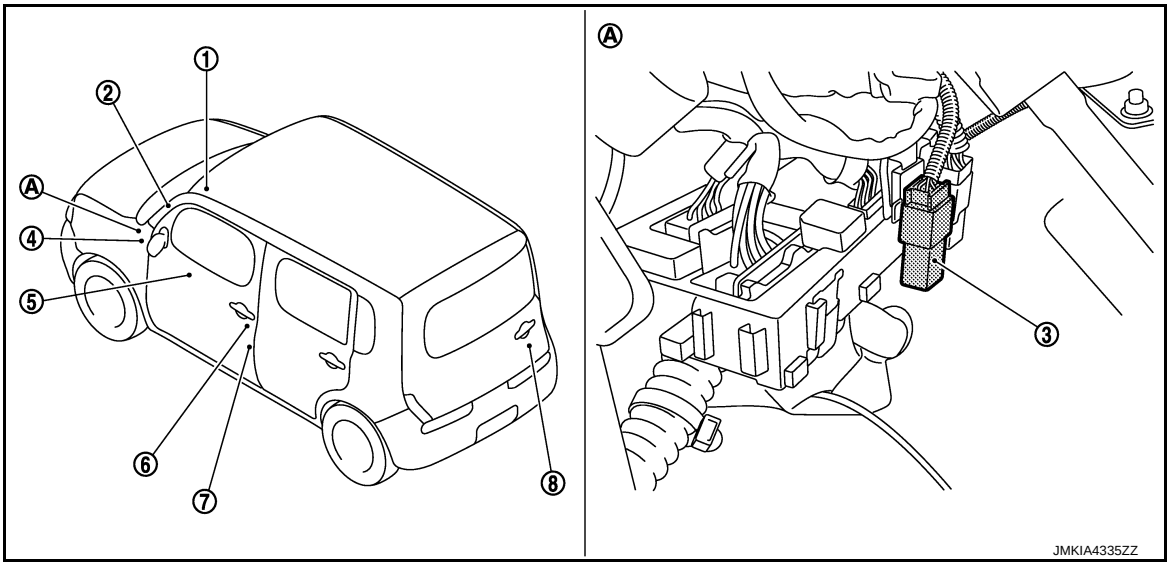

1. Push-button ignition switch (push switch)
2. Combination meter
3. Back door lock actuator relay
4. BCM
   Refer to BCS-10, "Component Parts Location"
5. Power window main switch (door lock and unlock switch)
6. Front door lock assembly (driver side)
7. Front door switch (driver side)
8. Back door lock assembly

A. Behind the instrument lower panel LH (Left side)

Component Description

INFOID:0000000007772730

Item	Function
BCM	Controls the door lock function
Door lock and unlock switch	Inputs lock or unlock signal to BCM
Door lock actuator	Inputs lock/unlock signal from BCM and locks/unlocks each door
Door key cylinder switch	Built-in driver side door lock assembly • Inputs lock or unlock signal to power window main switch • Power window main switch transmits door lock/unlock signal to BCM
Combination meter	Transmits vehicle speed signal to CAN communication line
TCM*	Transmits shift position signal to BCM via CAN communication line
Back door lock actuator relay	Controls the back door lock/unlock operation
Push-button ignition switch	Inputs push-button ignition switch ON/OFF condition to BCM

*: With CVT models

INTELLIGENT KEY SYSTEM

INTELLIGENT KEY SYSTEM

INTELLIGENT KEY SYSTEM : System Diagram

INFOID:0000000007772731

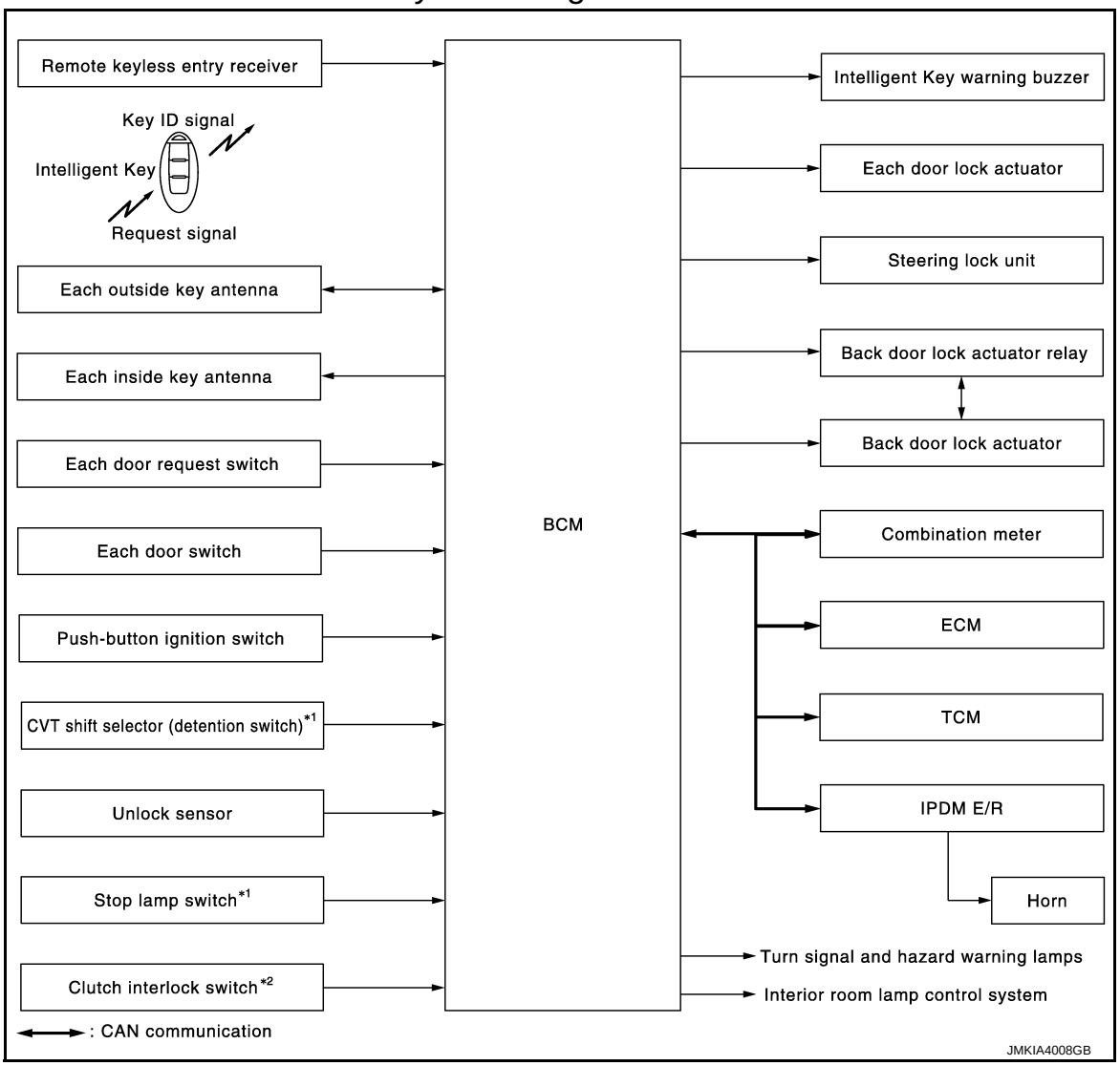

*1: With CVT models
*2: With M/T models

INTELLIGENT KEY SYSTEM : System Description

INFOID:0000000007772732

- The Intelligent Key system is a system that makes it possible to lock and unlock the door locks (door lock/unlock function) by carrying the Intelligent Key, which operates based on the results of electronic ID verification using two-way communication between the Intelligent Key and the vehicle (BCM).
  CAUTION:
  The driver should always carry the Intelligent Key
- The settings for each function can be changed with CONSULT.
- If an Intelligent Key is lost, a new Intelligent Key can be registered. A maximum of 4 Intelligent Keys can be registered.
- It is possible to perform a diagnosis on the system and register an Intelligent Key with CONSULT.

Function	Description	Refer
Door lock	Lock/unlock can be performed by pressing the request switch	DLK-20
Remote keyless entry	Lock/unlock can be performed by pressing the remote controller button of the Intelligent Key	DLK-25

Function	Description	Refer
Key reminder	The key reminder buzzer sounds a warning if the door is locked with the key left inside the vehicle	DLK-30
Warning	If an action that does not meet the operating condition of the Intelligent Key system is taken, the buzzer sounds to inform the driver	DLK-32
Engine start	The engine can be turned on while carrying the Intelligent Key	SEC-11
Interior room lamp control	Interior room lamp is controlled according to door lock/unlock state	INL-6
Panic alarm	When Intelligent Key panic alarm button is pressed, horn sounds	SEC-21

INTELLIGENT KEY SYSTEM : Component Parts Location

INFOID:0000000007772733

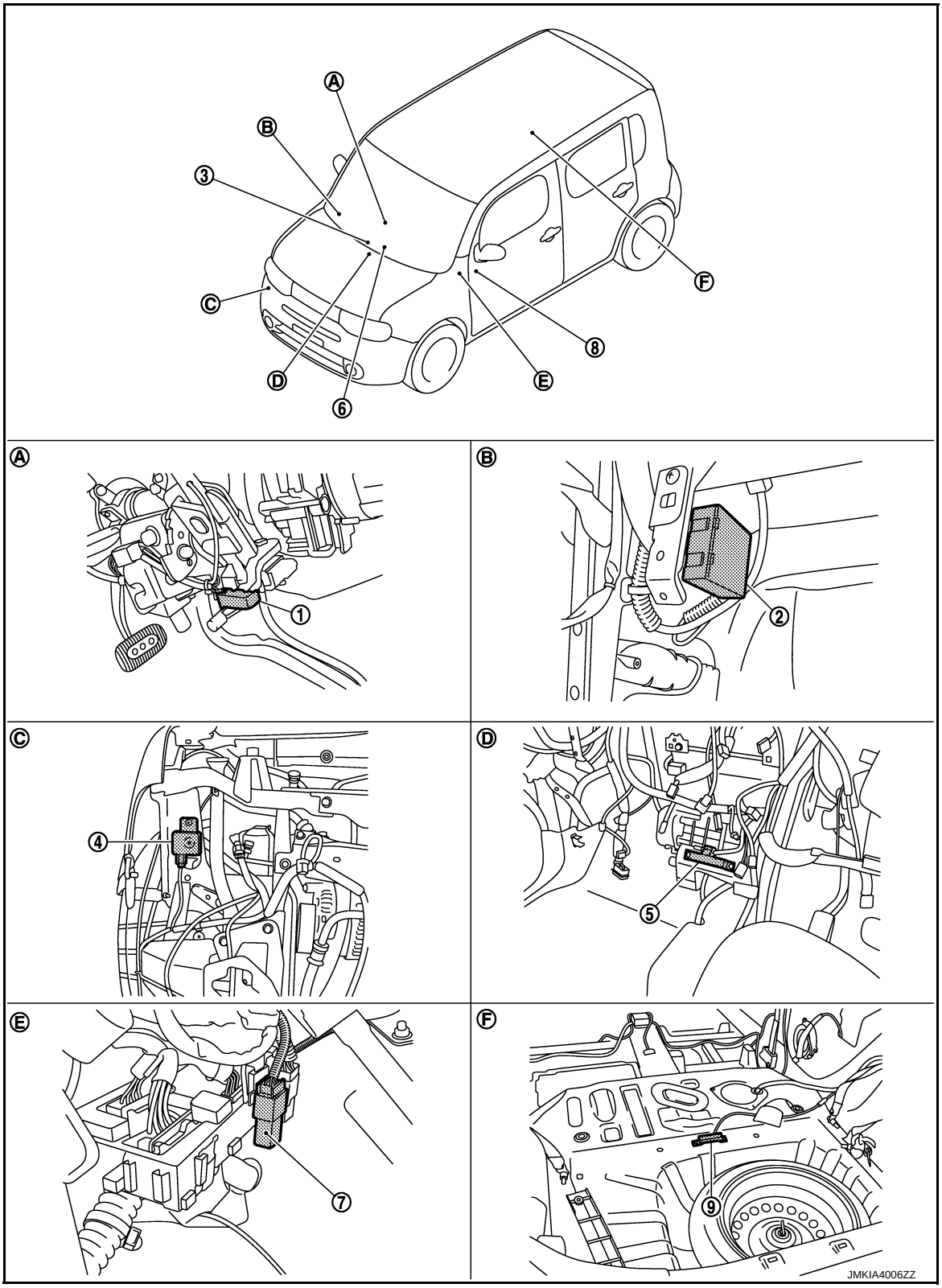

1. CVT shift selector (detention switch)*
2. Remote keyless entry receiver
3. Push-button ignition switch
4. Intelligent Key warning buzzer
5. Inside key antenna (instrument center)
6. Combination meter

7. Back door lock actuator relay	8. BCM Refer to BCS-81, "Removal and Installation"	9. Inside key antenna (luggage room)
A. Integrated in CVT shift selector	B. View with glove box assembly removed	C. View with front bumper removed
D. Behind the audio unit	E. Behind the instrument lower panel LH (Left side)	F. View with rear seat removed

*: With CVT models

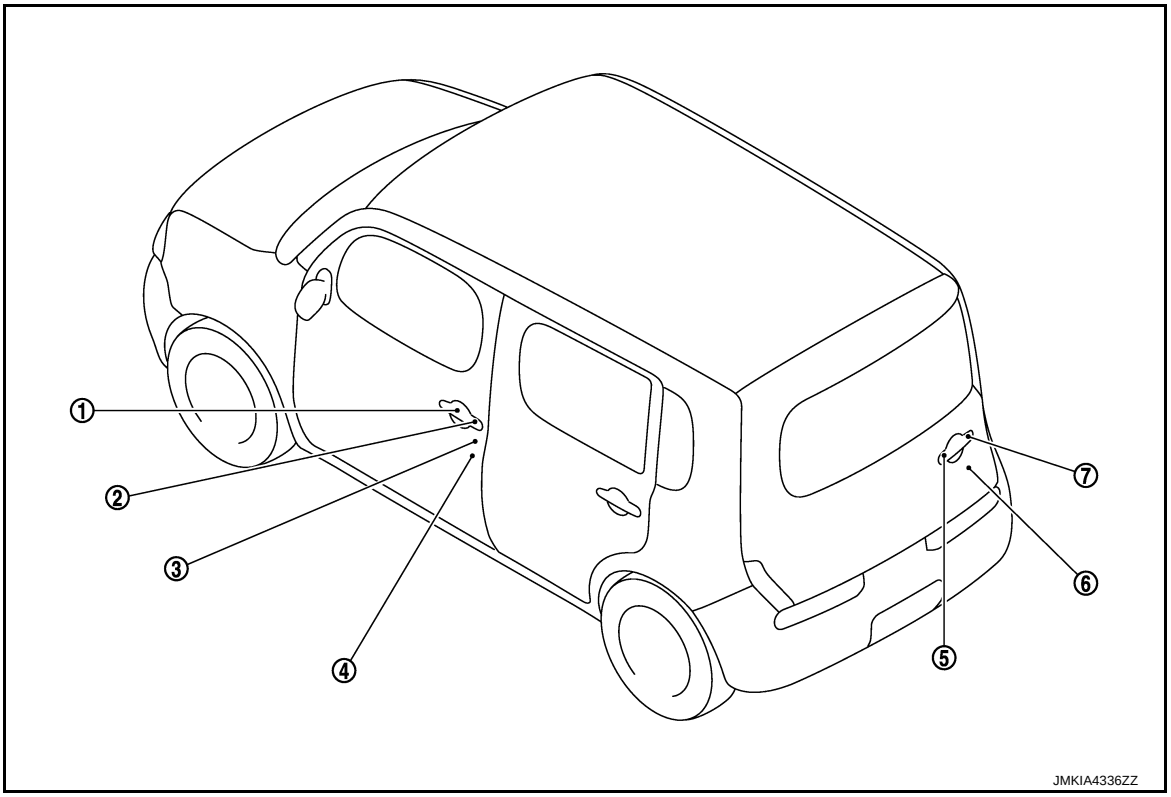

1. Outside key antenna (driver side)	2. Front door request switch (driver side)	3. Front door lock assembly (driver side)
4. Front door switch (driver side)	5. Outside antenna (back door)	6. Back door lock assembly
7. Back door request switch		

INTELLIGENT KEY SYSTEM : Component Description

INFOID:0000000007772734

Item	Function
BCM	Controls the Intelligent Key system
IPDM E/R	Sounds horn via CAN communication between BCM
Door lock actuator	Inputs lock/unlock signal from BCM and locks/unlocks each door
Door switch	Inputs door open/close condition to BCM
Remote keyless entry receiver	Receives lock/unlock signal from the Intelligent Key, and then transmits to BCM
Door request switch	Inputs lock/unlock operation to BCM
Intelligent Key	Transmits button operation to remote keyless entry receiver
Outside key antenna	Detects if Intelligent Key is outside the vehicle
Inside key antenna	Detects if Intelligent Key is inside the vehicle
Unlock sensor	Detects door lock condition of driver door
CVT shift selector (detention switch)*	Detects the P range position of CVT selector lever

Item	Function
Intelligent Key warning buzzer	Warns the user of the lock/unlock condition and inappropriate operations with the buzzer sound
Hazard warning lamp	Warns the user of the door lock/unlock condition and inappropriate operations with the lamps blink
Back door lock actuator relay	Controls the back door lock/unlock operation
Push-button ignition switch	Inputs push-button ignition switch ON/OFF condition to BCM

*: With CVT models

DOOR LOCK FUNCTION

DOOR LOCK FUNCTION : System Diagram

INFOID:0000000007772735

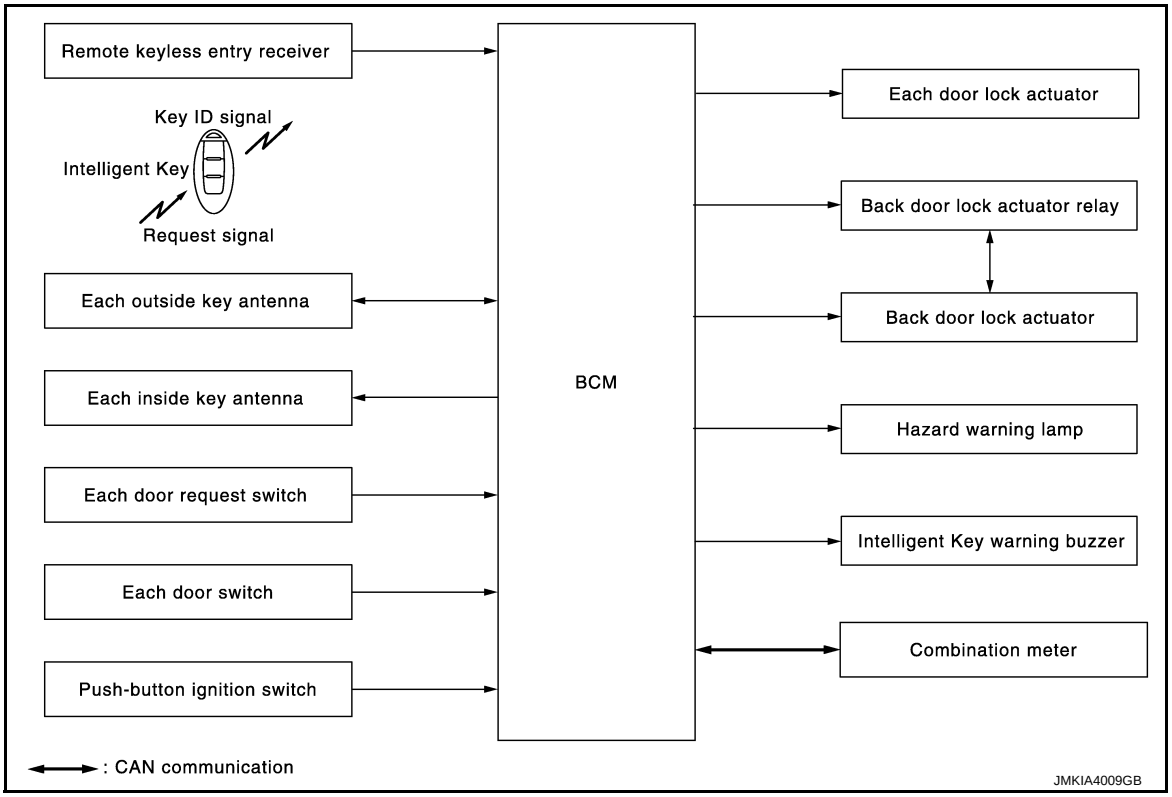

DOOR LOCK FUNCTION : System Description

INFOID:0000000007772736

Only when pressing the request switch, it is possible to lock and unlock the door by carrying the Intelligent Key.

OPERATION DESCRIPTION

- When the BCM detects that each door request switch is pressed, it starts the outside key antenna and inside key antenna corresponding to the pressed door request switch and transmits the request signal to the Intelligent Key. And then, check that the Intelligent Key is near the door.
- If the Intelligent Key is within the outside key antenna detection area, it receives the request signal and transmits the key ID signal to the BCM via remote keyless entry receiver.
- BCM receives the key ID signal and compares it with the registered key ID.
- BCM lock/unlock each door and sounds Intelligent Key buzzer warning (lock: 2 time, unlock: 1 times) at the same time as a reminder.

OPERATION CONDITION

If the following conditions are satisfied, door lock/unlock operation is performed if the door request switch is operated.

Each request switch operation	Operation condition
Lock	• All doors are closed • P position warning is not activated • Panic alarm is not activated • Intelligent Key is outside the vehicle • Intelligent Key is within outside key antenna detection area
Unlock	• Panic alarm is not activated • Intelligent Key is outside the vehicle • Intelligent Key is within outside key antenna detection area *

*: Even with a registered Intelligent Key remaining inside the vehicle, door locks can be unlocked from outside of the vehicle with a spare Intelligent Key as long as key IDs are different.

OUTSIDE KEY ANTENNA DETECTION AREA

The outside key antenna detection area of door lock/unlock function is in the range of approximately 80 cm (31.50 in) surrounding the driver, passenger door handles (1) and back door handle (2). However, this operating range depends on the ambient conditions.

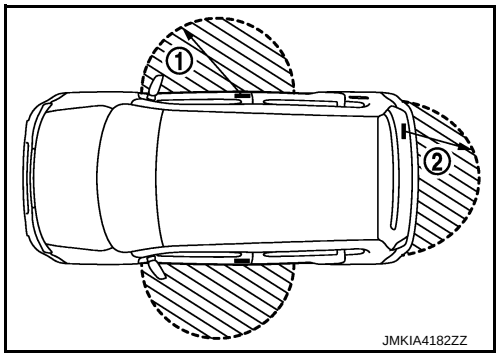

SELECTIVE UNLOCK FUNCTION

Lock Operation

When an LOCK signal is sent from door request switch, all doors will be locked.

Unlock Operation

- When an UNLOCK signal from driver side door request switch is transmitted, driver side door unlocks. When another UNLOCK signal is transmitted within 60 seconds, passenger side door, rear doors and back door unlocks.
- When an UNLOCK signal from passenger side door request switch is transmitted, passenger side door unlocks. When another UNLOCK signal is transmitted within 60 seconds, driver side door, rear doors and back door unlocks.
- When an UNLOCK signal from back door request switch is transmitted, back door unlocks. When another UNLOCK signal is transmitted within 60 seconds, driver side door, passenger side door and rear doors unlocks.

Selective unlock operation mode can be changed using “DOOR LOCK-UNLOCK SET” mode in “WORK SUPPORT”. Refer to DLK-38, "DOOR LOCK : CONSULT Function (BCM - DOOR LOCK)".

HAZARD AND BUZZER REMINDER FUNCTION

During lock, unlock, operation by each door request switch, the hazard warning lamps and Intelligent Key warning buzzer will blink or honk as a reminder.

When doors are locked, unlocked by each door request switch, BCM honks Intelligent Key warning buzzer as a reminder and blinks.

Operating Function of Hazard and Buzzer Reminder

Operation	Hazard warning lamp blinks	Intelligent Key warning buzzer honk
Unlock	Once	Once
Lock	Twice	Twice

Hazard and buzzer reminder does not operate in the following conditions.

- Ignition switch position is ON
- Door is open (only lock operation)

How to Change Hazard and Buzzer Reminder Mode

Refer to DLK-40, "INTELLIGENT KEY : CONSULT Function (BCM - INTELLIGENT KEY)".

AUTO DOOR LOCK FUNCTION

After door is unlocked by door request switch operation and if 60 seconds or more passes without performing the following operation, all doors are automatically locked. However, operation check function does not activate.

Operating condition	• Door switch is ON (door is open) • Door is locked • Push switch is pressed

Auto door lock mode can be changed by the “AUTO LOCK SET” mode in “WORK SUPPORT”. Refer to DLK-40, "INTELLIGENT KEY : CONSULT Function (BCM - INTELLIGENT KEY)".

LIST OF OPERATION RELATED PARTS

Parts marked with × are the parts related to operation.

Door lock function	Intelligent Key	Remote keyless entry receiver	Door switch	Door request switch	Door lock actuator	Inside key antenna	Outside key antenna	Intelligent Key warning buzzer	CAN communication system	BCM	Hazard warning lamp	Push-button ignition switch	Combination meter
Door lock/unlock function	×	×	×	×	×	×	×			×			
Hazard and buzzer reminder function								×	×	×	×		×
Selective unlock function	×			×	×	×	×			×			
Auto door lock function	×				×					×		×	

DOOR LOCK FUNCTION : Component Parts Location

INFOID:0000000007772737

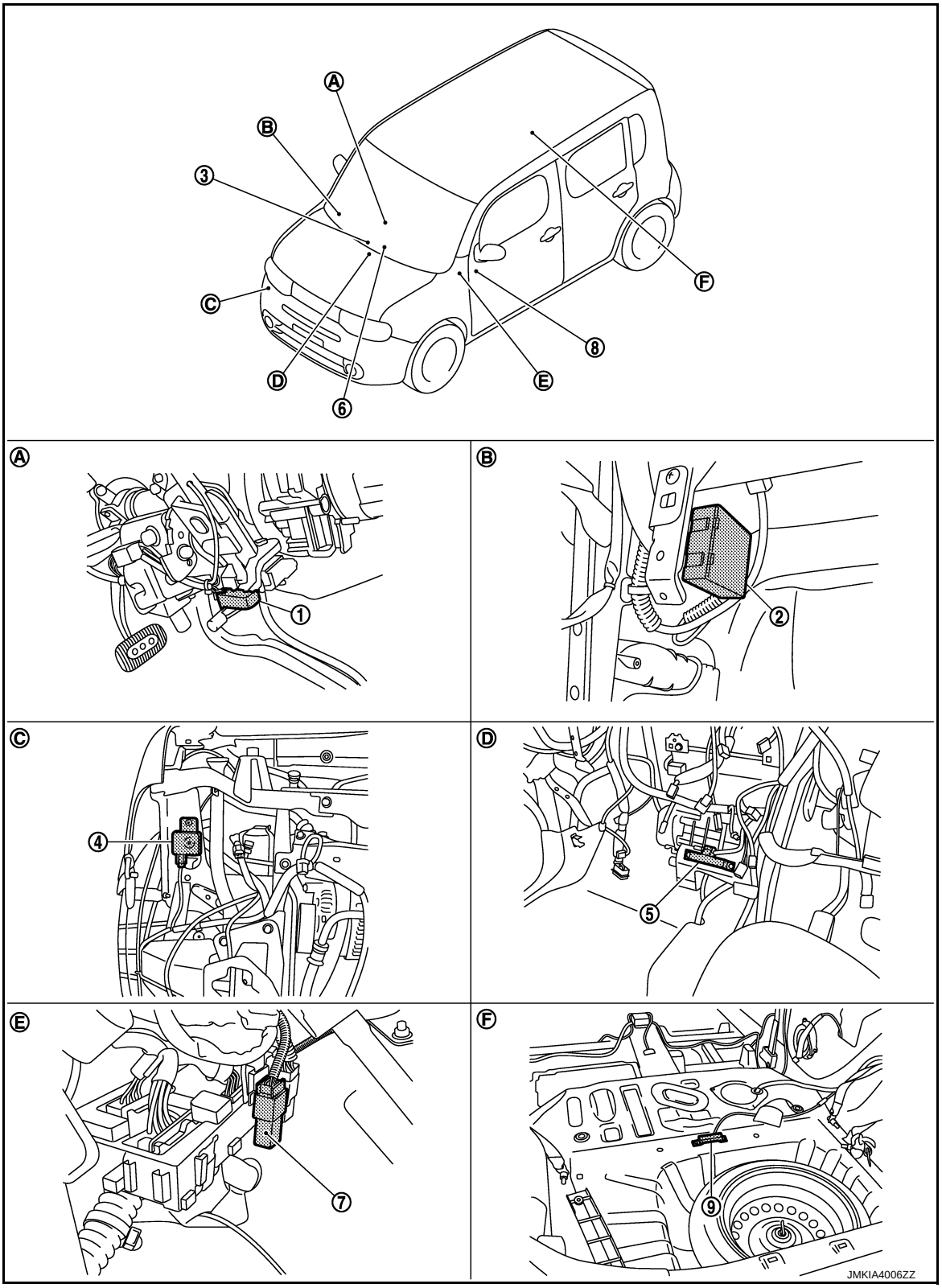

1. CVT shift selector (detention switch)*
2. Remote keyless entry receiver
3. Push-button ignition switch
4. Intelligent Key warning buzzer
5. Inside key antenna (instrument center)
6. Combination meter

7. Back door lock actuator relay	8. BCM Refer to BCS-81, "Removal and Installation"	9. Inside key antenna (luggage room)
A. Integrated in CVT shift selector	B. View with glove box assembly removed	C. View with front bumper removed
D. Behind the audio unit	E. Behind the instrument lower panel LH (Left side)	F. View with rear seat removed

*: With CVT models

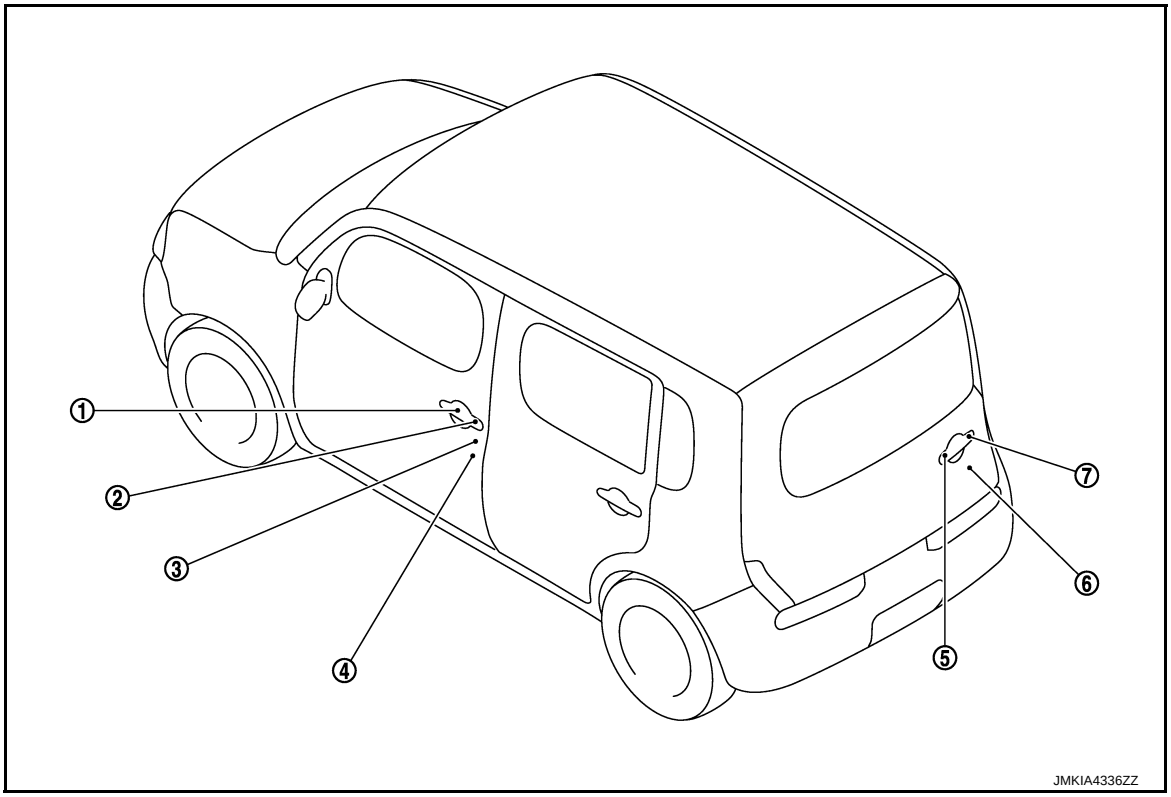

1. Outside key antenna (driver side)	2. Front door request switch (driver side)	3. Front door lock assembly (driver side)
4. Front door switch (driver side)	5. Outside antenna (back door)	6. Back door lock assembly
7. Back door request switch		

DOOR LOCK FUNCTION : Component Description

INFOID:0000000007772738

Item	Function
BCM	Controls the door lock function
Door lock actuator	Inputs lock/unlock signal from BCM and locks/unlocks each door
Door switch	Inputs door open/close condition to BCM
Remote keyless entry receiver	Receives lock/unlock signal from the Intelligent Key, and then transmits to BCM
Door request switch	Inputs lock/unlock operation to BCM
Intelligent Key	Transmits button operation to remote keyless entry receiver
Outside key antenna	Detects if Intelligent Key is outside the vehicle
Inside key antenna	Detects if Intelligent Key is inside the vehicle
Push-button ignition switch	Inputs push-button ignition switch ON/OFF condition to BCM
Intelligent Key warning buzzer	Warns the user of the lock/unlock condition and inappropriate operations with the buzzer sound

Item	Function
Back door lock actuator relay	Controls the back door lock/unlock operation
Hazard warning lamp	Warns the user of the door lock/unlock condition and in appropriate operations with the lamps blink

REMOTE KEYLESS ENTRY FUNCTION

REMOTE KEYLESS ENTRY FUNCTION : System Diagram

INFOID:0000000007772739

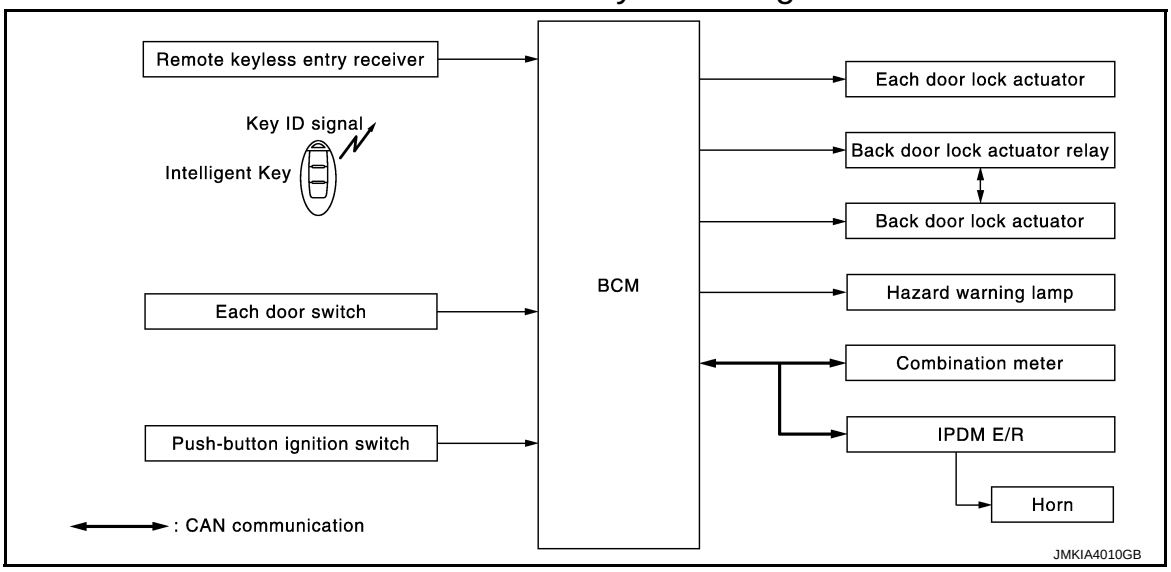

REMOTE KEYLESS ENTRY FUNCTION : System Description

INFOID:0000000007772740

The Intelligent Key has the same functions as the remote control entry system. Therefore, it can be used in the same manner as the remote controller by operating the door lock/unlock button.

OPERATION

Remote keyless entry system controls operation of the following items.
- Door lock/unlock
- Selective unlock
- Hazard and horn reminder
- Auto door lock

OPERATION AREA

To check that the Intelligent Key works normally, use within 1 m (3 ft) range of each doors, however the operable range may differ according to surroundings.

DOOR LOCK/UNLOCK FUNCTION

- When door lock/unlock button of the Intelligent Key is pressed, lock signal or unlock signal transmitted from Intelligent Key to BCM via remote keyless entry receiver.
- When BCM receives the door lock/unlock signal, it operates all door lock actuators and the hazard lamp (lock: 2 times, unlock: 1 time) and horn chirp signal to IPDM E/R at the same time as a reminder.
- IPDM E/R honks horn (lock: 2 times) as a reminder

OPERATION CONDITION

Remote controller operation	Operation condition
Lock	• Panic alarm is not activated • P position warning is not activated
Unlock	Panic alarm is not activated

SELECTIVE UNLOCK FUNCTION

- When an LOCK signal is transmitted from Intelligent Key, all doors are locked.
- When an UNLOCK signal is transmitted from Intelligent Key once, driver side door is unlocked.

- Then, if an UNLOCK signal is transmitted from Intelligent Key again within 60 seconds, all other doors are unlocked.

Selective unlock operation mode can be changed using “DOOR LOCK-UNLOCK SET” mode in “WORK SUPPORT”. Refer to DLK-38, "DOOR LOCK : CONSULT Function (BCM - DOOR LOCK)".

HAZARD AND HORN REMINDER FUNCTION

When doors are locked or unlocked by Intelligent Key, BCM blinks hazard warning lamps as a reminder and transmits horn chirp signal to IPDM E/R. IPDM E/R sounds horn as a reminder.
The hazard and horn reminder has a horn chirp mode (C mode) and a non-horn chirp mode (S mode).

Operating Function of Hazard and Horn Reminder

	C mode			S mode		
Intelligent Key operation	Lock	Unlock	Trunk open	Lock	Unlock	Trunk open
Hazard warning lamp blinks	Twice	Once	—	Twice	—	—
Horn sound	Once	—	—	—	—	—

Hazard and horn reminder does not operate in the following condition.
- Ignition switch position is ON
- Door is open (only lock operation)

How to change hazard and horn reminder mode

With CONSULT

Refer to DLK-40, "INTELLIGENT KEY : CONSULT Function (BCM - INTELLIGENT KEY)".

Without CONSULT

When LOCK and UNLOCK signals are sent from the Intelligent Key for more than 2 seconds at the same time, the hazard and horn reminder mode is changed and hazard warning lamp blinks and horn sounds as per the following items:

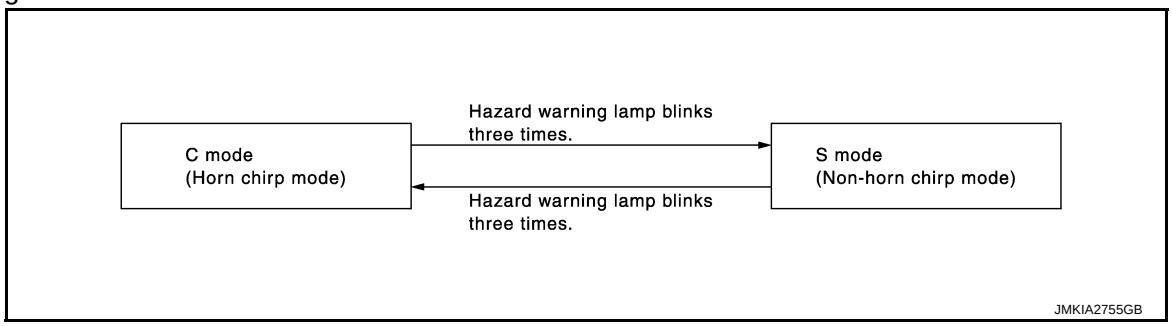

AUTO DOOR LOCK FUNCTION

After door is unlocked by Intelligent Key button operation and if 60 seconds or more passes without performing the following operation, all doors are automatically locked. However, operation check function does not activate.

Operating condition	• Door switch is ON (door is open) • Door is locked • Push switch is pressed

Auto door lock mode can be changed by the “AUTO LOCK SET” mode in “WORK SUPPORT”. Refer to DLK-40, "INTELLIGENT KEY : CONSULT Function (BCM - INTELLIGENT KEY)".

LIST OF OPERATION RELATED PARTS

Parts marked with × are the parts related to operation.

Remote keyless entry functions	Intelligent Key	Door switch	Door lock actuator	Intelligent Key warning buzzer	CAN communication system	BCM	Combination meter	Hazard warning lamp	Horn	IPDM E/R
Door lock/unlock function by remote control button	×	×	×		×	×				
Hazard and horn reminder function	×			×	×	×	×	×	×	×
Selective unlock function	×	×	×		×	×				
Auto door lock function	×				×	×				

REMOTE KEYLESS ENTRY FUNCTION : Component Parts Location

INFOID:0000000007772741

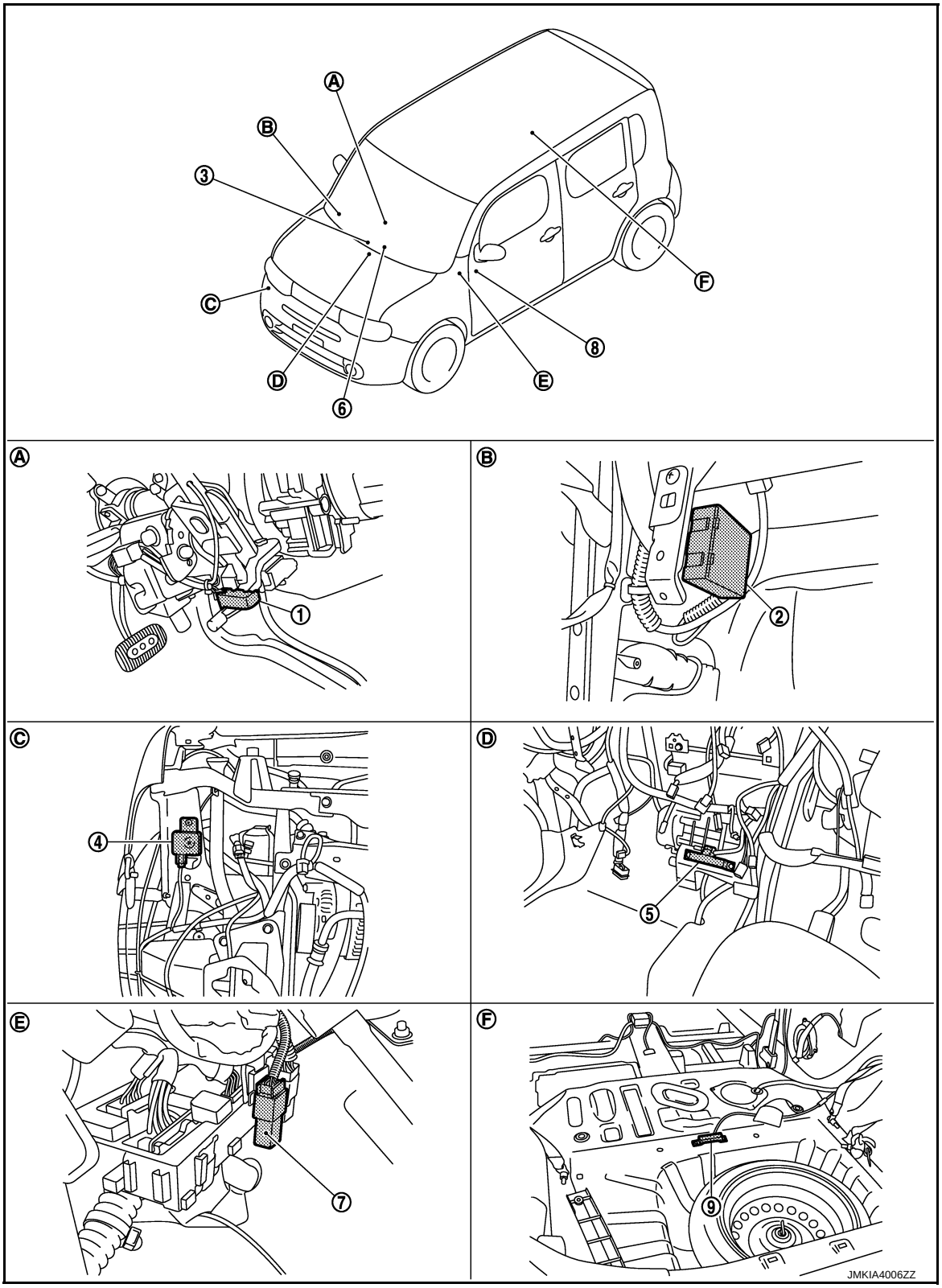

1. CVT shift selector (detention switch)*
2. Remote keyless entry receiver
3. Push-button ignition switch
4. Intelligent Key warning buzzer
5. Inside key antenna (instrument center)
6. Combination meter

7. Back door lock actuator relay	8. BCM Refer to BCS-81, "Removal and Installation"	9. Inside key antenna (luggage room)
A. Integrated in CVT shift selector	B. View with glove box assembly removed	C. View with front bumper removed
D. Behind the audio unit	E. Behind the instrument lower panel LH (Left side)	F. View with rear seat removed

*: With CVT models

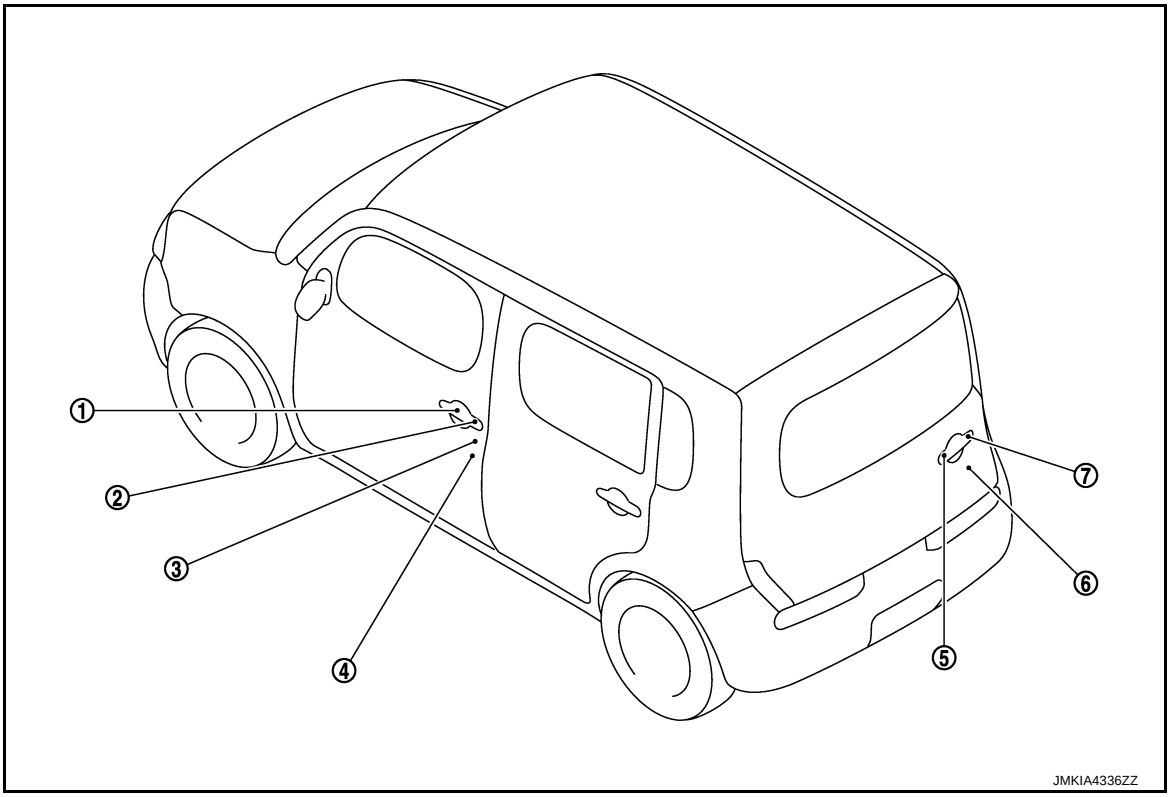

1. Outside key antenna (driver side)	2. Front door request switch (driver side)	3. Front door lock assembly (driver side)
4. Front door switch (driver side)	5. Outside antenna (back door)	6. Back door lock assembly
7. Back door request switch		

REMOTE KEYLESS ENTRY FUNCTION : Component Description

INFOID:0000000007772742

Item	Function
BCM	Controls the door lock function and trunk open function
IPDM E/R	Sounds horn and blinks head lamp via CAN communication between BCM
Door lock actuator	Outputs lock/unlock signal from BCM and locks/unlocks each door
Door switch	Inputs door open/close condition to BCM
Remote keyless entry receiver	Receives lock/unlock signal from the Intelligent Key, and then transmits to BCM
Intelligent Key	Transmits button operation to remote keyless entry receiver
Back door lock actuator relay	Controls back door lock/unlock operation
Push-button ignition switch	Input push-button ignition switch ON/OFF condition to BCM
Intelligent Key warning buzzer	Warns the user of the lock/unlock condition and inappropriate operations with the buzzer sound
Hazard warning lamp	Warns the user of the door lock/unlock condition and in appropriate operations with the lamps blink

KEY REMINDER FUNCTION

KEY REMINDER FUNCTION : System Diagram

INFOID:0000000007772743

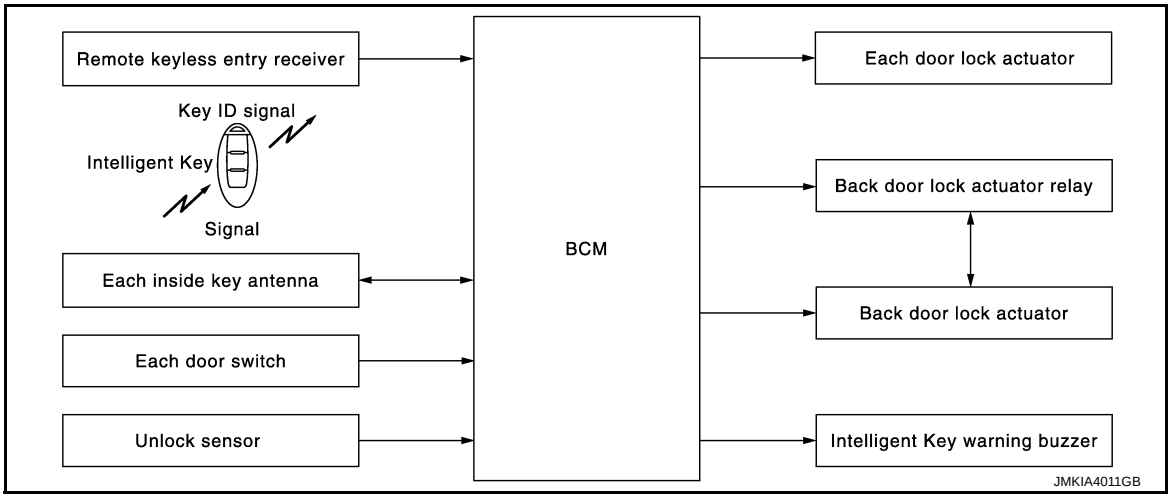

KEY REMINDER FUNCTION : System Description

INFOID:0000000007772744

Key reminder is the function that prevents the key from being left in the vehicle.
Key reminder has the following 2 functions.

Key remainder function	Operation condition	Operation
Driver door closed*	Right after driver side door is closed under the following conditions • Door lock operation is performed • Driver side door is opened • Driver side door is in unlock state	All doors unlock
Door is open or closed	Right after all doors are closed under the following conditions • Intelligent Key is inside the vehicle • Any door is opened • All doors are locked by door lock and unlock switch or door lock knob	• All doors unlock • Honk Intelligent Key warning buzzer

*:If the door closing impact shocks the door lock knob, or contacts against baggage with the door lock knob might activate the door locks accidentally but unlock operation is perform in these cases.

CAUTION:

- **The above function operates when the Intelligent Key is inside the vehicle. However, there may be times when the Intelligent Key cannot be detected, and this function does not operate when the Intelligent Key is on the instrument panel, rear parcel shelf, or in the glove box. Also, this system sometimes does not operate if the Intelligent Key is in the door pocket for the open door.**

KEY REMINDER FUNCTION : Component Parts Location

INFOID:0000000007772745

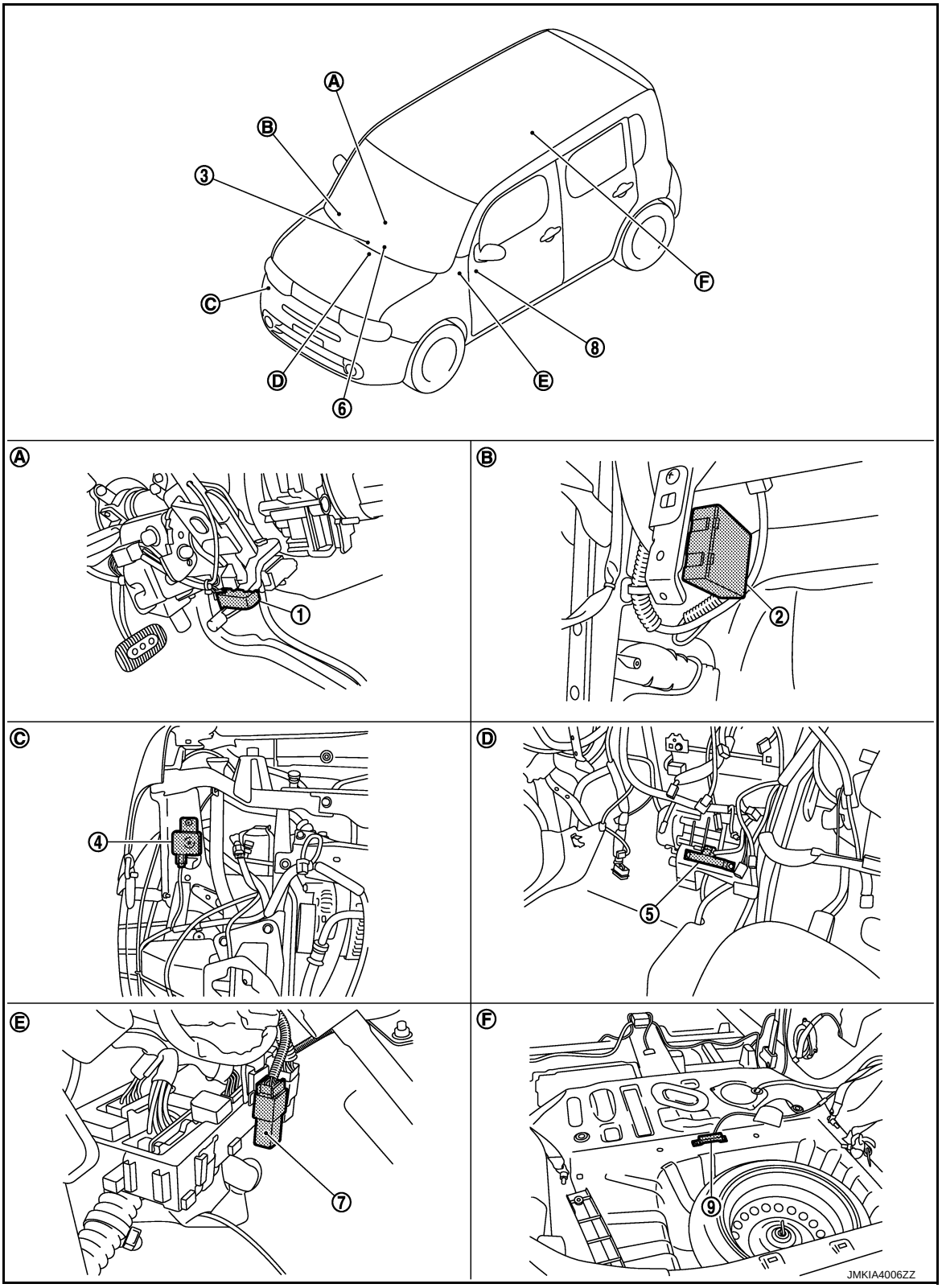

1. CVT shift selector (detention switch)*
2. Remote keyless entry receiver
3. Push-button ignition switch
4. Intelligent Key warning buzzer
5. Inside key antenna (instrument center)
6. Combination meter

7. Back door lock actuator relay	8. BCM Refer to BCS-81, "Removal and Installation"	9. Inside key antenna (luggage room)
A. Integrated in CVT shift selector	B. View with glove box assembly removed	C. View with front bumper removed
D. Behind the audio unit	E. Behind the instrument lower panel LH (Left side)	F. View with rear seat removed

*: With CVT models

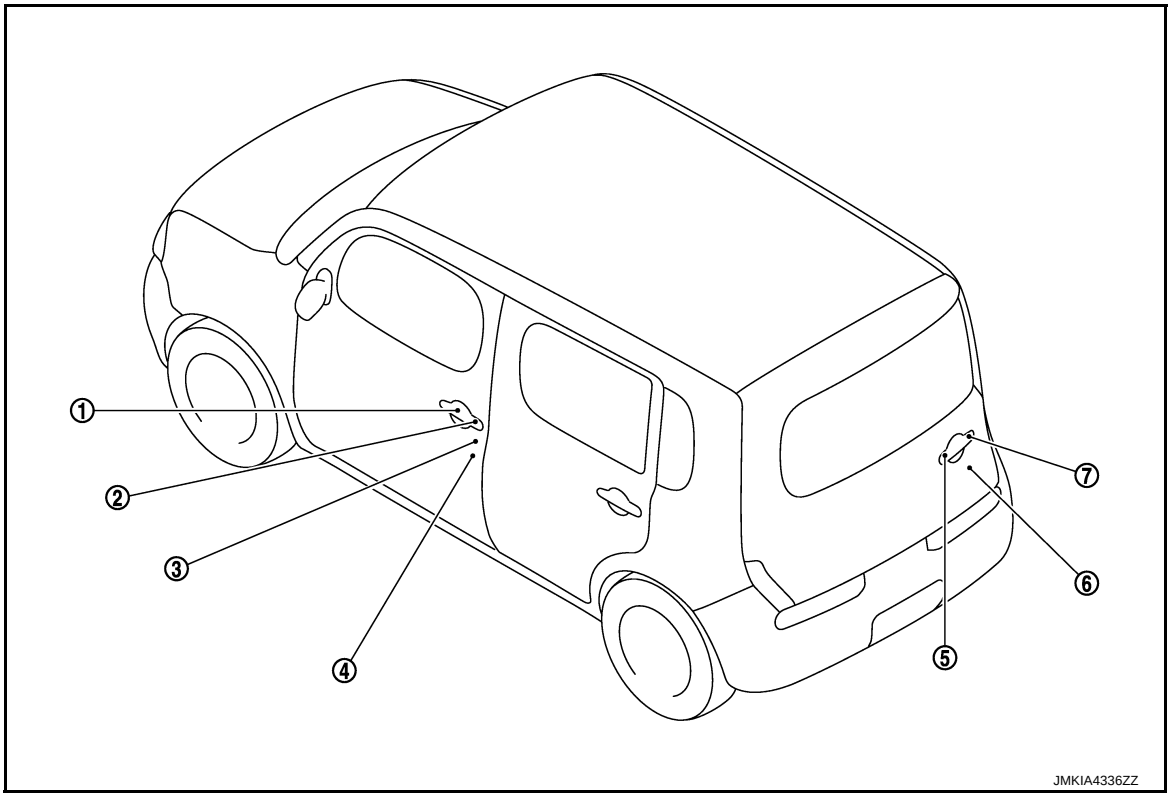

1. Outside key antenna (driver side)	2. Front door request switch (driver side)	3. Front door lock assembly (driver side)
4. Front door switch (driver side)	5. Outside antenna (back door)	6. Back door lock assembly
7. Back door request switch		

WARNING FUNCTION

WARNING FUNCTION : System Description

INFOID:0000000007772746

OPERATION DESCRIPTION

The warning function are as per the following items and are given to the user as warning information and warnings using combinations of Intelligent Key warning buzzer, combination meter buzzer, KEY warning lamp, shift P warning lamp and engine start operation indicator lamp.

- Intelligent Key system malfunction
- OFF position warning
- P position warning
- ACC warning
- Take away warning
- Door lock operation warning
- Engine start information
- Intelligent Key low battery warning
- Key ID warning

OPERATION CONDITION

Once the following condition from below is established, alert or warning is executed.

Warning/Information functions		Operation procedure
Intelligent Key system malfunction		When a malfunction is detected on BCM, “KEY” warning lamp illuminates
OFF position warning	For internal	When condition A, B or condition C is satisfied • Condition A - Ignition switch: ACC position - Door switch (driver side): ON (Door is open) • Condition B - Turn ignition switch from ON to OFF while door is open • Condition C - Intelligent Key backside is contacted to ignition switch while brake pedal is depressed and ignition switch is LOCK or OFF (When the Intelligent Key battery is discharged) - Door switch (driver side): ON (Door is open)
	For external*	OFF position warning (For internal) is in active mode, driver side door is closed **NOTE:** OFF position (For external) active only when each of the sequence occurs as below: P position warning → ACC warning → OFF position warning (For internal) → OFF position warning (For internal)
P position warning*	For internal	• Shift position: Except P position • Engine is running to stopped (Ignition switch is ON to OFF)
	For external	Warning is activated when driver door is closed from the open position while the P position warning (for inside vehicle) is ON
ACC warning*		• When P position warning is in active mode, shift position changes P position. • Ignition switch: ACC position
Take away warning	Door is open to close	• Ignition switch: Except LOCK position • Door switch: ON to OFF (Door is open to close) • Intelligent Key cannot be detected inside the vehicle
	Door is open	• Ignition switch: Except LOCK position • Door switch: ON (Door is open) • Key ID verification every 5 seconds when registered Intelligent Key cannot be detected inside the vehicle
	Push button-ignition switch operation	• Ignition switch: Except LOCK position • Press push-button ignition switch • Intelligent Key cannot be detected inside the vehicle
Door lock operation warning		When door lock operation is requested while door lock operating condition of door request switch not satisfied
Engine start information	Ignition switch is ON position	• Ignition switch: ON position • Shift position: P position* • Engine is stopped
	Ignition switch is except ON position	• Ignition switch: Except ON position • Shift position: P position* • Intelligent Key is in the passenger room after driver door is opened and closed.
	Ignition switch is ON position to OFF position	• Ignition switch: ON position to OFF position • Shift position: P position **NOTE:** Engine start information turns ON for several seconds and then turns OFF, when ignition switch is turned to the ON position from the OFF position. Engine start information does not turn ON until opening and closing of driver door is detected again.
Intelligent Key low battery warning		When Intelligent Key is low battery, BCM is detected after ignition switch is turned ON
Key ID warning		When registered intelligent Key cannot be detected inside the vehicle after ignition switch is turned ON

*: M/T models do not apply.

WARNING METHOD

The following table shows the alarm or warning methods with chime.

Warning/Information functions		"KEY" warning lamp	Shift P warning lamp	Warning chime		Engine start operation indicator lamp
				Combination meter buzzer	Intelligent Key warning buzzer	
Intelligent Key system malfunction		Indicate	—	—	—	—
OFF position warning	For internal	—	—	Activate	—	—
	For external*	—	—	—	Activate	—
P position warning*	For internal	Blink (yellow)	Indicate	Activate	—	—
	For external		—	—	Active	—
ACC warning*		—	—	Activate	—	—
Take away warning	Door is open to close	Blink (yellow)	—	Activate	Activate	—
	Door is open		—	—	—	—
	Push-ignition switch operation		—	Activate	—	—
Door lock operation warning		—	—	—	Activate	—
Key ID warning		Blink (yellow)	—	—	—	—
Engine start information		—	—	—	—	Indicate
Intelligent Key low battery warning		Blink (green)	—	—	—	—

*: M/T models do not apply.

LIST OF OPERATION RELATED PARTS

Parts marked with × are the parts related to operation.

Warning function		Intelligent Key	Ignition switch	Door switch	Door request switch	Inside key antenna	Outside key antenna	Intelligent Key warning buzzer	Combination meter warning buzzer	CAN communication system	BCM	Detention switch	"KEY" warning lamp
Intelligent Key system malfunction										×	×		×
OFF position warning	For internal			×					×	×	×		
	For external			×				×			×		
P position warning			×					×	×	×	×	×	
ACC warning			×						×	×	×	×	
Take away warning	Door is open or close	×		×		×		×	×	×	×		
	Door is open	×		×		×				×	×		
	Push-button ignition switch operation	×	×			×			×	×	×		
Door lock operation warning		×		×	×	×	×	×			×		
Key ID warning			×			×				×	×		
Engine start information	Ignition switch is ON position	×	×			×				×	×	×	
	Ignition switch is except ON position	×	×			×				×	×		
Intelligent Key low battery warning		×				×				×	×		

WARNING FUNCTION : Component Parts Location

INFOID:0000000007772747

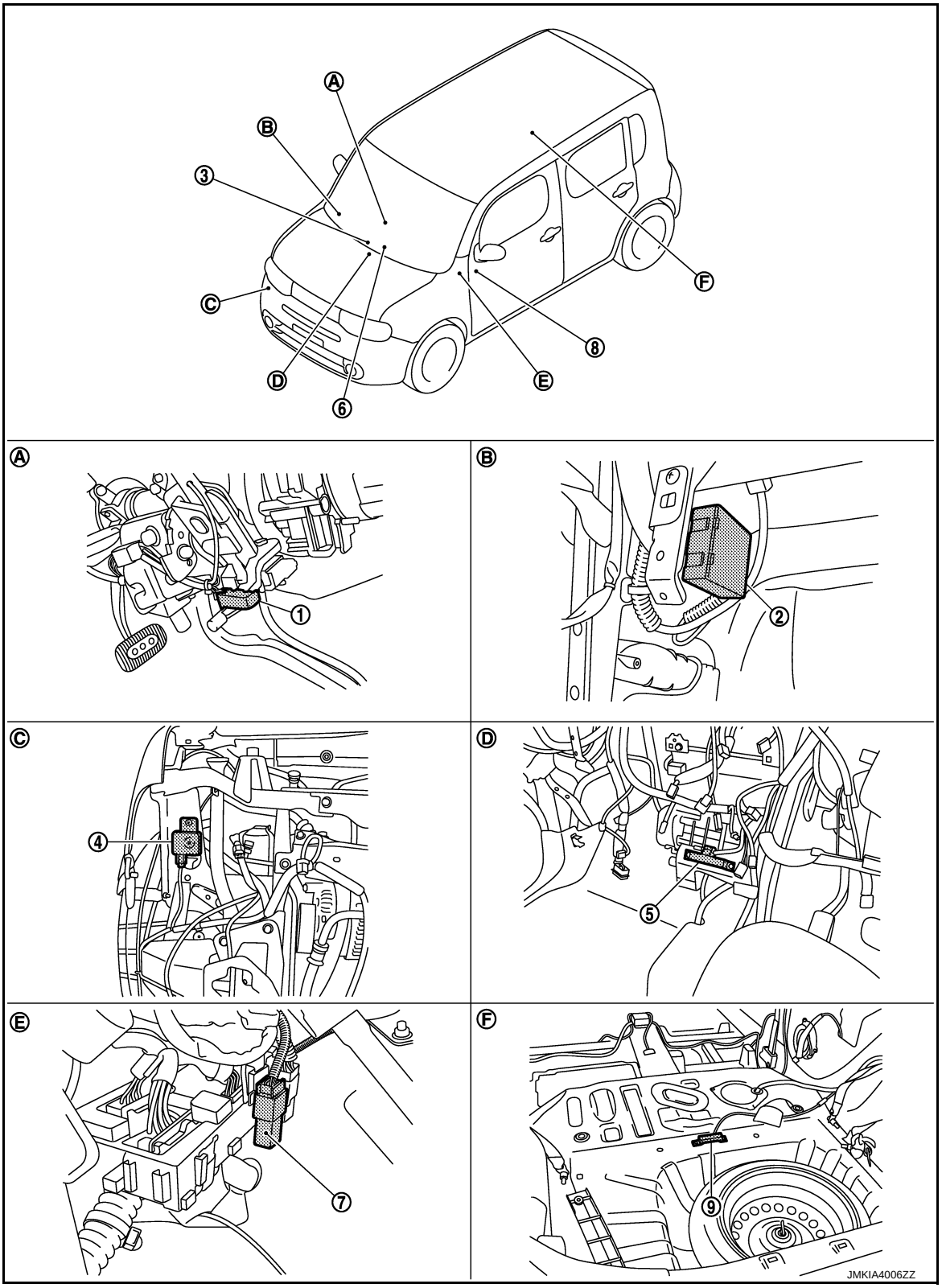

1. CVT shift selector (detention switch)*
2. Remote keyless entry receiver
3. Push-button ignition switch
4. Intelligent Key warning buzzer
5. Inside key antenna (instrument center)
6. Combination meter

7. Back door lock actuator relay	8. BCM Refer to BCS-81, "Removal and Installation"	9. Inside key antenna (luggage room)
A. Integrated in CVT shift selector	B. View with glove box assembly removed	C. View with front bumper removed
D. Behind the audio unit	E. Behind the instrument lower panel LH (Left side)	F. View with rear seat removed

*: With CVT models

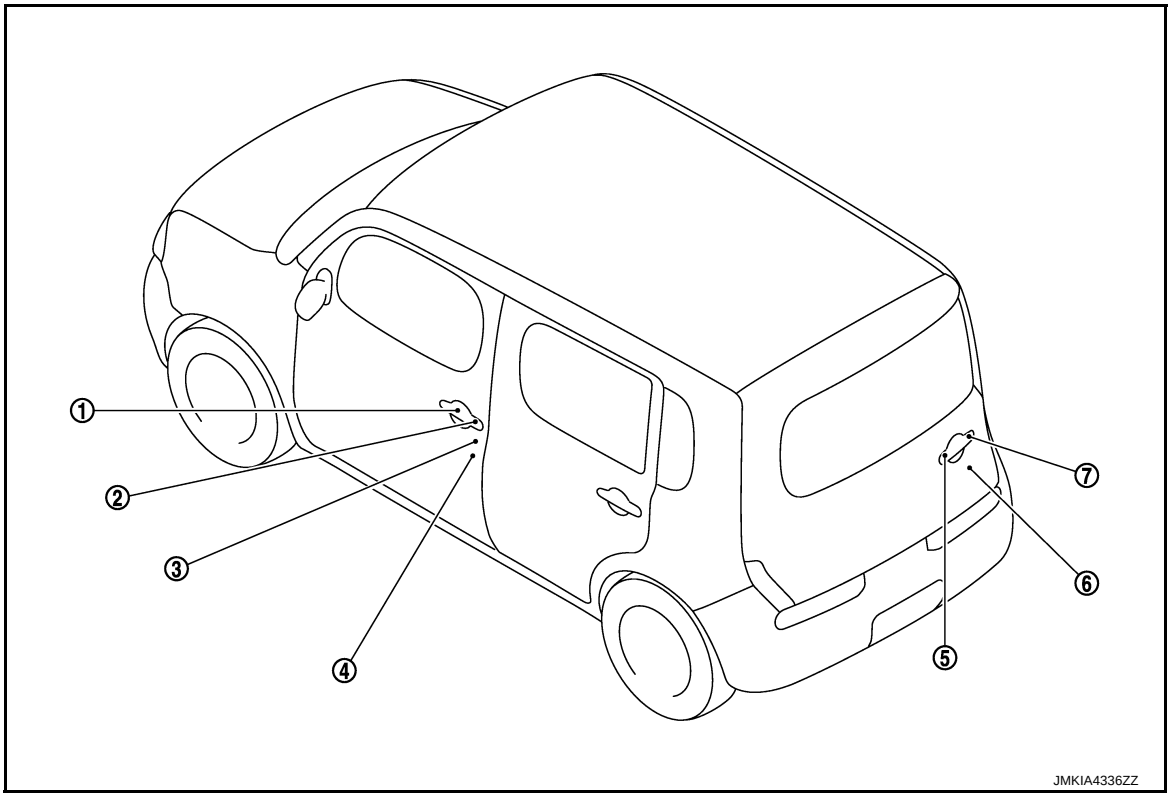

1. Outside key antenna (driver side)	2. Front door request switch (driver side)	3. Front door lock assembly (driver side)
4. Front door switch (driver side)	5. Outside antenna (back door)	6. Back door lock assembly
7. Back door request switch		

DIAGNOSIS SYSTEM (BCM)

COMMON ITEM

COMMON ITEM : CONSULT Function (BCM - COMMON ITEM)

INFOID:0000000007905899

APPLICATION ITEM

CONSULT performs the following functions via CAN communication with BCM.

Diagnosis mode	Function Description
Work Support	Changes the setting for each system function.
Self Diagnostic Result	Displays the diagnosis results judged by BCM.
CAN Diag Support Monitor	Monitors the reception status of CAN communication viewed from BCM.
Data Monitor	The BCM input/output signals are displayed.
Active Test	The signals used to activate each device are forcibly supplied from BCM.
Ecu Identification	The BCM part number is displayed.
Configuration	• Read and save the vehicle specification. • Write the vehicle specification when replacing BCM.

SYSTEM APPLICATION

BCM can perform the following functions for each system.

NOTE:

It can perform the diagnosis modes except the following for all sub system selection items.

×: Applicable item

System	Sub system selection item	Diagnosis mode		
		Work Support	Data Monitor	Active Test
Door lock	DOOR LOCK	×	×	×
Rear window defogger	REAR DEFOGGER		×	×
Warning chime	BUZZER		×	×
Interior room lamp timer	INT LAMP	×	×	×
Exterior lamp	HEAD LAMP	×	×	×
Wiper and washer	WIPER	×	×	×
Turn signal and hazard warning lamps	FLASHER	×	×	×
• Automatic air conditioner • Manual air conditioner	AIR CONDITONER		×	×*
• Intelligent Key system • Engine start system	INTELLIGENT KEY	×	×	×
Combination switch	COMB SW		×	
Body control system	BCM	×		
NVIS - NATS	IMMU	×	×	×
Interior room lamp battery saver	BATTERY SAVER	×	×	×
Back door	TRUNK		×	
Vehicle security system	THEFT ALM	×	×	×
RAP system	RETAINED PWR		×	
Signal buffer system	SIGNAL BUFFER		×	×
TPMS	TPMS (AIR PRESSURE MONITOR)	×	×	×

*: For models with automatic air conditioner, this model is not used.

FREEZE FRAME DATA (FFD)

The BCM records the following vehicle condition at the time a particular DTC is detected, and displays on CONSULT.

CONSULT screen item	Indication/Unit	Description	
Vehicle Speed	km/h	Vehicle speed of the moment a particular DTC is detected	
Odo/Trip Meter	km	Total mileage (Odometer value) of the moment a particular DTC is detected	
Vehicle Condition	SLEEP>LOCK	Power position status of the moment a particular DTC is detected	While turning BCM status from low power consumption mode to normal mode (Power supply position is “LOCK”*)
	SLEEP>OFF		While turning BCM status from low power consumption mode to normal mode (Power supply position is “OFF”.)
	LOCK>ACC		While turning power supply position from “LOCK”* to “ACC”
	ACC>ON		While turning power supply position from “ACC” to “IGN”
	RUN>ACC		While turning power supply position from “RUN” to “ACC” (Vehicle is stopping and selector lever is except P position.)
	CRANK>RUN		While turning power supply position from “CRANKING” to “RUN” (From cranking up the engine to run it)
	RUN>URGENT		While turning power supply position from “RUN“ to “ACC” (Emergency stop operation)
	ACC>OFF		While turning power supply position from “ACC” to “OFF”
	OFF>LOCK		While turning power supply position from “OFF” to “LOCK”*
	OFF>ACC		While turning power supply position from “OFF” to “ACC”
	ON>CRANK		While turning power supply position from “IGN” to “CRANKING”
	OFF>SLEEP		While turning BCM status from normal mode (Power supply position is “OFF”.) to low power consumption mode
	LOCK>SLEEP		While turning BCM status from normal mode (Power supply position is “LOCK”*.) to low power consumption mode
	LOCK		Power supply position is “LOCK”*
	OFF		Power supply position is “OFF” (Ignition switch OFF)
	ACC		Power supply position is “ACC” (Ignition switch ACC)
	ON		Power supply position is “IGN” (Ignition switch ON with engine stopped)
	ENGINE RUN		Power supply position is “RUN” (Ignition switch ON with engine running)
	CRANKING		Power supply position is “CRANKING” (At engine cranking)
IGN Counter	0 - 39	The number of times that ignition switch is turned ON after DTC is detected • The number is 0 when a malfunction is detected now. • The number increases like 1 → 2 → 3...38 → 39 after returning to the normal condition whenever ignition switch OFF → ON. • The number is fixed to 39 until the self-diagnosis results are erased if it is over 39.	

NOTE:
*: Power position shifts to “LOCK” from “OFF”, when ignition switch is in the OFF position, selector lever is in the P position (CVT models), and any of the following conditions are met.
- Closing door
- Opening door
- Door is locked using door request switch
- Door is locked using Intelligent Key

The power position shifts to “ACC” when the push-button ignition switch (push switch) is pushed at “LOCK”.

DOOR LOCK

DOOR LOCK : CONSULT Function (BCM - DOOR LOCK)

INFOID:0000000007772749

BCM CONSULT FUNCTION

CONSULT performs the following functions via CAN communication with BCM.

Diagnosis mode	Function Description
WORK SUPPORT	Changes the setting for each system function
DATA MONITOR	The BCM input/output signals are displayed
ACTIVE TEST	The signals used to activate each device are forcibly supplied from BCM

WORK SUPPORT

Monitor item	Description
DOOR LOCK-UNLOCK SET	Selective unlock function mode can be changed to operation with this mode • On: Operate • Off: Non-operation
AUTOMATIC DOOR LOCK SELECT	Automatic door lock function mode can be selected from the following in this mode • VH SPD: All doors are locked when vehicle speed more than 24km/h (15MPH) • P RANGE*: All doors are locked when shifting the selector lever from P position to other than the P position
AUTOMATIC DOOR UNLOCK SELECT	Automatic door unlock function mode can be selected from the following in the mode • MODE 1: All doors are unlocked when the power supply position is changed from ON to OFF • MODE 2*: All doors are unlocked when shifting the selector lever from any position other than the P to P position • MODE 3: Driver side door is unlocked when the power supply position is changed from ON to OFF • MODE 4*: Driver side door is unlocked when shifting the selector lever from any position other than the P to P position • MODE 5: This item is displayed, but cannot be monitored • MODE 6: This item is displayed, but cannot be monitored
AUTOMATIC LOCK/UNLOCK SET	Automatic door lock/unlock function mode can be selected from the following in this mode. • Off: non-operational • Unlock Only: door unlock operation only • Lock Only: door lock operation only • Lock/Unlock: lock/unlock operation

*: P range interlock door lock can be selected for M/T models, but automatic door lock/unlock function does not operate.

DATA MONITOR

Monitor Item	Contents
REQ SW-DR	Indicated [On/Off] condition of door request switch (driver side)
REQ SW-AS	Indicated [On/Off] condition of door request switch (passenger side)
REQ SW-BD/TR	Indicated [On/Off] condition of back door request switch
DOOR SW-DR	Indicated [On/Off] condition of front door switch (driver side)
DOOR SW-AS	Indicated [On/Off] condition of front door switch (passenger side)
DOOR SW-RR	Indicated [On/Off] condition of rear door switch RH
DOOR SW-RL	Indicated [On/Off] condition of rear door switch LH
DOOR SW-BK	Indicated [On/Off] condition of back door switch
CDL LOCK SW	Indicated [On/Off] condition of lock signal from door lock unlock switch
CDL UNLOCK SW	Indicated [On/Off] condition of unlock signal from door lock unlock switch
KEY CYL LK-SW	Indicated [On/Off] condition of lock signal from door key cylinder
KEY CYL UN-SW	Indicated [On/Off] condition of unlock signal from door key cylinder

ACTIVE TEST

Test item	Description
DOOR LOCK	This test is able to check door lock/unlock operation • The all door lock actuators are locked when “ALL LOCK” on CONSULT screen is touched • The all door lock actuators are unlocked when “ALL UNLK” on CONSULT screen is touched • The door lock actuator (driver side) is unlocked when “DR UNLK” on CONSULT screen is touched • The door lock actuator (passenger side) is unlocked when “AS UNLK” on CONSULT screen is touched • The door lock actuator (other) is unlocked when “OTR ULK” on CONSULT screen is touched

INTELLIGENT KEY

INTELLIGENT KEY : CONSULT Function (BCM - INTELLIGENT KEY)

INFOID:0000000007772750

WORK SUPPORT

Monitor item	Description
CONFIRM KEY FOB ID	It can be checked whether Intelligent Key ID code is registered or not in this mode
AUTO LOCK SET	Auto door lock time can be changed in this mode • MODE 1: OFF • MODE 2: 30 sec • MODE 3: 1 minute • MODE 4: 2 minutes • MODE 5: 3 minutes • MODE 6: 4 minutes • MODE 7: 5 minutes
LOCK/UNLOCK BY I-KEY	Door lock/unlock function by door request switch mode can be changed to operation in this mode • On: Operate • Off: Non-operation
ENGINE START BY I-KEY	Engine start function mode can be changed to operation with this mode • On: Operate • Off: Non-operation
TRUNK/GLASS HATCH OPEN	**NOTE:** This item is displayed, but cannot be monitored
PANIC ALARM SET	Panic alarm button pressing time on Intelligent Key remote control button can be selected from the following with this mode • MODE 1: 0.5 sec • MODE 2: Non-operation • MODE 3: 1.5 sec
TRUNK OPEN DELAY	**NOTE:** This item is displayed, but cannot be monitored
LO- BATT OF KEY FOB WARN	Intelligent Key low battery warning mode can be changed to operation with this mode • On: Operate • Off: Non-operation
ANTI KEY LOCK IN FUNCTI	Key reminder function mode can be changed to operation with this mode • On: Operate • Off: Non-operation
HAZARD ANSWER BACK	Hazard reminder function mode by door request switch and Intelligent Key button can be selected from the following with this mode • Lock Only: Door lock operation only • Unlock Only: Door unlock operation only • Lock/Unlock: Lock/unlock operation • Off: Non-operation
ANS BACK I-KEY LOCK	Buzzer reminder function (lock operation) mode by door request switch (driver side and passenger side) can be selected from the following with this mode • Horn Chirp: Sound horn • Buzzer: Sound Intelligent Key warning buzzer • Off: Non-operation

Monitor item	Description
ANS BACK I-KEY UNLOCK	Buzzer reminder function (unlock operation) mode by door request switch can be changed to operation with this mode • On: Operate • Off: Non-operation
SHORT CRANKING OUTPUT	Starter motor can operate during the times below
INSIDE ANT DIAGNOSIS	This function allows inside key antenna self-diagnosis
HORN WITH KEYLESS LOCK	Horn reminder function mode by Intelligent Key button can be changed to operate (ON) or not operate (OFF) with this mode • On: Operate • Off: Non-operation

SELF-DIAG RESULT

Refer to BCS-75, "DTC Index".

DATA MONITOR

Monitor Item	Condition
REQ SW -DR	Indicates [On/Off] condition of door request switch (driver side)
REQ SW -AS	Indicates [On/Off] condition of door request switch (passenger side)
REQ SW -BD/TR	Indicates [On/Off] condition of back door request switch
PUSH SW	Indicates [On/Off] condition of push-button ignition switch
CLUTCH SW*1	Indicates [On/Off] condition of clutch switch
BRAKE SW 1	Indicates [On/Off]*2 condition of brake switch power supply
BRAKE SW 2	Indicates [On/Off] condition of brake switch
DETE/CANCL SW	Indicates [On/Off] condition of P position
SFT PN/N SW	Indicates [On/Off] condition of P or N position
S/L -LOCK	**NOTE:** This item is displayed, but cannot be monitored
S/L -UNLOCK	**NOTE:** This item is displayed, but cannot be monitored
S/L RELAY -F/B	**NOTE:** This item is displayed, but cannot be monitored
UNLK SEN -DR	Indicates [On/Off] condition of driver door UNLOCK status
PUSH SW -IPDM	Indicates [On/Off] condition of push-button ignition switch
IGN RLY1 -F/B	Indicates [On/Off] condition of ignition relay 1
DETE SW -IPDM	Indicates [On/Off] condition of P position
SFT PN -IPDM	Indicates [On/Off] condition of P or N position
SFT P -MET	Indicates [On/Off] condition of P position
SFT N -MET	Indicates [On/Off] condition of N position
ENGINE STATE	Indicates [Stop/Stall/Crank/Run] condition of engine states
S/L LOCK-IPDM	**NOTE:** This item is displayed, but cannot be monitored
S/L UNLK-IPDM	**NOTE:** This item is displayed, but cannot be monitored
S/L RELAY-REQ	**NOTE:** This item is displayed, but cannot be monitored
VEH SPEED 1	Display the vehicle speed signal received from combination meter by numerical value [Km/h]
VEH SPEED 2	Display the vehicle speed signal received from ABS or VDC or TCM by numerical value [Km/h]
DOOR STAT-DR	Indicates [LOCK/READY/UNLK] condition of driver side door status
DOOR STAT-AS	Indicates [LOCK/READY/UNLK] condition of passenger side door status

Monitor Item	Condition
ID OK FLAG	Indicates [Set/Reset] condition of key ID
PRMT ENG STRT	Indicates [Set/Reset] condition of engine start possibility
PRMT RKE STRT	**NOTE:** This item is displayed, but cannot be monitored
TRNK/HAT MNTR	**NOTE:** This item is displayed, but cannot be monitored
RKE-LOCK	Indicates [On/Off] condition of LOCK signal from Intelligent Key
RKE-UNLOCK	Indicates [On/Off] condition of UNLOCK signal from Intelligent Key
RKE-TR/BD	**NOTE:** This item is displayed, but cannot be monitored
RKE-PANIC	Indicates [On/Off] condition of PANIC button of Intelligent Key
RKE-MODE CHG	Indicates [On/Off] condition of MODE CHANGE signal from Intelligent Key
RKE OPE COUN1	When remote keyless entry receiver receives the signal transmitted while operating on Intelligent Key, the numerical value start changing
RKE OPE COUN2	**NOTE:** This item is displayed, but cannot be monitored

*1: It is displayed but does not operate on M/T models.

*2: OFF is displayed when brake pedal is depressed while brake switch power supply is OFF.

ACTIVE TEST

Test item	Description
BATTERY SAVER	This test is able to check interior room lamp operation • On: Operate • Off: Non-operation
OUTSIDE BUZZER	This test is able to check Intelligent Key warning buzzer operation • On: Operate • Off: Non-operation
INSIDE BUZZER	This test is able to check warning chime in combination meter operation • Take out: Take away warning chime sounds when CONSULT screen is touched • Key: Key warning chime sounds when CONSULT screen is touched • Knob: OFF position warning chime sounds when CONSULT screen is touched
INDICATOR	This test is able to check warning lamp operation • KEY ON: “KEY” Warning lamp illuminates when CONSULT screen is touched • “KEY” Warning lamp blinks when CONSULT screen is touched
INT LAMP	This test is able to check interior room lamp operation • On: Operate • Off: Non-operation
LCD	This test is able to check meter display information • BP N: Engine start operation indicator lamp indicate when CONSULT screen is touched • BP I: Engine start operation indicator lamp indicate when CONSULT screen is touched • ID NG: This item is displayed, but cannot be monitored • ROTAT: This item is displayed, but cannot be monitored • SFT P: Shift P warning lamp indicate when CONSULT screen is touched • INSRT: This item is displayed, but cannot be monitored • BATT: Key warning lamp indicator when CONSULT screen is touched • NO KY: This item is displayed, but cannot be monitored • OUTKEY: Engine start operation indicator lamp indicate when CONSULT screen is touched • LK WN: Engine start operation indicator lamp indicate when CONSULT screen is touched
FLASHER	This test is able to check security hazard lamp operation The hazard lamps are activated after “LH/RH/Off” on CONSULT screen is touched
HORN	This test is able to check horn operation The horn is activated after “ON” on CONSULT screen is touched

Test item	Description
P RANGE	This test is able to check CVT shift selector power supply • On: Operate • Off: Non-operation
ENGINE SW ILLUMI	This test is able to check push-ignition switch illumination operation Push-ignition switch illumination illuminates when “ON” on CONSULT screen is touched
PUSH SWITCH INDICATOR	This test is able to check LOCK indicator in push-ignition switch operation LOCK indicator in push-ignition switch illuminates when “ON” on CONSULT screen is touched
TRUNK/BACK DOOR	**NOTE:** This item is displayed, but cannot be monitored

TRUNK

TRUNK : CONSULT Function (BCM - TRUNK)

INFOID:0000000007772751

BCM CONSULT FUNCTION

CONSULT performs the following functions via CAN communication with BCM.

Diagnosis mode	Function Description
DATA MONITOR	The BCM input/output signals are displayed

DATA MONITOR

Monitor Item	Contents
PUSH SW	Indicates [On/Off] condition of push switch
UNLK SEN -DR	Indicates [On/Off] condition of unlock sensor
VEH SPEED 1	Indicates [Km/h] condition of vehicle speed signal from combination meter
TR/BD OPEN SW	**NOTE:** This item is displayed, but cannot be monitored
TRNK/HAT MNTR	**NOTE:** This item is displayed, but cannot be monitored
RKE-TR/BD	**NOTE:** This item is displayed, but cannot be monitored

ACTIVE TEST

Test item	Description
TRUNK/GLASS HATCH	**NOTE:** This item is displayed, but cannot be monitored

DTC/CIRCUIT DIAGNOSIS

B2621 INSIDE ANTENNA

Description

INFOID:0000000007772752

- Detects whether Intelligent Key is inside the vehicle.
- Installed in the instrument center.

DTC Logic

INFOID:0000000007772753

DTC DETECTION LOGIC

DTC	CONSULT display description	DTC detecting condition	Possible cause
B2621	INSIDE ANTENNA	An excessive high or low voltage from inside antenna (instrument center) is sent to BCM	• Inside key antenna (instrument center) • Harness or connector [Inside key antenna (instrument center) circuit is open or shorted]

DTC CONFIRMATION PROCEDURE

1. PERFORM DTC CONFIRMATION PROCEDURE

1. Perform inside key antenna (“INSIDE ANT DIAGNOSIS”) on “Work Support” of “INTELLIGENT KEY”.
2. Perform “INTELLIGENT KEY” Self Diagnostic Result.

Is inside key antenna DTC detected?

YES >> Refer to DLK-44, "Diagnosis Procedure".
NO >> Inside key antenna (instrument center) is OK.

Diagnosis Procedure

INFOID:0000000007772754

1. CHECK INSIDE KEY ANTENNA INPUT SIGNAL 1

1. Turn ignition switch OFF.
2. Check signal between BCM harness connector and ground using oscilloscope.

(+) BCM Connector		(+) BCM Terminal	(–)	Condition	Signal (Reference value)
Instrument center	M71	84, 85	Ground	When Intelligent Key is in the antenna detection area	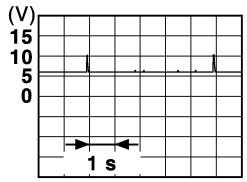 JMKIA3839GB
				When Intelligent Key is not in the antenna detection area	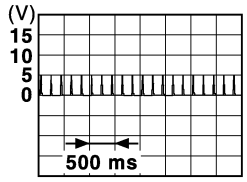 JMKIA3838GB

Is the inspection result normal?

YES >> GO TO 4.
NO >> GO TO 2.

2. CHECK INSIDE KEY ANTENNA CIRCUIT

1. Disconnect BCM connector and inside key antenna (instrument center) connector.
2. Check continuity between BCM harness connector and inside key antenna (instrument center) harness connector.

BCM		Inside key antenna (instrument center)		Continuity
Connector	Terminal	Connector	Terminal	
M71	84	M105	1	Existed
	85		2	

3. Check continuity between BCM harness connector and ground.

BCM		Ground	Continuity
Connector	Terminal		
M71	84		Not existed
	85		

Is the inspection result normal?

YES >> GO TO 3.
NO >> Repair or replace harness.

3. CHECK INSIDE KEY ANTENNA INPUT SIGNAL 2

1. Replace inside key antenna (instrument center). (New antenna or other antenna)
2. Connect BCM connector and inside key antenna (instrument center) connector.
3. Check signal between BCM harness connector and ground using oscilloscope.

(+)			(–)	Condition	Signal (Reference value)
BCM					
Connector		Terminal			
Instrument center	M71	84, 85	Ground	When Intelligent Key is in the antenna detection area.	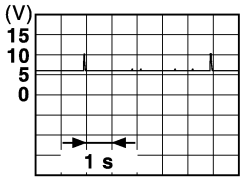 JMKIA3839GB
				When Intelligent Key is not in the antenna detection area.	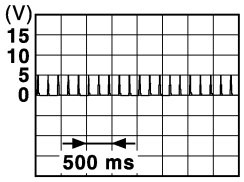 JMKIA3838GB

Is the inspection result normal?

YES >> Replace inside key antenna (instrument center). Refer to DLK-201, "INSTRUMENT CENTER : Removal and Installation".
NO >> Replace BCM. Refer to BCS-81, "Removal and Installation".

4. CHECK INTERMITTENT INCIDENT

Refer to GI-41, "Intermittent Incident".

>> INSPECTION END

B2622 INSIDE ANTENNA

Description

INFOID:0000000007772755

- Detects whether Intelligent Key is inside the vehicle.
- Installed in the luggage room.

DTC Logic

INFOID:0000000007772756

DTC DETECTION LOGIC

DTC	CONSULT display description	DTC detecting condition	Possible cause
B2622	INSIDE ANTENNA	An excessive high or low voltage from inside antenna (luggage room) is sent to BCM	• Inside key antenna (luggage room) • Harness or connector [Inside key antenna (luggage room) circuit is open or shorted]

DTC CONFIRMATION PROCEDURE

1. PERFORM DTC CONFIRMATION PROCEDURE

1. Perform inside key antenna (“INSIDE ANT DIAGNOSIS”) on “Work Support” of “INTELLIGENT KEY”.
2. Perform “INTELLIGENT KEY” Self Diagnostic Result.

Is inside key antenna DTC detected?

YES >> Refer to DLK-46, "Diagnosis Procedure".
NO >> Inside key antenna (luggage room) is OK.

Diagnosis Procedure

INFOID:0000000007772757

1. CHECK INSIDE KEY ANTENNA INPUT SIGNAL 1

1. Turn ignition switch OFF.
2. Check signal between BCM harness connector and ground using oscilloscope.

(+) BCM Connector	(+) BCM Terminal	(–)	Condition	Signal (Reference value)
Luggage room M71	86, 87	Ground	When Intelligent Key is in the antenna detection area	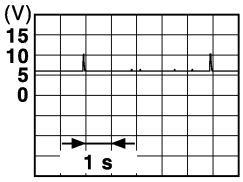 JMKIA3839GB
			When Intelligent Key is not in the antenna detection area	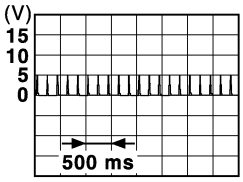 JMKIA3838GB

Is the inspection result normal?

YES >> GO TO 4.
NO >> GO TO 2.

2. CHECK INSIDE KEY ANTENNA CIRCUIT

1. Disconnect BCM connector and inside key antenna (luggage room) connector.

2. Check continuity between BCM harness connector and inside key antenna (luggage room) harness connector.

BCM		Inside key antenna (luggage room)		Continuity
Connector	Terminal	Connector	Terminal	
M71	86	B82	1	Existed
	87		2	

3. Check continuity between BCM harness connector and ground.

BCM		Ground	Continuity
Connector	Terminal		
M71	86		Not existed
	87		

Is the inspection result normal?

YES >> GO TO 3.
NO >> Repair or replace harness.

3. CHECK INSIDE KEY ANTENNA INPUT SIGNAL 2

1. Replace inside key antenna (luggage room). (New antenna or other antenna)
2. Connect BCM connector and inside key antenna (luggage room) connector.
3. Check signal between BCM harness connector and ground using oscilloscope.

(+)			(–)	Condition	Signal (Reference value)
BCM					
Connector		Terminal			
Luggage room	M71	86, 87	Ground	When Intelligent Key is in the antenna detection area	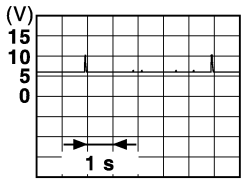 JMKIA3839GB
				When Intelligent Key is not in the antenna detection area	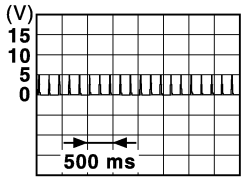 JMKIA3838GB

Is the inspection result normal?

YES >> Replace inside key antenna (luggage room). Refer to DLK-202, "LUGGAGE ROOM : Removal and Installation".
NO >> Replace BCM. Refer to BCS-81, "Removal and Installation".

4. CHECK INTERMITTENT INCIDENT

Refer to GI-41, "Intermittent Incident".

>> INSPECTION END

B2626 OUTSIDE ANTENNA

Description

INFOID:0000000007772761

- Detects whether Intelligent Key is outside the vehicle.
- Integrated in the outside handle (passenger side).

DTC Logic

INFOID:0000000007772762

DTC DETECTION LOGIC

DTC	CONSULT display description	DTC detecting condition	Possible cause
B2626	OUTSIDE ANTENNA	An excessive high or low voltage from front door right outside key antenna is sent to BCM	• Front door right outside key antenna • Harness or connector (Front door right outside key antenna circuit is open or shorted)

DTC CONFIRMATION PROCEDURE

1. PERFORM DTC CONFIRMATION PROCEDURE

1. Disconnect outside key antenna (passenger side) connector.
2. Perform “INTELLIGENT KEY” Self Diagnostic Result.

Is outside key antenna DTC detected?

YES >> Refer to DLK-48, "Diagnosis Procedure".
NO >> Outside key antenna (passenger side) is OK.

Diagnosis Procedure

INFOID:0000000007772763

1. CHECK OUTSIDE KEY ANTENNA INPUT SIGNAL 1

1. Turn ignition switch OFF.
2. Check signal between BCM harness connector and ground using oscilloscope.

(+) BCM Connector	(+) BCM Terminal	(–)	Condition		Signal (Reference value)
M71	80, 81	Ground	When the passenger door request switch is operated with power switch ON	When Intelligent Key is in the antenna detection area (The distance between Intelligent Key and antenna: 80 cm or less)	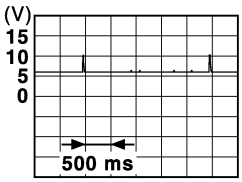 JMKIA5955GB
				When Intelligent Key is not in the antenna detection area (The distance between Intelligent Key and antenna: Approx. 2 m)	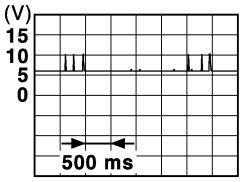 JMKIA5954GB

Is the inspection result normal?

YES >> GO TO 4.
NO >> GO TO 2.

2. CHECK OUTSIDE KEY ANTENNA CIRCUIT

1. Disconnect BCM connector and outside key antenna (passenger side) connector.
2. Check continuity between BCM harness connector and outside key antenna (passenger side) harness connector.

BCM		Outside key antenna (passenger side)		Continuity
Connector	Terminal	Connector	Terminal	
M71	80	D32	1	Existed
	81		2	

3. Check continuity between BCM harness connector and ground.

BCM		Ground	Continuity
Connector	Terminal		
M71	80		Not existed
	81		

Is the inspection result normal?

YES >> GO TO 3.
NO >> Repair or replace harness.

3. CHECK OUTSIDE KEY ANTENNA INPUT SIGNAL 2

1. Replace outside key antenna (passenger side). (New antenna or other antenna)
2. Connect BCM connector and outside key antenna (passenger side) connector.
3. Check signal between BCM harness connector and ground using oscilloscope.

(+) BCM Connector	(+) BCM Terminal	(–)	Condition		Signal (Reference value)
M71	80, 81	Ground	When the passenger door request switch is operated with power switch ON	When Intelligent Key is in the antenna detection area (The distance between Intelligent Key and antenna: 80 cm or less)	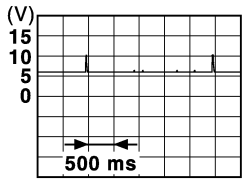 JMKIA5955GB
				When Intelligent Key is not in the antenna detection area (The distance between Intelligent Key and antenna: Approx. 2 m)	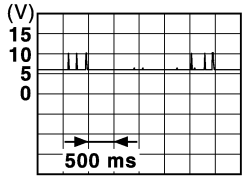 JMKIA5954GB

Is the inspection result normal?

YES >> Replace outside key antenna (passenger side). Refer to DLK-189, "OUTSIDE HANDLE : Removal and Installation".
NO >> Replace BCM. Refer to BCS-81, "Removal and Installation".

4. CHECK INTERMITTENT INCIDENT

Refer to GI-41, "Intermittent Incident".

>> INSPECTION END

B2627 OUTSIDE ANTENNA

Description

INFOID:0000000007772758

- Detects whether Intelligent Key is outside the vehicle.
- Integrated in the outside handle (driver side).

DTC Logic

INFOID:0000000007772759

DTC DETECTION LOGIC

DTC	CONSULT display description	DTC detecting condition	Possible cause
B2627	OUTSIDE ANTENNA	An excessive high or low voltage from front door left outside key antenna is sent to BCM	• Front door left outside key antenna • Harness or connector (Front door left outside key antenna circuit is open or shorted)

DTC CONFIRMATION PROCEDURE

1. PERFORM DTC CONFIRMATION PROCEDURE

1. Disconnect outside key antenna (driver side) connector.
2. Perform “INTELLIGENT KEY” Self Diagnostic Result.

Is outside key antenna DTC detected?

YES >> Refer to DLK-50, "Diagnosis Procedure".
NO >> Outside key antenna (driver side) is OK.

Diagnosis Procedure

INFOID:0000000007772760

1. CHECK OUTSIDE KEY ANTENNA INPUT SIGNAL 1

1. Turn ignition switch OFF.
2. Check signal between BCM harness connector and ground using oscilloscope.

(+) BCM Connector	(+) BCM Terminal	(–)	Condition		Signal (Reference value)
M71	78, 79	Ground	When the passenger door request switch is operated with power switch ON	When Intelligent Key is in the antenna detection area (The distance between Intelligent Key and antenna: 80 cm or less)	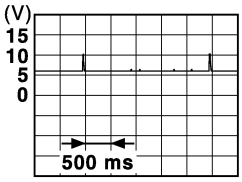 JMKIA5955GB
				When Intelligent Key is not in the antenna detection area (The distance between Intelligent Key and antenna: Approx. 2 m)	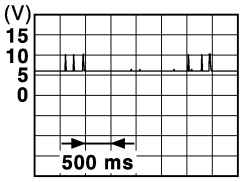 JMKIA5954GB

Is the inspection result normal?

YES >> GO TO 4.
NO >> GO TO 2.

2. CHECK OUTSIDE KEY ANTENNA CIRCUIT

1. Disconnect BCM connector and outside key antenna (driver side) connector.

2. Check continuity between BCM harness connector and outside key antenna (driver side) harness connector.

BCM		Outside key antenna (driver side)		Continuity
Connector	Terminal	Connector	Terminal	
M71	78	D12	1	Existed
	79		2	

3. Check continuity between BCM harness connector and ground.

BCM		Ground	Continuity
Connector	Terminal		
M71	78		Not existed
	79		

Is the inspection result normal?

YES >> GO TO 3.
NO >> Repair or replace harness.

3. CHECK OUTSIDE KEY ANTENNA INPUT SIGNAL 2

1. Replace outside key antenna (driver side). (New antenna or other antenna)
2. Connect BCM connector and outside key antenna (driver side) connector.
3. Check signal between BCM harness connector and ground using oscilloscope.

(+) BCM Connector	(+) BCM Terminal	(–)	Condition		Signal (Reference value)
M71	78, 79	Ground	When the passenger door request switch is operated with power switch ON	When Intelligent Key is in the antenna detection area (The distance between Intelligent Key and antenna: 80 cm or less)	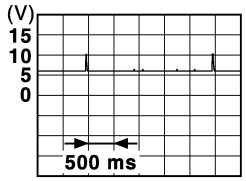 JMKIA5955GB
				When Intelligent Key is not in the antenna detection area (The distance between Intelligent Key and antenna: Approx. 2 m)	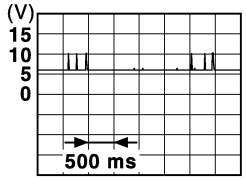 JMKIA5954GB

Is the inspection result normal?

YES >> Replace outside key antenna (driver side). Refer to DLK-189, "OUTSIDE HANDLE : Removal and Installation".
NO >> Replace BCM. Refer to BCS-81, "Removal and Installation".

4. CHECK INTERMITTENT INCIDENT

Refer to GI-41, "Intermittent Incident".

>> INSPECTION END

B2628 OUTSIDE ANTENNA

Description

INFOID:0000000007772764

- Detects whether Intelligent Key is outside the vehicle.
- Integrated in the outside handle (back door).

DTC Logic

INFOID:0000000007772765

DTC DETECTION LOGIC

DTC	CONSULT display description	DTC detecting condition	Possible cause
B2628	OUTSIDE ANTENNA	An excessive high or low voltage from outside key antenna (back door) is sent to BCM	• Outside key antenna (back door) • Harness or connector [Outside key antenna (back door) circuit is open or shorted]

DTC CONFIRMATION PROCEDURE

1. PERFORM DTC CONFIRMATION PROCEDURE

1. Disconnect outside key antenna (back door) connector.
2. Perform “INTELLIGENT KEY” Self Diagnostic Result.

Is outside key antenna DTC detected?

YES >> Refer to DLK-52, "Diagnosis Procedure".
NO >> Outside key antenna (back door) is OK.

Diagnosis Procedure

INFOID:0000000007772766

1. CHECK OUTSIDE KEY ANTENNA INPUT SIGNAL 1

1. Turn ignition switch OFF.
2. Check signal between BCM harness connector and ground using oscilloscope.

(+) BCM Connector	(+) BCM Terminal	(–)	Condition		Signal (Reference value)
M71	82, 83	Ground	When the passenger door request switch is operated with power switch ON	When Intelligent Key is in the antenna detection area (The distance between Intelligent Key and antenna: 80 cm or less)	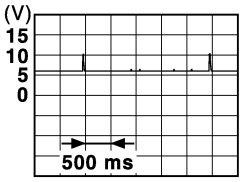 JMKIA5955GB
				When Intelligent Key is not in the antenna detection area (The distance between Intelligent Key and antenna: Approx. 2 m)	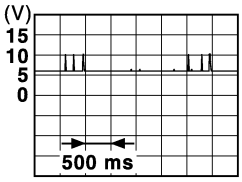 JMKIA5954GB

Is the inspection result normal?

YES >> GO TO 4.
NO >> GO TO 2.

2. CHECK OUTSIDE KEY ANTENNA CIRCUIT

1. Disconnect BCM connector and outside key antenna (back door) connector.

2. Check continuity between BCM harness connector and outside key antenna (back door) harness connector.

BCM		Outside key antenna (back door)		Continuity
Connector	Terminal	Connector	Terminal	
M71	82	D108	1	Existed
	83		2	

3. Check continuity between BCM harness connector and ground.

BCM		Ground	Continuity
Connector	Terminal		
M71	82		Not existed
	83		

Is the inspection result normal?

YES >> GO TO 3.
NO >> Repair or replace harness.

3. CHECK OUTSIDE KEY ANTENNA INPUT SIGNAL 2

1. Replace outside key antenna (back door). (New antenna or other antenna)
2. Connect BCM and outside key antenna (back door) connector.
3. Check signal between BCM harness connector and ground using oscilloscope.

(+) BCM Connector	(+) BCM Terminal	(–)	Condition		Signal (Reference value)
M71	82, 83	Ground	When the passenger door request switch is operated with power switch ON	When Intelligent Key is in the antenna detection area (The distance between Intelligent Key and antenna: 80 cm or less)	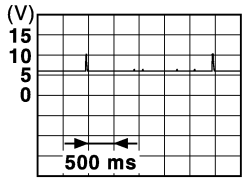 JMKIA5955GB
				When Intelligent Key is not in the antenna detection area (The distance between Intelligent Key and antenna: Approx. 2 m)	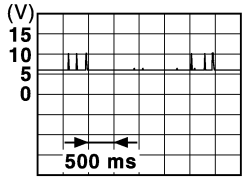 JMKIA5954GB

Is the inspection result normal?

YES >> Replace outside key antenna (back door). Refer to DLK-196, "OUTSIDE HANDLE : Removal and Installation".
NO >> Replace BCM. Refer to BCS-81, "Removal and Installation".

4. CHECK INTERMITTENT INCIDENT

Refer to GI-41, "Intermittent Incident".

>> INSPECTION END

POWER SUPPLY AND GROUND CIRCUIT
BCM (BODY CONTROL MODULE)

BCM (BODY CONTROL MODULE) : Diagnosis Procedure

INFOID:0000000007772767

1. CHECK FUSE AND FUSIBLE LINK

Check that the following fuse and fusible link are not blown.

Signal name	Fuse and fusible link No.
Battery power supply	G
	8

Is the fuse fusing?

YES >> Replace the blown fuse or fusible link after repairing the affected circuit if a fuse or fusible link is blown.
NO >> GO TO 2.

2. CHECK POWER SUPPLY CIRCUIT

1. Turn ignition switch OFF.
2. Disconnect BCM connectors.
3. Check voltage between BCM harness connector and ground.

Terminals			Voltage (Approx.)
(+)		(–)	
BCM		Ground	
Connector	Terminal		
M70	70		Battery voltage
	57		

Is the measurement value normal?

YES >> GO TO 3.
NO >> Repair harness or connector.

3. CHECK GROUND CIRCUIT

Check continuity between BCM harness connector and ground.

BCM		Ground	Continuity
Connector	Terminal		
M70	67		Existed

Does continuity exist?

YES >> INSPECTION END
NO >> Repair harness or connector.

DOOR SWITCH

Description

INFOID:0000000007772768

Detects door open/close condition.

Component Function Check

INFOID:0000000007772769

1.CHECK FUNCTION

Check (“DOOR SW-DR”, “DOOR SW-AS”, “DOOR SW-RL”, “DOOR SW-RR”, “DOOR SW-BK”) in “Data Monitor” mode with CONSULT.

Monitor item	Condition		Status
DOOR SW-DR	Driver side door	Open	ON
		Closed	OFF
DOOR SW-AS	Passenger side door	Open	ON
		Closed	OFF
DOOR SW-RL	Rear door LH	Open	ON
		Closed	OFF
DOOR SW-RR	Rear door RH	Open	ON
		Closed	OFF
DOOR SW-BK	Back door	Open	ON
		Closed	OFF

Is the inspection result normal?

YES >> Door switch is OK.
NO >> Refer to DLK-55, "Diagnosis Procedure".

Diagnosis Procedure

INFOID:0000000007772770

1.CHECK DOOR SWITCH INPUT SIGNAL

1. Turn ignition switch OFF.
2. Disconnect malfunctioning door switch connector.
3. Check signal between malfunctioning door switch harness connector and ground using oscilloscope.

(+) Door switch Connector		Terminal	(–)	Condition		Signal (Reference value)
Driver side	B34	3	Ground	Driver door switch	OFF (When driver door closed)	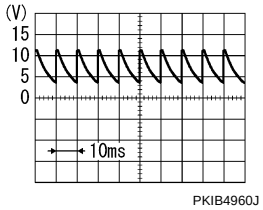 7.0 - 8.0 V
					ON (When driver door opened)	0 V
Passenger side	B27	3		Passenger door switch	OFF (When passenger door closed)	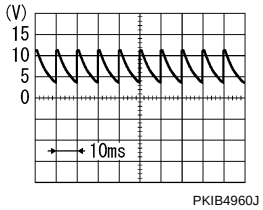 7.0 - 8.0 V
					ON (When passenger door opened)	0 V
Rear LH	B71	3		Rear LH door switch	OFF (When rear LH door closed)	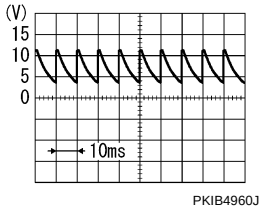 7.0 - 8.0 V
					ON (When rear door LH opened)	0 V
Rear RH	B53	3		Rear RH door switch	OFF (When rear RH door closed)	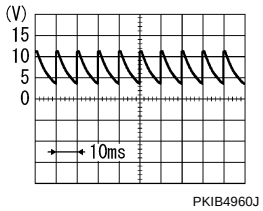 7.0 - 8.0 V
					ON (When rear RH door opened)	0 V

(+)			(–)	Condition		Signal (Reference value)
Door switch						
Connector		Terminal				
Back door	B75	3	Ground	Back door switch	OFF (When back door closed)	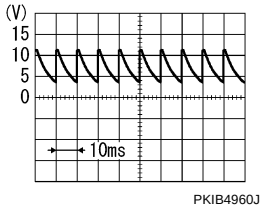 9.5 - 10.0 V
					ON (When back door opened)	0 V

Is the inspection result normal?

YES >> GO TO 3.
NO >> GO TO 2.

2. CHECK DOOR SWITCH CIRCUIT

1. Disconnect BCM connector.
2. Check continuity between door switch harness connector and BCM harness connector.

Door switch			BCM		Continuity
Connector		Terminal	Connector	Terminal	
Driver side	B34	3	M69	47	Existed
Passenger side	B27			45	
Rear LH	B71			48	
Rear RH	B53			46	
Back door	B75			43	

3. Check continuity between door switch harness connector and ground.

Door switch				Continuity
Connector		Terminal		
Driver side	B34	3	Ground	Not existed
Passenger side	B27			
Rear LH	B71			
Rear RH	B53			
Back door	B75			

Is the inspection result normal?

YES >> Replace BCM. Refer to BCS-81, "Removal and Installation".
NO >> Repair or replace harness.

3. CHECK DOOR SWITCH

Refer to DLK-58, "Component Inspection".

Is the inspection result normal?

YES >> GO TO 4.
NO >> Replace malfunctioning door switch. Refer to DLK-200, "Removal and Installation".

4. CHECK INTERMITTENT INCIDENT

Refer to GI-41, "Intermittent Incident".

>> INSPECTION END

Component Inspection

INFOID:0000000007772771

1. CHECK DOOR SWITCH

1. Turn ignition switch OFF.
2. Disconnect malfunctioning door switch connector.
3. Check continuity between door switch terminals.

Door switch		Condition		Continuity
Terminal				
3	Ground part of door switch	Door switch	Pressed	Not existed
			Released	Existed

Is the inspection result normal?

YES >> INSPECTION END
NO >> Replace malfunction door switch. Refer to DLK-200, "Removal and Installation".

DOOR LOCK AND UNLOCK SWITCH
DRIVER SIDE

DRIVER SIDE : Description

INFOID:0000000007772772

Transmits door lock/unlock operation to BCM.

DRIVER SIDE : Component Function Check

INFOID:0000000007772773

1.CHECK FUNCTION

Check “CDL LOCK SW ”and “CDL UNLOCK SW” in BCM “Data Monitor” mode using CONSULT.

Monitor item	Condition		Status
CDL LOCK SW	Door lock and unlock switch	LOCK	ON
		UNLOCK	OFF
CDL UNLOCK SW		LOCK	OFF
		UNLOCK	ON

Is the inspection result normal?

YES >> Door lock and unlock switch is OK.
NO >> Refer to DLK-59, "DRIVER SIDE : Diagnosis Procedure".

DRIVER SIDE : Diagnosis Procedure

INFOID:0000000007772774

1.CHECK DOOR LOCK AND UNLOCK SWITCH INPUT SIGNAL

1. Turn ignition switch OFF.
2. Disconnect power window main switch connector.
3. Check signal between power window main switch harness connector and ground using oscilloscope.

(+)		(–)	Signal (Reference value)
Power window main switch			
Connector	Terminal		
D5	6	Ground	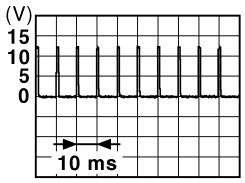 JPMIA0012GB 1.0 - 1.5 V
	18		

Is the inspection result normal?

YES >> GO TO 4.
NO >> GO TO 2.

2.CHECK DOOR LOCK AND UNLOCK SWITCH CIRCUIT

1. Disconnect BCM connector and front power window switch (passenger side) connector.
2. Check continuity between BCM harness connector and power window main switch harness connector.

BCM		Power window main switch		Continuity
Connector	Terminal	Connector	Terminal	
M66	12	D5	18	Existed
	13		6	

3. Check continuity between BCM harness connector and ground.

BCM		Ground	Continuity
Connector	Terminal		
M66	12		Not existed
	13		

Is the inspection result normal?

YES >> GO TO 3.
NO >> Repair or replace harness.

3. CHECK BCM OUTPUT SIGNAL

1. Connect BCM connector.
2. Check signal between BCM harness connector and ground using oscilloscope.

(+)		(–)	Signal (Reference value)
BCM			
Connector	Terminal		
M66	12	Ground	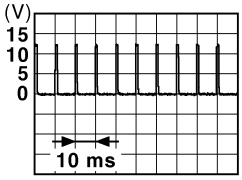 JPMIA0012GB 1.0 - 1.5 V
	13		

Is the inspection result normal?

YES >> GO TO 6.
NO >> Replace BCM. Refer to BCS-81, "Removal and Installation".

4. CHECK DOOR LOCK AND UNLOCK SWITCH GROUND

Check continuity between power window main switch harness connector and ground.

Power window main switch		Ground	Continuity
Connector	Terminal		
D6	17		Existed

Is the inspection result normal?

YES >> GO TO 5.
NO >> Repair or replace harness.

5. CHECK DOOR LOCK AND UNLOCK SWITCH

Refer to DLK-60, "DRIVER SIDE : Component Inspection".

Is the inspection result normal?

YES >> GO TO 6.
NO >> Replace power window main switch. Refer to PWC-93, "Removal and Installation".

6. CHECK INTERMITTENT INCIDENT

Refer to GI-41, "Intermittent Incident".

>> INSPECTION END

DRIVER SIDE : Component Inspection

INFOID:0000000007772775

1. CHECK DOOR LOCK AND UNLOCK SWITCH

1. Turn ignition switch OFF.
2. Disconnect power window main switch (door lock and unlock switch) connector.

3. Check continuity between power window main switch (door lock and unlock switch) terminals.

Power window main switch		Condition		Continuity
Terminal				
6	17	Door lock and unlock switch	LOCK	Existed
			UNLOCK	Not existed
18			LOCK	Existed
			UNLOCK	Not existed

Is the inspection result normal?

YES >> INSPECTION END
NO >> Replace power window main switch. Refer to PWC-93, "Removal and Installation".

PASSENGER SIDE

PASSENGER SIDE : Description

INFOID:0000000007772776

Transmits door lock/unlock operation to BCM.

PASSENGER SIDE : Component Function Check

INFOID:0000000007772777

1. CHECK FUNCTION

Check “CDL LOCK SW ”and “CDL UNLOCK SW” in BCM “Data Monitor” mode using CONSULT.

Monitor item	Condition		Status
CDL LOCK SW	Door lock and unlock switch	LOCK	ON
		UNLOCK	OFF
CDL UNLOCK SW		LOCK	OFF
		UNLOCK	ON

Is the inspection result normal?

YES >> Door lock and unlock switch is OK.
NO >> Refer to DLK-61, "PASSENGER SIDE : Diagnosis Procedure".

PASSENGER SIDE : Diagnosis Procedure

INFOID:0000000007772778

1. CHECK DOOR LOCK AND UNLOCK SWITCH INPUT SIGNAL

1. Turn ignition switch OFF.
2. Disconnect front power window switch (passenger side) connector.
3. Check signal between front power window switch (passenger side) harness connector and ground using oscilloscope.

(+)		(–)	Signal (Reference value)
Front power window switch (passenger side)			
Connector	Terminal		
D25	1	Ground	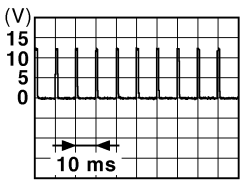 JPMIA0012GB 1.0 - 1.5 V
	2		

Is the inspection result normal?

YES >> GO TO 4.

NO >> GO TO 2.

2. CHECK DOOR LOCK AND UNLOCK SWITCH CIRCUIT

1. Disconnect BCM connector and power window main switch connector.
2. Check continuity between BCM harness connector and front power window switch (passenger side) harness connector.

BCM		Front power window switch (passenger side)		Continuity
Connector	Terminal	Connector	Terminal	
M66	12	D25	1	Existed
	13		2	

3. Check continuity between BCM connector and ground.

BCM		Ground	Continuity
Connector	Terminal		
M66	12		Not existed
	13		

Is the inspection result normal?

YES >> GO TO 3.
NO >> Repair or replace harness.

3. CHECK BCM OUTPUT SIGNAL

1. Connect BCM connector.
2. Check signal between BCM harness connector and ground using oscilloscope.

(+)		(–)	Signal (Reference value)
BCM			
Connector	Terminal		
M66	12	Ground	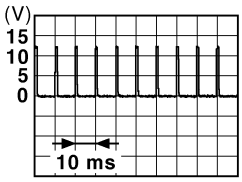 JPMIA0012GB 1.0 - 1.5 V
	13		

Is the inspection result normal?

YES >> GO TO 6.
NO >> Replace BCM. Refer to BCS-81, "Removal and Installation".

4. CHECK DOOR LOCK AND UNLOCK SWITCH GROUND

Check continuity between front power window switch (passenger side) harness connector and ground.

Front power window switch (passenger side)		Ground	Continuity
Connector	Terminal		
M25	3		Existed

Is the inspection result normal?

YES >> GO TO 5.
NO >> Repair or replace harness.

5. CHECK DOOR LOCK AND UNLOCK SWITCH

Check front power window switch (passenger side).
Refer to DLK-63, "PASSENGER SIDE : Component Inspection".

Is the inspection result normal?

YES >> GO TO 6.
NO >> Replace front power window switch (passenger side). Refer to PWC-93, "Removal and Installation".

6. CHECK INTERMITTENT INCIDENT

Refer to GI-41, "Intermittent Incident".

>> INSPECTION END

PASSENGER SIDE : Component Inspection

INFOID:0000000007772779

1. CHECK DOOR LOCK AND UNLOCK SWITCH

1. Turn ignition switch OFF.
2. Disconnect front power window switch (passenger side) connector.
3. Check continuity between front power window switch (passenger side) terminals.

Front power window switch (passenger side) Terminal		Condition		Continuity
1	3	Door lock and unlock switch	LOCK	Existed
			UNLOCK	Not existed
2			LOCK	Not existed
			UNLOCK	Existed

Is the inspection result normal?

YES >> INSPECTION END
NO >> Replace front power window switch (passenger side). Refer to PWC-93, "Removal and Installation".

DOOR LOCK ACTUATOR

DRIVER SIDE

DRIVER SIDE : Description

INFOID:0000000007772780

Locks/unlocks the door with the signal from BCM.

DRIVER SIDE : Component Function Check

INFOID:0000000007772781

1.CHECK FUNCTION

1. Use CONSULT to perform Active Test (“DOOR LOCK”).
2. Touch “ALL LOCK” or “ALL UNLK” to check that it works normally.

Is the inspection result normal?

YES >> Door lock actuator is OK.
NO >> Refer to DLK-64, "DRIVER SIDE : Diagnosis Procedure".

DRIVER SIDE : Diagnosis Procedure

INFOID:0000000007772782

1.CHECK DOOR LOCK ACTUATOR INPUT SIGNAL

1. Turn ignition switch OFF.
2. Disconnect front door lock assembly (driver side) connector.
3. Check voltage between front door lock assembly (driver side) harness connector and ground.

(+)		(–)	Condition		Voltage (V) (Approx.)
Front door lock assembly (driver side)					
Connector	Terminal				
D9	1	Ground	Door lock and unlock switch	Lock	0 → Battery voltage → 0
	2			Unlock	0 → Battery voltage → 0

Is the inspection result normal?

YES >> Replace front door lock assembly (driver side). Refer to DLK-187, "DOOR LOCK : Removal and Installation".
NO >> GO TO 2.

2.CHECK DOOR LOCK ACTUATOR CIRCUIT

1. Disconnect BCM connector and all door lock actuator connector.
2. Check continuity between BCM harness connector and front door lock assembly (driver side) harness connector.

BCM		Front door lock assembly (driver side)		Continuity
Connector	Terminal	Connector	Terminal	
M70	65	D9	1	Existed
	66		2	

3. Check continuity between BCM harness connector and ground.

BCM		Ground	Continuity
Connector	Terminal		
M70	65	Ground	Not existed
	66		

Is the inspection result normal?

YES >> Replace BCM. Refer to BCS-81, "Removal and Installation".
NO >> Repair or replace harness.

PASSENGER SIDE

PASSENGER SIDE : Description

INFOID:0000000007772783

Locks/unlocks the door with the signal from BCM.

PASSENGER SIDE : Component Function Check

INFOID:0000000007772784

1. CHECK FUNCTION

1. Use CONSULT to perform Active Test (“DOOR LOCK”).
2. Touch “ALL LOCK” or “ALL UNLK” to check that it works normally.

Is the inspection result normal?

YES >> Door lock actuator is OK.
NO >> Refer to DLK-65, "PASSENGER SIDE : Diagnosis Procedure".

PASSENGER SIDE : Diagnosis Procedure

INFOID:0000000007772785

1. CHECK DOOR LOCK ACTUATOR INPUT SIGNAL

1. Turn ignition switch OFF.
2. Disconnect front door lock assembly (passenger side) connector.
3. Check voltage between front door lock assembly (passenger side) harness connector and ground.

(+)		(–)	Condition		Voltage (V) (Approx.)
Front door lock assembly (passenger side)					
Connector	Terminal				
D28	5	Ground	Door lock and unlock switch	Lock	0 → Battery voltage → 0
	6			Unlock	0 → Battery voltage → 0

Is the inspection result normal?

YES >> Replace front door lock assembly (passenger side). Refer to DLK-187, "DOOR LOCK : Removal and Installation".
NO >> GO TO 2.

2. CHECK DOOR LOCK ACTUATOR CIRCUIT

1. Disconnect BCM connector and all door lock actuator.
2. Check continuity between BCM harness connector and front door lock assembly (passenger side) harness connector.

BCM		Front door lock assembly (passenger side)		Continuity
Connector	Terminal	Connector	Terminal	
M70	59	D28	6	Existed
	65		5	

3. Check continuity between BCM harness connector and ground.

BCM		Ground	Continuity
Connector	Terminal		
M70	59		Not existed
	65		

Is the inspection result normal?

YES >> Replace BCM. Refer to BCS-81, "Removal and Installation".
NO >> Repair or replace harness.

REAR LH

REAR LH : Description

INFOID:0000000007772786

Locks/unlocks the door with the signal from BCM.

REAR LH : Component Function Check

INFOID:0000000007772787

1. CHECK FUNCTION

1. Use CONSULT to perform Active Test (“DOOR LOCK”).
2. Touch “ALL LOCK” or “ALL UNLK” to check that it works normally.

Is the inspection result normal?

YES >> Door lock actuator is OK.
NO >> Refer to DLK-67, "REAR RH : Diagnosis Procedure".

REAR LH : Diagnosis Procedure

INFOID:0000000007772788

1. CHECK DOOR LOCK ACTUATOR INPUT SIGNAL

1. Turn ignition switch OFF.
2. Disconnect rear door lock assembly LH connector.
3. Check voltage between rear door lock assembly LH harness connector and ground.

(+)		(–)	Condition		Voltage (V) (Approx.)
Rear door lock assembly LH					
Connector	Terminal				
D65	1	Ground	Door lock and unlock switch	Lock	0 → Battery voltage → 0
	2			Unlock	0 → Battery voltage → 0

Is the inspection result normal?

YES >> Replace rear door lock assembly LH. Refer to DLK-191, "DOOR LOCK : Removal and Installation".
NO >> GO TO 2.

2. CHECK DOOR LOCK ACTUATOR CIRCUIT

1. Disconnect BCM connector and all door lock actuator connector.
2. Check continuity between BCM harness connector and rear door lock assembly LH harness connector.

BCM		Rear door lock assembly LH		Continuity
Connector	Terminal	Connector	Terminal	
M69	55	D65	2	Existed
M70	65		1	

3. Check continuity between BCM harness connector and ground.

BCM		Ground	Continuity
Connector	Terminal		
M69	55		Not existed
M70	65		

Is the inspection result normal?

YES >> Replace BCM. Refer to BCS-81, "Removal and Installation".
NO >> Repair or replace harness.

REAR RH

REAR RH : Description

INFOID:0000000007772789

Locks/unlocks the door with the signal from BCM.

REAR RH : Component Function Check

INFOID:0000000007772790

1. CHECK FUNCTION

1. Use CONSULT to perform Active Test (“DOOR LOCK”).

2. Touch “ALL LOCK” or “ALL UNLK” to check that it works normally.

Is the inspection result normal?

YES >> Door lock actuator is OK.
NO >> Refer to DLK-67, "REAR RH : Diagnosis Procedure".

REAR RH : Diagnosis Procedure

INFOID:0000000007772791

1. CHECK DOOR LOCK ACTUATOR INPUT SIGNAL

1. Turn ignition switch OFF.
2. Disconnect rear door lock assembly RH connector.
3. Check voltage between rear door lock assembly RH harness connector and ground.

(+)		(–)	Condition		Voltage (V) (Approx.)
Rear door lock assembly RH					
Connector	Terminal				
D45	5	Ground	Door lock and unlock switch	Lock	0 → Battery voltage → 0
	6			Unlock	0 → Battery voltage → 0

Is the inspection result normal?

YES >> Replace rear door lock assembly RH. Refer to DLK-191, "DOOR LOCK : Removal and Installation".
NO >> GO TO 2.

2. CHECK DOOR LOCK ACTUATOR CIRCUIT

1. Disconnect BCM connector and all door lock actuator connector.
2. Check continuity between BCM harness connector and rear door lock assembly RH harness connector.

BCM		Rear door lock assembly RH		Continuity
Connector	Terminal	Connector	Terminal	
M69	55	D45	6	Existed
M70	65		5	

3. Check continuity between BCM harness connector and ground.

BCM		Ground	Continuity
Connector	Terminal		
M69	55		Not existed
M70	65		

Is the inspection result normal?

YES >> Replace BCM. Refer to BCS-81, "Removal and Installation".
NO >> Repair or replace harness.

BACK DOOR

BACK DOOR : Description

INFOID:0000000007772792

Locks/unlocks the door with the signal from BCM.

BACK DOOR : Component Function Check

INFOID:0000000007772793

1. CHECK FUNCTION

1. Use CONSULT to perform Active Test (“DOOR LOCK”).
2. Touch “ALL LOCK” or “ALL UNLK” to check that it works normally.

Is the inspection result normal?

YES >> Back door lock actuator is OK.
NO >> Refer to DLK-68, "BACK DOOR : Diagnosis Procedure".

BACK DOOR : Diagnosis Procedure

INFOID:0000000007772794

1. CHECK BACK DOOR LOCK ACTUATOR INPUT SIGNAL

1. Turn ignition switch OFF.
2. Disconnect back door lock assembly connector.
3. Check voltage between back door lock assembly harness connector and ground.

(+)		(–)	Condition		Voltage (V) (Approx.)
Back door lock assembly					
Connector	Terminal				
D106	2	Ground	Door lock and unlock switch	Unlock	0 → Battery voltage → 0
	3			Lock	0 → Battery voltage → 0

Is the inspection result normal?

YES >> Replace back door lock assembly. Refer to DLK-195, "DOOR LOCK : Removal and Installation".
NO-1 >> GO TO 2 (lock signal).
NO-2 >> GO TO 3 (unlock signal).

2. CHECK BACK DOOR LOCK ACTUATOR LOCK CIRCUIT

1. Disconnect BCM connector and all door lock actuator connector.
2. Check continuity between BCM harness connector and back door lock assembly harness connector.

BCM		Back door lock assembly		Continuity
Connector	Terminal	Connector	Terminal	
M70	65	D106	3	Existed

3. Check continuity between BCM harness connector and ground.

BCM		Ground	Continuity
Connector	Terminal		
M70	65		Not existed

Is the inspection result normal?

YES >> Replace BCM. Refer to BCS-81, "Removal and Installation".
NO >> Repair or replace harness.

3. CHECK BACK DOOR LOCK ACTUATOR UNLOCK CIRCUIT

1. Remove back door lock actuator relay connector.
2. Check continuity between back door lock actuator relay harness connector and back door lock assembly harness connector.

Back door lock actuator relay		Back door lock assembly		Continuity
Connector	Terminal	Connector	Terminal	
M90	3	D106	2	Existed

3. Check continuity between BCM harness connector and ground.

Back door lock actuator relay		Ground	Continuity
Connector	Terminal		
M90	3		Not existed

Is the inspection result normal?

YES >> GO TO 4.
NO >> Repair or replace harness.

4. CHECK INTERMITTENT INCIDENT

Check intermittent incident.
Refer to GI-41, "Intermittent Incident"

>> INSPECTION END

BACK DOOR LOCK ACTUATOR RELAY

Description

INFOID:0000000007772795

Controls back door lock actuator lock/unlock operation.

Component Function Check

INFOID:0000000007772796

1.CHECK FUNCTION

1. Use CONSULT to perform Active Test (“DOOR LOCK”).
2. Touch “ALL LOCK” or “ALL UNLK” to check that it works normally.

Is the inspection result normal?

YES >> Back door lock actuator relay is OK.
NO >> Refer to DLK-68, "BACK DOOR : Diagnosis Procedure".

Diagnosis Procedure

INFOID:0000000007772797

1.CHECK FUSE

1. Turn ignition switch OFF.
2. Check 10 A fuse, [No. 10, located in fuse block (J/B)].

Is the inspection result normal?

YES >> GO TO 2.
NO >> Replace the blown fuse after repairing the affected circuit if a fuse is blown.

2.CHECK BACK DOOR LOCK ACTUATOR RELAY POWER CIRCUIT

1. Remove back door lock actuator relay.
2. Check voltage between back door lock actuator relay harness connector and ground.

(+)		(–)	Voltage (V) (Approx.)
Back door lock actuator relay			
Connector	Terminal		
M90	2	Ground	Battery voltage
	5		

Is the inspection result normal?

YES >> GO TO 3.
NO >> Repair or replace harness.

3.CHECK BACK DOOR LOCK ACTUATOR RELAY CIRCUIT 1

1. Install the back door lock relay.
2. Check voltage between BCM harness connector and ground.

(+)		(–)	Condition		Voltage (V) (Approx.)
BCM					
Connector	Terminal				
M69	50	Ground	Door lock and un-lock switch	LOCK	Battery voltage
				UNLOCK	0

Is the inspection result normal?

YES >> GO TO 6.
NO-1 (when voltage is fixed at 12V)>>Replace BCM. Refer to BCS-81, "Removal and Installation".
NO-2 (when voltage is fixed at 0V)>>GO TO 4.

4.CHECK BACK DOOR LOCK ACTUATOR RELAY CIRCUIT 1

1. Disconnect BCM connector.
2. Check voltage between BCM harness connector and ground.

(+)		(–)	Voltage (V) (Approx.)
BCM			
Connector	Terminal		
M69	50	Ground	Battery voltage

Is the inspection result normal?

YES >> Replace BCM. Refer to BCS-81, "Removal and Installation".
NO >> GO TO 5.

5. CHECK BACK DOOR LOCK ACTUATOR RELAY CIRCUIT 2

1. Remove back door lock actuator relay.
2. Check continuity between BCM harness connector and back door lock actuator relay harness connector.

Back door lock actuator relay		BCM		Continuity
Connector	Terminal	Connector	Terminal	
M90	1	M69	50	Existed

3. Check continuity between BCM harness connector and ground.

Back door lock actuator relay		Ground	Continuity
Connector	Terminal		
M90	1		Not existed

Is the inspection result normal?

YES >> Replace back door lock actuator relay.
NO >> Repair or replace harness.

6. CHECK BACK DOOR LOCK ACTUATOR RELAY GROUND CIRCUIT

Check continuity between back door lock actuator relay harness connector and ground.

Back door lock actuator relay		Ground	Continuity
Connector	Terminal		
M90	4		Existed

Is the inspection result normal?

YES >> GO TO 7.
NO >> Repair or replace harness.

7. CHECK BACK DOOR LOCK ACTUATOR RELAY

Check back door lock actuator relay.Refer to DLK-71, "Component Inspection"

Is the inspection result normal?

YES >> GO TO 8.
NO >> Replace back door lock actuator relay.

8. CHECK INTERMITTENT INCIDENT

Check intermittent incident.
Refer to GI-41, "Intermittent Incident"

>> INSPECTION END

Component Inspection

INFOID:0000000007772798

1. CHECK BACK DOOR LOCK ACTUATOR RELAY

1. Turn ignition switch OFF.
2. Remove back door lock actuator relay.
3. Check continuity between back door lock actuator relay terminals.

Back door lock actuator relay Terminal		Condition	Continuity
3	4	12 V direct current supply between terminals 1 and 2	Not existed
		No current supply	Existed
	5	12 V direct current supply between terminals 1 and 2	Existed
		No current supply	Not existed

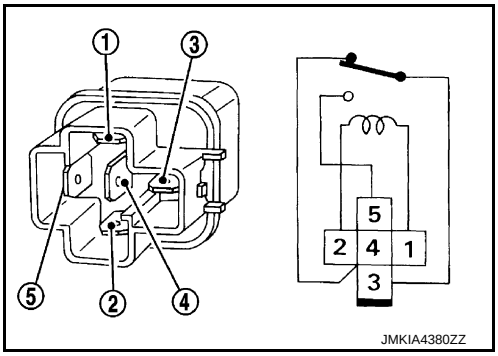

Is the inspection result normal?

YES >> INSPECTION END
NO >> Replace back door lock actuator relay.

DOOR KEY CYLINDER SWITCH

Description

INFOID:0000000007772799

Transmits lock/unlock operation to BCM.

Component Function Check

INFOID:0000000007772800

1. CHECK DOOR KEY CYLINDER SWITCH INPUT SIGNAL

Check (“KEY CYL LK-SW”, “KEY CYL UN-SW”) in “Data Monitor” mode using CONSULT.

Monitor item	Condition		Status
KEY CYL LK-SW	Driver side door key cylinder	Lock	ON
		Neutral / Unlock	OFF
KEY CYL UN-SW		Unlock	ON
		Neutral / Lock	OFF

Is the inspection result normal?

YES >> Door key cylinder switch is OK.
NO >> Refer to DLK-73, "Diagnosis Procedure".

Diagnosis Procedure

INFOID:0000000007772801

1. CHECK DOOR KEY CYLINDER SWITCH INPUT SIGNAL

1. Turn ignition switch OFF.
2. Disconnect front door lock assembly (driver side) connector.
3. Check voltage between front door lock assembly (driver side) harness connector and ground.

(+) Front door lock assembly (driver side) Connector	Terminal	(–)	Voltage (V) (Approx.)
D9	5	Ground	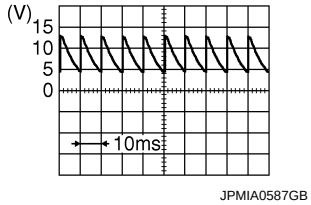 8.0 - 8.5 V
	6		Battery voltage

Is the inspection result normal?

YES >> GO TO 3.
NO >> GO TO 2.

2. CHECK DOOR KEY CYLINDER SWITCH SIGNAL CIRCUIT

1. Disconnect BCM connector.
2. Check continuity between BCM harness connector and front door lock assembly (driver side) harness connector.

BCM Connector	BCM Terminal	Front door lock assembly (driver side) Connector	Front door lock assembly (driver side) Terminal	Continuity
M68	7	D9	5	Existed
	8		6	

3. Check continuity between BCM harness connector and ground.

BCM		Ground	Continuity
Connector	Terminal		
M68	7		Not existed
	8		

Is the inspection result normal?

YES >> Replace BCM. Refer to BCS-81, "Removal and Installation".
NO >> Repair or replace harness.

3. CHECK DOOR KEY CYLINDER SWITCH GROUND CIRCUIT

Check continuity between front door lock assembly (driver side) harness connector and ground.

Front door lock assembly (driver side)		Ground	Continuity
Connector	Terminal		
D9	4		Existed

Is the inspection result normal?

YES >> GO TO 4.
NO >> Repair or replace harness.

4. CHECK DOOR KEY CYLINDER SWITCH

Refer to DLK-74, "Component Inspection".

Is the inspection result normal?

YES >> GO TO 5.
NO >> Replace front door lock assembly (driver side). Refer to DLK-187, "DOOR LOCK : Removal and Installation".

5. CHECK INTERMITTENT INCIDENT

Refer to GI-41, "Intermittent Incident".

>> INSPECTION END

Component Inspection

INFOID:0000000007772802

1. CHECK DOOR KEY CYLINDER SWITCH

1. Turn ignition switch OFF.
2. Disconnect front door lock assembly (driver side) terminal.
3. Check continuity between front door lock assembly (driver side) terminals.

Front door lock assembly (driver side) Terminal		Condition		Continuity
5	4	Driver side door key cylinder	Unlock	Existed
			Neutral / Lock	Not existed
6			Lock	Existed
			Neutral / Unlock	Not existed

Is the inspection result normal?

YES >> INSPECTION END
NO >> Replace front door lock assembly (driver side). Refer to DLK-187, "DOOR LOCK : Removal and Installation".

REMOTE KEYLESS ENTRY RECEIVER

Description

INFOID:0000000007772803

Receives Intelligent Key operation and transmits to BCM.

Component Function Check

INFOID:0000000007772804

1.CHECK FUNCTION

1. Select “INTELLIGENT KEY” of “BCM” using CONSULT.
2. Select “RKE OPE COUN1” in “DATA MONITOR” mode.
3. Check that the function operates normally according to the following conditions.

Monitor item	Condition
RKE OPE COUN1	Checks whether value changes when operating Intelligent Key

Is the inspection result normal?

YES >> Remote keyless entry receiver is OK.
NO >> Refer to DLK-75, "Diagnosis Procedure".

Diagnosis Procedure

INFOID:0000000007772805

1.CHECK REMOTE KEYLESS ENTRY RECEIVER POWER SUPPLY

1. Turn ignition switch OFF.
2. Disconnect remote keyless entry receiver connector.
3. Check voltage between remote keyless entry receiver harness connector and ground.

(+)		(–)	Voltage
Remote keyless entry receiver			
Connector	Terminal		
M87	1	Ground	Battery voltage

Is the inspection result normal?

YES >> GO TO 3.
NO >> GO TO 2.

2.DETECT MALFUNCTIONING PART

Check the following.
- 10 A fuse (No. 10)
- Harness for open or short between remote keyless entry receiver and battery

Is the inspection result normal?

YES >> GO TO 6.
NO >> Repair or replace the malfunctioning parts.

3.CHECK REMOTE KEYLESS ENTRY RECEIVER GROUND CIRCUIT

1. Disconnect BCM connector.
2. Check continuity between BCM harness connector and remote keyless entry receiver harness connector.

BCM		Remote keyless entry receiver		Continuity
Connector	Terminal	Connector	Terminal	
M68	18	M87	4	Existed

3. Check continuity between BCM harness connector and ground.

BCM		Ground	Continuity
Connector	Terminal		
M68	18		Not existed

Is the inspection result normal?

YES >> GO TO 4.
NO >> Repair or replace harness.

4. CHECK REMOTE KEYLESS ENTRY RECEIVER OUTPUT SIGNAL

1. Reconnect BCM connector and remote keyless entry receiver connector.
2. Check signal between remote keyless entry receiver harness connector and ground using oscilloscope.

(+)		(–)	Condition	Signal (Reference value)
Remote keyless entry receiver				
Connector	Terminal			
M87	2	Ground	Waiting	12 V
			Press the Intelligent Key lock or unlock button	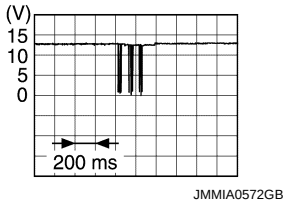

Is the inspection result normal?

YES >> GO TO 5.
NO >> Replace remote keyless entry receiver.

5. CHECK REMOTE KEYLESS ENTRY RECEIVER CIRCUIT

1. Disconnect BCM connector and remote keyless entry receiver connector.
2. Check continuity between BCM harness connector and remote keyless entry receiver harness connector.

BCM		Remote keyless entry receiver		Continuity
Connector	Terminal	Connector	Terminal	
M68	38	M87	2	Existed

3. Check continuity between BCM harness connector and ground.

BCM		Ground	Continuity
Connector	Terminal		
M68	38		Not existed

Is the inspection result normal?

YES >> Replace BCM. Refer to BCS-81, "Removal and Installation".
NO >> Repair or replace harness.

6. CHECK INTERMITTENT INCIDENT

Refer to GI-41, "Intermittent Incident".

>> INSPECTION END

BACK DOOR REQUEST SWITCH

Description

INFOID:0000000007772806

Transmits lock/unlock operation to BCM.

Component Function Check

INFOID:0000000007772807

1.CHECK FUNCTION

Check (“REQSW-BD/TR”) in “Data Monitor” mode using CONSULT.

Monitor item	Condition		Status
REQSW-BD/TR	Back door request switch	Pressed	ON
		Released	OFF

Is the inspection result normal?

YES >> Back door request switch is OK.
NO >> Refer to DLK-77, "Diagnosis Procedure".

Diagnosis Procedure

INFOID:0000000007772808

1.CHECK BACK DOOR REQUEST SWITCH INPUT SIGNAL

1. Turn ignition switch OFF.
2. Disconnect back door request switch connector.
3. Check voltage between back door request switch harness connector and ground.

(+)		(–)	Voltage (V) (Approx.)
Back door request switch			
Connector	Terminal		
D107	1	Ground	Battery voltage

Is the inspection result normal?

YES >> GO TO 3.
NO >> GO TO 2.

2.CHECK BACK DOOR REQUEST SWITCH CIRCUIT

1. Disconnect BCM connector.
2. Check continuity between BCM harness connector and back door request switch harness connector.

BCM		Back door request switch		Continuity
Connector	Terminal	Connector	Terminal	
M69	51	D107	1	Existed

3. Check continuity between BCM harness connector and ground.

BCM		Ground	Continuity
Connector	Terminal		
M69	51		Not existed

Is the inspection result normal?

YES >> Replace BCM. Refer to BCS-81, "Removal and Installation".
NO >> Repair harness or connector.

3.CHECK BACK DOOR REQUEST SWITCH GROUND CIRCUIT

Check continuity between back door request switch harness connector and ground.

Back door request switch		Ground	Continuity
Connector	Terminal		
D107	2		Existed

Is the inspection result normal?

YES >> GO TO 4.
NO >> Repair or replace harness.

4. CHECK BACK DOOR REQUEST SWITCH

Refer to DLK-78, "Component Inspection".

Is the inspection result normal?

YES >> GO TO 5.
NO >> Replace back door request switch. Refer to DLK-196, "OUTSIDE HANDLE : Removal and Installation".

5. CHECK INTERMITTENT INCIDENT

Refer to GI-41, "Intermittent Incident".

>> INSPECTION END

Component Inspection

INFOID:0000000007772809

1. CHECK BACK DOOR REQUEST SWITCH

1. Turn ignition switch OFF.
2. Disconnect back door request switch connector.
3. Check continuity between back door request switch terminals.

Back door request switch		Condition		Continuity
Terminal				
1	2	Back door request switch	Pressed	Existed
			Released	Not existed

Is the inspection result normal?

YES >> INSPECTION END
NO >> Replace back door request switch. Refer to DLK-196, "OUTSIDE HANDLE : Removal and Installation".

DOOR REQUEST SWITCH

Description

INFOID:0000000007772810

Transmits lock/unlock operation to BCM.

Component Function Check

INFOID:0000000007772811

1.CHECK FUNCTION

Check (“REQ SW -DR” or “REQ SW -AS”) in “Data Monitor” mode using CONSULT.

Monitor item	Condition		Status
REQ SW -DR	Driver side door request switch	Pressed	ON
		Released	OFF
REQ SW -AS	Passenger side door request switch	Pressed	ON
		Released	OFF

Is the inspection result normal?

YES >> Front door request switch is OK.
NO >> Refer to DLK-79, "Diagnosis Procedure".

Diagnosis Procedure

INFOID:0000000007772812

1.CHECK DOOR REQUEST SWITCH INPUT SIGNAL

1. Turn ignition switch OFF.
2. Disconnect malfunctioning front door request switch connector.
3. Check voltage between malfunctioning front door request switch harness connector and ground.

(+)			(–)	Voltage (V) (Approx.)
Front door request switch				
Connector		Terminal		
Driver side	D11	2	Ground	Battery voltage
Passenger side	D31			

Is the inspection result normal?

YES >> GO TO 3.
NO >> GO TO 2.

2.CHECK DOOR REQUEST SWITCH CIRCUIT

1. Disconnect BCM connector.
2. Check continuity between malfunctioning front door request switch harness connector and BCM harness connector.

Front door request switch			BCM		Continuity
Connector		Terminal	Connector	Terminal	
Driver side	D11	2	M71	75	Existed
Passenger side	D31			100	

3. Check continuity between malfunctioning front door request switch harness connector and ground.

Front door request switch			Ground	Continuity
Connector		Terminal		
Driver side	D11	2		Not existed
Passenger side	D31			

Is the inspection result normal?

YES >> Replace BCM. Refer to BCS-81, "Removal and Installation".
NO >> Repair or replace harness.

3. CHECK DOOR REQUEST SWITCH GROUND CIRCUIT

Check continuity between malfunctioning front door request switch harness connector and ground.

Front door request switch			Ground	Continuity
Connector		Terminal		
Driver side	D11	1		Existed
Passenger side	D31			

Is the inspection result normal?

YES >> GO TO 4.
NO >> Repair or replace harness.

4. CHECK DOOR REQUEST SWITCH

Refer to DLK-80, "Component Inspection".

Is the inspection result normal?

YES >> GO TO 5.
NO >> Replace malfunctioning front door request switch. Refer to DLK-189, "OUTSIDE HANDLE : Removal and Installation".

5. CHECK INTERMITTENT INCIDENT

Refer to GI-41, "Intermittent Incident".

>> INSPECTION END

Component Inspection

INFOID:0000000007772813

1. CHECK DOOR REQUEST SWITCH

1. Turn ignition switch OFF.
2. Disconnect malfunctioning front door request switch connector.
3. Check continuity between malfunctioning front door request switch terminals.

Front door request switch		Condition		Continuity
Terminal				
1	2	Door request switch	Pressed	Existed
			Released	Not existed

Is the inspection result normal?

YES >> INSPECTION END
NO >> Replace malfunctioning front door request switch. Refer to DLK-189, "OUTSIDE HANDLE : Removal and Installation".

UNLOCK SENSOR

Description

INFOID:0000000007772814

Detects door lock condition of driver side door.

Component Function Check

INFOID:0000000007772815

1.CHECK FUNCTION

Check (“UNLK SEN -DR”) in BCM “Data Monitor” mode using CONSULT.

Monitor item	Condition		Status
UNLK SEN -DR	Driver side door	Lock	OFF
		Unlock	ON

Is the inspection result normal?

YES >> Unlock sensor is OK.
NO >> Refer to DLK-81, "Diagnosis Procedure".

Diagnosis Procedure

INFOID:0000000007772816

1.CHECK UNLOCK SENSOR INPUT SIGNAL

1. Turn ignition switch OFF.
2. Disconnect front door lock assembly (driver side) connector.
3. Check signal between front door lock assembly (driver side) harness connector and ground with oscilloscope.

(+)		(–)	Signal (Reference value)
Front door lock assembly (driver side)			
Connector	Terminal		
D9	3	Ground	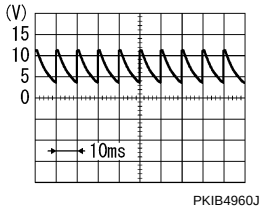

Is the inspection result normal?

YES >> GO TO 3.
NO >> GO TO 2.

2.CHECK UNLOCK SENSOR CIRCUIT

1. Disconnect BCM connector.
2. Check continuity between BCM harness connector and front door lock assembly (driver side) harness connector.

BCM		Front door lock assembly (driver side)		Continuity
Connector	Terminal	Connector	Terminal	
M68	31	D9	3	Existed

3. Check continuity between BCM harness connector and ground.

BCM		Ground	Continuity
Connector	Terminal		
M68	31		Not existed

Is the inspection result normal?

YES >> Replace BCM. Refer to BCS-81, "Removal and Installation".
NO >> Repair or replace harness.

3. CHECK UNLOCK SENSOR GROUND CIRCUIT

Check continuity between front door lock assembly (driver side) harness connector and ground.

Front door lock assembly (driver side)		Ground	Continuity
Connector	Terminal		
D9	4		Existed

Is the inspection result normal?

YES >> GO TO 4.
NO >> Repair or replace harness.

4. CHECK UNLOCK SENSOR

Refer to DLK-82, "Component Inspection".

Is the inspection result normal?

YES >> GO TO 5.
NO >> Replace front door lock assembly (driver side). Refer to DLK-187, "DOOR LOCK : Removal and Installation".

5. CHECK INTERMITTENT INCIDENT

Refer to GI-41, "Intermittent Incident".

>> INSPECTION END

Component Inspection

INFOID:0000000007772817

1. CHECK UNLOCK SENSOR

1. Turn ignition switch OFF.
2. Disconnect front door lock assembly (driver side) connector.
3. Check continuity between front door lock assembly (driver side) terminals.

Front door lock assembly (driver side)		Condition		Continuity
Terminal				
3	4	Driver side door	Unlock	Existed
			Lock	Not existed

Is the inspection result normal?

YES >> INSPECTION END
NO >> Replace front door lock assembly (driver side). Refer to DLK-187, "DOOR LOCK : Removal and Installation".

INTELLIGENT KEY WARNING BUZZER

Description

INFOID:0000000007772818

Answers back and warns for an inappropriate operation.

Component Function Check

INFOID:0000000007772819

1. CHECK FUNCTION

1. Use CONSULT to perform BCM Active Test (“OUTSIDE BUZZER”).
2. Touch “ON” to check that it works normally.

Is the inspection result normal?

YES >> Intelligent Key warning buzzer is OK.
NO >> Refer to DLK-83, "Diagnosis Procedure".

Diagnosis Procedure

INFOID:0000000007772820

1. CHECK FUSE

1. Turn ignition switch OFF.
2. Check 10 A fuse, [No. 10, located in fuse block (J/B)].

Is the inspection result normal?

YES >> GO TO 2.
NO >> Replace the blown fuse after repairing the affected circuit if a fuse is blown.

2. CHECK INTELLIGENT KEY WARNING BUZZER POWER SUPPLY CIRCUIT

1. Disconnect Intelligent Key warning buzzer connector.
2. Check voltage between Intelligent Key warning buzzer harness connector and ground.

(+)		(–)	Voltage (V) (Approx.)
Intelligent Key warning buzzer			
Connector	Terminal		
E25	1	Ground	Battery voltage

Is the inspection result normal?

YES >> GO TO 3.
NO >> Repair or replace harness.

3. CHECK INTELLIGENT KEY WARNING BUZZER CIRCUIT

1. Disconnect BCM connector.
2. Check continuity between BCM harness connector and Intelligent Key warning buzzer harness connector.

BCM		Intelligent Key warning buzzer		Continuity
Connector	Terminal	Connector	Terminal	
M71	93	E25	3	Existed

3. Check continuity between BCM harness connector and ground.

BCM		Ground	Continuity
Connector	Terminal		
M71	93		Not existed

Is the inspection result normal?

YES >> GO TO 4.
NO >> Repair or replace harness.

4. CHECK INTELLIGENT KEY WARNING BUZZER

Refer to DLK-84, "Component Inspection".

Is the inspection result normal?

YES >> Replace BCM. Refer to BCS-81, "Removal and Installation".
NO >> Replace Intelligent Key warning buzzer. Refer to DLK-203, "Removal and Installation".

Component Inspection

INFOID:0000000007772821

1. CHECK INTELLIGENT KEY WARNING BUZZER

1. Turn ignition switch OFF.
2. Disconnect Intelligent Key warning buzzer connector.
3. Connect battery power supply directly to Intelligent Key warning buzzer terminals and check the operation.

Intelligent Key warning buzzer		Operation
Terminal		
(+)	(–)	
1	3	Buzzer sounds

Is the inspection result normal?

YES >> INSPECTION END
NO >> Replace Intelligent Key warning buzzer. Refer to DLK-203, "Removal and Installation".

INTELLIGENT KEY

Description

INFOID:0000000007772822

The following functions are available when having and carrying electronic ID.
- Door lock/unlock
- Engine start

Remote control entry function and panic alarm function are available when operating on button.

Component Function Check

INFOID:0000000007772823

1.CHECK FUNCTION

Check (“RKE OPE COUN1”) in Data Monitor mode using CONSULT.

Monitor item	Condition
RKE OPE COUN1	Check that the numerical value is changing while operating on the Intelligent Key.

Is the inspection result normal?

YES >> Intelligent Key is OK.
NO >> Refer to DLK-85, "Diagnosis Procedure".

Diagnosis Procedure

INFOID:0000000007772824

1.CHECK INTELLIGENT KEY BATTERY

Check by connecting a resistance (approximately 300Ω) so that the current value becomes about 10 mA. Refer to DLK-205, "Removal and Installation".

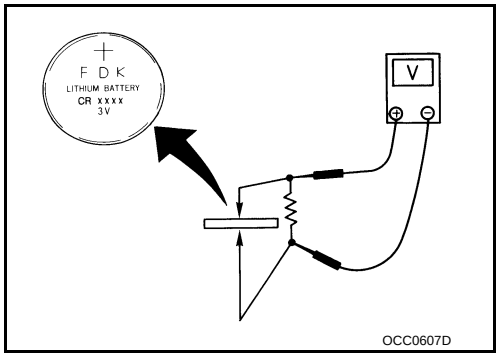

Standard : Approx. 2.5 - 3.0V

Is the measurement value within the specification?

YES >> Replace Intelligent Key.
NO >> Replace Intelligent Key battery. Refer to DLK-205, "Removal and Installation".

BUZZER (COMBINATION METER)

Description

INFOID:0000000007772825

Performs operation method guide and warning with buzzer.

Component Function Check

INFOID:0000000007772826

1.CHECK FUNCTION

1. Use CONSULT to perform Active Test (“INSIDE BUZZER”).
2. Touch “take out”, “knob”or “key” to check that it works normally.

Is the inspection result normal?

Yes >> Buzzer (combination meter) is OK.
No >> Refer to DLK-86, "Diagnosis Procedure".

Diagnosis Procedure

INFOID:0000000007772827

1.CHECK METER BUZZER CIRCUIT

Refer to WCS-25, "Component Function Check".

Is the inspection result normal?

Yes >> GO TO 2.
No >> Repair or replace harness.

2.CHECK INTERMITTENT INCIDENT

Refer to GI-41, "Intermittent Incident".

>> INSPECTION END

KEY WARNING LAMP

Description

INFOID:0000000007772828

Performs operation method guide and warning together with buzzer.

Component Function Check

INFOID:0000000007772829

1.CHECK FUNCTION

1. Use CONSULT to perform Active Test (“INDICATOR”).
2. Touch “KEY IND” or “KEY ON” to check that it works normally.

Is the inspection result normal?

YES >> Key warning lamp is OK.
NO >> Refer to DLK-87, "Diagnosis Procedure".

Diagnosis Procedure

INFOID:0000000007772830

1.CHECK KEY WARNING LAMP

Refer to MWI-4, "Work flow".

Is the inspection result normal?

YES >> GO TO 2.
NO >> Repair or replace harness.

2.CHECK INTERMITTENT INCIDENT

Refer to GI-41, "Intermittent Incident".

>> INSPECTION END

HAZARD FUNCTION

Description

INFOID:0000000007772831

Performs answer-back for each operation with number of blinks.

Component Function Check

INFOID:0000000007772832

1.CHECK FUNCTION

1. Use CONSULT to perform Active Test (“FLASHER”).
2. Touch “LH” or “RH” to check that it works normally.

Is the inspection result normal?

YES >> Hazard warning lamp circuit is OK.
NO >> Refer to DLK-88, "Diagnosis Procedure".

Diagnosis Procedure

INFOID:0000000007772833

1.CHECK HAZARD SWITCH CIRCUIT

Refer to EXL-66, "Component Function Check".

Is the inspection result normal?

YES >> GO TO 2.
NO >> Repair or replace harness.

2.CHECK INTERMITTENT INCIDENT

Refer to GI-41, "Intermittent Incident".

>> INSPECTION END

POWER DOOR LOCK SYSTEM

Wiring Diagram - POWER DOOR LOCK SYSTEM -

INFOID:0000000007772834

For connector terminal arrangements, harness layouts, and alphabets in a ⬡ (option abbreviation; if not described in wiring diagram), refer to GI-12, "Connector Information".

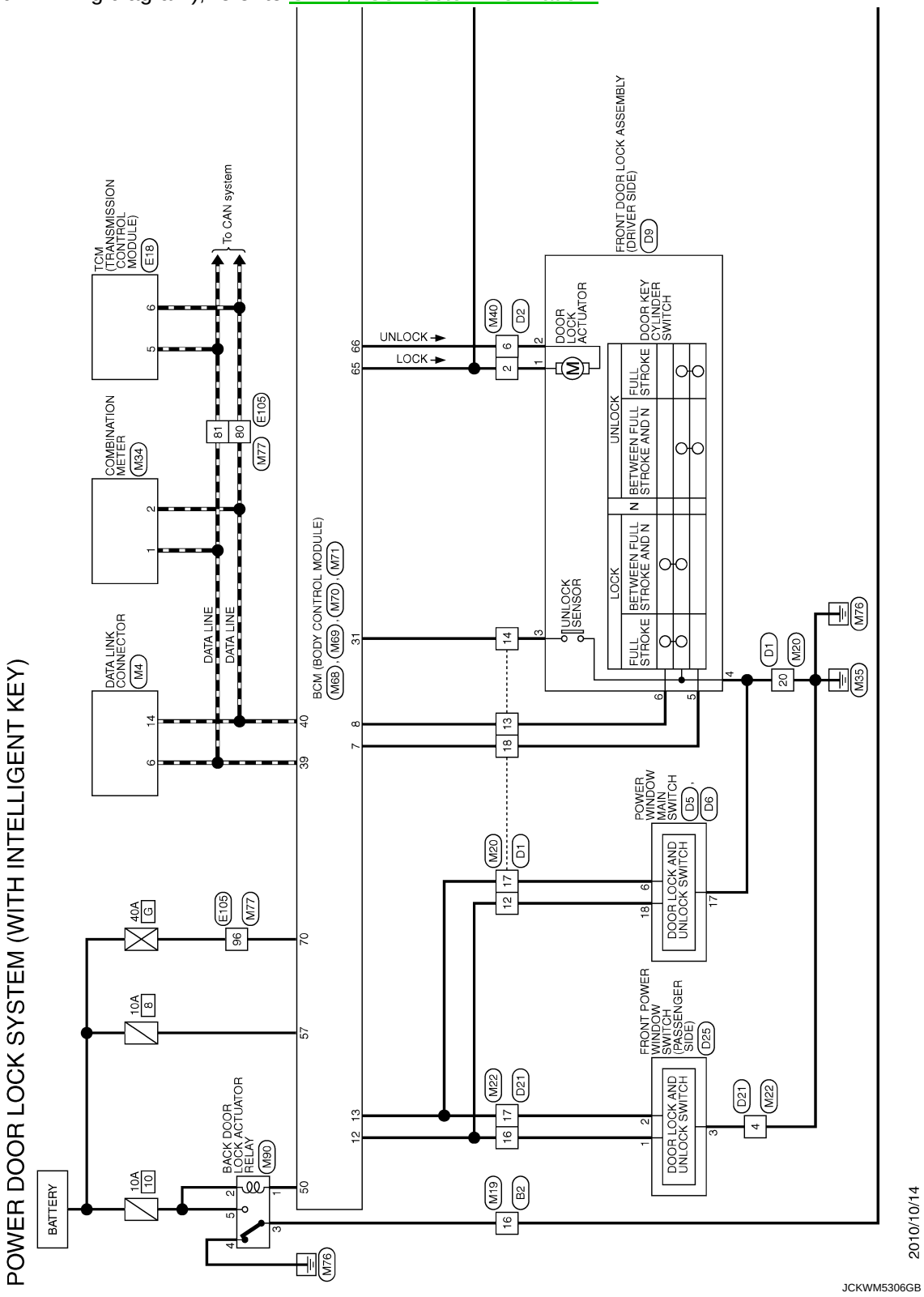

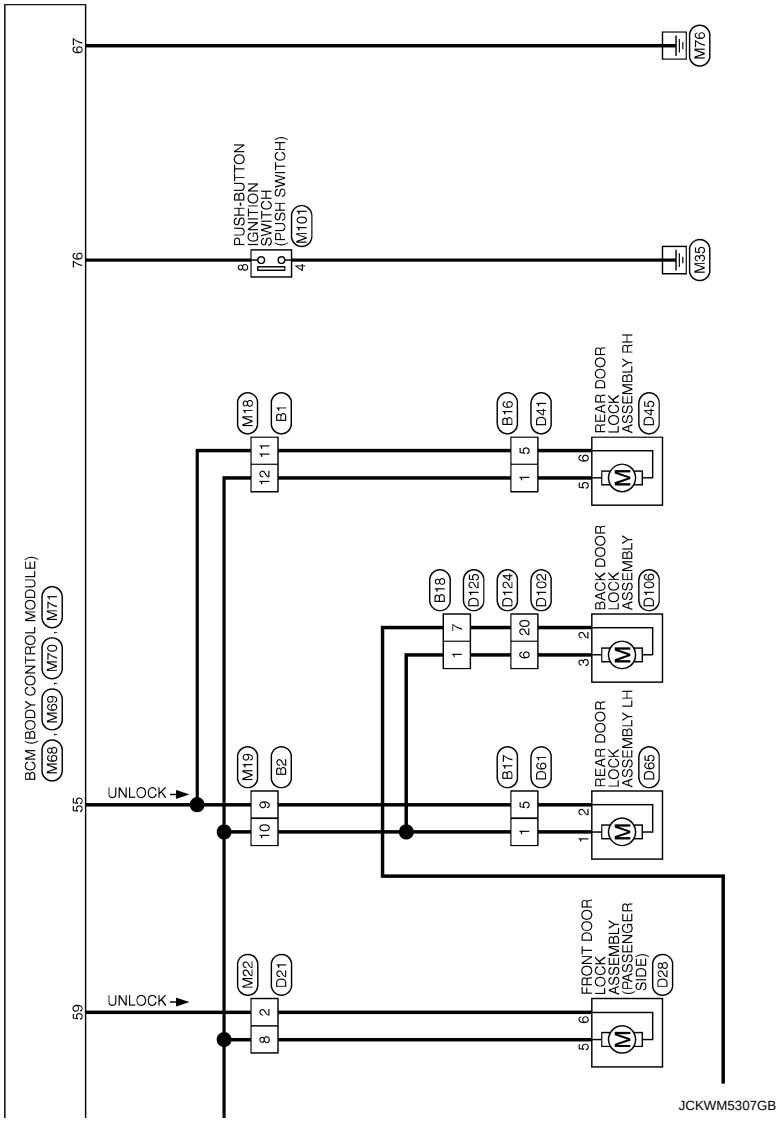
BCM (BODY CONTROL MODULE)
M68, M69, M70, M71
67
76
55
59
UNLOCK
UNLOCK
PUSH-BUTTON IGNITION SWITCH (PUSH SWITCH)
M101
8
4
M76
M35
M18
B1
M19
B2
M22
D21
B16
D41
B17
D61
B18
D125
D124
D102
REAR DOOR LOCK ASSEMBLY RH
D45
BACK DOOR LOCK ASSEMBLY
D106
REAR DOOR LOCK ASSEMBLY LH
D65
FRONT DOOR LOCK ASSEMBLY (PASSENGER SIDE)
D28
JCKWM5307GB

INTELLIGENT KEY SYSTEM

Wiring Diagram - INTELLIGENT KEY SYSTEM -

INFOID:0000000007772835

For connector terminal arrangements, harness layouts, and alphabets in a ⬡ (option abbreviation; if not described in wiring diagram), refer to GI-12, "Connector Information".

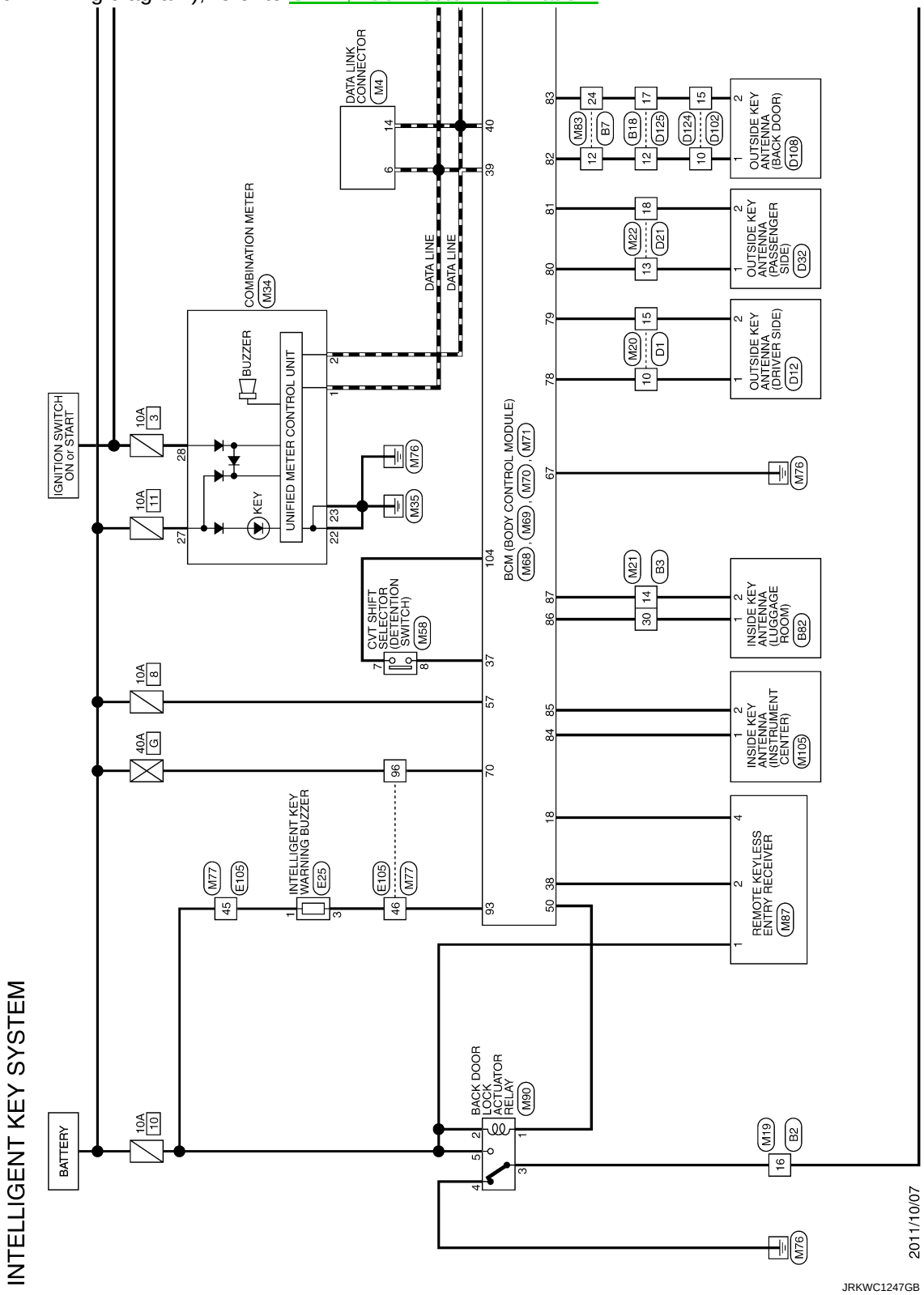

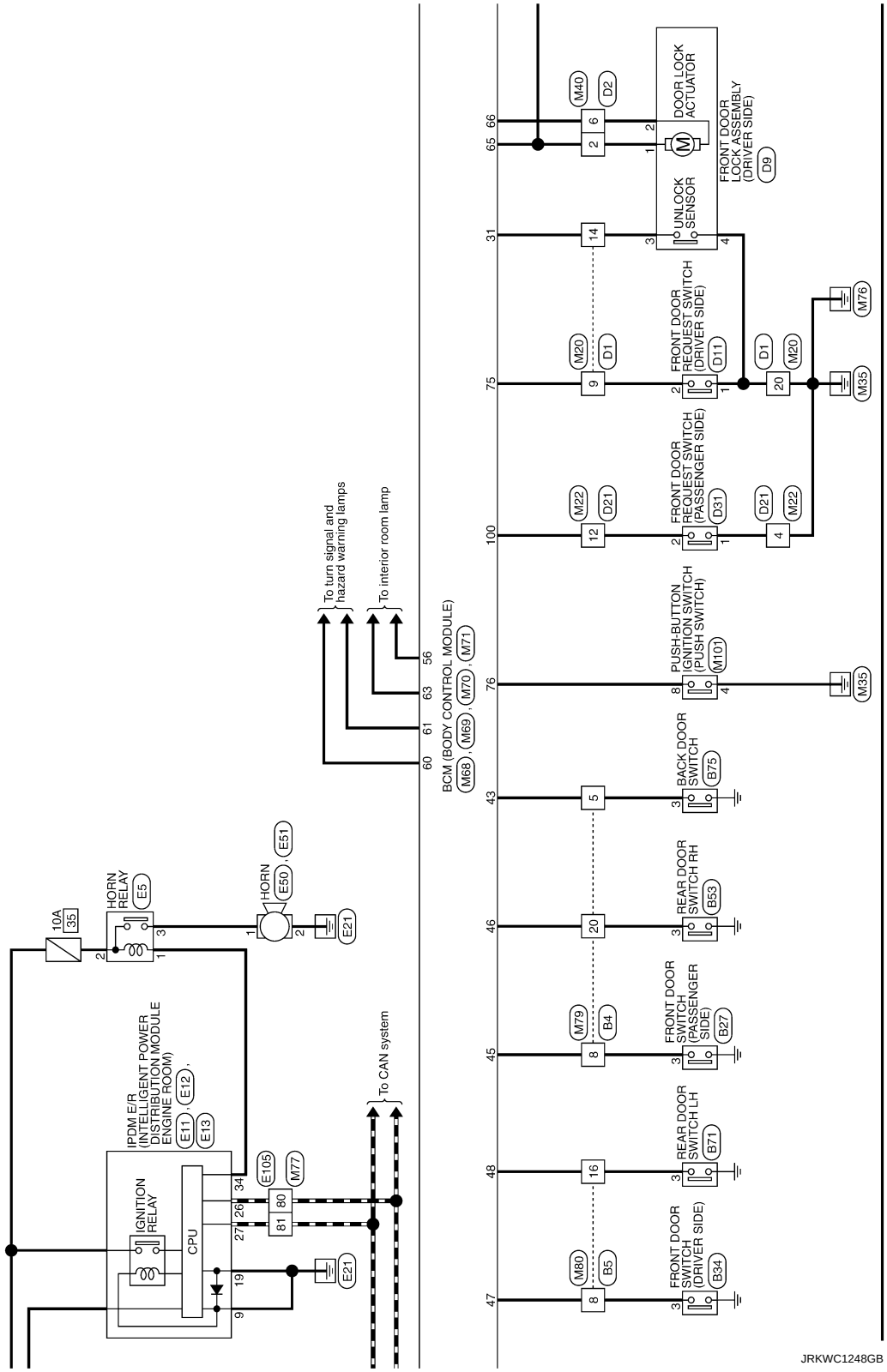
10A
35
HORN RELAY
E5
HORN
E50
E51
E21
IPDM E/R (INTELLIGENT POWER DISTRIBUTION MODULE ENGINE ROOM)
E11
E12
E13
IGNITION RELAY
CPU
E105
M77
To CAN system
To turn signal and hazard warning lamps
To interior room lamp
BCM (BODY CONTROL MODULE)
M68
M69
M70
M71
60
61
63
56
FRONT DOOR SWITCH (DRIVER SIDE)
B34
B5
M80
REAR DOOR SWITCH LH
B71
16
FRONT DOOR SWITCH (PASSENGER SIDE)
B27
B4
M79
REAR DOOR SWITCH RH
B53
20
BACK DOOR SWITCH
B75
5
PUSH-BUTTON IGNITION SWITCH (PUSH SWITCH)
M101
FRONT DOOR REQUEST SWITCH (PASSENGER SIDE)
D31
D21
M22
12
FRONT DOOR REQUEST SWITCH (DRIVER SIDE)
D11
D1
M20
9
UNLOCK SENSOR
DOOR LOCK ACTUATOR
FRONT DOOR LOCK ASSEMBLY (DRIVER SIDE)
D9
D2
M40
14
6
2
M35
M76
JRKWC1248GB

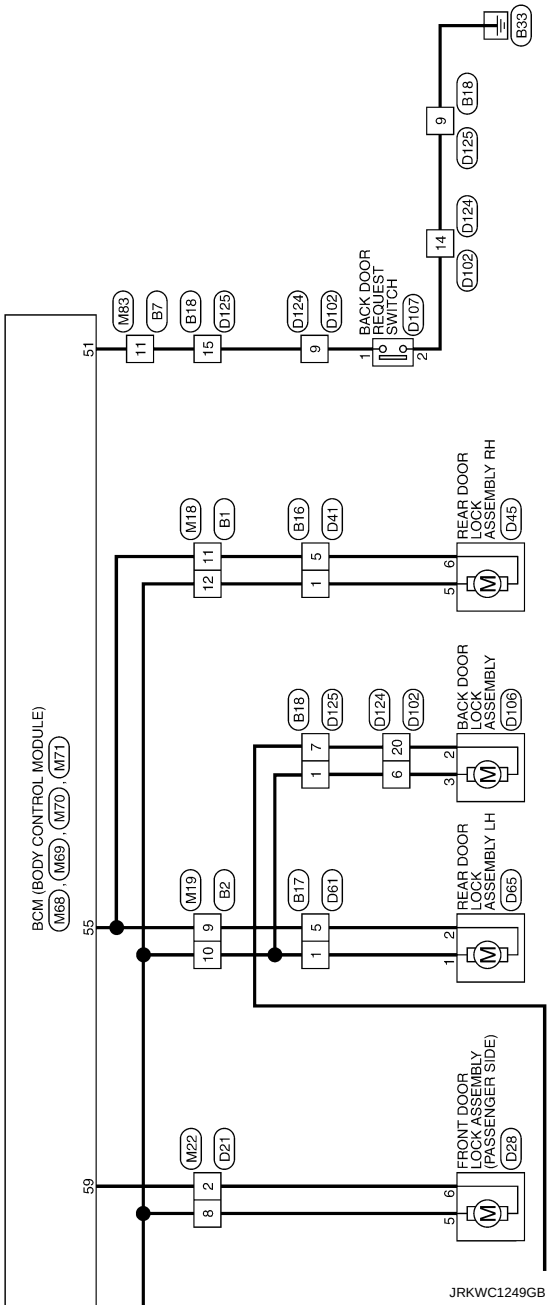
BCM (BODY CONTROL MODULE)
M68, M69, M70, M71
51
55
59
M83
B7
B18
D125
D124
D102
BACK DOOR REQUEST SWITCH
D107
D102
D124
D125
B18
B33
M18
B1
B16
D41
REAR DOOR LOCK ASSEMBLY RH
D45
B18
D125
D124
D102
BACK DOOR LOCK ASSEMBLY
D106
M19
B2
B17
D61
REAR DOOR LOCK ASSEMBLY LH
D65
M22
D21
FRONT DOOR LOCK ASSEMBLY (PASSENGER SIDE)
D28
JRKWC1249GB

ECU DIAGNOSIS INFORMATION

BCM (BODY CONTROL MODULE)

Reference Value

INFOID:0000000007905894

VALUES ON THE DIAGNOSIS TOOL

CONSULT MONITOR ITEM

Monitor Item	Condition	Value/Status
FR WIPER HI	Other than front wiper switch HI	Off
	Front wiper switch HI	On
FR WIPER LOW	Other than front wiper switch LO	Off
	Front wiper switch LO	On
FR WASHER SW	Front washer switch OFF	Off
	Front washer switch ON	On
FR WIPER INT	Other than front wiper switch INT	Off
	Front wiper switch INT	On
FR WIPER STOP	Front wiper is not in STOP position	Off
	Front wiper is in STOP position	On
INT VOLUME	Wiper intermittent dial is in a dial position 1 - 7	Wiper intermittent dial position
RR WIPER ON	Other than rear wiper switch ON	Off
	Rear wiper switch ON	On
RR WIPER INT	Other than rear wiper switch INT	Off
	Rear wiper switch INT	On
RR WASHER SW	Rear washer switch OFF	Off
	Rear washer switch ON	On
RR WIPER STOP	Rear wiper is in STOP position	Off
	Rear wiper is not in STOP position	On
TURN SIGNAL R	Other than turn signal switch RH	Off
	Turn signal switch RH	On
TURN SIGNAL L	Other than turn signal switch LH	Off
	Turn signal switch LH	On
TAIL LAMP SW	Other than lighting switch 1ST and 2ND	Off
	Lighting switch 1ST or 2ND	On
HI BEAM SW	Other than lighting switch HI	Off
	Lighting switch HI	On
HEAD LAMP SW 1	Other than lighting switch 2ND	Off
	Lighting switch 2ND	On
HEAD LAMP SW 2	Other than lighting switch 2ND	Off
	Lighting switch 2ND	On
PASSING SW	Other than lighting switch PASS	Off
	Lighting switch PASS	On
AUTO LIGHT SW	Other than lighting switch AUTO	Off
	Lighting switch AUTO	On
FR FOG SW	Front fog lamp switch OFF	Off
	Front fog lamp switch ON	On

Monitor Item	Condition	Value/Status
DOOR SW-DR	Driver door closed	Off
	Driver door opened	On
DOOR SW-AS	Passenger door closed	Off
	Passenger door opened	On
DOOR SW-RR	Rear RH door closed	Off
	Rear RH door opened	On
DOOR SW-RL	Rear LH door closed	Off
	Rear LH door opened	On
DOOR SW-BK	Back door closed	Off
	Back door opened	On
CDL LOCK SW	Other than power door lock switch LOCK	Off
	Power door lock switch LOCK	On
CDL UNLOCK SW	Other than power door lock switch UNLOCK	Off
	Power door lock switch UNLOCK	On
KEY CYL LK-SW	Other than driver door key cylinder LOCK position	Off
	Driver door key cylinder LOCK position	On
KEY CYL UN-SW	Other than driver door key cylinder UNLOCK position	Off
	Driver door key cylinder UNLOCK position	On
HAZARD SW	Hazard switch is OFF	Off
	Hazard switch is ON	On
REAR DEF SW	Rear window defogger switch OFF	Off
	Rear window defogger switch ON	On
TR/BD OPEN SW	**NOTE:** The item is indicated, but not monitored.	Off
TRNK/HAT MNTR	**NOTE:** The item is indicated, but not monitored.	Off
FAN ON SIG	Blower fan OFF	Off
	Blower fan ON	On
AIR COND SW	Air conditioner OFF (A/C switch indicator OFF)	Off
	Air conditioner ON (A/C switch indicator ON)	On
RKE-LOCK	LOCK button of the key is not pressed	Off
	LOCK button of the key is pressed	On
RKE-UNLOCK	UNLOCK button of the key is not pressed	Off
	UNLOCK button of the key is pressed	On
RKE-TR/BD	BACK DOOR OPEN button of the key is not pressed	Off
	BACK DOOR OPEN button of the key is pressed	On
RKE-PANIC	PANIC button of the key is not pressed	Off
	PANIC button of the key is pressed	On
RKE-MODE CHG	LOCK/UNLOCK button of the key is not pressed and held simultaneously	Off
	LOCK/UNLOCK button of the key is pressed and held simultaneously	On
OPTI SEN (DTCT)	Bright outside of the vehicle	Close to 5 V
	Dark outside of the vehicle	Close to 0 V
OPTI SEN (FILT)	Bright outside of the vehicle (Lighting switch AUTO)	Close to 5 V
	Dark outside of the vehicle (Lighting switch AUTO)	Close to 1.50 V

Monitor Item	Condition	Value/Status
OPTICAL SENSOR	**NOTE:** The item is indicated, but not monitored.	Off
RAIN SENSOR	**NOTE:** The item is indicated, but not monitored.	Off
REQ SW -DR	Driver door request switch is not pressed	Off
	Driver door request switch is pressed	On
REQ SW -AS	Passenger door request switch is not pressed	Off
	Passenger door request switch is pressed	On
REQ SW -RR	**NOTE:** The item is indicated, but not monitored.	Off
REQ SW -RL	**NOTE:** The item is indicated, but not monitored.	Off
REQ SW -BD/TR	Back door request switch is not pressed	Off
	Back door request switch is pressed	On
PUSH SW	Push-button ignition switch (push switch) is not pressed	Off
	Push-button ignition switch (push switch) is pressed	On
CLUCH SW	The clutch pedal is not depressed.	Off
	The clutch pedal is depressed	On
BRAKE SW 1	The brake pedal is not depressed	Off
	The brake pedal is depressed	On
BRAKE SW 2	The brake pedal is depressed when No. 9 fuse is blown	Off
	The brake pedal is not depressed when No. 9 fuse is blown, or No. 9 fuse is normal	On
DETE/CANCL SW	Selector lever in P position	Off
	Selector lever in any position other than P	On
SFT PN/N SW	Selector lever in any position other than P and N	Off
	Selector lever in P or N position	On
S/L -LOCK	**NOTE:** The item is indicated, but not monitored.	Off
S/L -UNLOCK	**NOTE:** The item is indicated, but not monitored.	Off
S/L RELAY-F/B	**NOTE:** The item is indicated, but not monitored.	Off
UNLK SEN -DR	Driver door is locked	Off
	Driver door is unlocked	On
PUSH SW -IPDM	Push-button ignition switch (push-switch) is not pressed	Off
	Push-button ignition switch (push-switch) is pressed	On
IGN RLY1 -F/B	Ignition switch in OFF or ACC position	Off
	Ignition switch in ON position	On
DETE SW -IPDM	Selector lever in any position other than P	Off
	Selector lever in P position	On
SFT PN -IPDM	Selector lever in any position other than P and N	Off
	Selector lever in P or N position	On
SFT P -MET	Selector lever in any position other than P	Off
	Selector lever in P position	On
SFT N -MET	Selector lever in any position other than N	Off
	Selector lever in N position	On

Monitor Item	Condition	Value/Status
ENGINE STATE	Engine stopped	Stop
	While the engine stalls	Stall
	At engine cranking	Crank
	Engine running	Run
S/L LOCK-IPDM	**NOTE:** The item is indicated, but not monitored.	Off
S/L UNLK-IPDM	**NOTE:** The item is indicated, but not monitored.	Off
S/L RELAY-REQ	**NOTE:** The item is indicated, but not monitored.	Off
VEH SPEED 1	While driving	Equivalent to speed-ometer reading
VEH SPEED 2	While driving	Equivalent to speed-ometer reading
DOOR STAT-DR	Driver door is locked	LOCK
	Wait with selective UNLOCK operation (5 seconds)	READY
	Driver door is unlocked	UNLOCK
DOOR STAT-AS	Passenger door is locked	LOCK
	Wait with selective UNLOCK operation (5 seconds)	READY
	Passenger door is unlocked	UNLOCK
ID OK FLAG	Driver side door is open after ignition switch is turned OFF (Selector lever is in the P position except for M/T models)	Reset
	Ignition switch ON	Set
PRMT ENG STRT	The engine start is prohibited	Reset
	The engine start is permitted	Set
PRMT RKE STRT	**NOTE:** The item is indicated, but not monitored.	Reset
RKE OPE COUN1	During the operation of the key	Operation frequency of the key
RKE OPE COUN2	**NOTE:** The item is indicated, but not monitored.	—
CONFRM ID ALL	The key ID that the key slot receives is not recognized by any key ID registered to BCM.	Yet
	The key ID that the key slot receives is recognized by any key ID registered to BCM.	Done
CONFIRM ID4	The key ID that the key slot receives is not recognized by the fourth key ID registered to BCM.	Yet
	The key ID that the key slot receives is recognized by the fourth key ID registered to BCM.	Done
CONFIRM ID3	The key ID that the key slot receives is not recognized by the third key ID registered to BCM.	Yet
	The key ID that the key slot receives is recognized by the third key ID registered to BCM.	Done
CONFIRM ID2	The key ID that the key slot receives is not recognized by the second key ID registered to BCM.	Yet
	The key ID that the key slot receives is recognized by the second key ID registered to BCM.	Done

Monitor Item	Condition	Value/Status
CONFIRM ID1	The key ID that the key slot receives is not recognized by the first key ID registered to BCM.	Yet
	The key ID that the key slot receives is recognized by the first key ID registered to BCM.	Done
NOT REGISTERED	BCM detects registered key ID, or BCM does not detect key ID.	ID OK
	BCM detects non-registration key ID.	ID NG
TP 4	The ID of fourth key is not registered to BCM	Yet
	The ID of fourth key is registered to BCM	Done
TP 3	The ID of third key is not registered to BCM	Yet
	The ID of third key is registered to BCM	Done
TP 2	The ID of second key is not registered to BCM	Yet
	The ID of second key is registered to BCM	Done
TP 1	The ID of first key is not registered to BCM	Yet
	The ID of first key is registered to BCM	Done
AIR PRESS FL	Ignition switch ON (Only when the signal from the transmitter is received)	Air pressure of front LH tire
AIR PRESS FR	Ignition switch ON (Only when the signal from the transmitter is received)	Air pressure of front RH tire
AIR PRESS RR	Ignition switch ON (Only when the signal from the transmitter is received)	Air pressure of rear RH tire
AIR PRESS RL	Ignition switch ON (Only when the signal from the transmitter is received)	Air pressure of rear LH tire
ID REGST FL1	ID of front LH tire transmitter is registered	Done
	ID of front LH tire transmitter is not registered	Yet
ID REGST FR1	ID of front RH tire transmitter is registered	Done
	ID of front RH tire transmitter is not registered	Yet
ID REGST RR1	ID of rear RH tire transmitter is registered	Done
	ID of rear RH tire transmitter is not registered	Yet
ID REGST RL1	ID of rear LH tire transmitter is registered	Done
	ID of rear LH tire transmitter is not registered	Yet
WARNING LAMP	Tire pressure indicator OFF	Off
	Tire pressure indicator ON	On
BUZZER	Tire pressure warning alarm is not sounding	Off
	Tire pressure warning alarm is sounding	On

TERMINAL LAYOUT

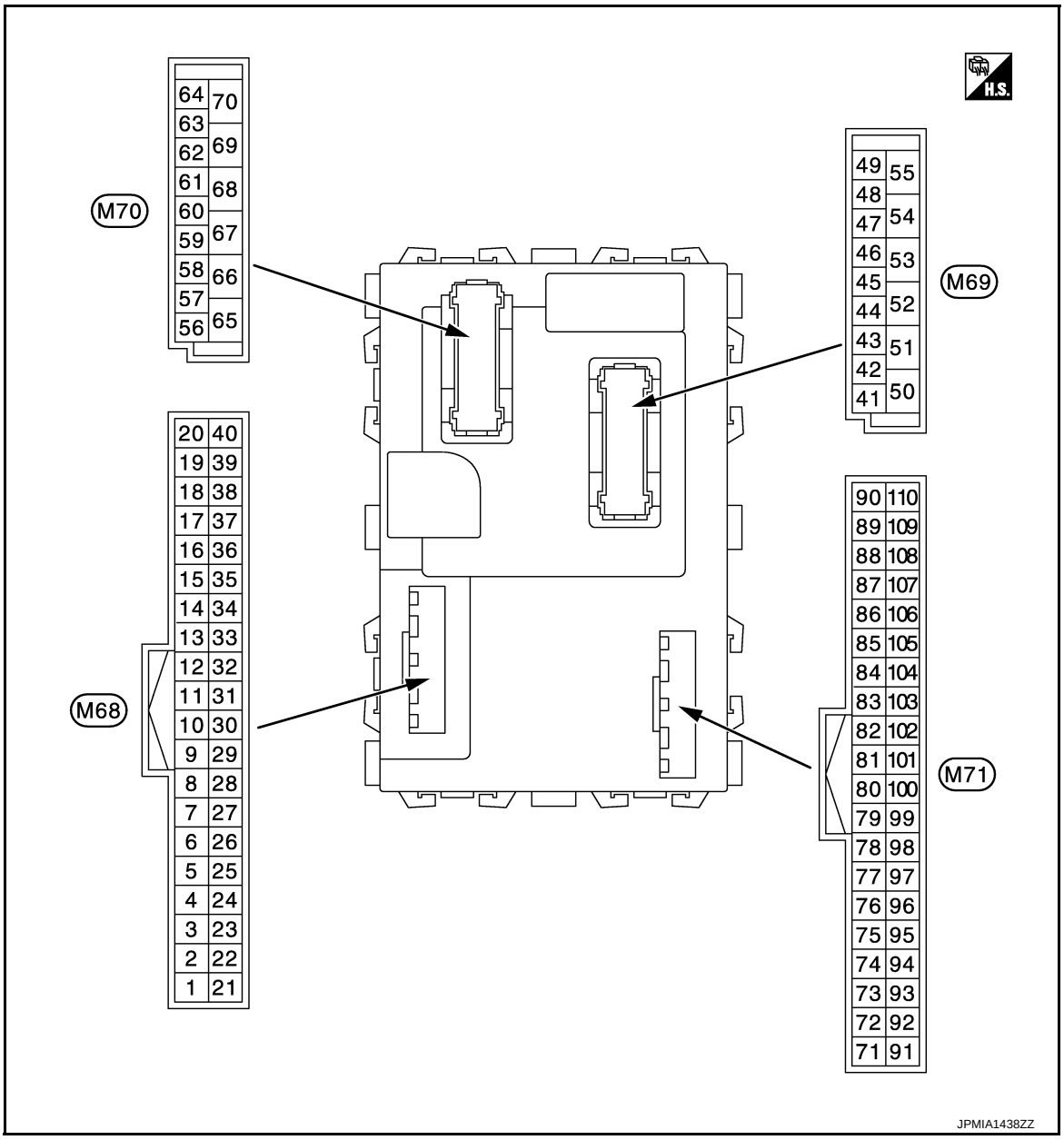

NOTE:

Connector color
- M68, M70: Black
- M69, M71: White

PHYSICAL VALUES

Terminal No. (Wire color)		Description		Condition		Value (Approx.)
+	–	Signal name	Input/ Output			
2 (BR/W)	Ground	Combination switch INPUT 5	Input	Combination switch (Wiper intermittent dial 4)	All switch OFF	0 V
					Turn signal switch RH	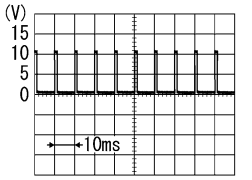 PKIB4958J 1.0 V
					Lighting switch HI	
					Lighting switch 1ST	
					Lighting switch 2ND	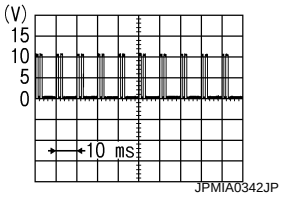 JPMIA0342JP 2.0 V
3 (GR)	Ground	Combination switch INPUT 4	Input	Combination switch (Wiper intermittent dial 4)	All switch OFF	0 V
					Turn signal switch LH	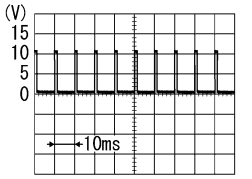 PKIB4958J 1.0 V
					Lighting switch PASS	
					Lighting switch 2ND	
					Front fog lamp switch ON	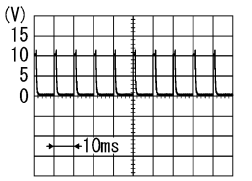 PKIB4956J 0.8 V
4 (L/Y)	Ground	Combination switch INPUT 3	Input	Combination switch (Wiper intermittent dial 4)	All switch OFF	0 V
					Front wiper switch LO	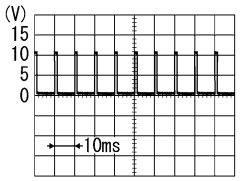 PKIB4958J 1.0 V
					Front wiper switch MIST	
					Front wiper switch INT	
					Lighting switch AUTO	

Terminal No. (Wire color) +	Terminal No. (Wire color) –	Description: Signal name	Description: Input/ Output	Condition		Value (Approx.)
5 (G)	Ground	Combination switch INPUT 2	Input	Combination switch	All switch OFF (Wiper intermittent dial 4)	0 V
					Front washer switch (Wiper intermittent dial 4)	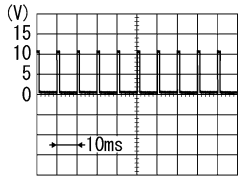 PKIB4958J 1.0 V
					Rear washer ON (Wiper intermittent dial 4)	
					Any of the condition below with all switch OFF • Wiper intermittent dial 1 • Wiper intermittent dial 5 • Wiper intermittent dial 6	
					Rear wiper switch ON (Wiper intermittent dial 4)	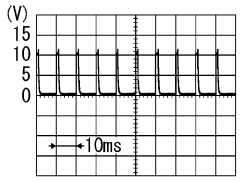 PKIB4956J 0.8 V
6 (L/R)	Ground	Combination switch INPUT 1	Input	Combination switch	All switch OFF (Wiper intermittent dial 4)	0 V
					Front wiper switch HI (Wiper intermittent dial 4)	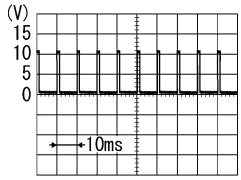 PKIB4958J 1.0 V
					Rear wiper switch INT (Wiper intermittent dial 4)	
					Wiper intermittent dial 3 (All switch OFF)	
					Any of the condition below with all switch OFF • Wiper intermittent dial 1 • Wiper intermittent dial 2	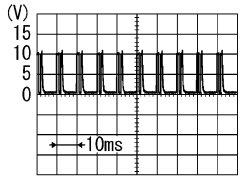 PKIB4952J 1.9 V
					Any of the condition below with all switch OFF • Wiper intermittent dial 6 • Wiper intermittent dial 7	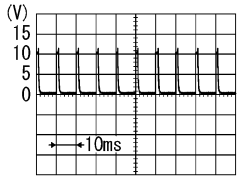 PKIB4956J 0.8 V

Terminal No. (Wire color)		Description		Condition		Value (Approx.)
+	–	Signal name	Input/ Output			
7 (W/R)	Ground	Door key cylinder switch UNLOCK	Input	Door key cylinder switch	NEUTRAL position	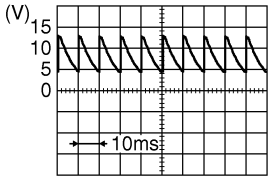 JPMIA0587GB 8.0 - 8.5 V
					UNLOCK position	0 V
8 (W/B)	Ground	Door key cylinder switch LOCK	Input	Door key cylinder switch	NEUTRAL position	12 V
					LOCK position	0 V
9 (R)	Ground	Stop lamp switch 1	Input	Stop lamp switch	OFF (Brake pedal is not depressed)	0 V
					ON (Brake pedal is depressed)	Battery voltage
12 (GR)	Ground	Door lock and unlock switch LOCK	Input	Door lock and unlock switch	NEUTRAL position	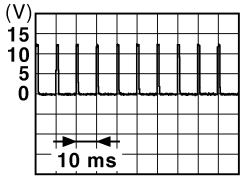 JPMIA0012GB 1.0 - 1.5 V
					LOCK position	0 V
13 (BR)	Ground	Door lock and unlock switch UNLOCK	Input	Door lock and unlock switch	NEUTRAL position	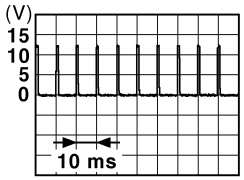 JPMIA0012GB 1.0 - 1.5 V
					UNLOCK position	0 V
14 (L/G)	Ground	Optical sensor	Input	Ignition switch ON	When bright outside of the vehicle	Close to 5 V
					When dark outside of the vehicle	Close to 0 V
15 (W/L)	Ground	Rear window defogger switch	Input	Rear window defogger switch	Not pressed	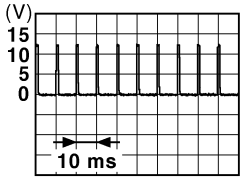 JPMIA0012GB 1.0 - 1.5 V
					Pressed	0 V
17 (R/G)	Ground	Optical sensor power supply	Output	Ignition switch	OFF, ACC	0 V
					ON	5 V

Terminal No. (Wire color)		Description		Condition		Value (Approx.)
+	–	Signal name	Input/ Output			
18 (V)	Ground	Sensor ground	Input	Ignition switch ON		0 V
21 (P/L)	Ground	NATS antenna amp.	Input/ Output	Intelligent Key: Intelligent Key battery is removed	Brake pedal: Depressed **NOTE:** Waveform varies each time when brake pedal is depressed	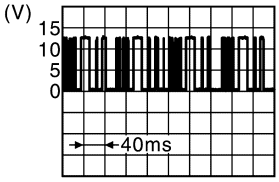 JMKIA6232JP
					Brake pedal: Not depressed	12 V
23 (R/Y)	Ground	Security indicator lamp	Output	Security indicator	ON	0 V
					Blinking (Ignition switch OFF)	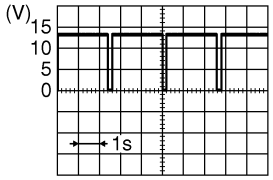 JPMIA0590GB 12.0 V
					OFF	Battery voltage
24*1 (SB)	Ground	Dongle link	Input/ Output	Ignition switch OFF		5 V
25 (LG)	Ground	NATS antenna amp.	Input/ Output	During waiting	Brake pedal: Depressed **NOTE:** Waveform varies each time when brake pedal is depressed	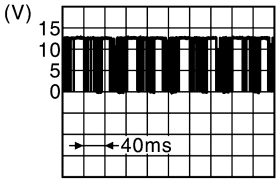 JMKIA6233JP
					Brake pedal: Not depressed	12 V
26*2 (GR)	Ground	Thermo control amp.	Input	Ignition switch ON		0 V
				Evaporator is extremely low temperature		12 V

Terminal No. (Wire color)		Description		Condition		Value (Approx.)
+	–	Signal name	Input/ Output			
27 (O)	Ground	A/C ON (Automatic A/C)	Input	A/C	OFF (A/C switch indicator: OFF)	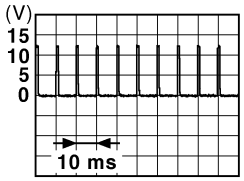 JPMIA0012GB 1.0 - 1.5 V
					ON (A/C switch indicator: ON)	0 V
		A/C switch (Manual A/C)		A/C switch	OFF	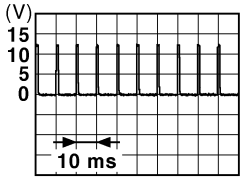 JPMIA0012GB 1.0 - 1.5 V
					ON	0 V
28 (G/W)	Ground	Blower fan switch (Automatic A/C)	Input	Fan switch	Blower fan switch OFF	0 V
					Blower fan switch ON	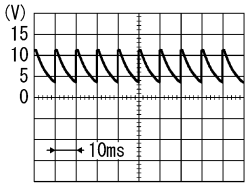 PKIB4960J 7.0 - 8.0 V
		Blower fan switch (Manual A/C)		Fan switch	Blower fan switch OFF	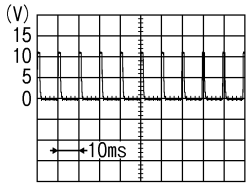 PIIB7730J 1.5 - 2.0 V
					Blower fan switch ON	0 V
29 (L/W)	Ground	Hazard switch	Input	Hazard switch	OFF	12 V
					ON	0 V
31 (G/B)	Ground	Front door lock assembly driver side (Unlock sensor)	Input	Driver door	LOCK status (Unlock sensor switch OFF)	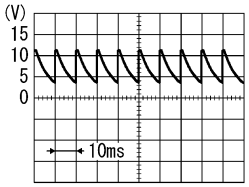 PKIB4960J 7.0 - 8.0 V
					UNLOCK status (Unlock sensor switch ON)	0 V

Terminal No. (Wire color)		Description		Condition		Value (Approx.)
+	–	Signal name	Input/ Output			
32 (LG)	Ground	Combination switch OUTPUT 5	Output	Combination switch	All switch OFF (Wiper intermittent dial 4)	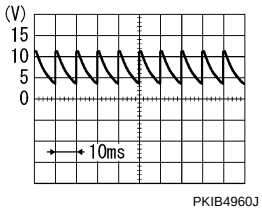 7.0 - 8.0 V
					Front fog lamp switch ON (Wiper intermittent dial 4)	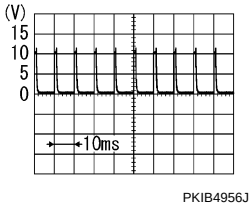 1.0 V
					Rear wiper switch ON (Wiper intermittent dial 4)	
					Any of the condition below with all switch OFF • Wiper intermittent dial 1 • Wiper intermittent dial 2 • Wiper intermittent dial 6 • Wiper intermittent dial 7	
33 (Y/L)	Ground	Combination switch OUTPUT 4	Output	Combination switch	All switch OFF (Wiper intermittent dial 4)	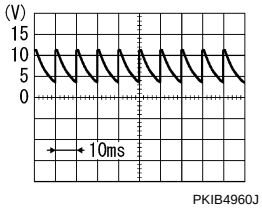 7.0 - 8.0 V
					Lighting switch 1ST (Wiper intermittent dial 4)	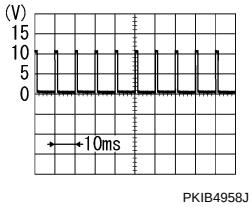 1.2 V
					Lighting switch AUTO (Wiper intermittent dial 4)	
					Rear wiper switch INT (Wiper intermittent dial 4)	
					Any of the condition below with all switch OFF • Wiper intermittent dial 1 • Wiper intermittent dial 5 • Wiper intermittent dial 6	

Terminal No. (Wire color)		Description		Condition		Value (Approx.)
+	–	Signal name	Input/ Output			
34 (W)	Ground	Combination switch OUTPUT 3	Output	Combination switch	All switch OFF (Wiper intermittent dial 4)	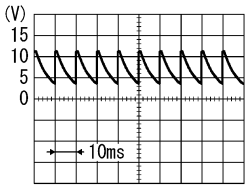 PKIB4960J 7.0 - 8.0 V
					Lighting switch 2ND (Wiper intermittent dial 4)	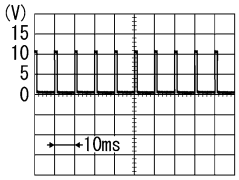 PKIB4958J 1.2 V
					Lighting switch HI (Wiper intermittent dial 4)	
					Rear washer switch ON (Wiper intermittent dial 4)	
					Any of the condition below with all switch OFF • Wiper intermittent dial 1 • Wiper intermittent dial 2 • Wiper intermittent dial 3	
35 (R/L)	Ground	Combination switch OUTPUT 2	Output	Combination switch (Wiper intermittent dial 4)	All switch OFF	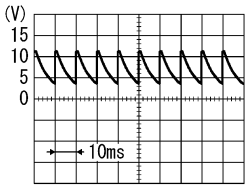 PKIB4960J 7.0 - 8.0 V
					Lighting switch 2ND	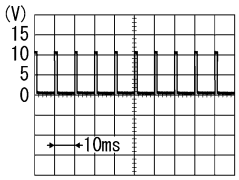 PKIB4958J 1.2 V
					Lighting switch PASS	
					Front wiper switch INT	
					Front wiper switch HI	
36 (L/O)	Ground	Combination switch OUTPUT 1	Output	Combination switch (Wiper intermittent dial 4)	All switch OFF	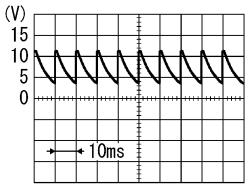 PKIB4960J 7.0 - 8.0 V
					Turn signal switch RH	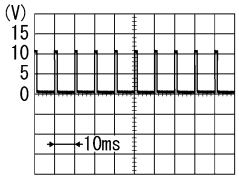 PKIB4958J 1.2 V
					Turn signal switch LH	
					Front wiper switch LO (Front wiper switch MIST)	
					Front washer switch ON	

Terminal No. (Wire color)		Description		Condition		Value (Approx.)
+	–	Signal name	Input/ Output			
37 (G/O)	Ground	Selector lever P position switch	Input	Selector lever	P position	0 V
					Any position other than P	12 V
38 (G/Y)	Ground	Receiver communication	Input/ Output	Ignition switch OFF (Remote keyless entry communication)	Waiting	12 V
					When operating either button on Intelligent Key	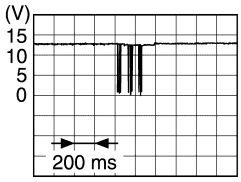 JMMIA0572GB
				Ignition switch ON (TPMS communication)	Waiting	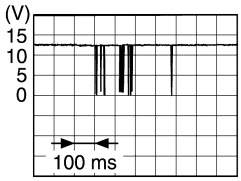 JMMIA0573GB
					When receiving signal from tire pressure sensor	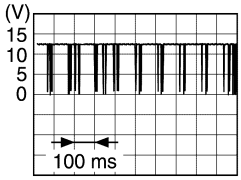 JMMIA0574GB
39 (L)	Ground	CAN-H	Input/ Output	—		—
40 (P)	Ground	CAN-L	Input/ Output	—		—
43 (W)	Ground	Back door switch	Input	Back door switch	OFF (When back door closed)	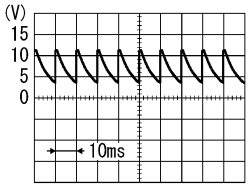 PKIB4960J 9.5 - 10.0 V
					ON (When back door opened)	0 V
44 (LG)	Ground	Rear wiper stop position	Input	Ignition switch ON	Rear wiper stop position	12 V
					Any position other than rear wiper stop position	0 V

Terminal No. (Wire color)		Description		Condition		Value (Approx.)
+	–	Signal name	Input/ Output			
45 (SB)	Ground	Passenger door switch	Input	Passenger door switch	OFF (When passenger door closed)	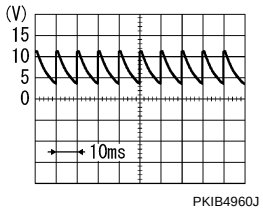 7.0 - 8.0 V
					ON (When passenger door opened)	0 V
46 (GR/L)	Ground	Rear RH door switch	Input	Rear RH door switch	OFF (When rear RH door closed)	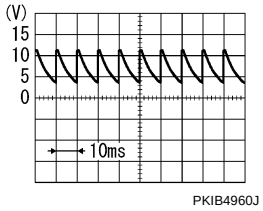 7.0 - 8.0 V
					ON (When rear RH door opened)	0 V
47 (BR/Y)	Ground	Driver door switch	Input	Driver door switch	OFF (When driver door closed)	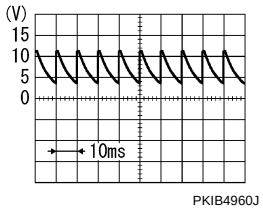 7.0 - 8.0 V
					ON (When driver door opened)	0 V
48 (W/G)	Ground	Rear LH door switch	Input	Rear LH door switch	OFF (When rear LH door closed)	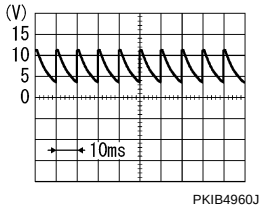 7.0 - 8.0 V
					ON (When rear door LH opened)	0 V
50 (R/W)	Ground	Back door lock actuator relay control	Output	Back door	LOCK (Actuator is activated)	0 V
					Other than LOCK (Actuator is not activated)	Battery voltage
51 (W)	Ground	Back door request switch	Input	Back door request switch	ON (Pressed)	0 V
					OFF (Not pressed)	12 V
54 (LG)	Ground	Rear wiper	Output	Rear wiper	OFF (Stopped)	0 V
					ON (Activated)	12 V

Terminal No. (Wire color)		Description		Condition		Value (Approx.)
+	–	Signal name	Input/ Output			
55 (G)	Ground	Rear door UNLOCK	Output	Rear door	UNLOCK (Actuator is activated)	12 V
					Other then UNLOCK (Actuator is not activated)	0 V
56 (L)	Ground	Interior room lamp power supply	Output	Interior room lamp battery saver is activated. (Cuts the interior room lamp power supply)		0 V
				Interior room lamp battery saver is not activated. (Outputs the interior room lamp power supply)		12 V
57 (Y)	Ground	Battery power supply	Input	Ignition switch OFF		Battery voltage
59 (G)	Ground	Passenger door UNLOCK	Output	Passenger door	UNLOCK (Actuator is activated)	12 V
					Other then UNLOCK (Actuator is not activated)	0 V
60 (W/B)	Ground	Turn signal LH	Output	Ignition switch ON	Turn signal switch OFF	0 V
					Turn signal switch LH	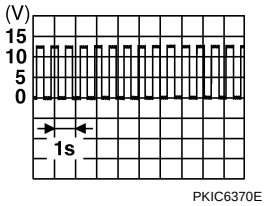 6.0 V
61 (W/L)	Ground	Turn signal RH	Output	Ignition switch ON	Turn signal switch OFF	0 V
					Turn signal switch RH	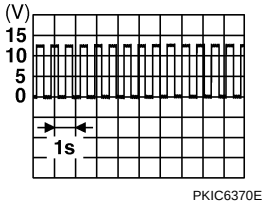 6.0 V
63 (BR)	Ground	Interior room lamp control signal	Output	Interior room lamp	OFF	12 V
					ON	0 V
65 (V)	Ground	All doors LOCK	Output	All doors	LOCK (Actuator is activated)	12 V
					Other then LOCK (Actuator is not activated)	0 V
66 (L/B)	Ground	Driver door UNLOCK	Output	Driver door	UNLOCK (Actuator is activated)	12 V
					Other then UNLOCK (Actuator is not activated)	0 V
67 (B)	Ground	Ground	Output	Ignition switch ON		0 V
68 (L)	Ground	P/W power supply (IGN)	Output	Ignition switch ON		12 V
69 (P)	Ground	P/W power supply (BAT)	Output	Ignition switch OFF		12 V

Terminal No. (Wire color)		Description		Condition		Value (Approx.)
+	–	Signal name	Input/ Output			
70 (Y)	Ground	Battery power supply	Input	Ignition switch OFF		Battery voltage
72*2 (SB)	Ground	A/C indicator	Output	A/C indicator	OFF	12 V
					ON	0 V
75 (SB)	Ground	Driver door request switch	Input	Driver door request switch	ON (Pressed)	0 V
					OFF (Not pressed)	12 V
76 (L/O)	Ground	Push-button ignition switch (push switch)	Input	Push-button ignition switch (push switch)	Pressed	0 V
					Not pressed	12 V
78 (LG)	Ground	Driver door antenna (+)	Output	When the driver door request switch is operated with ignition switch ON	When Intelligent Key is not in the antenna detection area (The distance between Intelligent Key and antenna: Approx. 2 m)	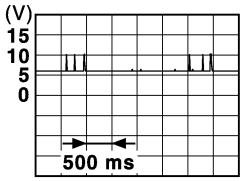 JMKIA5954GB
					When Intelligent Key is in the antenna detection area (The distance between Intelligent Key and antenna: 80 cm or less)	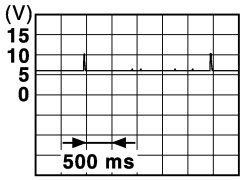 JMKIA5955GB
79 (V)	Ground	Driver door antenna (-)	Output	When the driver door request switch is operated with ignition switch ON	When Intelligent Key is not in the antenna detection area (The distance between Intelligent Key and antenna: Approx. 2 m)	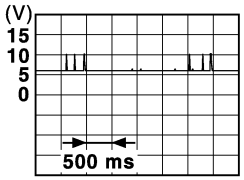 JMKIA5954GB
					When Intelligent Key is in the antenna detection area (The distance between Intelligent Key and antenna: 80 cm or less)	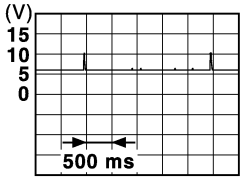 JMKIA5955GB

Terminal No. (Wire color)		Description		Condition		Value (Approx.)
+	–	Signal name	Input/ Output			
80 (BR/Y)	Ground	Passenger door antenna (+)	Output	When the passenger door request switch is operated with ignition switch ON	When Intelligent Key is not in the antenna detection area (The distance between Intelligent Key and antenna: Approx. 2 m)	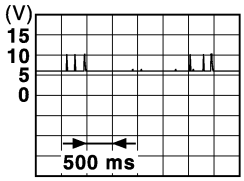 JMKIA5954GB
					When Intelligent Key is in the antenna detection area (The distance between Intelligent Key and antenna: 80 cm or less)	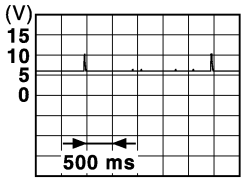 JMKIA5955GB
81 (L/Y)	Ground	Passenger door antenna (-)	Output	When the passenger door request switch is operated with ignition switch ON	When Intelligent Key is not in the antenna detection area (The distance between Intelligent Key and antenna: Approx. 2 m)	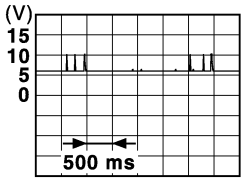 JMKIA5954GB
					When Intelligent Key is in the antenna detection area (The distance between Intelligent Key and antenna: 80 cm or less)	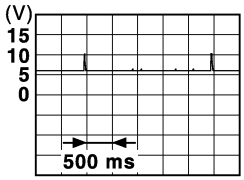 JMKIA5955GB
82 (W/B)	Ground	Back door antenna (+)	Output	When the back door request switch is operated with ignition switch ON	When Intelligent Key is not in the antenna detection area (The distance between Intelligent Key and antenna: Approx. 2 m)	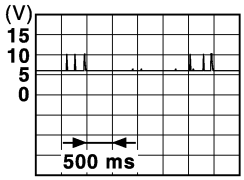 JMKIA5954GB
					When Intelligent Key is in the antenna detection area (The distance between Intelligent Key and antenna: 80 cm or less)	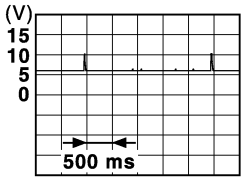 JMKIA5955GB

Terminal No. (Wire color)		Description		Condition		Value (Approx.)
+	–	Signal name	Input/ Output			
83 (B/W)	Ground	Back door antenna (-)	Output	When the back door request switch is operated with ignition switch ON	When Intelligent Key is not in the antenna detection area (The distance between Intelligent Key and antenna: Approx. 2 m)	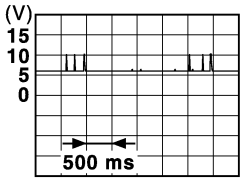 JMKIA5954GB
					When Intelligent Key is in the antenna detection area (The distance between Intelligent Key and antenna: 80 cm or less)	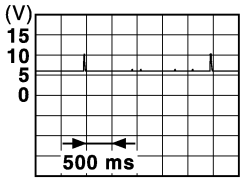 JMKIA5955GB
84 (Y/G)	Ground	Room antenna (+) (Instrument center)	Output	Ignition switch ON	When Intelligent Key is not in the antenna detection area	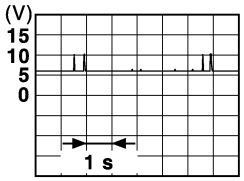 JMKIA5951GB
					When Intelligent Key is in the antenna detection area	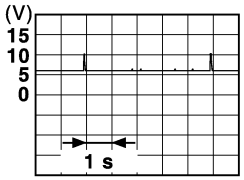 JMKIA3839GB
85 (Y/L)	Ground	Room antenna (-) (Instrument center)	Output	Ignition switch ON	When Intelligent Key is not in the antenna detection area	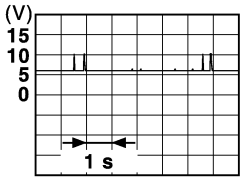 JMKIA5951GB
					When Intelligent Key is in the antenna detection area	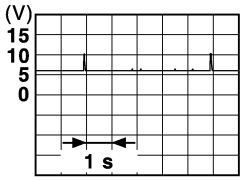 JMKIA3839GB

Terminal No. (Wire color)		Description		Condition		Value (Approx.)
+	–	Signal name	Input/ Output			
86 (P)	Ground	Luggage room antenna (+)	Output	Ignition switch ON	When Intelligent Key is not in the antenna detection area	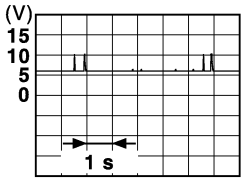 JMKIA5951GB
					When Intelligent Key is in the antenna detection area	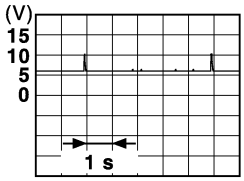 JMKIA3839GB
87 (L)	Ground	Luggage room antenna (-)	Output	Ignition switch ON	When Intelligent Key is not in the antenna detection area	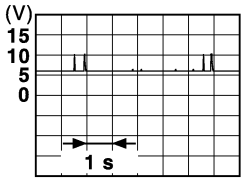 JMKIA5951GB
					When Intelligent Key is in the antenna detection area	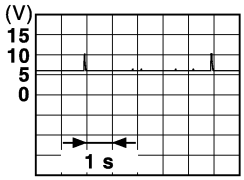 JMKIA3839GB
90 (W/L)	Ground	Push-button ignition switch illumination	Output	Push-button ignition switch illumination	ON	12 V
					OFF	0 V
91 (Y)	Ground	ACC/ON indicator lamp	Output	Ignition switch	OFF	Battery voltage
					ACC or ON	0.5 V
92 (BR/R)	Ground	Push-button ignition switch illumination ground	Output	Tail lamp	OFF	0 V
					ON	**NOTE:** When the illumination brightening/dimming level is in the neutral position 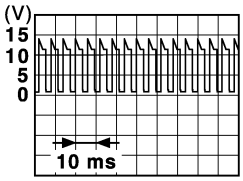 JPMIA1554GB 6.0 - 7.0 V

Terminal No. (Wire color)		Description		Condition		Value (Approx.)
+	–	Signal name	Input/ Output			
93 (GR/W)	Ground	Intelligent Key warning buzzer	Output	Intelligent Key warning buzzer	Sounding	0 V
					Not sounding	12 V
96 (BR/W)	Ground	ACC relay control	Output	Ignition switch	OFF	0 V
					ACC or ON	12 V
97 (L/R)	Ground	Starter relay control	Output	Ignition switch ON	When selector lever is in P or N position	Battery voltage
					When selector lever is not in P or N position	0 V
98 (BR)	Ground	Ignition relay (IPDM E/R) control	Output	Ignition switch	OFF or ACC	12 V
					ON	0 V
99 (W/R)	Ground	Ignition relay control	Output	Ignition switch	OFF or ACC	0 V
					ON	12 V
100 (G)	Ground	Passenger door request switch	Input	Passenger door request switch	ON (Pressed)	0 V
					OFF (Not pressed)	12 V
102 (G)	Ground	Selector lever P/N position	Input	Selector lever	P or N position	Battery voltage
					Except P and N positions	0 V
103*2 (G/Y)	Ground	Front defroster switch	Input	Ignition switch ON	A/C mode defroster ON position	0 V
					Other than A/C mode defroster ON position	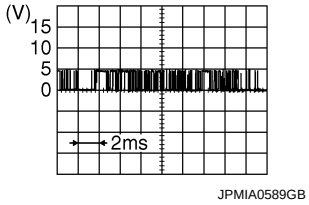 8.0 - 9.0 V
104 (Y/R)	Ground	CVT shift selector (detention switch) power supply	Output	Ignition switch ON		12 V
105 (B/O)	Ground	Stop lamp switch 2	Input	Ignition switch OFF		Battery voltage
106 (Y/B)	Ground	Blower fan motor relay control	Output	Ignition switch	OFF or ACC	0 V
					ON	12 V

*1: For Canada
*2: Manual air conditioner

Wiring Diagram - BCM -

INFOID:0000000007905895

For connector terminal arrangements, harness layouts, and alphabets in a ⬡ (option abbreviation; if not described in wiring diagram), refer to GI-12, "Connector Information".

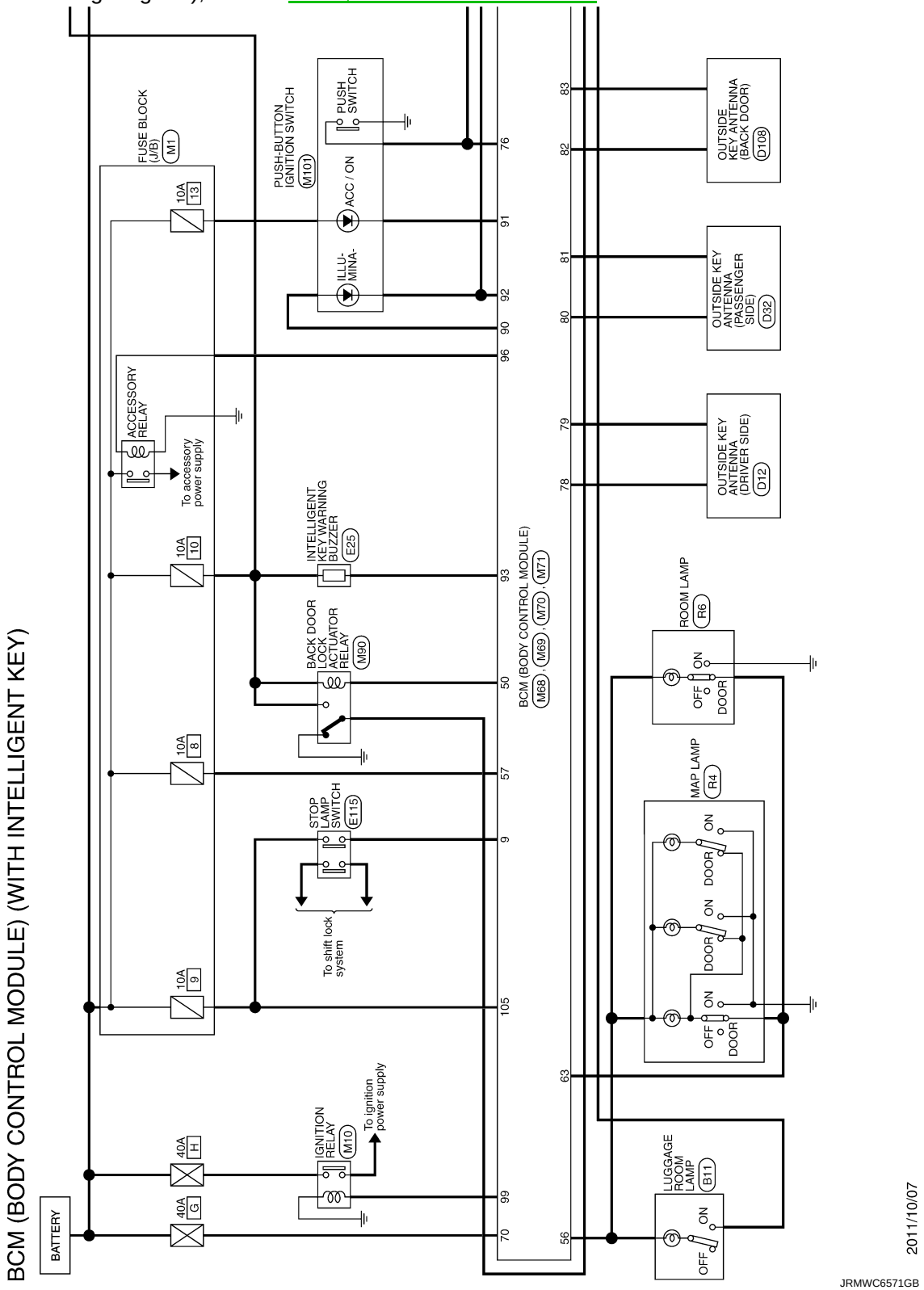

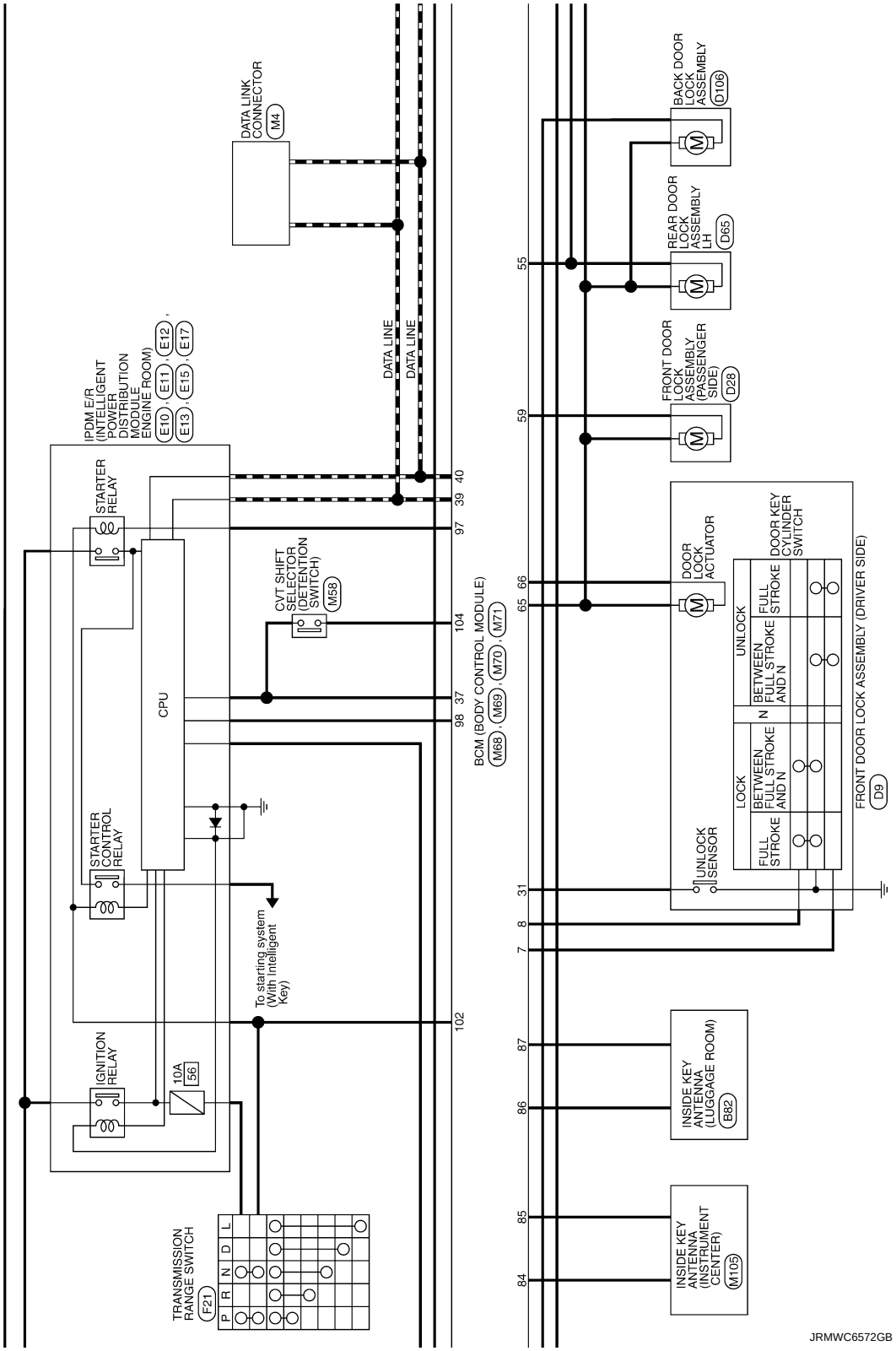
DATA LINK CONNECTOR
M4
IPDM E/R (INTELLIGENT POWER DISTRIBUTION MODULE ENGINE ROOM)
E10, E11, E12, E13, E15, E17
STARTER RELAY
STARTER CONTROL RELAY
CPU
IGNITION RELAY
10A
56
To starting system (With Intelligent Key)
TRANSMISSION RANGE SWITCH
F21
P R N D L
DATA LINE
DATA LINE
CVT SHIFT SELECTOR (DETENTION SWITCH)
M58
BCM (BODY CONTROL MODULE)
M68, M69, M70, M71
40 39 97 104 37 98 102
55 59 66 65 31 8 7 87 86 85 84
BACK DOOR LOCK ASSEMBLY
D106
REAR DOOR LOCK ASSEMBLY LH
D65
FRONT DOOR LOCK ASSEMBLY (PASSENGER SIDE)
D28
DOOR LOCK ACTUATOR
UNLOCK SENSOR
DOOR KEY CYLINDER SWITCH
LOCK
UNLOCK
FULL STROKE
BETWEEN FULL STROKE AND N
N
FRONT DOOR LOCK ASSEMBLY (DRIVER SIDE)
D9
INSIDE KEY ANTENNA (LUGGAGE ROOM)
B82
INSIDE KEY ANTENNA (INSTRUMENT CENTER)
M105
JRMWC6572GB

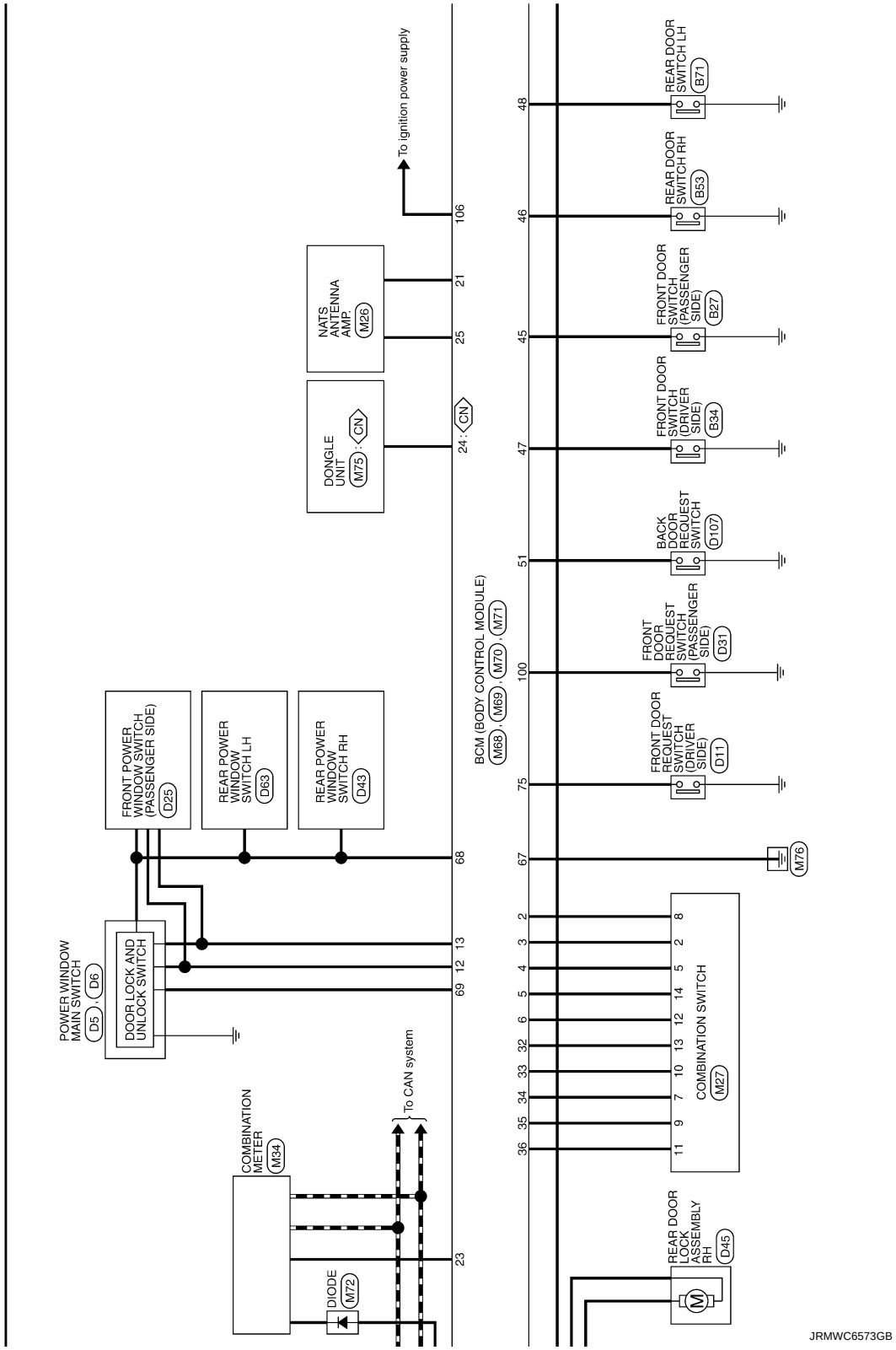
POWER WINDOW MAIN SWITCH
D5 , D6
DOOR LOCK AND UNLOCK SWITCH
FRONT POWER WINDOW SWITCH (PASSENGER SIDE)
D25
REAR POWER WINDOW SWITCH LH
D63
REAR POWER WINDOW SWITCH RH
D43
COMBINATION METER
M34
DIODE
M72
To CAN system
DONGLE UNIT
M75 : CN
NATS ANTENNA AMP.
M26
To ignition power supply
BCM (BODY CONTROL MODULE)
M68 , M69 , M70 , M71
68
13
12
69
23
24 : CN
25
21
106
2
3
4
5
6
32
33
34
35
36
75
67
100
51
47
45
46
48
FRONT DOOR REQUEST SWITCH (DRIVER SIDE)
D11
FRONT DOOR REQUEST SWITCH (PASSENGER SIDE)
D31
BACK DOOR REQUEST SWITCH
D107
FRONT DOOR SWITCH (DRIVER SIDE)
B34
FRONT DOOR SWITCH (PASSENGER SIDE)
B27
REAR DOOR SWITCH RH
B53
REAR DOOR SWITCH LH
B71
M76
COMBINATION SWITCH
M27
8
2
5
14
12
13
10
7
9
11
REAR DOOR LOCK ASSEMBLY RH
D45
JRMWC6573GB

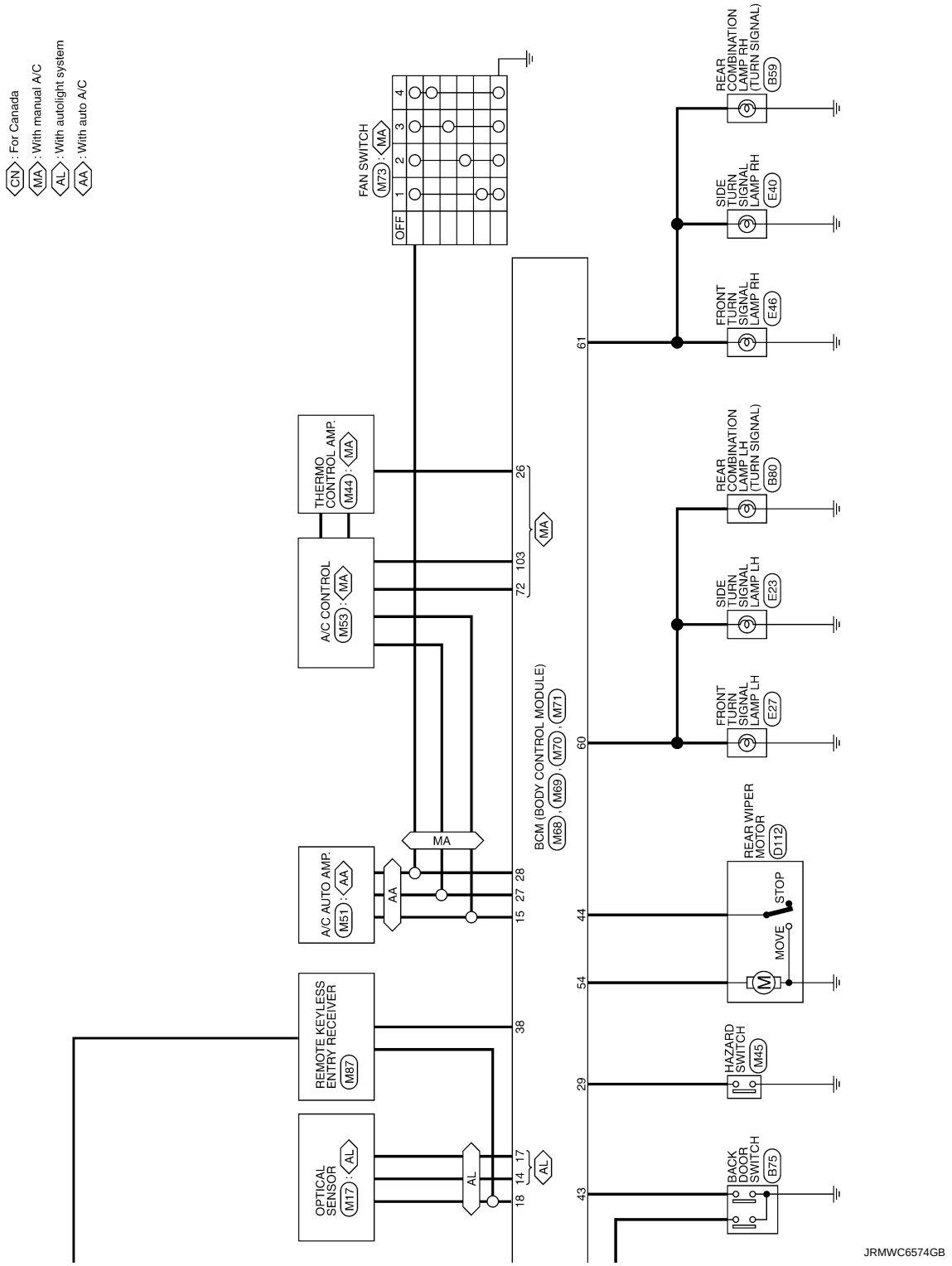

Fail-safe

INFOID:0000000007905896

FAIL-SAFE CONTROL BY DTC

BCM performs fail-safe control when any DTC are detected.

Display contents of CONSULT	Fail-safe	Cancellation
B2192: ID DISCORD BCM-ECM	Inhibit engine cranking	Erase DTC
B2193: CHAIN OF BCM-ECM	Inhibit engine cranking	Erase DTC
B2195: ANTI-SCANNING	Inhibit engine cranking	Ignition switch ON → OFF
B2196: DONGLE NG	Inhibit engine cranking	Erase DTC
B2198: NATS ANTENNA AMP	Inhibit engine cranking	Erase DTC
B2608: STARTER RELAY	Inhibit engine cranking	500 ms after the following signal communication status becomes consistent • Starter relay control signal • Starter relay status signal (CAN)
B260F: ENG STATE SIG LOST	Inhibit engine cranking	When any of the following conditions are fulfilled • Power position changes to ACC • Receives engine status signal (CAN)
B26F1: IGN RELAY OFF	Inhibit engine cranking	When the following conditions are fulfilled • Ignition switch ON signal (CAN: Transmitted from BCM): ON • Ignition switch ON signal (CAN: Transmitted from IPDM E/R): ON
B26F2: IGN RELAY ON	Inhibit engine cranking	When the following conditions are fulfilled • Ignition switch ON signal (CAN: Transmitted from BCM): OFF • Ignition switch ON signal (CAN: Transmitted from IPDM E/R): OFF
B26F3: START CONT RLY ON	Inhibit engine cranking	When the following conditions are fulfilled • Starter control relay signal (CAN: Transmitted from BCM): OFF • Starter control relay signal (CAN: Transmitted from IPDM E/R): OFF
B26F4: START CONT RLY OFF	Inhibit engine cranking	When the following conditions are fulfilled • Starter control relay signal (CAN: Transmitted from BCM): ON • Starter control relay signal (CAN: Transmitted from IPDM E/R): ON
B26F7: BCM	Inhibit engine cranking by Intelligent Key system	When room antenna and luggage room antenna functions normally

REAR WIPER MOTOR PROTECTION

BCM detects the rear wiper stopping position according to the rear wiper stop position signal.
When the rear wiper stop position signal does not change for more than 5 seconds while driving the rear wiper, BCM stops power supply to protect the rear wiper motor.

Condition of cancellation
1. More than 1 minute is passed after the rear wiper stop.
2. Turn rear wiper switch OFF.
3. Operate the rear wiper switch or rear washer switch.

FAIL-SAFE CONTROL OF COMBINATION SWITCH READING FUNCTION CAUSED BY LOW POWER SUPPLY VOLTAGE

If voltage of battery power supply lower, BCM maintains combination switch reading to the status when input voltage is less than approximately 9 V.

NOTE:
When voltage of battery power supply is approximately 9 V or more, combination switch reading function returns to normal operation.

DTC Inspection Priority Chart

INFOID:0000000007905897

If some DTCs are displayed at the same time, perform inspections one by one based on the following priority chart.

Priority	DTC
1	B2562: LOW VOLTAGE
2	• U1000: CAN COMM CIRCUIT • U1010: CONTROL UNIT (CAN)

Priority	DTC
3	• B2192: ID DISCORD BCM-ECM • B2193: CHAIN OF BCM-ECM • B2195: ANTI-SCANNING • B2196: DONGLE NG • B2198: NATS ANTENNA AMP
4	• B2555: STOP LAMP • B2556: PUSH-BTN IGN SW • B2557: VEHICLE SPEED • B2601: SHIFT POSITION • B2602: SHIFT POSITION • B2603: SHIFT POSI STATUS • B2604: PNP/CLUTCH SW • B2605: PNP/CLUTCH SW • B2608: STARTER RELAY • B260F: ENG STATE SIG LOST • B2614: BCM • B2615: BCM • B2616: BCM • B2618: BCM • B261A: PUSH-BTN IGN SW • B26F1: IGN RELAY OFF • B26F2: IGN RELAY ON • B26F3: START CONT RLY ON • B26F4: START CONT RLY OFF • B26F6: BCM • B26F7: BCM • B26F8: BCM • B26FC: KEY REGISTRATION • C1729: VHCL SPEED SIG ERR • U0415: VEHICLE SPEED
5	• C1704: LOW PRESSURE FL • C1705: LOW PRESSURE FR • C1706: LOW PRESSURE RR • C1707: LOW PRESSURE RL • C1708: [NO DATA] FL • C1709: [NO DATA] FR • C1710: [NO DATA] RR • C1711: [NO DATA] RL • C1716: [PRESSDATA ERR] FL • C1717: [PRESSDATA ERR] FR • C1718: [PRESSDATA ERR] RR • C1719: [PRESSDATA ERR] RL
6	• B2621: INSIDE ANTENNA • B2622: INSIDE ANTENNA
7	• B2626: OUTSIDE ANTENNA • B2627: OUTSIDE ANTENNA • B2628: OUTSIDE ANTENNA

DTC Index

INFOID:0000000007905898

NOTE:
The details of time display are as follows.
- CRNT: A malfunction is detected now.
- PAST: A malfunction was detected in the past.

IGN counter is displayed on Freeze Frame Data. For details of Freeze Frame Data, refer to BCS-20, "COMMON ITEM : CONSULT Function (BCM - COMMON ITEM)".

CONSULT display	Fail-safe	Freeze Frame Data •Vehicle Speed •Odo/Trip Meter •Vehicle Condi-tion	Intelligent Key warning lamp ON	Tire pressure monitor warning lamp ON	Reference page
No DTC is detected. further testing may be required.	—	—	—	—	—
U1000: CAN COMM	—	—	—	—	BCS-40
U1010: CONTROL UNIT (CAN)	—	—	—	—	BCS-41
U0415: VEHICLE SPEED	—	—	×	—	BCS-42
B2192: ID DISCORD BCM-ECM	×	—	—	—	SEC-38
B2193: CHAIN OF BCM-ECM	×	—	—	—	SEC-40
B2195: ANTI-SCANNING	×	—	—	—	SEC-41
B2196: DONGLE NG	×	—	—	—	SEC-42
B2198: NATS ANTENNA AMP	×	—	—	—	SEC-44
B2555: STOP LAMP	—	×	×	—	SEC-48
B2556: PUSH-BTN IGN SW	—	×	×	—	SEC-50
B2557: VEHICLE SPEED	—	×	×	—	SEC-52
B2562: LOW VOLTAGE	—	×	—	—	BCS-43
B2601: SHIFT POSITION	—	×	×	—	SEC-53
B2602: SHIFT POSITION	—	×	×	—	SEC-56
B2603: SHIFT POSI STATUS	—	×	×	—	SEC-59
B2604: PNP/CLUTCH SW	—	×	×	—	SEC-64
B2605: PNP/CLUTCH SW	—	×	×	—	SEC-67
B2608: STARTER RELAY	×	×	×	—	SEC-69
B260F: ENG STATE SIG LOST	×	×	×	—	SEC-71
B2614: BCM	—	×	×	—	PCS-75
B2615: BCM	—	×	×	—	PCS-78
B2616: BCM	—	×	×	—	PCS-81
B2618: BCM	—	×	×	—	PCS-84
B261A: PUSH-BTN IGN SW	—	×	×	—	PCS-85
B2621: INSIDE ANTENNA	—	×	—	—	DLK-44
B2622: INSIDE ANTENNA	—	×	—	—	DLK-46
B2626: OUTSIDE ANTENNA	—	×	—	—	DLK-50
B2627: OUTSIDE ANTENNA	—	×	—	—	DLK-48
B2628: OUTSIDE ANTENNA	—	×	—	—	DLK-52
B26F1: IGN RELAY OFF	×	×	×	—	PCS-87
B26F2: IGN RELAY ON	×	×	×	—	PCS-89
B26F3: START CONT RLY ON	×	×	×	—	SEC-72
B26F4: START CONT RLY OFF	×	×	×	—	SEC-73
B26F6: BCM	—	×	×	—	PCS-91
B26F7: BCM	×	×	×	—	SEC-75
B26F8: BCM	—	×	×	—	SEC-76
B26FC: KEY REGISTRATION	—	×	×	—	SEC-77

CONSULT display	Fail-safe	Freeze Frame Data •Vehicle Speed •Odo/Trip Meter •Vehicle Condi-tion	Intelligent Key warning lamp ON	Tire pressure monitor warning lamp ON	Reference page
C1704: LOW PRESSURE FL	—	—	—	×	WT-22
C1705: LOW PRESSURE FR	—	—	—	×	
C1706: LOW PRESSURE RR	—	—	—	×	
C1707: LOW PRESSURE RL	—	—	—	×	
C1708: [NO DATA] FL	—	—	—	×	WT-24
C1709: [NO DATA] FR	—	—	—	×	
C1710: [NO DATA] RR	—	—	—	×	
C1711: [NO DATA] RL	—	—	—	×	
C1716: [PRESSDATA ERR] FL	—	—	—	×	WT-27
C1717: [PRESSDATA ERR] FR	—	—	—	×	
C1718: [PRESSDATA ERR] RR	—	—	—	×	
C1719: [PRESSDATA ERR] RL	—	—	—	×	
C1729: VHCL SPEED SIG ERR	—	—	—	×	WT-29

SYMPTOM DIAGNOSIS

DOOR DOES NOT LOCK/UNLOCK WITH DOOR LOCK AND UNLOCK SWITCH

ALL DOOR

ALL DOOR : Description

INFOID:0000000007772841

All doors do not lock/unlock using door lock and unlock switch.

ALL DOOR : Diagnosis Procedure

INFOID:0000000007772842

1.CHECK POWER SUPPLY AND GROUND CIRCUIT

Check power supply and ground circuit.
Refer to DLK-54, "BCM (BODY CONTROL MODULE) : Diagnosis Procedure".

Is the inspection result normal?

YES >> GO TO 2.
NO >> Repair or replace the malfunctioning parts.

2.CHECK DOOR LOCK AND UNLOCK SWITCH

Check door lock and unlock switch.
- Driver side: Refer to DLK-59, "DRIVER SIDE : Component Function Check".
- Passenger side: Refer to DLK-61, "PASSENGER SIDE : Component Function Check".

Is the inspection result normal?

YES >> GO TO 3.
NO >> Repair or replace the malfunctioning parts.

3.CHECK DOOR LOCK ACTUATOR

Check front door lock assembly (driver side).
Refer to DLK-187, "DOOR LOCK : Removal and Installation".

Is the inspection result normal?

YES >> GO TO 4.
NO >> Repair or replace the malfunctioning parts.

4.CONFIRM THE OPERATION

Confirm the operation again.

Is the result normal?

YES >> Check intermittent incident. Refer to GI-41, "Intermittent Incident".
NO >> GO TO 1.

DRIVER SIDE

DRIVER SIDE : Description

INFOID:0000000007772843

Driver side door does not lock/unlock using door lock and unlock switch.

DRIVER SIDE : Diagnosis Procedure

INFOID:0000000007772844

1.CHECK DOOR LOCK ACTUATOR

Check front door lock assembly (driver side).
Refer to DLK-64, "DRIVER SIDE : Component Function Check".

Is the inspection result normal?

YES >> GO TO 2.
NO >> Repair or replace the malfunctioning parts.

2.CONFIRM THE OPERATION

Confirm the operation again.

Is the result normal?

YES >> Check intermittent incident. Refer to GI-41, "Intermittent Incident".
NO >> GO TO 1.

PASSENGER SIDE

PASSENGER SIDE : Description

INFOID:0000000007772845

Passenger side door does not lock/unlock using door lock and unlock switch.

PASSENGER SIDE : Diagnosis Procedure

INFOID:0000000007772846

1. CHECK DOOR LOCK ACTUATOR

Check front door lock assembly (passenger side).
Refer to DLK-65, "PASSENGER SIDE : Component Function Check".

Is the inspection result normal?

YES >> GO TO 2.
NO >> Repair or replace the malfunctioning parts.

2. CONFIRM THE OPERATION

Confirm the operation again.

Is the result normal?

YES >> Check intermittent incident. Refer to GI-41, "Intermittent Incident".
NO >> GO TO 1.

REAR LH

REAR LH : Description

INFOID:0000000007772847

Rear LH side door does not lock/unlock using door lock and unlock switch.

REAR LH : Diagnosis Procedure

INFOID:0000000007772848

1. CHECK DOOR LOCK ACTUATOR

Check rear door lock assembly LH.
Refer to DLK-66, "REAR LH : Component Function Check".

Is the inspection result normal?

YES >> GO TO 2.
NO >> Repair or replace the malfunctioning parts.

2. CONFIRM THE OPERATION

Confirm the operation again.

Is the result normal?

YES >> Check intermittent incident. Refer to GI-41, "Intermittent Incident".
NO >> GO TO 1.

REAR RH

REAR RH : Description

INFOID:0000000007772849

Rear RH side door does not lock/unlock using door lock and unlock switch.

REAR RH : Diagnosis Procedure

INFOID:0000000007772850

1. CHECK DOOR LOCK ACTUATOR

Check rear door lock assembly RH.
Refer to DLK-66, "REAR RH : Component Function Check".

Is the inspection result normal?

YES >> GO TO 2.
NO >> Repair or replace the malfunctioning parts.

2. CONFIRM THE OPERATION

Confirm the operation again.

Is the result normal?

YES >> Check intermittent incident. Refer to GI-41, "Intermittent Incident".
NO >> GO TO 1.

BACK DOOR

BACK DOOR : Description

INFOID:0000000007772851

Back door does not lock/unlock using door lock and unlock switch.

BACK DOOR : Diagnosis Procedure

INFOID:0000000007772852

1. CHECK BACK DOOR LOCK ACTUATOR RELAY

Check back door lock actuator relay.
Refer toDLK-70, "Component Function Check".

Is the inspection result normal?

YES >> GO TO 2.
NO >> Repair or replace the malfunctioning parts.

2. CHECK DOOR LOCK ACTUATOR

Check back door lock assembly.
Refer to DLK-67, "BACK DOOR : Component Function Check".

Is the inspection result normal?

YES >> GO TO 3.
NO >> Repair or replace the malfunctioning parts.

3. CONFIRM THE OPERATION

Confirm the operation again.

Is the inspection result normal?

YES >> Check intermittent incident. Refer to GI-41, "Intermittent Incident".
NO >> GO TO 1.

DOOR DOES NOT LOCK/UNLOCK WITH DOOR KEY CYLINDER OPERATION

Diagnosis Procedure

INFOID:0000000007772853

1. CHECK POWER DOOR LOCK OPERATION

Check power door lock operation.

Does door lock/unlock with door lock and unlock switch?

YES >> GO TO 2.
NO >> Refer to DLK-123, "ALL DOOR : Diagnosis Procedure".

2. CHECK DOOR KEY CYLINDER SWITCH

Check door key cylinder switch.
Refer to DLK-73, "Component Function Check".

Is the inspection result normal?

YES >> GO TO 3.
NO >> Repair or replace the malfunctioning parts.

3. CONFIRM THE OPERATION

Confirm the operation again.

Is the result normal?

YES >> Check intermittent incident. Refer to GI-41, "Intermittent Incident".
NO >> GO TO 1.

DOOR DOES NOT LOCK/UNLOCK WITH DOOR REQUEST SWITCH

ALL DOOR

ALL DOOR : Description

INFOID:0000000007772854

All doors do not lock/unlock using all door request switches.

ALL DOOR : Diagnosis Procedure

INFOID:0000000007772855

1. CHECK REMOTE KEYLESS ENTRY FUNCTION

Check remote keyless entry function.

Does door lock/unlock with Intelligent Key button?

YES >> GO TO 2.
NO >> Refer to DLK-25, "REMOTE KEYLESS ENTRY FUNCTION : System Description".

2. CHECK “LOCK/UNLOCK BY I-KEY” SETTING IN “WORK SUPPORT”

Check “LOCK/UNLOCK BY I-KEY” in “WORK SUPPORT”.
Refer to DLK-40, "INTELLIGENT KEY : CONSULT Function (BCM - INTELLIGENT KEY)".

Is the inspection result normal?

YES >> GO TO 3.
NO >> Set “LOCK/UNLOCK BY I-KEY” in “WORK SUPPORT”.

3. CHECK DOOR SWITCH

Check door switch.
Refer to DLK-55, "Component Function Check".

Is the inspection result normal?

YES >> GO TO 4.
NO >> Repair or replace the malfunctioning parts.

4. CONFIRM THE OPERATION

Confirm the operation again.

Is the result normal?

YES >> Check intermittent incident. Refer to GI-41, "Intermittent Incident".
NO >> GO TO 1.

DRIVER SIDE

DRIVER SIDE : Description

INFOID:0000000007772856

All doors do not lock/unlock using driver side door request switch.

DRIVER SIDE : Diagnosis Procedure

INFOID:0000000007772857

1. CHECK DRIVER SIDE DOOR REQUEST SWITCH

Check driver side door request switch.
Refer to DLK-79, "Component Function Check".

Is the inspection result normal?

YES >> GO TO 2.
NO >> Repair or replace the malfunctioning parts.

2. CHECK OUTSIDE KEY ANTENNA

Check outside key antenna (driver side).
Refer to DLK-50, "DTC Logic".

Is the inspection result normal?

YES >> GO TO 3.
NO >> Repair or replace the malfunctioning parts.

3. CONFIRM THE OPERATION

Confirm the operation again.

Is the result normal?

YES >> Check Intermittent Incident. Refer to GI-41, "Intermittent Incident".
NO >> GO TO 1.

PASSENGER SIDE

PASSENGER SIDE : Description

INFOID:0000000007772858

All doors do not lock/unlock using passenger side door request switch.

PASSENGER SIDE : Diagnosis Procedure

INFOID:0000000007772859

1. CHECK PASSENGER SIDE DOOR REQUEST SWITCH

Check passenger side door request switch.
Refer to DLK-79, "Component Function Check".

Is the inspection result normal?

YES >> GO TO 2.
NO >> Repair or replace the malfunctioning parts.

2. CHECK OUTSIDE KEY ANTENNA

Check outside key antenna (passenger side).
Refer to DLK-48, "DTC Logic".

Is the inspection result normal?

YES >> GO TO 3.
NO >> Repair or replace the malfunctioning parts.

3. CONFIRM THE OPERATION

Confirm the operation again.

Is the result normal?

YES >> Check Intermittent Incident. Refer to GI-41, "Intermittent Incident".
NO >> GO TO 1.

BACK DOOR

BACK DOOR : Description

INFOID:0000000007772860

All doors do not lock/unlock using back door request switch.

BACK DOOR : Diagnosis Procedure

INFOID:0000000007772861

1. CHECK BACK DOOR REQUEST SWITCH

Check back door request switch.
Refer to DLK-77, "Component Function Check".

Is the inspection result normal?

YES >> GO TO 2.
NO >> Repair or replace the malfunctioning parts.

2. CHECK OUTSIDE KEY ANTENNA

Check outside key antenna (back door).
Refer to DLK-52, "DTC Logic".

Is the inspection result normal?

YES >> GO TO 3.
NO >> Repair or replace the malfunctioning parts.

3. CONFIRM THE OPERATION

Confirm the operation again.

Is the result normal?

YES >> Check Intermittent Incident. Refer to GI-41, "Intermittent Incident".

NO >> GO TO 1.

DOOR DOES NOT LOCK/UNLOCK WITH INTELLIGENT KEY

Diagnosis Procedure

INFOID:0000000007772862

1.CHECK POWER DOOR LOCK OPERATION

Check power door lock operation.

Does door lock/unlock with door lock and unlock switch?

YES >> GO TO 2.
NO >> Refer to DLK-123, "ALL DOOR : Diagnosis Procedure".

2.CHECK REMOTE KEYLESS ENTRY RECEIVER

Check remote keyless entry receiver.
Refer to DLK-75, "Component Function Check".

Is the inspection result normal?

YES >> GO TO 3.
NO >> Repair or replace the malfunctioning parts.

3.CHECK INTELLIGENT KEY

Check Intelligent Key.
Refer to DLK-85, "Component Function Check".

Is the inspection result normal?

YES >> GO TO 4.
NO >> Repair or replace the malfunctioning parts.

4.CONFIRM THE OPERATION

Confirm the operation again.

Is the result normal?

YES >> Check intermittent incident. Refer to GI-41, "Intermittent Incident".
NO >> GO TO 1.

SELECTIVE UNLOCK FUNCTION DOES NOT OPERATE

Diagnosis Procedure

INFOID:0000000007772863

1. CHECK “DOOR LOCK–UNLOCK SET” SETTING IN “WORK SUPPORT”

Check “DOOR LOCK-UNLOCK SET” setting in “WORK SUPPORT”.
Refer to DLK-38, "DOOR LOCK : CONSULT Function (BCM - DOOR LOCK)".

Is the inspection result normal?

YES >> GO TO 2.
NO >> Set “DOOR LOCK-UNLOCK SET” in “WORK SUPPORT”.

2. CONFIRM THE OPERATION

Confirm the operation again.

Is the result normal?

YES >> Check intermittent incident. Refer to GI-41, "Intermittent Incident".
NO >> GO TO 1.

VEHICLE SPEED SENSING AUTO LOCK OPERATION DOES NOT OPERATE

Diagnosis Procedure

INFOID:0000000007772864

1. CHECK POWER DOOR LOCK OPERATION

Check power door lock operation.

Does door lock/unlock with door lock and unlock switch?

YES >> GO TO 2.
NO >> Refer to DLK-123, "ALL DOOR : Diagnosis Procedure".

2. CHECK “AUTOMATIC LOCK/UNLOCK SELECT” SETTING IN “WORK SUPPORT”

Check “AUTOMATIC LOCK/UNLOCK SELECT” in “WORK SUPPORT”.
Refer to DLK-38, "DOOR LOCK : CONSULT Function (BCM - DOOR LOCK)".

Is the inspection result normal?

YES >> GO TO 3.
NO >> Set “AUTOMATIC LOCK/UNLOCK SELECT” in “WORK SUPPORT”.

3. CHECK “AUTOMATIC DOOR LOCK SELECT” SETTING IN “WORK SUPPORT”

Check “AUTOMATIC DOOR LOCK SELECT” in “WORK SUPPORT”.
Refer to DLK-38, "DOOR LOCK : CONSULT Function (BCM - DOOR LOCK)".

Is the inspection result normal?

YES >> GO TO 4.
NO >> Set “AUTOMATIC DOOR LOCK SELECT” in “WORK SUPPORT”.

4. CHECK VEHICLE SPEED SIGNAL

Check combination meter for DTC.
Refer to MWI-57, "DTC Index".

Is the inspection result normal?

YES >> GO TO 5.
NO >> Repair or replace the malfunctioning parts.

5. CONFIRM THE OPERATION

Confirm the operation again.

Is the result normal?

YES >> Check intermittent incident. Refer to GI-41, "Intermittent Incident".
NO >> GO TO 1.

IGN OFF INTERLOCK DOOR UNLOCK FUNCTION DOES NOT OPERATE

Diagnosis Procedure

INFOID:0000000007772865

1. CHECK POWER DOOR LOCK OPERATION

Check power door lock operation.

Does door lock/unlock with door lock and unlock switch?

YES >> GO TO 2.
NO >> Refer to DLK-123, "ALL DOOR : Diagnosis Procedure".

2. CHECK “AUTOMATIC LOCK/UNLOCK SELECT” SETTING IN “WORK SUPPORT”

Check “AUTOMATIC LOCK/UNLOCK SELECT” in “WORK SUPPORT”.
Refer to DLK-38, "DOOR LOCK : CONSULT Function (BCM - DOOR LOCK)".

Is the inspection result normal?

YES >> GO TO 3.
NO >> Set “AUTOMATIC LOCK/UNLOCK SELECT” in “WORK SUPPORT”.

3. CHECK “AUTOMATIC DOOR UNLOCK SELECT” SETTING IN “WORK SUPPORT”

Check “AUTOMATIC DOOR UNLOCK SELECT” in “WORK SUPPORT”.
Refer to DLK-38, "DOOR LOCK : CONSULT Function (BCM - DOOR LOCK)".

Is the inspection result normal?

YES >> GO TO 4.
NO >> Set “AUTOMATIC DOOR UNLOCK SELECT” in “WORK SUPPORT”.

4. CHECK BCM

Check BCM for DTC.
Refer to BCS-75, "DTC Index".

Is the inspection result normal?

YES >> GO TO 5.
NO >> Repair or replace the malfunctioning parts.

5. CONFIRM THE OPERATION

Confirm the operation again.

Is the result normal?

YES >> Check intermittent incident. Refer to GI-41, "Intermittent Incident".
NO >> GO TO 1.

P RANGE INTERLOCK DOOR LOCK/UNLOCK FUNCTION DOES NOT OPERATE

Diagnosis Procedure

INFOID:0000000007772866

1. CHECK POWER DOOR LOCK OPERATION

Check power door lock operation.

Does door lock/unlock with door lock and unlock switch?

YES >> GO TO 2.
NO >> Refer to DLK-123, "ALL DOOR : Diagnosis Procedure".

2. CHECK “AUTOMATIC LOCK/UNLOCK SELECT” SETTING IN “WORK SUPPORT”

Check “AUTOMATIC LOCK/UNLOCK SELECT” in “WORK SUPPORT”.
Refer to DLK-38, "DOOR LOCK : CONSULT Function (BCM - DOOR LOCK)".

Is the inspection result normal?

YES >> GO TO 3.
NO >> Set “AUTOMATIC LOCK/UNLOCK SELECT” in “WORK SUPPORT”.

3. CHECK “AUTOMATIC DOOR LOCK SELECT” SETTING IN “WORK SUPPORT”

Check “AUTOMATIC DOOR LOCK SELECT” in “WORK SUPPORT”.
Refer to DLK-38, "DOOR LOCK : CONSULT Function (BCM - DOOR LOCK)".

Is the inspection result normal?

YES >> GO TO 4.
NO >> Set “AUTOMATIC DOOR LOCK SELECT” in “WORK SUPPORT”.

4. CHECK “AUTOMATIC DOOR UNLOCK SELECT” SETTING IN “WORK SUPPORT”

Check “AUTOMATIC DOOR UNLOCK SELECT” in “WORK SUPPORT”.
Refer to DLK-38, "DOOR LOCK : CONSULT Function (BCM - DOOR LOCK)".

Is the inspection result normal?

YES >> GO TO 5.
NO >> Set “AUTOMATIC DOOR UNLOCK SELECT” in “WORK SUPPORT”.

5. CHECK TCM

Check TCM for DTC.
Refer to TM-179, "DTC Index".

Is the inspection result normal?

YES >> GO TO 6.
NO >> Repair or replace the malfunctioning parts.

6. CONFIRM THE OPERATION

Confirm the operation again.

Is the result normal?

YES >> Check intermittent incident. Refer to GI-41, "Intermittent Incident".
NO >> GO TO 1.

AUTO DOOR LOCK OPERATION DOES NOT OPERATE

Diagnosis Procedure

INFOID:0000000007772867

1. CHECK “AUTO LOCK SET” SETTING IN “WORK SUPPORT”

Check “AUTO LOCK SET” setting in “WORK SUPPORT”.
Refer to DLK-40, "INTELLIGENT KEY : CONSULT Function (BCM - INTELLIGENT KEY)".

Is the inspection result normal?

YES >> GO TO 2.
NO >> Set “AUTO LOCK SET” setting in “WORK SUPPORT”.

2. CONFIRM THE OPERATION

Confirm the operation again.

Is the result normal?

YES >> Check intermittent incident. Refer to GI-41, "Intermittent Incident".
NO >> GO TO 1.

HAZARD AND HORN REMINDER DOES NOT OPERATE

Diagnosis Procedure

INFOID:0000000007772868

1. CHECK “HAZARD ANSWER BACK” SETTING IN “WORK SUPPORT”

Check “HAZARD ANSWER BACK” setting in “WORK SUPPORT”.
Refer to DLK-40, "INTELLIGENT KEY : CONSULT Function (BCM - INTELLIGENT KEY)".

Is the inspection result normal?

YES >> GO TO 2.
NO >> Set “HAZARD ANSWER BACK” setting in “WORK SUPPORT”.

2. CHECK “HORN WITH KEYLESS LOCK” SETTING IN “WORK SUPPORT”.

Check “HORN WITH KEYLESS LOCK” setting in “WORK SUPPORT”.
Refer to DLK-40, "INTELLIGENT KEY : CONSULT Function (BCM - INTELLIGENT KEY)".

Is the inspection result normal?

YES >> GO TO 3.
NO >> Set “HORN WITH KEYLESS LOCK” setting in “WORK SUPPORT”.

3. CHECK POWER POSITION

Check if ignition switch position is changing or not.

Does ignition switch position change?

YES >> GO TO 4.
NO >> Check BCM for DTC. Refer to BCS-75, "DTC Index".

4. CHECK HAZARD FUNCTION

Check hazard function.
Refer to DLK-88, "Component Function Check".

Is the inspection result normal?

YES >> GO TO 5.
NO >> Repair or replace the malfunctioning parts.

5. CHECK HORN FUNCTION

Check horn function.
Refer to SEC-92, "Component Function Check".

Is the inspection result normal?

YES >> GO TO 6.
NO >> Repair or replace the malfunctioning parts.

6. CHECK DOOR SWITCH

Check door switch.
Refer to DLK-55, "Component Function Check".

Is the inspection result normal?

YES >> GO TO 7.
NO >> Repair or replace the malfunctioning parts.

7. CONFIRM THE OPERATION

Confirm the operation again.

Is the result normal?

YES >> Check intermittent incident. Refer to GI-41, "Intermittent Incident".
NO >> GO TO 1.

HAZARD AND BUZZER REMINDER DOES NOT OPERATE

Diagnosis Procedure

INFOID:0000000007772869

1. CHECK “HAZARD ANSWER BACK” SETTING IN “WORK SUPPORT”

Check “HAZARD ANSWER BACK” setting in “WORK SUPPORT”.
Refer to DLK-40, "INTELLIGENT KEY : CONSULT Function (BCM - INTELLIGENT KEY)".

Is the inspection result normal?

YES >> GO TO 2.
NO >> Set “HAZARD ANSWER BACK” in “WORK SUPPORT”.

2. CHECK “ANS BACK I-KEY LOCK” SETTING IN “WORK SUPPORT”

Check “ANS BACK I-KEY LOCK” setting in “WORK SUPPORT”.
Refer to DLK-40, "INTELLIGENT KEY : CONSULT Function (BCM - INTELLIGENT KEY)".

Is the inspection result normal?

YES >> GO TO 3.
NO >> Set “ANS BACK I-KEY LOCK” in “WORK SUPPORT”.

3. CHECK “ANS BACK I-KEY UNLOCK” SETTING IN “WORK SUPPORT”

Check “ANS BACK I-KEY UNLOCK” setting in “WORK SUPPORT”.
Refer to DLK-40, "INTELLIGENT KEY : CONSULT Function (BCM - INTELLIGENT KEY)".

Is the inspection result normal?

YES >> GO TO 4.
NO >> Set “ANS BACK I-KEY UNLOCK” in “WORK SUPPORT”.

4. CHECK POWER POSITION

Check if ignition switch position is changing or not.

Does ignition switch position change?

YES >> GO TO 5.
NO >> Check BCM for DTC. Refer to BCS-75, "DTC Index".

5. CHECK HAZARD FUNCTION

Check hazard function.
Refer to DLK-88, "Component Function Check".

Is the inspection result normal?

YES >> GO TO 6.
NO >> Repair or replace the malfunctioning parts.

6. CHECK DOOR SWITCH

Check door switch.
Refer to DLK-55, "Component Function Check".

Is the inspection result normal?

YES >> GO TO 7.
NO >> Repair or replace the malfunctioning parts.

7. CHECK INTELLIGENT KEY WARNING BUZZER

Check Intelligent Key warning buzzer.
Refer to DLK-83, "Component Function Check".

Is the inspection result normal?

YES >> GO TO 8.
NO >> Repair or replace the malfunctioning parts.

8. CONFIRM THE OPERATION

Confirm the operation again.

Is the result normal?

YES >> Check intermittent incident. Refer to GI-41, "Intermittent Incident".

NO >> GO TO 1.

KEY REMINDER FUNCTION DOES NOT OPERATE

Diagnosis Procedure

INFOID:0000000007772870

1. CHECK “ANTI KEY LOCK IN FUNCTI” SETTING IN “WORK SUPPORT”

Check “ANTI KEY LOCK IN FUNCTI” setting in “WORK SUPPORT”.
Refer to DLK-40, "INTELLIGENT KEY : CONSULT Function (BCM - INTELLIGENT KEY)".

Is the inspection result normal?

YES >> GO TO 2.
NO >> Set “ANTI KEY LOCK IN FUNCTI” setting in “WORK SUPPORT”.

2. CHECK DOOR SWITCH

Check door switch.
Refer to DLK-55, "Component Function Check".

Is the inspection result normal?

YES >> GO TO 3.
NO >> Repair or replace the malfunctioning parts.

3. CHECK INSIDE KEY ANTENNA

Check inside key antenna.
- Instrument center: Refer to DLK-44, "DTC Logic".
- Luggage room: Refer to DLK-46, "DTC Logic".

Is the inspection result normal?

YES >> GO TO 4.
NO >> Repair or replace the malfunctioning parts.

4. CHECK UNLOCK SENSOR

Check unlock sensor.
Refer to DLK-81, "Component Function Check".

Is the inspection result normal?

YES >> GO TO 5.
NO >> Repair or replace the malfunctioning parts.

5. CONFIRM THE OPERATION

Confirm the operation again.

Is the result normal?

YES >> Check intermittent incident. Refer to GI-41, "Intermittent Incident".
NO >> GO TO 1.

OFF POSITION WARNING DOES NOT OPERATE

Diagnosis Procedure

INFOID:0000000007772871

1. CHECK POWER POSITION

Check if ignition switch position is changing or not.

Does ignition switch position change?

YES >> GO TO 2.
NO >> Check BCM for DTC. Refer to BCS-75, "DTC Index".

2. CHECK BUZZER (COMBINATION METER)

Check buzzer (combination meter).
Refer to DLK-86, "Component Function Check".

Is the inspection result normal?

YES >> GO TO 3.
NO >> Repair or replace the malfunctioning parts.

3. CHECK INTELLIGENT KEY WARNING BUZZER

Check Intelligent Key warning buzzer.
Refer to DLK-83, "Component Function Check".

Is the inspection result normal?

YES >> GO TO 4.
NO >> Repair or replace the malfunctioning parts.

4. CHECK DOOR SWITCH

Check door switch (driver side).
Refer to DLK-55, "Component Function Check".

Is the inspection result normal?

YES >> GO TO 5.
NO >> Repair or replace the malfunctioning parts.

5. CONFIRM THE OPERATION

Confirm the operation again.

Is the result normal?

YES >> Check intermittent incident. Refer to GI-41, "Intermittent Incident".
NO >> GO TO 1.

P POSITION WARNING DOES NOT OPERATE

Diagnosis Procedure

INFOID:0000000007772872

1. CHECK POWER POSITION

Check if ignition switch position is changing or not.

Does ignition switch position change?

YES >> GO TO 2.
NO >> Check BCM for DTC. Refer to BCS-75, "DTC Index".

2. CHECK DETENTION SWITCH

Check BCM for DTC.
Refer to BCS-75, "DTC Index".

Is the inspection result normal?

YES >> GO TO 3.
NO >> Repair or replace the malfunctioning parts.

3. CHECK INTELLIGENT KEY WARNING BUZZER

Check Intelligent Key warning buzzer.
Refer to DLK-83, "Component Function Check".

Is the inspection result normal?

YES >> GO TO 4.
NO >> Repair or replace the malfunctioning parts.

4. CHECK BUZZER (COMBINATION METER)

Check buzzer (combination meter).
Refer to DLK-86, "Component Function Check".

Is the inspection result normal?

YES >> GO TO 5.
NO >> Repair or replace the malfunctioning parts.

5. CHECK DOOR SWITCH

Check door switch (driver side).
Refer to DLK-55, "Component Function Check".

Is the inspection result normal?

YES >> GO TO 6.
NO >> Repair or replace the malfunctioning parts.

6. CHECK INSIDE KEY ANTENNA

Check inside key antenna.
- Instrument center: Refer to DLK-44, "DTC Logic".
- Luggage room: Refer to DLK-46, "DTC Logic".

Is the inspection result normal?

YES >> GO TO 7.
NO >> Repair or replace the malfunctioning parts.

7. CHECK KEY WARNING LAMP

Check key warning lamp.
Refer to DLK-87, "Component Function Check".

Is the inspection result normal?

YES >> GO TO 8.
NO >> Repair or replace the malfunctioning parts.

8. CHECK SHIFT P WARNING LAMP

Check shift P warning lamp.
Refer to MWI-4, "Work flow".

Is the inspection result normal?

YES >> GO TO 9.
NO >> Repair or replace the malfunctioning parts.

9. CONFIRM THE OPERATION

Confirm the operation again.

Is the result normal?

YES >> Check intermittent incident. Refer to GI-41, "Intermittent Incident".
NO >> GO TO 1.

ACC WARNING DOES NOT OPERATE

Diagnosis Procedure

INFOID:0000000007772873

1. CHECK POWER POSITION

Check if ignition switch position is changing or not.

Does ignition switch position change?

YES >> GO TO 2.
NO >> Check BCM for DTC. Refer to BCS-75, "DTC Index".

2. CHECK BUZZER (COMBINATION METER)

Check buzzer (combination meter).
Refer to DLK-86, "Component Function Check".

Is the inspection result normal?

YES >> GO TO 3.
NO >> Repair or replace the malfunctioning parts.

3. CHECK DETENTION SWITCH

Check BCM for DTC.
Refer to BCS-75, "DTC Index".

Is the inspection result normal?

YES >> GO TO 4.
NO >> Repair or replace the malfunctioning parts.

4. CONFIRM THE OPERATION

Confirm the operation again.

Is the result normal?

YES >> Check intermittent incident. Refer to GI-41, "Intermittent Incident".
NO >> GO TO 1.

TAKE AWAY WARNING DOES NOT OPERATE

Diagnosis Procedure

INFOID:0000000007772874

1. CHECK POWER POSITION

Check if ignition switch position is changing or not.

Does ignition switch position change?

YES >> GO TO 2.
NO >> Check BCM for DTC. Refer to BCS-75, "DTC Index".

2. CHECK DOOR SWITCH

Check door switch.
Refer to DLK-55, "Component Function Check".

Is the inspection result normal?

YES >> GO TO 3.
NO >> Repair or replace the malfunctioning parts.

3. CHECK INSIDE KEY ANTENNA

Check inside key antenna.
- Instrument center: Refer to DLK-44, "DTC Logic".
- Luggage room: Refer to DLK-46, "DTC Logic".

Is the inspection result normal?

YES >> GO TO 4.
NO >> Repair or replace the malfunctioning parts.

4. CHECK BUZZER (COMBINATION METER)

Check buzzer (combination meter).
Refer to DLK-86, "Component Function Check".

Is the inspection result normal?

YES >> GO TO 5.
NO >> Repair or replace the malfunctioning parts.

5. CHECK INTELLIGENT KEY WARNING BUZZER

Check Intelligent Key warning buzzer.
Refer to DLK-83, "Component Function Check".

Is the inspection result normal?

YES >> GO TO 6.
NO >> Repair or replace the malfunctioning parts.

6. CHECK KEY WARNING LAMP

Check key warning lamp.
Refer to MWI-4, "Work flow".

Is the inspection result normal?

YES >> GO TO 7.
NO >> Repair or replace the malfunctioning parts.

7. CONFIRM THE OPERATION

Confirm the operation again.

Is the result normal?

YES >> Check intermittent incident. Refer to GI-41, "Intermittent Incident".
NO >> GO TO 1.

INTELLIGENT KEY LOW BATTERY WARNING DOES NOT OPERATE

Diagnosis Procedure

INFOID:0000000007772875

1. CHECK “LO- BATT OF KEY FOB WARN” SETTING IN “WORK SUPPORT”

Check “LO- BATT OF KEY FOB WARN” setting in “WORK SUPPORT”.
Refer to DLK-40, "INTELLIGENT KEY : CONSULT Function (BCM - INTELLIGENT KEY)".

Is the inspection result normal?

YES >> GO TO 2.
NO >> Set “LO- BATT OF KEY FOB WARN” setting in “WORK SUPPORT”.

2. CHECK INTELLIGENT KEY

Check Intelligent key.
Refer to DLK-85, "Component Function Check".

Is the inspection result normal?

YES >> GO TO 3.
NO >> Repair or replace the malfunctioning parts.

3. CHECK KEY WARNING LAMP

Check key warning lamp.
Refer to DLK-87, "Component Function Check".

Is the inspection result normal?

YES >> GO TO 4.
NO >> Repair or replace the malfunctioning parts.

4. CHECK INSIDE KEY ANTENNA

Check inside key antenna.
- Instrument center: Refer to DLK-44, "DTC Logic".
- Luggage room: Refer to DLK-46, "DTC Logic".

Is the inspection result normal?

YES >> GO TO 5.
NO >> Repair or replace the malfunctioning parts.

5. CONFIRM THE OPERATION

Confirm the operation again.

Is the result normal?

YES >> Check intermittent incident. Refer to GI-41, "Intermittent Incident".
NO >> GO TO 1.

DOOR LOCK OPERATION WARNING DOES NOT OPERATE

Diagnosis Procedure

INFOID:0000000007772876

1.CHECK DOOR LOCK FUNCTION

Check door lock function.

Does door lock/unlock using door request switch?

YES >> GO TO 2.
NO >> Refer to DLK-127, "DRIVER SIDE : Diagnosis Procedure".

2.CHECK INTELLIGENT KEY WARNING BUZZER

Check Intelligent Key warning buzzer.
Refer to DLK-83, "Component Function Check".

Is the inspection result normal?

YES >> GO TO 3.
NO >> Repair or replace the malfunctioning parts.

3.CONFIRM THE OPERATION

Confirm the operation again.

Is the result normal?

YES >> Check intermittent incident. Refer to GI-41, "Intermittent Incident".
NO >> GO TO 1.

KEY ID WARNING DOES NOT OPERATE

Diagnosis Procedure

INFOID:0000000007772877

1. CHECK INTELLIGENT KEY

Check Intelligent Key.
Refer to DLK-85, "Component Function Check".

Is the inspection result normal?

YES >> GO TO 2.
NO >> Repair or replace the malfunctioning parts.

2. CHECK KEY WARNING LAMP

Check key warning lamp.
Refer to DLK-87, "Component Function Check".

Is the inspection result normal?

YES >> GO TO 3.
NO >> Repair or replace the malfunctioning parts.

3. CONFIRM THE OPERATION

Confirm the operation again.

Is the result normal?

YES >> Check intermittent incident. Refer to GI-41, "Intermittent Incident".
NO >> GO TO 1.

KEY WARNING LAMP DOES NOT ILLUMINATE

Diagnosis Procedure

INFOID:0000000007772878

1. CHECK KEY WARNING LAMP

Check key warning lamp.
Refer to DLK-87, "Component Function Check".

Is the inspection result normal?

YES >> GO TO 2.
NO >> Repair or replace the malfunctioning parts.

2. CONFIRM THE OPERATION

Confirm the operation again.

Is the result normal?

YES >> Check intermittent incident. Refer to GI-41, "Intermittent Incident".
NO >> GO TO 1.

SQUEAK AND RATTLE TROUBLE DIAGNOSES

Work Flow

INFOID:0000000007772879

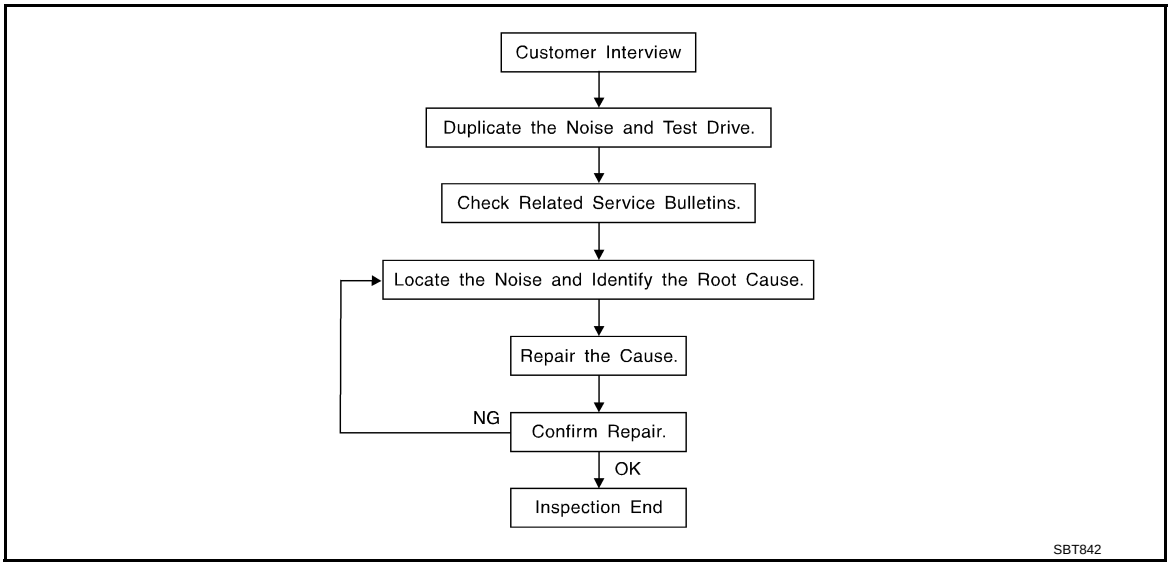

CUSTOMER INTERVIEW

Interview the customer if possible, to determine the conditions that exist when the noise occurs. Use the Diagnostic Worksheet during the interview to document the facts and conditions when the noise occurs and any of customer's comments; refer to DLK-153, "Diagnostic Worksheet". This information is necessary to duplicate the conditions that exist when the noise occurs.

- The customer may not be able to provide a detailed description or the location of the noise. Attempt to obtain all the facts and conditions that exist when the noise occurs (or does not occur).
- If there is more than one noise in the vehicle, perform a diagnosis and repair the noise that the customer is concerned about. This can be accomplished by performing a cruise test on the vehicle with the customer.
- After identifying the type of noise, isolate the noise in terms of its characteristics. The noise characteristics are provided so the customer, service adviser and technician are all speaking the same language when defining the noise.
- Squeak – (Like tennis shoes on a clean floor)
  Squeak characteristics include the light contact/fast movement/brought on by road conditions/hard surfaces = higher pitch noise/softer surfaces = lower pitch noises/edge to surface = chirping
- Creak – (Like walking on an old wooden floor)
  Creak characteristics include firm contact/slow movement/twisting with a rotational movement/pitch dependent on materials/often brought on by activity.
- Rattle – (Like shaking a baby rattle)
  Rattle characteristics include the fast repeated contact/vibration or similar movement/loose parts/missing clip or fastener/incorrect clearance.
- Knock – (Like a knock on a door)
  Knock characteristics include hollow sounding/sometimes repeating/often brought on by driver action.
- Tick – (Like a clock second hand)
  Tick characteristics include gentle contacting of light materials/loose components/can be caused by driver action or road conditions.
- Thump – (Heavy, muffled knock noise)
  Thump characteristics include softer knock/dead sound often brought on by activity.
- Buzz – (Like a bumblebee)
  Buzz characteristics include high frequency rattle/firm contact.
- Often the degree of acceptable noise level will vary depending up on the person. A noise that a technician may judge as acceptable may be very irritating to the customer.
- Weather conditions, especially humidity and temperature, may have a great effect on noise level.

DUPLICATE THE NOISE AND TEST DRIVE

If possible, drive the vehicle with the customer until the noise is duplicated. Note any additional information on the Diagnostic Worksheet regarding the conditions or location of the noise. This information can be used to duplicate the same conditions when the repair is reconfirmed.

If the noise can be duplicated easily during the test drive, to help identify the source of the noise, try to duplicate the noise with the vehicle stopped by doing one or all of the following:
1) Close a door.
2) Tap or push/pull around the area where the noise appears to be coming from.
3) Rev the engine.
4) Use a floor jack to recreate vehicle “twist”.
5) At idle, apply engine load (electrical load, half-clutch on M/T models, drive position on A/T models).
6) Raise the vehicle on a hoist and hit a tire with a rubber hammer.

- Drive the vehicle and attempt to duplicate the conditions the customer states exist when the noise occurs.
- If it is difficult to duplicate the noise, drive the vehicle slowly on an undulating or rough road to stress the vehicle body.

CHECK RELATED SERVICE BULLETINS

After verifying the customer concern or symptom, check ASIST for Technical Service Bulletins (TSBs) related to that concern or symptom.
If a TSB relates to the symptom, follow the procedure to repair the noise.

LOCATE THE NOISE AND IDENTIFY THE ROOT CAUSE

1. Narrow down the noise to a general area. To help pinpoint the source of the noise, use a listening tool (Chassis ear: J-39570, Engine ear and mechanics stethoscope).
2. Narrow down the noise to a more specific area and identify the cause of the noise by:

- Removing the components in the area that is are suspected to be the cause of the noise.
  Do not use too much force when removing clips and fasteners, otherwise clips and fastener can be broken or lost during the repair, resulting in the creation of new noise.
- Tapping or pushing/pulling the component that is are suspected to be the cause of the noise.
  Do not tap or push/pull the component with excessive force, otherwise the noise will be eliminated only temporarily.
- Feeling for a vibration by hand by touching the component(s) that is are suspected to be the cause of the noise.
- Placing a piece of paper between components that are suspected to be the cause of the noise.
- Looking for loose components and contact marks.
  Refer to DLK-151, "Inspection Procedure".

REPAIR THE CAUSE

- If the cause is a loose component, tighten the component securely.
- If the cause is insufficient clearance between components:
- Separate components by repositioning or loosening and retightening the component, if possible.
- Insulate components with a suitable insulator such as urethane pads, foam blocks, felt cloth tape or urethane tape. A Nissan Squeak and Rattle Kit (J-43980) is available through the authorized Nissan Parts Department.

CAUTION:
Never use excessive force as many components are constructed of plastic and may be damaged.
NOTE:
Always check with the Parts Department for the latest parts information.
The following materials are contained in the Nissan Squeak and Rattle Kit (J-43980). Each item can be ordered separately as needed.
URETHANE PADS [1.5 mm (0.059 in) thick]
Insulates connectors, harness, etc.
76268-9E005: 100 × 135 mm (3.94 × 5.31 in)/76884-71L01: 60 × 85 mm (2.36 × 3.35 in)/76884-71L02:15 × 25 mm (0.59 × 0.98 in)
INSULATOR (Foam blocks)
Insulates components from contact. Can be used to fill space behind a panel.
73982-9E000: 45 mm (1.77 in) thick, 50 × 50 mm (1.97 × 1.97 in)/73982-50Y00: 10 mm (0.39 in) thick, 50 × 50 mm (1.97 × 1.97 in)
INSULATOR (Light foam block)
80845-71L00: 30 mm (1.18 in) thick, 30 × 50 mm (1.18 × 1.97 in)
FELT CLOTHTAPE
Used to insulate where movement does not occur. Ideal for instrument panel applications.
68370-4B000: 15 × 25 mm (0.59 × 0.98 in) pad/68239-13E00: 5 mm (0.20 in) wide tape roll
The following materials, not found in the kit, can also be used to repair squeaks and rattles.
UHMW (TEFLON) TAPE

Insulates where slight movement is present. Ideal for instrument panel applications.
SILICONE GREASE
Used in place of UHMW tape that is be visible or does not fit. Will only last a few months.
SILICONE SPRAY
Used when grease cannot be applied.
DUCT TAPE
Used to eliminate movement.

CONFIRM THE REPAIR

Confirm that the cause of a noise is repaired by test driving the vehicle. Operate the vehicle under the same conditions as when the noise originally occurred. Refer to the notes on the Diagnostic Worksheet.

Inspection Procedure

INFOID:0000000007772880

Refer to Table of Contents for specific component removal and installation information.

INSTRUMENT PANEL

Most incidents are caused by contact and movement between:

1. The cluster lid A and instrument panel
2. Acrylic lens and combination meter housing
3. Instrument panel to front pillar garnish
4. Instrument panel to windshield
5. Instrument panel mounting pins
6. Wiring harnesses behind the combination meter
7. A/C defroster duct and duct joint
   These incidents can usually be located by tapping or moving the components to duplicate the noise or by pressing on the components while driving to stop the noise. Most of these incidents can be repaired by applying felt cloth tape or silicon spray (in hard to reach areas). Urethane pads can be used to insulate wiring harness.
   CAUTION:
   Never use silicone spray to isolate a squeak or rattle. If the area is saturated with silicone, the recheck of repair becomes impossible.

CENTER CONSOLE

Components to pay attention to include:

1. Shifter assembly cover to finisher
2. A/C control unit and cluster lid C
3. Wiring harnesses behind audio and A/C control unit

The instrument panel repair and isolation procedures also apply to the center console.

DOORS

Pay attention to the following:

1. Finisher and inner panel making a slapping noise
2. Inside handle escutcheon to door finisher
3. Wiring harnesses tapping
4. Door striker out of alignment causing a popping noise on starts and stops

Tapping or moving the components or pressing on them while driving to duplicate the conditions can isolate many of these incidents. The areas can usually be insulated with felt cloth tape or insulator foam blocks from the Nissan Squeak and Rattle Kit (J-43980) to repair the noise.

TRUNK

Trunk noises are often caused by a loose jack or loose items put into the trunk by the customer.
In addition look for the following:

1. Trunk lid dumpers out of adjustment
2. Trunk lid striker out of adjustment
3. The trunk lid torsion bars knocking together
4. A loose license plate or bracket

Most of these incidents can be repaired by adjusting, securing or insulating the item(s) or component(s) causing the noise.

SUNROOF/HEADLINING

Noises in the sunroof/headlining area can often be traced to one of the following:

1. Sunroof lid, rail, linkage or seals making a rattle or light knocking noise
2. Sunvisor shaft shaking in the holder
3. Front or rear windshield touching headlining and squeaking

Again, pressing on the components to stop the noise while duplicating the conditions can isolate most of these incidents. Repairs usually consist of insulating with felt cloth tape.

SEATS

When isolating seat noise it's important to note the position the seats in and the load placed on the seat when the noise occurs. These conditions should be duplicated when verifying and isolating the cause of the noise.
Cause of seat noise include:

1. Headrest rods and holder
2. A squeak between the seat pad cushion and frame
3. The rear seatback lock and bracket

These noises can be isolated by moving or pressing on the suspected components while duplicating the conditions under which the noise occurs.Most of these incidents can be repaired by repositioning the component or applying urethane tape to the contact area.

UNDERHOOD

Some interior noise may be caused by components under the hood or on the engine wall. The noise is then transmitted into the passenger compartment.
Causes of transmitted underhood noise include:

1. Any component mounted to the engine wall
2. Components that pass through the engine wall
3. Engine wall mounts and connectors
4. Loose radiator mounting pins
5. Hood bumpers out of adjustment
6. Hood striker out of adjustment

These noises can be difficult to isolate since they cannot be reached from the interior of the vehicle. The best method is to secure, move or insulate one component at a time and test drive the vehicle. Also, engine RPM or load can be changed to isolate the noise. Repairs can usually be made by moving, adjusting, securing, or insulating the component causing the noise.

Diagnostic Worksheet

INFOID:0000000007772881

SQUEAK & RATTLE DIAGNOSTIC WORKSHEET

Dear Nissan Customer:
We are concerned about your satisfaction with your Nissan vehicle. Repairing a squeak or rattle sometimes can be very difficult. To help us fix your Nissan right the first time, please take a moment to note the area of the vehicle where the squeak or rattle occurs and under what conditions. You may be asked to take a test drive with a service advisor or technician to ensure we confirm the noise you are hearing.

I. WHERE DOES THE NOISE COME FROM? (circle the area of the vehicle)
The illustrations are for reference only, and may not reflect the actual configuration of your vehicle.

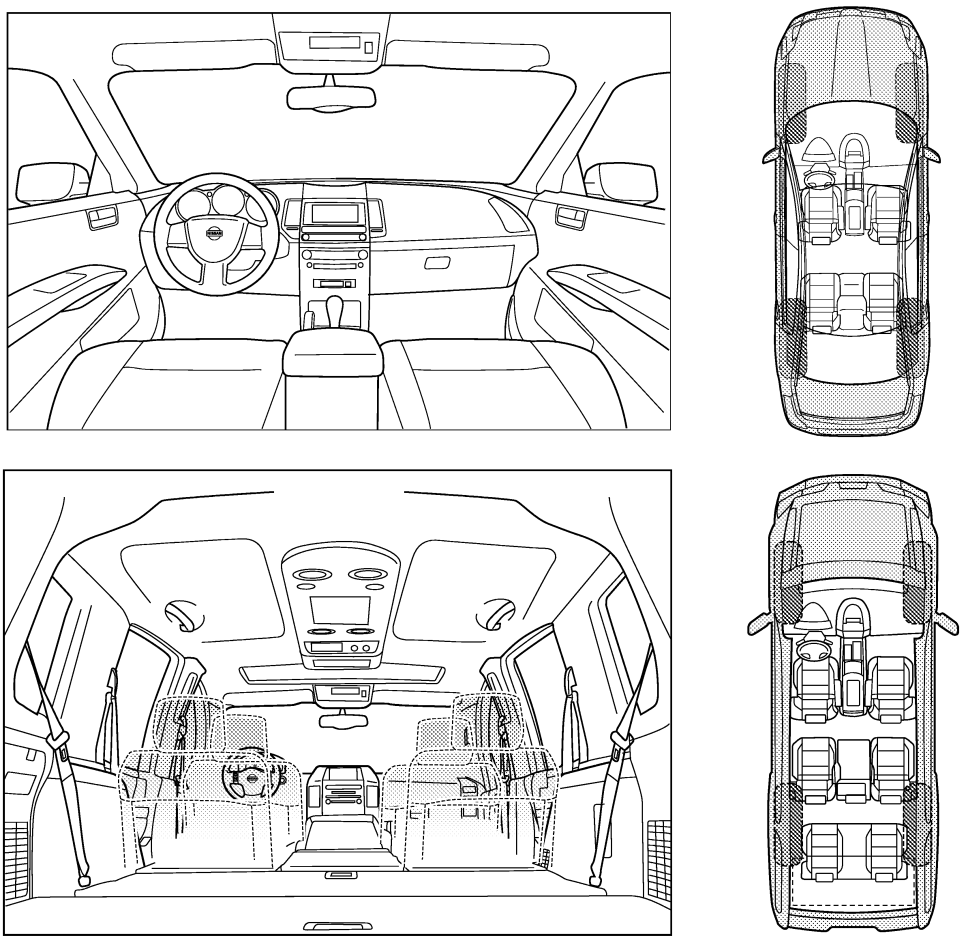

Continue to page 2 of the worksheet and briefly describe the location of the noise or rattle. In addition, please indicate the conditions which are present when the noise occurs.

PIIB8740E

SQUEAK & RATTLE DIAGNOSTIC WORKSHEET - page 2

Briefly describe the location where the noise occurs:

_____

_____

II. WHEN DOES IT OCCUR? (please check the boxes that apply)

- ☐ anytime
- ☐ 1st time in the morning
- ☐ only when it is cold outside
- ☐ only when it is hot outside
- ☐ after sitting out in the rain
- ☐ when it is raining or wet
- ☐ dry or dusty conditions
- ☐ other:

III. WHEN DRIVING:

- ☐ through driveways
- ☐ over rough roads
- ☐ over speed bumps
- ☐ only about ____ mph
- ☐ on acceleration
- ☐ coming to a stop
- ☐ on turns: left, right or either (circle)
- ☐ with passengers or cargo
- ☐ other: _____
- ☐ after driving _____ miles or _____ minutes

IV. WHAT TYPE OF NOISE

- ☐ squeak (like tennis shoes on a clean floor)
- ☐ creak (like walking on an old wooden floor)
- ☐ rattle (like shaking a baby rattle)
- ☐ knock (like a knock at the door)
- ☐ tick (like a clock second hand)
- ☐ thump (heavy, muffled knock noise)
- ☐ buzz (like a bumble bee)

TO BE COMPLETED BY DEALERSHIP PERSONNEL

Test Drive Notes:

_____

_____

_____

	YES	NO	Initials of person performing
Vehicle test driven with customer	☐	☐	_____
- Noise verified on test drive	☐	☐	_____
- Noise source located and repaired	☐	☐	_____
- Follow up test drive performed to confirm repair	☐	☐	_____

VIN: _____ Customer Name: _____

W.O.# _____ Date: _____

This form must be attached to Work Order

PIIB8742E

PRECAUTION

PRECAUTIONS

Precaution for Supplemental Restraint System (SRS) "AIR BAG" and "SEAT BELT PRE-TENSIONER"

INFOID:0000000007772882

The Supplemental Restraint System such as “AIR BAG” and “SEAT BELT PRE-TENSIONER”, used along with a front seat belt, helps to reduce the risk or severity of injury to the driver and front passenger for certain types of collision. This system includes seat belt switch inputs and dual stage front air bag modules. The SRS system uses the seat belt switches to determine the front air bag deployment, and may only deploy one front air bag, depending on the severity of a collision and whether the front occupants are belted or unbelted.
Information necessary to service the system safely is included in the “SRS AIR BAG” and “SEAT BELT” of this Service Manual.

WARNING:
Always observe the following items for preventing accidental activation.
- **To avoid rendering the SRS inoperative, which could increase the risk of personal injury or death in the event of a collision that would result in air bag inflation, all maintenance must be performed by an authorized NISSAN/INFINITI dealer.**
- **Improper maintenance, including incorrect removal and installation of the SRS, can lead to personal injury caused by unintentional activation of the system. For removal of Spiral Cable and Air Bag Module, see “SRS AIR BAG”.**
- **Never use electrical test equipment on any circuit related to the SRS unless instructed to in this Service Manual. SRS wiring harnesses can be identified by yellow and/or orange harnesses or harness connectors.**

PRECAUTIONS WHEN USING POWER TOOLS (AIR OR ELECTRIC) AND HAMMERS

WARNING:
Always observe the following items for preventing accidental activation.
- **When working near the Air Bag Diagnosis Sensor Unit or other Air Bag System sensors with the ignition ON or engine running, never use air or electric power tools or strike near the sensor(s) with a hammer. Heavy vibration could activate the sensor(s) and deploy the air bag(s), possibly causing serious injury.**
- **When using air or electric power tools or hammers, always switch the ignition OFF, disconnect the battery, and wait at least 3 minutes before performing any service.**

Precaution for Procedure without Cowl Top Cover

INFOID:0000000007772883

When performing the procedure after removing cowl top cover, cover the lower end of windshield with urethane, etc to prevent damage to windshield.

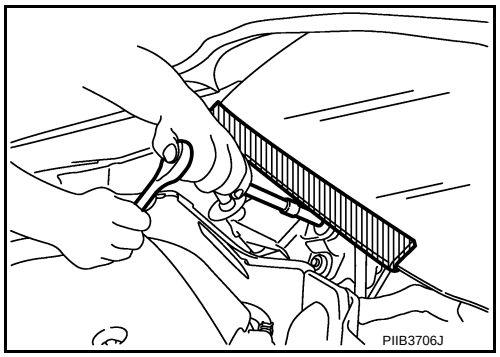

Work

INFOID:0000000007772884

- After removing and installing the opening/closing parts, be sure to carry out fitting adjustments to check their operational.
- Check the lubrication level, damage, and wear of each part. If necessary, grease or replace it.

PREPARATION

PREPARATION

Special Service Tools

INFOID:0000000007772885

The actual shapes of Kent-Moore tools may differ from those of special service tools illustrated here.

Tool number (Kent-Moore No.) Tool name	Description
(J-39570) Chassis ear 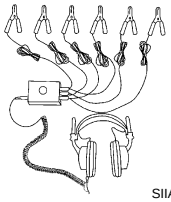 SIIA0993E	Locates the noise
(J-43980) NISSAN Squeak and Rattle Kit 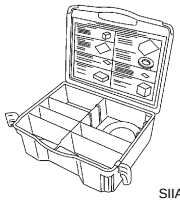 SIIA0994E	Repairs the cause of noise

Commercial Service Tools

INFOID:0000000007772886

Tool name	Description
Engine ear 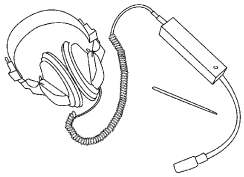 SIIA0995E	Locates the noise
Remover tool 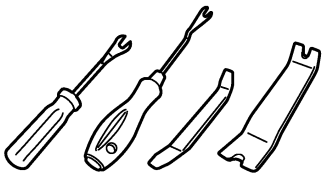 JMKIA3050ZZ	Removes the clips, pawls, and metal clips
Power tool 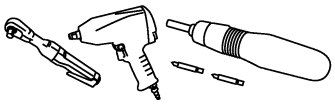 PIIB1407E	

REMOVAL AND INSTALLATION

HOOD

HOOD ASSEMBLY

HOOD ASSEMBLY : Exploded View

INFOID:0000000007772887

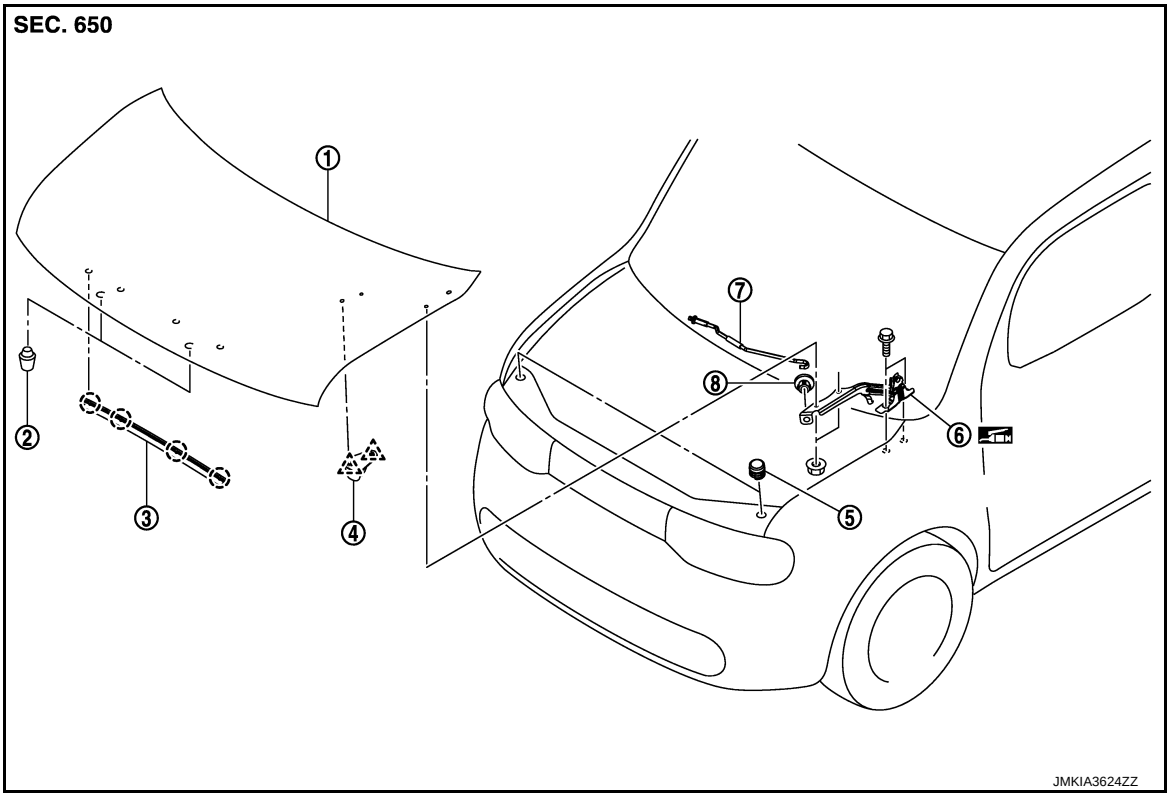

1. Hood assembly
2. Hood bumper rubber (hood side)
3. Radiator core seal
4. Clamp
5. Hood bumper rubber (body side)
6. Hood hinge
7. Hood support rod
8. Grommet

: Clip

: Pawl

Refer to GI-4, "Components" for symbols in the figure.

HOOD ASSEMBLY : Removal and Installation

INFOID:0000000007772888

REMOVAL

1. Support hood lock assembly with the proper material to prevent it from falling.

   WARNING:
   Bodily injury may occur if no supporting rod is holding hood open when removing hood stay.
2. Remove hood hinge mounting nuts on the hood to remove the hood assembly.

   CAUTION:
   Perform work with 2 workers, because of its heavy weight.

INSTALLATION

Install in the reverse order of removal.

CAUTION:

- **Perform work with 2 workers, because of its heavy weight.**
- **Check hood hinge rotating part for poor lubrication. If necessary, apply body grease.**
- **After installation, apply touch-up paint (the body color) onto the heads of hood hinge mounting bolts and nuts.**

- **After installing, perform hood fitting adjustment. Refer to DLK-158, "HOOD ASSEMBLY : Adjustment".**

HOOD ASSEMBLY : Adjustment

INFOID:0000000007772889

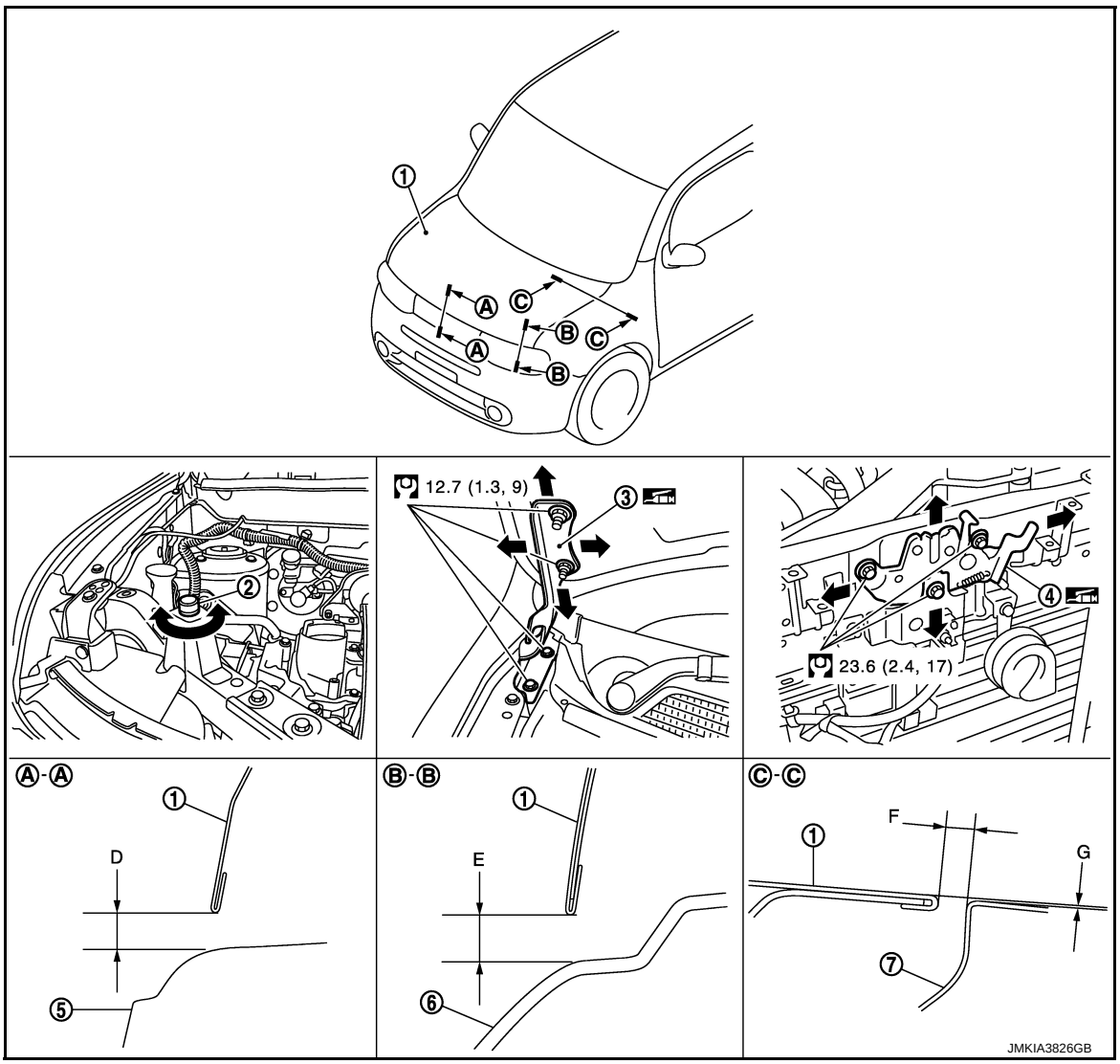

1. Hood assembly
2. Hood bumper rubber
3. Hood hinge
4. Hood lock assembly
5. Front grille
6. Front combination lamp
7. Front fender

Refer to GI-4, "Components" for symbols in the figure.

Check the clearance and the surface height between hood and each part by visually and touching.
If the clearance and the surface height are out of specification, adjust them according to the procedures shown below.

Unit: mm (in)

Portion				Standard	Difference (RH/LH)
Hood – Front grille	A – A	D	Clearance	6.0 – 10.0 (0.236 – 0.394)	< 2.0 (0.079)
Hood – Front combination lamp	B – B	E	Clearance	6.0 – 10.0 (0.236 – 0.394)	< 2.0 (0.079)
Hood – Front fender	C – C	F	Clearance	2.5 – 4.5 (0.098 – 0.177)	< 1.0 (0.039)
		G	Surface height	- 1.0 – 1.0 (- 0.039 – 0.039)	—

1. Remove hood lock and adjust the surface height of hood, front grill and front fender according to the fitting standard dimension, by rotating hood bumper rubber (body side).
2. Loosen hood hinge mounting nuts on the hood.
3. Check that hood lock primary latch is securely engaged with striker by dropping hood from approximately 200 mm (7.874 in) height or by pressing lightly on the hood.
   CAUTION:
   Never drop hood from a height of 300 mm (11.811 in) or more
4. Install as static closing face of hood is 94– 490 N (9.6 – 50.0 kg, 21.1 – 110 lb).
5. After adjustment tighten lock bolts to the specified torque.

CAUTION:
- **Check hood hinge rotating part for poor lubrication. If necessary, apply body grease.**
- **After installation, apply touch-up paint (the body color) onto the heads of hood hinge mounting bolts and nuts.**

HOOD HINGE

HOOD HINGE : Exploded View

INFOID:0000000007772890

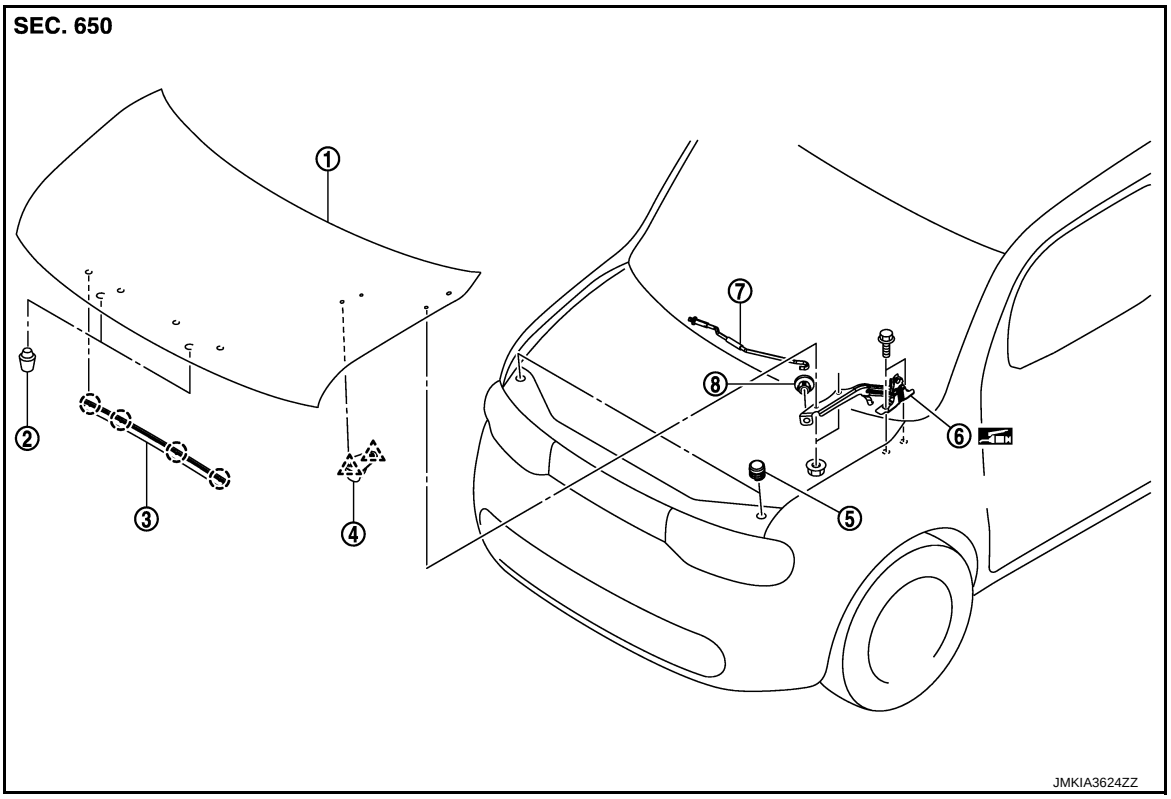

1. Hood assembly
2. Hood bumper rubber (hood side)
3. Radiator core seal
4. Clamp
5. Hood bumper rubber (body side)
6. Hood hinge
7. Hood support rod
8. Grommet

: Clip

: Pawl

Refer to GI-4, "Components" for symbols in the figure.

HOOD HINGE : Removal and Installation

INFOID:0000000007772891

REMOVAL

1. Remove hood assembly. Refer to DLK-157, "HOOD ASSEMBLY : Removal and Installation".
2. Remove front fender. Refer to DLK-164, "Removal and Installation".

3. Remove cowl top. Refer to EXT-19, "Removal and Installation"
4. Remove hood hinge mounting bolts, and then remove hood hinge.

INSTALLATION

Install in the reverse order of removal.

CAUTION:

- **Check hood hinge rotating part for poor lubrication. If necessary, apply grease.**
- **After installation, apply touch-up paint (the body color) onto the head of the hinge mounting bolts and nuts.**
- **After installation, perform hood fitting adjustment. Refer to DLK-158, "HOOD ASSEMBLY : Adjustment".**

HOOD SUPPORT ROD

HOOD SUPPORT ROD : Exploded View

INFOID:0000000007772892

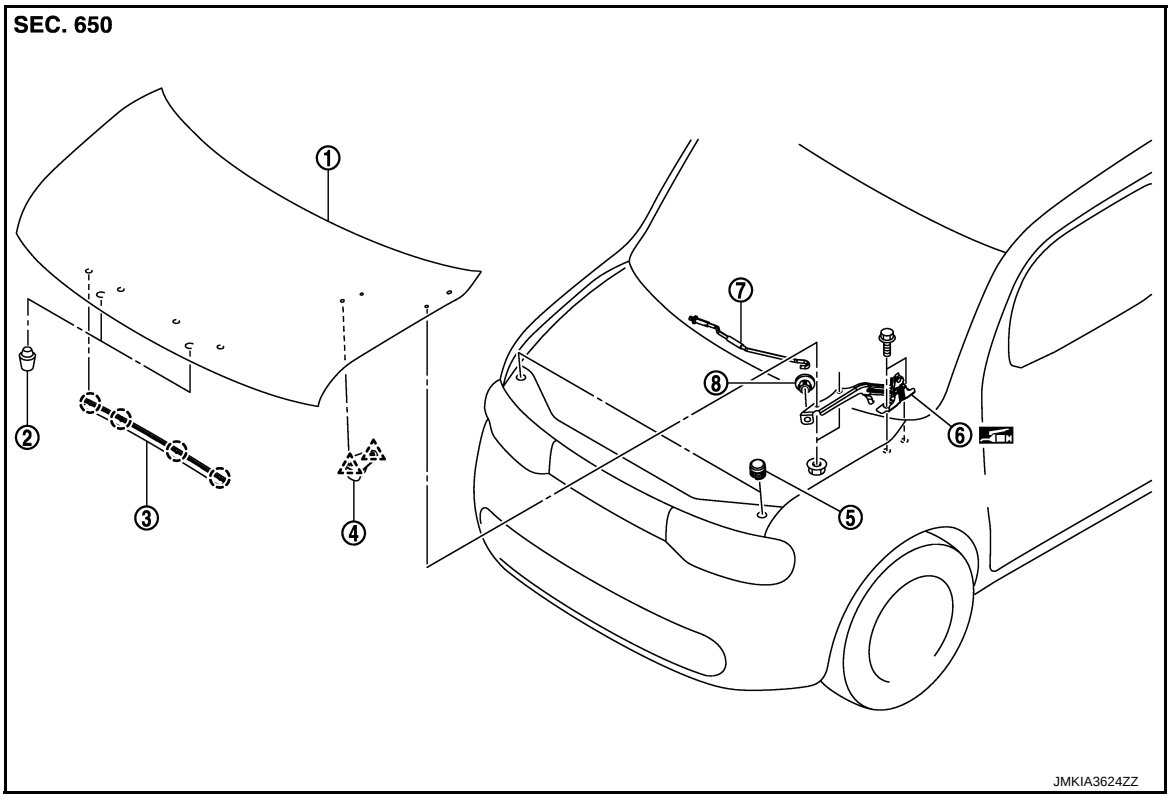

1. Hood assembly
2. Hood bumper rubber (hood side)
3. Radiator core seal
4. Clamp
5. Hood bumper rubber (body side)
6. Hood hinge
7. Hood support rod
8. Grommet

: Clip

: Pawl

Refer to GI-4, "Components" for symbols in the figure.

HOOD SUPPORT ROD : Removal and Installation

INFOID:0000000007772893

REMOVAL

1. Support hood assembly with a suitable material to prevent it from falling.

   WARNING:

   Bodily injury may occur if no supporting rod is holding the hood open when removing the hood support rod.
2. Pull hood support rod from grommet and remove.

INSTALLATION

Install in the reverse order of removal.

RADIATOR CORE SUPPORT

Exploded View

INFOID:0000000007772894

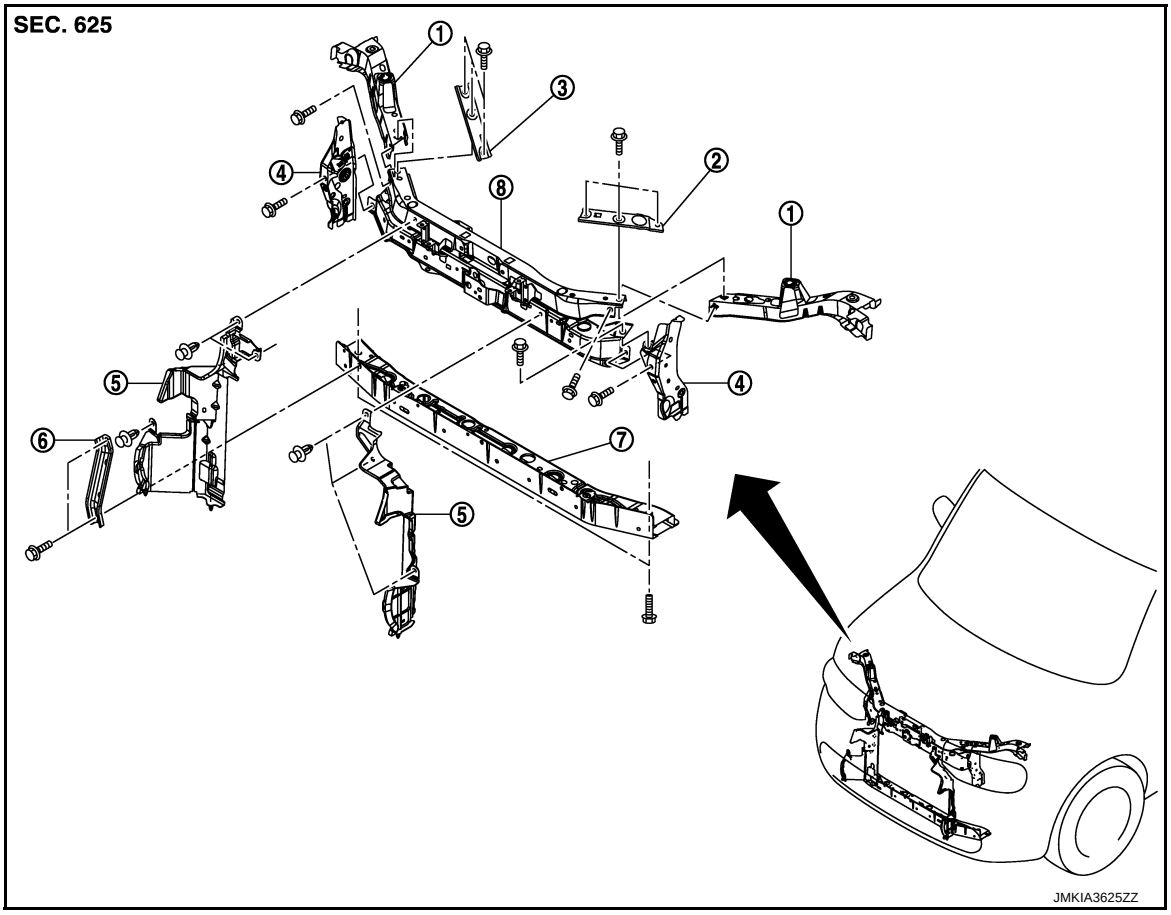

1. Radiator core support side
2. Radiator core support upper bracket (LH)
3. Radiator core support upper bracket (RH)
4. Radiator core reinforcement side
5. Air guide
6. Radiator core lower stay
7. Radiator core support lower
8. Radiator core support upper

Removal and Installation

INFOID:0000000007772895

RADIATOR CORE SUPPORT UPPER

REMOVAL

1. Remove front bumper fascia and bumper reinforcement. Refer to EXT-12, "Removal and Installation".
2. Remove hood lock. Refer to DLK-185, "Removal and Installation".
3. Remove front combination lamps (LH/RH). Refer toEXL-168, "Removal and Installation".
4. Remove air guide.
5. Remove horn. Refer to HRN-4, "Removal and Installation".
6. Remove crash zone sensor. Refer to SR-21, "Removal and Installation".
7. Remove ambient sensor. Refer to HAC-113, "Removal and Installation".
8. Disconnect all harness from radiator core support upper.
9. Remove air duct assembly. Refer to EM-24, "Removal and Installation".
10. Remove radiator core support upper bracket (LH/RH).
11. Remove mounting bolts, and then remove radiator core support upper.

INSTALLATION

Install in the reverse order of removal.

CAUTION:

- **After installation, adjust the following parts.**
- **Front combination lamp: Refer to EXL-164, "Aiming Adjustment Procedure".**

RADIATOR CORE SUPPORT LOWER

REMOVAL

1. Remove front bumper fascia and bumper reinforcement. Refer to EXT-12, "Removal and Installation".
2. Remove air guide.
3. Remove radiator core lower stay.
4. Remove clips of fender protector.
5. Remove floor under cover. Refer to EXT-22, "Removal and Installation".
6. Use a belts (A) to suspend it to prevent it from falling.
   CAUTION:
   Never damage radiator and condenser.

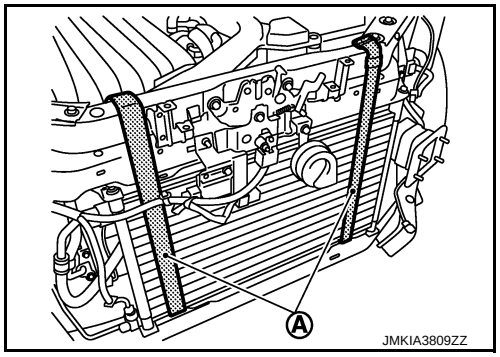

7. Remove mounting bolts, and then remove radiator core support lower.

INSTALLATION

Install in the reverse order of removal.

CAUTION:

- **After installation, adjust the following parts.**
- **Front combination lamp: Refer to EXL-164, "Aiming Adjustment Procedure".**

FRONT FENDER

Exploded View

INFOID:0000000007772896

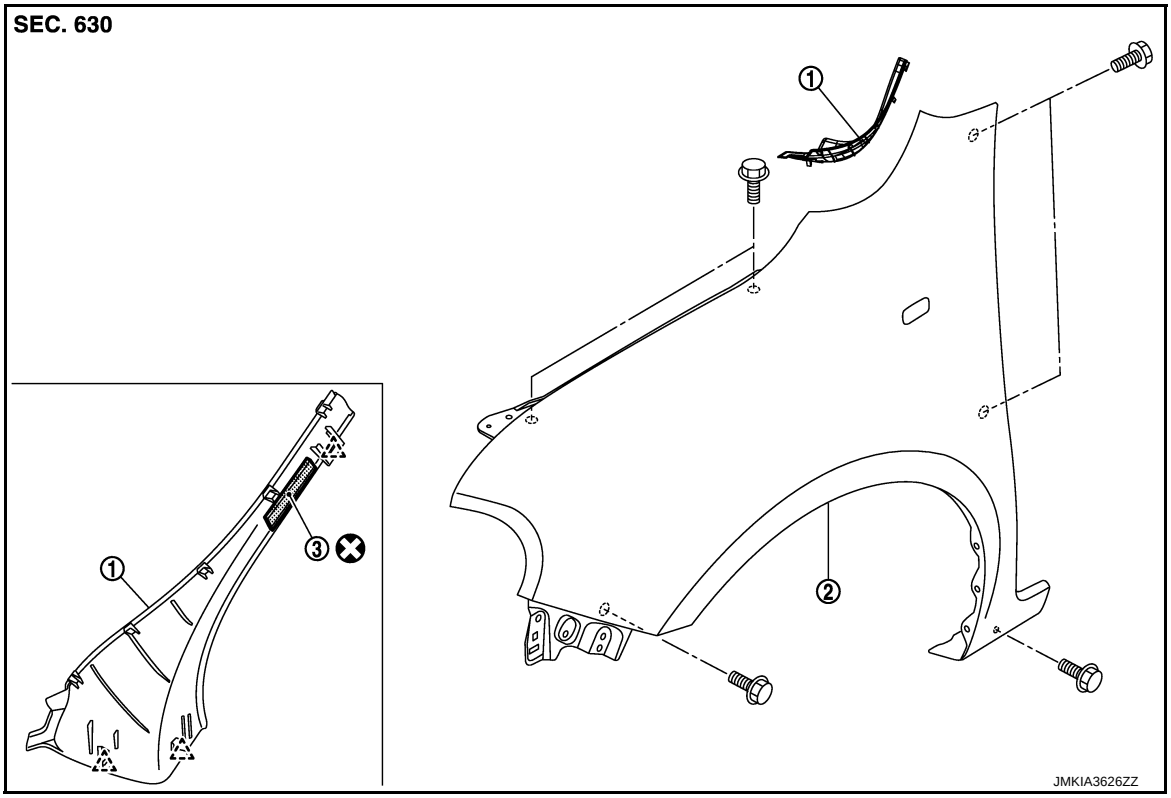

1. Front fender cover
2. Front fender assembly
3. Doube-faced adhesive tape [t : 2.0 mm (0.079 in)]

: Pawl

Refer to GI-4, "Components" for symbols in the figure.

Removal and Installation

INFOID:0000000007772897

CAUTION:
Use a shop cloth to protect the body from being damaged during removal and installation.

REMOVAL

1. Remove side turn signal lamp. Refer to EXL-175, "Removal and Installation".
2. Remove front grille. Refer to EXT-17, "Removal and Installation".
3. Remove front bumper fascia. Refer to EXT-12, "Removal and Installation".
4. Remove front combination lamp. Refer toEXL-168, "Removal and Installation".
5. Remove clips and screws of fender protector. Refer to EXT-21, "FENDER PROTECTOR : Removal and Installation".
6. Remove front fender cover.
7. Remove mounting bolts and remove front fender.
   CAUTION:
   An viscous urethane foam is installed on the back surface of front fender. When removing the front fender, be careful to not deform the front fender while performing the procedure and removing the viscous urethane foam a little at a time.

INSTALLATION

Install in the reverse order of removal.

CAUTION:

- **After installation, apply the touch-up paint (the body color) onto the head of front fender mounting bolts.**
- **After installation, adjust the following part.**
- **Hood assembly : Refer to DLK-158, "HOOD ASSEMBLY : Adjustment".**
- **Front door : Refer to DLK-167, "DOOR ASSEMBLY : Adjustment".**
- **Front combination lamp : Refer to EXL-163, "Description".**

FRONT DOOR

DOOR ASSEMBLY

DOOR ASSEMBLY : Exploded View

INFOID:0000000007772898

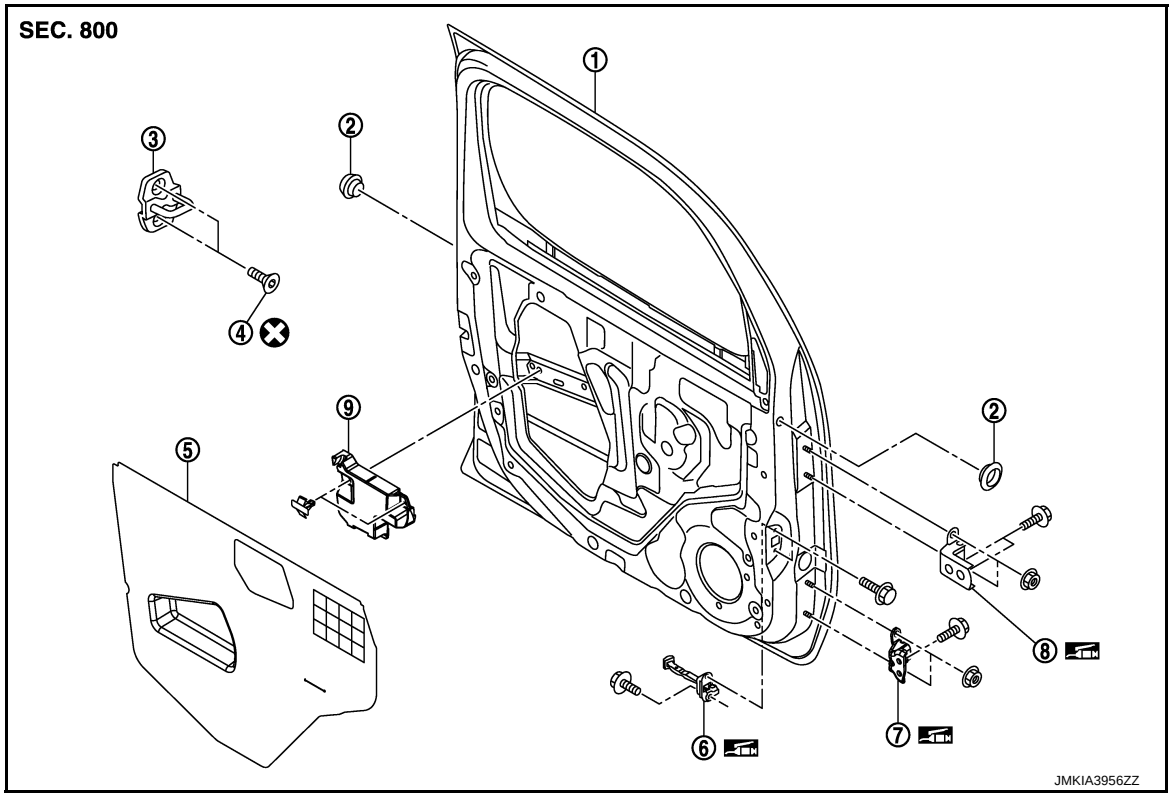

1.	Front door panel	2.	Grommet	3.	Door striker
4.	TORX bolt	5.	Sealing screen	6.	Door check link
7.	Door hinge (lower)	8.	Door hinge (upper)		

Refer to GI-4, "Components" for symbols in the figure.

DOOR ASSEMBLY : Removal and Installation

INFOID:0000000007772899

CAUTION:
- **Perform work with 2 workers, because of its heavy weight.**
- **When removing and installing front door assembly, support door with a jack and shop cloth to protect door and body.**

REMOVAL

1. Remove mounting bolts of door check link on the vehicle.
2. Remove front door harness grommet, and then pull out the harness from the vehicle.
3. Disconnect front door harness connector.
4. Remove door hinge mounting nuts (door side), and then remove door assembly.

INSTALLATION

Install in the reverse order of removal.

CAUTION:
- **Check front door open/close, lock/unlock operation after installation.**
- **Check door hinge rotating part for poor lubrication. If necessary, apply body grease.**
- **After installation, perform the fitting adjustment. Refer to DLK-167, "DOOR ASSEMBLY : Adjustment".**
- **After installation, apply touch-up paint (the body color) onto the head of door hinge mounting nuts.**

DOOR ASSEMBLY : Adjustment

INFOID:0000000007772900

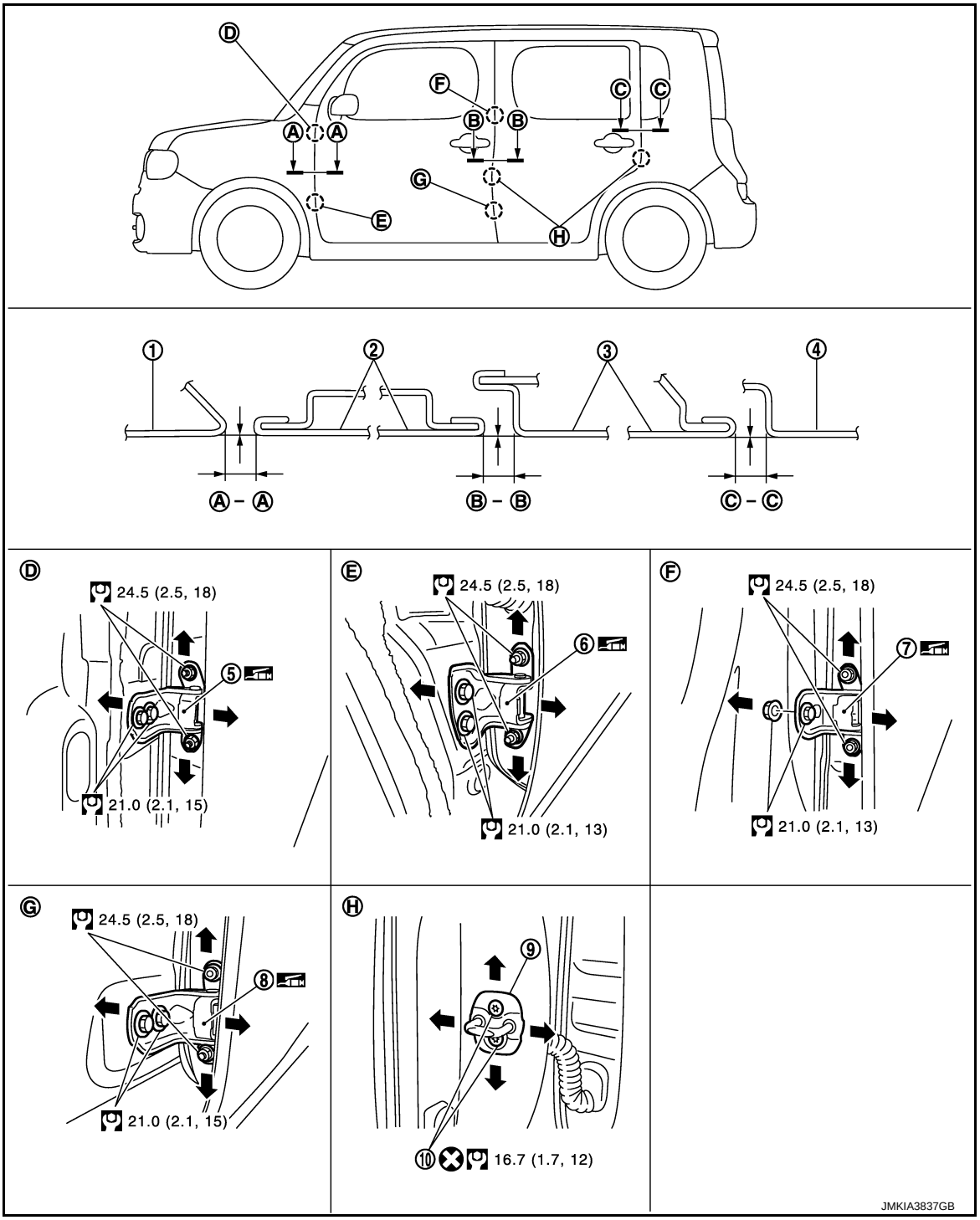

1.	Front fender	2.	Front door	3.	Rear door
4.	Body side outer	5.	Front door hinge (upper)	6.	Front door hinge (lower)
7.	Rear door hinge (upper)	8.	Rear door hinge (lower)	9.	Door striker
10.	TORX bolt				

Refer to GI-4, "Components" for symbols in the figure.

Check the clearance and surface height between front door and each part by visually and touching.
If the clearance and the surface height are out of specification, adjust them according to the procedures shown below.

Unit : mm (in)

Portion		Clearance	Surface height
Front fender – Front door	A – A	3.5 – 5.5 (0.138 – 0.217)	- 1.0 – 1.0 (- 0.039 – 0.039)
Front door – Rear door	B – B	3.4 – 5.4 (0.134 – 0.213)	- 1.0 – 1.0 (- 0.039 – 0.039)

1. Remove front fender. Refer to DLK-164, "Removal and Installation".
2. Loosen door hinge mounting nuts on door side.
3. Adjust the surface height of front door according to the fitting standard dimension.
4. Temporarily tighten door hinge mounting nuts on door side.
5. Loosen door hinge mounting bolts on body side.
6. Raise front door at rear end to adjust clearance of the front door according to the fitting standard dimension.
7. After adjustment tighten bolts and nuts to the specified torque.
8. Install front fender. Refer to refer to DLK-164, "Removal and Installation".

DOOR STRIKER ADJUSTMENT

Adjust door striker so that it becomes parallel with door lock insertion direction.

DOOR STRIKER

DOOR STRIKER : Exploded View

INFOID:0000000007772901

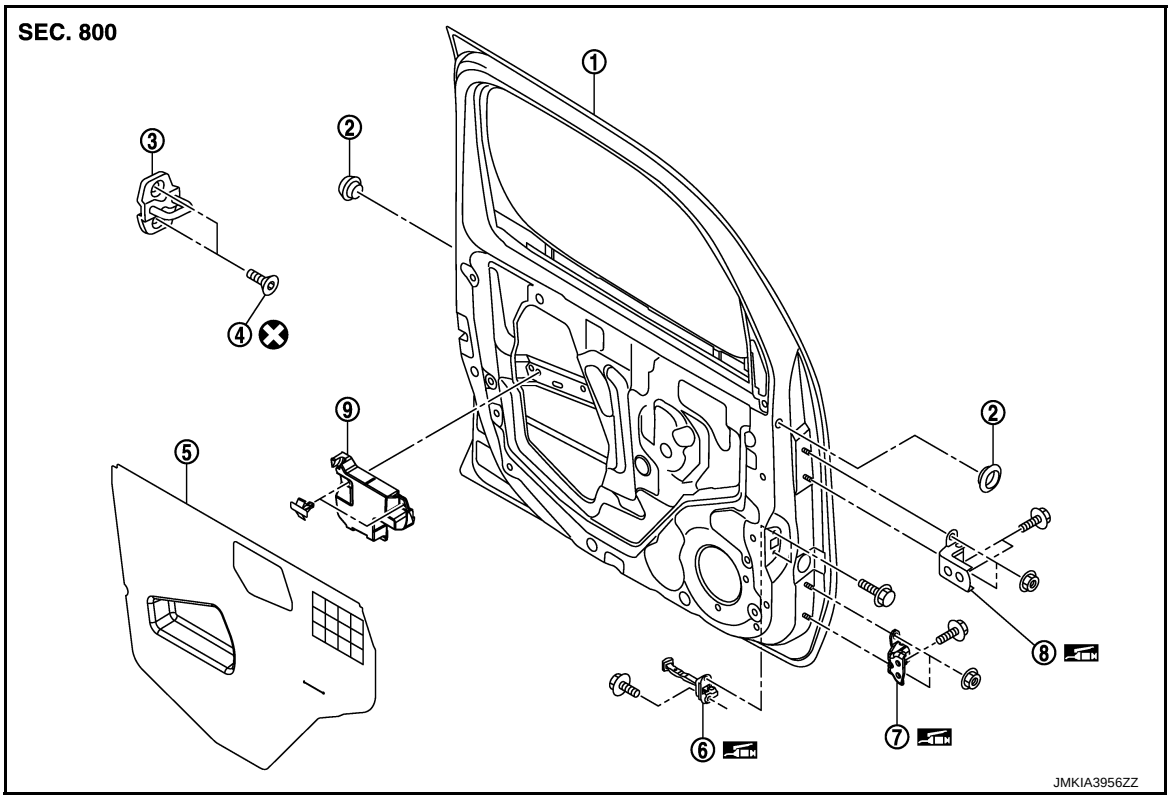

1. Front door panel
2. Grommet
3. Door striker
4. TORX bolt
5. Sealing screen
6. Door check link
7. Door hinge (lower)
8. Door hinge (upper)

Refer to GI-4, "Components" for symbols in the figure.

DOOR STRIKER : Removal and Installation

INFOID:0000000007772902

REMOVAL

Remove TORX bolts, and then remove door striker.

INSTALLATION

Install in the reverse order of removal.

CAUTION:

- **Check front door open/close, lock/unlock operation after installation.**
- **After installation, be sure to perform the fitting adjustment. Refer to DLK-167, "DOOR ASSEMBLY : Adjustment".**

DOOR HINGE

DOOR HINGE : Exploded View

INFOID:0000000007772903

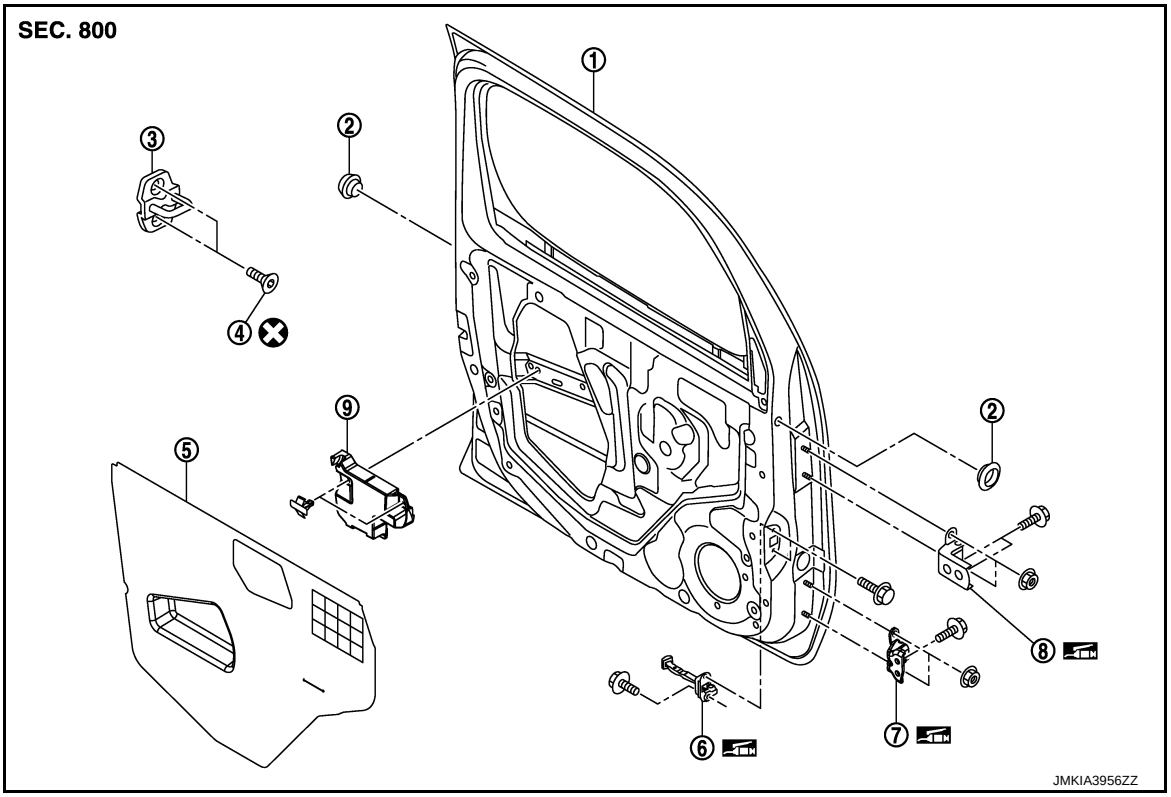

1.	Front door panel	2.	Grommet	3.	Door striker
4.	TORX bolt	5.	Sealing screen	6.	Door check link
7.	Door hinge (lower)	8.	Door hinge (upper)		

Refer to GI-4, "Components" for symbols in the figure.

DOOR HINGE : Removal and Installation

INFOID:0000000007772904

REMOVAL

CAUTION:

- **Perform work with 2 workers, because of its heavy weight.**
- **When removing and installing front door assembly, support door with a jack and shop cloth to protect door and body.**

1. Remove front fender. Refer to DLK-164, "Removal and Installation".
2. Remove front door assembly. Refer to DLK-166, "DOOR ASSEMBLY : Removal and Installation".
3. Remove front door hinge mounting bolts (body side), and then remove front door hinge.

INSTALLATION

Install in the reverse order of removal.

CAUTION:

- **Check front door open/close, lock/unlock operation after installation.**

- **Check door hinge rotating part for poor lubrication. If necessary, apply body grease.**
- **After installation, perform the fitting adjustment. Refer to DLK-167, "DOOR ASSEMBLY : Adjustment".**
- **After installation, apply touch-up paint (the body color) onto the head of door hinge mounting nuts.**

DOOR CHECK LINK

DOOR CHECK LINK : Exploded View

INFOID:0000000007772905

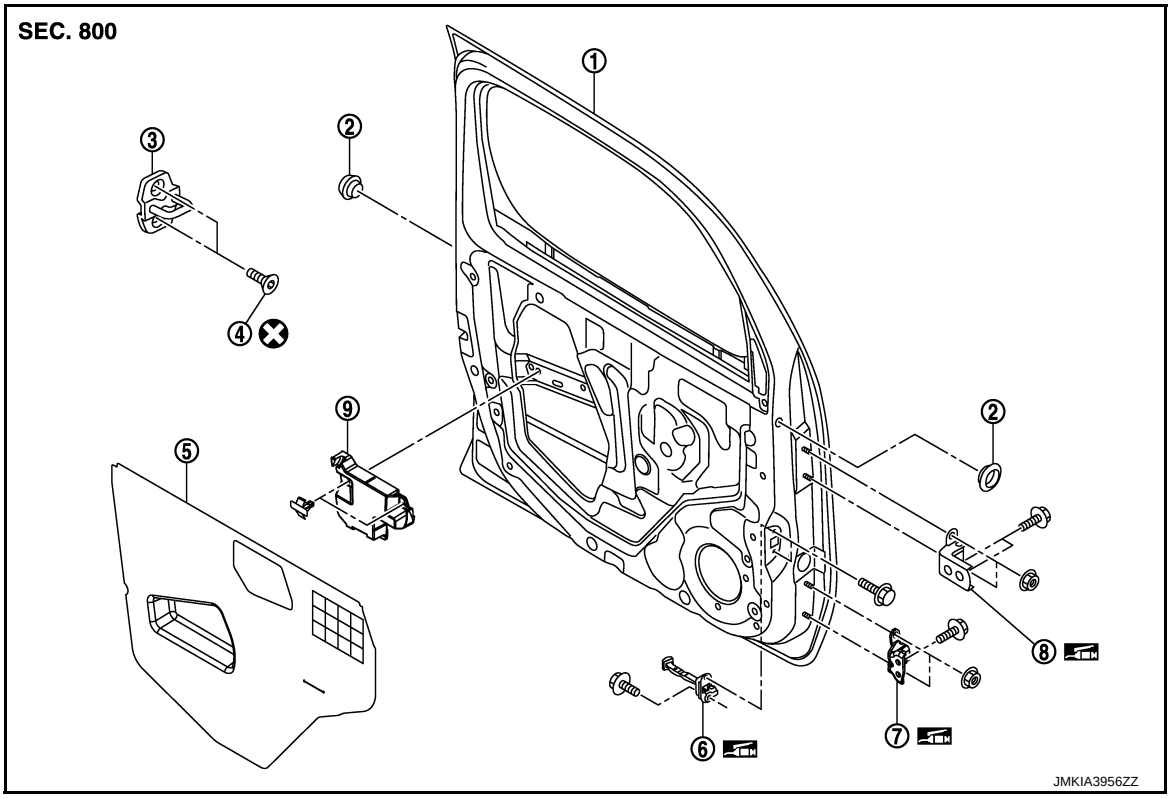

1.	Front door panel	2.	Grommet	3.	Door striker
4.	TORX bolt	5.	Sealing screen	6.	Door check link
7.	Door hinge (lower)	8.	Door hinge (upper)		

Refer to GI-4, "Components" for symbols in the figure.

DOOR CHECK LINK : Removal and Installation

INFOID:0000000007772906

REMOVAL

1. Remove front door finisher. Refer to INT-12, "Removal and Installation".
2. Fully close the front door window.
3. Remove sealing screen.
   NOTE:
   Cut the butyl-tape so that some parts of the butyl-tape do not remain on the sealing screen, if the sealing screen is reused.
4. Remove front door speaker. Refer to AV-56, "Removal and Installation".
5. Remove mounting bolts of door check link on the vehicle.
6. Remove mounting bolts of door check link on door panel.
7. Take door check link out from the hole of door panel.

INSTALLATION

Install in the reverse order of removal.

CAUTION:

Check front door open/close operation after installation.

REAR DOOR

DOOR ASSEMBLY

DOOR ASSEMBLY : Exploded View

INFOID:0000000007772907

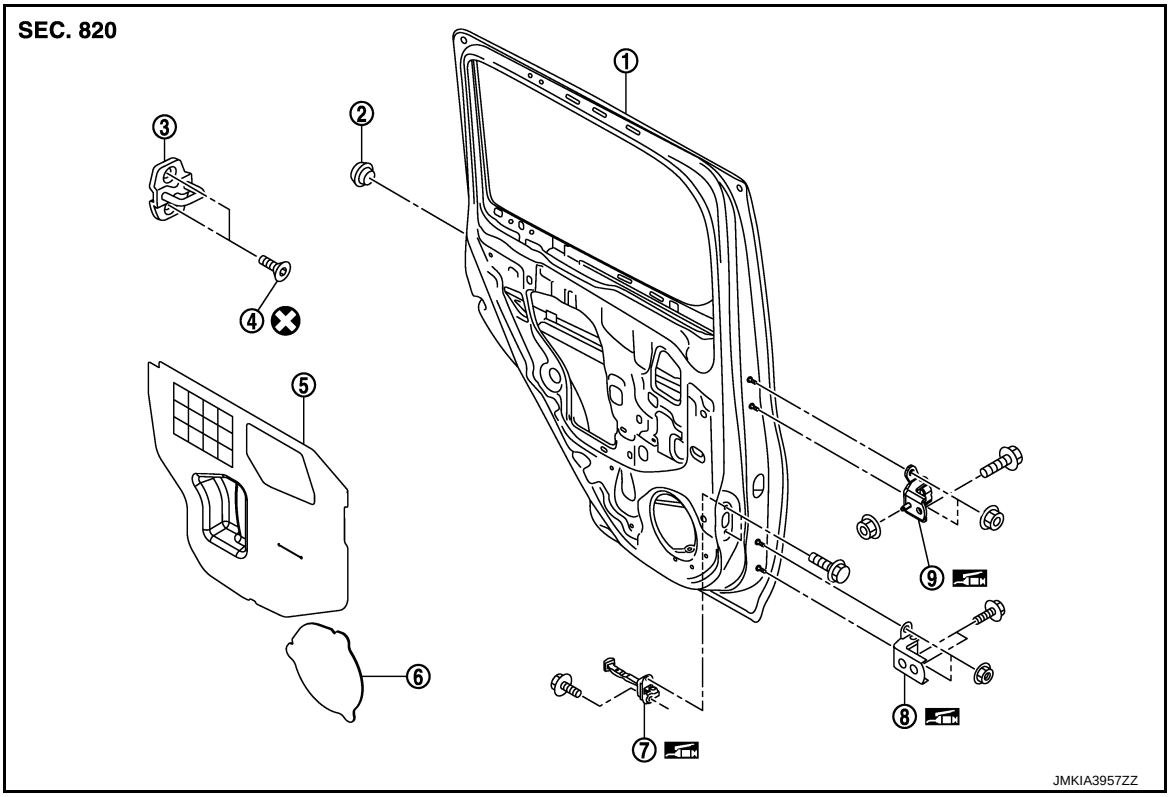

1.	Rear door panel	2.	Grommet	3.	Door striker
4.	TORX bolt	5.	Sealing screen (upper)	6.	Sealing screen (lower)
7.	Door check link	8.	Door hinge (lower)	9.	Door hinge (upper)

Refer to GI-4, "Components" for symbols in the figure.

DOOR ASSEMBLY : Removal and Installation

INFOID:0000000007772908

CAUTION:
- **Perform work with 2 workers, because of it's heavy weight.**
- **When removing and installing rear door assembly, support door with a jack and shop cloth to protect door and body.**

REMOVAL

1. Remove rear door harness grommet, and then pull out door harness from the vehicle.
2. Disconnect rear door harness connector.
3. Remove mounting bolts of door check link on the vehicle.
4. Remove door hinge mounting nuts (door side), and then remove rear door assembly.

INSTALLATION

Install in the reverse order of removal.

CAUTION:
- **Check rear door open/close, lock/unlock operation after installation.**
- **Check door hinge rotating part for poor lubrication. If necessary, apply body grease.**
- **After installation, perform the fitting adjustment. Refer to DLK-172, "DOOR ASSEMBLY : Adjustment".**
- **After installation, apply touch-up paint (the body color) onto the head of door hinge mounting nuts.**

DOOR ASSEMBLY : Adjustment

INFOID:0000000007772909

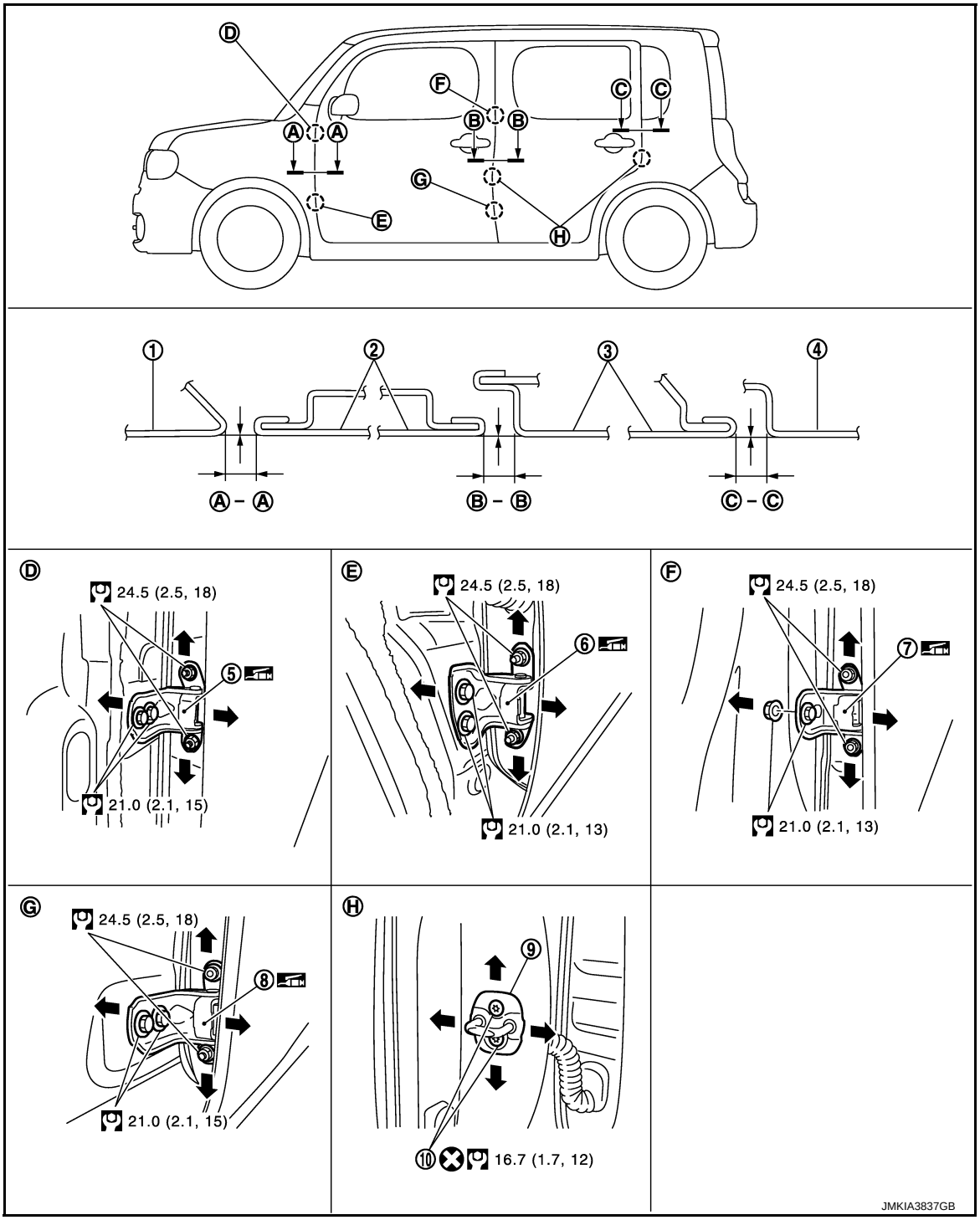

1.	Front fender	2.	Front door	3.	Rear door
4.	Body side outer	5.	Front door hinge (upper)	6.	Front door hinge (lower)
7.	Rear door hinge (upper)	8.	Rear door hinge (lower)	9.	Door striker
10.	TORX bolt				

Refer to GI-4, "Components" for symbols in the figure.

Check the clearance and surface height between rear door and each part by visually and touching.
If the clearance and the surface height are out of specification, adjust them according to the procedures shown below.

Unit: mm (in)

Portion		Clearance	Surface height
Front door – Rear door	B – B	3.4 – 5.4 (0.134 – 0.213)	-1.0 – 1.0 (-0.039 – 0.039)
Rear door – Body side outer	C – C	3.5 – 5.5 (0.138 – 0.217)	-1.0 – 1.0 (-0.039 – 0.039)

1. Remove center pillar garnish (upper/lower). Refer to INT-16, "Removal and Installation".
2. Loosen door hinge mounting nuts on door side.
3. Adjust the surface height of rear door according to the fitting standard dimension.
4. Temporarily tighten door hinge mounting nuts on door side.
5. Loosen door hinge mounting nuts and bolts on body side.
6. Raise rear door at rear end to adjust clearance of rear door according to the fitting standard dimension.
7. After adjustment tighten bolts and nuts to the specified torque.
8. Install center pillar garnish (upper/lower). Refer to INT-16, "Removal and Installation".

DOOR STRIKER ADJUSTMENT

Adjust door striker so that it becomes parallel with door lock insertion direction.

DOOR STRIKER

DOOR STRIKER : Exploded View

INFOID:0000000007772910

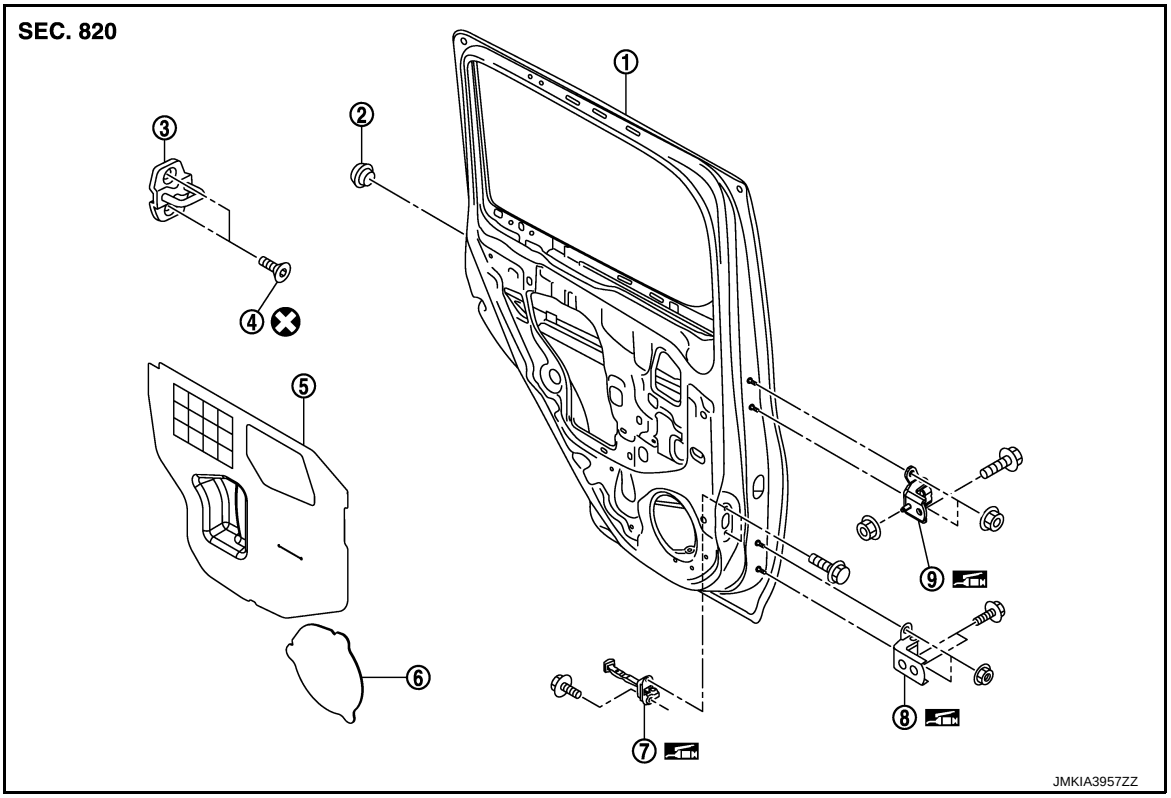

1.	Rear door panel	2.	Grommet	3.	Door striker
4.	TORX bolt	5.	Sealing screen (upper)	6.	Sealing screen (lower)
7.	Door check link	8.	Door hinge (lower)	9.	Door hinge (upper)

Refer to GI-4, "Components" for symbols in the figure.

DOOR STRIKER : Removal and Installation

INFOID:0000000007772911

REMOVAL

Remove TORX bolts, and then remove door striker.

INSTALLATION

Install in the reverse order of removal.

CAUTION:

- **Check rear door open/close, lock/unlock operation after installation.**
- **After installation, be sure to perform the fitting adjustment. Refer to DLK-172, "DOOR ASSEMBLY : Adjustment".**

DOOR HINGE

DOOR HINGE : Exploded View

INFOID:0000000007772912

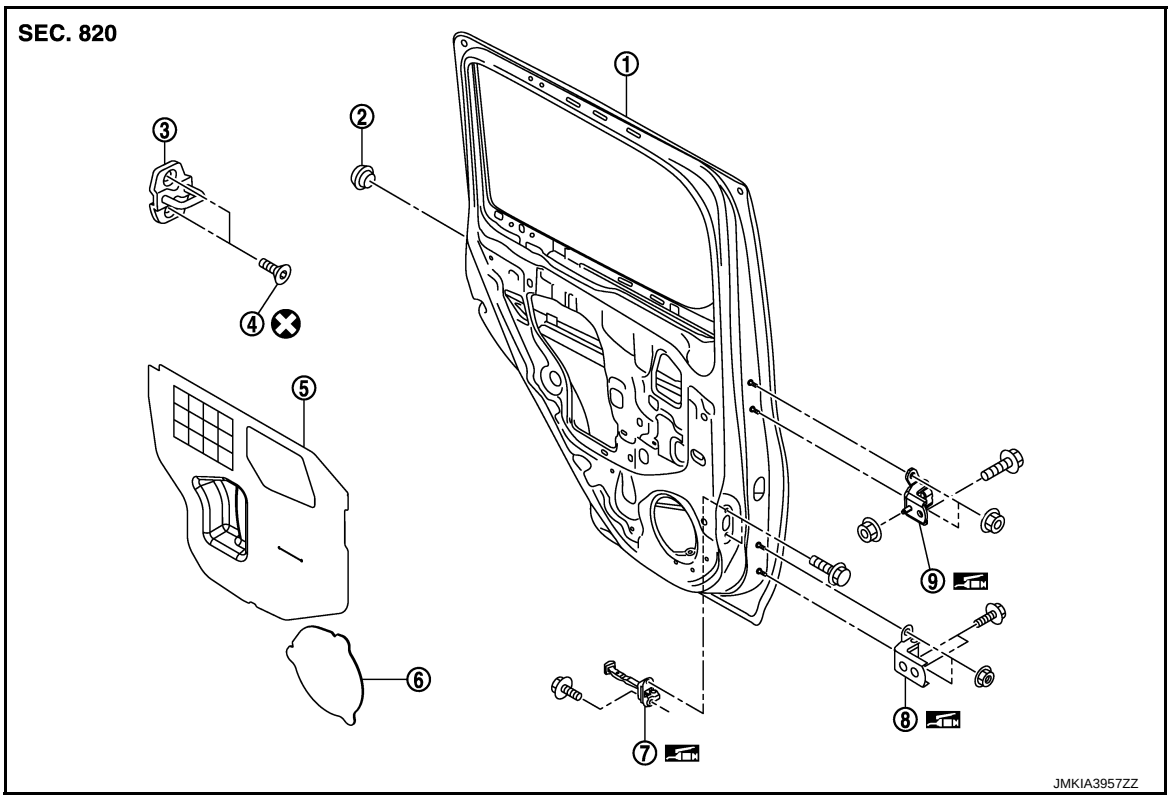

1.	Rear door panel	2.	Grommet	3.	Door striker
4.	TORX bolt	5.	Sealing screen (upper)	6.	Sealing screen (lower)
7.	Door check link	8.	Door hinge (lower)	9.	Door hinge (upper)

Refer to GI-4, "Components" for symbols in the figure.

DOOR HINGE : Removal and Installation

INFOID:0000000007772913

CAUTION:

- **Perform work with 2 workers, because of it's heavy weight.**
- **When removing and installing rear door assembly, support door with a jack and shop cloth to protect door and body.**

REMOVAL

1. Remove rear door assembly. Refer to DLK-171, "DOOR ASSEMBLY : Removal and Installation".
2. Remove center pillar garnish (upper/lower). Refer to INT-16, "Removal and Installation".
3. Remove rear door hinge mounting bolts and nuts (body side), and then remove door hinge.

INSTALLATION

Install in the reverse order of removal.

CAUTION:

- **Check rear door open/close operation after installation.**
- **Check door hinge rotating part for poor lubrication. If necessary, apply body grease.**

- **When removing and installing rear door assembly, perform the fitting adjustment. Refer to DLK-172, "DOOR ASSEMBLY : Adjustment".**
- **After installing, apply the touch-up paint (the body color) onto the head of door hinge mounting nuts.**

DOOR CHECK LINK

DOOR CHECK LINK : Exploded View

INFOID:0000000007772914

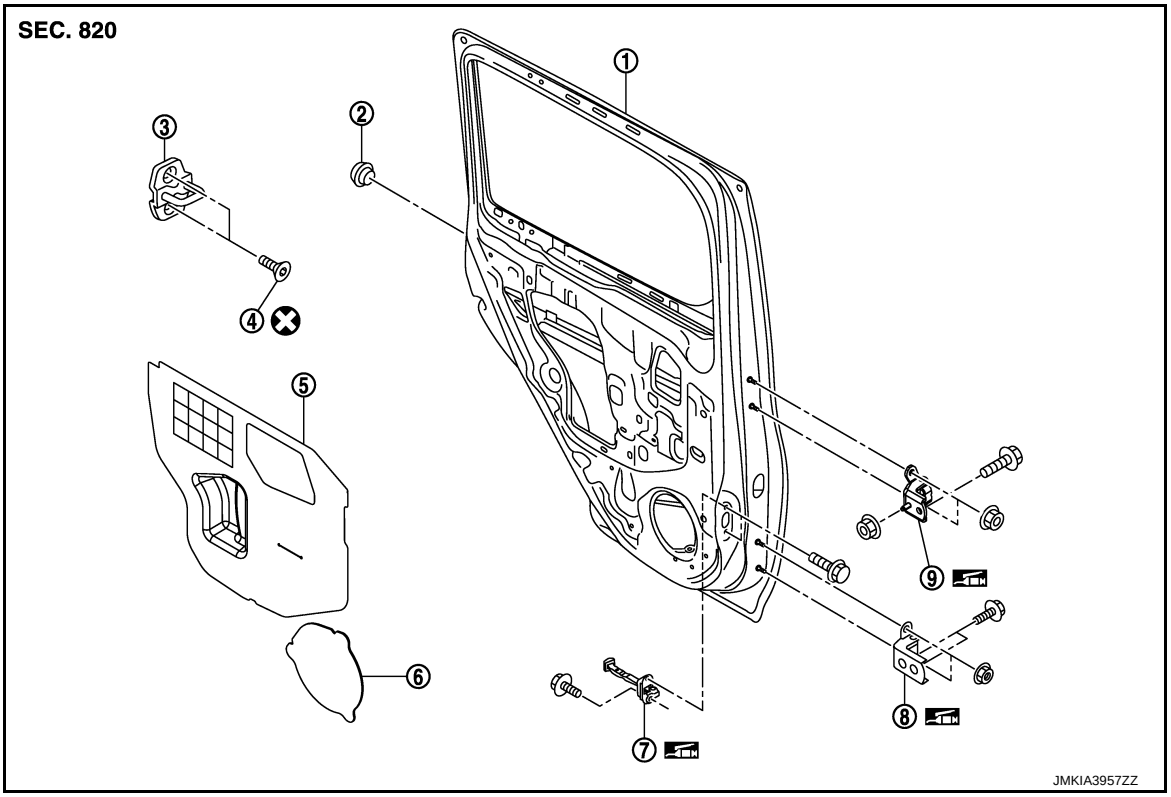

1.	Rear door panel	2.	Grommet	3.	Door striker
4.	TORX bolt	5.	Sealing screen (upper)	6.	Sealing screen (lower)
7.	Door check link	8.	Door hinge (lower)	9.	Door hinge (upper)

Refer to GI-4, "Components" for symbols in the figure.

DOOR CHECK LINK : Removal and Installation

INFOID:0000000007772915

REMOVAL

1. Remove rear door finisher. Refer to INT-14, "Removal and Installation".
2. Fully close the rear door window.
3. Remove rear door speaker. Refer to AV-58, "Removal and Installation".
4. Remove mounting bolts of the check link on the vehicle.
5. Remove mounting bolts of the check link on door panel.
6. Take door check link out from the hole of door panel.

INSTALLATION

Install in the reverse order of removal.

CAUTION:

Check rear door open/close operation after installation.

BACK DOOR

BACK DOOR ASSEMBLY

BACK DOOR ASSEMBLY : Exploded View

INFOID:0000000007772916

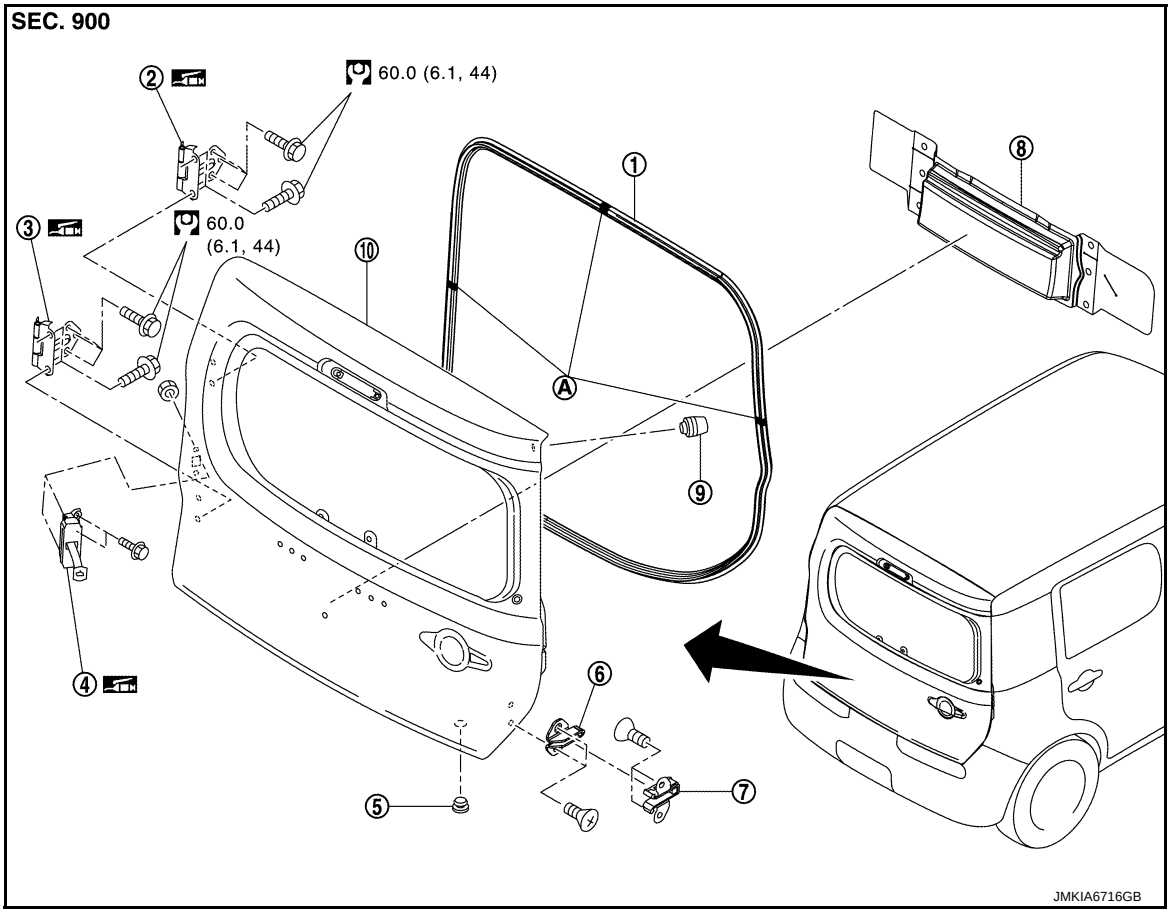

1.	Back door weather-strip	2.	Back door hinge (upper)	3.	Back door hinge (lower)
4.	Door check link	5.	Grommet	6.	Dovetail male
7.	Dovetail female	8.	Sealing screen	9.	Bumper rubber
10.	Back door panel	A	: Center mark		

Refer to GI-4, "Components" for symbols in the figure.

BACK DOOR ASSEMBLY : Removal and Installation

INFOID:0000000007772917

CAUTION:
Perform work with 2 workers, because of its heavy weight.

REMOVAL

1. Remove back door finisher lower. Refer to INT-27, "Removal and Installation".
2. Remove luggage side finisher (LH) (upper/lower). Refer to INT-24, "Removal and Installation".

3. Remove ground bolt (A) and disengage connections of harness connectors (B) and rear washer hose (C).

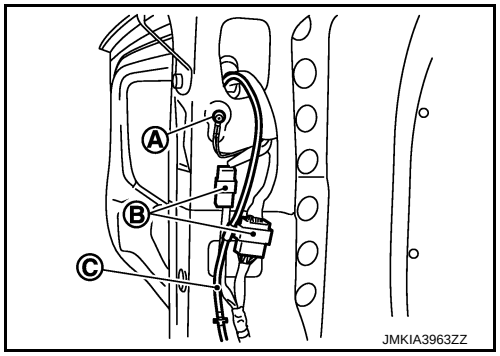

4. Remove back door harness grommet, and then pull out the harness from the vehcle.
5. Support back door with the proper material to prevent it from falling.
6. Remove mounting bolt of door check link on the vehcle.
7. Remove back door hinge mounting bolts (back door side), and then remove back door assembly.
8. Remove the following parts after removing back door assembly.
   - Back door finisher upper
   - Sealing screen
   - Dovetail (male)
   - Dovetail (female)
   - Door check link
   - Grommet
   - Bumper rubber

INSTALLATION

Install in the reverse order of removal.

CAUTION:

- **Check back door open/close, lock/unlock operation after installation.**
- **After installation, perform fitting adjustment. Refer to DLK-178, "BACK DOOR ASSEMBLY : Adjustment".**

BACK DOOR ASSEMBLY : Adjustment

INFOID:0000000007772918

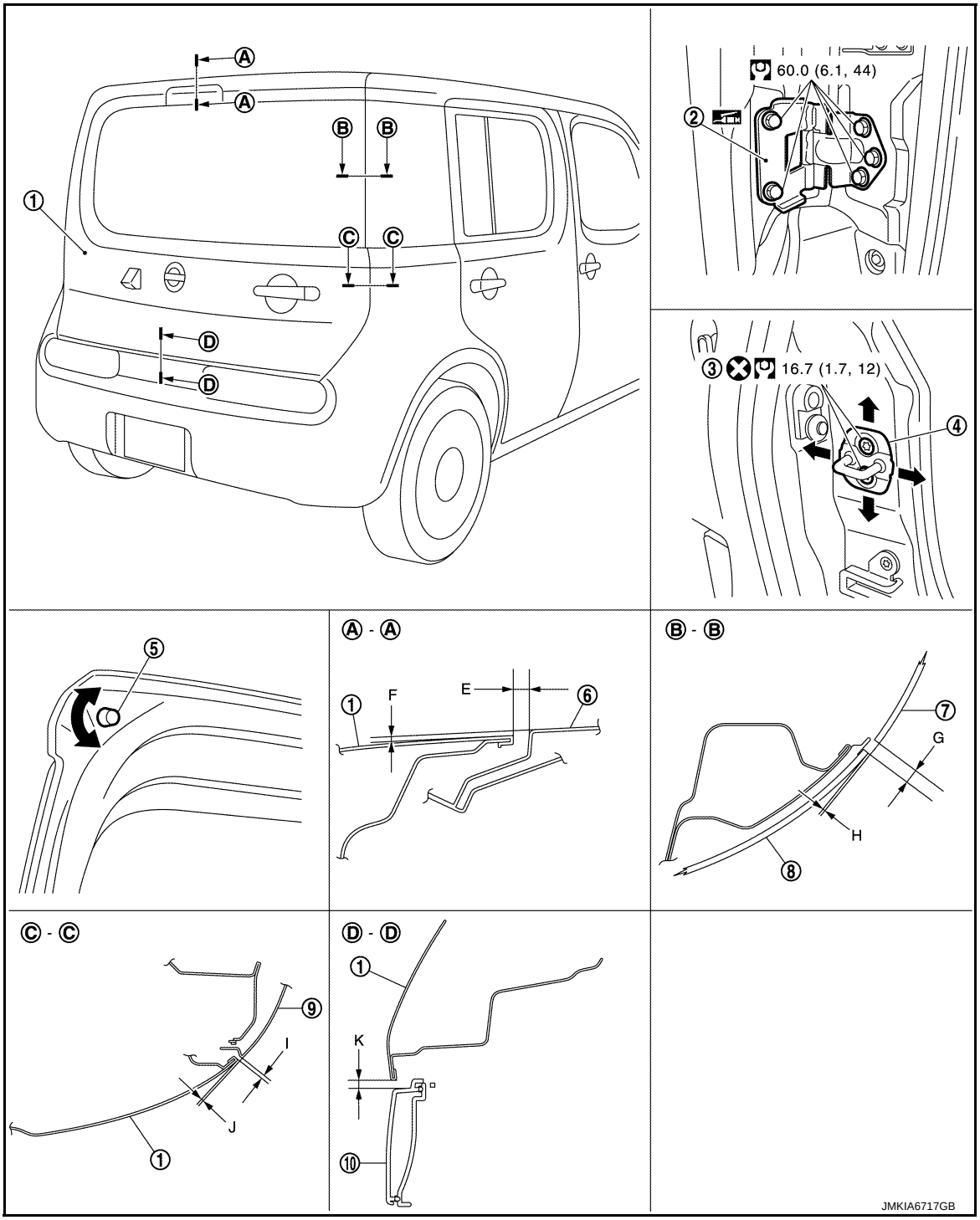

1. Back door panel
2. Back door hinge
3. TORX bolt
4. Back door striker
5. Back door bumper rubber
6. Roof panel
7. Side window glass
8. Back door glass
9. Body side outer panel
10. Back door finisher

Refer to GI-4, "Components" for symbols in the figure.

Check the clearance and the surface height between back door and each part by visually and touching.
If the clearance and the surface height are out of specification, adjust them according to the procedures shown below.

Unit: mm (in)

Portion				Standard	Difference (RH/LH)
Back door – Roof	A – A	E	Clearance	6.1 – 9.9 (0.240 – 0.390)	—
		F	Surface height	-0.6 – 1.4 (-0.024 – 0.055)	—
Side window glass – Back door glass	B – B	G	Clearance	4.4 – 8.4 (0.173 – 0.331)	< 2.0 (0.079)
		H	Surface height	0 – 2.0 (0 – 0.079)	—
Body side outer panel – Back door	C – C	I	Clearance	4.0 – 6.0 (0.157 – 0.236)	< 1.0 (0.039)
		J	Surface height	-1.0 – 1.0 (-0.039 – 0.039)	—
Back door – Back door finisher	D – D	K	Clearance	5.0 – 9.0 (0.197 – 0.354)	—

1. Loosen back door striker mounting bolts.
2. Loosen bumper rubber.
3. Adjust right and left clearances and clearances between rear bumper to the standard value specified in the table, by taping back door striker using a rubber hammer and adjusting back door striker and bumper rubber.
4. Finally tighten back door hinge, bumper rubber, and back door striker.

CAUTION:
- **Check back door hinge rotating part for poor lubrication. If necessary, apply body grease.**
- **After installation, apply touch-up paint (the body color) onto the head of back door hinge mounting nuts.**

BACK DOOR STRIKER ADJUSTMENT

Adjust back door striker so that becomes parallel with back door lock insertion direction.

BACK DOOR STRIKER

BACK DOOR STRIKER : Exploded View

INFOID:0000000007772919

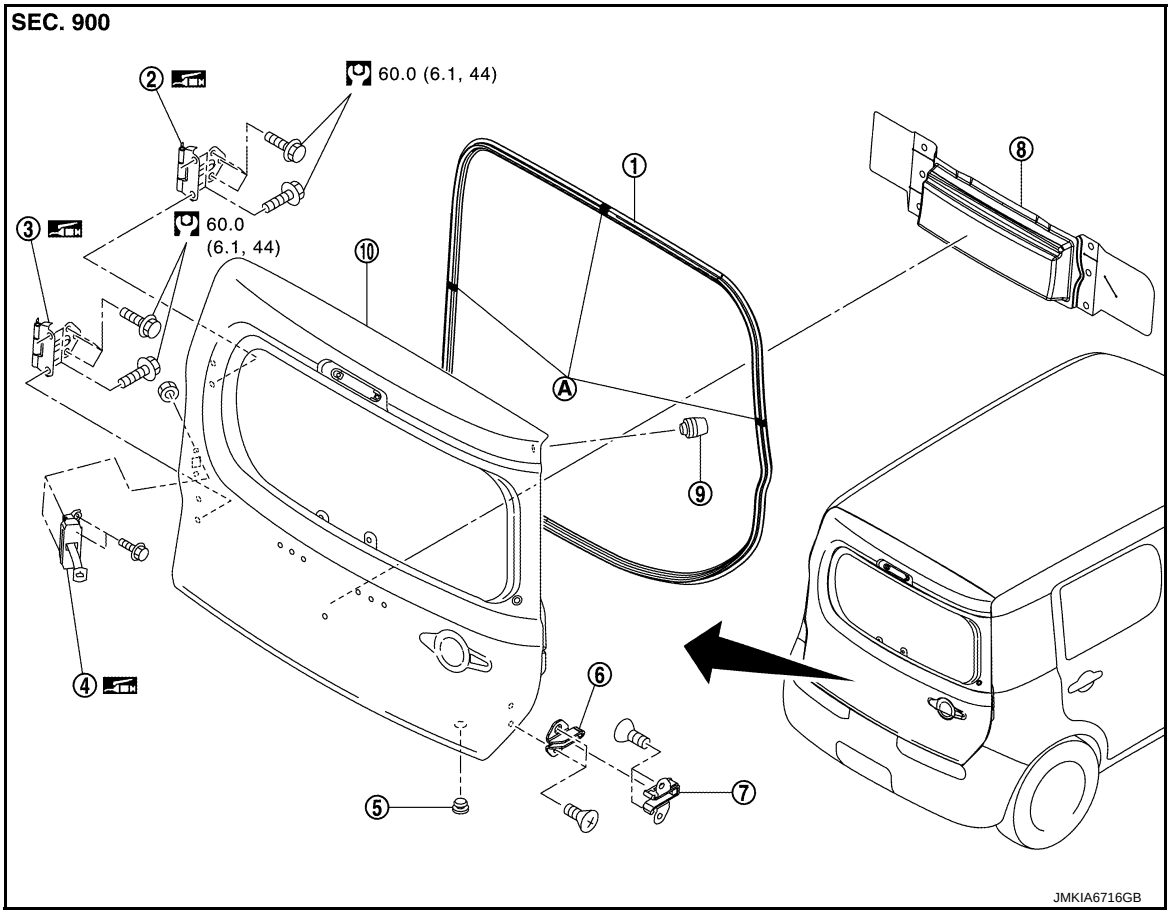

1.	Back door weather-strip	2.	Back door hinge (upper)	3.	Back door hinge (lower)
4.	Door check link	5.	Grommet	6.	Dovetail male
7.	Dovetail female	8.	Sealing screen	9.	Bumper rubber
10.	Back door panel	A	: Center mark		

Refer to GI-4, "Components" for symbols in the figure.

BACK DOOR STRIKER : Removal and Installation

INFOID:0000000007772920

REMOVAL

Remove mounting bolts, and then remove back door striker.

INSTALLATION

Install in the reverse order of removal.

CAUTION:

- **Check back door open/close operation after installation.**
- **When removing and installing back door striker, be sure to perform the fitting adjustment. Refer to DLK-178, "BACK DOOR ASSEMBLY : Adjustment".**

BACK DOOR HINGE

BACK DOOR HINGE : Exploded View

INFOID:0000000007772921

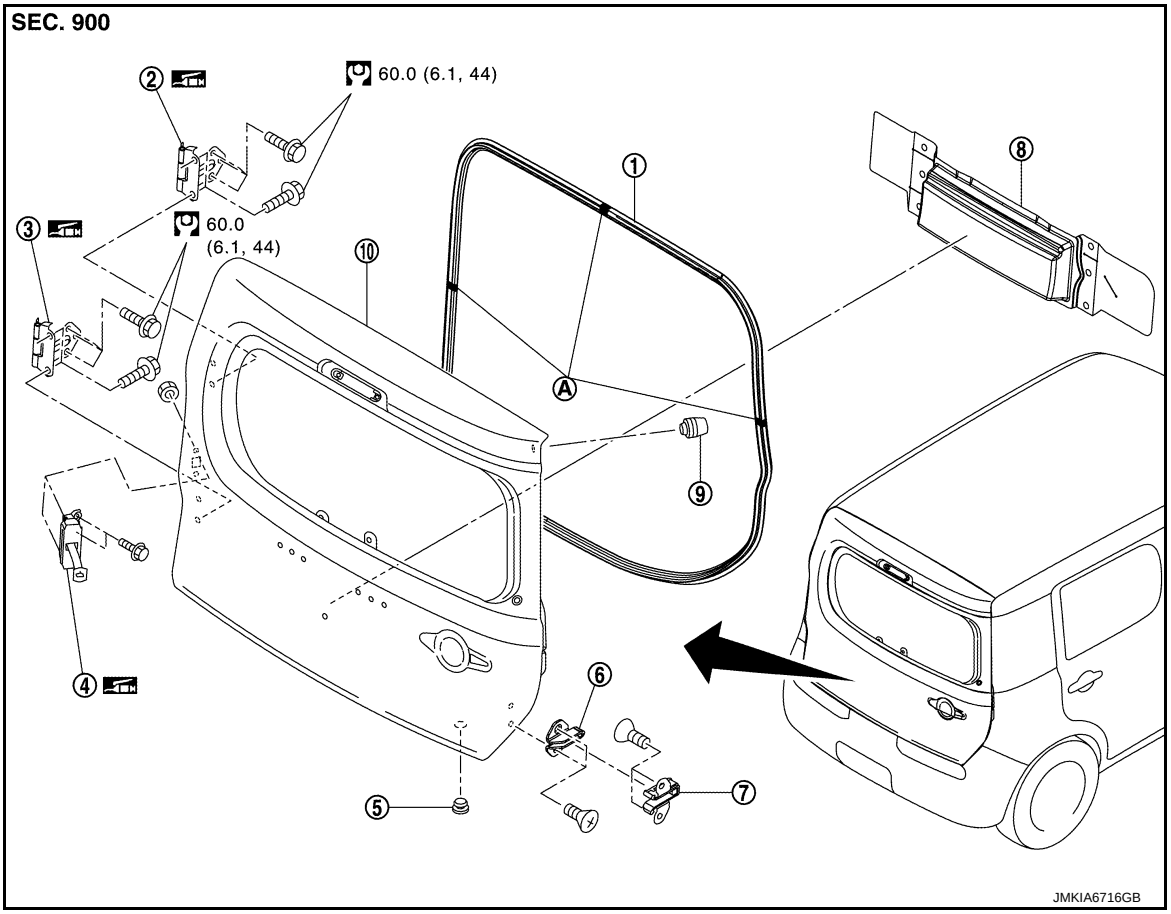

1.	Back door weather-strip	2.	Back door hinge (upper)	3.	Back door hinge (lower)
4.	Door check link	5.	Grommet	6.	Dovetail male
7.	Dovetail female	8.	Sealing screen	9.	Bumper rubber
10.	Back door panel	A	: Center mark		

Refer to GI-4, "Components" for symbols in the figure.

BACK DOOR HINGE : Removal and Installation

INFOID:0000000007772922

CAUTION:
Perform work with 2 workers, because of its heavy weight.

REMOVAL

1. Remove back door assembly. Refer to DLK-176, "BACK DOOR ASSEMBLY : Removal and Installation".
2. Remove back door hinge mounting bolts (body side), and then remove back door hinge.

INSTALLATION

Install in the reverse order of removal.

CAUTION:

- **Check back door open/close operation after installation.**
- **Check back door hinge rotating part for poor lubrication. If necessary, apply body grease.**
- **When removing and installing back door assembly, perform the fitting adjustment. Refer to DLK-178, "BACK DOOR ASSEMBLY : Adjustment".**
- **After installation, apply touch-up paint (the body color) onto the head of back door hinge mounting nuts.**

DOOR CHECK LINK

DOOR CHECK LINK : Exploded View

INFOID:0000000007772923

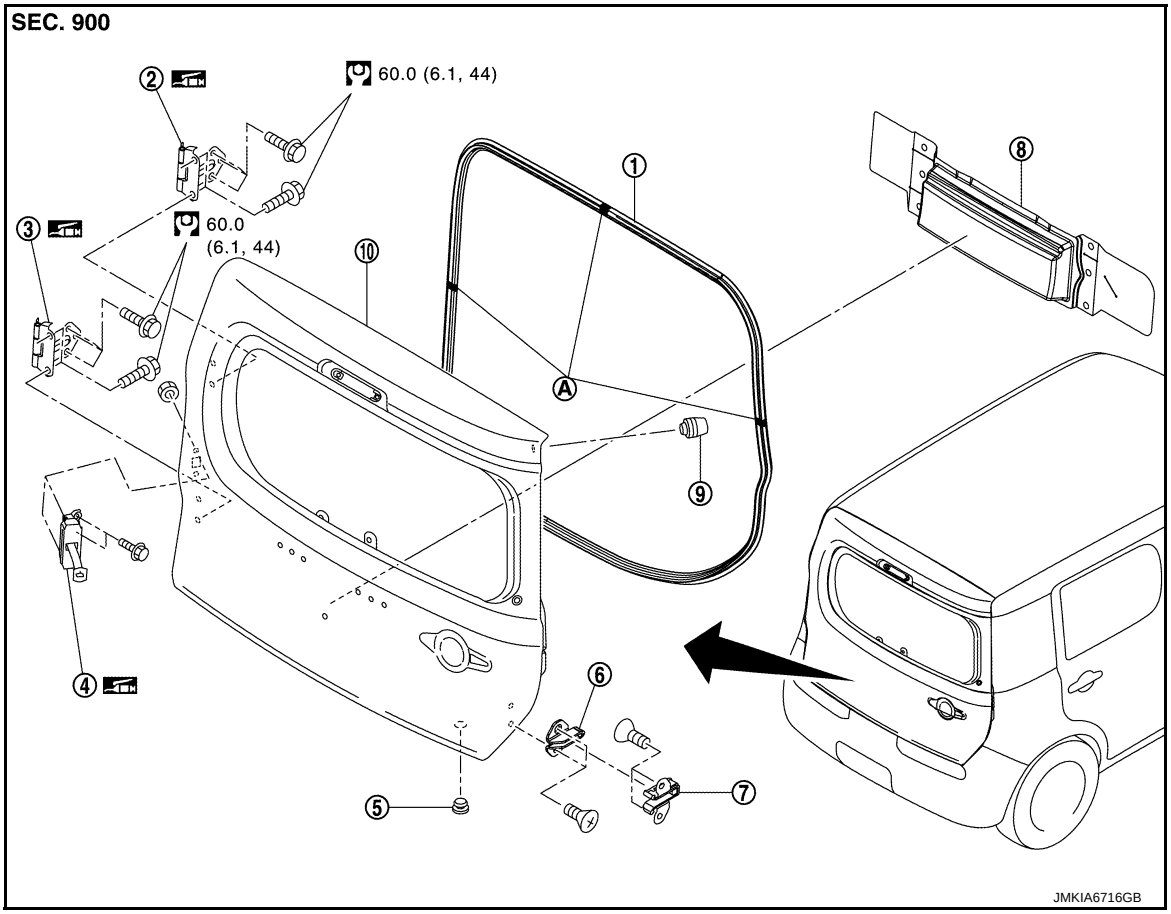

1.	Back door weather-strip	2.	Back door hinge (upper)	3.	Back door hinge (lower)
4.	Door check link	5.	Grommet	6.	Dovetail male
7.	Dovetail female	8.	Sealing screen	9.	Bumper rubber
10.	Back door panel	A	: Center mark		

Refer to GI-4, "Components" for symbols in the figure.

DOOR CHECK LINK : Removal and Installation

INFOID:0000000007772924

REMOVAL

1. Remove back door finisher lower. Refer to INT-27, "Removal and Installation".
2. Remove sealing screen.
   NOTE:
   Cut the butyl-tape so that some part of the butyl-tape do not remain on the sealing screen, if the sealing screen is reused.
3. Remove mounting bolts of door check link on the vehicle.
4. Remove mounting nuts of door check link on the back door panel.
5. Take door check link out from the hole of back door panel.

INSTALLATION

Install in the reverse order of removal.

CAUTION:

Check back door open/close operation after installation.

DOVETAIL

DOVETAIL : Exploded View

INFOID:0000000007772925

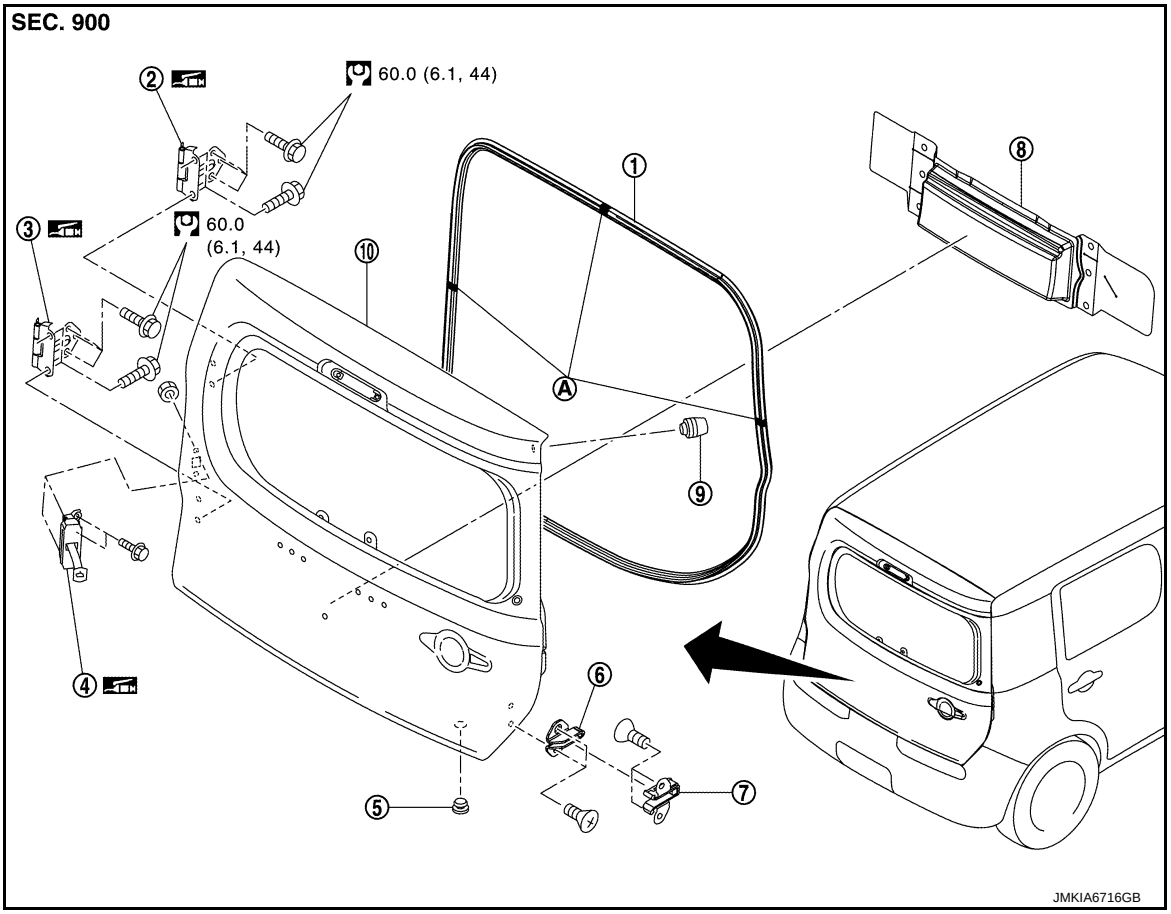

1.	Back door weather-strip	2.	Back door hinge (upper)	3.	Back door hinge (lower)
4.	Door check link	5.	Grommet	6.	Dovetail male
7.	Dovetail female	8.	Sealing screen	9.	Bumper rubber
10.	Back door panel	A	: Center mark		

Refer to GI-4, "Components" for symbols in the figure.

DOVETAIL : Removal and Installation

INFOID:0000000007772926

REMOVAL

1. Remove mounting bolts, and then remove dovetai (male).
2. Remove mounting bolts, and then remove dovetai (female).

INSTALLATION

Install in the reverse order of removal.

CAUTION:

Check back door open/close operation after installation.

BACK DOOR WEATHER-STRIP

BACK DOOR WEATHER-STRIP : Exploded View

INFOID:0000000007772927

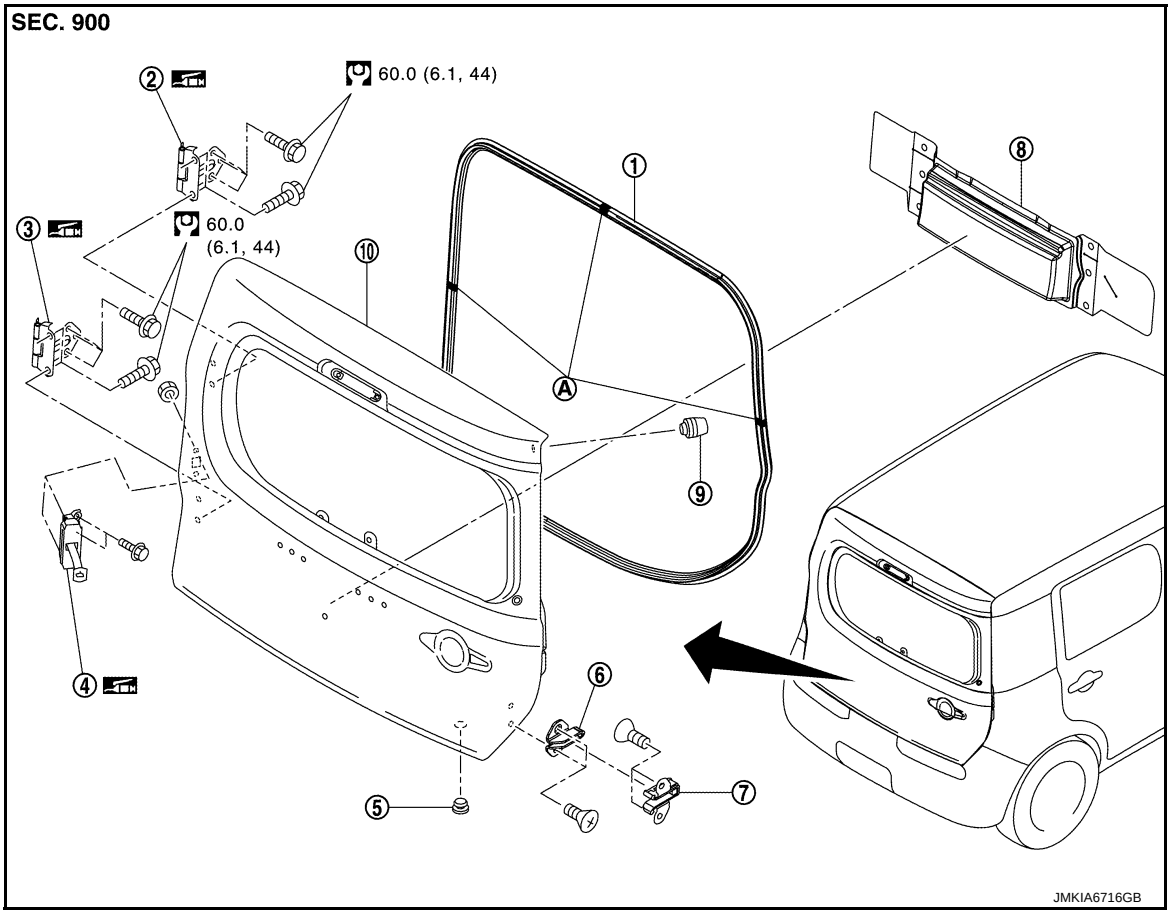

1.	Back door weather-strip	2.	Back door hinge (upper)	3.	Back door hinge (lower)
4.	Door check link	5.	Grommet	6.	Dovetail male
7.	Dovetail female	8.	Sealing screw	9.	Bumper rubber
10.	Back door panel	A	: Center mark		

Refer to GI-4, "Components" for symbols in the figure.

BACK DOOR WEATHER-STRIP : Removal and Installation

INFOID:0000000007772928

REMOVAL

1. Pull and remove engagement with body from weather-strip joint.
   CAUTION:
   Never pull strongly on weather-strip.

INSTALLATION

1. Working from the upper section, align weather-strip center mark (A) with vehicle center mark (cutting position) and install weather-strip onto the vehicle.
2. Pull weather-strip gently to ensure that there is no loose section.
   NOTE:
   Make sure that weather-strip is fit tightly at each corner and luggage rear plate.

HOOD LOCK

Exploded View

INFOID:0000000007772929

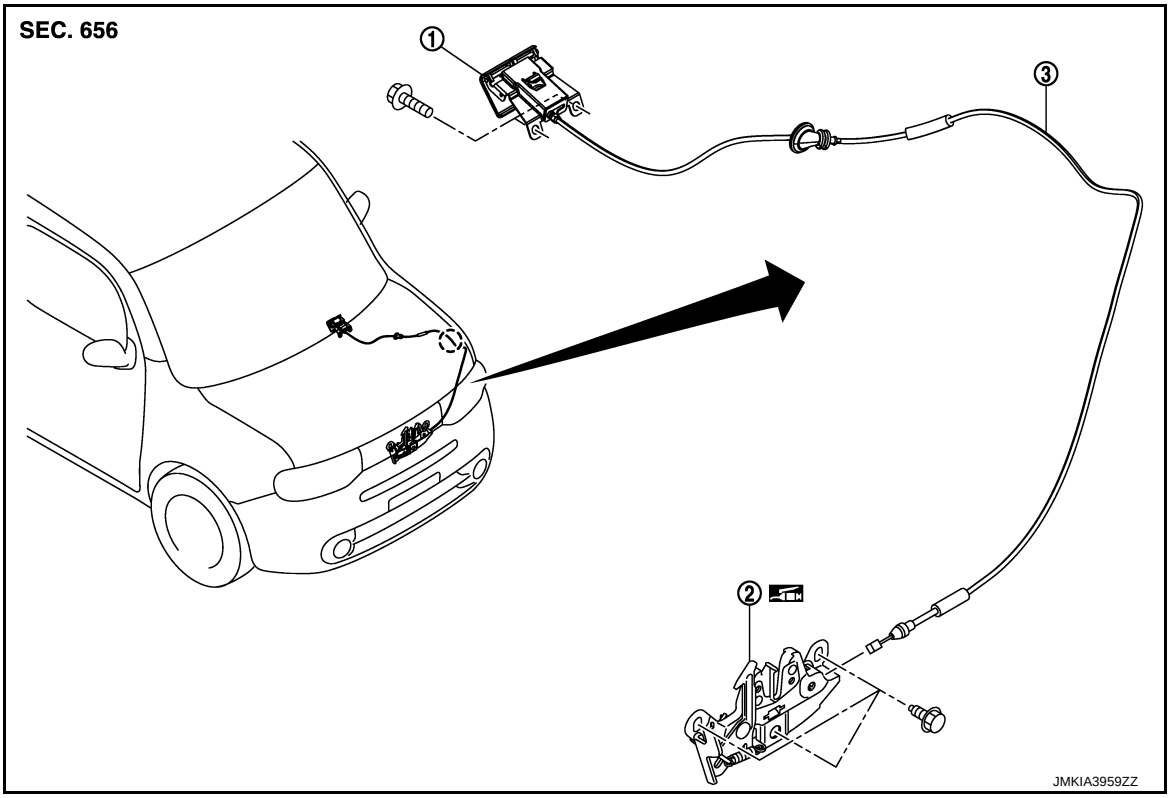

1. Hood lock opener lever
2. Hood lock assembly
3. Hood lock control cable

: Clip

Refer to GI-4, "Components" for symbols in the figure.

Removal and Installation

INFOID:0000000007772930

REMOVAL

1. Remove front grille. Refer to EXT-17, "Removal and Installation".
2. Remove mounting bolts, and then remove hood lock assembly.
3. Disconnect hood lock cable from hood lock assembly.
4. Remove hood lock cable clip.
5. Remove fender protector (LH). Refer to EXT-21, "FENDER PROTECTOR : Removal and Installation".
6. Remove hood lock opener lever.
7. Disconnect hood lock cable from hood lock opener lever.
8. Remove grommet on the lower dash, and pull the hood lock control cable toward the passenger compartment.
   CAUTION:
   While pulling, never to damage (peeling) the outside of hood lock control cable.

INSTALLATION

Install in the reverse order of removal.

CAUTION:

- **Never to bend cable too much, keeping the radius 100 mm (3.937 in) or more.**

- **Check that cable is not offset from the positioning grommet, and apply the sealant to the grommet (at * mark) properly.**

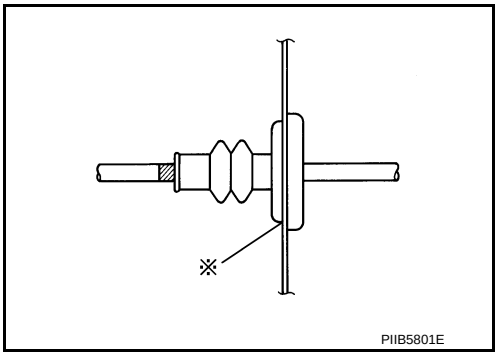

- **Check that hood lock control cable is properly engaged with hood lock.**
- **After installation, perform hood fitting adjustment. Refer to DLK-158, "HOOD ASSEMBLY : Adjustment".**
- **After installation, perform hood lock control inspection. Refer to DLK-186, "Inspection".**

Inspection

INFOID:0000000007772931

NOTE:
If the hood lock cable is bent or deformed, replace it.

1. Check that secondary latch is properly engaged with secondary striker [6.8 mm (0.268 in)] by hood weight.
2. While operating hood opener, carefully check that the front end of hood is raised by approximately 20.0 mm (0.787 in). Also check that hood opener returns to the original position.
3. Check that hood opener operating is condition 49 N (5.0 kg, 11.0 lb) or below.
4. Install so that static closing face of hood is 94 – 490 N·m (9.6 – 50.0 kg-m, 69 – 361 ft – lb).
   NOTE:
   - Exert vertical force on right side and left side of hood lock.
   - Never press simultaneously both sides.
5. Check the hood lock lubrication condition. If necessary, apply body grease to hood lock.

FRONT DOOR LOCK

DOOR LOCK

DOOR LOCK : Exploded View

INFOID:0000000007772932

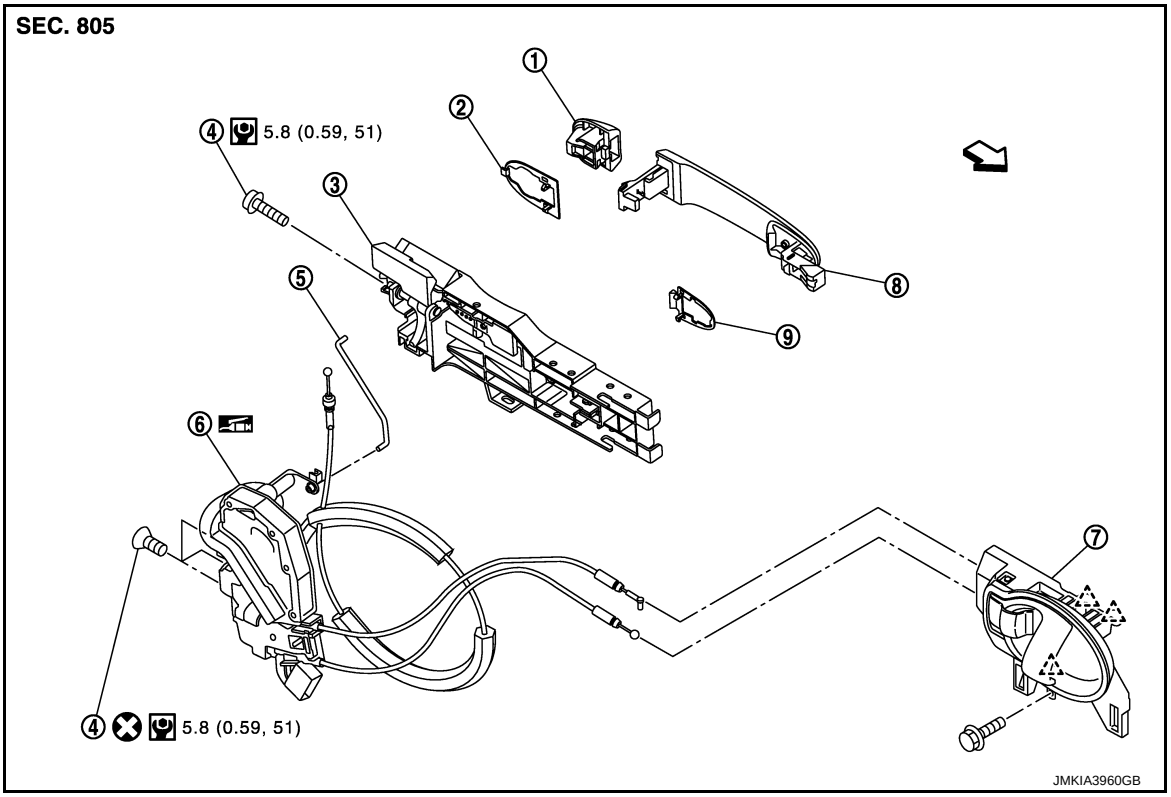

1.	Door key cylinder assembly (driver side) Outside handle escutcheon (passenger side)	2.	Rear gasket	3.	Outside handle bracket
4.	TORX bolt	5.	Key rod (driver side)	6.	Door lock assembly
7.	Inside handle	8.	Outside handle	9.	Front gasket

: Pawl

: Vehicle front

Refer to GI-4, "Components" for symbols in the figure.

DOOR LOCK : Removal and Installation

INFOID:0000000007772933

REMOVAL

1. Remove front door finisher. Refer to INT-12, "Removal and Installation".
2. Remove sealing screen.
   NOTE:
   Cut the butyl-tape so that some parts of the butyl-tape do not remain on the sealing screen, if the sealing screen is reused.
3. Remove front door glass. Refer to GW-18, "Removal and Installation".
4. Remove front door lower sash (rear). Refer to GW-18, "Removal and Installation".
5. Remove outside handle. Refer to DLK-189, "OUTSIDE HANDLE : Removal and Installation".
6. Remove inside handle. Refer to DLK-188, "INSIDE HANDLE : Removal and Installation".
7. Remove door lock assembly TORX bolts.
8. Disconnect door lock actuator connector, and then remove door lock assembly.

INSTALLATION

Install in the reverse order of removal.

CAUTION:

- **Check door open/close, lock/unlock operation after installation.**
- **Check door lock cable is properly engaged with outside handle bracket.**

INSIDE HANDLE

INSIDE HANDLE : Exploded View

INFOID:0000000007772934

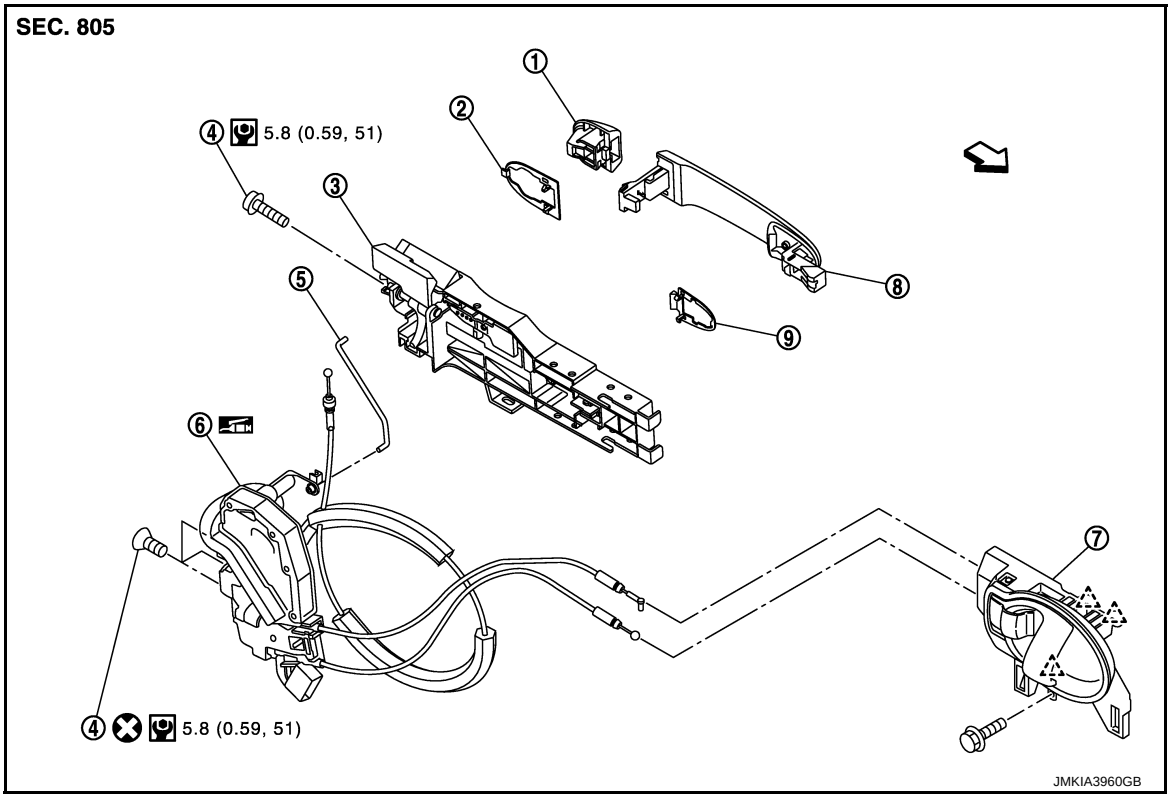

1.	Door key cylinder assembly (driver side) Outside handle escutcheon (passenger side)	2.	Rear gasket	3.	Outside handle bracket
4.	TORX bolt	5.	Key rod (driver side)	6.	Door lock assembly
7.	Inside handle	8.	Outside handle	9.	Front gasket

: Pawl

: Vehicle front

Refer to GI-4, "Components" for symbols in the figure.

INSIDE HANDLE : Removal and Installation

INFOID:0000000007772935

REMOVAL

1. Remove front door finisher. Refer to INT-12, "Removal and Installation".
2. Remove inside handle mounting bolts, slide handle toward rear of vehicle, disengage handle from door panel, and remove inside handle.

INSTALLATION

Install in the reverse order of removal.

CAUTION:

Check door open/close, lock/unlock operation after installation.

OUTSIDE HANDLE

OUTSIDE HANDLE : Exploded View

INFOID:0000000007772936

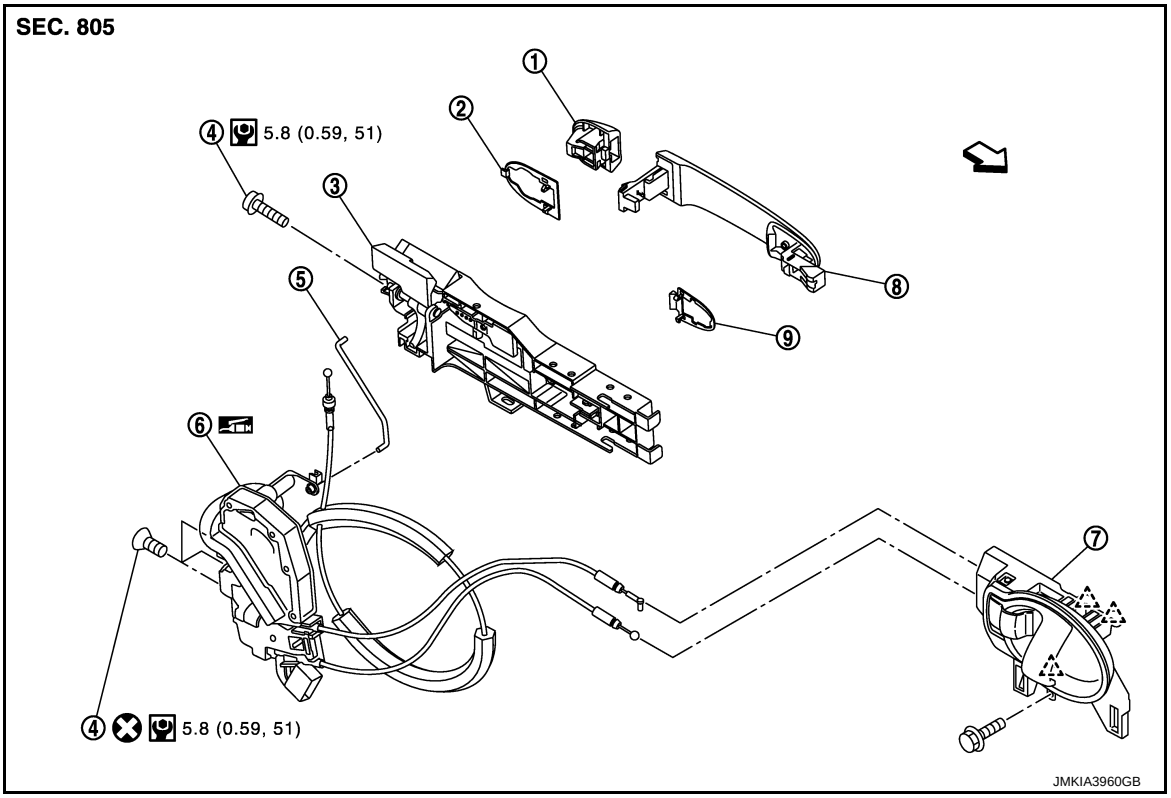

1.	Door key cylinder assembly (driver side) Outside handle escutcheon (passenger side)	2.	Rear gasket	3.	Outside handle bracket
4.	TORX bolt	5.	Key rod (driver side)	6.	Door lock assembly
7.	Inside handle	8.	Outside handle	9.	Front gasket

: Pawl

: Vehicle front

Refer to GI-4, "Components" for symbols in the figure.

OUTSIDE HANDLE : Removal and Installation

INFOID:0000000007772937

REMOVAL

1. Remove front door finisher. Refer to INT-12, "Removal and Installation".
2. Fully close the front door glass.
3. Remove sealing screen.
   NOTE:
   Cut the butyl-tape so that some parts of the butyl-tape do not remain on the sealing screen, if the sealing screen is reused.
4. Remove front door lower sash (rear). Refer to GW-18, "Removal and Installation".
5. Disconnect key rod (driver side).
6. Disconnect door antenna and door request switch connector and remove harness clamp (with Intelligent Key system) on outside handle bracket.

7. Remove door side grommet, and loosen TORX bolt from grommet hole.

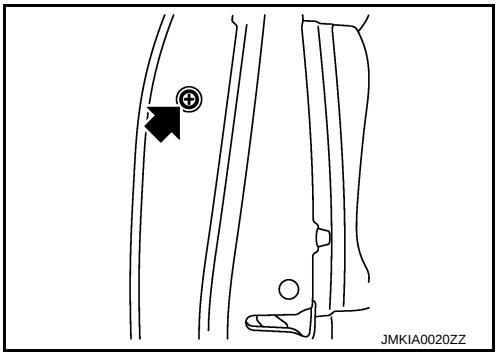

8. While pulling outside handle, remove door key cylinder assembly (diver side) or outside handle escutcheon (passenger side).

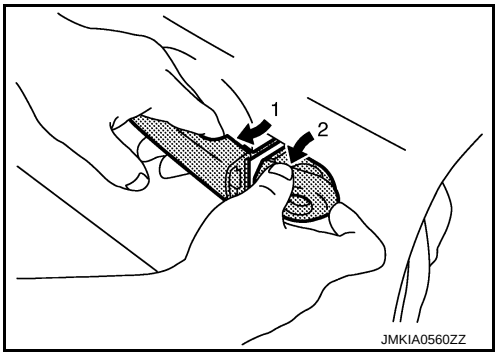

9. While pulling outside handle (1), slide toward rear of vehicle to remove outside handle.

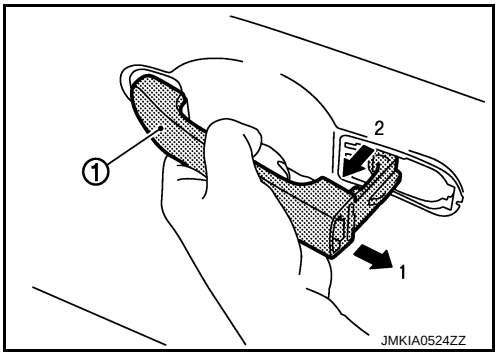

10. Remove front gasket and rear gasket.
11. While pulling outside handle bracket, slide toward rear of vehicle to remove outside handle bracket.
12. Reach in to separate outside handle cable connection on outside handle bracket.

INSTALLATION

Install in the reverse order of removal.

CAUTION:

- **Check door open/close, lock/unlock operation after installation.**
- **Check door lock cable is properly engaged with outside handle bracket.**

REAR DOOR LOCK

DOOR LOCK

DOOR LOCK : Exploded View

INFOID:0000000007772938

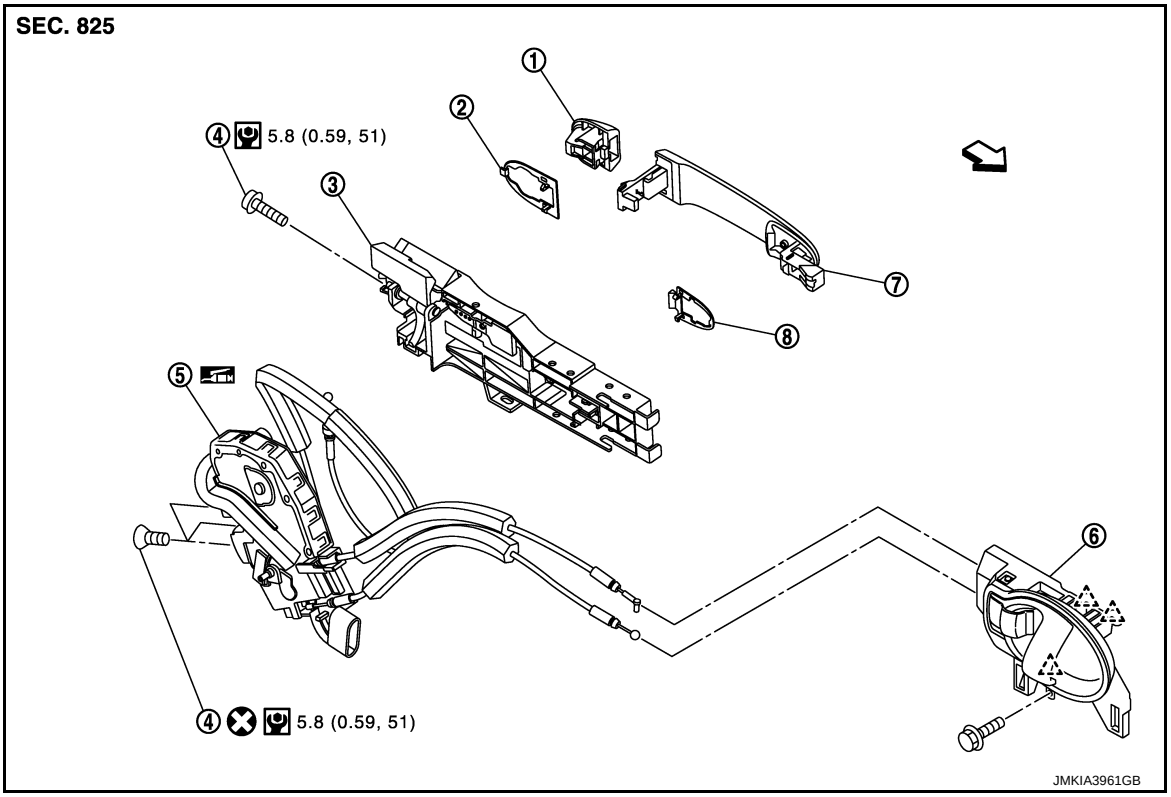

1.	Outside handle escutcheon	2.	Rear gasket	3.	Outside handle bracket
4.	TORX bolt	5.	Door lock assembly	6.	Inside handle
7.	Outside handle	8.	Front gasket		

: Pawl

: Vehicle front

Refer to GI-4, "Components" for symbols in the figure.

DOOR LOCK : Removal and Installation

INFOID:0000000007772939

REMOVAL

1. Remove rear door finisher. Refer to INT-14, "Removal and Installation".
2. Remove sealing screen.
   NOTE:
   Cut the butyl-tape so that some parts of the butyl-tape do not remain on the sealing screen, if the sealing screen is reused.
3. Remove rear door glass. Refer to GW-23, "Removal and Installation".
4. Remove outside handle. Refer to DLK-193, "OUTSIDE HANDLE : Removal and Installation".
5. Remove inside handle. Refer to DLK-192, "INSIDE HANDLE : Removal and Installation".
6. Remove door lock assembly TORX bolts.
7. Disconnect door lock actuator connector, and then remove door lock assembly.

INSTALLATION

Install in the reverse order of removal.

CAUTION:

- **Check door open/close, lock/unlock operation after installation.**

- **Check door lock cable is properly engaged with outside handle bracket.**

INSIDE HANDLE

INSIDE HANDLE : Exploded View

INFOID:0000000007772940

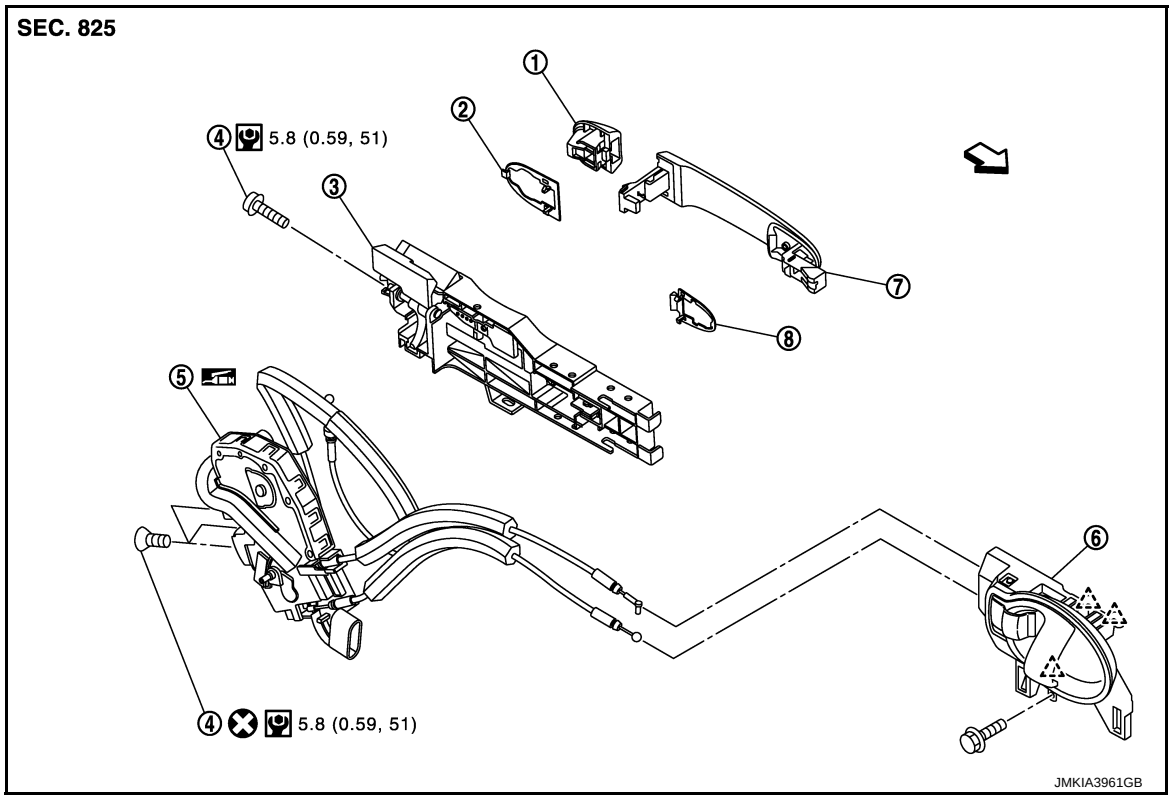

1.	Outside handle escutcheon	2.	Rear gasket	3.	Outside handle bracket
4.	TORX bolt	5.	Door lock assembly	6.	Inside handle
7.	Outside handle	8.	Front gasket		

: Pawl

: Vehicle front

Refer to GI-4, "Components" for symbols in the figure.

INSIDE HANDLE : Removal and Installation

INFOID:0000000007772941

REMOVAL

1. Remove rear door finisher. Refer to INT-14, "Removal and Installation".
2. Remove inside handle mounting bolts, slide handle toward rear of vehicle, disengage handle from door panel, and remove inside handle.

INSTALLATION

Install in the reverse order of removal.

CAUTION:

Check door open/close, lock/unlock operation after installation.

OUTSIDE HANDLE

OUTSIDE HANDLE : Exploded View

INFOID:0000000007772942

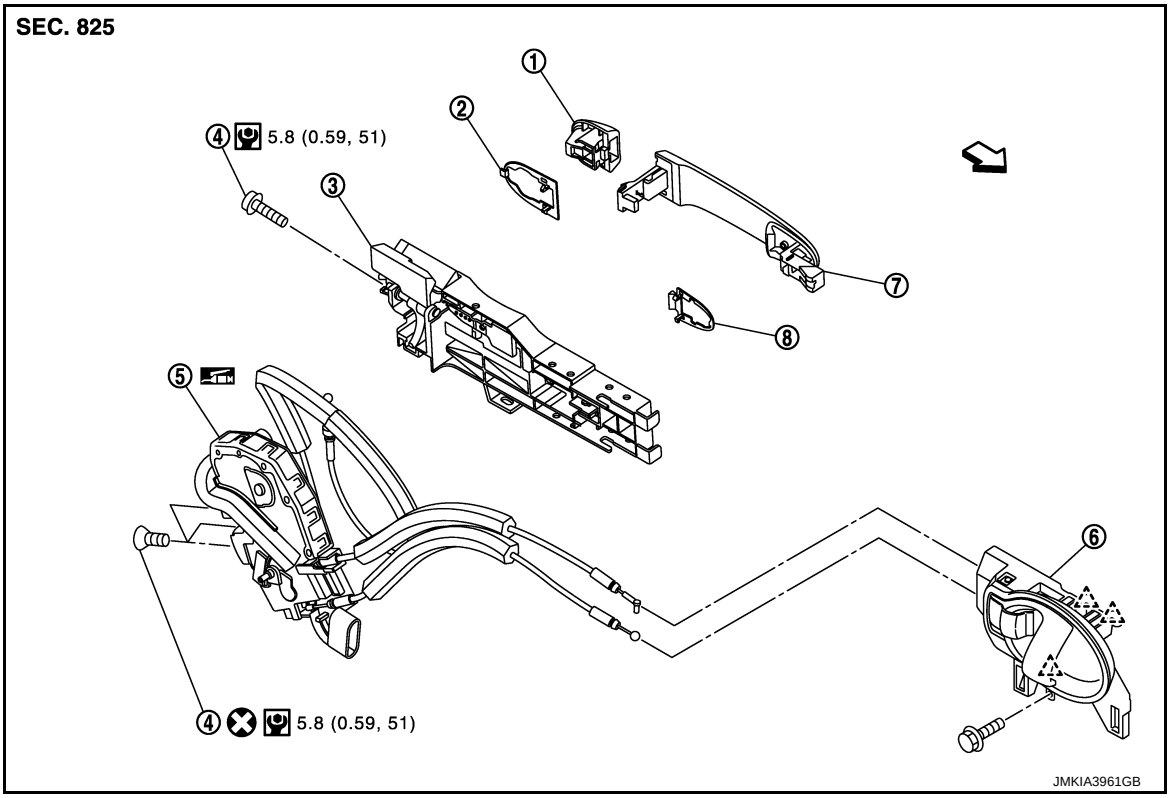

1.	Outside handle escutcheon	2.	Rear gasket	3.	Outside handle bracket
4.	TORX bolt	5.	Door lock assembly	6.	Inside handle
7.	Outside handle	8.	Front gasket		

: Pawl

: Vehicle front

Refer to GI-4, "Components" for symbols in the figure.

OUTSIDE HANDLE : Removal and Installation

INFOID:0000000007772943

REMOVAL

1. Remove rear door finisher. Refer to INT-14, "Removal and Installation".
2. Fully close rear door glass.
3. Remove sealing screen.
   NOTE:
   Cut the butyl-tape so that some parts of the butyl-tape do not remain on the sealing screen, if the sealing screen is reused.
4. Remove door side grommet, and loosen TORX bolt from grommet hole.

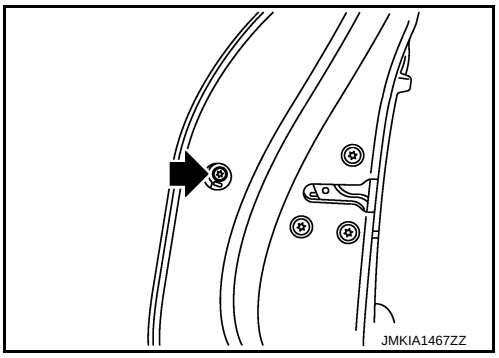

5. While pulling outside handle, remove outside handle escutcheon.

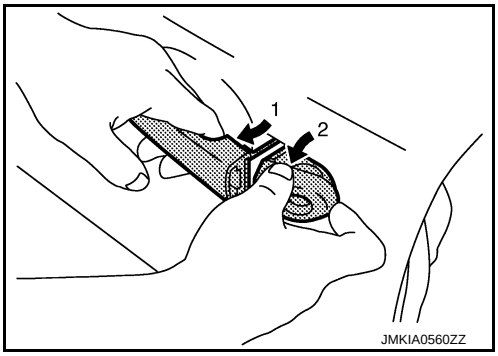

6. While pulling outside handle (1), slide toward rear of vehicle to remove outside handle.

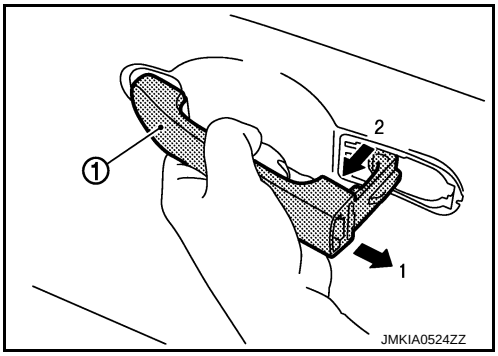

7. Remove front gasket and rear gasket.
8. While pulling outside handle bracket, slide toward rear of vehicle to remove outside handle bracket.
9. Reach in to separate outside handle cable connection on outside handle bracket.

INSTALLATION

Install in the reverse order of removal.

CAUTION:

- **Check door open/close, lock/unlock operation after installation.**
- **Check door lock cable is properly engaged with outside handle bracket.**

BACK DOOR LOCK

DOOR LOCK

DOOR LOCK : Exploded View

INFOID:0000000007772944

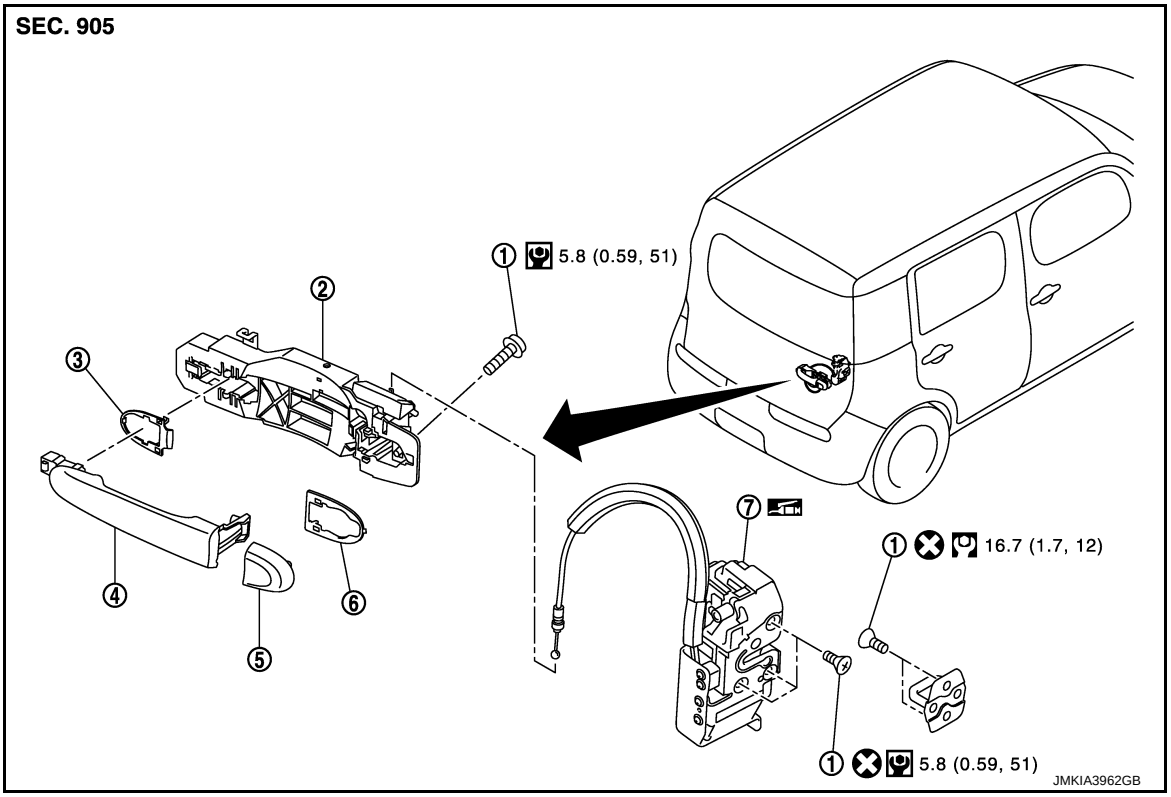

1. TORX bolt	2. Outside handle bracket	3. Rear gasket
4. Outside handle	5. Outside handle escutcheon	6. Front gasket
7. Back door lock assembly		

Refer to GI-4, "Components" for symbols in the figure.

DOOR LOCK : Removal and Installation

INFOID:0000000007772945

REMOVAL

1. Remove back door finisher lower. Refer to INT-27, "Removal and Installation".
2. Remove sealing screen.
   NOTE:
   Cut the butyl-tape so that some parts of the butyl-tape do not remain on the sealing screen, if the sealing screen is reused.
3. Remove back door outside handle. Refer to DLK-196, "OUTSIDE HANDLE : Removal and Installation".
4. Remove back door lock assembly mounting bolts.
5. Disconnect harness connector from back door lock assembly.
6. Remove back door lock assembly.

INSTALLATION

Install in the reverse order of removal.

CAUTION:

- **Check back door open/close, lock/unlock operation after installation.**
- **Check door lock cable is properly engaged with outside handle bracket.**

OUTSIDE HANDLE

OUTSIDE HANDLE : Exploded View

INFOID:0000000007772946

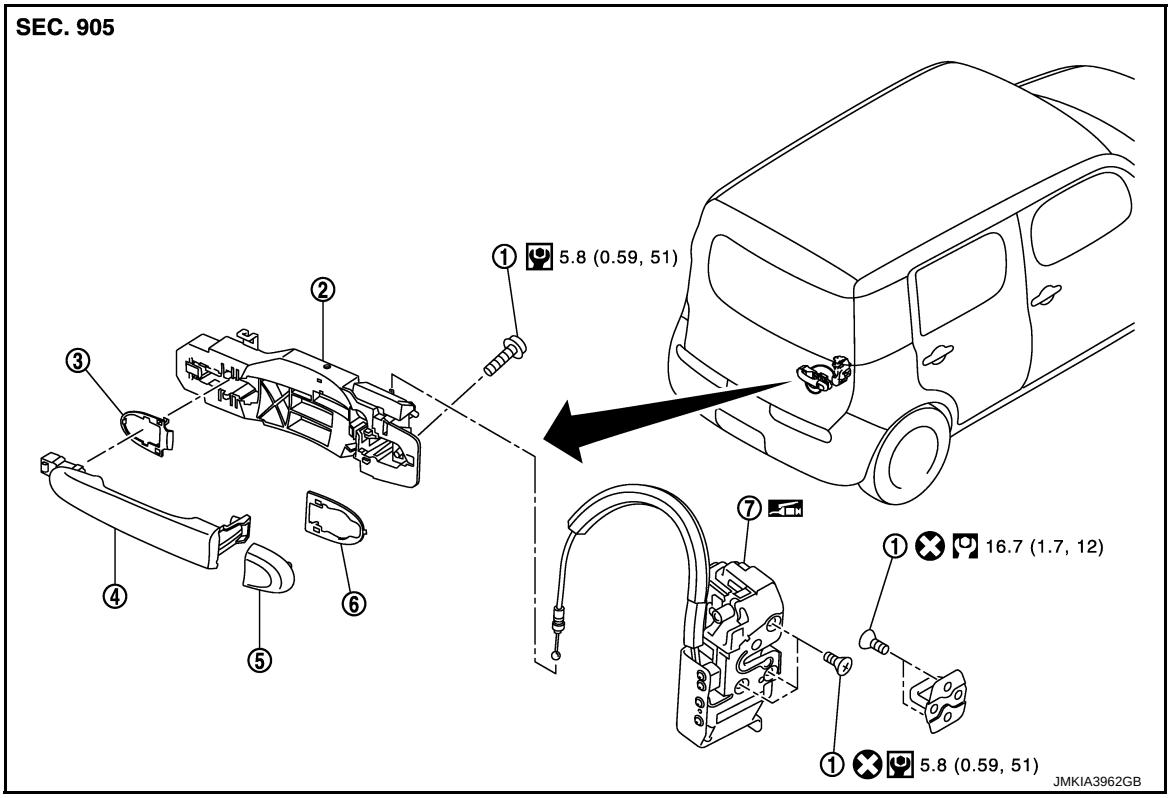

1. TORX bolt
2. Outside handle bracket
3. Rear gasket
4. Outside handle
5. Outside handle escutcheon
6. Front gasket
7. Back door lock assembly

Refer to GI-4, "Components" for symbols in the figure.

OUTSIDE HANDLE : Removal and Installation

INFOID:0000000007772947

REMOVAL

1. Remove back door finisher lower. Refer to INT-27, "Removal and Installation".
2. Remove sealing screeen.
   NOTE:
   Cut the butyl-tape so that some parts of the butyl-tape do not remain on the sealing screen, if the sealing screen is reused.
3. Disconnect back door antenna and back door request switch connector and remove harness clamp (with intelligent key system) on outside handle bracket.
4. Remove mounting bolt of outside handle bracket.
5. While pulling outside handle, remove outside habdle escutcheon.

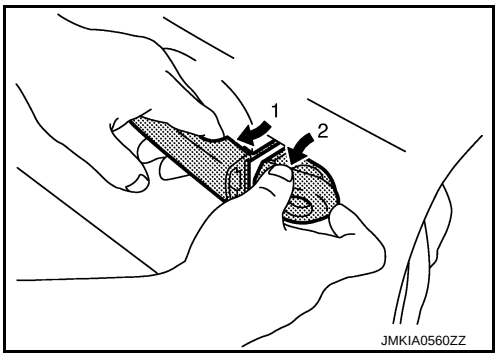

6. While pulling outside handle (1), slide toward rear of vehicle to remove outside handle.

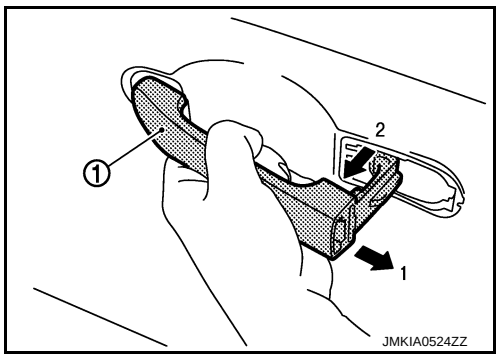

7. Remove front gasket and rear gasket.
8. While pulling outside handle bracket, slide toward rear of vehicle to remove outside handle bracket.
9. Reach in to separate outside handle cable connection on outside handle bracket.

INSTALLATION

Install in the reverse order of removal.

CAUTION:

- **Check back door open/close operation after installation.**
- **Check door lock cable is properly engaged with outside handle bracket.**

EMERGENCY LEVER

EMERGENCY LEVER : Unlock procedures

INFOID:0000000007772948

UNLOCK PROCEDURES

NOTE:

If back door lock cannot be unlocked due to a malfunction or battery discharge, follow the procedures to unlock back door.

1. Remove back door finisher lower. Refer to INT-27, "Removal and Installation".
2. Remove sealing screen.
   NOTE:
   Cut the butyl-tape so that some parts of the butyl-tape do not remain on the sealing screen, if the sealing screen is reused.
3. From inside the vehicle, rotate emergency lever (1) toward lower direction and unlock.

   ⇦ : Vehicle front

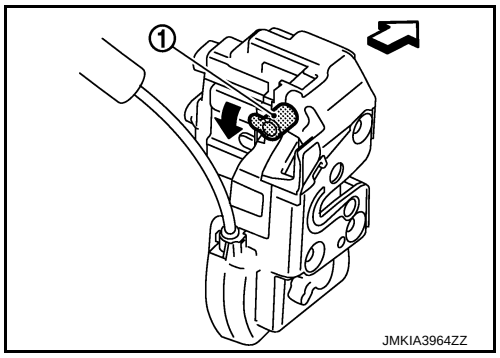

FUEL FILLER LID OPENER

Exploded View

INFOID:0000000007772949

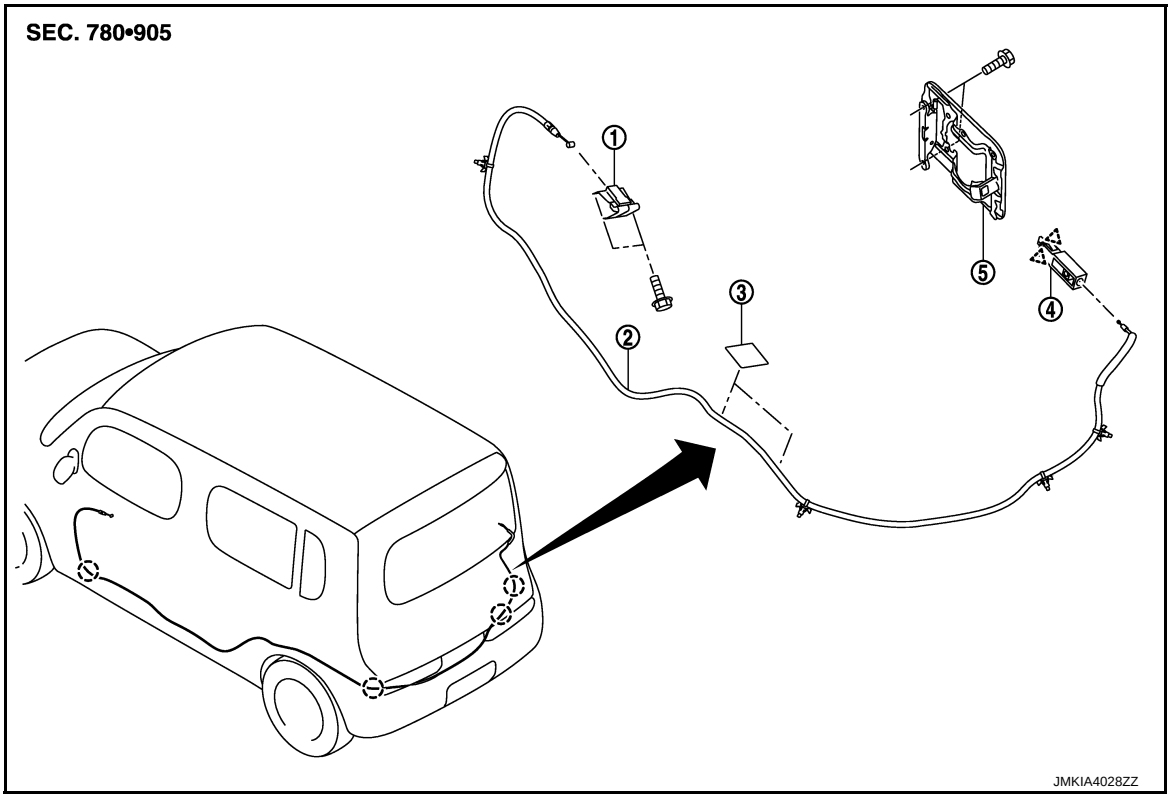

1. Fuel filler lid opener handle
2. Fuel filler lid opener cable
3. Cable protector
4. Fuel filler lid lock assembly
5. Fuel filler lid assembly

: Clip

: Pawl

Removal and Installation

INFOID:0000000007772950

REMOVAL

FUEL FILLER LID

1. Fully open fuel filler lid.
2. Remove mounting screws, and then remove fuel filler lid.

FUEL FILLER LID OPENER CABLE

1. Fully open fuel filler lid.
2. Remove dash side finisher (LH). Refer to INT-16, "Removal and Installation".
3. Remove front kicking plate inner (LH). Refer to INT-16, "Removal and Installation".
4. Remove center pillar lower garnish (LH). Refer to INT-16, "Removal and Installation".
5. Remove rear kicking plate inner (LH). Refer to INT-16, "Removal and Installation".
6. Remove luggage side finisher (LH) (upper/lower). Refer to INT-24, "Removal and Installation".
7. Remove center seat belt retractor. Refer to SB-11, "SEAT BELT RETRACTOR : Removal and Installation".
8. Remove mounting bolts, and then remove fuel filler lid opener handle.
9. Remove fuel filler lid opener cable from fuel filler lid opener handle.
10. Push fuel filler lid lock assembly front the vehicle, while pushing the pawls.

11. Remove fuel filler lid opener cable from fuel filler lid lock assembly.
12. Pull up floor trim. Refer to INT-19, "Removal and Installation".
13. Remove fuel filler lid opener cable mounting clips.
14. Remove fuel filler lid opener cable.

INSTALLATION

Install in the reverse order of removal.

DOOR SWITCH

Exploded View

INFOID:0000000007772951

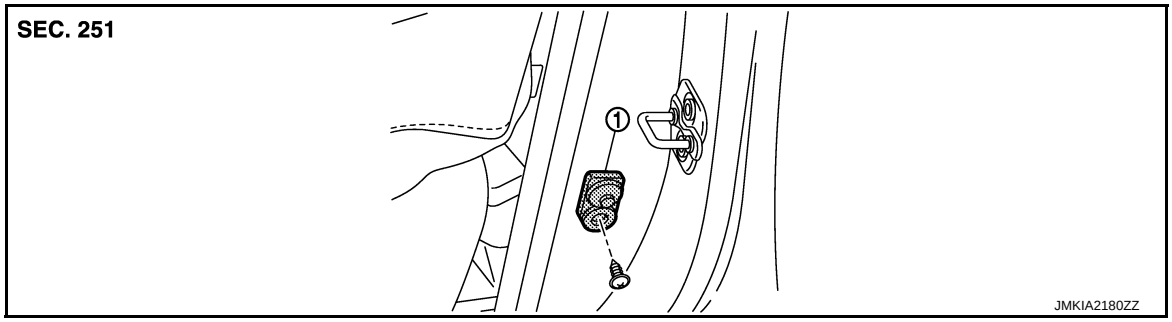

1. Door switch

Removal and Installation

INFOID:0000000007772952

REMOVAL

1. Remove the door switch mounting bolt (A), and then remove door switch (1).

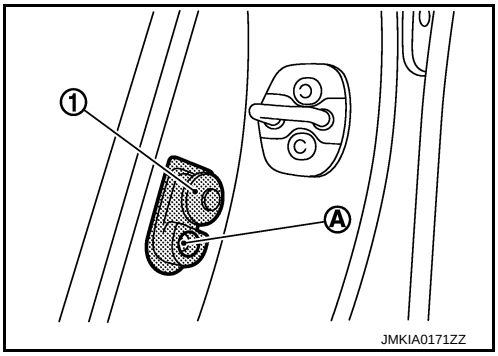

INSTALLATION

Install in the reverse order of removal.

INSIDE KEY ANTENNA

INSTRUMENT CENTER

INSTRUMENT CENTER : Exploded View

INFOID:0000000007772953

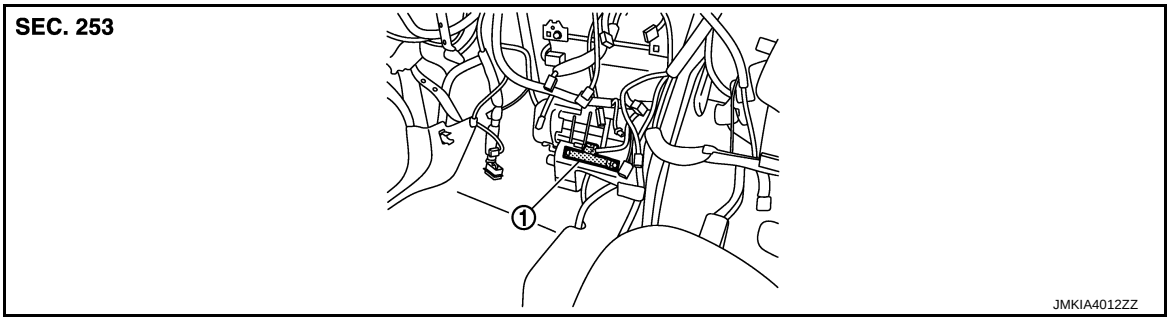

1. Inside key antenna (instrument center)

INSTRUMENT CENTER : Removal and Installation

INFOID:0000000007772954

REMOVAL

1. Remove the audio unit. Refer to AV-55, "Removal and Installation".
2. Remove the inside key antenna (instrument center) mounting screw (A), and then remove inside key antenna (instrument center) (1).

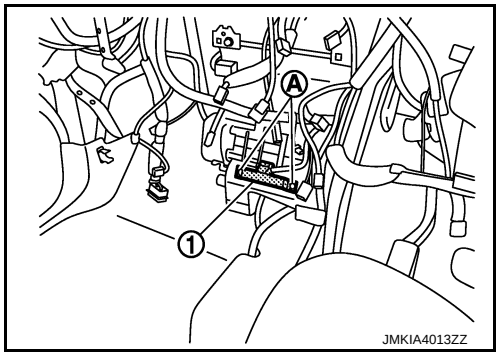

INSTALLATION

Install in the reverse order of removal.

LUGGAGE ROOM

LUGGAGE ROOM : Exploded View

INFOID:0000000007772955

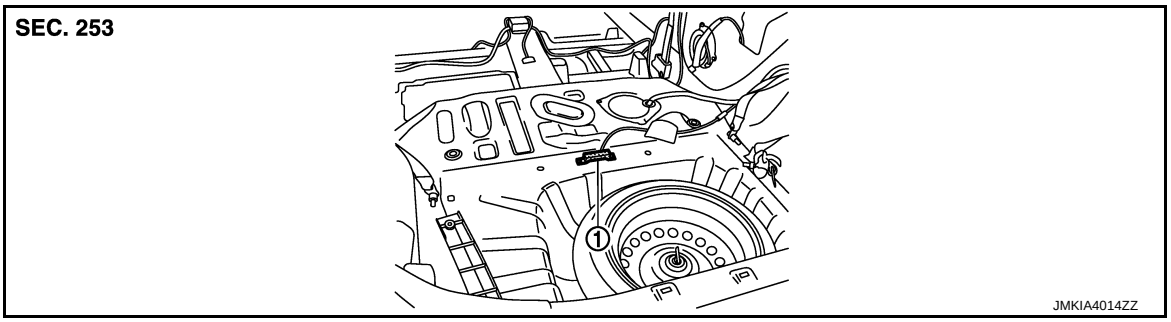

1. Inside key antenna (luggage room)

LUGGAGE ROOM : Removal and Installation

INFOID:0000000007772956

REMOVAL

1. Remove the luggage floor finisher front. Refer to INT-24, "Removal and Installation".
2. Remove the inside key antenna (luggage room) mounting clip (A), and then remove inside key antenna (luggage room) (1).

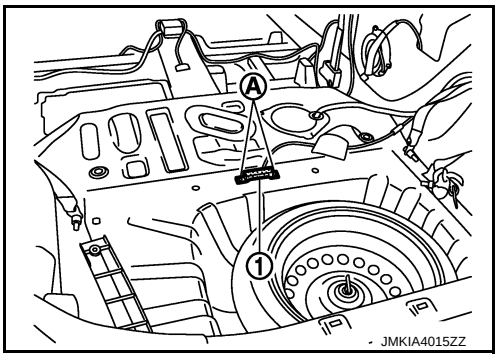

INSTALLATION

Install in the reverse order of removal.

INTELLIGENT KEY WARNING BUZZER

Exploded View

INFOID:0000000007772957

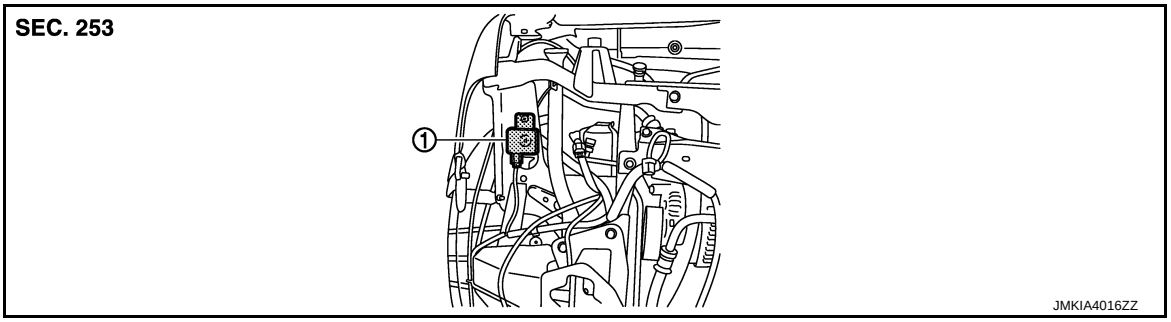

1. Intelligent Key warning buzzer

Removal and Installation

INFOID:0000000007772958

REMOVAL

1. Remove the front bumper. Refer to EXT-12, "Removal and Installation".
2. Remove the Intelligent Key warning buzzer mounting bolt (A), and then remove the Intelligent Key warning buzzer (1).

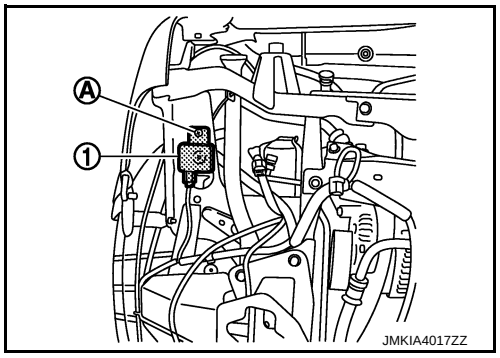

INSTALLATION

Install in the reverse order of removal.

REMOTE KEYLESS ENTRY RECEIVER

Exploded View

INFOID:0000000007772959

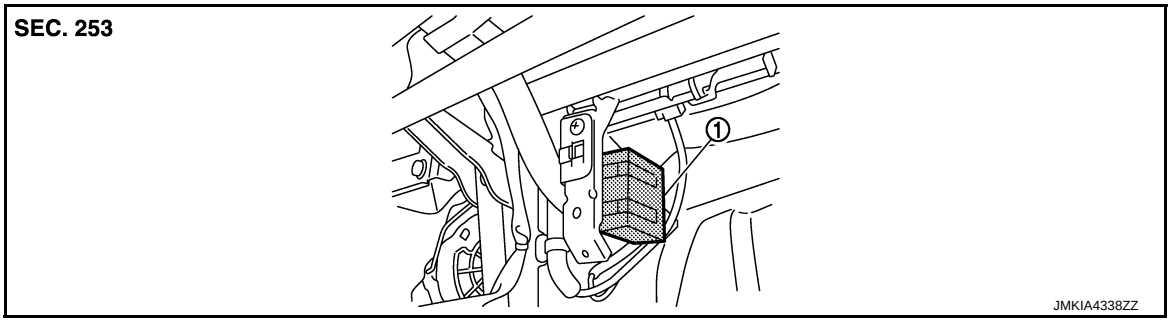

1. Remote keyless entry receiver

Removal and Installation

INFOID:0000000007772960

REMOVAL

1. Remove the glove box assembly. Refer to IP-13, "Removal and Installation".
2. Remove the remote keyless entry receiver mounting bolt (A), and then remove remote keyless entry receiver (1).

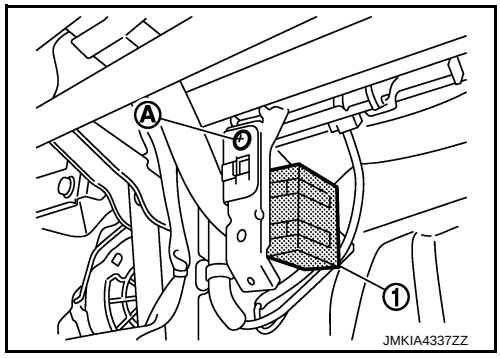

INSTALLATION

Install in the reverse order of removal.

INTELLIGENT KEY BATTERY

Removal and Installation

INFOID:0000000007772961

1. Release the lock knob at the back of the Intelligent Key and remove the mechanical key.

2. Insert a remover tool (A) wrapped with a cloth into the slit of the corner and twist it to separate the upper part from the lower part.
   CAUTION:
   - **Do not touch the circuit board or battery terminal.**
   - **The key fob is water-resistant. However, if it does get wet, immediately wipe it dry.**

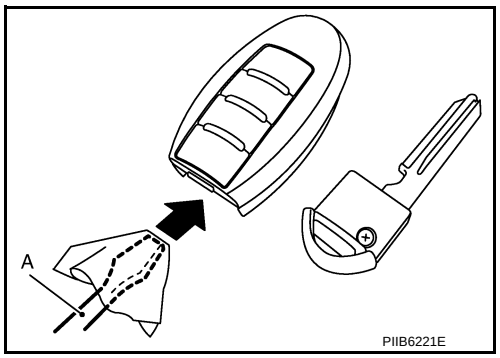

3. Replace the battery with new one.

Battery replacement	**:Coin-type lithium battery (CR2025)**

4. Align the tips of the upper and lower parts, and then push them together until it is securely closed.
   CAUTION:
   - **When replacing battery, keep dirt, grease, and other foreign materials off the electrode contact area.**
   - **After replacing the battery, check that all Intelligent Key functions work normally.**

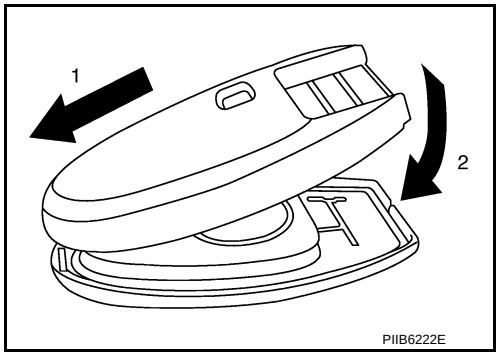

BASIC INSPECTION

DIAGNOSIS AND REPAIR WORK FLOW

Work Flow

INFOID:0000000007906288

OVERALL SEQUENCE

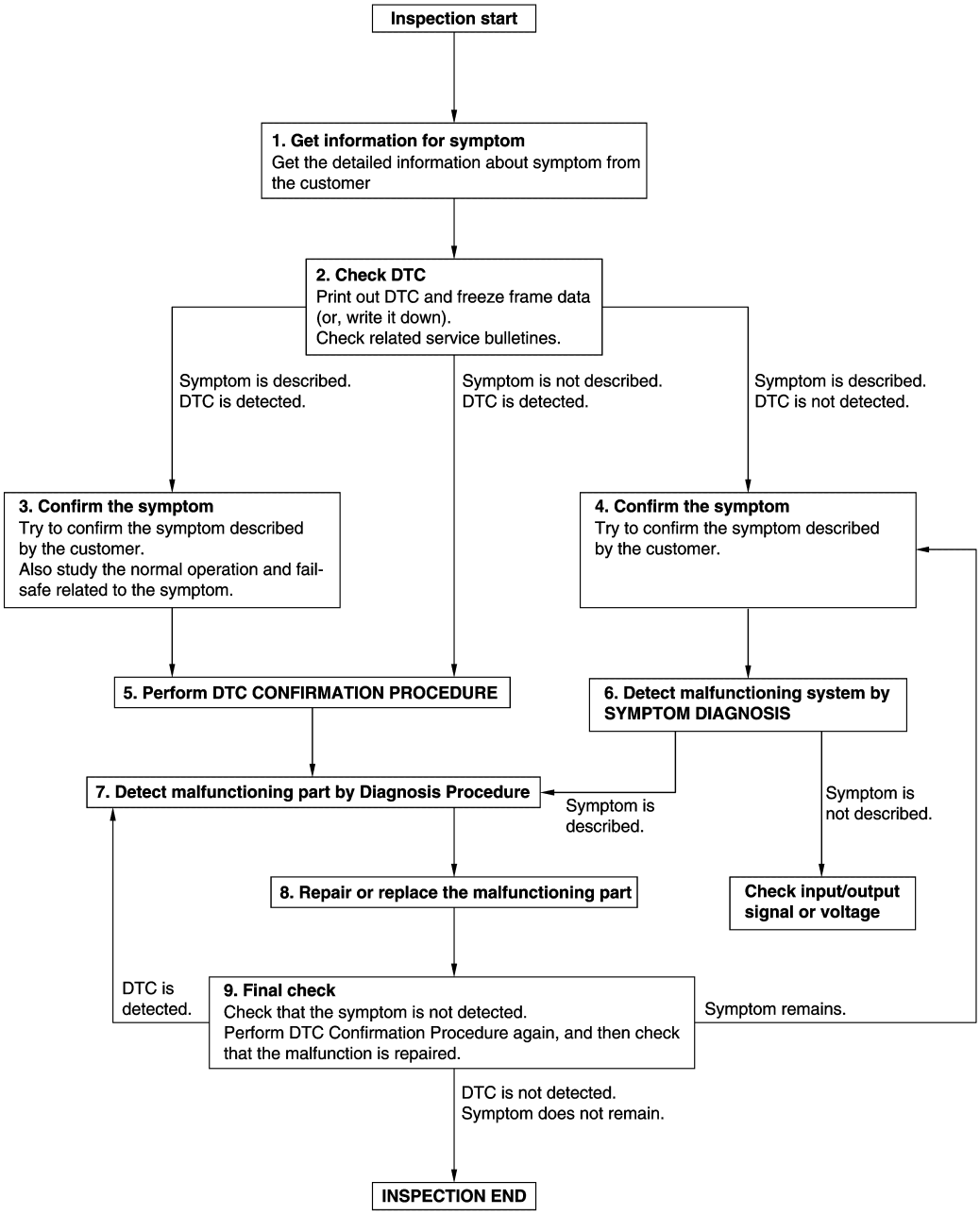

JMKIA8652GB

DETAILED FLOW

1. GET INFORMATION FOR SYMPTOM

1. Get detailed information from the customer about the symptom (the condition and the environment when the incident/malfunction occurs).
2. Check operation condition of the function that is malfunctioning.

>> GO TO 2.

2. CHECK DTC

1. Check DTC.
2. Perform the following procedure if DTC is detected.
- Record DTC and freeze frame data (Print them out using CONSULT.)
- Erase DTC.
- Study the relationship between the cause detected by DTC and the symptom described by the customer.
3. Check related service bulletins for information.

Are any symptoms described and any DTC detected?

Symptom is described, DTC is detected>>GO TO 3.
Symptom is described, DTC is not detected>>GO TO 4.
Symptom is not described, DTC is detected>>GO TO 5.

3. CONFIRM THE SYMPTOM

Try to confirm the symptom described by the customer.
Also study the normal operation and fail-safe related to the symptom.
Verify relation between the symptom and the condition when the symptom is detected.

>> GO TO 5.

4. CONFIRM THE SYMPTOM

Try to confirm the symptom described by the customer.
Verify relation between the symptom and the condition when the symptom is detected.

>> GO TO 6.

5. PERFORM DTC CONFIRMATION PROCEDURE

Perform DTC CONFIRMATION PROCEDURE for the detected DTC, and then check that DTC is detected again. At this time, always connect CONSULT to the vehicle, and check self diagnostic results in real time.
If two or more DTCs are detected, refer to BCS-74, "DTC Inspection Priority Chart" (BCM), and determine trouble diagnosis order.

NOTE:
- Freeze frame data is useful if the DTC is not detected.
- Perform Component Function Check if DTC CONFIRMATION PROCEDURE is not included on Service Manual. This simplified check procedure is an effective alternative though DTC cannot be detected during this check.
  If the result of Component Function Check is NG, it is the same as the detection of DTC by DTC CONFIRMATION PROCEDURE.

Is DTC detected?

YES >> GO TO 7.
NO >> Check according to GI-41, "Intermittent Incident".

6. DETECT MALFUNCTIONING SYSTEM BY SYMPTOM DIAGNOSIS

Detect malfunctioning system according to SYMPTOM DIAGNOSIS based on the confirmed symptom in step 4, and determine the trouble diagnosis order based on possible causes and symptom.

Is the symptom described?

YES >> GO TO 7.
NO >> Monitor input data from related sensors or check voltage of related module terminals using CONSULT.

7. DETECT MALFUNCTIONING PART BY DIAGNOSIS PROCEDURE

Inspect according to Diagnosis Procedure of the system.

Is malfunctioning part detected?

YES >> GO TO 8.
NO >> Check according to GI-41, "Intermittent Incident".

8. REPAIR OR REPLACE THE MALFUNCTIONING PART

1. Repair or replace the malfunctioning part.
2. Reconnect parts or connectors disconnected during Diagnosis Procedure again after repair and replacement.
3. Check DTC. If DTC is detected, erase it.

>> GO TO 9.

9. FINAL CHECK

When DTC is detected in step 2, perform DTC CONFIRMATION PROCEDURE again, and then check that the malfunction is repaired securely.
When symptom is described by the customer, refer to confirmed symptom in step 3 or 4, and check that the symptom is not detected.

Is DTC detected and does symptom remain?

YES-1 >> DTC is detected: GO TO 7.
YES-2 >> Symptom remains: GO TO 4.
NO >> Before returning the vehicle to the customer, always erase DTC.

INSPECTION AND ADJUSTMENT

ADDITIONAL SERVICE WHEN REPLACING CONTROL UNIT

ADDITIONAL SERVICE WHEN REPLACING CONTROL UNIT : Description

INFOID:0000000007772963

Perform the system initialization when replacing or registering keyfob and ignition key.

ADDITIONAL SERVICE WHEN REPLACING CONTROL UNIT : Special Repair Requirement

INFOID:0000000007772964

Refer to the CONSULT Operation Manual-NATS.

SYSTEM DESCRIPTION

POWER DOOR LOCK SYSTEM

System Diagram

INFOID:0000000007772965

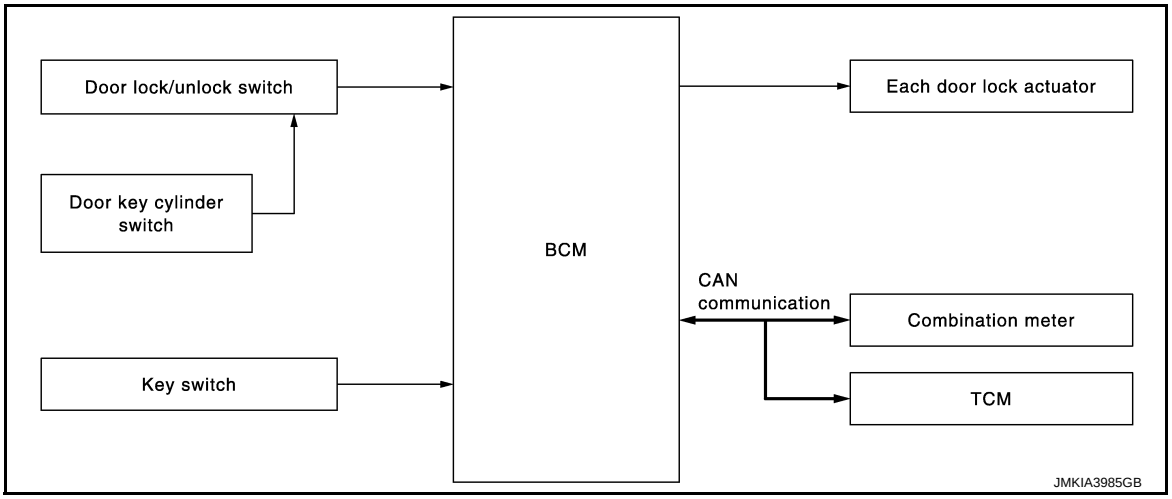

System Description

INFOID:0000000007772966

DOOR LOCK FUNCTION

- The door lock and unlock switch (driver side) is build into power window main switch.
- The door lock and unlock switch (passenger side) is on door trim.
- Interlocked with the locking operation of door lock and unlock switch, door lock actuators of all doors are locked.
- Interlocked with the unlocking operation of door lock and unlock switch, door lock actuators of all doors and are unlocked.

Door Key Cylinder

- With the door key inserted in the door key cylinder on driver side, turning it to “LOCK”, will lock door lock actuator of all doors.
- With the door key inserted in the door key cylinder on driver side, turning it to “UNLOCK” once unlocks the driver side door lock actuator; turning it to “UNLOCK” again within 60 seconds after the first unlock operation unlocks all of the other doors. (SELECTIVE UNLOCK OPERATION)

Selective unlock operation mode can be changed using “DOOR LOCK-UNLOCK SET” mode in “WORK SUPPORT”. Refer to DLK-217, "DOOR LOCK : CONSULT Function (BCM - DOOR LOCK)".

KEY REMINDER FUNCTION

When door lock and unlock switch are operated while key is inserted into key switch and any door is open, door locks once but immediately unlocks. This operation prevents keyfob from being left in the vehicle.

AUTOMATIC DOOR LOCK/UNLOCK FUNCTION (LOCK OPERATION)

The interlock door lock function is the function that locks all doors linked with the vehicle speed or shift position. It has 2 types as follows.

Vehicle Speed Sensing Auto Door Lock*1

All doors are locked when the vehicle speed reaches 15 miles or more.
BCM outputs the lock signal to all door lock actuators when it detects that the ignition switch is turned ON, all doors are closed and the vehicle speed received from the combination meter via CAN communication becomes 24 km/h (15 miles) or more.

P Range Interlock Door Lock*2

All doors are locked when shifting the selector lever from the P position to any position other than P.
BCM outputs the lock signal to all door lock actuators when it detects that the ignition switch is in the ON position and the shift signal received from the TCM via CAN communication is shifted from the P position to any position other than P.

Setting change of Automatic Door Lock/Unlock Function

The lock operation setting of the automatic door lock/unlock function can be changed.

With CONSULT

The ON/OFF switching of the automatic door lock function and the type selection of the automatic door lock/unlock function can be performed at the WORK SUPPORT setting of CONSULT.

Without CONSULT

The automatic door lock function ON/OFF can be switched by performing the following operation.

1. Close all doors (door switch OFF)
2. Turn ignition switch ON
3. Press and hold the door lock and unlock switch for 5 seconds or more in the lock direction within 20 seconds after turning the ignition switch ON.
4. The switching is completed when the hazard warning lamp blinks.

OFF → ON	: 2 blinks
ON → OFF	: 1 blink

AUTOMATIC DOOR LOCK/UNLOCK FUNCTION (UNLOCK OPERATION)

The automatic door lock/unlock function is the function that unlocks all doors linked with the key position or shift position. It has 2 types as follows.

IGN OFF Interlock Door Unlock*1

All doors are unlocked when the power supply position is changed from ON to OFF.
BCM outputs the unlock signal to all door lock actuators when it detects that the power supply position is changed from ignition switch ON to OFF.

P Range Interlock Door Unlock*2

All doors are unlocked when shifting the selector lever from any position other than the P to P position.
BCM outputs the unlock signal to all door lock actuators when it detects that the ignition switch is in the ON position and the shift signal received from TCM via CAN communication is shifted from any position other than the P to P position.

Key out Interlock Door Unlock

When ignition key is removed from ignition knob switch, all doors unlock.
When BCM detects that ignition key is removed from ignition knob switch, BCM transmits unlock signal to all door lock actuators.

Setting change of Automatic Door Lock/Unlock Function

The unlock operation setting of the automatic door lock/unlock function can be changed.

With CONSULT

The ON/OFF switching of the automatic door lock/unlock function and the type selection of the automatic door lock/unlock function can be performed at the WORK SUPPORT setting of CONSULT.

Without CONSULT

The automatic door lock/unlock function ON/OFF can be switched by performing the following operation.

1. Close all doors below (door switch OFF)
2. Turn ignition switch ON
3. Press and hold the door lock and unlock switch for 5 seconds or more in the unlock direction within 20 seconds after turning the power supply position ON.
4. The switching is completed when the hazard warning lamp blinks.

OFF → ON	: 2 blinks
ON → OFF	: 1 blink

*1: This function is set to ON before delivery.
*2: This function does not operate on M/T models.

Component Parts Location

INFOID:0000000007772967

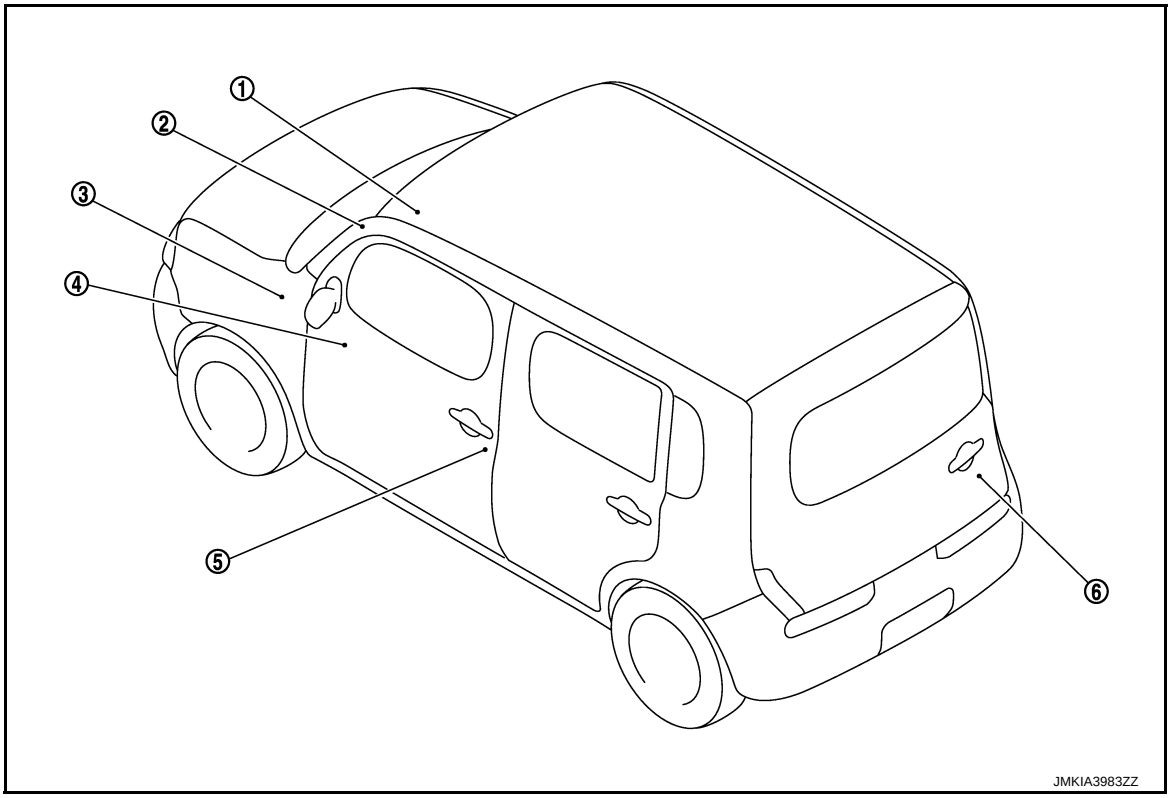

1. Key switch
2. Combination meter
   Refer to MWI-8, "METER SYSTEM : Component Parts Location"
3. BCM M
   Refer to BCS-142, "Removal and Installation"
4. Power window main switch (door lock and unlock switch)
5. Front door lock assembly (driver side)
6. Back door lock assembly

Component Description

INFOID:0000000007772968

Item	Function
BCM	Controls the door lock function and room lamp function
Door lock and unlock switch	Input lock or unlock signal to BCM
Door lock actuator	Input lock/unlock signal from BCM and locks/unlocks each door
Door switch	Input door open/close condition to BCM
Door key cylinder switch	• Input lock or unlock signal to power window main switch • Power window main switch transmits door lock/unlock signal to BCM
TCM	Transmit shift position signal to BCM via CAN communication line
Key switch	Input ignition switch ON/OFF condition to BCM

REMOTE KEYLESS ENTRY SYSTEM

System Diagram

INFOID:0000000007772969

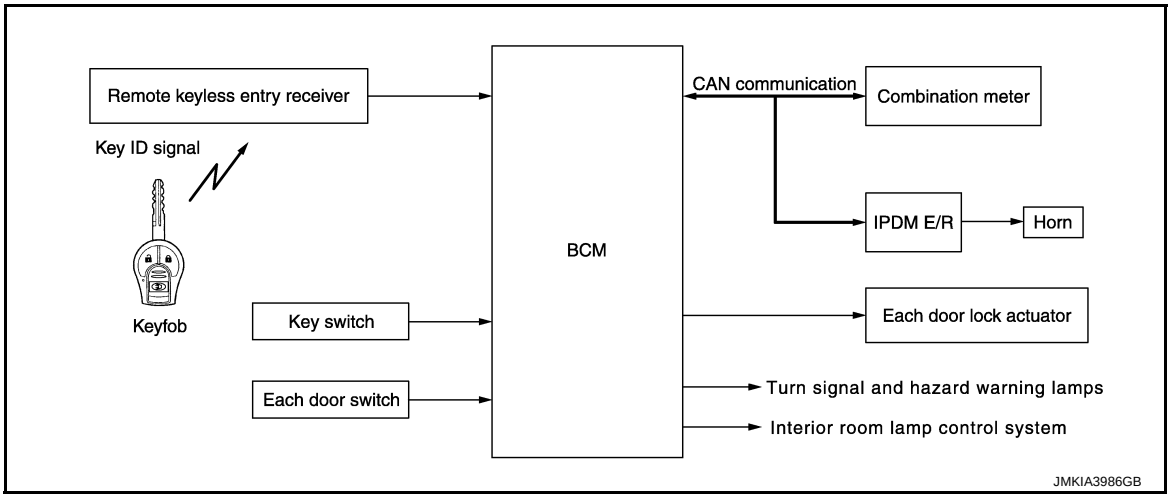

System Description

INFOID:0000000007772970

DOOR LOCK AND UNLOCK OPERATION

- When door lock and unlock button of keyfob is pressed, door lock and unlock signal transmits from keyfob to BCM via remote keyless entry receiver.
- When BCM receives the door lock and unlock signal, it operates door lock actuator, flashes the hazard lamp (lock: 2 times, unlock: 1 time) and horn chirp signal to IPDM E/R at the same time as a reminder.
- IPDM E/R honks horn (lock: 1 time) as a reminder.

OPERATION CONDITION

If the following conditions are satisfied, door lock/unlock operation is performed if the keyfob is operated.

Remote controller operation	Operation condition
Lock/unlock	Key switch is off

OPERATION AREA

To ensure that the keyfob works effectively, use within 100 cm (3 ft) range of each door, however the operable range may differ according to surroundings.

SELECTIVE UNLOCK OPERATION

When door lock is unlocked, pressing LOCK button on keyfob once will lock all doors. When door lock is locked, pressing UNLOCK button on keyfob will unlock driver side door.

HAZARD AND HORN REMINDER

When the doors are locked or unlocked by keyfob, power is supplied to sound horn and flash hazard warning lamps as a reminder

The hazard and horn reminder has C mode (horn chirp mode) and S mode (non-horn chirp mode).

How to Change Hazard and Horn Reminder Modes

With CONSULT

Hazard reminder has modes 1, 2, 3 and 4, and horn reminder can be turned ON/OFF with any lock mode.

Hazard reminder setting	Mode 1		Mode 2		Mode 3		Mode 4	
Keyfob operation	Lock	Unlock	Lock	Unlock	Lock	Unlock	Lock	Unlock
Hazard warning lamp blink	—	—	—	Once	Twice	—	Twice	Once

Horn reminder setting	ON		OFF	
Keyfob operation	Lock	Unlock	Lock	Unlock
Horns sound	Once	—	—	—

Hazard and horn reminders do not operate if any door switch is ON (any door is OPEN).
Hazard reminder can be changed using “HAZARD LAMP SET” mode in “WORK SUPPORT”.
Horn reminder can be changed using “HORN CHIRP SET” mode in “WORK SUPPORT”.
Refer to DLK-219, "MULTI REMOTE ENT : CONSULT Function (BCM - MULTI REMOTE ENT)".

Without CONSULT

When LOCK and UNLOCK signals are sent from the Intelligent Key for more than 2 seconds at the same time, the hazard and horn reminder mode is changed and hazard warning lamp blinks and horn sounds as follows:

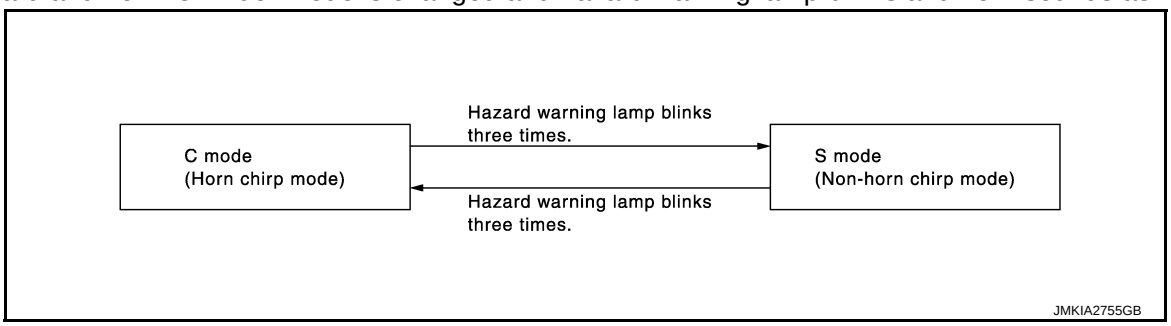

AUTO DOOR LOCK FUNCTION

After door is unlocked by keyfob button operation and if 60 seconds or more passes without performing the following operation, all doors are automatically locked. However, operation check function does not activate.

Operating condition	• Door switch is ON (door is open) • Door is locked • Push switch is pressed • Ignition switch is ON

Auto door lock mode can be changed by the “AUTO LOCK SET” mode in “WORK SUPPORT”. Refer to DLK-219, "MULTI REMOTE ENT : CONSULT Function (BCM - MULTI REMOTE ENT)".

INTERIOR ROOM LAMP CONTROL FUNCTION

Interior room lamp is controlled according to door lock/unlock state, refer to INL-6, "System Description".

REGISTER, CHECK, AND ERASURE OF REMOTE CONTROLLER ID

- Remote controller ID can be registered by key operation and can be registered, checked, and erased using CONSULT.
- Remote controller ID can be registered by key operation or CONSULT. A maximum of 5 IDs can be registered.Operative number of IDs is always amaximum total of 5. When a 6th ID registration is performed, the oldest ID among the 5 registered IDs is automatically erased. (Initially saved data is automatically erased.)

Remote controller ID registration with key

When recording a new remote controller ID after replacing BCM, or when maintaining a previously recorded ID and newly adding a remote controller, keep the remote controller within the effective range and register the new controller by performing the following procedure.

NOTE:

- Always remove and insert key slowly and carefully within a 10 second period. If this procedure is performed too quickly, remote controller ID registration mode may not be entered.
- After a new remote controller is registered, be sure to check the operation.

- The memory function protects the remote controller ID from erasure even if the battery is removed.

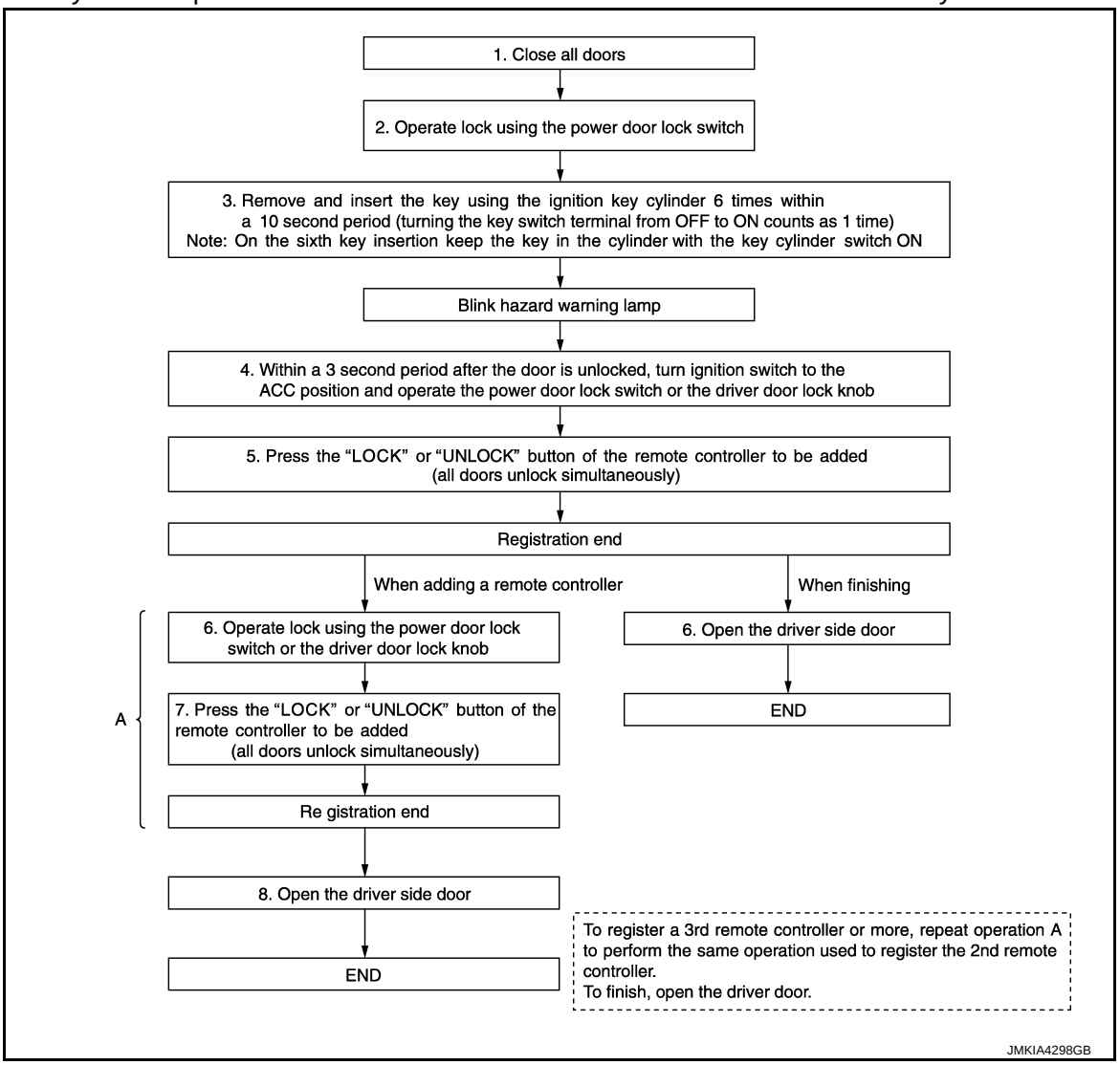

Component Parts Location

INFOID:0000000007772971

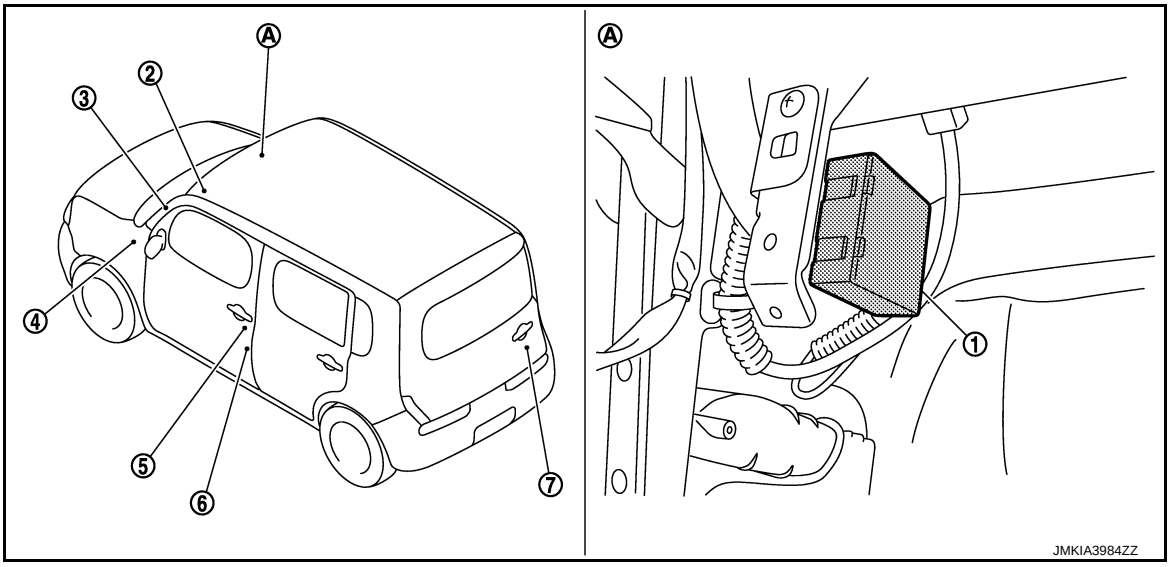

1. Remote keyless entry receiver
2. Key switch
3. Combination meter
   Refer to MWI-8, "METER SYSTEM : Component Parts Location"
4. BCM
5. Front door lock assembly (driver side)
6. Front door switch (driver side)
7. Back door lock assembly

A. View with globe box assembly removed

Component Description

INFOID:0000000007772972

Item	Function
BCM	Controls the door lock and unlock function.
Door lock actuator	Output lock / unlock signal from BCM and locks and unlocks each door.
Remote keyless entry receiver	Receives lock/unlock signal from the key fob, and then transmits to BCM.
Key fob	Transmits button operation to remote keyless entry receiver.
Door switch	Inputs door open/close condition to BCM
Key switch	Inputs key insert/remove signal to BCM

DIAGNOSIS SYSTEM (BCM)

COMMON ITEM

COMMON ITEM : CONSULT Function (BCM - COMMON ITEM)

INFOID:0000000007970605

APPLICATION ITEM

CONSULT performs the following functions via CAN communication with BCM.

Diagnosis mode	Function Description
Work Support	Changes the setting for each system function.
Self Diagnostic Result	Displays the diagnosis results judged by BCM.
CAN Diag Support Monitor	Monitors the reception status of CAN communication viewed from BCM.
Data Monitor	The BCM input/output signals are displayed.
Active Test	The signals used to activate each device are forcibly supplied from BCM.
Ecu Identification	The BCM part number is displayed.
Configuration	• Read and save the vehicle specification. • Write the vehicle specification when replacing BCM.

SYSTEM APPLICATION

BCM can perform the following functions for each system.

NOTE:

It can perform the diagnosis modes except the following for all sub system selection items.

×: Applicable item

System	Sub system selection item	Diagnosis mode		
		Work Support	Data Monitor	Active Test
Door lock	DOOR LOCK	×	×	×
Rear window defogger	REAR DEFOGGER		×	×
Warning chime	BUZZER		×	×
Interior room lamp control	INT LAMP	×	×	×
Remote keyless entry system	MULTI REMOTE ENT	×	×	×
Exterior lamp	HEAD LAMP	×	×	×
Wiper and washer	WIPER	×	×	×
Turn signal and hazard warning lamps	FLASHER		×	×
Manual air conditioner	AIR CONDITONER		×	×
Combination switch	COMB SW		×	
Body control system	BCM	×		
NVIS - NATS	IMMU	×	×	×
Interior room lamp battery saver	BATTERY SAVER	×	×	×
Back door	TRUNK		×	
Vehicle security system	THEFT ALM	×	×	×
RAP system	RETAINED PWR		×	×
Signal buffer system	SIGNAL BUFFER		×	×
TPMS	TPMS (AIR PRESSURE MONITOR)	×	×	×
Panic alarm system	PANIC ALARM			×

DOOR LOCK

DOOR LOCK : CONSULT Function (BCM - DOOR LOCK)

INFOID:0000000007772974

BCM CONSULT FUNCTION

CONSULT performs the following functions via CAN communication with BCM.

Diagnosis mode	Function Description
WORK SUPPORT	Changes the setting for each system function
DATA MONITOR	The BCM input/output signals are displayed
ACTIVE TEST	The signals used to activate each device are forcibly supplied from BCM

WORK SUPPORT

Monitor item	Description
DOOR LOCK-UNLOCK SET	Selective unlock function mode can be changed to operate with this mode • On: Operate • Off: Non-operation
AUTOMATIC DOOR LOCK SELECT	Automatic door lock function mode can be selected from the following in this mode • VH SPD: All doors are locked when vehicle speed more than 24km/h (15MPH) • P RANGE: All doors are locked when shifting the selector lever from P position to other than the P position
AUTOMATIC DOOR UNLOCK SELECT	Automatic door unlock function mode can be selected from the following in the mode • MODE 1: All doors are unlocked when the power supply position is changed from ON to OFF • MODE 2: All doors are unlocked when shifting the selector lever from any position other than the P to P position • MODE 3: Driver side door is unlocked when the power supply position is changed from ON to OFF • MODE 4: Driver side door is unlocked when shifting the selector lever from any position other than the P to P position • MODE 5: Driver side door is unlocked when key out of key switch • MODE 6: All doors are unlocked when key out of key switch
AUTOMATIC LOCK/UNLOCK SET	Automatic door lock/unlock function mode can be selected from the following in this mode • Off: Non-operation • Unlock Only: door unlock operation only • Lock Only: door lock operation only • Lock/Unlock: lock/unlock operation

DATA MONITOR

Monitor Item	Contents
IGN ON SW	Indicated [On/Off] condition of ignition switch in ON position
KEY ON SW	Indicated [On/Off] condition of key switch
DOOR SW-DR	Indicated [On/Off] condition of front door switch (driver side)
DOOR SW-AS	Indicated [On/Off] condition of front door switch (passenger side)
DOOR SW-RR	Indicated [On/Off] condition of rear door switch RH
DOOR SW-RL	Indicated [On/Off] condition of rear door switch LH
BACK DOOR SW	Indicated [On/Off] condition of back door switch
LOCK STATUS	Indicated [On/Off] condition of driver side door
ACC ON SW	Indicated [On/Off] condition of ignition switch in ACC position
KEYLESS LOCK	Indicated [On/Off] condition of lock signal from key fob
KEYLESS UNLOCK	Indicated [On/Off] condition of unlock signal from key fob
SHOCK SENSOR	**NOTE:** This item is displayed, but cannot be supported
CDL LOCK SW	Indicated [On/Off] condition of lock signal from door lock unlock switch
CDL UNLOCK SW	Indicated [On/Off] condition of unlock signal from door lock unlock switch
KEY CYL LK-SW	Indicated [On/Off] condition of lock signal from door key cylinder
KEY CYL UN-SW	Indicated [On/Off] condition of unlock signal from door key cylinder
VEHICLE SPEED	Display the vehicle speed signal received from combination meter by numerical value [Km/h]

ACTIVE TEST

Test item	Description
DOOR LOCK	This test is able to check door lock/unlock operation • The all door lock actuators are locked when “ALL LCK” on CONSULT screen is touched • The all door lock actuators are unlocked when “ALL UNLK” on CONSULT screen is touched • The door lock actuator (driver side) is unlocked when “DR UNLK” on CONSULT screen is touched • The door lock actuator (other) is unlocked when “OTR ULK” on CONSULT screen is touched

MULTI REMOTE ENT

MULTI REMOTE ENT : CONSULT Function (BCM - MULTI REMOTE ENT)

INFOID:0000000007772975

BCM CONSULT FUNCTION

CONSULT performs the following functions via CAN communication with BCM.

Diagnosis mode	Function Description
WORK SUPPORT	Changes the setting for each system function
DATA MONITOR	The BCM input/output signals are displayed
ACTIVE TEST	The signals used to activate each device are forcibly supplied from BCM

DATA MONITOR

Monitor Item	Condition
IGN ON SW	Indicates [On/Off] condition of ignition switch in ON position
KEY ON SW	Indicates [On/Off] condition of key switch
ACC ON SW	Indicates [On/Off] condition of ignition switch in ACC position
KEYLESS LOCK	Indicates [On/Off] condition of lock signal from keyfob
KEYLESS UNLOCK	Indicates [On/Off] condition of unlock signal from keyfob
KYLS TRNK/HAT	**NOTE:** This item is displayed, but cannot be tested
DOOR SW-DR	Indicates [On/Off] condition of front door switch (driver side)
DOOR SW-AS	Indicates [On/Off] condition of front door switch (passenger side)
DOOR SW-RR	Indicates [On/Off] condition of rear door switch RH
DOOR SW-RL	Indicates [On/Off] condition of rear door switch LH
BACK DOOR SW	Indicates [On/Off] condition of back door switch
TRNK/HAT MNTR	**NOTE:** This item is displayed, but cannot be tested
CDL LOCK SW	Indicates [On/Off] condition of door lock and unlock switch
CDL UNLOCK SW	Indicates [On/Off] condition of door lock and unlock switch
KEYLESS PANIC	Indicates [On/Off] condition of PANIC button of keyfob

ACTIVE TEST

Test item	Description
INT LAMP	This test is able to check interior room lamp operation • On: Operate • Off: Non-operation
FLASHER	This test is able to check flasher operation [LH/RH/Off]
HORN	This test is able to check horn operation • On: Operate

WORK SUPPORT

Test item	Description
REMO CONT IN REGIST	Keyfob ID code can be registered
REMO CONT IN ERASUR	Keyfob ID code can be erased
REMO CONT IN CONFIR	It can be checked whether Intelligent Key ID code is registered or not in this mode
MULTI ANSWER BACK SET	**NOTE:** This item is displayed, but cannot be tested
HORN CHIRP SET	Hazard and horn reminder function (horn operation) mode can be changed in this mode • On: Operate • Off: Non-operation
HAZARD LAMP SET	Hazard and horn reminder function (hazard operation) mode can be changed in this mode • MODE1: Non-operation • MODE2: Unlock operation only • MODE3: Lock operation only • MODE4: Lock and unlock operation
AUTO LOCK SET	Auto door lock time can be changed in this mode • MODE 1: Non-operation • MODE 2: 30 sec • MODE 3: 1 minute • MODE 4: 2 minute • MODE 5: 3 minute • MODE 6: 4 minute • MODE 7: 5 minute
PANIC ALARM SET	Panic alarm button pressing time on keyfob remote control button can be selected from the following with this mode • MODE1: 0.5 sec • MODE2: Non-operation • MODE3: 1.5 sec
TRUNK OPEN SET	**NOTE:** This item is displayed, but cannot be tested

TRUNK

TRUNK : CONSULT Function (BCM - TRUNK)

INFOID:0000000007772976

BCM CONSULT FUNCTION

CONSULT performs the following functions via CAN communication with BCM.

Diagnosis mode	Function Description
DATA MONITOR	The BCM input/output signals are displayed.

DATA MONITOR

Monitor Item	Contents
KEY ON SW	Indicates [On/Off] condition of key switch.
LOCK STATUS	**NOTE:** This item is displayed, but cannot be monitored.
VEHICLE SPEED	Indicates [Km/h] condition of vehicle speed signal from combination meter.
IGN ON SW	Indicates [On/Off] condition of ignition switch.
TRNK OPNR SW	**NOTE:** This item is displayed, but cannot be monitored.
KYLS TRNK/HAT	**NOTE:** This item is displayed, but cannot be monitored.

DTC/CIRCUIT DIAGNOSIS

POWER SUPPLY AND GROUND CIRCUIT

BCM (BODY CONTROL MODULE)

BCM (BODY CONTROL MODULE) : Diagnosis Procedure

INFOID:0000000007772977

1. CHECK FUSES AND FUSIBLE LINK

Check that the following fuses and fusible link are not fusing.

Signal name	Fuses and fusible link No.
Battery power supply	8
	G
ACC power supply	20
Ignition power supply	2

Is the fuse fusing?

YES >> Replace the blown fuse or fusible link after repairing the affected circuit if a fuse or fusible link is blown.
NO >> GO TO 2.

2. CHECK POWER SUPPLY CIRCUIT

1. Turn ignition switch OFF.
2. Disconnect BCM connectors.
3. Check voltage between BCM harness connector and ground.

Terminals			Ignition switch position		
(+)		(–)			
BCM			OFF	ACC	ON
Connector	Terminal				
M67	70	Ground	Battery voltage	Battery voltage	Battery voltage
	57				
M65	11		Approx. 0 V	Battery voltage	Battery voltage
	38		Approx. 0 V	Approx. 0 V	Battery voltage

Is the measurement value normal?

YES >> GO TO 3.
NO >> Repair harness or connector.

3. CHECK GROUND CIRCUIT

Check continuity between BCM harness connector and ground.

BCM		Ground	Continuity
Connector	Terminal		
M67	67		Existed

Does continuity exist?

YES >> INSPECTION END
NO >> Repair harness or connector.

DOOR SWITCH

Description

INFOID:0000000007772978

Detects door open/close condition.

Component Function Check

INFOID:0000000007772979

1.CHECK FUNCTION

Check (“DOOR SW-DR”, “DOOR SW-AS”, “DOOR SW-RL”, “DOOR SW-RR”, “BACK DOOR SW”) in “Data Monitor” mode with CONSULT.

Monitor item	Condition		Status
DOOR SW-DR	Driver side door	Open	ON
		Closed	OFF
DOOR SW-AS	Passenger side door	Open	ON
		Closed	OFF
DOOR SW-RL	Rear door LH	Open	ON
		Closed	OFF
DOOR SW-RR	Rear door RH	Open	ON
		Closed	OFF
BACK DOOR SW	Back door	Open	ON
		Closed	OFF

Is the inspection result normal?

YES >> Door switch is OK.
NO >> Refer to DLK-222, "Diagnosis Procedure".

Diagnosis Procedure

INFOID:0000000007772980

1.CHECK DOOR SWITCH INPUT SIGNAL

1. Turn ignition switch OFF.
2. Disconnect malfunctioning door switch connector.
3. Check signal between malfunctioning door switch harness connector and ground with oscilloscope.

(+)			(–)	Signal (Reference value)
Door switch				
Connector		Terminal		
Driver side	B34	3	Ground	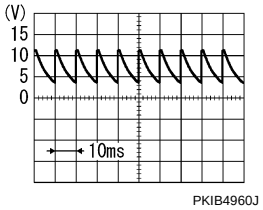 7.0 - 8.0 V
Passenger side	B27	3		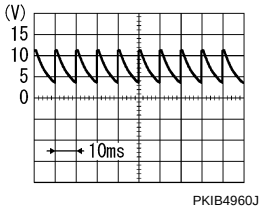 7.0 - 8.0 V
Rear LH	B71	3		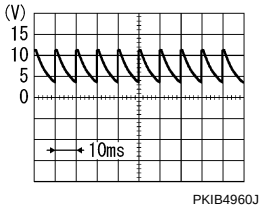 7.0 - 8.0 V
Rear RH	B53	3		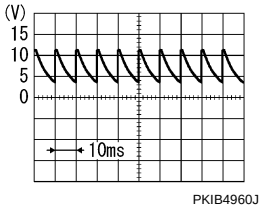 7.0 - 8.0 V
Back door	B75	3		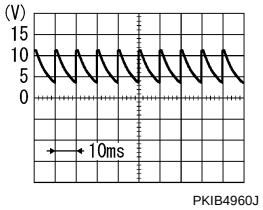 9.5 - 10.0 V

Is the inspection result normal?

YES >> GO TO 3.
NO >> GO TO 2.

2. CHECK DOOR SWITCH CIRCUIT

1. Disconnect BCM connector.
2. Check continuity between door switch harness connector and BCM harness connector.

Door switch			BCM		Continuity
Connector		Terminal	Connector	Terminal	
Driver side	B34	3	M66	47	Existed
Passenger side	B27		M65	12	
Rear LH	B71		M66	48	
Rear RH	B53		M65	13	
Back door	B75		M66	43	

3. Check continuity between door switch harness connector and ground.

Door switch				Continuity
Connector		Terminal		
Driver side	B34	3	Ground	Not existed
Passenger side	B27			
Rear LH	B71			
Rear RH	B53			
Back door	B75			

Is the inspection result normal?

YES >> Replace BCM. Refer to BCS-142, "Removal and Installation".
NO >> Repair or replace harness.

3. CHECK DOOR SWITCH

Refer to DLK-224, "Component Inspection".

Is the inspection result normal?

YES >> GO TO 4.
NO >> Replace malfunctioning door switch. Refer to DLK-331, "Removal and Installation".

4. CHECK INTERMITTENT INCIDENT

Refer to GI-41, "Intermittent Incident".

>> INSPECTION END

Component Inspection

INFOID:0000000007772981

1. CHECK DOOR SWITCH

1. Turn ignition switch OFF.
2. Disconnect malfunctioning door switch connector.
3. Check continuity between door switch terminals.

Door switch		Condition		Continuity
Terminal				
3	Ground part of door switch	Door switch	Pressed	Not existed
			Released	Existed

Is the inspection result normal?

YES >> INSPECTION END
NO >> Replace malfunction door switch. Refer to DLK-331, "Removal and Installation".

DOOR LOCK AND UNLOCK SWITCH
DRIVER SIDE

DRIVER SIDE : Description

INFOID:0000000007772982

Transmits door lock/unlock operation to BCM.

DRIVER SIDE : Component Function Check

INFOID:0000000007772983

1. CHECK FUNCTION

Check “CDL LOCK SW ”and “CDL UNLOCK SW” in BCM “Data Monitor” mode using CONSULT.

Monitor item	Condition		Status
CDL LOCK SW	Door lock and unlock switch	LOCK	ON
		UNLOCK	OFF
CDL UNLOCK SW		LOCK	OFF
		UNLOCK	ON

Is the inspection result normal?

YES >> Door lock and unlock switch is OK.
NO >> Refer to DLK-225, "DRIVER SIDE : Diagnosis Procedure".

DRIVER SIDE : Diagnosis Procedure

INFOID:0000000007772984

1. CHECK DOOR LOCK AND UNLOCK SWITCH INPUT SIGNAL

1. Turn ignition switch OFF.
2. Disconnect power window main switch connector.
3. Check signal between power window main switch harness connector and ground using oscilloscope.

(+)		(–)	Signal (Reference value)
Power window main switch			
Connector	Terminal		
D5	6	Ground	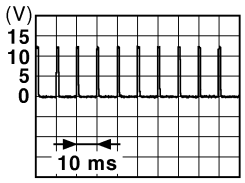 JPMIA0012GB 1.0 - 1.5 V
	18		

Is the inspection result normal?

YES >> GO TO 4.
NO >> GO TO 2.

2. CHECK DOOR LOCK AND UNLOCK SWITCH CIRCUIT

1. Disconnect BCM connector and front power window switch (passenger side) connector.
2. Check continuity between BCM harness connector and power window main switch harness connector.

BCM		Power window main switch		Continuity
Connector	Terminal	Connector	Terminal	
M66	45	D5	18	Existed
	46		6	

3. Check continuity between BCM harness connector and ground.

BCM		Ground	Continuity
Connector	Terminal		
M66	45		Not existed
	46		

Is the inspection result normal?

YES >> GO TO 3.
NO >> Repair or replace harness.

3. CHECK BCM OUTPUT SIGNAL

1. Connect BCM connector.
2. Check signal between BCM harness connector and ground using oscilloscope.

(+)		(–)	Signal (Reference value)
BCM			
Connector	Terminal		
M66	45	Ground	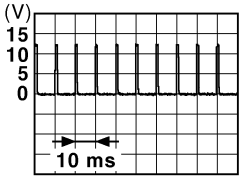 JPMIA0012GB 1.0 - 1.5 V
	46		

Is the inspection result normal?

YES >> GO TO 6.
NO >> Replace BCM. Refer to BCS-142, "Removal and Installation".

4. CHECK DOOR LOCK AND UNLOCK SWITCH GROUND

Check continuity between power window main switch harness connector and ground.

Power window main switch		Ground	Continuity
Connector	Terminal		
D6	17		Existed

Is the inspection result normal?

YES >> GO TO 5.
NO >> Repair or replace harness.

5. CHECK DOOR LOCK AND UNLOCK SWITCH

Refer to DLK-226, "DRIVER SIDE : Component Inspection".

Is the inspection result normal?

YES >> GO TO 6.
NO >> Replace power window main switch. Refer to PWC-93, "Removal and Installation".

6. CHECK INTERMITTENT INCIDENT

Refer to GI-41, "Intermittent Incident".

>> INSPECTION END

DRIVER SIDE : Component Inspection

INFOID:0000000007772985

1. CHECK DOOR LOCK AND UNLOCK SWITCH

1. Turn ignition switch OFF.
2. Disconnect power window main switch (door lock and unlock switch) connector.

3. Check continuity between power window main switch (door lock and unlock switch) terminals.

Power window main switch		Condition		Continuity
Terminal				
6	17	Door lock and unlock switch	LOCK	Existed
			UNLOCK	Not existed
18			LOCK	Existed
			UNLOCK	Not existed

Is the inspection result normal?

YES >> INSPECTION END
NO >> Replace power window main switch. Refer to PWC-93, "Removal and Installation".

PASSENGER SIDE

PASSENGER SIDE : Description

INFOID:0000000007772986

Transmits door lock/unlock operation to BCM.

PASSENGER SIDE : Component Function Check

INFOID:0000000007772987

1. CHECK FUNCTION

Check “CDL LOCK SW ”and “CDL UNLOCK SW” in BCM “Data Monitor” mode using CONSULT.

Monitor item	Condition		Status
CDL LOCK SW	Door lock and unlock switch	LOCK	ON
		UNLOCK	OFF
CDL UNLOCK SW		LOCK	OFF
		UNLOCK	ON

Is the inspection result normal?

YES >> Door lock and unlock switch is OK.
NO >> Refer to DLK-227, "PASSENGER SIDE : Diagnosis Procedure".

PASSENGER SIDE : Diagnosis Procedure

INFOID:0000000007772988

1. CHECK DOOR LOCK AND UNLOCK SWITCH INPUT SIGNAL

1. Turn ignition switch OFF.
2. Disconnect front power window switch (passenger side) connector.
3. Check signal between front power window switch (passenger side) harness connector and ground using oscilloscope.

(+)		(–)	Signal (Reference value)
Front power window switch (passenger side)			
Connector	Terminal		
D25	1	Ground	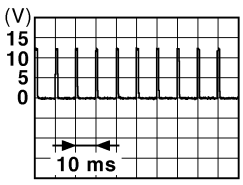 JPMIA0012GB 1.0 - 1.5 V
	2		

Is the inspection result normal?

YES >> GO TO 4.

NO >> GO TO 2.

2. CHECK DOOR LOCK AND UNLOCK SWITCH CIRCUIT

1. Disconnect BCM connector and power window main switch connector.
2. Check continuity between BCM harness connector and front power window switch (passenger side) harness connector.

BCM		Front power window switch (passenger side)		Continuity
Connector	Terminal	Connector	Terminal	
M66	45	D25	1	Existed
	46		2	

3. Check continuity between BCM connector and ground.

BCM		Ground	Continuity
Connector	Terminal		
M66	45		Not existed
	46		

Is the inspection result normal?

YES >> GO TO 3.
NO >> Repair or replace harness.

3. CHECK BCM OUTPUT SIGNAL

1. Connect BCM connector.
2. Check signal between BCM harness connector and ground using oscilloscope.

(+)		(–)	Signal (Reference value)
BCM			
Connector	Terminal		
M66	45	Ground	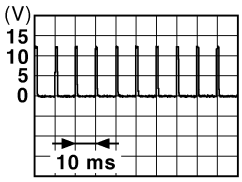 JPMIA0012GB 1.0 - 1.5 V
	46		

Is the inspection result normal?

YES >> GO TO 6.
NO >> Replace BCM. Refer to BCS-142, "Removal and Installation".

4. CHECK DOOR LOCK AND UNLOCK SWITCH GROUND

Check continuity between front power window switch (passenger side) harness connector and ground.

Front power window switch (passenger side)		Ground	Continuity
Connector	Terminal		
M25	3		Existed

Is the inspection result normal?

YES >> GO TO 5.
NO >> Repair or replace harness.

5. CHECK DOOR LOCK AND UNLOCK SWITCH

Check front power window switch (passenger side).
Refer to DLK-229, "PASSENGER SIDE : Component Inspection".

Is the inspection result normal?

YES >> GO TO 6.
NO >> Replace front power window switch (passenger side). Refer to PWC-93, "Removal and Installation".

6. CHECK INTERMITTENT INCIDENT

Refer to GI-41, "Intermittent Incident".

>> INSPECTION END

PASSENGER SIDE : Component Inspection

INFOID:0000000007772989

1. CHECK DOOR LOCK AND UNLOCK SWITCH

1. Turn ignition switch OFF.
2. Disconnect front power window switch (passenger side) connector.
3. Check continuity between front power window switch (passenger side) terminals.

Front power window switch (passenger side) Terminal		Condition		Continuity
1	3	Door lock and unlock switch	LOCK	Existed
			UNLOCK	Not existed
2			LOCK	Not existed
			UNLOCK	Existed

Is the inspection result normal?

YES >> INSPECTION END
NO >> Replace front power window switch (passenger side). Refer to PWC-93, "Removal and Installation".

DOOR LOCK ACTUATOR

DRIVER SIDE

DRIVER SIDE : Description

INFOID:0000000007772990

Locks/unlocks the door with the signal from BCM.

DRIVER SIDE : Component Function Check

INFOID:0000000007772991

1. CHECK FUNCTION

1. Use CONSULT to perform BCM Active Test (“DOOR LOCK”).
2. Touch “ALL LOCK” or “ALL UNLK” to check that it works normally.

Is the inspection result normal?

YES >> Door lock actuator is OK.
NO >> Refer to DLK-230, "DRIVER SIDE : Diagnosis Procedure".

DRIVER SIDE : Diagnosis Procedure

INFOID:0000000007772992

1. CHECK DOOR LOCK ACTUATOR INPUT SIGNAL

1. Turn ignition switch OFF.
2. Disconnect front door lock assembly (driver side) connector.
3. Check voltage between front door lock assembly (driver side) harness connector and ground.

(+)		(–)	Condition		Voltage (V) (Approx.)
Front door lock assembly (driver side)					
Connector	Terminal				
D9	1	Ground	Door lock and unlock switch	Lock	0 → Battery voltage → 0
	2			Unlock	0 → Battery voltage → 0

Is the inspection result normal?

YES >> Replace front door lock assembly (driver side). Refer to DLK-318, "DOOR LOCK : Removal and Installation".
NO >> GO TO 2.

2. CHECK DOOR LOCK ACTUATOR CIRCUIT

1. Disconnect BCM connector and all door lock actuator connector.
2. Check continuity between BCM harness connector and front door lock assembly (driver side) harness connector.

BCM		Front door lock assembly (driver side)		Continuity
Connector	Terminal	Connector	Terminal	
M67	59	D9	2	Existed
	65		1	

3. Check continuity between BCM harness connector and ground.

BCM		Ground	Continuity
Connector	Terminal		
M67	59	Ground	Not existed
	65		

Is the inspection result normal?

YES >> Replace BCM. Refer to BCS-142, "Removal and Installation".
NO >> Repair or replace harness.

PASSENGER SIDE

PASSENGER SIDE : Description

INFOID:0000000007772993

Locks/unlocks the door with the signal from BCM.

PASSENGER SIDE : Component Function Check

INFOID:0000000007772994

1. CHECK FUNCTION

1. Use CONSULT to perform Active Test (“DOOR LOCK”).
2. Touch “ALL LOCK” or “ALL UNLK” to check that it works normally.

Is the inspection result normal?

YES >> Door lock actuator is OK.
NO >> Refer to DLK-231, "PASSENGER SIDE : Diagnosis Procedure".

PASSENGER SIDE : Diagnosis Procedure

INFOID:0000000007772995

1. CHECK DOOR LOCK ACTUATOR INPUT SIGNAL

1. Turn ignition switch OFF.
2. Disconnect front door lock assembly (passenger side) connector.
3. Check voltage between front door lock assembly (passenger side) harness connector and ground.

(+)		(–)	Condition		Voltage (V) (Approx.)
Front door lock assembly (passenger side)					
Connector	Terminal				
D28	5	Ground	Door lock and unlock switch	Lock	0 → Battery voltage → 0
	6			Unlock	0 → Battery voltage → 0

Is the inspection result normal?

YES >> Replace front door lock assembly (passenger side). Refer to DLK-318, "DOOR LOCK : Removal and Installation".
NO >> GO TO 2.

2. CHECK DOOR LOCK ACTUATOR CIRCUIT

1. Disconnect BCM connector and all door lock actuator connector.
2. Check continuity between BCM harness connector and front door lock assembly (passenger side) harness connector.

BCM		Front door lock assembly (passenger side)		Continuity
Connector	Terminal	Connector	Terminal	
M67	65	D28	5	Existed
	66		6	

3. Check continuity between BCM harness connector and ground.

BCM		Ground	Continuity
Connector	Terminal		
M67	65		Not existed
	66		

Is the inspection result normal?

YES >> Replace BCM. Refer to BCS-142, "Removal and Installation".
NO >> Repair or replace harness.

REAR LH

REAR LH : Description

INFOID:0000000007772996

Locks/unlocks the door with the signal from BCM.

REAR LH : Component Function Check

INFOID:0000000007772997

1. CHECK FUNCTION

1. Use CONSULT to perform Active Test (“DOOR LOCK”).
2. Touch “ALL LOCK” or “ALL UNLK” to check that it works normally.

Is the inspection result normal?

YES >> Door lock actuator is OK.
NO >> Refer to DLK-233, "REAR RH : Diagnosis Procedure".

REAR LH : Diagnosis Procedure

INFOID:0000000007772998

1. CHECK DOOR LOCK ACTUATOR INPUT SIGNAL

1. Turn ignition switch OFF.
2. Disconnect rear door lock assembly LH connector.
3. Check voltage between rear door lock assembly LH harness connector and ground.

(+)		(–)	Condition		Voltage (V) (Approx.)
Rear door lock assembly LH					
Connector	Terminal				
D65	1	Ground	Door lock and unlock switch	Lock	0 → Battery voltage → 0
	2			Unlock	0 → Battery voltage → 0

Is the inspection result normal?

YES >> Replace rear door lock assembly LH. Refer to DLK-322, "DOOR LOCK : Removal and Installation".
NO >> GO TO 2.

2. CHECK DOOR LOCK ACTUATOR CIRCUIT

1. Disconnect BCM connector and all door lock actuator.
2. Check continuity between BCM harness connector and rear door lock assembly LH harness connector.

BCM		Rear door lock assembly LH		Continuity
Connector	Terminal	Connector	Terminal	
M67	65	D65	1	Existed
	66		2	

3. Check continuity between BCM harness connector and ground.

BCM		Ground	Continuity
Connector	Terminal		
M67	65		Not existed
	66		

Is the inspection result normal?

YES >> Replace BCM. Refer to BCS-142, "Removal and Installation".
NO >> Repair or replace harness.

REAR RH

REAR RH : Description

INFOID:0000000007772999

Locks/unlocks the door with the signal from BCM.

REAR RH : Component Function Check

INFOID:0000000007773000

1. CHECK FUNCTION

1. Use CONSULT to perform Active Test (“DOOR LOCK”).

2. Touch “ALL LOCK” or “ALL UNLK” to check that it works normally.

Is the inspection result normal?

YES >> Door lock actuator is OK.
NO >> Refer to DLK-233, "REAR RH : Diagnosis Procedure".

REAR RH : Diagnosis Procedure

INFOID:0000000007773001

1. CHECK DOOR LOCK ACTUATOR INPUT SIGNAL

1. Turn ignition switch OFF.
2. Disconnect rear door lock assembly RH connector.
3. Check voltage between rear door lock assembly RH harness connector and ground.

(+)		(–)	Condition		Voltage (V) (Approx.)
Rear door lock assembly RH					
Connector	Terminal				
D45	5	Ground	Door lock and unlock switch	Lock	0 → Battery voltage → 0
	6			Unlock	0 → Battery voltage → 0

Is the inspection result normal?

YES >> Replace rear door lock assembly RH. Refer to DLK-322, "DOOR LOCK : Removal and Installation".
NO >> GO TO 2.

2. CHECK DOOR LOCK ACTUATOR CIRCUIT

1. Disconnect BCM connector and all door lock actuator.
2. Check continuity between BCM harness connector and rear door lock assembly RH harness connector.

BCM		Rear door lock assembly RH		Continuity
Connector	Terminal	Connector	Terminal	
M67	65	D45	5	Existed
	66		6	

3. Check continuity between BCM harness connector and ground.

BCM		Ground	Continuity
Connector	Terminal		
M67	65		Not existed
	66		

Is the inspection result normal?

YES >> Replace BCM. Refer to BCS-142, "Removal and Installation".
NO >> Repair or replace harness.

BACK DOOR

BACK DOOR : Description

INFOID:0000000007773002

Locks/unlocks the door with the signal from BCM.

BACK DOOR : Component Function Check

INFOID:0000000007773003

1. CHECK FUNCTION

1. Use CONSULT to perform Active Test (“DOOR LOCK”).
2. Touch “ALL LOCK” or “ALL UNLK” to check that it works normally.

Is the inspection result normal?

YES >> Back door lock actuator is OK.
NO >> Refer to DLK-234, "BACK DOOR : Diagnosis Procedure".

BACK DOOR : Diagnosis Procedure

INFOID:0000000007773004

1. CHECK BACK DOOR LOCK ACTUATOR INPUT SIGNAL

1. Turn ignition switch OFF.
2. Disconnect back door lock assembly connector.
3. Check voltage between back door lock assembly harness connector and ground.

(+)		(–)	Condition		Voltage (V) (Approx.)
Back door lock assembly					
Connector	Terminal				
D106	2	Ground	Door lock and unlock switch	Unlock	0 → Battery voltage → 0
	3			Lock	0 → Battery voltage → 0

Is the inspection result normal?

YES >> Replace back door lock assembly. Refer to DLK-326, "DOOR LOCK : Removal and Installation".
NO >> GO TO 2

2. CHECK BACK DOOR LOCK ACTUATOR CIRCUIT

1. Disconnect BCM connector and all door lock actuator.
2. Check continuity between BCM harness connector and back door lock assembly harness connector.

BCM		Back door lock assembly		Continuity
Connector	Terminal	Connector	Terminal	
M67	65	D106	3	Existed
	66		2	

3. Check continuity between BCM harness connector and ground.

BCM		Ground	Continuity
Connector	Terminal		
M67	65		Not existed
	66		

Is the inspection result normal?

YES >> Replace BCM. Refer to BCS-142, "Removal and Installation".
NO >> Repair or replace harness.

DOOR KEY CYLINDER SWITCH

Description

INFOID:0000000007773005

Transmits lock/unlock operation to BCM.

Component Function Check

INFOID:0000000007773006

1. CHECK DOOR KEY CYLINDER SWITCH INPUT SIGNAL

Check (“KEY CYL LK-SW”, “KEY CYL UN-SW”) in “Data Monitor” mode using CONSULT.

Monitor item	Condition		Status
KEY CYL LK-SW	Driver side door key cylinder	Lock	ON
		Neutral / Unlock	OFF
KEY CYL UN-SW		Unlock	ON
		Neutral / Lock	OFF

Is the inspection result normal?

YES >> Door key cylinder switch is OK.
NO >> Refer to DLK-235, "Diagnosis Procedure".

Diagnosis Procedure

INFOID:0000000007773007

1. CHECK DOOR KEY CYLINDER SWITCH INPUT SIGNAL

1. Turn ignition switch OFF.
2. Disconnect front door lock assembly (driver side) connector.
3. Check voltage between front door lock assembly (driver side) harness connector and ground.

(+) Front door lock assembly (driver side) Connector	Terminal	(–)	Voltage (V) (Approx.)
D9	5	Ground	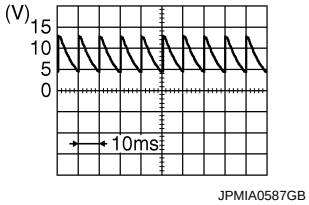 8.0 - 8.5 V
	6		Battery voltage

Is the inspection result normal?

YES >> GO TO 3.
NO >> GO TO 2.

2. CHECK DOOR KEY CYLINDER SWITCH SIGNAL CIRCUIT

1. Disconnect BCM connector.
2. Check continuity between BCM harness connector and front door lock assembly (driver side) harness connector.

BCM Connector	BCM Terminal	Front door lock assembly (driver side) Connector	Front door lock assembly (driver side) Terminal	Continuity
M65	7	D9	5	Existed
	8		6	

3. Check continuity between BCM harness connector and ground.

BCM		Ground	Continuity
Connector	Terminal		
M65	7		Not existed
	8		

Is the inspection result normal?

YES >> Replace BCM. Refer to BCS-142, "Removal and Installation".
NO >> Repair or replace harness.

3. CHECK DOOR KEY CYLINDER SWITCH GROUND CIRCUIT

Check continuity between front door lock assembly (driver side) harness connector and ground.

Front door lock assembly (driver side)		Ground	Continuity
Connector	Terminal		
D9	4		Existed

Is the inspection result normal?

YES >> GO TO 4.
NO >> Repair or replace harness.

4. CHECK DOOR KEY CYLINDER SWITCH

Refer to DLK-236, "Component Inspection".

Is the inspection result normal?

YES >> GO TO 5.
NO >> Replace front door lock assembly (driver side). Refer to DLK-318, "DOOR LOCK : Removal and Installation".

5. CHECK INTERMITTENT INCIDENT

Refer to GI-41, "Intermittent Incident".

>> INSPECTION END

Component Inspection

INFOID:0000000007773008

1. CHECK DOOR KEY CYLINDER SWITCH

1. Turn ignition switch OFF.
2. Disconnect front door lock assembly (driver side) terminal.
3. Check continuity between front door lock assembly (driver side) terminals.

Front door lock assembly (driver side) Terminal		Condition		Continuity
5	4	Driver side door key cylinder	Unlock	Existed
			Neutral / Lock	Not existed
6			Lock	Existed
			Neutral / Unlock	Not existed

Is the inspection result normal?

YES >> INSPECTION END
NO >> Replace front door lock assembly (driver side). Refer to DLK-318, "DOOR LOCK : Removal and Installation".

REMOTE KEYLESS ENTRY RECEIVER

Description

INFOID:0000000007773009

Receives Intelligent Key operation and transmits to BCM.

Component Function Check

INFOID:0000000007773010

1.CHECK FUNCTION

Check (“RKE OPE COUN1”) in MULTI REMOTE ENT Data Monitor mode using CONSULT.

Monitor item	Condition
RKE OPE COUN1	Checks whether value changes when operating Intelligent Key

Is the inspection result normal?

YES >> Remote keyless entry receiver is OK.
NO >> Refer to DLK-237, "Diagnosis Procedure".

Diagnosis Procedure

INFOID:0000000007773011

1.CHECK REMOTE KEYLESS ENTRY RECEIVER OUTPUT SIGNAL

1. Turn ignition switch OFF.
2. Check signal between remote keyless entry receiver harness connector and ground using oscilloscope.

(+) Remote keyless entry receiver		(–)	Condition	Signal (Reference value)
Connector	Terminal			
M61	2	Ground	Waiting	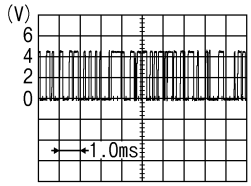 PIIB7728J
			Signal receiving	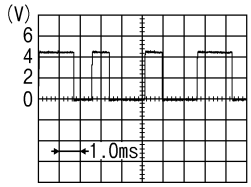 PIIB7729J

Is the inspection result normal?

YES >> GO TO 2.
NO >> GO TO 3.

2.CHECK REMOTE KEYLESS ENTRY RECEIVER CIRCUIT 1

1. Disconnect BCM connector and remote keyless entry receiver connector
2. Check continuity between BCM harness connector and remote keyless entry receiver harness connector.

BCM		Remote keyless entry receiver		Continuity
Connector	Terminal	Connector	Terminal	
M65	20	M61	2	Existed

3. Check continuity between BCM harness connector and ground.

BCM		Ground	Continuity
Connector	Terminal		
M65	20		Not existed

Is the inspection result normal?

YES >> Replace BCM. Refer to BCS-142, "Removal and Installation".
NO >> Repair or replace harness between BCM and remote keyless entry receiver.

3. CHECK REMOTE KEYLESS ENTRY RECEIVER POWER SUPPLY

1. Disconnect remote keyless entry receiver.
2. Check signal between remote keyless entry receiver harness connector and ground using oscilloscope.

(+)		(–)	Signal (Reference value)	
Remote keyless entry receiver				
Connector	Terminal			
M61	4	Ground	Insert mechanical key into ignition key cylinder	0 V
			Remove mechanical key from ignition key cylinder (Any door opened)	5 V
			Remove mechanical key from ignition key cylinder (Any door closed)	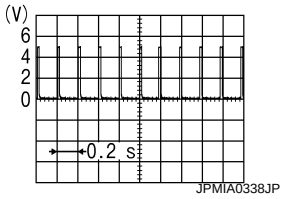

Is the inspection result normal?

YES >> GO TO 5.
NO >> GO TO 4.

4. CHECK REMOTE KEYLESS ENTRY RECEIVER CIRCUIT 2

1. Disconnect BCM connector.
2. Check continuity between BCM harness connector and remote keyless entry receiver harness connector.

BCM		Remote keyless entry receiver		Continuity
Connector	Terminal	Connector	Terminal	
M61	19	M61	4	Existed

3. Check continuity between BCM connector and ground.

BCM		Ground	Continuity
Connector	Terminal		
M61	19		Not existed

Is the inspection result normal?

YES >> Replace BCM. Refer to BCS-142, "Removal and Installation".
NO >> Repair or replace harness between BCM and remote keyless entry receiver.

5. CHECK REMOTE KEYLESS ENTRY RECEIVER CIRCUIT 3

1. Disconnect BCM connector.
2. Check continuity between BCM harness connector and remote keyless entry receiver harness connector.

BCM		Remote keyless entry receiver		Continuity
Connector	Terminal	Connector	Terminal	
M65	18	M61	1	Existed

3. Check continuity between BCM harness connector and ground.

BCM		Ground	Continuity
Connector	Terminal		
M65	18		Existed

Is the inspection result normal?

YES >> GO TO 6.
NO >> Repair or replace harness.

6. CHECK REMOTE KEYLESS ENTRY RECEIVER GROUND CIRCUIT

1. Connect BCM connector.
2. Check continuity between BCM harness connector and ground.

BCM		Ground	Continuity
Connector	Terminal		
M65	18		Existed

Is the inspection result normal?

YES >> Replace remote keyless entry receiver. Refer to DLK-332, "Removal and Installation".
NO >> Replace BCM. Refer to BCS-142, "Removal and Installation".

KEY SWITCH

Description

INFOID:0000000007773012

Key switch detects that ignition key is inserted into the key cylinder, and then transmits the signal to BCM.

Component Function Check

INFOID:0000000007773013

1.CHECK FUNCTION

Check (“KEY ON SW”) in BCM “DATA MONITOR” mode using CONSULT..

Monitor item	Condition		Status
KEY ON SW	Keyfob	Inserted in key cylinder	ON
		Removed from key cylinder	OFF

Is the inspection result normal?

YES >> Key switch is OK.
NO >> Refer to DLK-240, "Diagnosis Procedure".

Diagnosis Procedure

INFOID:0000000007773014

1.CHECK FUSE

1. Turn ignition switch OFF.
2. Check 10 A fuse, [No.10, located in fuse block (J/B)].

Is fuse fusing?

YES >> Replace the blown fuse after repairing the affected circuit if a fuse is blown.
NO >> GO TO 2.

2.CHECK KEY SWITCH POWER SUPPLY CIRCUIT

1. Disconnect key switch connector.
2. Check voltage between key switch harness connector and ground.

Key switch		Ground	Voltage (V) (Approx.)
Connector	Terminal		
M24	2		Battery voltage

Is the inspection result normal?

YES >> GO TO 3.
NO >> Repair or replace harness.

3.CHECK KEY SWITCH CIRCUIT

1. Disconnect BCM connector.
2. Check continuity between key switch harness connector and BCM harness connector.

Key switch		BCM		Continuity
Connector	Terminal	Connector	Terminal	
M24	1	M65	37	Existed

3. Check continuity between key switch connector and ground.

Key switch		Ground	Continuity
Connector	Terminal		
M24	1		Not existed

Is the inspection result normal?

YES >> GO TO 4
NO >> Repair or replace harness.

4. CHECK KEY SWITCH

Refer to DLK-241, "Component Inspection".

Is the inspection result normal?

YES >> GO TO 5.
NO >> Replace key switch.

5. CHECK INTERMITTENT INCIDENT

Refer to GI-41, "Intermittent Incident".

>> INSPECTION END

Component Inspection

INFOID:0000000007773015

COMPONENT INSPECTION

1. CHECK KEY SWITCH

1. Turn ignition switch OFF.
2. Disconnect key switch connector.
3. Check continuity between key switch terminals.

Key switch		Condition		Continuity
Terminal				
1	2	Keyfob	Inserted in key cylinder	Existed
			Removed from key cylinder	Not existed

Is the inspection result normal?

YES >> INSPECTION END
NO >> Replace key switch.

BUZZER (COMBINATION METER)

Description

INFOID:0000000007773016

Performs operation method guide and warning with buzzer.

Component Function Check

INFOID:0000000007773017

1.CHECK FUNCTION

1. Check the operation with “INSIDE BUZZER” in the Active Test.
2. Touch “take out”, “knob”or “key”on screen.

Is the inspection result normal?

Yes >> Buzzer (combination meter) is OK.
No >> Refer to DLK-242, "Diagnosis Procedure".

Diagnosis Procedure

INFOID:0000000007773018

1.CHECK METER BUZZER CIRCUIT

Refer to WCS-25, "Component Function Check".

Is the inspection result normal?

Yes >> GO TO 2.
No >> Repair or replace meter buzzer circuit.

2.CHECK INTERMITTENT INCIDENT

Refer to GI-41, "Intermittent Incident".

>> INSPECTION END

HAZARD FUNCTION

Description

INFOID:0000000007773019

Perform answer-back for each operation with number of blinks.

Component Function Check

INFOID:0000000007773020

1.CHECK FUNCTION

Check hazard warning lamp (“FLASHER”) in Active Test.

Is the inspection result normal?

YES >> Hazard warning lamp circuit is OK.
NO >> Refer to DLK-243, "Diagnosis Procedure".

Diagnosis Procedure

INFOID:0000000007773021

1.CHECK HAZARD SWITCH CIRCUIT

Refer to EXL-66, "Component Function Check".

Is the inspection result normal?

YES >> GO TO 2.
NO >> Repair or replace hazard warning switch circuit. Refer to EXL-177, "Removal and Installation".

2.CHECK INTERMITTENT INCIDENT

Refer to GI-41, "Intermittent Incident".

>> INSPECTION END

KEYFOB BATTERY

Description

INFOID:0000000007773022

Remote door lock and unlock control entry function available when operating on button.

Component Function Check

INFOID:0000000007773023

1.CHECK FUNCTION

Check door lock and unlock operation with keyfob button.

Is the inspection result normal?

YES >> Keyfob is OK.
NO >> Refer to DLK-244, "Diagnosis Procedure".

Diagnosis Procedure

INFOID:0000000007773024

1.CHECK KEYFOB BATTERY

Check by connecting a resistance (approximately 300Ω) so that the current value becomes about 10 mA.

Standard : Approx. 2.5 - 3.0V

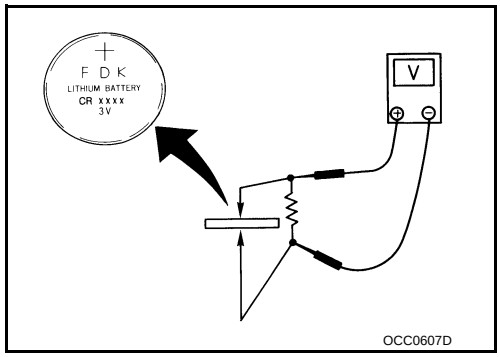

Is the measurement value within the specification?

YES >> Replace keyfob.
NO >> Replace keyfob battery. Refer to DLK-333, "Removal and Installation".

POWER DOOR LOCK SYSTEM

Wiring Diagram - POWER DOOR LOCK SYSTEM -

INFOID:0000000007773025

For connector terminal arrangements, harness layouts, and alphabets in a ⬡ (option abbreviation; if not described in wiring diagram), refer to GI-12, "Connector Information".

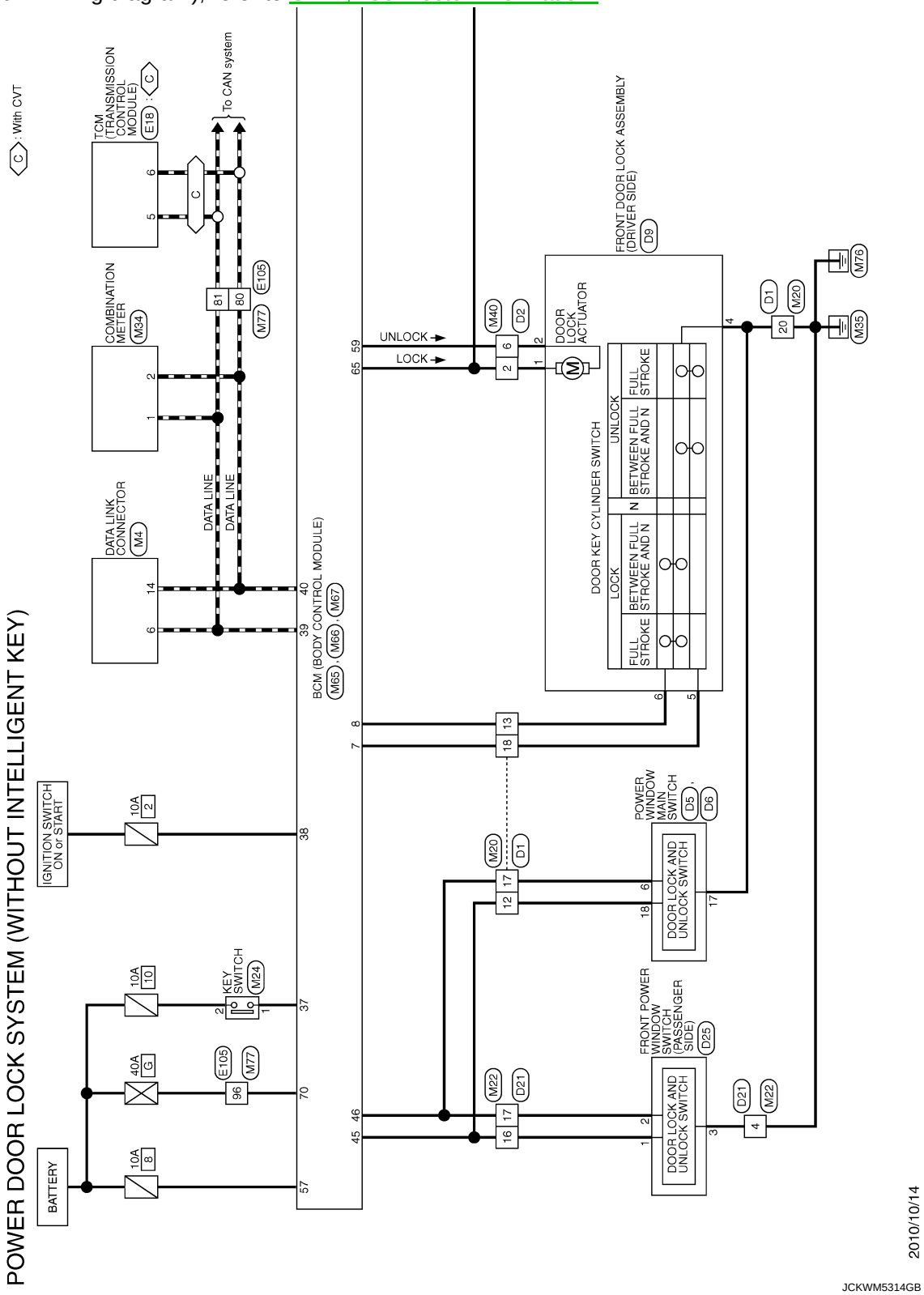

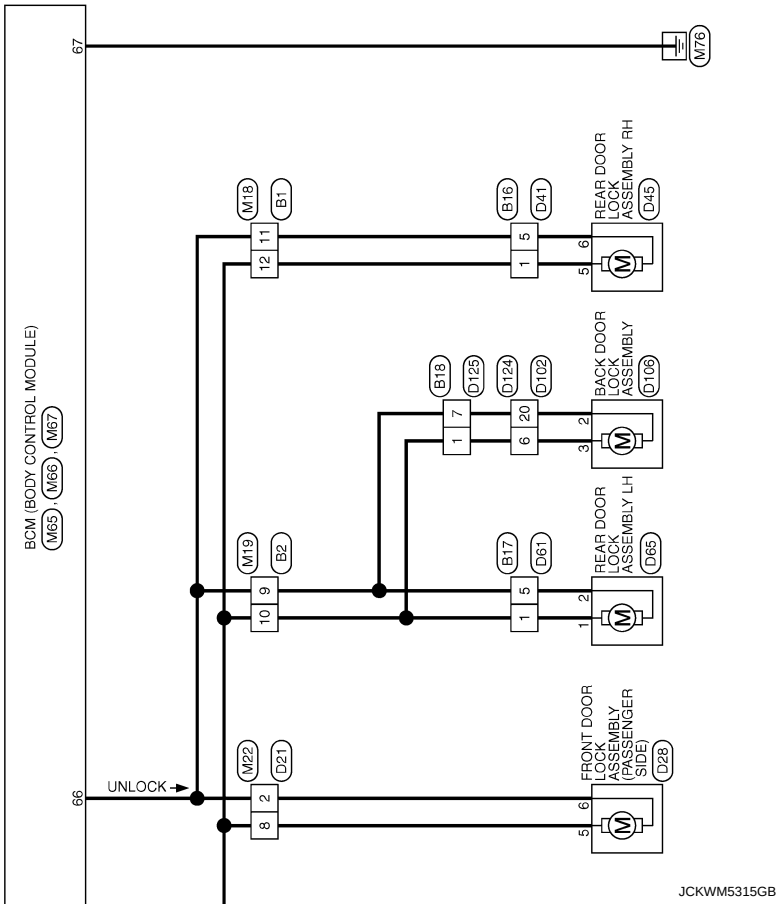
BCM (BODY CONTROL MODULE)
M65, M66, M67
66
67
UNLOCK
M22
D21
M19
B2
M18
B1
M76
FRONT DOOR LOCK ASSEMBLY (PASSENGER SIDE)
D28
REAR DOOR LOCK ASSEMBLY LH
D65
B17
D61
BACK DOOR LOCK ASSEMBLY
D106
B18
D125
D124
D102
REAR DOOR LOCK ASSEMBLY RH
D45
B16
D41
JCKWM5315GB

REMOTE KEYLESS ENTRY SYSTEM

Wiring Diagram - REMOTE KEYLESS ENTRY SYSTEM -

INFOID:0000000007773026

For connector terminal arrangements, harness layouts, and alphabets in a ⬡ (option abbreviation; if not described in wiring diagram), refer to GI-12, "Connector Information".

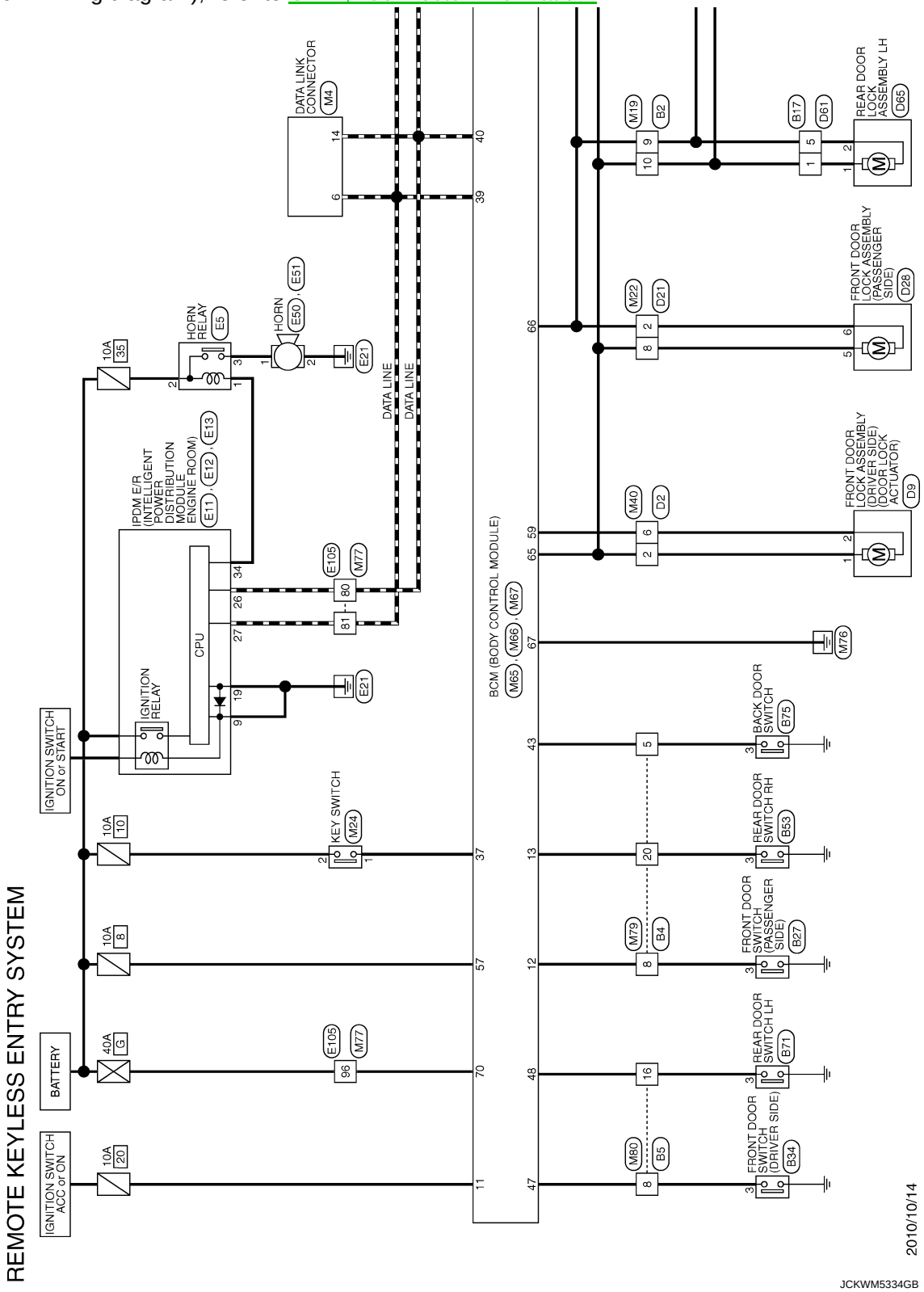

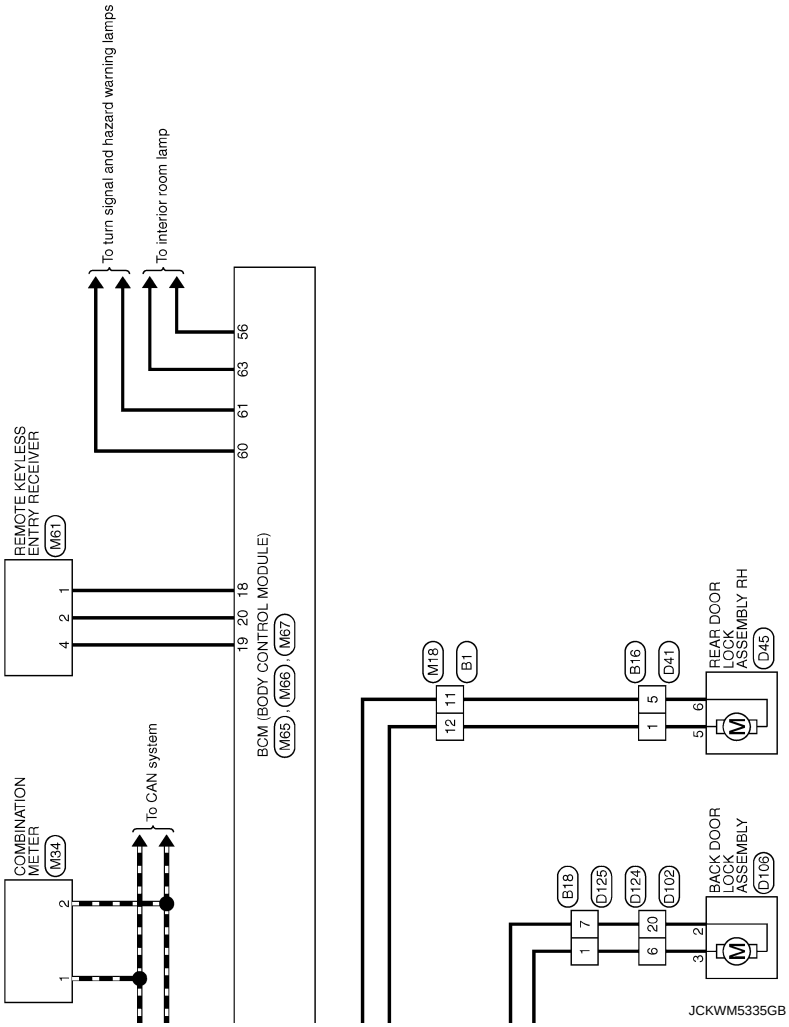
COMBINATION METER
M34
1
2
To CAN system
REMOTE KEYLESS ENTRY RECEIVER
M61
1
2
4
BCM (BODY CONTROL MODULE)
M65, M66, M67
19 20 18
60 61 63 56
To turn signal and hazard warning lamps
To interior room lamp
M18
B1
12 11
B16
D41
1 5
6
5
REAR DOOR LOCK ASSEMBLY RH
D45
B18
D125
D124
D102
1 7
6 20
2
3
BACK DOOR LOCK ASSEMBLY
D106
JCKWM5335GB

ECU DIAGNOSIS INFORMATION

BCM (BODY CONTROL MODULE)

Reference Value

INFOID:0000000007991884

VALUES ON THE DIAGNOSIS TOOL

Monitor Item	Condition	Value/Status
IGN ON SW	Ignition switch OFF or ACC	Off
	Ignition switch ON	On
KEY ON SW	Mechanical key is removed from key cylinder	Off
	Mechanical key is inserted to key cylinder	On
CDL LOCK SW	Door lock/unlock switch does not operate	Off
	Press door lock/unlock switch to the lock side	On
CDL UNLOCK SW	Door lock/unlock switch does not operate	Off
	Press door lock/unlock switch to the unlock side	On
DOOR SW-DR	Driver's door closed	Off
	Driver's door opened	On
DOOR SW-AS	Passenger door closed	Off
	Passenger door opened	On
DOOR SW-RR	Rear RH door closed	Off
	Rear RH door opened	On
DOOR SW-RL	Rear LH door closed	Off
	Rear LH door opened	On
BACK DOOR SW	Back door closed	Off
	Back door opened	On
LOCK STATUS	**NOTE:** The item is indicated, but not monitored.	Off
ACC ON SW	Ignition switch OFF	Off
	Ignition switch ACC or ON	On
KEYLESS LOCK	“LOCK” button of key fob is not pressed	Off
	“LOCK” button of key fob is pressed	On
KEYLESS UNLOCK	“UNLOCK” button of key fob is not pressed	Off
	“UNLOCK” button of key fob is pressed	On
SHOCK SENSOR	**NOTE:** The item is indicated, but not monitored.	NORMAL
KEY CYL LK-SW	Other than driver door key cylinder LOCK position	Off
	Driver door key cylinder LOCK position	On
KEY CYL UN-SW	Other than driver door key cylinder UNLOCK position	Off
	Driver door key cylinder UNLOCK position	On
VEHICLE SPEED	While driving	Equivalent to speed-ometer reading
REAR DEF SW	Rear window defogger switch OFF	Off
	Rear window defogger switch ON	On
REVERSE SW CAN	**NOTE:** The item is indicated, but not used.	Off
		On

Monitor Item	Condition	Value/Status
TAIL LAMP SW	Lighting switch OFF	Off
	Lighting switch 1ST	On
FR FOG SW	**NOTE:** The item is indicated, but not monitored.	Off
BUCKLE SW	The seat belt (driver side) is fastened. [Seat belt switch (driver side) OFF]	Off
	The seat belt (driver side) is unfastened. [Seat belt switch (driver side) ON]	On
TRNK/HAT MNTR	**NOTE:** The item is indicated, but not monitored.	Off
ACC SW	Ignition switch OFF	Off
	Ignition switch ACC or ON	On
KYLS TRNK/HAT	**NOTE:** The item is indicated, but not monitored.	Off
KEYLESS PANIC	PANIC button of key fob is not pressed	Off
	PANIC button of key fob is pressed	On
HI BEAM SW	Lighting switch OFF	Off
	Lighting switch HI	On
HEAD LAMP SW 1	Lighting switch OFF	Off
	Lighting switch 2ND	On
HEAD LAMP SW 2	Lighting switch OFF	Off
	Lighting switch 2ND	On
AUTO LIGHT SW	**NOTE:** The item is indicated, but not monitored.	Off
PASSING SW	Other than lighting switch PASS	Off
	Lighting switch PASS	On
RR FOG SW	**NOTE:** The item is indicated, but not monitored.	Off
TURN SIGNAL R	Turn signal switch OFF	Off
	Turn signal switch RH	On
TURN SIGNAL L	Turn signal switch OFF	Off
	Turn signal switch LH	On
PKB SW	Parking brake switch is OFF	Off
	Parking brake switch is ON	On
ENGINE RUN	Engine stopped	Off
	Engine running	On
OPTI SEN (DTCT)	**NOTE:** The item is indicated, but not monitored.	Close to 5 V
OPTI SEN (FILT)	**NOTE:** The item is indicated, but not monitored.	Close to 5 V
LIG SEN COND	**NOTE:** The item is indicated, but not monitored.	OFF
IGN SW CAN	Ignition switch OFF or ACC	Off
	Ignition switch ON	On
FR WIPER HI	Front wiper switch OFF	Off
	Front wiper switch HI	On
FR WIPER LOW	Front wiper switch OFF	Off
	Front wiper switch LO	On

Monitor Item	Condition	Value/Status
FR WIPER INT	Front wiper switch OFF	Off
	Front wiper switch INT	On
FR WASHER SW	Front washer switch OFF	Off
	Front washer switch ON	On
INT VOLUME	Wiper intermittent dial is in a dial position 1 - 7	1 - 7
FR WIPER STOP	Any position other than front wiper stop position	Off
	Front wiper stop position	On
RR WIPER ON	Rear wiper switch OFF	Off
	Rear wiper switch ON	On
RR WIPER INT	Rear wiper switch OFF	Off
	Rear wiper switch INT	On
RR WASHER SW	Rear washer switch OFF	Off
	Rear washer switch ON	On
RR WIPER STOP	Rear wiper stop position	Off
	Other than rear wiper stop position	On
RAIN SENSOR	**NOTE:** The item is indicated, but not monitored.	Off
HAZARD SW	Hazard switch OFF	Off
	Hazard switch ON	On
FAN ON SIG	Blower control dial OFF	Off
	Other than blower control dial OFF	On
AIR COND SW	A/C switch OFF	Off
	A/C switch ON	On
THERMO AMP	Ignition switch ON	Off
	Evaporator is extremely low temperature	On
FR DEF SW	Other than A/C mode defroster ON position	Off
	A/C mode defroster ON position	On
KEYLESS TRUNK	**NOTE:** The item is indicated, but not monitored.	Off
TRNK OPNR SW	**NOTE:** The item is indicated, but not monitored.	Off
TRNK OPN MNTR	**NOTE:** The item is indicated, but not monitored.	Off
HOOD SW	Close the hood	Off
	Open the hood	On
TRANSPONDER	Other than the ignition switch is ON by key registered to BCM.	Off
	The ignition switch is ON by key registered to BCM.	On
INTELLI KEY	**NOTE:** The item is indicated, but not used.	Off
AUTO RELOCK	**NOTE:** The item is indicated, but not monitored.	Off
OIL PRESS SW	• Ignition switch OFF or ACC • Engine running	Off
	Ignition switch ON	On
BRAKE SW	Brake pedal is not depressed	Off
	Brake pedal is depressed	On

TERMINAL LAYOUT

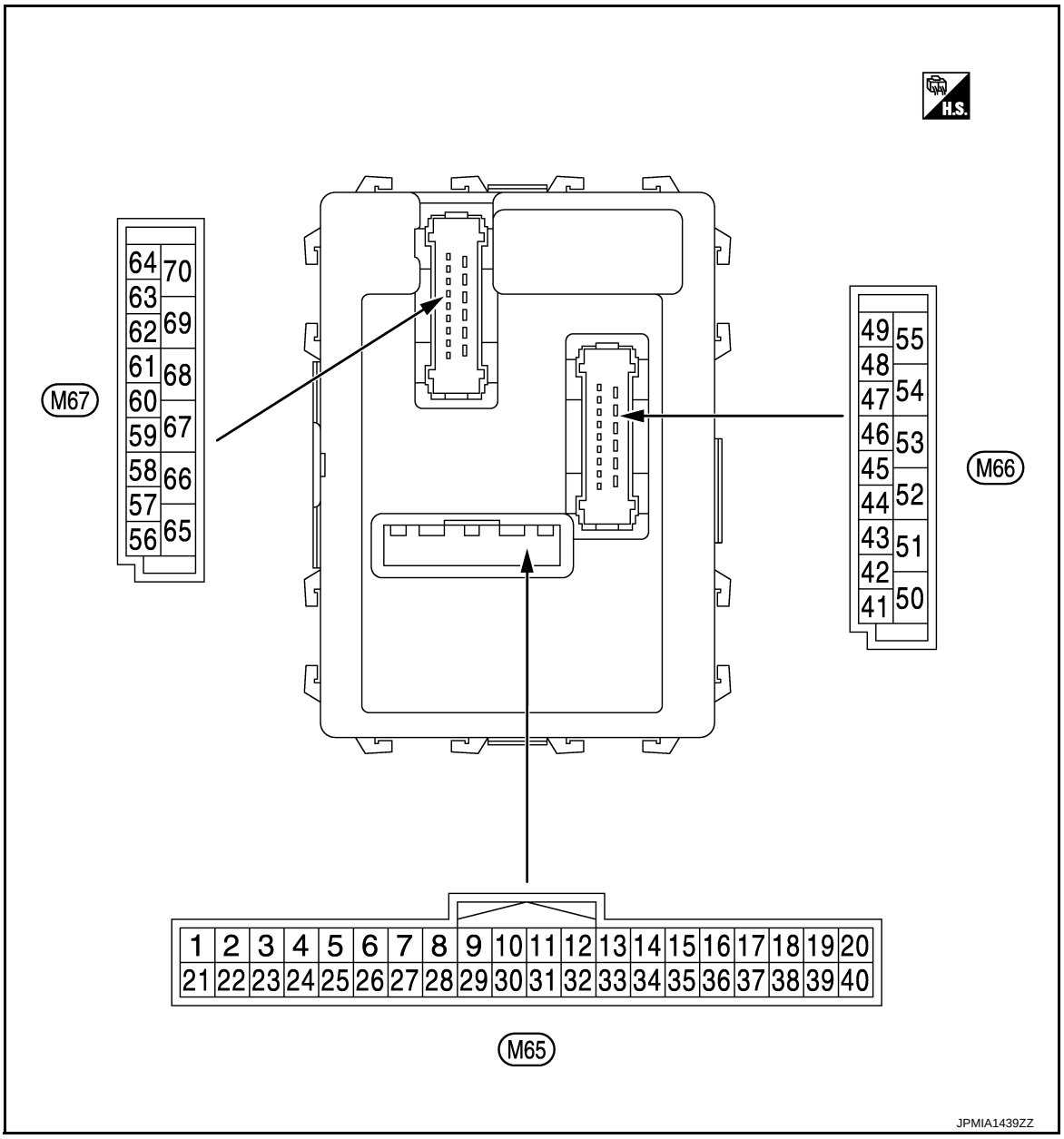

NOTE:
- M65, M66: White
- M67: Black

PHYSICAL VALUES

Terminal No. (Wire color)		Description		Condition		Value (Approx.)
+	–	Signal name	Input/ Output			
2 (BR/W)	Ground	Combination switch INPUT 5	Input	Combination switch (Wiper intermittent dial 4)	All switch OFF	0 V
					Turn signal switch RH Lighting switch HI Lighting switch 1ST	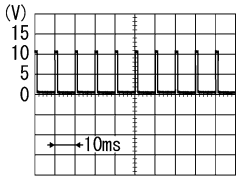 PKIB4958J 1.0 V
					Lighting switch 2ND	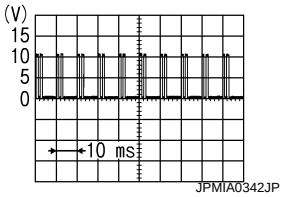 JPMIA0342JP 2.0 V
3 (GR)	Ground	Combination switch INPUT 4	Input	Combination switch (Wiper intermittent dial 4)	All switch OFF	0 V
					Turn signal switch LH Lighting switch PASS Lighting switch 2ND	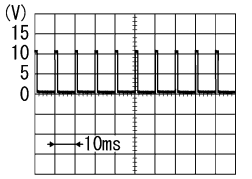 PKIB4958J 1.0 V
4 (L/Y)	Ground	Combination switch INPUT 3	Input	Combination switch (Wiper intermittent dial 4)	All switch OFF	0 V
					Front wiper switch LO Front wiper switch MIST Front wiper switch INT	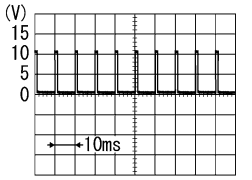 PKIB4958J 1.0 V

Terminal No. (Wire color)		Description		Condition		Value (Approx.)
+	–	Signal name	Input/ Output			
5 (G)	Ground	Combination switch INPUT 2	Input	Combination switch	All switch OFF (Wiper intermittent dial 4)	0 V
					Front washer switch (Wiper intermittent dial 4) Rear washer switch ON (Wiper intermittent dial 4) Any of the condition below with all switch OFF • Wiper intermittent dial 1 • Wiper intermittent dial 5 • Wiper intermittent dial 6	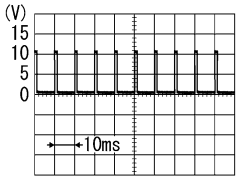 PKIB4958J 1.0 V
					Rear wiper switch ON (Wiper intermittent dial 4)	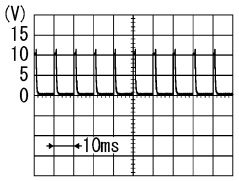 PKIB4956J 0.8 V
6 (L/R)	Ground	Combination switch INPUT 1	Input	Combination switch	All switch OFF (Wiper intermittent dial 4)	0 V
					Front wiper switch HI (Wiper intermittent dial 4) Rear wiper switch INT (Wiper intermittent dial 4) Wiper intermittent dial 3 (All switch OFF)	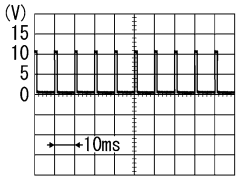 PKIB4958J 1.0 V
					Any of the condition below with all switch OFF • Wiper intermittent dial 1 • Wiper intermittent dial 2	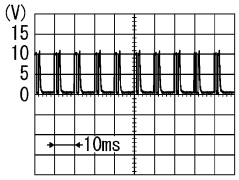 PKIB4952J 1.9 V
					Any of the condition below with all switch OFF • Wiper intermittent dial 6 • Wiper intermittent dial 7	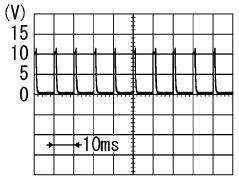 PKIB4956J 0.8 V

Terminal No. (Wire color)		Description		Condition		Value (Approx.)
+	–	Signal name	Input/ Output			
7 (W/R)	Ground	Door key cylinder switch UNLOCK	Input	Door key cylinder switch	NEUTRAL position	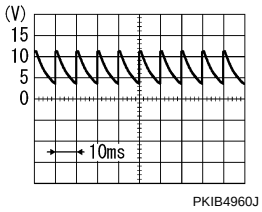 7.0 - 8.0 V
					UNLOCK position	0 V
8 (W/B)	Ground	Door key cylinder switch LOCK	Input	Door key cylinder switch	NEUTRAL position	12 V
					LOCK position	0 V
9 (R)	Ground	Stop lamp switch	Input	Stop lamp switch	OFF (Brake pedal is not depressed)	0 V
					ON (Brake pedal is depressed)	Battery voltage
10 (W/L)	Ground	Rear window defogger switch	Input	Rear window defogger switch	OFF (Not pressed)	12 V
					ON (Pressed)	0 V
11 (L/Y)	Ground	Ignition switch ACC	Input	Ignition switch OFF		0 V
				Ignition switch ACC or ON		Battery voltage
12 (SB)	Ground	Passenger door switch	Input	Passenger door switch	OFF (When passenger door closed)	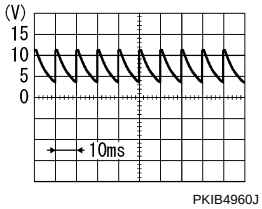 7.0 - 8.0 V
					ON (When passenger door opened)	0 V
13 (GR/L)	Ground	Rear RH door switch	Input	Rear RH door switch	OFF (When rear RH door closed)	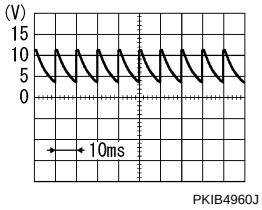 7.0 - 8.0 V
					ON (When rear RH door opened)	0 V
18 (V)	Ground	Receiver ground	Input	Ignition switch ON		0 V

Terminal No. (Wire color)		Description		Condition		Value (Approx.)
+	–	Signal name	Input/ Output			
19 (BR)	Ground	Remote keyless entry receiver power supply	Input	Ignition switch OFF	Insert mechanical key into ignition key cylinder	0 V
					Remove mechanical key from ignition key cylinder (Any door opened)	5 V
					Remove mechanical key from ignition key cylinder (Any door closed)	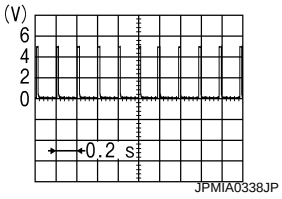
20 (G/Y)	Ground	Remote keyless entry receiver communication	Input	Ignition switch OFF	Insert mechanical key into ignition key cylinder	0 V
					Waiting	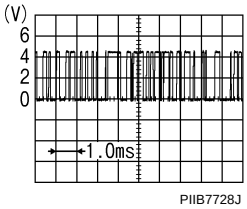
					Signal receiving	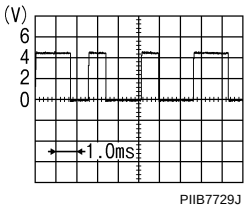
21 (P/L)	Ground	NATS antenna amp.	Input/ Output	Just after inserting ignition key in key cylinder		Pointer of tester should move
				Other than above		0 V
23 (R/Y)	Ground	Security indicator	Input	Security indicator	ON	0 V
					Blinking (Ignition switch OFF)	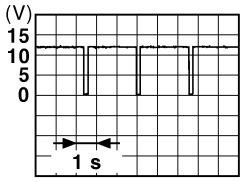 11.3 V
					OFF	12 V
24* (GR/B)	Ground	Dongle link	Input/ Output	Ignition switch OFF		5 V
25 (LG)	Ground	NATS antenna amp.	Input/ Output	Just after inserting ignition key in key cylinder		Pointer of tester should move
				Other than above		0 V
26 (GR)	Ground	Thermo control amp.	Input	Ignition switch ON		0 V
				Evaporator is extremely low temperature		12 V

Terminal No. (Wire color) +	Terminal No. (Wire color) –	Description: Signal name	Description: Input/Output	Condition		Value (Approx.)
27 (Y/G)	Ground	A/C switch	Input	A/C switch	OFF	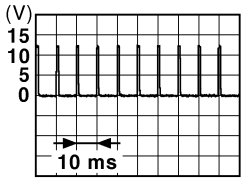 JPMIA0012GB 1.0 - 1.5 V
					ON	0 V
28 (G/W)	Ground	Blower fan switch	Input	Fan switch	Blower fan switch OFF	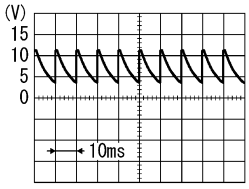 PKIB4960J 7.0 - 8.0 V
					Blower fan switch ON	0 V
29 (L/W)	Ground	Hazard switch	Input	Hazard switch	OFF	Battery voltage
					ON	0 V
31 (G/Y)	Ground	Front defroster switch	Input	Ignition switch ON	A/C mode defroster ON position	0 V
					Other than A/C mode defroster ON position	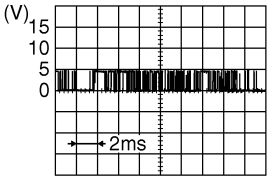 JPMIA0589GB 8.0 - 9.0 V
32 (LG)	Ground	Combination switch OUTPUT 5	Output	Combination switch	All switch OFF (Wiper intermittent dial 4)	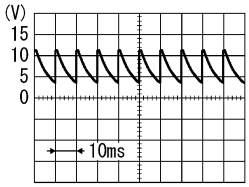 PKIB4960J 7.0 - 8.0 V
					Rear wiper switch ON (Wiper intermittent dial 4)	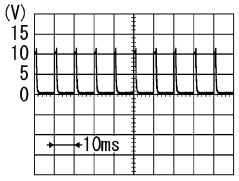 PKIB4956J 1.0 V
					Any of the condition below with all switch OFF • Wiper intermittent dial 1 • Wiper intermittent dial 2 • Wiper intermittent dial 6 • Wiper intermittent dial 7	

Terminal No. (Wire color)		Description		Condition		Value (Approx.)
+	–	Signal name	Input/ Output			
33 (Y/L)	Ground	Combination switch OUTPUT 4	Output	Combination switch	All switch OFF (Wiper intermittent dial 4)	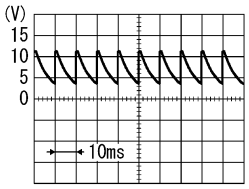 PKIB4960J 7.0 - 8.0 V
					Lighting switch 1ST (Wiper intermittent dial 4)	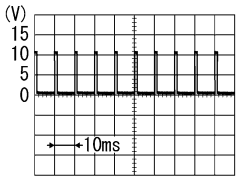 PKIB4958J 1.2 V
					Rear wiper switch INT (Wiper intermittent dial 4)	
					Any of the condition below with all switch OFF • Wiper intermittent dial 1 • Wiper intermittent dial 5 • Wiper intermittent dial 6	
34 (W)	Ground	Combination switch OUTPUT 3	Output	Combination switch	All switch OFF (Wiper intermittent dial 4)	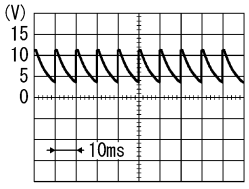 PKIB4960J 7.0 - 8.0 V
					Lighting switch 2ND (Wiper intermittent dial 4)	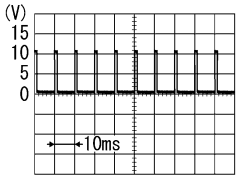 PKIB4958J 1.2 V
					Lighting switch HI (Wiper intermittent dial 4)	
					Rear washer switch ON (Wiper intermittent dial 4)	
					Any of the condition below with all switch OFF • Wiper intermittent dial 1 • Wiper intermittent dial 2 • Wiper intermittent dial 3	
35 (R/L)	Ground	Combination switch OUTPUT 2	Output	Combination switch (Wiper intermittent dial 4)	All switch OFF	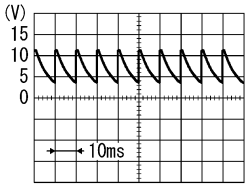 PKIB4960J 7.0 - 8.0 V
					Lighting switch 2ND	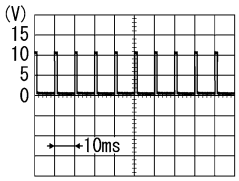 PKIB4958J 1.2 V
					Lighting switch PASS	
					Front wiper switch INT	
					Front wiper switch HI	

Terminal No. (Wire color)		Description		Condition		Value (Approx.)
+	–	Signal name	Input/ Output			
36 (L/O)	Ground	Combination switch OUTPUT 1	Output	Combination switch (Wiper intermittent dial 4)	All switch OFF	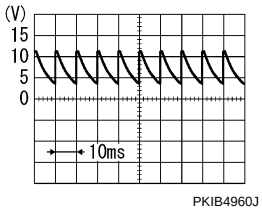 7.0 - 8.0 V
					Turn signal switch RH	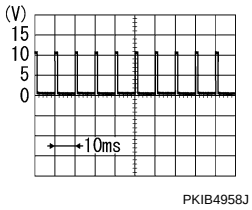 1.2 V
					Turn signal switch LH	
					Front wiper switch LO (Front wiper switch MIST)	
					Front washer switch ON	
37 (R/W)	Ground	Key switch	Input	Insert mechanical key into ignition key cylinder		Battery voltage
				Remove mechanical key from ignition key cylinder		0 V
38 (O)	Ground	Ignition switch ON	Input	Ignition switch OFF or ACC		0 V
				Ignition switch ON		Battery voltage
39 (L)	Ground	CAN-H	Input/ Output	—		—
40 (P)	Ground	CAN-L	Input/ Output	—		—
43 (W)	Ground	Back door switch	Input	Back door switch	OFF (When back door closed)	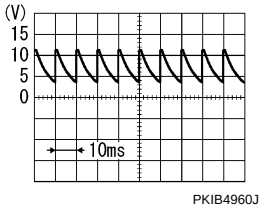 7.0 - 8.0 V
					ON (When back door opened)	0 V
44 (LG)	Ground	Rear wiper stop position	Input	Ignition switch ON	Rear wiper stop position	12 V
					Any position other than rear wiper stop position	0 V
45 (GR)	Ground	Door lock and unlock switch LOCK	Input	Door lock and unlock switch	NEUTRAL position	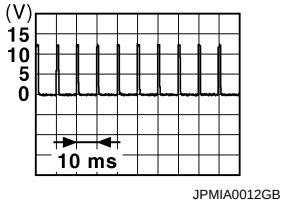 1.0 - 1.5 V
					LOCK position	0 V

Terminal No. (Wire color)		Description		Condition		Value (Approx.)
+	–	Signal name	Input/ Output			
46 (BR)	Ground	Door lock and unlock switch UNLOCK	Input	Door lock and unlock switch	NEUTRAL position	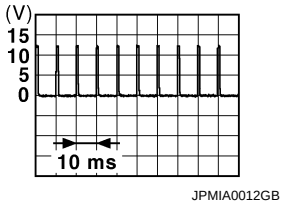 1.0 - 1.5 V
					UNLOCK position	0 V
47 (BR/Y)	Ground	Driver door switch	Input	Driver door switch	OFF (When driver door closed)	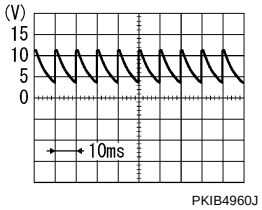 7.0 - 8.0 V
					ON (When driver door opened)	0 V
48 (W/G)	Ground	Rear LH door switch	Input	Rear LH door switch	OFF (When rear LH door closed)	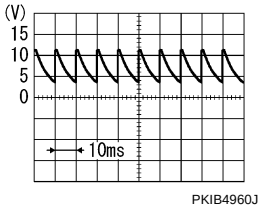 7.0 - 8.0 V
					ON (When rear LH door opened)	0 V
50 (SB)	Ground	A/C indicator	Output	A/C indicator	OFF	12 V
					ON	0 V
54 (LG)	Ground	Rear wiper	Output	Ignition switch ON	Rear wiper switch OFF	0 V
					Rear wiper switch ON	12 V
56 (L)	Ground	Interior room lamp power supply	Output	Interior room lamp battery saver is activated. (Cuts the interior room lamp power supply)		0 V
				Interior room lamp battery saver is not activated. (Outputs the interior room lamp power supply)		12 V
57 (Y)	Ground	Battery power supply	Input	Ignition switch OFF		Battery voltage
59 (L/B)	Ground	Driver door UNLOCK	Output	Driver door	UNLOCK (Actuator is activated)	12 V
					Other then UNLOCK (Actuator is not activated)	0 V

Terminal No. (Wire color)		Description		Condition		Value (Approx.)
+	–	Signal name	Input/ Output			
60 (W/B)	Ground	Turn signal LH	Output	Ignition switch ON	Turn signal switch OFF	0 V
					Turn signal switch LH	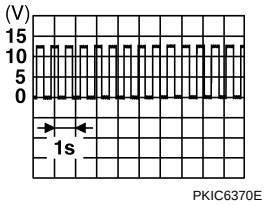 6.0 V
61 (W/L)	Ground	Turn signal RH	Output	Ignition switch ON	Turn signal switch OFF	0 V
					Turn signal switch RH	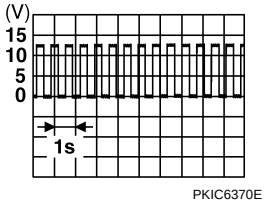 6.0 V
63 (BR)	Ground	Interior room lamp control signal	Output	Interior room lamp	OFF	12 V
					ON	0 V
65 (V)	Ground	All doors LOCK	Output	All doors	LOCK (Actuator is activated)	12 V
					Other then LOCK (Actuator is not activated)	0 V
66 (G)	Ground	Passenger door and rear door UNLOCK	Output	Passenger door and rear door	UNLOCK (Actuator is activated)	12 V
					Other then UNLOCK (Actuator is not activated)	0 V
67 (B)	Ground	Ground	Output	Ignition switch ON		0 V
68 (L)	Ground	P/W power supply (IGN)	Output	Ignition switch ON		12 V
69 (P)	Ground	P/W power supply (BAT)	Output	Ignition switch OFF		12 V
70 (Y)	Ground	Battery power supply	Input	Ignition switch OFF		Battery voltage

*: For Canada

Wiring Diagram - BCM -

INFOID:0000000007991885

For connector terminal arrangements, harness layouts, and alphabets in a ⬡ (option abbreviation; if not described in wiring diagram), refer to GI-12, "Connector Information".

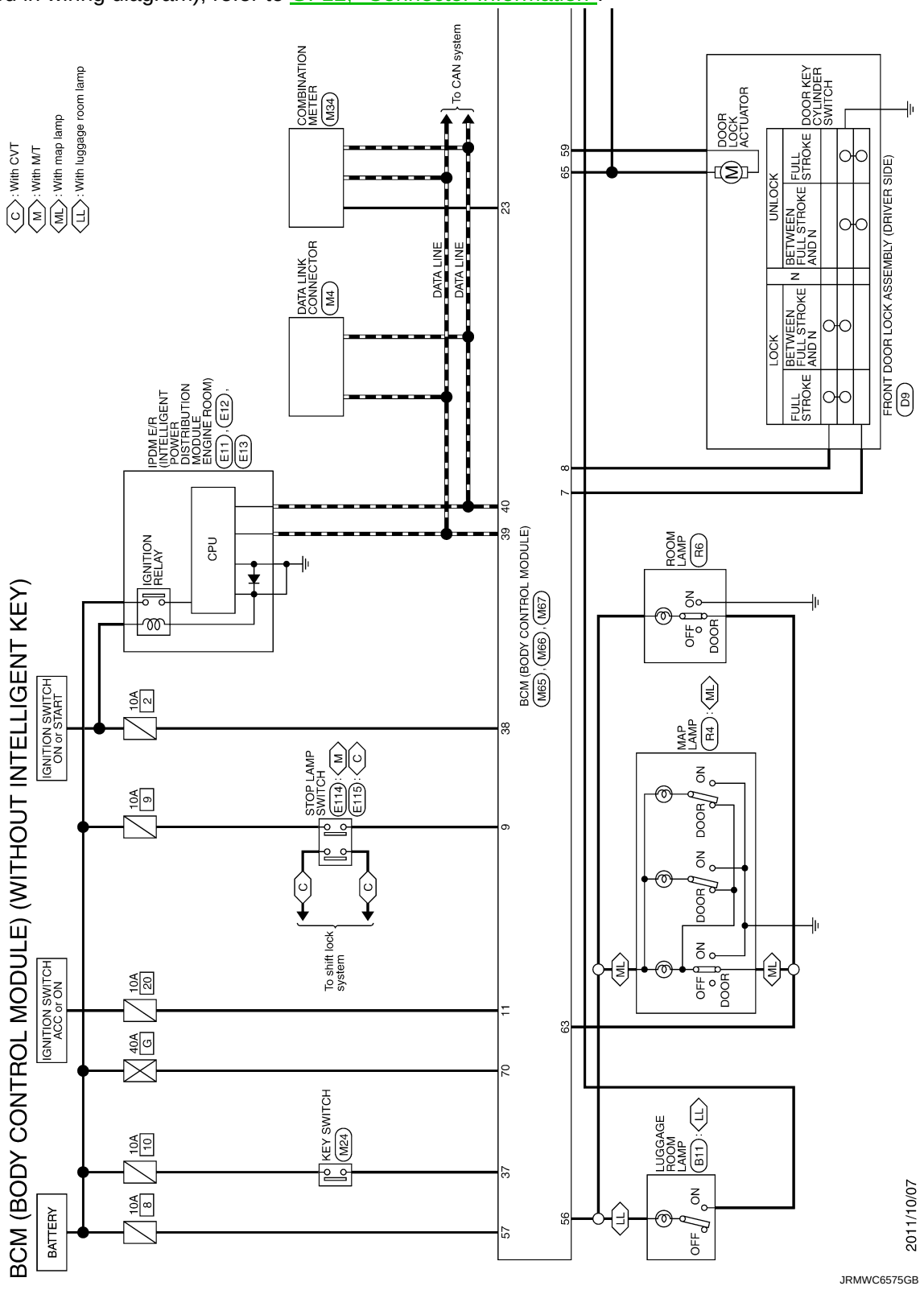

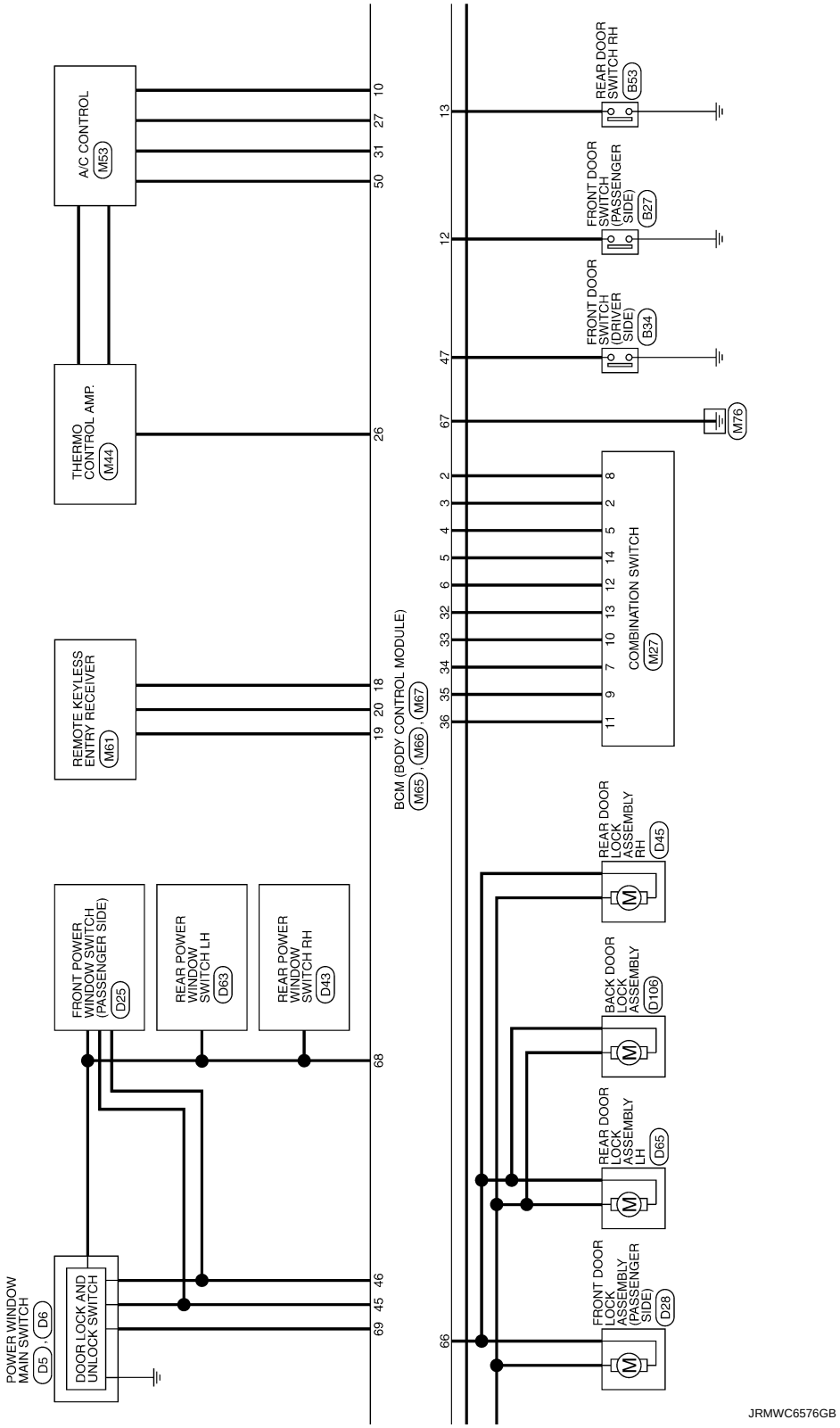
A/C CONTROL
M53
THERMO CONTROL AMP.
M44
REMOTE KEYLESS ENTRY RECEIVER
M61
FRONT POWER WINDOW SWITCH (PASSENGER SIDE)
D25
REAR POWER WINDOW SWITCH LH
D63
REAR POWER WINDOW SWITCH RH
D43
POWER WINDOW MAIN SWITCH
D5, D6
DOOR LOCK AND UNLOCK SWITCH
BCM (BODY CONTROL MODULE)
M65, M66, M67
10 27 31 50
26
18 20 19
68
46 45 69
13
12
47
67
2 3 4 5 6 32 33 34 35 36
8 2 5 14 12 13 10 7 9 11
COMBINATION SWITCH
M27
66
REAR DOOR SWITCH RH
B53
FRONT DOOR SWITCH (PASSENGER SIDE)
B27
FRONT DOOR SWITCH (DRIVER SIDE)
B34
M76
REAR DOOR LOCK ASSEMBLY RH
D45
BACK DOOR LOCK ASSEMBLY
D106
REAR DOOR LOCK ASSEMBLY LH
D65
FRONT DOOR LOCK ASSEMBLY (PASSENGER SIDE)
D28
JRMWC6576GB

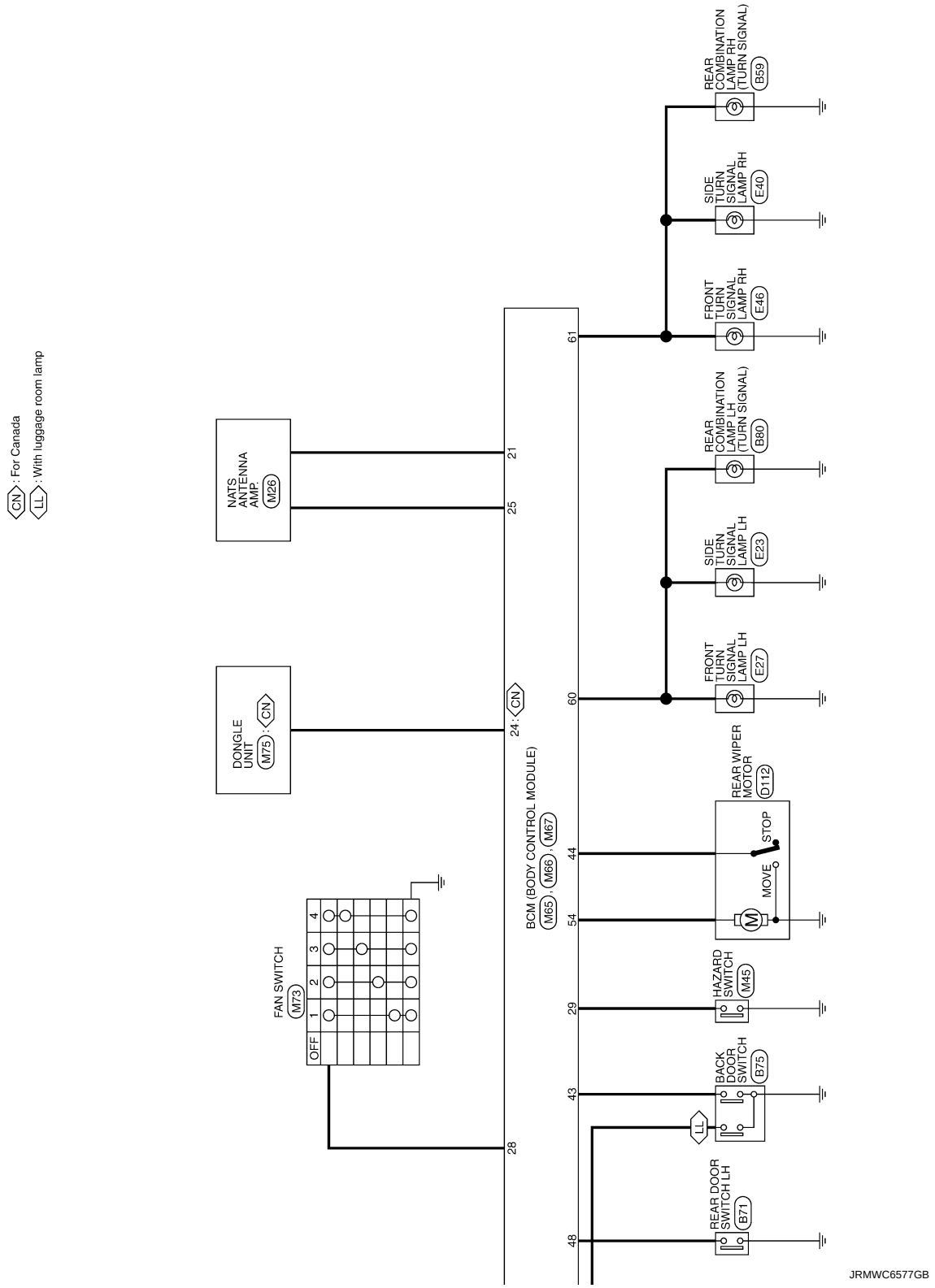

Fail-safe

INFOID:0000000007991886

FAIL-SAFE CONTROL BY DTC

BCM performs fail-safe control when any DTC are detected.

Display contents of CONSULT	Fail-safe	Cancellation
B2190: NATS ANTENNA AMP	Inhibit engine cranking	Erase DTC
B2191: DIFFERENCE OF KEY	Inhibit engine cranking	Erase DTC
B2192: ID DISCORD BCM-ECM	Inhibit engine cranking	Erase DTC
B2193: CHAIN OF BCM-ECM	Inhibit engine cranking	Erase DTC
B2195: ANTI SCANNING	Inhibit engine cranking	Ignition switch ON → OFF
B2196: DONGLE NG	Inhibit engine cranking	Erase DTC

REAR WIPER MOTOR PROTECTION

BCM detects the rear wiper stopping position according to the rear wiper auto stop signal.
When the rear wiper auto stop signal does not change more than 5 seconds while driving the rear wiper, BCM stops power supply to protect the rear wiper motor.

Condition of cancellation
1. Pass more than 1 minute after the rear wiper stop.
2. Turn rear wiper switch OFF.
3. Operate the rear wiper switch or rear washer switch.

DTC Inspection Priority Chart

INFOID:0000000007991887

If some DTCs are displayed at the same time, perform inspections one by one based on the following priority chart.

Priority	DTC
1	• U1000: CAN COMM • U1010: CONTROL UNIT (CAN)
2	• B2190: NATS ANTENNA AMP • B2191: DIFFERENCE OF KEY • B2192: ID DISCORD BCM-ECM • B2193: CHAIN OF BCM-ECM • B2195: ANTI SCANNING • B2196: DONGLE NG
3	C1735: IGN CIRCUIT OPEN
4	• C1704: LOW PRESSURE FL • C1705: LOW PRESSURE FR • C1706: LOW PRESSURE RR • C1707: LOW PRESSURE RL • C1708: [NO DATA] FL • C1709: [NO DATA] FR • C1710: [NO DATA] RR • C1711: [NO DATA] RL • C1716: [PRESSDATA ERR] FL • C1717: [PRESSDATA ERR] FR • C1718: [PRESSDATA ERR] RR • C1719: [PRESSDATA ERR] RL • C1729: VHCL SPEED SIG ERR

DTC Index

INFOID:0000000007991888

NOTE:
Details of time display
- CRNT: Displays when there is a malfunction now or after returning to the normal condition until turning ignition switch OFF → ON again.
- 1 - 39: Displayed if any previous malfunction is present when current condition is normal. It increases like 1 → 2 → 3...38 → 39 after returning to the normal condition whenever ignition switch OFF → ON. The counter remains at 39 even if the number of cycles exceeds it. It is counted from 1 again when turning ignition switch OFF → ON after returning to the normal condition if the malfunction is detected again.

CONSULT display	Fail-safe	Tire pressure monitor warning lamp ON	Reference
U1000: CAN COMM	—	—	BCS-113
U1010: CONTROL UNIT (CAN)	—	—	BCS-114
B2190: NATS ANTENNA AMP	×	—	SEC-173
B2191: DIFFERENCE OF KEY	×	—	SEC-176
B2192: ID DISCORD BCM-ECM	×	—	SEC-177
B2193: CHAIN OF BCM-ECM	×	—	SEC-178
B2195: ANTI SCANNING	×	—	SEC-179
B2196: DONGLE NG	×	—	SEC-180
C1704: LOW PRESSURE FL	—	×	WT-22
C1705: LOW PRESSURE FR	—	×	
C1706: LOW PRESSURE RR	—	×	
C1707: LOW PRESSURE RL	—	×	
C1708: [NO DATA] FL	—	×	WT-24
C1709: [NO DATA] FR	—	×	
C1710: [NO DATA] RR	—	×	
C1711: [NO DATA] RL	—	×	
C1716: [PRESS DATA ERR] FL	—	×	WT-27
C1717: [PRESS DATA ERR] FR	—	×	
C1718: [PRESS DATA ERR] RR	—	×	
C1719: [PRESS DATA ERR] RL	—	×	
C1729: VHCL SPEED SIG ERR	—	×	WT-29
C1735: IGN CIRCUIT OPEN	—	—	BCS-115

SYMPTOM DIAGNOSIS

DOOR DOES NOT LOCK/UNLOCK WITH DOOR LOCK AND UNLOCK SWITCH

ALL DOOR

ALL DOOR : Description

INFOID:0000000007773032

All doors do not lock/unlock using door lock and unlock switch.

ALL DOOR : Diagnosis Procedure

INFOID:0000000007773033

1. CHECK POWER SUPPLY AND GROUND CIRCUIT

Check power supply and ground circuit.
Refer to DLK-221, "BCM (BODY CONTROL MODULE) : Diagnosis Procedure" (BCM).

Is the inspection result normal?

YES >> GO TO 2.
NO >> Repair or replace the malfunctioning parts.

2. CHECK DOOR LOCK AND UNLOCK SWITCH

Check door lock and unlock switch.
- Driver side: Refer to DLK-225, "DRIVER SIDE : Component Function Check".
- Passenger side: Refer to DLK-227, "PASSENGER SIDE : Component Function Check".

Is the inspection result normal?

YES >> GO TO 3.
NO >> Repair or replace the malfunctioning parts.

3. CHECK DOOR LOCK ACTUATOR

Check door lock actuator (driver side).
Refer to DLK-230, "DRIVER SIDE : Component Function Check".

Is the inspection result normal?

YES >> GO TO 4.
NO >> Repair or replace the malfunctioning parts.

4. CONFIRM THE OPERATION

Confirm the operation again.

Is the result normal?

YES >> Check intermittent incident. Refer to GI-41, "Intermittent Incident".
NO >> GO TO 1.

DRIVER SIDE

DRIVER SIDE : Description

INFOID:0000000007773034

Driver side door does not lock/unlock using door lock and unlock switch.

DRIVER SIDE : Diagnosis Procedure

INFOID:0000000007773035

1. CHECK DOOR LOCK ACTUATOR

Check door lock actuator (driver side).
Refer to DLK-230, "DRIVER SIDE : Component Function Check".

Is the inspection result normal?

YES >> GO TO 2.
NO >> Repair or replace the malfunctioning parts.

2. CONFIRM THE OPERATION

Confirm the operation again.

Is the result normal?

YES >> Check intermittent incident. Refer to GI-41, "Intermittent Incident".
NO >> GO TO 1.

PASSENGER SIDE

PASSENGER SIDE : Description

INFOID:0000000007773036

Passenger side door does not lock/unlock using door lock and unlock switch.

PASSENGER SIDE : Diagnosis Procedure

INFOID:0000000007773037

1. CHECK DOOR LOCK ACTUATOR

Check door lock actuator (passenger side).
Refer to DLK-231, "PASSENGER SIDE : Component Function Check".

Is the inspection result normal?

YES >> GO TO 2.
NO >> Repair or replace the malfunctioning parts.

2. CONFIRM THE OPERATION

Confirm the operation again.

Is the result normal?

YES >> Check intermittent incident. Refer to GI-41, "Intermittent Incident".
NO >> GO TO 1.

REAR LH

REAR LH : Description

INFOID:0000000007773038

Rear LH side door does not lock/unlock using door lock and unlock switch.

REAR LH : Diagnosis Procedure

INFOID:0000000007773039

1. CHECK DOOR LOCK ACTUATOR

Check door lock actuator (rear LH).
Refer to DLK-232, "REAR LH : Component Function Check".

Is the inspection result normal?

YES >> GO TO 2.
NO >> Repair or replace the malfunctioning parts.

2. CONFIRM THE OPERATION

Confirm the operation again.

Is the result normal?

YES >> Check intermittent incident. Refer to GI-41, "Intermittent Incident".
NO >> GO TO 1.

REAR RH

REAR RH : Description

INFOID:0000000007773040

Rear RH side door does not lock/unlock using door lock and unlock switch.

REAR RH : Diagnosis Procedure

INFOID:0000000007773041

1. CHECK DOOR LOCK ACTUATOR

Check door lock actuator (rear RH).
Refer to DLK-232, "REAR RH : Component Function Check".

Is the inspection result normal?

YES >> GO TO 2.
NO >> Repair or replace the malfunctioning parts.

2. CONFIRM THE OPERATION

Confirm the operation again.

Is the result normal?

YES >> Check intermittent incident. Refer to GI-41, "Intermittent Incident".
NO >> GO TO 1.

BACK DOOR

BACK DOOR : Description

INFOID:0000000007773042

Back door does not lock/unlock using door lock and unlock switch.

BACK DOOR : Diagnosis Procedure

INFOID:0000000007773043

1. CHECK DOOR LOCK ACTUATOR

Check back door lock assembly.
Refer to DLK-233, "BACK DOOR : Component Function Check".

Is the inspection result normal?

YES >> GO TO 2.
NO >> Repair or replace the malfunctioning parts.

2. CONFIRM THE OPERATION

Confirm the operation again.

Is the inspection result normal?

YES >> Check intermittent incident. Refer to GI-41, "Intermittent Incident".
NO >> GO TO 1.

DOOR DOES NOT LOCK/UNLOCK WITH DOOR KEY CYLINDER OPERATION

Diagnosis Procedure

INFOID:0000000007773044

1. CHECK POWER DOOR LOCK OPERATION

Check power door lock operation.

Does door lock/unlock with door lock and unlock switch?

YES >> GO TO 2.
NO >> Go to DLK-267, "ALL DOOR : Diagnosis Procedure".

2. CHECK DOOR KEY CYLINDER SWITCH

Check door key cylinder switch.
Refer to DLK-235, "Component Function Check".

Is the inspection result normal?

YES >> GO TO 3.
NO >> Repair or replace the malfunctioning parts.

3. CONFIRM THE OPERATION

Confirm the operation again.

Is the result normal?

YES >> Check intermittent incident. Refer to GI-41, "Intermittent Incident".
NO >> GO TO 1.

DOOR DOES NOT LOCK/UNLOCK WITH KEYFOB

Diagnosis Procedure

INFOID:0000000007773045

1. CHECK POWER DOOR LOCK OPERATION

Check power door lock operation.

Does door lock/unlock with door lock and unlock switch?

YES >> GO TO 2.
NO >> Go to DLK-267, "ALL DOOR : Diagnosis Procedure".

2. CHECK REMOTE KEYLESS ENTRY RECEIVER

Check remote keyless entry receiver.
Refer to DLK-237, "Component Function Check".

Is the inspection result normal?

YES >> GO TO 3.
NO >> Repair or replace the malfunctioning parts.

3. CHECK DOOR SWITCH

Check door switch.
Refer to DLK-222, "Component Function Check".

Is the inspection result normal?

YES >> GO TO 4.
NO >> Repair or replace the malfunctioning parts.

4. CHECK KEYFOB BATTERY

Check keyfob battery.
Refer to DLK-244, "Component Function Check".

Is the inspection result normal?

YES >> GO TO 5.
NO >> Repair or replace the malfunctioning parts.

5. CONFIRM THE OPERATION

Confirm the operation again.

Is the result normal?

YES >> Check intermittent incident. Refer to GI-41, "Intermittent Incident".
NO >> GO TO 1.

AUTO DOOR LOCK OPERATION DOES NOT OPERATE

Diagnosis Procedure

INFOID:0000000007773046

1. CHECK “AUTO LOCK SET” SETTING WITH CONSULT

Check “AUTO LOCK SET” setting in “WORK SUPPORT”.
Refer to DLK-219, "MULTI REMOTE ENT : CONSULT Function (BCM - MULTI REMOTE ENT)".

Is the inspection result normal?

YES >> GO TO 2.
NO >> Set “AUTO LOCK SET” in “WORK SUPPORT”.

2. CONFIRM THE OPERATION

Confirm the operation again.

Is the result normal?

YES >> Check intermittent incident. Refer to GI-41, "Intermittent Incident".
NO >> GO TO 1.

SELECTIVE UNLOCK FUNCTION DOES NOT OPERATE

Diagnosis Procedure

INFOID:0000000007773047

1. CHECK “DOOR LOCK–UNLOCK SET” SETTING IN “WORK SUPPORT”

Check “DOOR LOCK-UNLOCK SET” setting in “WORK SUPPORT”.
Refer to DLK-217, "DOOR LOCK : CONSULT Function (BCM - DOOR LOCK)".

Is the inspection result normal?

YES >> GO TO 2.
NO >> Set “DOOR LOCK-UNLOCK SET” in “WORK SUPPORT”.

2. CONFIRM THE OPERATION

Confirm the operation again.

Is the result normal?

YES >> Check intermittent incident. Refer to GI-41, "Intermittent Incident".
NO >> GO TO 1.

VEHICLE SPEED SENSING AUTO LOCK OPERATION DOES NOT OPERATE

Diagnosis Procedure

INFOID:0000000007773048

1. CHECK POWER DOOR LOCK OPERATION

Check power door lock operation.

Does door lock/unlock with door lock and unlock switch?

YES >> GO TO 2.
NO >> Refer to DLK-267, "ALL DOOR : Diagnosis Procedure".

2. CHECK “AUTOMATIC LOCK/UNLOCK SELECT” SETTING IN “WORK SUPPORT”

Check “AUTOMATIC LOCK/UNLOCK SELECT” in “WORK SUPPORT”.
Refer to DLK-217, "DOOR LOCK : CONSULT Function (BCM - DOOR LOCK)".

Is the inspection result normal?

YES >> GO TO 3.
NO >> Set “AUTOMATIC LOCK/UNLOCK SELECT” in “WORK SUPPORT”.

3. CHECK “AUTOMATIC DOOR LOCK SELECT” SETTING IN “WORK SUPPORT”

Check “AUTOMATIC DOOR LOCK SELECT” in “WORK SUPPORT”.
Refer to DLK-217, "DOOR LOCK : CONSULT Function (BCM - DOOR LOCK)".

Is the inspection result normal?

YES >> GO TO 4.
NO >> Set “AUTOMATIC DOOR LOCK SELECT” in “WORK SUPPORT”.

4. CHECK VEHICLE SPEED SIGNAL

Check combination meter for DTC.
Refer to MWI-57, "DTC Index".

Is the inspection result normal?

YES >> GO TO 5.
NO >> Repair or replace the malfunctioning parts.

5. CONFIRM THE OPERATION

Confirm the operation again.

Is the result normal?

YES >> Check intermittent incident. Refer to GI-41, "Intermittent Incident".
NO >> GO TO 1.

IGN OFF INTERLOCK DOOR UNLOCK FUNCTION DOES NOT OPERATE

Diagnosis Procedure

INFOID:0000000007773049

1. CHECK POWER DOOR LOCK OPERATION

Check power door lock operation.

Does door lock/unlock with door lock and unlock switch?

YES >> GO TO 2.
NO >> Refer to DLK-267, "ALL DOOR : Diagnosis Procedure".

2. CHECK “AUTOMATIC LOCK/UNLOCK SELECT” SETTING IN “WORK SUPPORT”

Check “AUTOMATIC LOCK/UNLOCK SELECT” in “WORK SUPPORT”.
Refer to DLK-217, "DOOR LOCK : CONSULT Function (BCM - DOOR LOCK)".

Is the inspection result normal?

YES >> GO TO 3.
NO >> Set “AUTOMATIC LOCK/UNLOCK SELECT” in “WORK SUPPORT”.

3. CHECK “AUTOMATIC DOOR UNLOCK SELECT” SETTING IN “WORK SUPPORT”

Check “AUTOMATIC DOOR UNLOCK SELECT” in “WORK SUPPORT”.
Refer to DLK-217, "DOOR LOCK : CONSULT Function (BCM - DOOR LOCK)".

Is the inspection result normal?

YES >> GO TO 4.
NO >> Set “AUTOMATIC DOOR UNLOCK SELECT” in “WORK SUPPORT”.

4. CHECK BCM

Check BCM for DTC.
Refer to BCS-137, "DTC Index".

Is the inspection result normal?

YES >> GO TO 5.
NO >> Repair or replace the malfunctioning parts.

5. CONFIRM THE OPERATION

Confirm the operation again.

Is the result normal?

YES >> Check intermittent incident. Refer to GI-41, "Intermittent Incident".
NO >> GO TO 1.

P RANGE INTERLOCK DOOR LOCK/UNLOCK FUNCTION DOES NOT OPERATE

Diagnosis Procedure

INFOID:0000000007773050

1. CHECK POWER DOOR LOCK OPERATION

Check power door lock operation.

Does door lock/unlock with door lock and unlock switch?

YES >> GO TO 2.
NO >> Refer to DLK-267, "ALL DOOR : Diagnosis Procedure".

2. CHECK “AUTOMATIC LOCK/UNLOCK SELECT” SETTING IN “WORK SUPPORT”

Check “AUTOMATIC LOCK/UNLOCK SELECT” in “WORK SUPPORT”.
Refer to DLK-217, "DOOR LOCK : CONSULT Function (BCM - DOOR LOCK)".

Is the inspection result normal?

YES >> GO TO 3.
NO >> Set “AUTOMATIC LOCK/UNLOCK SELECT” in “WORK SUPPORT”.

3. CHECK “AUTOMATIC DOOR LOCK SELECT” SETTING IN “WORK SUPPORT”

Check “AUTOMATIC DOOR LOCK SELECT” in “WORK SUPPORT”.
Refer to DLK-217, "DOOR LOCK : CONSULT Function (BCM - DOOR LOCK)".

Is the inspection result normal?

YES >> GO TO 4.
NO >> Set “AUTOMATIC DOOR LOCK SELECT” in “WORK SUPPORT”.

4. CHECK “AUTOMATIC DOOR UNLOCK SELECT” SETTING IN “WORK SUPPORT”

Check “AUTOMATIC DOOR UNLOCK SELECT” in “WORK SUPPORT”.
Refer to DLK-217, "DOOR LOCK : CONSULT Function (BCM - DOOR LOCK)".

Is the inspection result normal?

YES >> GO TO 5.
NO >> Set “AUTOMATIC DOOR UNLOCK SELECT” in “WORK SUPPORT”.

5. CHECK TCM

Check TCM for DTC.
Refer to TM-179, "DTC Index".

Is the inspection result normal?

YES >> GO TO 6.
NO >> Repair or replace the malfunctioning parts.

6. CONFIRM THE OPERATION

Confirm the operation again.

Is the result normal?

YES >> Check intermittent incident. Refer to GI-41, "Intermittent Incident".
NO >> GO TO 1.

KEY OUT INTERLOCK DOOR UNLOCK FUNCTION DOES NOT OPERATE

Diagnosis Procedure

INFOID:0000000007773051

1. CHECK POWER DOOR LOCK OPERATION

Check power door lock operation.

Does door lock/unlock with door lock and unlock switch?

YES >> GO TO 2.
NO >> Refer to DLK-267, "ALL DOOR : Diagnosis Procedure".

2. CHECK “AUTOMATIC LOCK/UNLOCK SELECT” SETTING IN “WORK SUPPORT”

Check “AUTOMATIC LOCK/UNLOCK SELECT” in “WORK SUPPORT”.
Refer to DLK-217, "DOOR LOCK : CONSULT Function (BCM - DOOR LOCK)".

Is the inspection result normal?

YES >> GO TO 3.
NO >> Set “AUTOMATIC LOCK/UNLOCK SELECT” in “WORK SUPPORT”.

3. CHECK “AUTOMATIC DOOR UNLOCK SELECT” SETTING IN “WORK SUPPORT”

Check “AUTOMATIC DOOR UNLOCK SELECT” in “WORK SUPPORT”.
Refer to DLK-217, "DOOR LOCK : CONSULT Function (BCM - DOOR LOCK)".

Is the inspection result normal?

YES >> GO TO 4.
NO >> Set “AUTOMATIC DOOR UNLOCK SELECT” in “WORK SUPPORT”.

4. CHECK KEY SWITCH

Check key switch.

Is the inspection result normal?

YES >> GO TO 5.
NO >> Repair or replace the malfunctioning parts.

5. CONFIRM THE OPERATION

Confirm the operation again.

Is the result normal?

YES >> Check intermittent incident. Refer to GI-41, "Intermittent Incident".
NO >> GO TO 1.

HAZARD AND HORN REMINDER DOES NOT OPERATE

Diagnosis Procedure

INFOID:0000000007773052

1. CHECK “HAZARD LAMP SET” SETTING IN “WORK SUPPORT”

Check “HAZARD LAMP SET” setting in “WORK SUPPORT”.
Refer to DLK-219, "MULTI REMOTE ENT : CONSULT Function (BCM - MULTI REMOTE ENT)".

Is the inspection result normal?

YES >> GO TO 2.
NO >> Set “HAZARD LAMP SET” setting in “WORK SUPPORT”.

2. CHECK “HORN CHIRP SET” SETTING IN “WORK SUPPORT”.

Check “HORN CHIRP SET” setting in “WORK SUPPORT”.
Refer to DLK-219, "MULTI REMOTE ENT : CONSULT Function (BCM - MULTI REMOTE ENT)".

Is the inspection result normal?

YES >> GO TO 3.
NO >> Set “HORN CHIRP SET” setting in “WORK SUPPORT”.

3. CHECK HAZARD WARNING LAMP

Check hazard warning lamp.
Refer to DLK-243, "Component Function Check".

Is the inspection result normal?

YES >> GO TO 4.
NO >> Repair or replace the malfunctioning parts.

4. CHECK HORN

Check horn.
Refer to SEC-186, "Component Function Check".

Is the inspection result normal?

YES >> GO TO 5.
NO >> Repair or replace the malfunctioning parts.

5. CONFIRM THE OPERATION

Confirm the operation again.

Is the result normal?

YES >> Check intermittent incident. Refer to GI-41, "Intermittent Incident".
NO >> GO TO 1.

SQUEAK AND RATTLE TROUBLE DIAGNOSES

Work Flow

INFOID:0000000007773053

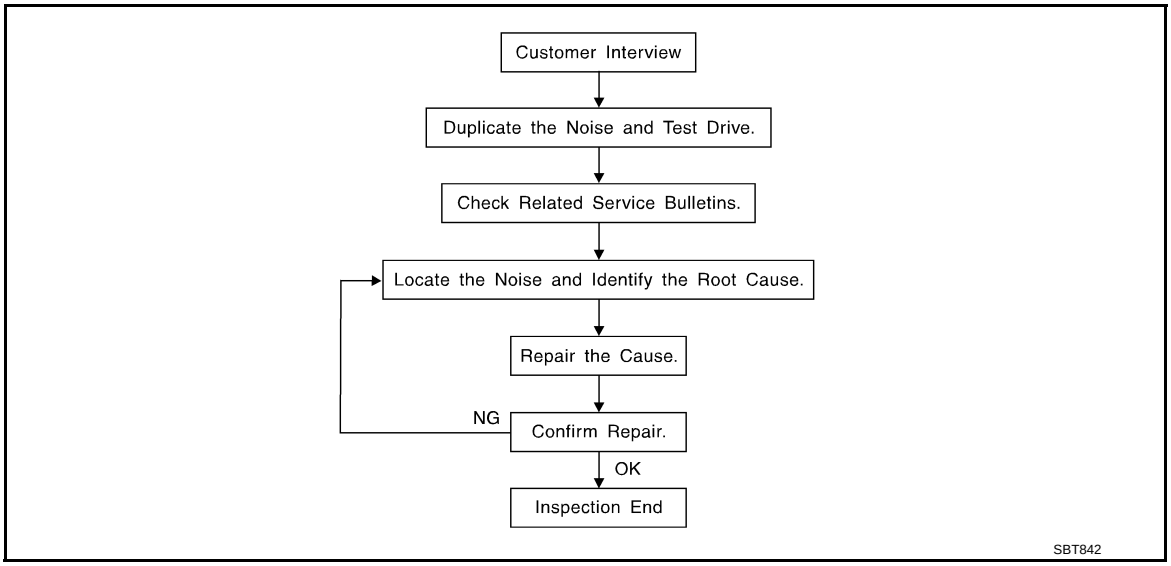

CUSTOMER INTERVIEW

Interview the customer if possible, to determine the conditions that exist when the noise occurs. Use the Diagnostic Worksheet during the interview to document the facts and conditions when the noise occurs and any of customer's comments; refer to DLK-283, "Diagnostic Worksheet". This information is necessary to duplicate the conditions that exist when the noise occurs.

- The customer may not be able to provide a detailed description or the location of the noise. Attempt to obtain all the facts and conditions that exist when the noise occurs (or does not occur).
- If there is more than one noise in the vehicle, perform a diagnosis and repair the noise that the customer is concerned about. This can be accomplished by performing a cruise test on the vehicle with the customer.
- After identifying the type of noise, isolate the noise in terms of its characteristics. The noise characteristics are provided so the customer, service adviser and technician are all speaking the same language when defining the noise.
- Squeak – (Like tennis shoes on a clean floor)
  Squeak characteristics include the light contact/fast movement/brought on by road conditions/hard surfaces = higher pitch noise/softer surfaces = lower pitch noises/edge to surface = chirping
- Creak – (Like walking on an old wooden floor)
  Creak characteristics include firm contact/slow movement/twisting with a rotational movement/pitch dependent on materials/often brought on by activity.
- Rattle – (Like shaking a baby rattle)
  Rattle characteristics include the fast repeated contact/vibration or similar movement/loose parts/missing clip or fastener/incorrect clearance.
- Knock – (Like a knock on a door)
  Knock characteristics include hollow sounding/sometimes repeating/often brought on by driver action.
- Tick – (Like a clock second hand)
  Tick characteristics include gentle contacting of light materials/loose components/can be caused by driver action or road conditions.
- Thump – (Heavy, muffled knock noise)
  Thump characteristics include softer knock/dead sound often brought on by activity.
- Buzz – (Like a bumblebee)
  Buzz characteristics include high frequency rattle/firm contact.
- Often the degree of acceptable noise level will vary depending up on the person. A noise that a technician may judge as acceptable may be very irritating to the customer.
- Weather conditions, especially humidity and temperature, may have a great effect on noise level.

DUPLICATE THE NOISE AND TEST DRIVE

If possible, drive the vehicle with the customer until the noise is duplicated. Note any additional information on the Diagnostic Worksheet regarding the conditions or location of the noise. This information can be used to duplicate the same conditions when the repair is reconfirmed.

If the noise can be duplicated easily during the test drive, to help identify the source of the noise, try to duplicate the noise with the vehicle stopped by doing one or all of the following:

1) Close a door.
2) Tap or push/pull around the area where the noise appears to be coming from.
3) Rev the engine.
4) Use a floor jack to recreate vehicle “twist”.
5) At idle, apply engine load (electrical load, half-clutch on M/T models, drive position on A/T models).
6) Raise the vehicle on a hoist and hit a tire with a rubber hammer.

- Drive the vehicle and attempt to duplicate the conditions the customer states exist when the noise occurs.
- If it is difficult to duplicate the noise, drive the vehicle slowly on an undulating or rough road to stress the vehicle body.

CHECK RELATED SERVICE BULLETINS

After verifying the customer concern or symptom, check ASIST for Technical Service Bulletins (TSBs) related to that concern or symptom.
If a TSB relates to the symptom, follow the procedure to repair the noise.

LOCATE THE NOISE AND IDENTIFY THE ROOT CAUSE

1. Narrow down the noise to a general area. To help pinpoint the source of the noise, use a listening tool (Chassis ear: J-39570, Engine ear and mechanics stethoscope).
2. Narrow down the noise to a more specific area and identify the cause of the noise by:

- Removing the components in the area that is are suspected to be the cause of the noise.
  Do not use too much force when removing clips and fasteners, otherwise clips and fastener can be broken or lost during the repair, resulting in the creation of new noise.
- Tapping or pushing/pulling the component that is are suspected to be the cause of the noise.
  Do not tap or push/pull the component with excessive force, otherwise the noise will be eliminated only temporarily.
- Feeling for a vibration by hand by touching the component(s) that is are suspected to be the cause of the noise.
- Placing a piece of paper between components that are suspected to be the cause of the noise.
- Looking for loose components and contact marks.
  Refer to DLK-281, "Inspection Procedure".

REPAIR THE CAUSE

- If the cause is a loose component, tighten the component securely.
- If the cause is insufficient clearance between components:
- Separate components by repositioning or loosening and retightening the component, if possible.
- Insulate components with a suitable insulator such as urethane pads, foam blocks, felt cloth tape or urethane tape. A Nissan Squeak and Rattle Kit (J-43980) is available through the authorized Nissan Parts Department.

CAUTION:
Never use excessive force as many components are constructed of plastic and may be damaged.
NOTE:
Always check with the Parts Department for the latest parts information.
The following materials are contained in the Nissan Squeak and Rattle Kit (J-43980). Each item can be ordered separately as needed.
URETHANE PADS [1.5 mm (0.059 in) thick]
Insulates connectors, harness, etc.
76268-9E005: 100 × 135 mm (3.94 × 5.31 in)/76884-71L01: 60 × 85 mm (2.36 × 3.35 in)/76884-71L02:15 × 25 mm (0.59 × 0.98 in)
INSULATOR (Foam blocks)
Insulates components from contact. Can be used to fill space behind a panel.
73982-9E000: 45 mm (1.77 in) thick, 50 × 50 mm (1.97 × 1.97 in)/73982-50Y00: 10 mm (0.39 in) thick, 50 × 50 mm (1.97 × 1.97 in)
INSULATOR (Light foam block)
80845-71L00: 30 mm (1.18 in) thick, 30 × 50 mm (1.18 × 1.97 in)
FELT CLOTHTAPE
Used to insulate where movement does not occur. Ideal for instrument panel applications.
68370-4B000: 15 × 25 mm (0.59 × 0.98 in) pad/68239-13E00: 5 mm (0.20 in) wide tape roll
The following materials, not found in the kit, can also be used to repair squeaks and rattles.
UHMW (TEFLON) TAPE

Insulates where slight movement is present. Ideal for instrument panel applications.
SILICONE GREASE
Used in place of UHMW tape that is be visible or does not fit. Will only last a few months.
SILICONE SPRAY
Used when grease cannot be applied.
DUCT TAPE
Used to eliminate movement.

CONFIRM THE REPAIR

Confirm that the cause of a noise is repaired by test driving the vehicle. Operate the vehicle under the same conditions as when the noise originally occurred. Refer to the notes on the Diagnostic Worksheet.

Inspection Procedure

INFOID:0000000007773054

Refer to Table of Contents for specific component removal and installation information.

INSTRUMENT PANEL

Most incidents are caused by contact and movement between:

1. The cluster lid A and instrument panel
2. Acrylic lens and combination meter housing
3. Instrument panel to front pillar garnish
4. Instrument panel to windshield
5. Instrument panel mounting pins
6. Wiring harnesses behind the combination meter
7. A/C defroster duct and duct joint
   These incidents can usually be located by tapping or moving the components to duplicate the noise or by pressing on the components while driving to stop the noise. Most of these incidents can be repaired by applying felt cloth tape or silicon spray (in hard to reach areas). Urethane pads can be used to insulate wiring harness.
   CAUTION:
   Never use silicone spray to isolate a squeak or rattle. If the area is saturated with silicone, the recheck of repair becomes impossible.

CENTER CONSOLE

Components to pay attention to include:

1. Shifter assembly cover to finisher
2. A/C control unit and cluster lid C
3. Wiring harnesses behind audio and A/C control unit

The instrument panel repair and isolation procedures also apply to the center console.

DOORS

Pay attention to the following:

1. Finisher and inner panel making a slapping noise
2. Inside handle escutcheon to door finisher
3. Wiring harnesses tapping
4. Door striker out of alignment causing a popping noise on starts and stops

Tapping or moving the components or pressing on them while driving to duplicate the conditions can isolate many of these incidents. The areas can usually be insulated with felt cloth tape or insulator foam blocks from the Nissan Squeak and Rattle Kit (J-43980) to repair the noise.

TRUNK

Trunk noises are often caused by a loose jack or loose items put into the trunk by the customer.
In addition look for the following:

1. Trunk lid dumpers out of adjustment
2. Trunk lid striker out of adjustment
3. The trunk lid torsion bars knocking together
4. A loose license plate or bracket

Most of these incidents can be repaired by adjusting, securing or insulating the item(s) or component(s) causing the noise.

SUNROOF/HEADLINING

Noises in the sunroof/headlining area can often be traced to one of the following:

1. Sunroof lid, rail, linkage or seals making a rattle or light knocking noise
2. Sunvisor shaft shaking in the holder
3. Front or rear windshield touching headlining and squeaking

Again, pressing on the components to stop the noise while duplicating the conditions can isolate most of these incidents. Repairs usually consist of insulating with felt cloth tape.

SEATS

When isolating seat noise it's important to note the position the seats in and the load placed on the seat when the noise occurs. These conditions should be duplicated when verifying and isolating the cause of the noise.
Cause of seat noise include:

1. Headrest rods and holder
2. A squeak between the seat pad cushion and frame
3. The rear seatback lock and bracket

These noises can be isolated by moving or pressing on the suspected components while duplicating the conditions under which the noise occurs.Most of these incidents can be repaired by repositioning the component or applying urethane tape to the contact area.

UNDERHOOD

Some interior noise may be caused by components under the hood or on the engine wall. The noise is then transmitted into the passenger compartment.
Causes of transmitted underhood noise include:

1. Any component mounted to the engine wall
2. Components that pass through the engine wall
3. Engine wall mounts and connectors
4. Loose radiator mounting pins
5. Hood bumpers out of adjustment
6. Hood striker out of adjustment

These noises can be difficult to isolate since they cannot be reached from the interior of the vehicle. The best method is to secure, move or insulate one component at a time and test drive the vehicle. Also, engine RPM or load can be changed to isolate the noise. Repairs can usually be made by moving, adjusting, securing, or insulating the component causing the noise.

Diagnostic Worksheet

INFOID:0000000007773055

SQUEAK & RATTLE DIAGNOSTIC WORKSHEET

Dear Nissan Customer:
We are concerned about your satisfaction with your Nissan vehicle. Repairing a squeak or rattle sometimes can be very difficult. To help us fix your Nissan right the first time, please take a moment to note the area of the vehicle where the squeak or rattle occurs and under what conditions. You may be asked to take a test drive with a service advisor or technician to ensure we confirm the noise you are hearing.

I. WHERE DOES THE NOISE COME FROM? (circle the area of the vehicle)
The illustrations are for reference only, and may not reflect the actual configuration of your vehicle.

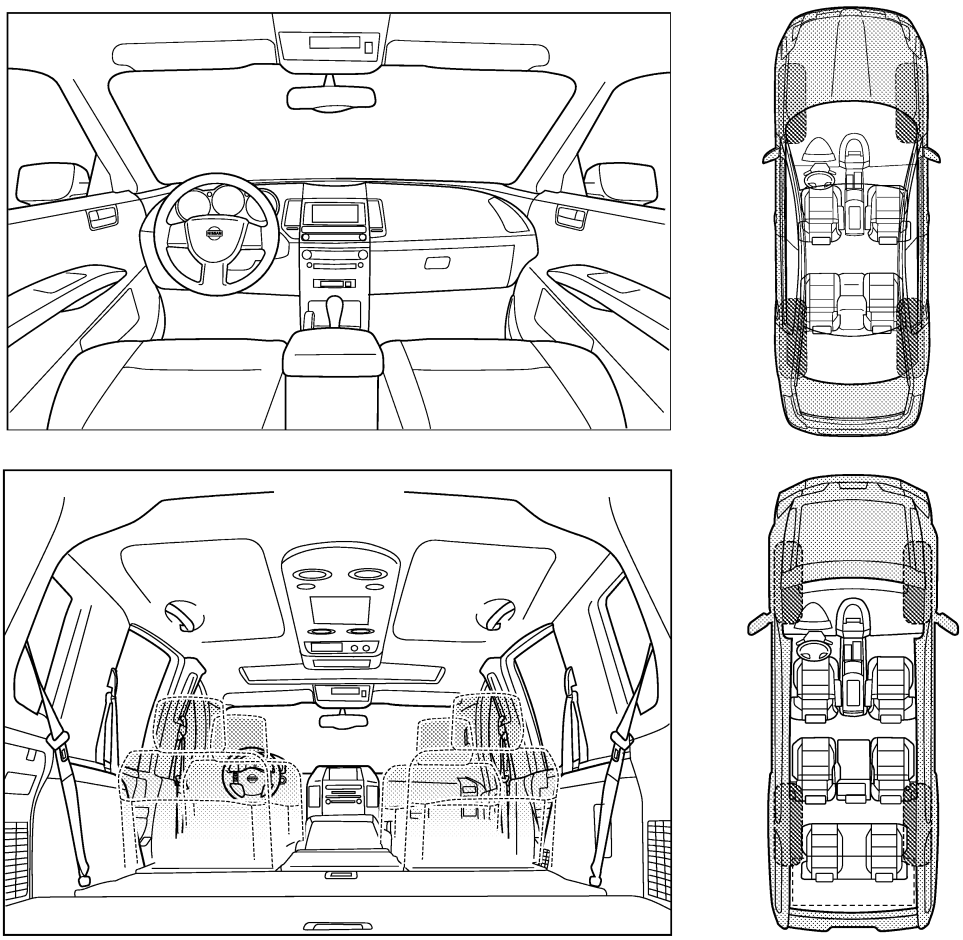

Continue to page 2 of the worksheet and briefly describe the location of the noise or rattle. In addition, please indicate the conditions which are present when the noise occurs.

PIIB8740E

SQUEAK & RATTLE DIAGNOSTIC WORKSHEET - page 2

Briefly describe the location where the noise occurs:

_____

_____

II. WHEN DOES IT OCCUR? (please check the boxes that apply)

- ☐ anytime
- ☐ 1st time in the morning
- ☐ only when it is cold outside
- ☐ only when it is hot outside
- ☐ after sitting out in the rain
- ☐ when it is raining or wet
- ☐ dry or dusty conditions
- ☐ other:

III. WHEN DRIVING:

- ☐ through driveways
- ☐ over rough roads
- ☐ over speed bumps
- ☐ only about ____ mph
- ☐ on acceleration
- ☐ coming to a stop
- ☐ on turns: left, right or either (circle)
- ☐ with passengers or cargo
- ☐ other: _____
- ☐ after driving _____ miles or _____ minutes

IV. WHAT TYPE OF NOISE

- ☐ squeak (like tennis shoes on a clean floor)
- ☐ creak (like walking on an old wooden floor)
- ☐ rattle (like shaking a baby rattle)
- ☐ knock (like a knock at the door)
- ☐ tick (like a clock second hand)
- ☐ thump (heavy, muffled knock noise)
- ☐ buzz (like a bumble bee)

TO BE COMPLETED BY DEALERSHIP PERSONNEL

Test Drive Notes:

_____

_____

_____

	YES	NO	Initials of person performing
Vehicle test driven with customer	☐	☐	_____
- Noise verified on test drive	☐	☐	_____
- Noise source located and repaired	☐	☐	_____
- Follow up test drive performed to confirm repair	☐	☐	_____

VIN: _____ Customer Name: _____

W.O.# _____ Date: _____

This form must be attached to Work Order

PIIB8742E

PRECAUTION

PRECAUTIONS

Precaution for Supplemental Restraint System (SRS) "AIR BAG" and "SEAT BELT PRE-TENSIONER"

INFOID:0000000007773056

The Supplemental Restraint System such as “AIR BAG” and “SEAT BELT PRE-TENSIONER”, used along with a front seat belt, helps to reduce the risk or severity of injury to the driver and front passenger for certain types of collision. This system includes seat belt switch inputs and dual stage front air bag modules. The SRS system uses the seat belt switches to determine the front air bag deployment, and may only deploy one front air bag, depending on the severity of a collision and whether the front occupants are belted or unbelted.
Information necessary to service the system safely is included in the “SRS AIR BAG” and “SEAT BELT” of this Service Manual.

WARNING:
Always observe the following items for preventing accidental activation.
- **To avoid rendering the SRS inoperative, which could increase the risk of personal injury or death in the event of a collision that would result in air bag inflation, all maintenance must be performed by an authorized NISSAN/INFINITI dealer.**
- **Improper maintenance, including incorrect removal and installation of the SRS, can lead to personal injury caused by unintentional activation of the system. For removal of Spiral Cable and Air Bag Module, see “SRS AIR BAG”.**
- **Never use electrical test equipment on any circuit related to the SRS unless instructed to in this Service Manual. SRS wiring harnesses can be identified by yellow and/or orange harnesses or harness connectors.**

PRECAUTIONS WHEN USING POWER TOOLS (AIR OR ELECTRIC) AND HAMMERS

WARNING:
Always observe the following items for preventing accidental activation.
- **When working near the Air Bag Diagnosis Sensor Unit or other Air Bag System sensors with the ignition ON or engine running, never use air or electric power tools or strike near the sensor(s) with a hammer. Heavy vibration could activate the sensor(s) and deploy the air bag(s), possibly causing serious injury.**
- **When using air or electric power tools or hammers, always switch the ignition OFF, disconnect the battery, and wait at least 3 minutes before performing any service.**

Precaution for Procedure without Cowl Top Cover

INFOID:0000000007773057

When performing the procedure after removing cowl top cover, cover the lower end of windshield with urethane, etc to prevent damage to windshield.

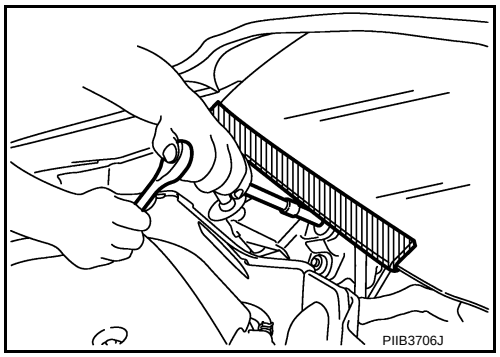

Precautions Necessary for Steering Wheel Rotation After Battery Disconnection

INFOID:0000000007773058

CAUTION:
Comply with the following cautions to prevent any error and malfunction.
- **Before removing and installing any control units, first turn the ignition switch to the LOCK position, then disconnect both battery cables.**
- **After finishing work, confirm that all control unit connectors are connected properly, then re-connect both battery cables.**
- **Always use CONSULT to perform self-diagnosis as a part of each function inspection after finishing work. If a DTC is detected, perform trouble diagnosis according to self-diagnosis results.**

For vehicle with steering lock unit, if the battery is disconnected or discharged, the steering wheel will lock and cannot be turned.
If turning the steering wheel is required with the battery disconnected or discharged, follow the operation procedure below before starting the repair operation.

OPERATION PROCEDURE

1. Connect both battery cables.
   NOTE:
   Supply power using jumper cables if battery is discharged.
2. Turn the ignition switch to ACC position.
   (At this time, the steering lock will be released.)
3. Disconnect both battery cables. The steering lock will remain released with both battery cables disconnected and the steering wheel can be turned.
4. Perform the necessary repair operation.
5. When the repair work is completed, re-connect both battery cables. With the brake pedal released, turn the ignition switch from ACC position to ON position, then to LOCK position. (The steering wheel will lock when the ignition switch is turned to LOCK position.)
6. Perform self-diagnosis check of all control units using CONSULT.

Work

INFOID:0000000007773059

- After removing and installing the opening/closing parts, be sure to carry out fitting adjustments to check their operational.
- Check the lubrication level, damage, and wear of each part. If necessary, grease or replace it.

PREPARATION

PREPARATION

Special Service Tools

INFOID:0000000007773060

The actual shapes of Kent-Moore tools may differ from those of special service tools illustrated here.

Tool number (Kent-Moore No.) Tool name		Description
(J-39570) Chassis ear	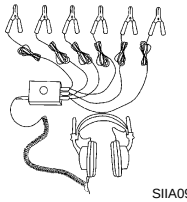 SIIA0993E	Locating the noise
(J-43980) NISSAN Squeak and Rattle Kit	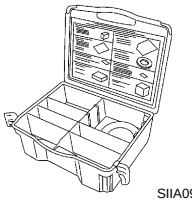 SIIA0994E	Repairing the cause of noise

Commercial Service Tools

INFOID:0000000007773061

Tool name		Description
Engine ear	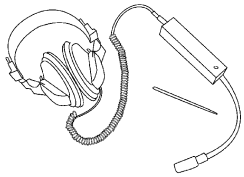 SIIA0995E	Locating the noise
Remover tool	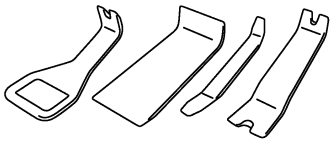 PIIB7923J	Remove the clips, pawls, and metal clips
Power tool	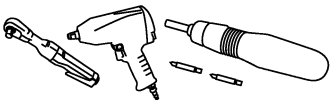 PIIB1407E	

REMOVAL AND INSTALLATION

HOOD

HOOD ASSEMBLY

HOOD ASSEMBLY : Exploded View

INFOID:0000000007773062

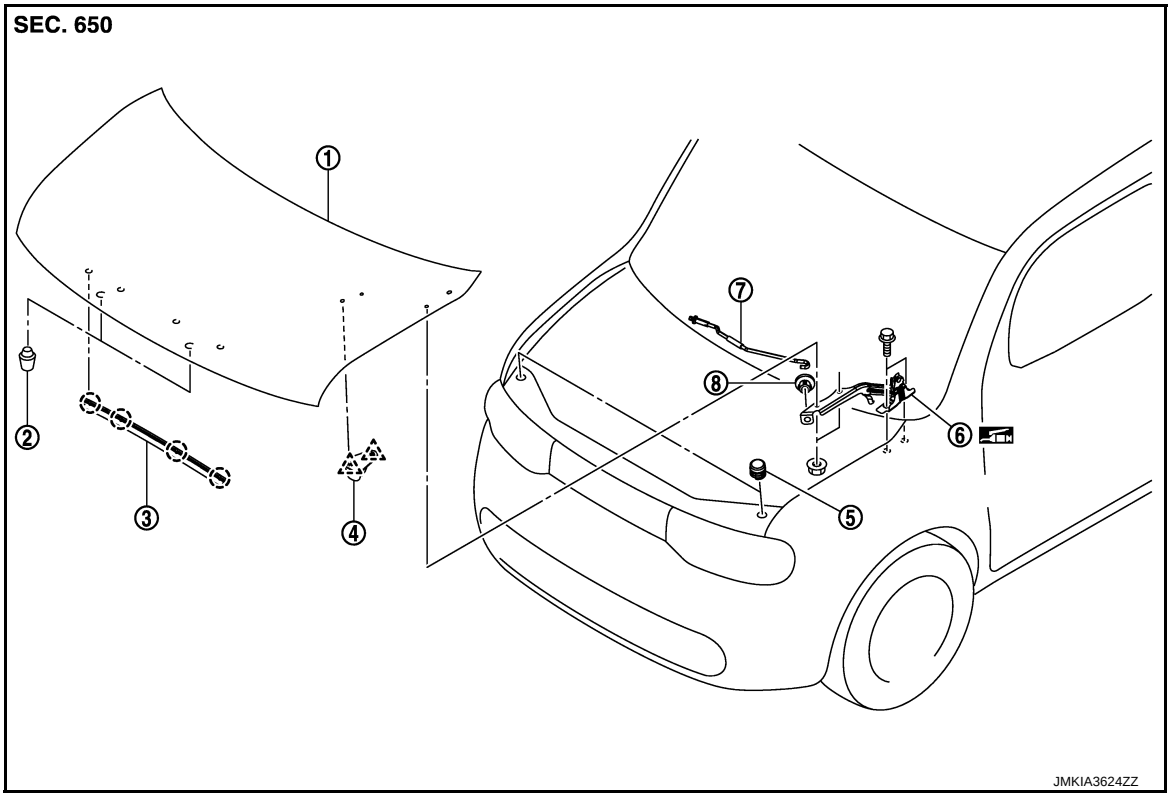

1. Hood assembly
2. Hood bumper rubber (hood side)
3. Radiator core seal
4. Clamp
5. Hood bumper rubber (body side)
6. Hood hinge
7. Hood support rod
8. Grommet

: Clip

: Pawl

Refer to GI-4, "Components" for symbols in the figure.

HOOD ASSEMBLY : Removal and Installation

INFOID:0000000007773063

REMOVAL

1. Support hood lock assembly with the proper material to prevent it from falling.

   WARNING:
   Bodily injury may occur if no supporting rod is holding hood open when removing hood stay.

2. Remove hood hinge mounting nuts on the hood to remove the hood assembly.

   CAUTION:
   Perform work with 2 workers, because of its heavy weight.

INSTALLATION

Install in the reverse order of removal.

CAUTION:

- **Perform work with 2 workers, because of its heavy weight.**
- **Check hood hinge rotating part for poor lubrication. If necessary, apply body grease.**
- **After installation, apply touch-up paint (the body color) onto the heads of hood hinge mounting bolts and nuts.**

- **After installing, perform hood fitting adjustment. Refer to DLK-289, "HOOD ASSEMBLY : Adjustment".**

HOOD ASSEMBLY : Adjustment

INFOID:0000000007773064

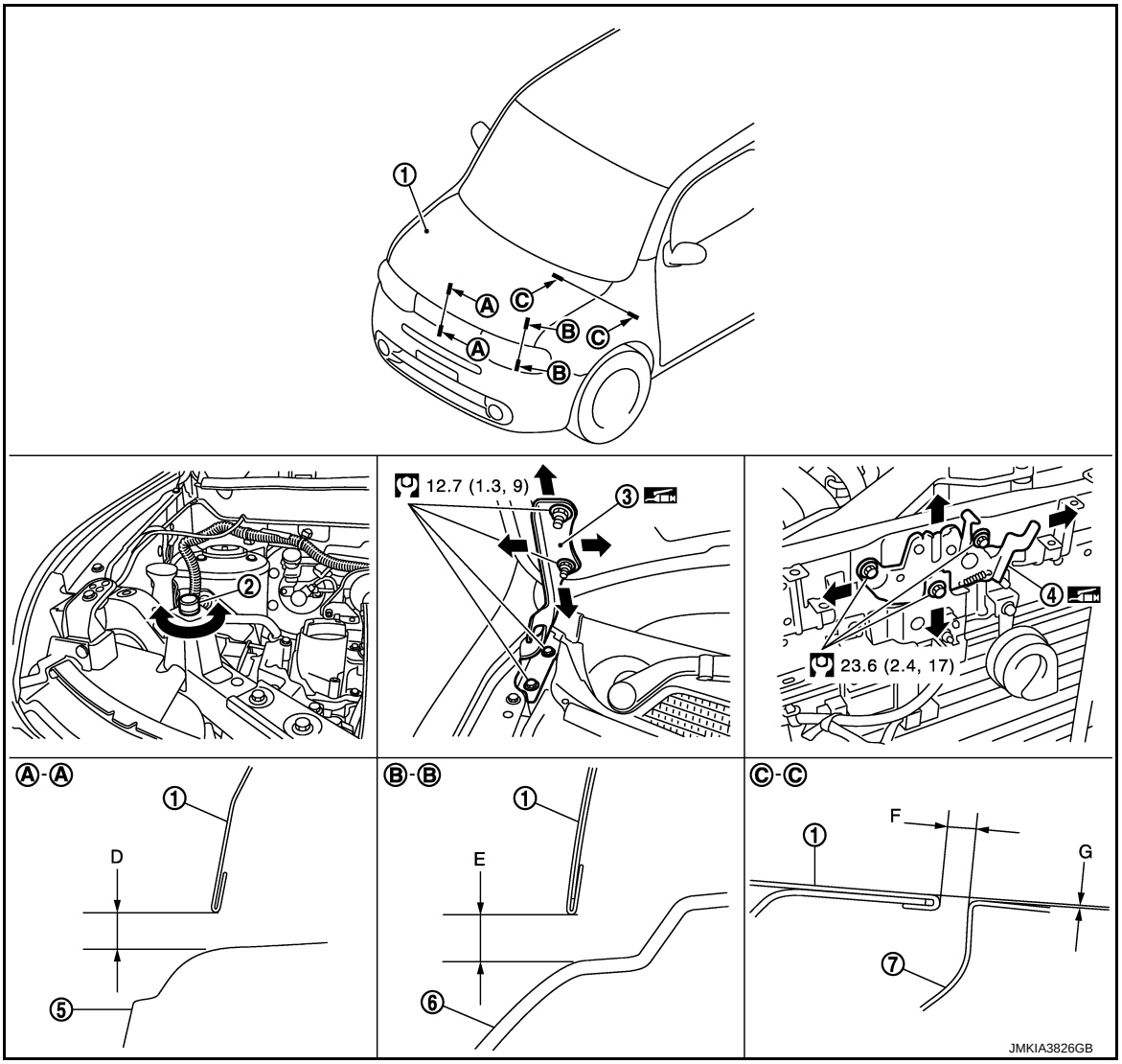

1. Hood assembly
2. Hood bumper rubber
3. Hood hinge
4. Hood lock assembly
5. Front grille
6. Front combination lamp
7. Front fender

Refer to GI-4, "Components" for symbols in the figure.

Check the clearance and the surface height between hood and each part by visually and touching.
If the clearance and the surface height are out of specification, adjust them according to the procedures shown below.

Unit: mm (in)

Portion				Standard	Difference (RH/LH)
Hood – Front grille	A – A	D	Clearance	6.0 – 10.0 (0.236 – 0.394)	< 2.0 (0.079)
Hood – Front combination lamp	B – B	E	Clearance	6.0 – 10.0 (0.236 – 0.394)	< 2.0 (0.079)
Hood – Front fender	C – C	F	Clearance	2.5 – 4.5 (0.098 – 0.177)	< 1.0 (0.039)
		G	Surface height	- 1.0 – 1.0 (- 0.039 – 0.039)	—

1. Remove hood lock and adjust the surface height of hood, front grill and front fender according to the fitting standard dimension, by rotating hood bumper rubber (body side).
2. Loosen hood hinge mounting nuts on the hood.
3. Check that hood lock primary latch is securely engaged with striker by dropping hood from approximately 200 mm (7.874 in) height or by pressing lightly on the hood.
   CAUTION:
   Never drop hood from a height of 300 mm (11.811 in) or more
4. Install as static closing face of hood is 94– 490 N (9.6 – 50.0 kg, 21.1 – 110 lb).
5. After adjustment tighten lock bolts to the specified torque.

CAUTION:
- **Check hood hinge rotating part for poor lubrication. If necessary, apply body grease.**
- **After installation, apply touch-up paint (the body color) onto the heads of hood hinge mounting bolts and nuts.**

HOOD HINGE

HOOD HINGE : Exploded View

INFOID:0000000007773065

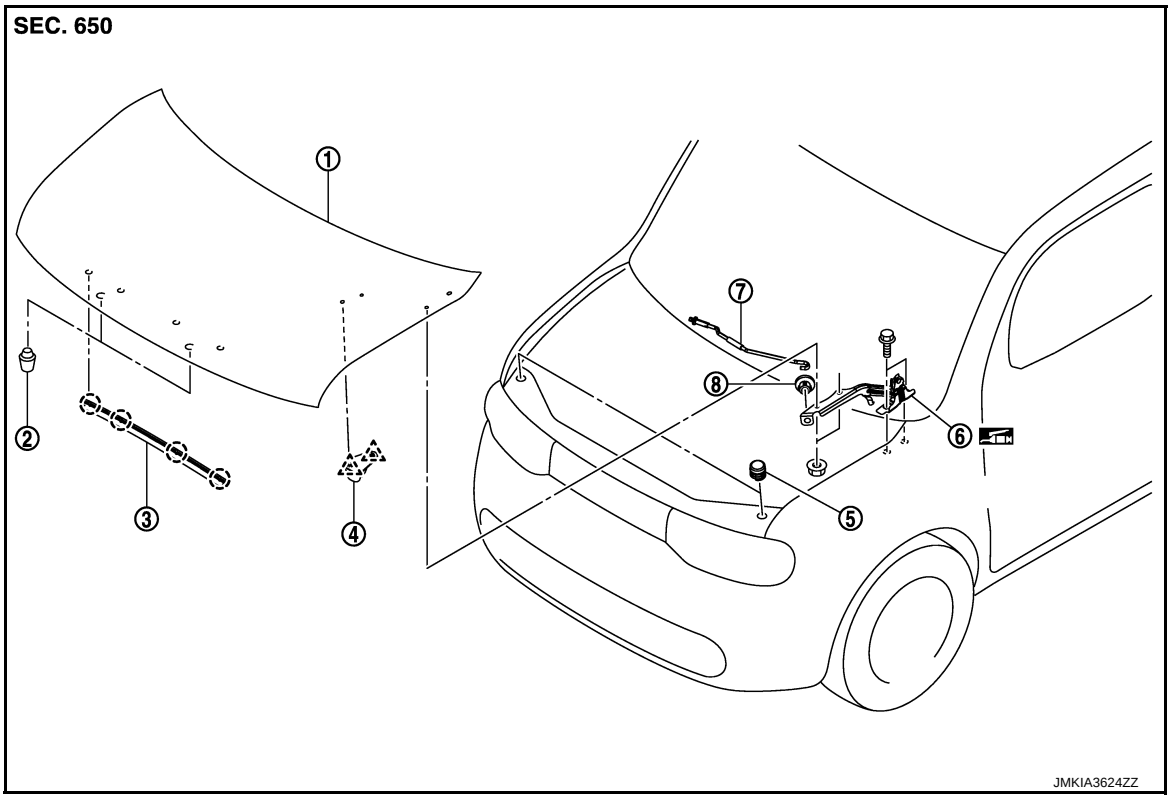

1. Hood assembly
2. Hood bumper rubber (hood side)
3. Radiator core seal
4. Clamp
5. Hood bumper rubber (body side)
6. Hood hinge
7. Hood support rod
8. Grommet

: Clip

: Pawl

Refer to GI-4, "Components" for symbols in the figure.

HOOD HINGE : Removal and Installation

INFOID:0000000007773066

REMOVAL

1. Remove hood assembly. Refer to DLK-288, "HOOD ASSEMBLY : Removal and Installation".
2. Remove front fender. Refer to DLK-295, "Removal and Installation".

3. Remove cowl top. Refer to EXT-19, "Removal and Installation"
4. Remove hood hinge mounting bolts, and then remove hood hinge.

INSTALLATION

Install in the reverse order of removal.

CAUTION:

- **Check hood hinge rotating part for poor lubrication. If necessary, apply grease.**
- **After installation, apply touch-up paint (the body color) onto the head of the hinge mounting bolts and nuts.**
- **After installation, perform hood fitting adjustment. Refer to DLK-289, "HOOD ASSEMBLY : Adjustment".**

HOOD SUPPORT ROD

HOOD SUPPORT ROD : Exploded View

INFOID:0000000007773067

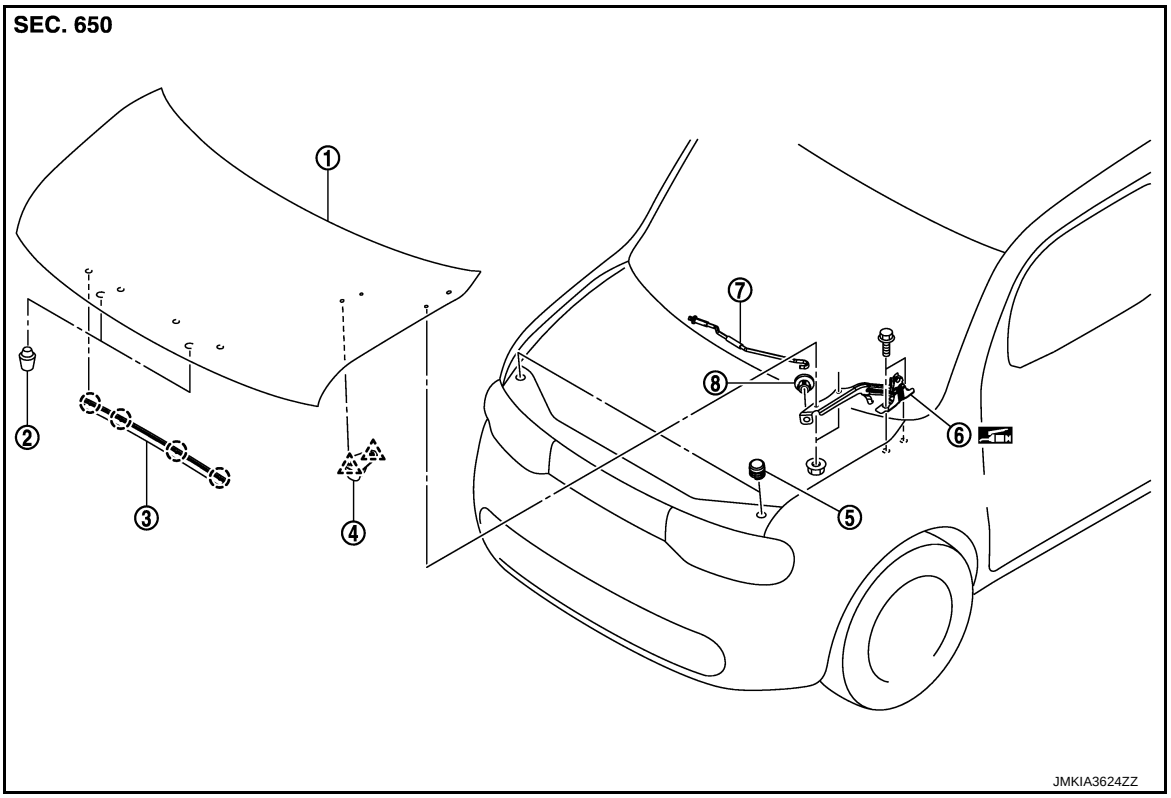

1. Hood assembly	2. Hood bumper rubber (hood side)	3. Radiator core seal
4. Clamp	5. Hood bumper rubber (body side)	6. Hood hinge
7. Hood support rod	8. Grommet	

: Clip

: Pawl

Refer to GI-4, "Components" for symbols in the figure.

HOOD SUPPORT ROD : Removal and Installation

INFOID:0000000007773068

REMOVAL

1. Support hood assembly with a suitable material to prevent it from falling.

   WARNING:

   Bodily injury may occur if no supporting rod is holding the hood open when removing the hood support rod.

2. Pull hood support rod from grommet and remove.

INSTALLATION

Install in the reverse order of removal.

RADIATOR CORE SUPPORT

Exploded View

INFOID:0000000007773069

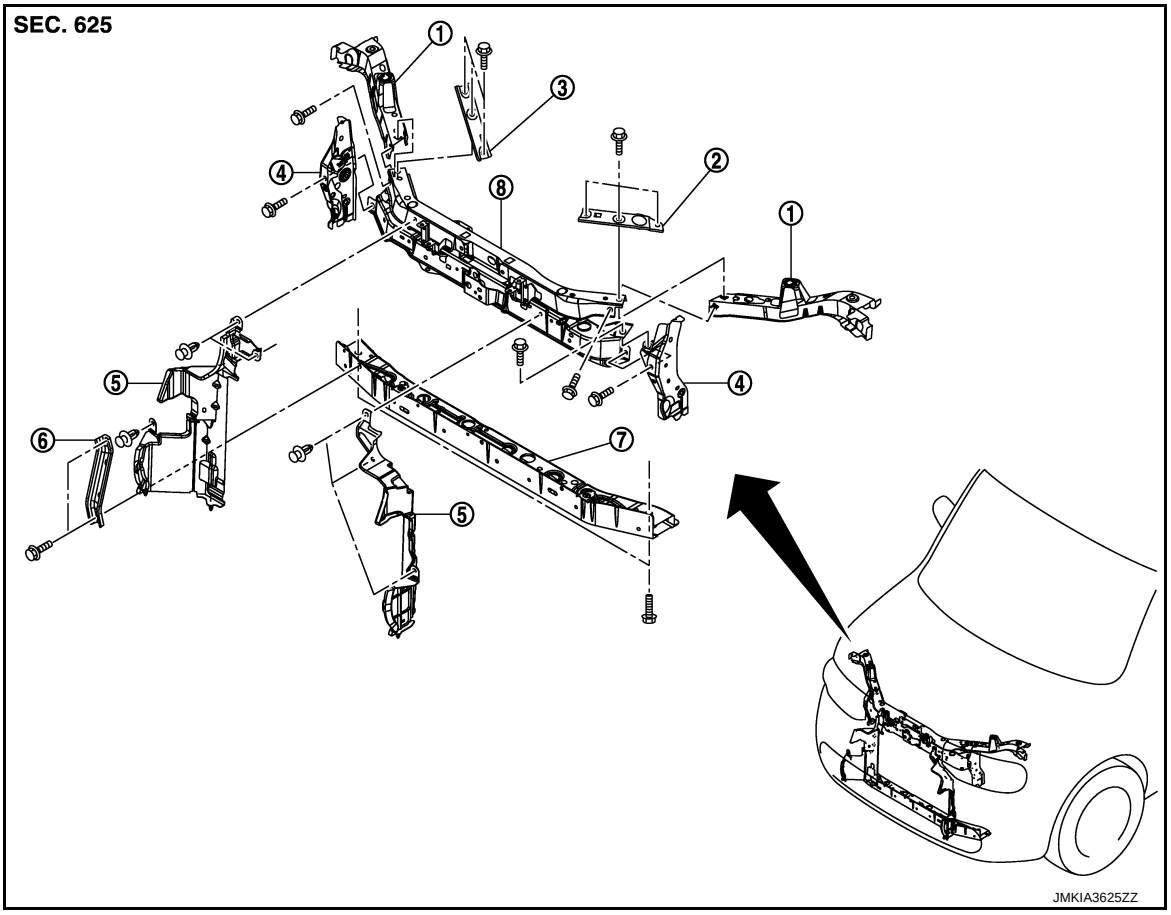

1. Radiator core support side
2. Radiator core support upper bracket (LH)
3. Radiator core support upper bracket (RH)
4. Radiator core reinforcement side
5. Air guide
6. Radiator core lower stay
7. Radiator core support lower
8. Radiator core support upper

Removal and Installation

INFOID:0000000007773070

RADIATOR CORE SUPPORT UPPER

REMOVAL

1. Remove front bumper fascia and bumper reinforcement. Refer to EXT-12, "Removal and Installation".
2. Remove hood lock. Refer to DLK-316, "Removal and Installation".
3. Remove front combination lamps (LH/RH). Refer toEXL-168, "Removal and Installation".
4. Remove air guide.
5. Remove horn. Refer to HRN-4, "Removal and Installation".
6. Remove crash zone sensor. Refer to SR-21, "Removal and Installation".
7. Remove ambient sensor. Refer to HAC-113, "Removal and Installation".
8. Disconnect all harness from radiator core support upper.
9. Remove air duct assembly. Refer to EM-24, "Removal and Installation".
10. Remove radiator core support upper bracket (LH/RH).
11. Remove mounting bolts, and then remove radiator core support upper.

INSTALLATION

Install in the reverse order of removal.

CAUTION:

- **After installation, adjust the following parts.**
- **Front combination lamp: Refer to EXL-164, "Aiming Adjustment Procedure".**

RADIATOR CORE SUPPORT LOWER

REMOVAL

1. Remove front bumper fascia and bumper reinforcement. Refer to EXT-12, "Removal and Installation".
2. Remove air guide.
3. Remove radiator core lower stay.
4. Remove clips of fender protector.
5. Remove floor under cover. Refer to EXT-22, "Removal and Installation".
6. Use a belts (A) to suspend it to prevent it from falling.
   CAUTION:
   Never damage radiator and condenser.

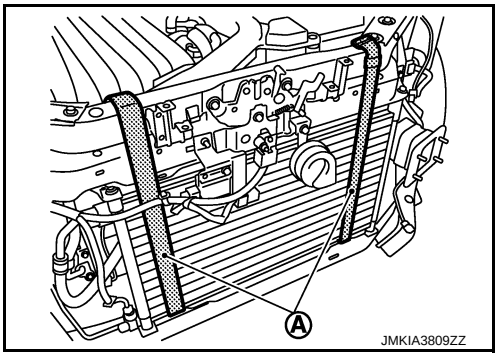

7. Remove mounting bolts, and then remove radiator core support lower.

INSTALLATION

Install in the reverse order of removal.

CAUTION:

- **After installation, adjust the following parts.**
- **Front combination lamp: Refer to EXL-164, "Aiming Adjustment Procedure".**

FRONT FENDER

Exploded View

INFOID:0000000007773071

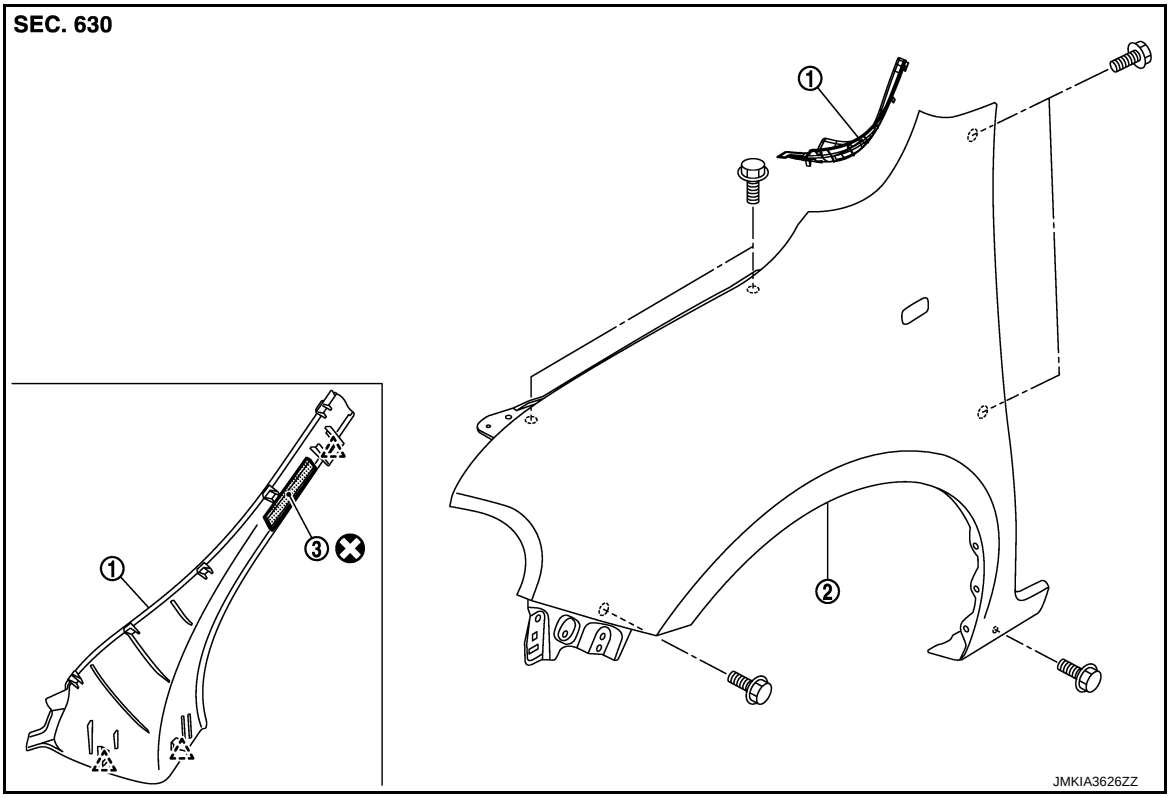

1. Front fender cover
2. Front fender assembly
3. Doube-faced adhesive tape [t : 2.0 mm (0.079 in)]

: Pawl

Refer to GI-4, "Components" for symbols in the figure.

Removal and Installation

INFOID:0000000007773072

CAUTION:
Use a shop cloth to protect the body from being damaged during removal and installation.

REMOVAL

1. Remove side turn signal lamp. Refer to EXL-175, "Removal and Installation".
2. Remove front grille. Refer to EXT-17, "Removal and Installation".
3. Remove front bumper fascia. Refer to EXT-12, "Removal and Installation".
4. Remove front combination lamp. Refer toEXL-168, "Removal and Installation".
5. Remove clips and screws of fender protector. Refer to EXT-21, "FENDER PROTECTOR : Removal and Installation".
6. Remove front fender cover.
7. Remove mounting bolts and remove front fender.
   CAUTION:
   An viscous urethane foam is installed on the back surface of front fender. When removing the front fender, be careful to not deform the front fender while performing the procedure and removing the viscous urethane foam a little at a time.

INSTALLATION

Install in the reverse order of removal.

CAUTION:

- **After installation, apply the touch-up paint (the body color) onto the head of front fender mounting bolts.**
- **After installation, adjust the following part.**

- Hood assembly : Refer to DLK-289, "HOOD ASSEMBLY : Adjustment".
- Front door : Refer to DLK-298, "DOOR ASSEMBLY : Adjustment".
- Front combination lamp : Refer to EXL-163, "Description".

FRONT DOOR

DOOR ASSEMBLY

DOOR ASSEMBLY : Exploded View

INFOID:0000000007773073

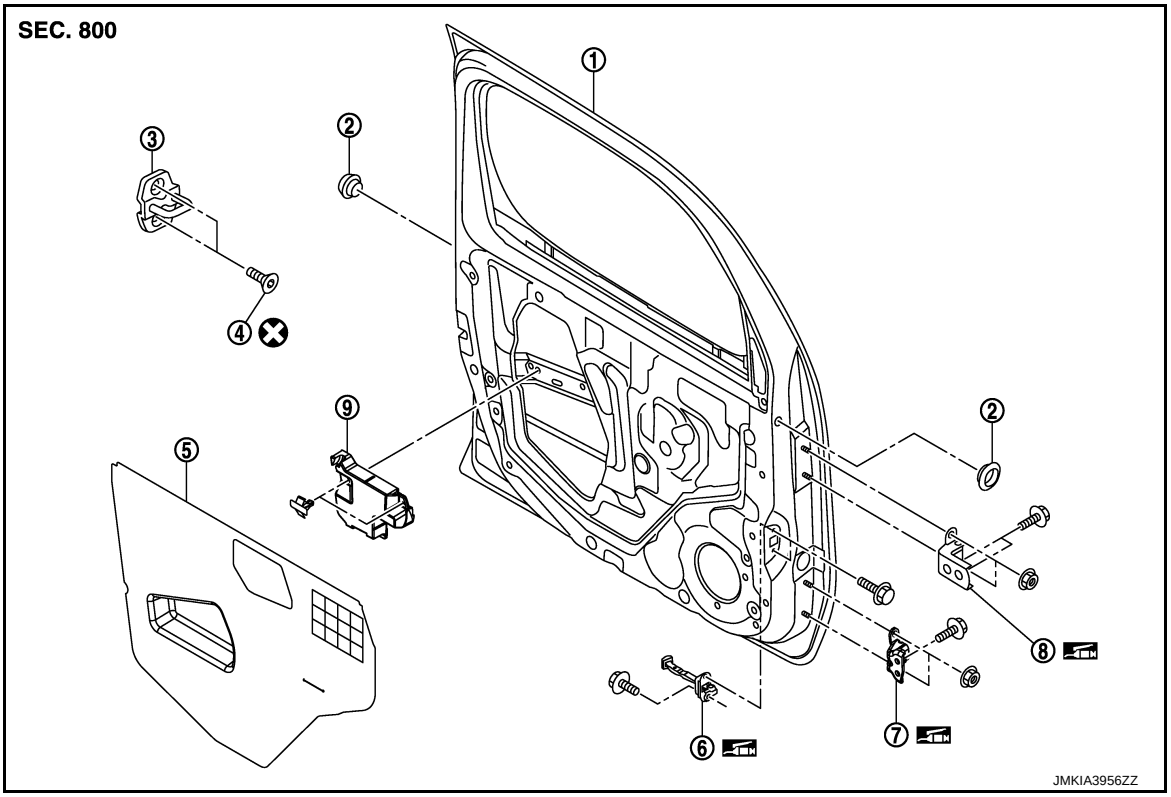

1.	Front door panel	2.	Grommet	3.	Door striker
4.	TORX bolt	5.	Sealing screen	6.	Door check link
7.	Door hinge (lower)	8.	Door hinge (upper)		

Refer to GI-4, "Components" for symbols in the figure.

DOOR ASSEMBLY : Removal and Installation

INFOID:0000000007773074

CAUTION:
- **Perform work with 2 workers, because of its heavy weight.**
- **When removing and installing front door assembly, support door with a jack and shop cloth to protect door and body.**

REMOVAL

1. Remove mounting bolts of door check link on the vehicle.
2. Remove front door harness grommet, and then pull out the harness from the vehicle.
3. Disconnect front door harness connector.
4. Remove door hinge mounting nuts (door side), and then remove door assembly.

INSTALLATION

Install in the reverse order of removal.

CAUTION:
- **Check front door open/close, lock/unlock operation after installation.**
- **Check door hinge rotating part for poor lubrication. If necessary, apply body grease.**
- **After installation, perform the fitting adjustment. Refer to DLK-298, "DOOR ASSEMBLY : Adjustment".**
- **After installation, apply touch-up paint (the body color) onto the head of door hinge mounting nuts.**

DOOR ASSEMBLY : Adjustment

INFOID:0000000007773075

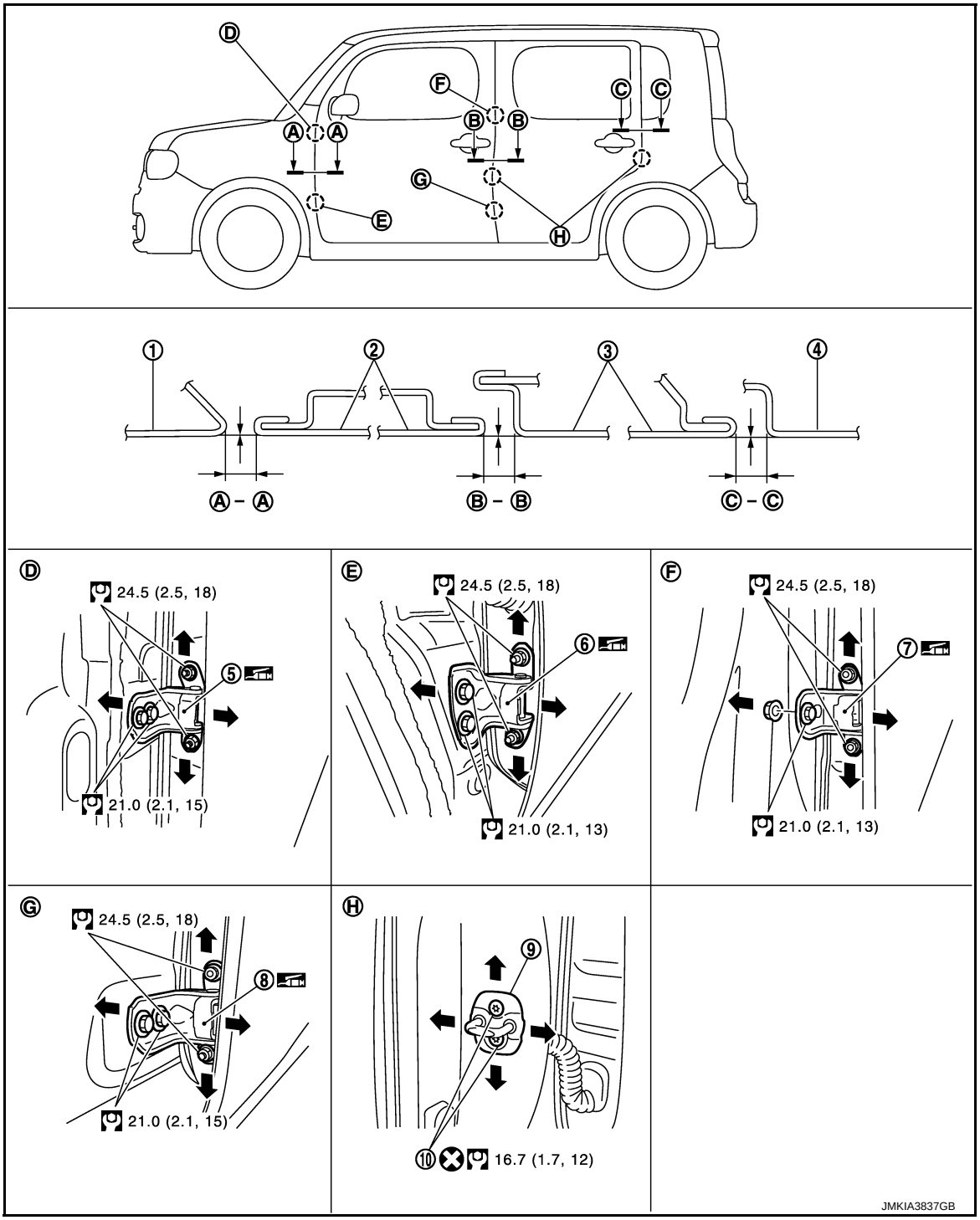

1.	Front fender	2.	Front door	3.	Rear door
4.	Body side outer	5.	Front door hinge (upper)	6.	Front door hinge (lower)
7.	Rear door hinge (upper)	8.	Rear door hinge (lower)	9.	Door striker
10.	TORX bolt				

Refer to GI-4, "Components" for symbols in the figure.

Check the clearance and surface height between front door and each part by visually and touching.
If the clearance and the surface height are out of specification, adjust them according to the procedures shown below.

Unit : mm (in)

Portion		Clearance	Surface height
Front fender – Front door	A – A	3.5 – 5.5 (0.138 – 0.217)	- 1.0 – 1.0 (- 0.039 – 0.039)
Front door – Rear door	B – B	3.4 – 5.4 (0.134 – 0.213)	- 1.0 – 1.0 (- 0.039 – 0.039)

1. Remove front fender. Refer to DLK-295, "Removal and Installation".
2. Loosen door hinge mounting nuts on door side.
3. Adjust the surface height of front door according to the fitting standard dimension.
4. Temporarily tighten door hinge mounting nuts on door side.
5. Loosen door hinge mounting bolts on body side.
6. Raise front door at rear end to adjust clearance of the front door according to the fitting standard dimension.
7. After adjustment tighten bolts and nuts to the specified torque.
8. Install front fender. Refer to refer to DLK-295, "Removal and Installation".

DOOR STRIKER ADJUSTMENT

Adjust door striker so that it becomes parallel with door lock insertion direction.

DOOR STRIKER

DOOR STRIKER : Exploded View

INFOID:0000000007773076

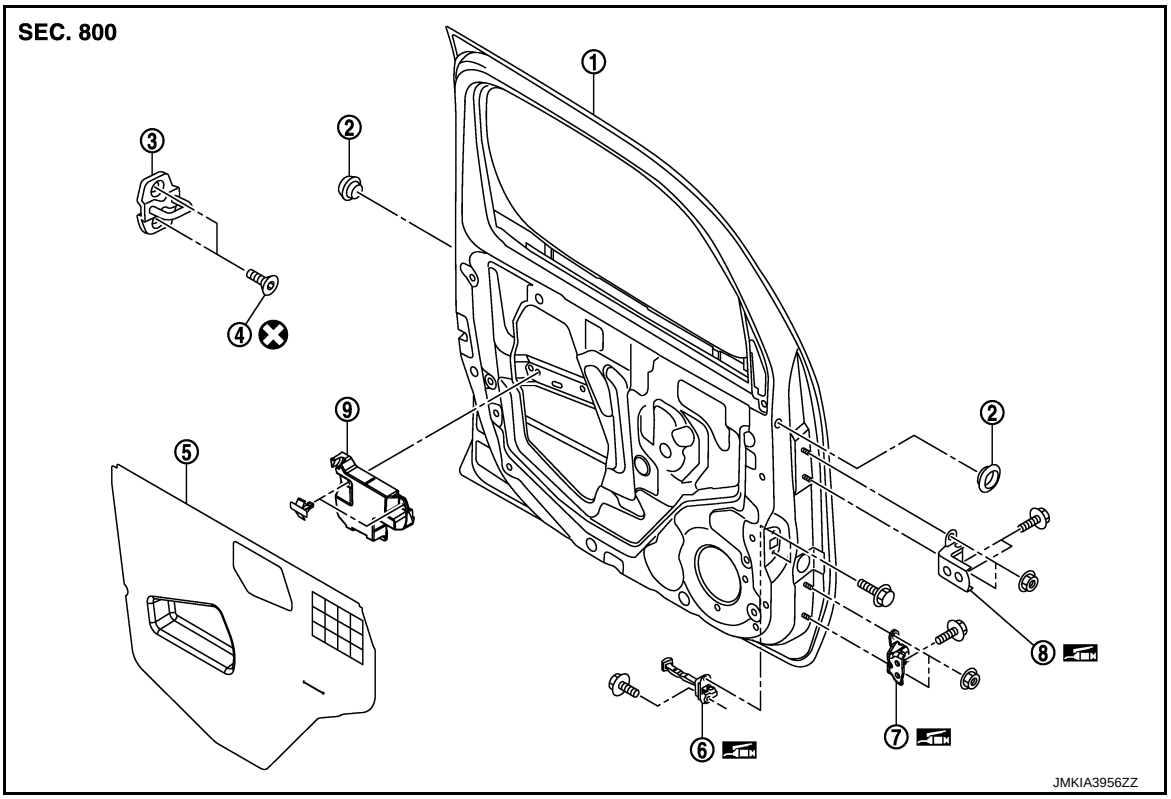

1. Front door panel
2. Grommet
3. Door striker
4. TORX bolt
5. Sealing screen
6. Door check link
7. Door hinge (lower)
8. Door hinge (upper)

Refer to GI-4, "Components" for symbols in the figure.

DOOR STRIKER : Removal and Installation

INFOID:0000000007773077

REMOVAL

Remove TORX bolts, and then remove door striker.

INSTALLATION

Install in the reverse order of removal.

CAUTION:

- **Check front door open/close, lock/unlock operation after installation.**
- **After installation, be sure to perform the fitting adjustment. Refer to DLK-298, "DOOR ASSEMBLY : Adjustment".**

DOOR HINGE

DOOR HINGE : Exploded View

INFOID:0000000007773078

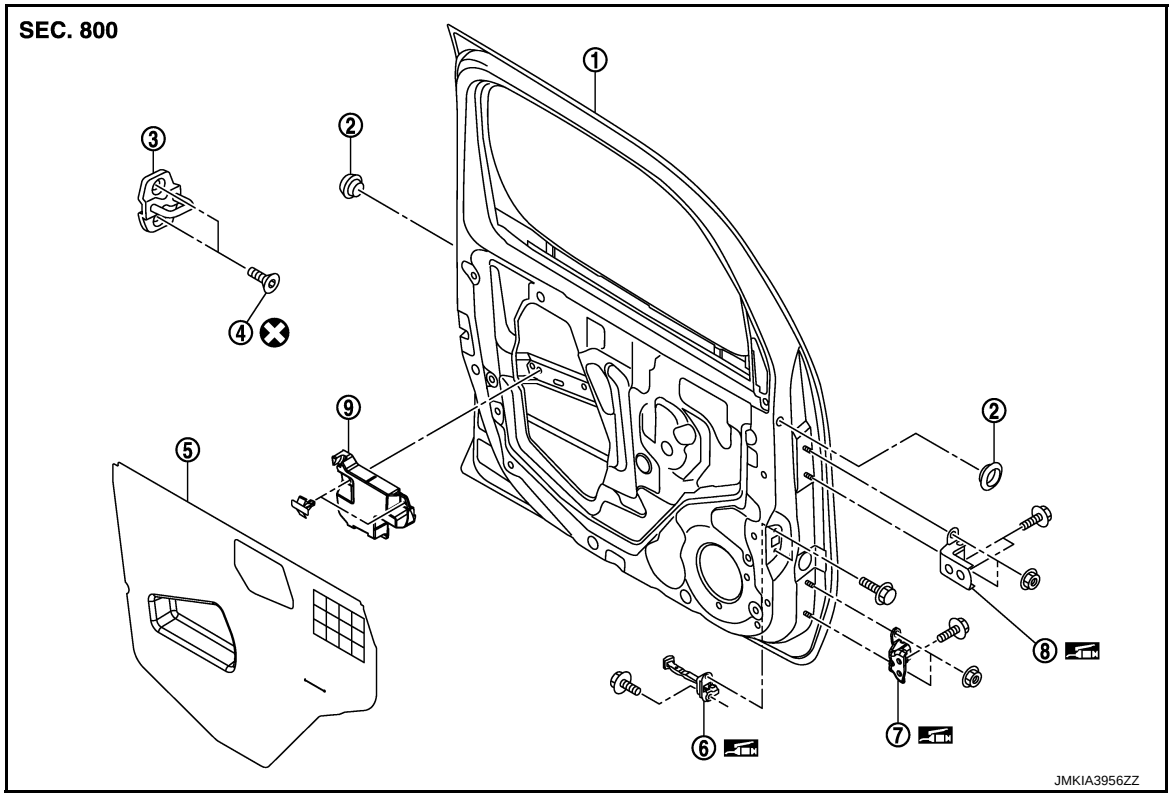

1.	Front door panel	2.	Grommet	3.	Door striker
4.	TORX bolt	5.	Sealing screen	6.	Door check link
7.	Door hinge (lower)	8.	Door hinge (upper)		

Refer to GI-4, "Components" for symbols in the figure.

DOOR HINGE : Removal and Installation

INFOID:0000000007773079

REMOVAL

CAUTION:

- **Perform work with 2 workers, because of its heavy weight.**
- **When removing and installing front door assembly, support door with a jack and shop cloth to protect door and body.**

1. Remove front fender. Refer to DLK-295, "Removal and Installation".
2. Remove front door assembly. Refer to DLK-297, "DOOR ASSEMBLY : Removal and Installation".
3. Remove front door hinge mounting bolts (body side), and then remove front door hinge.

INSTALLATION

Install in the reverse order of removal.

CAUTION:

- **Check front door open/close, lock/unlock operation after installation.**

- **Check door hinge rotating part for poor lubrication. If necessary, apply body grease.**
- **After installation, perform the fitting adjustment. Refer to DLK-298, "DOOR ASSEMBLY : Adjustment".**
- **After installation, apply touch-up paint (the body color) onto the head of door hinge mounting nuts.**

DOOR CHECK LINK

DOOR CHECK LINK : Exploded View

INFOID:0000000007773080

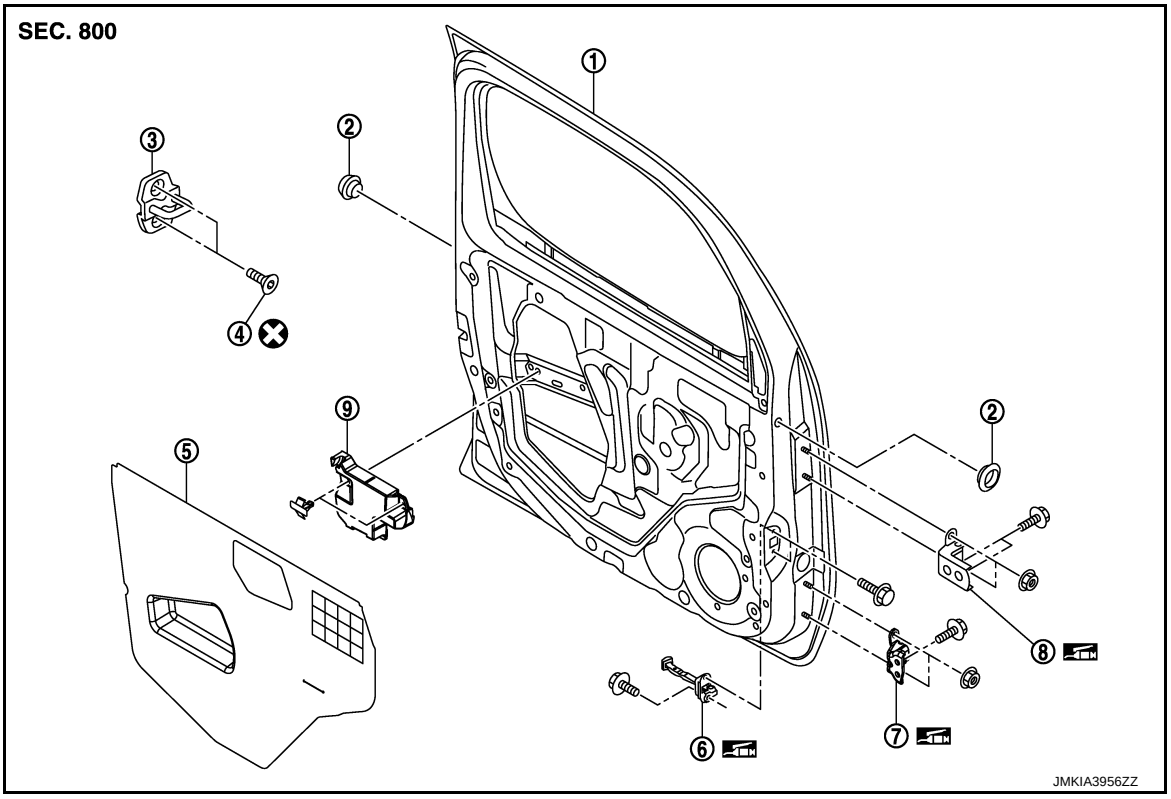

1.	Front door panel	2.	Grommet	3.	Door striker
4.	TORX bolt	5.	Sealing screen	6.	Door check link
7.	Door hinge (lower)	8.	Door hinge (upper)		

Refer to GI-4, "Components" for symbols in the figure.

DOOR CHECK LINK : Removal and Installation

INFOID:0000000007773081

REMOVAL

1. Remove front door finisher. Refer to INT-12, "Removal and Installation".
2. Fully close the front door window.
3. Remove sealing screen.
   NOTE:
   Cut the butyl-tape so that some parts of the butyl-tape do not remain on the sealing screen, if the sealing screen is reused.
4. Remove front door speaker. Refer to AV-56, "Removal and Installation".
5. Remove mounting bolts of door check link on the vehicle.
6. Remove mounting bolts of door check link on door panel.
7. Take door check link out from the hole of door panel.

INSTALLATION

Install in the reverse order of removal.

CAUTION:

Check front door open/close operation after installation.

REAR DOOR

DOOR ASSEMBLY

DOOR ASSEMBLY : Exploded View

INFOID:0000000007773082

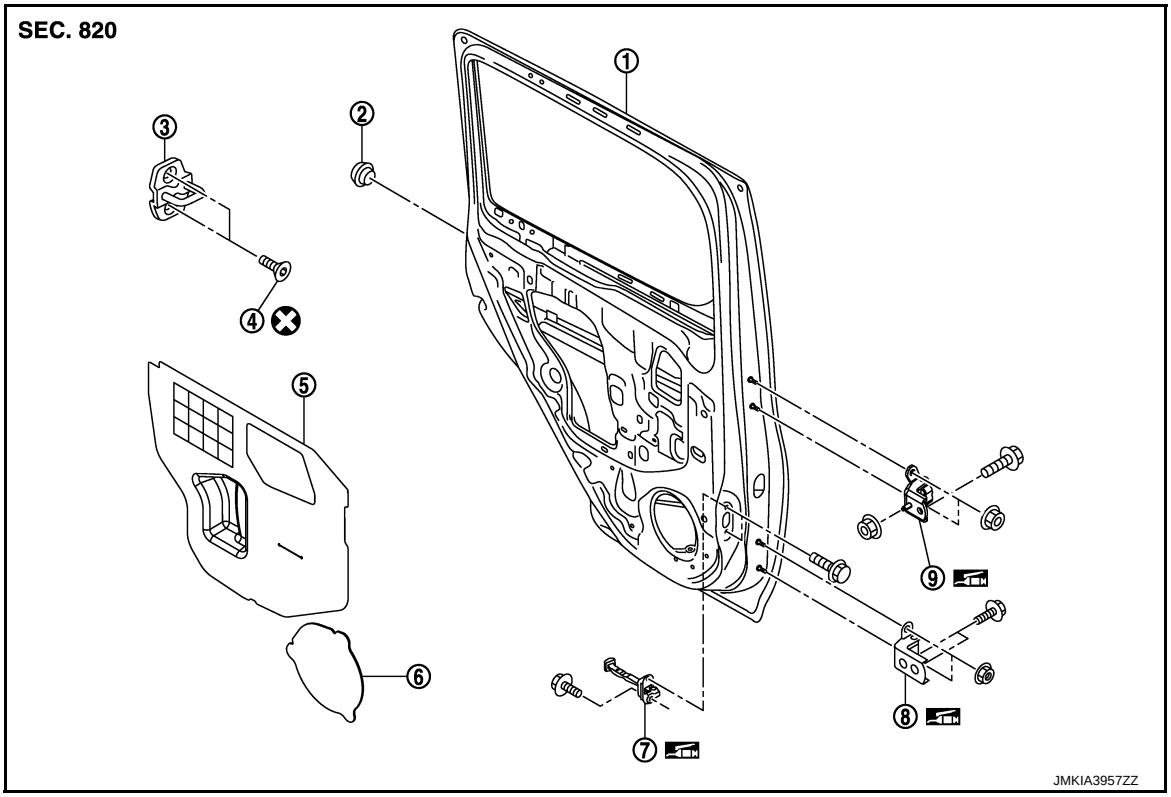

1.	Rear door panel	2.	Grommet	3.	Door striker
4.	TORX bolt	5.	Sealing screen (upper)	6.	Sealing screen (lower)
7.	Door check link	8.	Door hinge (lower)	9.	Door hinge (upper)

Refer to GI-4, "Components" for symbols in the figure.

DOOR ASSEMBLY : Removal and Installation

INFOID:0000000007773083

CAUTION:
- **Perform work with 2 workers, because of it's heavy weight.**
- **When removing and installing rear door assembly, support door with a jack and shop cloth to protect door and body.**

REMOVAL

1. Remove rear door harness grommet, and then pull out door harness from the vehicle.
2. Disconnect rear door harness connector.
3. Remove mounting bolts of door check link on the vehicle.
4. Remove door hinge mounting nuts (door side), and then remove rear door assembly.

INSTALLATION

Install in the reverse order of removal.

CAUTION:
- **Check rear door open/close, lock/unlock operation after installation.**
- **Check door hinge rotating part for poor lubrication. If necessary, apply body grease.**
- **After installation, perform the fitting adjustment. Refer to DLK-303, "DOOR ASSEMBLY : Adjustment".**
- **After installation, apply touch-up paint (the body color) onto the head of door hinge mounting nuts.**

DOOR ASSEMBLY : Adjustment

INFOID:0000000007773084

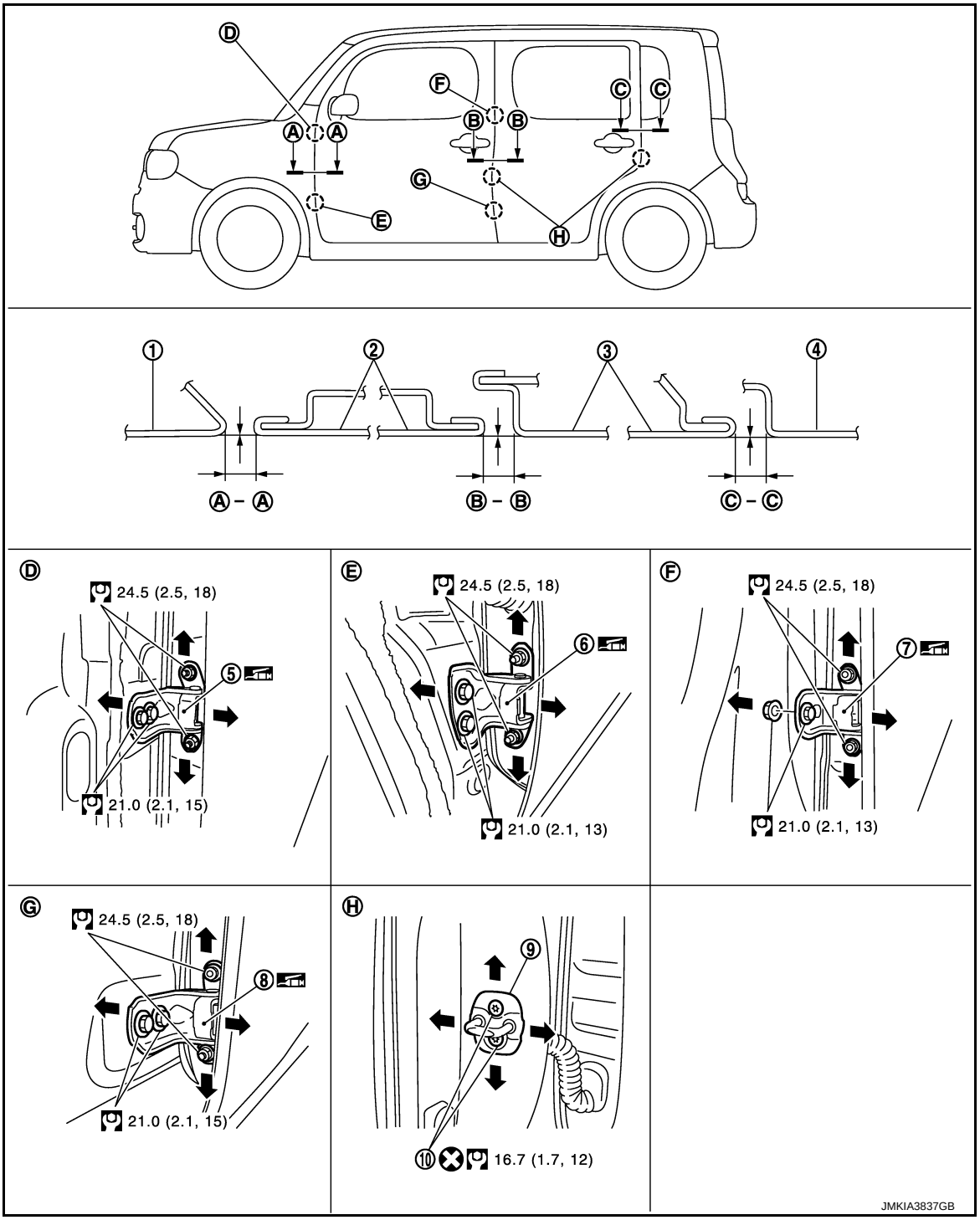

1.	Front fender	2.	Front door	3.	Rear door
4.	Body side outer	5.	Front door hinge (upper)	6.	Front door hinge (lower)
7.	Rear door hinge (upper)	8.	Rear door hinge (lower)	9.	Door striker
10.	TORX bolt				

Refer to GI-4, "Components" for symbols in the figure.

Check the clearance and surface height between rear door and each part by visually and touching.
If the clearance and the surface height are out of specification, adjust them according to the procedures shown below.

Unit: mm (in)

Portion		Clearance	Surface height
Front door – Rear door	B – B	3.4 – 5.4 (0.134 – 0.213)	-1.0 – 1.0 (-0.039 – 0.039)
Rear door – Body side outer	C – C	3.5 – 5.5 (0.138 – 0.217)	-1.0 – 1.0 (-0.039 – 0.039)

1. Remove center pillar garnish (upper/lower). Refer to INT-16, "Removal and Installation".
2. Loosen door hinge mounting nuts on door side.
3. Adjust the surface height of rear door according to the fitting standard dimension.
4. Temporarily tighten door hinge mounting nuts on door side.
5. Loosen door hinge mounting nuts and bolts on body side.
6. Raise rear door at rear end to adjust clearance of rear door according to the fitting standard dimension.
7. After adjustment tighten bolts and nuts to the specified torque.
8. Install center pillar garnish (upper/lower). Refer to INT-16, "Removal and Installation".

DOOR STRIKER ADJUSTMENT

Adjust door striker so that it becomes parallel with door lock insertion direction.

DOOR STRIKER

DOOR STRIKER : Exploded View

INFOID:0000000007773085

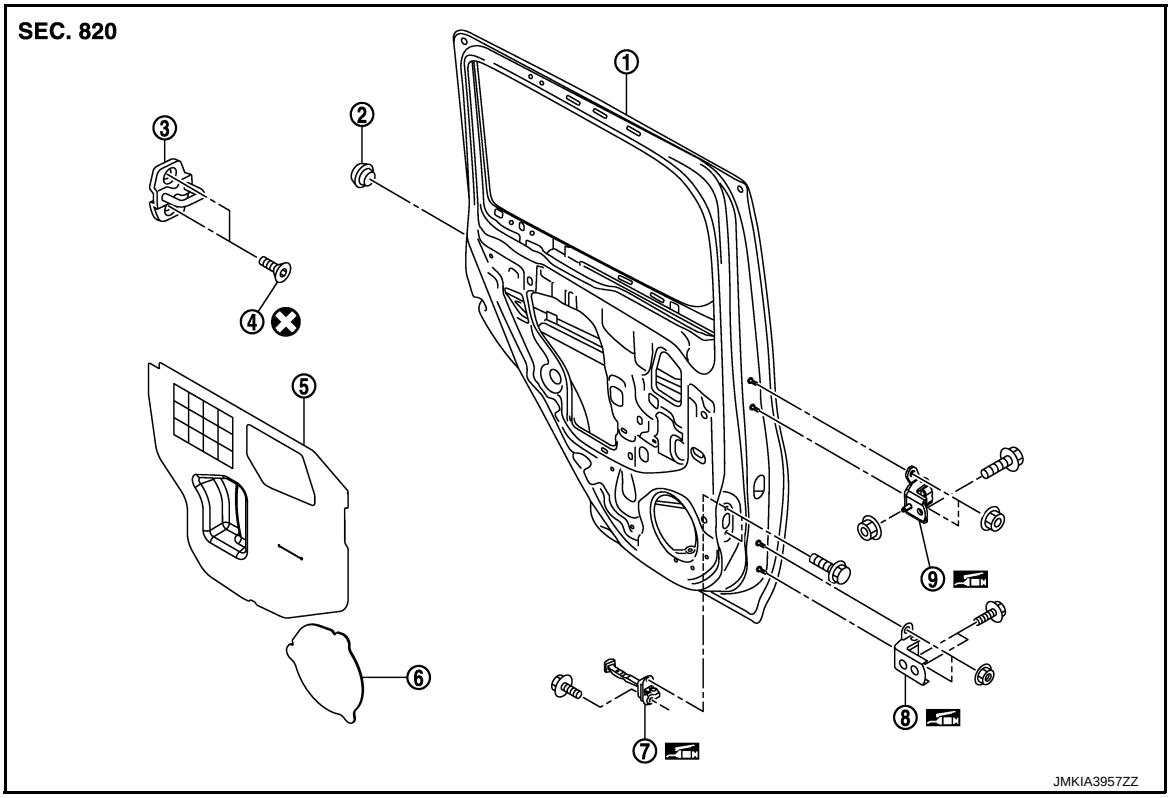

1.	Rear door panel	2.	Grommet	3.	Door striker
4.	TORX bolt	5.	Sealing screen (upper)	6.	Sealing screen (lower)
7.	Door check link	8.	Door hinge (lower)	9.	Door hinge (upper)

Refer to GI-4, "Components" for symbols in the figure.

DOOR STRIKER : Removal and Installation

INFOID:0000000007773086

REMOVAL

Remove TORX bolts, and then remove door striker.

INSTALLATION

Install in the reverse order of removal.

CAUTION:

- **Check rear door open/close, lock/unlock operation after installation.**
- **After installation, be sure to perform the fitting adjustment. Refer to DLK-303, "DOOR ASSEMBLY : Adjustment".**

DOOR HINGE

DOOR HINGE : Exploded View

INFOID:0000000007773087

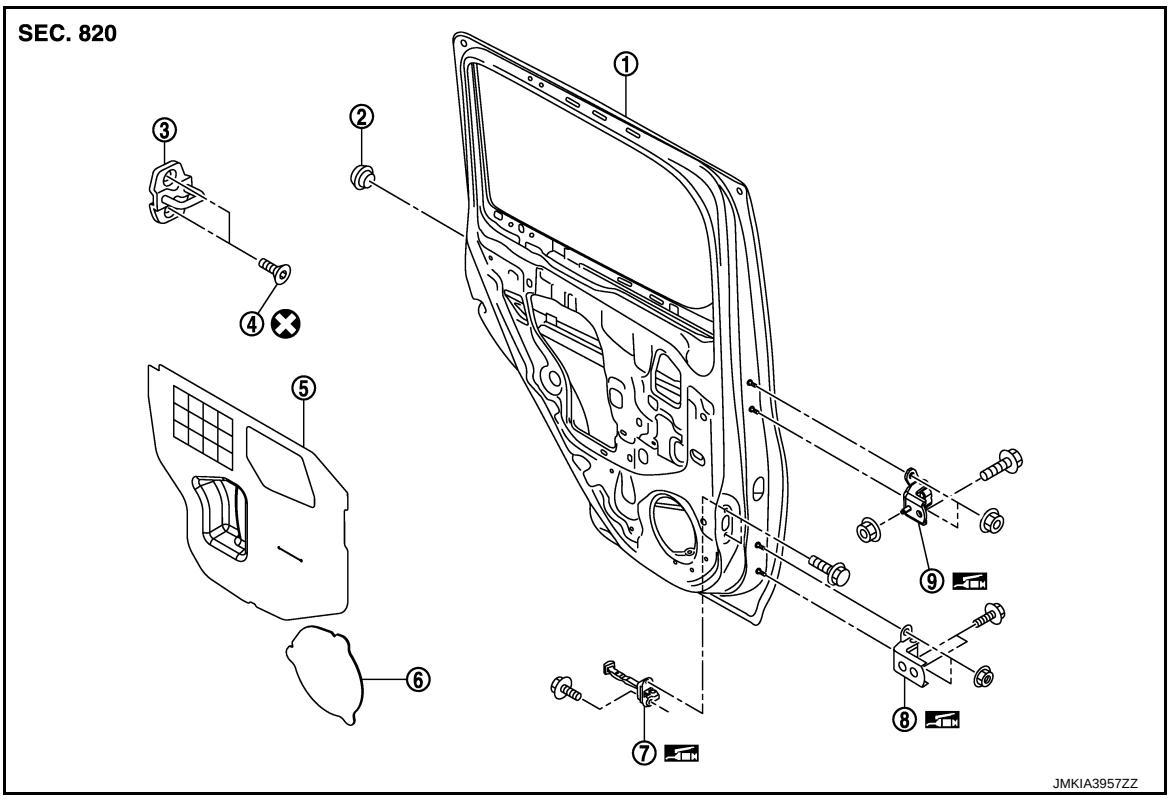

1.	Rear door panel	2.	Grommet	3.	Door striker
4.	TORX bolt	5.	Sealing screen (upper)	6.	Sealing screen (lower)
7.	Door check link	8.	Door hinge (lower)	9.	Door hinge (upper)

Refer to GI-4, "Components" for symbols in the figure.

DOOR HINGE : Removal and Installation

INFOID:0000000007773088

CAUTION:

- **Perform work with 2 workers, because of it's heavy weight.**
- **When removing and installing rear door assembly, support door with a jack and shop cloth to protect door and body.**

REMOVAL

1. Remove rear door assembly. Refer to DLK-302, "DOOR ASSEMBLY : Removal and Installation".
2. Remove center pillar garnish (upper/lower). Refer to INT-16, "Removal and Installation".
3. Remove rear door hinge mounting bolts and nuts (body side), and then remove door hinge.

INSTALLATION

Install in the reverse order of removal.

CAUTION:

- **Check rear door open/close operation after installation.**
- **Check door hinge rotating part for poor lubrication. If necessary, apply body grease.**

- **When removing and installing rear door assembly, perform the fitting adjustment. Refer to DLK-303, "DOOR ASSEMBLY : Adjustment".**
- **After installing, apply the touch-up paint (the body color) onto the head of door hinge mounting nuts.**

DOOR CHECK LINK

DOOR CHECK LINK : Exploded View

INFOID:0000000007773089

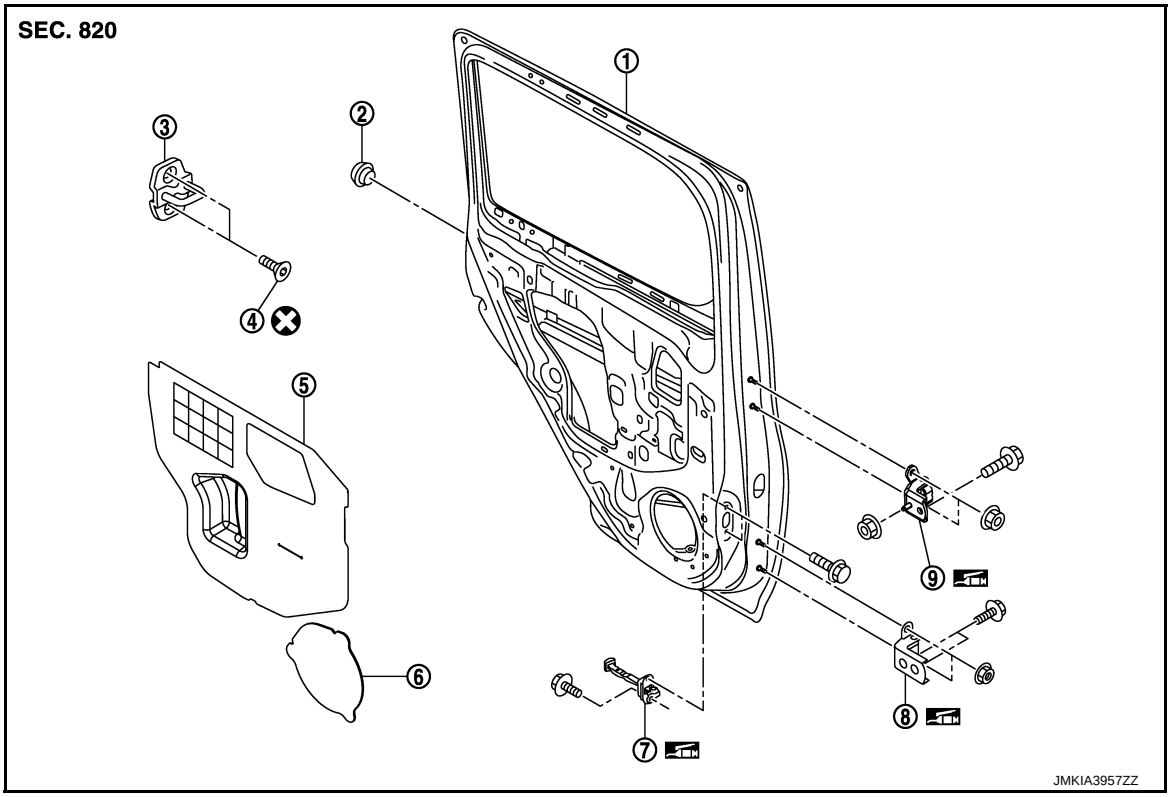

1.	Rear door panel	2.	Grommet	3.	Door striker
4.	TORX bolt	5.	Sealing screen (upper)	6.	Sealing screen (lower)
7.	Door check link	8.	Door hinge (lower)	9.	Door hinge (upper)

Refer to GI-4, "Components" for symbols in the figure.

DOOR CHECK LINK : Removal and Installation

INFOID:0000000007773090

REMOVAL

1. Remove rear door finisher. Refer to INT-14, "Removal and Installation".
2. Fully close the rear door window.
3. Remove rear door speaker. Refer to AV-58, "Removal and Installation".
4. Remove mounting bolts of the check link on the vehicle.
5. Remove mounting bolts of the check link on door panel.
6. Take door check link out from the hole of door panel.

INSTALLATION

Install in the reverse order of removal.

CAUTION:

Check rear door open/close operation after installation.

BACK DOOR

BACK DOOR ASSEMBLY

BACK DOOR ASSEMBLY : Exploded View

INFOID:0000000007773091

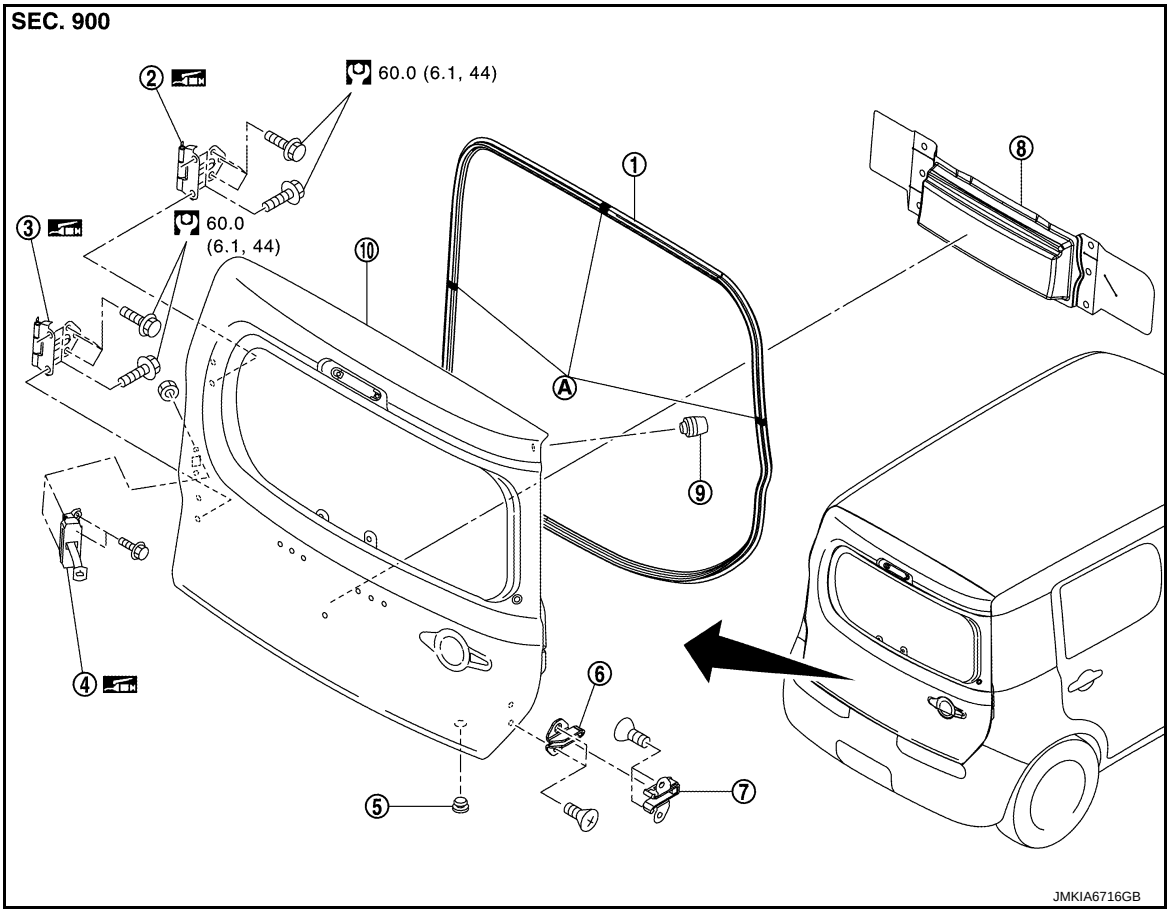

1.	Back door weather-strip	2.	Back door hinge (upper)	3.	Back door hinge (lower)
4.	Door check link	5.	Grommet	6.	Dovetail male
7.	Dovetail female	8.	Sealing screen	9.	Bumper rubber
10.	Back door panel	A	: Center mark		

Refer to GI-4, "Components" for symbols in the figure.

BACK DOOR ASSEMBLY : Removal and Installation

INFOID:0000000007773092

CAUTION:
Perform work with 2 workers, because of its heavy weight.

REMOVAL

1. Remove back door finisher lower. Refer to INT-27, "Removal and Installation".
2. Remove luggage side finisher (LH) (upper/lower). Refer to INT-24, "Removal and Installation".

3. Remove ground bolt (A) and disengage connections of harness connectors (B) and rear washer hose (C).

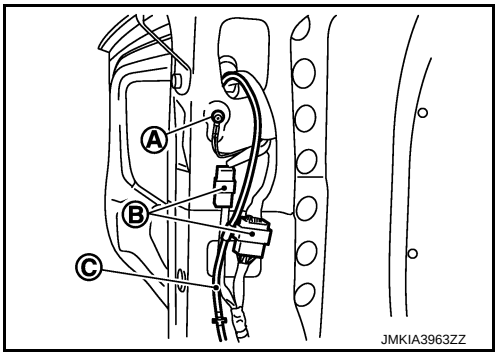

4. Remove back door harness grommet, and then pull out the harness from the vehcle.
5. Support back door with the proper material to prevent it from falling.
6. Remove mounting bolt of door check link on the vehcle.
7. Remove back door hinge mounting bolts (back door side), and then remove back door assembly.
8. Remove the following parts after removing back door assembly.
   - Back door finisher upper
   - Sealing screen
   - Dovetail (male)
   - Dovetail (female)
   - Door check link
   - Grommet
   - Bumper rubber

INSTALLATION

Install in the reverse order of removal.

CAUTION:

- **Check back door open/close, lock/unlock operation after installation.**
- **After installation, perform fitting adjustment. Refer to DLK-309, "BACK DOOR ASSEMBLY : Adjustment".**

BACK DOOR ASSEMBLY : Adjustment

INFOID:0000000007773093

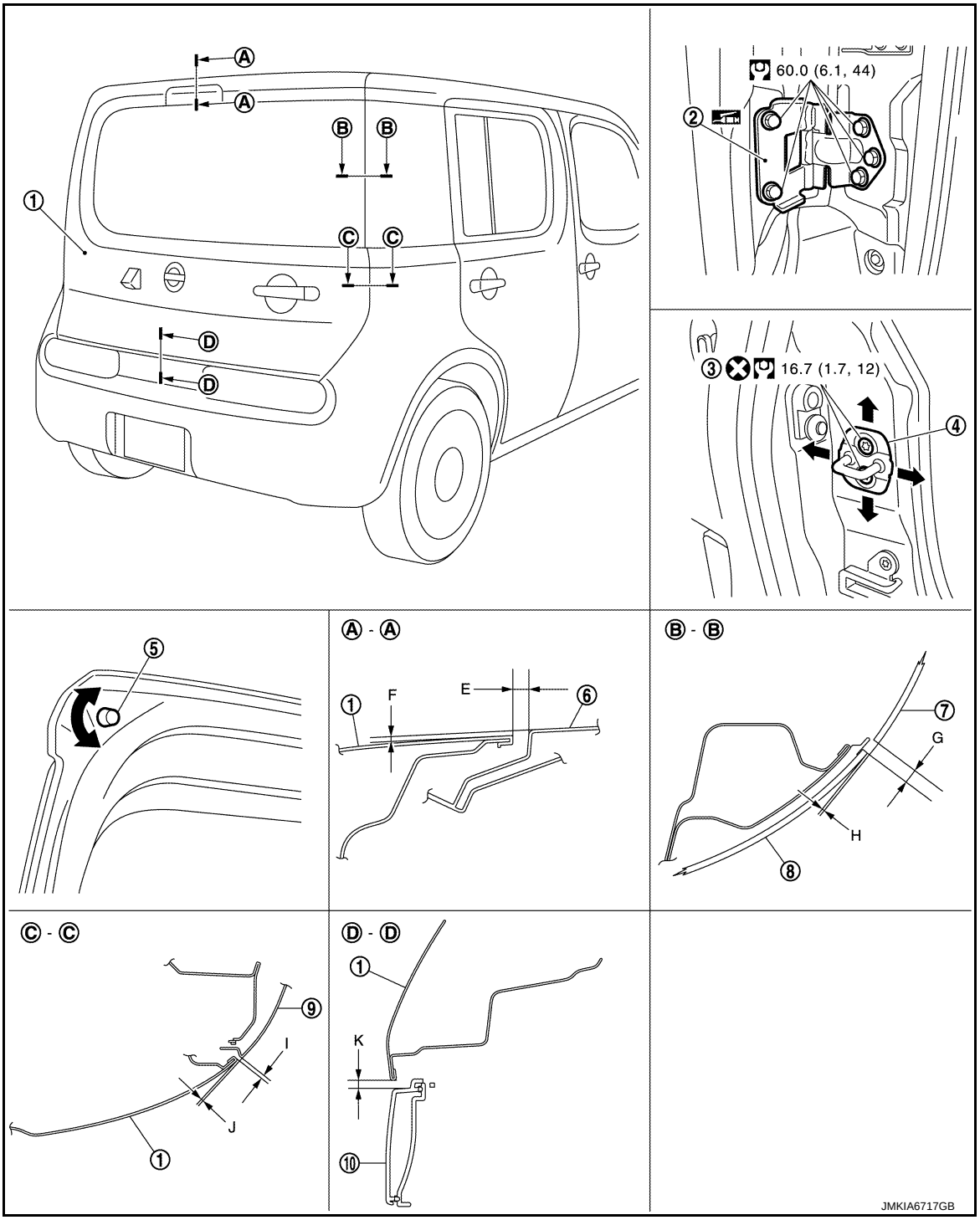

1. Back door panel
2. Back door hinge
3. TORX bolt
4. Back door striker
5. Back door bumper rubber
6. Roof panel
7. Side window glass
8. Back door glass
9. Body side outer panel
10. Back door finisher

Refer to GI-4, "Components" for symbols in the figure.

Check the clearance and the surface height between back door and each part by visually and touching.
If the clearance and the surface height are out of specification, adjust them according to the procedures shown below.

Unit: mm (in)

Portion				Standard	Difference (RH/LH)
Back door – Roof	A – A	E	Clearance	6.1 – 9.9 (0.240 – 0.390)	—
		F	Surface height	-0.6 – 1.4 (-0.024 – 0.055)	—
Side window glass – Back door glass	B – B	G	Clearance	4.4 – 8.4 (0.173 – 0.331)	< 2.0 (0.079)
		H	Surface height	0 – 2.0 (0 – 0.079)	—
Body side outer panel – Back door	C – C	I	Clearance	4.0 – 6.0 (0.157 – 0.236)	< 1.0 (0.039)
		J	Surface height	-1.0 – 1.0 (-0.039 – 0.039)	—
Back door – Back door finisher	D – D	K	Clearance	5.0 – 9.0 (0.197 – 0.354)	—

1. Loosen back door striker mounting bolts.
2. Loosen bumper rubber.
3. Adjust right and left clearances and clearances between rear bumper to the standard value specified in the table, by taping back door striker using a rubber hammer and adjusting back door striker and bumper rubber.
4. Finally tighten back door hinge, bumper rubber, and back door striker.

CAUTION:
- **Check back door hinge rotating part for poor lubrication. If necessary, apply body grease.**
- **After installation, apply touch-up paint (the body color) onto the head of back door hinge mounting nuts.**

BACK DOOR STRIKER ADJUSTMENT

Adjust back door striker so that becomes parallel with back door lock insertion direction.

BACK DOOR STRIKER

BACK DOOR STRIKER : Exploded View

INFOID:0000000007773094

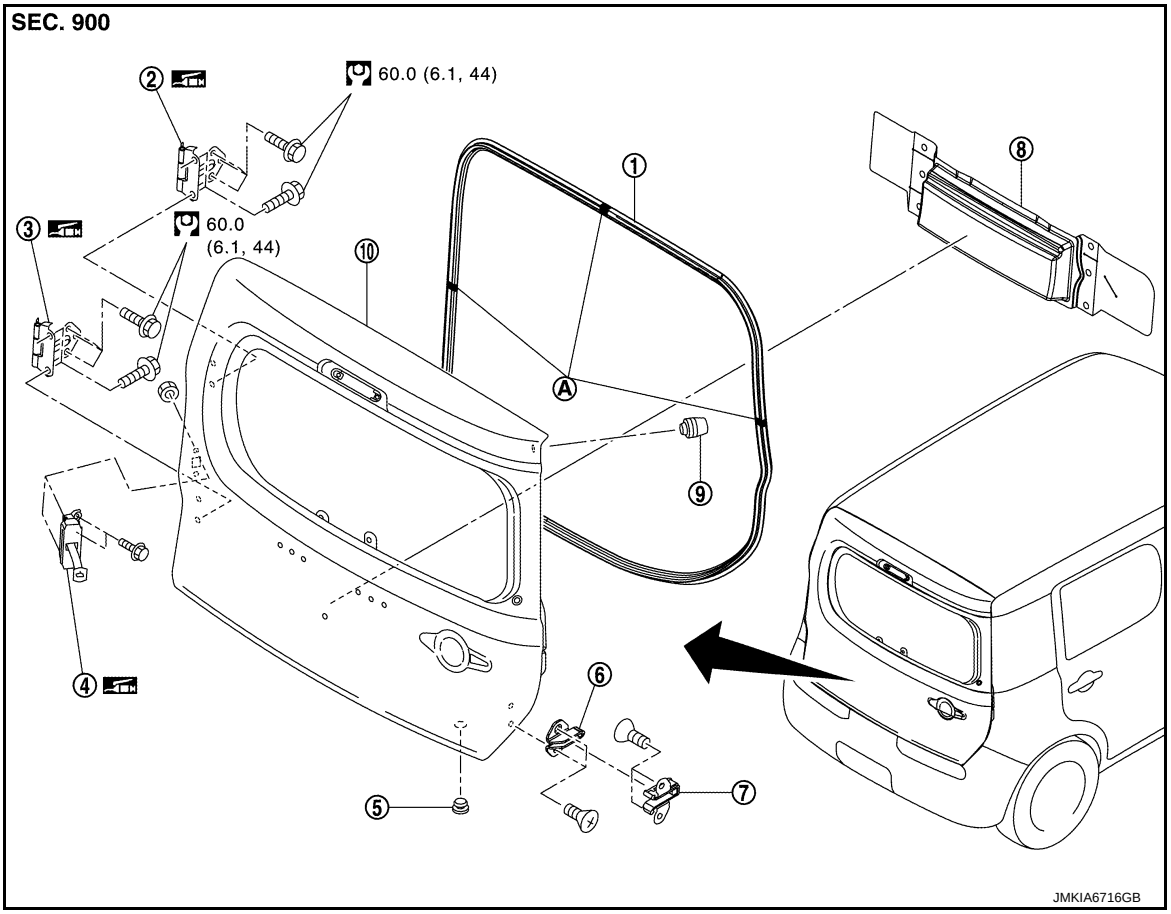

1.	Back door weather-strip	2.	Back door hinge (upper)	3.	Back door hinge (lower)
4.	Door check link	5.	Grommet	6.	Dovetail male
7.	Dovetail female	8.	Sealing screen	9.	Bumper rubber
10.	Back door panel	A	: Center mark		

Refer to GI-4, "Components" for symbols in the figure.

BACK DOOR STRIKER : Removal and Installation

INFOID:0000000007773095

REMOVAL

Remove mounting bolts, and then remove back door striker.

INSTALLATION

Install in the reverse order of removal.

CAUTION:

- **Check back door open/close operation after installation.**
- **When removing and installing back door striker, be sure to perform the fitting adjustment. Refer to DLK-309, "BACK DOOR ASSEMBLY : Adjustment".**

BACK DOOR HINGE

BACK DOOR HINGE : Exploded View

INFOID:0000000007773096

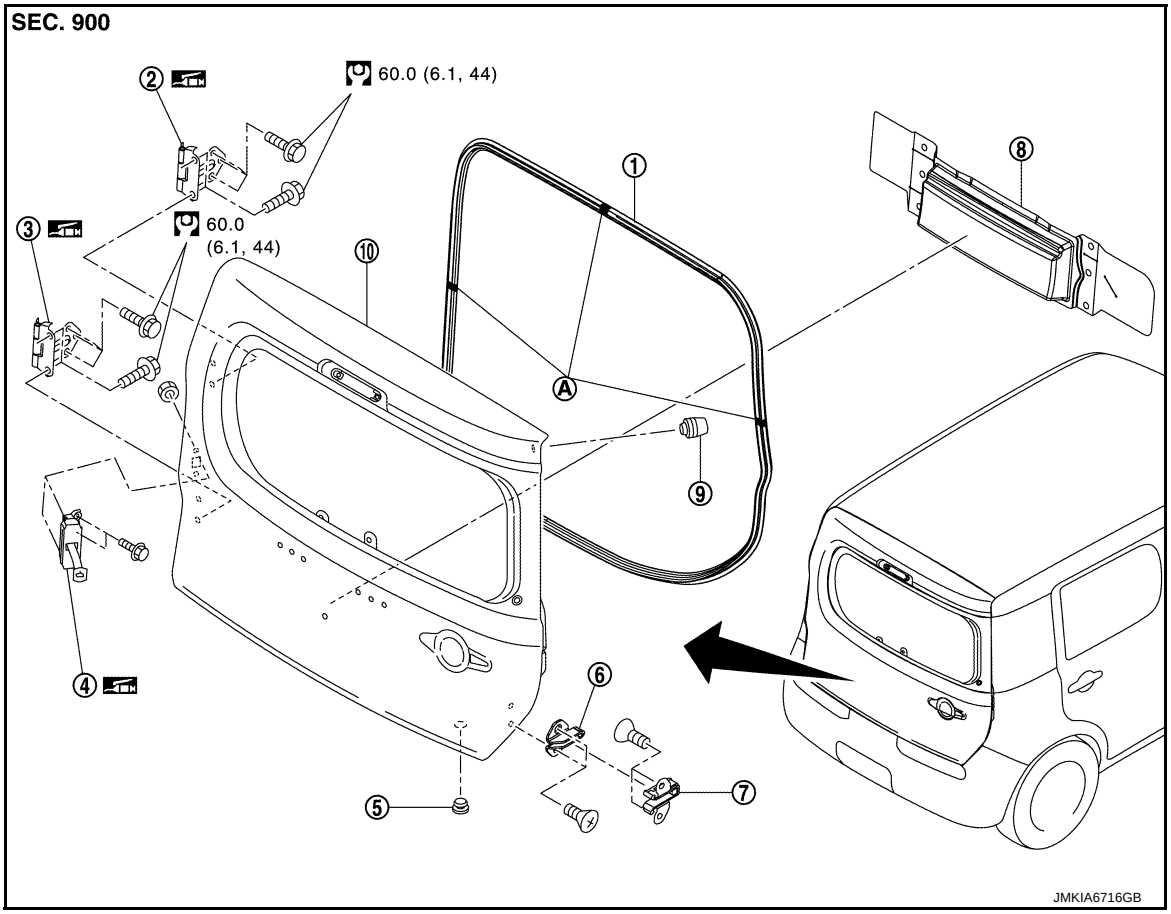

1.	Back door weather-strip	2.	Back door hinge (upper)	3.	Back door hinge (lower)
4.	Door check link	5.	Grommet	6.	Dovetail male
7.	Dovetail female	8.	Sealing screen	9.	Bumper rubber
10.	Back door panel	A	: Center mark		

Refer to GI-4, "Components" for symbols in the figure.

BACK DOOR HINGE : Removal and Installation

INFOID:0000000007773097

CAUTION:
Perform work with 2 workers, because of its heavy weight.

REMOVAL

1. Remove back door assembly. Refer to DLK-307, "BACK DOOR ASSEMBLY : Removal and Installation".
2. Remove back door hinge mounting bolts (body side), and then remove back door hinge.

INSTALLATION

Install in the reverse order of removal.

CAUTION:
- **Check back door open/close operation after installation.**
- **Check back door hinge rotating part for poor lubrication. If necessary, apply body grease.**
- **When removing and installing back door assembly, perform the fitting adjustment. Refer to DLK-309, "BACK DOOR ASSEMBLY : Adjustment".**
- **After installation, apply touch-up paint (the body color) onto the head of back door hinge mounting nuts.**

DOOR CHECK LINK

DOOR CHECK LINK : Exploded View

INFOID:0000000007773098

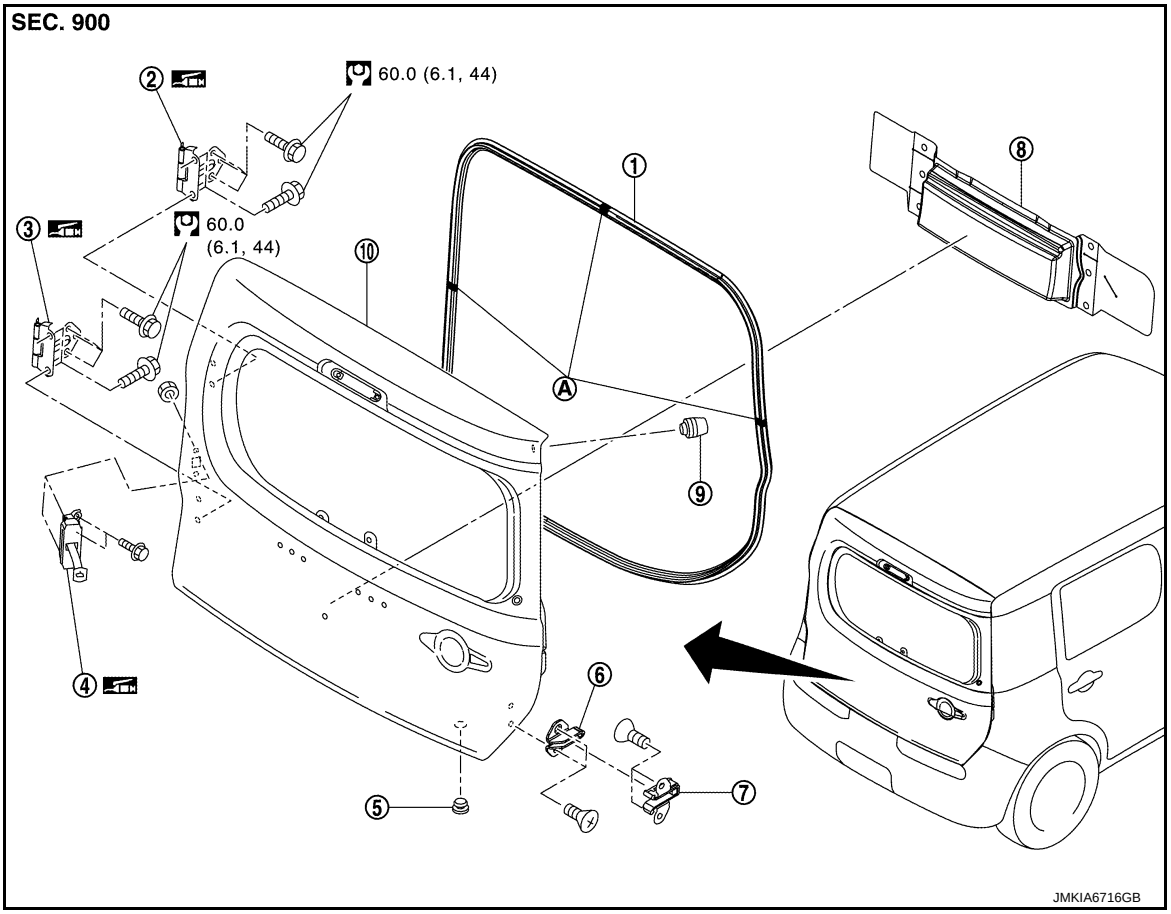

1.	Back door weather-strip	2.	Back door hinge (upper)	3.	Back door hinge (lower)
4.	Door check link	5.	Grommet	6.	Dovetail male
7.	Dovetail female	8.	Sealing screen	9.	Bumper rubber
10.	Back door panel	A	: Center mark		

Refer to GI-4, "Components" for symbols in the figure.

DOOR CHECK LINK : Removal and Installation

INFOID:0000000007773099

REMOVAL

1. Remove back door finisher lower. Refer to INT-27, "Removal and Installation".
2. Remove sealing screen.
   NOTE:
   Cut the butyl-tape so that some part of the butyl-tape do not remain on the sealing screen, if the sealing screen is reused.
3. Remove mounting bolts of door check link on the vehicle.
4. Remove mounting nuts of door check link on the back door panel.
5. Take door check link out from the hole of back door panel.

INSTALLATION

Install in the reverse order of removal.

CAUTION:

Check back door open/close operation after installation.

DOVETAIL

DOVETAIL : Exploded View

INFOID:0000000007773100

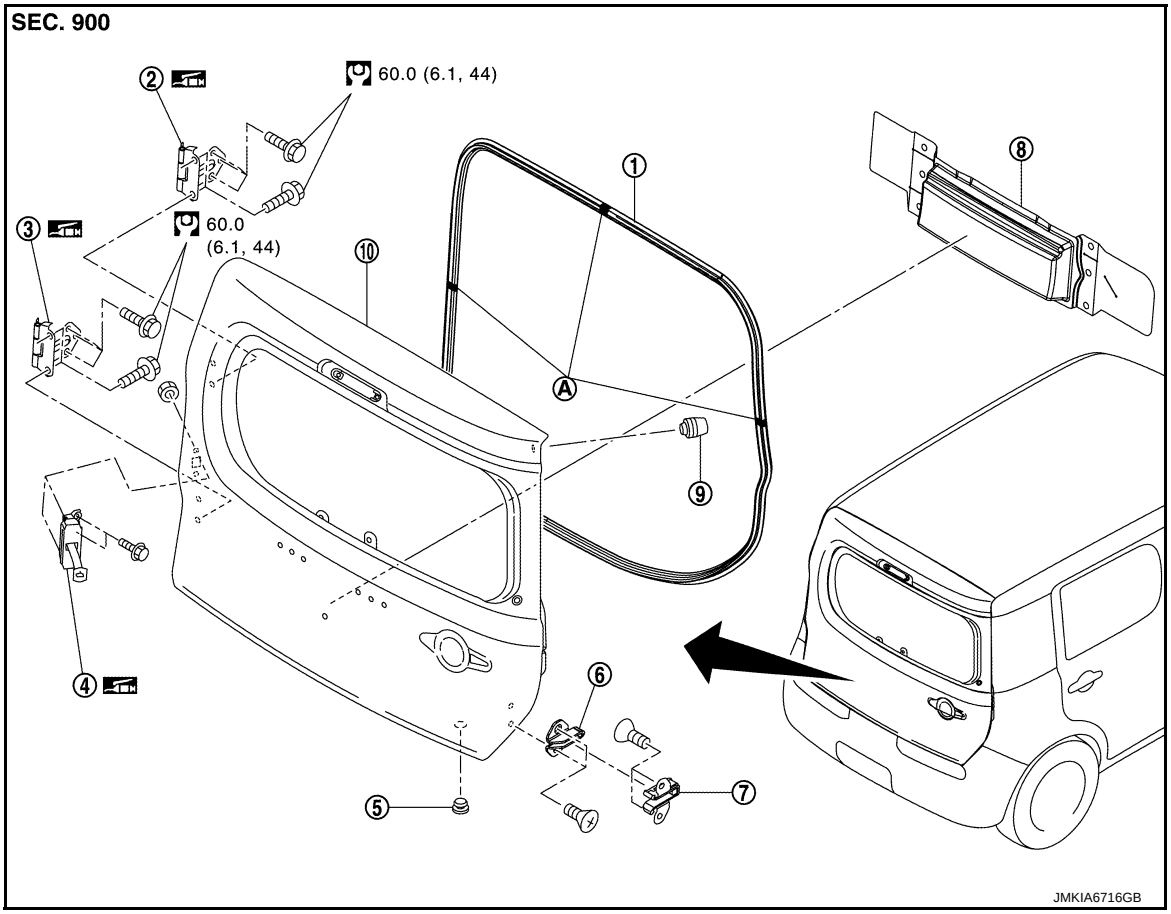

1.	Back door weather-strip	2.	Back door hinge (upper)	3.	Back door hinge (lower)
4.	Door check link	5.	Grommet	6.	Dovetail male
7.	Dovetail female	8.	Sealing screen	9.	Bumper rubber
10.	Back door panel	A	: Center mark		

Refer to GI-4, "Components" for symbols in the figure.

DOVETAIL : Removal and Installation

INFOID:0000000007773101

REMOVAL

1. Remove mounting bolts, and then remove dovetai (male).
2. Remove mounting bolts, and then remove dovetai (female).

INSTALLATION

Install in the reverse order of removal.

CAUTION:

Check back door open/close operation after installation.

BACK DOOR WEATHER-STRIP

BACK DOOR WEATHER-STRIP : Exploded View

INFOID:0000000007773102

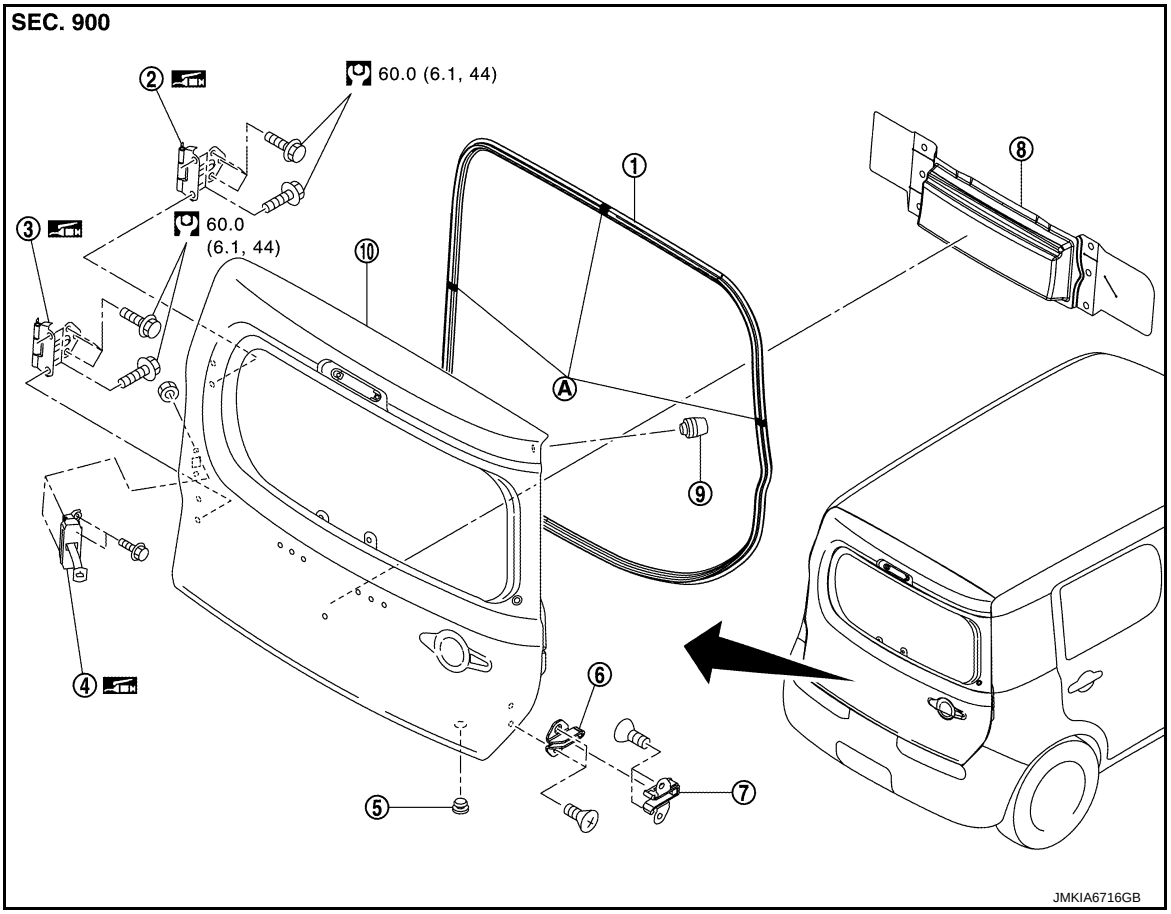

1.	Back door weather-strip	2.	Back door hinge (upper)	3.	Back door hinge (lower)
4.	Door check link	5.	Grommet	6.	Dovetail male
7.	Dovetail female	8.	Sealing screen	9.	Bumper rubber
10.	Back door panel	A	: Center mark		

Refer to GI-4, "Components" for symbols in the figure.

BACK DOOR WEATHER-STRIP : Removal and Installation

INFOID:0000000007773103

REMOVAL

1. Pull and remove engagement with body from weather-strip joint.
   CAUTION:
   Never pull strongly on weather-strip.

INSTALLATION

1. Working from the upper section, align weather-strip center mark (A) with vehicle center mark (cutting position) and install weather-strip onto the vehicle.
2. Pull weather-strip gently to ensure that there is no loose section.
   NOTE:
   Make sure that weather-strip is fit tightly at each corner and luggage rear plate.

HOOD LOCK

Exploded View

INFOID:0000000007773104

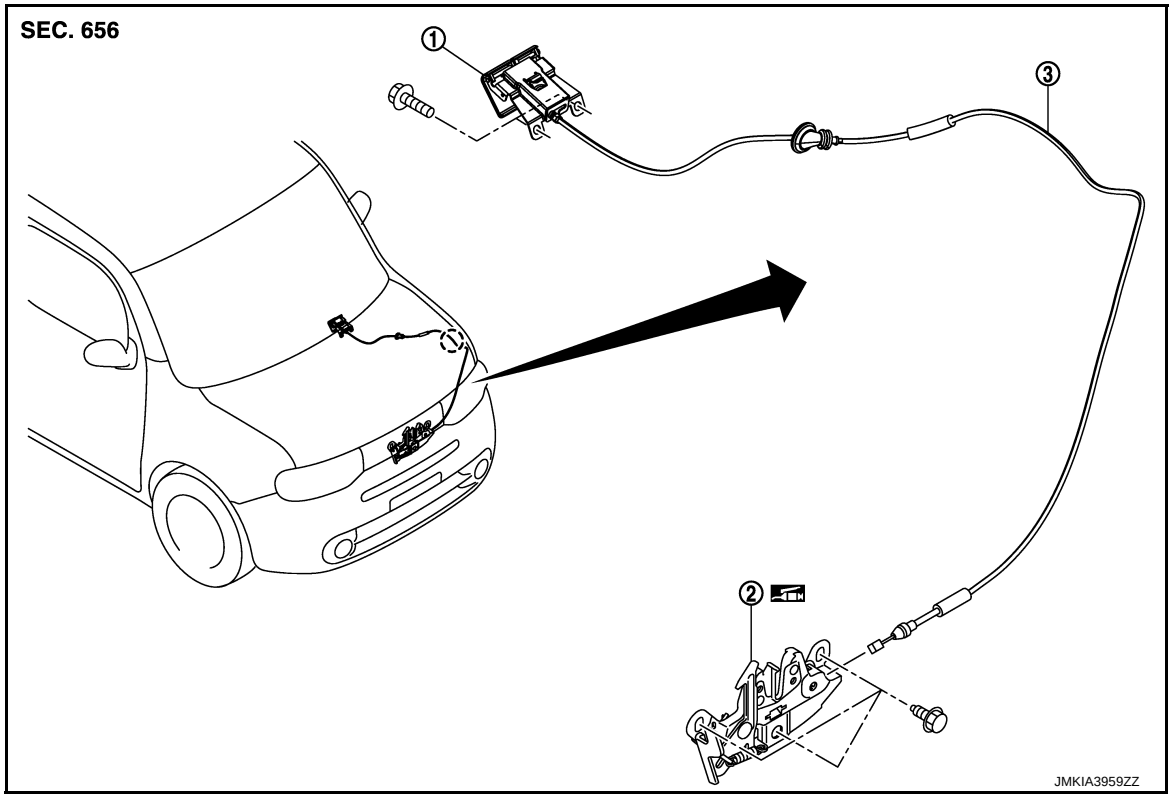

1. Hood lock opener lever
2. Hood lock assembly
3. Hood lock control cable

: Clip

Refer to GI-4, "Components" for symbols in the figure.

Removal and Installation

INFOID:0000000007773105

REMOVAL

1. Remove front grille. Refer to EXT-17, "Removal and Installation".
2. Remove mounting bolts, and then remove hood lock assembly.
3. Disconnect hood lock cable from hood lock assembly.
4. Remove hood lock cable clip.
5. Remove fender protector (LH). Refer to EXT-21, "FENDER PROTECTOR : Removal and Installation".
6. Remove hood lock opener lever.
7. Disconnect hood lock cable from hood lock opener lever.
8. Remove grommet on the lower dash, and pull the hood lock control cable toward the passenger compartment.
   CAUTION:
   While pulling, never to damage (peeling) the outside of hood lock control cable.

INSTALLATION

Install in the reverse order of removal.

CAUTION:

- **Never to bend cable too much, keeping the radius 100 mm (3.937 in) or more.**

- **Check that cable is not offset from the positioning grommet, and apply the sealant to the grommet (at * mark) properly.**

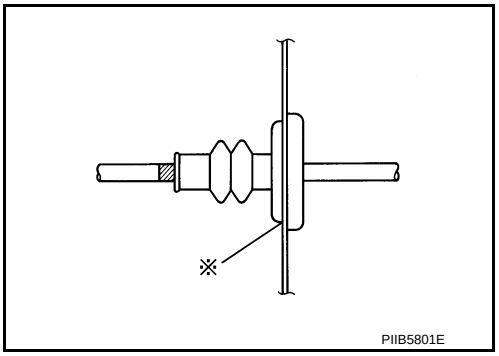

- **Check that hood lock control cable is properly engaged with hood lock.**
- **After installation, perform hood fitting adjustment. Refer to DLK-289, "HOOD ASSEMBLY : Adjustment".**
- **After installation, perform hood lock control inspection. Refer to DLK-317, "Inspection".**

Inspection

INFOID:0000000007773106

NOTE:
If the hood lock cable is bent or deformed, replace it.

1. Check that secondary latch is properly engaged with secondary striker [6.8 mm (0.268 in)] by hood weight.
2. While operating hood opener, carefully check that the front end of hood is raised by approximately 20.0 mm (0.787 in). Also check that hood opener returns to the original position.
3. Check that hood opener operating is condition 49 N (5.0 kg, 11.0 lb) or below.
4. Install so that static closing face of hood is 94 – 490 N·m (9.6 – 50.0 kg-m, 69 – 361 ft – lb).
   NOTE:
   - Exert vertical force on right side and left side of hood lock.
   - Never press simultaneously both sides.
5. Check the hood lock lubrication condition. If necessary, apply body grease to hood lock.

FRONT DOOR LOCK

DOOR LOCK

DOOR LOCK : Exploded View

INFOID:0000000007773107

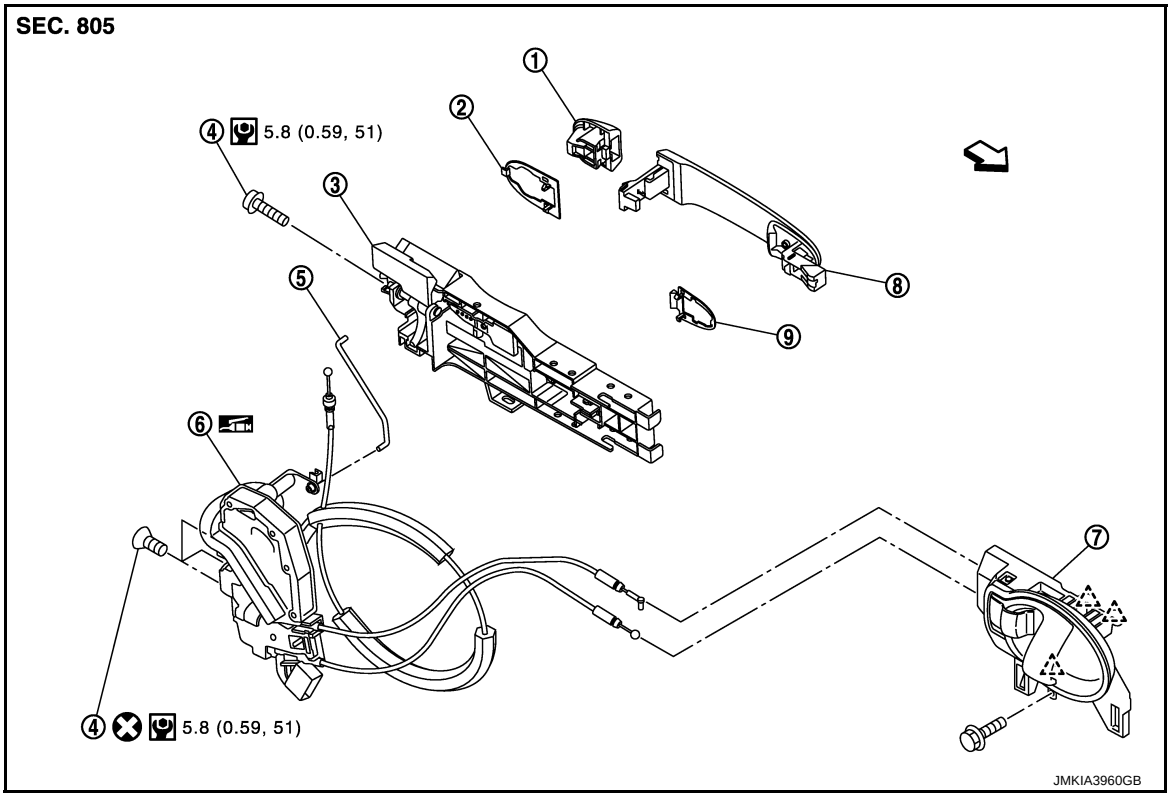

1.	Door key cylinder assembly (driver side) Outside handle escutcheon (passenger side)	2.	Rear gasket	3.	Outside handle bracket
4.	TORX bolt	5.	Key rod (driver side)	6.	Door lock assembly
7.	Inside handle	8.	Outside handle	9.	Front gasket

: Pawl

: Vehicle front

Refer to GI-4, "Components" for symbols in the figure.

DOOR LOCK : Removal and Installation

INFOID:0000000007773108

REMOVAL

1. Remove front door finisher. Refer to INT-12, "Removal and Installation".
2. Remove sealing screen.
   NOTE:
   Cut the butyl-tape so that some parts of the butyl-tape do not remain on the sealing screen, if the sealing screen is reused.
3. Remove front door glass. Refer to GW-18, "Removal and Installation".
4. Remove front door lower sash (rear). Refer to GW-18, "Removal and Installation".
5. Remove outside handle. Refer to DLK-320, "OUTSIDE HANDLE : Removal and Installation".
6. Remove inside handle. Refer to DLK-319, "INSIDE HANDLE : Removal and Installation".
7. Remove door lock assembly TORX bolts.
8. Disconnect door lock actuator connector, and then remove door lock assembly.

INSTALLATION

Install in the reverse order of removal.

CAUTION:

- **Check door open/close, lock/unlock operation after installation.**
- **Check door lock cable is properly engaged with outside handle bracket.**

INSIDE HANDLE

INSIDE HANDLE : Exploded View

INFOID:0000000007773109

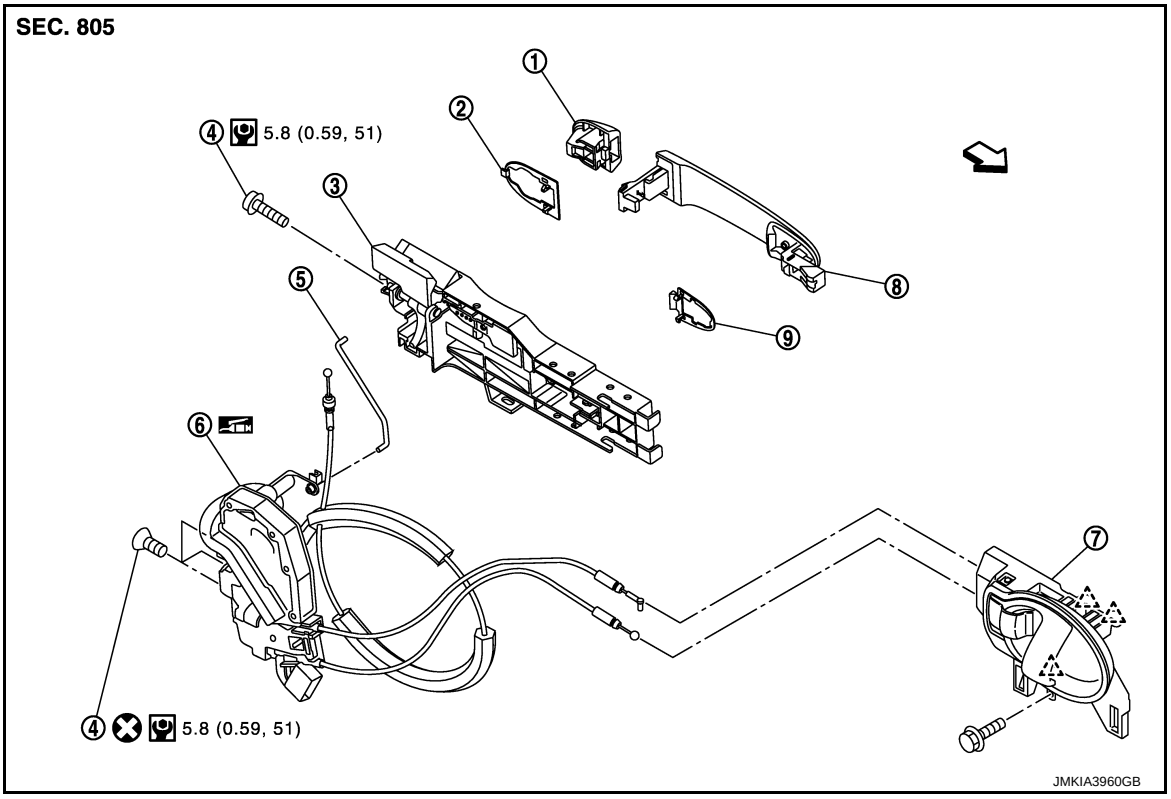

1.	Door key cylinder assembly (driver side) Outside handle escutcheon (passenger side)	2.	Rear gasket	3.	Outside handle bracket
4.	TORX bolt	5.	Key rod (driver side)	6.	Door lock assembly
7.	Inside handle	8.	Outside handle	9.	Front gasket

: Pawl

: Vehicle front

Refer to GI-4, "Components" for symbols in the figure.

INSIDE HANDLE : Removal and Installation

INFOID:0000000007773110

REMOVAL

1. Remove front door finisher. Refer to INT-12, "Removal and Installation".
2. Remove inside handle mounting bolts, slide handle toward rear of vehicle, disengage handle from door panel, and remove inside handle.

INSTALLATION

Install in the reverse order of removal.

CAUTION:

Check door open/close, lock/unlock operation after installation.

OUTSIDE HANDLE

OUTSIDE HANDLE : Exploded View

INFOID:0000000007773111

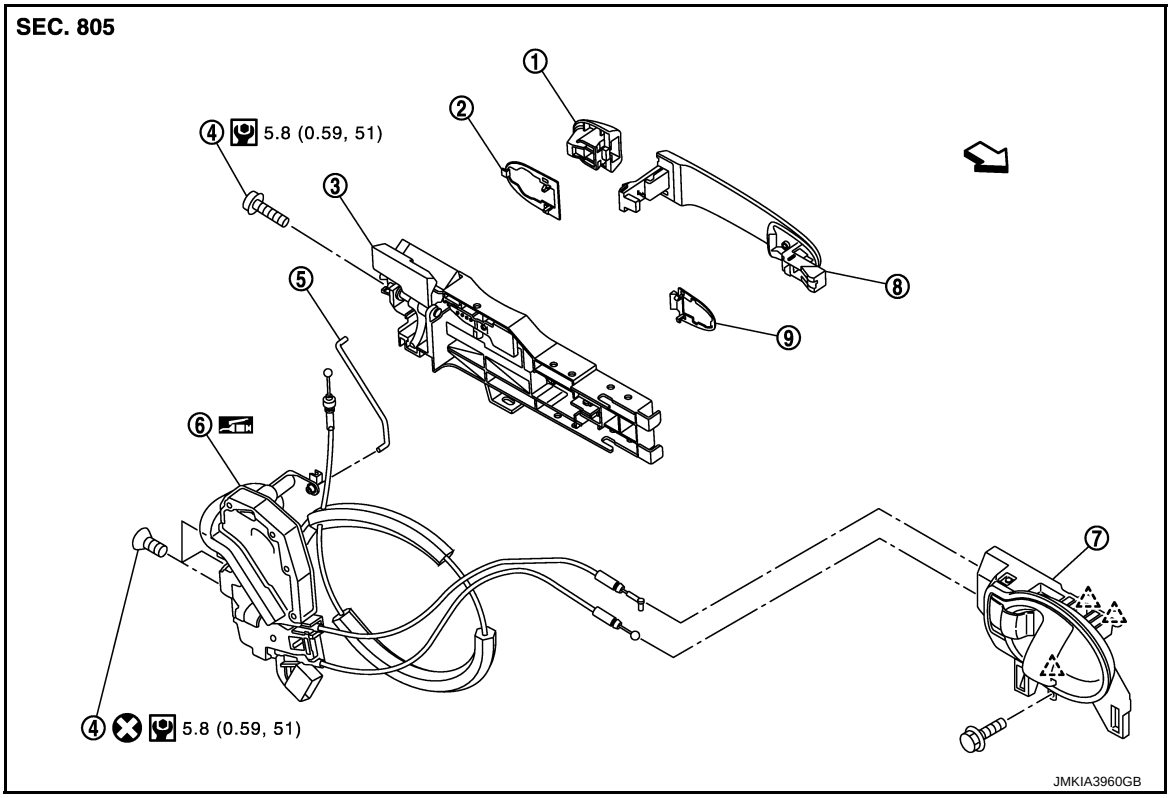

1.	Door key cylinder assembly (driver side) Outside handle escutcheon (passenger side)	2.	Rear gasket	3.	Outside handle bracket
4.	TORX bolt	5.	Key rod (driver side)	6.	Door lock assembly
7.	Inside handle	8.	Outside handle	9.	Front gasket

: Pawl

: Vehicle front

Refer to GI-4, "Components" for symbols in the figure.

OUTSIDE HANDLE : Removal and Installation

INFOID:0000000007773112

REMOVAL

1. Remove front door finisher. Refer to INT-12, "Removal and Installation".
2. Fully close the front door glass.
3. Remove sealing screen.
   NOTE:
   Cut the butyl-tape so that some parts of the butyl-tape do not remain on the sealing screen, if the sealing screen is reused.
4. Remove front door lower sash (rear). Refer to GW-18, "Removal and Installation".
5. Disconnect key rod (driver side).
6. Disconnect door antenna and door request switch connector and remove harness clamp (with Intelligent Key system) on outside handle bracket.

7. Remove door side grommet, and loosen TORX bolt from grommet hole.

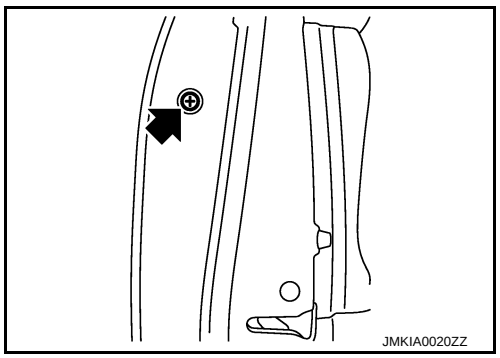

8. While pulling outside handle, remove door key cylinder assembly (diver side) or outside handle escutcheon (passenger side).

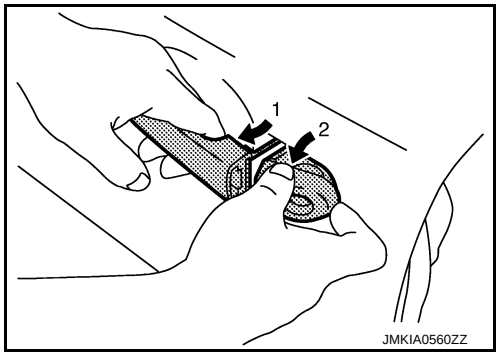

9. While pulling outside handle (1), slide toward rear of vehicle to remove outside handle.

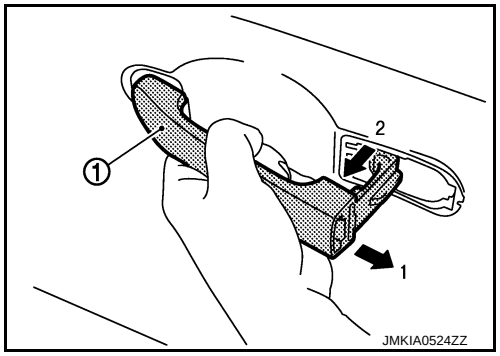

10. Remove front gasket and rear gasket.
11. While pulling outside handle bracket, slide toward rear of vehicle to remove outside handle bracket.
12. Reach in to separate outside handle cable connection on outside handle bracket.

INSTALLATION

Install in the reverse order of removal.

CAUTION:

- **Check door open/close, lock/unlock operation after installation.**
- **Check door lock cable is properly engaged with outside handle bracket.**

REAR DOOR LOCK

DOOR LOCK

DOOR LOCK : Exploded View

INFOID:0000000007773113

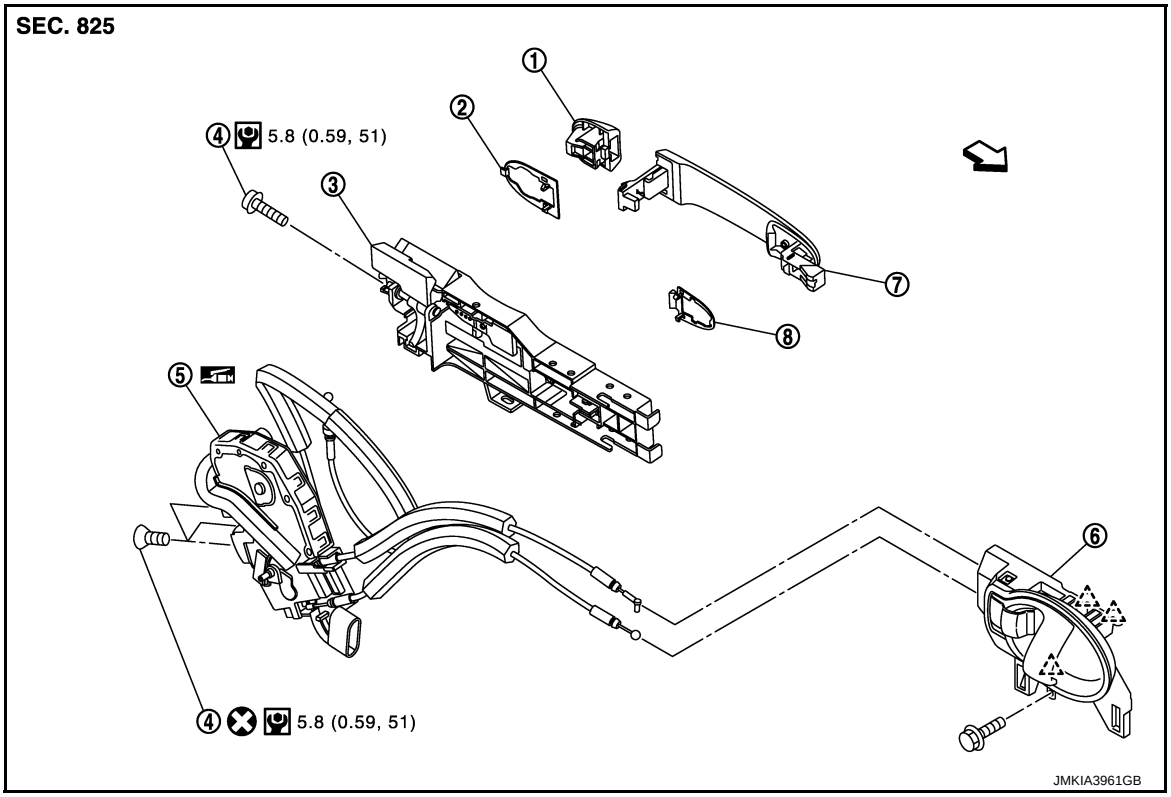

1.	Outside handle escutcheon	2.	Rear gasket	3.	Outside handle bracket
4.	TORX bolt	5.	Door lock assembly	6.	Inside handle
7.	Outside handle	8.	Front gasket		

: Pawl

: Vehicle front

Refer to GI-4, "Components" for symbols in the figure.

DOOR LOCK : Removal and Installation

INFOID:0000000007773114

REMOVAL

1. Remove rear door finisher. Refer to INT-14, "Removal and Installation".
2. Remove sealing screen.
   NOTE:
   Cut the butyl-tape so that some parts of the butyl-tape do not remain on the sealing screen, if the sealing screen is reused.
3. Remove rear door glass. Refer to GW-23, "Removal and Installation".
4. Remove outside handle. Refer to DLK-324, "OUTSIDE HANDLE : Removal and Installation".
5. Remove inside handle. Refer to DLK-323, "INSIDE HANDLE : Removal and Installation".
6. Remove door lock assembly TORX bolts.
7. Disconnect door lock actuator connector, and then remove door lock assembly.

INSTALLATION

Install in the reverse order of removal.

CAUTION:

- **Check door open/close, lock/unlock operation after installation.**

- **Check door lock cable is properly engaged with outside handle bracket.**

INSIDE HANDLE

INSIDE HANDLE : Exploded View

INFOID:0000000007773115

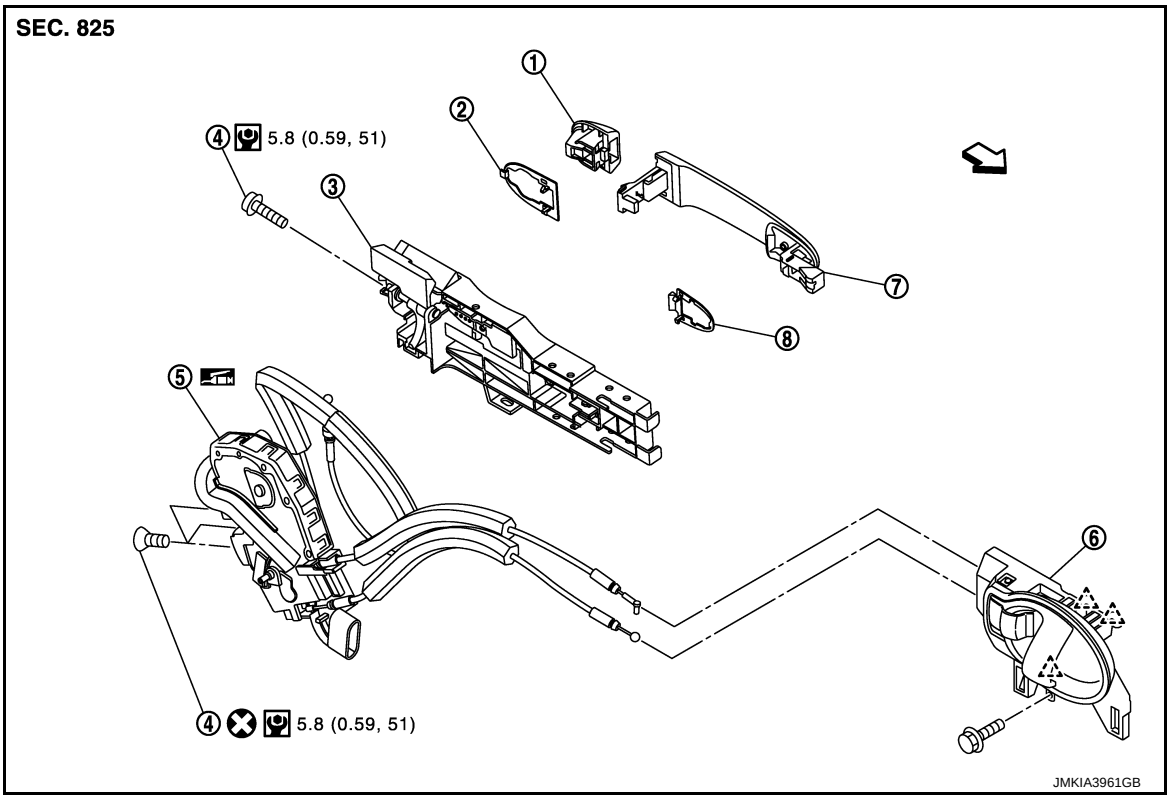

1.	Outside handle escutcheon	2.	Rear gasket	3.	Outside handle bracket
4.	TORX bolt	5.	Door lock assembly	6.	Inside handle
7.	Outside handle	8.	Front gasket		

: Pawl

: Vehicle front

Refer to GI-4, "Components" for symbols in the figure.

INSIDE HANDLE : Removal and Installation

INFOID:0000000007773116

REMOVAL

1. Remove rear door finisher. Refer to INT-14, "Removal and Installation".
2. Remove inside handle mounting bolts, slide handle toward rear of vehicle, disengage handle from door panel, and remove inside handle.

INSTALLATION

Install in the reverse order of removal.

CAUTION:

Check door open/close, lock/unlock operation after installation.

OUTSIDE HANDLE

OUTSIDE HANDLE : Exploded View

INFOID:0000000007773117

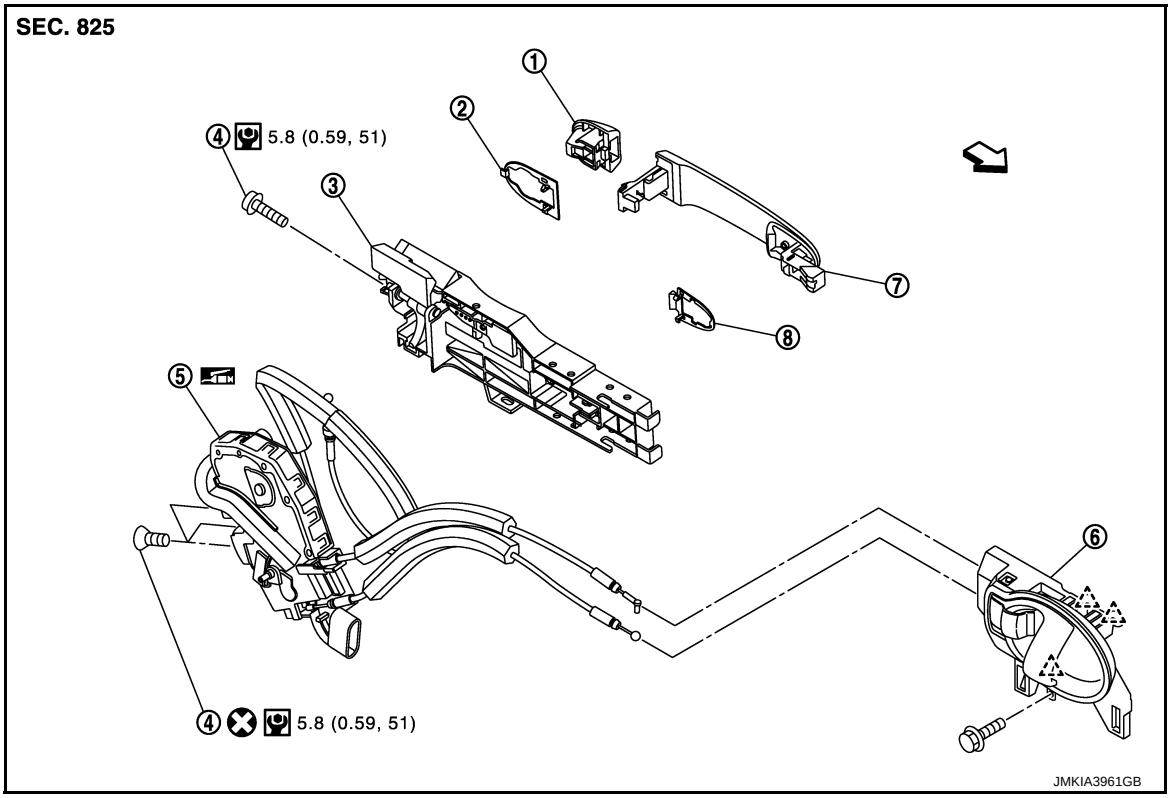

1.	Outside handle escutcheon	2.	Rear gasket	3.	Outside handle bracket
4.	TORX bolt	5.	Door lock assembly	6.	Inside handle
7.	Outside handle	8.	Front gasket		

: Pawl

: Vehicle front

Refer to GI-4, "Components" for symbols in the figure.

OUTSIDE HANDLE : Removal and Installation

INFOID:0000000007773118

REMOVAL

1. Remove rear door finisher. Refer to INT-14, "Removal and Installation".
2. Fully close rear door glass.
3. Remove sealing screen.
   NOTE:
   Cut the butyl-tape so that some parts of the butyl-tape do not remain on the sealing screen, if the sealing screen is reused.
4. Remove door side grommet, and loosen TORX bolt from grommet hole.

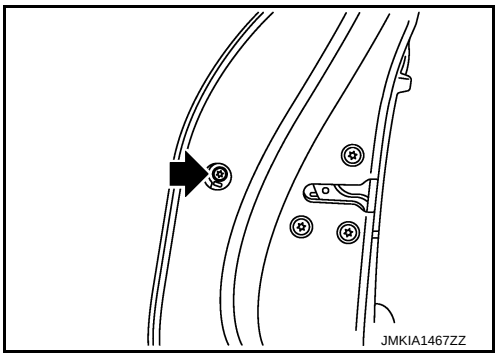

5. While pulling outside handle, remove outside handle escutcheon.

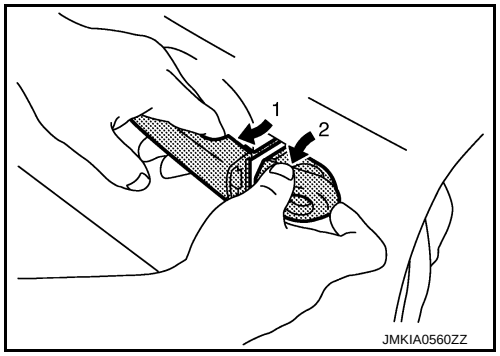

6. While pulling outside handle (1), slide toward rear of vehicle to remove outside handle.

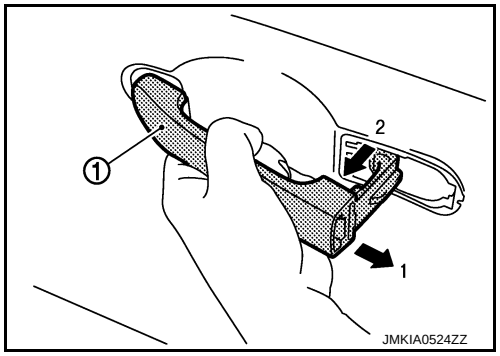

7. Remove front gasket and rear gasket.
8. While pulling outside handle bracket, slide toward rear of vehicle to remove outside handle bracket.
9. Reach in to separate outside handle cable connection on outside handle bracket.

INSTALLATION

Install in the reverse order of removal.

CAUTION:

- **Check door open/close, lock/unlock operation after installation.**
- **Check door lock cable is properly engaged with outside handle bracket.**

BACK DOOR LOCK

DOOR LOCK

DOOR LOCK : Exploded View

INFOID:0000000007773119

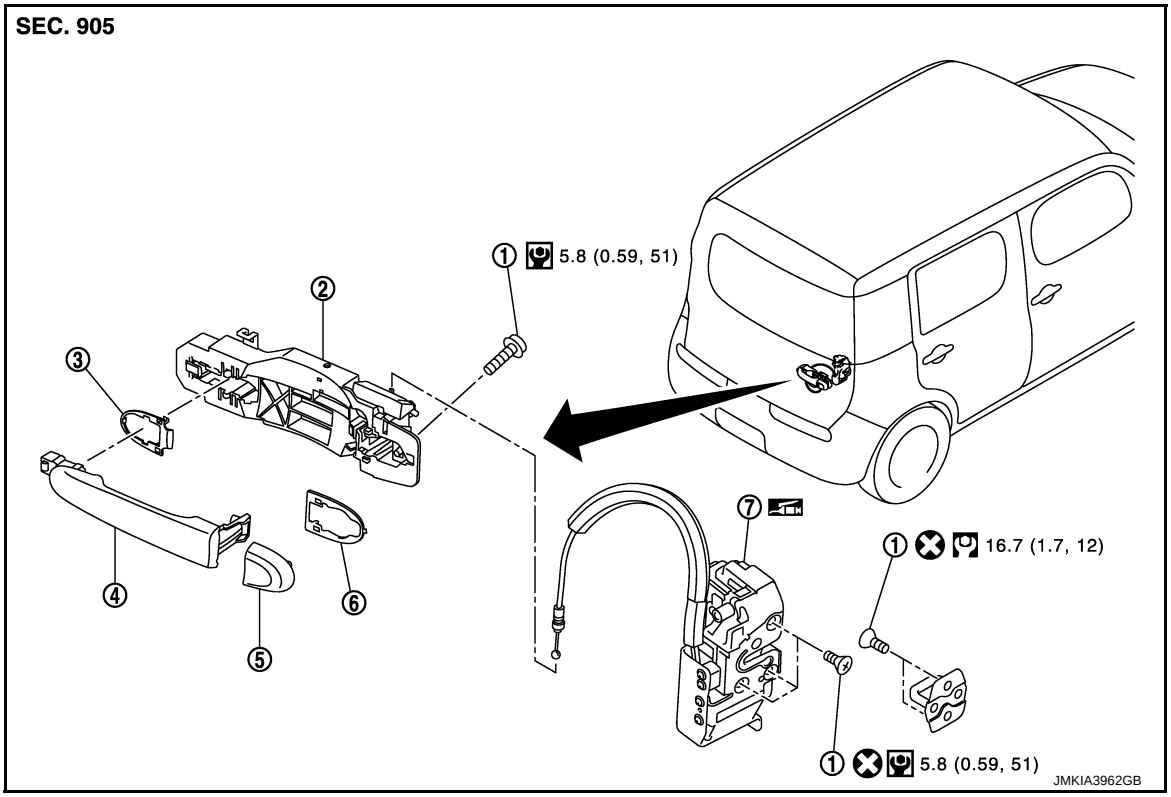

1. TORX bolt	2. Outside handle bracket	3. Rear gasket
4. Outside handle	5. Outside handle escutcheon	6. Front gasket
7. Back door lock assembly		

Refer to GI-4, "Components" for symbols in the figure.

DOOR LOCK : Removal and Installation

INFOID:0000000007773120

REMOVAL

1. Remove back door finisher lower. Refer to INT-27, "Removal and Installation".
2. Remove sealing screen.
   NOTE:
   Cut the butyl-tape so that some parts of the butyl-tape do not remain on the sealing screen, if the sealing screen is reused.
3. Remove back door outside handle. Refer to DLK-327, "OUTSIDE HANDLE : Removal and Installation".
4. Remove back door lock assembly mounting bolts.
5. Disconnect harness connector from back door lock assembly.
6. Remove back door lock assembly.

INSTALLATION

Install in the reverse order of removal.

CAUTION:

- **Check back door open/close, lock/unlock operation after installation.**
- **Check door lock cable is properly engaged with outside handle bracket.**

OUTSIDE HANDLE

OUTSIDE HANDLE : Exploded View

INFOID:0000000007773121

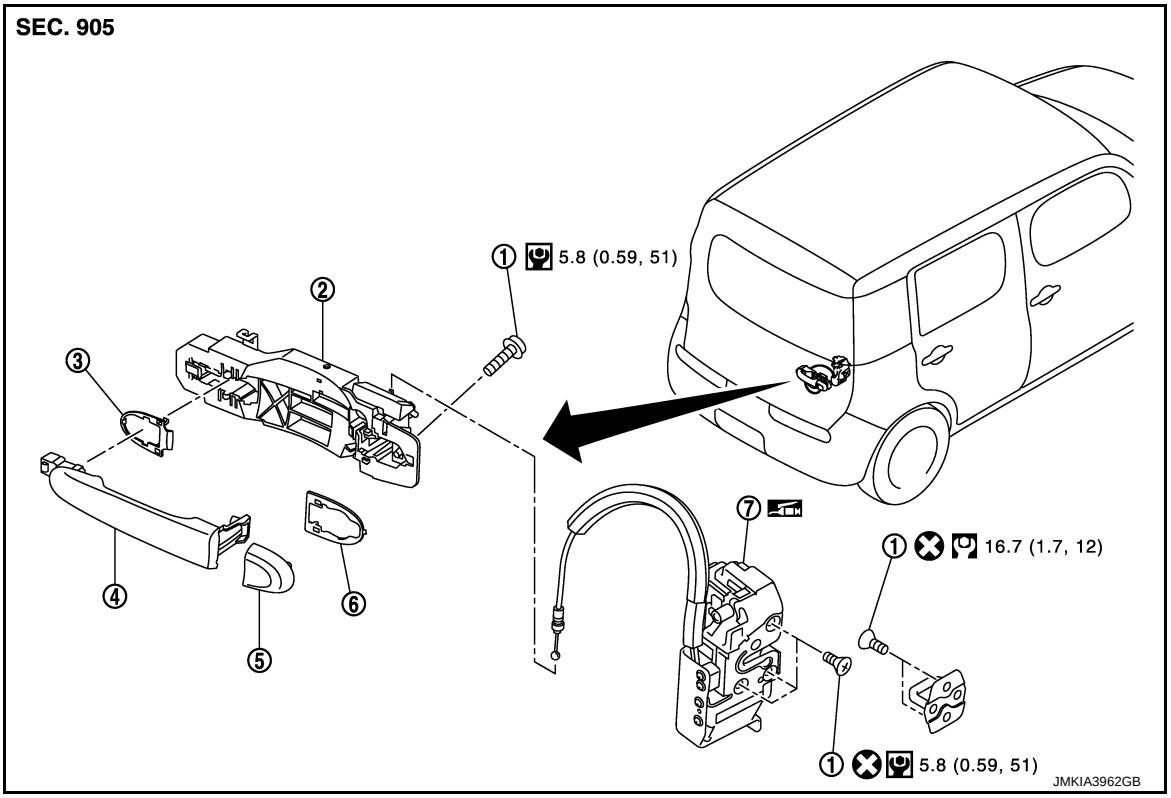

1. TORX bolt	2. Outside handle bracket	3. Rear gasket
4. Outside handle	5. Outside handle escutcheon	6. Front gasket
7. Back door lock assembly		

Refer to GI-4, "Components" for symbols in the figure.

OUTSIDE HANDLE : Removal and Installation

INFOID:0000000007773122

REMOVAL

1. Remove back door finisher lower. Refer to INT-27, "Removal and Installation".
2. Remove sealing screeen.
   NOTE:
   Cut the butyl-tape so that some parts of the butyl-tape do not remain on the sealing screen, if the sealing screen is reused.
3. Disconnect back door antenna and back door request switch connector and remove harness clamp (with intelligent key system) on outside handle bracket.
4. Remove mounting bolt of outside handle bracket.
5. While pulling outside handle, remove outside habdle escutcheon.

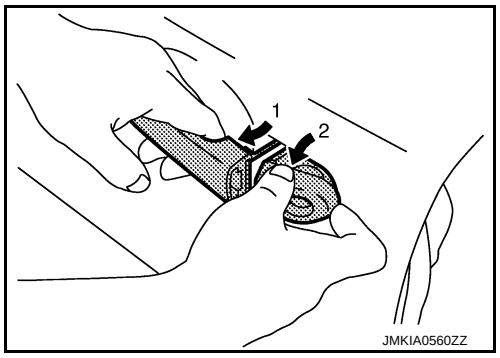

6. While pulling outside handle (1), slide toward rear of vehicle to remove outside handle.

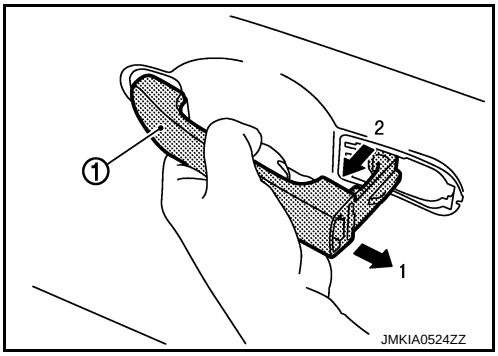

7. Remove front gasket and rear gasket.
8. While pulling outside handle bracket, slide toward rear of vehicle to remove outside handle bracket.
9. Reach in to separate outside handle cable connection on outside handle bracket.

INSTALLATION

Install in the reverse order of removal.

CAUTION:

- **Check back door open/close operation after installation.**
- **Check door lock cable is properly engaged with outside handle bracket.**

EMERGENCY LEVER

EMERGENCY LEVER : Unlock procedures

INFOID:0000000007773123

UNLOCK PROCEDURES

NOTE:

If back door lock cannot be unlocked due to a malfunction or battery discharge, follow the procedures to unlock back door.

1. Remove back door finisher lower. Refer to INT-27, "Removal and Installation".
2. Remove sealing screen.
   NOTE:
   Cut the butyl-tape so that some parts of the butyl-tape do not remain on the sealing screen, if the sealing screen is reused.
3. From inside the vehicle, rotate emergency lever (1) toward lower direction and unlock.

   ⇦ : Vehicle front

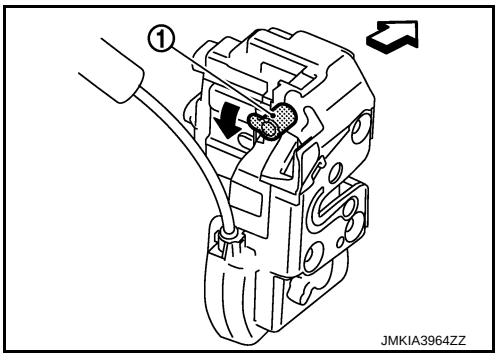

FUEL FILLER LID OPENER

Exploded View

INFOID:0000000007773124

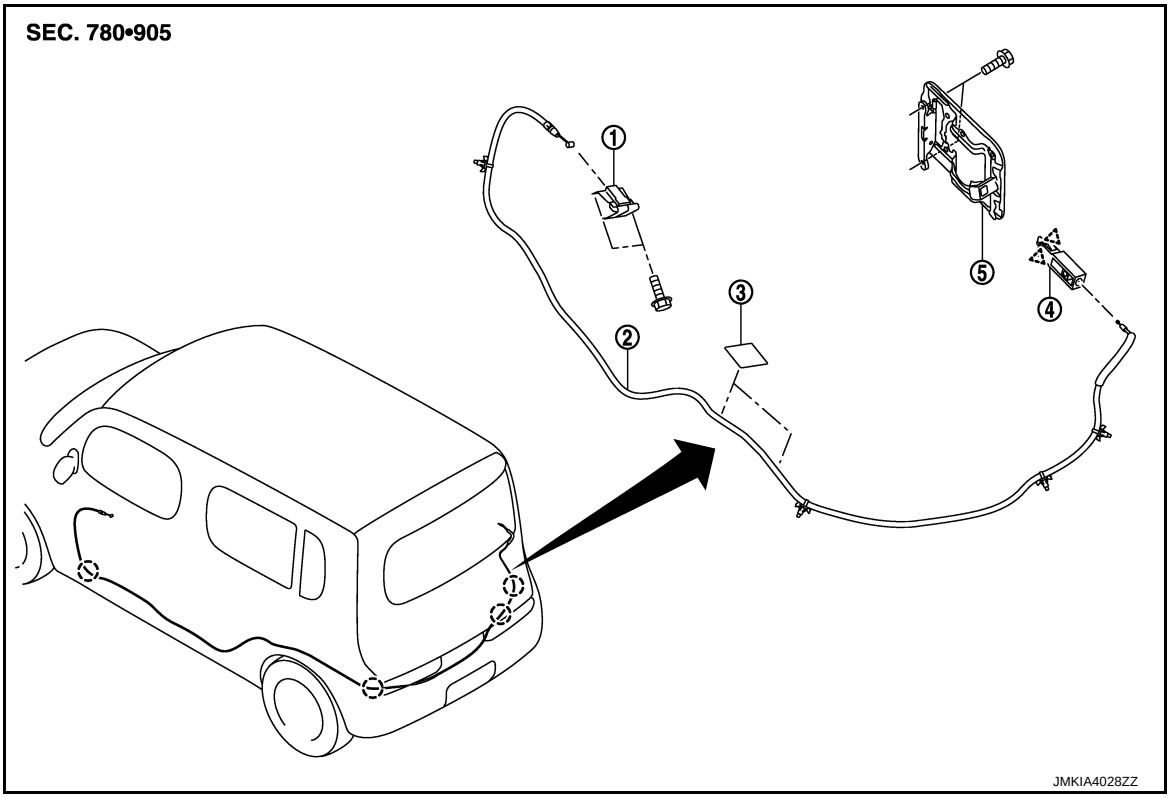

1. Fuel filler lid opener handle
2. Fuel filler lid opener cable
3. Cable protector
4. Fuel filler lid lock assembly
5. Fuel filler lid assembly

: Clip

: Pawl

Removal and Installation

INFOID:0000000007773125

REMOVAL

FUEL FILLER LID

1. Fully open fuel filler lid.
2. Remove mounting screws, and then remove fuel filler lid.

FUEL FILLER LID OPENER CABLE

1. Fully open fuel filler lid.
2. Remove dash side finisher (LH). Refer to INT-16, "Removal and Installation".
3. Remove front kicking plate inner (LH). Refer to INT-16, "Removal and Installation".
4. Remove center pillar lower garnish (LH). Refer to INT-16, "Removal and Installation".
5. Remove rear kicking plate inner (LH). Refer to INT-16, "Removal and Installation".
6. Remove luggage side finisher (LH) (upper/lower). Refer to INT-24, "Removal and Installation".
7. Remove center seat belt retractor. Refer to SB-11, "SEAT BELT RETRACTOR : Removal and Installation".
8. Remove mounting bolts, and then remove fuel filler lid opener handle.
9. Remove fuel filler lid opener cable from fuel filler lid opener handle.
10. Push fuel filler lid lock assembly front the vehicle, while pushing the pawls.

11. Remove fuel filler lid opener cable from fuel filler lid lock assembly.
12. Pull up floor trim. Refer to INT-19, "Removal and Installation".
13. Remove fuel filler lid opener cable mounting clips.
14. Remove fuel filler lid opener cable.

INSTALLATION

Install in the reverse order of removal.

DOOR SWITCH

Exploded View

INFOID:0000000007773126

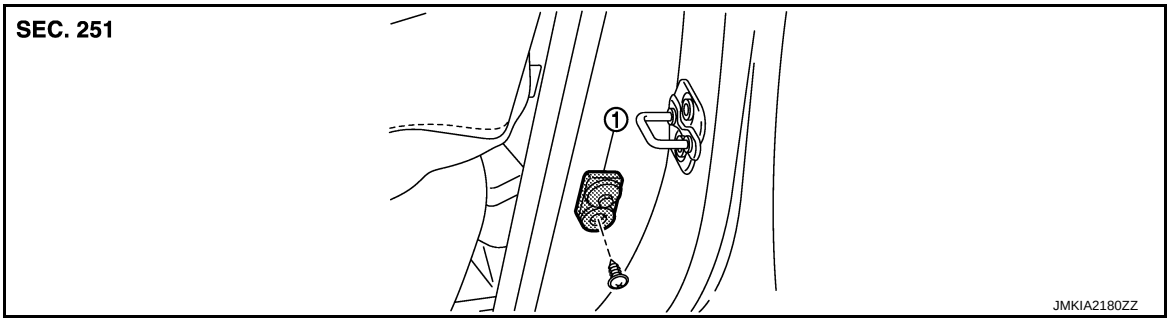

1. Door switch

Removal and Installation

INFOID:0000000007773127

REMOVAL

1. Remove the door switch mounting bolt (A), and then remove door switch (1).

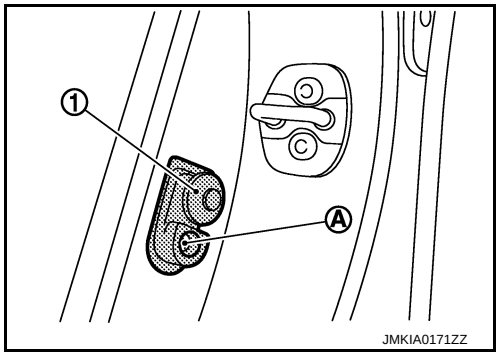

INSTALLATION

Install in the reverse order of removal.

REMOTE KEYLESS ENTRY RECEIVER

Exploded View

INFOID:0000000007773128

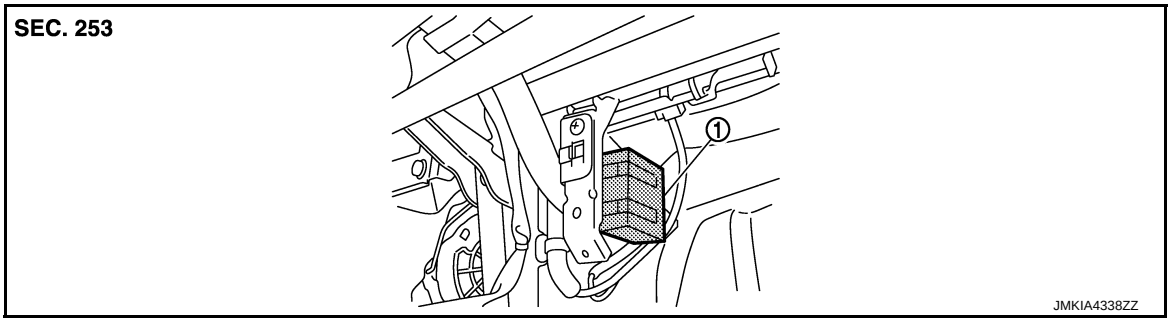

1. Remote keyless entry receiver

Removal and Installation

INFOID:0000000007773129

REMOVAL

1. Remove the glove box assembly. Refer to IP-13, "Removal and Installation".
2. Remove the remote keyless entry receiver mounting bolt (A), and then remove remote keyless entry receiver (1).

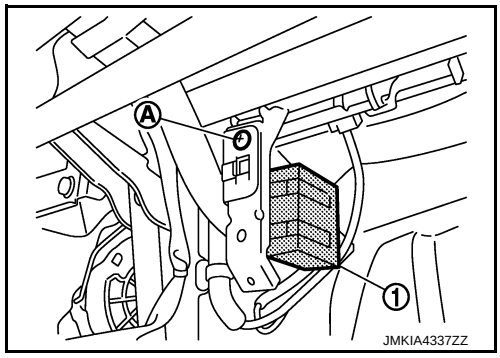

INSTALLATION

Install in the reverse order of removal.

KEYFOB BATTERY

Exploded View

INFOID:0000000007773130

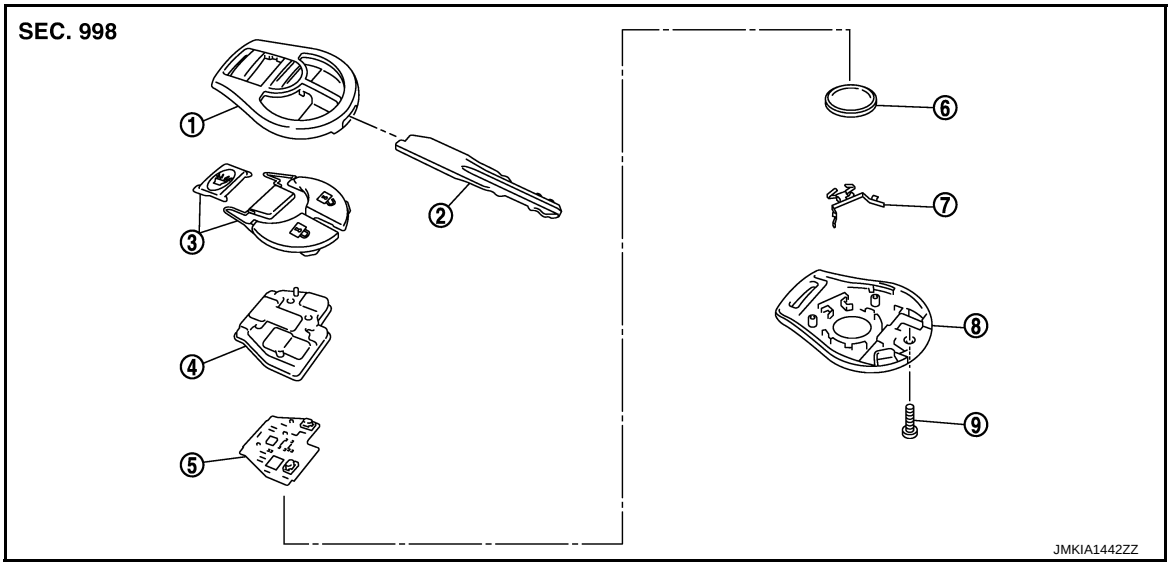

1. Upper case
2. Key
3. Switch cover
4. Switch rubber
5. Board surface
6. Battery
7. plate
8. Lower case
9. Screw

Removal and Installation

INFOID:0000000007773131

REMOVAL

1. Remove screw (9) on the rear of keyfob.
2. Place the key with the lower case (8) facing up. Set a screw-driver wrapped with tape between upper case (1) and lower case (8) and then separate the lower case (8) from the upper case (1).
   CAUTION:
   - **Do not touch the circuit board or battery terminal.**
   - **The keyfob is water-resistant. However, if it does get wet, immediately wipe it dry.**
3. When replacing the circuit board assembly, remove circuit board assembly from the upper case (1).
   [Circuit board assembly: Switch rubber (4) + Board surface (5)]
   CAUTION:
   Do not touch the printed circuits directly.
4. Remove the battery (6) from the lower case (8) and replace it.

   Battery replacement : Coin-type lithium battery (CR1620)

   CAUTION:
   When replacing battery, keep dirt, grease, and other foreign materials off the electrode contact area.
5. After replacement, fit the lower and upper cases together, part (4), (7) and tighten with the screw.
   CAUTION:
   After replacing the battery, Be sure to check that door locking operates normally using the keyfob.
   Refer to DLK-244, "Component Function Check".

INSTALLATION

Install in the reverse order of removal.