SECTION TM
TRANSAXLE & TRANSMISSION

CONTENTS

6MT: RS6F94R

CVT: RE0F08B

SYSTEM DESCRIPTION

M/T SYSTEM

System Diagram

INFOID:0000000009948855

CROSS-SECTIONAL VIEW

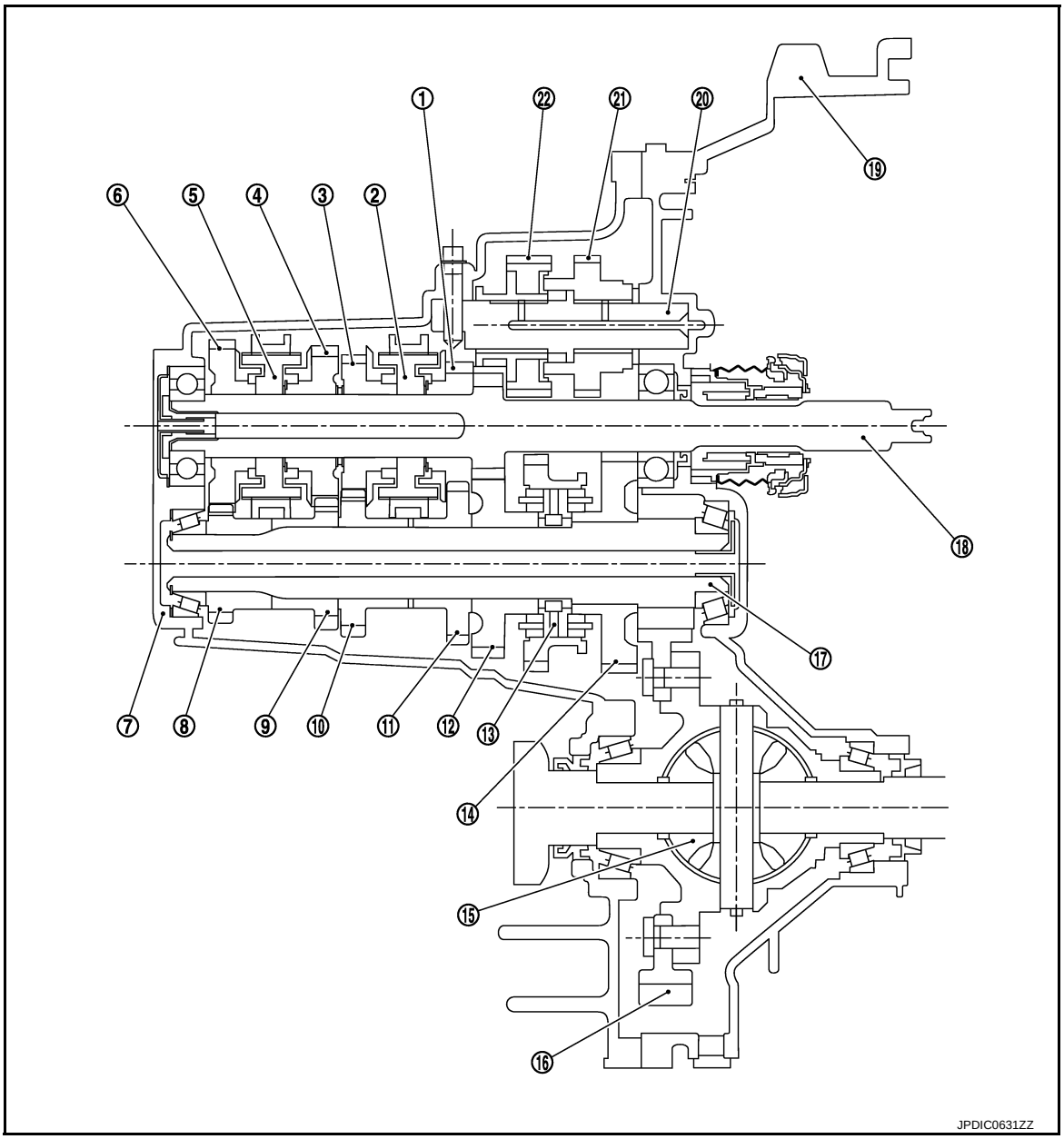

1. 3rd input gear	2. 3rd-4th synchronizer hub assembly	3. 4th input gear
4. 5th input gear	5. 5th-6th synchronizer hub assembly	6. 6th input gear
7. Transaxle case	8. 6th main gear	9. 5th main gear
10. 4th main gear	11. 3rd main gear	12. 2nd main gear
13. 1st-2nd synchronizer hub assembly	14. 1st main gear	15. Differential
16. Final gear	17. Mainshaft	18. Input shaft
19. Clutch housing	20. Reverse idler shaft	21. Reverse input gear
22. Reverse output gear		

System Description

INFOID:0000000009948856

TRIPLE-CONE SYNCHRONIZER

Triple-cone synchronizer are adopted for the 1st and the 2nd gears to reduce operating force of the shifter lever.

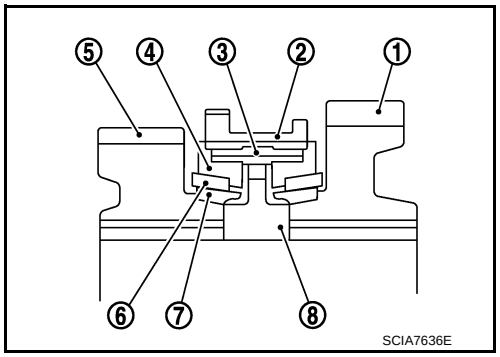

1 : 1st main gear
2 : 1st-2nd coupling sleeve
3 : Insert key
4 : Outer baulk ring
5 : 2nd main gear
6 : Synchronizer cone
7 : Inner baulk ring
8 : 1st-2nd synchronizer hub

REVERSE GEAR NOISE PREVENTION FUNCTION (SYNCHRONIZING METHOD)

Reverse gear assembly consists of reverse input gear, return spring, reverse baulk ring, and reverse output gear. When the shifter lever is shifted to the reverse position, the construction allows smooth shift operation by stopping the reverse idler shaft rotation by frictional force of synchronizer.

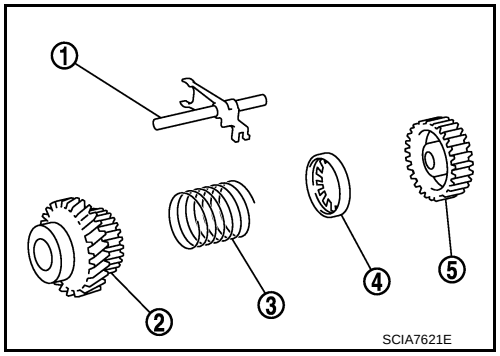

1 : Reverse fork rod
2 : Reverse output gear
3 : Return spring
4 : Reverse baulk ring
5 : Reverse input gear

DTC/CIRCUIT DIAGNOSIS

POSITION SWITCH

BACK-UP LAMP SWITCH

BACK-UP LAMP SWITCH : Component Parts Location

INFOID:0000000009948857

1 : Position switch

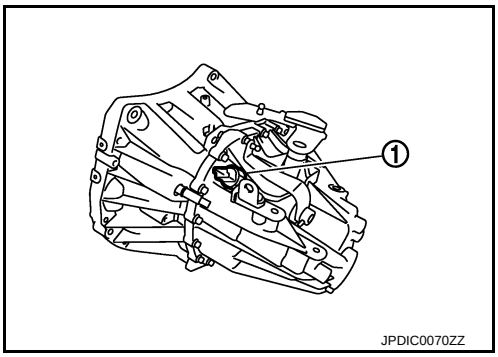

BACK-UP LAMP SWITCH : Component Inspection

INFOID:0000000009948858

1. CHECK BACK-UP LAMP SWITCH

1. Disconnect position switch connector. Refer to TM-23, "Removal and Installation".
2. Check continuity between position switch terminals.

Terminals		Condition	Continuity
1	2	Reverse gear position	Existed
		Except reverse gear position	Not existed

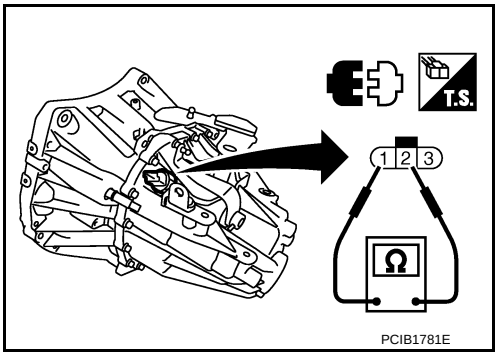

Is the inspection result normal?

YES >> INSPECTION END
NO >> Replace position switch. Refer to TM-23, "Removal and Installation".

PARK/NEUTRAL POSITION (PNP) SWITCH

PARK/NEUTRAL POSITION (PNP) SWITCH : Component Parts Location

INFOID:0000000009948859

1 : Position switch

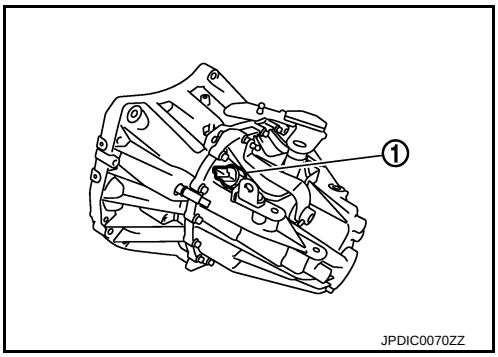

PARK/NEUTRAL POSITION (PNP) SWITCH : Component Inspection

INFOID:0000000009948860

1. CHECK PARK/NEUTRAL POSITION (PNP) SWITCH

1. Disconnect position switch connector. Refer to TM-23, "Removal and Installation".

2. Check continuity between position switch terminals.

Terminals		Condition	Continuity
2	3	Neutral gear position	Existed
		Except neutral gear position	Not existed

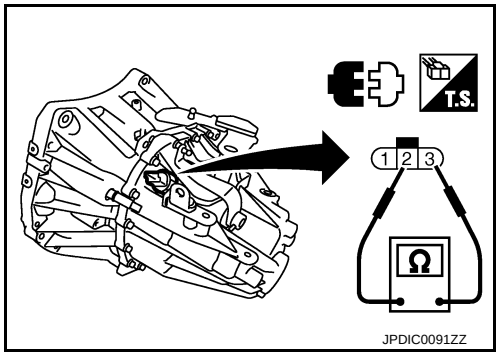

Is the inspection result normal?

YES >> INSPECTION END

NO >> Replace position switch. Refer to TM-23, "Removal and Installation".

SYMPTOM DIAGNOSIS

NOISE, VIBRATION AND HARSHNESS (NVH) TROUBLESHOOTING

NVH Troubleshooting Chart

INFOID:0000000009948861

Use the chart below to find the cause of the symptom. The numbers indicate the order of the inspection. If necessary, repair or replace these parts.

SUSPECTED PARTS (Possible cause)		OIL (Oil level is low)	OIL (Wrong oil)	OIL (Oil level is high)	GASKET (Damaged)	OIL SEAL (Worn or damaged)	O-RING (Worn or damaged)	SHIFT CONTROL LINKAGE (Worn)	SHIFT FORK (Worn)	GEAR (Worn or damaged)	BEARING (Worn or damaged)	BAULK RING (Worn or damaged)	INSERT SPRING (Damaged)
Reference			TM-17			TM-27		TM-19	TM-27		TM-27		
Symptoms	Noise	1	2							3	3		
	Oil leakage		3	1	2	2	2						
	Hard to shift or will not shift		1	1				2				3	3
	Jumps out of gear							1	2	2			

PRECAUTION

PRECAUTIONS

Precaution for Supplemental Restraint System (SRS) "AIR BAG" and "SEAT BELT PRE-TENSIONER"

INFOID:0000000009948862

The Supplemental Restraint System such as “AIR BAG” and “SEAT BELT PRE-TENSIONER”, used along with a front seat belt, helps to reduce the risk or severity of injury to the driver and front passenger for certain types of collision. This system includes seat belt switch inputs and dual stage front air bag modules. The SRS system uses the seat belt switches to determine the front air bag deployment, and may only deploy one front air bag, depending on the severity of a collision and whether the front occupants are belted or unbelted. Information necessary to service the system safely is included in the “SRS AIR BAG” and “SEAT BELT” of this Service Manual.

WARNING:

Always observe the following items for preventing accidental activation.

- **To avoid rendering the SRS inoperative, which could increase the risk of personal injury or death in the event of a collision that would result in air bag inflation, all maintenance must be performed by an authorized NISSAN/INFINITI dealer.**
- **Improper maintenance, including incorrect removal and installation of the SRS, can lead to personal injury caused by unintentional activation of the system. For removal of Spiral Cable and Air Bag Module, see “SRS AIR BAG”.**
- **Never use electrical test equipment on any circuit related to the SRS unless instructed to in this Service Manual. SRS wiring harnesses can be identified by yellow and/or orange harnesses or harness connectors.**

PRECAUTIONS WHEN USING POWER TOOLS (AIR OR ELECTRIC) AND HAMMERS

WARNING:

Always observe the following items for preventing accidental activation.

- **When working near the Air Bag Diagnosis Sensor Unit or other Air Bag System sensors with the ignition ON or engine running, never use air or electric power tools or strike near the sensor(s) with a hammer. Heavy vibration could activate the sensor(s) and deploy the air bag(s), possibly causing serious injury.**
- **When using air or electric power tools or hammers, always switch the ignition OFF, disconnect the battery, and wait at least 3 minutes before performing any service.**

Service Notice or Precautions for Manual Transaxle

INFOID:0000000009948863

CAUTION:

- **Never reuse CSC (Concentric Slave Cylinder). Because CSC slides back to the original position every time when removing transaxle assembly. At this timing, dust on the sliding parts may damage a seal of CSC and may cause clutch fluid leakage. CL-17, "Removal and Installation".**
- **Never reuse transaxle gear oil, once it has been drained.**
- **Check oil level or replace gear oil with vehicle on level surface.**
- **During removal or installation, keep inside of transaxle clear of dust or dirt.**
- **Check for the correct installation status prior to removal or disassembly. If matching marks are required, be certain they never interfere with the function of the parts they are applied.**
- **In principle, tighten bolts or nuts gradually in several steps working diagonally from inside to outside. If tightening sequence is specified, use it.**
- **Never damage sliding surfaces and mating surfaces.**

Precautions for Removing of Battery Terminal

INFOID:0000000010078184

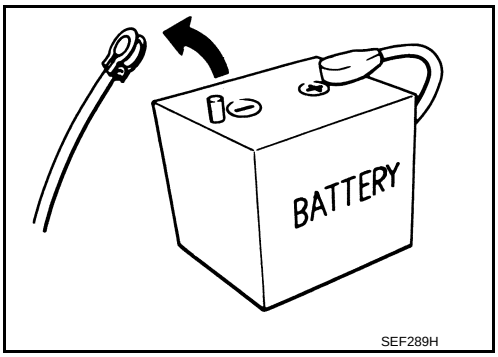

- When removing the 12V battery terminal, turn OFF the ignition switch and wait at least 30 seconds.
  NOTE:
  ECU may be active for several tens of seconds after the ignition switch is turned OFF. If the battery terminal is removed before ECU stops, then a DTC detection error or ECU data corruption may occur.
- For vehicles with the 2-batteries, be sure to connect the main battery and the sub battery before turning ON the ignition switch.
  NOTE:
  If the ignition switch is turned ON with any one of the terminals of main battery and sub battery disconnected, then DTC may be detected.
- After installing the 12V battery, always check "Self Diagnosis Result" of all ECUs and erase DTC.
  NOTE:
  The removal of 12V battery may cause a DTC detection error.

PREPARATION

PREPARATION

Special Service Tools

INFOID:0000000009948864

The actual shapes of Kent-Moore tools may differ from those of special service tools illustrated here.

Tool number (Kent-Moore No.) Tool name	Description
KV381054S0 (J-34286) Puller 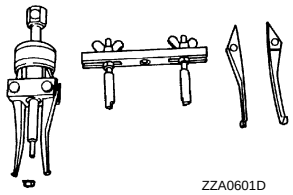 ZZA0601D	Removing mainshaft front bearing outer race
KV38100200 (-) Drift a: 65 mm (2.56 in) dia. b: 49 mm (1.93 in) dia. 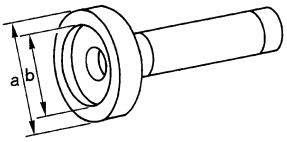 ZZA1143D	• Installing mainshaft front bearing outer race • Installing mainshaft rear bearing outer race • Installing differential side bearing outer race (clutch housing side)
ST33220000 (-) Drift a: 37 mm (1.46 in) dia. b: 31 mm (1.22 in) dia. c: 22 mm (0.87 in) dia. 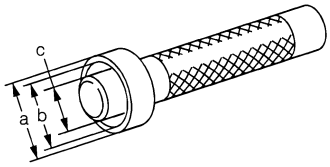 ZZA1046D	Installing input shaft oil seal
ST33400001 (J-26082) Drift a: 60 mm (2.36 in) dia. b: 47 mm (1.85 in) dia. 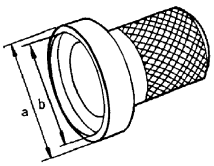 ZZA0814D	Installing differential side bearing outer race (transaxle case side)
KV32500QAA (-) (Renault SST: B.vi 1666) Drift set 1. — (-) (Stamping number: B.vi 1666-A) Drift a: 54.3 mm (2.138 in) dia. b: 45 mm (1.77 in) dia. c: 26.6 mm (1.047 in) dia. 2. — (-) (Stamping number: B.vi 1666-B) Drift d: 54 mm (2.13 in) dia. e: 48.6 mm (1.913 in) dia. f: 26.6 mm (1.047 in) dia. 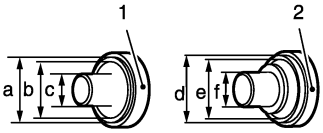 JPDIC0730ZZ	Installing differential side oil seal

Tool number (Kent-Moore No.) Tool name	Description
ST36720030 (-) Drift a: 70 mm (2.76 in) dia. b: 40 mm (1.57 in) dia. c: 29 mm (1.14 in) dia. 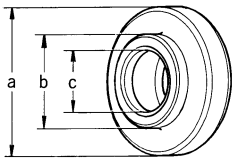 ZZA0978D	• Installing input shaft rear bearing • Installing mainshaft front bearing inner race
ST33052000 (-) Drift a: 22 mm (0.87 in) dia. b: 28 mm (1.10 in) dia. 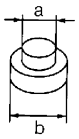 ZZA0969D	• Removing mainshaft rear bearing inner race • Removing 6th main gear • Removing 5th main gear • Removing 4th main gear • Removing 1st main gear • Removing 1st-2nd synchronizer hub assembly • Removing 2nd main gear • Removing bushing • Removing 3rd main gear • Removing mainshaft front bearing inner race
KV32102700 (-) Drift a: 48.6 mm (1.913 in) dia. b: 41.6 mm (1.638 in) dia. 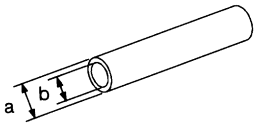 S-NT065	• Installing bushing • Installing 2nd main gear • Installing 3rd main gear • Installing 4th main gear • Installing 5th main gear • Installing 6th main gear
ST30901000 (J-26010-01) Drift a: 79 mm (3.11 in) dia. b: 45 mm (1.77 in) dia. c: 35.2 mm (1.386 in) dia. 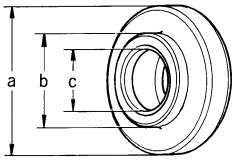 ZZA0978D	Installing mainshaft rear bearing inner race
ST33061000 (J-8107-2) Drift a: 28.5 mm (1.122 in) dia. b: 38 mm (1.50 in) dia. 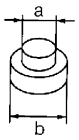 ZZA0969D	Removing differential side bearing inner race (clutch housing side)
KV32300QAM (-) (Renault SST: B.vi 1823) Drift 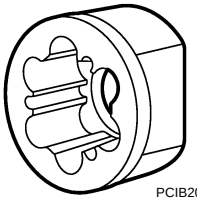 PCIB2078J	Removing and installing input shaft rear bearing mounting bolt

Commercial Service Tools

INFOID:0000000009948865

Tool name	Description
Socket a: 8 mm (0.31 in) b: 5 mm (0.20 in) 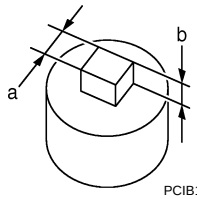 PCIB1776E	Removing and installing drain plug
Spacer a: 25 mm (0.98 in) dia. b: 25 mm (0.98 in) 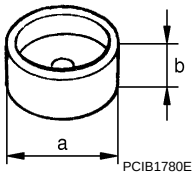 PCIB1780E	Removing mainshaft front bearing outer race
Drift a: 17 mm (0.67 in) dia. 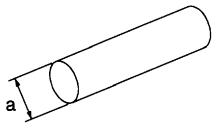 S-NT063	Installing bushing
Drift a: 24 mm (0.94 in) dia. 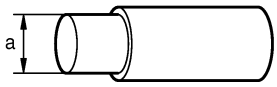 PCIB1779E	Removing input shaft rear bearing
Drift a: 35 mm (1.38 in) dia. b: 25 mm (0.98 in) dia. 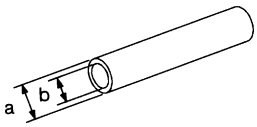 S-NT065	Installing input shaft front bearing
Drift a: 43 mm (1.69 in) dia. 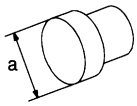 NT109	• Installing input shaft rear bearing • Removing differential side bearing inner race (transaxle case side)

Tool name	Description
Drift a: 45 mm (1.77 in) dia. b: 39 mm (1.54 in) dia. 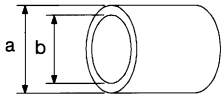 S-NT474	Installing differential side bearing inner race (clutch housing side)
Drift a: 52 mm (2.05 in) dia. b: 45 mm (1.77 in) dia. 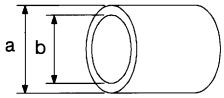 S-NT474	Installing differential side bearing inner race (transaxle case side)
Puller 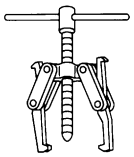 NT077	• Removing differential side bearing inner race (clutch housing side) • Removing differential side bearing inner race (transaxle case side)
Puller 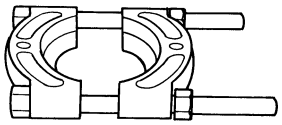 ZZB0823D	• Removing differential side bearing inner race (clutch housing side) • Removing differential side bearing inner race (transaxle case side) • Removing input shaft rear bearing • Removing input shaft front bearing • Removing mainshaft rear bearing inner race • Removing 6th main gear • Removing 4th main gear • Removing 5th main gear • Removing 1st main gear • Removing 1st-2nd synchronizer hub assembly • Removing 2nd main gear • Removing 3rd main gear • Removing mainshaft front bearing inner race
Remover  S-NT134	• Removing bushing • Removing mainshaft rear bearing outer race
Power tool 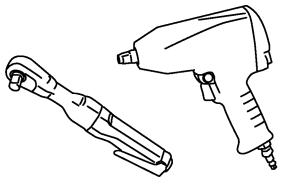 PBIC0190E	Loosening bolts and nuts

PERIODIC MAINTENANCE

GEAR OIL

Inspection

INFOID:0000000009948866

OIL LEAKAGE

Make sure that gear oil is not leaking from transaxle or around it.

OIL LEVEL

1. Remove filler plug (1) and gasket from transaxle case.
2. Check the oil level from filler plug mounting hole as shown in the figure.
   CAUTION:
   Never start engine while checking oil level.
3. Set a gasket on filler plug and then install it to transaxle case.
   CAUTION:
   Never reuse gasket.
4. Tighten filler plug to the specified torque. Refer to TM-27, "Exploded View".

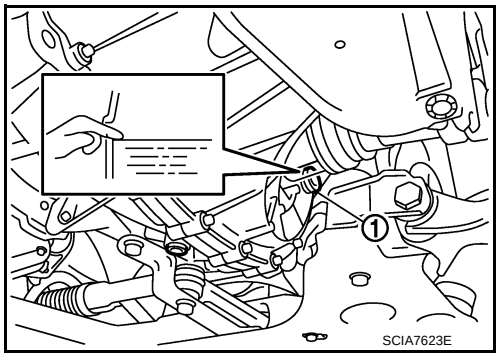

Draining

INFOID:0000000009948867

1. Start engine and let it run to warm up transaxle.
2. Stop engine. Remove drain plug (1) and gasket, using a socket [Commercial service tool] and then drain gear oil.
3. Set a gasket on drain plug and install it to clutch housing, using a socket [Commercial service tool].
   CAUTION:
   Never reuse gasket.
4. Tighten drain plug to the specified torque. Refer to TM-27, "Exploded View".

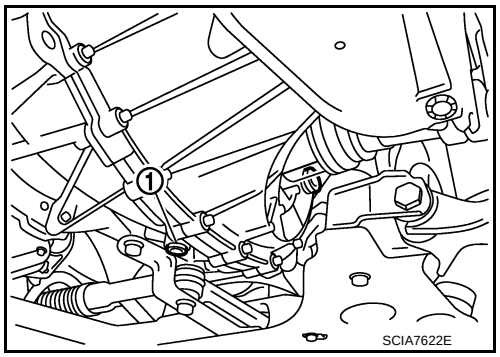

Refilling

INFOID:0000000009948868

1. Remove filler plug (1) and gasket from transaxle case.
2. Fill with new gear oil until oil level reaches the specified limit at filler plug mounting hole as shown in the figure.

Oil grade and viscosity	**: Refer to MA-10, "Fluids and Lubricants".**
Oil capacity	**: Refer to TM-63, "General Specification".**

3. After refilling gear oil, check the oil level. Refer to TM-17, "Inspection".
4. Set a gasket on filler plug and then install it to transaxle case.
   CAUTION:
   Never reuse gasket.
5. Tighten filler plug to the specified torque. Refer to TM-27, "Exploded View".

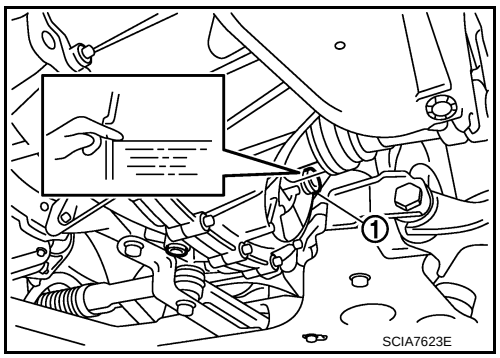

REMOVAL AND INSTALLATION

SIDE OIL SEAL

Removal and Installation

INFOID:0000000009948869

REMOVAL

1. Remove front drive shafts. Refer to FAX-16, "LEFT SIDE : Removal and Installation" (LH) and FAX-17, "RIGHT SIDE : Removal and Installation" (RH).
2. Remove differential side oil seals (1) from clutch housing and transaxle case, using a suitable tool.
   CAUTION:
   Never damage transaxle case and clutch housing.

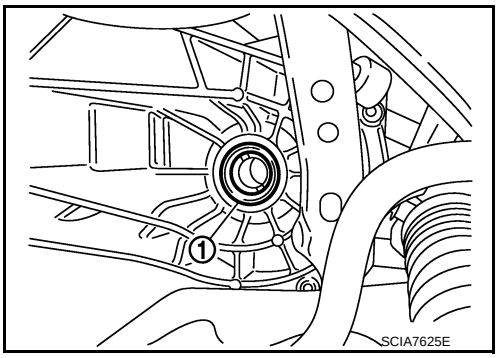

INSTALLATION

Note the following, and install in the reverse order of removal.

- Install differential side oil seals (1) to clutch housing and transaxle case, using the drift [Stamping number: B.vi 1666-B] of the drift set [SST: KV32500QAA (-)].

A : Transaxle case side
B : Clutch housing side

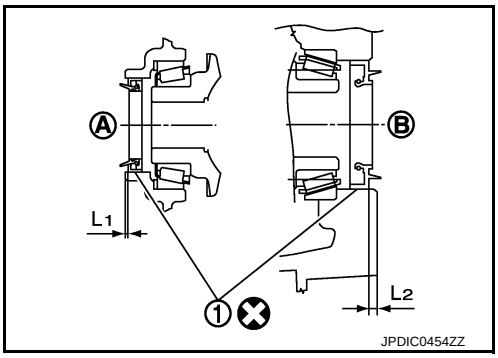

Dimension "L_1" : 1.2 – 1.8 mm (0.047 – 0.071 in)
Dimension "L_2" : 2.7 – 3.3 mm (0.106 – 0.130 in)

CAUTION:
- **Never incline differential side oil seal.**
- **Never damage clutch housing and transaxle case.**

Inspection

INFOID:0000000009948870

INSPECTION AFTER INSTALLATION

Check the oil leakage and the oil level. Refer to TM-17, "Inspection".

CONTROL LINKAGE

Exploded View

INFOID:0000000009948871

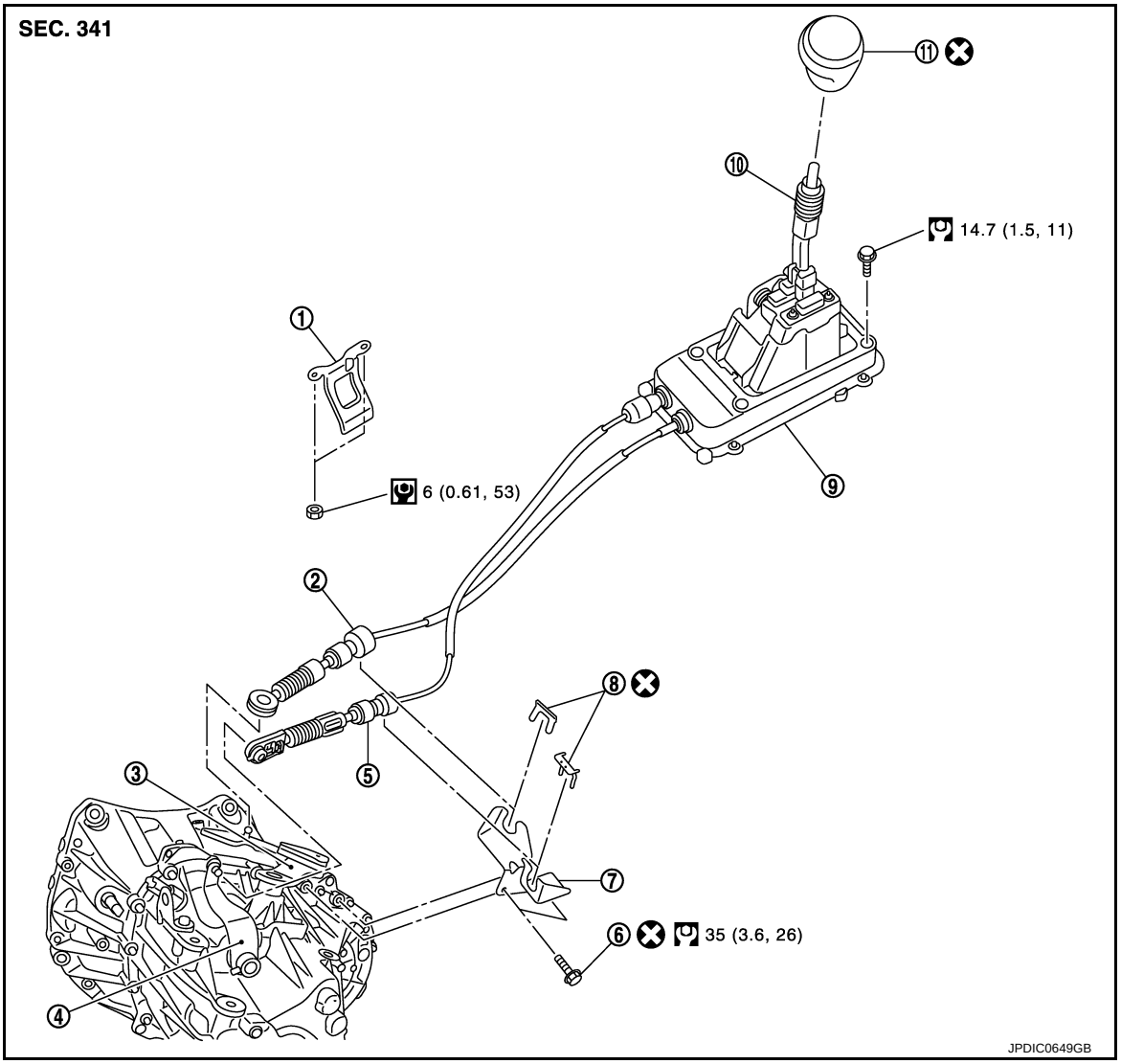

1. Bracket	2. Shifter cable	3. Shifter lever A
4. Selector lever	5. Selector cable	6. Tapping bolt
7. Cable mounting bracket	8. Lock plate	9. M/T shift selector
10. Shifter lever	11. Shifter lever knob	

Refer to GI-4, "Components" for the symbols in the figure.

Removal and Installation

INFOID:0000000009948872

REMOVAL

1. Pull the shifter lever knob upward to remove.
2. Remove center console assembly. Refer to IP-23, "Removal and Installation".
3. Remove harness clips.
4. Shift the shifter lever in the neutral position.
5. Remove mounting bolts of the M/T shift selector.
6. Remove air duct (inlet). Refer to EM-24, "Removal and Installation".
7. Remove battery. Refer to PG-82, "Removal and Installation".

8. Remove clips from the air duct and air cleaner case. TM-22, "Removal and Installation".
9. Remove air cleaner case and air ducts. Refer to EM-24, "Removal and Installation".
10. Pull out and disconnect the each cable from the shifter lever A and the selector lever, using a suitable remover.
11. Remove each lock plate upward to disconnect the each cable from the cable mounting bracket.
12. Remove cable mounting bracket from the transaxle case.
13. Remove center muffler, exhaust front tube, and heat plate. Refer to EX-5, "Removal and Installation".
14. Remove bracket from the vehicle.
15. Release the tabs (A) on the front and back of the M/T shift selector (1) to remove the M/T shift selector from under the vehicle.

⇦ : Vehicle front

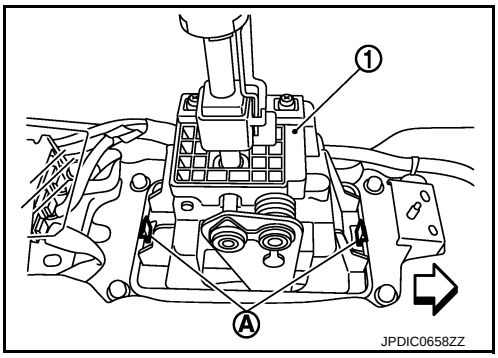

INSTALLATION

Note the following, and install in the reverse order of removal.

- To install the shifter lever knob, press it into the shifter lever.
  CAUTION:
  - **Never reuse shifter lever knob.**
  - **Be careful with orientation of shifter lever knob.**
- Shift the shifter lever in the neutral position.
- Tapping work for tapping bolts is not applied to new transaxle case. Do not perform tapping by other than screwing tapping bolts because tapping is formed by screwing tapping bolts into transaxle case.
  CAUTION:
  Never reuse tapping bolt.
- Shift the shifter lever A in the neutral position.
- Insert the each cable until it reaches the shifter lever A and the selector lever.
- The lock plate (1) which fixes the selector cable (2) has an indentation (⬅). Never confuse the lock plate with the lock plate (3) which fixes the shifter cable (4).

⇦ : Vehicle front

- Insert the each lock plate until it reaches the cable mounting bracket.

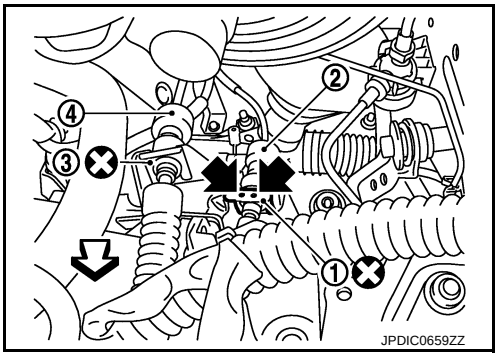

Install the selector cable according to the following instructions.

1. Install the selector cable (1) on the cable mounting bracket to install the lock plate.
2. Install the selector cable on the selector lever (2).
3. Slide the stopper (3) in the direction of the arrow (A) shown in the figure.
4. Press the lock (4) in the direction of the arrow (B) shown in the figure.
   CAUTION:
   Never move the selector lever.
5. Side the stopper in the direction of the arrow (C) shown in the figure.
   CAUTION:
   Never move the selector lever.

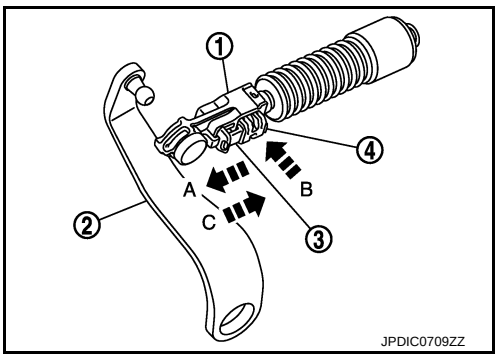

Inspection

INFOID:0000000009948873

INSPECTION AFTER INSTALLATION

- Check that the shifter lever knob maintains its position.
- Operate the shifter lever in each position to check that the shifter lever smoothly operates without any complication, snag, noise, backlash, or interference. If any malfunction is fund, repair malfunctioning parts or replace the M/T shift selector.
- Check that the shifter lever automatically and smoothly returns to the neutral position when selecting the 1st-2nd side and the 5th-6th side. If any malfunction is fund, repair malfunctioning parts or replace the M/T shift selector.

AIR BREATHER HOSE

Exploded View

INFOID:0000000009948874

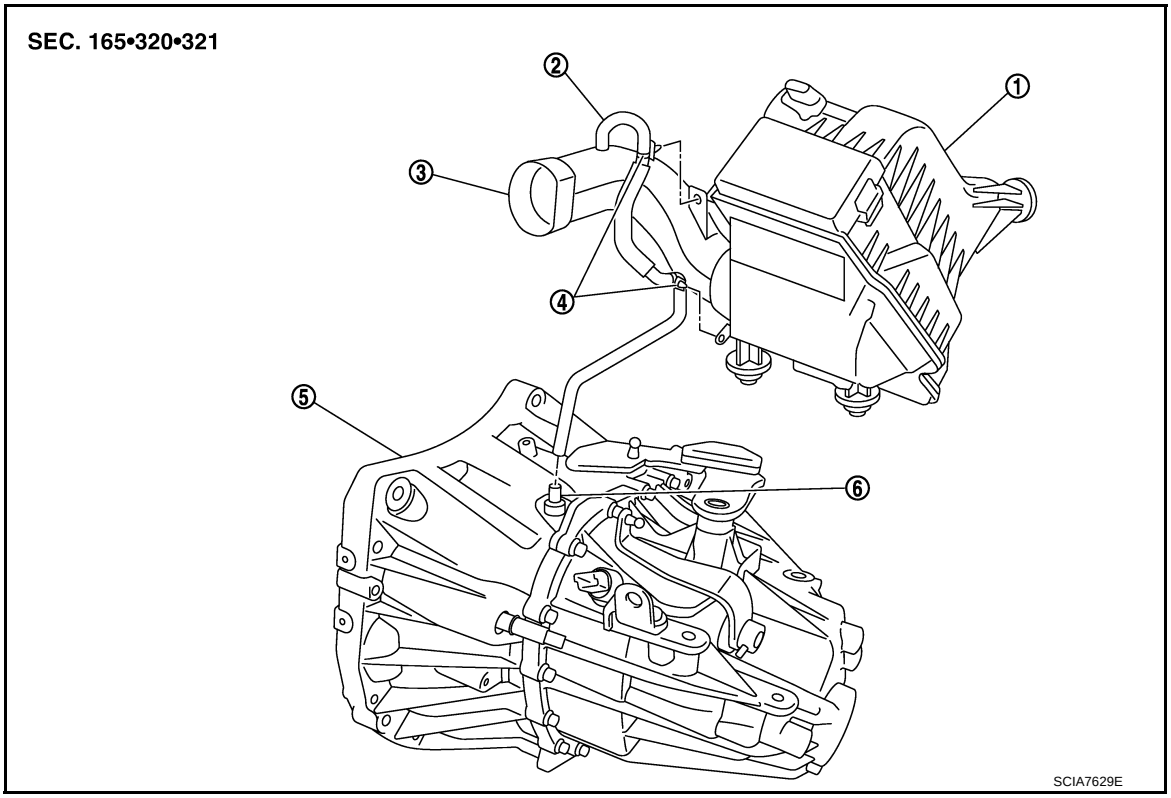

1. Air cleaner case
2. Air breather hose
3. Air duct
4. Clip
5. Transaxle assembly
6. 2 way connector

Removal and Installation

INFOID:0000000009948875

REMOVAL

1. Remove air duct (inlet). Refer to EM-24, "Removal and Installation".
2. Remove clip from the air duct.
3. Remove air duct. Refer to EM-24, "Removal and Installation".
4. Remove clip from the air cleaner case.
5. Remove air breather hose from the 2 way connector.
   CAUTION:
   When removing air breather hose, be sure to hold 2 way connector securely.

INSTALLATION

Note the following, and install in the reverse order of removal.

- When installing air breather hose on 2 way connector, aim paint mark face toward the vehicle front.
- When installing air breather hose on 2 way connector, push it until it hits transaxle case.
- When installing air breather hose to air cleaner case, make sure that clip are fully inserted.
  CAUTION:
  Make sure that air breather hose is not collapsed or blocked due to folding or bending when installed.

POSITION SWITCH

Exploded View

INFOID:0000000009948876

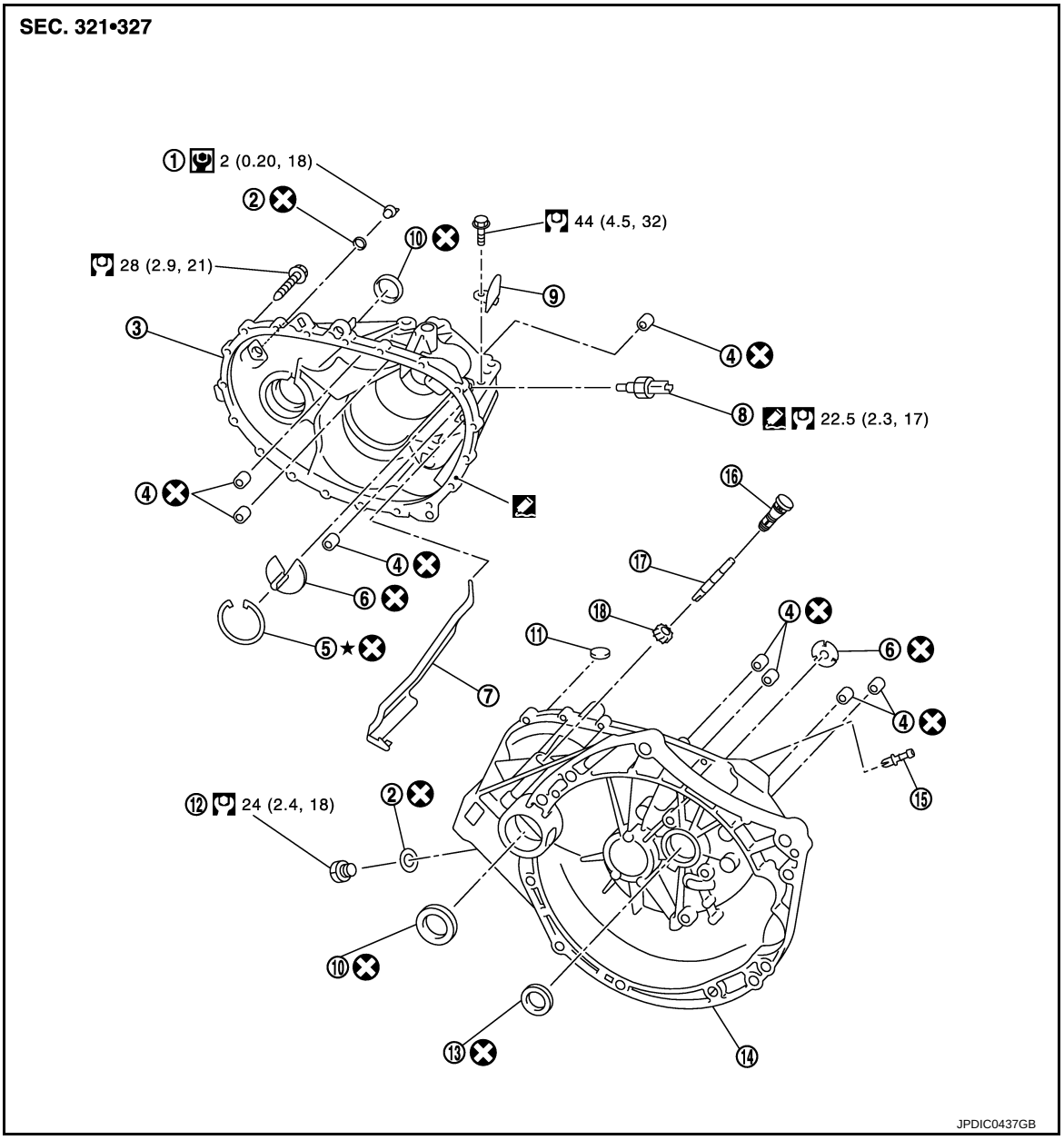

1.	Filler plug	2.	Gasket	3.	Transaxle case
4.	Bushing	5.	Snap ring	6.	Oil channel
7.	Oil gutter	8.	Position switch	9.	Bracket
10.	Differential side oil seal	11.	Magnet	12.	Drain plug
13.	Input shaft oil seal	14.	Clutch housing	15.	2 way connector
16.	Plug	17.	Pinion shaft	18.	Pinion gear

: Apply Genuine Silicone RTV or an equivalent. Refer to GI-22, "Recommended Chemical Products and Sealants".

Refer to GI-4, "Components" for symbols not described on the above.

Removal and Installation

INFOID:0000000009948877

REMOVAL

1. Remove air duct (inlet). Refer to EM-24, "Removal and Installation".
2. Remove battery. Refer to PG-82, "Removal and Installation".
3. Remove clips from the air cleaner case and air duct. Refer to TM-22, "Removal and Installation".
4. Remove air cleaner case and air ducts. Refer to EM-24, "Removal and Installation".
5. Remove bracket (1).

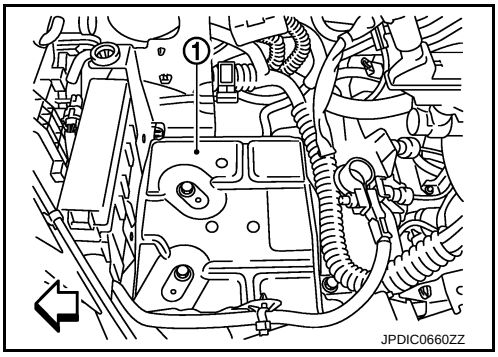

⇦ : Vehicle front

6. Disconnect position switch connector.
7. Remove position switch from transaxle case.

INSTALLATION

1. Apply recommended sealant to threads of position switch.
   - Use Genuine Silicone RTV or an equivalent. Refer to GI-22, "Recommended Chemical Products and Sealants".

   CAUTION:
   Remove old sealant and oil adhering to threads.
2. Install position switch to transaxle case.
3. Tighten position switch to the specified torque. Refer to TM-27, "Exploded View".
4. For the next step and after, install in the reverse order of removal.

UNIT REMOVAL AND INSTALLATION

TRANSAXLE ASSEMBLY

Exploded View

INFOID:0000000009948878

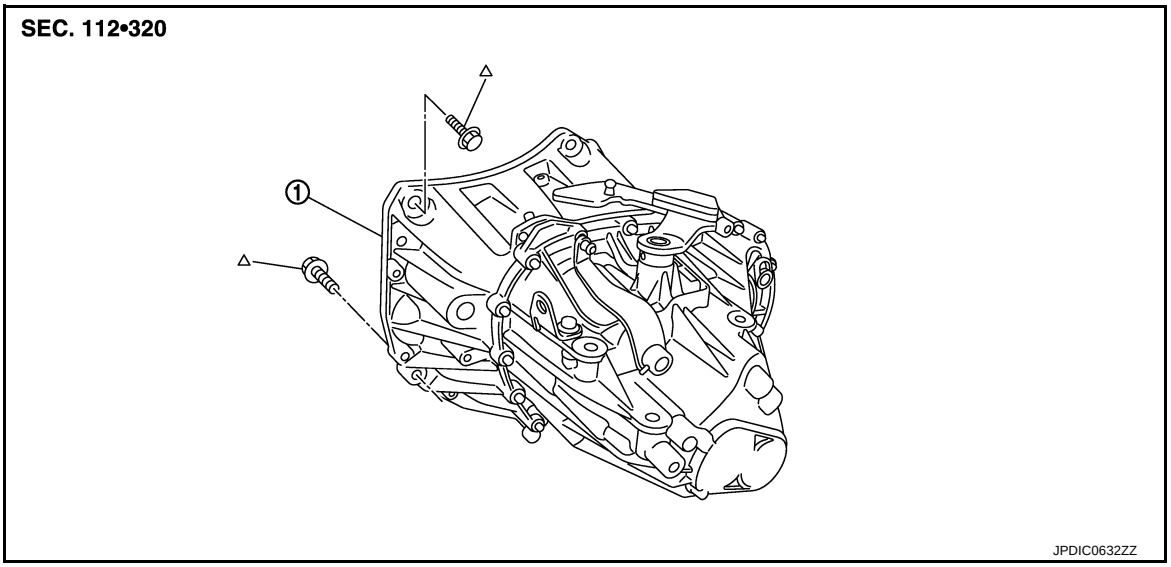

1. Transaxle assembly

△: Refer to "INSTALLATION" in TM-25, "Removal and Installation" for the locations and tightening torque.

Removal and Installation

INFOID:0000000009948879

CAUTION:
Never reuse CSC (Concentric Slave Cylinder). Because CSC slides back to the original position every time when removing transaxle assembly. At this timing, dust on the sliding parts may damage a seal of CSC and may cause clutch fluid leakage. Refer to CL-17, "Removal and Installation".

REMOVAL

1. Disconnect the battery cable from the negative terminal.
2. Remove air duct (inlet). Refer to EM-24, "Removal and Installation".
3. Remove battery. Refer to PG-82, "Removal and Installation".
4. Remove clips from air cleaner case and air duct. Refer to TM-22, "Removal and Installation".
5. Remove air cleaner case and air ducts. Refer to EM-24, "Removal and Installation".
6. Remove air breather hose. Refer to TM-22, "Removal and Installation".
7. Remove bracket (1).

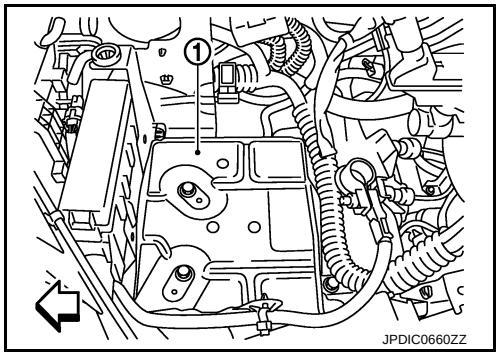

⇦ : Vehicle front

8. Disconnect position switch connector.
9. Remove harness clip from transaxle assembly.
10. Disconnect selector cable and shifter cable from transaxle assembly. Refer to TM-19, "Removal and Installation".
11. Remove starter motor. Refer to STR-26, "Removal and Installation".
12. Remove clutch tube from CSC (Concentric Slave Cylinder). Refer to CL-15, "Removal and Installation".

    CAUTION:
    - **Keep painted surface on the body or other parts free of clutch fluid. If it spills, wipe up immediately and wash the affected area with water.**

- **Never depress clutch pedal during removal procedure.**

13. Remove engine under cover.
14. Remove fender protector LH. Refer to EXT-21, "FENDER PROTECTOR : Removal and Installation".
15. Disconnect ground cable.
16. Remove front drive shafts. Refer to FAX-16, "LEFT SIDE : Removal and Installation" (LH) or FAX-17, "RIGHT SIDE : Removal and Installation" (RH).
    NOTE:
    Insert a suitable plug into differential side oil seal after removing front drive shaft.
17. Set a suitable jack to transaxle assembly and then set a suitable jack to engine assembly.
    CAUTION:
    When setting a suitable jack, be careful so that it does not contact with the switch.
18. Remove engine mounting bracket (LH) mounting bolts (⬅) from transaxle assembly. Refer to EM-74, "Removal and Installation".

    ⇦ : Vehicle front

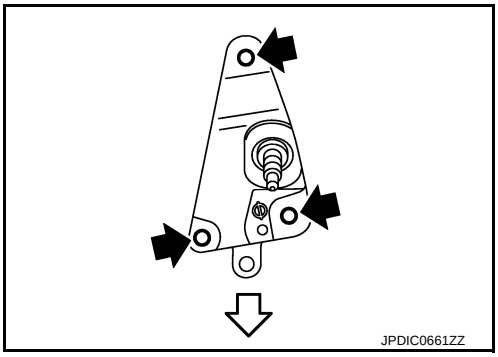

19. Remove rear engine mounting bracket and rear torque rod. Refer to EM-74, "Removal and Installation".
20. Remove transaxle assembly mounting bolts, using a power tool [Commercial service tool].
21. Remove transaxle assembly from the engine.
    CAUTION:
    - **Fix transaxle assembly to a suitable jack.**
    - **The transaxle assembly must not interfere with the wire harnesses and clutch tube.**
22. Remove CSC (Concentric Slave Cylinder). Refer to CL-17, "Removal and Installation".

INSTALLATION

Note the following, and install in the reverse order of removal.

CAUTION:

- **Fix transaxle assembly to a suitable jack.**
- **The transaxle assembly must not interfere with the wire harnesses and clutch tube.**
- **When installing transaxle assembly, never bring input shaft into contact with clutch cover.**
- Tighten transaxle assembly mounting bolts to the specified torque. The figure is the view from the engine.

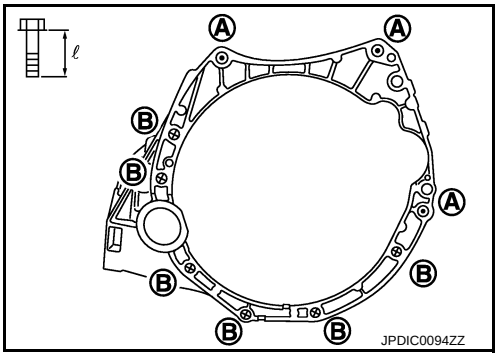

⊙ : Transaxle to engine

⊗ : Engine to transaxle

Bolt symbol	A	B
Quantity	3	6
Bolt length "ℓ" mm (in)	60 (2.36)	50 (1.97)
Tightening torque N·m (kg-m, ft-lb)	62.0 (6.3, 46)	

Inspection

INFOID:0000000009948880

INSPECTION AFTER INSTALLATION

- Check the control linkage. Refer to TM-21, "Inspection".
- Check the oil leakage and the oil level. Refer to TM-17, "Inspection".

UNIT DISASSEMBLY AND ASSEMBLY

TRANSAXLE ASSEMBLY

Exploded View

INFOID:0000000009948881

CASE AND HOUSING

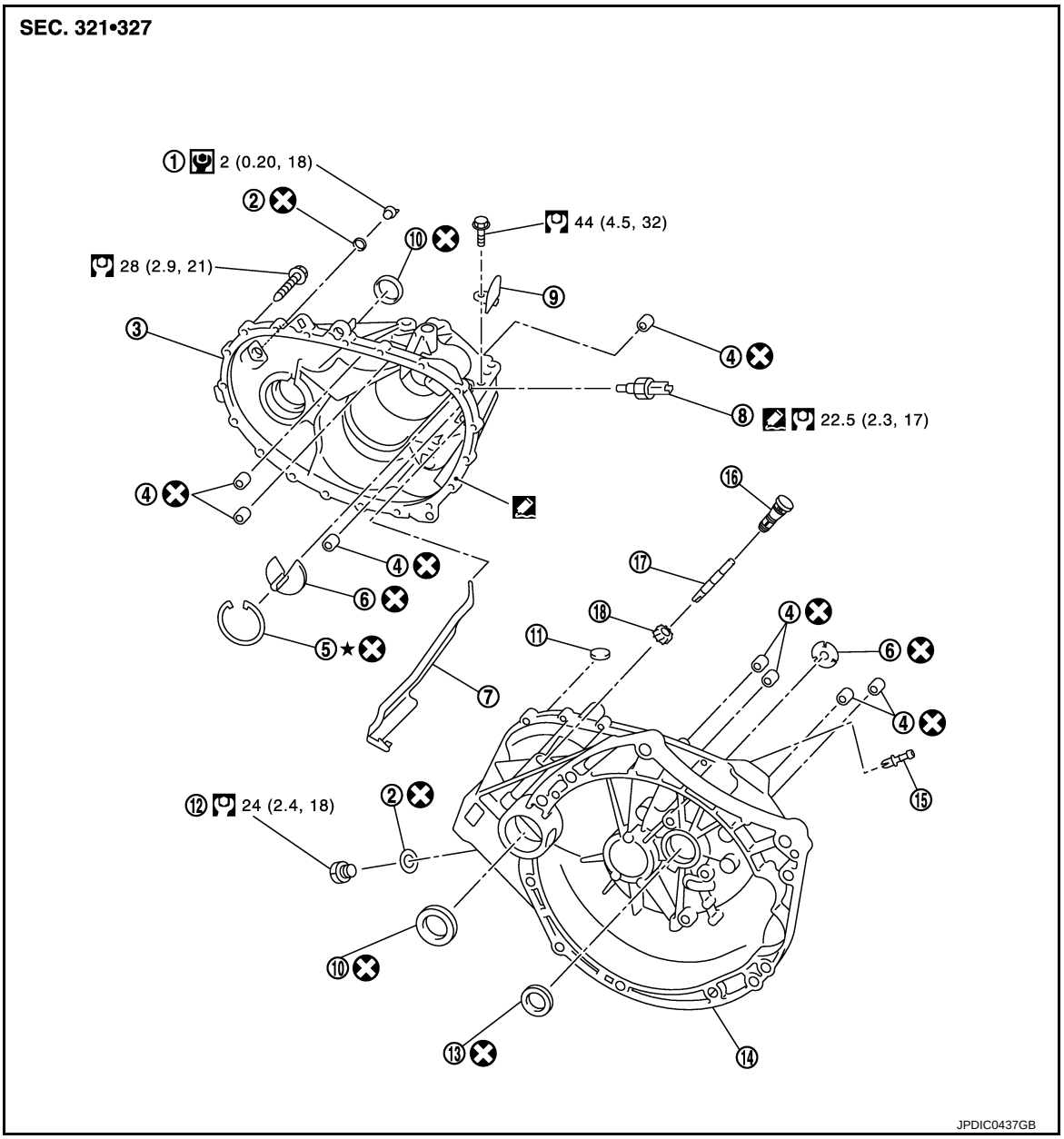

1.	Filler plug	2.	Gasket	3.	Transaxle case
4.	Bushing	5.	Snap ring	6.	Oil channel
7.	Oil gutter	8.	Position switch	9.	Bracket
10.	Differential side oil seal	11.	Magnet	12.	Drain plug
13.	Input shaft oil seal	14.	Clutch housing	15.	2 way connector
16.	Plug	17.	Pinion shaft	18.	Pinion gear

: Apply Genuine Silicone RTV or an equivalent. Refer to GI-22, "Recommended Chemical Products and Sealants".

Refer to GI-4, "Components" for symbols not described on the above.

SHAFT AND GEAR

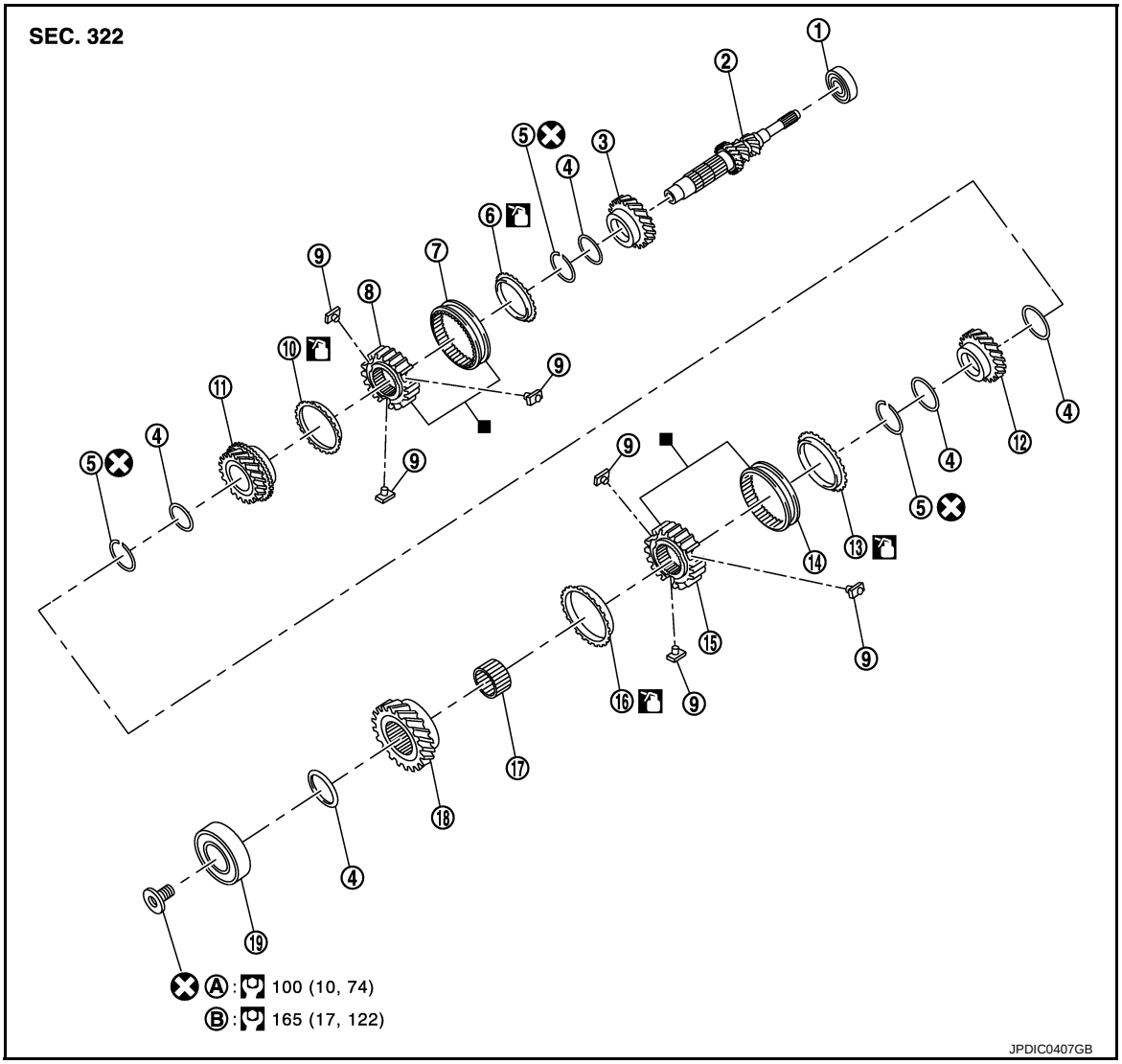

1. Input shaft front bearing	2. Input shaft	3. 3rd input gear
4. Spacer	5. Snap ring	6. 3rd baulk ring
7. 3rd-4th coupling sleeve	8. 3rd-4th synchronizer hub	9. Insert key
10. 4th baulk ring	11. 4th input gear	12. 5th input gear
13. 5th baulk ring	14. 5th-6th coupling sleeve	15. 5th-6th synchronizer hub
16. 6th baulk ring	17. Needle bearing	18. 6th input gear
19. Input shaft rear bearing		
A. First step	B. Final step	

: Apply gear oil.

■: Replace the parts as a set.

Refer to GI-4, "Components" for symbols not described on the above.

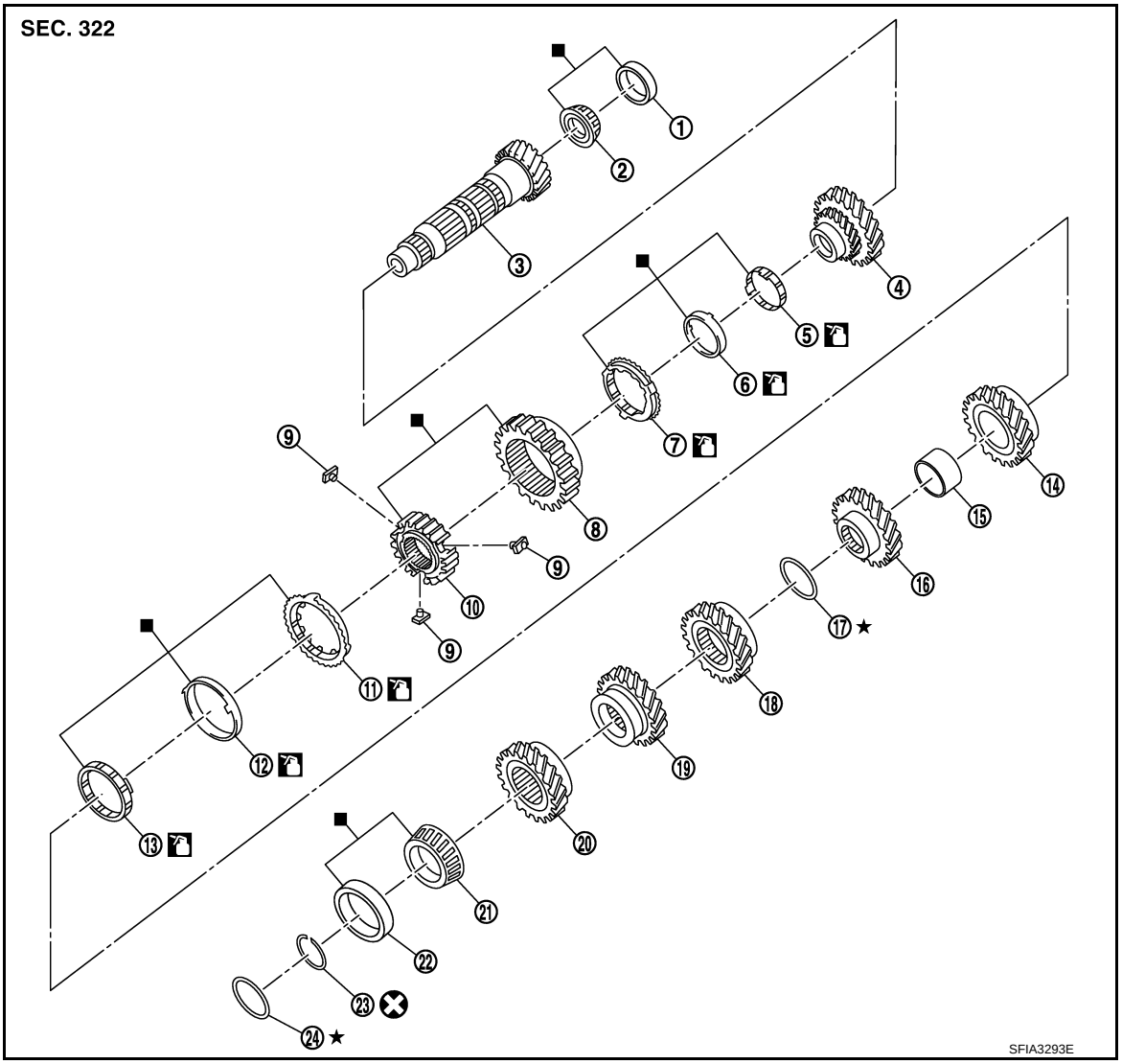

1.	Mainshaft front bearing outer race	2.	Mainshaft front bearing inner race	3.	Mainshaft
4.	1st main gear	5.	1st inner baulk ring	6.	1st synchronizer cone
7.	1st outer baulk ring	8.	1st-2nd coupling sleeve	9.	Insert key
10.	1st-2nd synchronizer hub	11.	2nd outer baulk ring	12.	2nd synchronizer cone
13.	2nd inner baulk ring	14.	2nd main gear	15.	Bushing
16.	3rd main gear	17.	Mainshaft adjusting shim	18.	4th main gear
19.	5th main gear	20.	6th main gear	21.	Mainshaft rear bearing inner race
22.	Mainshaft rear bearing outer race	23.	Snap ring	24.	Mainshaft rear bearing adjusting shim

: Apply gear oil.

: Replace the parts as a set.

Refer to GI-4, "Components" for symbols not described on the above.

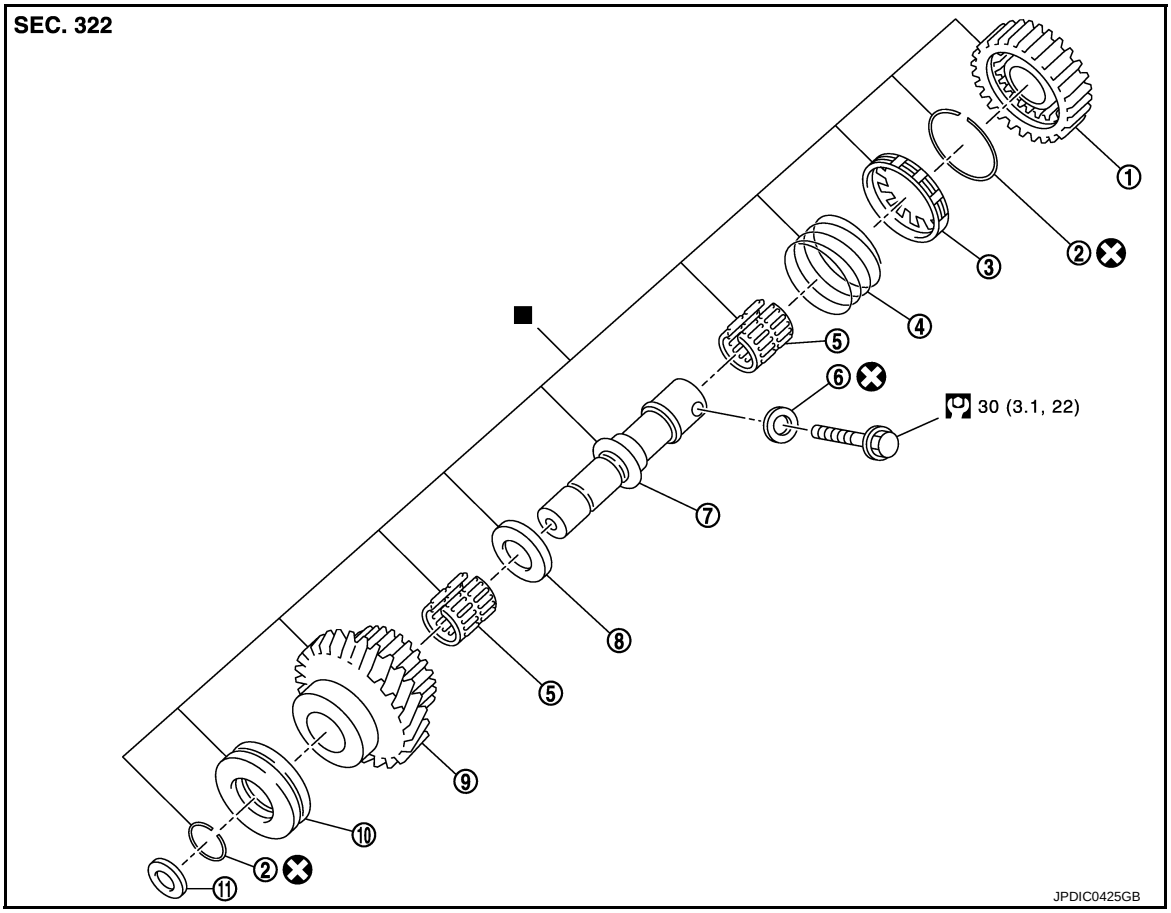

1. Reverse output gear	2. Snap ring	3. Reverse baulk ring
4. Return spring	5. Needle bearing	6. Seal washer
7. Reverse idler shaft	8. Spacer	9. Reverse input gear
10. Lock washer	11. Spring washer	

■: Replace the parts as a set.

Refer to GI-4, "Components" for symbols not described on the above.

SHIFT FORK AND FORK ROD

SEC. 328

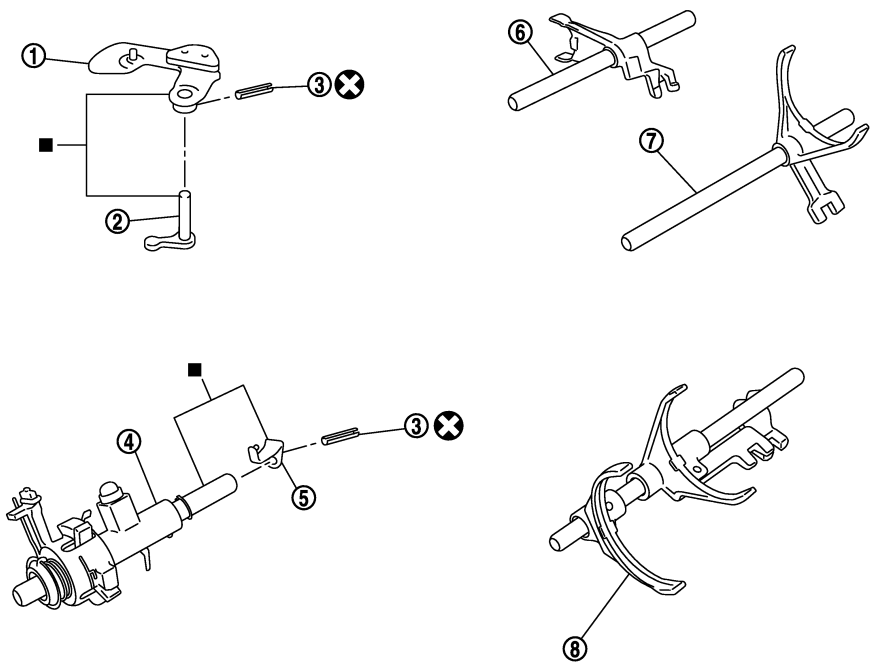

1. Shifter lever A
2. Shifter lever B
3. Retaining pin
4. Selector
5. Selector lever
6. Reverse fork rod
7. 1st-2nd fork rod
8. Fork rod

■: Replace the parts as a set.

Refer to GI-4, "Components" for symbols not described on the above.

FINAL DRIVE

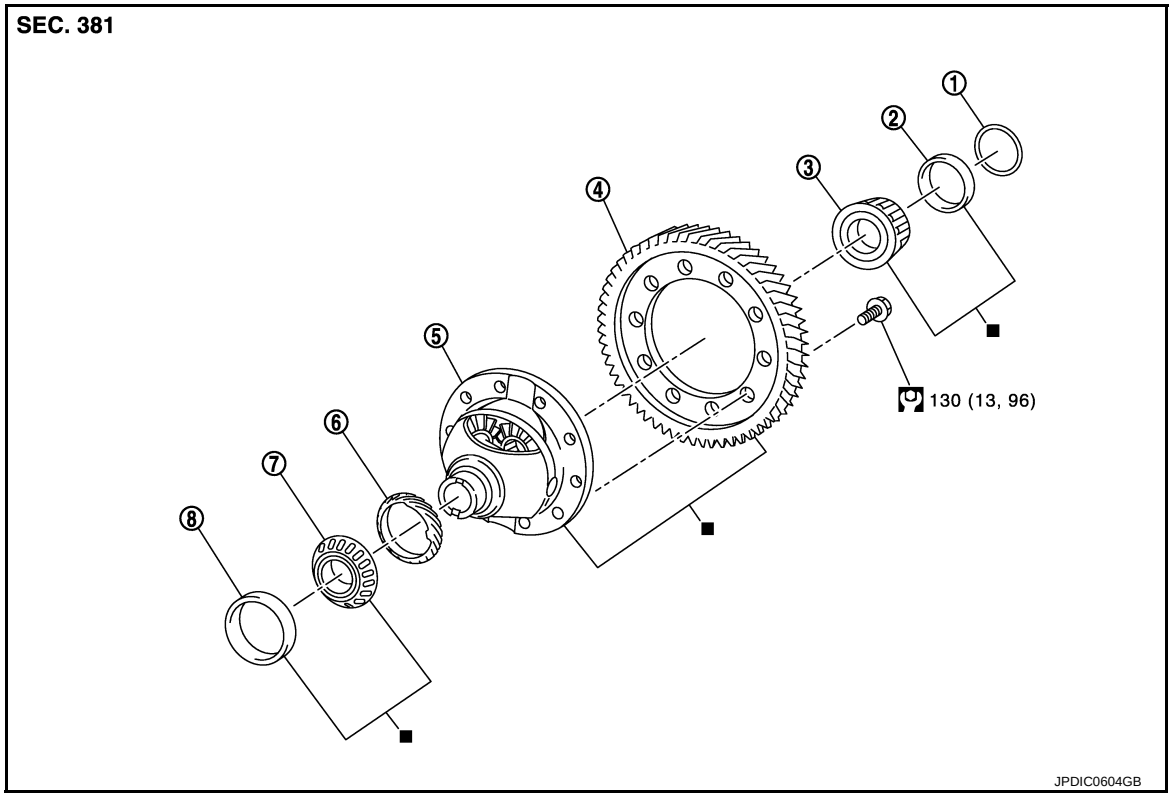

1. Shim
2. Differential side bearing outer race (transaxle case side)
3. Differential side bearing inner race (transaxle case side)
4. Final gear
5. Differential case
6. Speedometer drive gear
7. Differential side bearing inner race (clutch housing side)
8. Differential side bearing outer race (clutch housing side)

■: Replace the parts as a set.

Refer to GI-4, "Components" for symbols not described on the above.

Disassembly

INFOID:0000000009948882

1. Remove drain plug and gasket from clutch housing, using a socket [Commercial service tool] and then drain gear oil.
2. Remove filler plug and gasket from transaxle case.
3. Remove selector lever (1) retaining pin with a pin punch to remove selector lever.
4. Remove bracket (2) and position switch (3) from transaxle case.

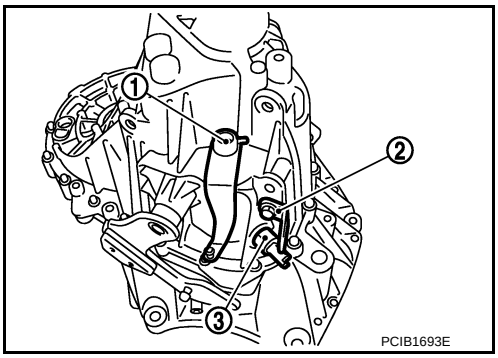

5. Remove transaxle case mounting bolts (⬅).

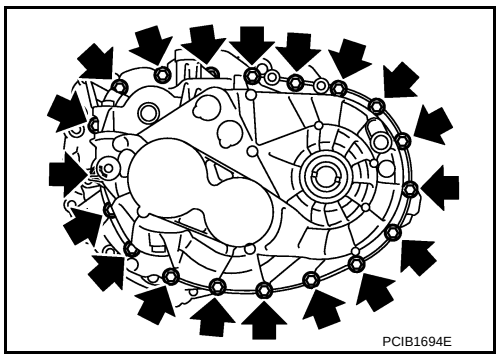

6. Remove reverse idler shaft mounting bolt (⬅) and seal washer.

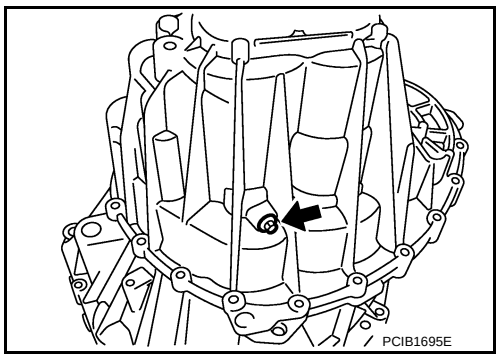

7. Remove transaxle case (2) while rotating shifter lever A (1) in the direction as shown in the figure.

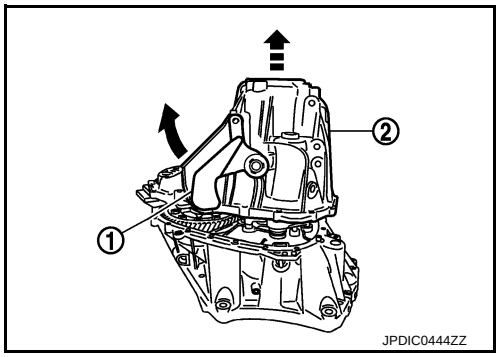

8. Remove selector spring (1) from return bushing (A).

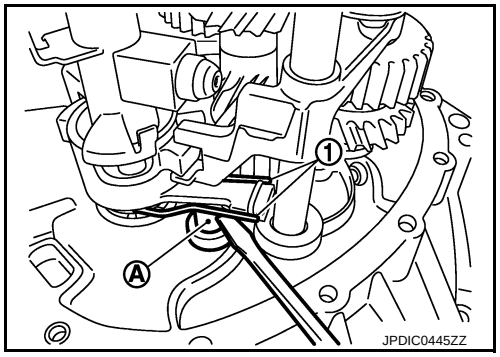

9. Shift 1st-2nd fork rod (1), fork rod (2), and reverse fork rod (3) to the neutral position.
10. Remove selector (4) from clutch housing.

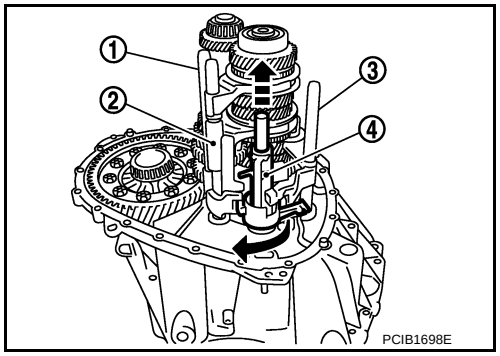

11. Remove reverse idler shaft assembly (1) according to the following procedures.

a. Pull up input shaft assembly (2), mainshaft assembly (3), fork rod (4), and 1st-2nd fork rod (5).
NOTE:
It is easier to pull up when shifting each fork rod to each shaft side.

b. Remove reverse idler shaft assembly and reverse fork rod (6) from clutch housing.

12. Remove spring washer from clutch housing.

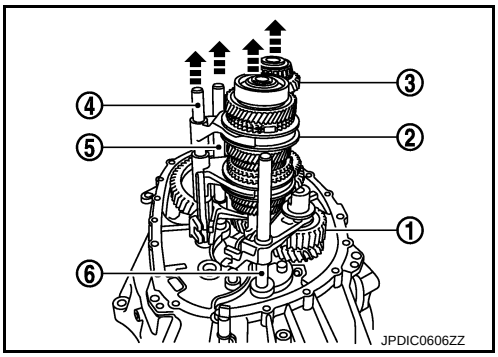

13. Pull up and remove input shaft assembly (1), mainshaft assembly (2), fork rod (3), and 1st-2nd fork rod (4) from clutch housing.
NOTE:
It is easier to pull up when shifting each fork rod to each shaft side.

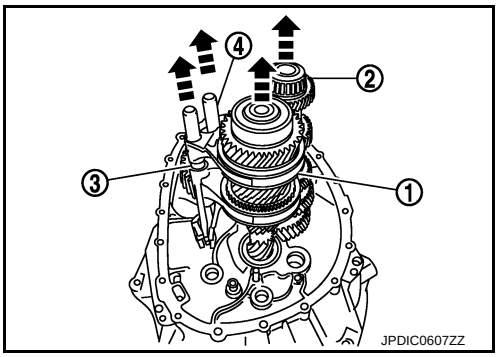

14. Remove final drive assembly (1) from clutch housing.
15. Remove magnet from clutch housing.

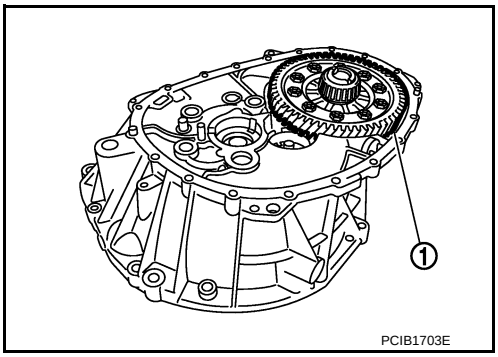

16. Remove differential side oil seals (1) from clutch housing and transaxle case.
CAUTION:
Never damage clutch housing and transaxle case.

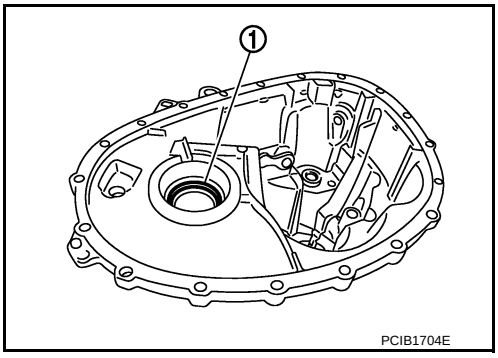

17. Remove differential side bearing outer race (1) from clutch housing, using a brass rod.
CAUTION:
Never damage clutch housing.

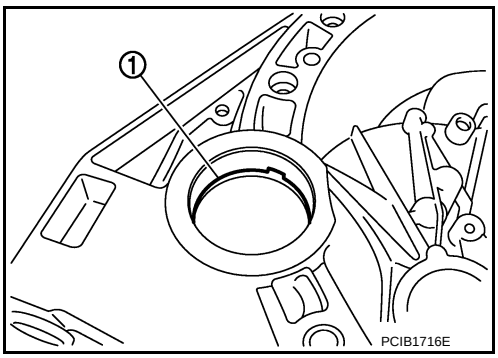

18. Remove differential side bearing outer race (1) from transaxle case, using a brass rod.
CAUTION:
Never damage transaxle case.
19. Remove shim (2) from transaxle case.

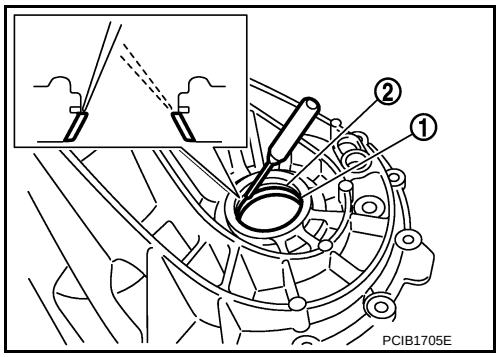

20. Remove shifter lever A (1) retaining pin, using a pin punch.
21. Remove shifter lever A from transaxle case.

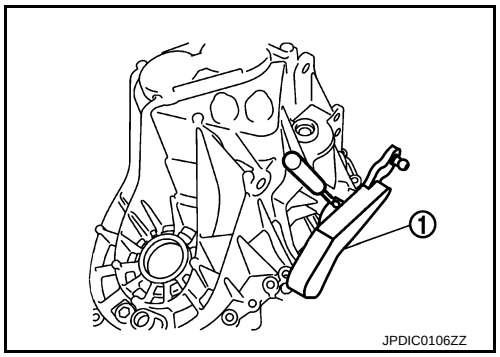

22. Remove shifter lever B (1) from transaxle case.

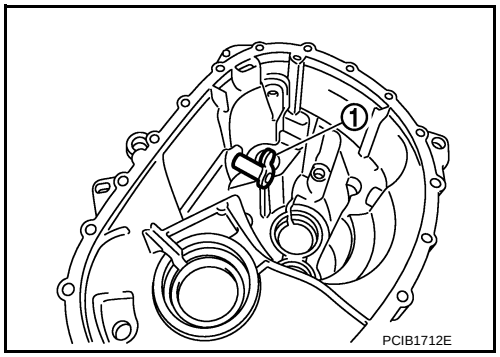

23. Remove oil gutter (1) from transaxle case.

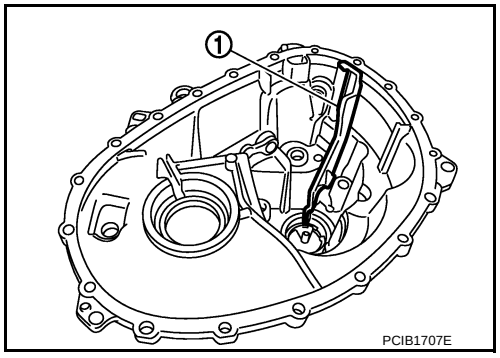

24. Remove bushings (1) from transaxle case, using a remover [Commercial service tool].
CAUTION:
Never damage transaxle case.

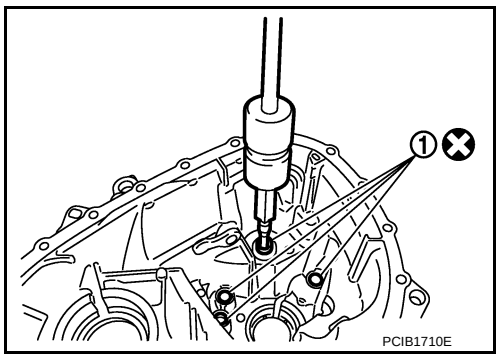

25. Remove mainshaft rear bearing outer race from transaxle case, using a remover [Commercial service tool].
CAUTION:
Never damage transaxle case.
26. Remove mainshaft rear bearing adjusting shim from transaxle case.

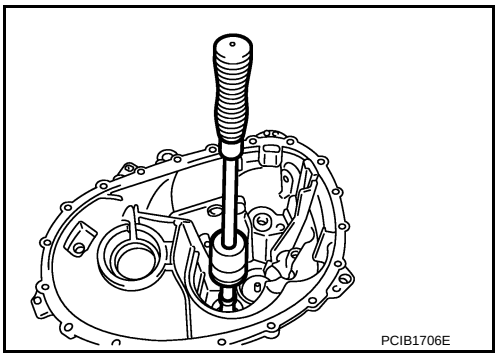

27. Remove snap ring (1) and oil channel (2) from transaxle case.

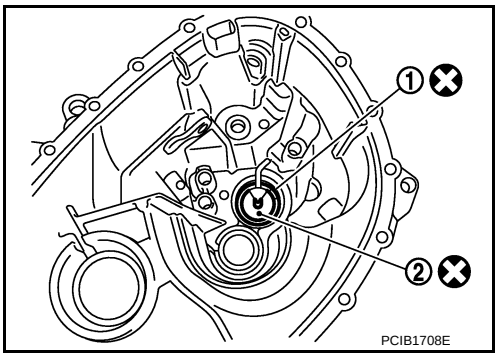

28. Remove input shaft oil seal (1) from clutch housing, using a screwdriver.
CAUTION:
Never damage clutch housing.

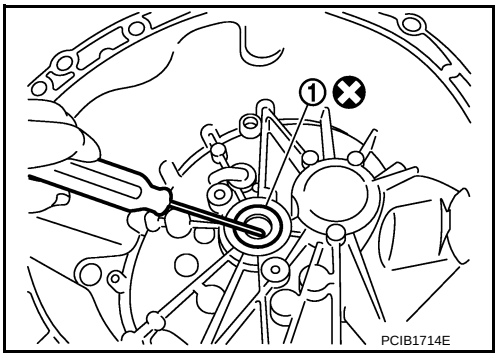

29. Remove mainshaft front bearing outer race (1) from clutch housing, using the puller (A) [SST: KV381054S0 (J-34286)] and a spacer (B) [Commercial service tool].
CAUTION:
Never damage clutch housing.
30. Remove oil channel (2) from clutch housing.

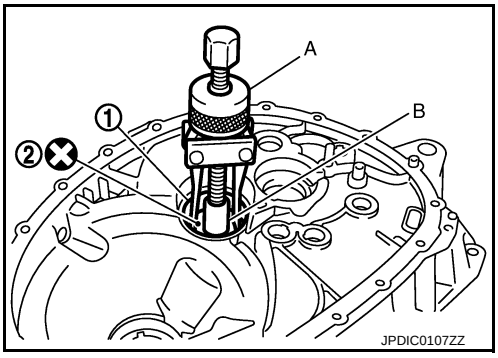

31. Remove bushing (1) from clutch housing, using a remover [Commercial service tool].
CAUTION:
Never damage clutch housing.

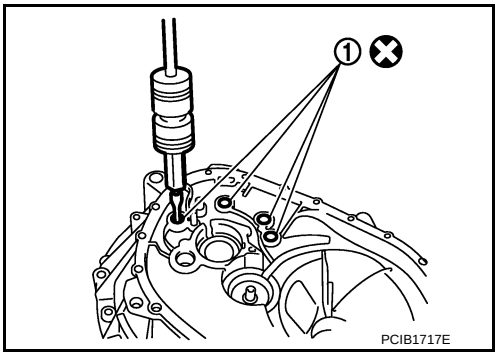

32. Remove 2 way connector (1) from clutch housing.
33. Remove plug from clutch housing.

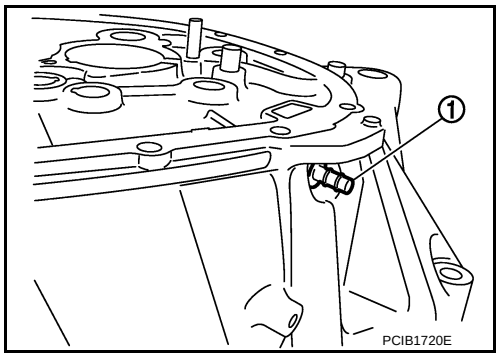

34. Remove pinion gear (1) and pinion shaft (2) from clutch housing.

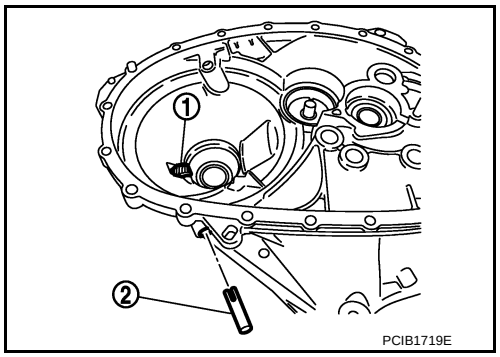

Assembly

INFOID:0000000009948883

1. Install pinion gear (1) and pinion shaft (2) to clutch housing.
   CAUTION:
   Replace transaxle assembly when replacing clutch housing.
2. Install plug to clutch housing.

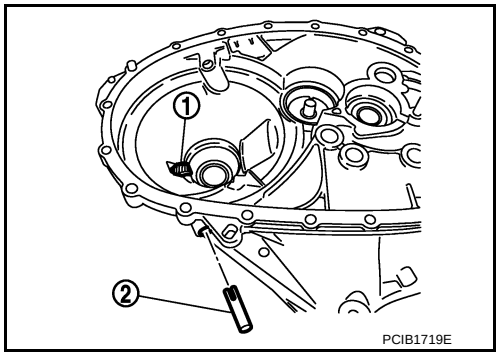

3. Install 2 way connector (1) to clutch housing.

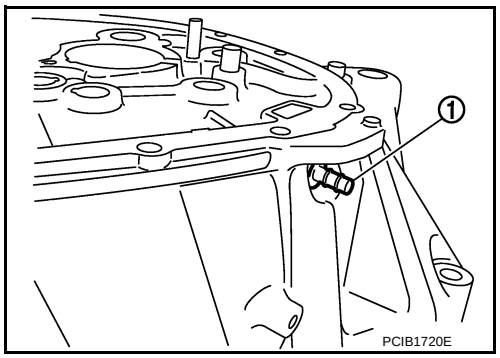

4. Install bushings (1) so that they becomes even to clutch housing edge surface, using a drift (A) [Commercial service tool].
5. Install oil channel to clutch housing.
   CAUTION:
   Never reuse oil channel.

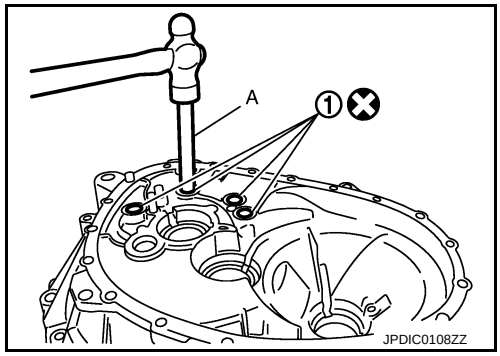

6. Install mainshaft front bearing outer race to clutch housing, using the drift (A) [SST: KV38100200 (-)].
   CAUTION:
   Replace mainshaft front bearing outer race and mainshaft front bearing inner race as a set.

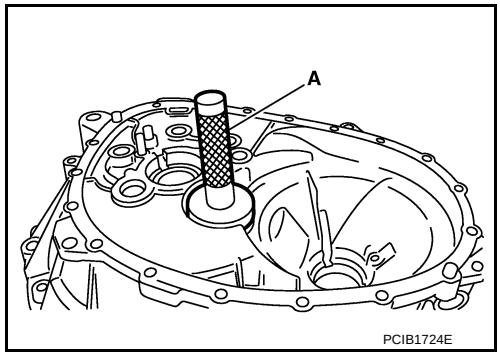

7. Install input shaft oil seal (1) to clutch housing, using the drift (A) [SST: ST33220000 (-)].

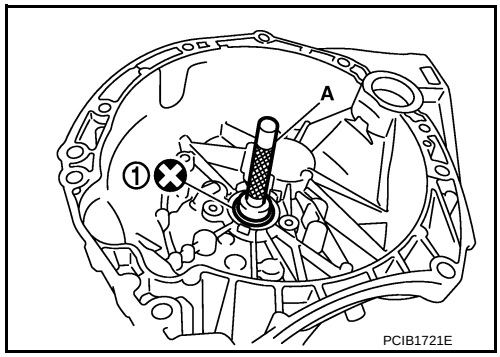

8. Install snap ring (1) and oil channel (2) to transaxle case.
   CAUTION:
   - **Select and install snap ring that has the same thickness as previous one.**
   - **Replace transaxle assembly when replacing transaxle case.**
9. Install mainshaft rear bearing adjusting shim to transaxle case.
   CAUTION:
   Select mainshaft rear bearing adjusting shim according to the following procedures when replacing mainshaft adjusting shim, 6th main gear, 5th main gear, or 4th main gear.
   - **Replace mainshaft adjusting shim.**
   - **If new mainshaft adjusting shim is thinner than previous one, offset the thickness difference by selecting thicker mainshaft rear bearing adjusting shim.**
   - **If new mainshaft adjusting shim is thicker than previous one, offset the thickness difference by selecting thinner mainshaft rear bearing adjusting shim.**
   - **Replace 6th main gear, 5th main gear, or 4th main gear.**
   - **Measure the thickness of the main gear used before and the new main gear**
   - **Increase the thickness of the mainshaft rear bearing adjusting shim, if the difference is smaller than 0.025 mm (0.0010 in).**
   - **Decrease the thickness of the mainshaft rear bearing adjusting shim, if the difference is greater than 0.025 mm (0.0010 in).**

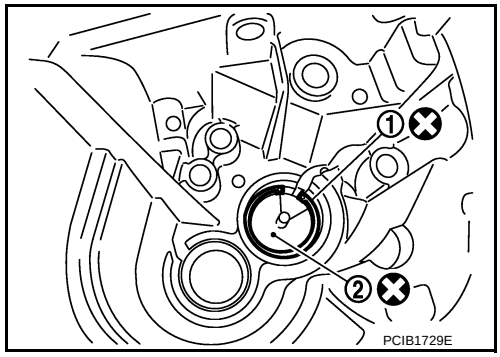

10. Install mainshaft rear bearing outer race to transaxle case, using the drift (A) [SST: KV38100200 (-)].
CAUTION:
Replace mainshaft rear bearing outer race and mainshaft rear bearing inner race as a set.

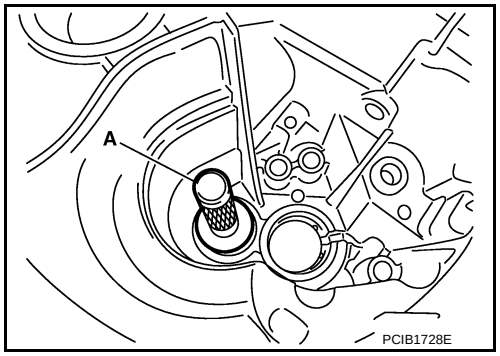

11. Install bushings (1) to transaxle case, using a drift (A) [Commercial service tool].

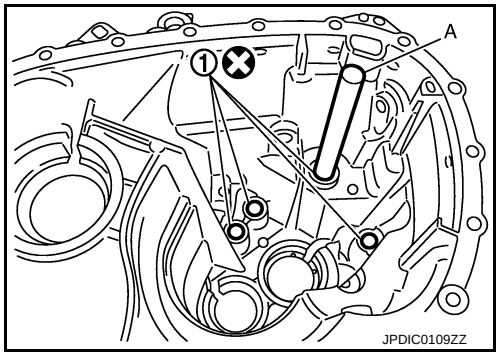

12. Install oil gutter (1) to transaxle case.

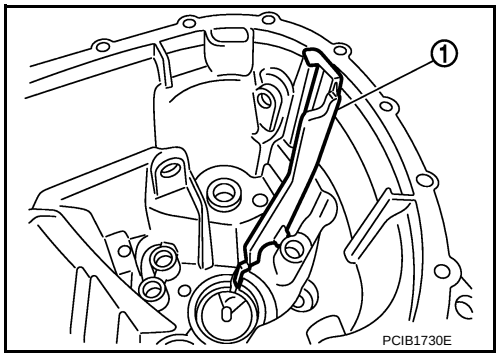

13. Install shifter lever B (1) to transaxle case.
CAUTION:
Replace shifter lever A and shifter lever B as a set.
14. Install shifter lever A to transaxle case.
CAUTION:
Replace shifter lever A and shifter lever B as a set.

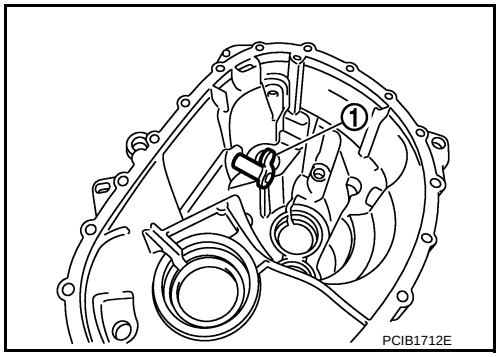

15. Install retaining pin to shifter lever A (1), using a pin punch.
CAUTION:
Never reuse retaining pin.
16. Install shim to transaxle case.

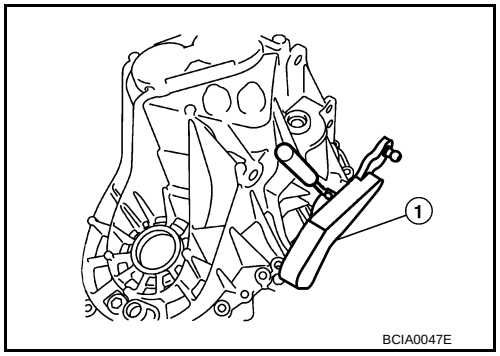

17. Install differential side bearing outer race (transaxle case side) to transaxle case, using the drift (A) [SST: ST33400001 (J-26082)].
CAUTION:
Replace differential side bearing outer race (transaxle case side) and differential side bearing inner race (transaxle case side) as a set.

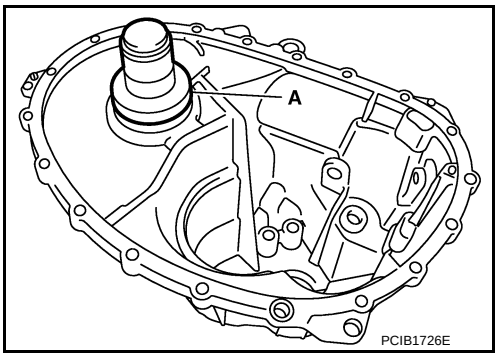

18. Install differential side bearing outer race (clutch housing side) to clutch housing, using the drift (A) [SST: KV38100200 (-)].
CAUTION:
Replace differential side bearing outer race (clutch housing side) and differential side bearing inner race (clutch housing side) as a set.

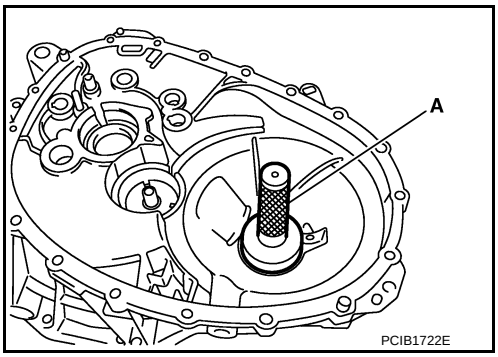

19. Install differential side oil seals (1) to clutch housing and transaxle case, using the drift [Stamping number: B.vi 1666-B] of the drift set [SST: KV32500QAA (-)].

A : Transaxle case side
B : Clutch housing side

Dimension "L_1" : 1.2 – 1.8 mm (0.047 – 0.071 in)
Dimension "L_2" : 2.7 – 3.3 mm (0.106 – 0.130 in)

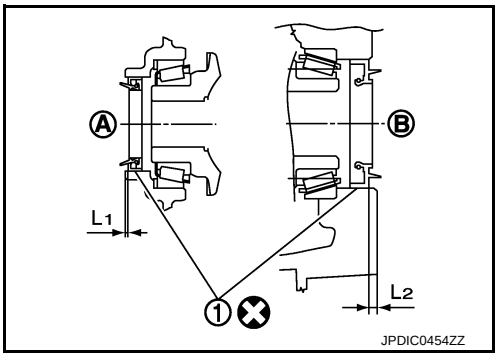

20. Install magnet to clutch housing.
21. Install final drive assembly to clutch housing.
22. Set fork rod (1) to input shaft assembly (2), and then install them to clutch housing.

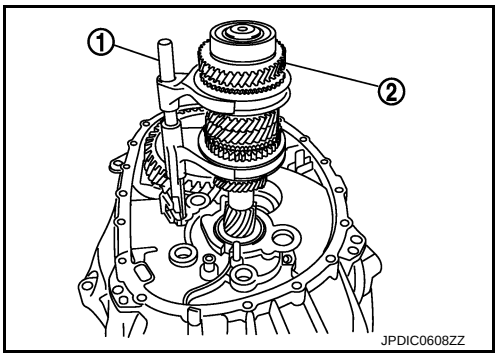

23. Install mainshaft assembly (1) according to the following procedures.
a. Pull up input shaft assembly (2) and fork rod (3).
b. Set 1st-2nd fork rod (4) to mainshaft assembly, and then install them to clutch housing.

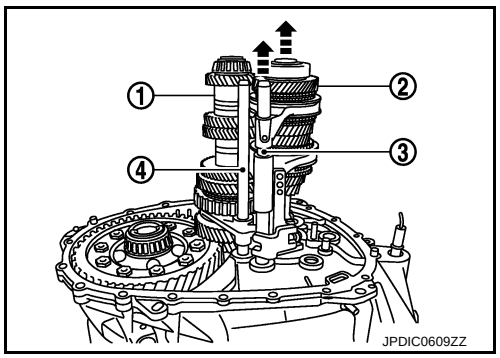

24. Install reverse idler shaft assembly (1) according to the following procedures.
a. Install spring washer to clutch housing.
b. Pull up input shaft assembly (2), mainshaft assembly (3), fork rod (4), and 1st-2nd fork rod (5).
NOTE:
It is easier to pull up when shifting each fork rod to each shaft side.
c. Set reverse fork rod (6) to reverse idler shaft assembly, and then install them to clutch housing.

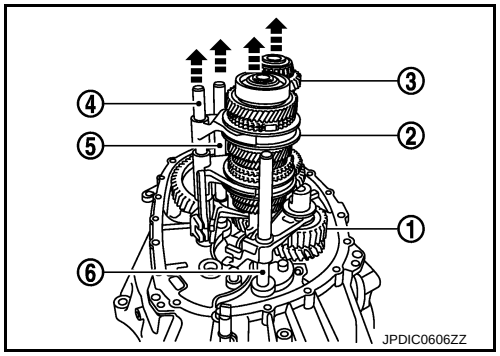

25. Shift 1st-2nd fork rod (1), fork rod (2), and reverse fork rod (3) to the neutral position.
26. Install selector (4) to clutch housing.
CAUTION:
Replace selector lever and selector as a set.

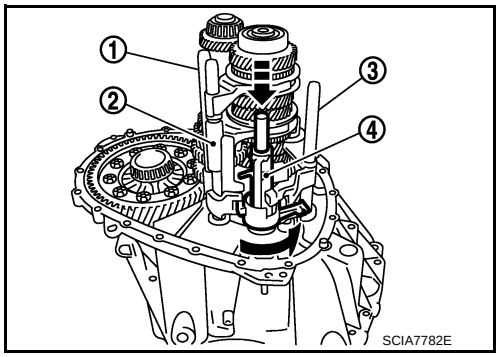

27. Install selector spring (1) to return bushing (A).
28. Apply recommended sealant to mounting surface of transaxle case.
- Use Genuine Silicone RTV or an equivalent. Refer to GI-22, "Recommended Chemical Products and Sealants".

CAUTION:
- **Remove old sealant adhering to the mounting surfaces. Also remove any moisture, oil, or foreign material adhering to both mounting surfaces.**
- **Check that mounting surface is not damaged.**
- **Apply sealant bead continuously.**

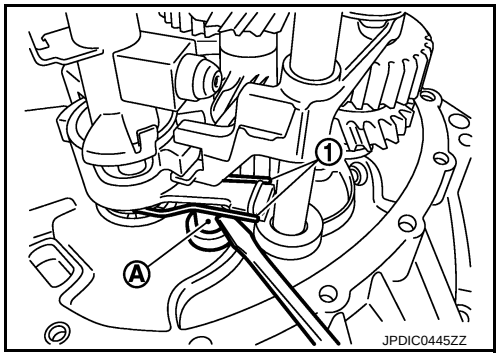

29. Install transaxle case to clutch housing while rotating shifter lever A (1) in the direction as shown in the figure.

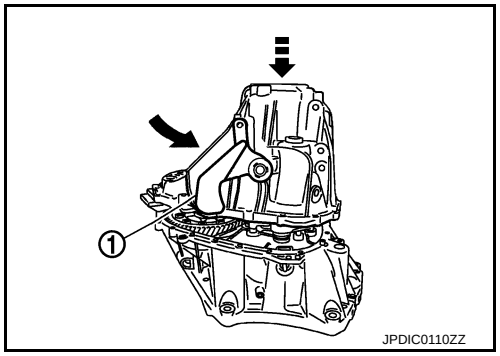

30. Install reverse idler shaft mounting bolt (⬅) according to the following procedures.

a. Install seal washer to reverse idler shaft mounting bolt, and install reverse idler shaft mounting bolt to transaxle case.
CAUTION:
Never reuse seal washer.

b. Tighten reverse idler shaft mounting bolt to the specified torque.

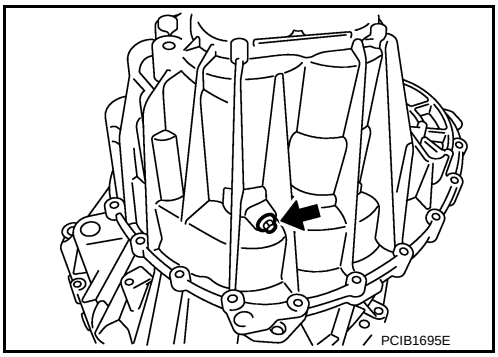

31. Tighten transaxle case mounting bolts (⬅) to the specified torque.

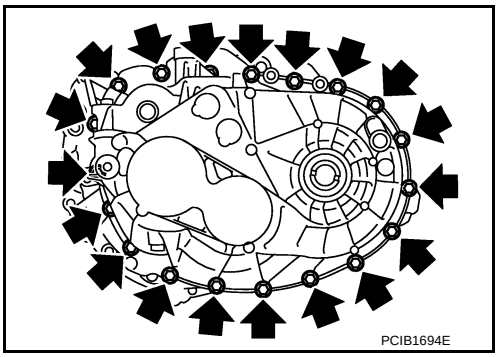

32. Install position switch (1) according to the following procedures.

a. Apply recommended sealant to threads of position switch.
- Use Genuine Silicone RTV or an equivalent. Refer to GI-22, "Recommended Chemical Products and Sealants".

CAUTION:
Remove old sealant and oil adhering to threads.

b. Install position switch to transaxle case, and tighten it to the specified torque.

33. Install bracket (2) to transaxle case, and tighten mounting bolt to the specified torque.

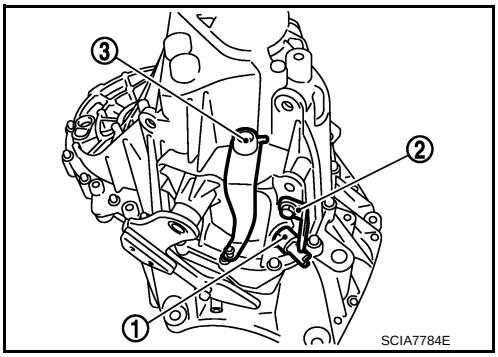

34. Install selector lever (3) according to following the procedures.

a. Install selector lever to transaxle case.
CAUTION:
Replace selector lever and selector as a set.

b. Install retaining pin to selector lever, using a pin punch.
CAUTION:
Never reuse retaining pin.

35. Install drain plug according to the following procedures.

a. Install gasket to drain plug.
CAUTION:
Never reuse gasket.

b. Install drain plug to clutch housing, using a socket [Commercial service tool].

c. Tighten drain plug to the specified torque.

36. Install filler plug according to the following procedures.

a. Install gasket to filler plug, and then install them to transaxle case.
CAUTION:
Never reuse gasket.

b. Tighten filler plug to the specified torque.
CAUTION:
Fill with gear oil before tighten filler plug to the specified torque.

INPUT SHAFT AND GEAR

Exploded View

INFOID:0000000009948884

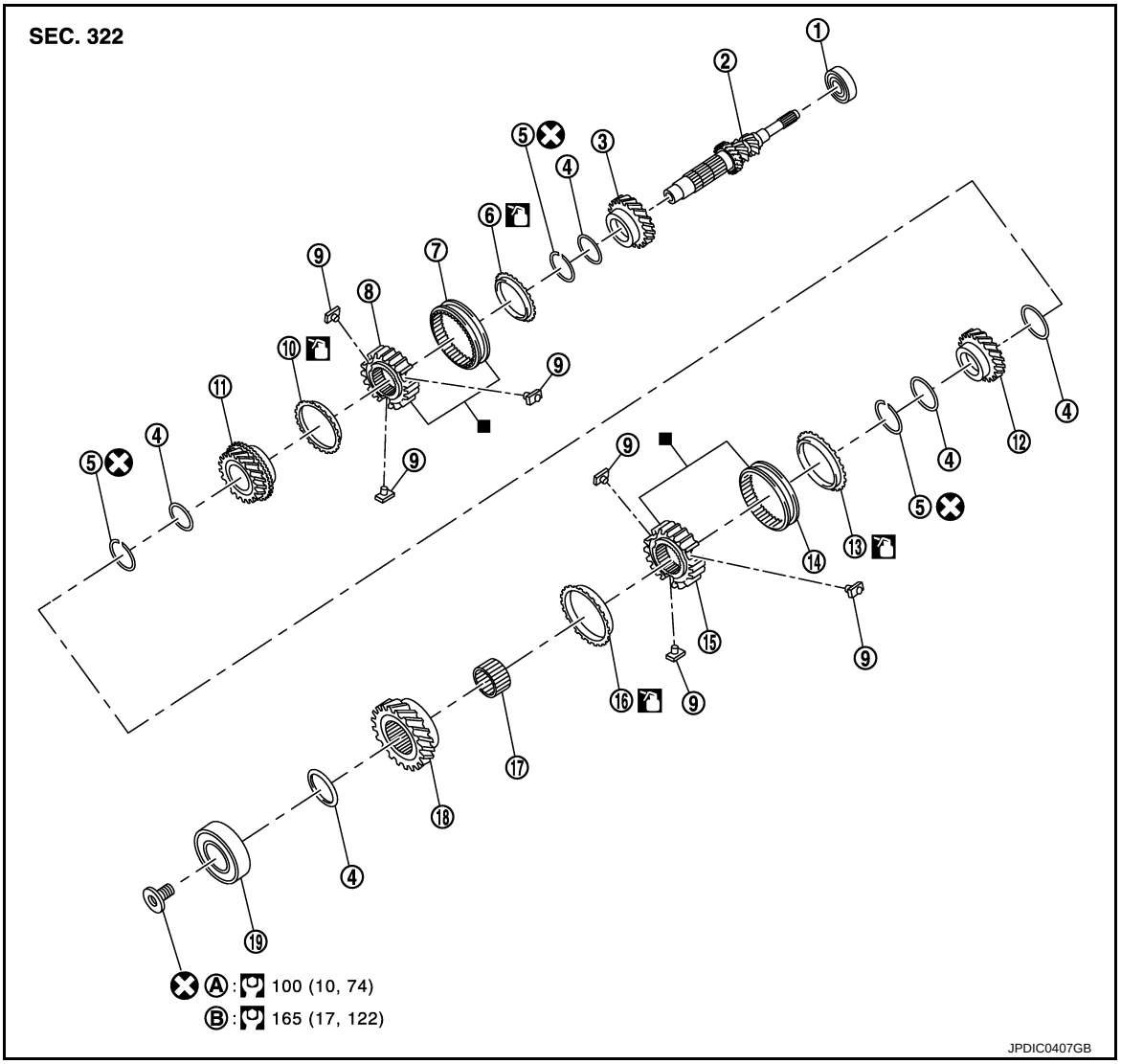

1. Input shaft front bearing	2. Input shaft	3. 3rd input gear
4. Spacer	5. Snap ring	6. 3rd baulk ring
7. 3rd-4th coupling sleeve	8. 3rd-4th synchronizer hub	9. Insert key
10. 4th baulk ring	11. 4th input gear	12. 5th input gear
13. 5th baulk ring	14. 5th-6th coupling sleeve	15. 5th-6th synchronizer hub
16. 6th baulk ring	17. Needle bearing	18. 6th input gear
19. Input shaft rear bearing		
A. First step	B. Final step	

: Apply gear oil.

: Replace the parts as a set.

Refer to GI-4, "Components" for symbols not described on the above.

Disassembly

INFOID:0000000009948885

CAUTION:

- **Fix input shaft in a vise with backplate, and then remove gears and snap rings.**

- **For removal of snap ring, set snap ring pliers and flat pliers at both sides of snap ring. While expanding snap ring with snap ring pliers, move snap ring with flat pliers.**
- **Disassemble gear components putting direction marks on the parts that do not affect any functions.**

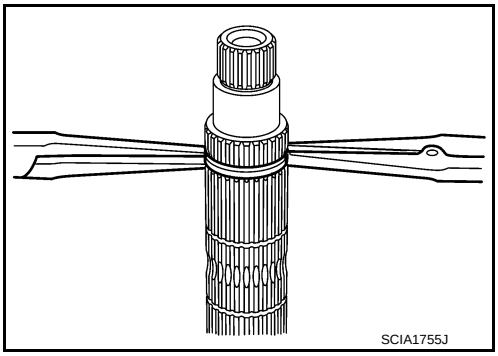

1. Remove input shaft rear bearing mounting bolt (1), using the drift (A) [SST: KV32300QAM (-)].

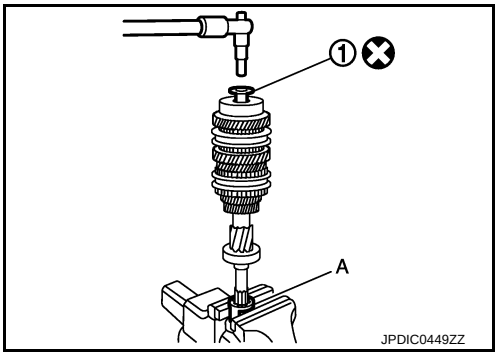

2. Remove input shaft rear bearing (1) according to the following procedures.

a. Set a puller [Commercial service tool] to input shaft rear bearing.

b. Remove input shaft rear bearing, using a drift (A) [Commercial service tool].

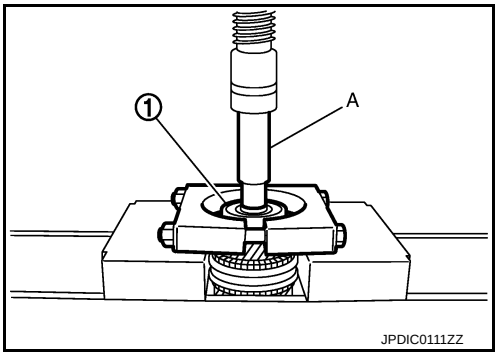

3. Remove spacer (1), 6th input gear (2), needle bearing, 6th baulk ring, and 5th-6th synchronizer hub assembly (3).

4. Remove insert keys and 5th-6th coupling sleeve from 5th-6th synchronizer hub.

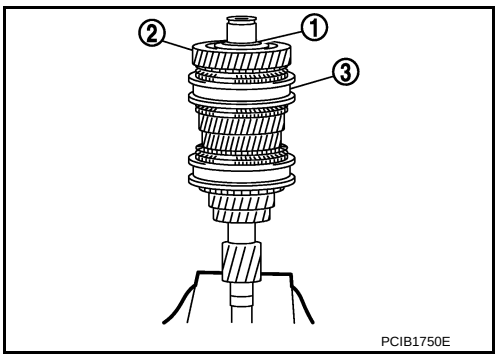

5. Remove snap ring (1).

6. Remove spacer, 5th baulk ring, 5th input gear (2), and spacer.

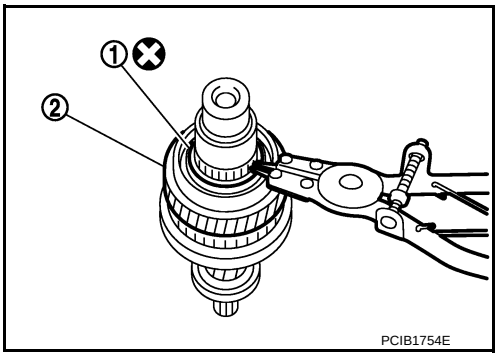

7. Remove snap ring (1).
8. Remove spacer, 4th input gear (2), 4th baulk ring, and 3rd-4th synchronizer hub assembly (3).
9. Remove insert keys and 3rd-4th coupling sleeve from 3rd-4th synchronizer hub.

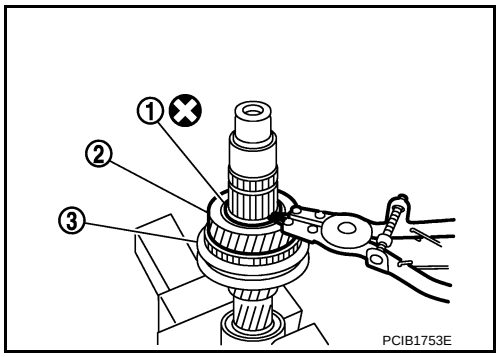

10. Remove snap ring (1).
11. Remove spacer, 3rd baulk ring, and 3rd input gear (2).

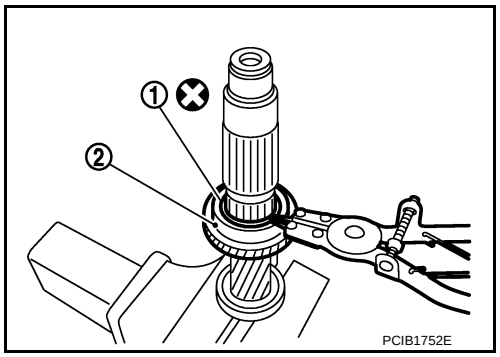

12. Set a puller [Commercial service tool] to input shaft front bearing (1), and then remove input shaft front bearing.

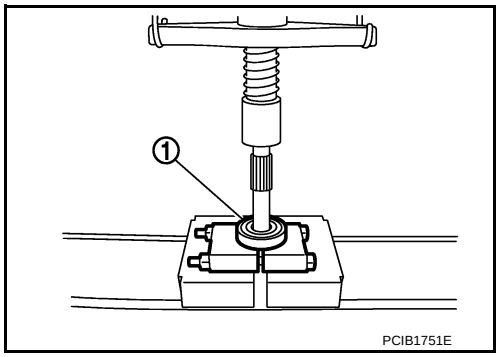

Assembly

INFOID:0000000009948886

Note the following procedures, and assemble in the reverse order of disassembly.

CAUTION:

- **Replace transaxle assembly when replacing input shaft.**
- **For installation of snap ring, set snap ring pliers and flat pliers at both sides of snap ring. While expanding snap ring with snap ring pliers, move snap ring with flat pliers.**
- **Never reuse snap ring.**
- **Check that snap ring is securely installed in a groove.**
- **Replace 3rd-4th coupling sleeve and 3rd-4th synchronizer hub as a set.**
- **Replace 5th-6th coupling sleeve and 5th-6th synchronizer hub as a set.**

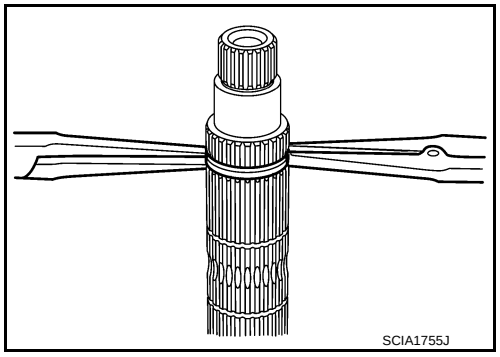

- **Be careful to install 3rd-4th synchronizer hub according to the specified direction.**

  A : 3rd input gear side
  B : 4th input gear side

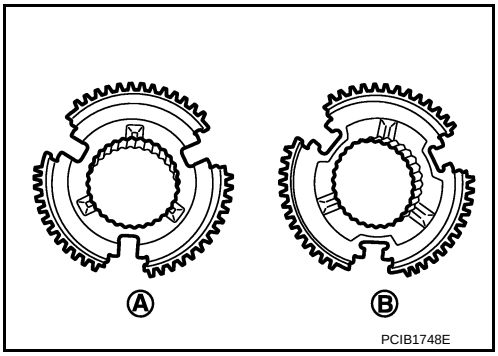

- **Be careful to install 5th-6th synchronizer hub according to the specified direction.**

  A : 5th input gear side
  B : 6th input gear side

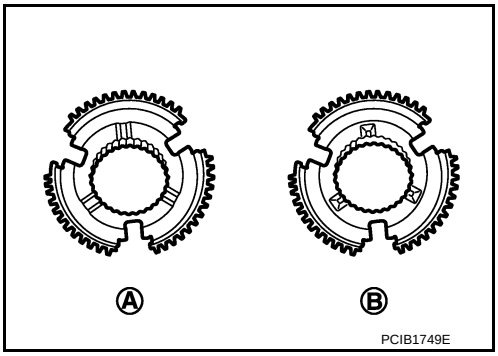

- Install input shaft front bearing (1), using a drift (A) [Commercial service tool].

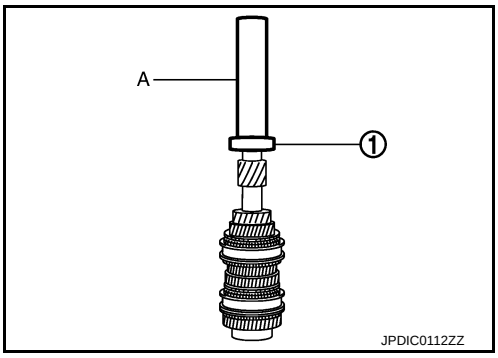

- Install input shaft rear bearing (1), using a drift (A) [Commercial service tool] and the drift (B) [SST: ST36720030 (-)].
- Apply gear oil to 3rd baulk ring, 4th baulk ring, 5th baulk ring, and 6th baulk ring.

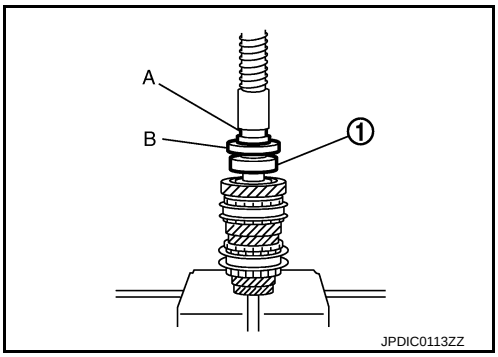

- Install input shaft rear bearing mounting bolt (1) according to the following procedures.

CAUTION:
Follow the procedures. Otherwise it may cause a transaxle malfunction.

1. Fix the drift (A) [SST: KV32300QAM (-)] in a vise, and then set input shaft assembly.
2. Install input shaft rear bearing mounting bolt, and then tighten it to the specified torque of the first step.
3. Loosen input shaft rear bearing mounting bolt by a half turn.
4. Tighten input shaft rear bearing mounting bolt to the specified torque of the final step.

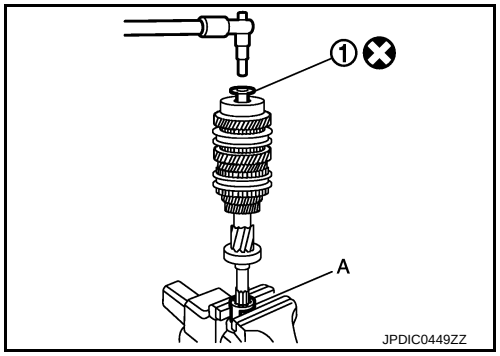

Inspection

INFOID:0000000009948887

INSPECTION AFTER DISASSEMBLY

Input shaft and gear

Check the following items and replace if necessary.

- Damage, peeling, bend, uneven wear, and distortion of shaft.
- Excessive wear, damage, and peeling of gear.

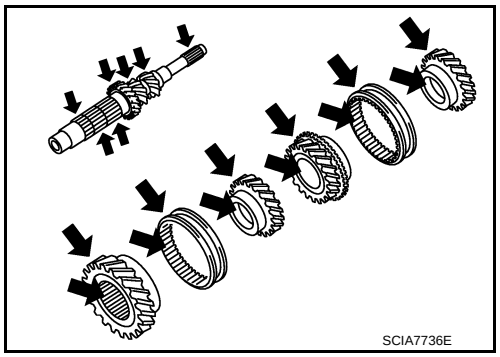

Synchronizer hub and coupling sleeve

Check the following items and replace if necessary.

- Breakage, damage, and unusual wear on contact surface of coupling sleeve, synchronizer hub, and insert key.
- Coupling sleeve and synchronizer hub move smoothly.

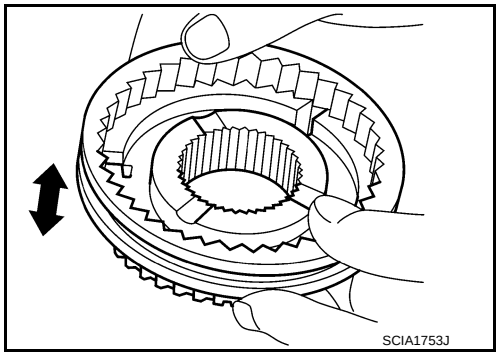

Baulk ring

Check contact surface of baulk ring cam and insert key for excessive wear, uneven wear, bend, and damage. Replace if necessary.

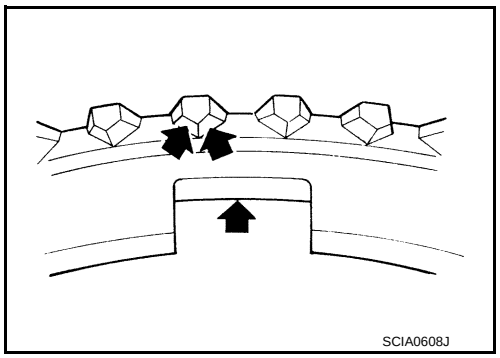

Bearing

Check bearing for damage and unsmooth rotation. Replace if necessary.

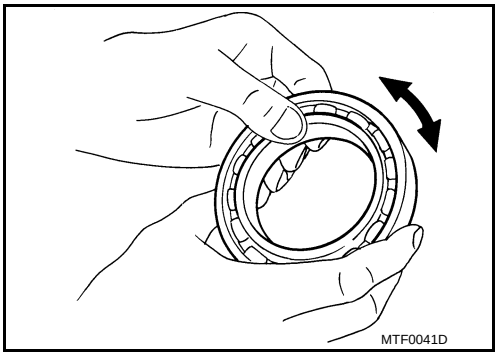

MAINSHAFT AND GEAR

Exploded View

INFOID:0000000009948888

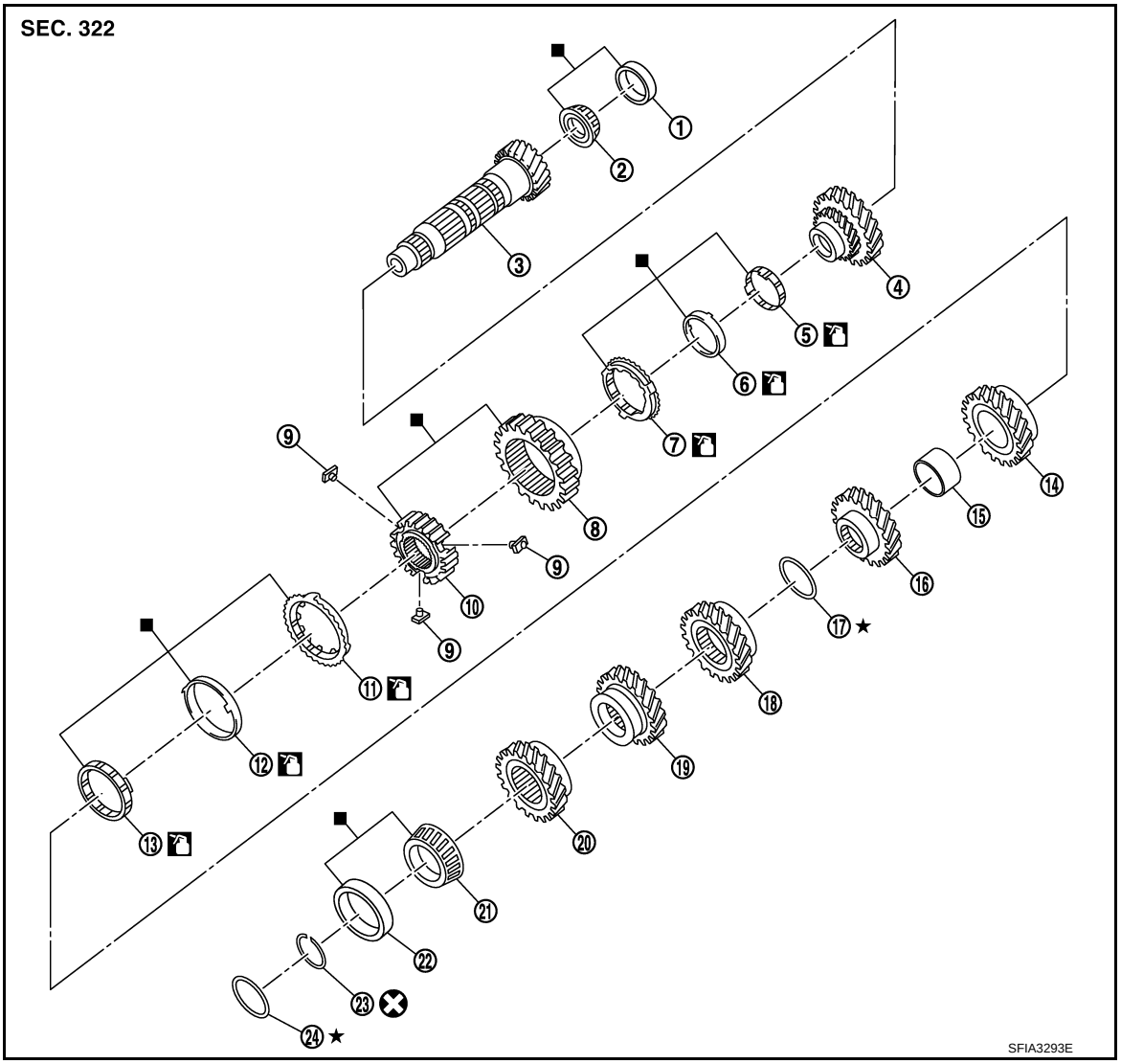

1.	Mainshaft front bearing outer race	2.	Mainshaft front bearing inner race	3.	Mainshaft
4.	1st main gear	5.	1st inner baulk ring	6.	1st synchronizer cone
7.	1st outer baulk ring	8.	1st-2nd coupling sleeve	9.	Insert key
10.	1st-2nd synchronizer hub	11.	2nd outer baulk ring	12.	2nd synchronizer cone
13.	2nd inner baulk ring	14.	2nd main gear	15.	Bushing
16.	3rd main gear	17.	Mainshaft adjusting shim	18.	4th main gear
19.	5th main gear	20.	6th main gear	21.	Mainshaft rear bearing inner race
22.	Mainshaft rear bearing outer race	23.	Snap ring	24.	Mainshaft rear bearing adjusting shim

: Apply gear oil.

: Replace the parts as a set.

Refer to GI-4, "Components" for symbols not described on the above.

Disassembly

INFOID:0000000009948889

CAUTION:

- **Fix mainshaft in a vise with backplate, and then remove gears and snap rings.**
- **For removal of snap ring, set snap ring pliers and flat pliers at both sides of snap ring. While expanding snap ring with snap ring pliers, move snap ring with flat pliers.**
- **Disassemble gear components putting direction marks on the parts that never affect any functions.**

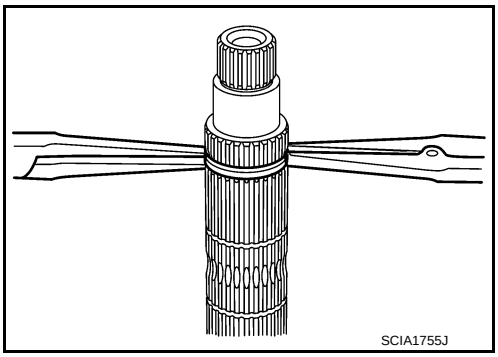

1. Remove snap ring (1).

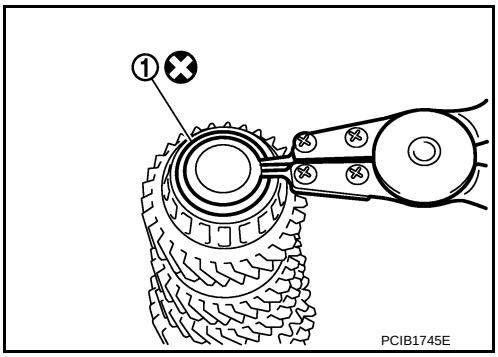

2. Remove 6th main gear (1) and mainshaft rear bearing inner race (2) according to the following procedures.

a. Set a puller [Commercial service tool] to 6th main gear.

b. Remove mainshaft rear bearing inner race and 6th main gear, using the drift (A) [SST: ST33052000 (-)].

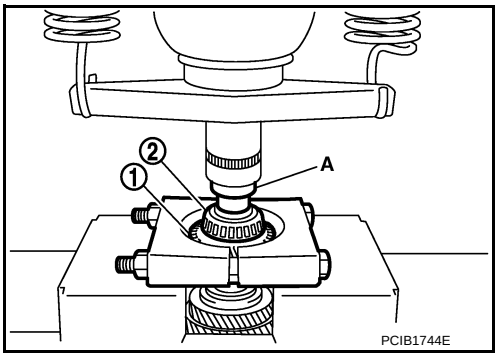

3. Remove 4th main gear (1) and 5th main gear (2) according to the following procedures.

a. Set a puller [Commercial service tool] to 4th main gear.

b. Remove 5th main gear and 4th main gear, using the drift (A) [SST: ST33052000 (-)].

4. Remove mainshaft adjusting shim.

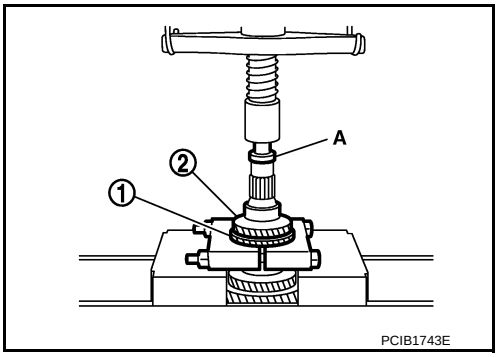

5. Remove 1st main gear (1), 1st-2nd synchronizer hub assembly (2), 2nd main gear (3), and 3rd main gear (4) according to the following procedures.

a. Set a puller [Commercial service tool] to 1st main gear.

b. Remove 3rd main gear, bushing, 2nd main gear, 2nd inner baulk ring, 2nd synchronizer cone, 2nd outer baulk ring, 1st-2nd synchronizer hub assembly, 1st outer baulk ring, 1st synchronizer cone, 1st inner baulk ring, and 1st main gear, using the drift (A) [SST: ST33052000 (-)].

c. Remove insert keys and 1st-2nd coupling sleeve from 1st-2nd synchronizer hub.

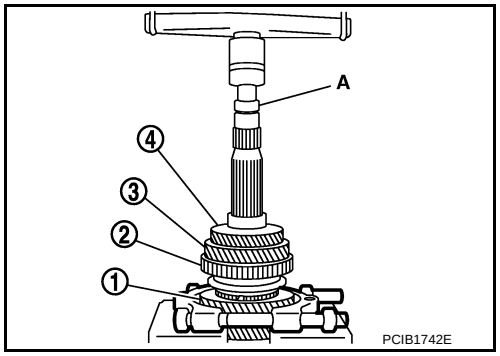

6. Remove mainshaft front bearing inner race (1) according to the following procedures.

a. Set a puller [Commercial service tool] to mainshaft front bearing inner race.

b. Remove mainshaft front bearing inner race, using the drift (A) [SST: ST33052000 (-)].

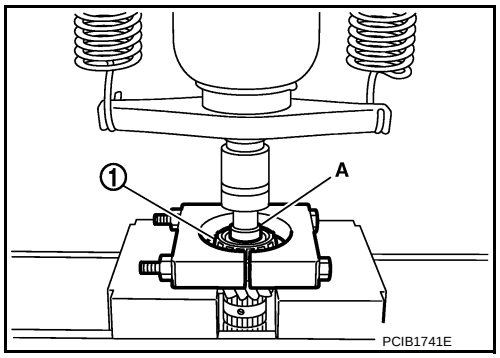

Assembly

INFOID:0000000009948890

CAUTION:

- **Select mainshaft rear bearing adjusting shim according to the following procedures when replacing mainshaft adjusting shim, 6th main gear, 5th main gear, or 4th main gear.**
- **Replace mainshaft adjusting shim.**
- **If new mainshaft adjusting shim is thinner than previous one, offset the thickness difference by selecting thicker mainshaft rear bearing adjusting shim.**
- **If new mainshaft adjusting shim is thicker than previous one, offset the thickness difference by selecting thinner mainshaft rear bearing adjusting shim.**
- **Replace 6th main gear, 5th main gear, or 4th main gear.**
- **Measure the thickness of the main gear used before and the new main gear**
- **Increase the thickness of the mainshaft rear bearing adjusting shim, if the difference is smaller than 0.025 mm (0.0010 in).**
- **Replace transaxle assembly when replacing mainshaft.**
- **For installation of snap ring, set snap ring pliers and flat pliers at both sides of snap ring. While expanding snap ring with snap ring pliers, move snap ring with flat pliers.**

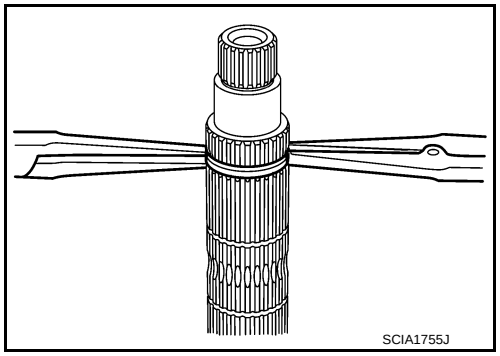

1. Install mainshaft front bearing inner race (1), using the drift (A) [SST: ST36720030 (-)].
   CAUTION:
   Replace mainshaft front bearing outer race and mainshaft front bearing inner race as a set.
2. Apply gear oil to 1st inner baulk ring, 1st synchronizer cone, 1st outer baulk ring, 2nd inner baulk ring, 2nd synchronizer cone, and 2nd outer baulk ring.
   CAUTION:
   - **Replace 1st inner baulk ring, 1st synchronizer cone, and 1st outer baulk ring as a set.**
   - **Replace 2nd inner baulk ring, 2nd synchronizer cone, and 2nd outer baulk ring as a set.**

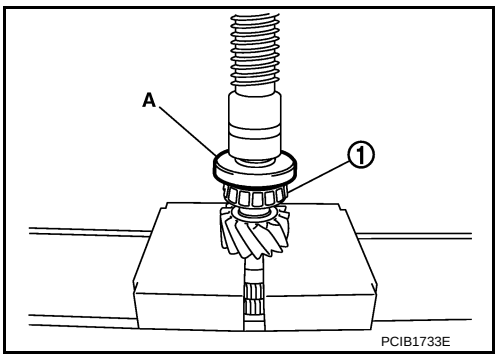

3. Install insert keys and 1st-2nd coupling sleeve to 1st-2nd synchronizer hub.
   CAUTION:
   Replace 1st-2nd synchronizer hub and 1st-2nd coupling sleeve as a set.
4. Install 1st main gear (1), 1st inner baulk ring, 1st synchronizer cone, 1st outer baulk ring, 1st-2nd synchronizer hub assembly (2), 2nd inner baulk ring, 2nd synchronizer cone, and 2nd outer baulk ring.
5. Install bushing (3), using the drift (A) [SST: KV32102700 (-)].

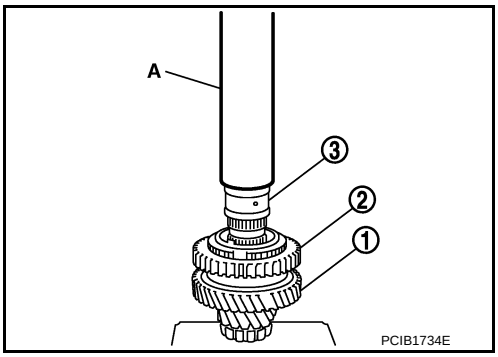

6. Install 3rd main gear (1) and 2nd main gear (2), using the drift (A) [SST: KV32102700 (-)].

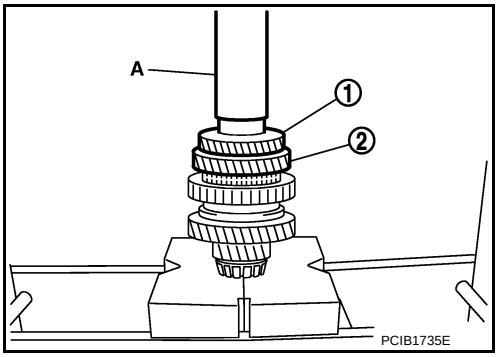

7. Measure dimension “L” as shown in the figure. Select mainshaft adjusting shim (1) according to the following list, and then install it to mainshaft.

   2 : Mainshaft
   3 : 3rd main gear

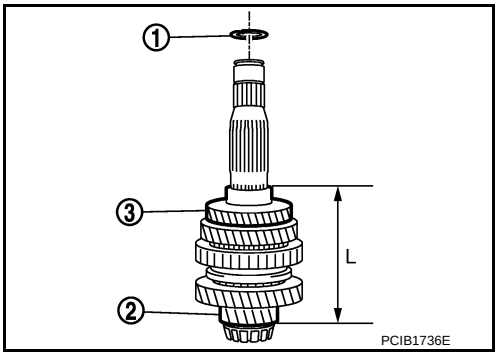

Unit: mm (in)

Dimension “L”	Thickness of mainshaft adjusting shim
147.690 – 147.666 (5.815 – 5.814)	1.500 (0.0591)
147.665 – 147.641 (5.814 – 5.813)	1.525 (0.0600)
147.640 – 147.616 (5.813 – 5.812)	1.550 (0.0610)
147.615 – 147.591 (5.812 – 5.811)	1.575 (0.0620)
147.590 – 147.566 (5.811 – 5.810)	1.600 (0.0630)
147.565 – 147.541 (5.810 – 5.809)	1.625 (0.0640)
147.540 – 147.516 (5.809 – 5.808)	1.650 (0.0650)
147.515 – 147.491 (5.808 – 5.807)	1.675 (0.0659)

Dimension “L”	Thickness of mainshaft adjusting shim
147.490 – 147.466 (5.807 – 5.806)	1.700 (0.0669)
147.465 – 147.441 (5.806 – 5.805)	1.725 (0.0679)
147.440 – 147.416 (5.805 – 5.804)	1.750 (0.0689)
147.415 – 147.391 (5.804 – 5.803)	1.775 (0.0699)

8. Install 4th main gear (1), using the drift (A) [SST: KV32102700 (-)].

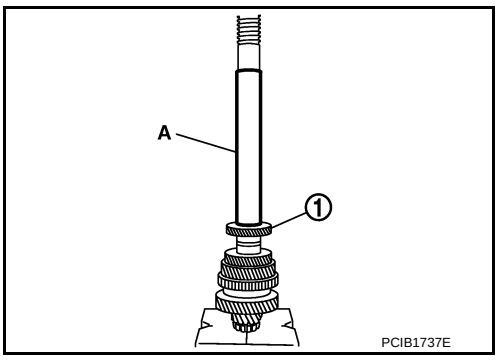

9. Install 5th main gear (1), using the drift (A) [SST: KV32102700 (-)].

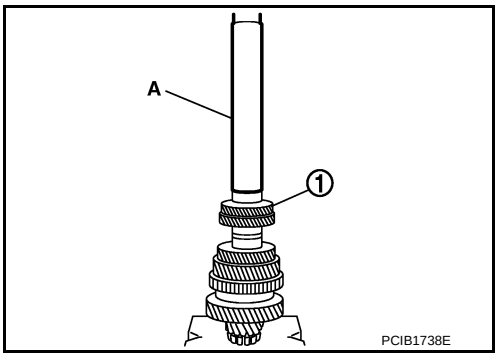

10. Install 6th main gear (1), using the drift (A) [SST: KV32102700 (-)].

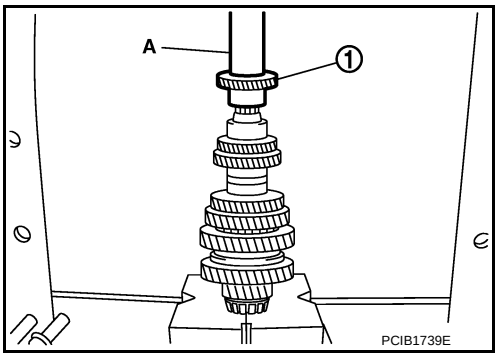

11. Install mainshaft rear bearing inner race (1), using the drift (A) [SST: ST30901000 (J-26010-01)].
CAUTION:
Replace mainshaft rear bearing inner race and mainshaft rear bearing outer race as a set.
12. Install snap ring.
CAUTION:
Never reuse snap ring.

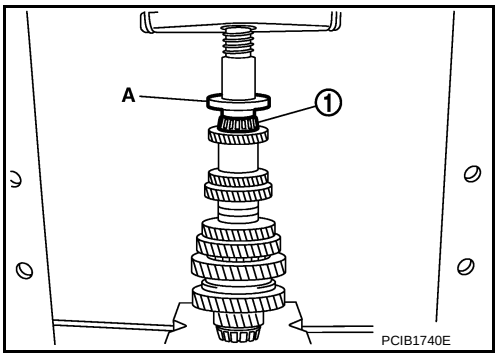

Inspection

INFOID:0000000009948891

INSPECTION AFTER DISASSEMBLY

Mainshaft and Gear

Check the following items and replace if necessary.
- Damage, peeling, bend, uneven wear, and distortion of shaft.
- Excessive wear, damage, and peeling of gear.

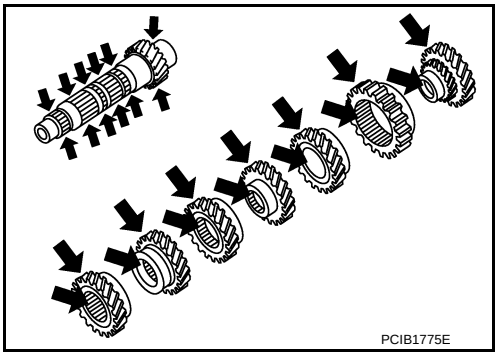

Synchronizer hub and coupling sleeve

Check the following items and replace if necessary.
- Breakage, damage, and unusual wear on contact surface of coupling sleeve, synchronizer hub, and insert key.
- Coupling sleeve and synchronizer hub move smoothly.

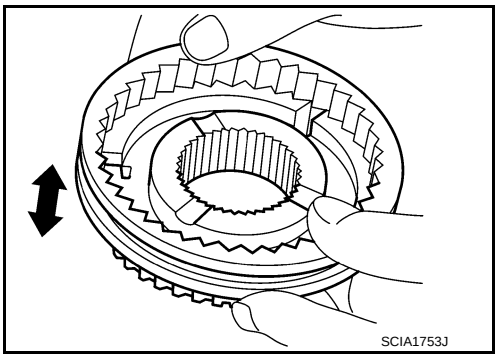

Baulk ring

Check contact surface of baulk ring cam and insert key for excessive wear, uneven wear, bend, and damage. Replace if necessary.

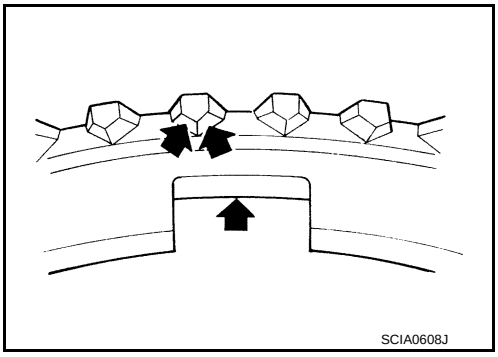

Bearing

Check bearing for damage and unsmooth rotation. Replace if necessary.

CAUTION:
- **Replace mainshaft front bearing outer race and mainshaft front bearing inner race as a set.**
- **Replace mainshaft rear bearing inner race and mainshaft rear bearing outer race as a set.**

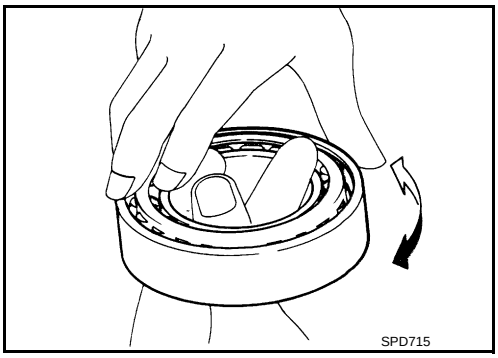

REVERSE IDLER SHAFT AND GEAR

Exploded View

INFOID:0000000009948892

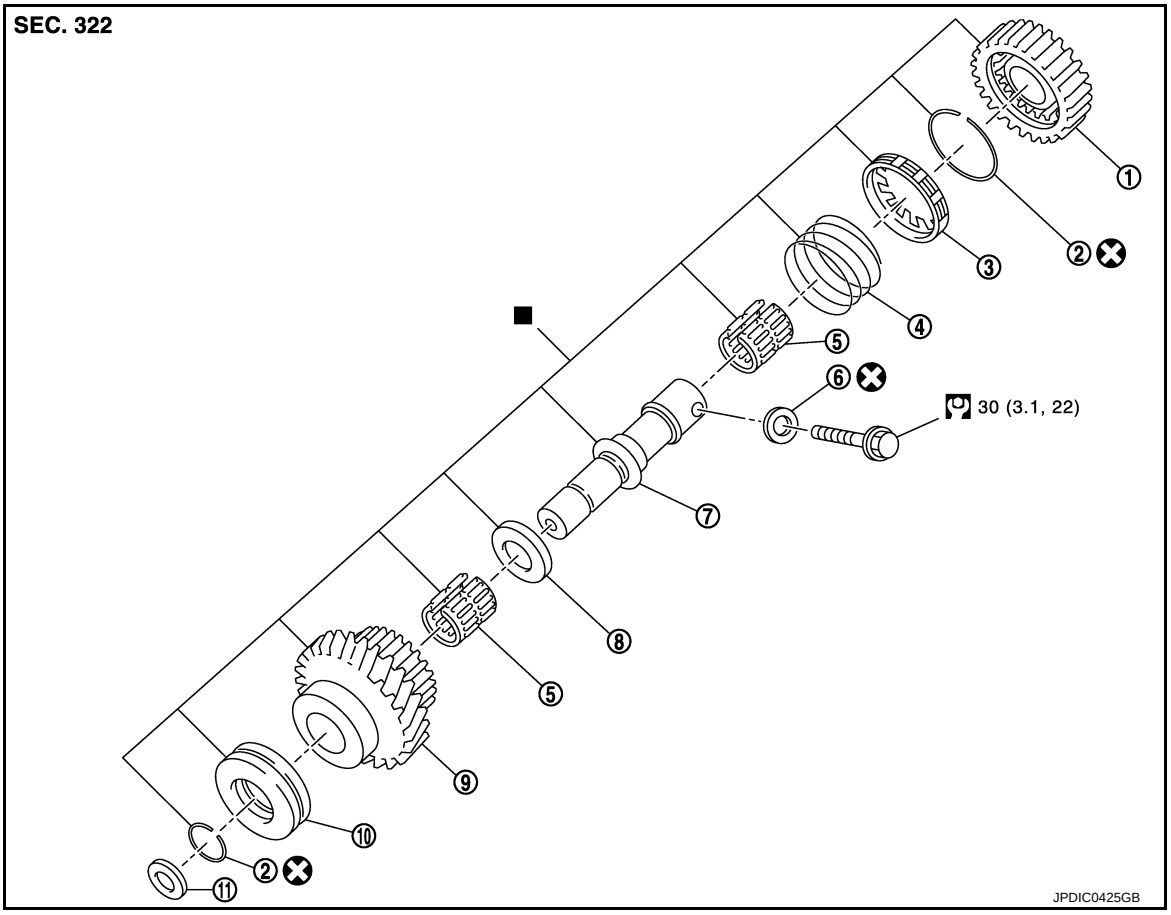

1. Reverse output gear
2. Snap ring
3. Reverse baulk ring
4. Return spring
5. Needle bearing
6. Seal washer
7. Reverse idler shaft
8. Spacer
9. Reverse input gear
10. Lock washer
11. Spring washer

■: Replace the parts as a set.

Refer to GI-4, "Components" for symbols not described on the above.

Disassembly

INFOID:0000000009948893

1. Remove reverse output gear (1).

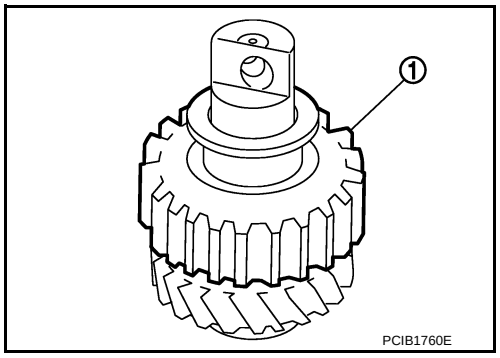

2. Remove snap ring (1).

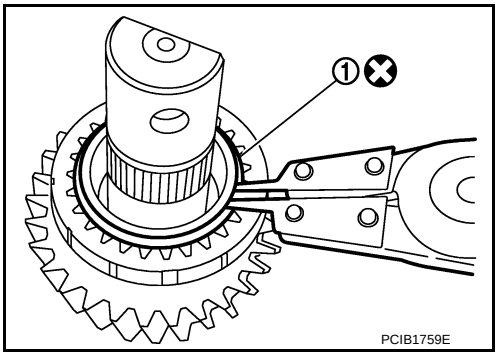

3. Remove reverse baulk ring (1) and return spring (2).

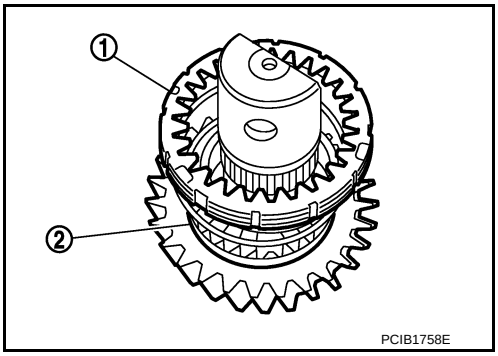

4. Remove snap ring (1), lock washer (2), and reverse input gear (3).

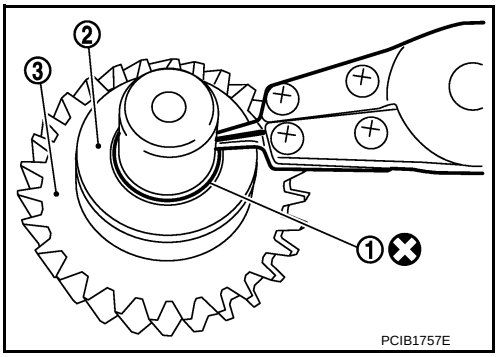

5. Remove needle bearings (1) and washer.

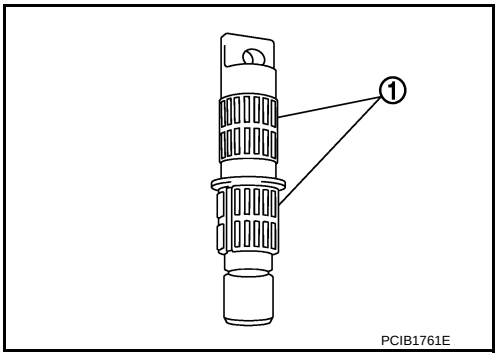

Assembly

INFOID:0000000009948894

Note the following procedures, and assemble in the reverse order of disassembly.

CAUTION:

- **Never reuse snap ring.**
- **Check that snap ring is securely installed in a groove.**
- **Replace reverse output gear, snap ring, reverse baulk ring, return spring, needle bearing, reverse idler shaft, spacer, reverse input gear, and lock washer as a set.**

Inspection

INFOID:0000000009948895

INSPECTION AFTER DISASSEMBLY

Shaft and Gear

Check the following items. Replace reverse output gear, snap ring, reverse baulk ring, return spring, needle bearing, reverse idler shaft, spacer, reverse input gear, and lock washer as a set, if necessary.

- Damage, peeling, bend, uneven wear, and distortion of shaft
- Excessive wear, damage, and peeling of gear

Bearing

Check damage and rotation of bearing. Replace reverse output gear, snap ring, reverse baulk ring, return spring, needle bearing, reverse idler shaft, spacer, reverse input gear, and lock washer as a set, if necessary.

FINAL DRIVE

Exploded View

INFOID:0000000009948896

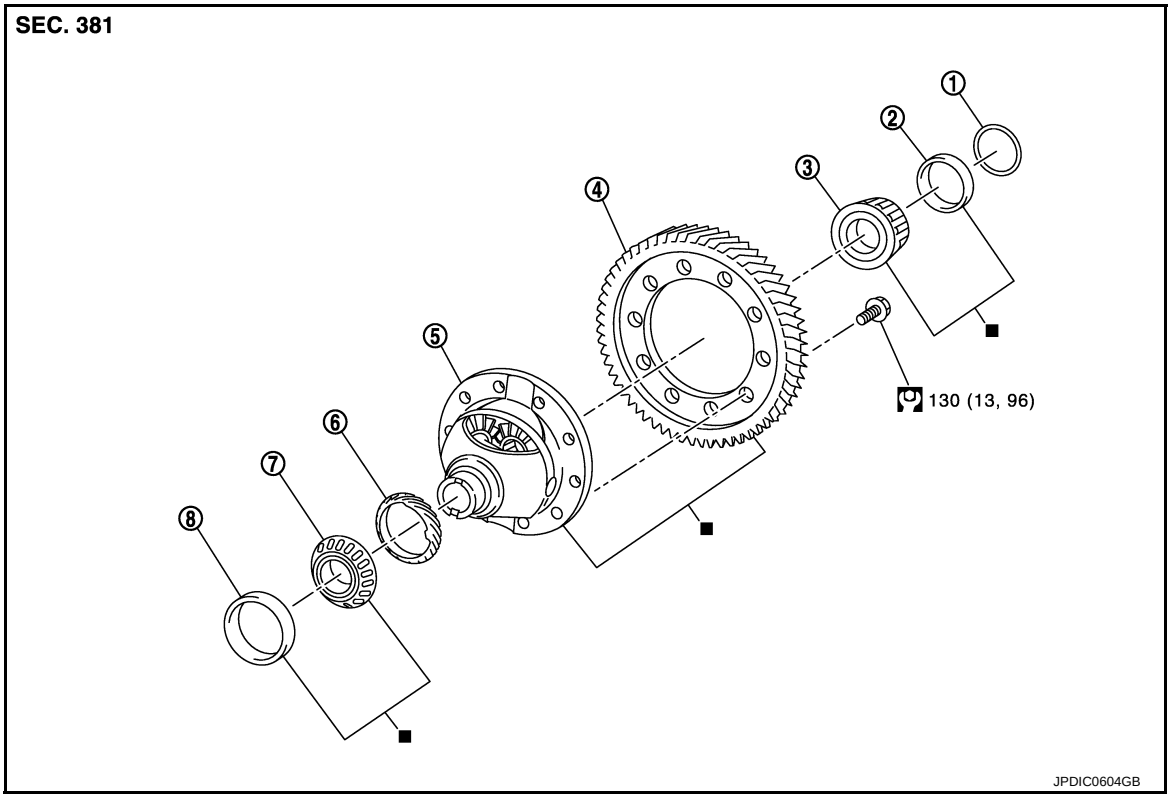

1. Shim
2. Differential side bearing outer race (transaxle case side)
3. Differential side bearing inner race (transaxle case side)
4. Final gear
5. Differential case
6. Speedometer drive gear
7. Differential side bearing inner race (clutch housing side)
8. Differential side bearing outer race (clutch housing side)

■: Replace the parts as a set.

Refer to GI-4, "Components" for symbols not described on the above.

Disassembly

INFOID:0000000009948897

1. Remove differential side bearing inner race (clutch housing side) (1) according to the following procedures.

a. Set a puller [Commercial service tool] to differential side bearing inner race (clutch housing side).

b. Remove differential side bearing inner race (clutch housing side), using the drift (A) [SST: ST33061000 (J-8107-2)].

2. Remove speedometer drive gear.

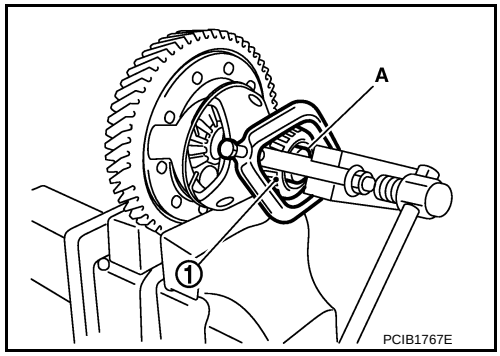

3. Remove final gear mounting bolts, and then remove final gear (1).

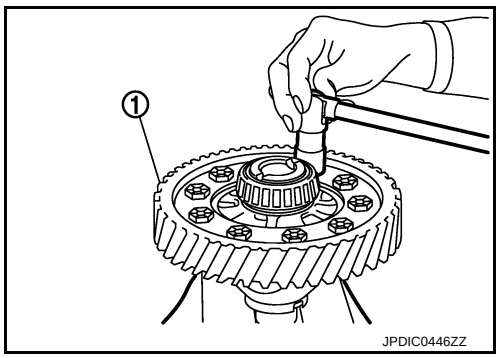

4. Remove differential side bearing inner race (transaxle case side) (1) according to the following procedures.
a. Set a puller [Commercial service tool] to differential side bearing inner race (transaxle case side).
b. Remove differential side bearing inner race (transaxle case side), using a drift (A) [Commercial service tool].

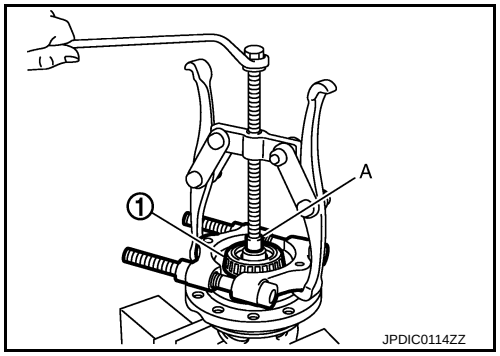

Assembly

INFOID:0000000009948898

1. Install final gear, and then tighten final gear mounting bolts to the specified torque.
CAUTION:
Replace final gear and differential case as a set.
2. Install speedometer drive gear.
3. Install differential side bearing inner race (clutch housing side), using a drift (A) [Commercial service tool].
CAUTION:
Replace differential side bearing inner race (clutch housing side) and differential side bearing outer race (clutch housing side) as a set.

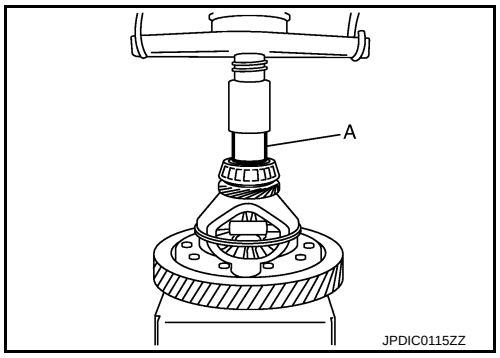

4. Install differential side bearing inner race (transaxle case side), using a drift (A) [Commercial service tool].
CAUTION:
Replace differential side bearing inner race (transaxle case side) and differential side bearing outer race (transaxle case side) as a set.

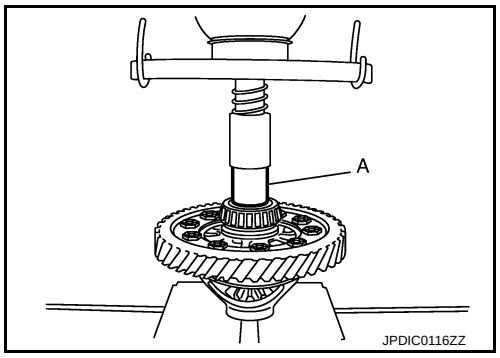

Inspection

INFOID:0000000009948899

INSPECTION AFTER DISASSEMBLY

Gear and Case

Check final gear and differential case. Replace if necessary.

Bearing

Check bearing for damage and unsmooth rotation. Replace if necessary.

CAUTION:

- **Replace differential side bearing outer race (clutch housing side) and differential side bearing inner race (clutch housing side) as a set.**
- **Replace differential side bearing inner race (transaxle case side) and differential side bearing outer race (transaxle case side) as a set.**

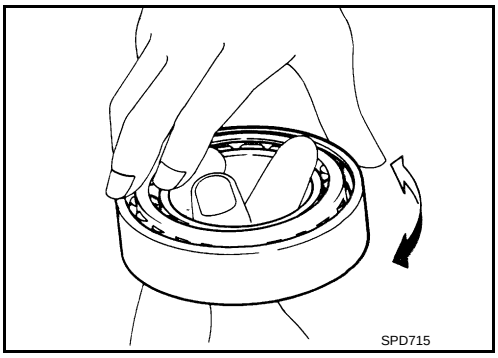

SHIFT FORK AND FORK ROD

Exploded View

INFOID:0000000009948900

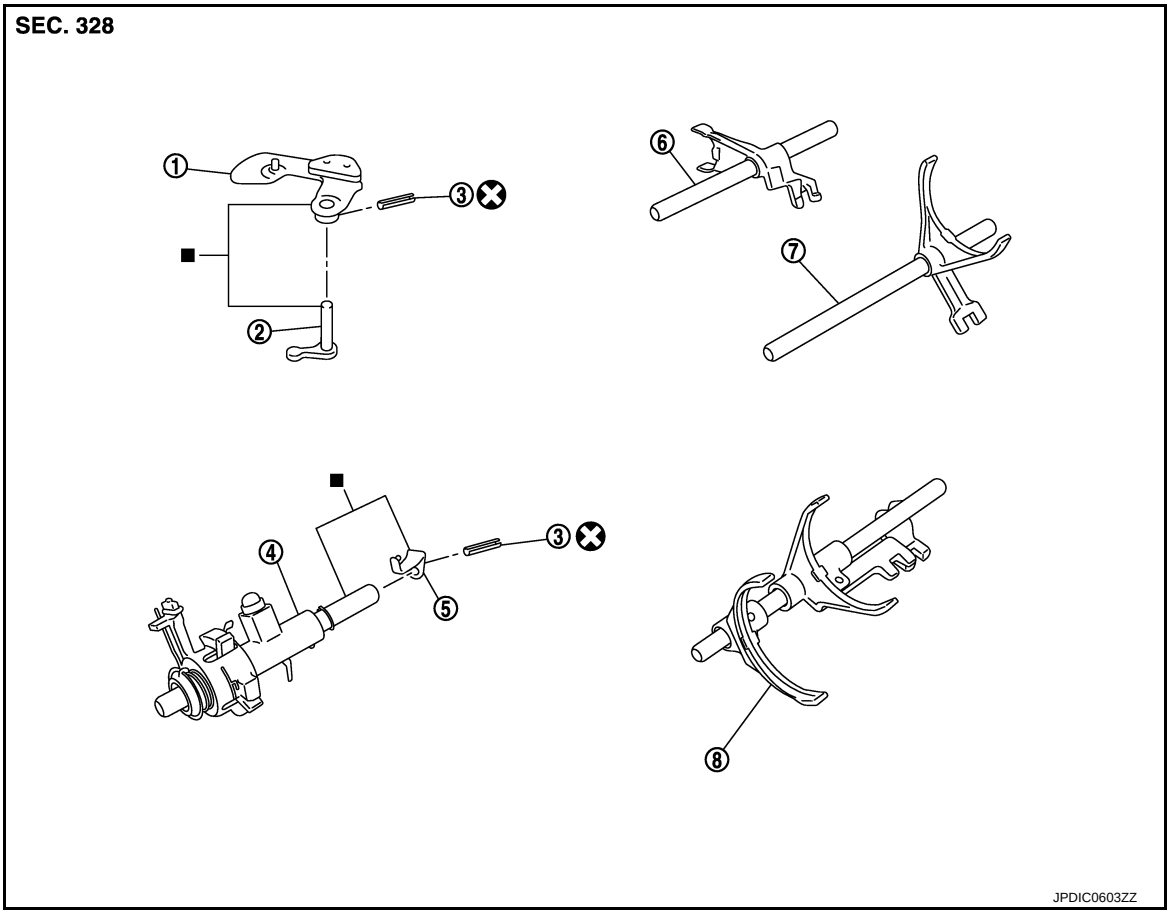

1. Shifter lever A
2. Shifter lever B
3. Retaining pin
4. Selector
5. Selector lever
6. Reverse fork rod
7. 1st-2nd fork rod
8. Fork rod

■: Replace the parts as a set.

Refer to GI-4, "Components" for symbols not described on the above.

Disassembly

INFOID:0000000009948901

Refer to TM-32, "Disassembly" for disassembly procedure.

Assembly

INFOID:0000000009948902

Refer to TM-37, "Assembly" for assembly procedure.

Inspection

INFOID:0000000009948903

INSPECTION AFTER DISASSEMBLY

Check contact surface and sliding surface for excessive wear, uneven wear, bend, and damage. Replace if necessary.

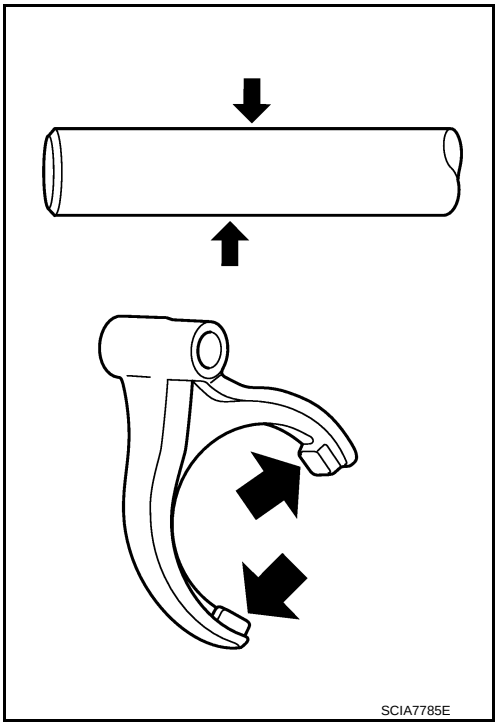

SERVICE DATA AND SPECIFICATIONS (SDS)

SERVICE DATA AND SPECIFICATIONS (SDS)

General Specification

INFOID:0000000009948904

Transaxle type			RS6F94R
Engine type			MR18DE
Number of speed			6
Synchromesh type			Warner
Shift pattern			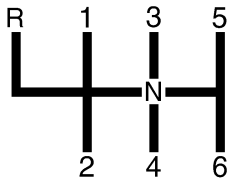 PCIB1769E
Gear ratio	1st		3.727
	2nd		2.105
	3rd		1.452
	4th		1.171
	5th		0.971
	6th		0.811
	Reverse		3.687
	Final gear		3.933
Number of teeth	Input gear	1st	11
		2nd	19
		3rd	31
		4th	35
		5th	35
		6th	37
		Reverse	11
	Main gear	1st	41
		2nd	40
		3rd	45
		4th	41
		5th	34
		6th	30
		Reverse	42
	Reverse idler gear	Input/Output	28/29
	Final gear	Final gear/Pinion	59/15
		Side gear/Pinion mate gear	21/18
Oil capacity (Reference)		ℓ (US pt, Imp pt)	Approx. 2.0 (4-1/4, 3-1/2)
Remarks	Reverse synchronizer		Installed
	Triple-cone synchronizer		1st and 2nd

BASIC INSPECTION

DIAGNOSIS AND REPAIR WORK FLOW

Work Flow

INFOID:0000000009948905

BEFORE STARTING TROUBLE DIAGNOSIS

- TCM receives signals from sensor, switch, and others to control gear shifting and lock-up with a solenoid. Therefore, input and output signals during CVT activation must be correct and stable. In addition, valves must be free from adhesion and solenoids must have no malfunctions for CVT system to operate normally.
- It is more difficult to diagnose intermittent malfunctions than continuous ones. These kinds of malfunctions often occur due to poor electrical connections or improper wiring. If this is the case, it is necessary to check the related circuit carefully and not to replace a normal part by mistake.
- When a visual check is not sufficient, connect CONSULT (or GST) and circuit tester according to “DETAILED FLOW” and perform “ROAD TEST”. (Refer to TM-211, "Description".)
- For a complaint regarding drivability, always take time to talk with the customer before starting trouble diagnoses. Helpful information, especially for diagnosing intermittent malfunctions, can be obtained from the customer.
- Use the attached “Diagnostic Work Sheet” to specifically find out what malfunction occurs under what conditions. (Refer to TM-65, "Diagnostic Work Sheet".)
- Starting with the inspection of basic items facilitates diagnoses of malfunctions in electrically controlled vehicle drivability.

DETAILED FLOW

1. OBTAIN INFORMATION ABOUT SYMPTOM

1. Refer to TM-65, "Diagnostic Work Sheet" and interview the customer to obtain the malfunction information (conditions and environment when the malfunction occurred) as much as possible when the customer brings in the vehicle.
2. Check the following:

- Service history
- Harnesses and connectors malfunction. Refer to GI-40, "Intermittent Incident".

>> GO TO 2.

2. CHECK DTC

1. Before checking the malfunction, check whether any DTC exists.
2. If DTC exists, perform the following operations.

- Record the DTC and freeze frame data. (Print out the data using CONSULT and affix them to the Work Order Sheet.)
- Erase DTCs.
- Check the relationship between the cause that is clarified with DTC and the malfunction information described by the customer. TM-188, "Symptom Table" is effective.

3. Check the information of related service bulletins and others also.

Do malfunction information and DTC exist?

Malfunction information and DTC exist. >>GO TO 3.
Malfunction information exists, but not DTC. >>GO TO 4.
Malfunction information does not exist, but DTC does. >>GO TO 5.

3. REPRODUCE MALFUNCTION SYMPTOM

Check any malfunction described by a customer, except those with DTC on the vehicle.
Also investigate whether the symptom is a fail-safe or normal operation. Refer to TM-184, "Fail-safe".
When a malfunction symptom is reproduced, the question sheet is effective. Refer to TM-65, "Diagnostic Work Sheet".
Verify the relationship between the symptom and the conditions in which the malfunction described by the customer occurs.

>> GO TO 5.

4. REPRODUCE MALFUNCTION SYMPTOM

Check the malfunction described by the customer on the vehicle.
Also investigate whether the symptom is a fail-safe or normal operation. Refer to TM-184, "Fail-safe".
When a malfunction symptom is reproduced, the question sheet is effective. Refer to TM-65, "Diagnostic Work Sheet".
Verify the relationship between the symptom and the conditions in which the malfunction described by the customer occurs.

>> GO TO 6.

5. PERFORM "DTC CONFIRMATION PROCEDURE"

Perform "DTC CONFIRMATION PROCEDURE" of the appropriate DTC to check if DTC is detected again.
Refer to TM-186, "DTC Inspection Priority Chart" when multiple DTCs are detected, and then determine the order for performing the diagnosis.

NOTE:
If no DTC is detected, refer to the freeze frame data.

Is any DTC detected?

YES >> GO TO 7.
NO >> Check according to GI-40, "Intermittent Incident".

6. IDENTIFY MALFUNCTIONING SYSTEM WITH "DIAGNOSIS CHART BY SYMPTOM"

Use TM-188, "Symptom Table" from the symptom inspection result in step 4. Then identify where to start performing the diagnosis based on possible causes and symptoms.

>> GO TO 8.

7. REPAIR OR REPLACE THE MALFUNCTIONING PARTS

Repair or replace the detected malfunctioning parts.
Reconnect parts or connector after repairing or replacing, and then erase DTC if necessary.

>> GO TO 8.

8. FINAL CHECK

Perform "DTC CONFIRMATION PROCEDURE" again to make sure that the repair is correctly performed.
Check that malfunctions are not reproduced when obtaining the malfunction information from the customer, referring to the symptom inspection result in step 3 or 4.

Is DTC or malfunction symptom reproduced?

YES-1 (DTC is reproduced)>>GO TO 5.
YES-2 (Malfunction symptom is reproduced)>>GO TO 6.
NO >> Before delivering the vehicle to the customer, make sure that DTC is erased.

Diagnostic Work Sheet

INFOID:0000000009948906

DESCRIPTION

There are many operating conditions that may cause a malfunction of the transaxle parts. By understanding those conditions properly, a quick and exact diagnosis can be achieved.
In general, customers have their own criteria for a problem. Therefore, it is important to understand the symptom and status well enough by asking the customer about the concerns carefully. In order to systemize all the information for the diagnosis, prepare the question sheet referring to the question points.

KEY POINTS

WHAT ..... Vehicle & engine model
WHEN ..... Date, Frequencies
WHERE..... Road conditions
HOW ..... Operating conditions, Weather conditions, Symptoms

SEF907L

WORKSHEET SAMPLE

Question Sheet						
Customer name MR/MS		Registration number			Manuf. Date	
		VIN			Model & Year	
In Service Date		Engine			Mileage	km / Mile
Symptoms		☐ Vehicle does not move (☐ Any position ☐ Particular position)				
		☐ No up-shift	☐ No down-shift			
		☐ Lock-up malfunction				
		☐ Shift point too high	☐ Shift point too low			
		☐ Shift shock (☐ N → D ☐ N → R ☐ Lock-up ☐ R, D, L, Manual position)				
		☐ Slip (☐ N → D ☐ N → R ☐ Lock-up ☐ R, D, L, Manual position)				
		☐ Noise	☐ Vibration			
		☐ No pattern select				
		☐ Others ( )				
First occurrence		☐ Recently (Indicate approximate month and year)				
Frequency		☐ All the time ☐ Under certain conditions ☐ Sometimes (times a day)				
Weather conditions		☐ Not affected				
	Weather	☐ Fine	☐ Clouding	☐ Raining	☐ Snowing	☐ Other ( )
	Temp.	☐ Hot	☐ Warm	☐ Cool	☐ Cold	☐ Temp. [Approx. °C (°F)]
	Humidity	☐ High	☐ Middle	☐ Low		
Transaxle conditions		☐ Cold	☐ During warm-up		☐ After warm-up	
		☐ Engine speed (rpm)				
Road conditions		☐ In town	☐ In suburbs	☐ Freeway	☐ Off road (Up / Down)	
Driving conditions		☐ Not affected				
		☐ At starting	☐ While idling	☐ While engine racing	☐ At racing	☐ While cruising
		☐ While accelerating		☐ While decelerating	☐ While turning (Right / Left)	
		☐ Vehicle speed [km/h (MPH)]				
Other conditions						

ADDITIONAL SERVICE WHEN REPLACING TCM

Description

INFOID:0000000009948907

When replacing the TCM, perform the following work.

LOADING AND STORING OF CALIBRATION DATA

- The TCM acquires calibration data (individual characteristic value) of each solenoid that is stored in the ROM assembly (in the control valve). This enables the TCM to perform accurate control. After the TCM is replaced, check that the calibration data is correctly loaded and stored.

CAUTION:

When replacing TCM and transaxle assembly as a set, replace transaxle assembly first and then replace TCM.

If the TCM is replaced in advance, perform "ADDITIONAL SERVICE WHEN REPLACING TRANSAXLE ASSEMBLY". Refer to TM-68, "Description".

Procedure

INFOID:0000000009948908

CAUTION:

Immediately after TCM is replaced or after transaxle assembly is replaced (after TCM initialization is complete), self-diagnosis result of "P1701", "P1709" may be displayed. In this case, erase self-diagnosis result using CONSULT. After erasing self-diagnosis result, perform DTC P1701, P1709 reproduction procedure and check that malfunction is not detected. Refer to TM-144, "DTC Logic" (P1701), TM-148, "DTC Logic" (P1709).

1. LOAD CALIBRATION DATA

1. Shift the selector lever to the "P" position.
2. Turn ignition switch ON.
3. Check that "P" is displayed on shift position indicator on combination meter.
   NOTE:
   Displayed approximately 1 – 2 seconds after the selector lever is moved to the "P" position.

Does the shift position indicator display "P"?

YES >> GO TO 3.
NO >> GO TO 2.

2. DETECT MALFUNCTIONING ITEM

Check the following items:

- Harness between the TCM and the ROM assembly inside the transaxle assembly is open or shorted.
- Disconnected, loose, bent, collapsed, or otherwise abnormal connector housing terminals

Is the inspection result normal?

YES >> GO TO 1.
NO >> Repair or replace the malfunctioning parts.

3. STORE CALIBRATION DATA

1. Turn ignition switch OFF and wait for 5 seconds.
2. Turn ignition switch ON.

Does the shift position indicator display "P" at the same time when turning ON the ignition switch?

YES >> WORK END
NO >> Check harness between battery and TCM harness connector terminal. Refer to TM-144, "Diagnosis Procedure".

ADDITIONAL SERVICE WHEN REPLACING TRANSAXLE ASSEMBLY

Description

INFOID:0000000009948909

When replacing the transaxle assembly, perform the following work.

ERASING, LOADING AND STORING OF CALIBRATION DATA
- The TCM acquires calibration data (individual characteristic value) of each solenoid that is stored in the ROM assembly (in the control valve). This enables the TCM to perform accurate control. For this reason, after the transaxle assembly/control valve is replaced, it is necessary to erase the calibration data previously stored in TCM, to load new calibration data, and to stored them.

ERASING OF CVT FLUID DEGRADATION LEVEL DATA
- TCM records the degradation level of the CVT fluid calculated from the vehicle driving status. Therefore, if the transaxle assembly/control valve is replaced, it is necessary to erase the CVT fluid degradation level data recorded by TCM.

Procedure

INFOID:0000000009948910

CAUTION:
Immediately after TCM is replaced or after transaxle assembly is replaced (after TCM initialization is complete), self-diagnosis result of “P1701”, “P1709” may be displayed. In this case, erase self-diagnosis result using CONSULT. After erasing self-diagnosis result, perform DTC P1701, P1709 reproduction procedure and check that malfunction is not detected. Refer to TM-144, "DTC Logic" (P1701), TM-148, "DTC Logic" (P1709).

1. PREPARATION BEFORE WORK

With CONSULT
1. Start the engine.
   CAUTION:
   Never drive the vehicle.
2. Select “Data Monitor” in “TRANSMISSION”.
3. Select “ATFTEMP COUNT”.

Is “ATFTEMP COUNT” 47 [equivalent to 20°C (68°F)] or more?

YES >> GO TO 2.
NO >> 1. Warm up the transaxle assembly until “ATFTEMP COUNT” reaches “47” [equivalent to 20°C (68°F)] or more.
2. GO TO 2.

2. PERFORM TCM INITIALIZATION

With CONSULT
1. Turn ignition switch OFF.
2. Turn ignition switch ON.
   CAUTION:
   Never start the engine.
3. Select “Self Diagnostic Results” in “TRANSMISSION”.
4. Shift selector lever to “R” position.
5. Depress slightly the accelerator pedal (Pedal angle: 2.0/8) while depressing the brake pedal.
6. Select “Erase” with step 5.
7. Release brake pedal and accelerator pedal.
8. Turn ignition switch OFF while keeping the selector lever in “R” position.
9. Wait approximately 10 seconds.
10. Turn ignition switch ON while keeping the selector lever in “R” position.
11. Select “CALIB DATA” in “TRANSMISSION”.
12. Check that “CALIB DATA” value is as shown as in the following table.

Item name	Display value
UNIT CLB ID 1	00
UNIT CLB ID 2	00
UNIT CLB ID 3	00

Item name	Display value
UNIT CLB ID 4	00
UNIT CLB ID 5	00
UNIT CLB ID 6	00

Is “CALIB DATA” value it?

YES >> GO TO 3.
NO >> GO TO 1.

3. LOAD CALIBRATION DATA

1. Shift selector lever to “P” position.
2. Check that “P” is displayed on shift position indicator on combination meter.
   NOTE:
   It indicates approximately 1 – 2 seconds after shifting the selector lever to “P” position.

Does shift position indicator display “P”?

YES >> GO TO 5.
NO >> GO TO 4.

4. DETECT MALFUNCTIONING ITEM

Check the following items:
- Harness between the TCM and the ROM assembly inside the transaxle assembly is open or shorted.
- Disconnected, loose, bent, collapsed, or otherwise abnormal connector housing terminals
- Power supply and ground of TCM. (Refer to TM-144, "Diagnosis Procedure".)

Is the inspection result normal?

YES >> GO TO 1.
NO >> Repair or replace the malfunctioning parts.

5. STORE CALIBRATION DATA

1. Turn ignition switch OFF and wait for 5 seconds.
2. Turn ignition switch ON.

Does the shift position indicator display “P” at the same time when turning ON the ignition switch?

YES >> GO TO 6.
NO >> Check harness between battery and TCM harness connector terminal. Refer to TM-144, "Diagnosis Procedure".

6. ERASE CVT FLUID DEGRADATION LEVEL DATA

With CONSULT
1. Select “WORK SUPPORT” in “TRANSMISSION”.
2. Select “CONFORM CVTF DETERIORTN”.
3. Touch “Clear”.

>> WORK END

SYSTEM DESCRIPTION

CVT SYSTEM

System Diagram

INFOID:0000000009948911

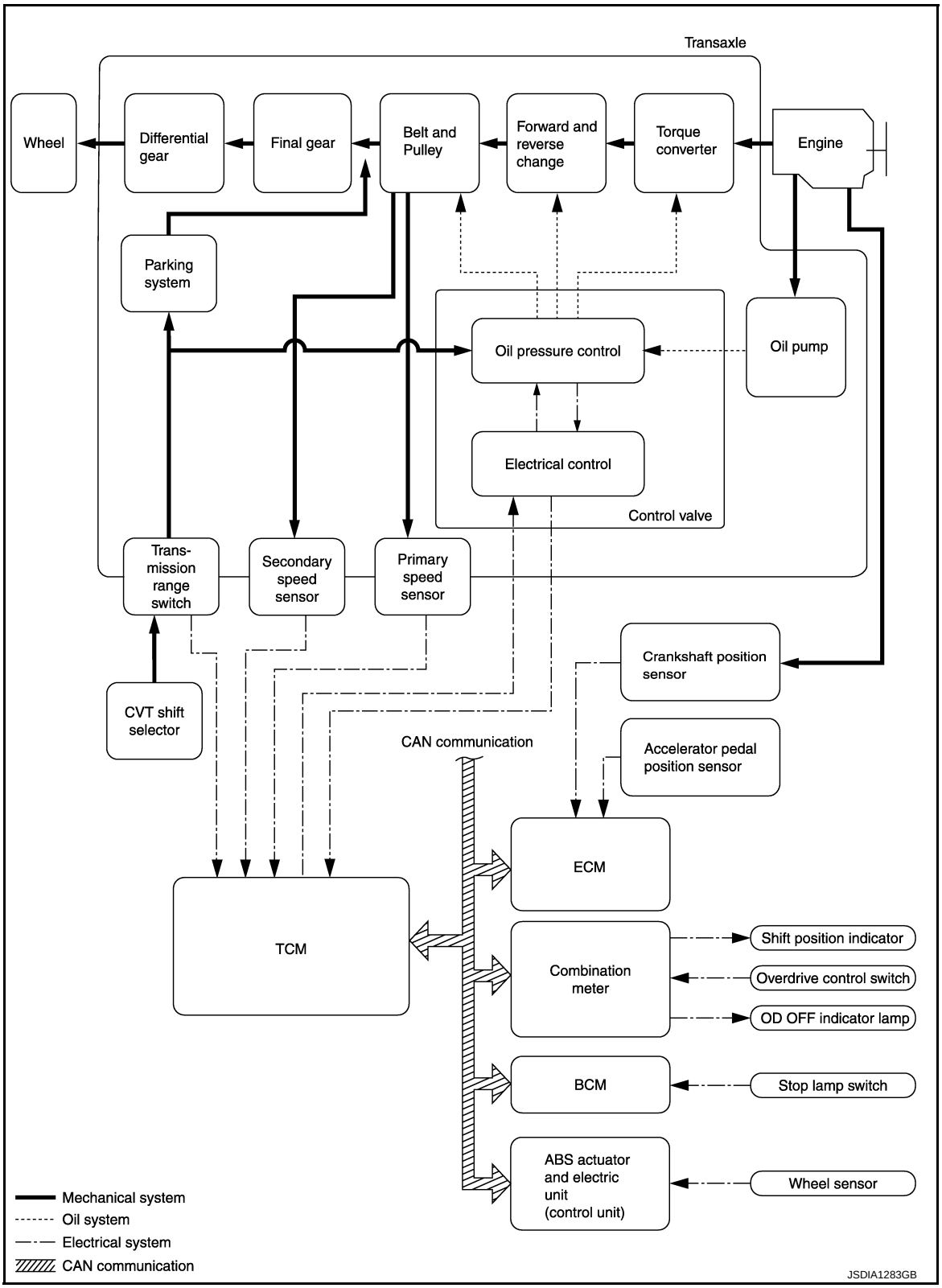

Component Parts Location

INFOID:0000000009948912

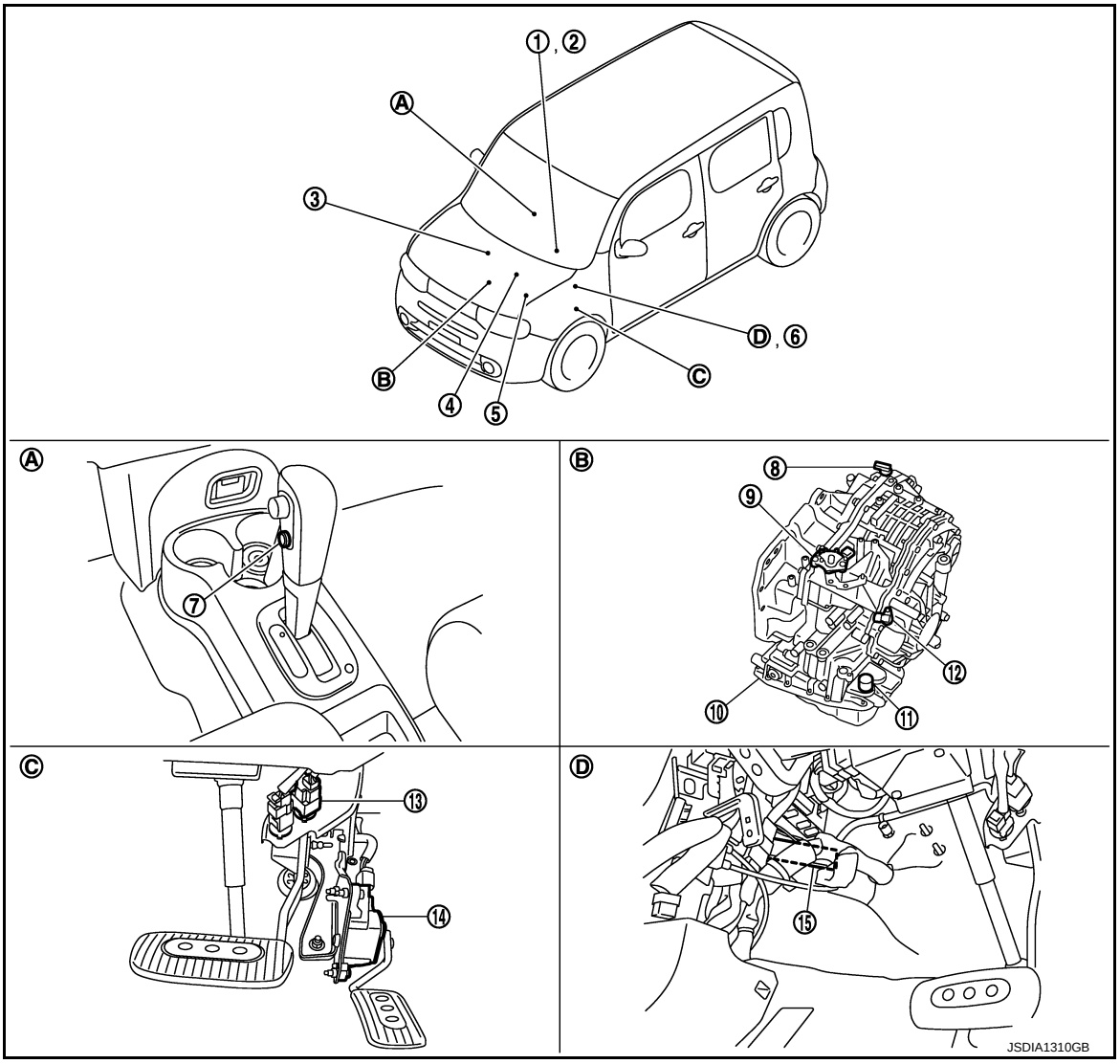

1. Shift position indicator (On the combination meter)	2. OD OFF indicator lamp (On the combination meter)	3. Crankshaft position sensor
4. ECM Refer to EC-36, "Component Parts Location"	5. IPDM E/R Refer to PCS-5, "Component Parts Location" (With intelligent Key system), PCS-36, "Component Parts Location" (Without intelligent Key system)	6. BCM Refer to BCS-10, "Component Parts Location" (With intelligent Key system), BCS-95, "Component Parts Location" (Without intelligent Key system)
7. Overdrive control switch	8. Secondary speed sensor	9. Transmission range switch
10. Control valve assembly*	11. CVT unit connector	12. Primary speed sensor
13. Stop lamp switch	14. Accelerator pedal position sensor	15. TCM
A. Center console	B. Transaxle assembly	C. Accelerator pedal, upper
D. Brake pedal, left side		

NOTE:

The following components are included in control valve assembly.

- CVT fluid temperature sensor
- Torque converter clutch solenoid valve
- Lock-up select solenoid valve
- Line pressure solenoid valve

- Secondary pressure solenoid valve
- Secondary pressure sensor
- Step motor
- ROM assembly

*: Control valve assembly is included in transaxle assembly.

MECHANICAL SYSTEM

Cross-Sectional View

INFOID:0000000009948913

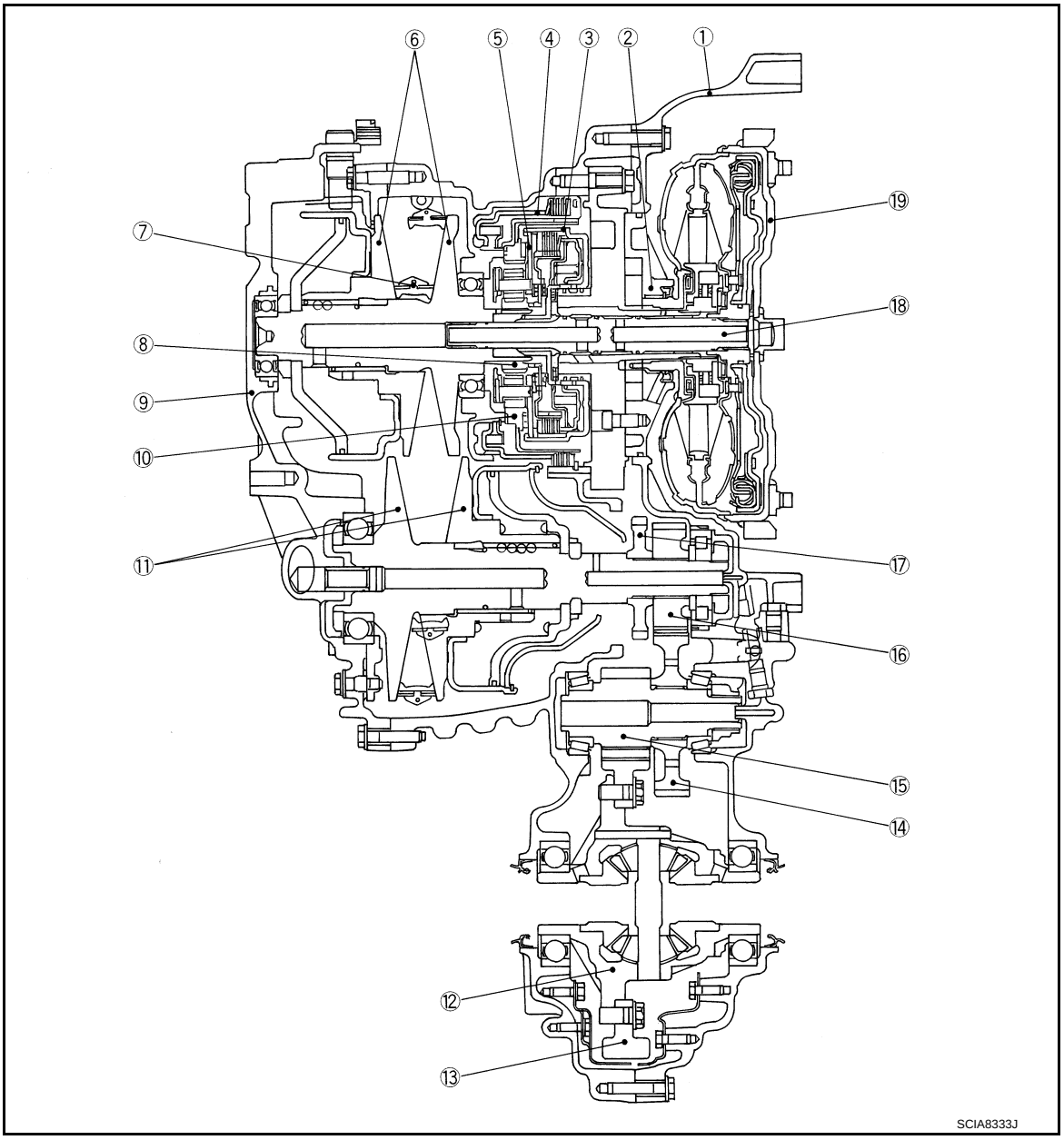

1. Converter housing	2. Oil pump	3. Forward clutch
4. Reverse brake	5. Planetary carrier	6. Primary pulley
7. Steel belt	8. Sun gear	9. Side cover
10. Internal gear	11. Secondary pulley	12. Differential case
13. Final gear	14. Idler gear	15. Reduction gear
16. Output gear	17. Parking gear	18. Input shaft
19. Torque converter		

System Diagram

INFOID:0000000009948914

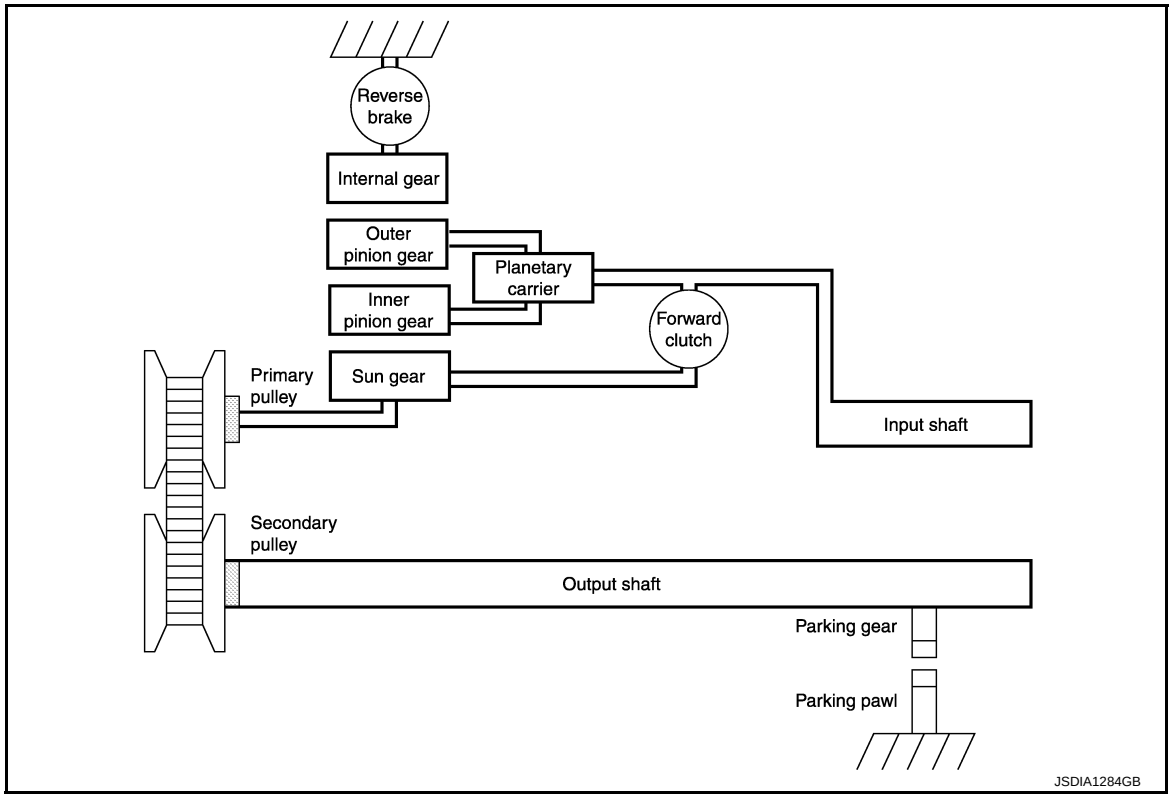

System Description

INFOID:0000000009948915

Driving force of engine is transmitted to wheels via torque converter, planetary gear, belt & pulley, differential gear, and others. In addition, with mounting of parking mechanism, secondary pulley is mechanically fixed by shifting the selector lever to “P” position.

Activation state according to each gear shifting

○: Activation

Selector lever position	Secondary oil pressure sensor	Solenoid valve				Step motor
		Line pressure	Secondary pressure	Lock-up	Lock-up /select switching	
P	○	○	○		○	
R	○	○	○		○	○
N	○	○	○		○	○
D (Low)	○	○	○	○		○
D (High)	○	○	○	○		○
D (Lock-up)	○	○	○	○		○
L	○	○	○	○		○

Power transmission of each position

“P” position

- Driving force from input shaft is not transmitted to primary pulley because of idling caused by poor engagement of forward clutch and reverse brake.
- Since the parking pole interlocked with the selector lever becomes into engagement with the parking gear integral with the output shaft to mechanically fix the output shaft, torque from wheel is not transmitted to secondary pulley.

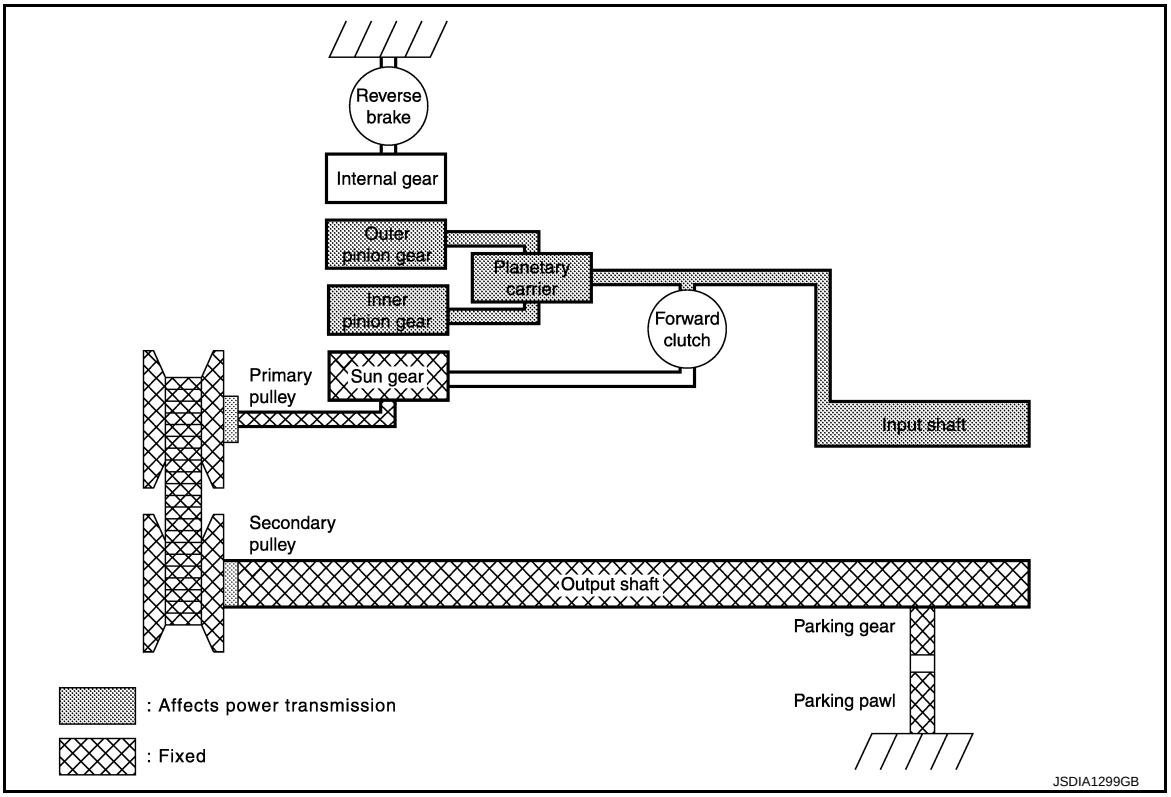

Planet gear

Description	Sun gear	Planetary carrier	Internal gear
Condition	Fixed	Input	—
Rotating direction	—	Idle	In the positive direction

“R” position

- Driving force from input shaft rotates sun gear in opposite direction of input shaft rotation because reverse brake is engaged and internal gear is fixed.
- Therefore primary pulley rotates in opposite direction of input shaft rotation and driving force output is in opposite direction rotation.

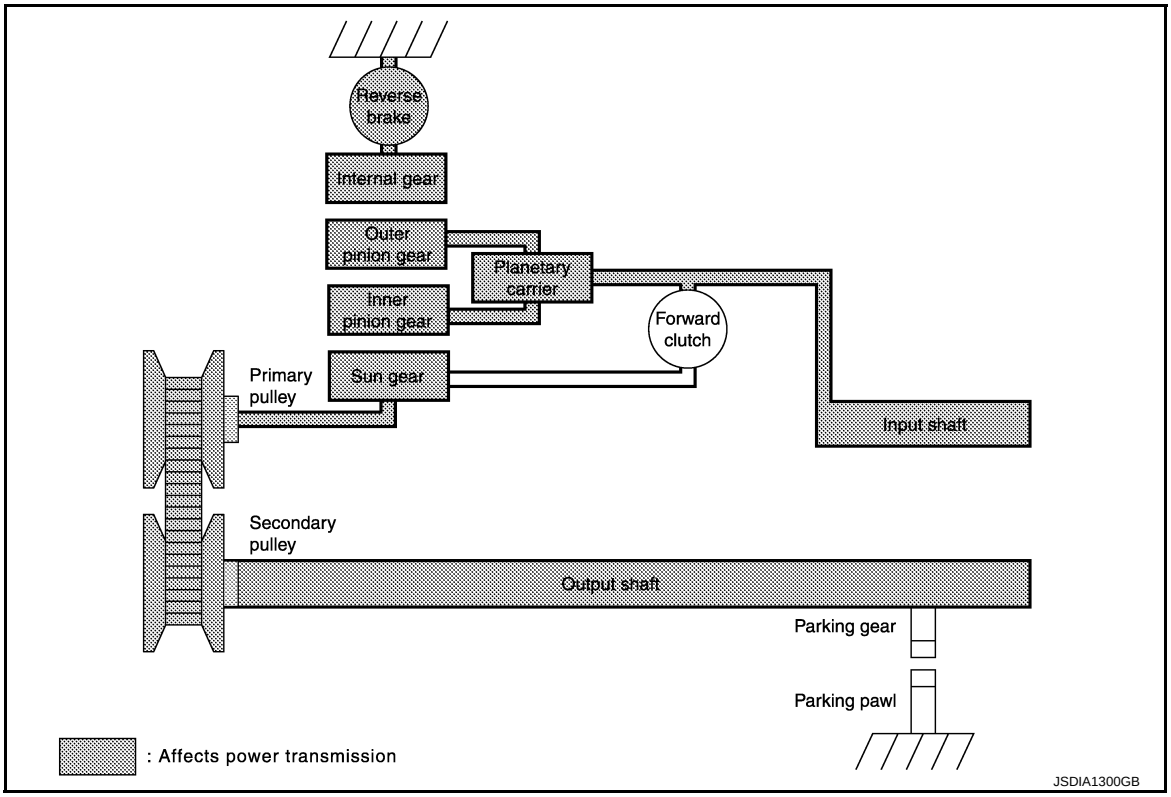

Planet gear

Description	Sun gear	Planetary carrier	Internal gear
Condition	Output	Input	Fixed
Rotating direction	In the positive direction	In the positive direction	—

“N” position

- Driving force from input shaft is not transmitted to primary pulley because of idling caused by poor engagement of forward clutch and reverse brake.
- Torque from wheel is not transmitted to input shaft because of idling of planetary carrier caused by poor engagement of forward clutch and reverse brake.

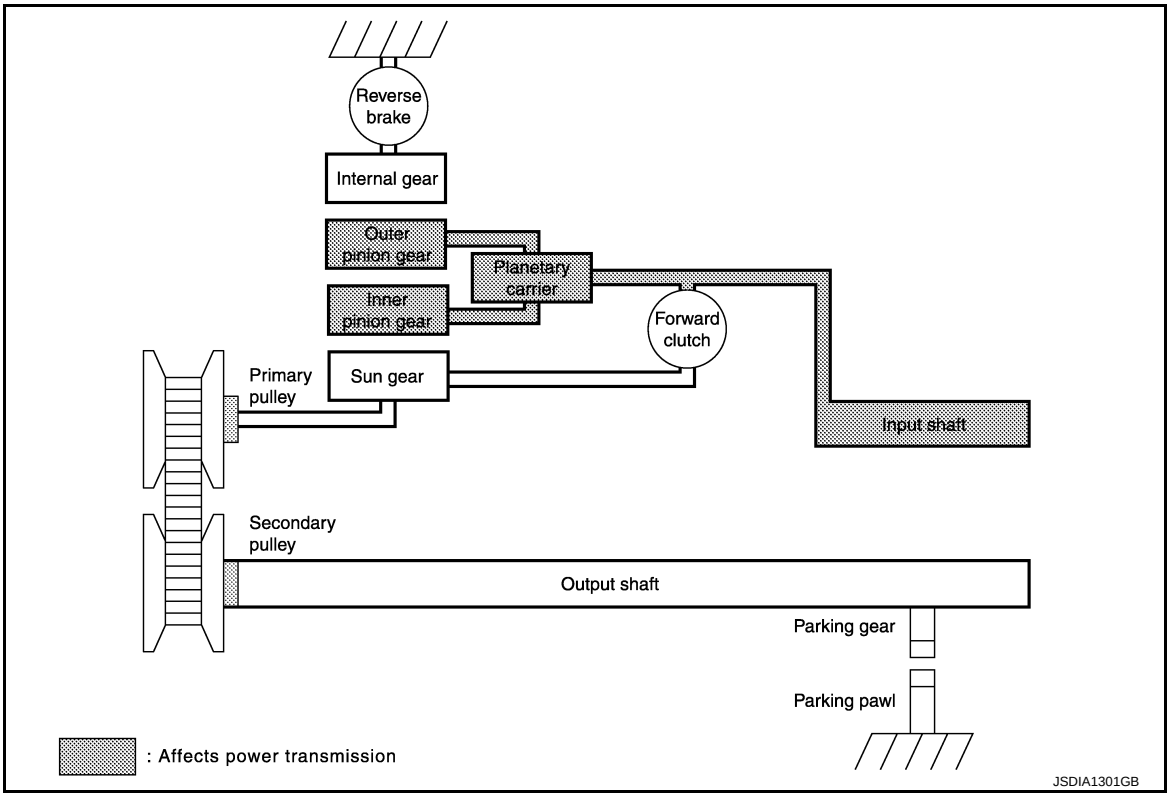

Planet gear

Description	Sun gear	Planetary carrier	Internal gear
Condition	—	Input	—
Rotating direction	Stopped	Idle	In the positive direction

“D” and “L” positions

- Since the Forward clutch is engaged, driving force from Input shaft rotates Sun gear in the positive direction via Forward clutch.
- Therefore primary pulley rotates in the positive direction, and driving force is outputted in the forward direction.

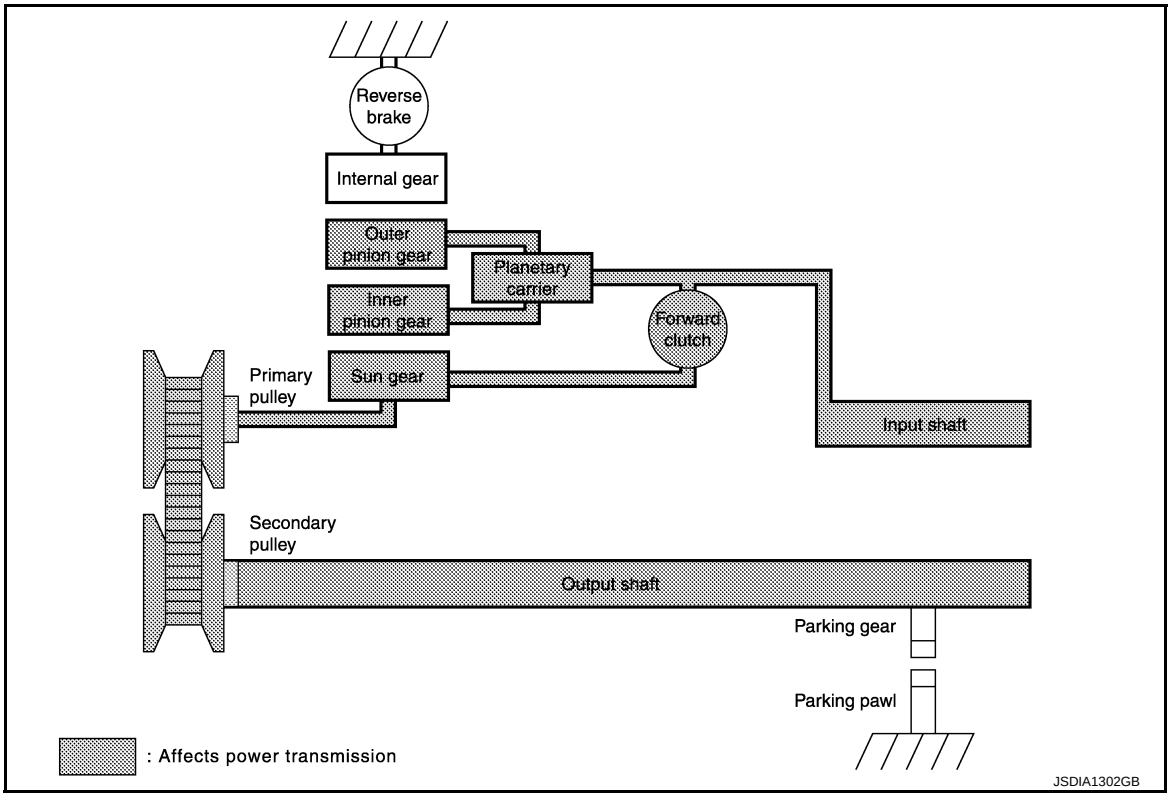

Planet gear

Description	Sun gear	Planetary carrier	Internal gear
Condition	Input/Output	Input	—
Rotating direction	In the positive direction	In the positive direction	Idle

Component Parts Location

INFOID:0000000009948916

Refer to TM-73, "Cross-Sectional View".

Component Description

INFOID:0000000009948917

Item	Function
Torque converter	The torque converter is the device that increases the engine torque as well as the conventional CVT and transmits it to the transaxle.
Oil pump	This is a trochoid type oil pump directly driven by the engine. Discharged oil from oil pump is conveyed to control valve to be used for operating oil for primary and secondary pulleys, clutch, and for lubricant for each part.
Forward clutch	The forward clutch is wet and multiple plate type clutch that consists of clutch drum, piston, drive plate, and driven plate. It is a clutch to move the vehicle forward by activating piston hydraulically, engaging plates, and directly connecting sun gear and input shaft.
Reverse brake	The reverse brake is a wet and multiple plate type brake that consists of transaxle case, piston, drive plate, and driven plate. It is a brake to move the vehicle in reverse by activating piston hydraulically, engaging plates, and fixing internal gear.
Internal gear	The internal gear is directly connected to reverse brake drum. It is a gear that moves the outer edge of outer pinion gear of planetary carrier. It performs switching of forwards, reverse and others by fixing or releasing internal gear.
Planetary carrier	The planetary carrier consists of carrier, inner pinion gear, outer pinion gear, and pinion shaft. It transmits traction force to move the vehicle in reverse when internal gear is fixed.
Sun gear	Sun gear is a set part of planetary carrier and internal gear. It transmits transmitted traction force to primary fix pulley (FIX). It rotates in same or opposite direction according to activation of either forward clutch or reverse brake.

Item	Function
Input shaft	The input shaft is directly connected to forward clutch drum and transmits traction force from torque converter. In shaft center, there are holes for hydraulic distribution to primary pulley and hydraulic distribution for lock-up ON/OFF.
Primary pulley	It is composed of a pair of pulleys (the groove width is changed freely in the axial direction) and the steel belt (the steel star wheels are placed continuously and the belt is guided with the multilayer steel rings on both sides). The groove width changes according to wrapping radius of steel belt and pulley from low status to overdrive status continuously with non-step. It is controlled with the oil pressures of primary pulley and secondary pulley.
Secondary pulley	
Steel belt	
Manual shaft	The parking rod rotates the parking pole and the parking pole engages with the parking gear when the manual shaft is in “P” position. As a result the parking gear and the output axis are fixed.
Parking rod	
Parking pawl	
Parking gear	
Output gear	Reduction gear consists of primary deceleration (output gear and idler gear in pair) and secondary deceleration (reduction gear and final gear in pair). Each of them uses a helical gear.
Idler gear	
Reduction gear	
Final gear	
Differential	

HYDRAULIC CONTROL SYSTEM

System Diagram

INFOID:0000000009948918

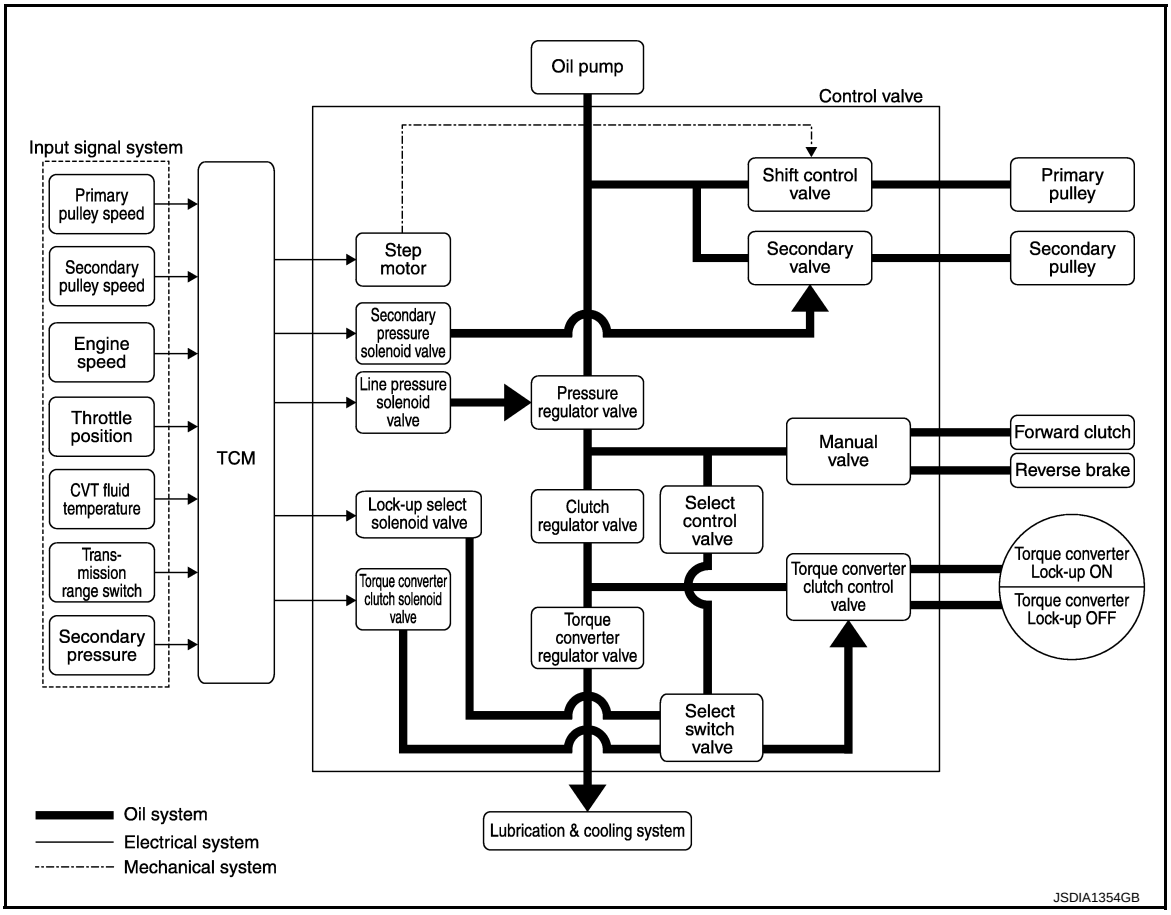

System Description

INFOID:0000000009948919

Hydraulic control mechanism consists of trochoid type oil pump directly driven by the engine, hydraulic control valve controlling line pressure and gear shifting, and input signals.

LINE PRESSURE AND SECONDARY PRESSURE CONTROL

When an input torque signal corresponding to engine driving force is transmitted from ECM to TCM, TCM controls line pressure solenoid valve and secondary pressure solenoid valve to adjust to a correct oil pressure.

Normal Control

Optimize the line pressure and secondary pressure, depending on driving conditions, on the basis of the throttle position, the engine speed, the primary pulley (input) revolution speed, the secondary pulley (output) revolution speed, the brake signal, the transmission range switch signal, the lock-up signal, the voltage, the target gear ratio, the fluid temperature, and the fluid pressure.

Feedback Control

For the normal fluid control and the select fluid control, secondary pressure is detected for feedback control by using a secondary pressure sensor to set a high-precision secondary pressure.

Component Parts Location

INFOID:0000000009948920

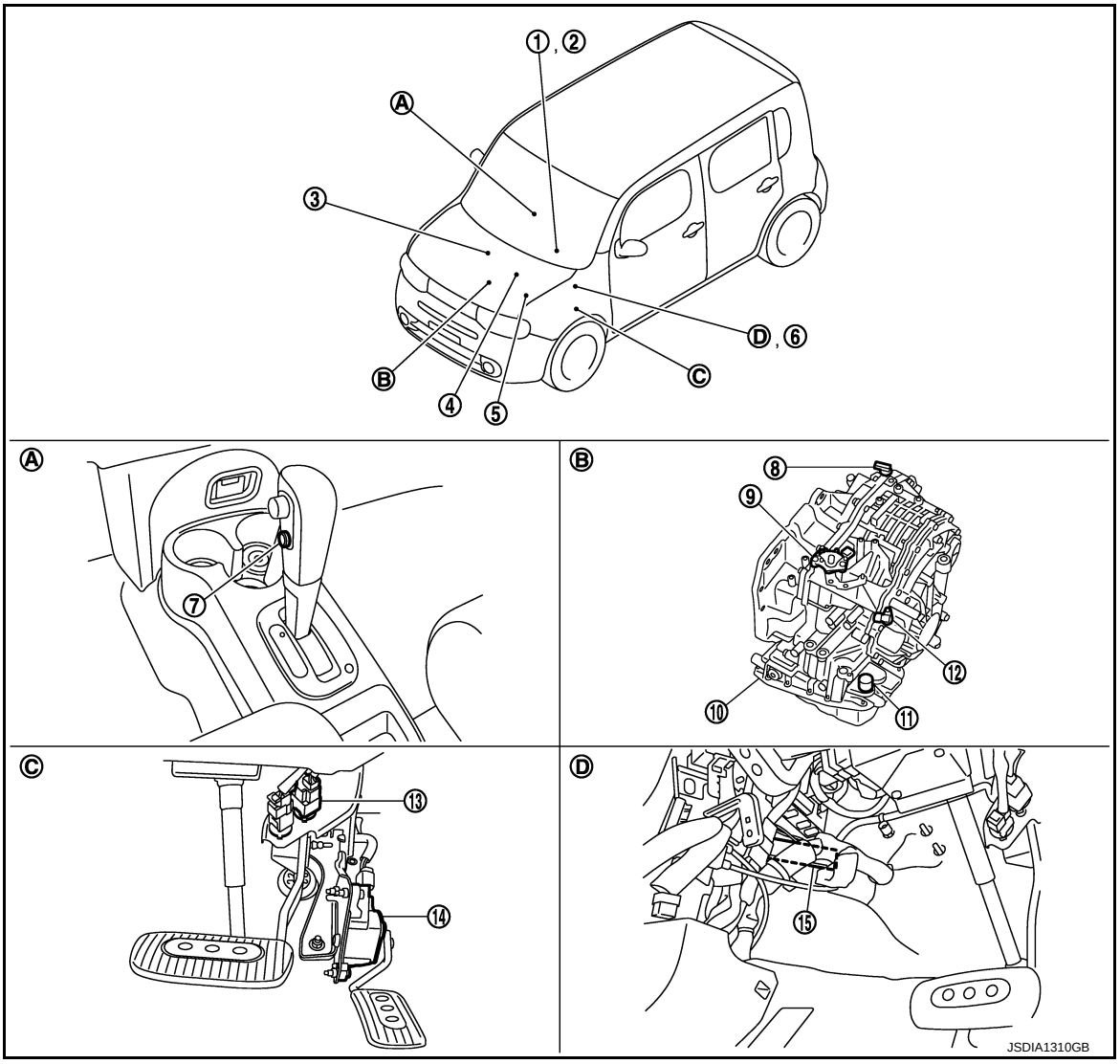

1. Shift position indicator (On the combination meter)	2. OD OFF indicator lamp (On the combination meter)	3. Crankshaft position sensor
4. ECM Refer to EC-36, "Component Parts Location"	5. IPDM E/R Refer to PCS-5, "Component Parts Location" (With intelligent Key system), PCS-36, "Component Parts Location" (Without intelligent Key system)	6. BCM Refer to BCS-10, "Component Parts Location" (With intelligent Key system), BCS-95, "Component Parts Location" (Without intelligent Key system)
7. Overdrive control switch	8. Secondary speed sensor	9. Transmission range switch
10. Control valve assembly*	11. CVT unit connector	12. Primary speed sensor
13. Stop lamp switch	14. Accelerator pedal position sensor	15. TCM
A. Center console	B. Transaxle assembly	C. Accelerator pedal, upper
D. Brake pedal, left side		

NOTE:

The following components are included in control valve assembly.

- CVT fluid temperature sensor
- Torque converter clutch solenoid valve
- Lock-up select solenoid valve
- Line pressure solenoid valve

- Secondary pressure solenoid valve
- Secondary pressure sensor
- Step motor
- ROM assembly

*: Control valve assembly is included in transaxle assembly.

Component Description

INFOID:0000000009948921

Name	Function
Torque converter regulator valve	Optimizes the supply pressure for the torque converter depending on driving conditions.
Pressure regulator valve	Optimizes the discharge pressure from the oil pump depending on driving conditions.
TCC control valve	• Activates or deactivates the lock-up. • Locks-up smoothly by opening lock-up operation excessively.
Shift control valve	Controls inflow/outflow of line pressure from the primary pulley depending on the stroke difference between the stepping motor and the primary pulley.
Secondary valve	Controls the line pressure from the secondary pulley depending on operating conditions.
Clutch regulator valve	Adjusts the clutch operating pressure depending on operating conditions.
Manual valve	Transmits the clutch operating pressure to each circuit in accordance with the selected position.
Select control valve	Engages forward clutch, reverse brake smoothly depending on select operation.
Select switch valve	The select switch valve enables to select engagement/disengagement of lock-up clutch and that of forward clutch and reverse clutch.
TCC solenoid valve	TM-123, "Description"
Secondary pressure solenoid valve	TM-135, "Description"
Line pressure solenoid valve	TM-129, "Description"
Step motor	TM-157, "Description"
Lock-up select solenoid valve	TM-154, "Description"
Primary speed sensor	TM-116, "Description"
Secondary speed sensor	TM-119, "Description"
Transmission range switch	TM-109, "Description"
Primary pulley	TM-78, "Component Description"
Secondary pulley	
Forward clutch	
Torque converter	
TCM	Judges the vehicle driving status according to the signal from each sensor and controls the non-step transmission mechanism properly.
Accelerator pedal position sensor	TM-147, "Description"

CONTROL SYSTEM

System Diagram

INFOID:0000000009948922

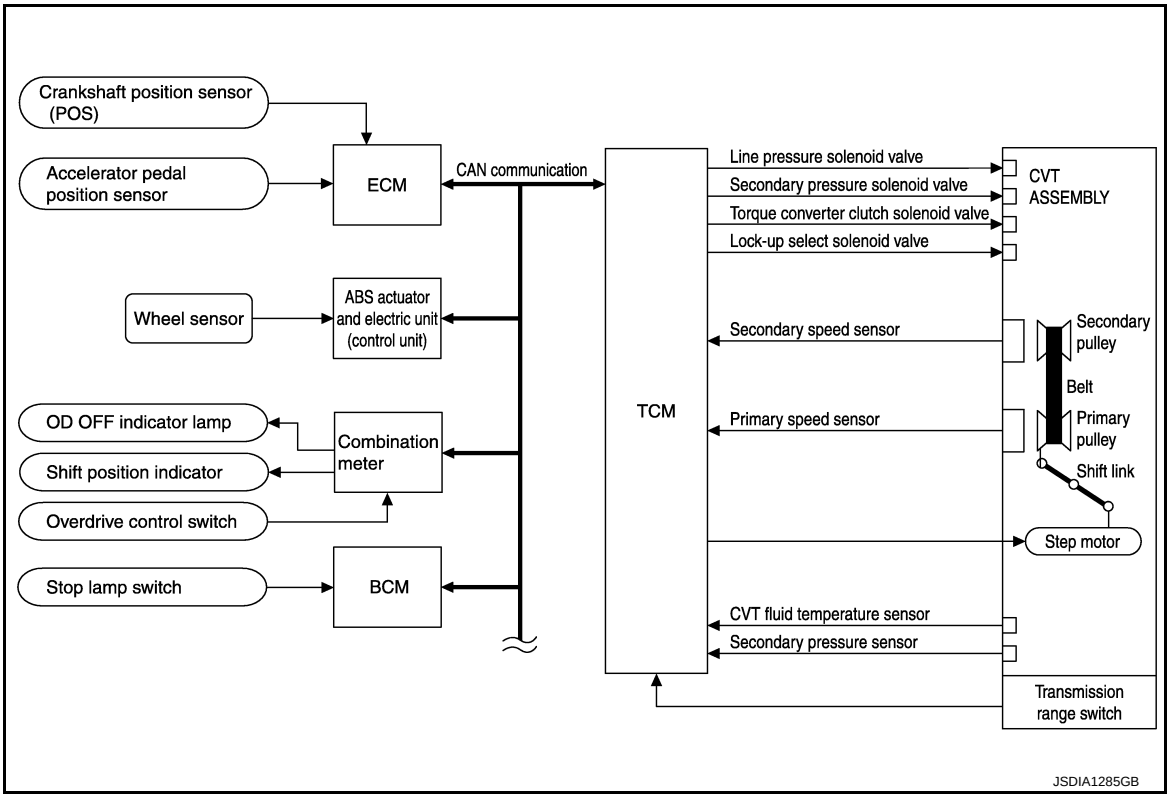

System Description

INFOID:0000000009948923

The CVT senses vehicle operating conditions through various sensors. It always controls the optimum shift position and reduces shifting and lock-up shocks.

TCM FUNCTION

The function of the TCM is to:

- Receive input signals sent from various switches and sensors.
- Determine required line pressure, shifting point, and lock-up operation.
- Send required output signals to the step motor and the respective solenoids.

SENSORS (or SIGNALS)		TCM		ACTUATORS
Transmission range switch CVT fluid temperature sensor Secondary pressure sensor Primary speed sensor Secondary speed sensor Engine speed signal Accelerator pedal position signal Closed throttle position signal Stop lamp switch signal Overdrive control switch signal Vehicle speed signal	⇒	Shift control Line pressure control Primary pressure control Secondary pressure control Lock-up control Engine brake control Vehicle speed control Fail-safe control Self-diagnosis CONSULT communication line Duet-EA control CAN system On board diagnosis	⇒	Line pressure solenoid valve Secondary pressure solenoid valve Torque converter clutch solenoid valve Lock-up select solenoid valve Step motor Shift position indicator OD OFF indicator lamp

INPUT/OUTPUT SIGNAL OF TCM

Control item		Fluid pressure control	Select control	Shift control	Lock-up control	CAN communication control	Fail-safe function*2
Input	Transmission range switch	X	X	X	X	X	X
	CVT fluid temperature sensor	X	X	X	X		X
	Secondary pressure sensor	X					X
	Primary speed sensor	X	X	X	X		X
	Secondary speed sensor	X	X	X	X		X
	Engine speed signal*1	X	X	X	X	X	X
	Accelerator pedal position signal *1	X	X	X	X	X	X
	Closed throttle position signal*1	X	X		X	X	
	Stop lamp switch signal*1	X	X		X	X	
	Overdrive control switch signal*1		X	X	X	X	
	TCM power supply voltage signal	X	X	X	X	X	X
Output	Line pressure solenoid valve	X		X			X
	Secondary pressure solenoid valve	X					X
	TCC solenoid valve			X	X		X
	Lock-up select solenoid valve			X	X		X
	Step motor		X				X

*1: Input via CAN communications.

*2: If these input and output signals are different, the TCM triggers the fail-safe function.

Component Parts Location

INFOID:0000000009948924

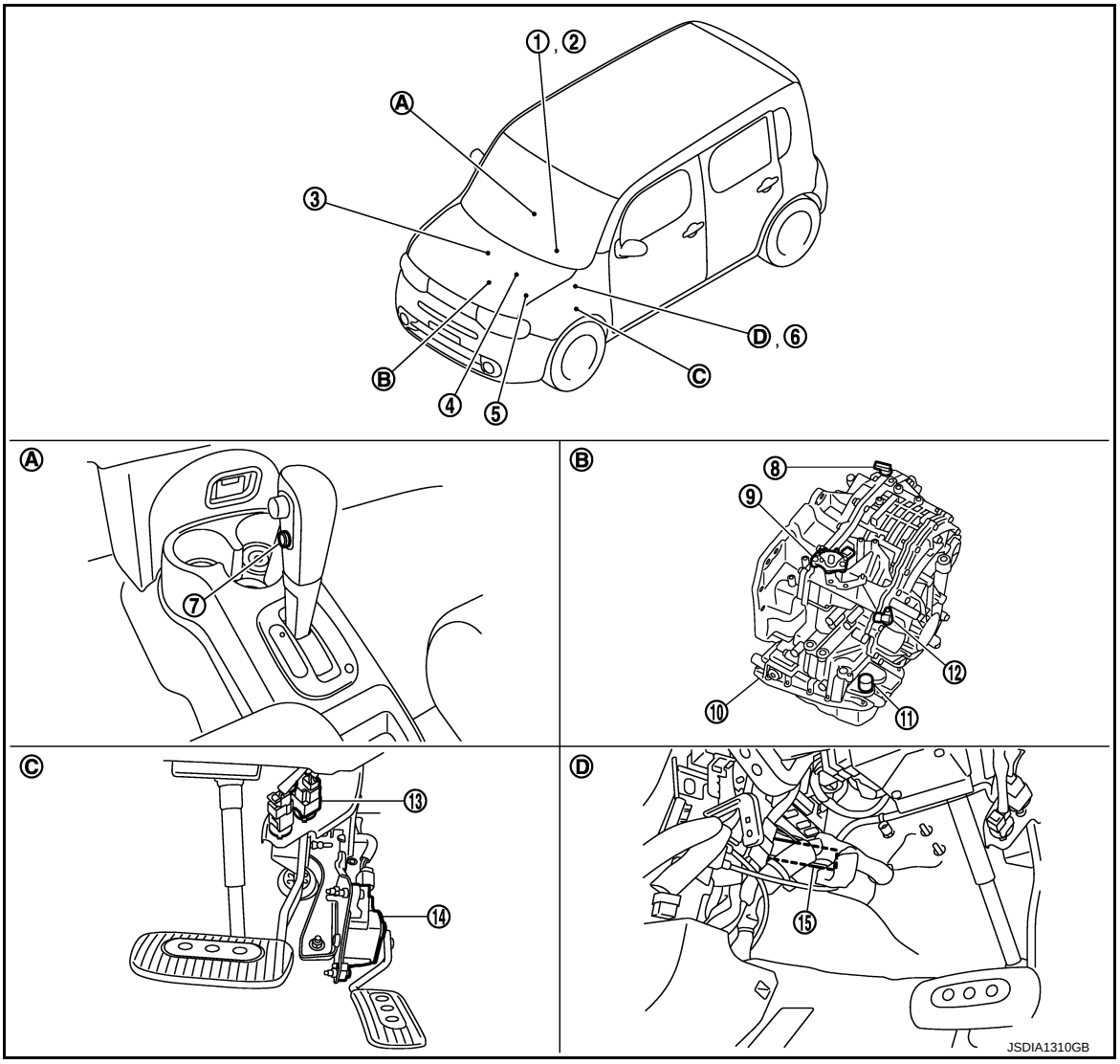

1. Shift position indicator (On the combination meter)	2. OD OFF indicator lamp (On the combination meter)	3. Crankshaft position sensor
4. ECM Refer to EC-36, "Component Parts Location"	5. IPDM E/R Refer to PCS-5, "Component Parts Location" (With intelligent Key system), PCS-36, "Component Parts Location" (Without intelligent Key system)	6. BCM Refer to BCS-10, "Component Parts Location" (With intelligent Key system), BCS-95, "Component Parts Location" (Without intelligent Key system)
7. Overdrive control switch	8. Secondary speed sensor	9. Transmission range switch
10. Control valve assembly*	11. CVT unit connector	12. Primary speed sensor
13. Stop lamp switch	14. Accelerator pedal position sensor	15. TCM
A. Center console	B. Transaxle assembly	C. Accelerator pedal, upper
D. Brake pedal, left side		

NOTE:

The following components are included in control valve assembly.

- CVT fluid temperature sensor
- Torque converter clutch solenoid valve
- Lock-up select solenoid valve
- Line pressure solenoid valve

- Secondary pressure solenoid valve
- Secondary pressure sensor
- Step motor
- ROM assembly

*: Control valve assembly is included in transaxle assembly.

Component Description

INFOID:0000000009948925

Name	Function
Transmission range switch	TM-109, "Description"
CVT fluid temperature sensor	TM-112, "Description"
Secondary pressure sensor	TM-137, "Description"
Primary speed sensor	TM-116, "Description"
Secondary speed sensor	TM-119, "Description"
Line pressure solenoid valve	TM-129, "Description"
Secondary pressure solenoid valve	TM-135, "Description"
TCC solenoid valve	TM-123, "Description"
Lock-up select solenoid valve	TM-154, "Description"
Step motor	TM-157, "Description"
TCM	TM-82, "Component Description"
Accelerator pedal position sensor	TM-147, "Description"
Stop lamp switch	TM-106, "Description"
Overdrive control switch	TM-162, "Description"

LOCK-UP AND SELECT CONTROL SYSTEM

System Diagram

INFOID:0000000009948926

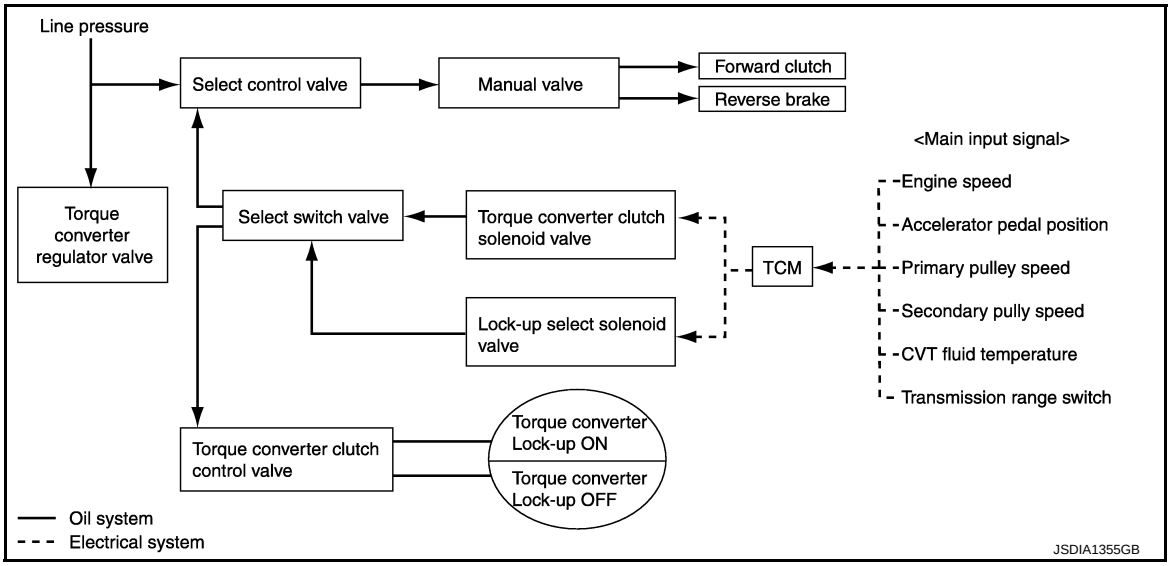

System Description

INFOID:0000000009948927

- The torque converter clutch piston in the torque converter is engaged to eliminate torque converter slip to increase power transmission efficiency.
- The torque converter clutch control valve operation is controlled by the torque converter clutch solenoid valve, which is controlled by a signal from TCM. The torque converter clutch control valve engages or releases the torque converter clutch piston.
- When shifting between “N” (“P”) ⇒“D” (“R”), torque converter clutch solenoid valve controls engagement power of forward clutch and reverse brake.
- The lock-up applied gear range was expanded by locking up the torque converter at a lower vehicle speed than AT models.
- Lock-up is prohibited when CVT fluid temperature is low.

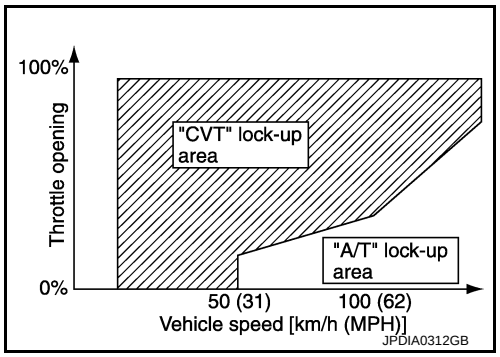

TORQUE CONVERTER CLUTCH AND SELECT CONTROL VALVE CONTROL

Lock-up Released

In the lock-up released state, the torque converter clutch control valve is set into the unlocked state by the torque converter clutch solenoid valve and the lock-up apply pressure is drained.
In this way, the torque converter clutch piston is not coupled.

Lock-up Applied

In the lock-up applied state, the torque converter clutch control valve is set into the locked state by the torque converter clutch solenoid valve and lock-up apply pressure is generated.
In this way, the torque converter clutch piston is pressed and coupled.

Select Control

When shifting between “N” (“P”) ⇒“D” (“R”), optimize the operating pressure on the basis of the throttle position, the engine speed, and the secondary pulley (output) revolution speed to lessen the shift shock.

Component Parts Location

INFOID:0000000009948928

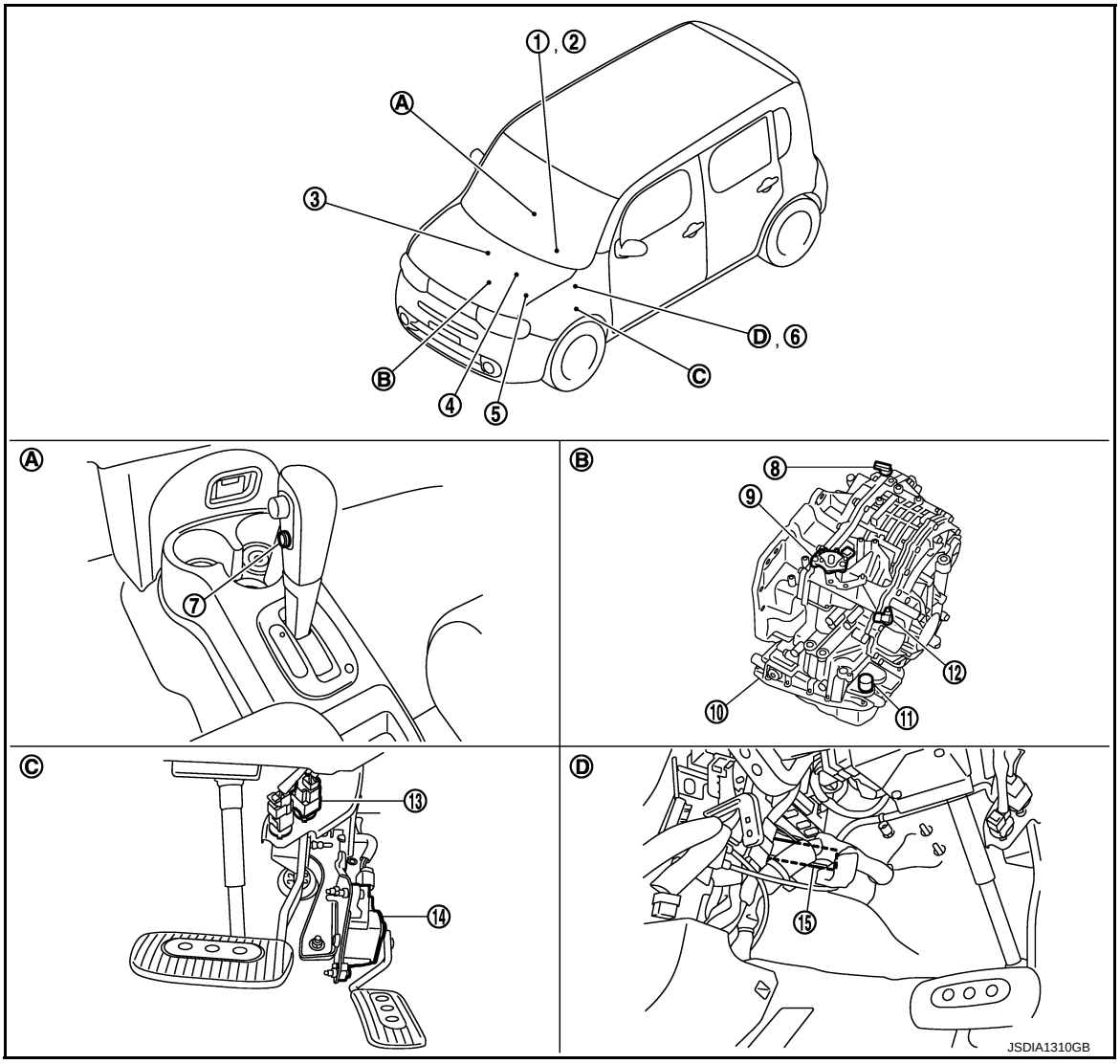

1. Shift position indicator (On the combination meter)	2. OD OFF indicator lamp (On the combination meter)	3. Crankshaft position sensor
4. ECM Refer to EC-36, "Component Parts Location"	5. IPDM E/R Refer to PCS-5, "Component Parts Location" (With intelligent Key system), PCS-36, "Component Parts Location" (Without intelligent Key system)	6. BCM Refer to BCS-10, "Component Parts Location" (With intelligent Key system), BCS-95, "Component Parts Location" (Without intelligent Key system)
7. Overdrive control switch	8. Secondary speed sensor	9. Transmission range switch
10. Control valve assembly*	11. CVT unit connector	12. Primary speed sensor
13. Stop lamp switch	14. Accelerator pedal position sensor	15. TCM
A. Center console	B. Transaxle assembly	C. Accelerator pedal, upper
D. Brake pedal, left side		

NOTE:

The following components are included in control valve assembly.

- CVT fluid temperature sensor
- Torque converter clutch solenoid valve
- Lock-up select solenoid valve
- Line pressure solenoid valve

- Secondary pressure solenoid valve
- Secondary pressure sensor
- Step motor
- ROM assembly

*: Control valve assembly is included in transaxle assembly.

Component Description

INFOID:0000000009948929

Name	Function
Transmission range switch	TM-109, "Description"
CVT fluid temperature sensor	TM-112, "Description"
Primary speed sensor	TM-116, "Description"
Secondary speed sensor	TM-119, "Description"
TCC solenoid valve	TM-123, "Description"
Lock-up select solenoid valve	TM-154, "Description"
Select switch valve	TM-82, "Component Description"
TCC control valve	
Torque converter regulator valve	
Select control valve	
Manual valve	
Forward clutch	TM-78, "Component Description"
Reverse brake	
Torque converter	
TCM	TM-82, "Component Description"
Accelerator pedal position sensor	TM-147, "Description"

SHIFT CONTROL SYSTEM

System Diagram

INFOID:0000000009948930

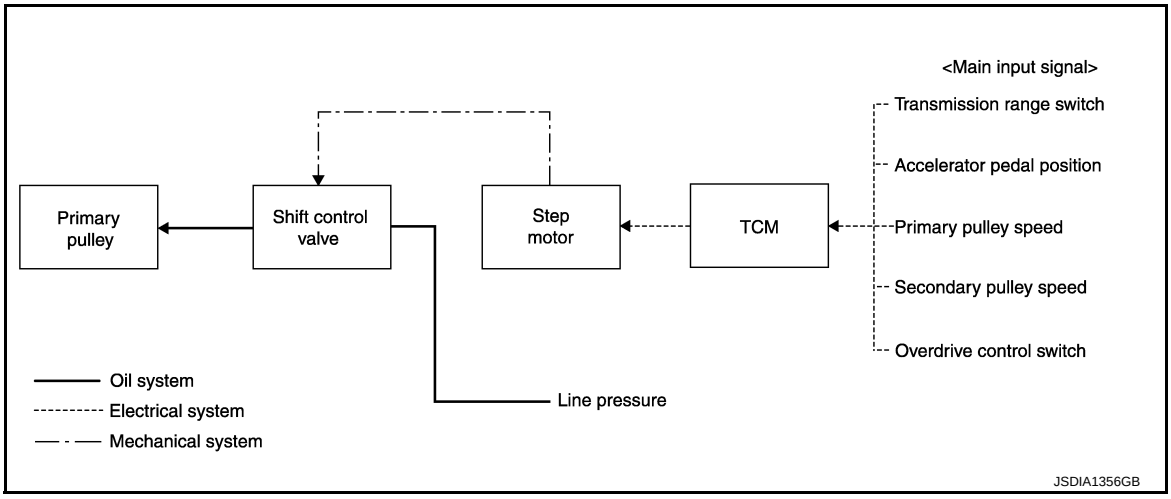

NOTE:
The gear ratio is set for each position separately.

System Description

INFOID:0000000009948931

In order to select the gear ratio that can obtain the driving force in accordance with driver's intention and the vehicle condition, TCM monitors the driving conditions, such as the vehicle speed and the throttle position and selects the optimum gear ratio, and determines the gear change steps to the gear ratio. Then TCM sends the command to the step motor, controls the inflow/outflow of line pressure from the primary pulley to determine the position of the moving-pulley and controls the gear ratio.

“D” POSITION

Shifting over all the ranges of gear ratios from the lowest to the highest.

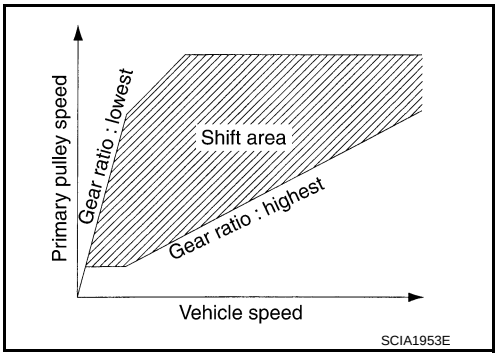

OVERDRIVE OFF CONDITION

Use this position for the improved engine braking.

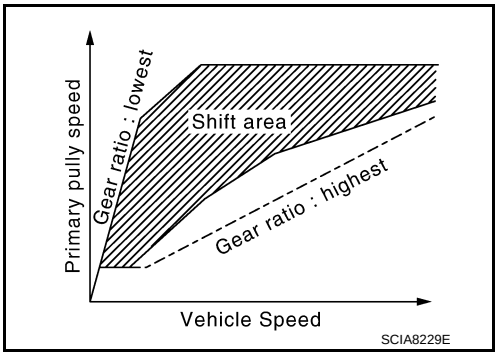

“L” POSITION

By limiting gear range to the lowest position, the strong driving force and the engine brake can be secured.

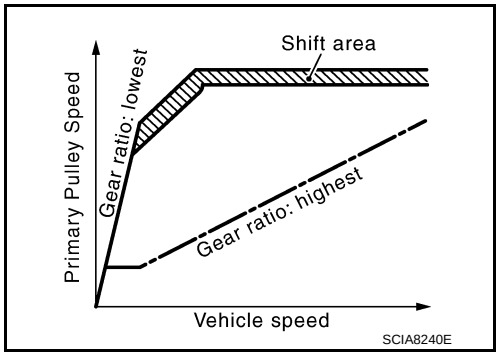

DOWNHILL ENGINE BRAKE CONTROL (AUTO ENGINE BRAKE CONTROL)

When a downhill slope is detected with the accelerator pedal released, the engine brake will be strengthened up by downshifting so as not to accelerate the vehicle more than necessary.

ACCELERATION CONTROL

According to vehicle speed and a change of accelerator pedal angle, driver's request for acceleration and driving scene are judged. This function assists improvement in the acceleration feeling by making the engine speed proportionate to the vehicle speed. And a shift map that can gain a larger driving force is available for compatibility of mileage with driveability.

Component Parts Location

INFOID:0000000009948932

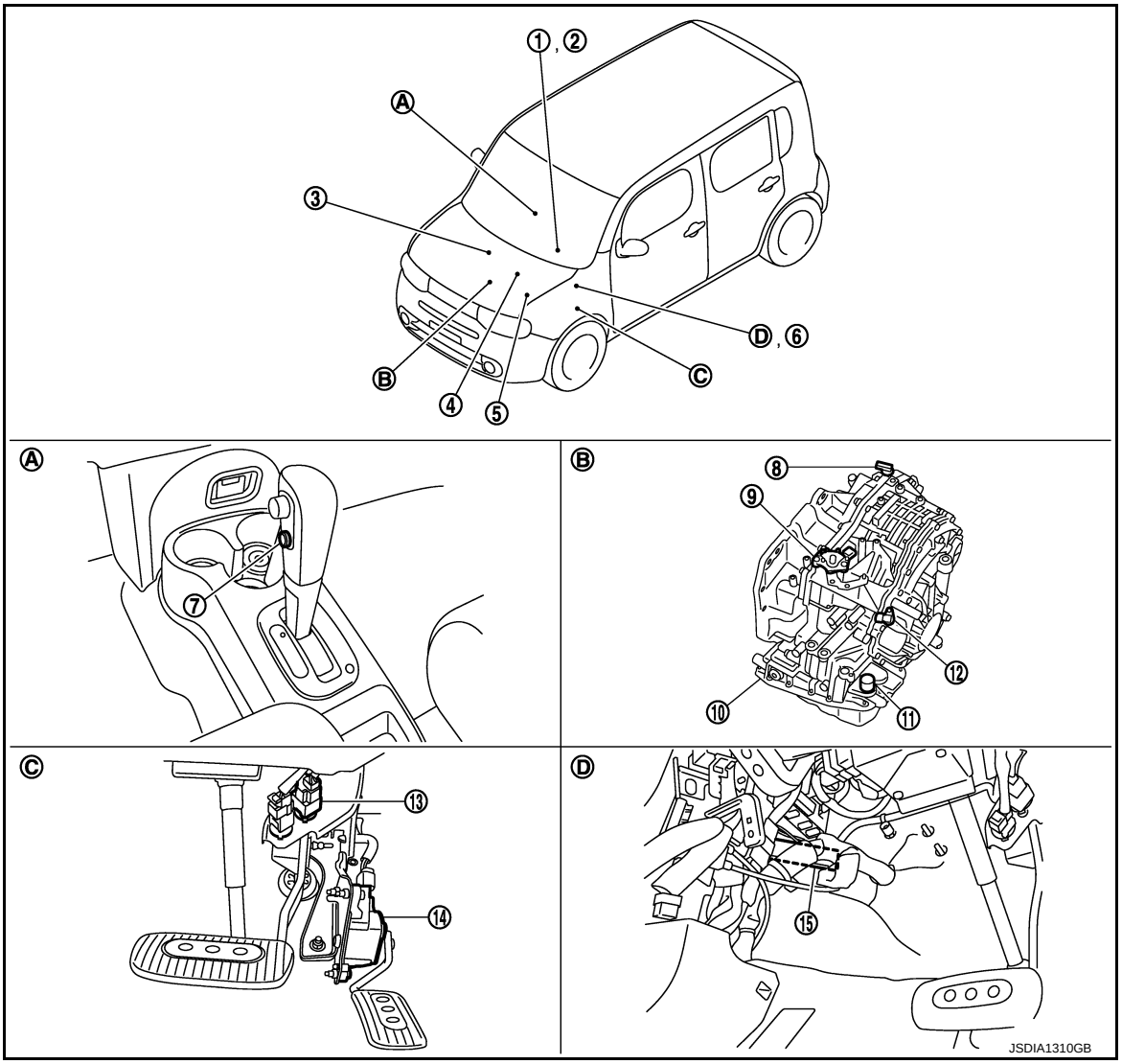

1. Shift position indicator (On the combination meter)
2. OD OFF indicator lamp (On the combination meter)
3. Crankshaft position sensor
4. ECM Refer to EC-36, "Component Parts Location"
5. IPDM E/R Refer to PCS-5, "Component Parts Location" (With intelligent Key system), PCS-36, "Component Parts Location" (Without intelligent Key system)
6. BCM Refer to BCS-10, "Component Parts Location" (With intelligent Key system), BCS-95, "Component Parts Location" (Without intelligent Key system)
7. Overdrive control switch
8. Secondary speed sensor
9. Transmission range switch
10. Control valve assembly*
11. CVT unit connector
12. Primary speed sensor
13. Stop lamp switch
14. Accelerator pedal position sensor
15. TCM

A. Center console
B. Transaxle assembly
C. Accelerator pedal, upper
D. Brake pedal, left side

NOTE:

The following components are included in control valve assembly.

- CVT fluid temperature sensor
- Torque converter clutch solenoid valve
- Lock-up select solenoid valve
- Line pressure solenoid valve
- Secondary pressure solenoid valve
- Secondary pressure sensor
- Step motor
- ROM assembly

*: Control valve assembly is included in transaxle assembly.

Component Description

INFOID:0000000009948933

Item	Function
Transmission range switch	TM-109, "Description"
Primary speed sensor	TM-116, "Description"
Secondary speed sensor	TM-119, "Description"
Step motor	TM-157, "Description"
Shift control valve	TM-82, "Component Description"
Primary pulley	TM-78, "Component Description"
Secondary pulley	
TCM	TM-82, "Component Description"
Accelerator pedal position sensor	TM-147, "Description"
Overdrive control switch	TM-162, "Description"

SHIFT LOCK SYSTEM

WITH INTELLIGENT KEY SYSTEM

WITH INTELLIGENT KEY SYSTEM : System Description

INFOID:0000000009948934

The shift lever cannot be shifted from the “P” position unless the brake pedal is depressed while the ignition switch is set to ON. The shift lock is unlocked by turning the shift lock solenoid ON when the ignition switch is set to ON, the park position switch is turned ON (selector lever is in “P” position), and the stop lamp switch is turned ON (brake pedal is depressed) as shown in the operation chart in the figure. Therefore, the shift lock solenoid receives no ON signal and the shift lock remains locked if all of the above conditions are not fulfilled. (However, selector operation is allowed if the shift lock release button is pressed.)

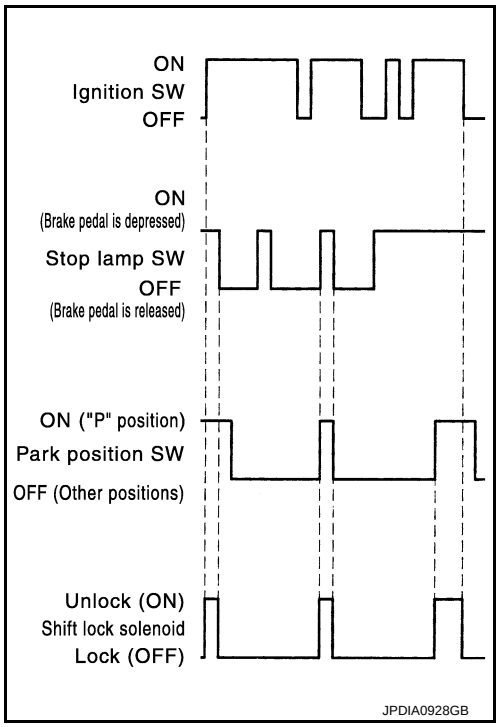

SHIFT LOCK OPERATION AT “P” POSITION

When Brake Pedal Is Not Depressed (No Selector Operation Allowed)

The shift lock solenoid (A) is turned OFF (not energized) and the solenoid rod (B) is extended with the spring when the brake pedal is not depressed (no selector operation allowed) with the ignition switch ON.

The connecting lock lever (C) is located at the position shown in the figure when the solenoid rod is extended. It prevents the movement of the pull rod (D). For these reasons, the selector lever cannot be shifted from the “P” position.

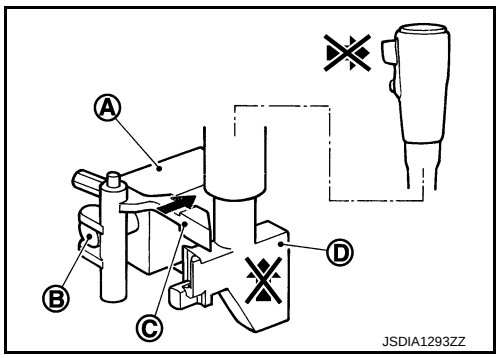

When Brake Pedal Is Depressed (Shift Operation Allowed)

The shift lock solenoid (A) is turned ON (energized) when the brake pedal is depressed with the ignition switch ON. The solenoid rod (B) is compressed by the electromagnetic force. The connecting lock lever (C) rotates when the solenoid is activated. Therefore, the pull rod (D) can be moved. For these reasons, the selector lever can be shifted to other positions.

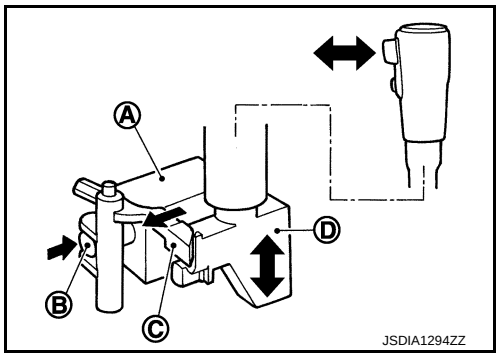

“P” POSITION HOLD MECHANISM (IGNITION SWITCH LOCK)

The shift lock solenoid (A) is not energized when the ignition switch is in any position other than ON. In this condition, the shift mechanism is locked and “P” position is held. The operation cannot be performed from “P” position if the brake pedal is depressed with the ignition switch ON when the operation system of shift lock solenoid is malfunctioning. However, the lock lever (B) is forcibly rotated and the shift lock is released when the shift lock release button (C) is pressed from above. Then the selector operation from “P” position can be performed.

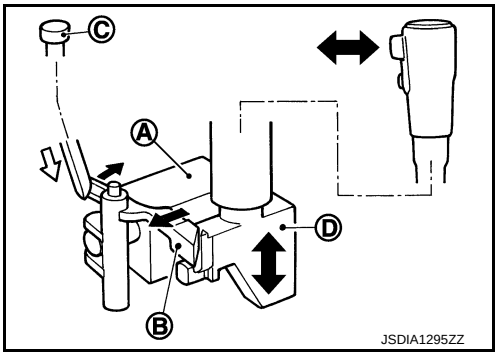

D : Pull rod

CAUTION:
Use the shift lock release button only when the selector lever cannot be operated even if the brake pedal is depressed with the ignition switch ON.

WITH INTELLIGENT KEY SYSTEM : Component Parts Location

INFOID:0000000009948935

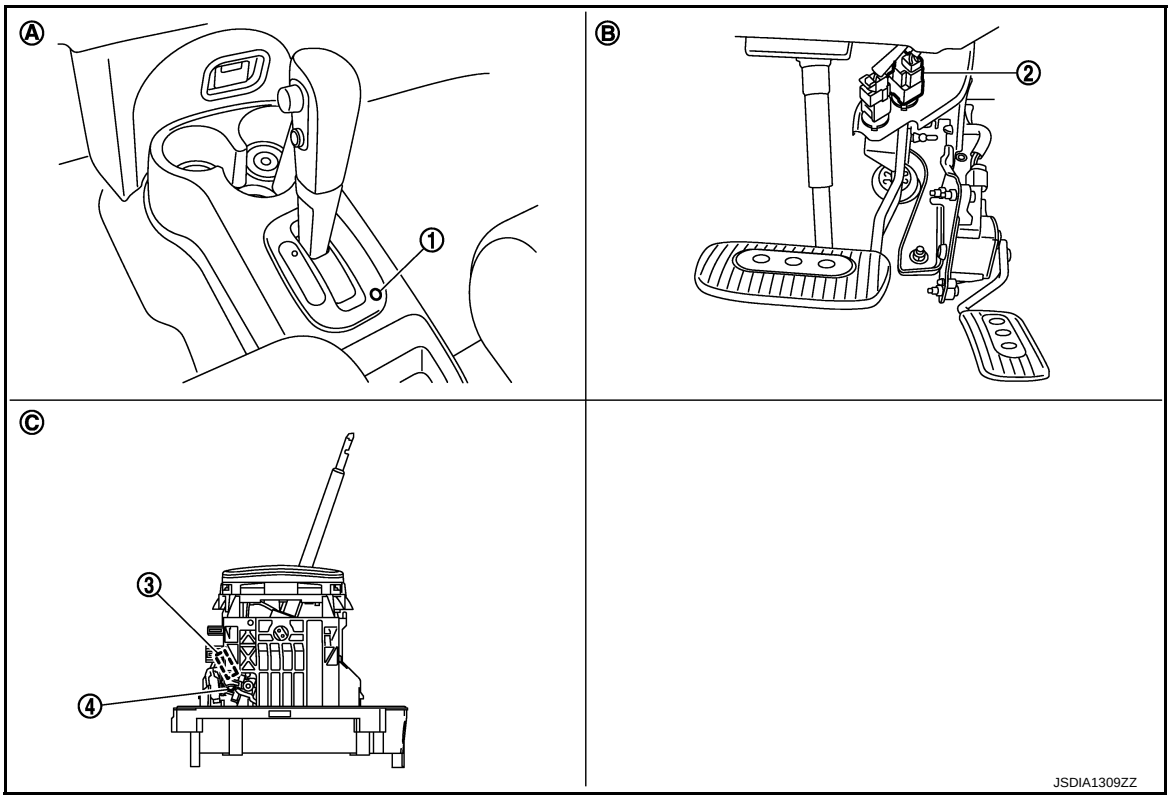

1. Shift lock release button
2. Stop lamp switch
3. Park position switch
4. Shift lock solenoid

A. Center console
B. Brake pedal, upper
C. CVT shift selector

WITH INTELLIGENT KEY SYSTEM : Component Description

INFOID:0000000009948936

SHIFT LOCK

Component	Function
Shift lock solenoid	It operates according to the signal from the stop lamp switch and moves the lock lever.
Lock lever	It moves according to the operation of the shift lock solenoid and performs the release of the shift lock.
Pull rod	It links with the selector button and restricts the selector lever movement.

Component	Function
Park position switch	It detects that the selector lever is in “P” position.
Shift lock release button	It moves the lock lever forcibly.

WITHOUT INTELLIGENT KEY SYSTEM

WITHOUT INTELLIGENT KEY SYSTEM : System Description

INFOID:0000000009948937

The shift lever cannot be shifted from the “P” position unless the brake pedal is depressed while the ignition switch is set to ON. The shift lock is unlocked by turning the shift lock solenoid ON when the ignition switch is set to ON, the park position switch is turned ON (selector lever is in “P” position), and the stop lamp switch is turned ON (brake pedal is depressed) as shown in the operation chart in the figure. Therefore, the shift lock solenoid receives no ON signal and the shift lock remains locked if all of the above conditions are not fulfilled. (However, selector operation is allowed if the shift lock release button is pressed.)

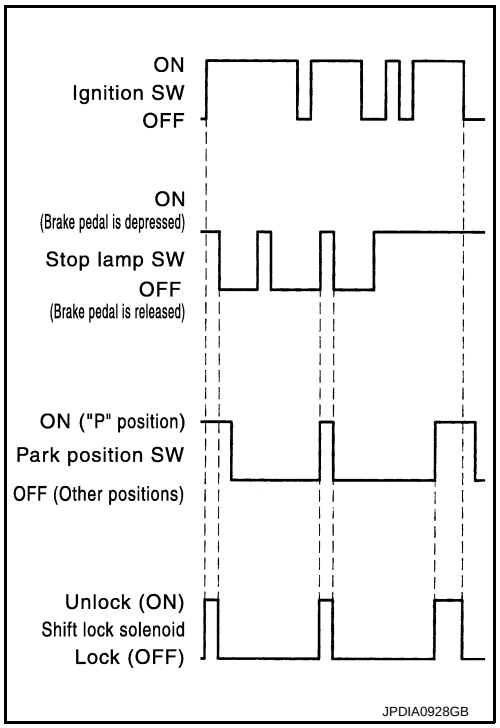

SHIFT LOCK OPERATION AT “P” POSITION

When Brake Pedal Is Not Depressed (No Selector Operation Allowed)

The shift lock solenoid (A) is turned OFF (not energized) and the solenoid rod (B) is extended with the spring when the brake pedal is not depressed (no selector operation allowed) with the ignition switch ON.

The connecting lock lever (C) is located at the position shown in the figure when the solenoid rod is extended. It prevents the movement of the pull rod (D). For these reasons, the selector lever cannot be shifted from the “P” position.

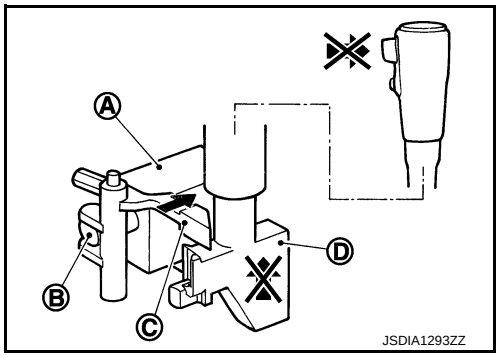

When Brake Pedal Is Depressed (Shift Operation Allowed)

The shift lock solenoid (A) is turned ON (energized) when the brake pedal is depressed with the ignition switch ON. The solenoid rod (B) is compressed by the electromagnetic force. The connecting lock lever (C) rotates when the solenoid is activated. Therefore, the pull rod (D) can be moved. For these reasons, the selector lever can be shifted to other positions.

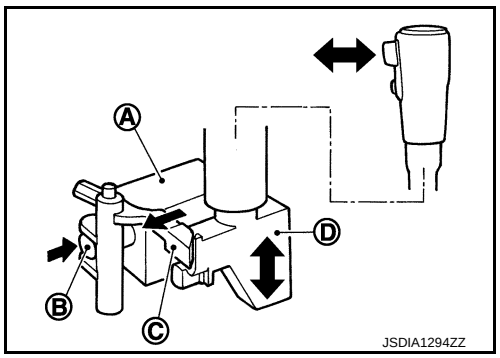

“P” POSITION HOLD MECHANISM (IGNITION SWITCH LOCK)

The shift lock solenoid (A) is not energized when the ignition switch is in any position other than ON. In this condition, the shift mechanism is locked and “P” position is held. The operation cannot be performed from “P” position if the brake pedal is depressed with the ignition switch ON when the operation system of shift lock solenoid is malfunctioning. However, the lock lever (B) is forcibly rotated and the shift lock is released when the shift lock release button (C) is pressed from above. Then the selector operation from “P” position can be performed.

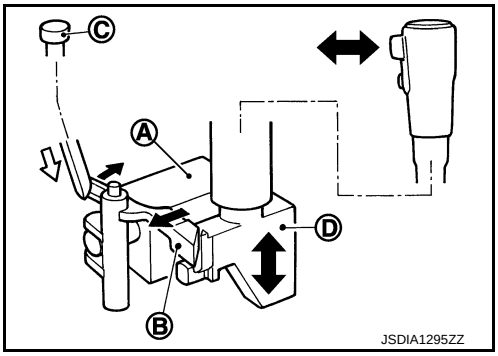

D : Pull rod

CAUTION:

Use the shift lock release button only when the selector lever cannot be operated even if the brake pedal is depressed with the ignition switch ON.

KEY LOCK MECHANISM

The key cannot be set to LOCK when the selector lever is not selected to “P” position. This prevents the key from being removed from the key cylinder.

Key Lock Status

The slider (B) in the key cylinder (A) is moved to the left side of the figure when the selector lever is in any positions other than “P” position. The rotator (D) that rotates together with the key (C) cannot be rotated for this reason. The key cannot be removed from the key cylinder because it cannot be turned to LOCK (E).

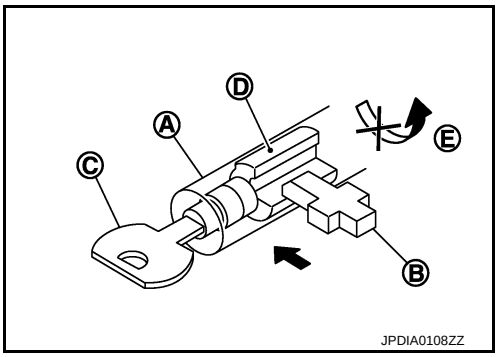

Key Unlock Status

The slider (B) in the key cylinder (A) is moved to the right side of the figure when the selector lever is in “P” position and the finger is removed from the selector button. The rotator (C) can be rotated for this reason. The key (D) can be removed from the key cylinder because it can be turned to LOCK (E).

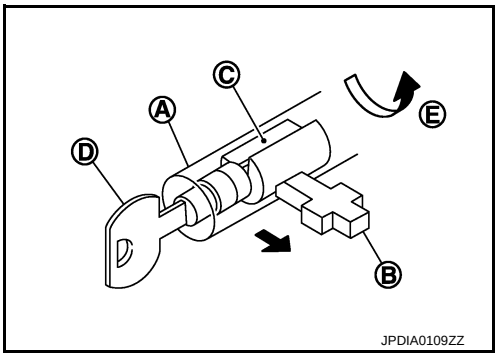

WITHOUT INTELLIGENT KEY SYSTEM : Component Parts Location

INFOID:0000000009948938

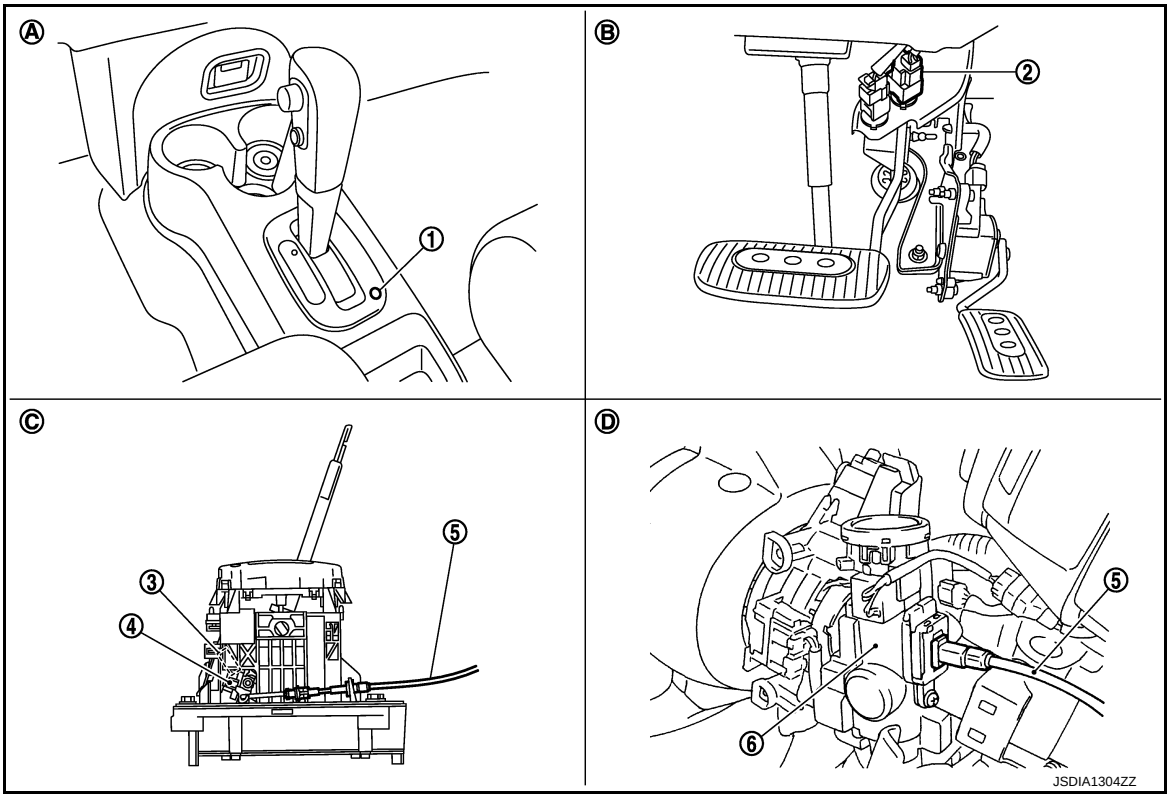

1. Shift lock release button
2. Stop lamp switch
3. Park position switch
4. Shift lock solenoid
5. Key interlock cable
6. Key cylinder

A. Center console
B. Brake pedal, upper
C. CVT shift selector
D. Key cylinder

WITHOUT INTELLIGENT KEY SYSTEM : Component Description

INFOID:0000000009948939

SHIFT LOCK

Component	Function
Shift lock solenoid	It operates according to the signal from the stop lamp switch and moves the lock lever.
Lock lever	It moves according to the operation of the shift lock solenoid and performs the release of the shift lock.
Pull rod	It links with the selector button and restricts the selector lever movement.
Park position switch	It detects that the selector lever is in “P” position.
Key interlock cable and key interlock rod	It transmits the lock lever operation to the slider in the key cylinder.
Shift lock release button	It moves the lock lever forcibly.

KEY LOCK

Component		Function
Key cylinder	Rotator	It rotates together with the key and restricts the slider movement when the ignition switch is in LOCK position.
	Slider	It moves according to the rotation of the lock lever.
Key interlock cable and key interlock rod		Actuation of lock lever is conveyed to slider in the key cylinder.

ON BOARD DIAGNOSTIC (OBD) SYSTEM

Diagnosis Description

INFOID:0000000009948940

DESCRIPTION

The CVT system has two self-diagnostic systems.
The first is the emission-related on board diagnostic system (OBD-II) performed by the TCM in combination with the ECM. A malfunction is indicated by the MIL (Malfunction Indicator Lamp) and is stored as a DTC in the ECM memory and in the TCM memory.
The second is the TCM original self-diagnosis performed by the TCM. A malfunction history is stored in the TCM memory. The detected items are overlapped with OBD-II self-diagnostic items. For details, refer to TM-186, "DTC Index".

OBD-II FUNCTION

The ECM provides emission-related on board diagnostic (OBD-II) functions for the CVT system. One function is to receive a signal from the TCM used with OBD-related parts of the CVT system. The signal is sent to the ECM when a malfunction occurs in the corresponding OBD-related part. The other function is to indicate a diagnostic result by means of the MIL (Malfunction Indicator Lamp) on the instrument panel. Sensors, switches and solenoid valves are used as sensing elements.
The MIL automatically illuminates in “One or Two Trip Detection Logic” when a malfunction is sensed in relation to CVT system parts. For details, refer to EC-101, "Diagnosis Description".

DIAGNOSIS SYSTEM (TCM)

CONSULT Function

INFOID:0000000009948941

FUNCTION

CONSULT can display each diagnostic item using the diagnostic test modes shown following.

Diagnostic test mode	Function
Work Support	This mode enables a technician to adjust some devices faster and more accurately.
Self Diagnostic Results	Retrieve DTC from ECU and display diagnostic items.
Data Monitor	Monitor the input/output signal of the control unit in real time.
CAN Diagnosis	This mode displays a network diagnosis result about CAN by a diagram.
CAN Diagnosis Support Monitor	It monitors the status of CAN communication.
ECU Identification	Display the ECU identification number (part number etc.) of the selected system.
CALIB DATA	The calibration data status of TCM can be checked.

SELF DIAGNOSTIC RESULTS MODE

Refer to TM-186, "DTC Index".

DATA MONITOR MODE

NOTE:

The following table includes information (items) inapplicable to this vehicle. For information (items) applicable to this vehicle, refer to CONSULT display items.

X: Standard, —: Not applicable, ▼: Option

Monitored item	(Unit)	Monitor item selection			Remarks
		ECU INPUT SIGNALS	MAIN SIGNALS	SELECTION FROM MENU	
VSP SENSOR	(km/h or mph)	X	—	▼	—
ESTM VSP SIG	(km/h or mph)	X	—	▼	—
PRI SPEED SEN	(rpm)	X	—	▼	—
ENG SPEED SIG	(rpm)	X	—	▼	Engine speed signal (Signal input via CAN communications)
SEC HYDR SEN	(V)	X	—	▼	—
PRI HYDR SEN	(V)	X	—	▼	Not mounted but displayed.
ATF TEMP SEN	(V)	X	—	▼	CVT fluid temperature sensor
VIGN SEN	(V)	X	—	▼	—
VEHICLE SPEED	(km/h or mph)	—	X	▼	Vehicle speed recognized by the TCM.
PRI SPEED	(rpm)	—	X	▼	Primary pulley speed
SEC SPEED	(rpm)	—	—	▼	Secondary pulley speed
ENG SPEED	(rpm)	—	X	▼	—
SLIP REV	(rpm)	—	X	▼	Difference between engine speed and primary pulley speed.
GEAR RATIO		—	X	▼	—
G SPEED	(G)	—	—	▼	—

Monitored item	(Unit)	Monitor item selection			Remarks
		ECU INPUT SIGNALS	MAIN SIGNALS	SELECTION FROM MENU	
ACC PEDAL OPEN	(0.0/8)	X	X	▼	Degree of opening for accelerator recognized by the TCM. For fail-safe operation, the specific value used for control is displayed.
TRQ RTO		—	—	▼	—
SEC PRESS	(MPa)	—	X	▼	—
PRI PRESS	(MPa)	—	X	▼	Not mounted but displayed.
ATFTEMP COUNT		—	X	▼	Means CVT fluid temperature. Actual oil temperature °C (°F) numeric value is converted. Refer to TM-203
DSR REV	(rpm)	—	—	▼	—
DGEAR RATIO		—	—	▼	—
DSTM STEP	(step)	—	—	▼	—
STM STEP	(step)	—	X	▼	—
LU PRS	(MPa)	—	—	▼	—
LINE PRS	(MPa)	—	—	▼	—
TGT SEC PRESS	(MPa)	—	—	▼	—
ISOLT1	(A)	—	X	▼	Torque converter clutch solenoid valve output current
ISOLT2	(A)	—	X	▼	Line pressure solenoid valve output current
ISOLT3	(A)	—	X	▼	Secondary pressure solenoid valve output current
SOLMON1	(A)	X	X	▼	Torque converter clutch solenoid valve monitor current
SOLMON2	(A)	X	X	▼	Line pressure solenoid valve monitor current
SOLMON3	(A)	X	X	▼	Secondary pressure solenoid valve monitor current
BRAKESW	(On/Off)	X	X	▼	Stop lamp switch signal (Signal input via CAN communications)
FULL SW	(On/Off)	X	X	▼	Full switch signal (Signal input via CAN communications)
IDLE SW	(On/Off)	X	X	▼	Idle switch signal (Signal input via CAN communications)
SPORT MODE SW	(On/Off)	X	X	▼	Overdrive control switch signal (Signal input via CAN communications)
STRDWNSW	(On/Off)	X	—	▼	Not mounted but displayed.
STRUPSW	(On/Off)	X	—	▼	
DOWNLVR	(On/Off)	X	—	▼	
UPLVR	(On/Off)	X	—	▼	
NONMMODE	(On/Off)	X	—	▼	
MMODE	(On/Off)	X	—	▼	
INDLRNG	(On/Off)	—	—	▼	“L” position indicator output

Monitored item	(Unit)	Monitor item selection			Remarks
		ECU INPUT SIGNALS	MAIN SIGNALS	SELECTION FROM MENU	
INDDRNG	(On/Off)	—	—	▼	“D” position indicator output
INDNRNG	(On/Off)	—	—	▼	“N” position indicator output
INDRRNG	(On/Off)	—	—	▼	“R” position indicator output
INDPRNG	(On/Off)	—	—	▼	“P” position indicator output
CVT LAMP	(On/Off)	—	—	▼	—
SPORT MODE IND	(On/Off)	—	—	▼	—
MMODE IND	(On/Off)	—	—	▼	Not mounted but displayed.
SMCOIL D	(On/Off)	—	—	▼	Step motor coil “D” energizing status
SMCOIL C	(On/Off)	—	—	▼	Step motor coil “C” energizing status
SMCOIL B	(On/Off)	—	—	▼	Step motor coil “B” energizing status
SMCOIL A	(On/Off)	—	—	▼	Step motor coil “A” energizing status
LUSEL SOL OUT	(On/Off)	—	—	▼	—
LUSEL SOL MON	(On/Off)	—	—	▼	—
VDC ON	(On/Off)	X	—	▼	—
TCS ON	(On/Off)	X	—	▼	—
ABS ON	(On/Off)	X	—	▼	—
ACC ON	(On/Off)	X	—	▼	Not mounted but displayed.
RANGE		—	X	▼	Indicates position is recognized by TCM. Indicates a specific value required for control when fail-safe function is activated.
M GEAR POS		—	X	▼	—
D POSITION SW	(On/Off)	X	—	▼	
N POSITION SW	(On/Off)	X	—	▼	—
L POSITION SW	(On/Off)	X	—	▼	—
P POSITION SW	(On/Off)	X	—	▼	—
R POSITION SW	(On/Off)	X	—	▼	—
CVT-A		—	—	▼	This monitor item does not use.
CVT-B		—	—	▼	This monitor item does not use.

WORK SUPPORT MODE

Item name	Description
ENGINE BRAKE ADJ.	The engine brake level setting can be canceled.
CONFORM CVTF DETERIORTN	The CVT fluid deterioration level can be checked.

Engine Brake Adjustment

Under normal operating conditions of the transaxle main body and CVT system, if a customer indicates strangeness of involuntary application of the brake on a downhill run, engine brake is allowed to be released in accordance with “Engine Brake Adjustment”.

"ENGINE BRAKE LEVEL"

0: Initial set value (Engine brake level control is activated)

OFF: Engine brake level control is deactivated.

CAUTION:
Mode of "+1", "0", "–1", "–2", "OFF" can be selected by touching "UP" or "DOWN" on CONSULT screen. However, do not select mode other than "0" and "OFF". Selecting "+1" or "–1" or "–2" is selected, that may cause irregular driveability.

Conform CVTF Deterioration
- Check CVT fluid deterioration level when driving under severe conditions.

"CVTF DETERIORATION DATE"

More than 210000:

It is necessary to change CVT fluid.

Less than 210000:

It is not necessary to change CVT fluid.

- How to Erase CVT Fluid Deterioration Date
- Select "clear".

Calibration Data
After replacing transaxle assembly, it is necessary to initialize ROM data of TCM. Checking calibration data makes it possible to check that initialization is successful.

Diagnostic Tool Function

INFOID:0000000009948942

OBD-II SELF-DIAGNOSTIC PROCEDURE (WITH GST)

Refer to EC-101, "GST (Generic Scan Tool)".

DTC/CIRCUIT DIAGNOSIS

U0100 LOST COMMUNICATION (ECM A)

Description

INFOID:0000000009948943

CAN (Controller Area Network) is a serial communication line for real-time application. It is an on-vehicle multiplex communication line with high data communication speed and excellent malfunction detection ability. Many electronic control units are equipped onto a vehicle, and each control unit shares information and links with other control units during operation (not independently). In CAN communication, control units are connected with 2 communication lines (CAN-H line, CAN-L line) allowing a high rate of information transmission with less wiring. Each control unit transmits/receives data but selectively reads required data only.

DTC Logic

INFOID:0000000009948944

DTC DETECTION LOGIC

DTC	Trouble diagnosis name	DTC detection condition	Possible causes
U0100	Lost Communication With ECM/PCM A	When the ignition switch is ON, TCM is unable to receive the CAN communications signal from ECM continuously for 2 seconds or more.	• ECM • Harness or connector (CAN communication line is open or shorted)

DTC CONFIRMATION PROCEDURE

1. PREPARATION BEFORE WORK

If another “DTC CONFIRMATION PROCEDURE” occurs just before, turn ignition switch OFF and wait for at least 10 seconds, then perform the next test.

>> GO TO 2.

2. PERFORM DTC CONFIRMATION PROCEDURE

With CONSULT
1. Start the engine and wait for at least 5 seconds.
2. Check DTC.

With GST
Follow the procedure “With CONSULT”.

Is “U0100” detected?

YES >> Go to TM-103, "Diagnosis Procedure".
NO >> INSPECTION END

Diagnosis Procedure

INFOID:0000000009948945

For the diagnosis procedure, refer to LAN-13, "Trouble Diagnosis Flow Chart".

U1000 CAN COMM CIRCUIT

Description

INFOID:0000000009948946

Real time communication is performed between each control unit such as TCM, ECM, combination meter, or others. Information is shared and linked between other control units. Each system is optimally controlled according to driving conditions of the vehicle.
In CAN (Controller Area Network) communication, 2 control units are connected via 2 communication lines (CAN-H and CAN-L) allowing a high rate of information transmission via less wiring. Each control unit transmits/receives data but selectively reads required data only.

DTC Logic

INFOID:0000000009948947

DTC DETECTION LOGIC

DTC	Trouble diagnosis name	DTC is detected if...	Possible cause
U1000	CAN communication line	TCM cannot transmit and receive CAN communication signals continuously for 2 seconds or more	• CAN communication line • Each control unit

DTC CONFIRMATION PROCEDURE

1. PRECONDITIONING

Immediately after performing any “DTC CONFIRMATION PROCEDURE”, always turn ignition switch OFF. Then wait at least 10 seconds before performing the next test.

>> GO TO 2.

2. PERFORM DTC CONFIRMATION PROCEDURE

With CONSULT
1. Start the engine.
2. Maintain idling state for 2 seconds or more.
3. Select “Self Diagnostic Results” in “TRANSMISSION”.

With GST
Follow the procedure “With CONSULT”.

Is “U1000” detected?

YES >> Go to TM-104, "Diagnosis Procedure".
NO >> INSPECTION END

Diagnosis Procedure

INFOID:0000000009948948

Go to LAN-22, "CAN System Specification Chart".

U1010 CONTROL UNIT (CAN)

Description

INFOID:0000000009948949

Real time communication is performed between each control unit such as TCM, ECM, combination meter, or others. Information is shared and linked between other control units. Each system is optimally controlled according to driving conditions of the vehicle.
In CAN (Controller Area Network) communication, 2 control units are connected via 2 communication lines (CAN-H and CAN-L) allowing a high rate of information transmission via less wiring. Each control unit transmits/receives data but selectively reads required data only.

DTC Logic

INFOID:0000000009948950

DTC DETECTION LOGIC

DTC	Trouble diagnosis name	DTC is detected if...	Possible cause
U1010	TCM Communication Malfunction	TCM detects a malfunction in CAN communication initial diagnosis (control unit malfunction)	TCM

DTC CONFIRMATION PROCEDURE

1. PRECONDITIONING

Immediately after performing any “DTC CONFIRMATION PROCEDURE”, always turn ignition switch OFF. Then wait at least 10 seconds before performing the next test.

>> GO TO 2.

2. PERFORM DTC CONFIRMATION PROCEDURE

With CONSULT
1. Start the engine.
2. Maintain idling state for 6 seconds or more.
3. Select “Self Diagnostic Results” in “TRANSMISSION”.

Is “U1010” detected?

YES >> Go to TM-105, "Diagnosis Procedure".
NO >> INSPECTION END

Diagnosis Procedure

INFOID:0000000009948951

1. CHECK INTERMITTENT INCIDENT

Refer to GI-40, "Intermittent Incident".

Is the inspection result normal?

YES >> Replace TCM. Refer to TM-223, "Exploded View".
NO >> Repair or replace damaged parts.

P0703 BRAKE SWITCH B

Description

INFOID:0000000009948952

- Stop lamp switch is installed to upper part of brake pedal.
- Stop lamp switch detects that brake pedal is depressed.
- Stop lamp switch transmits a signal of brake pedal depression to BCM.
- TCM receives stop lamp switch signal (CAN signal) from BCM.

DTC Logic

INFOID:0000000009948953

DTC DETECTION LOGIC

DTC	Trouble diagnosis name	DTC is detected if...	Possible cause
P0703	Brake Switch B Circuit	• TCM detects malfunction in CAN communication between BCM • TCM detects a state that ON/OFF of stop lamp switch signal is not switched	• Harness or connectors (CAN communication line is open or shorted.) (Stop lamp switch circuit is open or shorted.) • Stop lamp switch • BCM

DTC CONFIRMATION PROCEDURE

CAUTION:

Always drive vehicle at a safe speed.

1. PRECONDITIONING

Immediately after performing any “DTC CONFIRMATION PROCEDURE”, always turn ignition switch OFF. Then wait at least 10 seconds before performing the next test.

>> GO TO 2.

2. PERFORM DTC CONFIRMATION PROCEDURE

With CONSULT

1. Start the engine.
2. Select “Data Monitor” in “TRANSMISSION”.
3. Select “VEHICLE SPEED”.
4. Drive the vehicle.
5. Maintain the following conditions for 10 seconds or more.

VEHICLE SPEED	: More than 30 km/h (19 MPH)

6. Depress brake pedal and stop the vehicle.
7. Turn ignition switch OFF.
8. Repeat the above steps 4 to 7 two times.
9. Turn ignition switch ON.
10. Select “Self Diagnostic Results” in “TRANSMISSION”.

Is “P0703” detected?

YES >> Go to TM-106, "Diagnosis Procedure".
NO >> INSPECTION END

Diagnosis Procedure

INFOID:0000000009948954

1. CHECK STOP LAMP SWITCH POWER CIRCUIT

1. Turn ignition switch OFF.
2. Disconnect stop lamp switch connector.
3. Check voltage between stop lamp switch vehicle side harness connector terminal and ground.

Stop lamp switch vehicle side harness connector		Ground	Voltage (Approx.)
Connector	Terminal		
E115	1		Battery voltage

Is the inspection result normal?

YES >> GO TO 2.
NO >> GO TO 7.

2. CHECK HARNESS BETWEEN BCM AND STOP LAMP SWITCH (PART 1)

1. Disconnect BCM connector.
2. Check continuity between BCM vehicle side harness connector terminal and stop lamp switch vehicle side harness connector terminal.

With intelligent key system

BCM vehicle side harness connector		Stop lamp switch vehicle side harness connector		Continuity
Connector	Terminal	Connector	Terminal	
M68	9	E115	2	Existed

Without intelligent key system

BCM vehicle side harness connector		Stop lamp switch vehicle side harness connector		Continuity
Connector	Terminal	Connector	Terminal	
M65	9	E115	2	Existed

Is the inspection result normal?

YES >> GO TO 3.
NO >> Repair or replace damaged parts.

3. CHECK HARNESS BETWEEN BCM AND STOP LAMP SWITCH (PART 2)

Check continuity between BCM vehicle side harness connector terminal and ground.

With intelligent key system

BCM vehicle side harness connector		Ground	Continuity
Connector	Terminal		
M68	9		Not existed

Without intelligent key system

BCM vehicle side harness connector		Ground	Continuity
Connector	Terminal		
M65	9		Not existed

Is the inspection result normal?

YES >> GO TO 4.
NO >> Repair or replace damaged parts.

4. CHECK STOP LAMP SWITCH (PART 1)

Check stop lamp switch. Refer to TM-108, "Component Inspection (Stop Lamp Switch)".

Is the inspection result normal?

YES >> GO TO 7.
NO >> GO TO 5.

5. PERFORM STOP LAMP SWITCH INSTALLATION POSITION ADJUSTMENT

Perform stop lamp switch installation position adjustment. Refer to BR-7, "Inspection and Adjustment".

>> GO TO 6.

6. CHECK STOP LAMP SWITCH (PART 2)

Check stop lamp switch. Refer to TM-108, "Component Inspection (Stop Lamp Switch)".

Is the inspection result normal?

YES >> INSPECTION END
NO >> Replace stop lamp switch. Refer to BR-17, "Exploded View".

7. DETECT MALFUNCTIONING ITEMS

Check the following.
- 10A fuse (No.9)
- Harness for short or open between battery and stop lamp switch (Refer to PG-6, "Wiring Diagram - BATTERY POWER SUPPLY -".)
- Battery

Is the inspection result normal?

YES >> GO TO 8.
NO >> Repair or replace damaged parts.

8. CHECK INTERMITTENT INCIDENT

Refer to GI-40, "Intermittent Incident".

Is the inspection result normal?

YES >> Replace BCM. Refer to BCS-88, "Exploded View" (With intelligent key system), BCS-155, "Exploded View" (Without intelligent key system).
NO >> Repair or replace damaged parts.

Component Inspection (Stop Lamp Switch)

INFOID:0000000009948955

1. CHECK STOP LAMP SWITCH

Check continuity between stop lamp switch connector terminals.

Stop lamp switch connector			Condition	Continuity
Connector	Terminal			
E115	1	2	Depressed brake pedal	Existed
			Brake pedal not depressed	Not existed
	3	4	Depressed brake pedal	Existed
			Brake pedal not depressed	Not existed

Is the inspection result normal?

YES >> INSPECTION END
NO >> Replace stop lamp switch. Refer to BR-17, "Exploded View".

P0705 TRANSMISSION RANGE SWITCH A

Description

INFOID:0000000009948956

- Transmission range switch is installed to upper part of transaxle case.
- Transmission range switch detects the selector lever position and transmits selector lever position signal to TCM.

DTC Logic

INFOID:0000000009948957

DTC DETECTION LOGIC

DTC	Trouble diagnosis name	DTC is detected if...	Possible cause
P0705	Transmission Range Sensor A Circuit (PRNDL Input)	• Range signal is not transmitted to TCM • 2 or more range signals are transmitted to TCM	• Harness or connectors [Transmission range switch circuit is open or shorted.] • Transmission range switch

DTC CONFIRMATION PROCEDURE

1. PRECONDITIONING

Immediately after performing any “DTC CONFIRMATION PROCEDURE”, always turn ignition switch OFF. Then wait at least 10 seconds before performing the next test.

>> GO TO 2.

2. PERFORM DTC CONFIRMATION PROCEDURE

With CONSULT
1. Start the engine.
2. Shift and hold selector lever to each position for 5 seconds or more.
3. Select “Self Diagnostic Results” in “TRANSMISSION”.

With GST
Follow the procedure “With CONSULT”.

Is “P0705” detected?

YES >> Go to TM-109, "Diagnosis Procedure".
NO >> INSPECTION END

Diagnosis Procedure

INFOID:0000000009948958

1. CHECK TRANSMISSION RANGE SWITCH POWER CIRCUIT

1. Turn ignition switch OFF.
2. Disconnect transmission range switch connector.
3. Turn ignition switch ON.
4. Check voltage between transmission range switch vehicle side harness connector terminal and ground.

Transmission range switch vehicle side harness connector		Ground	Condition	Voltage (Approx.)
Connector	Terminal			
F21	3		Ignition switch: ON	Battery voltage
			Ignition switch: OFF	0 V

Is the inspection result normal?

YES >> GO TO 2.
NO >> GO TO 5.

2. CHECK HARNESS BETWEEN TCM AND TRANSMISSION RANGE SWITCH (PART 1)

1. Turn ignition switch OFF.
2. Disconnect TCM connector.

3. Check continuity between TCM vehicle side harness connector terminals and transmission range switch vehicle side harness connector terminals.

TCM vehicle side harness connector		Transmission range switch vehicle side harness connector		Continuity
Connector	Terminal	Connector	Terminal	
E18	18	F21	4	Existed
	22		5	
E19	26		6	
	43		7	
	44		8	

Is the inspection result normal?

YES >> GO TO 3.
NO >> Repair or replace damaged parts.

3. CHECK HARNESS BETWEEN TCM AND TRANSMISSION RANGE SWITCH (PART 2)

Check continuity between TCM vehicle side harness connector terminal and ground.

TCM vehicle side harness connector			Continuity
Connector	Terminal		
E18	18	Ground	Not existed
	22		
E19	26		
	43		
	44		

Is the inspection result normal?

YES >> GO TO 4.
NO >> Repair or replace damaged parts.

4. CHECK TRANSMISSION RANGE SWITCH

1. Remove control cable from manual lever. Refer to TM-219, "Exploded View".
2. Check transmission range switch. Refer to TM-111, "Component Inspection (Transmission Range Switch)".

Is the inspection result normal?

YES >> Check intermittent incident. Refer to GI-40, "Intermittent Incident".
NO >> Transmission range switch is malfunctioning. Replace transaxle assembly. Refer to TM-235, "Exploded View".

5. CHECK HARNESS BETWEEN TRANSMISSION RANGE SWITCH AND IPDM E/R (PART 1)

1. Turn ignition switch OFF.
2. Disconnect IPDM E/R connector.
3. Check continuity between transmission range switch vehicle side harness connector terminals and IPDM E/R vehicle side harness connector terminals.

Transmission range switch vehicle side harness connector		IPDM E/R vehicle side harness connector		Continuity
Connector	Terminal	Connector	Terminal	
F21	3	E15	58	Existed

Is the inspection result normal?

YES >> GO TO 6.
NO >> Repair or replace damaged parts.

6. CHECK HARNESS BETWEEN TRANSMISSION RANGE SWITCH AND IPDM E/R (PART 2)

Check continuity between transmission range switch vehicle side harness connector terminal and ground.

Transmission range switch vehicle side harness connector		Ground	Continuity
Connector	Terminal		
F21	3		Not existed

Is the inspection result normal?

YES >> GO TO 7.
NO >> Repair or replace damaged parts.

7. DETECT MALFUNCTIONING ITEMS

Check the following.
- IPDM E/R
- 10A fuse (No.55, located in the IPDM E/R)
- Harness for short or open between IPDM E/R and ignition switch (Refer to PG-33, "Wiring Diagram - IGNITION POWER SUPPLY -".)
- Ignition switch

Is the inspection result normal?

YES >> Check intermittent incident. Refer to GI-40, "Intermittent Incident".
NO >> Repair or replace damaged parts.

Component Inspection (Transmission Range Switch)

INFOID:0000000009948959

1. CHECK TRANSMISSION RANGE SWITCH

Check continuity of transmission range switch connector terminals.

Transmission range switch connector			Condition	Continuity
Connector	Terminal			
F21	1	2	Manual lever: “P” and “N” positions	Existed
			Other than the above	Not existed
	3	4	Manual lever: “P” position	Existed
			Other than the above	Not existed
	3	5	Manual lever: “R” position	Existed
			Other than the above	Not existed
	3	6	Manual lever: “N” position	Existed
			Other than the above	Not existed
	3	7	Manual lever: “D” position	Existed
			Other than the above	Not existed
	3	8	Manual lever: “L” position	Existed
			Other than the above	Not existed

Is the inspection result normal?

YES >> INSPECTION END
NO >> Transmission range switch is malfunctioning. Replace transaxle assembly. Refer to TM-235, "Exploded View".

P0710 TRANSMISSION FLUID TEMPERATURE SENSOR A

Description

INFOID:0000000009948960

- CVT fluid temperature sensor is installed to control valve.
- CVT fluid temperature sensor detects CVT fluid temperature in oil pan.
- The CVT fluid temperature sensor converts CVT fluid temperature into output voltage and transmits the signal to TCM.
- The CVT fluid temperature sensor uses a thermistor and its electrical resistance varies as the temperature varies. The electrical resistance decreases as the temperature increases.

DTC Logic

INFOID:0000000009948961

DTC DETECTION LOGIC

DTC	Trouble diagnosis name	DTC is detected if...	Possible cause
P0710	Transmission Fluid Temperature Sensor A Circuit	• CVT fluid temperature does not rise to 10°C (50°F) after driving for a certain period of time with the TCM-received fluid temperature sensor value between –40°C (–40°F) and 9°C (48.2°F). • CVT fluid temperature sensor value that TCM receives is more than 180°C (356°F) • TCM-received CVT fluid temperature sensor value while driving is less than –40°C (–40°F) • When compared with value of ECT sensor temperature, - the value of CVT fluid temperature sensor is higher by more than 38°C (100°F). - the value of CVT fluid temperature sensor is lower by more than 27°C (81°F).	• Harness or connectors (CVT fluid temperature sensor circuit is open or shorted.) • CVT fluid temperature sensor

DTC CONFIRMATION PROCEDURE

CAUTION:

Always drive vehicle at a safe speed.

NOTE:

Immediately after performing any “DTC CONFIRMATION PROCEDURE”, always turn ignition switch OFF. Then wait at least 10 seconds before performing the next test.

1. CHECK DTC DETECTION (PART 1)

1. Start the engine.
2. Maintain the following condition for 5 seconds or more.

Vehicle speed : 20 km/h (12 MPH) or more

3. Stop the vehicle.
4. Check the first trip DTC.

Is “P0710” detected?

YES >> Go to TM-113, "Diagnosis Procedure".
NO >> GO TO 2.

2. CHECK DTC DETECTION (PART 2)

With CONSULT

1. Turn ignition switch OFF and cool the engine.
2. Turn ignition switch ON.
   CAUTION:
   Never start the engine.
3. Select “Data Monitor” in “TRANSMISSION”.
4. Select “FLUID TEMP”.
5. Record CVT fluid temperature.
6. Start the engine and wait for at least 3 minutes.

7. Drive the vehicle for the total minutes specified in the Driving time column below with the following conditions satisfied.

Selector lever	: “D” position
Accelerator pedal position	: 1.0/8 or more
Vehicle speed	: 10 km/h (7 MPH) or more

CVT fluid temperature before engine start	Driving time
–40°C (–40°F) – –31°C (–23.8°F)	18 minutes or more
–30°C (–22°F) – –21°C (–5.8°F)	16 minutes or more
–20°C (–4°F) – –11°C (–12.2°F)	13 minutes or more
–10°C (14°F) – –1°C (30.2°F)	10 minutes or more
0°C (32°F) – 9°C (48.2°F)	7 minutes or more
10°C (50°F) or more	— (Go to 3.)

8. Stop the vehicle.
9. Check the first trip DTC.

With GST

1. Turn ignition switch OFF and cool the engine.
2. Start the engine and wait for at least 3 minutes.
3. Drive the vehicle and maintain the following conditions for 18 minutes or more.

Selector lever	: “D” position
Accelerator pedal position	: 1.0/8 or more
Vehicle speed	: 10 km/h (7 MPH) or more

4. Stop the vehicle.
5. Check the first trip DTC.

Is “P0710” detected?

YES >> Go to TM-113, "Diagnosis Procedure".
NO >> GO TO 3.

3. CHECK CVT FLUID TEMPERATURE SENSOR

1. Turn ignition switch OFF.
2. Disconnect CVT unit connector.
3. Check resistance between CVT unit connector terminals.

CVT unit			Condition	Resistance (Approx.)
Connector	Terminal			
F24	17	19	When CVT fluid temperature is 20°C (68°F)	6.83 – 6.29 kΩ
			When CVT fluid temperature is 50°C (122°F)	2.25 – 2.10 kΩ
			When CVT fluid temperature is 80°C (176°F)	0.90 – 0.85 kΩ

Is the inspection result normal?

YES >> INSPECTION END
NO >> Replace the transaxle assembly due to malfunction in the CVT fluid temperature sensor. Refer to TM-235, "Exploded View".

Diagnosis Procedure

INFOID:0000000009948963

1. CHECK CVT FLUID TEMPERATURE SENSOR CIRCUIT (PART 1)

1. Turn ignition switch ON.
2. Check resistance between TCM vehicle side harness connector terminals.

TCM connector			Condition	Resistance (Approx.)
Connector	Terminal			
E19	47	42	CVT fluid temperature: 20°C (68°F)	6.83 – 6.29 kΩ
			CVT fluid temperature: 50°C (122°F)	2.25 – 2.10 kΩ
			CVT fluid temperature: 80°C (176°F)	0.90 – 0.85 kΩ

Is the inspection result normal?

YES >> GO TO 2.
NO >> GO TO 3.

2. CHECK CVT FLUID TEMPERATURE SENSOR CIRCUIT (PART 2)

1. Disconnect TCM connector.
2. Check continuity between TCM vehicle side harness connector terminal and ground.

TCM vehicle side harness connector		Ground	Continuity
Connector	Terminal		
E19	47		Not existed

Is the inspection result normal?

YES >> Check intermittent incident. Refer to GI-40, "Intermittent Incident".
NO >> GO TO 3.

3. CHECK CVT FLUID TEMPERATURE SENSOR

1. Turn ignition switch OFF.
2. Disconnect CVT unit connector.
3. Check CVT fluid temperature sensor. Refer to TM-115, "Component Inspection (CVT Fluid Temperature Sensor)".

Is the inspection result normal?

YES >> GO TO 4.
NO >> CVT fluid temperature sensor is malfunctioning. Replace transaxle assembly. Refer to TM-235, "Exploded View".

4. CHECK HARNESS BETWEEN TCM AND CVT UNIT (CVT FLUID TEMPERATURE SENSOR) (PART 1)

1. Disconnect TCM connector.
2. Check continuity between TCM vehicle side harness connector terminals and CVT unit vehicle side harness connector terminals.

TCM vehicle side harness connector		CVT unit vehicle side harness connector		Continuity
Connector	Terminal	Connector	Terminal	
E19	42	F24	19	Existed
	47		17	

Is the inspection result normal?

YES >> GO TO 5.
NO >> Repair or replace damaged parts.

5. CHECK HARNESS BETWEEN TCM AND CVT UNIT (CVT FLUID TEMPERATURE SENSOR) (PART 2)

Check continuity between TCM vehicle side harness connector terminals and ground.

TCM vehicle side harness connector		Ground	Continuity
Connector	Terminal		
E19	42		Not existed
	47		

Is the inspection result normal?

YES >> Check intermittent incident. Refer to GI-40, "Intermittent Incident".

NO >> Repair or replace damaged parts.

Component Inspection (CVT Fluid Temperature Sensor)

INFOID:0000000009948964

1. CHECK CVT FLUID TEMPERATURE SENSOR (PART 1)

Check resistance between CVT unit harness connector terminals.

CVT unit harness connector			Condition	Resistance (Approx.)
Connector	Terminal			
F24	17	19	CVT fluid temperature: 20°C (68°F)	6.83 – 6.29 kΩ
			CVT fluid temperature: 50°C (122°F)	2.25 – 2.10 kΩ
			CVT fluid temperature: 80°C (176°F)	0.90 – 0.85 kΩ

Is the inspection result normal?

YES >> GO TO 2.
NO >> CVT fluid temperature sensor is malfunctioning. Replace transaxle assembly. Refer to TM-235, "Exploded View".

2. CHECK CVT FLUID TEMPERATURE SENSOR (PART 2)

Check continuity between CVT unit vehicle side harness connector terminal and ground.

CVT unit harness connector		Ground	Continuity
Connector	Terminal		
F24	17		Not existed

Is the inspection result normal?

YES >> INSPECTION END
NO >> CVT fluid temperature sensor is malfunctioning. Replace transaxle assembly. Refer to TM-235, "Exploded View".

P0715 INPUT SPEED SENSOR A

Description

INFOID:0000000009948965

- Primary speed sensor is installed to the front side of transaxle case.
- Primary speed sensor detects primary pulley speed.
- Primary speed sensor converts primary pulley speed to pulse signal and transmits the signal to TCM.

DTC Logic

INFOID:0000000009948966

DTC DETECTION LOGIC

DTC	Trouble diagnosis name	DTC is detected if...	Possible cause
P0715	Input/Turbine Speed Sensor A Circuit	• Primary speed sensor signal is not transmitted to TCM • Primary speed sensor value is less than 150 rpm while secondary pulley speed is more than 500 rpm	• Harness or connectors (Primary speed sensor circuit is open or shorted.) • Primary speed sensor

DTC CONFIRMATION PROCEDURE

CAUTION:

Always drive vehicle at a safe speed.

1. PRECONDITIONING

Immediately after performing any “DTC CONFIRMATION PROCEDURE”, always turn ignition switch OFF. Then wait at least 10 seconds before performing the next test.

>> GO TO 2.

2. PERFORM DTC CONFIRMATION PROCEDURE

With CONSULT

1. Start the engine.
2. Select “Data Monitor” in “TRANSMISSION”.
3. Select “SEC SPEED” and “VEHICLE SPEED”.
4. Drive the vehicle.
5. Maintain the following conditions for 5 seconds or more.

SEC SPEED	: More than 500 rpm
VEHICLE SPEED	: More than 10 km/h (7 MPH)

6. Stop the vehicle.
7. Select “Self Diagnostic Results” in “TRANSMISSION”.

With GST

Follow the procedure “With CONSULT”.

Is “P0715” detected?

YES >> Go to TM-116, "Diagnosis Procedure".
NO >> INSPECTION END

Diagnosis Procedure

INFOID:0000000009948967

1. CHECK PRIMARY SPEED SENSOR POWER CIRCUIT

1. Turn ignition switch OFF.
2. Disconnect primary speed sensor connector.
3. Turn ignition switch ON.
4. Check voltage between primary speed sensor vehicle side harness connector terminal and ground.

Primary speed sensor vehicle side harness connector		Ground	Voltage (Approx.)
Connector	Terminal		
F55	3		Battery voltage

Is the inspection result normal?

YES >> GO TO 2.
NO >> GO TO 6.

2. CHECK TCM INPUT SIGNAL

1. Turn ignition switch OFF.
2. Connect primary speed sensor connector.
3. Lift the vehicle.
4. Start the engine.
5. Check frequency of primary speed sensor.

TCM connector			Condition	Data (Approx.)
Connector	Terminal			
E19	38	42	• Selector lever: “L” position • While driving at 20 km/h (12 MPH)	1275 Hz 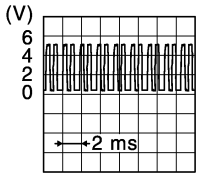 JSDIA1306GB

Is the inspection result normal?

YES >> GO TO 9.
NO >> GO TO 3.

3. CHECK HARNESS BETWEEN TCM AND PRIMARY SPEED SENSOR (PART 1)

1. Turn ignition switch OFF.
2. Disconnect TCM connector and primary speed sensor connector.
3. Check continuity between TCM vehicle side harness connector terminal and primary speed sensor vehicle side harness connector terminal.

TCM vehicle side harness connector		Primary speed sensor vehicle side harness connector		Continuity
Connector	Terminal	Connector	Terminal	
E19	38	F55	2	Existed
	42		1	

Is the inspection result normal?

YES >> GO TO 4.
NO >> Repair or replace damaged parts.

4. CHECK HARNESS BETWEEN TCM AND PRIMARY SPEED SENSOR (PART 2)

Check continuity between TCM vehicle side harness connector terminal and ground.

TCM vehicle side harness connector		Ground	Continuity
Connector	Terminal		
E19	38		Not existed
	42		

Is the inspection result normal?

YES >> GO TO 5.
NO >> Repair or replace damaged parts.

5. CHECK CVT UNIT CIRCUIT

1. Disconnect CVT unit connector.
2. Check continuity between CVT unit connector terminal and ground.

CVT unit connector		Ground	Continuity
Connector	Terminal		
F24	19		Not existed

Is the inspection result normal?

YES >> GO TO 9.
NO >> Repair or replace damaged parts.

6. CHECK HARNESS BETWEEN PRIMARY SPEED SENSOR (POWER) AND IPDM E/R (PART 1)

1. Turn ignition switch OFF.
2. Disconnect IPDM E/R connector.
3. Check continuity between primary speed sensor vehicle side harness connector terminal and IPDM E/R vehicle side harness connector terminal.

Primary speed sensor vehicle side harness connector		IPDM E/R vehicle side harness connector		Continuity
Connector	Terminal	Connector	Terminal	
F55	3	E15	58	Existed

Is the inspection result normal?

YES >> GO TO 7.
NO >> Repair or replace damaged parts.

7. CHECK HARNESS BETWEEN PRIMARY SPEED SENSOR (POWER) AND IPDM E/R (PART 2)

Check continuity between primary speed sensor vehicle side harness connector terminal and ground.

Primary speed sensor vehicle side harness connector		Ground	Continuity
Connector	Terminal		
F55	3		Not existed

Is the inspection result normal?

YES >> GO TO 8.
NO >> Repair or replace damaged parts.

8. DETECT MALFUNCTIONING ITEMS

Check the following.
- IPDM E/R
- 10A fuse (No.55, located in the IPDM E/R)
- Harness for short or open between IPDM E/R and ignition switch (Refer to PG-33, "Wiring Diagram - IGNITION POWER SUPPLY -".)
- Ignition switch

Is the inspection result normal?

YES >> Check intermittent incident. Refer to GI-40, "Intermittent Incident"
NO >> Repair or replace damaged parts.

9. CHECK INTERMITTENT INCIDENT

Refer to GI-40, "Intermittent Incident".

Is the inspection result normal?

YES >> Replace primary speed sensor. Refer to TM-227, "Exploded View".
NO >> Repair or replace damaged parts.

P0720 OUTPUT SPEED SENSOR

Description

INFOID:0000000009948968

- Secondary speed sensor is installed to the upper side of converter housing.
- Secondary speed sensor detects secondary pulley speed.
- Secondary speed sensor converts secondary pulley speed to pulse signal and transmits the signal to TCM.
- TCM converts pulse signal to vehicle speed.

DTC Logic

INFOID:0000000009948969

DTC DETECTION LOGIC

DTC	Trouble diagnosis name	DTC is detected if...	Possible cause
P0720	Output Speed Sensor Circuit	• Secondary speed sensor signal is not transmitted to TCM • Secondary speed sensor value is less than 150 rpm while primary pulley speed is more than 1,000 rpm	• Harness or connectors (Secondary speed sensor circuit is open or shorted.) • Secondary speed sensor

DTC CONFIRMATION PROCEDURE

CAUTION:

Always drive vehicle at a safe speed.

1. PRECONDITIONING

Immediately after performing any “DTC CONFIRMATION PROCEDURE”, always turn ignition switch OFF. Then wait at least 10 seconds before performing the next test.

>> GO TO 2.

2. PERFORM DTC CONFIRMATION PROCEDURE

With CONSULT

1. Start the engine.
2. Select “Data Monitor” in “TRANSMISSION”.
3. Select “PRI SPEED” and “VEHICLE SPEED”.
4. Drive the vehicle.
5. Maintain the following conditions for 5 seconds or more.

PRI SPEED	: More than 1,000 rpm
VEHICLE SPEED	: More than 10 km/h (7 MPH)

6. Stop the vehicle.
7. Select “Self Diagnostic Results” in “TRANSMISSION”.

With GST

Follow the procedure “With CONSULT”.

Is “P0720” detected?

YES >> Go to TM-119, "Diagnosis Procedure".

NO >> INSPECTION END

Diagnosis Procedure

INFOID:0000000009948970

1. CHECK SECONDARY SPEED SENSOR POWER CIRCUIT

1. Turn ignition switch OFF.
2. Disconnect secondary speed sensor connector.
3. Turn ignition switch ON.
4. Check voltage between secondary speed sensor vehicle side harness connector terminal and ground.

Secondary speed sensor vehicle side harness connector		Ground	Voltage (Approx.)
Connector	Terminal		
F19	3		Battery voltage

Is the inspection result normal?

YES >> GO TO 2.
NO >> GO TO 5.

2. CHECK TCM INPUT SIGNAL

1. Turn ignition switch OFF.
2. Connect secondary speed sensor connector.
3. Lift the vehicle.
4. Start the engine.
5. Check frequency of secondary speed sensor.

TCM connector			Condition	Data (Approx.)
Connector	Terminal			
E19	29	42	• Selector lever: “L” position • While driving at 20 km/h (12 MPH)	570 Hz 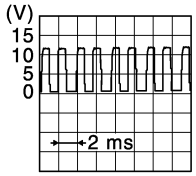 JSDIA1305GB

Is the inspection result normal?

YES >> GO TO 8.
NO >> GO TO 3.

3. CHECK HARNESS BETWEEN TCM AND SECONDARY SPEED SENSOR (PART 1)

1. Turn ignition switch OFF.
2. Disconnect TCM connector and secondary speed sensor connector.
3. Check continuity between TCM vehicle side harness connector terminals and secondary speed sensor vehicle side harness connector terminals.

TCM vehicle side harness connector		Secondary speed sensor vehicle side harness connector		Continuity
Connector	Terminal	Connector	Terminal	
E19	29	F19	2	Existed
	42		1	

Is the inspection result normal?

YES >> GO TO 4.
NO >> Repair or replace damaged parts.

4. CHECK HARNESS BETWEEN TCM AND SECONDARY SPEED SENSOR (PART 2)

Check continuity between TCM vehicle side harness connector terminals and ground.

TCM vehicle side harness connector		Ground	Continuity
Connector	Terminal		
E19	29		Not existed
	42		

Is the inspection result normal?

YES >> GO TO 8.
NO >> Repair or replace damaged parts.

5. CHECK HARNESS BETWEEN SECONDARY SPEED SENSOR (POWER) AND IPDM E/R (PART 1)

1. Turn ignition switch OFF.
2. Disconnect IPDM E/R connector.
3. Check continuity between secondary speed sensor vehicle side harness connector terminal and IPDM E/R vehicle side harness connector terminal.

Secondary speed sensor vehicle side harness connector		IPDM E/R vehicle side harness connector		Continuity
Connector	Terminal	Connector	Terminal	
F19	3	E15	58	Existed

Is the inspection result normal?

YES >> GO TO 6.
NO >> Repair or replace damaged parts.

6. CHECK HARNESS BETWEEN SECONDARY SPEED SENSOR (POWER) AND IPDM E/R (PART 2)

Check continuity between secondary speed sensor vehicle side harness connector terminal and ground.

Secondary speed sensor vehicle side harness connector		Ground	Continuity
Connector	Terminal		
F19	3		Not existed

Is the inspection result normal?

YES >> GO TO 7.
NO >> Repair or replace damaged parts.

7. DETECT MALFUNCTIONING ITEMS

Check the following.
- IPDM E/R
- 10A fuse (No.55, located in the IPDM E/R)
- Harness for short or open between IPDM E/R and ignition switch (Refer to PG-33, "Wiring Diagram - IGNITION POWER SUPPLY -".)
- Ignition switch

Is the inspection result normal?

YES >> Check intermittent incident. Refer to GI-40, "Intermittent Incident".
NO >> Repair or replace damaged parts.

8. CHECK INTERMITTENT INCIDENT

Refer to GI-40, "Intermittent Incident".

Is the inspection result normal?

YES >> Replace secondary speed sensor. Refer to TM-228, "Exploded View".
NO >> Repair or replace damaged parts.

P0725 ENGINE SPEED

Description

INFOID:0000000009948971

TCM receives engine speed signal from ECM via CAN communication.

DTC Logic

INFOID:0000000009948972

DTC DETECTION LOGIC

DTC	Trouble diagnosis name	DTC is detected if...	Possible cause
P0725	Engine Speed Input Circuit	• TCM detects a malfunction in CAN communication between TCM and ECM • When primary pulley speed is more than 1,000 rpm, engine speed (CAN signal) is less than 450 rpm	• Harness or connectors (CAN communication line is open or shorted.) (Engine speed signal circuit is open or shorted.) • ECM

DTC CONFIRMATION PROCEDURE

CAUTION:

Always drive vehicle at a safe speed.

1. PRECONDITIONING

Immediately after performing any “DTC CONFIRMATION PROCEDURE”, always turn ignition switch OFF. Then wait at least 10 seconds before performing the next test.

>> GO TO 2.

2. PERFORM DTC CONFIRMATION PROCEDURE

With CONSULT

1. Start the engine.
2. Select “Data Monitor” in “TRANSMISSION”.
3. Select “PRI SPEED SEN”.
4. Drive the vehicle.
5. Maintain the following conditions for 10 seconds or more.

PRI SPEED SEN	: More than 1,000 rpm

6. Stop the vehicle.
7. Select “Self Diagnostic Results” in “TRANSMISSION”.

Is “P0725” detected?

YES >> Go to TM-122, "Diagnosis Procedure".
NO >> INSPECTION END

Diagnosis Procedure

INFOID:0000000009948973

1. CHECK DTC WITH ECM

With CONSULT

1. Turn ignition switch ON.
2. Perform “Self Diagnostic Results” in “ENGINE”.

Is the inspection result normal?

YES >> Check intermittent incident. Refer to GI-40, "Intermittent Incident".
NO >> Check DTC detected item. Refer to TM-186, "DTC Index".

P0740 TORQUE CONVERTER

Description

INFOID:0000000009948974

- Torque converter clutch solenoid valve is installed to control valve.
- Torque converter clutch solenoid valve adjusts oil pump discharge pressure to an optimum level according to the driving conditions.
- The adoption of an N/L type (normal low) torque converter clutch solenoid valve enables generation of a control oil pressure when a voltage is not applied to the coil.
- Torque converter clutch solenoid valve is controlled by TCM according to signals transmitted from vehicle speed sensor and accelerator pedal position sensor.
- Lock-up is prohibited when CVT fluid temperature is low.
- When accelerator pedal is depressed (throttle opening angle is less than 2.0/8) in the lock-up state, engine speed does not suddenly change. If engine speed changes suddenly, lock-up is not applied.

DTC Logic

INFOID:0000000009948975

DTC DETECTION LOGIC

DTC	Trouble diagnosis name	DTC is detected if...	Possible cause
P0740	Torque Converter Clutch Circuit/Open	• Torque converter clutch solenoid valve monitor voltage value of TCM is less than 70% of torque converter clutch solenoid valve target voltage value • Torque converter clutch solenoid valve current command value of TCM and torque converter clutch solenoid valve current monitor value is deviated	• Harness or connectors (Torque converter clutch solenoid valve circuit is open or shorted.) • Torque converter clutch solenoid valve

DTC CONFIRMATION PROCEDURE

CAUTION:

Always drive vehicle at a safe speed.

1. PRECONDITIONING (PART 1)

Immediately after performing any “DTC CONFIRMATION PROCEDURE”, always turn ignition switch OFF. Then wait at least 10 seconds before performing the next test.

>> GO TO 2.

2. PRECONDITIONING (PART 2)

With CONSULT
1. Start the engine.
2. Select “Data Monitor” in “TRANSMISSION”.
3. Select “ATF TEMP SEN”.

Is “ATF TEMP SEN” value 2.17 V or less?

YES >> GO TO 3.
NO >> 1. Warm up transaxle.
2. GO TO 3.

3. PERFORM DTC CONFIRMATION PROCEDURE

With CONSULT
1. Start the engine.
2. Select “Data Monitor” in “TRANSMISSION”.
3. Select “VEHICLE SPEED”.
4. Drive the vehicle.
5. Maintain the following conditions for 5 seconds or more.

VEHICLE SPEED : More than 40 km/h (25 MPH)

6. Stop the vehicle.

7. Select “Self Diagnostic Results” in “TRANSMISSION”.

With GST
Follow the procedure “With CONSULT”.

Is “P0740” detected?

YES >> Go to TM-124, "Diagnosis Procedure".
NO >> INSPECTION END

Diagnosis Procedure

INFOID:0000000009948976

1. CHECK TORQUE CONVERTER CLUTCH SOLENOID VALVE CIRCUIT

1. Turn ignition switch OFF.
2. Check resistance between TCM connector terminal and ground.

TCM connector		Ground	Condition	Resistance (Approx.)
Connector	Terminal			
E18	3		CVT fluid temperature: 20°C (68°F)	5.60 – 6.60 Ω
			CVT fluid temperature: 50°C (122°F)	6.76 – 6.87 Ω
			CVT fluid temperature: 80°C (176°F)	7.47 – 7.59 Ω

Is the inspection result normal?

YES >> Check intermittent incident. Refer to GI-40, "Intermittent Incident".
NO >> GO TO 2.

2. CHECK TORQUE CONVERTER CLUTCH SOLENOID VALVE

1. Disconnect CVT unit connector.
2. Check torque converter clutch solenoid valve. Refer to TM-125, "Component Inspection (Torque Converter Clutch Solenoid Valve)".

Is the inspection result normal?

YES >> GO TO 3.
NO >> Torque converter clutch solenoid valve is malfunctioning. Replace transaxle assembly. Refer to TM-235, "Exploded View".

3. CHECK HARNESS BETWEEN TCM AND CVT UNIT (TORQUE CONVERTER CLUTCH SOLENOID VALVE) (PART 1)

1. Disconnect TCM connector.
2. Check continuity between TCM vehicle side harness connector terminal and CVT unit vehicle side harness connector terminal.

TCM vehicle side harness connector		CVT unit vehicle side harness connector		Continuity
Connector	Terminal	Connector	Terminal	
E18	3	F24	12	Existed

Is the inspection result normal?

YES >> GO TO 4.
NO >> Repair or replace damaged parts.

4. CHECK HARNESS BETWEEN TCM AND CVT UNIT (TORQUE CONVERTER CLUTCH SOLENOID VALVE) (PART 2)

Check continuity between TCM vehicle side harness connector terminal and ground.

TCM vehicle side harness connector		Ground	Continuity
Connector	Terminal		
E18	3		Not existed

Is the inspection result normal?

YES >> Check intermittent incident. Refer to GI-40, "Intermittent Incident".
NO >> Repair or replace damaged parts.

Component Inspection (Torque Converter Clutch Solenoid Valve)

INFOID:0000000009948977

1. CHECK TORQUE CONVERTER CLUTCH SOLENOID VALVE

Check resistance between CVT unit harness connector terminal and ground.

CVT unit harness connector			Condition	Resistance (Approx.)
Connector	Terminal			
F24	12	Ground	CVT fluid temperature: 20°C (68°F)	5.60 – 6.60 Ω
			CVT fluid temperature: 50°C (122°F)	6.76 – 6.87 Ω
			CVT fluid temperature: 80°C (176°F)	7.47 – 7.59 Ω

Is the inspection result normal?

YES >> INSPECTION END

NO >> Torque converter clutch solenoid valve is malfunctioning. Replace transaxle assembly. Refer to TM-235, "Exploded View".

P0744 TORQUE CONVERTER

Description

INFOID:0000000009948978

- This is detected when torque converter clutch is not engaged under an electrically normal condition of torque converter clutch solenoid valve.
- This DTC is not caused by an electrical malfunction (circuit open or short) but is caused by a mechanical malfunction (control valve clogging, solenoid valve sticking, and others).

DTC Logic

INFOID:0000000009948979

DTC DETECTION LOGIC

DTC	Trouble diagnosis name	DTC is detected if...	Possible cause
P0744	Torque Converter Clutch Circuit Intermittent	Torque converter slip speed is more than a certain value (40 rpm + vehicle speed/2) while TCM is in lock-up command state	• Hydraulic control circuit • Torque converter clutch solenoid valve • Lock-up select solenoid valve

DTC CONFIRMATION PROCEDURE

CAUTION:

Always drive vehicle at a safe speed.

1. PRECONDITIONING

Immediately after performing any “DTC CONFIRMATION PROCEDURE”, always turn ignition switch OFF. Then wait at least 10 seconds before performing the next test.

>> GO TO 2.

2. PERFORM DTC CONFIRMATION PROCEDURE

With CONSULT

1. Start the engine.
2. Select “Data Monitor” in “TRANSMISSION”.
3. Select “RANGE”, “ATF TEMP SEN”, “ACC PEDAL OPEN” and “VEHICLE SPEED”.
4. Drive the vehicle.
5. Maintain the following conditions for 10 seconds or more.

RANGE	: D
ATF TEMP SEN	: 2.03 V or less
ACC PEDAL OPEN	: 0.0/8 – 1.0/8
VEHICLE SPEED	: More than 40 km/h (25 MPH)

6. Stop the vehicle.
7. Select “Self Diagnostic Results” in “TRANSMISSION”.

With GST

Follow the procedure “With CONSULT”.

Is “P0744” detected?

YES >> Go to TM-126, "Diagnosis Procedure".
NO >> INSPECTION END

Diagnosis Procedure

INFOID:0000000009948980

1. CHECK LINE PRESSURE

Perform line pressure test. Refer to TM-209, "Inspection and Judgment".

Is the inspection result normal?

YES >> GO TO 2.
NO >> Repair or replace damaged parts. Refer to TM-209, "Inspection and Judgment".

2. CHECK TORQUE CONVERTER CLUTCH SOLENOID VALVE

1. Turn ignition switch OFF.
2. Disconnect CVT unit connector.
3. Check torque converter clutch solenoid valve. Refer to TM-127, "Component Inspection (Torque Converter Clutch Solenoid Valve)".

Is the inspection result normal?

YES >> GO TO 3.
NO >> Torque converter clutch solenoid valve is malfunctioning. Replace transaxle assembly. Refer to TM-235, "Exploded View".

3. CHECK LOCK-UP SELECT SOLENOID VALVE

Check lock-up select solenoid valve. Refer to TM-127, "Component Inspection (Lock-up Select Solenoid Valve)".

Is the inspection result normal?

YES >> GO TO 4.
NO >> Lock-up select solenoid valve is malfunctioning. Replace transaxle assembly. Refer to TM-235, "Exploded View".

4. CHECK PRIMARY SPEED SENSOR SYSTEM

Check primary speed sensor system. Refer to TM-116, "DTC Logic".

Is the inspection result normal?

YES >> GO TO 5.
NO >> Repair or replace damaged parts.

5. CHECK SECONDARY SPEED SENSOR SYSTEM

Check secondary speed sensor system. Refer to TM-119, "DTC Logic".

Is the inspection result normal?

YES >> GO TO 6.
NO >> Repair or replace damaged parts.

6. CHECK INTERMITTENT INCIDENT

Refer to GI-40, "Intermittent Incident".

Is the inspection result normal?

YES >> Replace transaxle assembly. Refer to TM-235, "Exploded View".
NO >> Repair or replace damaged parts.

Component Inspection (Torque Converter Clutch Solenoid Valve)

INFOID:0000000009948981

1. CHECK TORQUE CONVERTER CLUTCH SOLENOID VALVE

Check resistance between CVT unit harness connector terminal and ground.

CVT unit harness connector			Condition	Resistance (Approx.)
Connector	Terminal			
F24	12	Ground	CVT fluid temperature: 20°C (68°F)	5.60 – 6.60 Ω
			CVT fluid temperature: 50°C (122°F)	6.76 – 6.87 Ω
			CVT fluid temperature: 80°C (176°F)	7.47 – 7.59 Ω

Is the inspection result normal?

YES >> INSPECTION END
NO >> Torque converter clutch solenoid valve is malfunctioning. Replace transaxle assembly. Refer to TM-235, "Exploded View".

Component Inspection (Lock-up Select Solenoid Valve)

INFOID:0000000009948982

1. CHECK LOCK-UP SELECT SOLENOID VALVE

Check resistance between CVT unit harness connector terminal and ground.

CVT unit harness connector			Condition	Resistance (Approx.)
Connector	Terminal			
F24	13	Ground	CVT fluid temperature: 20°C (68°F)	12.3 – 13.5 Ω
			CVT fluid temperature: 50°C (122°F)	13.7 – 15.1 Ω
			CVT fluid temperature: 80°C (176°F)	15.1 – 16.7 Ω

Is the inspection result normal?

YES >> INSPECTION END

NO >> Lock-up select solenoid valve is malfunctioning. Replace transaxle assembly. Refer to TM-235, "Exploded View".

P0745 PRESSURE CONTROL SOLENOID A

Description

INFOID:0000000009948983

- Line pressure solenoid valve is installed to control valve.
- Line pressure solenoid valve adjusts oil pump discharge pressure to optimum level according to the driving conditions.
- The adoption of an N/H type (normal high) line pressure solenoid valve enables generation of a control oil pressure when a voltage is not applied to the coil.

DTC Logic

INFOID:0000000009948984

DTC DETECTION LOGIC

DTC	Trouble diagnosis name	DTC is detected if...	Possible cause
P0745	Pressure Control Solenoid A	• Monitor voltage value of TCM line pressure solenoid valve is less than 70% of the target voltage value of line pressure solenoid valve • Current monitor value of the Line pressure solenoid valve differs from the TCM current command value of line pressure solenoid valve	• Harness or connectors (Line pressure solenoid valve circuit is open or shorted.) • Line pressure solenoid valve

DTC CONFIRMATION PROCEDURE

CAUTION:

Always drive vehicle at a safe speed.

1. PRECONDITIONING

Immediately after performing any “DTC CONFIRMATION PROCEDURE”, always turn ignition switch OFF. Then wait at least 10 seconds before performing the next test.

>> GO TO 2.

2. PERFORM DTC CONFIRMATION PROCEDURE

With CONSULT

1. Start the engine.
2. Drive the vehicle for 10 seconds or more.
3. Stop the vehicle.
4. Select “Self Diagnostic Results” in “TRANSMISSION”.

With GST

Follow the procedure “With CONSULT”.

Is “P0745” detected?

YES >> Go to TM-129, "Diagnosis Procedure".

NO >> INSPECTION END

Diagnosis Procedure

INFOID:0000000009948985

1. CHECK LINE PRESSURE SOLENOID VALVE CIRCUIT

1. Turn ignition switch OFF.
2. Check resistance between TCM connector terminal and ground.

TCM connector			Condition	Resistance (Approx.)
Connector	Terminal			
E18	1	Ground	CVT fluid temperature: 20°C (68°F)	5.60 – 6.60 Ω
			CVT fluid temperature: 50°C (122°F)	6.76 – 6.87 Ω
			CVT fluid temperature: 80°C (176°F)	7.47 – 7.59 Ω

Is the inspection result normal?

YES >> Check intermittent incident. Refer to GI-40, "Intermittent Incident".
NO >> GO TO 2.

2. CHECK LINE PRESSURE SOLENOID VALVE

1. Disconnect CVT unit connector.
2. Check Line pressure solenoid valve. Refer to TM-130, "Component Inspection (Line Pressure Solenoid Valve)".

Is the inspection result normal?

YES >> GO TO 3.
NO >> Line pressure solenoid valve is malfunctioning. Replace transaxle assembly. Refer to TM-235, "Exploded View".

3. CHECK HARNESS BETWEEN TCM AND CVT UNIT (LINE PRESSURE SOLENOID VALVE) (PART 1)

1. Disconnect TCM connector.
2. Check continuity between TCM vehicle side harness connector terminal and CVT unit vehicle side harness connector terminal.

TCM vehicle side harness connector		CVT unit vehicle side harness connector		Continuity
Connector	Terminal	Connector	Terminal	
E18	1	F24	2	Existed

Is the inspection result normal?

YES >> GO TO 4.
NO >> Repair or replace damaged parts.

4. CHECK HARNESS BETWEEN TCM AND CVT UNIT (LINE PRESSURE SOLENOID VALVE) (PART 2)

Check continuity between TCM vehicle side harness connector terminal and ground.

TCM vehicle side harness connector		Ground	Continuity
Connector	Terminal		
E18	1		Not existed

Is the inspection result normal?

YES >> Check intermittent incident. Refer to GI-40, "Intermittent Incident".
NO >> Repair or replace damaged parts.

Component Inspection (Line Pressure Solenoid Valve)

INFOID:0000000009948986

1. CHECK LINE PRESSURE SOLENOID VALVE

Check resistance between CVT unit harness connector terminal and ground.

CVT unit harness connector		Ground	Condition	Resistance (Approx.)
Connector	Terminal			
F24	2		CVT fluid temperature: 20°C (68°F)	5.60 – 6.60 Ω
			CVT fluid temperature: 50°C (122°F)	6.76 – 6.87 Ω
			CVT fluid temperature: 80°C (176°F)	7.47 – 7.59 Ω

Is the inspection result normal?

YES >> INSPECTION END
NO >> Line pressure solenoid valve is malfunctioning. Replace transaxle assembly. Refer to TM-235, "Exploded View".

P0746 PRESSURE CONTROL SOLENOID A

Description

INFOID:0000000009948987

- When an abnormal gear ratio is detected on the LOW side due to a low line pressure with the line pressure solenoid valve electrically normal, this phenomenon is judged as a malfunction.
- This DTC is not caused by an electrical malfunction (circuit open or short) but is caused by a mechanical malfunction (control valve clogging, solenoid valve sticking, and others).

DTC Logic

INFOID:0000000009948988

DTC DETECTION LOGIC

DTC	Trouble diagnosis name	DTC is detected if...	Possible cause
P0746	Pressure Control Solenoid A Performance/Stuck Off	TCM detects a state that gear ratio is more than 2.9	• Line pressure control system • Line pressure solenoid valve • Primary speed sensor • Secondary speed sensor

DTC CONFIRMATION PROCEDURE

CAUTION:

Always drive vehicle at a safe speed.

1. PRECONDITIONING

Immediately after performing any “DTC CONFIRMATION PROCEDURE”, always turn ignition switch OFF. Then wait at least 10 seconds before performing the next test.

>> GO TO 2.

2. PERFORM DTC CONFIRMATION PROCEDURE

With CONSULT

1. Start the engine.
2. Select “Data Monitor” in “TRANSMISSION”.
3. Select “ENG SPEED”, “PRI SPEED” and “VEHICLE SPEED”.
4. Drive the vehicle.
5. Maintain the following conditions for 1 seconds or more.

ENG SPEED	: More than 600 rpm
PRI SPEED	: More than 500 rpm
VEHICLE SPEED	: More than 10 km/h (7 MPH)

6. Stop the vehicle.
7. Select “Self Diagnostic Results” in “TRANSMISSION”.

With GST

Follow the procedure “With CONSULT”.

Is “P0746” detected?

YES >> Go to TM-131, "Diagnosis Procedure".

NO >> INSPECTION END

Diagnosis Procedure

INFOID:0000000009948989

1. CHECK LINE PRESSURE

Perform line pressure test. Refer to TM-209, "Inspection and Judgment".

Is the inspection result normal?

YES >> GO TO 2.

NO >> Repair or replace damaged parts. Refer to TM-209, "Inspection and Judgment".

2. CHECK LINE PRESSURE SOLENOID VALVE

1. Turn ignition switch OFF.

2. Disconnect CVT unit harness connector.
3. Check line pressure solenoid valve. Refer to TM-132, "Component Inspection (Line Pressure Solenoid Valve)".

Is the inspection result normal?

YES >> GO TO 3.
NO >> Line pressure solenoid valve is malfunctioning. Replace transaxle assembly. Refer to TM-235, "Exploded View".

3. CHECK PRIMARY SPEED SENSOR SYSTEM

Check primary speed sensor system. Refer to TM-116, "DTC Logic".

Is the inspection result normal?

YES >> GO TO 4.
NO >> Repair or replace damaged parts.

4. CHECK SECONDARY SPEED SENSOR SYSTEM

Check secondary speed sensor system. Refer to TM-119, "DTC Logic".

Is the inspection result normal?

YES >> GO TO 5.
NO >> Repair or replace damaged parts.

5. CHECK INTERMITTENT INCIDENT

Refer to GI-40, "Intermittent Incident".

Is the inspection result normal?

YES >> Replace transaxle assembly. Refer to TM-235, "Exploded View".
NO >> Repair or replace damaged parts.

Component Inspection (Line Pressure Solenoid Valve)

INFOID:0000000009948990

1. CHECK LINE PRESSURE SOLENOID VALVE

Check resistance between CVT unit harness connector terminal and ground.

CVT unit harness connector		Ground	Condition	Resistance (Approx.)
Connector	Terminal			
F24	2		CVT fluid temperature: 20°C (68°F)	5.60 – 6.60 Ω
			CVT fluid temperature: 50°C (122°F)	6.76 – 6.87 Ω
			CVT fluid temperature: 80°C (176°F)	7.47 – 7.59 Ω

Is the inspection result normal?

YES >> INSPECTION END
NO >> Line pressure solenoid valve is malfunctioning. Replace transaxle assembly. Refer to TM-235, "Exploded View".

P0776 PRESSURE CONTROL SOLENOID B

Description

INFOID:0000000009948991

- This is detected when secondary pressure solenoid valve is electrically normal and secondary pressure is low.
- This DTC is not caused by an electrical malfunction (circuit open or short) but is caused by a mechanical malfunction (control valve clogging, solenoid valve sticking, and others).

DTC Logic

INFOID:0000000009948992

DTC DETECTION LOGIC

DTC	Trouble diagnosis name	DTC is detected if...	Possible cause
P0776	Pressure Control Solenoid B Performance/Stuck Off	Difference of secondary pressure target value of TCM and secondary pressure actual value is more than 1.2 MPa	• Secondary pressure solenoid valve system • Line pressure control system • Secondary pressure solenoid valve • Secondary pressure sensor

DTC CONFIRMATION PROCEDURE

CAUTION:
Always drive vehicle at a safe speed.

1. PRECONDITIONING

Immediately after performing any “DTC CONFIRMATION PROCEDURE”, always turn ignition switch OFF. Then wait at least 10 seconds before performing the next test.

>> GO TO 2.

2. PERFORM DTC CONFIRMATION PROCEDURE

With CONSULT
1. Start the engine.
2. Select “Data Monitor” in “TRANSMISSION”.
3. Select “RANGE”, “VIGN SEN”, “ATF TEMP SEN”, “ACC PEDAL OPEN” and “VEHICLE SPEED”.
4. Drive the vehicle.
5. Maintain the following conditions for 30 seconds or more.

RANGE	: D
VIGN SEN	: More than 10 V
ATF TEMP SEN	: 2.03 – 0.16 V
ACC PEDAL OPEN	: More than 1.0/8
VEHICLE SPEED	: More than 10 km/h (7 MPH)

6. Stop the vehicle.
7. Select “Self Diagnostic Results” in “TRANSMISSION”.

With GST
Follow the procedure “With CONSULT”.

Is “P0776” detected?

YES >> Go to TM-133, "Diagnosis Procedure".
NO >> INSPECTION END

Diagnosis Procedure

INFOID:0000000009948993

1. CHECK LINE PRESSURE

Perform line pressure test. Refer to TM-209, "Inspection and Judgment".

Is the inspection result normal?

YES >> GO TO 2.

NO >> Repair or replace damaged parts. Refer to TM-209, "Inspection and Judgment".

2. CHECK SECONDARY PRESSURE SOLENOID VALVE

1. Turn ignition switch OFF.
2. Disconnect CVT unit harness connector.
3. Check secondary pressure solenoid valve. Refer to TM-134, "Component Inspection (Secondary Pressure Solenoid Valve)".

Is the inspection result normal?

YES >> GO TO 3.
NO >> Secondary pressure solenoid valve is malfunctioning. Replace transaxle assembly. Refer to TM-235, "Exploded View"

3. CHECK SECONDARY PRESSURE SENSOR SYSTEM

Check secondary pressure sensor system. Refer to TM-137, "DTC Logic".

Is the inspection result normal?

YES >> GO TO 4.
NO >> Repair or replace damaged parts.

4. CHECK INTERMITTENT INCIDENT

Refer to GI-40, "Intermittent Incident".

Is the inspection result normal?

YES >> Replace transaxle assembly. Refer to TM-235, "Exploded View".
NO >> Repair or replace damaged parts.

Component Inspection (Secondary Pressure Solenoid Valve)

INFOID:0000000009948994

1. CHECK SECONDARY PRESSURE SOLENOID VALVE

Check resistance between CVT unit harness connector terminal and ground.

CVT unit harness connector			Condition	Resistance (Approx.)
Connector	Terminal			
F24	3	Ground	CVT fluid temperature: 20°C (68°F)	5.60 – 6.60 Ω
			CVT fluid temperature: 50°C (122°F)	6.76 – 6.87 Ω
			CVT fluid temperature: 80°C (176°F)	7.47 – 7.59 Ω

Is the inspection result normal?

YES >> INSPECTION END
NO >> Secondary pressure solenoid valve is malfunctioning. Replace transaxle assembly. Refer to TM-235, "Exploded View".

P0778 PRESSURE CONTROL SOLENOID B

Description

INFOID:0000000009948995

- Secondary pressure solenoid valve is installed to control valve.
- Secondary pressure solenoid valve adjusts oil pump discharge pressure to optimum level according to the driving conditions.
- The adoption of an N/H type (normal high) secondary pressure solenoid valve enables generation of a control oil pressure when a voltage is not applied to the coil.

DTC Logic

INFOID:0000000009948996

DTC DETECTION LOGIC

DTC	Trouble diagnosis name	DTC is detected if...	Possible cause
P0778	Pressure Control Solenoid B Electrical	• Current monitor value of the secondary pressure solenoid valve differs from the TCM current command value of secondary pressure solenoid valve • Secondary pressure solenoid valve current command value of TCM and secondary pressure solenoid valve current monitor value is deviated	• Harness or connectors (secondary pressure solenoid valve circuit is open or shorted.) • Secondary pressure solenoid valve

DTC CONFIRMATION PROCEDURE

CAUTION:

Always drive vehicle at a safe speed.

1. PRECONDITIONING

Immediately after performing any “DTC CONFIRMATION PROCEDURE”, always turn ignition switch OFF. Then wait at least 10 seconds before performing the next test.

>> GO TO 2.

2. PERFORM DTC CONFIRMATION PROCEDURE

With CONSULT

1. Start the engine.
2. Drive the vehicle for 10 seconds or more.
3. Stop the vehicle.
4. Select “Self Diagnostic Results” in “TRANSMISSION”.

With GST

Follow the procedure “With CONSULT”.

Is “P0778” detected?

YES >> Go to TM-135, "Diagnosis Procedure".

NO >> INSPECTION END

Diagnosis Procedure

INFOID:0000000009948997

1. CHECK SECONDARY PRESSURE SOLENOID VALVE CIRCUIT

1. Turn ignition switch OFF.
2. Check resistance between TCM connector terminal and ground.

TCM connector			Condition	Resistance (Approx.)
Connector	Terminal			
E18	2	Ground	CVT fluid temperature: 20°C (68°F)	5.60 – 6.60 Ω
			CVT fluid temperature: 50°C (122°F)	6.76 – 6.87 Ω
			CVT fluid temperature: 80°C (176°F)	7.47 – 7.59 Ω

Is the inspection result normal?

YES >> Check intermittent incident. Refer to GI-40, "Intermittent Incident".
NO >> GO TO 2.

2. CHECK SECONDARY PRESSURE SOLENOID VALVE

1. Disconnect CVT unit harness connector.
2. Check secondary pressure solenoid valve. Refer to TM-136, "Component Inspection (Secondary Pressure Solenoid Valve)".

Is the inspection result normal?

YES >> GO TO 3.
NO >> Secondary pressure solenoid valve is malfunctioning. Replace transaxle assembly. Refer to TM-235, "Exploded View".

3. CHECK HARNESS BETWEEN TCM AND CVT UNIT SECONDARY PRESSURE SOLENOID VALVE) (PART 1)

1. Disconnect TCM connector.
2. Check continuity between TCM vehicle side harness connector terminal and CVT unit vehicle side harness connector terminal.

TCM vehicle side harness connector		CVT unit vehicle side harness connector		Continuity
Connector	Terminal	Connector	Terminal	
E18	2	F24	3	Existed

Is the inspection result normal?

YES >> GO TO 4.
NO >> Repair or replace damaged parts.

4. CHECK HARNESS BETWEEN TCM AND CVT UNIT (SECONDARY PRESSURE SOLENOID VALVE) (PART 2)

Check continuity between TCM vehicle side harness connector terminal and ground.

TCM vehicle side harness connector		Ground	Continuity
Connector	Terminal		
E18	2		Not existed

Is the inspection result normal?

YES >> Check intermittent incident. Refer to GI-40, "Intermittent Incident".
NO >> Repair or replace damaged parts.

Component Inspection (Secondary Pressure Solenoid Valve)

INFOID:0000000009948998

1. CHECK SECONDARY PRESSURE SOLENOID VALVE

Check resistance between CVT unit harness connector terminal and ground.

CVT unit harness connector		Ground	Condition	Resistance (Approx.)
Connector	Terminal			
F24	3		CVT fluid temperature: 20°C (68°F)	5.60 – 6.60 Ω
			CVT fluid temperature: 50°C (122°F)	6.76 – 6.87 Ω
			CVT fluid temperature: 80°C (176°F)	7.47 – 7.59 Ω

Is the inspection result normal?

YES >> INSPECTION END
NO >> Secondary pressure solenoid valve is malfunctioning. Replace transaxle assembly. Refer to TM-235, "Exploded View".

P0840 TRANSMISSION FLUID PRESSURE SEN/SW A

Description

INFOID:0000000009948999

- Secondary pressure sensor is installed to control valve.
- Secondary pressure sensor detects pressure that is applied to secondary pulley.
- Secondary pressure sensor converts pressure that is applied to secondary pulley to output voltage and transmits the signal to TCM.
- Secondary pressure sensor changes voltage according to pressure change. The voltage increases as the pressure increases.

DTC Logic

INFOID:0000000009949000

DTC DETECTION LOGIC

DTC	Trouble diagnosis name	DTC is detected if...	Possible cause
P0840	Transmission Fluid Pressure Sensor/Switch A Circuit	• Secondary pressure sensor voltage that TCM receives is more than 4.7 V • Secondary pressure sensor voltage that TCM receives is less than 0.9 V	• Harness or connectors (Secondary pressure sensor circuit is open or shorted.) • Secondary pressure sensor

DTC CONFIRMATION PROCEDURE

1. PRECONDITIONING

Immediately after performing any “DTC CONFIRMATION PROCEDURE”, always turn ignition switch OFF. Then wait at least 10 seconds before performing the next test.

>> GO TO 2.

2. PERFORM DTC CONFIRMATION PROCEDURE

With CONSULT
1. Start the engine.
2. Select “Data Monitor” in “TRANSMISSION”.
3. Select “ATF TEMP SEN”.
4. Maintain the following conditions for 5 seconds or more.

ATF TEMP SEN : 2.41 V or less

5. Select “Self Diagnostic Results” in “TRANSMISSION”.

With GST
Follow the procedure “With CONSULT”.

Is “P0840” detected?

YES >> Go to TM-137, "Diagnosis Procedure".
NO >> INSPECTION END

Diagnosis Procedure

INFOID:0000000009949001

1. CHECK TCM INPUT SIGNAL

1. Turn ignition switch OFF.
2. Start the engine.
3. Check voltage between TCM vehicle side harness connector terminals.

TCM connector			Condition	Voltage (Approx.)
Connector	Terminal			
E19	37	42	• Selector lever: “N” position • Idle speed	0.8 V

Is the inspection result normal?

YES >> Check intermittent incident. Refer to GI-40, "Intermittent Incident".

NO >> GO TO 2.

2. CHECK POWER AND SENSOR GROUND

1. Turn ignition switch OFF.
2. Check voltage between TCM vehicle side harness connector terminals.

TCM connector			Condition	Voltage (Approx.)
Connector	Terminal			
E19	42	46	Ignition switch: ON	5.0 V
			Ignition switch: OFF	0 V

Is the inspection result normal?

YES >> GO TO 3.
NO >> Go to TM-144, "Diagnosis Procedure".

3. CHECK HARNESS BETWEEN TCM AND CVT UNIT (SECONDARY PRESSURE SENSOR) (PART 1)

1. Turn ignition switch OFF.
2. Disconnect TCM connector and CVT unit harness connector.
3. Check continuity between TCM vehicle side harness connector terminals and CVT unit vehicle side harness connector terminals.

TCM vehicle side harness connector		CVT unit vehicle side harness connector		Continuity
Connector	Terminal	Connector	Terminal	
E19	37	F24	23	Existed
	42		19	
	46		20	

Is the inspection result normal?

YES >> GO TO 4.
NO >> Repair or replace damaged parts.

4. CHECK HARNESS BETWEEN TCM AND CVT UNIT (SECONDARY PRESSURE SENSOR) (PART 2)

Check continuity between TCM vehicle side harness connector terminals and ground.

TCM vehicle side harness connector		Ground	Continuity
Connector	Terminal		
E19	37		Not existed
	42		
	46		

Is the inspection result normal?

YES >> GO TO 5.
NO >> Repair or replace damaged parts.

5. CHECK INTERMITTENT INCIDENT

Refer to GI-40, "Intermittent Incident".

Is the inspection result normal?

YES >> Replace transaxle assembly. Refer to TM-235, "Exploded View".
NO >> Repair or replace damaged parts.

P0841 TRANSMISSION FLUID PRESSURE SEN/SW A

Description

INFOID:0000000009949002

A malfunction of oil pressure sensor function is detected by mutual monitoring between secondary pressure sensor and line pressure.

DTC Logic

INFOID:0000000009949003

DTC DETECTION LOGIC

DTC	Trouble diagnosis name	DTC is detected if...	Possible cause
P0841	Transmission Fluid Pressure Sensor/Switch A Circuit Range/Performance	Secondary pressure sensor value exceeds line pressure value	• Harness or connectors (secondary pressure sensor circuit is open or shorted.) • Secondary pressure sensor

DTC CONFIRMATION PROCEDURE

1. PRECONDITIONING

Immediately after performing any “DTC CONFIRMATION PROCEDURE”, always turn ignition switch OFF. Then wait at least 10 seconds before performing the next test.

>> GO TO 2.

2. PERFORM DTC CONFIRMATION PROCEDURE

With CONSULT
1. Start the engine.
2. Select “Data Monitor” in “TRANSMISSION”.
3. Select “VEHICLE SPEED”.
4. Drive the vehicle.
5. Maintain the following conditions for 5 seconds or more.

VEHICLE SPEED : More than 30 km/h (19 MPH)

6. Stop the vehicle.
7. Select “Self Diagnostic Results” in “TRANSMISSION”.

Is “P0841” detected?

YES >> Go to TM-139, "Diagnosis Procedure".
NO >> INSPECTION END

Diagnosis Procedure

INFOID:0000000009949004

1. CHECK LINE PRESSURE

Perform line pressure test. Refer to TM-209, "Inspection and Judgment".

Is the inspection result normal?

YES >> GO TO 2.
NO >> Repair or replace damaged parts. Refer to TM-209, "Inspection and Judgment".

2. CHECK SECONDARY PRESSURE SENSOR SYSTEM

Check secondary pressure sensor system. Refer to TM-137, "DTC Logic".

Is the inspection result normal?

YES >> GO TO 3.
NO >> Repair or replace damaged parts.

3. CHECK SECONDARY PRESSURE SOLENOID VALVE

Check line pressure solenoid valve. Refer to TM-140, "Component Inspection (Line Pressure Solenoid Valve)".

Is the inspection result normal?

YES >> GO TO 4.
NO >> Line pressure solenoid valve is malfunctioning. Replace transaxle assembly. Refer to TM-235, "Exploded View".

4. CHECK SECONDARY PRESSURE SOLENOID VALVE

Check secondary pressure solenoid valve. Refer to TM-140, "Component Inspection (Secondary Pressure Solenoid Valve)".

Is the inspection result normal?

YES >> GO TO 5.
NO >> Secondary pressure solenoid valve is malfunctioning. Replace transaxle assembly. Refer to TM-235, "Exploded View".

5. CHECK STEP MOTOR SYSTEM

Check step motor system. Refer to TM-157, "DTC Logic".

Is the inspection result normal?

YES >> GO TO 6.
NO >> Repair or replace damaged parts.

6. CHECK INTERMITTENT INCIDENT

Refer to GI-40, "Intermittent Incident".

Is the inspection result normal?

YES >> Replace transaxle assembly. Refer to TM-235, "Exploded View".
NO >> Repair or replace damaged parts.

Component Inspection (Line Pressure Solenoid Valve)

INFOID:0000000009949005

1. CHECK LINE PRESSURE SOLENOID VALVE

Check resistance between CVT unit harness connector terminal and ground.

CVT unit harness connector		Ground	Condition	Resistance (Approx.)
Connector	Terminal			
F24	2		CVT fluid temperature: 20°C (68°F)	5.60 – 6.60 Ω
			CVT fluid temperature: 50°C (122°F)	6.76 – 6.87 Ω
			CVT fluid temperature: 80°C (176°F)	7.47 – 7.59 Ω

Is the inspection result normal?

YES >> INSPECTION END
NO >> Line pressure solenoid valve is malfunctioning. Replace transaxle assembly. Refer to TM-235, "Exploded View".

Component Inspection (Secondary Pressure Solenoid Valve)

INFOID:0000000009949006

1. CHECK SECONDARY PRESSURE SOLENOID VALVE

Check resistance between CVT unit harness connector terminal and ground.

CVT unit harness connector		Ground	Condition	Resistance (Approx.)
Connector	Terminal			
F24	3		CVT fluid temperature: 20°C (68°F)	5.60 – 6.60 Ω
			CVT fluid temperature: 50°C (122°F)	6.76 – 6.87 Ω
			CVT fluid temperature: 80°C (176°F)	7.47 – 7.59 Ω

Is the inspection result normal?

YES >> INSPECTION END
NO >> Secondary pressure solenoid valve is malfunctioning. Replace transaxle assembly. Refer to TM-235, "Exploded View".

P0868 TRANSMISSION FLUID PRESSURE

Description

INFOID:0000000009949007

Secondary pressure solenoid valve regulates the secondary pressure to suit the driving condition in response to a signal sent from the TCM.

DTC Logic

INFOID:0000000009949008

DTC DETECTION LOGIC

DTC	Trouble diagnosis name	DTC is detected if...	Possible cause
P0868	Transmission Fluid Pressure Low	TCM detects that secondary pressure is excessively low against target secondary pressure while the vehicle is in ordinary driving	• Harness or connectors (Sensor circuit is open or shorted.) • Secondary pressure solenoid valve system • Line pressure control system • Secondary pressure sensor

DTC CONFIRMATION PROCEDURE

CAUTION:

Always drive vehicle at a safe speed.

1. PRECONDITIONING

Immediately after performing any “DTC CONFIRMATION PROCEDURE”, always turn ignition switch OFF. Then wait at least 10 seconds before performing the next test.

>> GO TO 2.

2. PERFORM DTC CONFIRMATION PROCEDURE

With CONSULT

1. Start the engine.
2. Select “Data Monitor” in “TRANSMISSION”.
3. Select “RANGE”, “ATF TEMP SEN”, “ACC PEDAL OPEN”, “BRAKESW” and “VEHICLE SPEED”.
4. Drive the vehicle.
5. Maintain the following conditions for 30 seconds or more.

RANGE	: D
ATF TEMP SEN	: 2.41 V or less
ACC PEDAL OPEN	: 0.5/8 – 1.0/8
BRAKESW	: Off
VEHICLE SPEED	: More than 40 km/h (25 MPH)

6. Stop the vehicle.
7. Select “Self Diagnostic Results” in “TRANSMISSION”.

Is “P0868” detected?

YES >> Go to TM-141, "Diagnosis Procedure".
NO >> INSPECTION END

Diagnosis Procedure

INFOID:0000000009949009

1. CHECK LINE PRESSURE

Perform line pressure test. Refer to TM-209, "Inspection and Judgment".

Is the inspection result normal?

YES >> GO TO 2.
NO >> Repair or replace damaged parts. Refer to TM-209, "Inspection and Judgment".

2. CHECK LINE PRESSURE SOLENOID VALVE

1. Turn ignition switch OFF.

2. Disconnect CVT unit harness connector.
3. Check line pressure solenoid valve. Refer to TM-142, "Component Inspection (Line Pressure Solenoid Valve)".

Is the inspection result normal?

YES >> GO TO 3.
NO >> Line pressure solenoid valve is malfunctioning. Replace transaxle assembly. Refer to TM-235, "Exploded View".

3. CHECK SECONDARY PRESSURE SOLENOID VALVE

Check secondary pressure solenoid valve. Refer to TM-142, "Component Inspection (Secondary Pressure Solenoid Valve)".

Is the inspection result normal?

YES >> GO TO 4.
NO >> Secondary pressure solenoid valve is malfunctioning. Replace transaxle assembly. Refer to TM-235, "Exploded View".

4. CHECK SECONDARY PRESSURE SENSOR SYSTEM

Check secondary pressure sensor system. Refer to TM-137, "DTC Logic".

Is the inspection result normal?

YES >> GO TO 5.
NO >> Repair or replace damaged parts.

5. CHECK INTERMITTENT INCIDENT

Refer to GI-40, "Intermittent Incident".

Is the inspection result normal?

YES >> Replace transaxle assembly. Refer to TM-235, "Exploded View".
NO >> Repair or replace damaged parts.

Component Inspection (Line Pressure Solenoid Valve)

INFOID:0000000009949010

1. CHECK LINE PRESSURE SOLENOID VALVE

Check resistance between CVT unit harness connector terminal and ground.

CVT unit harness connector			Condition	Resistance (Approx.)
Connector	Terminal			
F24	2	Ground	CVT fluid temperature: 20°C (68°F)	5.60 – 6.60 Ω
			CVT fluid temperature: 50°C (122F)	6.76 – 6.87 Ω
			CVT fluid temperature: 80°C (176°F)	7.47 – 7.59 Ω

Is the inspection result normal?

YES >> INSPECTION END
NO >> Line pressure solenoid valve is malfunctioning. Replace transaxle assembly. Refer to TM-235, "Exploded View".

Component Inspection (Secondary Pressure Solenoid Valve)

INFOID:0000000009949011

1. CHECK SECONDARY PRESSURE SOLENOID VALVE

Check resistance between CVT unit harness connector terminal and ground.

CVT unit harness connector			Condition	Resistance (Approx.)
Connector	Terminal			
F24	3	Ground	CVT fluid temperature: 20°C (68°F)	5.60 – 6.60 Ω
			CVT fluid temperature: 50°C (122°F)	6.76 – 6.87 Ω
			CVT fluid temperature: 80°C (176°F)	7.47 – 7.59 Ω

Is the inspection result normal?

YES >> INSPECTION END
NO >> Secondary pressure solenoid valve is malfunctioning. Replace transaxle assembly. Refer to TM-235, "Exploded View".

P1701 TCM

Description

INFOID:0000000009949012

This malfunction is detected when power (backup) is not supplied to TCM and the learning function stops.

CAUTION:

Immediately after TCM is replaced or after control valve or transaxle assembly is replaced (after TCM initialization is complete), self-diagnosis result of "P1701" may be displayed. In this case, erase self-diagnosis result using CONSULT. After erasing self-diagnosis, perform reproduction procedures of DTC P1701 and check that a malfunction is not detected.

DTC Logic

INFOID:0000000009949013

DTC DETECTION LOGIC

DTC	Trouble diagnosis name	DTC is detected if...	Possible cause
P1701	Power Supply Circuit	Power supply (backup) of TCM is not supplied and learning function stops	Harness or connectors (TCM power source circuit is open or shorted.)

DTC CONFIRMATION PROCEDURE

CAUTION:

Always drive vehicle at a safe speed.

1. PRECONDITIONING

Immediately after performing any "DTC CONFIRMATION PROCEDURE", always turn ignition switch OFF. Then wait at least 10 seconds before performing the next test.

>> GO TO 2.

2. PERFORM DTC CONFIRMATION PROCEDURE

With CONSULT

1. Start the engine.
2. Maintain idling state for 10 seconds or more.
3. Drive the vehicle for 10 seconds or more.
4. Stop the vehicle.
5. Turn ignition switch OFF.
6. Wait for 2 seconds or more.
7. Start the engine.
8. Select "Self Diagnostic Results" in "TRANSMISSION".

Is "P1701" detected?

YES >> Go to TM-144, "Diagnosis Procedure".
NO >> INSPECTION END

Diagnosis Procedure

INFOID:0000000009949014

1. CHECK TCM POWER CIRCUIT (PART 1)

1. Turn ignition switch OFF.
2. Disconnect TCM connector.
3. Turn ignition switch ON.
4. Check voltage between TCM vehicle side harness connector terminals and ground.

TCM vehicle side harness connector		Ground	Condition	Voltage (Approx.)
Connector	Terminal			
E18	10		Ignition switch: ON	Battery voltage
			Ignition switch: OFF	0 V
	19		Ignition switch: ON	Battery voltage
			Ignition switch: OFF	0 V

Is the inspection result normal?

YES >> GO TO 2.
NO >> GO TO 3.

2. CHECK TCM POWER CIRCUIT (PART 2)

1. Turn ignition switch OFF.
2. Check voltage between TCM vehicle side harness connector terminal and ground.

TCM vehicle side harness connector		Ground	Condition	Voltage (Approx.)
Connector	Terminal			
E19	28		Always	Battery voltage

Is the inspection result normal?

YES >> GO TO 9.
NO >> GO TO 6.

3. CHECK HARNESS BETWEEN TCM AND IPDM E/R (PART 1)

1. Turn ignition switch OFF.
2. Disconnect IPDM E/R connector.
3. Check continuity between TCM vehicle side harness connector terminals and IPDM E/R vehicle side harness connector terminal.

TCM vehicle side harness connector		IPDM E/R vehicle side harness connector		Continuity
Connector	Terminal	Connector	Terminal	
E18	10	E15	58	Existed
	19			

Is the inspection result normal?

YES >> GO TO 4.
NO >> Repair or replace damaged parts.

4. CHECK HARNESS BETWEEN TCM AND IPDM E/R (PART 2)

Check continuity between TCM vehicle side harness connector terminal and ground.

TCM vehicle side harness connector		Ground	Continuity
Connector	Terminal		
E18	10		Not existed
	19		

Is the inspection result normal?

YES >> GO TO 5.
NO >> Repair or replace damaged parts.

5. DETECT MALFUNCTIONING ITEMS

Check the following.
- IPDM E/R
- 10A fuse (No.55, located in the IPDM E/R)
- Harness for short or open between IPDM E/R and ignition switch (Refer to PG-33, "Wiring Diagram - IGNITION POWER SUPPLY -".)
- Ignition switch

Is the inspection result normal?

YES >> Check intermittent incident. Refer to GI-40, "Intermittent Incident".
NO >> Repair or replace damaged parts.

6. CHECK HARNESS BETWEEN TCM AND IPDM E/R (PART 1)

1. Turn ignition switch OFF.
2. Disconnect IPDM E/R connector.
3. Check continuity between TCM vehicle side harness connector terminal and IPDM E/R vehicle side harness connector terminal.

TCM vehicle side harness connector		IPDM E/R vehicle side harness connector		Continuity
Connector	Terminal	Connector	Terminal	
E19	28	E14	45	Existed

Is the inspection result normal?

YES >> GO TO 7.
NO >> Repair or replace damaged parts.

7. CHECK HARNESS BETWEEN TCM AND IPDM E/R (PART 2)

Check continuity between TCM vehicle side harness connector terminal and ground.

TCM vehicle side harness connector		Ground	Continuity
Connector	Terminal		
E19	28		Not existed

Is the inspection result normal?

YES >> GO TO 8.
NO >> Repair or replace damaged parts.

8. DETECT MALFUNCTIONING ITEMS

Check the following.
- IPDM E/R
- 20A fuse (No.43, located in the IPDM E/R)
- Harness for short or open between IPDM E/R and battery (Refer to PG-6, "Wiring Diagram - BATTERY POWER SUPPLY -".)
- Battery

Is the inspection result normal?

YES >> Check intermittent incident. Refer to GI-40, "Intermittent Incident".
NO >> Repair or replace damaged parts.

9. CHECK HARNESS BETWEEN TCM AND GROUND

Check continuity between TCM vehicle side harness connector terminal and ground.

TCM vehicle side harness connector		Ground	Continuity
Connector	Terminal		
E19	25		Existed
	48		

Is the inspection result normal?

YES >> Check intermittent incident. Refer to GI-40, "Intermittent Incident".
NO >> Repair or replace damaged parts.

P1705 TP SENSOR

Description

INFOID:0000000009949015

- Accelerator position sensor is installed to upper of accelerator pedal.
- Accelerator position sensor detects depressing amount of accelerator pedal.
- Accelerator position sensor converts depressing amount of accelerator pedal to voltage signal and transmits the signal to ECM.
- TCM receives throttle opening signal fro ECM via CAN communication.

DTC Logic

INFOID:0000000009949016

DTC DETECTION LOGIC

DTC	Trouble diagnosis name	DTC is detected if...	Possible cause
P1705	Accelerator Pedal Position Sensor Signal Circuit	TCM detects that difference between 2 throttle opening signals (CAN communication) from ECM is 1/8 or more	• Harness or connectors (CAN communication line is open or shorted.) (Accelerator pedal position signal circuit is open or shorted.) • ECM

DTC CONFIRMATION PROCEDURE

1. PRECONDITIONING

Immediately after performing any “DTC CONFIRMATION PROCEDURE”, always turn ignition switch OFF. Then wait at least 10 seconds before performing the next test.

>> GO TO 2.

2. PERFORM DTC CONFIRMATION PROCEDURE

With CONSULT
1. Start the engine.
2. Apply parking brake.
3. Fully depress accelerator pedal.
4. Release accelerator pedal.
5. Select “Self Diagnostic Results” in “TRANSMISSION”.

Is “P1705” detected?

YES >> Go to TM-147, "Diagnosis Procedure".
NO >> INSPECTION END

Diagnosis Procedure

INFOID:0000000009949017

1. CHECK DTC WITH ECM

With CONSULT
1. Turn ignition switch ON.
2. Perform “Self Diagnostic Results” in “ENGINE”.

Is the inspection result normal?

YES >> Check intermittent incident. Refer to GI-40, "Intermittent Incident".
NO >> Check DTC detected item. Refer to EC-455, "DTC Index".

P1709 INCOMPLETED DATA WRITING

Description

INFOID:0000000009949018

When TCM does not store calibration data (individual characteristic value) of each solenoid valve that is stored in the ROM assembly (in the control valve), a malfunction is detected.

DTC Logic

INFOID:0000000009949019

DTC DETECTION LOGIC

DTC	Trouble diagnosis name	DTC is detected if...	Possible cause
P1709	Incompleted Data Writing	When TCM does not store calibration data (individual characteristic value) of each solenoid valve that is stored in the ROM assembly (in the control valve).	• Harness or connectors (ROM assembly circuit is open or shorted.) • TCM • ROM assembly (in the control valve)

DTC CONFIRMATION PROCEDURE

NOTE:
Immediately after performing any “DTC CONFIRMATION PROCEDURE”, always turn ignition switch OFF. Then wait at least 10 seconds before performing the next test.

1. CHECK DTC DETECTION

With CONSULT
1. Turn ignition switch OFF.
2. Wait for at least 10 consecutive seconds.
3. Turn ignition switch ON.
4. Perform “Self Diagnostic Results” in “TRANSMISSION”.

Is “P1709” detected?

YES >> Go to TM-148, "Diagnosis Procedure".
NO >> INSPECTION END

Diagnosis Procedure

INFOID:0000000009949020

1. CHECK HARNESS BETWEEN TCM AND CVT UNIT HARNESS CONNECTOR (ROM ASSEMBLY) (PART 1)

1. Turn ignition switch OFF.
2. Disconnect TCM connector and CVT unit connector.
3. Check continuity between TCM vehicle side harness connector terminals and CVT unit vehicle side harness connector terminal.

TCM vehicle side harness connector		CVT unit vehicle side harness connector		Continuity
Connector	Terminal	Connector	Terminal	
E18	13	F24	11	Existed
	14		1	
	15		16	
	42		19	
	46		20	

Is the inspection result normal?

YES >> GO TO 2.
NO >> Repair or replace damaged parts.

2. CHECK HARNESS BETWEEN TCM AND CVT UNIT HARNESS CONNECTOR (ROM ASSEMBLY) (PART 2)

Check continuity between TCM vehicle side harness connector terminals and ground.

TCM vehicle side harness connector		Ground	Continuity
Connector	Terminal		
E18	13	Ground	Not existed
	14		
	15		
	42		
	46		

Is the inspection result normal?

YES >> GO TO 3.
NO >> Repair or replace damaged parts.

3. CHECK TCM POWER SUPPLY AND GROUND CIRCUIT

Check TCM power supply and ground circuit. Refer to TM-144, "Diagnosis Procedure".

Is the inspection result normal?

YES >> GO TO 4.
NO >> Repair or replace damaged parts.

4. REPLACE TCM

1. Replace the TCM. Refer to TM-223, "Removal and Installation".
2. Perform “DTC CONFIRMATION PROCEDURE”. Refer to TM-148, "DTC Logic".

Is the inspection result normal?

YES >> INSPECTION END
NO >> Replace the transaxle assembly. Refer to TM-235, "Removal and Installation".

P1722 VEHICLE SPEED

Description

INFOID:0000000009949021

TCM receives vehicle speed signal from ABS actuator and electric unit (control unit) via CAN communication.

DTC Logic

INFOID:0000000009949022

DTC DETECTION LOGIC

DTC	Trouble diagnosis name	DTC is detected if...	Possible cause
P1722	Vehicle Speed Signal Circuit	• TCM detects a malfunction of CAN communication between ABS actuator and electric unit (control unit) • When vehicle speed that TCM detects is 10 km/h (7 MPH) or more, vehicle speed signal (CAN signal) that is received from ABS actuator and electric unit (control unit) is less than 2 km/h (1 MPH) • Change of vehicle speed signal (CAN communication) that TCM receives is large	• Harness or connectors (CAN communication line is open or shorted.) (Vehicle speed signal circuit is open or shorted.) • ABS actuator and electric unit (control unit)

DTC CONFIRMATION PROCEDURE

CAUTION:

Always drive vehicle at a safe speed.

1. PRECONDITIONING

Immediately after performing any “DTC CONFIRMATION PROCEDURE”, always turn ignition switch OFF. Then wait at least 10 seconds before performing the next test.

>> GO TO 2.

2. PERFORM DTC CONFIRMATION PROCEDURE

With CONSULT

1. Start the engine.
2. Select “Data Monitor” in “TRANSMISSION”.
3. Select “VSP SENSOR”.
4. Drive the vehicle.
5. Maintain the following conditions for 5 seconds or more.

VSP SENSOR	: More than 10 km/h (7 MPH)

6. Stop the vehicle.
7. Select “Self Diagnostic Results” in “TRANSMISSION”.

Is “P1722” detected?

YES >> Go to TM-150, "Diagnosis Procedure".
NO >> INSPECTION END

Diagnosis Procedure

INFOID:0000000009949023

1. CHECK DTC WITH ABS

With CONSULT

1. Turn ignition switch ON.
2. Perform “Self Diagnostic Results” in “ABS”.

Is the inspection result normal?

YES >> Check intermittent incident. Refer to GI-40, "Intermittent Incident".
NO >> Check DTC detected item. Refer to BRC-98, "DTC Index".

P1723 SPEED SENSOR

Description

INFOID:0000000009949024

When noise (pulse) that is generated because of connection malfunction caused by primary speed sensor and secondary speed sensor harness and others is detected, it is judged that a malfunction occurs.

DTC Logic

INFOID:0000000009949025

DTC DETECTION LOGIC

CAUTION:
Either “P0715” or “P0720” is displayed simultaneously.

DTC	Trouble diagnosis name	DTC is detected if...	Possible cause
P1723	Speed Sensor Circuit	TCM detects that high frequency elements that are extracted from primary pulley speed and secondary pulley speed exceed a certain value	Harness or connectors (Primary speed sensor circuit is open or shorted.) (Secondary speed sensor circuit is open or shorted.)

DTC CONFIRMATION PROCEDURE

CAUTION:
Always drive vehicle at a safe speed.

1. PRECONDITIONING

Immediately after performing any “DTC CONFIRMATION PROCEDURE”, always turn ignition switch OFF. Then wait at least 10 seconds before performing the next test.

>> GO TO 2.

2. PERFORM DTC CONFIRMATION PROCEDURE

With CONSULT
1. Start the engine.
2. Select “Data Monitor” in “TRANSMISSION”.
3. Select “RANGE” and “VEHICLE SPEED”.
4. Drive the vehicle.
5. Maintain the following conditions for 1 seconds or more.

RANGE	: D
VEHICLE SPEED	: More than 20 km/h (12 MPH)

6. Stop the vehicle.
7. Select “Self Diagnostic Results” in “TRANSMISSION”.

Is “P1723” detected?

YES >> Go to TM-151, "Diagnosis Procedure".
NO >> INSPECTION END

Diagnosis Procedure

INFOID:0000000009949026

1. CHECK SECONDARY SPEED SENSOR SYSTEM

Check secondary speed sensor system. Refer to TM-119, "DTC Logic".

Is the inspection result normal?

YES >> GO TO 2.
NO >> Repair or replace damaged parts.

2. CHECK PRIMARY SPEED SENSOR SYSTEM

Check primary speed sensor system. Refer to TM-116, "DTC Logic".

Is the inspection result normal?

YES >> Check intermittent incident. Refer to GI-40, "Intermittent Incident".

NO >> Repair or replace damaged parts.

P1726 THROTTLE CONTROL SIGNAL

Description

INFOID:0000000009949027

Electric throttle control system consists of throttle control motor, accelerator position sensor, throttle position sensor, and others. Electric throttle control system transmits signal to ECM and ECM transmits signal to TCM via CAN communication.

DTC Logic

INFOID:0000000009949028

DTC DETECTION LOGIC

DTC	Trouble diagnosis name	DTC is detected if...	Possible cause
P1726	Throttle Control Signal Circuit	TCM receives a malfunction signal of engine system from ECM	Harness or connectors (Electric throttle sensor signal circuit is open or shorted.)

DTC CONFIRMATION PROCEDURE

1. PRECONDITIONING

Immediately after performing any “DTC CONFIRMATION PROCEDURE”, always turn ignition switch OFF. Then wait at least 10 seconds before performing the next test.

>> GO TO 2.

2. PERFORM DTC CONFIRMATION PROCEDURE

With CONSULT
1. Start the engine.
2. Maintain idling state for 10 seconds or more.
3. Select “Self Diagnostic Results” in “TRANSMISSION”.

Is “P1726” detected?

YES >> Go to GI-40, "Intermittent Incident".
NO >> INSPECTION END

Diagnosis Procedure

INFOID:0000000009949029

1. CHECK DTC WITH ECM

With CONSULT
1. Turn ignition switch ON.
2. Perform “Self Diagnostic Results” in “ENGINE”.

Is the inspection result normal?

YES >> Check intermittent incident. Refer to GI-40, "Intermittent Incident".
NO >> Check DTC detected item. Refer to EC-455, "DTC Index".

P1740 SELECT SOLENOID

Description

INFOID:0000000009949030

- Lock-up select solenoid valve is installed to control valve.
- Lock-up select solenoid valve switches among lock-up oil pressure, forward clutch oil pressure, and reverse brake oil pressure.
- Lock-up select solenoid valve is an ON/OFF solenoid valve.

DTC Logic

INFOID:0000000009949031

DTC DETECTION LOGIC

DTC	Trouble diagnosis name	DTC is detected if...	Possible cause
P1740	Lock-up Select Solenoid Valve Circuit	• Lock-up select solenoid valve monitor value is OFF when lock-up select solenoid valve command value of TCM is ON • Lock-up select solenoid valve monitor value is ON when lock-up select solenoid valve command value of TCM is OFF	• Harness or connectors (Lock-up select solenoid valve circuit is open or shorted.) • Lock-up select solenoid valve

DTC CONFIRMATION PROCEDURE

CAUTION:

Always drive vehicle at a safe speed.

1. PRECONDITIONING

Immediately after performing any “DTC CONFIRMATION PROCEDURE”, always turn ignition switch OFF. Then wait at least 10 seconds before performing the next test.

>> GO TO 2.

2. PERFORM DTC CONFIRMATION PROCEDURE (PART 1)

With CONSULT

1. Start the engine.
2. Select “Data Monitor” in “TRANSMISSION”.
3. Select “RANGE”.
4. Maintain the following conditions for 1 seconds or more.

RANGE	: N·P

5. Select “Self Diagnostic Results” in “TRANSMISSION”.

With GST

Follow the procedure “With CONSULT”.

Is “P1740” detected?

YES >> Go to TM-155, "Diagnosis Procedure".

NO >> GO TO 3.

3. PERFORM DTC CONFIRMATION PROCEDURE (PART 2)

With CONSULT

1. Select “Data Monitor” in “TRANSMISSION”.
2. Select “RANGE”.
3. Maintain the following state for 1 second or more.

RANGE	: R·D

4. Select “Self Diagnostic Results” in “TRANSMISSION”.

With GST

Follow the procedure “With CONSULT”.

Is “P1740” detected?

YES >> Go to TM-155, "Diagnosis Procedure".

NO >> INSPECTION END

Diagnosis Procedure

INFOID:0000000009949032

1. CHECK LOCK-UP SELECT SOLENOID VALVE CIRCUIT

1. Turn ignition switch OFF.
2. Check resistance between TCM connector terminal and ground.

TCM connector		Ground	Condition	Resistance (Approx.)
Connector	Terminal			
E18	4		CVT fluid temperature: 20°C (68°F)	12.3 – 13.5 Ω
			CVT fluid temperature: 50°C (122°F)	13.7 – 15.1 Ω
			CVT fluid temperature: 80°C (176°F)	15.1 – 16.7 Ω

Is the inspection result normal?

YES >> Check intermittent incident. Refer to GI-40, "Intermittent Incident".
NO >> GO TO 2.

2. CHECK LOCK-UP SELECT SOLENOID VALVE

1. Disconnect CVT unit harness connector.
2. Check lock-up select solenoid valve. Refer to TM-155, "Component Inspection (Lock-up Select Solenoid Valve)".

Is the inspection result normal?

YES >> GO TO 3.
NO >> Lock-up select solenoid valve is malfunctioning. Replace transaxle assembly. Refer to TM-235, "Exploded View".

3. CHECK HARNESS BETWEEN TCM AND CVT UNIT (LOCK-UP SELECT SOLENOID VALVE) (PART 1)

1. Disconnect TCM connector.
2. Check continuity between TCM vehicle side harness connector terminal and CVT unit vehicle side harness connector terminal.

TCM vehicle side harness connector		CVT unit vehicle side harness connector		Continuity
Connector	Terminal	Connector	Terminal	
E18	4	F24	13	Existed

Is the inspection result normal?

YES >> GO TO 4.
NO >> Repair or replace damaged parts.

4. CHECK HARNESS BETWEEN TCM AND CVT UNIT (LOCK-UP SELECT SOLENOID VALVE) (PART 2)

Check continuity between TCM vehicle side harness connector terminal and ground.

TCM vehicle side harness connector		Ground	Continuity
Connector	Terminal		
E18	4		Not existed

Is the inspection result normal?

YES >> Check intermittent incident. Refer to GI-40, "Intermittent Incident".
NO >> Repair or replace damaged parts.

Component Inspection (Lock-up Select Solenoid Valve)

INFOID:0000000009949033

1. CHECK LOCK-UP SELECT SOLENOID VALVE

Check resistance between CVT unit harness connector terminal and ground.

CVT unit harness connector			Condition	Resistance (Approx.)
Connector	Terminal			
F24	13	Ground	CVT fluid temperature: 20°C (68°F)	12.3 – 13.5 Ω
			CVT fluid temperature: 50°C (122°F)	13.7 – 15.1 Ω
			CVT fluid temperature: 80°C (176°F)	15.1 – 16.7 Ω

Is the inspection result normal?

YES >> INSPECTION END

NO >> Lock-up select solenoid valve is malfunctioning. Replace transaxle assembly. Refer to TM-235, "Exploded View".

P1777 STEP MOTOR

Description

INFOID:0000000009949034

- Step motor changes step by turning 4 coils ON or OFF according to signal from TCM.
- By changing step, step motor controls outward flow and inward flow of line pressure to primary pulley, determines the primary pulley position, and controls gear ratio.

DTC Logic

INFOID:0000000009949035

DTC DETECTION LOGIC

DTC	Trouble diagnosis name	DTC is detected if...	Possible cause
P1777	Step Motor Circuit	• Step motor monitor value is OFF when step motor command value of TCM is ON • Step motor monitor value is ON when step motor command value of TCM is OFF	• Harness or connectors (Step motor circuit is open or shorted.) • Step motor

DTC CONFIRMATION PROCEDURE

1. PRECONDITIONING

Immediately after performing any “DTC CONFIRMATION PROCEDURE”, always turn ignition switch OFF. Then wait at least 10 seconds before performing the next test.

>> GO TO 2.

2. PERFORM DTC CONFIRMATION PROCEDURE

With CONSULT
1. Start the engine.
2. Select “Data Monitor” in “TRANSMISSION”.
3. Select “RANGE” and “VEHICLE SPEED”.
4. Maintain the following conditions for 1 seconds or more.

RANGE	: D
VEHICLE SPEED	: More than 20 km/h (12 MPH)

5. Stop the vehicle.
6. Select “Self Diagnostic Results” in “TRANSMISSION”.

With GST
Follow the procedure “With CONSULT”.

Is “P1777” detected?

YES >> Go to TM-157, "Diagnosis Procedure".
NO >> INSPECTION END

Diagnosis Procedure

INFOID:0000000009949036

1. CHECK STEP MOTOR CIRCUIT (PART 1)

1. Turn ignition switch OFF.
2. Disconnect TCM connector.
3. Check resistance between TCM vehicle side harness connector terminals.

TCM vehicle side harness connector			Resistance (Approx.)
Connector	Terminal		
E18	11	12	30.0 Ω
	20	21	

Is the inspection result normal?

YES >> GO TO 2.
NO >> GO TO 3.

2. CHECK STEP MOTOR CIRCUIT (PART 2)

Check resistance between TCM vehicle side harness connector terminals and ground.

TCM vehicle side harness connector			Resistance (Approx.)
Connector	Terminal		
E18	11	Ground	15.0 Ω
	12		
	20		
	21		

Is the inspection result normal?

YES >> Check intermittent incident. Refer to GI-40, "Intermittent Incident".
NO >> GO TO 3.

3. CHECK STEP MOTOR

1. Disconnect CVT unit connector.
2. Check step motor. Refer to TM-158, "Component Inspection (Step Motor)".

Is the inspection result normal?

YES >> GO TO 4.
NO >> Step motor is malfunctioning. Replace transaxle assembly. Refer to TM-235, "Exploded View".

4. CHECK HARNESS BETWEEN TCM AND CVT UNIT (STEP MOTOR) (PART 1)

Check continuity between TCM vehicle side harness connector terminals and CVT unit vehicle side harness connector terminals.

TCM vehicle side harness connector		CVT unit vehicle side harness connector		Continuity
Connector	Terminal	Connector	Terminal	
E18	11	F24	6	Existed
	12		7	
	20		8	
	21		9	

Is the inspection result normal?

YES >> GO TO 5.
NO >> Repair or replace damaged parts.

5. CHECK HARNESS BETWEEN TCM AND CVT UNIT (STEP MOTOR) (PART 2)

Check continuity between TCM vehicle side harness connector terminals and ground.

TCM vehicle side harness connector			Continuity
Connector	Terminal		
E18	11	Ground	Not existed
	12		
	20		
	21		

Is the inspection result normal?

YES >> Check intermittent incident. Refer to GI-40, "Intermittent Incident".
NO >> Repair or replace damaged parts.

Component Inspection (Step Motor)

INFOID:0000000009949037

1. CHECK STEP MOTOR (PART 1)

Check resistance between CVT unit harness connector terminals.

CVT unit connector			Resistance (Approx.)
Connector	Terminal		
F24	6	7	30.0 Ω
	8	9	

Is the inspection result normal?

YES >> GO TO 2.
NO >> Step motor is malfunctioning. Replace transaxle assembly. Refer to TM-235, "Exploded View".

2. CHECK STEP MOTOR (PART 2)

Check resistance between CVT unit connector terminals and ground.

CVT unit connector			Resistance (Approx.)
Connector	Terminal		
F24	6	Ground	15.0 Ω
	7		
	8		
	9		

Is the inspection result normal?

YES >> INSPECTION END
NO >> Step motor is malfunctioning. Replace transaxle assembly. Refer to TM-235, "Exploded View".

P1778 STEP MOTOR

Description

INFOID:0000000009949038

- Step motor changes step by turning 4 coils ON or OFF according to signal from TCM.
- By changing step, step motor controls outward flow and inward flow of line pressure to primary pulley, determines the primary pulley position, and controls gear ratio.
- This DTC is not caused by an electrical malfunction (circuit open or short) but is caused by a mechanical malfunction (control valve clogging, solenoid valve sticking, and others).

DTC Logic

INFOID:0000000009949039

DTC DETECTION LOGIC

DTC	Trouble diagnosis name	DTC is detected if...	Possible cause
P1778	Step Motor Circuit Intermittent	TCM detects that primary speed sensor value and primary pulley speed estimated from secondary speed sensor are in a deviated state, and target pulley ratio and actual pulley ratio are in a deviated state	Step motor

DTC CONFIRMATION PROCEDURE

CAUTION:

- **Always drive vehicle at a safe speed.**
- **Before starting “DTC confirmation procedure”, check primary pulley speed and vehicle speed.**
- **It is fixed in high speed range. Go to TM-116, "Diagnosis Procedure".**

1. PRECONDITIONING

Immediately after performing any “DTC CONFIRMATION PROCEDURE”, always turn ignition switch OFF. Then wait at least 10 seconds before performing the next test.

>> GO TO 2.

2. PERFORM DTC CONFIRMATION PROCEDURE

With CONSULT

1. Select “Data Monitor” in “TRANSMISSION”.
2. Select “RANGE”, “ATF TEMP SEN”, “ACC PEDAL OPEN”, “PRI SPEED” and “VEHICLE SPEED”.
3. Drive the vehicle.
4. Maintain the following conditions for 5 seconds or more.

RANGE	: D
ATF TEMP SEN	: 2.03 – 0.16 V
ACC PEDAL OPEN	: More than 1.0/8
PRI SPEED	: More than 1,000 rpm
VEHICLE SPEED	: More than 10 km/h (7 MPH)

5. Stop the vehicle.
6. Select “Self Diagnostic Results” in “TRANSMISSION”.

With GST

Follow the procedure “With CONSULT”.

Is “P1778” detected?

YES >> Go to TM-160, "Diagnosis Procedure".
NO >> INSPECTION END

Diagnosis Procedure

INFOID:0000000009949040

1. CHECK STEP MOTOR SYSTEM

Check step motor system. Refer to TM-157, "DTC Logic".

Is the inspection result normal?

YES >> GO TO 2.

NO >> Repair or replace damaged parts.

2. CHECK PRIMARY SPEED SENSOR SYSTEM

Check primary speed sensor system. Refer to TM-116, "DTC Logic".

Is the inspection result normal?

YES >> GO TO 3.
NO >> Repair or replace damaged parts.

3. CHECK SECONDARY SPEED SENSOR SYSTEM

Check secondary speed sensor system. Refer to TM-119, "DTC Logic".

Is the inspection result normal?

YES >> GO TO 4.
NO >> Repair or replace damaged parts.

4. CHECK INTERMITTENT INCIDENT

Refer to GI-40, "Intermittent Incident".

Is the inspection result normal?

YES >> Replace transaxle assembly. Refer to TM-235, "Exploded View".
NO >> Repair or replace damaged parts.

OVERDRIVE CONTROL SWITCH

Description

INFOID:0000000009949041

- The overdrive control switch is installed to the selector lever knob.
- When turning ON the overdrive control switch (OD OFF indicator lamp turns ON), the driving condition becomes overdrive OFF.
- When turning OFF the overdrive control switch (OD OFF indicator lamp turns OFF), the driving condition changes to “D” position.

Component Function Check

INFOID:0000000009949042

1. CHECK OVERDRIVE CONTROL SWITCH SIGNAL

With CONSULT
1. Turn ignition switch ON.
2. Select “Data Monitor” in “TRANSMISSION”.
3. Select “SPORT MODE SW”.
4. Check display of “SPORT MODE SW”.

Monitor item	Condition	Status
SPORT MODE SW	Press and hold overdrive control switch	On
	Other conditions	Off

Is the inspection result normal?

YES >> INSPECTION END
NO >> Go to TM-162, "Diagnosis Procedure".

Diagnosis Procedure

INFOID:0000000009949043

1. CHECK OVERDRIVE CONTROL SWITCH POWER CIRCUIT

1. Turn ignition switch OFF.
2. Disconnect CVT shift selector connector.
3. Turn ignition switch ON.
4. Check voltage between CVT shift selector vehicle side harness connector terminals.

With intelligent key system

CVT shift selector vehicle side harness connector			Condition	Voltage (Approx.)
Connector	Terminal			
M58	1	2	Ignition switch: ON	5 V
			Ignition switch: OFF	0 V

Without intelligent key system

CVT shift selector vehicle side harness connector			Condition	Voltage (Approx.)
Connector	Terminal			
M57	1	2	Ignition switch: ON	5 V
			Ignition switch: OFF	0 V

Is the inspection result normal?

YES >> GO TO 2.
NO >> GO TO 3.

2. CHECK OVERDRIVE CONTROL SWITCH

Check overdrive control switch. Refer to TM-164, "Component Inspection (Overdrive Control Switch)".

Is the inspection result normal?

YES >> Check intermittent incident. Refer to GI-40, "Intermittent Incident".
NO >> Repair or replace damaged parts.

3. CHECK GROUND CIRCUIT

1. Turn ignition switch OFF.
2. Check continuity between CVT shift selector vehicle side harness connector terminal and ground.

With intelligent key system

CVT shift selector vehicle side harness connector		Ground	Continuity
Connector	Terminal		
M58	2		Existed

Without intelligent key system

CVT shift selector vehicle side harness connector		Ground	Continuity
Connector	Terminal		
M57	2		Existed

Is the inspection result normal?

YES >> GO TO 4.
NO >> Repair or replace damaged parts.

4. CHECK HARNESS BETWEEN CVT SHIFT SELECTOR (OVERDRIVE CONTROL SWITCH) AND COMBINATION METER (PART 1)

1. Disconnect combination meter connector.
2. Check continuity between CVT shift selector vehicle side harness connector terminal and combination meter vehicle side harness connector terminal.

With intelligent key system

CVT shift selector vehicle side harness connector		Combination meter vehicle side harness connector		Continuity
Connector	Terminal	Connector	Terminal	
M58	1	M34	8	Existed

Without intelligent key system

CVT shift selector vehicle side harness connector		Combination meter vehicle side harness connector		Continuity
Connector	Terminal	Connector	Terminal	
M57	1	M34	8	Existed

Is the inspection result normal?

YES >> GO TO 5.
NO >> Repair or replace damaged parts.

5. CHECK HARNESS BETWEEN CVT SHIFT SELECTOR (OVERDRIVE CONTROL SWITCH) AND COMBINATION METER (PART 2)

Check continuity between CVT shift selector vehicle side harness connector terminal and ground.

With intelligent key system

CVT shift selector vehicle side harness connector		Ground	Continuity
Connector	Terminal		
M58	1		Not existed

Without intelligent key system

CVT shift selector vehicle side harness connector		Ground	Continuity
Connector	Terminal		
M57	1		Not existed

Is the inspection result normal?

YES >> GO TO 6.
NO >> Repair or replace damaged parts.

6. CHECK INTERMITTENT INCIDENT

Refer to GI-40, "Intermittent Incident".

Is the inspection result normal?

YES >> Check input and output signals of combination meter. Refer to MWI-48, "Reference Value".
NO >> Repair or replace damaged parts.

Component Inspection (Overdrive Control Switch)

INFOID:0000000009949044

1. CHECK OVERDRIVE CONTROL SWITCH

Check continuity between CVT shift selector vehicle connector terminals.

With intelligent key system

CVT shift selector connector			Condition	Continuity
Connector	Terminal			
M58	1	2	Press and hold overdrive control switch	Existed
			Other conditions	Not existed

Without intelligent key system

CVT shift selector connector			Condition	Continuity
Connector	Terminal			
M57	1	2	Press and hold overdrive control switch	Existed
			Other conditions	Not existed

Is the inspection result normal?

YES >> INSPECTION END
NO >> Repair or replace damaged parts.

SHIFT POSITION INDICATOR CIRCUIT

Description

INFOID:0000000009949045

TCM transmits shift position signal to combination meter via CAN communication. The actual shift position is displayed on combination meter according to the signal.

Component Function Check

INFOID:0000000009949046

1. CHECK SHIFT POSITION INDICATOR

1. Start the engine.
2. Shift selector lever.
3. Check that the selector lever position and shift position indicator on combination meter are equivalent.

Is the inspection result normal?

YES >> INSPECTION END
NO >> Go to TM-165, "Diagnosis Procedure".

Diagnosis Procedure

INFOID:0000000009949047

1. CHECK TCM INPUT AND OUTPUT SIGNALS

With CONSULT

1. Start the engine.
2. Select “Data Monitor” in “TRANSMISSION”.
3. Select “RANGE”.
4. Shift selector lever.
5. Check that selector lever position, “RANGE” on CONSULT screen, and shift position indicator display on combination meter are identical.

Is the inspection result normal?

YES >> INSPECTION END
NO-1 (“RANGE” is changed but is not displayed on shift position indicator.)>>Select “Self Diagnostic Results” in “TRANSMISSION”.
NO-2 (“RANGE” differs from shift position indicator.)>>Select “Self Diagnostic Results” in “TRANSMISSION”.
NO-3 (Specific“RANGE” is not displayed on shift position indicator.)>>Select “Self Diagnostic Results” in “METER/M&A”.

SHIFT LOCK SYSTEM

Description

INFOID:0000000009949048

Component	Function
Shift lock solenoid	It operates according to the signal from the stop lamp switch and moves the lock lever.
Lock lever	• It is rotated according to shift lock solenoid activation and shift lock is released. • If shift lock solenoid does not activate, lock lever can be rotated when shift lock release button is pressed and shift lock is released.
Detent plate	It links with the selector button and restricts the selector lever movement.
Park position switch	It detects that the selector lever is in “P” position.
Shift lock release button	It moves the lock lever forcibly.

Wiring Diagram - SHIFT LOCK SYSTEM -

INFOID:0000000009949049

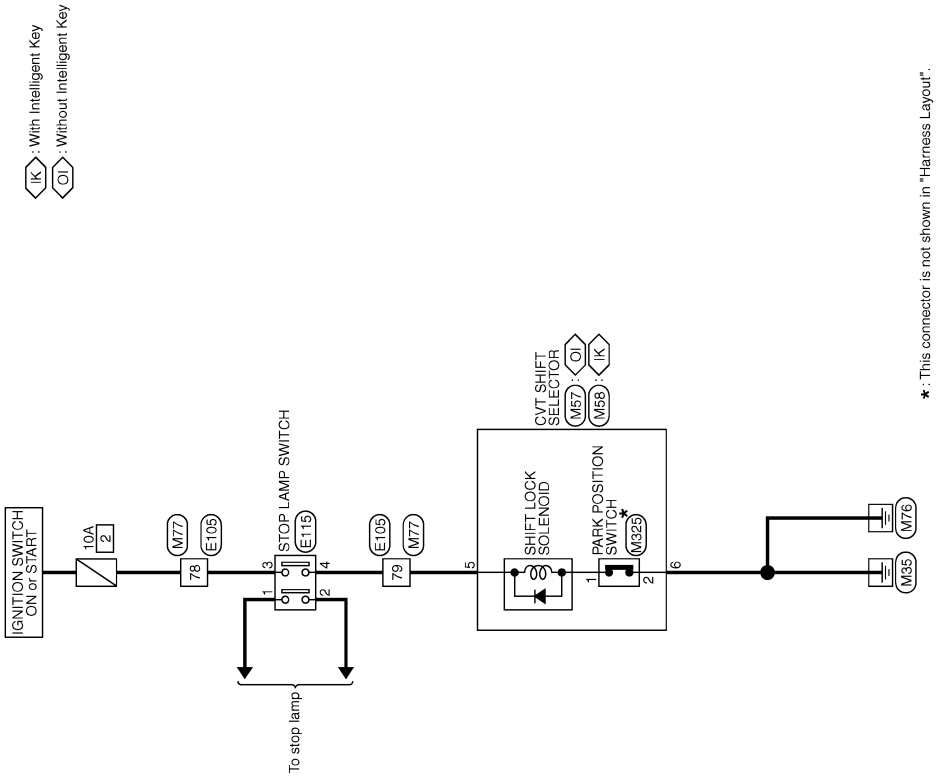

SHIFT LOCK SYSTEM

2009/02/27

JCDWM0583GB

SHIFT LOCK SYSTEM

Connector No.	E105
Connector Name	WIRE TO WIRE
Connector Type	TH80MW-CS16-TM4

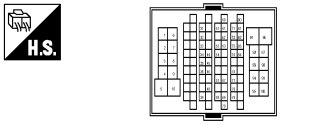

Terminal No.	Color Of Wire	Signal Name [Specification]
1	V	-
2	W	-
3	SB	-
4	G	-
5	P	-
6	L	- [With NAVI]
6	R	- [Without NAVI]
7	Y	-
8	O	-
9	W	-
10	SB	-
31	V	-
32	R	-
33	GR	-
34	P	-
35	Y	-
36	BR	-
39	SB	-
44	R	-
45	V	-
46	P	-
48	L	-
51	B	- [With M/T]
51	BR	- [With CVT]
53	SB	-
54	O	- [With M/T]
54	W	- [With CVT]
57	LG	-
59	L	-
60	O	-
61	G	-
62	W	-
63	L	-
67	GR	- [With CVT]
67	V	- [With M/T]
69	P	-
70	SHIELD	-
71	GR	-
72	LG	-
73	P	-
74	V	-
76	Y	-
77	LG	-
78	O	-
79	G	-
80	P	-
81	L	-
82	W	-
83	BR	-
84	B	-
91	W	-
92	Y	-
93	Y	-
94	R	-
95	V	-
96	LG	-
97	R	-
98	SB	-
99	G	-
100	P	-

Connector No.	E115
Connector Name	STOP LAMP SWITCH
Connector Type	M04FW-LC

Terminal No.	Color Of Wire	Signal Name [Specification]
1	V	-
2	W	-
3	O	-
4	G	-

Connector No.	M57
Connector Name	CVT SHIFT SELECTOR
Connector Type	TH08FW-NH

Terminal No.	Color Of Wire	Signal Name [Specification]
1	P	-
2	B	-
3	W	-
4	B/R	-
5	LG	-
6	B	-

Connector No.	M58
Connector Name	CVT SHIFT SELECTOR
Connector Type	TH08FW-NH

Terminal No.	Color Of Wire	Signal Name [Specification]
1	P	-
2	B	-
3	W	-
4	B/R	-
5	LG	-
6	B	-
7	Y/R	-
8	G/Y	-

Connector No.	M77
Connector Name	WIRE TO WIRE
Connector Type	TH80FW-CS16-TM4

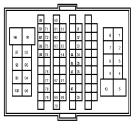

Terminal No.	Color Of Wire	Signal Name [Specification]
1	B/O	-
2	R	-
3	G/R	-
4	G/B	-
5	L	-
6	L	-
7	W/R	-
8	G/W	-
9	Y/L	-
10	W	-
31	GR/L	-
32	L/B	-
33	R/Y	-
34	SB	-
35	BR	-
36	G	-
39	L/R	-
44	G/O	-
45	LG/R	-
46	GR/W	-
48	L/O	-
51	B/W	-
53	R/L	-
54	O	-
57	GR	-
59	V	-
60	R/W	-
61	PU/W	-
62	W/L	-
63	W/B	-
67	Y/R	-
69	LG	-
70	SHIELD	-
71	P/B	-
72	R/G	-

JRDWC1938GB

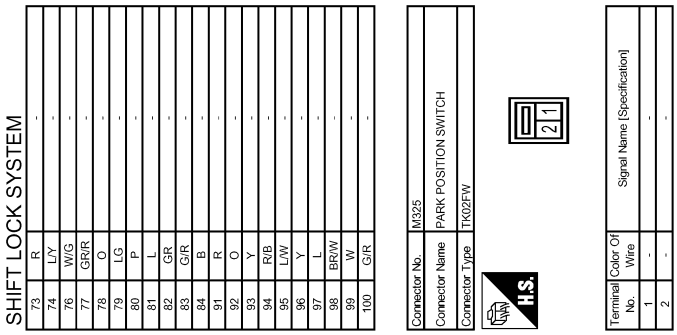

JRDWC1939GB

Component Function Check

INFOID:0000000009949050

1. CHECK CVT SHIFT LOCK OPERATION (PART 1)

1. Turn ignition switch ON.
2. Shift selector lever to “P” position.
3. Attempt to shift the selector lever to any other position with the brake pedal released.

Can the selector lever be shifted to any other position?

YES >> Go to TM-170, "Diagnosis Procedure".
NO >> GO TO 2.

2. CHECK CVT SHIFT LOCK OPERATION (PART 2)

1. Shift selector lever to “P” position.
2. Attempt to shift the selector lever to any other position with the brake pedal depressed.

Can the selector lever be shifted to any other position?

YES >> INSPECTION END
NO >> Go to TM-170, "Diagnosis Procedure".

Diagnosis Procedure

INFOID:0000000009949051

1. CHECK CVT SHIFT SELECTOR POWER CIRCUIT

1. Turn ignition switch OFF.
2. Disconnect CVT shift selector connector.
3. Turn ignition switch ON.
4. Check voltage between CVT shift selector vehicle side harness connector terminal and ground.

With intelligent key system

CVT shift selector vehicle side harness connector		Ground	Condition	Voltage (Approx.)
Connector	Terminal			
M58	5		Depressed brake pedal	Battery voltage
			Brake pedal not depressed	0 V

Without intelligent key system

CVT shift selector vehicle side harness connector		Ground	Condition	Voltage (Approx.)
Connector	Terminal			
M57	5		Depressed brake pedal	Battery voltage
			Brake pedal not depressed	0 V

Is the inspection result normal?

YES >> GO TO 2.
NO >> GO TO 6.

2. CHECK GROUND CIRCUIT

Check continuity between CVT shift selector vehicle side harness connector terminal and ground.

With intelligent key system

CVT shift selector vehicle side harness connector		Ground	Continuity
Connector	Terminal		
M58	6		Existed

Without intelligent key system

CVT shift selector vehicle side harness connector		Ground	Continuity
Connector	Terminal		
M57	6		Existed

Is the inspection result normal?

YES >> GO TO 3.
NO >> Repair or replace damaged parts.

3. CHECK CVT SHIFT SELECTOR

1. Shift selector lever to “P” position.
2. Check continuity between CVT shift selector connector terminals.

With intelligent key system

CVT shift selector connector			Condition	Continuity
Connector	Terminal			
M58	5	6	Selector lever: “P” position	Existed
			Other conditions	Not existed

Without intelligent key system

CVT shift selector connector			Condition	Continuity
Connector	Terminal			
M57	5	6	Selector lever: “P” position	Existed
			Other conditions	Not existed

Is the inspection result normal?

YES >> GO TO 4.
NO >> Repair or replace damaged parts.

4. CHECK PARK POSITION SWITCH

1. Disconnect park position switch connector.
2. Check park position switch. Refer to TM-173, "Component Inspection (Park Position Switch)".

Is the inspection result normal?

YES >> GO TO 5.
NO >> Replace park position switch. Refer to TM-216, "Exploded View".

5. CHECK SHIFT LOCK SOLENOID

Check shift lock solenoid. Refer to TM-173, "Component Inspection (Shift Lock Solenoid)".

Is the inspection result normal?

YES >> Check intermittent incident. Refer to GI-40, "Intermittent Incident".
NO >> Replace CVT shift selector. Refer to TM-216, "Exploded View".

6. CHECK HARNESS BETWEEN CVT SHIFT SELECTOR AND STOP LAMP SWITCH (PART 1)

1. Turn ignition switch OFF.
2. Disconnect stop lamp switch connector.
3. Check continuity between CVT shift selector vehicle side harness connector terminal and stop lamp switch vehicle side harness connector terminal.

With intelligent key system

CVT shift selector vehicle side harness connector		Stop lamp switch vehicle side harness connector		Continuity
Connector	Terminal	Connector	Terminal	
M58	5	E115	4	Existed

Without intelligent key system

CVT shift selector vehicle side harness connector		Stop lamp switch vehicle side harness connector		Continuity
Connector	Terminal	Connector	Terminal	
M57	5	E115	4	Existed

Is the inspection result normal?

YES >> GO TO 7.
NO >> Repair or replace damaged parts.

7. CHECK HARNESS BETWEEN CVT SHIFT SELECTOR AND STOP LAMP SWITCH (PART 2)

Check continuity between CVT shift selector vehicle side harness connector terminal and ground.

With intelligent key system

CVT shift selector vehicle side harness connector		Ground	Continuity
Connector	Terminal		
M58	5		Not existed

Without intelligent key system

CVT shift selector vehicle side harness connector		Ground	Continuity
Connector	Terminal		
M57	5		Not existed

Is the inspection result normal?

YES >> GO TO 8.
NO >> Repair or replace damaged parts.

8. CHECK STOP LAMP SWITCH (PART 1)

Check stop lamp switch. Refer to TM-172, "Component Inspection (Stop Lamp Switch)".

Is the inspection result normal?

YES >> GO TO 11.
NO >> GO TO 9.

9. PERFORM STOP LAMP SWITCH INSTALLATION POSITION ADJUSTMENT

Perform stop lamp switch installation position adjustment. Refer to BR-7, "Inspection and Adjustment".

>> GO TO 10.

10. CHECK STOP LAMP SWITCH (PART 2)

Check stop lamp switch. Refer to TM-172, "Component Inspection (Stop Lamp Switch)".

Is the inspection result normal?

YES >> INSPECTION END
NO >> Replace stop lamp switch. Refer to BR-17, "Exploded View".

11. CHECK HARNESS BETWEEN STOP LAMP SWITCH AND IGNITION SWITCH

Check continuity between stop lamp switch vehicle side harness connector terminal and ground.

Stop lamp switch vehicle side harness connector		Ground	Continuity
Connector	Terminal		
E115	3		Not existed

Is the inspection result normal?

YES >> GO TO 12.
NO >> Repair or replace damaged parts.

12. DETECT MALFUNCTIONING ITEMS

Check the following.

- 10A fuse (No.2)
- Harness for short or open between stop lamp switch and ignition switch (Refer to PG-33, "Wiring Diagram - IGNITION POWER SUPPLY -".)
- Ignition switch

Is the inspection result normal?

YES >> Check intermittent incident. Refer to GI-40, "Intermittent Incident".
NO >> Repair or replace damaged parts.

Component Inspection (Stop Lamp Switch)

INFOID:0000000009949052

1. CHECK STOP LAMP SWITCH

Check continuity between stop lamp switch connector terminals.

Stop lamp switch connector			Condition	Continuity
Connector	Terminal			
E115	1	2	Depressed brake pedal	Existed
			Brake pedal not depressed	Not existed
	3	4	Depressed brake pedal	Existed
			Brake pedal not depressed	Not existed

Is the inspection result normal?

YES >> INSPECTION END
NO >> Replace stop lamp switch. Refer to BR-17, "Exploded View".

Component Inspection (Shift Lock Solenoid)

INFOID:0000000009949053

1. CHECK SHIFT LOCK SOLENOID

Apply voltage to CVT shift selector connector terminal and park position switch connector terminal then check that shift lock solenoid is activated.

CAUTION:

Before applying voltage, always install a fuse between battery positive terminal and CVT shift selector connector terminal.

With intelligent key system

CVT shift selector connector		Park position switch connector		Condition	Status
Connector	Terminal	Connector	Terminal		
M58	5	M325	1	Impress battery voltage to CVT shift selector connector terminal 5.	Shift lock solenoid operates

Without intelligent key system

CVT shift selector connector		Park position switch connector		Condition	Status
Connector	Terminal	Connector	Terminal		
M57	5	M325	1	Impress battery voltage to CVT shift selector connector terminal 5.	Shift lock solenoid operates

Is the inspection result normal?

YES >> INSPECTION END
NO >> Replace CVT shift selector. Refer to TM-216, "Exploded View".

Component Inspection (Park Position Switch)

INFOID:0000000009949054

1. CHECK PARK POSITION SWITCH

Check continuity between park position switch connector terminals.

Park position switch connector			Condition	Continuity
Connector	Terminal			
M325	1	2	Park position switch: ON	Existed
			Park position switch: OFF	Not existed

Is the inspection result normal?

YES >> INSPECTION END
NO >> Replace park position switch. Refer to TM-216, "Exploded View".

ECU DIAGNOSIS INFORMATION

TCM

Reference Value

INFOID:0000000009949055

VALUES ON THE DIAGNOSIS TOOL

NOTE:
The following table includes information (items) inapplicable to this vehicle. For information (items) applicable to this vehicle, refer to CONSULT display items.

Monitor item	Condition	Value / Status (Approx.)
VSP SENSOR	During driving	Approximately matches the speedometer reading.
ESTM VSP SIG	During driving	Approximately matches the speedometer reading.
PRI SPEED SEN	During driving (Lock-up ON)	Approximately matches the engine speed.
ENG SPEED SIG	Engine running	Closely matches the tachometer reading.
SEC HYDR SEN	• Selector lever: “N” position • Idle speed	0.8 V
ATF TEMP SEN	CVT fluid temperature: 20°C (68°F)	2.01 – 2.05 V
	CVT fluid temperature: 50°C (122°F)	1.45 – 1.50 V
	CVT fluid temperature: 80°C (176°F)	0.90 – 0.94 V
VIGN SEN	Ignition switch: ON	Battery voltage
VEHICLE SPEED	During driving	Approximately matches the speedometer reading.
PRI SPEED	During driving (Lock-up ON)	Approximately matches the engine speed.
SEC SPEED	During driving	50 X (Approximately matches the speedometer reading.)
ENG SPEED	Engine running	Closely matches the tachometer reading.
GEAR RATIO	During driving	2.56 – 0.43
ACC PEDAL OPEN	Released accelerator pedal - Fully depressed accelerator pedal	0.0/8 – 8.0/8
SEC PRESS	• Selector lever: “N” position • Idle speed	0 – 1 MPa
ATFTEMP COUNT*1	CVT fluid temperature: 20°C (68°F)	47
	CVT fluid temperature: 50°C (122°F)	104
	CVT fluid temperature: 80°C (176°F)	161
STM STEP	During driving	–7 step – 171 step
ISOLT1	Lock-up “OFF”	0 A
	Lock-up “ON”	0.7 A
ISOLT2	Line pressure low	0.8 A
	Line pressure high	0 A
ISOLT3	Secondary pressure low - Secondary pressure high	0.8 – 0 A
SOLMON1	Lock-up “OFF”	0 A
	Lock-up “ON”	0.7 A

Monitor item	Condition	Value / Status (Approx.)
SOLMON2	• Selector lever: “N” position • Idle speed	0.8 A
	Stall speed	0.3 – 0.6 A
SOLMON3	• Selector lever: “N” position • Idle speed	0.6 – 0.7 A
	Stall speed	0.4 – 0.6 A
BRAKESW	Depressed brake pedal	On
	Brake pedal not depressed	Off
FULL SW	Fully depressed accelerator pedal	On
	Released accelerator pedal	Off
IDLE SW	After engine is warmed up, release accelerator pedal	On
	Fully depressed accelerator pedal	Off
SPORT MODE SW	Press and hold overdrive control switch	On
	Other conditions	Off
INDLRNG	Selector lever: “L” position	On
	Other conditions	Off
INDDRNG	Selector lever: “D” position	On
	Other conditions	Off
INDNRNG	Selector lever: “N” position	On
	Other conditions	Off
INDRRNG	Selector lever: “R” position	On
	Other conditions	Off
INDPRNG	Selector lever: “P” position	On
	Other conditions	Off
SPORT MODE IND	When overdrive OFF condition	On
	Other conditions	Off
SMCOIL D	During driving	Changes On ⇔ Off
SMCOIL C	During driving	Changes On ⇔ Off
SMCOIL B	During driving	Changes On ⇔ Off
SMCOIL A	During driving	Changes On ⇔ Off
LUSEL SOL OUT	Selector lever: “P” and “N” positions	On
	Wait at least for 5 seconds with the selector lever in “R”, “D” and “L” positions	Off
LUSEL SOL MON	Selector lever: “P” and “N” positions	On
	Wait at least for 5 seconds with the selector lever in “R”, “D” and “L” positions	Off
VDC ON	VDC operate	On
	Other conditions	Off
TCS ON	TCS operate	On
	Other conditions	Off
ABS ON	ABS operates	On
	Other conditions	Off
RANGE	Selector lever: “P” and “N” positions	N·P
	Selector lever: “R” position	R
	Selector lever: “D” position	D
	Selector lever: “L” position	L

Monitor item	Condition	Value / Status (Approx.)
L POSITION SW	Selector lever: “L” position	On
	Other conditions	Off
D POSITION SW	Selector lever: “D” position	On
	Other conditions	Off
N POSITION SW	Selector lever: “N” position	On
	Other conditions	Off
R POSITION SW	Selector lever: “R” position	On
	Other conditions	Off
P POSITION SW	Selector lever: “P” position	On
	Other conditions	Off
CVT-A	—	—
CVT-B	—	—

*1: Means CVT fluid temperature. Convert numerical values for actual fluid temperature °C (°F). Refer to TM-203, "ATFTEMP COUNT Conversion Table".

TERMINAL LAYOUT

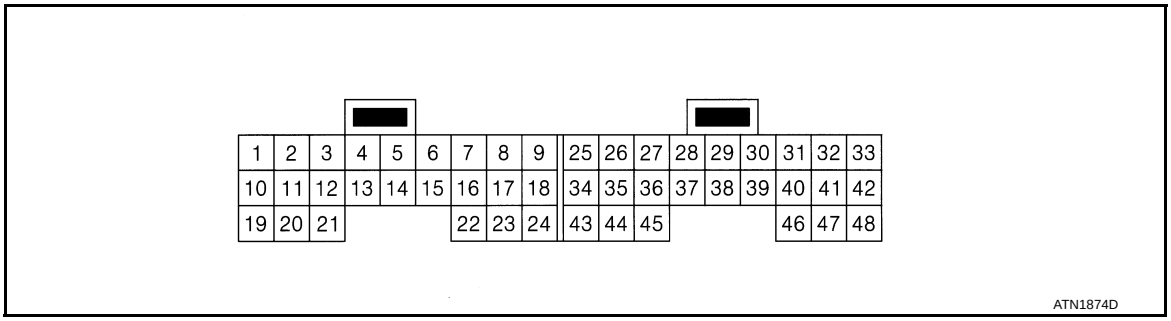

PHYSICAL VALUES

Terminal (Wire color)		Description		Condition		Value (Approx.)
+	–	Signal name	Input/ Output			
1 (Y)	Ground	Line pressure solenoid valve	Output	• Selector lever: “N” position • Idle speed • After engine is warmed up, release accelerator pedal		5.0 – 7.0 V
				• Selector lever: “N” position • Idle speed • After engine is warmed up, fully depress accelerator pedal		1.0 V
2 (LG)	Ground	Secondary pressure solenoid valve	Output	• Selector lever: “N” position • Idle speed • After engine is warmed up, release accelerator pedal		5.0 – 7.0 V
				• Selector lever: “N” position • Idle speed • After engine is warmed up, fully depress accelerator pedal		3.0 – 4.0 V
3 (BR)	Ground	Torque converter clutch solenoid valve	Output	During driving	When CVT performs lock-up.	6.0 V
					When CVT does not perform lock-up	1.0 V

Terminal (Wire color)		Description		Condition		Value (Approx.)
+	–	Signal name	Input/ Output			
4 (O)	Ground	Lock-up select solenoid valve	Output	Ignition switch: ON	Selector lever: “P” and “N” positions	Battery voltage
					Wait at least for 5 seconds with the selector lever in “R”, “D” and “L” positions	0 V
5 (L)	—	CAN-H	Input/ Output	—		—
6 (P)	—	CAN-L	Input/ Output	—		—
10 (R)	Ground	Ignition power supply	Input	Ignition switch: ON		Battery voltage
				Ignition switch: OFF		0 V
11 (W)	Ground	Step motor A	Output	Within 2 seconds after ignition switch ON, the time measurement by using the pulse width measurement function (Hi level) of CONSULT* *: Connect the diagnosis data link cable to the vehicle diagnosis connector		30.0 msec
12 (L)	Ground	Step motor B	Output			10.0 msec
13 (SB)	—	ROM ASSY (SEL2)	—	—		—
14 (P)	—	ROM ASSY (SEL1)	—	—		—
15 (V)	—	ROM ASSY (SEL3)	—	—		—
18 (BR)	Ground	P RANGE SW	Input	Ignition switch: ON	Selector lever: “P” position	Battery voltage
					Other conditions	0 V
19 (R)	Ground	Ignition power supply	Input	Ignition switch: ON		Battery voltage
				Ignition switch: OFF		0 V
20 (SB)	Ground	Step motor C	Output	Within 2 seconds after ignition switch ON, the time measurement by using the pulse width measurement function (Hi level) of CONSULT* *: Connect the diagnosis data link cable to the vehicle diagnosis connector		30.0 msec
21 (Y)	Ground	Step motor D	Output			10.0 msec
22 (GR)	Ground	R RANGE SW	Input	Ignition switch: ON	Selector lever: “R” position	Battery voltage
					Other conditions	0 V
25 (B)	Ground	Ground	Output	Always		0 V
26 (LG)	Ground	N RANGE SW	Input	Ignition switch: ON	Selector lever: “N” position	Battery voltage
					Other conditions	0 V
28 (Y)	Ground	Battery power supply (memory backup)	Input	Always		Battery voltage
29 (W)	Ground	Secondary speed sensor	Input	• Selector lever: “L” position • While driving at 20 km/h (12 MPH)		570 Hz 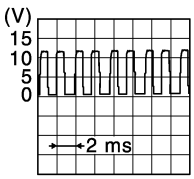 JSDIA1305GB

Terminal (Wire color)		Description		Condition		Value (Approx.)
+	–	Signal name	Input/ Output			
37 (P)	Ground	Secondary pressure sensor	Input	• Selector lever: “N” position • Idle speed		0.8 V
38 (V)	Ground	Primary speed sensor	Input	• Selector lever: “L” position • While driving at 20 km/h (12 MPH)		1275 Hz 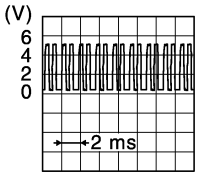 JSDIA1306GB
42 (R)	Ground	Sensor ground	Input	Always		0 V
43 (SB)	Ground	D RANGE SW	Input	Ignition switch: ON	Selector lever: “D” position	Battery voltage
					Other conditions	0 V
44 (L)	Ground	L RANGE SW	Input		Selector lever: “L” position	Battery voltage
					Other conditions	0 V
46 (BR)	Ground	Sensor power	Output	Ignition switch: ON		5.0 V
				Ignition switch: OFF		0 V
47 (LG)	Ground	CVT fluid temperature sensor	Input	Ignition switch: ON	CVT fluid temperature: 20°C (68°F)	2.01 – 2.05 V
					CVT fluid temperature: 50°C (122°F)	1.45 – 1.50 V
					CVT fluid temperature: 80°C (176°F)	0.90 – 0.94 V
48 (B)	Ground	Ground	Output	Always		0 V

NOTE:
Voltage value is reference value between each terminal and terminal 5 or terminal 42 (ground terminal).

Wiring Diagram - CVT CONTROL SYSTEM -

INFOID:0000000009949056

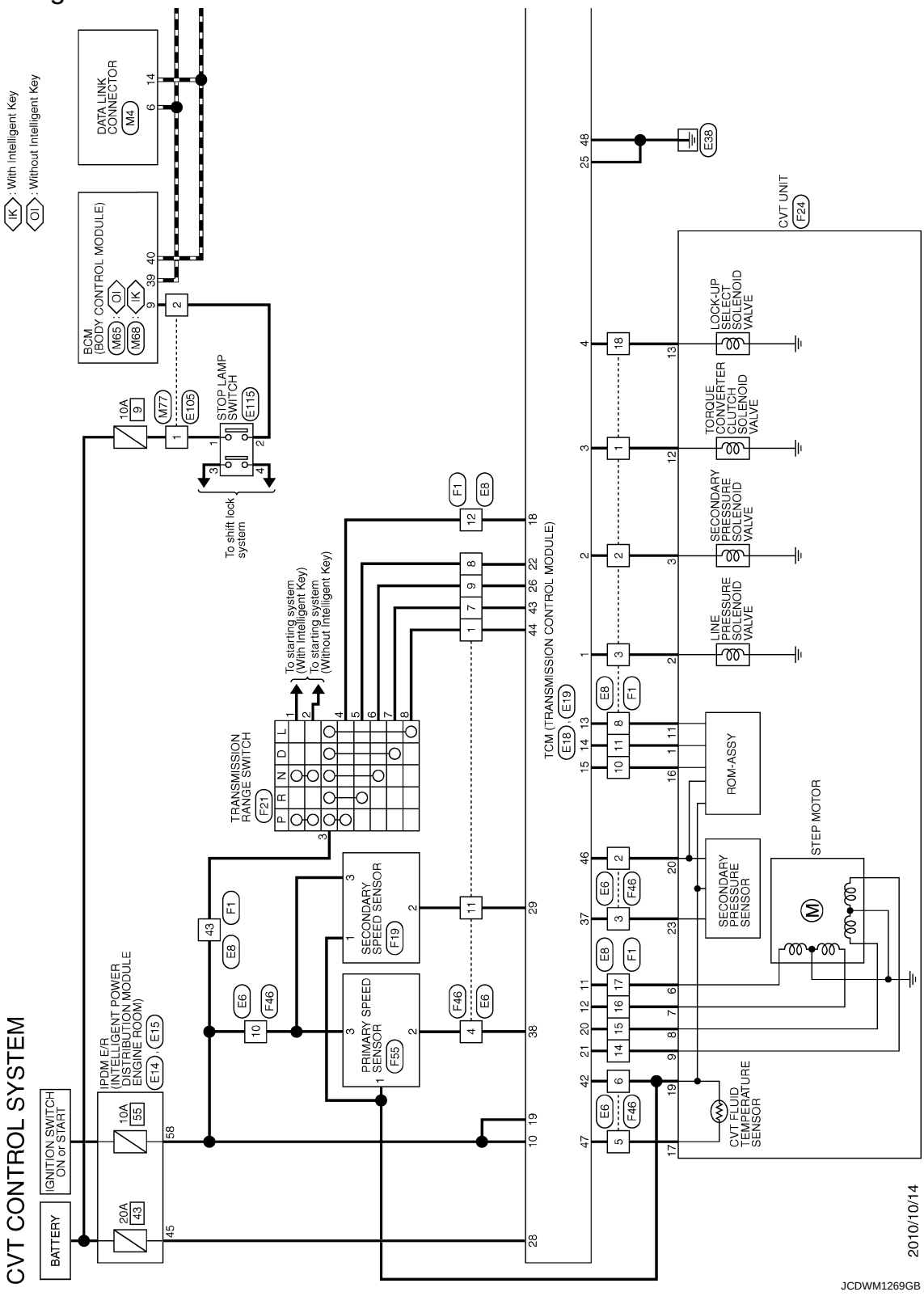

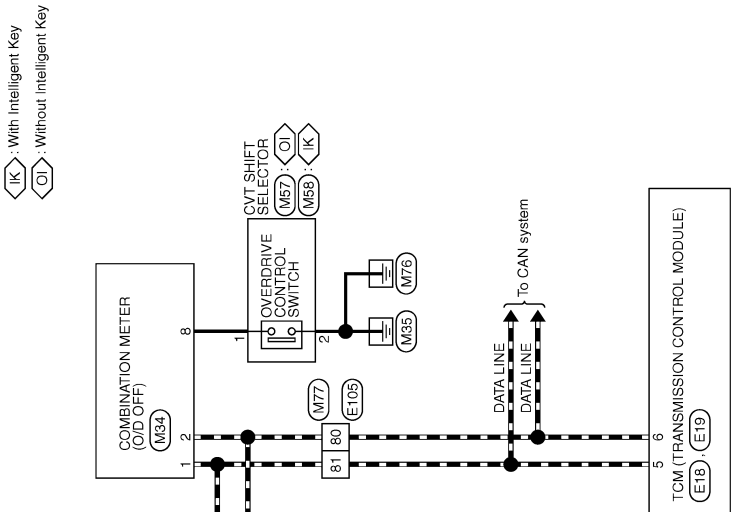

JCDWM1270GB

CVT CONTROL SYSTEM

Connector No.	E6
Connector Name	WIRE TO WIRE
Connector Type	RH12FB

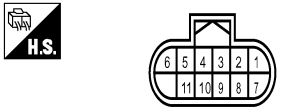

Terminal No.	Color Of Wire	Signal Name [Specification]
1	L	-
2	BR	-
3	P	-
4	V	-
5	LG	-
6	R	-
7	SB	-
8	GR	-
9	LG	-
10	R	-
11	W	-

Connector No.	E8
Connector Name	WIRE TO WIRE
Connector Type	SAA36MB-RS10-SJZ2

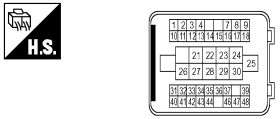

Terminal No.	Color Of Wire	Signal Name [Specification]
1	BR	-
2	LG	-
3	Y	-
4	W	-
7	Y	-
8	SB	-
9	L	-
10	V	-
11	P	-
12	BR	-
13	LG	-
14	Y	-
15	SB	-
16	L	-
17	W	-
18	O	-
21	G	-
22	Y	-
23	SB	-
24	W	-
25	BR	-
26	B/Y	-
27	GR	-
28	P	-
29	V	-
30	G	-
31	G	-
32	O	-
33	W	-
34	Y	-
35	V	-
36	P	-
37	LG	-
39	SB	-
40	GR	-
41	O	-
42	V	-
43	LG	- [With M/T]
43	R	- [With CVT]
44	R	-
46	W	-
47	G	-
48	BR	-

Connector No.	E14
Connector Name	IPDM E/R (INTELLIGENT POWER DISTRIBUTION MODULE ENGINE ROOM)
Connector Type	NS12FBR-CS

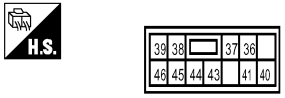

Terminal No.	Color Of Wire	Signal Name [Specification]
36	O	-
37	V	-
38	G	-
39	V	-
40	R	-
41	SB	-
43	G	-
44	P	-
45	Y	-
46	O	-

Connector No.	E15
Connector Name	IPDM E/R (INTELLIGENT POWER DISTRIBUTION MODULE ENGINE ROOM)
Connector Type	NS16FW-CS

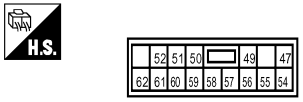

Terminal No.	Color Of Wire	Signal Name [Specification]
47	BR	-
49	W	-
50	GR	-
51	R	-
52	P	-
54	GR	-
55	P	-
56	SB	-
57	G	-
58	LG	- [With M/T]
58	R	- [With CVT]
59	Y	-
60	V	-
61	W	-
62	L	-

Connector No.	E18
Connector Name	TCM (TRANSMISSION CONTROL MODULE)
Connector Type	TK24FW

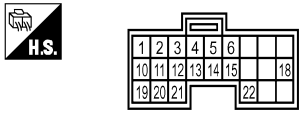

Terminal No.	Color Of Wire	Signal Name [Specification]
1	Y	LINE PRESSURE SOLENOID VLVE
2	LG	SECONDARY PRESSURE SOLENOID VALVE
3	BR	TORQUE CONVERTER CLUTCH SOLENOID VALVE
4	O	LOCK-UP SELECT SOLENOID VALVE
5	L	CAN-H
6	P	CAN-L
10	R	IGNITION POWER SUPPLY
11	W	STEP MOTOR A
12	L	STEP MOTOR B
13	SB	ROM ASSY (SEL 2)
14	P	ROM ASSY (SEL 1)
15	V	ROM ASSY (SEL 3)
18	BR	P RANGE SW
19	R	IGNITION POWER SUPPLY
20	SB	STEP MOTOR C
21	Y	STEP MOTOR D
22	GR	R RANGE SW

JRDWC1934GB

CVT CONTROL SYSTEM

Connector No.	E19
Connector Name	TCM (TRANSMISSION CONTROL MODULE)
Connector Type	TK24FGY

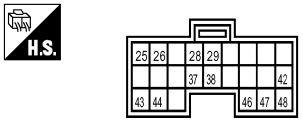

Terminal No.	Color Of Wire	Signal Name [Specification]
25	B	GROUND
26	LG	N RANGE SW
28	Y	BATTERY POWER SUPPLY (MEMORY BACKUP)
29	W	SECONDARY SPEED SENSOR
37	P	SECONDARY PRESSURE SENSOR
38	V	PRIMARY SPEED SENSOR
42	R	SENSOR GROUND
43	SB	D RANGE SW
44	L	L RANGE SW
46	BR	SENSOR POWER
47	LG	CVT FLUID TEMPERATURE SENSOR
48	B	GROUND

Connector No.	E105
Connector Name	WIRE TO WIRE
Connector Type	TH80MW-CS16-TM4

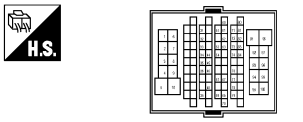

Terminal No.	Color Of Wire	Signal Name [Specification]
1	V	-
2	W	-
3	SB	-
4	G	-
5	P	-
6	L	- [With NAVI]
6	R	- [Without NAVI]
7	Y	-
8	O	-
9	W	-
10	SB	-
31	V	-
32	R	-
33	GR	-
34	P	-
35	Y	-
36	BR	-
39	SB	-
44	R	-
45	V	-
46	P	-
48	L	-
51	B	- [With M/T]
51	BR	- [With CVT]
53	SB	-
54	O	- [With M/T]
54	W	- [With CVT]
57	LG	-
59	L	-
60	O	-
61	G	-
62	W	-
63	L	-
67	GR	- [With CVT]
67	V	- [With M/T]
69	P	-
70	SHIELD	-
71	GR	-
72	LG	-
73	P	-
74	V	-
76	Y	-
77	LG	-
78	O	-
79	G	-
80	P	-
81	L	-
82	W	-
83	BR	-
84	B	-
91	W	-
92	Y	-
93	Y	-
94	R	-
95	V	-
96	LG	-
97	R	-
98	SB	-
99	G	-
100	P	-

Connector No.	E115
Connector Name	STOP LAMP SWITCH
Connector Type	M04FW-LC

Terminal No.	Color Of Wire	Signal Name [Specification]
1	V	-
2	W	-
3	O	-
4	G	-

Connector No.	F1
Connector Name	WIRE TO WIRE
Connector Type	SAA36FB-RS10-SJZ2

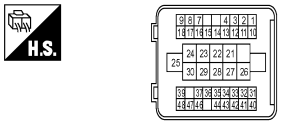

Terminal No.	Color Of Wire	Signal Name [Specification]
1	SB	-
2	LG	-
3	R	-
4	Y	-
7	V	-
8	G	-
9	SB	-
10	L	-
11	Y	-
12	GR	-
13	BR	-
14	G	-
15	W	-
16	Y	-
17	P	-
18	BR	-
21	G	-
22	L	-
23	W	-
24	R	-
25	R	-
26	B	-
27	SB	-
28	V	-
29	V	-
30	BR	-
31	GR	-
32	BR	-
33	W	-
34	LG	-
35	V	-
36	Y	-
37	W	-
39	G	-
40	P	-
41	O	-
42	G	-
43	R	-
44	P	-
46	GR	-
47	Y	-
48	BR	-

Connector No.	F19
Connector Name	SECONDARY SPEED SENSOR
Connector Type	RK03FB

Terminal No.	Color Of Wire	Signal Name [Specification]
1	LG	-
2	G	-
3	R	-

JRDWC1935GB

CVT CONTROL SYSTEM

Connector No.	F21
Connector Name	TRANSMISSION RANGE SWITCH
Connector Type	RK08FG

Terminal No.	Color Of Wire	Signal Name [Specification]
1	R	-
2	W	-
3	R	-
4	GR	-
5	SB	-
6	W	-
7	Y	-
8	G	-

Connector No.	F24
Connector Name	CVT UNIT
Connector Type	Yazaki_7283-8750-30

Terminal No.	Color Of Wire	Signal Name [Specification]
1	Y	-
2	R	-
3	LG	-
6	P	-
7	Y	-
8	W	-
9	G	-
11	G	-
12	SB	-
13	BR	-
16	L	-
17	BR	-
19	LG	-
20	O	-
23	L	-

Connector No.	F46
Connector Name	WIRE TO WIRE
Connector Type	RH12MB

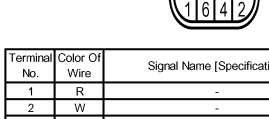

Terminal No.	Color Of Wire	Signal Name [Specification]
1	G	-
2	O	-
3	L	-
4	V	-
5	BR	-
6	LG	-
7	Y	-
8	SB	-
9	W	-
10	R	-
11	G	-

Connector No.	F55
Connector Name	PRIMARY SPEED SENSOR
Connector Type	RK03FB

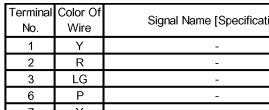

Terminal No.	Color Of Wire	Signal Name [Specification]
1	LG	-
2	V	-
3	R	-

Connector No.	M4
Connector Name	DATA LINK CONNECTOR
Connector Type	BD16FW

Terminal No.	Color Of Wire	Signal Name [Specification]
4	B	-
5	B	-
6	L	-
7	GR/R	-
8	O	-
14	P	-
16	LG/R	-

Connector No.	M34
Connector Name	COMBINATION METER
Connector Type	TH40FW-NH

Terminal No.	Color Of Wire	Signal Name [Specification]
1	L	CAN-H
2	P	CAN-L
3	V	VEHICLE SPEED SIGNAL (2-PULSE)
4	L	VEHICLE SPEED SIGNAL (8-PULSE) [Without NAVI]
4	V/R	VEHICLE SPEED SIGNAL (8-PULSE) [With NAVI]
6	BR/Y	FUEL LEVEL SENSOR SIGNAL
7	R/G	AIR BAG SIGNAL
8	P	OVERDRIVE CONTROL SWITCH SIGNAL
9	O	SEAT BELT BUCKLE SWITCH SIGNAL (DRIVER SIDE)
10	SB	PARKING BRAKE SWITCH SIGNAL
11	G/R	BRAKE FLUID LEVEL SWITCH SIGNAL
13	B/R	ILLUMINATION CONTROL SIGNAL
15	L/Y	ACC POWER SUPPLY
18	R/Y	SECURITY SIGNAL
19	PU/W	AMBIENT SENSOR SIGNAL
20	R/W	AMBIENT SENSOR GROUND
21	B	GROUND
22	B	GROUND
23	B	GROUND
24	PU	FUEL LEVEL SENSOR GROUND
25	B	VDC GROUND
27	LG/R	BATTERY POWER SUPPLY
28	GR	IGNITION SIGNAL
29	BR	PASSENGER SEAT BELT WARNING SIGNAL
31	R	A/C AUTO AMP. CONNECTION RECOGNITION SIGNAL
35	BR	ENGINE COOLANT TEMPERATURE SIGNAL
38	GR	ALTERNATOR SIGNAL

Connector No.	M57
Connector Name	CVT SHIFT SELECTOR
Connector Type	TH08FW-NH

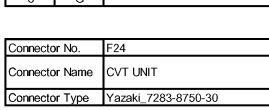

Terminal No.	Color Of Wire	Signal Name [Specification]
1	P	-
2	B	-
3	W	-
4	B/R	-
5	LG	-
6	B	-

JRDWC1936GB

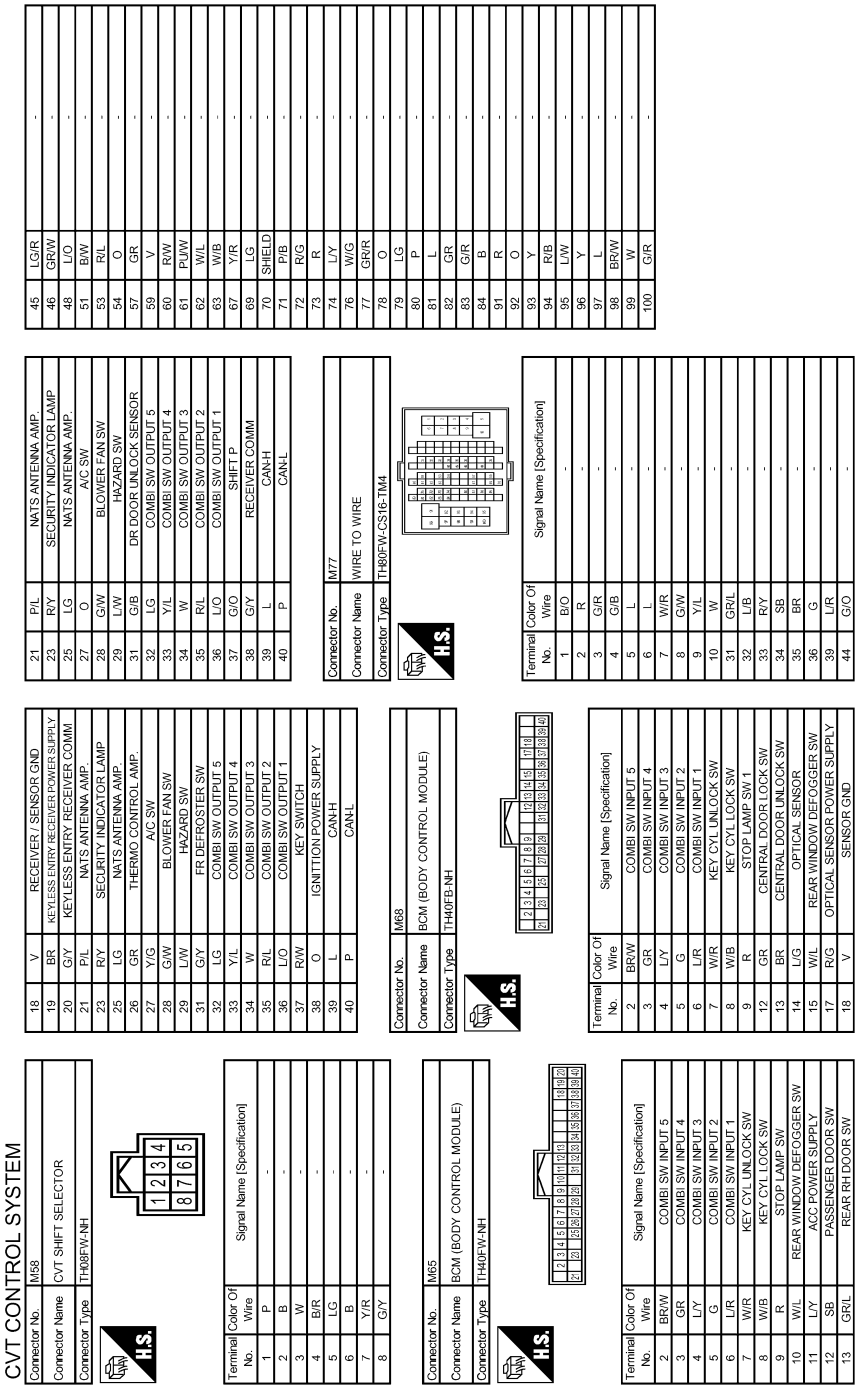

JRDWC1937GB

Fail-safe

INFOID:0000000009949057

Description

When a malfunction is detected in each sensor, switch, solenoid or others, this function provides control to minimize reduction of drivability so that durability of transmission assembly can be acquired.

DTC	Condition		Vehicle behavior
P0703	—		• Start is slow • Acceleration is slow
P0705	—		• Position indicator on combination meter is not displayed • Selector shock is large • Start is slow • Acceleration at high load state is slow • Overdrive off condition is not activated • “L” position is not activated
P0710	Engine coolant temperature when engine starts is 10°C (50°F) or more	Open circuit is detected while ignition switch is OFF	• Selector shock is large • Low is fixed
		Other than the above	• Selector shock is large • Engine speed is high in middle and high speed range
	Engine coolant temperature when engine starts is 10°C (50°F) or less		• Start is slow • Acceleration is slow • Vehicle speed is not increased
	Engine coolant temperature when engine starts is –35°C (–31°F) or less		Vehicle speed is not increased
P0715	—		• Re-acceleration is slightly slow • Re-start is slow after vehicle is stop by strong deceleration • Overdrive off condition is not activated • “L” position is not activated • Lock-up is not performed
P0720	—		• Start is slow • Re-acceleration is slow • Re-start is slow after vehicle is stop by strong deceleration • Overdrive off condition is not activated • “L” position is not activated • Lock-up is not performed
P0725	—		Lock-up is not performed
P0740	—		• Selector shock is large • Lock-up is not performed
P0744	—		Lock-up is not performed
P0746	A malfunction is detected		• Start is slow • Acceleration is slow • Lock-up is not performed
	Function is excessively reduced after a malfunction is detected		• Start is difficult • Drive is difficult • Lock-up is not performed
P0778	—		Engine speed is high in middle and high speed range
P0840	—		• Start is slow • Acceleration at high load state is slow
P0841	—		• Start is slow • Acceleration is slow
P0868	—		• Start is slow • Acceleration is slow (Slow acceleration is subject to secondary pressure that is recognized by TCM)
P1701	—		• Start is slow • Acceleration at high load state is slow
P1705	—		• Acceleration is slow • Lock-up is not performed

DTC	Condition	Vehicle behavior
P1709	—	• Start is slow • Acceleration is slow • Shift position indicator (P, N) is not displayed, or is displayed with delay
P1722	—	Lock-up is not activated in coast state
P1723	A malfunction is detected in primary pulley speed sensor side	• Acceleration is slow • Re-start is slow after vehicle is stop by strong deceleration • Overdrive off condition is not activated • “L” position is not activated • Lock-up is not performed
	A malfunction is detected in secondary pulley speed sensor	• Start is slow • Acceleration is slow • Re-start is slow after vehicle is stop by strong deceleration • Overdrive off condition is not activated • “L” position is not activated • Lock-up is not performed
P1726	—	Acceleration is slow
P1740	—	• Selector shock is large • Lock-up is not performed
P1777	A malfunction is detected in low side (when vehicle is stopped)	• Low is fixed • Lock-up is not performed
	A malfunction is detected in high side (during driving)	• Start is slow • Acceleration is low in low speed range • Lock-up is not performed
U0100	—	• Start is slow • Acceleration is slow • Vehicle speed is not increased
U1000	—	• Start is slow • Acceleration is slow • Vehicle speed is not increased
U1010	—	• Start is slow • Acceleration is slow • Vehicle speed is not increased

DTC Inspection Priority Chart

INFOID:0000000009949058

If some DTCs are displayed at the same time, perform inspections one by one based on the priority as per the following list.

Priority	Detected items (DTC)
1	U0100, U1000, U1010, P1709
2	Except above

DTC Index

INFOID:0000000009949059

When multiple malfunctions are detected simultaneously, perform inspection one by one according to DTC check priority list. Refer to TM-186, "DTC Inspection Priority Chart".

DTC*1		Items (CONSULT screen terms)	Reference
MIL*2, “ENGINE” with CONSULT or GST	“TRANSMISSION” with CONSULT		
U0100	U0100	LOST COMM (ECM A)	TM-103, "DTC Logic"
U1000	U1000	CAN COMM CIRCUIT	TM-104, "DTC Logic"
—	U1010	CONTROL UNIT (CAN)	TM-105, "DTC Logic"

DTC*1		Items (CONSULT screen terms)	Reference
MIL*2, “ENGINE” with CONSULT or GST	“TRANSMISSION” with CONSULT		
—	P0703	BRAKE SWITCH B	TM-106, "DTC Logic"
P0705	P0705	T/M RANGE SENSOR A	TM-109, "DTC Logic"
P0710	P0710	FLUID TEMP SENSOR A	TM-112, "DTC Logic"
P0715	P0715	INPUT SPEED SENSOR A	TM-116, "DTC Logic"
P0720	P0720	OUTPUT SPEED SENSOR	TM-119, "DTC Logic"
—	P0725	ENGINE SPEED	TM-122, "DTC Logic"
P0740	P0740	TORQUE CONVERTER	TM-123, "DTC Logic"
P0744	P0744	TORQUE CONVERTER	TM-126, "DTC Logic"
P0745	P0745	PC SOLENOID A	TM-129, "DTC Logic"
P0746	P0746	PC SOLENOID A	TM-131, "DTC Logic"
P0776	P0776	PC SOLENOID B	TM-133, "DTC Logic"
P0778	P0778	PC SOLENOID B	TM-135, "DTC Logic"
P0840	P0840	FLUID PRESS SEN/SW A	TM-137, "DTC Logic"
—	P0841	FLUID PRESS SEN/SW A	TM-139, "DTC Logic"
—	P0868	FLUID PRESS LOW	TM-141, "DTC Logic"
—	P1701	TCM	TM-144, "DTC Logic"
—	P1705	TP SENSOR	TM-147, "DTC Logic"
—	P1709	INCOMPLETED DATA WRITING	TM-148, "DTC Logic"
—	P1722	VEHICLE SPEED	TM-150, "DTC Logic"
—	P1723	SPEED SENSOR	TM-151, "DTC Logic"
—	P1726	THROTTLE CONTROL SIGNAL	TM-153, "DTC Logic"
P1740	P1740	SLCT SOLENOID	TM-154, "DTC Logic"
P1777	P1777	STEP MOTOR	TM-157, "DTC Logic"
P1778	P1778	STEP MOTOR	TM-160, "DTC Logic"

*1: These numbers are prescribed by SAE J2012.

*2: Refer to TM-98, "Diagnosis Description".

SYMPTOM DIAGNOSIS

SYSTEM SYMPTOM

Symptom Table

INFOID:0000000009949060

The diagnostics item numbers show the sequence for inspection. Inspect in order from item 1.

No.	Item	Symptom	Condition	Diagnostic item	Reference
1	Shift Shock	Large shock. (“N”→“D” position)	ON vehicle	1. Engine idle speed	EC-18
				2. Engine speed signal	TM-122
				3. Accelerator pedal position sensor	TM-147
				4. CVT position	TM-215
				5. CVT fluid temperature sensor	TM-112
				6. CAN communication line	TM-104
				7. CVT fluid level and state	TM-206
				8. Line pressure test	TM-209
				9. Torque converter clutch solenoid valve	TM-123
				10. Lock-up select solenoid valve	TM-154
				11. Transmission range switch	TM-109
			OFF vehicle	12. Control valve	TM-235
				13. Forward clutch	
2		Large shock. (“N”→“R” position)	ON vehicle	1. Engine idle speed	EC-18
				2. Engine speed signal	TM-122
				3. Accelerator pedal position sensor	TM-147
				4. CVT position	TM-215
				5. CVT fluid temperature sensor	TM-112
				6. CAN communication line	TM-104
				7. CVT fluid level and state	TM-206
				8. Line pressure test	TM-209
				9. Torque converter clutch solenoid valve	TM-123
				10. Lock-up select solenoid valve	TM-154
				11. Transmission range switch	TM-109
			OFF vehicle	12. Control valve	TM-235
				13. Reverse brake	
3		Shock is too large for lock-up.	ON vehicle	1. CVT position	TM-215
				2. Engine speed signal	TM-122
				3. CAN communication line	TM-104
				4. CVT fluid level and state	TM-206
			OFF vehicle	5. Control valve	TM-235
				6. Torque converter	TM-239

No.	Item	Symptom	Condition	Diagnostic item	Reference
4	Slips/Will Not Engage	Vehicle cannot take off from “D” position.	ON vehicle	1. CVT fluid level and state	TM-206
				2. CVT position	TM-215
				3. CAN communication line	TM-104
				4. Line pressure test	TM-209
				5. Stall test	TM-208
				6. Step motor	TM-157
				7. Primary speed sensor	TM-116
				8. Secondary speed sensor	TM-119
				9. Accelerator pedal position sensor	TM-147
				10. CVT fluid temperature sensor	TM-112
				11. Secondary pressure sensor	TM-135
				12. TCM power supply and ground	TM-144
			OFF vehicle	13. Control valve	TM-235
				14. Oil pump assembly	
				15. Forward clutch	
				16. Parking components	

No.	Item	Symptom	Condition	Diagnostic item	Reference
5	Slips/Will Not Engage	Vehicle cannot take off from “R” position.	ON vehicle	1. CVT fluid level and state	TM-206
				2. CVT position	TM-215
				3. CAN communication line	TM-104
				4. Line pressure test	TM-209
				5. Stall test	TM-208
				6. Step motor	TM-157
				7. Primary speed sensor	TM-116
				8. Secondary speed sensor	TM-119
				9. Accelerator pedal position sensor	TM-147
				10. CVT fluid temperature sensor	TM-112
				11. Secondary pressure sensor	TM-135
				12. TCM power supply and ground	TM-144
			OFF vehicle	13. Control valve	TM-235
				14. Oil pump assembly	
				15. Reverse brake	
				16. Parking components	
6		Does not lock-up.	ON vehicle	1. CVT fluid level and state	TM-206
				2. Line pressure test	TM-209
				3. Engine speed signal	TM-122
				4. Primary speed sensor	TM-116
				5. Torque converter clutch solenoid valve	TM-123
				6. CAN communication line	TM-104
				7. Stall test	TM-208
				8. Step motor	TM-157
				9. Transmission range switch	TM-109
				10. Lock-up select solenoid valve	TM-154
				11. CVT fluid temperature sensor	TM-112
				12. Secondary speed sensor	TM-119
				13. Secondary pressure sensor	TM-135
			OFF vehicle	14. Torque converter	TM-239
				15. Control valve	TM-235
				16. Oil pump assembly	

No.	Item	Symptom	Condition	Diagnostic item	Reference
7	Slips/Will Not Engage	Does not hold lock-up condition.	ON vehicle	1. CVT fluid level and state	TM-206
				2. Line pressure test	TM-209
				3. Engine speed signal	TM-122
				4. Primary speed sensor	TM-116
				5. Torque converter clutch solenoid valve	TM-123
				6. CAN communication line	TM-104
				7. Stall test	TM-208
				8. Step motor	TM-157
				9. Transmission range switch	TM-109
				10. Lock-up select solenoid valve	TM-154
				11. CVT fluid temperature sensor	TM-112
				12. Secondary speed sensor	TM-119
				13. Secondary pressure sensor	TM-135
			OFF vehicle	14. Torque converter	TM-239
				15. Control valve	TM-235
				16. Oil pump assembly	
8		Lock-up is not released.	ON vehicle	1. CVT fluid level and state	TM-206
				2. Line pressure test	TM-209
				3. Engine speed signal	TM-122
				4. Primary speed sensor	TM-116
				5. Torque converter clutch solenoid valve	TM-123
				6. CAN communication line	TM-104
				7. Stall test	TM-208
			OFF vehicle	8. Torque converter	TM-239
				9. Control valve	TM-235
				10. Oil pump assembly	

No.	Item	Symptom	Condition	Diagnostic item	Reference
9	Slips/Will Not Engage	With selector lever in “D” position, acceleration is extremely poor.	ON vehicle	1. CVT fluid level and state	TM-206
				2. Line pressure test	TM-209
				3. Stall test	TM-208
				4. Accelerator pedal position sensor	TM-147
				5. CAN communication line	TM-104
				6. Transmission range switch	TM-109
				7. CVT position	TM-215
				8. Step motor	TM-157
				9. Primary speed sensor	TM-116
				10. Secondary speed sensor	TM-119
				11. Accelerator pedal position sensor	TM-147
				12. Secondary pressure sensor	TM-135
				13. CVT fluid temperature sensor	TM-112
				14. TCM power supply and ground	TM-144
			OFF vehicle	15. Torque converter	TM-239
				16. Control valve	TM-235
				17. Oil pump assembly	
				18. Forward clutch	
10		With selector lever in “R” position, acceleration is extremely poor.	ON vehicle	1. CVT fluid level and state	TM-206
				2. Line pressure test	TM-209
				3. Stall test	TM-208
				4. Accelerator pedal position sensor	TM-147
				5. CAN communication line	TM-104
				6. Transmission range switch	TM-109
				7. CVT position	TM-215
				8. Step motor	TM-157
				9. Primary speed sensor	TM-116
				10. Secondary speed sensor	TM-119
				11. Accelerator pedal position sensor	TM-147
				12. Secondary pressure sensor	TM-135
				13. CVT fluid temperature sensor	TM-112
				14. TCM power supply and ground	TM-144
			OFF vehicle	15. Torque converter	TM-239
				16. Control valve	TM-235
				17. Oil pump assembly	
				18. Reverse brake	

No.	Item	Symptom	Condition	Diagnostic item	Reference
11	Slips/Will Not Engage	Slips at lock-up.	ON vehicle	1. CVT fluid level and state	TM-206
				2. Line pressure test	TM-209
				3. Engine speed signal	TM-122
				4. Primary speed sensor	TM-116
				5. Torque converter clutch solenoid valve	TM-123
				6. CAN communication line	TM-104
				7. Stall test	TM-208
				8. Step motor	TM-157
				9. Transmission range switch	TM-109
				10. Lock-up select solenoid valve	TM-154
				11. CVT fluid temperature sensor	TM-112
				12. Secondary speed sensor	TM-119
				13. Secondary pressure sensor	TM-135
			OFF vehicle	14. Torque converter	TM-239
				15. Control valve	TM-235
				16. Oil pump assembly	
12	Others	No creep at all.	ON vehicle	1.CVT fluid level and state	TM-206
				2. Line pressure test	TM-209
				3. Accelerator pedal position sensor	TM-147
				4. Transmission range switch	TM-109
				5. CAN communication line	TM-104
				6. Stall test	TM-208
				7. CVT position	TM-215
				8. Step motor	TM-157
				9. Primary speed sensor	TM-116
				10. Secondary speed sensor	TM-119
				11. Accelerator pedal position sensor	TM-147
				12. CVT fluid temperature sensor	TM-112
				13. Secondary pressure sensor	TM-135
				14. TCM power supply and ground	TM-144
			OFF vehicle	15. Torque converter	TM-239
				16. Control valve	TM-235
				17. Oil pump assembly	
				18. Gear system	
				19. Forward clutch	
				20. Reverse brake	

No.	Item	Symptom	Condition	Diagnostic item	Reference
13	Others	Vehicle cannot drive in all positions.	ON vehicle	1. CVT fluid level and state	TM-206
				2. Line pressure test	TM-209
				3. Transmission range switch	TM-109
				4. Stall test	TM-208
				5. CVT position	TM-215
				6. Step motor	TM-157
				7. Primary speed sensor	TM-116
				8. Secondary speed sensor	TM-119
				9. Accelerator pedal position sensor	TM-147
				10. CVT fluid temperature sensor	TM-112
				11. Secondary pressure sensor	TM-135
				12. TCM power supply and ground	TM-144
			OFF vehicle	13. Torque converter	TM-239
				14. Control valve	TM-235
				15. Oil pump assembly	
				16. Gear system	
				17. Forward clutch	
				18. Reverse brake	
				19. Parking components	
14		With selector lever in “D” position, driving is not possible.	ON vehicle	1. CVT fluid level and state	TM-206
				2. Line pressure test	TM-209
				3. Transmission range switch	TM-109
				4. Stall test	TM-208
				5. CVT position	TM-215
				6. Step motor	TM-157
				7. Primary speed sensor	TM-116
				8. Secondary speed sensor	TM-119
				9. Accelerator pedal position sensor	TM-147
				10. CVT fluid temperature sensor	TM-112
				11. Secondary pressure sensor	TM-135
				12. TCM power supply and ground	TM-144
			OFF vehicle	13. Torque converter	TM-239
				14. Control valve	TM-235
				15. Oil pump assembly	
				16. Gear system	
				17. Forward clutch	
				18. Parking components	

No.	Item	Symptom	Condition	Diagnostic item	Reference
15	Others	With selector lever in “R” position, driving is not possible.	ON vehicle	1. CVT fluid level and state	TM-206
				2. Line pressure test	TM-209
				3. Transmission range switch	TM-109
				4. Stall test	TM-208
				5. CVT position	TM-215
				6. Step motor	TM-157
				7. Primary speed sensor	TM-116
				8. Secondary speed sensor	TM-119
				9. Accelerator pedal position sensor	TM-147
				10. CVT fluid temperature sensor	TM-112
				11. Secondary pressure sensor	TM-135
				12. TCM power supply and ground	TM-144
			OFF vehicle	13. Torque converter	TM-239
				14. Control valve	TM-235
				15. Oil pump assembly	
				16. Gear system	
				17. Reverse brake	
				18. Parking components	
16		Judder occurs during lock-up.	ON vehicle	1. CVT fluid level and state	TM-206
				2. Engine speed signal	TM-122
				3. Primary speed sensor	TM-116
				4. Secondary speed sensor	TM-119
				5. Accelerator pedal position sensor	TM-147
				6. CAN communication line	TM-104
				7. Torque converter clutch solenoid valve	TM-123
			OFF vehicle	8. Torque converter	TM-239
				9. Control valve	TM-235
17		Strange noise in “D” position.	ON vehicle	1. CVT fluid level and state	TM-206
				2. Engine speed signal	TM-122
				3. CAN communication line	TM-104
			OFF vehicle	4. Torque converter	TM-239
				5. Control valve	TM-235
				6. Oil pump assembly	
				7. Gear system	
				8. Forward clutch	
				9. Bearing	

No.	Item	Symptom	Condition	Diagnostic item	Reference
18	Others	Strange noise in “R” position.	ON vehicle	1. CVT fluid level and state	TM-206
				2. Engine speed signal	TM-122
				3. CAN communication line	TM-104
			OFF vehicle	4. Torque converter	TM-239
				5. Control valve	TM-235
				6. Oil pump assembly	
				7. Gear system	
				8. Reverse brake	
19		Strange noise in “N” position.	ON vehicle	1. CVT fluid level and state	TM-206
				2. Engine speed signal	TM-122
				3. CAN communication line	TM-104
			OFF vehicle	4. Torque converter	TM-239
				5. Control valve	TM-235
				6. Oil pump assembly	
				7. Gear system	
20		Vehicle does not decelerate by engine brake.	ON vehicle	1. CVT fluid level and state	TM-206
				2. CVT position	TM-215
				3. CAN communication line	TM-104
				4. Step motor	TM-157
				5. Primary speed sensor	TM-116
				6. Secondary speed sensor	TM-119
				7. Line pressure test	TM-209
				8. Engine speed signal	TM-122
				9. Accelerator pedal position sensor	TM-147
			OFF vehicle	10. Control valve	TM-235

No.	Item	Symptom	Condition	Diagnostic item	Reference
21	Others	Maximum speed low.	ON vehicle	1. CVT fluid level and state	TM-206
				2. Line pressure test	TM-209
				3. Accelerator pedal position sensor	TM-147
				4. CAN communication line	TM-104
				5. Stall test	TM-208
				6. Step motor	TM-157
				7. Primary speed sensor	TM-116
				8. Secondary speed sensor	TM-119
				9. Secondary pressure sensor	TM-135
				10. CVT fluid temperature sensor	TM-112
			OFF vehicle	11. Torque converter	TM-239
				12. Control valve	TM-235
				13. Oil pump assembly	
				14. Gear system	
				15. Forward clutch	
22		With selector lever in “P” position, vehicle does not enter parking condition or, with selector lever in another position, parking condition is not cancelled.	ON vehicle	1. Transmission range switch	TM-109
				2. CVT position	TM-215
			OFF vehicle	3. Parking components	TM-235
23		Vehicle drives with CVT in “P” position.	ON vehicle	1. Transmission range switch	TM-109
				2. CVT fluid level and state	TM-206
				3. CVT position	TM-215
			OFF vehicle	4. Control valve	TM-235
				5. Parking components	
				6. Gear system	
24		Vehicle drives with CVT in “N” position.	ON vehicle	1. Transmission range switch	TM-109
				2. CVT fluid level and state	TM-206
				3. CVT position	TM-215
			OFF vehicle	4. Control valve	TM-235
				5. Gear system	
				6. Forward clutch	
				7. Reverse brake	

No.	Item	Symptom	Condition	Diagnostic item	Reference
25	Others	Engine stall.	ON vehicle	1. CVT fluid level and state	TM-206
				2. Engine speed signal	TM-122
				3. Primary speed sensor	TM-116
				4. Torque converter clutch solenoid valve	TM-123
				5. CAN communication line	TM-104
				6. Stall test	TM-208
				7. Secondary pressure sensor	TM-135
			OFF vehicle	8. Torque converter	TM-239
				9. Control valve	TM-235
26		Engine stalls when selector lever is shifted “N” → “D” or “R”.	ON vehicle	1. CVT fluid level and state	TM-206
				2. Engine speed signal	TM-122
				3. Primary speed sensor	TM-116
				4. Torque converter clutch solenoid valve	TM-123
				5. CAN communication line	TM-104
				6. Stall test	TM-208
			OFF vehicle	7. Torque converter	TM-239
				8. Control valve	TM-235
27		Engine speed does not return to idle.	ON vehicle	1. CVT fluid level and state	TM-206
				2. Accelerator pedal position sensor	TM-147
				3. Secondary speed sensor	TM-119
				4. CAN communication line	TM-104
			OFF vehicle	5. Control valve	TM-235
28		CVT does not shift.	ON vehicle	1. CVT fluid level and state	TM-206
				2. CVT position	TM-215
				3. Line pressure test	TM-209
				4. Engine speed signal	TM-122
				5. Accelerator pedal position sensor	TM-147
				6. CAN communication line	TM-104
				7. Primary speed sensor	TM-116
				8. Secondary speed sensor	TM-119
				9. Step motor	TM-157
			OFF vehicle	10. Control valve	TM-235
				11. Oil pump assembly	

No.	Item	Symptom	Condition	Diagnostic item	Reference
29	Others	Engine does not start in “N” or “P” position.	ON vehicle	1. Ignition switch and starter	PG-33, STR-9
				2. CVT position	TM-215
				3. Transmission range switch	TM-109
30		Engine starts in positions other than “N” or “P”.	ON vehicle	1. Ignition switch and starter	PG-33, STR-9
				2. CVT position	TM-215
				3. Transmission range switch	TM-109
31		When brake pedal is depressed with ignition switch ON, selector lever cannot be shifted from “P” position to other position.	ON vehicle	1. Stop lamp switch	TM-166
				2. Shift lock solenoid	
				3. CVT shift selector	
32		When brake pedal is not depressed with ignition switch ON, selector lever can be shifted from “P” position to other position.	ON vehicle	1. Stop lamp switch	TM-166
				2. Shift lock solenoid	
				3. CVT shift selector	
33		Cannot be changed to overdrive OFF condition.	ON vehicle	1. Overdrive control switch	TM-162
				2. CAN communication line	TM-104
				3. Combination meters	MWI-39
34		OD OFF indicator lamp is not turned ON.	ON vehicle	1. CAN communication line	TM-104
				2. Combination meters	MWI-39
				3. TCM power supply and ground	TM-144

PRECAUTION

PRECAUTIONS

Precaution for Supplemental Restraint System (SRS) "AIR BAG" and "SEAT BELT PRE-TENSIONER"

INFOID:0000000009949061

The Supplemental Restraint System such as “AIR BAG” and “SEAT BELT PRE-TENSIONER”, used along with a front seat belt, helps to reduce the risk or severity of injury to the driver and front passenger for certain types of collision. This system includes seat belt switch inputs and dual stage front air bag modules. The SRS system uses the seat belt switches to determine the front air bag deployment, and may only deploy one front air bag, depending on the severity of a collision and whether the front occupants are belted or unbelted.
Information necessary to service the system safely is included in the “SRS AIR BAG” and “SEAT BELT” of this Service Manual.

WARNING:
Always observe the following items for preventing accidental activation.
- **To avoid rendering the SRS inoperative, which could increase the risk of personal injury or death in the event of a collision that would result in air bag inflation, all maintenance must be performed by an authorized NISSAN/INFINITI dealer.**
- **Improper maintenance, including incorrect removal and installation of the SRS, can lead to personal injury caused by unintentional activation of the system. For removal of Spiral Cable and Air Bag Module, see “SRS AIR BAG”.**
- **Never use electrical test equipment on any circuit related to the SRS unless instructed to in this Service Manual. SRS wiring harnesses can be identified by yellow and/or orange harnesses or harness connectors.**

PRECAUTIONS WHEN USING POWER TOOLS (AIR OR ELECTRIC) AND HAMMERS

WARNING:
Always observe the following items for preventing accidental activation.
- **When working near the Air Bag Diagnosis Sensor Unit or other Air Bag System sensors with the ignition ON or engine running, never use air or electric power tools or strike near the sensor(s) with a hammer. Heavy vibration could activate the sensor(s) and deploy the air bag(s), possibly causing serious injury.**
- **When using air or electric power tools or hammers, always switch the ignition OFF, disconnect the battery, and wait at least 3 minutes before performing any service.**

Precaution for Procedure without Cowl Top Cover

INFOID:0000000009949062

When performing the procedure after removing cowl top cover, cover the lower end of windshield with urethane, etc to prevent damage to windshield.

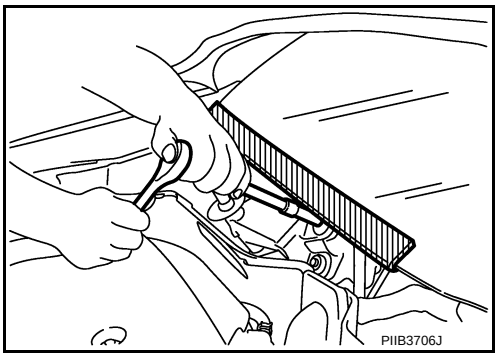

Precautions for Removing of Battery Terminal

INFOID:0000000010194295

- When removing the 12V battery terminal, turn OFF the ignition switch and wait at least 30 seconds.
  NOTE:
  ECU may be active for several tens of seconds after the ignition switch is turned OFF. If the battery terminal is removed before ECU stops, then a DTC detection error or ECU data corruption may occur.
- For vehicles with the 2-batteries, be sure to connect the main battery and the sub battery before turning ON the ignition switch.
  NOTE:
  If the ignition switch is turned ON with any one of the terminals of main battery and sub battery disconnected, then DTC may be detected.

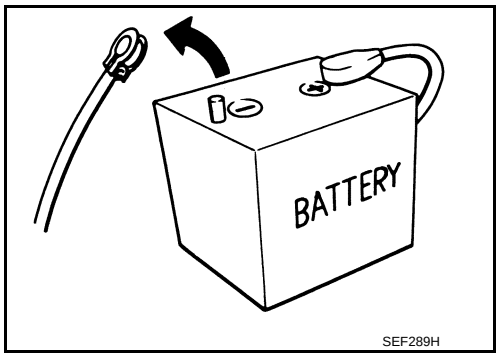

- After installing the 12V battery, always check "Self Diagnosis Result" of all ECUs and erase DTC.
  NOTE:
  The removal of 12V battery may cause a DTC detection error.

Precaution for On Board Diagnosis (OBD) System of CVT and Engine

INFOID:0000000009949063

The ECM has an on board diagnostic system. It will light up the malfunction indicator (MIL) to warn the driver of a malfunction causing emission deterioration.

CAUTION:

- **Be sure to turn the ignition switch OFF and disconnect the battery cable from the negative terminal before any repair or inspection work. The open/short circuit of related switches, sensors, solenoid valves, etc. will cause the MIL to light up.**
- **Be sure to connect and lock the connectors securely after work. A loose (unlocked) connector will cause the MIL to light up due to an open circuit. (Be sure the connector is free from water, grease, dirt, bent terminals, etc.)**
- **Be sure to route and secure the harnesses properly after work. Interference of the harness with a bracket, etc. may cause the MIL to light up due to a short circuit.**
- **Be sure to connect rubber tubes properly after work. A misconnected or disconnected rubber tube may cause the MIL to light up due to a malfunction of the EVAP system or fuel injection system, etc.**
- **Be sure to erase the unnecessary malfunction information (repairs completed) from the TCM and ECM before returning the vehicle to the customer.**

Precaution for TCM and Transaxle Assembly Replacement

INFOID:0000000009949064

CAUTION:

- **To replace TCM, refer to TM-67, "Description".**
- **To replace transaxle assembly, refer to TM-68, "Description".**

Precaution

INFOID:0000000009949065

NOTE:
If any malfunction occurs in the RE0F08B model transaxle, replace the entire transaxle assembly.

- **Turn ignition switch OFF and disconnect negative battery cable before connecting or disconnecting the TCM harness connector. Because battery voltage is applied to TCM even if ignition switch is turned OFF.**

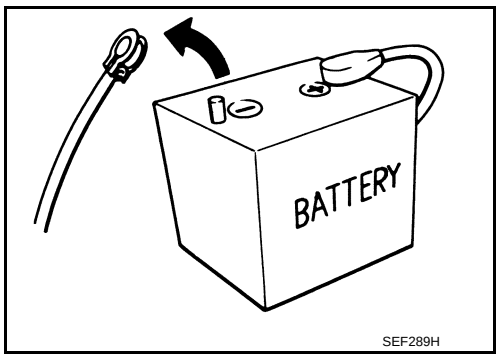

- **When connecting or disconnecting pin connectors into or from TCM, do not damage pin terminals (bend or break).**
  Check that there are not any bends or breaks on TCM pin terminal, when connecting pin connectors.

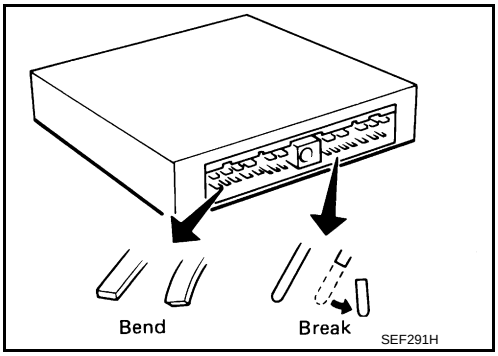

- **Perform TCM input/output signal inspection and check whether TCM functions normally or not before replacing TCM.** **TM-174, "Reference Value"****.**

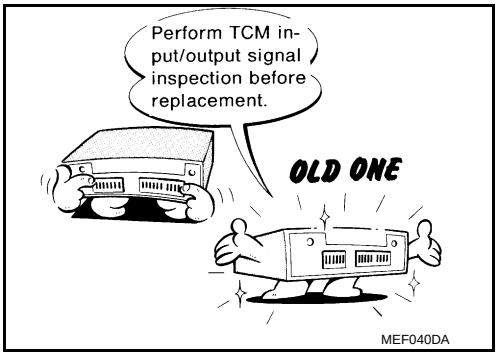

- **Perform "DTC Confirmation Procedure" after performing each TROUBLE DIAGNOSIS.**
  If the repair is completed the DTC should not be displayed in the "DTC Confirmation Procedure".
- Never disassemble transaxle unless it is described in this manual.
- Always use the specified brand of CVT fluid. Refer to MA-10, "Fluids and Lubricants".
- Use lint-free paper, not cloth rags, during work.
- Dispose of the waste oil using the methods prescribed by law, ordinance, etc. after replacing the CVT fluid.
- Perform the work in a clean workplace.
- Before starting removal, check normal state in advance.
- During work, never allow dust, dirt, and others to enter in transaxle inside.
- Use genuine Nissan parts for replacement.
- Never reuse fluid that is drained.
- Always treat drained fluid, used flushing oil, and others as oil waste.
- Perform fluid level check and replacement while keeping the vehicle in horizontal state.
- Apply the specified fluid to O-ring and oil seal when installing them.

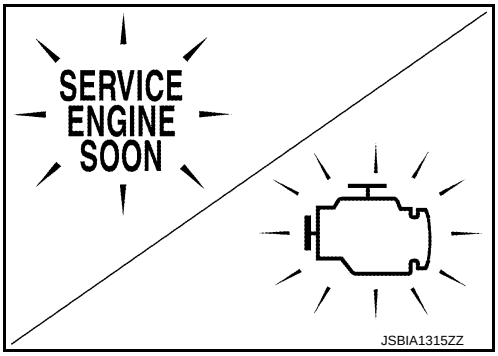

Removal and Installation Procedure for CVT Unit Connector

INFOID:0000000009949066

REMOVAL

- Rotate bayonet ring (A) counterclockwise. Pull out CVT unit harness connector (B) upward and remove it.

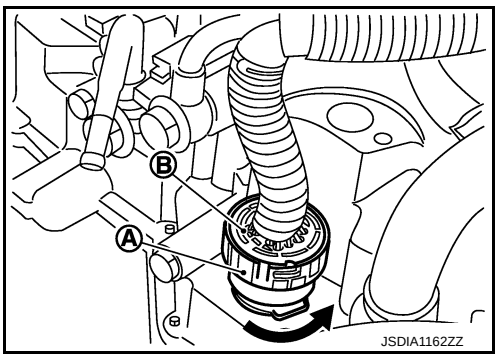

INSTALLATION

1. Align marking (A) on CVT unit harness connector terminal with marking (B) on bayonet ring. Insert CVT unit harness connector.
2. Rotate bayonet ring clockwise.

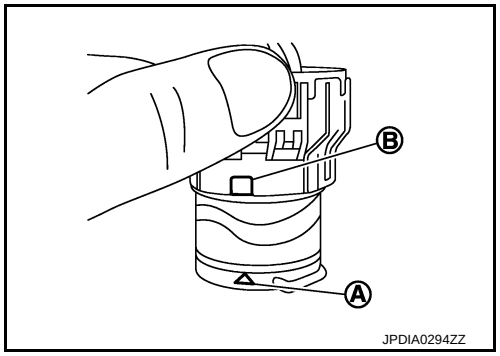

3. Rotate bayonet ring clockwise until marking (A) on CVT unit harness connector terminal body is aligned with the slit (B) on bayonet ring as shown in the figure (correctly fitting condition).

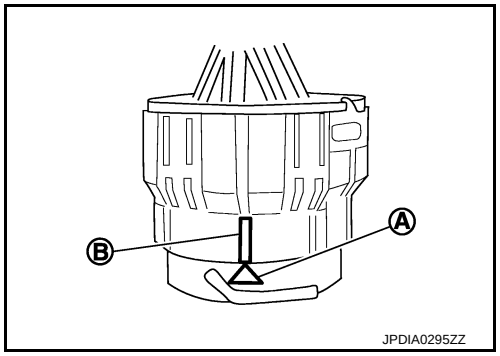

CAUTION:
- **Securely align marking (A) on CVT unit harness connector terminal body with bayonet ring slit (B). Then, be careful not to make a half fit condition as shown in the figure.**
- **Never mistake the slit of bayonet ring for other dent portion.**

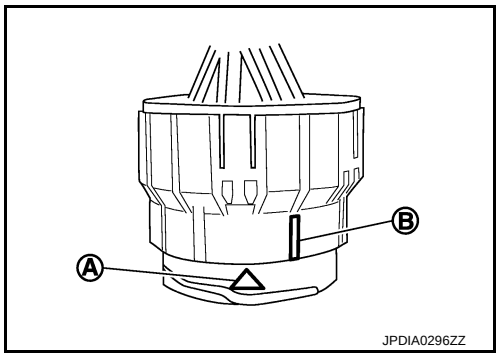

Service Notice or Precaution

INFOID:0000000009949067

OBD-II SELF-DIAGNOSIS

- CVT self-diagnosis is performed by the TCM in combination with the ECM. The results can be read through the blinking pattern of the Malfunction Indicator Lamp (MIL). Refer to the table on TM-99, "CONSULT Function" for the indicator used to display each self-diagnostic result.
- The self-diagnostic results indicated by the MIL are automatically stored in both the ECM and TCM memories.
  Always perform the procedure on TM-98, "Diagnosis Description" to complete the repair and avoid unnecessary blinking of the MIL.

For details of OBD-II, refer to EC-101, "Diagnosis Description".

- **Certain systems and components, especially those related to OBD, may use the new style slide-locking type harness connector. For description and how to disconnect, refer to PG-72.**

ATFTEMP COUNT Conversion Table

INFOID:0000000009949068

ATFTEMP COUNT	Temperature °C (°F)	ATFTEMP COUNT	Temperature °C (°F)
4	–30 (–22)	177	90 (194)
8	–20 (–4)	183	95 (203)
13	–10 (14)	190	100 (212)

ATFTEMP COUNT	Temperature °C (°F)	ATFTEMP COUNT	Temperature °C (°F)
17	–5 (23)	196	105 (221)
21	0 (32)	201	110 (230)
27	5 (41)	206	115 (239)
32	10 (50)	210	120 (248)
39	15 (59)	214	125 (257)
47	20 (68)	218	130 (266)
55	25 (77)	221	135 (275)
64	30 (86)	224	140 (284)
73	35 (95)	227	145 (293)
83	40 (104)	229	150 (302)
93	45 (113)	231	155 (311)
104	50 (122)	233	160 (320)
114	55 (131)	235	165 (329)
124	60 (140)	236	170 (338)
134	65 (149)	238	175 (347)
143	70 (158)	239	180 (356)
152	75 (167)	241	190 (374)
161	80 (176)	243	200 (392)
169	85 (185)	—	—

PREPARATION

PREPARATION

Special Service Tools

INFOID:0000000009949069

The actual shapes of Kent-Moore tools may differ from those of special service tools illustrated here.

Tool number (Kent-Moore No.) Tool name	Description
— (OTC3492) Oil pressure gauge set 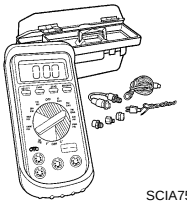 SCIA7531E	Measuring line pressure
KV38107900 (—) Protector a: 32 mm (1.26 in) dia. 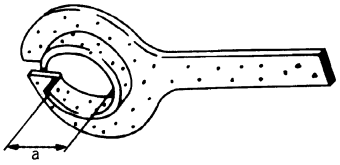 PDIA1183J	Installing drive shaft
ST35325000 (—) KV31103000 (—) Drift a: 70 mm (2.75 in) dia. b: 59 mm (2.32 in) dia. c: 49 mm (1.92 in) dia. 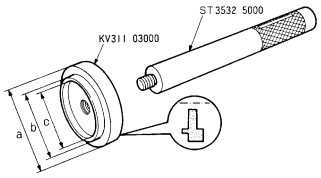 ZZA0501D	Installing differential side oil seal

Commercial Service Tools

INFOID:0000000009949070

Tool name	Description
Power tool 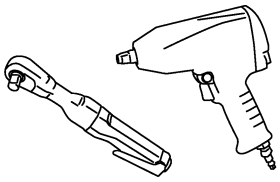 PBIC0190E	Loosening nuts and bolts

PERIODIC MAINTENANCE

CVT FLUID

Inspection

INFOID:0000000009949071

Level check

Check fluid level in HOT state [CVT fluid temperature is between 50 to 80°C (122 to 176°F)], according to the following procedures.

1. Visually check that CVT fluid leakage from transaxle assembly is not detected.
2. After engine warms up, drive the vehicle in an urban area for approximately 10 minutes.
   NOTE:
   When ambient temperature is 20°C (68°F), driving vehicle for approximately 10 minutes in an urban area ordinarily warms up CVT fluid temperature between 50 to 80°C (122 to 176°F).
3. Park the vehicle on a level surface.
4. Fully apply parking brake.
5. Adjust engine speed at idle state.
6. Shift selector lever through entire position from “P” to “D” while depressing brake pedal.
7. Press claw of CVT fluid level gauge lock to unlock.
8. Remove CVT fluid level gauge from CVT fluid charging pipe.
9. Wipe CVT fluid that is on CVT fluid level gauge.
   CAUTION:
   Always use shop paper when wiping off CVT fluid that is on CVT fluid level gauge.

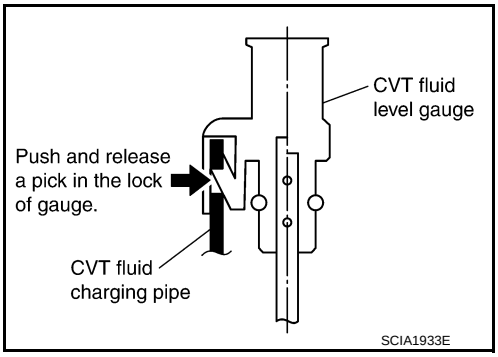

10. Rotate CVT fluid level gauge 180° from installed state.
11. Inset CVT fluid level gauge until it contacts CVT fluid charging pipe end.

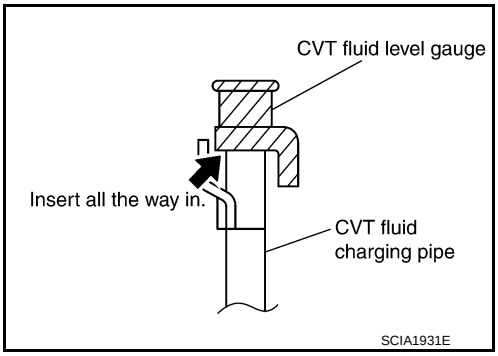

12. Check that CVT fluid level is within the specified level of CVT fluid level gauge (MAX side).

CAUTION:

- **After level check, when returning CVT fluid level gauge to the original state, insert CVT fluid level gauge to CVT fluid charging pipe until it is locked.**
- **Always use shop paper when wiping off CVT fluid that is on CVT fluid level gauge.**

CVT FLUID CONDITION

Check CVT fluid condition.

- If CVT fluid is very dark or smells burned, check operation of transaxle assembly. Flush cooling system after repair of transaxle assembly.
- If CVT fluid contains frictional material (clutches, brakes, etc.), replace radiator and flush cooler line using cleaning solvent and compressed air after repair of transaxle assembly. Refer to TM-231, "CVT FLUID COOLER HOSE : Exploded View".

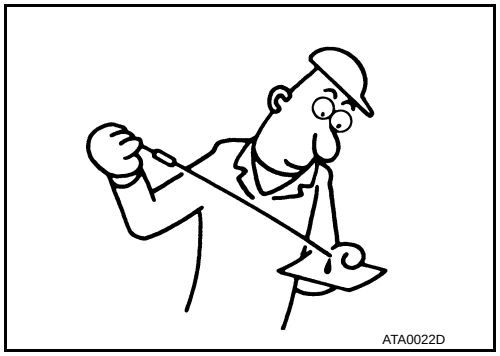

Fluid status	Conceivable cause	Required operation
Varnished (viscous varnish state)	CVT fluid become degraded due to high temperatures	• Replace the CVT fluid. • Check the transaxle assembly and the vehicle for malfunctions (wire harnesses, cooler pipes, etc.)
Milky white or cloudy	Water in the fluid	• Replace the CVT fluid. • Check for places where water is getting in.
Large amount of metal powder mixed in	Unusual wear of sliding parts within transaxle assembly	• Replace the CVT fluid. • Check for improper operation of the transaxle assembly.

Changing

INFOID:0000000009949072

1. Remove drain plug from oil pan and then the CVT fluid.
2. Remove drain plug gasket from drain plug.
3. Install drain plug gasket to drain plug.
   CAUTION:
   Never reuse drain plug gasket.
4. Install drain plug to oil pan.

   : TM-225, "Exploded View"

5. Fill CVT fluid from CVT fluid charging pipe to the specified level.

   CVT fluid and fluid capacity : MA-10, "Fluids and Lubricants"

   CAUTION:
   - **Always use the specified fluid. If use, misuse, or mixing of fluid other than the specified fluid occurs, original performance cannot be obtained or it may cause serious malfunctions.**
   - **CVT fluid is not reusable. Never reuse CVT fluid.**
   - **Always use shop paper. Never use shop cloth.**
   - **After replacement, always perform CVT fluid leakage check.**
   - **Delete CVT fluid deterioration date with CONSULT after changing CVT fluid.**
6. After engine warms up, drive the vehicle in an urban area for approximately 10 minutes.
   NOTE:
   When ambient temperature is 20°C (68°F), it takes about 10 minutes for the CVT fluid to warm up to 50 to 80°C (122 to 176°F).
7. Check CVT fluid level and condition. Refer to TM-206, "Inspection".
8. Repeat steps 1 to 6 if CVT fluid has been contaminated.

STALL TEST

Inspection and Judgment

INFOID:0000000009949073

INSPECTION

1. Inspect the amount of engine oil. Replenish the engine oil if necessary. Refer to LU-8, "Inspection".
2. After engine warms up, drive the vehicle in an urban area for approximately 10 minutes.
   NOTE:
   When ambient temperature is 20°C (68°F), it takes about 10 minutes for the CVT fluid to warm up to 50 to 80°C (122 to 176°F).
3. Inspect the amount of CVT fluid. Replenish if necessary.
4. Securely engage parking brake so that the tires do not turn.
5. Start the engine.
6. Apply foot brake, and shift selector lever to “D” position.
7. Gradually press down accelerator pedal while holding down the foot brake.
8. Quickly read off the stall speed, and then quickly remove your foot from accelerator pedal.
   CAUTION:
   Never hold down accelerator pedal for more than 5 seconds during this test.

   Stall speed : **TM-240, "Stall Speed"**
9. Shift selector lever to “N” position.
10. Cool down the CVT fluid.
    CAUTION:
    Run the engine at idle for at least 1 minute.
11. Repeat steps 7 through 10 with selector lever in “R” position.

JUDGMENT

	Selector lever position		Expected problem location
	“D”	“R”	
Stall rotation	H	O	• Forward clutch
	O	H	• Reverse brake
	L	L	• Engine and torque converter one-way clutch • Accelerator pedal position sensor
	H	H	• Line pressure low • Primary pulley • Secondary pulley • Steel belt

- O: Stall speed within standard value position.
- H: Stall speed is higher than standard value.
- L: Stall speed is lower than standard value.

LINE PRESSURE TEST

Inspection and Judgment

INFOID:0000000009949074

INSPECTION

1. Inspect the amount of engine oil. Replenish the engine oil if necessary. Refer to LU-8, "Inspection".
2. After engine warms up, drive the vehicle in an urban area for approximately 10 minutes.
   NOTE:
   When ambient temperature is 20°C (68°F), it takes about 10 minutes for the CVT fluid to warm up to 50 to 80°C (122 to 176°F).
3. Inspect the amount of CVT fluid. Replenish if necessary.
4. Remove oil pressure detection plug (A).
5. Install oil pressure gauge [special service tool: — (OTC3492)].
   NOTE:
   When using oil pressure gauge, be sure to use O-ring attached to oil pressure detection plug.
6. Securely engage parking brake so that the tires do not turn.
7. Start the engine.
8. Measure the line pressure at both idle and the stall speed.
   CAUTION:
   Keep brake pedal pressed all the way down during measurement.

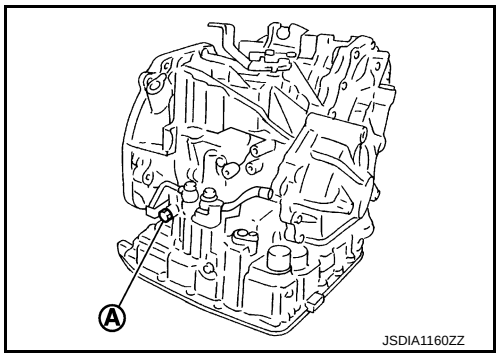

Line pressure : TM-240, "Line Pressure"

9. Install O-rig to oil pressure detection plug.
   CAUTION:
   - **Never reuse O-ring.**
   - **Apply CVT fluid to O-ring.**
10. Install oil pressure detection plug.

: 7.5 N·m (0.77 kg-m, 66 in-lb)

JUDGMENT

Judgment		Possible cause
Idle speed	Low for all positions (“P”, “R”, “N”, “D”, “L”)	Possible causes include malfunctions in the pressure supply system and low oil pump output. For example • Oil pump wear • Pressure regulator valve or plug sticking or spring fatigue • Oil strainer ⇒ oil pump ⇒ pressure regulator valve passage oil leak • Engine idle speed too low
	Only low for a specific position	Possible causes include an oil pressure leak in a passage or device related to the position after the pressure is distributed by the manual valve.
	High	Possible causes include a sensor malfunction or malfunction in the line pressure adjustment function. For example • Accelerator pedal position signal malfunction • CVT fluid temperature sensor malfunction • Line pressure solenoid malfunction (sticking in OFF state, filter clog, cut line) • Pressure regulator valve or plug sticking

Judgment		Possible cause
Stall speed	Line pressure does not rise higher than the line pressure for idle.	Possible causes include a sensor malfunction or malfunction in the pressure adjustment function. For example • Accelerator pedal position signal malfunction • TCM malfunction • Line pressure solenoid malfunction (shorting, sticking in ON state) • Pressure regulator valve or plug sticking
	The pressure rises, but does not enter the standard position.	Possible causes include malfunctions in the pressure supply system and malfunction in the pressure adjustment function. For example • Accelerator pedal position signal malfunction • Line pressure solenoid malfunction (sticking, filter clog) • Pressure regulator valve or plug sticking
	Only low for a specific position	Possible causes include an oil pressure leak in a passage or device related to the position after the pressure is distributed by the manual valve.

ROAD TEST

Description

INFOID:0000000009949075

DESCRIPTION

- The purpose of the test is to determine the overall performance of CVT and analyze causes of problems.
- The road test consists of the following three parts:

1. “Check Before Engine Is Started”
2. “Check at Idle”
3. “Cruise Test”

- Before the road test, familiarize yourself with all test procedures and items to check.
- Perform tests for all the check items until a malfunction phenomenon is detected. Perform diagnosis for NG items after the completion of road tests. Refer to TM-188, "Symptom Table".

Check before Engine Is Started

INFOID:0000000009949076

1.CHECK SHIFT POSITION INDICATOR

1. Park vehicle on level surface.
2. Shift selector lever to “P” position.
3. Turn ignition switch OFF.
4. Wait at least 5 seconds.
5. Turn ignition switch ON.

CAUTION:
Never start the engine.

Has shift position indicator been turned ON for about 2 seconds?

YES >> GO TO 2.
NO >> 1. Stop “Road Test”.
2. Perform self-diagnosis. Refer to TM-188, "Symptom Table".

2.CHECK OD OFF INDICATOR LAMP

1. Turn ignition switch OFF.
2. Wait at least 5 seconds.
3. Turn ignition switch ON.

CAUTION:
Never start the engine.

Has OD OFF indicator lamp been turned ON for about 2 seconds?

YES >> 1. Turn ignition switch OFF.
2. Go to TM-211, "Check at Idle".
NO >> 1. Stop “Road Test”.
2. Perform self-diagnosis. Refer to TM-188, "Symptom Table".

Check at Idle

INFOID:0000000009949077

1.CHECK STARTING THE ENGINE (PART 1)

1. Park vehicle on level surface.
2. Shift selector lever to “P” or “N” position.
3. Turn ignition switch OFF.
4. Turn ignition switch to “START” position.

Is engine started?

YES >> GO TO 2.
NO >> 1. Stop “Road Test”.
2. Perform self-diagnosis. Refer to TM-188, "Symptom Table".

2.CHECK STARTING THE ENGINE (PART 2)

1. Turn ignition switch ON.
2. Shift selector lever to “D” or “R” position.

3. Turn ignition switch to “START” position.

Does engine start with selector lever in one of these positions?

YES >> 1. Stop “Road Test”.
2. Perform self-diagnosis. Refer to TM-188, "Symptom Table".

NO >> GO TO 3.

3. CHECK “P” POSITION FUNCTION

1. Shift selector lever to “P” position.
2. Turn ignition switch OFF.
3. Release parking brake.
4. Push vehicle forward or backward.

Does the vehicle move when it is pushed?

YES >> 1. Apply parking brake.
2. Record malfunction symptoms.
3. GO TO 4.

NO >> 1. Apply parking brake.
2. GO TO 4.

4. CHECK “N” POSITION FUNCTION

1. Start the engine.
2. Shift selector lever to “N” position.
3. Release parking brake.

Does vehicle move?

YES >> 1. Record malfunction symptoms.
2. GO TO 5.

NO >> GO TO 5.

5. CHECK SHIFT SHOCK

1. Apply foot brake.
2. Shift selector lever from “N” to “R” position.

Is an excessive shock detected?

YES >> 1. Record malfunction symptoms.
2. GO TO 6.

NO >> GO TO 6.

6. CHECK “R” POSITION FUNCTION

Release foot brake pedal for several seconds.

Does vehicle back up?

YES >> GO TO 7.

NO >> 1. Record malfunction symptoms.
2. GO TO 7.

7. CHECK “D” POSITION FUNCTION

Shift selector lever to “D” position.

Does the vehicle move forward?

YES >> Go to TM-212, "Cruise Test".

NO >> 1. Stop “Road Test”.
2. Perform self-diagnosis. Refer to TM-188, "Symptom Table".

Cruise Test

INFOID:0000000009949078

CAUTION:

Always drive vehicle at a safe speed.

1. CHECK VEHICLE SPEED WHEN SHIFTING GEARS (PART 1)

1. Drive vehicle for approximately 10 minutes to warm engine oil and CVT fluid up to operating temperature.
   CVT fluid operating temperature: 50 – 80°C (122 – 176°F)
2. Park vehicle on level surface.
3. Shift selector lever to “P” position.

4. Start the engine.
5. Shift selector lever to “D” position.
6. Accelerate vehicle at 2/8 throttle opening.
7. Check “Vehicle Speed When Shifting Gears”. Refer to TM-240, "Vehicle Speed When Shifting Gears".

With CONSULT
- Read “ACC PEDAL OPEN”, “VEHICLE SPEED” and “ENG SPEED”.

Is the inspection result normal?

YES >> GO TO 2.
NO >> 1. Record malfunction symptoms.
2. GO TO 2.

2. CHECK VEHICLE SPEED WHEN SHIFTING GEARS (PART 2)

1. Park vehicle on level surface.
2. Shift selector lever to “D” position.
3. Accelerate vehicle at 8/8 throttle opening.
4. Check “Vehicle Speed When Shifting Gears”. Refer to TM-240, "Vehicle Speed When Shifting Gears".

With CONSULT
- Read “ACC PEDAL OPEN”, “VEHICLE SPEED” and “ENG SPEED”.

Is the inspection result normal?

YES >> GO TO 3.
NO >> 1. Record malfunction symptoms.
2. GO TO 3.

3. CHECK OVERDRIVE OFF CONDITION (PART 1)

1. Park vehicle on level surface.
2. Push overdrive control switch.
3. Accelerate vehicle at 2/8 throttle opening.
4. Check “Vehicle Speed When Shifting Gears”. Refer to TM-240, "Vehicle Speed When Shifting Gears".

With CONSULT
- Read “ACC PEDAL OPEN”, “VEHICLE SPEED” and “ENG SPEED”.

Is the inspection result normal?

YES >> GO TO 4.
NO >> 1. Record malfunction symptoms.
2. GO TO 4.

4. CHECK OVERDRIVE OFF CONDITION (PART 2)

1. Park vehicle on level surface.
2. Push overdrive control switch.
3. Accelerate vehicle at 8/8 throttle opening.
4. Check “Vehicle Speed When Shifting Gears”. Refer to TM-240, "Vehicle Speed When Shifting Gears".

With CONSULT
- Read “ACC PEDAL OPEN”, “VEHICLE SPEED” and “ENG SPEED”.

Is the inspection result normal?

YES >> GO TO 5.
NO >> 1. Record malfunction symptoms.
2. GO TO 5.

5. CHECK “L” POSITION FUNCTION (PART 1)

1. Park vehicle on level surface.
2. Shift selector lever to “L” position.
3. Accelerate vehicle at 2/8 throttle opening.
4. Check “Vehicle Speed When Shifting Gears”. Refer to TM-240, "Vehicle Speed When Shifting Gears".

With CONSULT
- Read “ACC PEDAL OPEN”, “VEHICLE SPEED” and “ENG SPEED”.

Is the inspection result normal?

YES >> GO TO 6.
NO >> 1. Record malfunction symptoms.
2. GO TO 6.

6. CHECK “L” POSITION FUNCTION (PART 2)

1. Park vehicle on level surface.
2. Shift selector lever to “L” position.
3. Accelerate vehicle at 8/8 throttle opening.
4. Check “Vehicle Speed When Shifting Gears”. Refer to TM-240, "Vehicle Speed When Shifting Gears".

With CONSULT

- Read “ACC PEDAL OPEN”, “VEHICLE SPEED” and “ENG SPEED”.

Is the inspection result normal?

YES >> GO TO 7.
NO >> 1. Record malfunction symptoms.
2. GO TO 7.

7. CHECK ENGINE BRAKE FUNCTION

Check engine brake.

Does engine braking effectively reduce vehicle speed in “L” position?

YES >> 1. Stop vehicle.
2. Perform “Self Diagnostic Results” in “TRANSMISSION”.
NO >> 1. Record malfunction symptoms.
2. Perform self-diagnosis. Refer to TM-188, "Symptom Table".

CVT POSITION

Inspection and Adjustment

INFOID:0000000009949079

Inspection

1. Shift selector lever to “P” position, and turn ignition switch ON.
2. Check that selector lever can be shifted to other than “P” position when brake pedal is depressed. Also check that selector lever can be shifted from “P” position only when brake pedal is depressed.
3. Shift selector lever and check for excessive effort, sticking, noise or rattle.
4. Check that selector lever stops at each position with the feel of engagement when it is shifted through all the positions. Check that the actual position of selector lever matches the position shown by shift position indicator and manual lever on the transaxle.
5. The method of operating selector lever to individual positions correctly should be as shown.

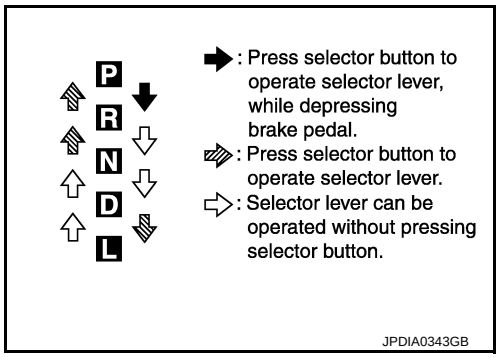

6. When selector button is pressed in “P”, “R”, “N”, “D” or “L” position without applying forward/backward force to selector lever, check button operation for sticking.
7. Check that back-up lamps illuminate only when selector lever is placed in the “R” position.
8. When in “R” position, check that back-up lamps do not illuminate even when the selector lever is in the “P” position.
   CAUTION:
   Check the lighting without pressing shift button.
9. Check that back-up lamps do not illuminate when selector lever is pushed toward the “R” position when in the “P” or “N” position.
   CAUTION:
   Check the lighting without pressing shift button.
10. Check that the engine can only be started with selector lever in the “P” and “N” positions.
11. Check that transaxle is locked completely in “P” position.

Adjustment

1. Shift selector lever to “P” position.
   CAUTION:
   Be sure to turn the wheels 1/4 turn or more and apply the park lock.
2. Remove lock nut (⬅) to release control cable (1).

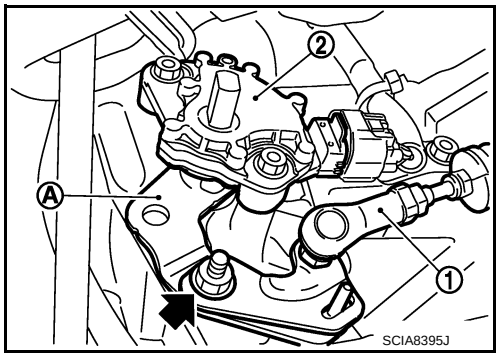

   2 : Transmission range switch
3. Place manual lever (A) to “P” position.
4. Release control cable and temporarily tighten lock nut.
5. Tighten lock nut to the specified torque. Refer to TM-219, "Exploded View".
   CAUTION:
   Never apply force (Especially forward and rearward) to manual lever when tightening lock nut.
6. Check CVT position.

REMOVAL AND INSTALLATION

CVT SHIFT SELECTOR

Exploded View

INFOID:0000000009949080

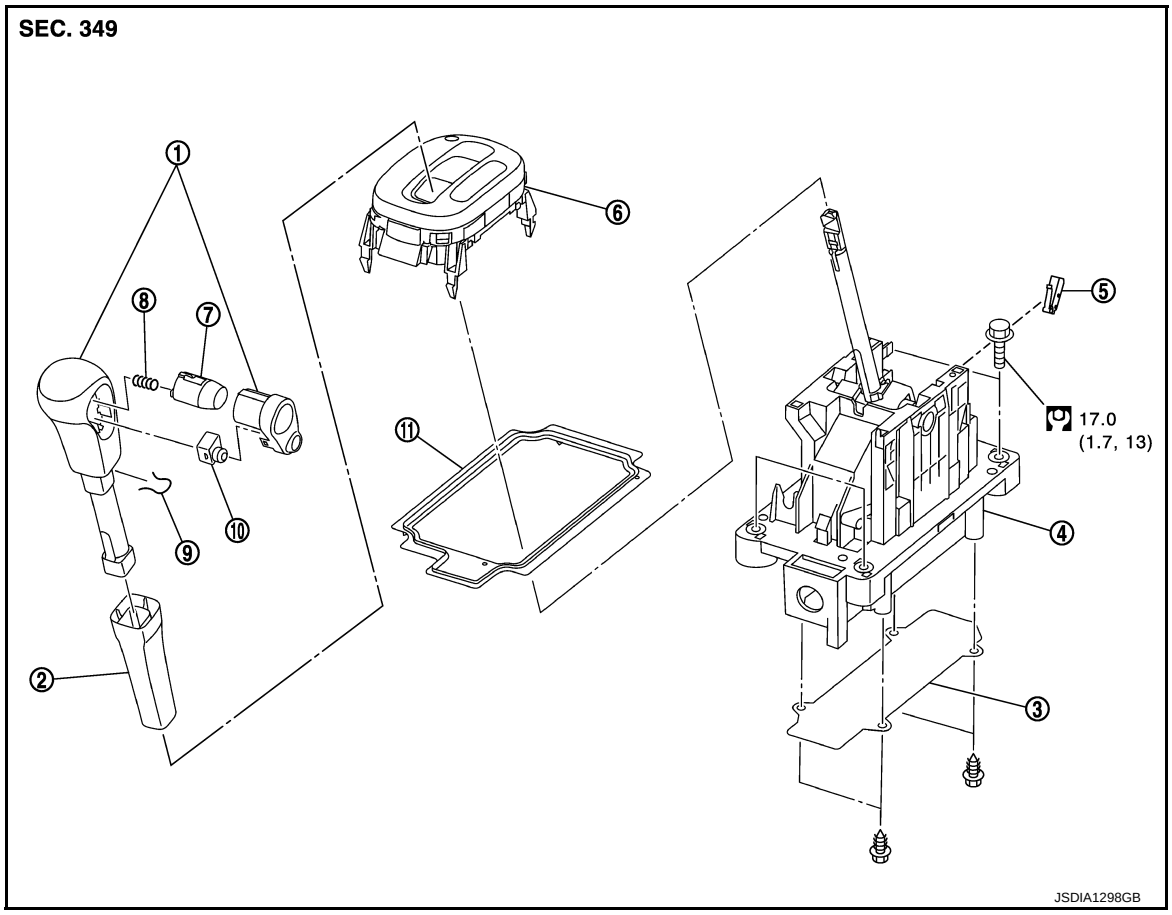

1.	Selector lever knob	2.	Knob cover	3.	Plate
4	CVT shift selector	5.	Park position switch	6.	Position indicator plate
7.	Selector button	8.	Selector button return spring	9.	Lock pin
10.	Overdrive control switch	11.	Dust cover		

Refer to GI-4, "Components" for symbols in the figure.

Removal and Installation

INFOID:0000000009949081

REMOVAL

CAUTION:

Make sure that parking brake is applied before removal and installation.

1. Disconnect the battery cable from the negative terminal. Refer to PG-82, "Removal and Installation".
2. Shift selector lever knob in “N” position.
3. Slide knob cover downward.
   CAUTION:
   Be careful not to damage selector lever knob.
4. Pull out lock pin from selector lever knob.
5. Remove selector lever knob and knob cover as a set from selector lever.
   CAUTION:
   Never press selector button.
6. Remove center console assembly. Refer to IP-23, "Exploded View".

7. Disconnect CVT shift selector connector.
8. Disconnect key interlock cable from CVT shift selector assembly. Refer to TM-221, "Exploded View". (Without intelligent Key system)
9. Remove the bolts from the CVT shift selector assembly.
10. Remove exhaust front tube, center muffler and heat plates. Refer to EX-5, "Exploded View".
11. Remove the plate from the CVT shift selector assembly.
12. Remove the lock plate from the control cable. Refer to TM-219, "Exploded View".
13. Remove control cable from the CVT shift selector assembly. Refer to TM-219, "Exploded View".
14. Insert flat-bladed screwdrivers at points (A) and (B) as shown, and press both tabs (E) and (F) at the front (C) and rear (D) slightly toward the center of the CVT shift selector assembly to remove the CVT shift selector assembly from the underside of the vehicle.

    ⇦ : Vehicle front

15. Remove CVT shift selector assembly from vehicle.

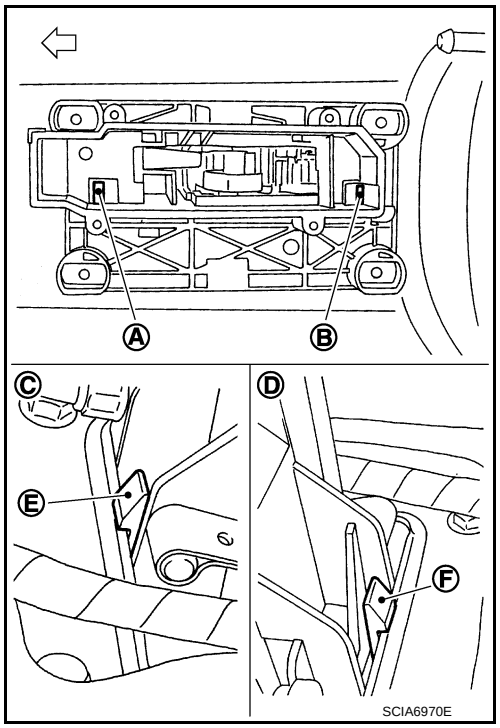

INSTALLATION

Note the following, and install in the reverse order of removal.

- When installing control cable (1) to CVT shift selector assembly (2), check that control cable is fully pressed in with the ribbed (A) surface facing upward.

  ⇦ : Vehicle front

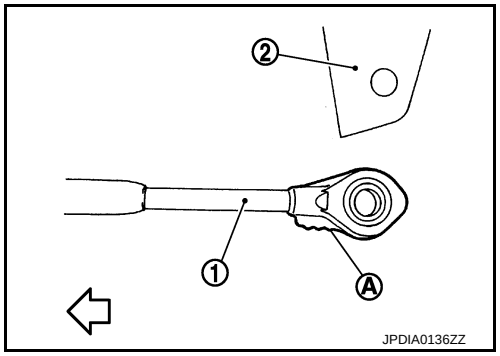

- Refer to the followings when installing the selector lever knob to the CVT shift selector assembly.
- Install the lock pin (1) to the selector lever knob (2).
- Install the knob cover (3) to the selector lever knob.
- Shift selector lever in “N” position.
- Insert the shift lever knob into the shift lever until it clicks.

  CAUTION:
  - **Install it straight, and never tap or apply any shock to install it.**
  - **Never press selector button.**

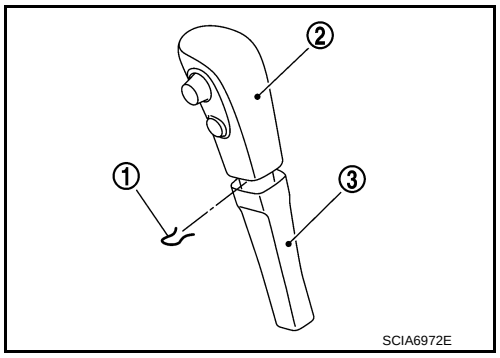

Disassembly and Assembly

INFOID:0000000009949082

DISASSEMBLY

1. Remove overdrive control switch, selector lever button, and selector button return spring from selector lever knob.
   CAUTION:
   Be careful not to damage selector lever knob.
2. Remove dust cover from CVT shift selector assembly.
3. Insert a flat-bladed screwdriver to (A) (at 4 locations) as shown, and bend each hook slightly to raise position indicator plate (1) and remove from CVT shift selector assembly (2).

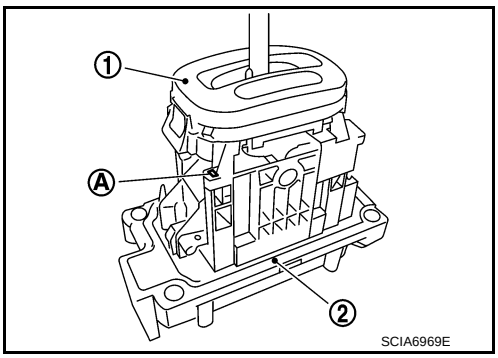

4. Remove park position switch (1) from CVT shift selector assembly.

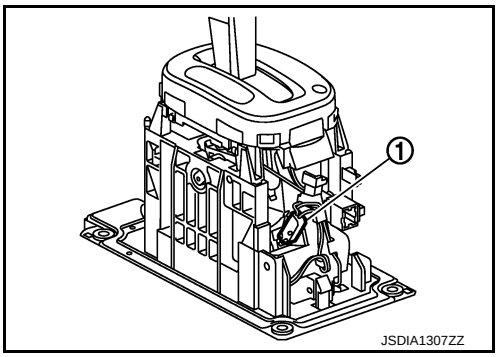

ASSEMBLY

Assembly is in the reverse order of disassembly.

Inspection

INFOID:0000000009949083

INSPECTION AFTER INSTALLATION

Check the CVT position. Refer to TM-215, "Inspection and Adjustment".

CONTROL CABLE

Exploded View

INFOID:0000000009949084

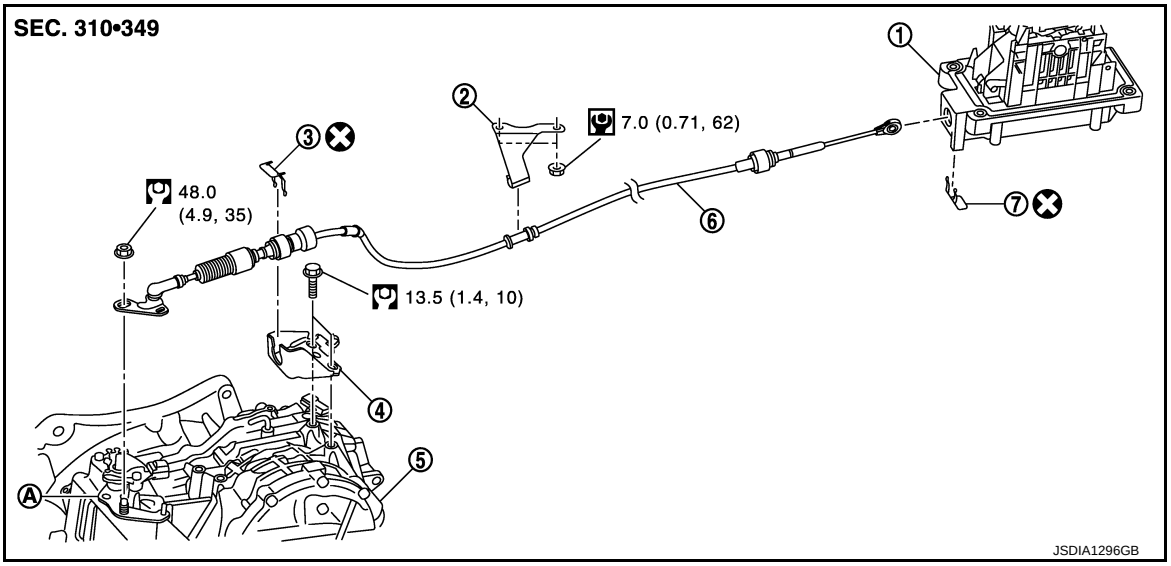

1. CVT shift selector assembly
2. Bracket
3. Lock plate
4. Bracket
5. Transaxle assembly
6. Control cable
7. Lock plate

A. Manual lever

Refer to GI-4, "Components" for symbols in the figure.

Removal and Installation

INFOID:0000000009949085

REMOVAL

CAUTION:

Make sure that parking brake is applied before removal/installation.

1. Remove battery. Refer to PG-82, "Exploded View".
2. Remove air duct (inlet), air duct and air cleaner case. Refer to EM-24, "Exploded View".
3. Remove battery bracket.
4. Remove control cable fitting nut from control cable.
5. Remove lock plate from bracket.
6. Remove control cable from bracket.
7. Remove control cable from CVT shift selector assembly. Refer to TM-219, "Exploded View".
8. Remove control cable from vehicle.
9. Remove bracket.

INSTALLATION

Note the following, and install in the reverse order of removal.

When installing control cable (1) to CVT shift selector assembly (2), check that control cable is fully pressed in with the ribbed (A) surface facing upward.

⇦ : Vehicle front

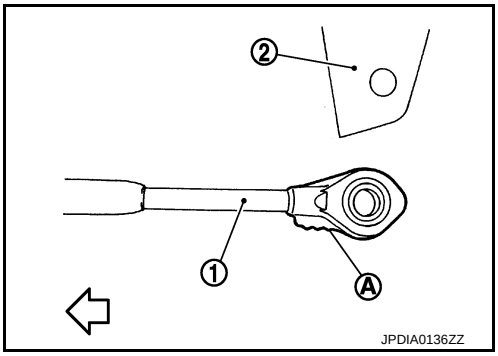

Inspection

INFOID:0000000009949086

INSPECTION AFTER INSTALLATION

Check the CVT position. Refer to TM-215, "Inspection and Adjustment".

KEY INTERLOCK CABLE

Exploded View

INFOID:0000000009949087

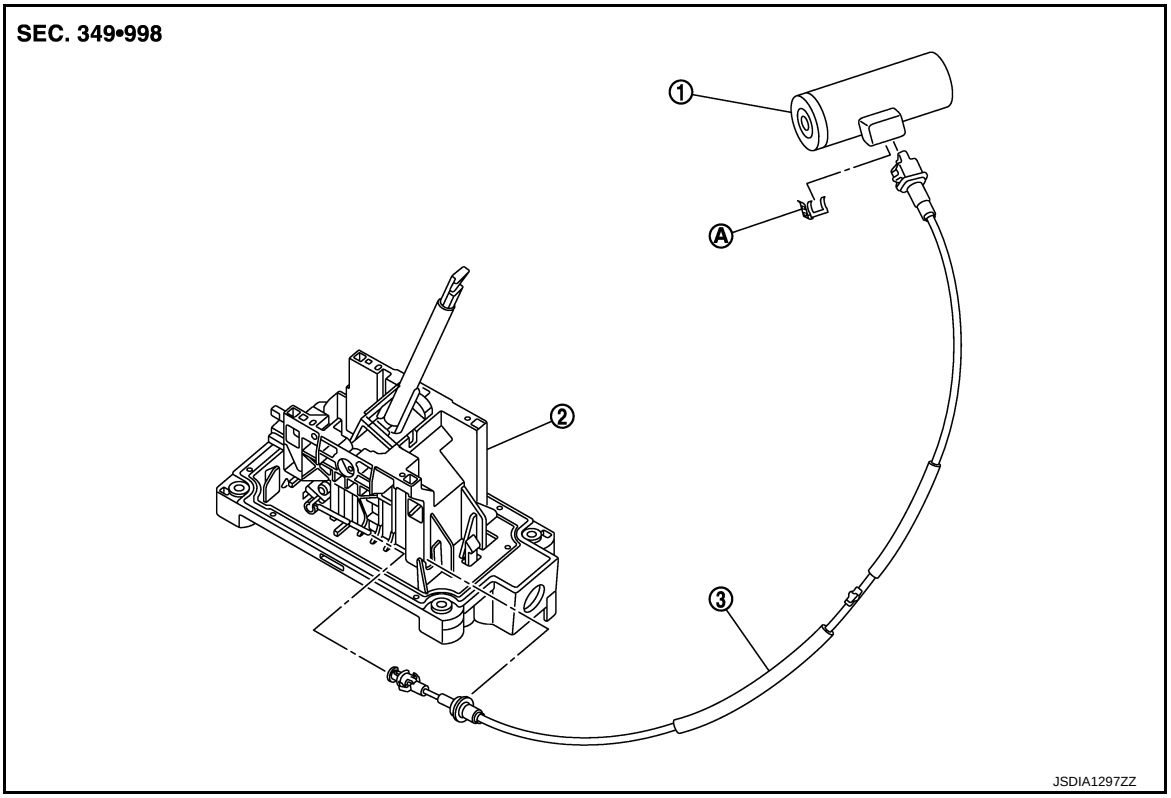

1. Key cylinder
2. CVT shift selector assembly
3. key interlock cable

A. Lock plate

Refer to GI-4, "Components" for symbols in the figure.

Removal and Installation

INFOID:0000000009949088

REMOVAL

CAUTION:

Make sure that parking brake is applied before removal/installation.

1. Remove selector lever knob. Refer to TM-216, "Exploded View".
2. Remove center console. Refer to IP-23, "Exploded View".
3. Slide slider (A) toward casing cap (B) while pressing tabs (C) on slider to separate slider from adjust holder (D).

E : Key interlock rod

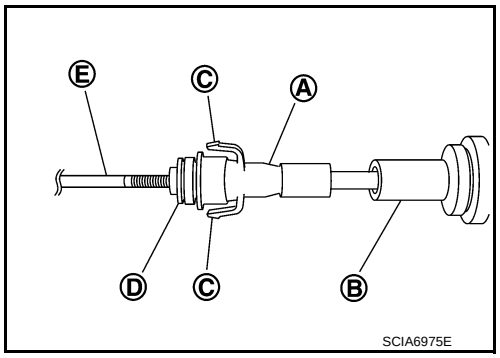

4. Remove steering column cover lower and instrument driver lower panel. Refer to IP-13, "Exploded View".

5. Pull out the lock plate (A) from the holder (B).
6. Remove the key interlock cable (1) from the key cylinder (2).
7. Remove clip and remove key interlock cable.

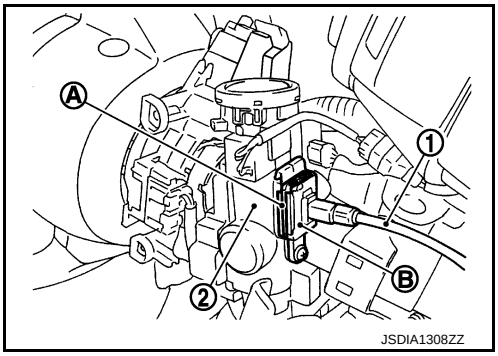

INSTALLATION

Note the following, and install in the reverse order of removal.

- Temporarily install adjust holder (A) to key interlock rod (B). Install casing cap (C) to cable bracket (D) on CVT shift selector assembly.

  CAUTION:
  - **Never bend or twist key interlock cable excessively when installing.**
  - **Check that casing cap is firmly secured in cable bracket on CVT shift selector assembly after installing key interlock cable to cable bracket on CVT shift selector assembly.**

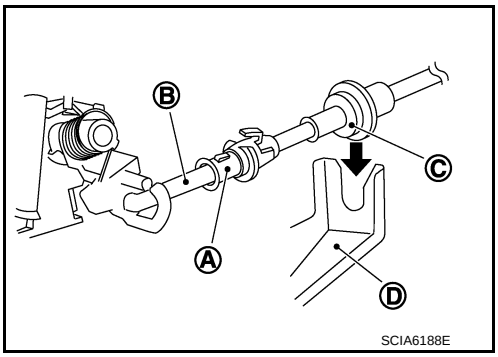

- Slide the slider (A) toward the key interlock rod (D) while pressing the pull lock (B) down to securely connect the adjust holder (C) with the key interlock rod (D).

  CAUTION:
  - **Never press tabs when holding slider.**
  - **Never apply any force at a right angle to key interlock rod when sliding.**

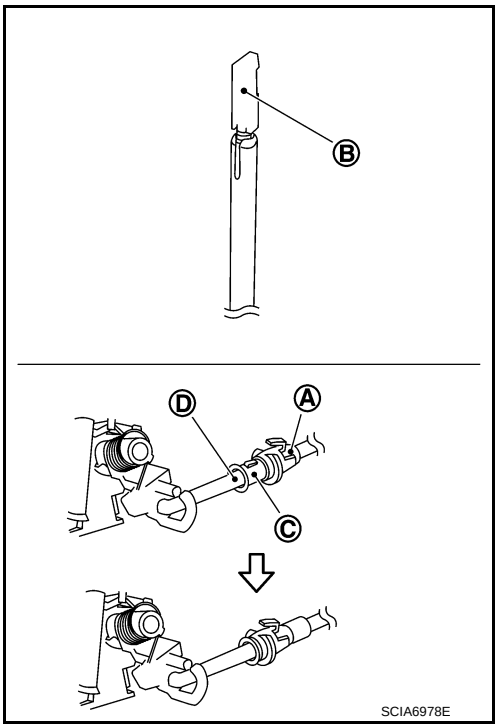

Inspection

INFOID:0000000009949089

INSPECTION AFTER INSTALLATION

Check the CVT position. Refer to TM-215, "Inspection and Adjustment".

TCM

Exploded View

INFOID:0000000009949090

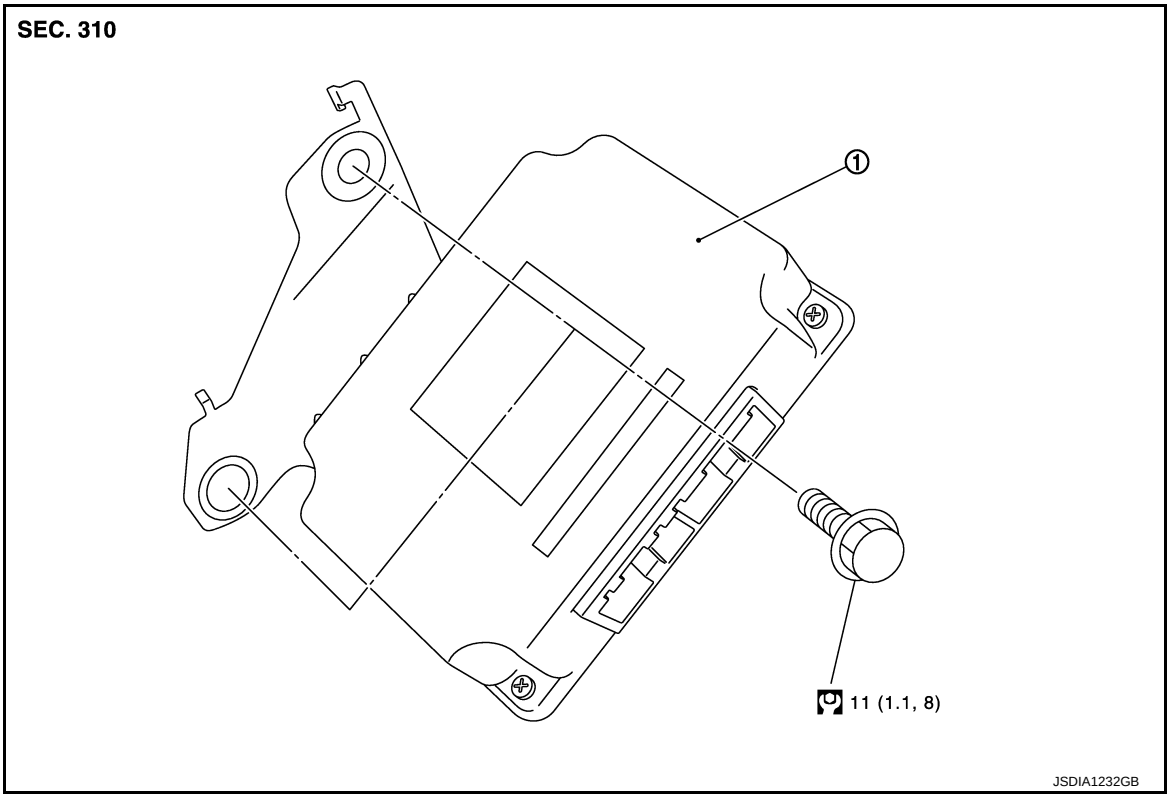

1. TCM

Refer to GI-4, "Components" for symbols in the figure.

Removal and Installation

INFOID:0000000009949091

REMOVAL

CAUTION:

When replacing TCM and transaxle assembly as a set, replace transaxle assembly first and then replace TCM. Refer to TM-68, "Description".

1. Disconnect the battery cable from the negative terminal. Refer to PG-82, "Removal and Installation".
2. Disconnect TCM connector.
3. Remove TCM.

INSTALLATION

Install in the reverse order of removal.

Adjustment

INFOID:0000000009949092

ADJUSTMENT AFTER INSTALLATION

Perform “ADDITIONAL SERVICE WHEN REPLACING TCM”. Refer to TM-67, "Description".

AIR BREATHER HOSE

Removal and Installation

INFOID:0000000009949093

REMOVAL

1. Remove clip from air cleaner assembly.
2. Remove air breather hose from transaxle assembly.

INSTALLATION

Note the following, and install in the reverse order of removal.

CAUTION:

- **Check that air breather hose is not collapsed or blocked due to folding or bending when installed.**
- **Fix clip to mounting hole.**
- **Check that insertion allowance of hose to transaxle tube is end reaches radius curve end.**
- **When inserting air breather hose to transaxle tube, check that paint mark faces vehicle upper side.**

OIL PAN

Exploded View

INFOID:0000000009949094

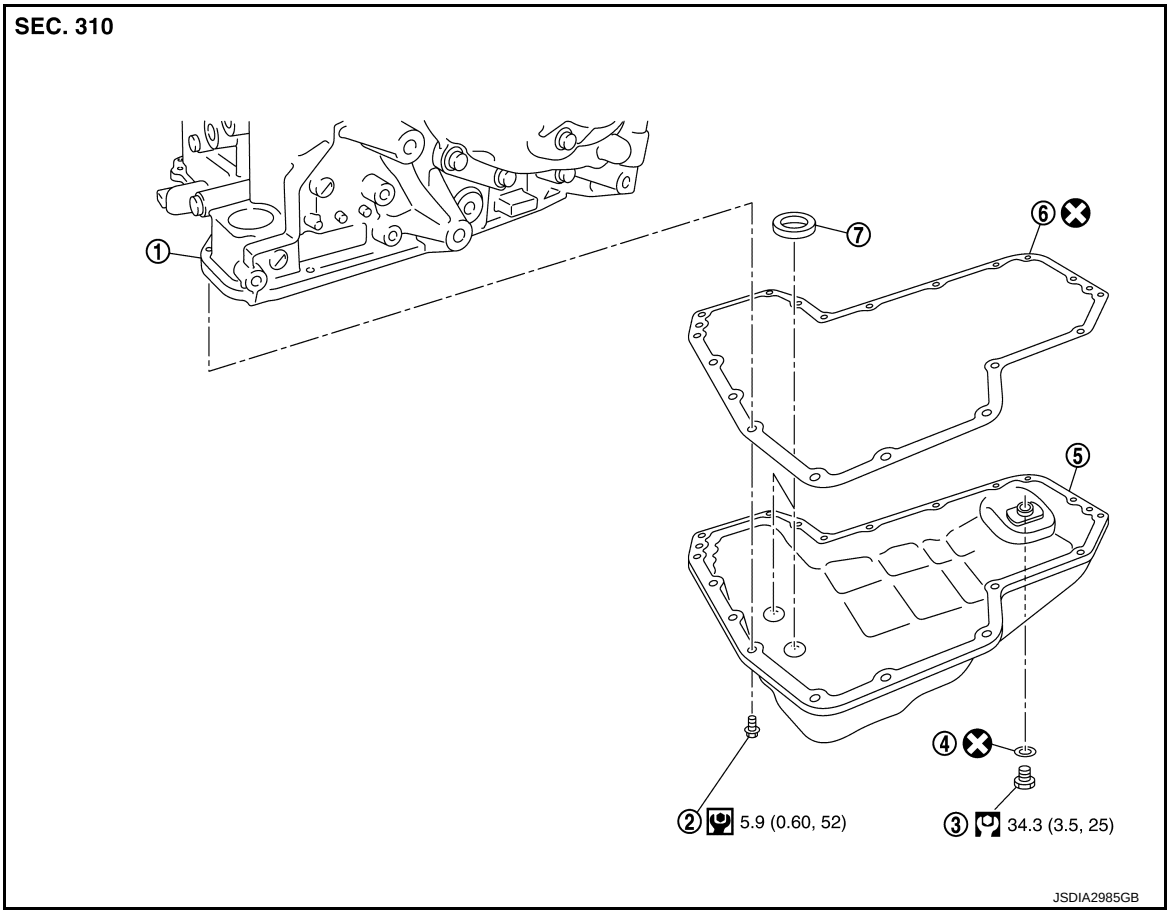

1. Transaxle assembly
2. Oil pan fitting bolt
3. Drain plug
4. Drain plug gasket
5. Oil pan
6. Oil pan gasket
7. Magnet

Refer to GI-4, "Components" for symbols in the figure.

Removal and Installation

INFOID:0000000009949095

REMOVAL

1. Remove engine under cover.
2. Remove drain plug from oil pan and then drain the CVT fluid.
3. Remove oil pan fitting bolts (⬅), and then remove oil pan and oil pan gasket.

   ⇦ : Vehicle front

4. Remove magnets from oil pan.

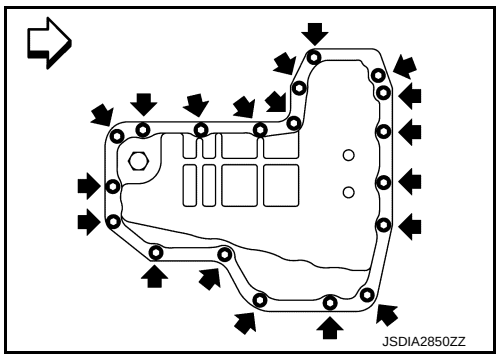

INSTALLATION

Note the following, and install in the reverse order of removal.

CAUTION:
- **Never reuse oil pan gasket and drain plug gasket.**
- **Completely remove all moisture, oil and old gasket, etc. from the oil pan gasket mounting surface of transaxle case and oil pan.**

Inspection

INFOID:0000000009949096

INSPECTION AFTER REMOVAL

Check oil pan for foreign material.
- If a large amount of worn material is found, clutch plate may be worn.
- If iron powder is found, bearings, gears, or clutch plates may be worn.
- If aluminum powder is found, bushing may be worn, or chips or burrs of aluminum casting parts may enter.

Check points where wear is found in all cases.

INSPECTION AFTER INSTALLATION

Check for CVT fluid leakage and check CVT fluid level. Refer to TM-206, "Inspection".

PRIMARY SPEED SENSOR

Exploded View

INFOID:0000000009949097

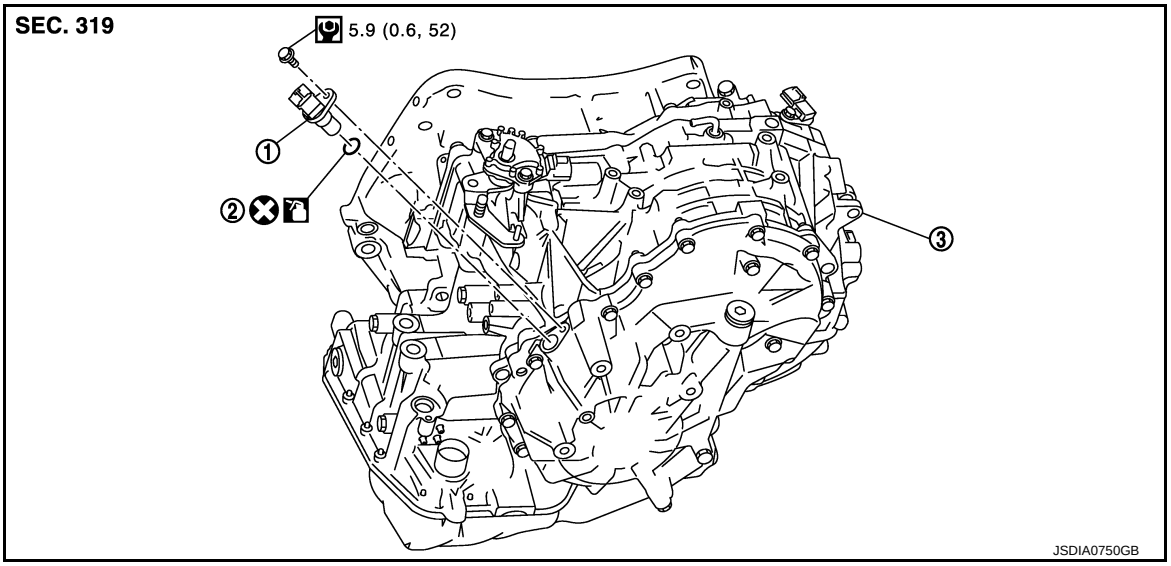

1. Primary speed sensor
2. O-ring
3. Transaxle assembly

: Apply CVT Fluid NS-2.

Refer to GI-4, "Components" for symbols not described above.

Removal and Installation

INFOID:0000000009949098

REMOVAL

1. Remove battery. Refer to PG-82, "Exploded View".
2. Remove air duct (inlet), air duct and air cleaner case. Refer to EM-24, "Exploded View".
3. Remove battery bracket.
4. Remove control cable from manual lever. Refer to TM-219, "Exploded View".
5. Place manual lever to “L” position.
6. Disconnect primary speed sensor connector.
7. Remove primary speed sensor.
8. Remove O-ring from primary speed sensor.

INSTALLATION

Note the following, and install in the reverse order of removal.

CAUTION:

- **Never reuse O-ring.**
- **Apply CVT fluid to O-ring.**

Inspection

INFOID:0000000009949099

INSPECTION AFTER INSTALLATION

- Check for CVT fluid leakage and check CVT fluid level. Refer to TM-206, "Inspection".
- Check the CVT position. Refer to TM-215, "Inspection and Adjustment".

SECONDARY SPEED SENSOR

Exploded View

INFOID:0000000009949100

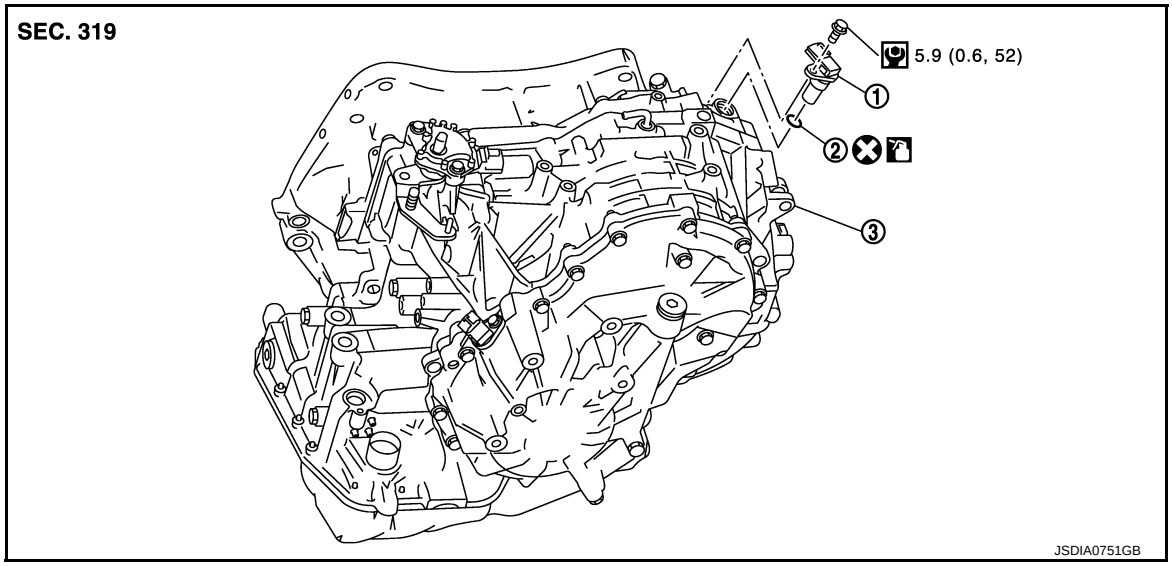

1. Secondary speed sensor
2. O-ring
3. Transaxle assembly

: Apply CVT Fluid NS-2.

Refer to GI-4, "Components" for symbols not described above.

Removal and Installation

INFOID:0000000009949101

REMOVAL

1. Remove air duct (inlet). Refer to EM-24, "Exploded View".
2. Disconnect secondary speed sensor connector.
3. Remove secondary speed sensor.
4. Remove O-ring from secondary speed sensor.

INSTALLATION

Note the following, and install in the reverse order of removal.

CAUTION:

- **Never reuse O-ring.**
- **Apply CVT fluid to O-ring.**

Inspection

INFOID:0000000009949102

INSPECTION AFTER INSTALLATION

Check for CVT fluid leakage and check CVT fluid level. Refer to TM-206, "Inspection".

DIFFERENTIAL SIDE OIL SEAL

Exploded View

INFOID:0000000009949103

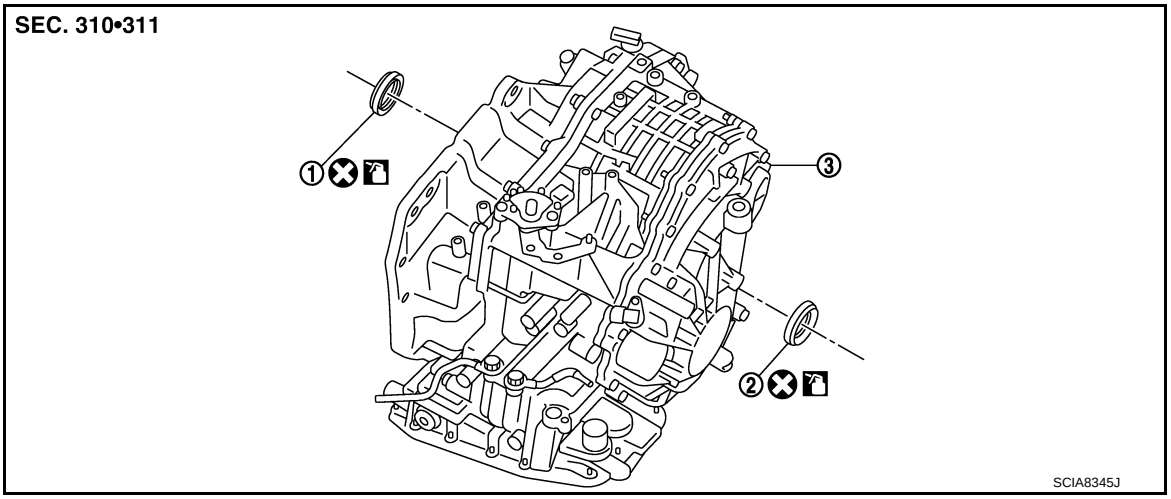

1. RH differential side oil seal
2. LH differential side oil seal
3. Transaxle assembly

: Apply CVT Fluid NS-2.

Refer to GI-4, "Components" for symbols not described above.

Removal and Installation

INFOID:0000000009949104

REMOVAL

1. Remove front drive shaft assembly. Refer to FAX-15, "Exploded View".
2. Remove differential side oil seals using a flat-bladed screwdriver.
   CAUTION:
   Be careful not to scratch transaxle case and converter housing.

INSTALLATION

Note the following, and install in the reverse order of removal.

CAUTION:

- **Never reuse differential side oil seals.**
- **Apply CVT fluid to differential side oil seals.**
- **When insert drive shaft, always use a protector [SST: KV38107900 (—)]. Refer to FAX-15, "Exploded View".**

Install drive shaft using drifts [SST: ST35325000 (—) and KV31103000 (—)]. Check that side oil seal height difference from case end surface is within the specified value “A” and “B”.

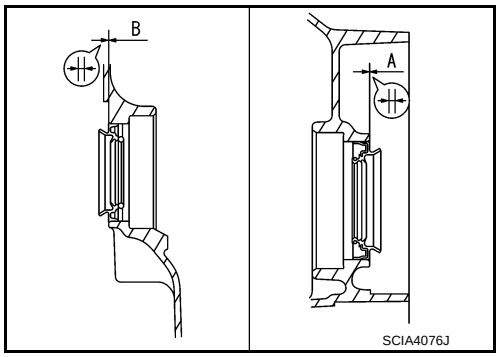

Dimension “A” : Height difference from case end surface is within 0 ± 0.5 mm (0 ± 0.020 in).

Dimension “B” : Height difference from case end surface is within 0 ± 0.5 mm (0 ± 0.020 in).

NOTE:

Differential side oil seal pulling direction is used as the reference.

Inspection

INFOID:0000000009949105

INSPECTION AFTER INSTALLATION

Check for CVT fluid leakage and check CVT fluid level. Refer to TM-206, "Inspection".

CVT OIL WARMER SYSTEM

WATER HOSE

WATER HOSE : Exploded View

INFOID:0000000009949106

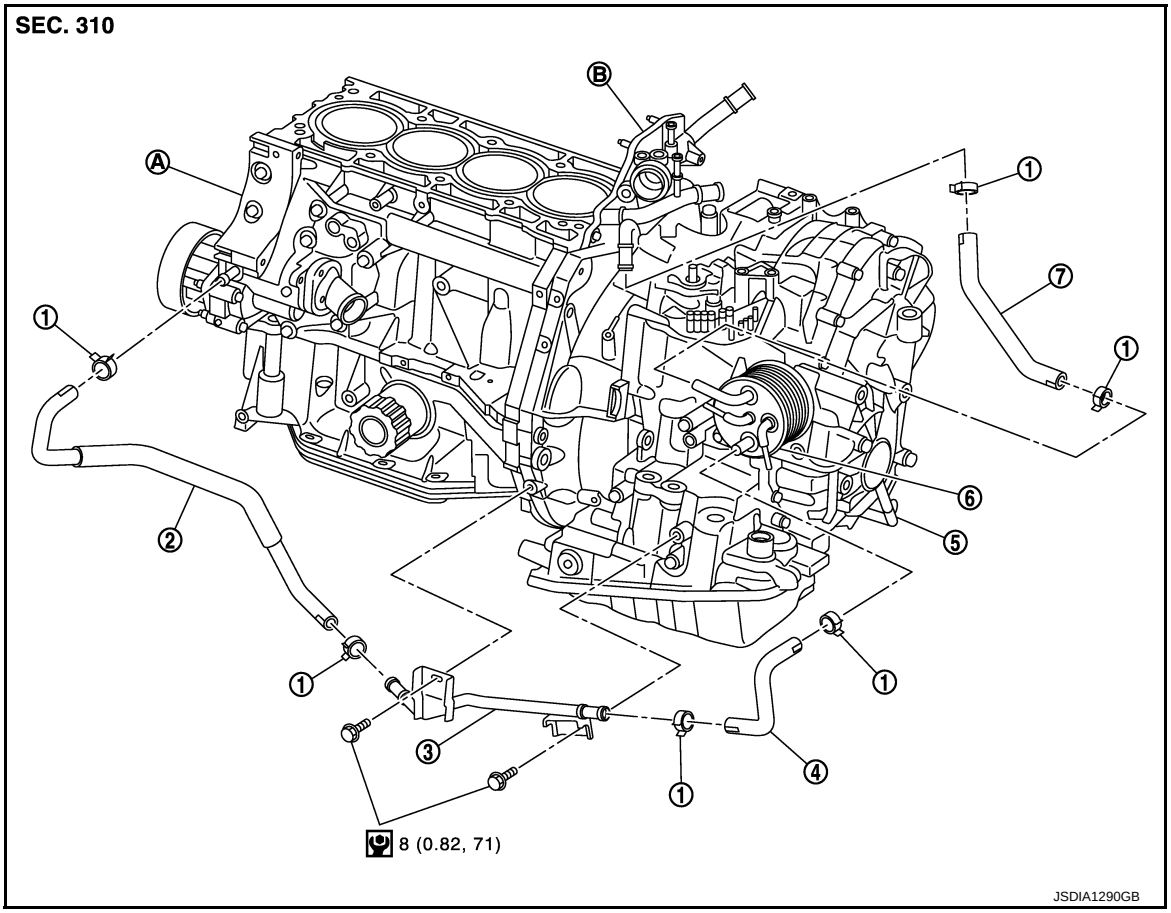

1. Hose clamp	2. CVT water hose C	3. CVT water tube
4. CVT water hose B	5. Transaxle assembly	6. CVT oil warmer
7. CVT water hose A		
A. Water pump	B. Water inlet-outlet	

Refer to GI-4, "Components" for symbols in the figure.

WATER HOSE : Removal and Installation

INFOID:0000000009949107

REMOVAL

WARNING:
Never remove the radiator cap when the engine is hot. Serious burns could occur from high pressure coolant escaping from the radiator.
CAUTION:
Perform this step engine is cold.

1. Remove air duct (inlet). Refer to EM-24, "Exploded View".
2. Remove hose clamps, and remove CVT water hose A.
3. Remove hose clamps, and remove CVT water hose B.
4. Remove hose clamps, and remove CVT water hose C.
5. Remove CVT water tube.

INSTALLATION

Note the following, and install in the reverse order of removal.

- Insert CVT water hose according to dimension “A” described below.

CVT water hose (1)	Insert side tube (2)	Dimension “A”
CVT water hose A	Water inlet-outlet	End reaches the spool portion (B)
	CVT oil warmer	
CVT water hose B	CVT oil warmer	
	CVT water tube	
CVT water hose C	CVT water tube	
	Water pump	

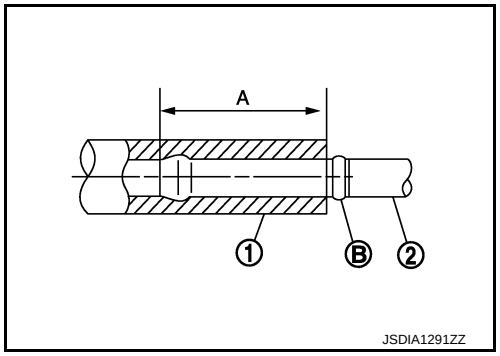

- Set hose clamps (1) at the both ends of fluid cooler hose (2) with dimension “A” from the hose edge.

Dimension “A” : 5 – 7 mm (0.20 – 0.28 in)

- Hose clamp should not interfere with the bulge.

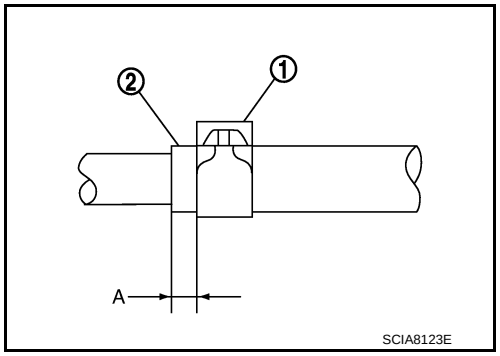

CVT water hose	Hose end	Paint mark	Position of hose clamp*
CVT water hose A	Water inlet-outlet side	Facing forward	A
	CVT oil warmer side	Facing forward	A
CVT water hose B	CVT oil warmer side	Facing to the right of the vehicle	B
	CVT water tube side	Facing forward	A
CVT water hose C	CVT water tube side	Facing forward	A
	Water pump side	Facing upward	C

*: Refer to the illustrations for the specific position of each hose clamp tab.

- The illustrations indicate the view from the hose ends.

⇦D : Vehicle front

⇦E : Vehicle upper

- When installing hose clamps the center line of each clamp tab should be positioned as shown in the figure.

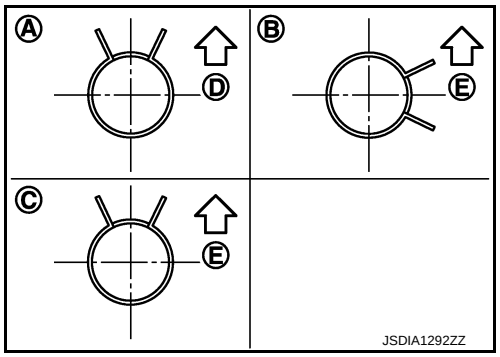

WATER HOSE : Inspection

INFOID:0000000009949108

INSPECTION AFTER INSTALLATION

Start and warm up the engine. Visually check that there is no leakage of engine coolant and CVT fluid.

CVT FLUID COOLER HOSE

CVT FLUID COOLER HOSE : Exploded View

INFOID:0000000009949109

COMPONENT PARTS LOCATION

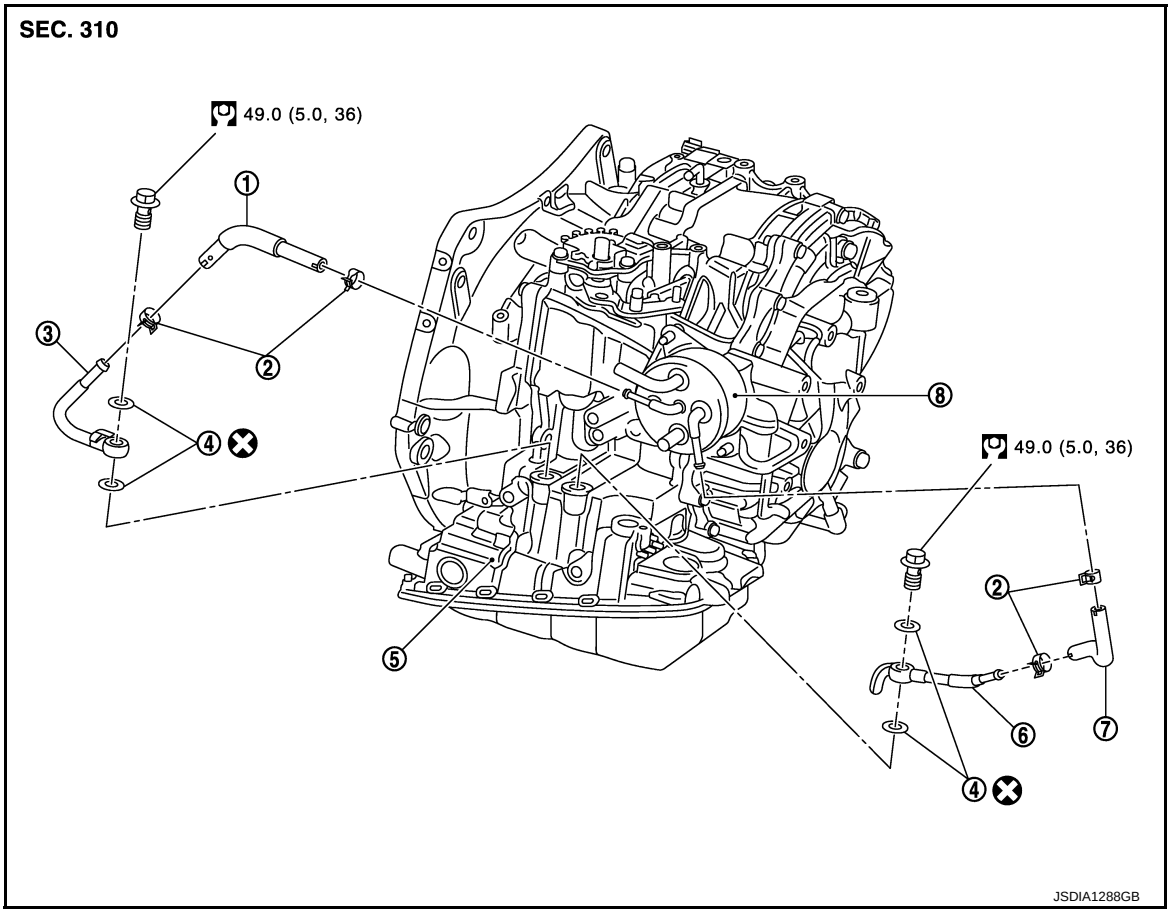

1. CVT fluid cooler hose A
2. Hose clamp
3. CVT fluid cooler tube A
4. Gasket
5. Transaxle assembly
6. CVT fluid cooler tube B
7. CVT fluid cooler hose B
8. CVT oil warmer

Refer to GI-4, "Components" for symbols in the figure.

CVT FLUID COOLER HOSE : Removal and Installation

INFOID:0000000009949110

REMOVAL

1. Remove air duct (inlet). Refer to EM-24, "Exploded View".
2. Remove hose clamps, and remove CVT fluid cooler hose A.
3. Remove hose clamps, and remove CVT fluid cooler hose B.
4. Remove CVT fluid cooler tube A and CVT fluid cooler tube B.

INSTALLATION

Note the following, and install in the reverse order of removal.

- When installing CVT fluid cooler tube (1) and (2) to transaxle assembly, install them so that CVT fluid cooler tube rotation stopper (A) and (B) touch to transaxle case (C) and (D).

⇦ : Vehicle front

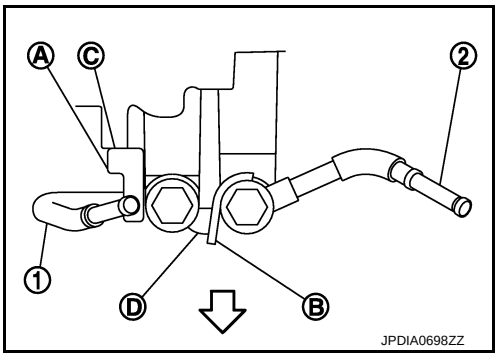

- Insert CVT fluid cooler hose according to dimension “A” described below.

CVT fluid cooler hose (1)	Insert side tube (2)	Dimension “A”
CVT fluid cooler hose A	CVT fluid cooler tube	End reaches the 2-stage bulge (B)
	CVT oil warmer	
CVT fluid cooler hose B	CVT oil warmer	
	CVT fluid cooler tube	

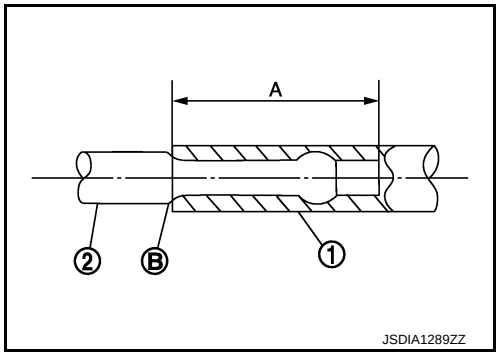

- Set hose clamps (1) at the both ends of fluid cooler hose (2) with dimension “A” from the hose edge.

Dimension “A” : 5 – 7 mm (0.20 – 0.28 in)

- Hose clamp should not interfere with the bulge.

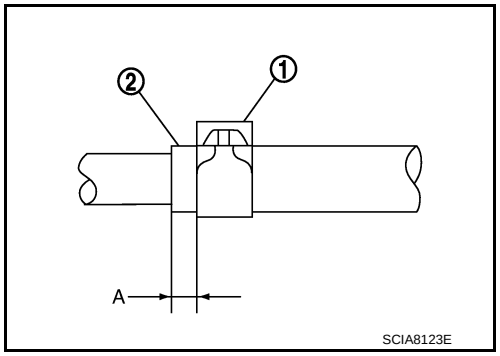

CVT fluid cooler hose	Hose end	Paint mark	Position of hose clamp*
CVT fluid cooler hose A	CVT fluid cooler tube side	Vehicle front	A
	CVT oil warmer side	Vehicle front	A
CVT fluid cooler hose B	CVT oil warmer side	Vehicle front	A
	CVT fluid cooler tube side	Vehicle front	A

*: Refer to the illustrations for the specific position of each hose clamp tab.

- The illustrations indicate the view from the hose ends.

⇦B : Vehicle front

- When installing hose clamps the center line of each clamp tab should be positioned as shown in the figure.

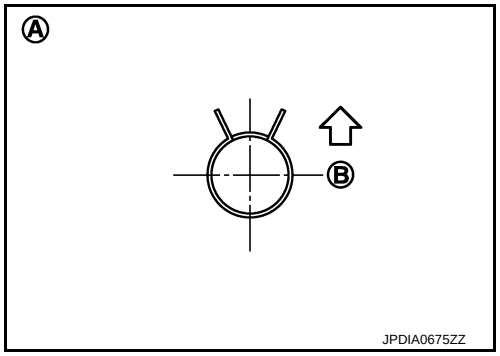

CVT FLUID COOLER HOSE : Inspection

INFOID:0000000009949111

INSPECTION AFTER INSTALLATION

Check for CVT fluid leakage and check CVT fluid level. Refer to TM-206, "Inspection".

CVT OIL WARMER

CVT OIL WARMER : Exploded View

INFOID:0000000009949112

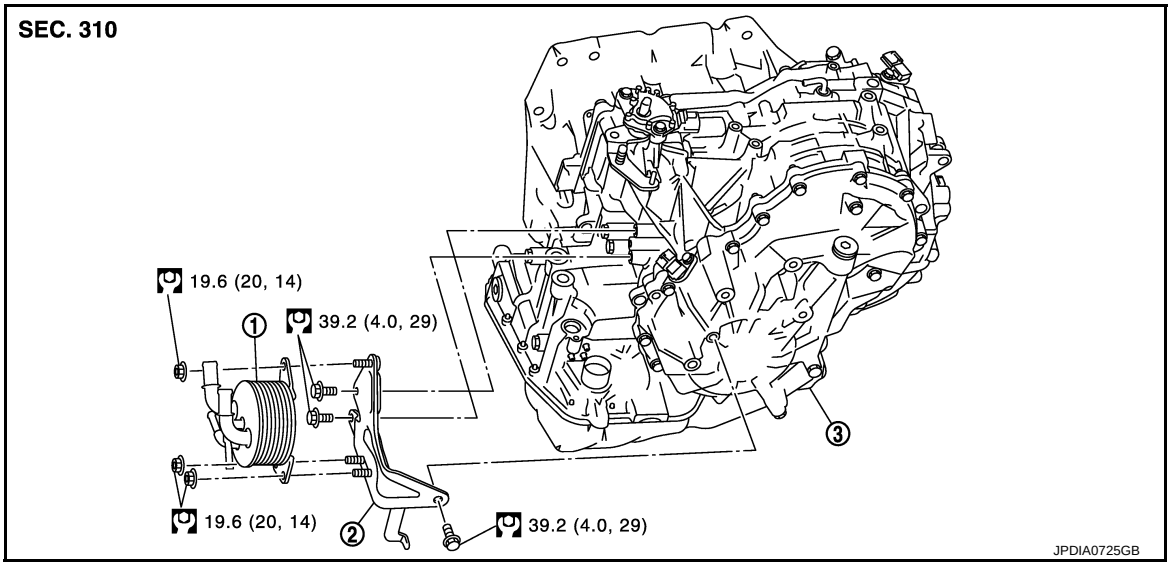

1. CVT oil warmer
2. Bracket
3. Transaxle assembly

Refer to GI-4, "Components" for symbols in the figure.

CVT OIL WARMER : Removal and Installation

INFOID:0000000009949113

REMOVAL

WARNING:

Never remove the radiator cap when the engine is hot. Serious burns could occur from high pressure coolant escaping from the radiator.

CAUTION:

Perform this step engine is cold.

1. Remove CVT water hose from CVT oil warmer. Refer to TM-230, "WATER HOSE : Exploded View".
2. Remove CVT fluid cooler hose from CVT oil warmer. Refer to TM-231, "CVT FLUID COOLER HOSE : Exploded View".
3. Remove CVT oil warmer.
4. Remove bracket.

INSTALLATION

Install in the reverse order of removal.

CVT OIL WARMER : Inspection

INFOID:0000000009949114

INSPECTION AFTER INSTALLATION

- Check for CVT fluid leakage and check CVT fluid level. Refer to TM-206, "Inspection".
- Start and warm up the engine. Visually check that there is no leakage of engine coolant and CVT fluid.

UNIT REMOVAL AND INSTALLATION

TRANSAXLE ASSEMBLY

Exploded View

INFOID:0000000009949115

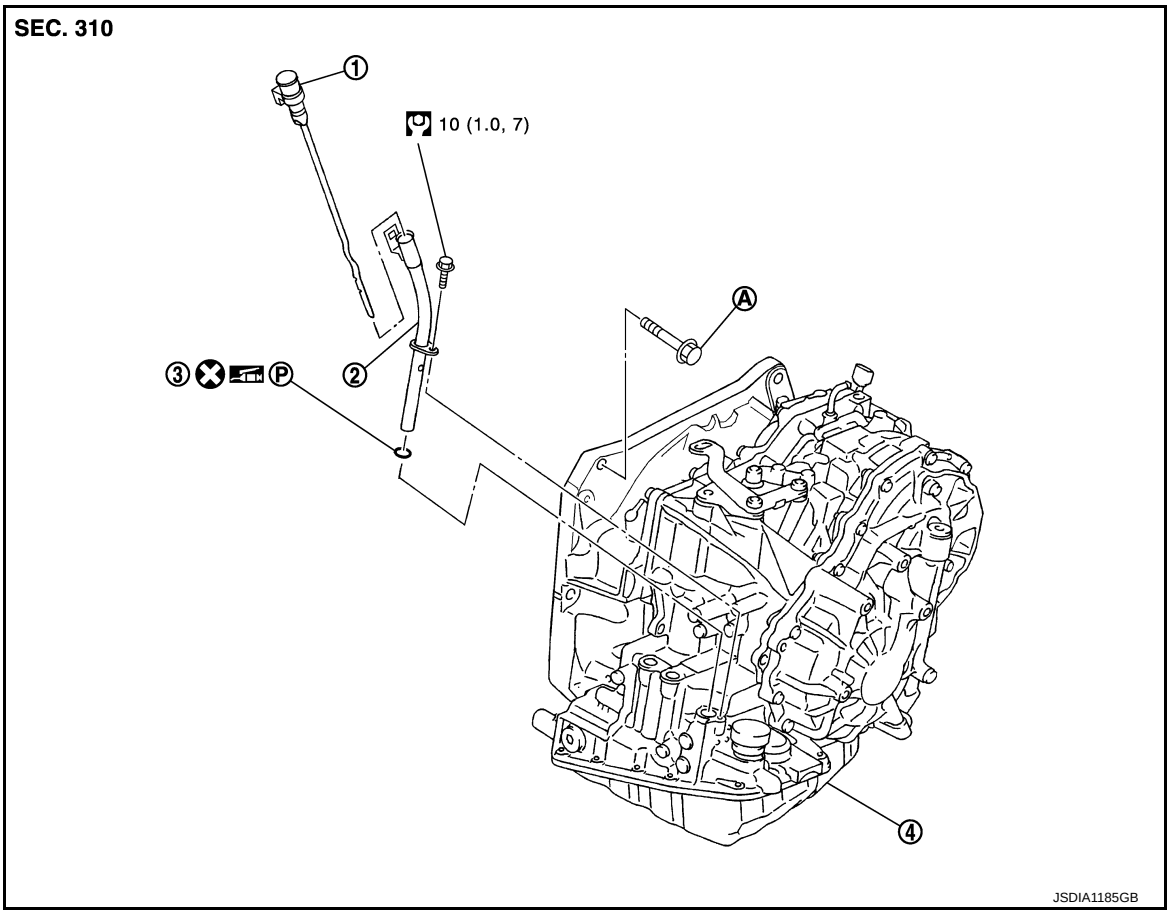

1. CVT fluid level gauge
2. CVT fluid charging pipe
3. O-ring
4. Transaxle assembly

A. : Tightening must be done following the installation procedure. Refer to TM-235, "Removal and Installation".

Refer to GI-4, "Components" for symbols in the figure.

Removal and Installation

INFOID:0000000009949116

WARNING:
Never remove the radiator cap when the engine is hot. Serious burns could occur from high pressure coolant escaping from the radiator.

CAUTION:
- **Perform this step engine is cold.**
- **When replacing TCM and transaxle assembly as a set, replace transaxle assembly first and then replace TCM. Refer to TM-68, "Description".**

REMOVAL

1. Remove battery. Refer to PG-82, "Exploded View".
2. Remove air duct (inlet), air duct and air cleaner case. Refer to EM-24, "Exploded View".
3. Remove air breather hose.
4. Remove battery bracket.
5. Disconnect following harness connector and wire harness.
   - CVT unit connector. Refer to TM-202, "Removal and Installation Procedure for CVT Unit Connector".

- Transmission range switch connector
- Primary speed sensor connector
- Secondary speed sensor connector
- Ground

6. Remove control cable and bracket from transaxle assembly. Refer to TM-219, "Exploded View".
7. Remove CVT water hoses. Refer to TM-230, "WATER HOSE : Exploded View".
8. Remove CVT water tubes. Refer to TM-230, "WATER HOSE : Exploded View".
9. Remove CVT fluid level gauge.
10. Remove CVT fluid charging pipe.
11. Remove O-ring from CVT fluid charging pipe.
12. Remove starter motor. Refer to STR-25, "Exploded View".
13. Remove engine under cover.
14. Turn crankshaft, and remove the four tightening nuts for drive plate and torque converter.
    CAUTION:
    When turning crankshaft, turn it clockwise as viewed from the front of the engine.
15. Remove front drive shafts. Refer to FAX-15, "Exploded View".
16. Remove heat insulator. Refer to EM-29, "Exploded View".
17. Support transaxle assembly with a transmission jack.
    CAUTION:
    When setting the transmission jack, be careful not to collide against drain plug.
18. Remove engine mounting insulator (LH). Refer to EM-74, "Exploded View".
19. Remove engine mounting bracket support (LH). Refer to EM-74, "Exploded View".
20. Remove rear engine mounting bracket. Refer to EM-74, "Exploded View".
21. Remove rear torque rod. Refer to EM-74, "Exploded View".
22. Support engine assembly with a transmission jack.
    CAUTION:
    When setting the transmission jack, be careful not to collide against drain plug.
23. Remove engine mounting bracket (LH). Refer to EM-74, "Exploded View".
24. Remove bolts fixing transaxle assembly to engine assembly.
25. Remove transaxle assembly from vehicle.
    CAUTION:
    - **Secure torque converter to prevent it from dropping.**
    - **Secure transaxle assembly to a transmission jack.**
26. Remove CVT fluid cooler tubes. Refer to TM-231, "CVT FLUID COOLER HOSE : Exploded View".

INSTALLATION

Note the following, and install in the reverse order of removal.

CAUTION:

- **Never reuse O-ring.**
- **Apply grease to O-ring.**
- Check fitting of dowel pins (A) when installing transaxle assembly to engine assembly.

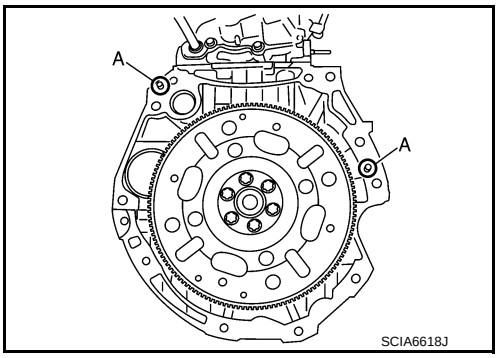

- Rotate torque converter so that the stud bolt (A) for mounting the drive plate location guide of torque converter aligns with the mounting position of starter motor.

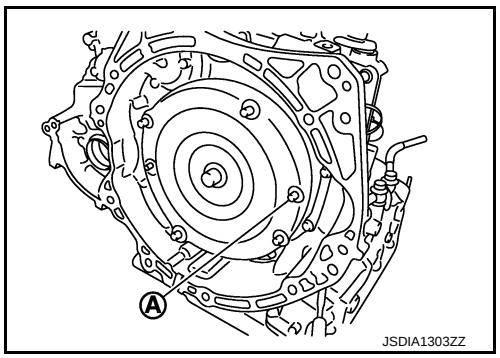

- Rotate crankshaft so that the hole (A) for inserting drive plate location guide of drive plate aligns with the mounting position (B) of starter motor.

CAUTION:
- **When turning crankshaft, turn it clockwise as viewed from the front of the engine.**
- **Be careful that torque converter stud bolt is aligned to drive plate hole position. Otherwise stud bolt contacts drive plate.**

NOTE:
Insert stud bolt of torque converter into the hole of drive plate, aligning the drive plate hole position and torque converter.

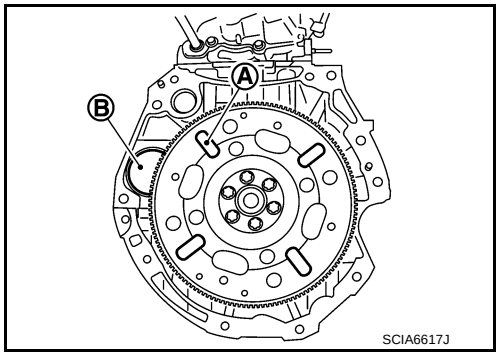

- Temporally tighten drive plate and torque converter connecting nuts and tighten to the specified torque.

: 51 N·m (5.2 kg-m, 38 ft-lb)

CAUTION:
- **When turning crankshaft, turn it clockwise as viewed from the front of the engine.**
- **When tightening the nuts for the torque converter after fixing the crankshaft pulley bolts, confirm the tightening torque of the crankshaft pulley mounting bolts. Refer to EM-43, "Removal and Installation".**

- When installing transaxle assembly to the engine assembly, attach the fixing bolts in accordance with the following.

Bolt position	A	B
Insertion direction	Transaxle assembly to engine assembly	Engine assembly to transaxle assembly
Number of bolts	2	2
Bolt length mm (in)	55 (2.17)	50 (1.97)
Tightening torque N·m (kg-m, ft-lb)	62.0 (6.3, 45.7)	

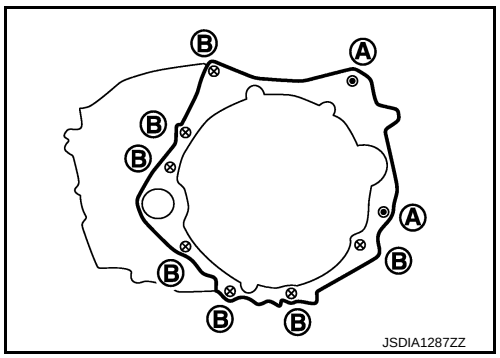

Inspection and Adjustment

INFOID:0000000009949117

INSPECTION BEFORE INSTALLATION

After inserting a torque converter to transaxle assembly, check dimension “A” within the reference value limit.

B : Scale
C : Straightedge

Dimension “A” : TM-240, "Torque Converter"

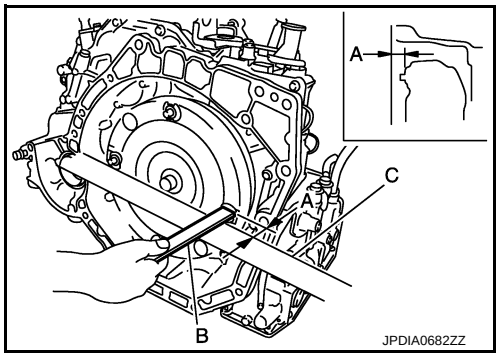

INSPECTION AFTER INSTALLATION

Check the following.

- Check for CVT fluid leakage and check CVT fluid level. Refer to TM-206, "Inspection".
- Check CVT position. Refer to TM-215, "Inspection and Adjustment".
- Start and warm up the engine. Visually check that there is no leakage of engine coolant and CVT fluid.

ADJUSTMENT AFTER INSTALLATION

Perform “ADDITIONAL SERVICE WHEN REPLACE TRANSAXLE ASSEMBLY”. Refer to TM-68, "Description".

UNIT DISASSEMBLY AND ASSEMBLY

TORQUE CONVERTER

Disassembly

INFOID:0000000009949118

1. Remove transaxle assembly. Refer to TM-235, "Exploded View".
2. Remove torque converter from transaxle assembly.
   CAUTION:
   Never damage bushing inside of torque converter sleeve when removing torque converter.

Assembly

INFOID:0000000009949119

Note the following, and install in the reverse order of removal.
Attach the pawl (A) of the torque converter to the inner gear hole (B) on the oil pump side.

CAUTION:
- **Rotate the torque converter for installing torque converter.**
- **Never damage the bushing inside the torque converter sleeve when installing the converter housing oil seal.**

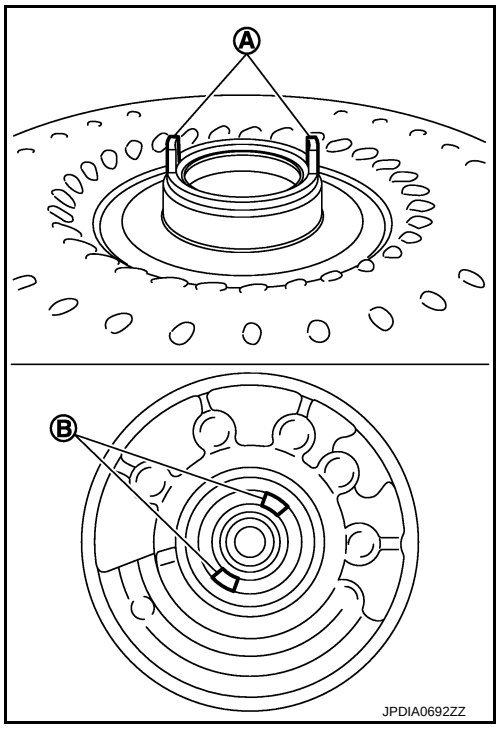

Inspection

INFOID:0000000009949120

INSPECTION AFTER INSTALLATION

After inserting a torque converter to transaxle assembly, check dimension “A” within the reference value limit.

B	: Scale
C	: Straightedge

Dimension “A” : **TM-240, "Torque Converter"**

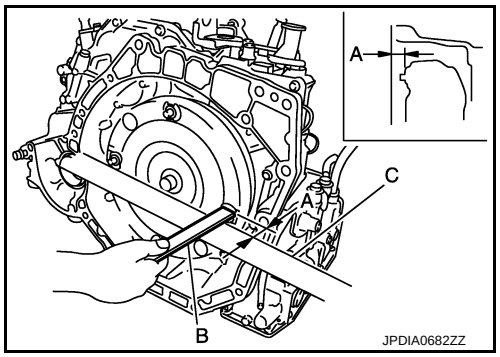

SERVICE DATA AND SPECIFICATIONS (SDS)

SERVICE DATA AND SPECIFICATIONS (SDS)

General Specification

INFOID:0000000009949121

Applied model	Engine	MR18DE
	Axle	2WD
Transaxle model		RE0F08B
Transmission gear ratio	D range	2.561 – 0.427
	Reverse	2.689
	Final drive	5.473
Recommended fluid and fluid capacity		Refer to MA-10, "Fluids and Lubricants".

Vehicle Speed When Shifting Gears

INFOID:0000000009949122

Unit: rpm

Throttle position	Shift pattern	Engine speed	
		At 40 km/h (25 MPH)	At 60 km/h (37 MPH)
2/8	“D” position	1,300 – 3,100	1,400 – 3,500
	Overdrive OFF condition	2,200 – 3,000	2,800 – 3,600
	“L” position	3,100 – 4,000	3,800 – 4,700
8/8	“D” position	3,600 – 4,500	4,400 – 5,300
	Overdrive OFF condition	3,600 – 4,500	4,400 – 5,300
	“L” position	3,600 – 4,500	4,400 – 5,300

CAUTION:

Lock-up clutch is engaged when vehicle speed is approximately 18 km/h (11 MPH) to 90 km/h (56 MPH).

Stall Speed

INFOID:0000000009949123

Unit: rpm

Stall speed	2,600 – 3,150

Line Pressure

INFOID:0000000009949124

Unit: kPa (kg/cm^2, psi)

Select position	Engine speed	Line pressure
“R”, “D”	Idle speed	650 (6.63, 94.3)
	Stall speed	4,250 (43.35, 616.3)

Torque Converter

INFOID:0000000009949125

Dimension “A” between end of converter housing and torque converter	14.4 mm (0.57 in)