SECTION DLK
DOOR & LOCK

CONTENTS

INTELLIGENT KEY SYSTEM

BASIC INSPECTION 7

DIAGNOSIS AND REPAIR WORKFLOW 7
Work Flow 7

INSPECTION AND ADJUSTMENT 10

ADDITIONAL SERVICE WHEN REPLACING CONTROL UNIT 10
ADDITIONAL SERVICE WHEN REPLACING CONTROL UNIT : Description 10
ADDITIONAL SERVICE WHEN REPLACING CONTROL UNIT : Special Repair Requirement 10

SYSTEM DESCRIPTION 11

POWER DOOR LOCK SYSTEM 11
System Diagram 11
System Description 11
Component Parts Location 13
Component Description 14

INTELLIGENT KEY SYSTEM 15

INTELLIGENT KEY SYSTEM 15
INTELLIGENT KEY SYSTEM : System Diagram 15
INTELLIGENT KEY SYSTEM : System Description 15
INTELLIGENT KEY SYSTEM : Component Parts Location 17
INTELLIGENT KEY SYSTEM : Component Description 19

DOOR LOCK FUNCTION 19
DOOR LOCK FUNCTION : System Diagram 19
DOOR LOCK FUNCTION : System Description 19
DOOR LOCK FUNCTION : Component Parts Location 22
DOOR LOCK FUNCTION : Component Description 24

BACK DOOR OPEN FUNCTION 24
BACK DOOR OPEN FUNCTION : System Diagram 24
BACK DOOR OPEN FUNCTION : System Description 24
BACK DOOR OPEN FUNCTION : Component Parts Location 26
BACK DOOR OPEN FUNCTION : Component Description 28

REMOTE KEYLESS ENTRY FUNCTION 28
REMOTE KEYLESS ENTRY FUNCTION : System Diagram 28
REMOTE KEYLESS ENTRY FUNCTION : System Description 28
REMOTE KEYLESS ENTRY FUNCTION : Component Parts Location 31
REMOTE KEYLESS ENTRY FUNCTION : Component Description 33

WELCOME LIGHT FUNCTION 33
WELCOME LIGHT FUNCTION : System Description 33
WELCOME LIGHT FUNCTION : Component Parts Location 34

KEY REMINDER FUNCTION 36
KEY REMINDER FUNCTION : System Description 36
KEY REMINDER FUNCTION : Component Parts Location 37

WARNING FUNCTION 39
WARNING FUNCTION : System Description 39
WARNING FUNCTION : Component Parts Location 44

BACK DOOR OPENER SYSTEM 47
System Diagram 47
System Description 47
Component Parts Location 48
Component Description 48

INTEGRATED HOMELINK TRANSMITTER 49
Component Description 49

DIAGNOSIS SYSTEM (BCM) 50

COMMON ITEM 50
COMMON ITEM : CONSULT Function (BCM - COMMON ITEM) 50

DOOR LOCK 51
DOOR LOCK : CONSULT Function (BCM - DOOR LOCK) 51

INTELLIGENT KEY 53
INTELLIGENT KEY : CONSULT Function (BCM - INTELLIGENT KEY) 53

TRUNK 56
TRUNK : CONSULT Function (BCM - TRUNK) 56

DTC/CIRCUIT DIAGNOSIS 58

U1000 CAN COMM CIRCUIT 58
Description 58
DTC Logic 58
Diagnosis Procedure 58

U1010 CONTROL UNIT (CAN) 59
DTC Logic 59
Diagnosis Procedure 59
Special Repair Requirement 59

B2621 INSIDE KEY ANTENNA 1 60
Description 60
DTC Logic 60
Diagnosis Procedure 60

B2622 INSIDE KEY ANTENNA 2 62
Description 62
DTC Logic 62
Diagnosis Procedure 62

B2623 INSIDE KEY ANTENNA 3 64
Description 64
DTC Logic 64
Diagnosis Procedure 64

POWER SUPPLY AND GROUND CIRCUIT 66

BCM (BODY CONTROL MODULE) 66
BCM (BODY CONTROL MODULE) : Diagnosis Procedure 66

DOOR SWITCH 67
Description 67
Component Function Check 67
Diagnosis Procedure 67
Component Inspection 69

DOOR LOCK AND UNLOCK SWITCH 71

DRIVER SIDE 71
DRIVER SIDE : Description 71
DRIVER SIDE : Component Function Check 71
DRIVER SIDE : Diagnosis Procedure 71

PASSENGER SIDE 71
PASSENGER SIDE : Description 71
PASSENGER SIDE : Component Function Check 71
PASSENGER SIDE : Diagnosis Procedure 71

DOOR LOCK ACTUATOR 73

DRIVER SIDE 73
DRIVER SIDE : Description 73
DRIVER SIDE : Component Function Check 73
DRIVER SIDE : Diagnosis Procedure 73

PASSENGER SIDE 73
PASSENGER SIDE : Description 74
PASSENGER SIDE : Component Function Check 74
PASSENGER SIDE : Diagnosis Procedure 74

REAR LH 74
REAR LH : Description 74
REAR LH : Component Function Check 75
REAR LH : Diagnosis Procedure 75

REAR RH 75
REAR RH : Description 75
REAR RH : Component Function Check 75
REAR RH : Diagnosis Procedure 76

FUEL LID LOCK ACTUATOR 77
Description 77
Component Function Check 77
Diagnosis Procedure 77

BACK DOOR OPENER ACTUATOR 78
Description 78
Component Function Check 78
Diagnosis Procedure 78

KEY CYLINDER SWITCH 80
Description 80
Component Function Check 80
Diagnosis Procedure 80
Component Inspection 81

REMOTE KEYLESS ENTRY RECEIVER 82
Description 82
Component Function Check 82
Diagnosis Procedure 82

BACK DOOR OPENER SWITCH 85
Description 85
Component Function Check 85
Diagnosis Procedure 85
Component Inspection 86

DOOR REQUEST SWITCH 87
Description 87
Component Function Check 87

Diagnosis Procedure 87
Component Inspection 88

BACK DOOR REQUEST SWITCH 89
Description 89
Component Function Check 89
Diagnosis Procedure 89
Component Inspection 90

UNLOCK SENSOR 91
Description 91
Component Function Check 91
Diagnosis Procedure 91
Component Inspection 92

OUTSIDE KEY ANTENNA 93
Description 93
Component Function Check 93
Diagnosis Procedure 93

INTELLIGENT KEY WARNING BUZZER 96
Description 96
Component Function Check 96
Diagnosis Procedure 96
Component Inspection 97

INTELLIGENT KEY BATTERY 98
Component Inspection 98

KEY SLOT 99
Description 99
Component Function Check 99
Diagnosis Procedure 99
Component Inspection 100

KEY SLOT INDICATOR 101
Description 101
Component Function Check 101
Diagnosis Procedure 101
Component Inspection 102

HORN FUNCTION 103
Description 103
Component Function Check 103
Diagnosis Procedure 103

COMBINATION METER DISPLAY FUNCTION 105
Description 105
Component Function Check 105
Diagnosis Procedure 105

BUZZER (COMBINATION METER) 106
Description 106
Component Function Check 106
Diagnosis Procedure 106

KEY WARNING LAMP 107
Description 107
Component Function Check 107
Diagnosis Procedure 107

HAZARD FUNCTION 108
Description 108
Component Function Check 108
Diagnosis Procedure 108

INTEGRATED HOMELINK TRANSMITTER .. 109
Description 109
Component Function Check 109
Diagnosis Procedure 109

POWER DOOR LOCK SYSTEM 111
Wiring Diagram - POWER DOOR LOCK SYSTEM - 111

INTELLIGENT KEY SYSTEM 122
Wiring Diagram - INTELLIGENT KEY SYSTEM - .. 122

INTEGRATED HOMELINK TRANSMITTER SYSTEM 137
Wiring Diagram - INTEGRATED HOMELINK TRANSMITTER SYSTEM - 137

ECU DIAGNOSIS INFORMATION 139

BCM (BODY CONTROL MODULE) 139
Reference Value 139
Wiring Diagram - BCM - 163
Fail-safe 177
DTC Inspection Priority Chart 178
DTC Index 179

SYMPTOM DIAGNOSIS 182

DOOR DOES NOT LOCK/UNLOCK WITH DOOR LOCK AND UNLOCK SWITCH 182

ALL DOOR 182
ALL DOOR : Description 182
ALL DOOR : Diagnosis Procedure 182

DRIVER SIDE 182
DRIVER SIDE : Description 182
DRIVER SIDE : Diagnosis Procedure 182

PASSENGER SIDE 183
PASSENGER SIDE : Description 183
PASSENGER SIDE : Diagnosis Procedure 183

REAR LH 183
REAR LH : Description 183
REAR LH : Diagnosis Procedure 183

REAR RH 183
REAR RH : Description 183
REAR RH : Diagnosis Procedure 183

DOOR DOES NOT LOCK/UNLOCK WITH DOOR KEY CYLINDER OPERATION 185
Description 185
Diagnosis Procedure 185

DOOR DOES NOT LOCK/UNLOCK WITH DOOR REQUEST SWITCH 186

ALL DOOR 186
ALL DOOR : Description 186
ALL DOOR : Diagnosis Procedure 186

DRIVER SIDE 186
DRIVER SIDE : Description 186
DRIVER SIDE : Diagnosis Procedure 186

PASSENGER SIDE 187
PASSENGER SIDE : Description 187
PASSENGER SIDE : Diagnosis Procedure 187

BACK DOOR 187
BACK DOOR : Description 187
BACK DOOR : Diagnosis Procedure 187

DOOR DOES NOT LOCK/UNLOCK WITH INTELLIGENT KEY 189
Description 189
Diagnosis Procedure 189

BACK DOOR DOES NOT OPENED 191
Description 191
Diagnosis Procedure 191

SELECTIVE UNLOCK FUNCTION DOES NOT OPERATE WITH DOOR REQUEST SWITCH 192
Description 192
Diagnosis Procedure 192

SELECTIVE UNLOCK FUNCTION DOES NOT OPERATE WITH INTELLIGENT KEY ... 193
Description 193
Diagnosis Procedure 193

VEHICLE SPEED SENSING AUTO LOCK OPERATION DOES NOT OPERATE 194
Diagnosis Procedure 194

IGN OFF INTERLOCK DOOR UNLOCK FUNCTION DOES NOT OPERATE 195
Diagnosis Procedure 195

P RANGE INTERLOCK DOOR LOCK/UNLOCK FUNCTION DOES NOT OPERATE 196
Diagnosis Procedure 196

AUTO DOOR LOCK OPERATION DOES NOT OPERATE 197
Description 197
Diagnosis Procedure 197

POWER WINDOW DOWN FUNCTION DOES NOT OPERATE WITH KEY CYLINDER OPERATION 198
Diagnosis Procedure 198

POWER WINDOW DOWN FUNCTION DOES NOT WORK WHEN OPERATING WITH INTELLIGENT KEY 199
Description 199
Diagnosis Procedure 199

WELCOME LIGHT FUNCTION DOES NOT OPERATE 200
Description 200
Diagnosis Procedure 200

PANIC ALARM FUNCTION DOES NOT OPERATE 201
Description 201
Diagnosis Procedure 201

HAZARD AND HORN REMINDER DOES NOT OPERATE 202
Description 202
Diagnosis Procedure 202

HAZARD AND BUZZER REMINDER DOES NOT OPERATE 203
Description 203
Diagnosis Procedure 203

KEY REMINDER FUNCTION DOES NOT OPERATE 204
Description 204
Diagnosis Procedure 204

KEY WARNING DOES NOT OPERATE 205
Description 205
Diagnosis Procedure 205

OFF POSITION WARNING DOES NOT OPERATE 206
Description 206
Diagnosis Procedure 206

P POSITION WARNING DOES NOT OPERATE 207
Description 207
Diagnosis Procedure 207

ACC WARNING DOES NOT OPERATE 209
Description 209
Diagnosis Procedure 209

TAKE AWAY WARNING DOES NOT OPERATE 210

DOOR IS OPEN 210
DOOR IS OPEN : Description 210
DOOR IS OPEN : Diagnosis Procedure 210

ANY DOOR OPEN TO ALL DOORS CLOSED 211
ANY DOOR OPEN TO ALL DOORS CLOSED : Description 211
ANY DOOR OPEN TO ALL DOORS CLOSED : Diagnosis Procedure 211

PUSH-BUTTON IGNITION SWITCH OPERATION. 211
PUSH-BUTTON IGNITION SWITCH OPERATION : Description 212
PUSH-BUTTON IGNITION SWITCH OPERATION : Diagnosis Procedure 212

INTELLIGENT KEY IS REMOVED FROM KEY SLOT 212
INTELLIGENT KEY IS REMOVED FROM KEY SLOT : Description 212
INTELLIGENT KEY IS REMOVED FROM KEY SLOT : Diagnosis Procedure 213

INTELLIGENT KEY LOW BATTERY WARNING DOES NOT OPERATE 214
Description 214
Diagnosis Procedure 214

DOOR LOCK OPERATION WARNING DOES NOT OPERATE WITH DOOR REQUEST SWITCH 215
Description 215
Diagnosis Procedure 215

KEY ID WARNING DOES NOT OPERATE 216
Description 216
Diagnosis Procedure 216

INTELLIGENT KEY LOW BATTERY WARNING DOES NOT OPERATE 217
Description 217
Diagnosis Procedure 217

INTEGRATED HOMELINK TRANSMITTER DOES NOT OPERATE 218
Description 218
Diagnosis Procedure 218

SQUEAK AND RATTLE TROUBLE DIAGNOSES 219
Work Flow 219
Inspection Procedure 221
Diagnostic Worksheet 223

PRECAUTION 225

PRECAUTIONS 225
Precaution for Supplemental Restraint System (SRS) "AIR BAG" and "SEAT BELT PRE-TENSIONER" 225
Precaution for Procedure without Cowl Top Cover. 225
Precautions For Xenon Headlamp Service 225
Work 226

PREPARATION 227

PREPARATION 227
Special Service Tools 227
Commercial Service Tools 227

REMOVAL AND INSTALLATION 228

HOOD 228

HOOD ASSEMBLY 228
HOOD ASSEMBLY : Exploded View 228
HOOD ASSEMBLY : Removal and Installation 228
HOOD ASSEMBLY : Adjustment 230

HOOD HINGE 231
HOOD HINGE : Exploded View 232
HOOD HINGE : Removal and Installation 232

HOOD STAY 233
HOOD STAY : Exploded View 233
HOOD STAY : Removal and Installation 233
HOOD STAY : Disposal 234

RADIATOR CORE SUPPORT 235
Exploded View 235
Removal and Installation 235

FRONT FENDER 238
Exploded View 238
Removal and Installation 238

FRONT DOOR 240

DOOR ASSEMBLY 240
DOOR ASSEMBLY : Exploded View 240
DOOR ASSEMBLY : Removal and Installation 240
DOOR ASSEMBLY : Adjustment 241

DOOR STRIKER 242
DOOR STRIKER : Exploded View 242
DOOR STRIKER : Removal and Installation 242

DOOR HINGE 242
DOOR HINGE : Exploded View 243
DOOR HINGE : Removal and Installation 243

DOOR CHECK LINK 243
DOOR CHECK LINK : Exploded View 244
DOOR CHECK LINK : Removal and Installation .. 244

REAR DOOR 245

DOOR ASSEMBLY 245
DOOR ASSEMBLY : Exploded View 245
DOOR ASSEMBLY : Removal and Installation 245
DOOR ASSEMBLY : Adjustment 246

DOOR STRIKER 247
DOOR STRIKER : Exploded View 247
DOOR STRIKER : Removal and Installation 247

DOOR HINGE 247
DOOR HINGE : Exploded View 248
DOOR HINGE : Removal and Installation 248

DOOR CHECK LINK 248
DOOR CHECK LINK : Exploded View 249
DOOR CHECK LINK : Removal and Installation .. 249

BACK DOOR 250

BACK DOOR ASSEMBLY 250
BACK DOOR ASSEMBLY : Exploded View 250
BACK DOOR ASSEMBLY : Removal and Installation 250
BACK DOOR ASSEMBLY : Adjustment 252

BACK DOOR STRIKER 253
BACK DOOR STRIKER : Exploded View 253
BACK DOOR STRIKER : Removal and Installation 253

BACK DOOR HINGE 254
BACK DOOR HINGE : Exploded View 254
BACK DOOR HINGE : Removal and Installation ..254

BACK DOOR STAY 255
BACK DOOR STAY : Exploded View 255
BACK DOOR STAY : Removal and Installation ...255
BACK DOOR STAY : Disposal 256

BACK DOOR WEATHER-STRIP 256
BACK DOOR WEATHER-STRIP : Exploded View..257
BACK DOOR WEATHER-STRIP : Removal and Installation 257

HOOD LOCK 258
Exploded View 258
Removal and Installation 258
Inspection 260

FRONT DOOR LOCK 261

DOOR LOCK 261
DOOR LOCK : Exploded View 261
DOOR LOCK : Removal and Installation 261

INSIDE HANDLE 263
INSIDE HANDLE : Exploded View 263
INSIDE HANDLE : Removal and Installation 264

OUTSIDE HANDLE 264
OUTSIDE HANDLE : Exploded View 264
OUTSIDE HANDLE : Removal and Installation 264

REAR DOOR LOCK 267

DOOR LOCK 267
DOOR LOCK : Exploded View 267
DOOR LOCK : Removal and Installation 267

INSIDE HANDLE 268
INSIDE HANDLE : Exploded View 269
INSIDE HANDLE : Removal and Installation 269

OUTSIDE HANDLE 269
OUTSIDE HANDLE : Exploded View 270
OUTSIDE HANDLE : Removal and Installation 270

BACK DOOR LOCK 272
Exploded View 272
Removal and Installation 272

FUEL FILLER LID OPENER 273
Exploded View 273
Removal and Installation 273

DOOR SWITCH 274
Exploded View 274
Removal and Installation 274

INSIDE KEY ANTENNA 275

INSTRUMENT CENTER 275
INSTRUMENT CENTER : Exploded View 275
INSTRUMENT CENTER : Removal and Installation 275

CONSOLE 275
CONSOLE : Exploded View 275
CONSOLE : Removal and Installation 275

LUGGAGE ROOM 276
LUGGAGE ROOM : Exploded View 276
LUGGAGE ROOM : Removal and Installation 276

OUTSIDE KEY ANTENNA 277

DRIVER SIDE 277
DRIVER SIDE : Exploded View 277
DRIVER SIDE : Removal and Installation 277

PASSENGER SIDE 277
PASSENGER SIDE : Exploded View 277
PASSENGER SIDE : Removal and Installation ... 277

BACK DOOR 277
BACK DOOR : Exploded View 277
BACK DOOR : Removal and Installation 277

INTELLIGENT KEY WARNING BUZZER 278
Exploded View 278
Removal and Installation 278

KEY SLOT 279
Exploded View 279
Removal and Installation 279

REMOTE KEYLESS ENTRY RECEIVER 280
Exploded View 280
Removal and Installation 280

INTELLIGENT KEY BATTERY 281
Removal and Installation 281

BASIC INSPECTION

DIAGNOSIS AND REPAIR WORKFLOW

Work Flow

INFOID:0000000007630738

OVERALL SEQUENCE

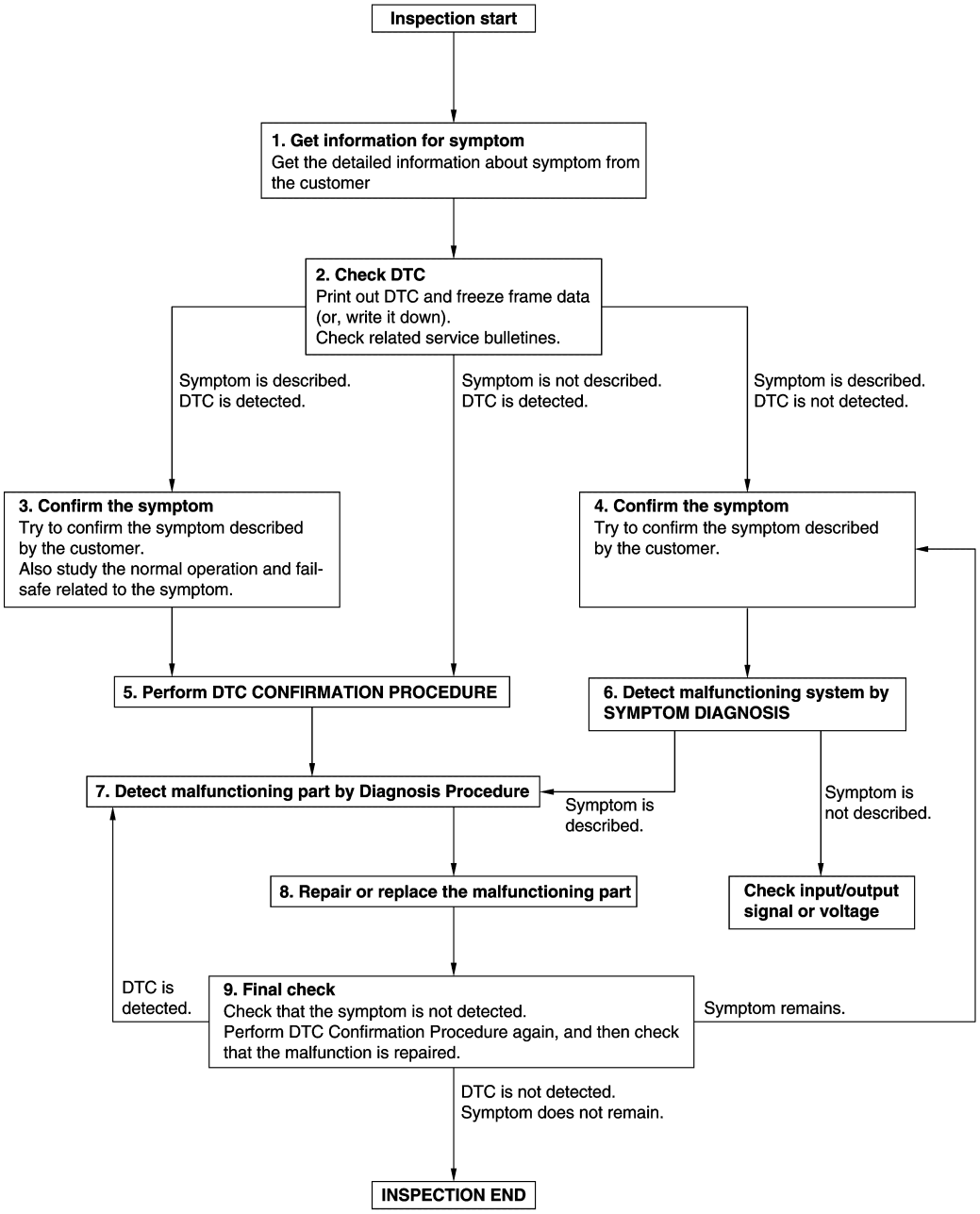

JMKIA8652GB

DETAILED FLOW

1.GET INFORMATION FOR SYMPTOM

1. Get detailed information from the customer about the symptom (the condition and the environment when the incident/malfunction occurs).
2. Check operation condition of the function that is malfunctioning.

>> GO TO 2.

2.CHECK DTC

1. Check DTC.
2. Perform the following procedure if DTC is detected.

- Record DTC and freeze frame data (Print them out using CONSULT.)
- Erase DTC.
- Study the relationship between the cause detected by DTC and the symptom described by the customer.

3. Check related service bulletins for information.

Are any symptoms described and any DTC detected?

Symptom is described, DTC is detected>>GO TO 3.
Symptom is described, DTC is not detected>>GO TO 4.
Symptom is not described, DTC is detected>>GO TO 5.

3.CONFIRM THE SYMPTOM

Try to confirm the symptom described by the customer.
Also study the normal operation and fail-safe related to the symptom.
Verify relation between the symptom and the condition when the symptom is detected.

>> GO TO 5.

4.CONFIRM THE SYMPTOM

Try to confirm the symptom described by the customer.
Verify relation between the symptom and the condition when the symptom is detected.

>> GO TO 6.

5.PERFORM DTC CONFIRMATION PROCEDURE

Perform DTC CONFIRMATION PROCEDURE for the detected DTC, and then check that DTC is detected again. At this time, always connect CONSULT to the vehicle, and check self diagnostic results in real time.
If two or more DTCs are detected, refer to BCS-85, "DTC Inspection Priority Chart" (BCM), and determine trouble diagnosis order.

NOTE:

- Freeze frame data is useful if the DTC is not detected.
- Perform Component Function Check if DTC CONFIRMATION PROCEDURE is not included on Service Manual. This simplified check procedure is an effective alternative though DTC cannot be detected during this check.
  If the result of Component Function Check is NG, it is the same as the detection of DTC by DTC CONFIRMATION PROCEDURE.

Is DTC detected?

YES >> GO TO 7.
NO >> Check according to GI-42, "Intermittent Incident".

6.DETECT MALFUNCTIONING SYSTEM BY SYMPTOM DIAGNOSIS

Detect malfunctioning system according to SYMPTOM DIAGNOSIS based on the confirmed symptom in step 4, and determine the trouble diagnosis order based on possible causes and symptom.

Is the symptom described?

YES >> GO TO 7.
NO >> Monitor input data from related sensors or check voltage of related module terminals using CONSULT.

7.DETECT MALFUNCTIONING PART BY DIAGNOSIS PROCEDURE

Inspect according to Diagnosis Procedure of the system.

Is malfunctioning part detected?

YES >> GO TO 8.
NO >> Check according to GI-42, "Intermittent Incident".

8. REPAIR OR REPLACE THE MALFUNCTIONING PART

1. Repair or replace the malfunctioning part.
2. Reconnect parts or connectors disconnected during Diagnosis Procedure again after repair and replacement.
3. Check DTC. If DTC is detected, erase it.

>> GO TO 9.

9. FINAL CHECK

When DTC is detected in step 2, perform DTC CONFIRMATION PROCEDURE again, and then check that the malfunction is repaired securely.
When symptom is described by the customer, refer to confirmed symptom in step 3 or 4, and check that the symptom is not detected.

Is DTC detected and does symptom remain?

YES-1 >> DTC is detected: GO TO 7.
YES-2 >> Symptom remains: GO TO 4.
NO >> Before returning the vehicle to the customer, always erase DTC.

INSPECTION AND ADJUSTMENT

ADDITIONAL SERVICE WHEN REPLACING CONTROL UNIT

ADDITIONAL SERVICE WHEN REPLACING CONTROL UNIT : Description

INFOID:0000000007456635

Perform the system initialization when replacing BCM, replacing Intelligent Key or registering an additional Intelligent Key.

ADDITIONAL SERVICE WHEN REPLACING CONTROL UNIT : Special Repair Requirement

INFOID:0000000007456636

Refer to the CONSULT operation manual for the initialization procedure.

SYSTEM DESCRIPTION

POWER DOOR LOCK SYSTEM

System Diagram

INFOID:0000000007456637

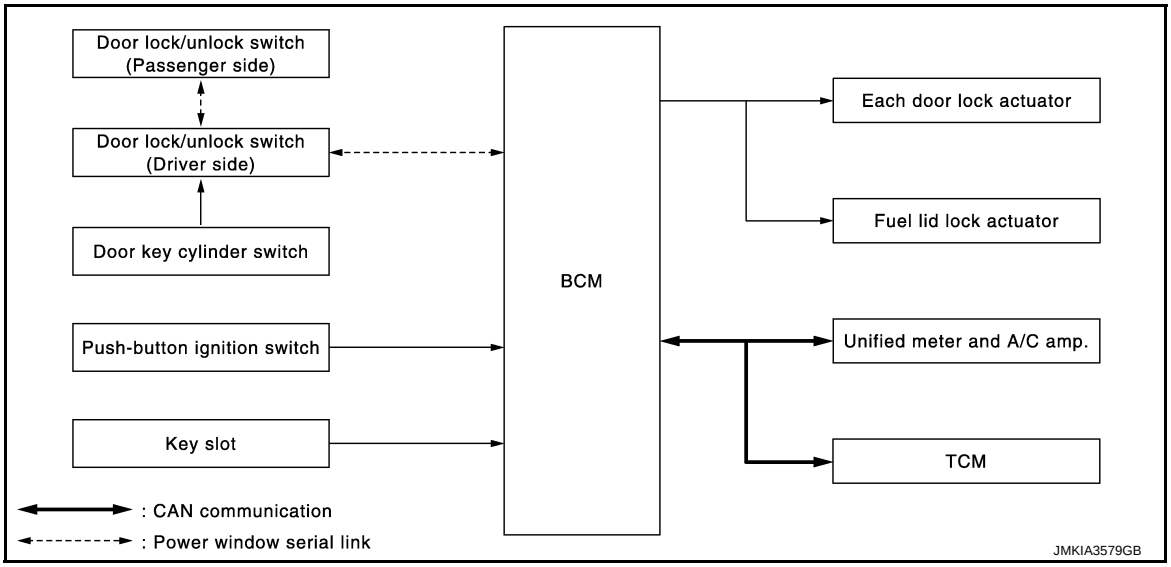

System Description

INFOID:0000000007456638

DOOR LOCK FUNCTION

- The door lock and unlock switch (driver side) is build into power window main switch.
- The door lock and unlock switch (passenger side) is build into front power window switch (passenger side).
- Interlocked with the locking operation of door lock and unlock switch, door lock actuators of all doors and fuel lid lock actuator are locked.
- Interlocked with the unlocking operation of door lock and unlock switch, door lock actuators of all doors and fuel lid lock actuator are unlocked.

Door Key Cylinder

- With the door key inserted in the door key cylinder on driver side, turning it to “LOCK”, will lock door lock actuator of all doors and fuel lid lock actuator.
- With the door key inserted in the door key cylinder on driver side, turning it to “UNLOCK” once unlocks the driver side door lock actuator and fuel lid lock actuator; turning it to “UNLOCK” again within 60 seconds after the first unlock operation unlocks all of the other doors. - (SELECTIVE UNLOCK OPERATION)

Selective unlock operation mode can be changed using “DOOR LOCK-UNLOCK SET” mode in “WORK SUPPORT”. Refer to DLK-51, "DOOR LOCK : CONSULT Function (BCM - DOOR LOCK)".

KEY REMINDER FUNCTION

When door lock and unlock switch are operated while Intelligent Key is inserted into key slot and any door is open, door locks once but immediately unlocks. This operation prevents Intelligent Key from being left in the vehicle.

AUTOMATIC DOOR LOCK/UNLOCK FUNCTION (LOCK OPERATION)

The interlock door lock function is the function that locks all doors linked with the vehicle speed or shift position. It has 2 types as follows.

Vehicle Speed Sensing Auto Door Lock*1

All doors are locked when the vehicle speed reaches 15 MPH (24 km/h) or more.
BCM outputs the lock signal to all door lock actuators when it detects that the ignition switch is turned ON, all doors are closed and the vehicle speed received from the unified meter and A/C amp. via CAN communication becomes 24 km/h (15 miles) or more.

P Range Interlock Door Lock

All doors are locked when shifting the selector lever from the P position to any position other than P.

BCM outputs the lock signal to all door lock actuators when it detects that the ignition switch is in the ON position and the shift signal received from the TCM via CAN communication is shifted from the P position to any position other than P.

Setting change of Automatic Door Lock/Unlock Function

The lock operation setting of the automatic door lock/unlock function can be changed.

With CONSULT

The ON/OFF switching of the automatic door lock function and the type selection of the automatic door lock/unlock function can be performed at the WORK SUPPORT setting of CONSULT.

Without CONSULT

The automatic door lock function ON/OFF can be switched by performing the following operation.

1. Close all doors (door switch OFF)
2. Turn ignition switch ON
3. Press and hold the door lock and unlock switch for 5 seconds or more in the lock direction within 20 seconds after turning the ignition switch ON.
4. The switching is completed when the hazard lamp blinks.

OFF → ON : 2 blinks
ON → OFF : 1 blink

AUTOMATIC DOOR LOCK/UNLOCK FUNCTION (UNLOCK OPERATION)

The automatic door lock/unlock function is the function that unlocks all doors linked with the key position or shift position. It has 2 types as follows.

IGN OFF Interlock Door Unlock*1

All doors are unlocked when the power supply position is changed from ON to OFF.
BCM outputs the unlock signal to all door lock actuators when it detects that the power supply position is changed from ignition switch ON to OFF.

P Range Interlock Door Unlock

All doors are unlocked when shifting the selector lever from any position other than the P to P position.
BCM outputs the unlock signal to all door lock actuators when it detects that the ignition switch is in the ON position and the shift signal received from TCM via CAN communication is shifted from any position other than the P to P position.

Setting change of Automatic Door Lock/Unlock Function

The unlock operation setting of the automatic door lock/unlock function can be changed.

With CONSULT

The ON/OFF switching of the automatic door lock/unlock function and the type selection of the automatic door lock/unlock function can be performed at the WORK SUPPORT setting of CONSULT.

Without CONSULT

The automatic door lock/unlock function ON/OFF can be switched by performing the following operation.

1. Close all doors below (door switch OFF)
2. Turn ignition switch ON
3. Press and hold the door lock and unlock switch for 5 seconds or more in the unlock direction within 20 seconds after turning the power supply position ON.
4. The switching is completed when the hazard lamp blinks.

OFF → ON : 2 blinks
ON → OFF : 1 blink

*1: This function is set to ON before delivery.

Component Parts Location

INFOID:0000000007456639

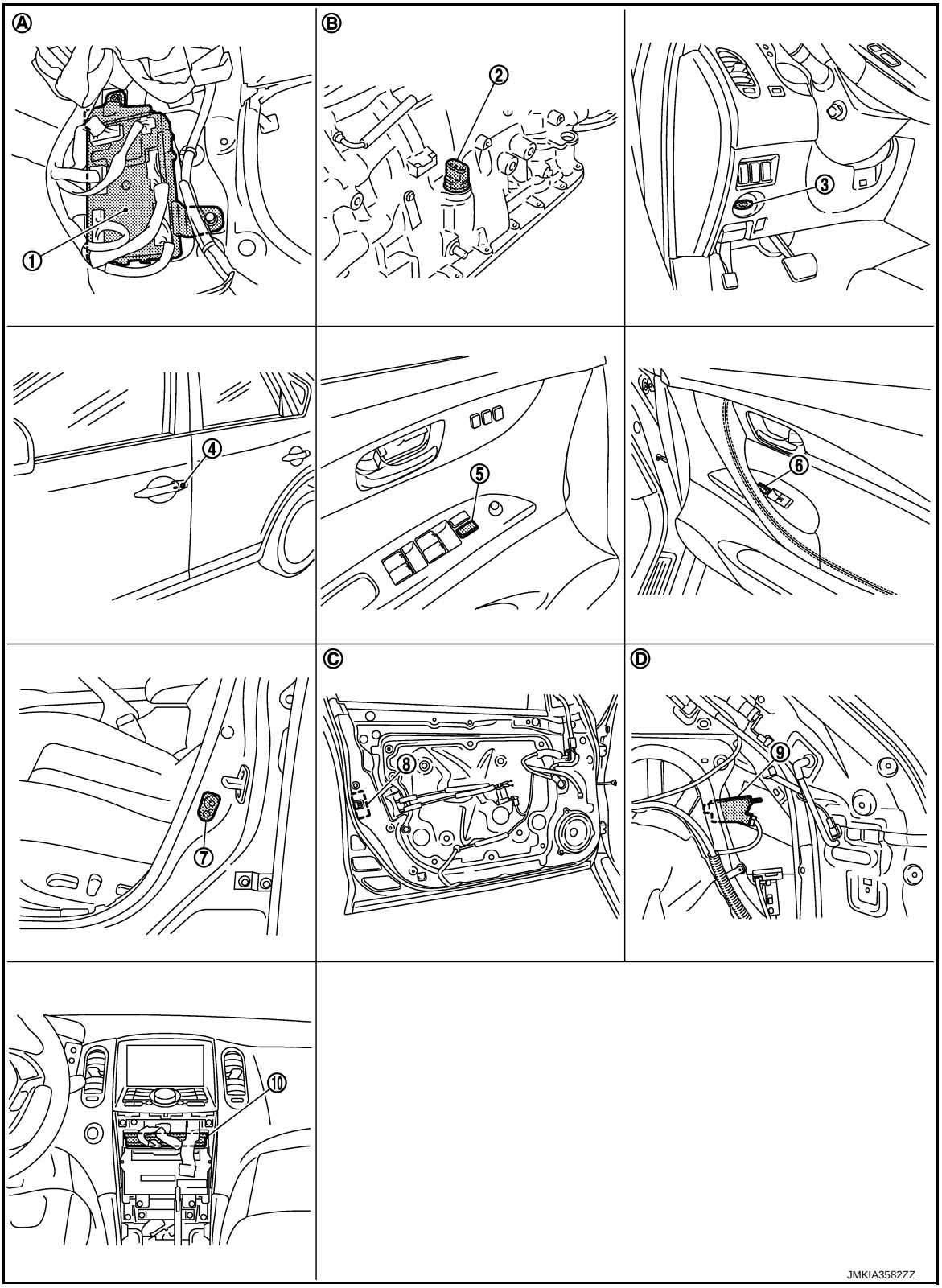

1. BCM M118, M119, M121, M122, M123
2. A/T assembly connector F51
3. Key slot M22
4. Key cylinder switch [Front door lock assembly (driver side) D15]
5. Door lock and unlock switch (Power window main switch D8, D9)
6. Door lock and unlock switch [Front power window switch (passenger) D38]

7. Front door switch (driver side) B16
8. Door lock actuator [Front door lock assembly (driver side) D15]
9. Fuel lid lock actuator B242
10. Unified meter and A/C amp. M66, M67

A. Dash side lower (passenger side)
B. A/T assembly (TCM is built in A/T assembly)
C. View with front door finisher (LH) is removed
D. View with luggage side finisher lower (RH) is removed

Component Description

INFOID:0000000007456640

Item	Function
BCM	Controls the door lock function and room lamp function.
Door lock and unlock switch	Input lock or unlock signal to BCM.
Door lock actuator	Output lock/unlock signal from BCM and locks/unlocks each door.
Door switch	Input door open/close condition to BCM.
Key cylinder switch	• Input lock or unlock signal to power window main switch. • Power window main switch transmits door lock/unlock signal to BCM.
Key slot	Input key insert/remove signal to BCM.
Unified meter and A/C amp.	• Receive buzzer signal from BCM via CAN communication line, and sounds the buzzer. • Transmits vehicle speed signal to BCM via CAN communication line.
TCM	Transmit shift position signal to BCM via CAN communication line.
Push-button ignition switch	Input push-button ignition switch ON/OFF condition to BCM.

INTELLIGENT KEY SYSTEM

INTELLIGENT KEY SYSTEM

INTELLIGENT KEY SYSTEM : System Diagram

INFOID:0000000007456641

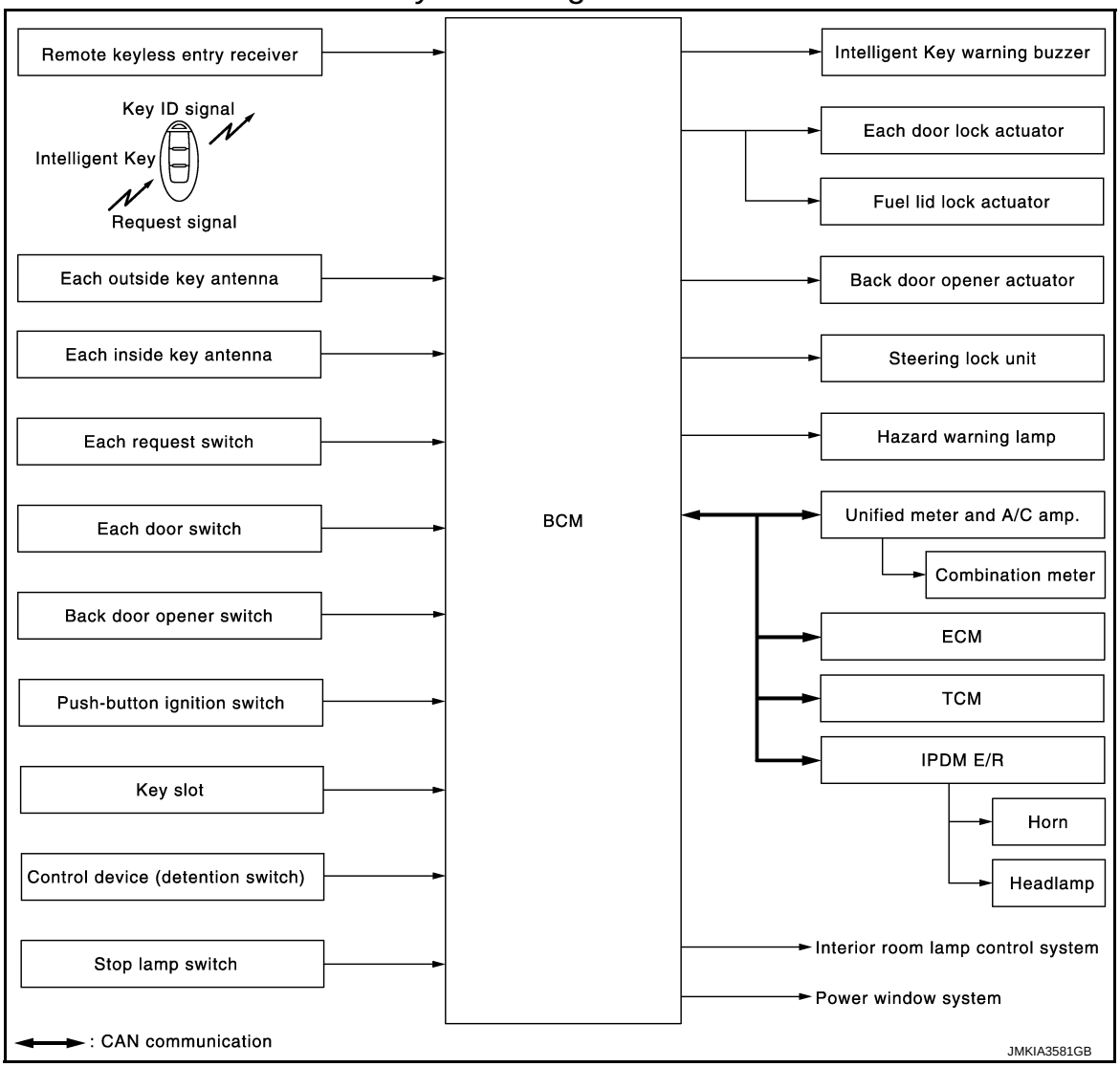

INTELLIGENT KEY SYSTEM : System Description

INFOID:0000000007456642

- The Intelligent Key system is a system that makes it possible to lock and unlock the door locks (door lock/unlock function) by carrying the Intelligent Key, which operates based on the results of electronic ID verification using two-way communications between the Intelligent Key and the vehicle (BCM).
  CAUTION:
  The driver should always carry the Intelligent Key
- The settings for each function can be changed with the CONSULT.
- If an Intelligent Key is lost, a new Intelligent Key can be registered. A maximum of 4 Intelligent Keys can be registered.
- It is possible to perform a diagnosis on the system and register an Intelligent Key with the CONSULT.

Function	Description	Refer
Door lock function	Lock/unlock can be performed by pressing the request switch.	DLK-19
Remote keyless entry function	Lock/unlock can be performed by pressing the remote controller button of the Intelligent Key.	DLK-28
Back door open function	The back door can be opened by carrying the Intelligent Key and pressing the back door opener switch.	DLK-24

Function	Description	Refer
Welcome light function	The puddle lamp and room automatically turn ON, if the Intelligent Key is in the door outside key antenna detection area.	DLK-33
Key reminder function	The key reminder buzzer sounds a warning if the door is locked with the key left inside the vehicle.	DLK-36
Warning function	If an action that does not meet the operating condition of the Intelligent Key system is taken, the buzzer goes off to inform the driver.	DLK-39
Engine start function	The engine be turned on while carrying the Intelligent Key.	SEC-9

INTELLIGENT KEY SYSTEM : Component Parts Location

INFOID:0000000007456643

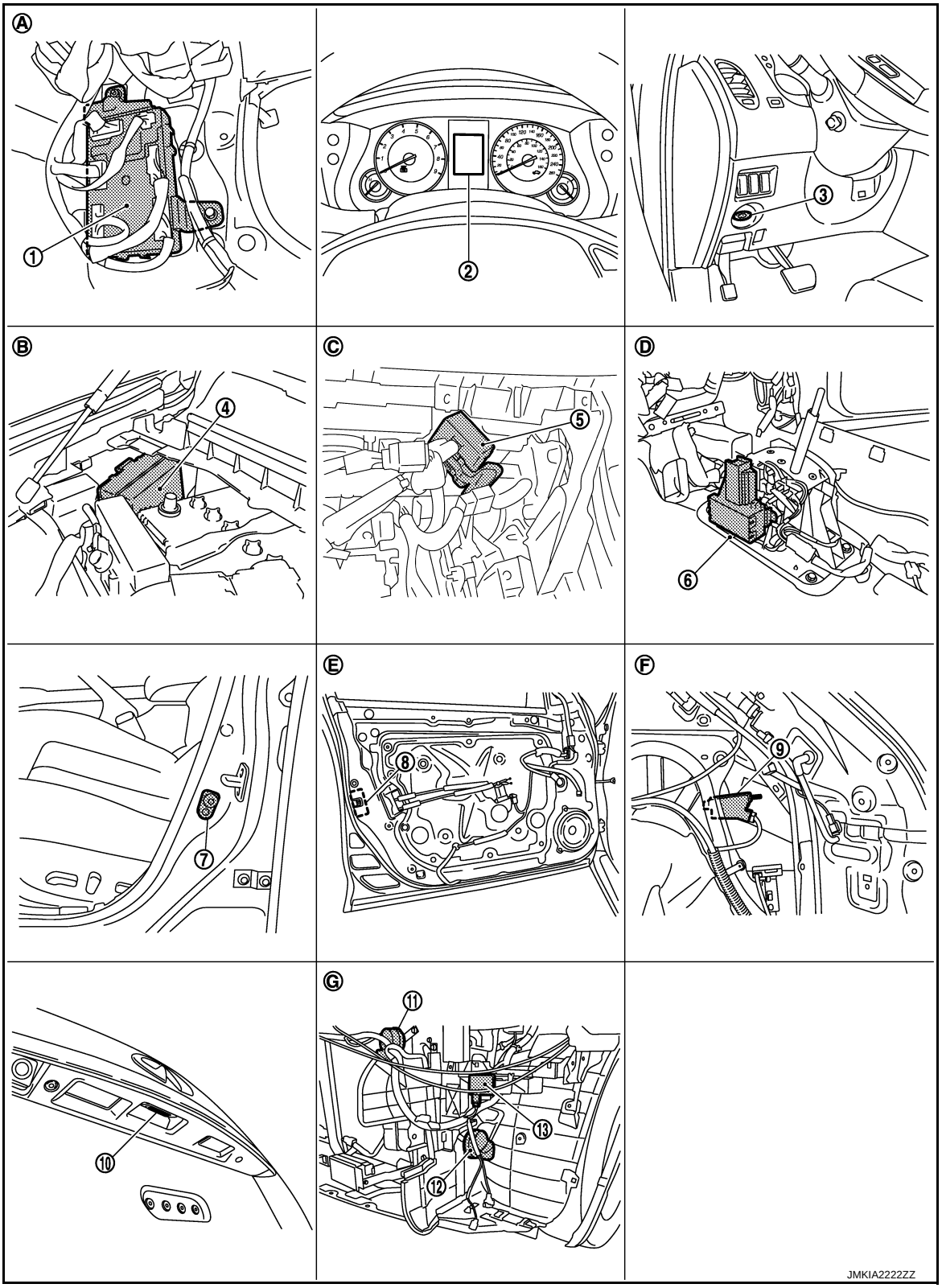

1. BCM M118, M119, M120, M121, M122, M123
2. Combination meter M53
3. Key slot M22
4. IPDM E/R E5, E6
5. Remote key less entry receiver M104
6. A/T shift selector (detention switch) M137

7. Front door switch (driver side) B16
8. Front door lock assembly (driver side) D15
9. Fuel lid lock actuator B242
10. Back door opener switch D114
11. Horn (high) E61, E62
12. Horn (low) E69, E70
13. Intelligent Key warning buzzer E57
A. Dash side lower (passenger side)
B. Engine room dash panel (RH)
C. Behind the instrument lower panel (driver side)
D. View with center console assembly removed
E. View with front door finisher (LH) is removed
F. View luggage side finisher lower (RH) is removed
G. View with front bumper is removed

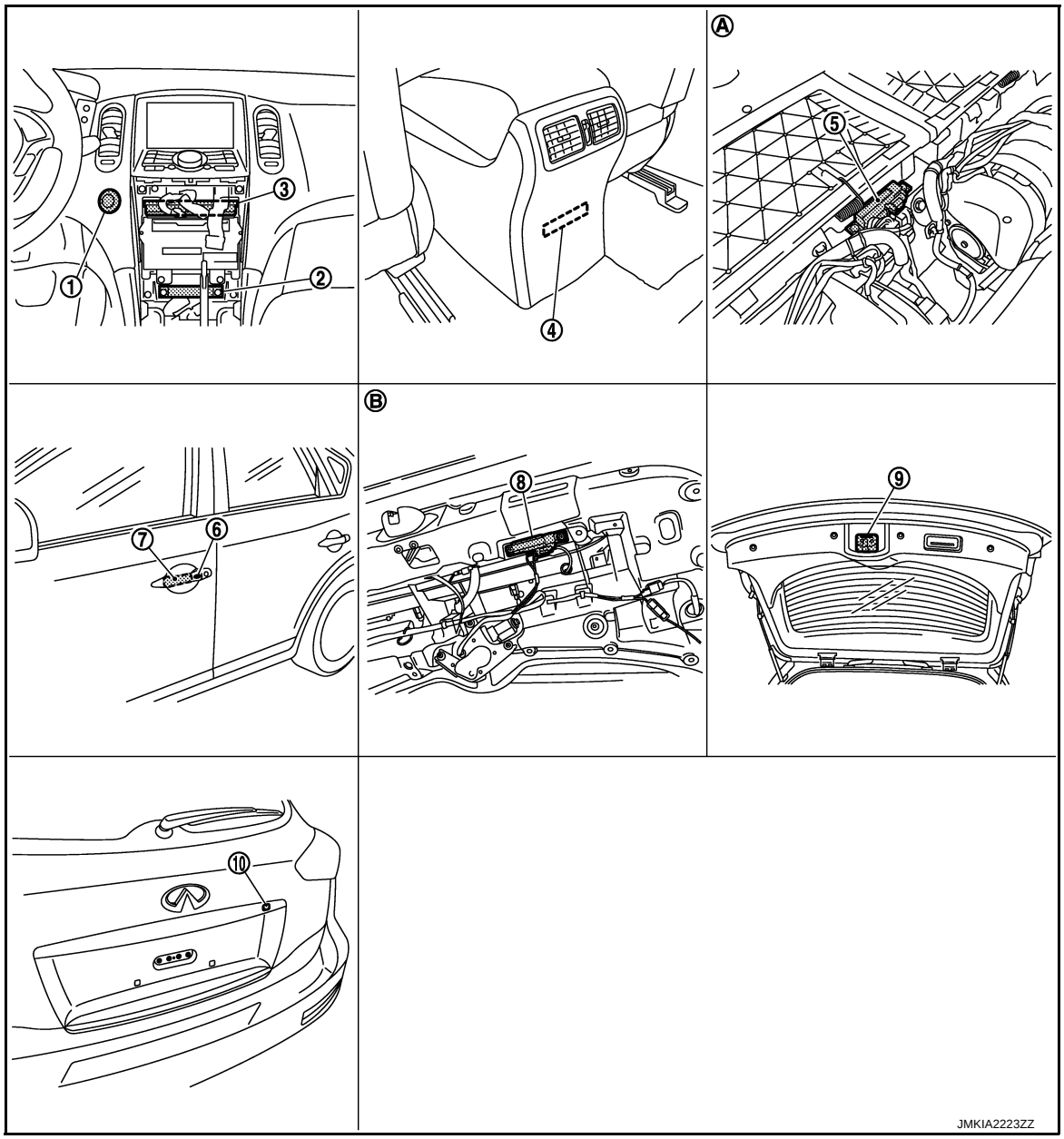

1. Push-button ignition switch (push switch) M50
2. Inside key antenna (instrument center) M131
3. Unified meter and A/C amp. M66, M67
4. Inside key antenna (console) M146
5. Inside key antenna (luggage room) B228
6. Front outside handle LH (request switch) D13
7. Front outside handle LH (outside key antenna) D14
8. Outside key antenna (back door) D118
9. Back door lock assembly D113

10. Back door request switch D116

A. View with luggage floor finisher front is removed B. View with back door finisher inner is removed

INTELLIGENT KEY SYSTEM : Component Description

INFOID:0000000007456644

Item	Function
BCM	Controls the Intelligent Key system.
Door lock actuator	Output lock/unlock signal from BCM and locks/unlocks each door.
Door switch	Input door open/close condition to BCM.
Remote keyless entry receiver	Receives lock/unlock signal from the Intelligent Key, and then transmits to BCM.
Request switch	Input lock/unlock operation to BCM.
Intelligent Key	Transmits button operation to remote keyless entry receiver.
Outside key antenna	Detects if Intelligent Key is outside the vehicle.
Inside key antenna	Detects if Intelligent Key is inside the vehicle.
Unified meter and A/C amp.	• Receive buzzer signal from BCM via CAN communication line, and sounds the buzzer. • Transmits vehicle speed signal to BCM via CAN communication line.
Combination meter	Display, buzzer (combination meter) and KEY warning lamp are installed to combination meter.
Back door opener switch	Input back door opener switch operation signal to BCM.
Back door opener actuator	Opens the back door with the back door open signal from BCM.
Intelligent Key warning buzzer	Warns the user of the lock/unlock condition and inappropriate operations with the buzzer sound.

DOOR LOCK FUNCTION

DOOR LOCK FUNCTION : System Diagram

INFOID:0000000007456645

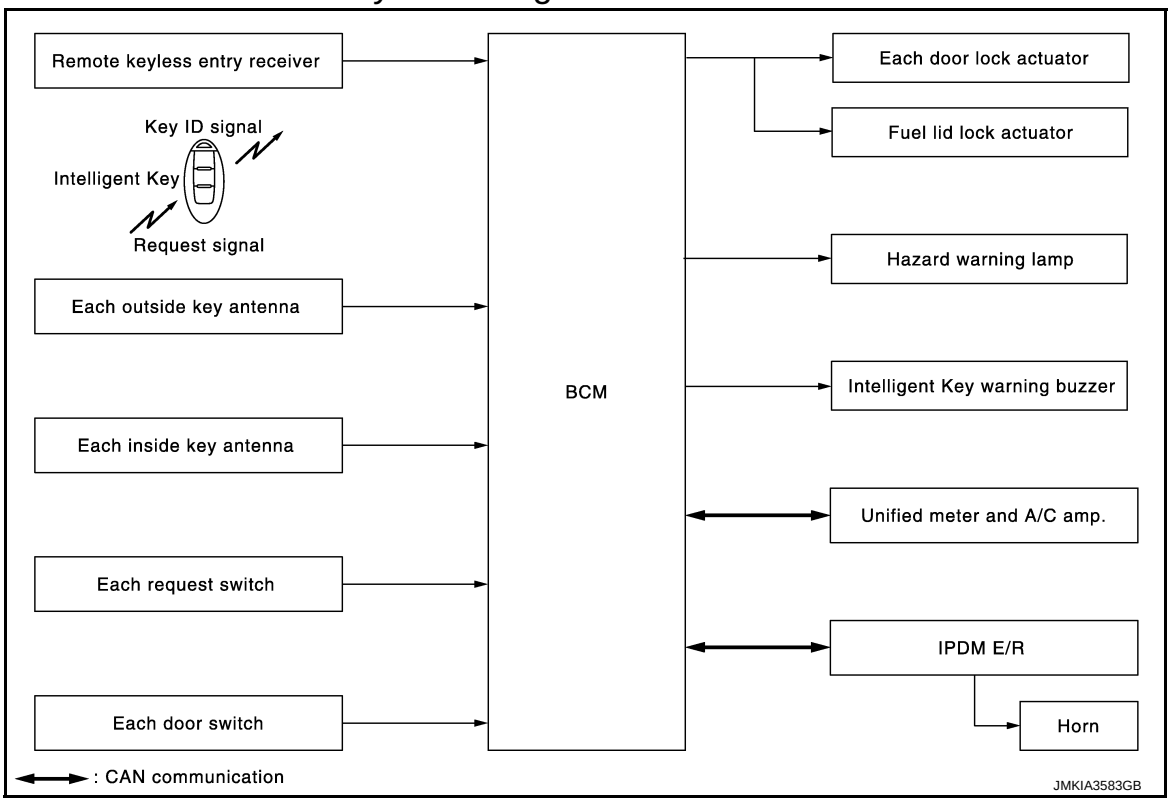

DOOR LOCK FUNCTION : System Description

INFOID:0000000007456646

Only when pressing the request switch, it is possible to lock and unlock the door by carrying the Intelligent Key.

OPERATION DESCRIPTION

- When the BCM detects that each door request switch is pressed, it starts the outside key antenna and inside key antenna corresponding to the pressed door request switch and transmits the request signal to the Intelligent Key. And then, check that the Intelligent Key is near the door.
- If the Intelligent Key is within the outside key antenna detection area, it receives the request signal and transmits the key ID signal to the BCM via remote keyless entry receiver.
- BCM receives the key ID signal and compares it with the registered key ID.
- BCM lock/unlock each door (except back door) and fuel lid lock actuator and sounds Intelligent Key buzzer warning (lock: 2 time, unlock: 1 times) at the same time as a reminder.

OPERATION CONDITION

If the following conditions are satisfied, door lock/unlock operation is performed if the request switch is operated.

Operation	Operation condition
Lock operation	• All doors are closed • P position warning is activated • Panic alarm is not activated • Intelligent Key is outside the vehicle • Intelligent Key is within outside key antenna detection area
Unlock Operation	• Panic alarm is not activated • Intelligent Key is outside the vehicle • Intelligent Key is within outside key antenna detection area *

*: Even with a registered Intelligent Key remaining inside the vehicle, door locks can be unlocked from outside of the vehicle with a spare Intelligent Key as long as key IDs are different.

OUTSIDE KEY ANTENNA DETECTION AREA

The outside key antenna detection area of door lock/unlock function is in the range of approximately 80 cm (31.50 in) surrounding the driver, passenger door handles and (1) and the back door request switch (2). However, this operating range depends on the ambient conditions.

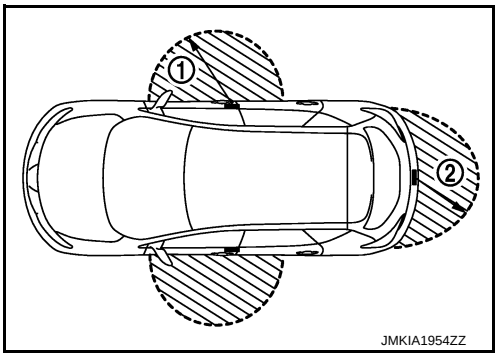

SELECTIVE UNLOCK FUNCTION

When an LOCK signal is sent from door request switch (driver side or passenger side), all doors and fuel lid will be locked.
When an UNLOCK signal is sent from door request switch (driver side or passenger side) once, driver's door and fuel lid will be unlocked.
Then, if an UNLOCK signal is sent from door request switch (driver side and passenger side) again within 60 seconds, all other door will be unlocked.

HAZARD AND BUZZER REMINDER FUNCTION

During lock, unlock, operation by each request switch, the hazard warning lamps and Intelligent Key warning buzzer will blink or honk as a reminder.
When doors are locked, unlocked by each request switch, BCM honks Intelligent Key warning buzzer as a reminder and blinks.

Operating Function of Hazard and Buzzer Reminder

Operation	Hazard warning lamp flash	Intelligent Key warning buzzer honk
Unlock	Once	Once
Lock	Twice	Twice

How to Change Hazard and Buzzer Reminder Mode

Refer to DLK-53, "INTELLIGENT KEY : CONSULT Function (BCM - INTELLIGENT KEY)".

AUTO DOOR LOCK FUNCTION

When all doors are locked, ignition switch is in OFF position and key switch is OFF (Intelligent Key is not inserted in key slot), doors are unlocked with door request switch

When BCM does not receive the following signals within 60 seconds, all doors and fuel lid are locked.

- Door switch is ON (door is opened)
- Door is locked
- Ignition switch is ON (ignition switch is pressed)
- Key switch is ON (Intelligent Key is inserted in key slot)

Auto door lock mode can be changed by “AUTO LOCK SET” mode in “WORK SUPPORT”. Refer to DLK-53, "INTELLIGENT KEY : CONSULT Function (BCM - INTELLIGENT KEY)".

INTERIOR ROOM LAMP CONTROL

Intelligent Key system turns on interior lamp by receiving UNLOCK signal from door request switch. For detailed description, refer to INL-6, "System Description".

LIST OF OPERATION RELATED PARTS

Parts marked with × are the parts related to operation.

Door lock function	Intelligent Key	Key slot	Remote keyless entry receiver	Door switch	Door request switch	Door lock actuator and fuel lid lock actuator	Inside key antenna	Outside key antenna	Intelligent Key warning buzzer	CAN communication system	BCM	Hazard warning lamp	Push-button ignition switch
Door lock/unlock function by request switch	×	×	×	×	×	×	×	×			×		
Hazard and buzzer reminder function for door lock/ unlock operation									×	×	×	×	
Selective unlock function by request switch (Driver side)	×				×	×	×	×			×		
Selective unlock function by request switch (Passenger side)	×				×	×	×	×			×		
Selective unlock function by request switch (back door)	×				×		×	×			×		
Auto door lock function	×	×		×	×	×					×		×

DOOR LOCK FUNCTION : Component Parts Location

INFOID:0000000007456647

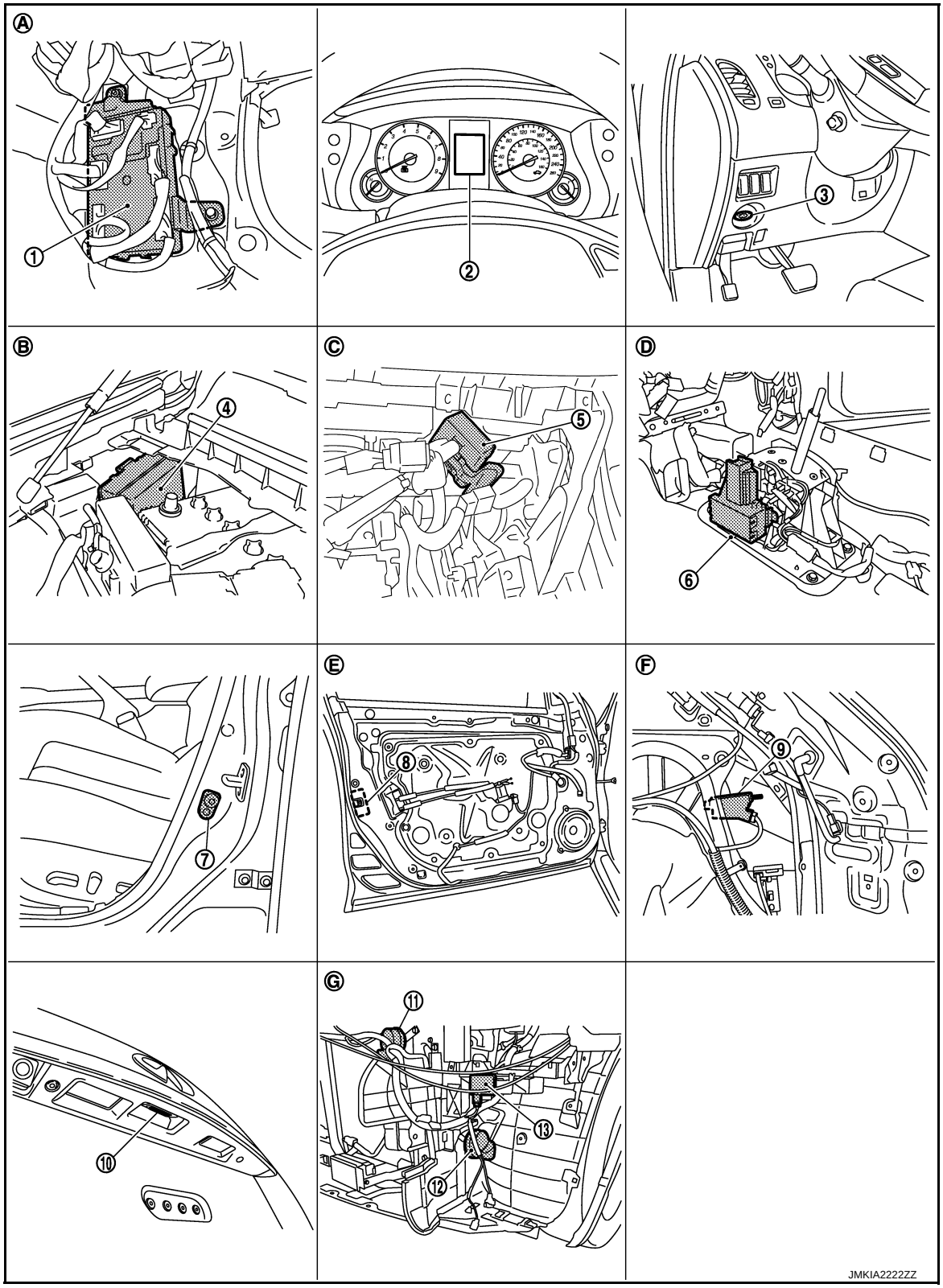

1. BCM M118, M119, M120, M121, M122, M123
2. Combination meter M53
3. Key slot M22
4. IPDM E/R E5, E6
5. Remote key less entry receiver M104
6. A/T shift selector (detention switch) M137

7. Front door switch (driver side) B16
8. Front door lock assembly (driver side) D15
9. Fuel lid lock actuator B242
10. Back door opener switch D114
11. Horn (high) E61, E62
12. Horn (low) E69, E70
13. Intelligent Key warning buzzer E57
A. Dash side lower (passenger side)
B. Engine room dash panel (RH)
C. Behind the instrument lower panel (driver side)
D. View with center console assembly removed
E. View with front door finisher (LH) is removed
F. View luggage side finisher lower (RH) is removed
G. View with front bumper is removed

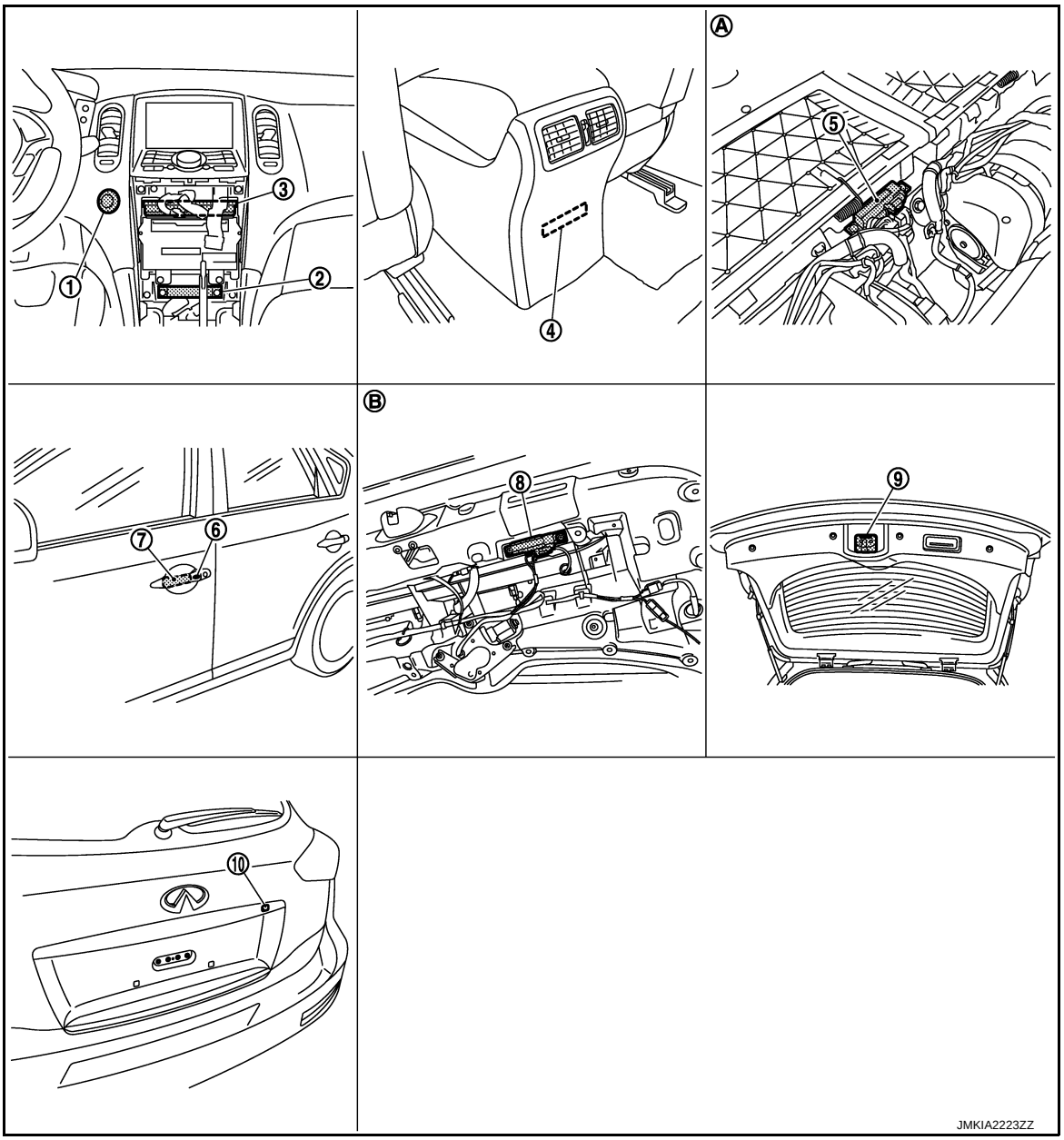

1. Push-button ignition switch (push switch) M50
2. Inside key antenna (instrument center) M131
3. Unified meter and A/C amp. M66, M67
4. Inside key antenna (console) M146
5. Inside key antenna (luggage room) B228
6. Front outside handle LH (request switch) D13
7. Front outside handle LH (outside key antenna) D14
8. Outside key antenna (back door) D118
9. Back door lock assembly D113

10. Back door opener request switch D116

A. View with luggage floor finisher front is removed
B. View with back door finisher inner is removed

DOOR LOCK FUNCTION : Component Description

INFOID:0000000007456648

Item	Function
BCM	Controls the door lock function.
Door lock actuator	Output lock/unlock signal from BCM and locks/unlocks each door.
Door switch	Input door open/close condition to BCM.
Remote keyless entry receiver	Receives lock/unlock signal from the Intelligent Key, and then transmits to BCM.
Request switch	Input lock/unlock operation to BCM.
Intelligent Key	Transmits button operation to remote keyless entry receiver.
Outside key antenna	Detects if Intelligent Key is outside the vehicle.
Inside key antenna	Detects if Intelligent Key is inside the vehicle.
Unified meter and A/C amp.	• Receive buzzer signal from BCM via CAN communication line, and sounds the buzzer. • Transmits vehicle speed signal to BCM via CAN communication line.
Combination meter	Display, buzzer (combination meter) and KEY warning lamp are installed to combination meter.
Intelligent Key warning buzzer	Warns the user of the lock/unlock condition and inappropriate operations with the buzzer sound.

BACK DOOR OPEN FUNCTION

BACK DOOR OPEN FUNCTION : System Diagram

INFOID:0000000007456649

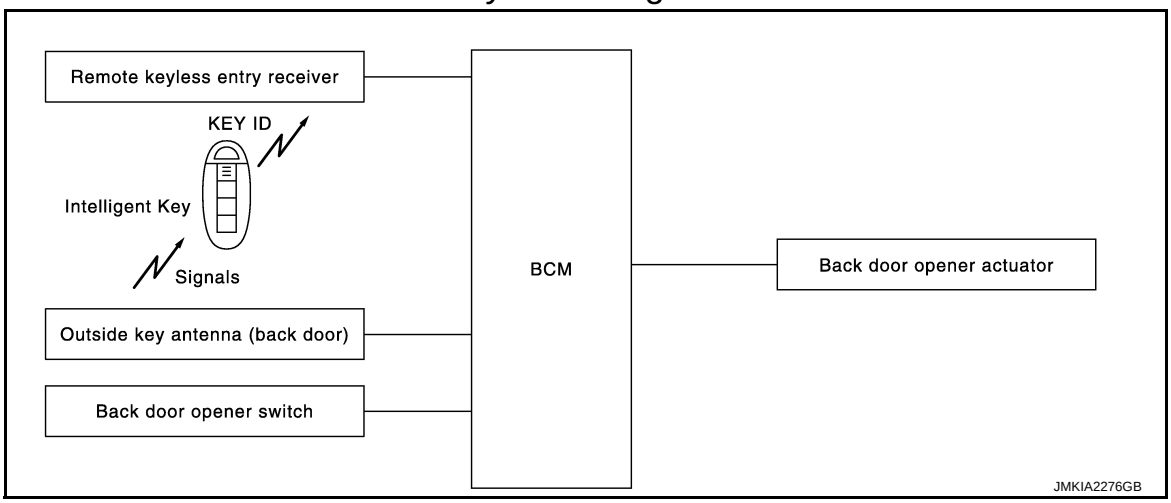

BACK DOOR OPEN FUNCTION : System Description

INFOID:0000000007456650

This section describes the operation of the back door opener switch. The operation of the back door request switch is the same as the door lock function. Refer to DLK-19, "DOOR LOCK FUNCTION : System Description".

- The back door opener function can open the back door by pressing the back door opener switch while carrying the Intelligent Key. At this time, all doors other than the back door and fuel lid are locked.
- The back door opener function can open the back door by pressing the back door opener switch with all doors and fuel lid are unlocked by the door request switch or remote controller.

BACK DOOR OPEN

- When the BCM detects that back door opener switch is pressed, it starts the outside key antenna (back door) and inside key antenna and transmits the request signal to the Intelligent Key. And then, check that the Intelligent Key is near the back door.

- If the Intelligent Key is within the outside key antenna detection area, it receives the request signal and transmits the key ID signal to the BCM via remote keyless entry receiver.
- BCM receives the key ID signal and compares it with the registered key ID.
- BCM open the back door and sounds Intelligent Key buzzer warning at the same time as a reminder.

OPERATION CONDITION

If the following conditions are satisfied, the back door can be opened.

- Back door is closed
- Intelligent Key is outside of vehicle
- Intelligent Key is within out side key antenna detection area

OUTSIDE KEY ANTENNA DETECTION AREA

The outside key antenna detection area of back door open function is in the range of approximately 80 cm (31.50 in) surrounding the back door opener switch (1). However, this operating range depends on the ambient conditions.

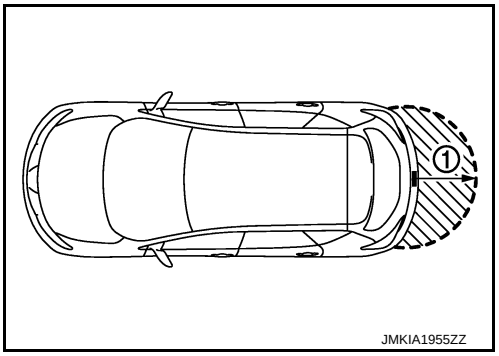

HAZARD AND BUZZER REMINDER FUNCTION

Back door opening operation by back door opener switch, the hazard warning lamps and born will blink or honk as a reminder.

LIST OF OPERATION RELATED PARTS

Parts marked with × are the parts related to operation.

Door lock function	Intelligent Key	Key slot	Remote keyless entry receiver	Door switch	Door request switch	Door lock actuator and fuel lid lock actuator	Inside key antenna	Outside key antenna (Rear bumper)	Intelligent Key warning buzzer	CAN communication system	BCM	Hazard warning lamp	Back door opener switch
Back door open function by back door opener switch (Carrying Intelligent Key)	×	×	×	×	×	×	×	×		×	×		×
Hazard and buzzer reminder function for door lock/unlock operation									×	×	×	×	

BACK DOOR OPEN FUNCTION : Component Parts Location

INFOID:0000000007456651

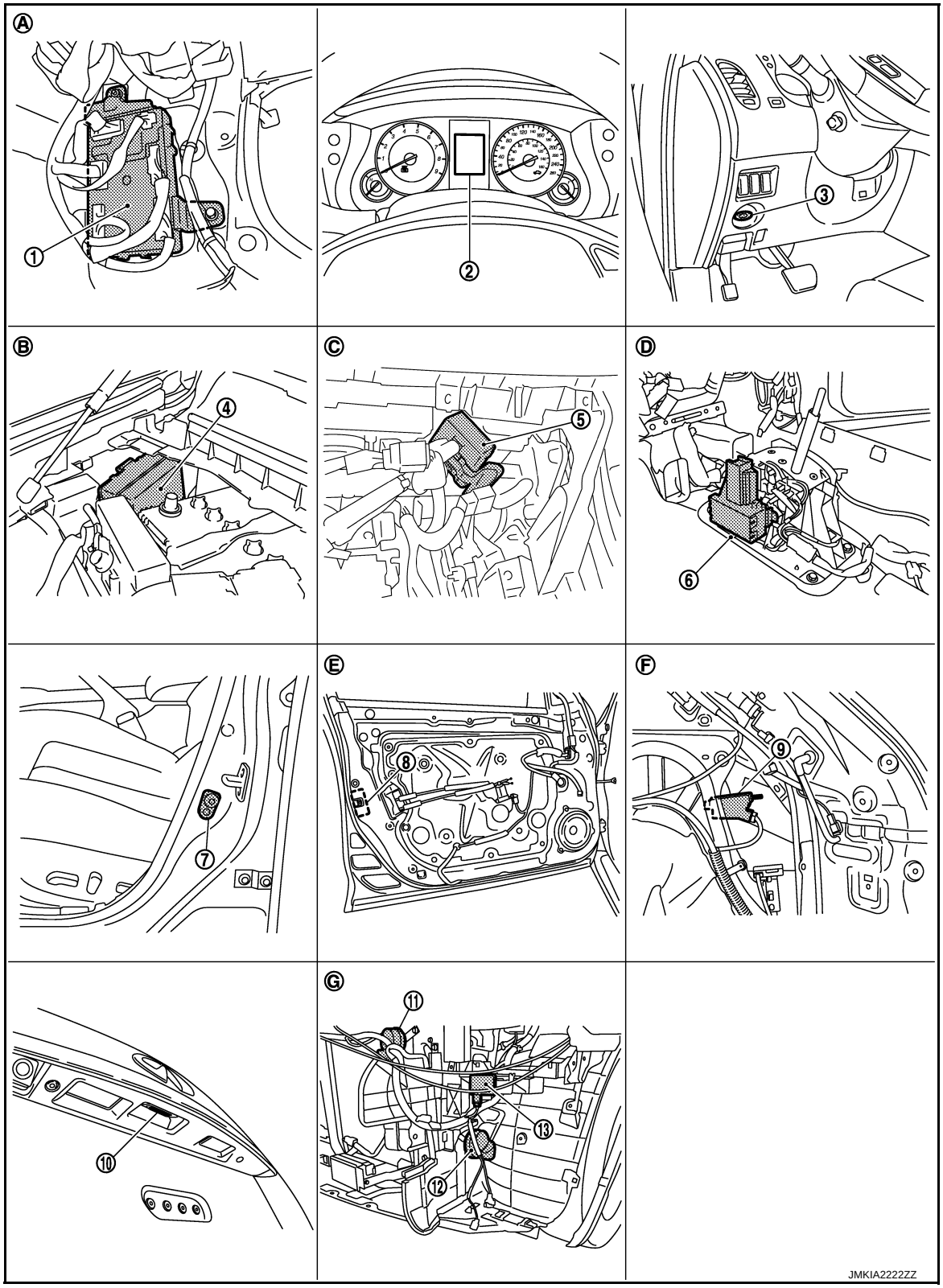

1. BCM M118, M119, M120, M121, M122, M123
2. Combination meter M53
3. Key slot M22
4. IPDM E/R E5, E6
5. Remote key less entry receiver M104
6. A/T shift selector (detention switch) M137

7. Front door switch (driver side) B16
8. Front door lock assembly (driver side) D15
9. Fuel lid lock actuator B242
10. Back door opener switch D114
11. Horn (high) E61, E62
12. Horn (low) E69, E70
13. Intelligent Key warning buzzer E57
A. Dash side lower (passenger side)
B. Engine room dash panel (RH)
C. Behind the instrument lower panel (driver side)
D. View with center console assembly removed
E. View with front door finisher (LH) is removed
F. View luggage side finisher lower (RH) is removed
G. View with front bumper is removed

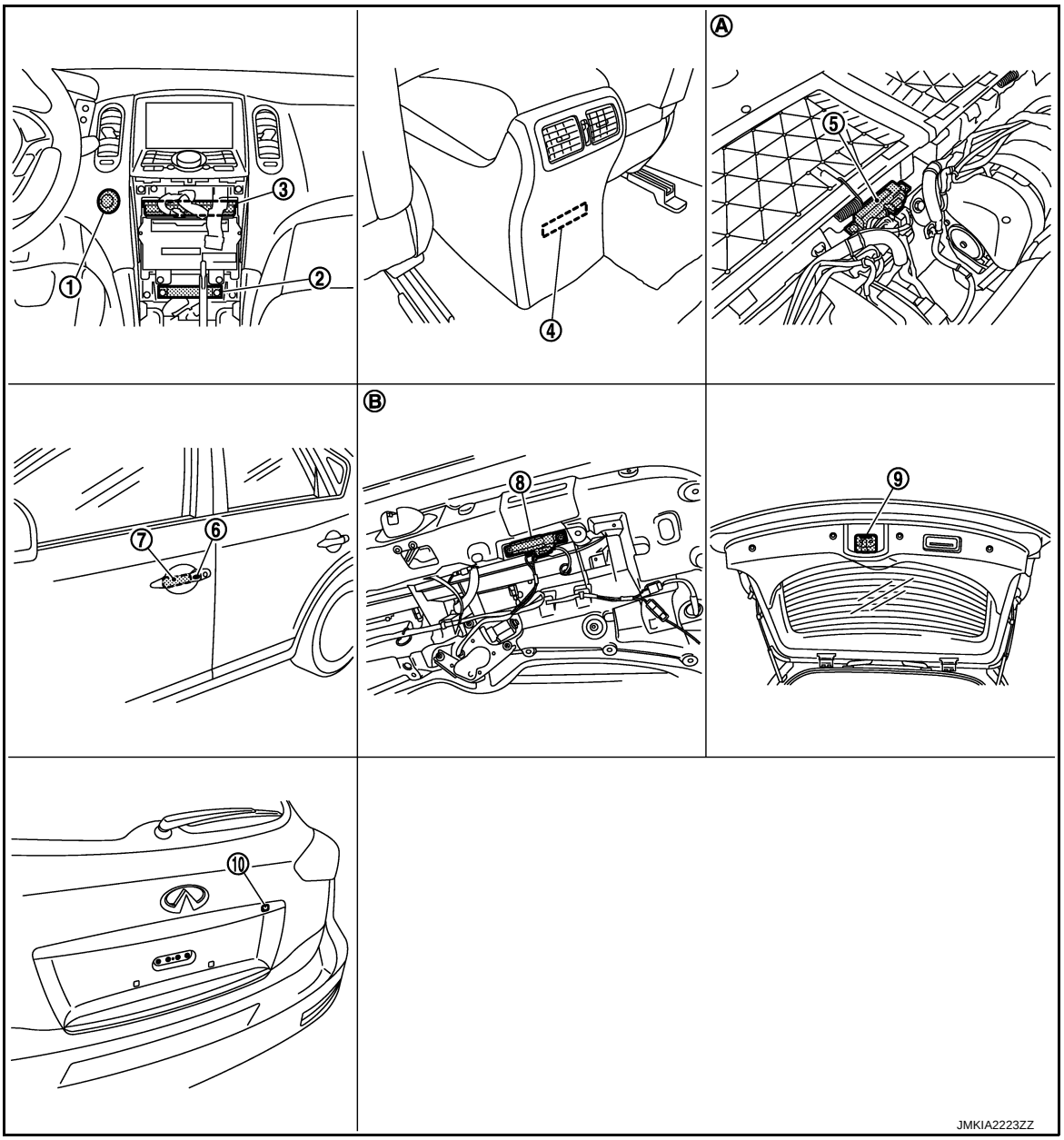

1. Push-button ignition switch (push switch) M50
2. Inside key antenna (instrument center) M131
3. Unified meter and A/C amp. M66, M67
4. Inside key antenna (console) M146
5. Inside key antenna (luggage room) B228
6. Front outside handle LH (request switch) D13
7. Front outside handle LH (outside key antenna) D14
8. Outside key antenna (back door) D118
9. Back door lock assembly D113

10. Back door opener request switch D116

A. View with luggage floor finisher front is removed
B. View with back door finisher inner is removed

BACK DOOR OPEN FUNCTION : Component Description

INFOID:0000000007456652

Item	Function
BCM	Controls the back door open function and room lamp function.
Back door opener switch	Input press/degrees signal to BCM.
Remote keyless entry receiver	Receives lock/unlock signal from the Intelligent Key, and then transmits to BCM.
Intelligent Key	Transmits button operation to remote keyless entry receiver.
Outside key antenna (back door)	Detects if Intelligent Key is outside the vehicle.

REMOTE KEYLESS ENTRY FUNCTION

REMOTE KEYLESS ENTRY FUNCTION : System Diagram

INFOID:0000000007456653

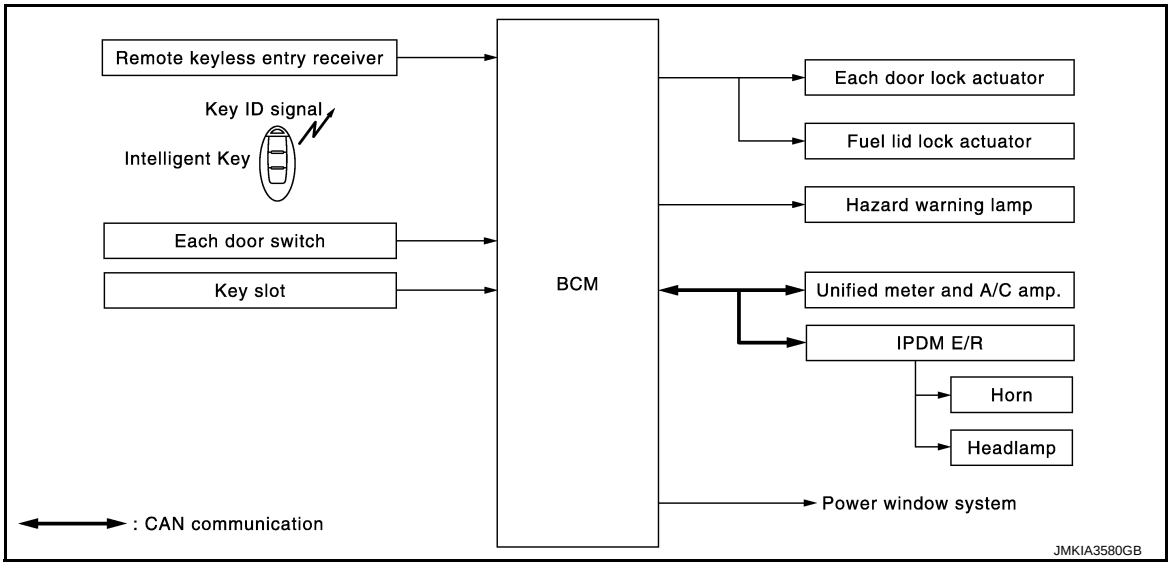

REMOTE KEYLESS ENTRY FUNCTION : System Description

INFOID:0000000007456654

The Intelligent Key has the same functions as the remote control entry system. Therefore, it can be used in the same manner as the remote controller by operating the door lock/unlock button.

OPERATION

Remote keyless entry system controls operation of the
- Door lock/unlock
- Selective unlock
- Hazard and horn reminder
- Auto door lock
- Panic alarm
- Power window down
- Interior lamp

OPERATION AREA

To ensure the Intelligent Key works effectively, use within 1 m (3ft) range of each doors, however the operable range may differ according to surroundings.

DOOR LOCK/UNLOCK FUNCTION

- When door lock/unlock button of the Intelligent Key is pressed, lock signal or unlock signal is transmits from Intelligent Key to BCM via remote keyless entry receiver.

- When BCM receives the door lock/unlock signal, it operates door lock actuator and fuel lid lock actuator, flashes the hazard lamp (lock: 2 time, unlock: 1 times) and horn chirp signal to IPDM E/R at the same time as a reminder.
- IPDM E/R honks horn (lock: 2 time) as a reminder

OPERATION CONDITION

Operation	Operation condition
Lock	All doors closed
Unlock	Intelligent Key is out of key slot

SELECTIVE UNLOCK FUNCTION

When an LOCK signal is transmitted from Intelligent Key, all doors and fuel lid will be locked.
When an UNLOCK signal is transmitted from Intelligent Key once, driver's door and fuel lid will be unlocked. Then, if an UNLOCK signal is transmitted from Intelligent Key again within 60 seconds, all other door will be unlocked.

HAZARD AND HORN REMINDER FUNCTION

When doors are locked or unlocked by Intelligent Key, BCM flashes hazard warning lamps as a reminder.
The hazard and horn reminder has a horn chirp mode (C mode) and a non-horn chirp mode (S mode).

Operating Function of Hazard and Horn Reminder

	C mode		S mode	
Intelligent Key operation	Lock	Unlock	Lock	Unlock
Hazard warning lamp flash	Twice	Once	Twice	—
Horn sound	Once	—	—	—

Hazard and horn reminder does not operate if any door switch is ON (any door is OPEN).

How to Change Hazard and Horn Reminder Mode

With CONSULT

Refer to DLK-53, "INTELLIGENT KEY : CONSULT Function (BCM - INTELLIGENT KEY)".

Without CONSULT

When LOCK and UNLOCK signals are sent from the Intelligent Key for more than 2 seconds at the same time, the hazard and horn reminder mode is changed and hazard warning lamp flashes and horn sounds as follows:

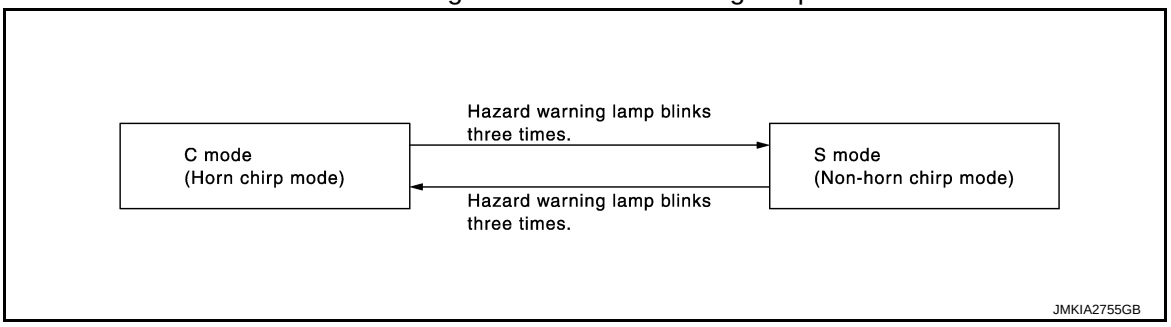

AUTO DOOR LOCK FUNCTION

When all doors and fuel lid are locked, ignition switch is OFF (ignition switch is not pressed) and key switch is OFF (Intelligent Key is not inserted in key slot), doors and fuel lid are unlocked with Intelligent Key button.
When BCM does not receive the following signals within 60 seconds, all doors and fuel lid are locked.

- Door switch is ON (door is opened)
- Door is locked
- Ignition switch is ON
- Key switch is ON (Intelligent Key is inserted in key slot)

Auto door lock mode can be changed by “AUTO LOCK SET” mode in “WORK SUPPORT”. Refer to DLK-53, "INTELLIGENT KEY : CONSULT Function (BCM - INTELLIGENT KEY)".

PANIC ALARM FUNCTION

When ignition switch is OFF (ignition switch is not pressed) and key switch is OFF (Intelligent Key is not inserted in key slot), BCM receives PANIC ALARM signal from Intelligent Key.

BCM turns on and off headlamp intermittently and transmits theft warning horn signal to IPDM E/R. Then, IPDM E/R turns on and off horn intermittently.
The headlamp flashes and the horn sounds intermittently.
The alarm automatically turns off:
- After 25 seconds
- When BCM receives any signal from Intelligent Key

Panic alarm function mode can be changed by “PANIC ALARM SET” mode in “WORK SUPPORT”. Refer to DLK-53, "INTELLIGENT KEY : CONSULT Function (BCM - INTELLIGENT KEY)".

KEYLESS POWER WINDOW DOWN (OPEN) FUNCTION

All power windows open when the unlock button on Intelligent Key is activated and kept pressed for more than 3 seconds with the ignition switch OFF. The windows keep opening if the unlock button is continuously pressed.
The power window opening stops when the following operations are performed:
- When the unlock button is kept pressed more than 15 seconds.
- When the ignition switch is turned ON while the power window opening is operated.
- When the unlock button is released.

While retained power operation activate, Keyless power window down (open) function cannot be operated.
Keyless power window down operation mode can be changed by “PW DOWN SET” mode in “WORK SUPPORT”. Refer to DLK-53, "INTELLIGENT KEY : CONSULT Function (BCM - INTELLIGENT KEY)".

INTERIOR ROOM LAMP CONTROL

Intelligent Key system turns on interior lamp by receiving UNLOCK signal from Intelligent Key. For detailed description, refer to INL-6, "System Description".

LIST OF OPERATION RELATED PARTS

Parts marked with × are the parts related to operation.

Remote keyless entry functions	Intelligent Key	Key slot	Door request switch	Door switch	Door lock actuator and fuel lid lock actuator	CAN communication system	BCM	Combination meter	Hazard warning lamp	Horn	IPDM E/R	Headlamp
Door lock/unlock function by remote control button	×	×		×	×		×					
Hazard and horn reminder function	×					×	×	×	×	×	×	
Selective unlock function	×			×	×		×					
Auto door lock function	×	×		×			×					
Panic alarm function	×		×			×	×			×	×	×

REMOTE KEYLESS ENTRY FUNCTION : Component Parts Location

INFOID:0000000007456655

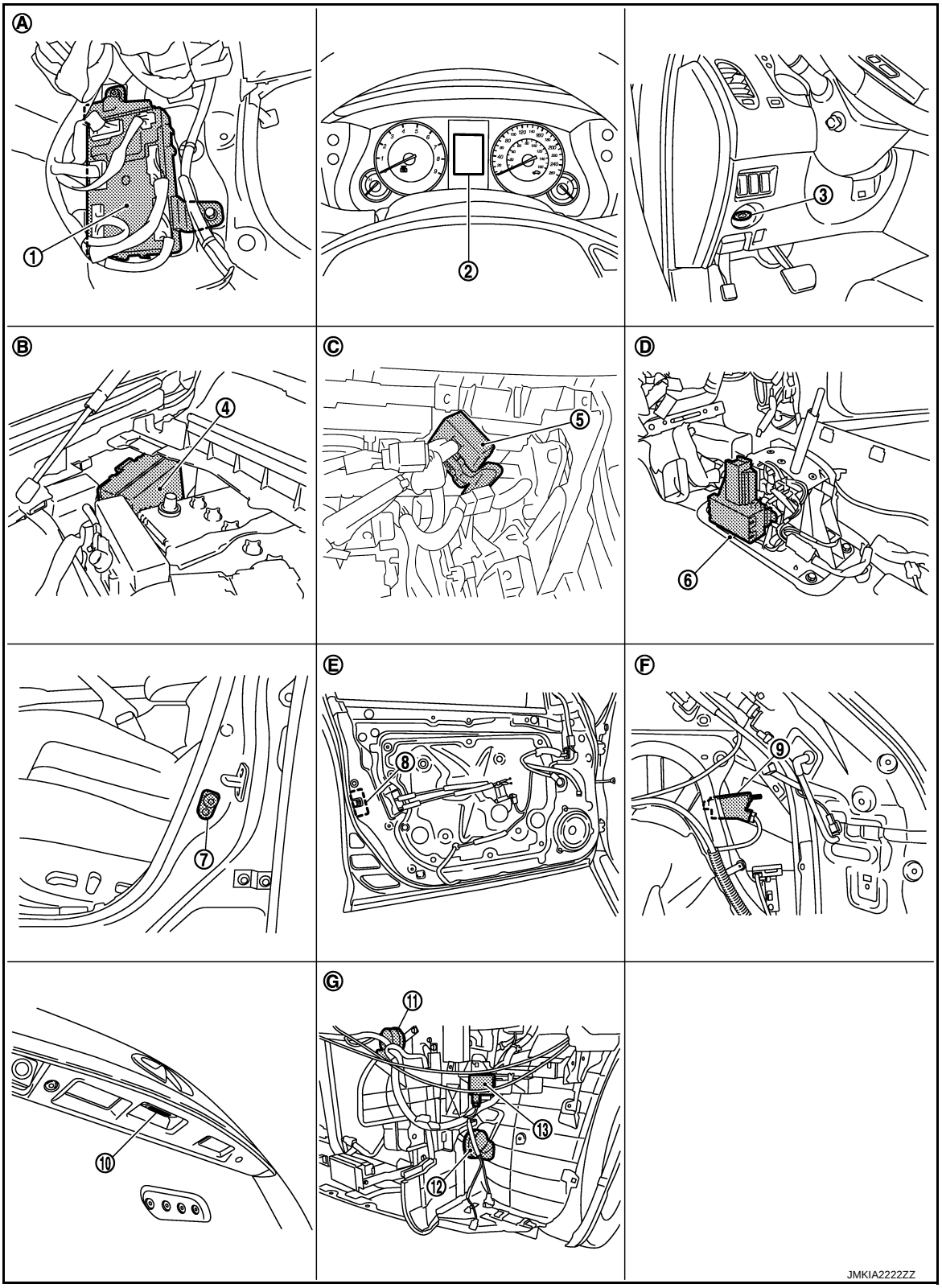

1. BCM M118, M119, M120, M121, M122, M123
2. Combination meter M53
3. Key slot M22
4. IPDM E/R E5, E6
5. Remote key less entry receiver M104
6. A/T shift selector (detention switch) M137

7. Front door switch (driver side) B16
8. Front door lock assembly (driver side) D15
9. Fuel lid lock actuator B242
10. Back door opener switch D114
11. Horn (high) E61, E62
12. Horn (low) E69, E70
13. Intelligent Key warning buzzer E57
A. Dash side lower (passenger side)
B. Engine room dash panel (RH)
C. Behind the instrument lower panel (driver side)
D. View with center console assembly removed
E. View with front door finisher (LH) is removed
F. View luggage side finisher lower (RH) is removed
G. View with front bumper is removed

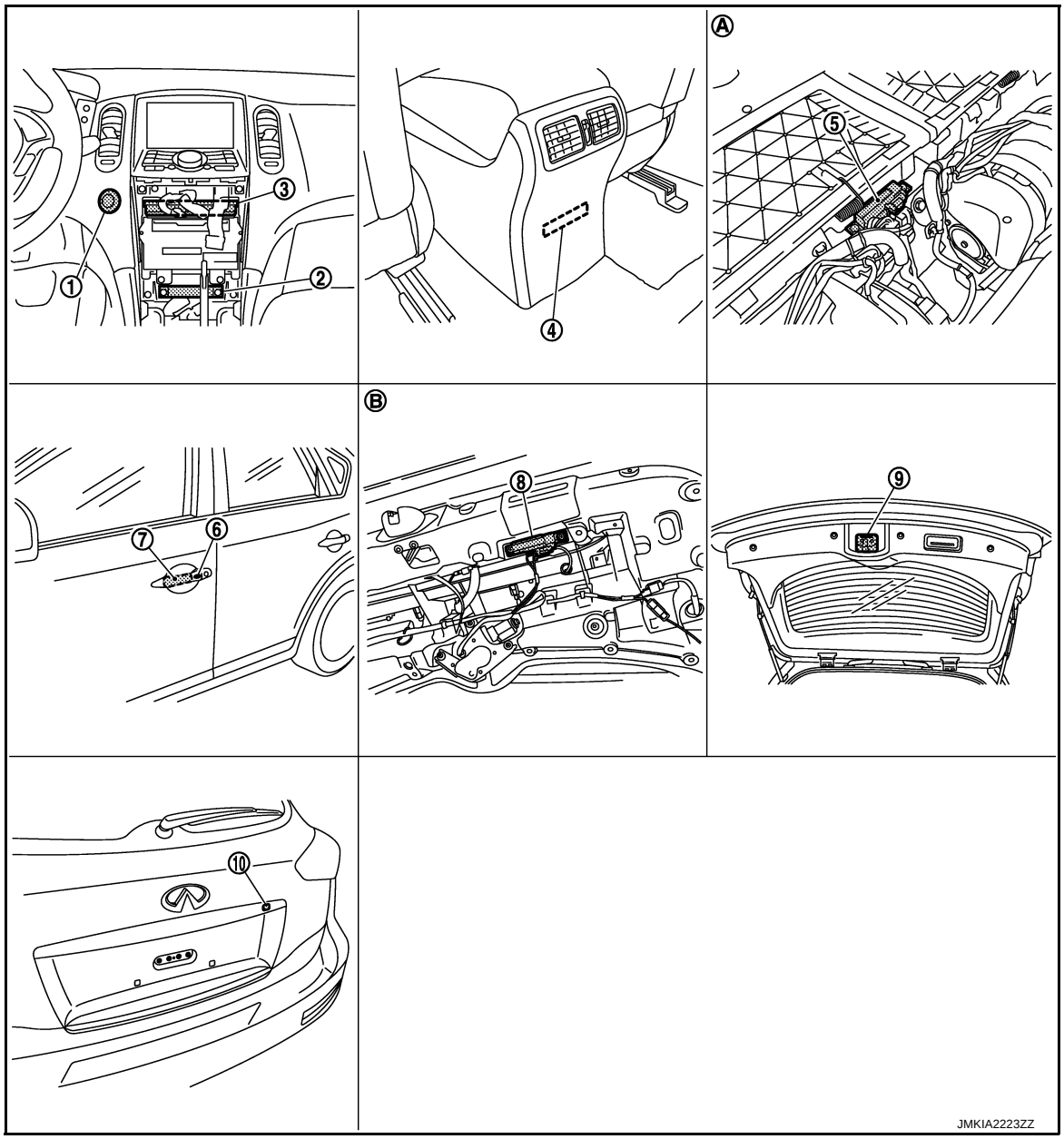

1. Push-button ignition switch (push switch) M50
2. Inside key antenna (instrument center) M131
3. Unified meter and A/C amp. M66, M67
4. Inside key antenna (console) M146
5. Inside key antenna (luggage room) B228
6. Front outside handle LH (request switch) D13
7. Front outside handle LH (outside key antenna) D14
8. Outside key antenna (back door) D118
9. Back door lock assembly D113

10. Back door opener request switch D116

A. View with luggage floor finisher front is removed
B. View with back door finisher inner is removed

REMOTE KEYLESS ENTRY FUNCTION : Component Description

INFOID:0000000007456656

Item	Function
BCM	Controls the door lock function and room lamp function.
IPDM E/R	Horn sounds and headlamp blinks via CAN communication between BCM.
Door lock actuator	Outputs lock/unlock signal from BCM and locks/unlocks each door.
Remote keyless entry receiver	Receives lock/unlock signal from the Intelligent Key, and then transmits to BCM.
Unified meter and A/C amp.	• Receive buzzer signal from BCM via CAN communication line, and sounds the buzzer. • Transmits vehicle speed signal to BCM via CAN communication line.
Combination meter	Display, buzzer (combination meter) and KEY warning lamp are installed to combination meter.
Intelligent Key	Transmits button operation to remote keyless entry receiver.

WELCOME LIGHT FUNCTION

WELCOME LIGHT FUNCTION : System Description

INFOID:0000000007456657

CONDITION OF SEARCHING

If all following conditions are satisfied, BCM search Intelligent Key by outside key antenna (front outside handle LH/RH and back door). BCM has timer to search for 14 days (every 0.3 sec.). If run the engine, the timer will be reset.

Function	Condition
Welcome light function	• System setting is active. • All doors are closed. • Ignition position is OFF. • There is no Intelligent Key inside vehicle. • Shift position is P position. • All doors are closed and locked (or auto lock timer is running).

OPERATION PROCEDURE

BCM search outside key antenna (front outside handle LH/RH and back door) detection area. If registered Intelligent Key is detected, BCM turn ON the room lamp and puddle lamp.
For detailed description after turning ON the lamps, refer toINL-6, "System Description".

SYSTEM SETTING PROCEDURE

Setting of welcome light function can be changed by following procedure. (for system setting by CONSULT: refer to DLK-53, "INTELLIGENT KEY : CONSULT Function (BCM - INTELLIGENT KEY)".)

1. Confirm Intelligent Key is removed from key slot.
2. Turn ignition switch ON and press and hold request switch (driver side) more than 5 seconds.
3. Confirm sounds of buzzer (combination meter).

Pi, Pi, Pi··· (approx. 1.2 sec.): Welcome light function is OFF.
Pi, Pi, Pi···(approx. 2.4 sec.): Welcome light function is ON.

WELCOME LIGHT FUNCTION : Component Parts Location

INFOID:0000000007456658

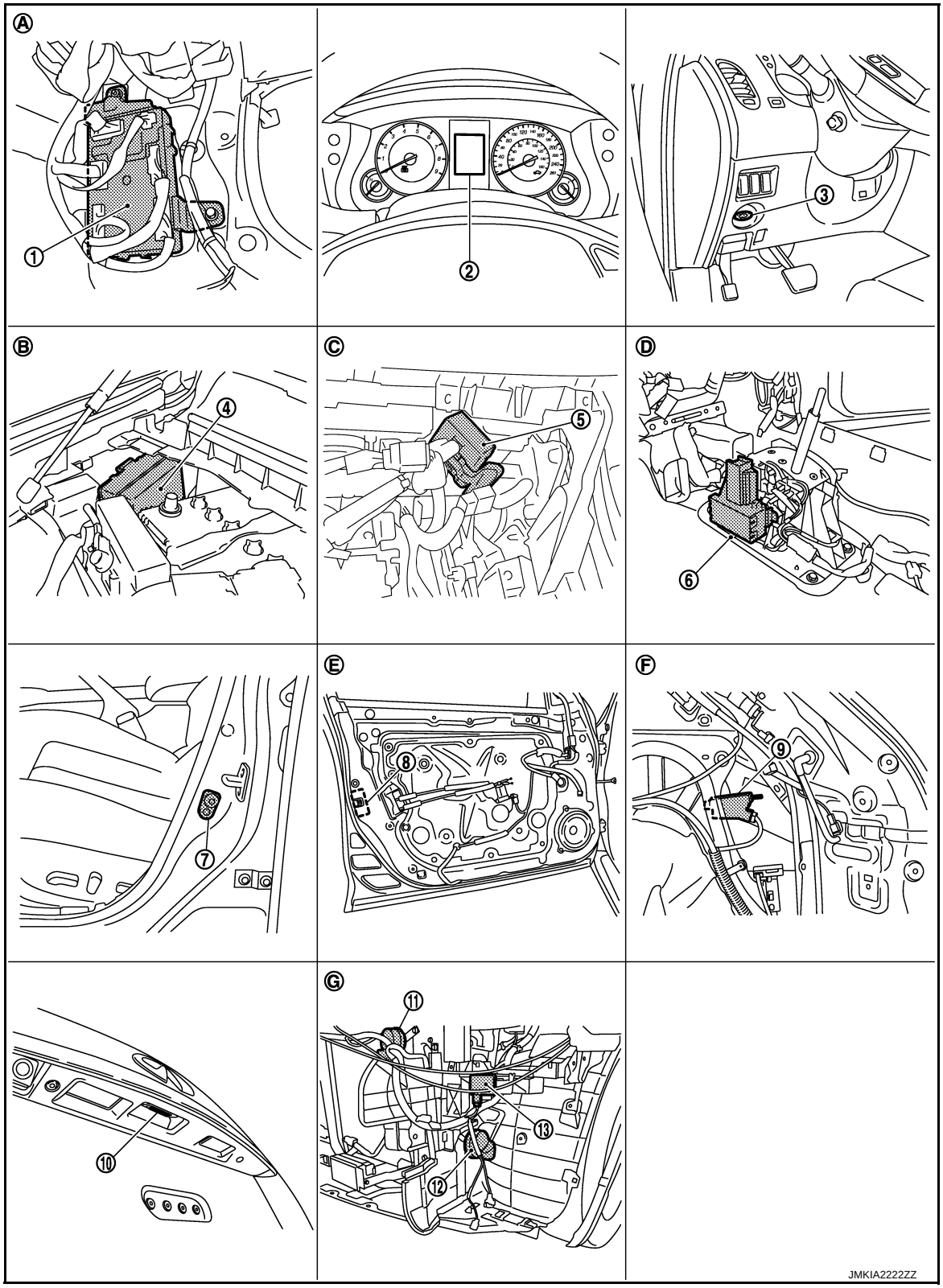

1. BCM M118, M119, M120, M121, M122, M123
2. Combination meter M53
3. Key slot M22
4. IPDM E/R E5, E6
5. Remote key less entry receiver M104
6. A/T shift selector (detention switch) M137

7. Front door switch (driver side) B16
8. Front door lock assembly (driver side) D15
9. Fuel lid lock actuator B242
10. Back door opener switch D114
11. Horn (high) E61, E62
12. Horn (low) E69, E70
13. Intelligent Key warning buzzer E57
A. Dash side lower (passenger side)
B. Engine room dash panel (RH)
C. Behind the instrument lower panel (driver side)
D. View with center console assembly removed
E. View with front door finisher (LH) is removed
F. View luggage side finisher lower (RH) is removed
G. View with front bumper is removed

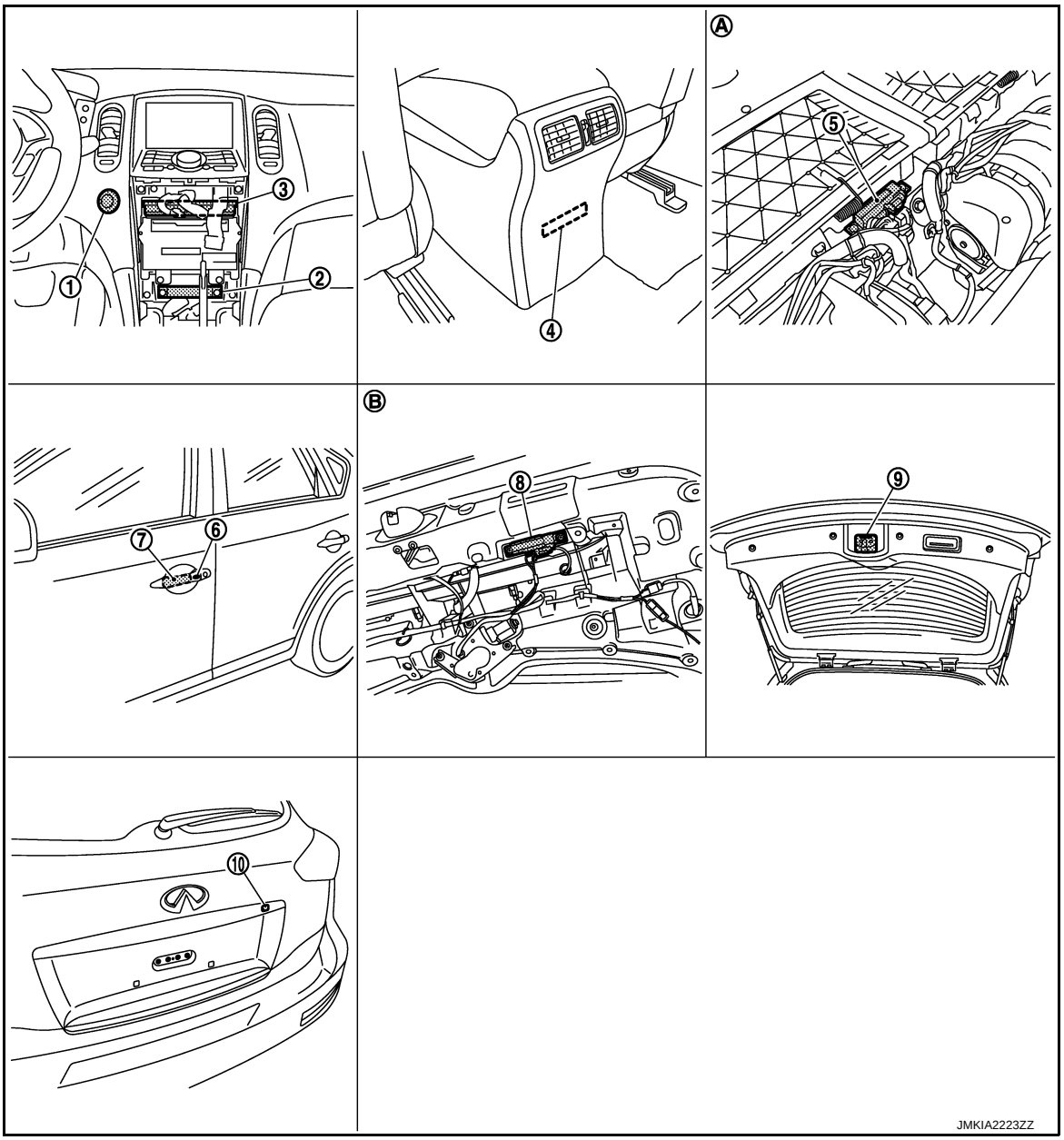

1. Push-button ignition switch (push switch) M50
2. Inside key antenna (instrument center) M131
3. Unified meter and A/C amp. M66, M67
4. Inside key antenna (console) M146
5. Inside key antenna (luggage room) B228
6. Front outside handle LH (request switch) D13
7. Front outside handle LH (outside key antenna) D14
8. Outside key antenna (back door) D118
9. Back door lock assembly D113

10. Back door opener request switch D116

A. View with luggage floor finisher front is removed
B. View with back door finisher inner is removed

KEY REMINDER FUNCTION

KEY REMINDER FUNCTION : System Description

INFOID:0000000007456659

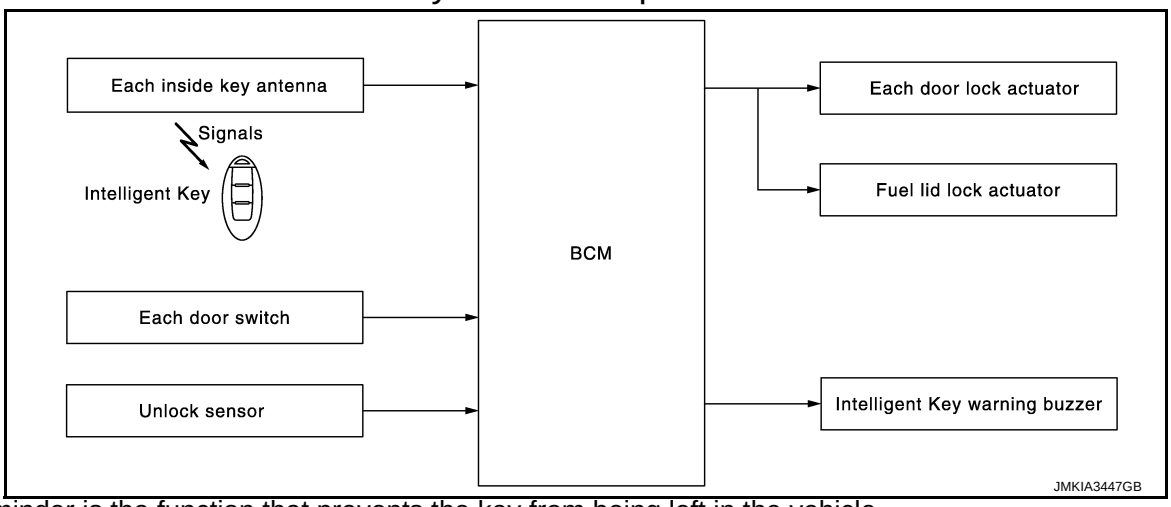

Key reminder is the function that prevents the key from being left in the vehicle.
Key reminder has the following 3 functions.

Key remainder function	Operation condition	Operation
Driver door closed*	Right after driver side door is closed under the following conditions • Door lock operation is performed • Driver side door is opened • Driver side door is in lock state	All doors and fuel lid unlock
Door is open or closed	Right after all doors are closed under the following conditions • Intelligent Key is inside the vehicle • Any door is opened • All doors are locked by door lock and unlock switch or door lock knob	• All doors and fuel lid unlock • Honk Intelligent Key warning buzzer
Back door is closed	Right after back door is closed under the following conditions • Intelligent Key is inside vehicle • All doors (except back door) are closed • All doors (except back door) are locked	• All doors and fuel lid unlock • Back door can open with back door opener switch • Honk Intelligent Key warning buzzer

*:If the door closing impact shocks the door lock knob, or contacts against baggage with the door lock knob might activate the door locks accidentally but unlock operation will be perform in these cases.

CAUTION:

- **The above function operates when the Intelligent Key is inside the vehicle. However, there may be times when the Intelligent Key cannot be detected, and this function will not operate when the Intelligent Key is on the instrument panel, or in the glove box. Also, this system sometimes does not operate if the Intelligent Key is in the door pocket for the open door.**
- **Key reminder function is operated when the back door is open/closed and the buzzers sound, if the following operations are performed, the key reminder function is cleared and buzzer sounds are stopped.**

- Remote controller door lock button operation of Intelligent Key
- Remote controller door unlock button operation of Intelligent Key
- When the back door is closed, the Intelligent Key is not inside the vehicle
- When any door is open

KEY REMINDER FUNCTION : Component Parts Location

INFOID:0000000007456660

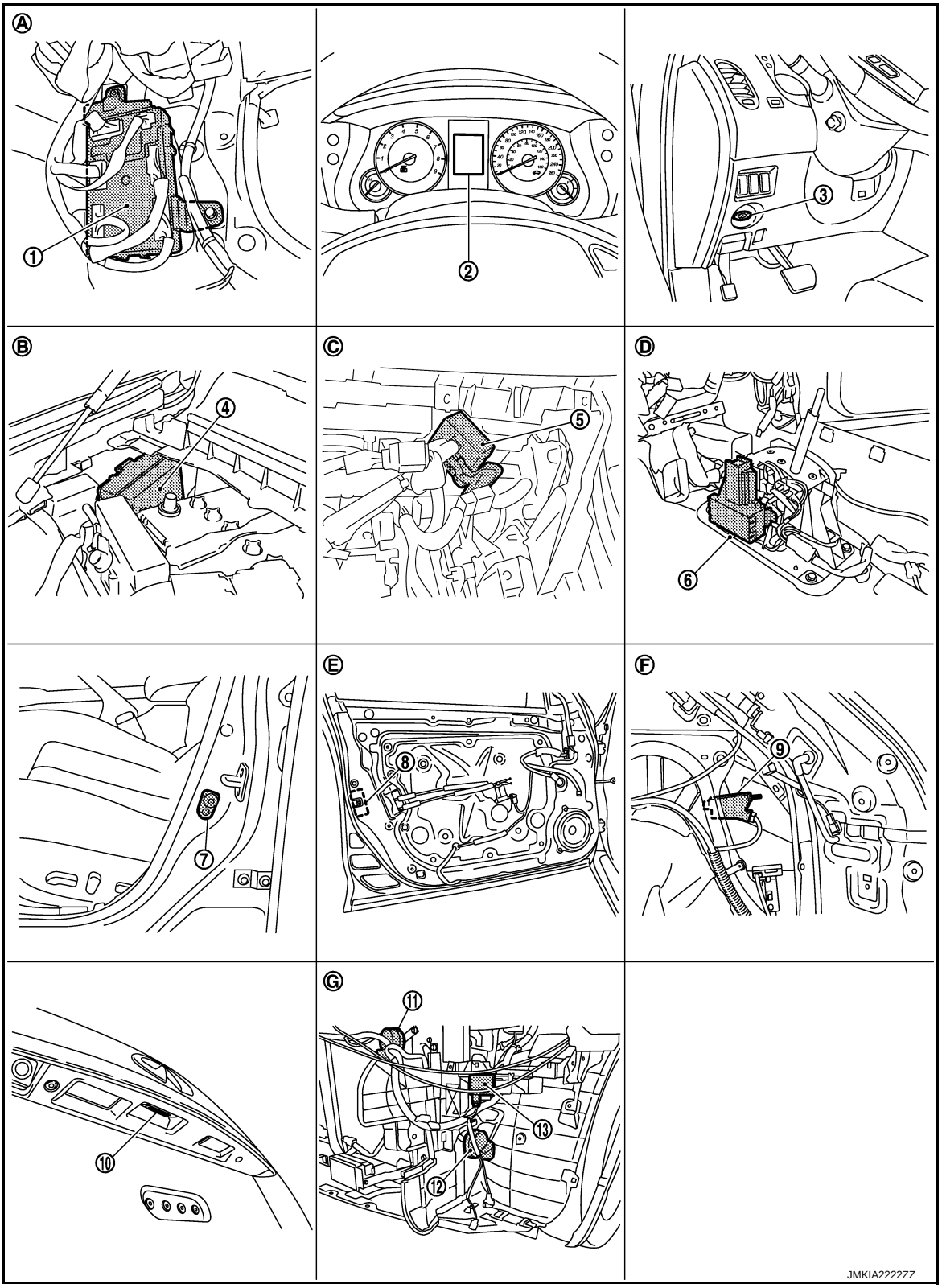

1. BCM M118, M119, M120, M121, M122, M123
2. Combination meter M53
3. Key slot M22
4. IPDM E/R E5, E6
5. Remote key less entry receiver M104
6. A/T shift selector (detention switch) M137

7. Front door switch (driver side) B16
8. Front door lock assembly (driver side) D15
9. Fuel lid lock actuator B242
10. Back door opener switch D114
11. Horn (high) E61, E62
12. Horn (low) E69, E70
13. Intelligent Key warning buzzer E57
A. Dash side lower (passenger side)
B. Engine room dash panel (RH)
C. Behind the instrument lower panel (driver side)
D. View with center console assembly removed
E. View with front door finisher (LH) is removed
F. View luggage side finisher lower (RH) is removed
G. View with front bumper is removed

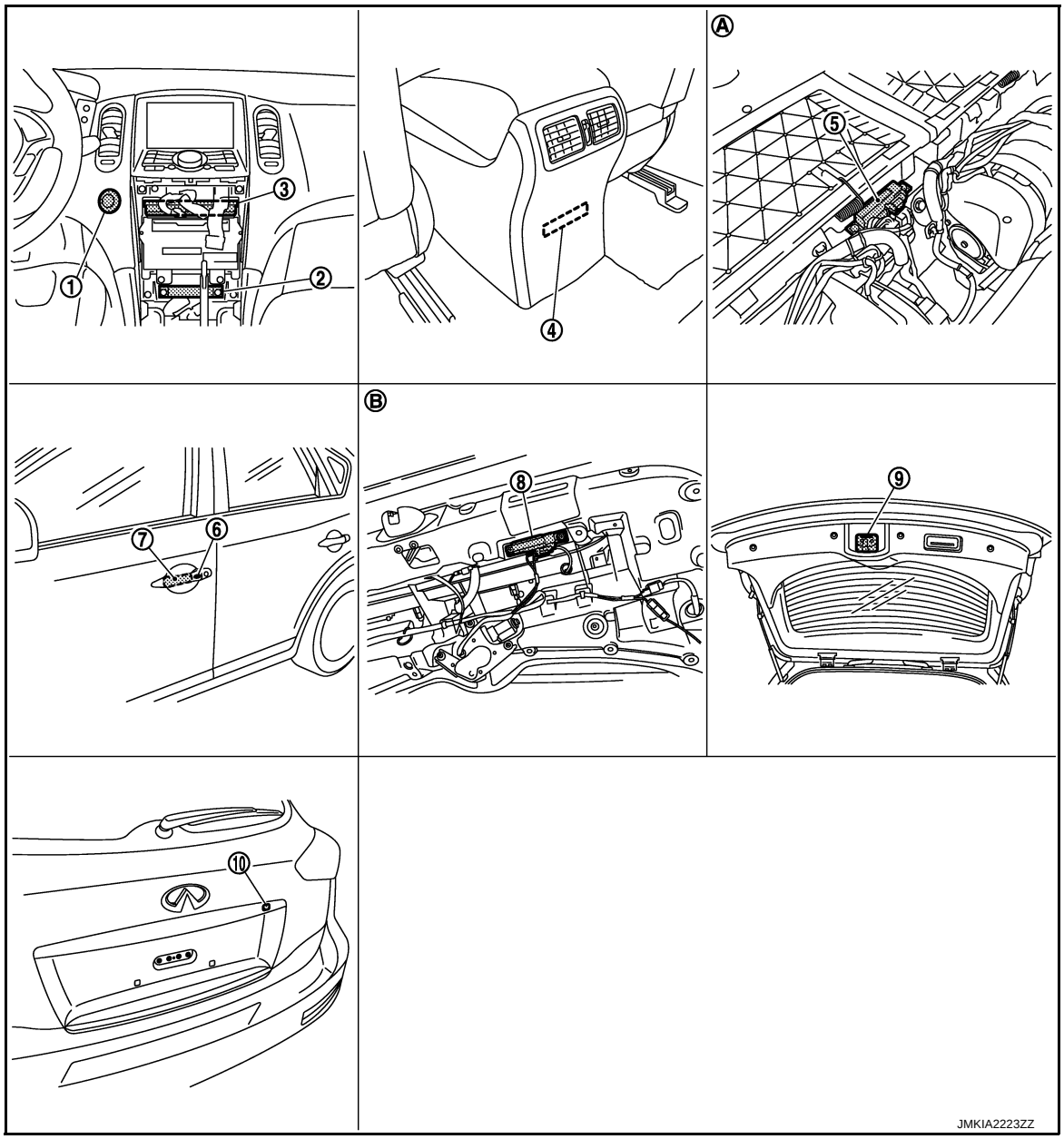

1. Push-button ignition switch (push switch) M50
2. Inside key antenna (instrument center) M131
3. Unified meter and A/C amp. M66, M67
4. Inside key antenna (console) M146
5. Inside key antenna (luggage room) B228
6. Front outside handle LH (request switch) D13
7. Front outside handle LH (outside key antenna) D14
8. Outside key antenna (back door) D118
9. Back door lock assembly D113

10. Back door opener request switch D116

A. View with luggage floor finisher front is removed
B. View with back door finisher inner is removed

WARNING FUNCTION

WARNING FUNCTION : System Description

INFOID:0000000007456661

OPERATION DESCRIPTION

The warning function are as follows and are given to the user as warning information and warnings using combinations of Intelligent Key warning buzzer, KEY warning lamp, key slot illumination and information display in combination meter.

- Intelligent Key system malfunction
- OFF position warning
- P position warning
- ACC warning
- Take away warning
- Door lock operation warning
- Key warning
- Intelligent Key insert information
- Engine start information
- Intelligent key low battery warning
- Key ID warning

OPERATION CONDITION

Once the following condition from below is established, alert or warning will be executed.

Warning/Information functions		Operation procedure
Intelligent Key system malfunction		When a malfunction is detected on BCM, “KEY” warning lamp will illuminate.
OFF position warning	For internal	When condition A, B or condition C is satisfied • Condition A - Ignition switch: ACC position - Door switch (driver side): ON (Door is open) • Condition B - Turn ignition switch from ON to OFF while door is open • Condition C - Intelligent Key is inserted in key slot - Door switch (driver side): ON (Door is open)
	For external	OFF position warning (For internal) is in active mode, driver side door has been closed. **NOTE:** OFF position (For external) active only when each of the sequence has occurred as below: P position warning → ACC warning → OFF position warning (For internal) → OFF position warning (For internal)
P position warning		• Shift position: Except P position. • Engine is running to stopped (Ignition switch is ON to OFF).
ACC warning		• During P position warning is in active mode, shift position has changed P position. • Ignition switch: ACC position.

Warning/Information functions		Operation procedure
Take away warning	Door is open to close	• Ignition switch: Except LOCK position. • Door switch: ON to OFF (Door is open to close). • Intelligent Key can not be detected inside the vehicle.
	Door is open	• Door switch: ON (Door is open). • Key ID verification every 5 seconds when registered Intelligent Key can not be detected inside the vehicle.
	Push button-ignition switch operation	• Ignition switch: Except LOCK position. • Press push-button ignition switch. • Intelligent Key can not be detected inside the vehicle.
	Intelligent Key is removed from key slot	• When Intelligent Key is removed from key slot, Intelligent Key can not be detected inside the vehicle.
Door lock operation warning	Request switch operation	When request switch is pushed (lock operation) under the following conditions. • All door is closed. • All door is unlocked. • Intelligent Key is inside vehicle.
	Intelligent Key button operation	When Intelligent Key button is pushed (lock operation) under the following conditions. • Door switch: ON (Any door is open). • For 3 seconds after Intelligent Key is removed from key slot.
Key warning		• Ignition switch is OFF position. • Driver side door switch: ON (Driver side door is open). • Intelligent Key is inserted in key slot.
Intelligent Key insert information		• Door switch: ON to OFF (Door is open to close). • Ignition switch: OFF to ON position. • Intelligent Key is out of key slot. • Intelligent Key can not be detected inside the vehicle.
Engine start information	Ignition switch is ON position	• Ignition switch: ON position. • Shift position: P position. • Engine is stopped.
	Ignition switch is except ON position	• Ignition switch: Except ON position. • Shift position: P position. • Intelligent Key is inserted in key slot or Intelligent Key can be detected inside the vehicle.
Intelligent Key low battery warning		When Intelligent Key is low battery, BCM is detected after ignition switch is turned ON.
Key ID warning		When registered intelligent Key can not be detected inside the vehicle after ignition switch is turned ON.

WARNING METHOD

The following table shows the alarm or warning methods with chime.
Information display (combination meter), “KEY” indicator or key slot illumination when the warning conditions are met.

Warning/Information functions		“KEY” warning lamp	Information display (combination meter)	Key slot indicator	Warning chime	
					Combination meter buzzer	Intelligent Key warning buzzer
Intelligent Key system malfunction		Illuminate	—	—	—	—
OFF position warning	For internal	—	—	—	Activate	—
	For external	—	—	—	—	Activate

Warning/Information functions		"KEY" warning lamp	Information display (combination meter)	Key slot indicator	Warning chime	
					Combination meter buzzer	Intelligent Key warning buzzer
P position warning		—	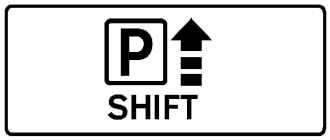 JMKIA0037GB	—	Activate	—
ACC warning		—	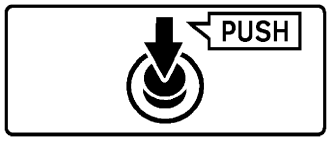 JMKIA0047GB	—	—	—
Take away warning	Door is open to close	—	JMKIA0036GB	Blink	Activate	Activate
	Door is open	—		Blink	—	—
	Push-ignition switch operation	—		Blink	Activate	—
	Take away through window	—		Blink	Activate	—
	Intelligent Key is removed from key slot	—		Blink	—	—
Door lock operation warning	Request switch operation	—	—	—	—	Activate
	Intelligent Key operation	—	—	—	—	Activate
Key ID warning		—	JMKIA0036GB	—	—	—
Key warning		—	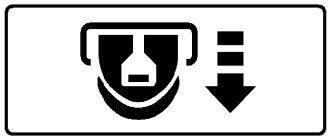 JMKIA0035GB	Blink	Activate	—
Intelligent Key insert information		—	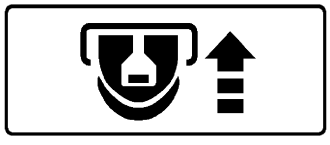 JMKIA0034GB	Blink	—	—

Warning/Information functions	"KEY" warning lamp	Information display (combination meter)	Key slot indicator	Warning chime	
				Combination meter buzzer	Intelligent Key warning buzzer
Engine start information	—	JMKIA0032GB	—	—	—
Intelligent Key low battery warning	—	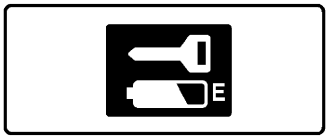 JMKIA0048GB	—	—	—

LIST OF OPERATION RELATED PARTS

Parts marked with × are the parts related to operation.

Warning function		Intelligent Key	Key slot	Ignition switch	Door switch	Door request switch	Inside key antenna	Outside key antenna	Intelligent Key warning buzzer	Combination meter warning buzzer	CAN communication system	BCM	Combination meter display	Key slot illumination	Detention switch	"KEY" warning lamp
Intelligent Key system malfunction											×	×				×
OFF position warning	For internal				×					×	×	×				
	For external				×				×			×				
P position warning				×						×	×	×	×		×	
ACC warning				×						×	×	×	×		×	
Take away warning	Door is open or close	×			×		×		×	×	×	×	×	×		
	Door is open	×			×		×				×	×	×	×		
	Push-ignition switch operation	×		×			×			×	×	×	×	×		
	Intelligent Key is removed from key slot	×	×				×				×	×	×	×		
Door lock operation warning		×	×		×	×	×	×	×			×				
Key ID warning		×	×	×			×				×	×	×			
Key warning		×	×		×					×	×	×	×	×		
Intelligent Key insert information		×	×	×	×		×				×	×	×	×		

Warning function		Intelligent Key	Key slot	Ignition switch	Door switch	Door request switch	Inside key antenna	Outside key antenna	Intelligent Key warning buzzer	Combination meter warning buzzer	CAN communication system	BCM	Combination meter display	Key slot illumination	Detention switch	"KEY" warning lamp
Engine start information	Ignition switch is ON position	×	×	×			×				×	×	×		×	
	Ignition switch is except ON position	×	×	×			×				×	×	×			
Intelligent Key low battery warning		×					×				×	×	×			

WARNING FUNCTION : Component Parts Location

INFOID:0000000007456662

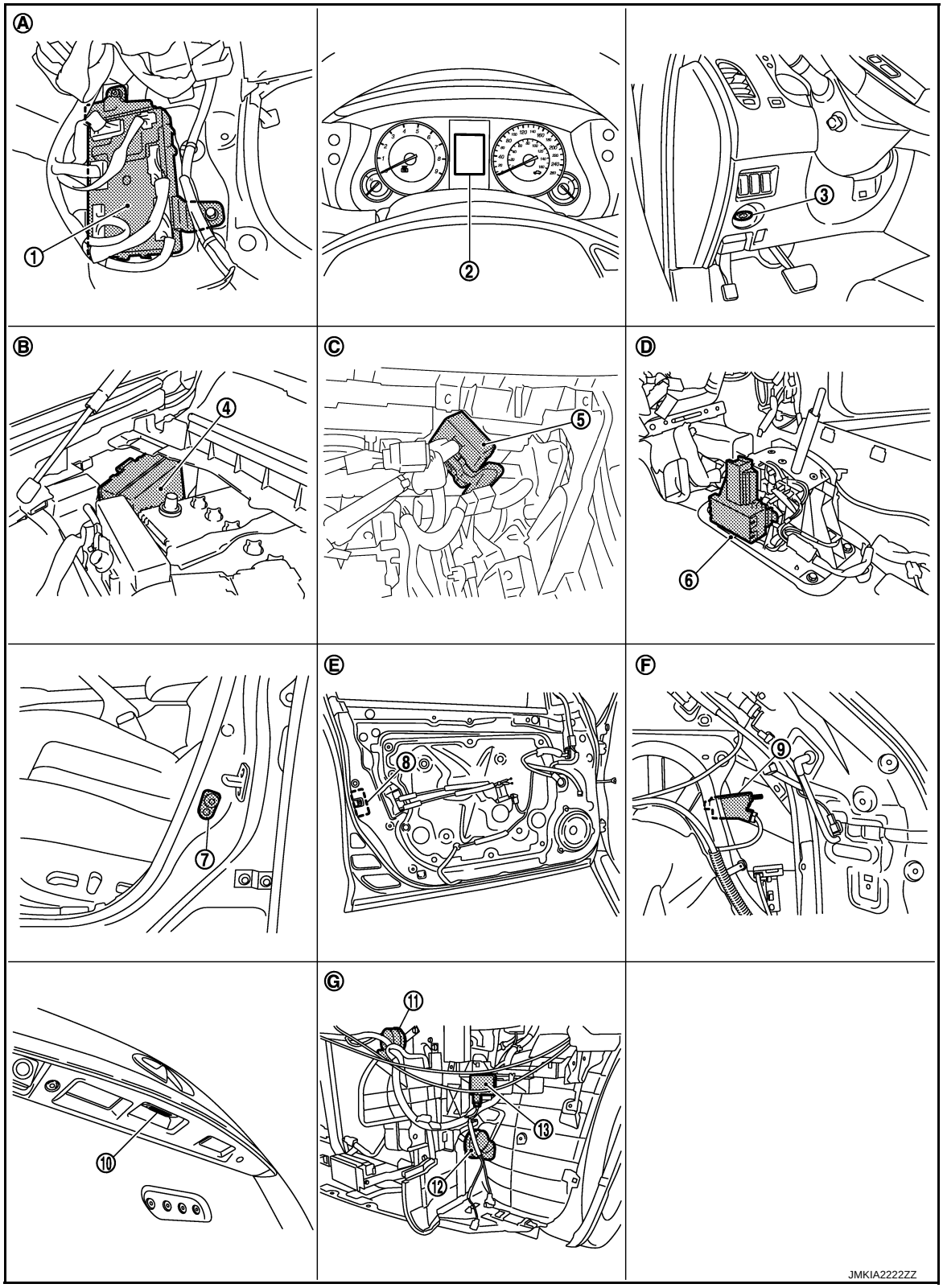

1. BCM M118, M119, M120, M121, M122, M123
2. Combination meter M53
3. Key slot M22
4. IPDM E/R E5, E6
5. Remote key less entry receiver M104
6. A/T shift selector (detention switch) M137

7. Front door switch (driver side) B16
8. Front door lock assembly (driver side) D15
9. Fuel lid lock actuator B242
10. Back door opener switch D114
11. Horn (high) E61, E62
12. Horn (low) E69, E70
13. Intelligent Key warning buzzer E57
A. Dash side lower (passenger side)
B. Engine room dash panel (RH)
C. Behind the instrument lower panel (driver side)
D. View with center console assembly removed
E. View with front door finisher (LH) is removed
F. View luggage side finisher lower (RH) is removed
G. View with front bumper is removed

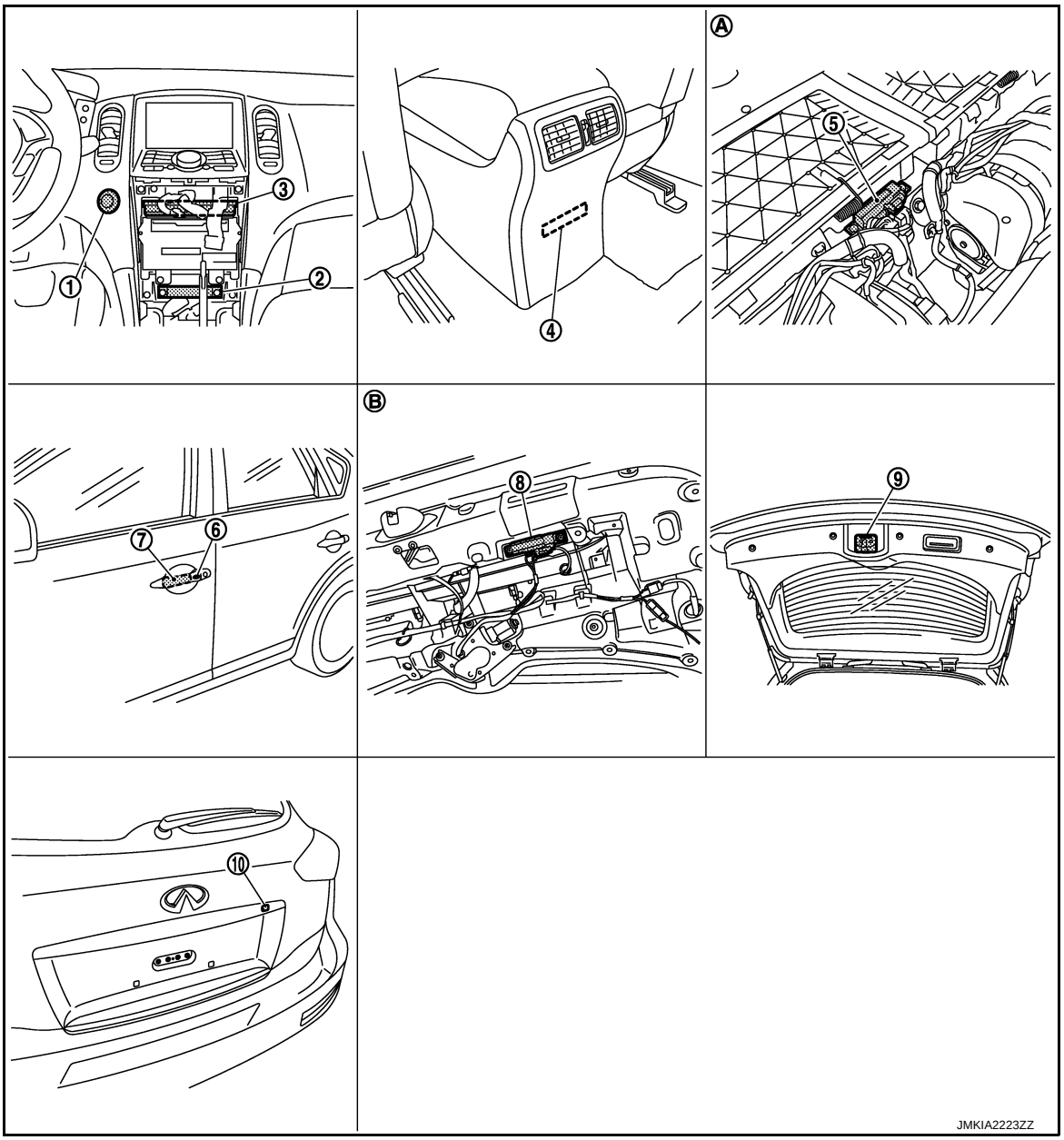

1. Push-button ignition switch (push switch) M50
2. Inside key antenna (instrument center) M131
3. Unified meter and A/C amp. M66, M67
4. Inside key antenna (console) M146
5. Inside key antenna (luggage room) B228
6. Front outside handle LH (request switch) D13
7. Front outside handle LH (outside key antenna) D14
8. Outside key antenna (back door) D118
9. Back door lock assembly D113

10. Back door opener request switch D116

A. View with luggage floor finisher front is removed

B. View with back door finisher inner is removed

BACK DOOR OPENER SYSTEM

System Diagram

INFOID:0000000007456663

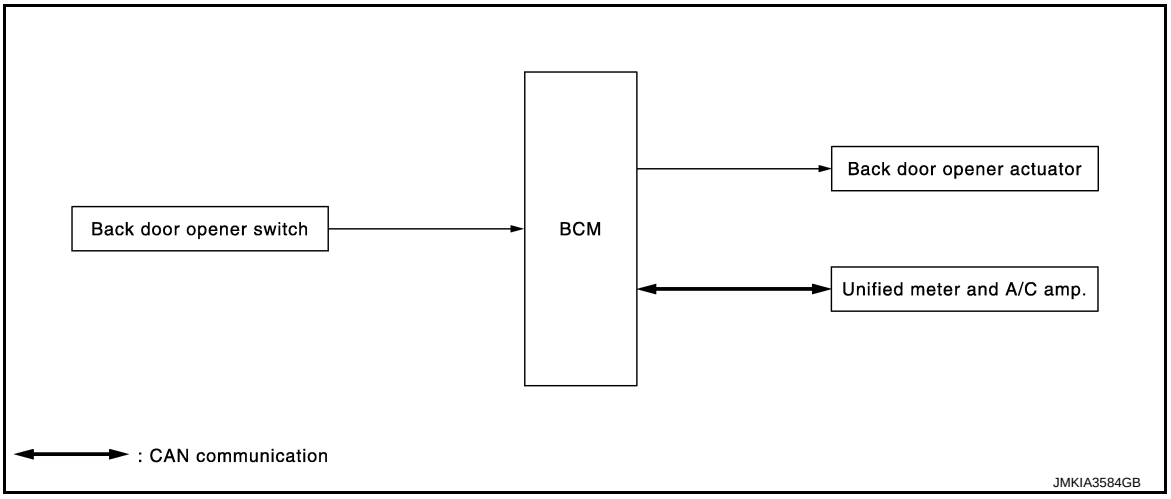

System Description

INFOID:0000000007456664

BACK DOOR OPENER OPERATION

When back door opener switch is pressed, BCM opens back door opener actuator.

NOTE:

Back door opener actuator is not for locking the back door. The function is only to open the back door.

OPERATION CONDITION

If the following conditions are satisfied, back door opener operation is performed.

Back door opener switch operation	Operation condition
Back door open	• All door is unlocked.* • Vehicle speed is less than 5 km/h (3 MPH).

*: Except UNLOCK by door lock knob operation.

Component Parts Location

INFOID:0000000007456665

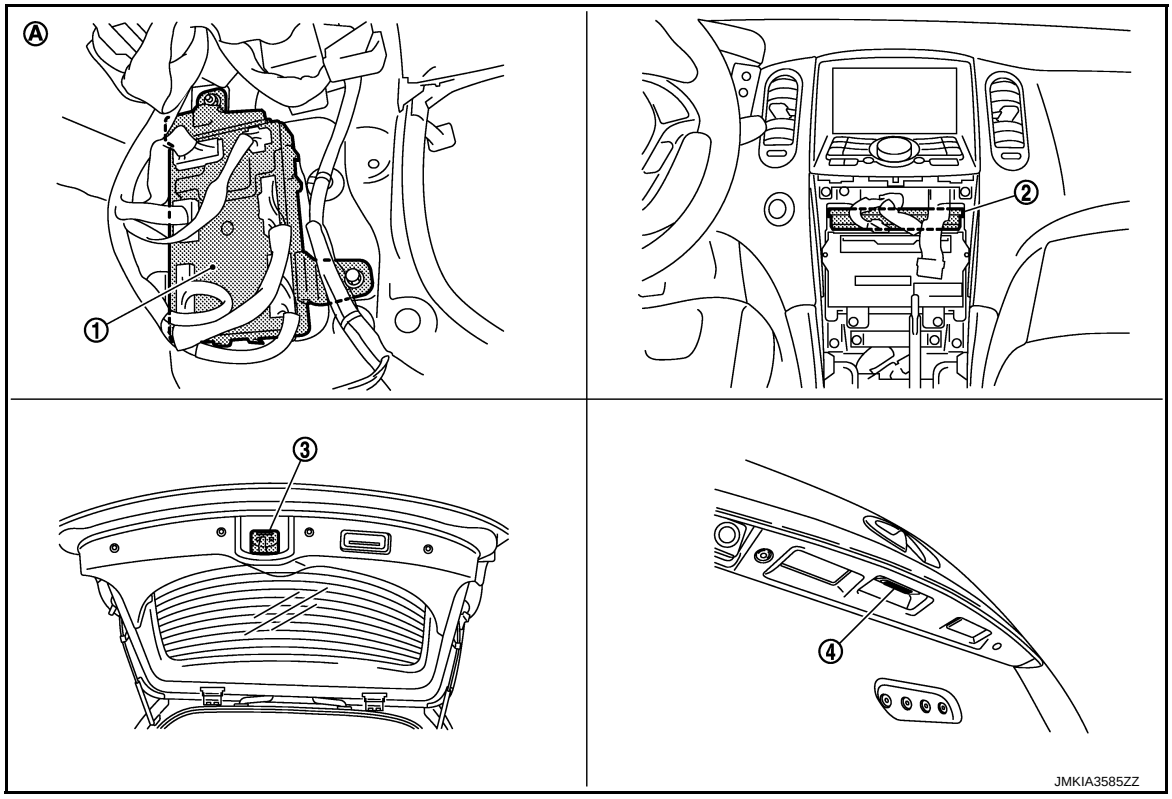

1. BCM M118, M119, M120, M121, M122
2. Unified meter and A/C amp. M66, M67
3. Back door lock assembly D113
4. Back door opener switch D114

A. Behind the center console

Component Description

INFOID:0000000007456666

Item	Function
BCM	Controls the back door opener function.
Back door opener switch	Input back door opener switch operation signal to BCM.
Back door opener actuator	Opens the back door with the back door open signal from BCM.
Unified meter and A/C amp.	Transmits vehicle speed signal to BCM via CAN communication.

INTEGRATED HOMELINK TRANSMITTER

Component Description

INFOID:0000000007456667

Item	Function
Homelink universal transceiver	A maximum of 3 radio signals can be stored and transmitted to operate the garage door, etc.

DIAGNOSIS SYSTEM (BCM)
COMMON ITEM
COMMON ITEM : CONSULT Function (BCM - COMMON ITEM)

INFOID:0000000007630755

APPLICATION ITEM
CONSULT performs the following functions via CAN communication with BCM.

Diagnosis mode	Function Description
Work Support	Changes the setting for each system function.
Self Diagnostic Result	Displays the diagnosis results judged by BCM.
CAN Diag Support Monitor	Monitors the reception status of CAN communication viewed from BCM.
Data Monitor	The BCM input/output signals are displayed.
Active Test	The signals used to activate each device are forcibly supplied from BCM.
Ecu Identification	The BCM part number is displayed.
Configuration	• Read and save the vehicle specification. • Write the vehicle specification when replacing BCM.

SYSTEM APPLICATION
BCM can perform the following functions for each system.
NOTE:
It can perform the diagnosis modes except the following for all sub system selection items.

×: Applicable item

System	Sub system selection item	Diagnosis mode		
		Work Support	Data Monitor	Active Test
Door lock	DOOR LOCK	×	×	×
Rear window defogger	REAR DEFOGGER		×	×
Warning chime	BUZZER		×	×
Interior room lamp timer	INT LAMP	×	×	×
Exterior lamp	HEAD LAMP	×	×	×
Wiper and washer	WIPER	×	×	×
Turn signal and hazard warning lamps	FLASHER	×	×	×
—	AIR CONDITONER*			
• Intelligent Key system • Engine start system	INTELLIGENT KEY	×	×	×
Combination switch	COMB SW		×	
Body control system	BCM	×		
IVIS - NATS	IMMU		×	×
Interior room lamp battery saver	BATTERY SAVER	×	×	×
Back door open system	TRUNK		×	×
Vehicle security system	THEFT ALM	×	×	×
RAP system	RETAINED PWR		×	
Signal buffer system	SIGNAL BUFFER		×	×
TPMS	AIR PRESSURE MONITOR	×	×	×

NOTE:

*: This item is displayed, but is not used.

FREEZE FRAME DATA (FFD)
The BCM records the following vehicle condition at the time a particular DTC is detected, and displays on CONSULT.

CONSULT screen item	Indication/Unit	Description	
Vehicle Speed	km/h	Vehicle speed of the moment a particular DTC is detected	
Odo/Trip Meter	km	Total mileage (Odometer value) of the moment a particular DTC is detected	
Vehicle Condition	SLEEP>LOCK	Power supply position status of the moment a particular DTC is detected*	While turning BCM status from low power consumption mode to normal mode (Power supply position is “LOCK”*)
	SLEEP>OFF		While turning BCM status from low power consumption mode to normal mode (Power supply position is “OFF”.)
	LOCK>ACC		While turning power supply position from “LOCK”* to “ACC”
	ACC>ON		While turning power supply position from “ACC” to “IGN”
	RUN>ACC		While turning power supply position from “RUN” to “ACC” (Except emergency stop operation)
	CRANK>RUN		While turning power supply position from “CRANKING” to “RUN” (From cranking up the engine to run it)
	RUN>URGENT		While turning power supply position from “RUN“ to “ACC” (Emergency stop operation)
	ACC>OFF		While turning power supply position from “ACC” to “OFF”
	OFF>LOCK		While turning power supply position from “OFF” to “LOCK”*
	OFF>ACC		While turning power supply position from “OFF” to “ACC”
	ON>CRANK		While turning power supply position from “IGN” to “CRANKING”
	OFF>SLEEP		While turning BCM status from normal mode (Power supply position is “OFF”.) to low power consumption mode
	LOCK>SLEEP		While turning BCM status from normal mode (Power supply position is “LOCK”*.) to low power consumption mode
	LOCK		Power supply position is “LOCK”*
	OFF		Power supply position is “OFF” (Ignition switch OFF)
	ACC		Power supply position is “ACC” (Ignition switch ACC)
	ON		Power supply position is “IGN” (Ignition switch ON with engine stopped)
	ENGINE RUN		Power supply position is “RUN” (Ignition switch ON with engine running)
	CRANKING		Power supply position is “CRANKING” (At engine cranking)
IGN Counter	0 - 39	The number of times that ignition switch is turned ON after DTC is detected • The number is 0 when a malfunction is detected now. • The number increases like 1 → 2 → 3...38 → 39 after returning to the normal condition whenever ignition switch OFF → ON. • The number is fixed to 39 until the self-diagnosis results are erased if it is over 39.	

NOTE:

*: Power supply position shifts to “LOCK” from “OFF”, when ignition switch is in the OFF position, selector lever is in the P position, and any of the following conditions are met.

- Closing door
- Opening door
- Door is locked using door request switch
- Door is locked using Intelligent Key

The power supply position shifts to “ACC” when the push-button ignition switch (push switch) is pushed at “LOCK”.

DOOR LOCK

DOOR LOCK : CONSULT Function (BCM - DOOR LOCK)

INFOID:0000000007456669

BCM CONSULT FUNCTION

CONSULT performs the following functions via CAN communication with BCM.

Diagnosis mode	Function Description
WORK SUPPORT	Changes the setting for each system function.
DATA MONITOR	The BCM input/output signals are displayed.
ACTIVE TEST	The signals used to activate each device are forcibly supplied from BCM.

WORK SUPPORT

Monitor item	Description
DOOR LOCK-UNLOCK SET	Selective unlock function mode can be changed to operate (WITH) or not operate (WITHOUT) with this mode.
AUTOMATIC DOOR LOCK SELECT	Automatic door lock function mode can be selected from the following in this mode. • VH SPD: All doors are locked when vehicle speed more than 24km/h (15MPH) • P RANGE: All doors are locked when shifting the selector lever from P position to other than the P position
AUTOMATIC DOOR UNLOCK SELECT	Automatic door unlock function mode can be selected from the following in the mode. • MODE 1: All doors are unlocked when the power supply position is changed from ON to OFF • MODE 2: All doors are unlocked when shifting the selector lever from any position other than the P to P position • MODE 3: Driver side door is unlocked when the power supply position is changed from ON to OFF • MODE 4: Driver side door is unlocked when shifting the selector lever from any position other than the P to P position
AUTOMATIC LOCK/UNLOCK SET	Automatic door lock/unlock function mode can be selected from the following in this mode. • Off: non-operational • Unlock Only: door unlock operation only • Lock Only: door lock operation only • Lock/Unlock: lock/unlock operation

DATA MONITOR

Monitor Item	Contents
REQ SW-DR	Indicated [ON/OFF] condition of door request switch (driver side).
REQ SW-AS	Indicated [ON/OFF] condition of door request switch (passenger side).
REQ SW-BD/TR	Indicated [ON/OFF] condition of back door request switch.
DOOR SW-DR	Indicated [ON/OFF] condition of front door switch (driver side).
DOOR SW-AS	Indicated [ON/OFF] condition of front door switch (passenger side).
DOOR SW-RR	Indicated [ON/OFF] condition of rear door switch RH.
DOOR SW-RL	Indicated [ON/OFF] condition of rear door switch LH.
DOOR SW-BK	Indicated [ON/OFF] condition of back door switch.
CDL LOCK SW	Indicated [ON/OFF] condition of lock signal from door lock unlock switch.
CDL UNLOCK SW	Indicated [ON/OFF] condition of unlock signal from door lock unlock switch.
KEY CYL LK-SW	Indicated [ON/OFF] condition of lock signal from door key cylinder.
KEY CYL UN-SW	Indicated [ON/OFF] condition of unlock signal from door key cylinder.

ACTIVE TEST

Test item	Description
DOOR LOCK	This test is able to check door lock/unlock operation. • The all door lock actuators are locked when “ALL LCK” on CONSULT screen is touched. • The all door lock actuators are unlocked when “ALL UNLK” on CONSULT screen is touched. • The door lock actuator (driver side) is unlocked when “DR UNLK” on CONSULT screen is touched. • The door lock actuator (passenger side) is unlocked when “AS UNLK” on CONSULT screen is touched. • The door lock actuator (rear LH and RH) is unlocked when “OTR ULK” on CONSULT screen is touched.

INTELLIGENT KEY

INTELLIGENT KEY : CONSULT Function (BCM - INTELLIGENT KEY)

INFOID:0000000007456670

WORK SUPPORT

Monitor item	Description
CONFIRM KEY FOB ID	It can be checked whether Intelligent Key ID code is registered or not in this mode.
AUTO LOCK SET	Auto door lock time can be changed in this mode. • MODE 1: 1 minute • MODE 2: 5 minutes • MODE 3: 30 seconds • MODE 4: 2 minutes
LOCK/UNLOCK BY I-KEY	Door lock/unlock function by door request switch (driver side, passenger side and back door) mode can be changed to operate (ON) or not operate (OFF) in this mode.
ENGINE START BY I-KEY	Engine start function mode can be changed to operate (ON) or not operate (OFF) with this mode.
TRUNK/GLASS HATCH OPEN	Buzzer reminder function mode by back door request switch can be changed to operate (ON) or not operate (OFF) with this mode.
PANIC ALARM SET	Panic alarm button pressing time on Intelligent Key remote control button can be selected from the following with this mode. • MODE 1: 0.5 sec. • MODE 2: Non-operation • MODE 3: 1.5 sec.
PW DOWN SET	Unlock button pressing time on Intelligent Key button can be selected from the following with this mode. • MODE 1: 3 sec. • MODE 2: Non-operation • MODE 3: 5 sec.
TAKE OUT FROM WIN WARN	**NOTE:** This item is displayed, but cannot be supported.
TRUNK OPEN DELAY	**NOTE:** This item is displayed, but cannot be supported.
LO- BATT OF KEY FOB WARN	Intelligent Key low battery warning mode can be changed to operate (ON) or not operate (OFF) with this mode.
ANTI KEY LOCK IN FUNCTI	Key reminder function mode can be changed to operate (ON) or not operate (OFF) with this mode.
HAZARD ANSWER BACK	Hazard reminder function mode can be selected from the following with this mode. • LOCK ONLY: Door lock operation only • UNLOCK ONLY: Door unlock operation only • LOCK/UNLOCK: Lock/unlock operation • OFF: Non-operation
ANS BACK I-KEY LOCK	Buzzer reminder function (lock operation) mode by door request switch (driver side and passenger side) can be selected from the following with this mode. • Horn chirp: Sound horn • Buzzer: Sound Intelligent Key warning buzzer • OFF: Non-operation

Monitor item	Description
ANS BACK I-KEY UNLOCK	Buzzer reminder function (unlock operation) mode by door request switch can be changed to operate (ON) or not operate (OFF) with this mode.
SHORT CRANKING OUTPUT	Starter motor can operate during the times below. • 70 msec. • 100 msec. • 200 msec.
INSIDE ANT DIAGNOSIS	This function allows inside key antenna self-diagnosis.
HORN WITH KEYLESS LOCK	Horn reminder function mode by Intelligent Key button can be changed to operate (ON) or not operate (OFF) with this mode.
WELCOME LIGHT OP SET	Welcome light function mode can be changed to operate (WITH) or not operate (WITHOUT) with this mode.
WELCOME LIGHT SELECT	Welcome light function mode can be selected from the following with this mode. • Without room lamp • With room lamp • Without paddle lamp • With paddle lamp

SELF-DIAG RESULT

Refer to BCS-86, "DTC Index".

DATA MONITOR

Monitor Item	Condition
REQ SW -DR	Indicates [ON/OFF] condition of door request switch (driver side).
REQ SW -AS	Indicates [ON/OFF] condition of door request switch (passenger side).
REQ SW -RR	**NOTE:** This item is displayed, but cannot be monitored.
REQ SW -RL	**NOTE:** This item is displayed, but cannot be monitored.
REQ SW -BD/TR	Indicates [ON/OFF] condition of back door request switch.
PUSH SW	Indicates [ON/OFF] condition of push-button ignition switch.
IGN RLY2 -F/B	Indicates [ON/OFF] condition of ignition relay 2.
CLUCH SW	**NOTE:** This item is displayed, but cannot be monitored.
BRAKE SW 1	Indicates [ON/OFF] condition of brake switch power supply.
BRAKE SW 2	Indicates [ON/OFF] condition of brake switch.
DETE/CANCL SW	Indicates [ON/OFF] condition of P position.
SFT PN/N SW	Indicates [ON/OFF] condition of P or N position.
S/L -LOCK	**NOTE:** This item is displayed, but cannot be monitored.
S/L -UNLOCK	**NOTE:** This item is displayed, but cannot be monitored.
S/L RELAY -F/B	**NOTE:** This item is displayed, but cannot be monitored.
UNLK SEN -DR	Indicates [ON/OFF] condition of driver door UNLOCK status.
PUSH SW -IPDM	Indicates [ON/OFF] condition of push-button ignition switch.
IGN RLY1 -F/B	Indicates [ON/OFF] condition of ignition relay 1.
DETE SW -IPDM	Indicates [ON/OFF] condition of P position.
SFT PN -IPDM	Indicates [ON/OFF] condition of P or N position.
SFT P -MET	Indicates [ON/OFF] condition of P position.
SFT N -MET	Indicates [ON/OFF] condition of N position.

Monitor Item	Condition
ENGINE STATE	Indicates [STOP/START/CRANK/RUN] condition of engine states.
S/L LOCK-IPDM	**NOTE:** This item is displayed, but cannot be monitored.
S/L UNLK-IPDM	**NOTE:** This item is displayed, but cannot be monitored.
S/L RELAY-REQ	**NOTE:** This item is displayed, but cannot be monitored.
VEH SPEED 1	Display the vehicle speed signal received from unified meter and A/C amp. by numerical value [Km/h].
VEH SPEED 2	Display the vehicle speed signal received from ABS or VDC or CVT by numerical value [Km/h].
DOOR STAT-DR	Indicates [LOCK/READY/UNLOCK] condition of driver side door status.
DOOR STAT-AS	Indicates [LOCK/READY/UNLOCK] condition of passenger side door status.
ID OK FLAG	Indicates [SET/RESET] condition of key ID.
PRMT ENG STRT	Indicates [SET/RESET] condition of engine start possibility.
PRMT RKE STRT	**NOTE:** This item is displayed, but cannot be monitored.
KEY SW -SLOT	Indicates [ON/OFF] condition of key slot.
TRNK/HAT MNTR	**NOTE:** This item is displayed, but cannot be monitored.
RKE-LOCK	Indicates [ON/OFF] condition of LOCK signal from Intelligent Key.
RKE-UNLOCK	Indicates [ON/OFF] condition of UNLOCK signal from Intelligent Key.
RKE-TR/BD	**NOTE:** This item is displayed, but cannot be monitored.
RKE-PANIC	Indicates [ON/OFF] condition of PANIC button of Intelligent Key.
RKE-P/W OPEN	Indicates [ON/OFF] condition of P/W DOWN signal from Intelligent Key.
RKE-MODE CHG	Indicates [ON/OFF] condition of MODE CHANGE signal from Intelligent Key.
RKE OPE COUN1	When remote keyless entry receiver receives the signal transmitted while operating on Intelligent Key, the numerical value start changing.
RKE OPE COUN2	**NOTE:** This item is displayed, but cannot be monitored.

ACTIVE TEST

Test item	Description
BATTERY SAVER	This test is able to check interior room lamp operation. The interior room lamp will be activated after “ON” on CONSULT screen is touched.
PW REMOTO DOWN SET	This test is able to check power window down operation. The power window down will be activated after “ON” on CONSULT screen is touched.
INSIDE BUZZER	This test is able to check warning chime in combination meter operation. • Take away warning chime sounds when “TAKE OUT” on CONSULT screen is touched. • Key warning chime sounds when “KEY WARN” on CONSULT screen is touched. • P position warning chime sounds when “P RNG WARN” on CONSULT screen is touched. • ACC warning chime sounds when “ACC WARN” on CONSULT screen is touched.
OUTSIDE BUZZER	This test is able to check Intelligent Key warning buzzer operation. The Intelligent Key warning buzzer will be activated after “ON” on CONSULT screen is touched.
INDICATOR	This test is able to check warning lamp operation. • “KEY” Warning lamp illuminates when “KEY ON” on CONSULT screen is touched. • “KEY” Warning lamp flashes when “KEY IND” on CONSULT screen is touched.
INT LAMP	This test is able to check interior room lamp operation. The interior room lamp will be activated after “ON” on CONSULT screen is touched.

Test item	Description
LCD	This test is able to check meter display information • Engine start information displays when “BP N” on CONSULT screen is touched. • Engine start information displays when “BP I” on CONSULT screen is touched. • Key ID warning displays when “ID NG” on CONSULT screen is touched. • ROTAT: This item is displayed, but cannot be tested. • P position warning displays when “SFT P” on CONSULT screen is touched. • Intelligent Key insert information displays when “INSRT” on CONSULT screen is touched. • Intelligent Key low battery warning displays when “BATT” on CONSULT screen is touched. • Take away through window warning displays when “NO KY” on CONSULT screen is touched. • Take away warning display when “OUTKY” on CONSULT screen is touched. • OFF position warning display when “LK WN” on CONSULT screen is touched.
TRUNK/GLASS HATCH	This test is able to check back door opener actuator open operation. This actuator opens when “ON” on CONSULT screen is touched.
FLASHER	This test is able to check hazard warning lamp operation. The hazard warning lamps will be activated after “ON” on CONSULT screen is touched.
HORN	This test is able to check horn operation. The horn will be activated after “ON” on CONSULT screen is touched.
P RANGE	This test is able to check A/T shift selector power supply A/T shift selector power is supplied when “ON” on CONSULT screen is touched.
ENGINE SW ILLUMI	This test is able to check push-ignition switch illumination operation. Push-ignition switch illumination illuminates when “ON” on CONSULT screen is touched.
LOCK INDICATOR	This test is able to check LOCK indicator in push-ignition switch operation. LOCK indicator in push-ignition switch illuminates when “ON” on CONSULT screen is touched;
ACC INDICATOR	This test is able to check ACC indicator in push-ignition switch operation. Indicator in push-ignition switch illuminates when “ON” on CONSULT screen is touched.
IGNITION ON IND	This test is able to check ON indicator in push-ignition switch operation. Indicator in push-ignition switch illuminates when “ON” on CONSULT screen is touched.
KEY SLOT ILLUMI	This test is able to check key slot illumination operation. Key slot illumination flash when “ON” on CONSULT screen is touched.
TRUNK/BACK DOOR	**NOTE:** This item is displayed, but cannot be tested.

TRUNK

TRUNK : CONSULT Function (BCM - TRUNK)

INFOID:0000000007456671

BCM CONSULT FUNCTION

CONSULT performs the following functions via CAN communication with BCM.

Diagnosis mode	Function Description
DATA MONITOR	The BCM input/output signals are displayed.
ACTIVE TEST	The signals used to activate each device are forcibly supplied from BCM.

DATA MONITOR

Monitor Item	Contents
PUSH SW	Indicates [ON/OFF] condition of push-button ignition switch.
UNLK SEN -DR	Indicates [ON/OFF] condition of driver door UNLOCK status.
VEH SPEED 1	Indicates [Km/h] condition of vehicle speed signal from combination meter.
KEY CYL SW-TR	**NOTE:** This item is displayed, but cannot be monitored.
TR CANCEL SW	**NOTE:** This item is displayed, but cannot be monitored.
TR/BD OPEN SW	Indicates [ON/OFF] condition of back door opener switch.

Monitor Item	Contents
TRNK/HAT MNTR	**NOTE:** This item is displayed, but cannot be monitored.
RKE-TR/BD*	**NOTE:** This item is displayed, but cannot be monitored.

ACTIVE TEST

Test item	Description
TRUNK/GLASS HATCH	This test is able to check back door opener actuator open operation. This actuator opens when “”

DTC/CIRCUIT DIAGNOSIS

U1000 CAN COMM CIRCUIT

Description

INFOID:0000000007456672

CAN (Controller Area Network) is a serial communication line for real time applications. It is an on-vehicle multiplex communication line with high data communication speed and excellent error detection ability. Modern vehicle is equipped with many electronic control unit, and each control unit shares information and links with other control units during operation (not independent). In CAN communication, control units are connected with 2 communication lines (CAN H-line, CAN L-line) allowing a high rate of information transmission with less wiring. Each control unit transmits/receives data but selectively reads required data only.
CAN Communication Signal Chart. Refer to LAN-25, "CAN System Specification Chart".

DTC Logic

INFOID:0000000007456673

DTC DETECTION LOGIC

DTC	CONSULT display description	DTC detection condition	Possible cause
U1000	CAN COMM CIRCUIT	When BCM cannot communicate CAN communication signal continuously for 2 seconds or more.	CAN communication system

Diagnosis Procedure

INFOID:0000000007456674

1.PERFORM SELF DIAGNOSTIC

1. Turn ignition switch ON and wait for 2 seconds or more.
2. Check “Self Diagnostic Result”.

Is “CAN COMM CIRCUIT” displayed?

YES >> Refer to LAN-16, "Trouble Diagnosis Flow Chart".
NO >> Refer to GI-42, "Intermittent Incident".

U1010 CONTROL UNIT (CAN)

DTC Logic

INFOID:0000000007456675

DTC DETECTION LOGIC

DTC	CONSULT display description	DTC detection condition	Possible cause
U1010	CONTROL UNIT (CAN)	BCM detected internal CAN communication circuit malfunction.	BCM

Diagnosis Procedure

INFOID:0000000007456676

1.REPLACE BCM

When DTC [U1010] is detected, replace BCM.

>> Replace BCM. Refer to BCS-92, "Removal and Installation"

Special Repair Requirement

INFOID:0000000007456677

1.REQUIRED WORK WHEN REPLACING BCM

Initialize control unit. Refer to CONSULT operation manual NATS-IVIS/NVIS.

>> Work end.

B2621 INSIDE KEY ANTENNA 1

Description

INFOID:0000000007456678

- Detects whether Intelligent Key is inside the vehicle.
- Installed in the instrument center.

DTC Logic

INFOID:0000000007456679

DTC DETECTION LOGIC

DTC	CONSULT display description	DTC detecting condition	Possible cause
B2621	INSIDE ANTENNA 1 CIRCUIT	An excessive high or low voltage from inside antenna is sent to BCM.	• Inside key antenna (instrument center) • Between BCM and Inside key antenna (instrument center)

DTC CONFIRMATION PROCEDURE

1.PERFORM DTC CONFIRMATION PROCEDURE

1. Perform inside key antenna (“INSIDE ANT DIAGNOSIS”) on Work Support” of “INTELLIGENT KEY”.
2. Perform “INTELLIGENT KEY” Self Diagnostic Result.

Is inside key antenna DTC detected?

YES >> Refer to DLK-60, "Diagnosis Procedure".
NO >> Inside key antenna (instrument center) is OK.

Diagnosis Procedure

INFOID:0000000007456680

1.CHECK INSIDE KEY ANTENNA INPUT SIGNAL 1

1. Turn ignition switch OFF.
2. Check signal between BCM harness connector and ground with oscilloscope.

(+) BCM Connector		(+) BCM Terminal	(–)	Condition	Signal (Reference value)
Instrument center	M122	78, 79	Ground	Place Intelligent Key inside the vehicle.	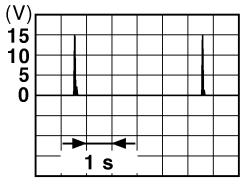 JMKIA0062GB
				Place Intelligent Key outside the vehicle.	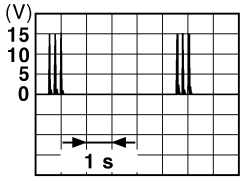 JMKIA0063GB

Is the inspection result normal?

YES >> GO TO 4.
NO >> GO TO 2.

2.CHECK INSIDE KEY ANTENNA CIRCUIT

1. Disconnect BCM and inside key antenna connector.

2. Check continuity between BCM harness connector and inside key antenna (instrument center) harness connector.

BCM		Inside key antenna (instrument center)		Continuity
Connector	Terminal	Connector	Terminal	
M122	78	M131	2	Existed
	79		1	

3. Check continuity between BCM harness connector and ground.

BCM		Ground	Continuity
Connector	Terminal		
M122	78		Not existed
	79		

Is the inspection result normal?

YES >> GO TO 3.
NO >> Repair or replace harness.

3.CHECK INSIDE KEY ANTENNA INPUT SIGNAL 2

1. Replace inside key antenna (instrument center). (New antenna or other antenna)
2. Connect BCM and inside key antenna (instrument center) connector.
3. Check signal between BCM harness connector and ground with oscilloscope.

(+)			(–)	Condition	Signal (Reference value)
BCM					
Connector		Terminal			
Instrument center	M122	78, 79	Ground	Place Intelligent Key inside the vehicle.	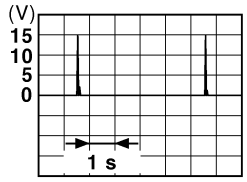 JMKIA0062GB
				Place Intelligent Key outside the vehicle.	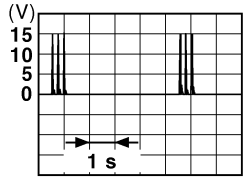 JMKIA0063GB

Is the inspection result normal?

YES >> Replace inside key antenna (instrument center). Refer to DLK-275, "INSTRUMENT CENTER : Removal and Installation".
NO >> Replace BCM. Refer to BCS-92, "Removal and Installation".

4.CHECK INTERMITTENT INCIDENT

Refer to GI-42, "Intermittent Incident".

>> INSPECTION END

B2622 INSIDE KEY ANTENNA 2

Description

INFOID:0000000007456681

- Detects whether Intelligent Key is inside the vehicle.
- Installed in the console.

DTC Logic

INFOID:0000000007456682

DTC DETECTION LOGIC

DTC	CONSULT display description	DTC detecting condition	Possible cause
B2622	INSIDE ANTENNA 2 CIRCUIT	An excessive high or low voltage from inside antenna is sent to BCM.	• Inside key antenna (console) • Between BCM ～ Inside key antenna (console)

DTC CONFIRMATION PROCEDURE

1.PERFORM DTC CONFIRMATION PROCEDURE

1. Perform inside key antenna (“INSIDE ANT DIAGNOSIS”) on “Work Support” of “INTELLIGENT KEY”.
2. Perform “INTELLIGENT KEY” Self Diagnostic Result.

Is inside key antenna DTC detected?

YES >> Refer to DLK-62, "Diagnosis Procedure".
NO >> Inside key antenna (console) is OK.

Diagnosis Procedure

INFOID:0000000007456683

1.CHECK INSIDE KEY ANTENNA INPUT SIGNAL 1

1. Turn ignition switch OFF.
2. Check signal between BCM harness connector and ground with oscilloscope.

(+) BCM Connector	(+) BCM Terminal	(–)	Condition	Signal (Reference value)
Console M122	72, 73	Ground	Place Intelligent Key inside the vehicle.	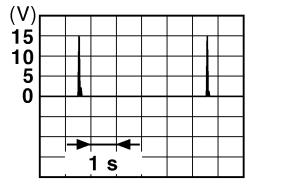 JMKIA0062GB
			Place Intelligent Key outside the vehicle.	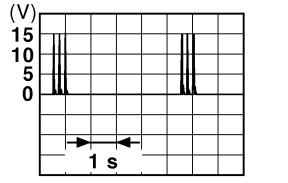 JMKIA0063GB

Is the inspection result normal?

YES >> GO TO 4.
NO >> GO TO 2.

2.CHECK INSIDE KEY ANTENNA CIRCUIT

1. Disconnect BCM and inside key antenna (console) connector.
2. Check continuity between BCM harness connector and inside key antenna harness connector.

BCM		Inside key antenna (console)		Continuity
Connector	Terminal	Connector	Terminal	
M122	72	M146	2	Existed
	73		1	

3. Check continuity between BCM harness connector and ground.

BCM		Ground	Continuity
Connector	Terminal		
M122	72		Not existed
	73		

Is the inspection result normal?

YES >> GO TO 3.
NO >> Repair or replace harness.

3.CHECK INSIDE KEY ANTENNA INPUT SIGNAL 2

1. Replace inside key antenna (console). (New antenna or other antenna)
2. Connect BCM and inside key antenna (console) connector.
3. Check signal between BCM harness connector and ground with oscilloscope.

(+) BCM			(–)	Condition	Signal (Reference value)
Connector		Terminal			
Console	M122	72, 73	Ground	Place Intelligent Key inside the vehicle.	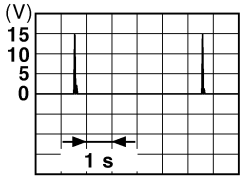 JMKIA0062GB
				Place Intelligent Key outside the vehicle.	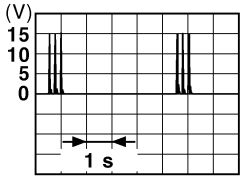 JMKIA0063GB

Is the inspection result normal?

YES >> Replace inside key antenna (console). Refer to DLK-275, "CONSOLE : Removal and Installation".
NO >> Replace BCM. Refer to BCS-92, "Removal and Installation".

4.CHECK INTERMITTENT INCIDENT

Refer to GI-42, "Intermittent Incident".

>> INSPECTION END

B2623 INSIDE KEY ANTENNA 3

Description

INFOID:0000000007456684

Detects whether Intelligent Key is inside the vehicle.
Installed in the luggage room.

DTC Logic

INFOID:0000000007456685

DTC DETECTION LOGIC

DTC	CONSULT display description	DTC detecting condition	Possible cause
B2623	INSIDE ANTENNA 3 CIRCUIT	An excessive high or low voltage from inside antenna is sent to BCM.	• Inside key antenna (luggage room) • Between BCM ～ Inside key antenna (luggage room)

DTC CONFIRMATION PROCEDURE

1.PERFORM DTC CONFIRMATION PROCEDURE

1. Perform inside key antenna (“INSIDE ANT DIAGNOSIS”) on “Work Support” of “INTELLIGENT KEY”.
2. Perform “INTELLIGENT KEY” Self Diagnostic Result.

Is inside key antenna DTC detected?

YES >> Refer to DLK-64, "Diagnosis Procedure".
NO >> Inside key antenna (luggage room) is OK.

Diagnosis Procedure

INFOID:0000000007456686

1.CHECK INSIDE KEY ANTENNA INPUT SIGNAL 1

1. Turn ignition switch OFF.
2. Check signal between BCM harness connector and ground with oscilloscope.

(+) BCM Connector	(+) BCM Terminal	(–)	Condition	Signal (Reference value)
Luggage room	M121	34, 35	Ground	Place Intelligent Key inside the vehicle.	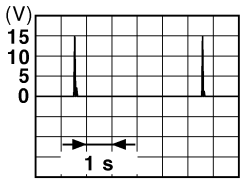 JMKIA0062GB
				Place Intelligent Key outside the vehicle.	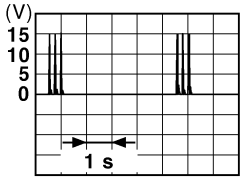 JMKIA0063GB

Is the inspection result normal?

YES >> GO TO 4.
NO >> GO TO 2.

2.CHECK INSIDE KEY ANTENNA CIRCUIT

1. Disconnect BCM and inside key antenna (luggage room) connector.

2. Check continuity between BCM harness connector and inside key antenna (luggage room) harness connector.

BCM		Inside key antenna		Continuity
Connector	Terminal	Connector	Terminal	
M121	34	B228	2	Existed
	35		1	

3. Check continuity between BCM harness connector and ground.

BCM		Ground	Continuity
Connector	Terminal		
M121	34		Not existed
	35		

Is the inspection result normal?

YES >> GO TO 3.
NO >> Repair or replace harness.

3.CHECK INSIDE KEY ANTENNA INPUT SIGNAL 2

1. Replace inside key antenna (luggage room). (New antenna or other antenna)
2. Connect BCM and inside key antenna (luggage room) connector.
3. Check signal between BCM harness connector and ground with oscilloscope.

(+)			(–)	Condition	Signal (Reference value)
BCM					
Connector		Terminal			
Luggage room	M121	34, 35	Ground	Place Intelligent Key inside the vehicle.	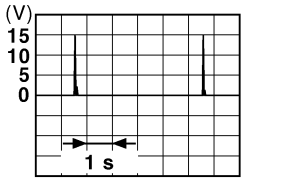 JMKIA0062GB
				Place Intelligent Key outside the vehicle.	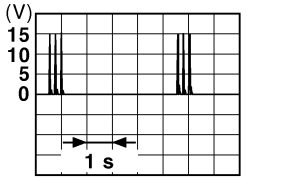 JMKIA0063GB

Is the inspection result normal?

YES >> Replace inside key antenna (luggage room). Refer to DLK-276, "LUGGAGE ROOM : Removal and Installation".
NO >> Replace BCM. Refer to BCS-92, "Removal and Installation".

4.CHECK INTERMITTENT INCIDENT

Refer to GI-42, "Intermittent Incident".

>> INSPECTION END

POWER SUPPLY AND GROUND CIRCUIT
BCM (BODY CONTROL MODULE)

BCM (BODY CONTROL MODULE) : Diagnosis Procedure

INFOID:0000000007456687

1.CHECK FUSE AND FUSIBLE LINK

Check that the following fuse and fusible link are not fusing.

Terminal No.	Signal name	Fuse and fusible link No.
1	Battery power supply	K (40 A)
11		10 (10 A)

Is the fuse fusing?

YES >> Replace the blown fuse or fusible link after repairing the affected circuit if a fuse or fusible link is blown.
NO >> GO TO 2.

2.CHECK POWER SUPPLY CIRCUIT

1. Turn ignition switch OFF.
2. Disconnect BCM connectors.
3. Check voltage between BCM harness connector and ground.

(+)		(–)	Voltage (Approx.)
BCM			
Connector	Terminal		
M118	1	Ground	Battery voltage
M119	11		

Is the measurement value normal?

YES >> GO TO 3.
NO >> Repair or replace harness.

3.CHECK GROUND CIRCUIT

Check continuity between BCM harness connector and ground.

BCM		Ground	Continuity
Connector	Terminal		
M119	13		Existed

Is the inspection result normal?

YES >> INSPECTION END
NO >> Repair or replace harness.

DOOR SWITCH

Description

INFOID:0000000007456688

Detects door open/close condition.

Component Function Check

INFOID:0000000007456689

1.CHECK FUNCTION

With CONSULT

Check door switches (“DOOR SW-DR”, “DOOR SW-AS”, “DOOR SW-RL”, “DOOR SW-RR” and “DOOR SW-BK”) in Data Monitor” mode with CONSULT.

Monitor item	Condition
DOOR SW-DR	CLOSE → OPEN: OFF → ON
DOOR SW-AS	
DOOR SW-RL	
DOOR SW-RR	
DOOR SW-BK	

Is the inspection result normal?

YES >> Door switch is OK.
NO >> Refer to DLK-67, "Diagnosis Procedure".

Diagnosis Procedure

INFOID:0000000007456690

1.CHECK DOOR SWITCH INPUT SIGNAL

1. Turn ignition switch OFF.
2. Disconnect malfunctioning door switch connector.
3. Check signal between malfunctioning door switch harness connector and ground with oscilloscope.

(+)			(–)	Signal (Reference value)
Door switch				
Connector		Terminal		
Driver side	B16	2	Ground	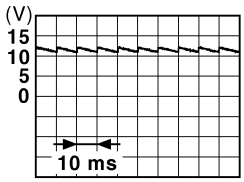 JPMIA0011GB
Passenger side	B216	2		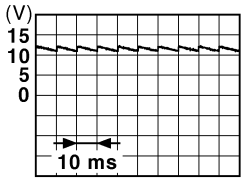 JPMIA0011GB
Rear LH	B23	2		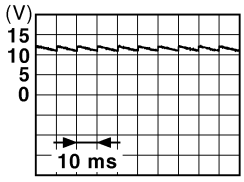 JPMIA0011GB
Rear RH	B223	2		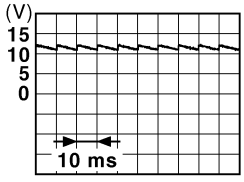 JPMIA0011GB
Back door	D113	3		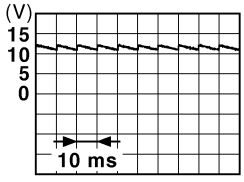 JPMIA0011GB

Is the inspection result normal?

YES-1 >> Back door: GO TO 3.
YES-2 >> Other doors: GO TO 4.
NO >> GO TO 2.

2.CHECK DOOR SWITCH CIRCUIT

1. Disconnect BCM connector.
2. Check continuity between BCM harness connector and door switch harness connector.

BCM		Door switch		Continuity
Connector	Terminal	Connector	Terminal	
M123	150	B16 (Driver side)	2	Existed
	124	B216 (Passenger side)		
M121	69	B23 (Rear LH)		
	68	B223 (Rear RH)		
	66	D113 (Back door)	3	

3. Check continuity between BCM harness connector and ground.

BCM		Ground	Continuity
Connector	Terminal		
M123	150 (Driver side)		Not existed
	124 (Passenger side)		
M121	69 (Rear LH)		
	68 (Rear RH)		
	66 (Back door)		

Is the inspection result normal?

YES >> Replace BCM. Refer to BCS-92, "Removal and Installation".
NO >> Repair or replace harness.

3.CHECK BACK DOOR SWITCH GROUND CIRCUIT

Check continuity between back door lock assembly (back door switch) harness connector and ground.

Back door lock assembly (back door switch)		Ground	Continuity
Connector	Terminal		
D113	4		Existed

Is the inspection result normal?

YES >> GO TO 4.
NO >> Repair or replace harness.

4.CHECK DOOR SWITCH

Refer to DLK-69, "Component Inspection".

Is the inspection result normal?

YES >> GO TO 5.
NO >> Replace malfunctioning door switch.
- Door switch: Refer to DLK-274, "Removal and Installation".
- Back door lock assembly (back door switch): Refer to DLK-272, "Removal and Installation".

5.CHECK INTERMITTENT INCIDENT

Refer to GI-42, "Intermittent Incident".

>> INSPECTION END

Component Inspection

INFOID:0000000007456691

1.CHECK DOOR SWITCH

1. Turn ignition switch OFF.
2. Disconnect door switch connector.
3. Check door switch terminals.

Door switch			Condition		Continuity
Terminal					
Each door	2	Ground part of door switch	Door switch	Pressed	Not existed
				Released	Existed
Back door	3	4		Pressed	Not existed
				Released	Existed

Is the inspection result normal?

YES >> INSPECTION END
NO-1 >> Replace malfunction door switch. Refer to DLK-274, "Removal and Installation".
NO-2 >> Replace back door lock assembly. Refer to DLK-272, "Removal and Installation".

DOOR LOCK AND UNLOCK SWITCH

DRIVER SIDE

DRIVER SIDE : Description

INFOID:0000000007456692

Transmits door lock/unlock operation to BCM.

DRIVER SIDE : Component Function Check

INFOID:0000000007456693

1.CHECK FUNCTION

With CONSULT

Check (“CDL LOCK SW ”, “CDL UNLOCK SW”) in Data Monitor mode with CONSULT.

Monitor item	Condition	
CDL LOCK SW	LOCK	: ON
	UNLOCK	: OFF
CDL UNLOCK SW	LOCK	: OFF
	UNLOCK	: ON

Is the inspection result normal?

YES >> Door lock and unlock switch is OK.
NO >> Refer to DLK-71, "DRIVER SIDE : Diagnosis Procedure".

DRIVER SIDE : Diagnosis Procedure

INFOID:0000000007456694

1.CHECK POWER WINDOW SWITCH

1. Turn ignition switch ON.
2. Check power window operation.

Does power window (driver side) operate?

YES >> Replace power window main switch.
NO >> Refer to PWC-101, "Diagnosis Procedure".

PASSENGER SIDE

PASSENGER SIDE : Description

INFOID:0000000007456695

Transmits door lock/unlock operation to BCM.

PASSENGER SIDE : Component Function Check

INFOID:0000000007456696

1.CHECK FUNCTION

With CONSULT

Check (“CDL LOCK SW ”, “CDL UNLOCK SW”) in Data Monitor mode with CONSULT.

Monitor item	Condition	
CDL LOCK SW	LOCK	: ON
	UNLOCK	: OFF
CDL UNLOCK SW	LOCK	: OFF
	UNLOCK	: ON

Is the inspection result normal?

YES >> Door lock and unlock switch is OK.
NO >> Refer to DLK-71, "PASSENGER SIDE : Diagnosis Procedure".

PASSENGER SIDE : Diagnosis Procedure

INFOID:0000000007456697

1.CHECK POWER WINDOW SWITCH

1. Turn ignition switch ON.
2. Check passenger side power window operation.

Does power window (passenger side) operate?

YES >> Replace power window switch (passenger side)
NO >> Refer to PWC-103, "WHEN POWER WINDOW MAIN SWITCH IS OPERATED : Diagnosis Procedure".

DOOR LOCK ACTUATOR

DRIVER SIDE

DRIVER SIDE : Description

INFOID:0000000007456698

Locks/unlocks the door with the signal from BCM.

DRIVER SIDE : Component Function Check

INFOID:0000000007456699

1.CHECK FUNCTION

1. Use CONSULT to perform Active Test (“DOOR LOCK”).
2. Touch “ALL LCK” or “ALL UNLK” to check that it works normally.

Is the inspection result normal?

YES >> Door lock actuator is OK.
NO >> Refer to DLK-73, "DRIVER SIDE : Diagnosis Procedure".

DRIVER SIDE : Diagnosis Procedure

INFOID:0000000007456700

1.CHECK OUTPUT SIGNAL

1. Turn ignition switch OFF.
2. Disconnect front door lock assembly (driver side) connector.
3. Check voltage between front door lock assembly (driver side) harness connector and ground.

(+)		(–)	Condition		Voltage (V) (Approx.)
Front door lock assembly (driver side)					
Connector	Terminal				
D15	1	Ground	Door lock and unlock switch	Lock	0 → Battery voltage → 0
	2			Unlock	0 → Battery voltage → 0

Is the inspection result normal?

YES >> Replace front door lock assembly (driver side). Refer to DLK-240, "DOOR ASSEMBLY : Removal and Installation".
NO >> GO TO 2.

2.CHECK DOOR LOCK ACTUATOR CIRCUIT

1. Disconnect BCM connector.
2. Check continuity between BCM harness connector and front door lock assembly (driver side) harness connector.

BCM		Front door lock assembly (driver side)		Continuity
Connector	Terminal	Connector	Terminal	
M119	8	D15	1	Existed
	9		2	

3. Check continuity between BCM harness connector and ground.

BCM		Ground	Continuity
Connector	Terminal		
M119	8		Not existed
	9		

Is the inspection result normal?

YES >> Replace BCM. Refer to BCS-92, "Removal and Installation".
NO >> Repair or replace harness.

PASSENGER SIDE

PASSENGER SIDE : Description

INFOID:0000000007456701

Locks/unlocks the door with the signal from BCM.

PASSENGER SIDE : Component Function Check

INFOID:0000000007456702

1.CHECK FUNCTION

1. Use CONSULT to perform Active Test (“DOOR LOCK”).
2. Touch “ALL LCK” or “ALL UNLK” to check that it works normally.

Is the inspection result normal?

YES >> Door lock actuator is OK.
NO >> Refer to DLK-74, "PASSENGER SIDE : Diagnosis Procedure".

PASSENGER SIDE : Diagnosis Procedure

INFOID:0000000007456703

1.CHECK DOOR LOCK ACTUATOR SIGNAL

1. Turn ignition switch OFF.
2. Disconnect front door lock assembly (passenger side).
3. Check voltage between front door lock assembly (passenger side) harness connector and ground.

(+)		(–)	Condition		Voltage (V) (Approx.)
Front door lock assembly (passenger side)					
Connector	Terminal				
D45	1	Ground	Door lock and unlock switch	Unlock	0 → Battery voltage → 0
	2			Lock	0 → Battery voltage → 0

Is the inspection result normal?

YES >> Replace front door lock assembly (passenger side). Refer to DLK-240, "DOOR ASSEMBLY : Removal and Installation".
NO >> GO TO 2.

2.CHECK DOOR LOCK ACTUATOR CIRCUIT

1. Disconnect BCM connector.
2. Check continuity between BCM harness connector and front door lock assembly (passenger side) harness connector.

BCM		Front door lock assembly (passenger side)		Continuity
Connector	Terminal	Connector	Terminal	
M119	5	D45	1	Existed
	8		2	

3. Check continuity between BCM harness connector and ground.

BCM		Ground	Continuity
Connector	Terminal		
M119	5		Not existed
	8		

Is the inspection result normal?

YES >> Replace BCM. Refer to BCS-92, "Removal and Installation".
NO >> Repair or replace harness.

REAR LH

REAR LH : Description

INFOID:0000000007456704

Locks/unlocks the door with the signal from BCM.

REAR LH : Component Function Check

INFOID:0000000007456705

1.CHECK FUNCTION

1. Use CONSULT to perform Active Test (“DOOR LOCK”).
2. Touch “ALL LCK” or “ALL UNLK” to check that it works normally.

Is the inspection result normal?

YES >> Door lock actuator is OK.
NO >> Refer to DLK-75, "REAR LH : Diagnosis Procedure".

REAR LH : Diagnosis Procedure

INFOID:0000000007456706

1.CHECK DOOR LOCK ACTUATOR SIGNAL

1. Turn ignition switch OFF.
2. Disconnect rear door lock assembly LH.
3. Check voltage between rear door lock assembly LH harness connector and ground.

(+)		(–)	Condition		Voltage (V) (Approx.)
Rear door lock assembly LH					
Connector	Terminal				
D55	1	Ground	Door lock and unlock switch	Lock	0 → Battery voltage → 0
	2			Unlock	0 → Battery voltage → 0

Is the inspection result normal?

YES >> Replace rear door lock assembly LH. Refer to DLK-245, "DOOR ASSEMBLY : Removal and Installation".
NO >> GO TO 2.

2.CHECK DOOR LOCK ACTUATOR CIRCUIT

1. Disconnect BCM connector.
2. Check continuity between BCM harness connector and rear door lock assembly LH harness connector.

BCM		Rear door lock assembly LH		Continuity
Connector	Terminal	Connector	Terminal	
M119	8	D55	1	Existed
	10		2	

3. Check continuity between BCM harness connector and ground.

BCM		Ground	Continuity
Connector	Terminal		
M119	8		Not existed
	10		

Is the inspection result normal?

YES >> Replace BCM. Refer to BCS-92, "Removal and Installation".
NO >> Repair or replace harness.

REAR RH

REAR RH : Description

INFOID:0000000007456707

Locks/unlocks the door with the signal from BCM.

REAR RH : Component Function Check

INFOID:0000000007456708

1.CHECK FUNCTION

1. Use CONSULT to perform Active Test (“DOOR LOCK”).

2. Touch “ALL LCK” or “ALL UNLK” to check that it works normally.

Is the inspection result normal?

YES >> Door lock actuator is OK.
NO >> Refer to DLK-76, "REAR RH : Diagnosis Procedure".

REAR RH : Diagnosis Procedure

INFOID:0000000007456709

1.CHECK DOOR LOCK ACTUATOR SIGNAL

1. Turn ignition switch OFF.
2. Disconnect rear door lock assembly RH.
3. Check voltage between rear door lock assembly RH harness connector and ground.

(+)		(–)	Condition		Voltage (V) (Approx.)
Rear door lock assembly RH					
Connector	Terminal				
D75	1	Ground	Door lock and unlock switch	Unlock	0 → Battery voltage → 0
	2			Lock	0 → Battery voltage → 0

Is the inspection result normal?

YES >> Replace rear door lock assembly RH. Refer to DLK-245, "DOOR ASSEMBLY : Removal and Installation".
NO >> GO TO 2.

2.CHECK DOOR LOCK ACTUATOR CIRCUIT

1. Disconnect BCM connector.
2. Check continuity between BCM harness connector and rear door lock assembly RH harness connector.

BCM		Rear door lock assembly RH		Continuity
Connector	Terminal	Connector	Terminal	
M119	8	D75	2	Existed
	10		1	

3. Check continuity between BCM harness connector and ground.

BCM		Ground	Continuity
Connector	Terminal		
M119	8		Not Existed
	10		

Is the inspection result normal?

YES >> Replace BCM. Refer to BCS-92, "Removal and Installation".
NO >> Repair or replace harness.

FUEL LID LOCK ACTUATOR

Description

INFOID:0000000007456710

Locks/unlocks the fuel filler lid with the signal from BCM.

Component Function Check

INFOID:0000000007456711

1.CHECK FUNCTION

1. Use CONSULT to perform Active Test (“DOOR LOCK”).
2. Touch “ALL LOCK” or “ALL UNLOCK” to check that it works normally.

Is the inspection result normal?

YES >> Fuel lid lock actuator is OK.
NO >> Refer to DLK-77, "Diagnosis Procedure".

Diagnosis Procedure

INFOID:0000000007456712

1.CHECK FUEL LID LOCK ACTUATOR INPUT SIGNAL

1. Turn ignition switch OFF.
2. Disconnect fuel lid lock actuator connector.
3. Check voltage between fuel lid lock actuator harness connector and ground.

(+)		(–)	Condition		Voltage (V) (Approx.)
Fuel lid lock actuator					
Connector	Terminal				
B242	1	Ground	Door lock and unlock switch	Unlock	0 → Battery voltage → 0
	2			Lock	0 → Battery voltage → 0

Is the inspection result normal?

YES >> Replace fuel lid lock actuator. Refer to DLK-273, "Removal and Installation".
NO >> GO TO 2.

2.CHECK FUEL LID LOCK ACTUATOR CIRCUIT

1. Disconnect BCM connector.
2. Check continuity between BCM harness connector and fuel lid lock actuator harness connector.

BCM		Fuel lid lock actuator		Continuity
Connector	Terminal	Connector	Terminal	
M119	8	B242	2	Existed
	9		1	

3. Check continuity between BCM harness connector and ground.

BCM		Ground	Continuity
Connector	Terminal		
M119	8		Not existed
	9		

Is the inspection result normal?

YES >> Replace BCM. Refer to BCS-92, "Removal and Installation".
NO >> Repair or replace harness.

BACK DOOR OPENER ACTUATOR

Description

INFOID:0000000007456713

Back door opener actuator open back door from BCM.

Component Function Check

INFOID:0000000007456714

1.CHECK FUNCTION

1. Perform Active Test (“TRUNK/GLASS HATCH”) with CONSULT.
2. Touch “OPEN” and check that back door opens.

Is the inspection result normal?

YES >> Back door opener actuator is OK.
NO >> Refer to DLK-78, "Diagnosis Procedure".

Diagnosis Procedure

INFOID:0000000007456715

1.CHECK OUTPUT SIGNAL

1. Turn ignition switch OFF.
2. Disconnect back door lock assembly.
3. Check voltage between back door lock assembly harness connector and ground.

(+)		(–)	Condition		Voltage (V) (Approx.)
Back door lock assembly					
Connector	Terminal				
D113	1	Ground	Back door opener switch	ON	0 → Battery voltage → 0

Is the inspection result normal?

YES >> GO TO 3.
NO >> GO TO 2.

2.CHECK BACK DOOR OPENER ACTUATOR CIRCUIT

1. Disconnect BCM connector.
2. Check continuity between BCM harness connector and back door lock assembly (back door opener actuator) harness connector.

BCM		Back door lock assembly		Continuity
Connector	Terminal	Connector	Terminal	
M120	23	D113	1	Existed

3. Check continuity between BCM harness connector and ground.

BCM		Ground	Continuity
Connector	Terminal		
M120	23		Not existed

Is the inspection result normal?

YES >> Replace BCM. Refer to BCS-92, "Removal and Installation".
NO >> Repair or replace harness.

3.CHECK BACK DOOR OPENER ACTUATOR GROUND CIRCUIT

Check continuity between back door lock assembly harness connector and ground.

Back door lock assembly		Ground	Continuity
Connector	Terminal		
D113	2		Existed

Is the inspection normal?

YES >> Replace back door lock assembly. Refer to DLK-272, "Removal and Installation"
NO >> Repair or replace harness.

KEY CYLINDER SWITCH

Description

INFOID:0000000007456716

Power window main switch detects condition of the door key cylinder switch and transmits to BCM as the LOCK or UNLOCK signals.

Component Function Check

INFOID:0000000007456717

1.CHECK DOOR KEY CYLINDER SWITCH INPUT SIGNAL

Check (“KEY CYL LK-SW”, “KEY CYL UN-SW”) in “DATA MONITOR” mode for “POWER DOOR LOCK SYSTEM” with CONSULT. Refer to DLK-51, "DOOR LOCK : CONSULT Function (BCM - DOOR LOCK)".

Monitor item	Condition	
KEY CYL LK-SW	Lock	: ON
	Neutral / Unlock	: OFF
KEY CYL UN-SW	Unlock	: ON
	Neutral / Lock	: OFF

Is the inspection result normal?

YES >> Key cylinder switch is OK.
NO >> Refer to DLK-80, "Diagnosis Procedure".

Diagnosis Procedure

INFOID:0000000007456718

1.CHECK DOOR KEY CYLINDER SWITCH INPUT SIGNAL

1. Turn ignition switch OFF.
2. Disconnect front door lock assembly (driver side).
3. Check voltage between front door lock assembly (driver side) harness connector and ground.

(+)		(–)	Voltage (V) (Approx.)
Front door lock assembly (driver side)			
Connector	Terminal		
D15	5	Ground	5
	6		

Is the inspection result normal?

YES >> GO TO 3.
NO >> GO TO 2.

2.CHECK DOOR KEY CYLINDER SIGNAL CIRCUIT

1. Disconnect power window main switch connector.
2. Check continuity between power window main switch harness connector and front door lock assembly (driver side) harness connector.

Power window main switch		Front door lock assembly (driver side)		Continuity
Connector	Terminal	Connector	Terminal	
D8	4	D15	6	Existed
	6		5	

3. Check continuity between power window main switch harness connector and ground.

Power window main switch		Ground	Continuity
Connector	Terminal		
D8	4		Not existed
	6		

Is the inspection result normal?

YES >> Replace power window main switch. Refer to PWC-115, "Removal and Installation".
NO >> Repair or replace harness.

3.CHECK DOOR KEY CYLINDER SWITCH GROUND CIRCUIT

Check continuity between front door lock assembly (driver side) harness connector and ground.

Front door lock assembly (driver side)		Ground	Continuity
Connector	Terminal		
D15	4		Existed

Is the inspection result normal?

YES >> GO TO 4.
NO >> Repair or replace harness.

4.CHECK DOOR KEY CYLINDER SWITCH

Check door key cylinder switch.
Refer to DLK-81, "Component Inspection".

Is the inspection result normal?

YES >> GO TO 5.
NO >> Replace front door lock assembly (driver side). Refer to DLK-240, "DOOR ASSEMBLY : Removal and Installation".

5.CHECK INTERMITTENT INCIDENT

Refer to GI-42, "Intermittent Incident".

>> INSPECTION END

Component Inspection

INFOID:0000000007456719

1.CHECK DOOR KEY CYLINDER SWITCH

1. Turn ignition switch OFF.
2. Disconnect front door lock assembly (driver side) terminals.
3. Check front door lock assembly (driver side) terminals.

Front door lock assembly (driver side)		Key position	Continuity
Terminal			
5	4	Unlock	Existed
		Neutral / Lock	Not existed
6		Lock	Existed
		Neutral / Unlock	Not existed

Is the inspection result normal?

YES >> INSPECTION END
NO >> Replace front door lock assembly (driver side). Refer to DLK-240, "DOOR ASSEMBLY : Removal and Installation".

REMOTE KEYLESS ENTRY RECEIVER

Description

INFOID:0000000007456720

Receives Intelligent Key operation and transmits to BCM.

Component Function Check

INFOID:0000000007456721

1.CHECK FUNCTION

With CONSULT

Check remote keyless entry receiver (“RKE OPE COUN1”) in Data Monitor mode with CONSULT.

Monitor item	Condition
RKE OPE COUN1	Checks whether value changes when operating Intelligent Key.

Is the inspection result normal?

YES >> Remote keyless entry receiver is OK.
NO >> Refer to DLK-82, "Diagnosis Procedure".

Diagnosis Procedure

INFOID:0000000007456722

1.CHECK REMOTE KEYLESS ENTRY RECEIVER OUTPUT SIGNAL

1. Turn ignition switch OFF.
2. Check signal between remote keyless entry receiver harness connector and ground with oscilloscope.

(+)		(–)	Condition	Signal (Reference value)
Remote keyless entry receiver				
Connector	Terminal			
M104	2	Ground	During waiting	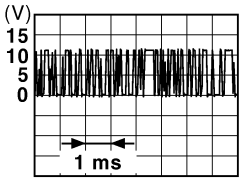 JMKIA0064GB
			When operating either button on the Intelligent Key	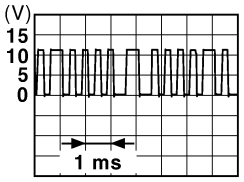 JMKIA0065GB

Is the inspection result normal?

YES >> GO TO 2.
NO >> GO TO 3.

2.CHECK REMOTE KEYLESS ENTRY RECEIVER CIRCUIT 1

1. Disconnect BCM connector and remote keyless entry receiver connector.
2. Check continuity between BCM harness connector and remote keyless entry receiver harness connector.

BCM		Remote keyless entry receiver		Continuity
Connector	Terminal	Connector	Terminal	
M122	83	M104	2	Existed

3. Check continuity between BCM harness connector and ground.

BCM		Ground	Continuity
Connector	Terminal		
M122	83		Not existed

Is the inspection result normal?

YES >> Replace BCM. Refer to BCS-92, "Removal and Installation".
NO >> Repair or replace harness.

3. CHECK REMOTE KEYLESS ENTRY RECEIVER POWER SUPPLY

1. Disconnect remote keyless entry receiver.
2. Check voltage between remote keyless entry receiver harness connector and ground.

(+)		(–)	Voltage (V) (Approx.)
Remote keyless entry receiver			
Connector	Terminal		
M104	4	Ground	Battery voltage

Is the inspection result normal?

YES >> GO TO 5.
NO >> GO TO 4.

4. CHECK REMOTE KEYLESS ENTRY RECEIVER CIRCUIT 2

1. Disconnect BCM connector.
2. Check continuity between BCM harness connector and remote keyless entry receiver harness connector.

BCM		Remote keyless entry receiver		Continuity
Connector	Terminal	Connector	Terminal	
M122	103	M104	4	Existed

3. Check continuity between BCM harness connector and ground.

BCM		Ground	Continuity
Connector	Terminal		
M122	103		Not existed

Is the inspection result normal?

YES >> Replace BCM. Refer to BCS-92, "Removal and Installation".
NO >> Repair or replace harness.

5. CHECK REMOTE KEYLESS ENTRY RECEIVER GROUND CIRCUIT

Check continuity between remote keyless entry receiver harness connector and ground.

Remote keyless entry receiver		Ground	Continuity
Connector	Terminal		
M104	1		Existed

Is the inspection result normal?

YES >> Replace remote keyless entry receiver. Refer to DLK-280, "Removal and Installation".
NO >> GO TO 6.

6. CHECK REMOTE KEYLESS ENTRY RECEIVER CIRCUIT 3

1. Disconnect BCM connector.
2. Check continuity between BCM harness connector and remote keyless entry receiver harness connector.

BCM		Remote keyless entry receiver		Continuity
Connector	Terminal	Connector	Terminal	
M123	137	M104	1	Existed

Is the inspection result normal?

YES >> Replace BCM. Refer to BCS-92, "Removal and Installation".
NO >> Repair or replace harness.

BACK DOOR OPENER SWITCH

Description

INFOID:0000000007456723

Output back door open signal to BCM.

Component Function Check

INFOID:0000000007456724

1.CHECK FUNCTION

Check back door opener switch (“TR/BD OPEN SW”) in “Data Monitor mode with CONSULT.

Monitor item	Condition
TR/BD OPEN SW	Back door opener switch is pressed: ON
	Back door opener switch is released: OFF

Is the inspection result normal?

YES >> Back door opener switch is OK.
NO >> Refer to DLK-85, "Diagnosis Procedure".

Diagnosis Procedure

INFOID:0000000007456725

1.CHECK BACK DOOR OPEN INPUT SIGNAL

1. Turn ignition switch OFF.
2. Disconnect back door opener switch connector.
3. Check signal between back door opener switch harness connector and ground with oscilloscope.

(+)		(–)	Signal (Reference value)
Back door opener switch			
Connector	Terminal		
D114	1	Ground	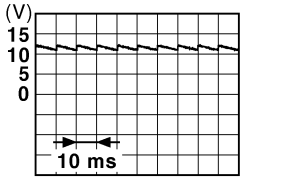

JPMIA0011GB

Is the inspection result normal?

YES >> GO TO 3.
NO >> GO TO 2.

2.CHECK BACK DOOR OPENER SWITCH CIRCUIT

1. Disconnect BCM connector.
2. Check continuity between BCM harness connector and back door opener switch assembly harness connector.

BCM		Back door opener switch		Continuity
Connector	Terminal	Connector	Terminal	
M121	67	D114	1	Existed

3. Check continuity between BCM harness connector and ground.

BCM		Ground	Continuity
Connector	Terminal		
M121	67		Not existed

Is the inspection result normal?

YES >> Replace BCM. Refer to BCS-92, "Removal and Installation".
NO >> Repair or replace harness.

3.CHECK BACK DOOR OPENER SWITCH GROUND CIRCUIT

Check continuity between back door opener switch harness connector and ground.

Back door opener switch		Ground	Continuity
Connector	Terminal		
D114	2		Existed

Is the inspection result normal?

YES >> GO TO 4.
NO >> Repair or replace harness.

4.CHECK BACK DOOR OPENER SWITCH

Refer to DLK-86, "Component Inspection".

Is the inspection result normal?

YES >> GO TO 5.
NO >> Replace back door opener switch. Refer to EXT-48, "Removal and Installation".

5.CHECK INTERMITTENT INCIDENT

Refer to GI-42, "Intermittent Incident".

>> INSPECTION END

Component Inspection

INFOID:0000000007456726

1.CHECK BACK DOOR OPENER SWITCH

1. Turn ignition switch OFF.
2. Disconnect back door opener switch connector.
3. Check continuity between back door opener switch terminals.

Back door opener switch		Condition		Continuity
Terminal				
1	2	Back door opener switch	Pressed	Existed
			Released	Not existed

Is the inspection result normal?

YES >> INSPECTION END
NO >> Replace back door opener switch. Refer to EXT-48, "Removal and Installation".

DOOR REQUEST SWITCH

Description

INFOID:0000000007456727

Transmits lock/unlock operation to BCM.

Component Function Check

INFOID:0000000007456728

1.CHECK FUNCTION

Check door request switch (“REQ SW -DR” or “REQ SW -AS”) in Data Monitor mode.

Monitor item	Condition
REQ SW -DR REQ SW -AS	Door request switch is pressed: ON
	Door request switch is released: OFF

Is the inspection result normal?

YES >> Door request switch is OK.
NO >> Refer to DLK-87, "Diagnosis Procedure".

Diagnosis Procedure

INFOID:0000000007456729

1.CHECK BCM OUTPUT SIGNAL

1. Turn ignition switch OFF.
2. Disconnect malfunctioning front outside handle (request switch) connector.
3. Check signal between malfunctioning front outside handle (request switch) harness connector and ground with oscilloscope.

(+)			(–)	Signal (Reference value)
Front outside handle (request switch)				
Connector		Terminal		
LH	D13	1	Ground	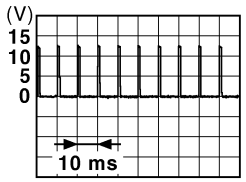 JPMIA0016GB
RH	D43			

Is the inspection result normal?

YES >> GO TO 3.
NO >> GO TO 2.

2.CHECK DOOR REQUEST SWITCH CIRCUIT

1. Disconnect BCM connector.
2. Check continuity between BCM harness connector and malfunctioning front outside handle (request switch) harness connector.

BCM		Front outside handle (request switch)			Continuity
Connector	Terminal	Connector		Terminal	
M122	101	LH	D13	1	Existed
	100	RH	D43		

3. Check continuity between BCM harness connector and ground.

BCM		Ground	Continuity
Connector	Terminal		
M122	101		Not existed
	100		

Is the inspection result normal?

YES >> Replace BCM. Refer to BCS-92, "Removal and Installation".
NO >> Repair or replace harness.

3.CHECK DOOR REQUEST SWITCH GROUND CIRCUIT

Check continuity between malfunctioning front outside handle (request switch) harness connector and ground.

Front outside handle (request switch)			Ground	Continuity
Connector		Terminal		
LH	D13	2		Existed
RH	D43			

Is the inspection result normal?

YES >> GO TO 4.
NO >> Repair or replace harness.

4.CHECK DOOR REQUEST SWITCH

Refer to DLK-88, "Component Inspection".

Is the inspection result normal?

YES >> GO TO 5.
NO >> Replace malfunctioning front outside handle (request switch). Refer to DLK-264, "OUTSIDE HANDLE : Removal and Installation".

5.CHECK INTERMITTENT INCIDENT

Refer to GI-42, "Intermittent Incident".

>> INSPECTION END

Component Inspection

INFOID:0000000007456730

1.CHECK DOOR REQUEST SWITCH

1. Turn ignition switch OFF.
2. Disconnect malfunctioning front outside handle (request switch) connector.
3. Check continuity between malfunctioning front outside handle (request switch) terminals.

Front outside handle (request switch)		Condition		Continuity
Terminal				
1	2	Door request switch	Pressed	Existed
			Released	Not existed

Is the inspection result normal?

YES >> INSPECTION END
NO >> Replace malfunctioning front outside handle (request switch). Refer to DLK-264, "OUTSIDE HANDLE : Removal and Installation".

BACK DOOR REQUEST SWITCH

Description

INFOID:0000000007456731

Transmits lock/unlock operation to BCM.

Component Function Check

INFOID:0000000007456732

1.CHECK FUNCTION

Check back door opener request switch (“REQ SW -BD/TR ”) in Data Monitor mode.

Monitor item	Condition
REQ SW -BD/TR	Back door opener request switch is pressed: ON
	Back door opener request switch is released: OFF

Is the inspection result normal?

YES >> Back door opener request switch is OK.
NO >> Refer to DLK-89, "Diagnosis Procedure".

Diagnosis Procedure

INFOID:0000000007456733

1.CHECK BCM OUTPUT SIGNAL

1. Turn ignition switch OFF.
2. Disconnect back door opener request switch connector.
3. Check signal between back door opener request switch harness connector and ground with oscilloscope.

(+)		(–)	Signal (Reference value)
Back door opener request switch			
Connector	Terminal		
D116	1	Ground	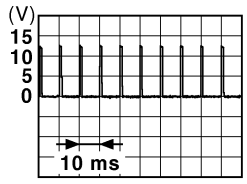

JPMIA0016GB

Is the inspection result normal?

YES >> GO TO 3.
NO >> GO TO 2.

2.CHECK BACK DOOR OPENER REQUEST SWITCH CIRCUIT

1. Disconnect BCM connector.
2. Check continuity between BCM harness connector and back door opener request switch harness connector.

BCM		Back door opener request switch		Continuity
Connector	Terminal	Connector	Terminal	
M121	61	D116	1	Existed

3. Check continuity between BCM harness connector and ground.

BCM		Ground	Continuity
Connector	Terminal		
M121	61		Not existed

Is the inspection result normal?

YES >> Replace BCM. Refer to BCS-92, "Exploded View".
NO >> Repair or replace harness.

3. CHECK BACK DOOR OPENER REQUEST SWITCH GROUND CIRCUIT

Check continuity between back door opener request switch harness connector and ground.

Back door opener request switch		Ground	Continuity
Connector	Terminal		
D116	2		Existed

Is the inspection result normal?

YES >> GO TO 4.
NO >> Repair or replace harness.

4. CHECK BACK DOOR OPENER REQUEST SWITCH

Refer to DLK-90, "Component Inspection".

Is the inspection result normal?

YES >> GO TO 5.
NO >> Replace back door opener request switch. Refer to EXT-48, "Removal and Installation".

5. CHECK INTERMITTENT INCIDENT

Refer to GI-42, "Intermittent Incident".

>> INSPECTION END

Component Inspection

INFOID:0000000007456734

1. CHECK BACK DOOR OPENER REQUEST SWITCH

1. Turn ignition switch OFF.
2. Disconnect back door opener request switch connector.
3. Check continuity between back door opener request switch assembly terminals.

Back door opener request switch		Condition		Continuity
Terminal				
1	2	Back door opener request switch	Pressed	Existed
			Released	Not existed

Is the inspection result normal?

YES >> INSPECTION END
NO >> Replace back door opener request switch. Refer to EXT-48, "Removal and Installation".

UNLOCK SENSOR

Description

INFOID:0000000007456735

Detects door lock condition of driver door.

Component Function Check

INFOID:0000000007456736

1.CHECK FUNCTION

Check unlock sensor (“UNLK SEN -DR”) in “Data Monitor” mode.

Monitor item	Condition
UNLK SEN -DR	Front door lock (driver side) LOCK: OFF
	Front door lock (driver side) UNLOCK: ON

Is the inspection result normal?

YES >> Unlock sensor is OK.
NO >> Refer to DLK-91, "Diagnosis Procedure".

Diagnosis Procedure

INFOID:0000000007456737

1.CHECK BCM OUTPUT SIGNAL

1. Turn ignition switch OFF.
2. Disconnect front door lock assembly (driver side) connector.
3. Check signal between front door lock assembly (driver side) harness connector and ground with oscilloscope.

(+)		(–)	Signal (Reference value)
Front door lock assembly (driver side)			
Connector	Terminal		
D15	3	Ground	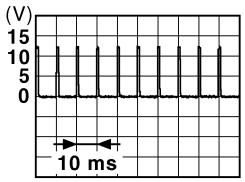

JPMIA0012GB

Is the inspection result normal?

YES >> GO TO 3.
NO >> GO TO 2.

2.CHECK UNLOCK SENSOR CIRCUIT

1. Disconnect BCM connector.
2. Check continuity between BCM harness connector and front door lock assembly (driver side) harness connector.

BCM		Front door lock assembly (driver side)		Continuity
Connector	Terminal	Connector	Terminal	
M123	119	D15	3	Existed

3. Check continuity between BCM harness connector and ground.

BCM		Ground	Continuity
Connector	Terminal		
M123	119		Not existed

Is the inspection result normal?

YES >> Replace BCM. Refer to BCS-92, "Removal and Installation".
NO >> Repair or replace harness.

3.CHECK UNLOCK SENSOR GROUND CIRCUIT

Check continuity between front door lock assembly (driver side) harness connector and ground.

Front door lock assembly (driver side)		Ground	Continuity
Connector	Terminal		
D15	4		Existed

Is the inspection result normal?

YES >> GO TO 4.
NO >> Repair or replace harness.

4.CHECK UNLOCK SENSOR

Refer to DLK-92, "Component Inspection".

Is the inspection result normal?

YES >> GO TO 5.
NO >> Replace front door lock assembly (driver side). Refer to DLK-261, "DOOR LOCK : Removal and Installation".

5.CHECK INTERMITTENT INCIDENT

Refer to GI-42, "Intermittent Incident".

>> INSPECTION END

Component Inspection

INFOID:0000000007456738

1.CHECK UNLOCK SENSOR

1. Turn ignition switch OFF.
2. Disconnect front door lock assembly (driver side) connector.
3. Check front door lock assembly (driver side) terminals.

Front door lock assembly (driver side)		Condition		Continuity
Terminal				
3	4	Front door lock assembly (driver side)	Unlock	Existed
			Lock	Not existed

Is the inspection result normal?

YES >> INSPECTION END
NO >> Replace front lock assembly (driver side). Refer to DLK-261, "DOOR LOCK : Removal and Installation".

OUTSIDE KEY ANTENNA

Description

INFOID:0000000007456739

- Detects whether Intelligent Key is outside the vehicle.
- Integrated in front outside handle (driver side, passenger side) and installed in rear bumper.

Component Function Check

INFOID:0000000007456740

1.CHECK DOOR REQUEST SWITCH

Check door request switch. Refer to DLK-87, "Component Function Check" (front door) or DLK-89, "Component Function Check" (back door).

Is the inspection result normal?

YES >> GO TO 2.
NO-1 >> Check front door opener request switch. Refer to DLK-87, "Component Function Check".
NO-2 >> Check back door request switches. Refer to DLK-89, "Component Function Check".

2.CHECK FUNCTION

Be sure that Intelligent Key is in each outside key antenna detection area.

Does door lock/unlock when each request switch is pressed?

YES >> Outside key antenna is OK.
NO >> Refer to DLK-93, "Diagnosis Procedure".

Diagnosis Procedure

INFOID:0000000007456741

1.CHECK OUTSIDE KEY ANTENNA INPUT SIGNAL 1

1. Turn ignition switch OFF.
2. Check signal between BCM harness connector and ground with oscilloscope.

(+) BCM			(–)	Condition		Signal (Reference value)
Connector		Terminal				
M122	RH	74, 75	Ground	Request switch is pushed	When Intelligent Key is in the antenna detection area.	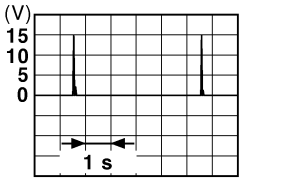 JMKIA0062GB
	LH	76, 77				
M121	Back door	38, 39			When Intelligent Key is not in the antenna detection area.	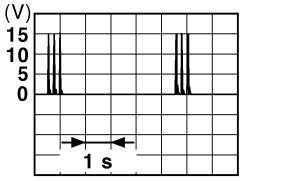 JMKIA0063GB

Is the inspection result normal?

YES >> Replace BCM. Refer to BCS-92, "Removal and Installation"
NO >> GO TO 2.

2.CHECK OUTSIDE KEY ANTENNA CIRCUIT

1. Disconnect BCM connector and malfunctioning outside key antenna connector.
2. Check continuity between BCM harness connector and malfunctioning outside key antenna harness connector.

BCM		Outside key antenna		Continuity
Connector	Terminal	Connector	Terminal	
M122	74	D44 (RH)	2	Existed
	75		1	
	76	D14 (LH)	2	
	77		1	
M121	38	D118 (back door)	2	
	39		1	

3. Check continuity between BCM harness connector and ground.

BCM			Continuity
Connector	Terminal		
M122	74	Ground	Not existed
	75		
	76		
	77		
M121	38		
	39		

Is the inspection result normal?

YES >> GO TO 3.
NO >> Repair or replace harness.

3. CHECK OUTSIDE KEY ANTENNA INPUT SIGNAL 2

1. Replace malfunctioning outside key antenna. (New antenna or other antenna)
2. Connect BCM connector and malfunctioning outside key antenna (New antenna or other antenna) connector.
3. Check signal between BCM harness connector and ground with oscilloscope.

(+)			(–)	Condition		Signal (Reference value)
BCM						
Connector		Terminal				
M122	RH	74, 75	Ground	Door request switch is pushed	When Intelligent Key is in the antenna detection area.	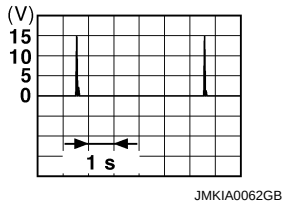 JMKIA0062GB
	LH	76, 77				
M121	Back door	38, 39			When Intelligent Key is not in the antenna detection area.	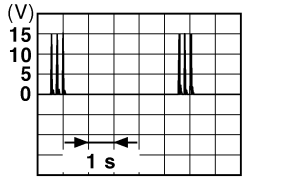 JMKIA0063GB

Is the inspection result normal?

YES-1 >> Replace malfunctioning front outside handle (LH or RH). Refer to DLK-264, "OUTSIDE HANDLE : Removal and Installation".
YES-2 >> Replace outside key antenna (Back door). Refer to DLK-277, "BACK DOOR : Removal and Installation".

NO >> Replace BCM. Refer to BCS-92, "Removal and Installation".

INTELLIGENT KEY WARNING BUZZER

Description

INFOID:0000000007456742

Answers back and warns for an inappropriate operation.

Component Function Check

INFOID:0000000007456743

1.CHECK FUNCTION

Check Intelligent Key warning buzzer (“OUTSIDE BUZZER”) in Active Test mode.

Is the inspection result normal?

YES >> Intelligent Key warning buzzer (engine room) is OK.
NO >> Refer to DLK-96, "Diagnosis Procedure".

Diagnosis Procedure

INFOID:0000000007456744

1.CHECK FUSE

1. Turn ignition switch OFF.
2. Check 10 A fuse, [No.6, located in fuse block (J/B)].

Is fuse fusing?

YES >> Replace the blown fuse after repairing the affected circuit if a fuse is blown.
NO >> GO TO 2.

2.CHECK INTELLIGENT KEY WARNING BUZZER POWER SUPPLY CIRCUIT

1. Disconnect Intelligent Key warning buzzer connector.
2. Check voltage between Intelligent Key warning buzzer harness connector and ground.

(+)		(–)	Voltage (V) (Approx.)
Intelligent Key warning buzzer			
Connector	Terminal		
E57	1	Ground	Battery voltage

Is the inspection result normal?

YES >> GO TO 3.
NO >> Repair or replace harness.

3.CHECK INTELLIGENT KEY WARNING BUZZER CIRCUIT

1. Disconnect BCM connector.
2. Check continuity between BCM harness connector and Intelligent Key warning buzzer harness connector.

BCM		Intelligent Key warning buzzer		Continuity
Connector	Terminal	Connector	Terminal	
M121	64	E57	3	Existed

3. Check continuity between BCM harness connector and ground.

BCM		Ground	Continuity
Connector	Terminal		
M121	64		Not existed

Is the inspection result normal?

YES >> GO TO 4.
NO >> Repair or replace harness.

4.CHECK INTELLIGENT KEY WARNING BUZZER

Check DLK-97, "Component Inspection".

Is the inspection result normal?

YES >> Replace BCM. Refer to BCS-92, "Removal and Installation".
NO >> Replace Intelligent Key warning buzzer. Refer to DLK-278, "Removal and Installation".

Component Inspection

INFOID:0000000007456745

1. CHECK INTELLIGENT KEY WARNING BUZZER

1. Turn ignition switch OFF.
2. Disconnect Intelligent Key warning buzzer connector.
3. Connect battery power supply directly to Intelligent Key warning buzzer terminals and check the operation.

Intelligent Key warning buzzer		Operation
Terminal		
(+)	(–)	
1	3	Buzzer sounds

Is the inspection result normal?

YES >> INSPECTION END
NO >> Replace Intelligent Key warning buzzer. Refer to DLK-278, "Removal and Installation".

INTELLIGENT KEY BATTERY

Component Inspection

INFOID:0000000007456747

1.CHECK INTELLIGENT KEY BATTERY

Check by connecting a resistance (approximately 300 Ω) so that the current value becomes about 10 mA.

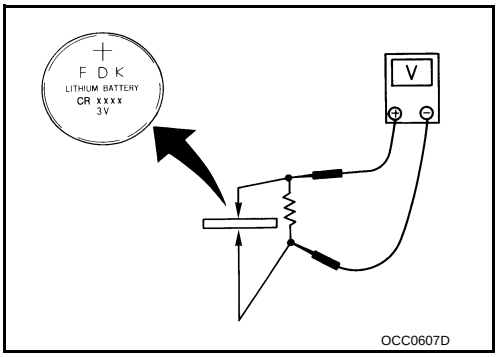

Standard : Approx. 2.5 - 3.0 V

Is the measurement value within the specification?

YES >> INSPECTION END
NO >> Replace Intelligent Key battery.

KEY SLOT

Description

INFOID:0000000007456751

- Detect whether Intelligent Key is inserted.
- Immobilizer antenna amp checks Intelligent Key transponder.

Component Function Check

INFOID:0000000007456752

1.CHECK FUNCTION

Check key slot (“KEY SW -SLOT”) in Data Monitor mode using CONSULT.

Monitor item	Condition
KEY SW-SLOT	Key is inserted in key slot: ON
	Key is removed from key slot: OFF

Is the inspection result normal?

YES >> Key slot is OK.
NO >> Refer to DLK-99, "Diagnosis Procedure".

Diagnosis Procedure

INFOID:0000000007456753

1.CHECK FUSE

1. Turn ignition switch OFF.
2. Check 10 A fuse, [No.9, located in fuse block (J/B)].

Is the inspection result normal?

YES >> GO TO 2.
NO >> Replace the blown fuse after repairing the affected circuit if a fuse is blown.

2.CHECK KEY SLOT POWER SUPPLY CIRCUIT

1. Disconnect key slot connector.
2. Check voltage between slot harness connector and ground.

(+)		(–)	Voltage (V) (Approx.)
Key slot			
Connector	Terminal		
M22	1	Ground	Battery voltage

Is the inspection result normal?

YES >> GO TO 3.
NO >> Repair or replace harness.

3.CHECK KEY SLOT CIRCUIT

1. Disconnect BCM connector.
2. Check continuity between BCM harness connector and key slot harness connector.

BCM		Key slot		Continuity
Connector	Terminal	Connector	Terminal	
M123	121	M22	11	Existed

3. Check continuity between BCM harness connector and ground.

BCM		Ground	Continuity
Connector	Terminal		
M123	121		Not existed

Is the inspection result normal?

YES >> GO TO 4.

NO >> Repair or replace harness.

4.CHECK KEY SLOT

Refer to DLK-100, "Component Inspection".

Is the inspection result normal?

YES >> GO TO 5.
NO >> Replace key slot. Refer to DLK-279, "Removal and Installation".

5.CHECK INTERMITTENT INCIDENT

Refer to GI-42, "Intermittent Incident".

>> INSPECTION END

Component Inspection

INFOID:0000000007456754

1.CHECK KEY SLOT

1. Turn ignition switch OFF.
2. Disconnect key slot connector.
3. Check continuity between key slot terminals.

Key slot		Condition		Continuity
Terminal				
1	11	Intelligent Key	Inserted in key slot	Existed
			Removed in key slot	Not existed

Is the inspection result normal?

YES >> INSPECTION END
NO >> Replace key slot. Refer to DLK-279, "Removal and Installation".

KEY SLOT INDICATOR

Description

INFOID:0000000007456755

Blinks when Intelligent Key insertion is required.

Component Function Check

INFOID:0000000007456756

1.CHECK FUNCTION

Check key slot indicator (“KEY SLOT ILLUMI”) Active Test mode.

Is the inspection result normal?

YES >> Key slot function is OK.
NO >> Refer to DLK-101, "Diagnosis Procedure".

Diagnosis Procedure

INFOID:0000000007456757

1.CHECK FUSE

1. Turn ignition switch OFF.
2. Check 10 A fuse, [No. 6, located in fuse block (J/B)].

Is fuse fusing?

YES >> GO TO 2.
NO >> Replace the blown fuse after repairing the affected circuit if a fuse is blown.

2.CHECK KEY SLOT POWER SUPPLY CIRCUIT

1. Disconnect key slot connector.
2. Check voltage between key slot harness connector and ground.

(+)		(–)	Voltage (V) (Approx.)
Key slot			
Connector	Terminal		
M22	5	Ground	Battery voltage

Is the inspection result normal?

YES >> GO TO 3.
NO >> Repair or replace harness.

3.CHECK KEY SLOT CIRCUIT

1. Disconnect BCM connector.
2. Check continuity between BCM harness connector and key slot harness connector.

BCM		Key slot		Continuity
Connector	Terminal	Connector	Terminal	
M122	92	M22	6	Existed

3. Check continuity between BCM harness connector and ground.

BCM		Ground	Continuity
Connector	Terminal		
M122	92		Not existed

Is the inspection result normal?

YES >> GO TO 4.
NO >> Repair or replace harness.

4.CHECK KEY SLOT

Refer to DLK-102, "Component Inspection".

Is the inspection result normal?

YES >> Replace BCM. Refer to BCS-92, "Removal and Installation".
NO >> Replace key slot. Refer to DLK-279, "Removal and Installation".

Component Inspection

INFOID:0000000007456758

1. CHECK KEY SLOT ILLUMINATION

1. Turn ignition switch OFF.
2. Disconnect key slot connector.
3. Connect battery power supply directly to key slot terminals.

Key slot		Operation
Terminal		
(+)	(–)	
5	6	Key slot illuminates

Is the inspection result normal?

YES >> INSPECTION END
NO >> Replace key slot. Refer to DLK-279, "Removal and Installation".

HORN FUNCTION

Description

INFOID:0000000007456759

Perform answer-back for each operation with horn.

Component Function Check

INFOID:0000000007456760

1.CHECK FUNCTION

1. Select “HORN” in “ACTIVE TEST” mode with CONSULT.
2. Check the horn (high/low) operation.

Test item		Description	
HORN	ON	Horn relay	ON (for 20 ms)

Is the operation normal?

YES >> Horn function is OK.
NO >> Refer to DLK-103, "Diagnosis Procedure".

Diagnosis Procedure

INFOID:0000000007456761

1.CHECK HORN SWITCH

Check horn function with horn switch

Do the horns sound?

YES >> GO TO 2.
NO >> Refer to HRN-2, "Wiring Diagram - HORN -".

2.CHECK HORN RELAY POWER SUPPLY

1. Turn ignition switch ON.
2. Perform “ACTIVE TEST” (“HORN”) with CONSULT-Ill.
3. Check voltage between malfunctioning horn relay harness connector and ground.

(+)			(–)	Test item		Voltage (V) (Approx.)
Horn relay						
Connector		Terminal				
E11	Low	1	Ground	HORN	ON	Battery voltage → 0 → Battery voltage
E18	High	3			Other than above	Battery voltage

Is the inspection result normal?

YES >> GO TO 4.
NO >> GO TO 3.

3.CHECK HORN RELAY CIRCUIT

1. Turn ignition switch OFF.
2. Disconnect IPDM E/R connector and horn relay connector.
3. Check continuity between IPDM E/R harness connector and malfunctioning horn relay harness connector.

IPDM E/R		Horn relay		Continuity
Connector	Terminal	Connector	Terminal	
E6	44	E11	1	Existed
	45	E18	3	

4. Check continuity between driver seat control unit harness connector and ground.

IPDM E/R		Ground	Continuity
Connector	Terminal		
E6	44		Not existed
	45		

Is the inspection result normal?

YES >> Replace IPDM E/R. Refer to PCS-32, "Removal and Installation".
NO >> Repair or replace harness.

4. CHECK INTERMITTENT INCIDENT

Refer to GI-42, "Intermittent Incident".

Is the inspection result normal?

>> INSPECTION END

COMBINATION METER DISPLAY FUNCTION

Description

INFOID:0000000007456762

Displays each operation method guide and warning for system malfunction.

Component Function Check

INFOID:0000000007456763

1.CHECK FUNCTION

Check the operation with (“LCD”) in the Active Test.

Is each warning displayed on meter display?

Is the inspection result normal?

YES >> Meter display is OK.
NO >> Refer to DLK-105, "Diagnosis Procedure".

Diagnosis Procedure

INFOID:0000000007456764

1.CHECK COMBINATION METER

Refer to MWI-88, "DTC Index".

Is the inspection result normal?

YES >> GO TO 2.
NO >> Check combination meter. Refer to MWI-4, "Work flow".

2.CHECK INTERMITTENT INCIDENT

Refer to GI-42, "Intermittent Incident".

>> INSPECTION END

BUZZER (COMBINATION METER)

Description

INFOID:0000000007456765

Performs operation method guide and warning with buzzer.

Component Function Check

INFOID:0000000007456766

1.CHECK FUNCTION

1. Check the operation with “INSIDE BUZZER” in the Active Test.
2. Touch “TAKE OUT”, “KNOB”or “KEY”on screen.

Is the inspection result normal?

Yes >> Warning buzzer into combination meter is OK.
No >> Refer to DLK-106, "Diagnosis Procedure".

Diagnosis Procedure

INFOID:0000000007456767

1.CHECK METER BUZZER CIRCUIT

Refer to WCS-23, "Component Function Check".

Is the inspection result normal?

Yes >> GO TO 2.
No >> Repair or replace harness.

2.CHECK INTERMITTENT INCIDENT

Refer to GI-42, "Intermittent Incident".

>> INSPECTION END

KEY WARNING LAMP

Description

INFOID:0000000007456768

Performs operation method guide and warning together with buzzer.

Component Function Check

INFOID:0000000007456769

1.CHECK FUNCTION

Check the operation with “INDICATOR” in “Active Test” mode with CONSULT.

Test item	Condition	
INDICATOR	RED ON	Key warning lamp (red) illuminates
	RED IND	Key warning lamp (red) flashes

Is the inspection result normal?

YES >> Key warning lamp in combination meter is OK.
NO >> Refer to DLK-107, "Diagnosis Procedure".

Diagnosis Procedure

INFOID:0000000007456770

1.CHECK KEY WARNING LAMP

Refer to MWI-25, "WARNING LAMPS/INDICATOR LAMPS : System Description".

Is the inspection result normal?

YES >> GO TO 2.
NO >> Repair or replace harness.

2.CHECK INTERMITTENT INCIDENT

Refer to GI-42, "Intermittent Incident".

>> INSPECTION END

HAZARD FUNCTION

Description

INFOID:0000000007456771

Perform answer-back for each operation with number of blinks.

Component Function Check

INFOID:0000000007456772

1.CHECK FUNCTION

Check hazard warning lamp (“FLASHER”) in Active Test.

Is the inspection result normal?

YES >> Hazard warning lamp circuit is OK.
NO >> Refer to DLK-108, "Diagnosis Procedure".

Diagnosis Procedure

INFOID:0000000007456773

1.CHECK HAZARD SWITCH CIRCUIT

Refer to EXL-83, "Component Function Check" (For xenon type) or EXL-271, "Component Function Check" (For halogen type)

Is the inspection result normal?

YES >> GO TO 2.
NO >> Repair or replace harness.

2.CHECK INTERMITTENT INCIDENT

Refer to GI-42, "Intermittent Incident".

>> INSPECTION END

INTEGRATED HOMELINK TRANSMITTER

Description

INFOID:0000000007456774

Integrated Homelink Transmitter can store and transmit a maximum of 3 radio signals.
Allows operation of garage doors, gates, home and office lighting, entry door locks and security system, etc.
Integrated Homelink Transmitter power supply uses vehicle battery, which enables it to maintain every program in case battery is discharged or removed.

Component Function Check

INFOID:0000000007456775

1.CHECK FUNCTION

Check that system receiver (garage door opener, etc.) operates with original hand-held transmitter.

Is the inspection result normal?

YES >> GO TO 2.
NO >> Receiver or hand-held transmitter is malfunctioning.

2.CHECK ILLUMINATE

1. Turn ignition switch OFF.
2. Does red light of transmitter illuminate when any transmitter button is pressed?

Is the inspection result normal?

YES >> GO TO 3.
NO >> Refer to DLK-109, "Diagnosis Procedure".

3.CHECK TRANSMITTER

Check transmitter with Tool*.
*:For details, refer to Technical Service Bulletin.

Is the inspection result normal?

YES >> Receiver or hand-held transmitter malfunction, not vehicle related.
NO >> Replace auto anti-dazzling inside mirror (homelink universal transceiver). Refer to MIR-118, "Removal and Installation" (with ADP) or MIR-138, "Removal and Installation" (Without ADP).

Diagnosis Procedure

INFOID:0000000007456776

1.CHECK POWER SUPPLY

1. Turn ignition switch OFF.
2. Disconnect auto anti-dazzling inside mirror (homelink universal transceiver) connector.
3. Check voltage between auto anti-dazzling inside mirror (home link universal transceiver) harness connector and ground.

Auto anti-dazzling inside mirror (Homelink universal transceiver) connector	Terminal		Condition	Voltage (V) (Approx.)
R3	10	Ground	Ignition switch position: OFF	Battery voltage
	6		Ignition switch position: ON	

Is the inspection result normal?

YES >> GO TO 2.
NO >> Check the following.
- 10A fuse [No. 3 located in the fuse block (J/B)]
- 10A fuse [No. 6 located in the fuse block (J/B)]
- Harness for open or short between fuse and auto anti-dazzling inside mirror (homelink universal transceiver).

2.CHECK GROUND CIRCUIT

Check continuity between auto anti-dazzling inside mirror (homelink universal transceiver) harness connector and ground.

Auto anti-dazzling inside mirror (Homelink universal transceiver) connector	Terminal	Ground	Continuity
R3	8		Existed

Is the inspection result normal?

YES >> GO TO 3.
NO >> Repair harness.

3. CHECK INTERMITTENT INCIDENT

Refer to GI-42, "Intermittent Incident".

>> INSPECTION END

POWER DOOR LOCK SYSTEM

Wiring Diagram - POWER DOOR LOCK SYSTEM -

INFOID:0000000007456777

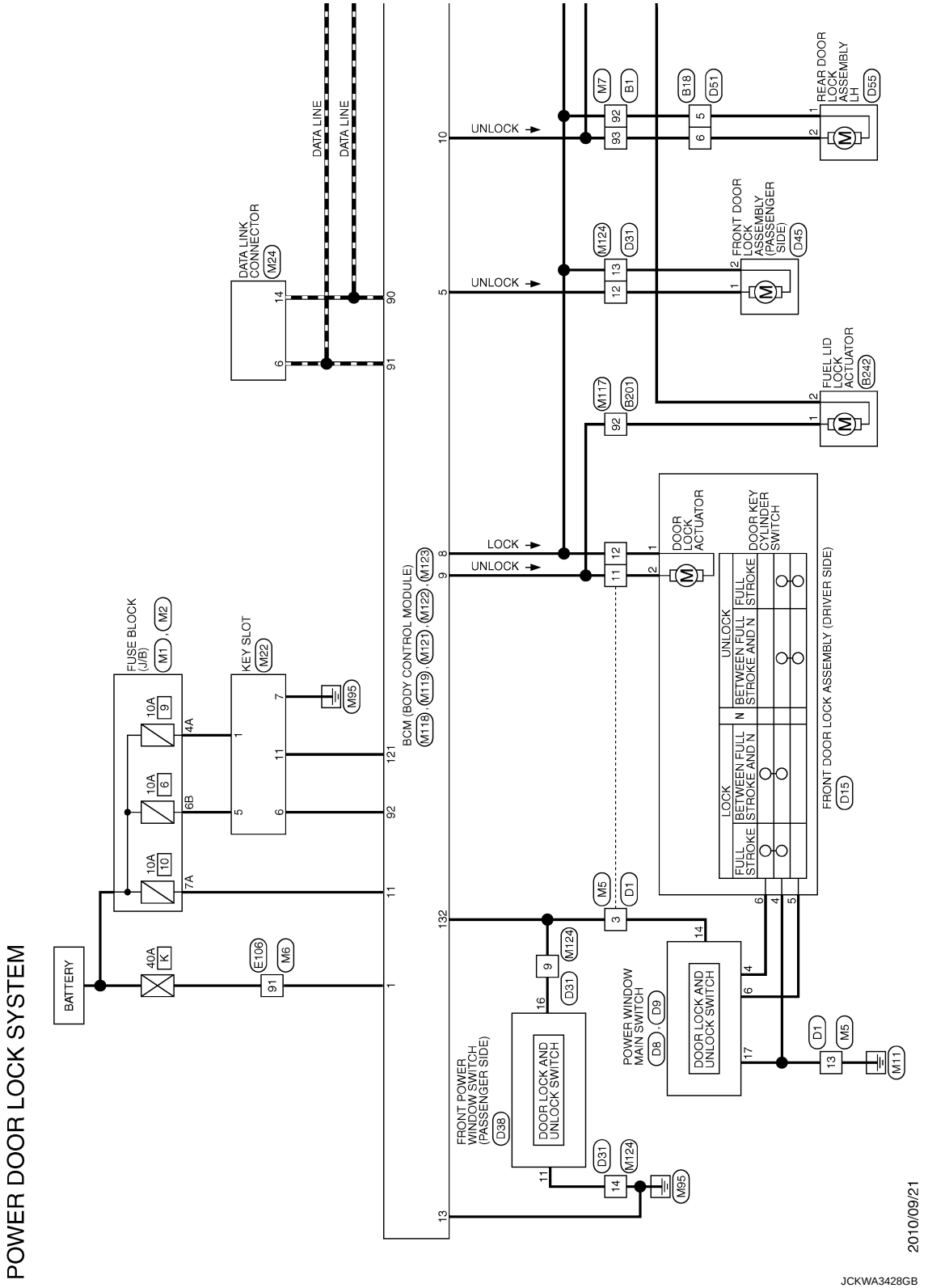

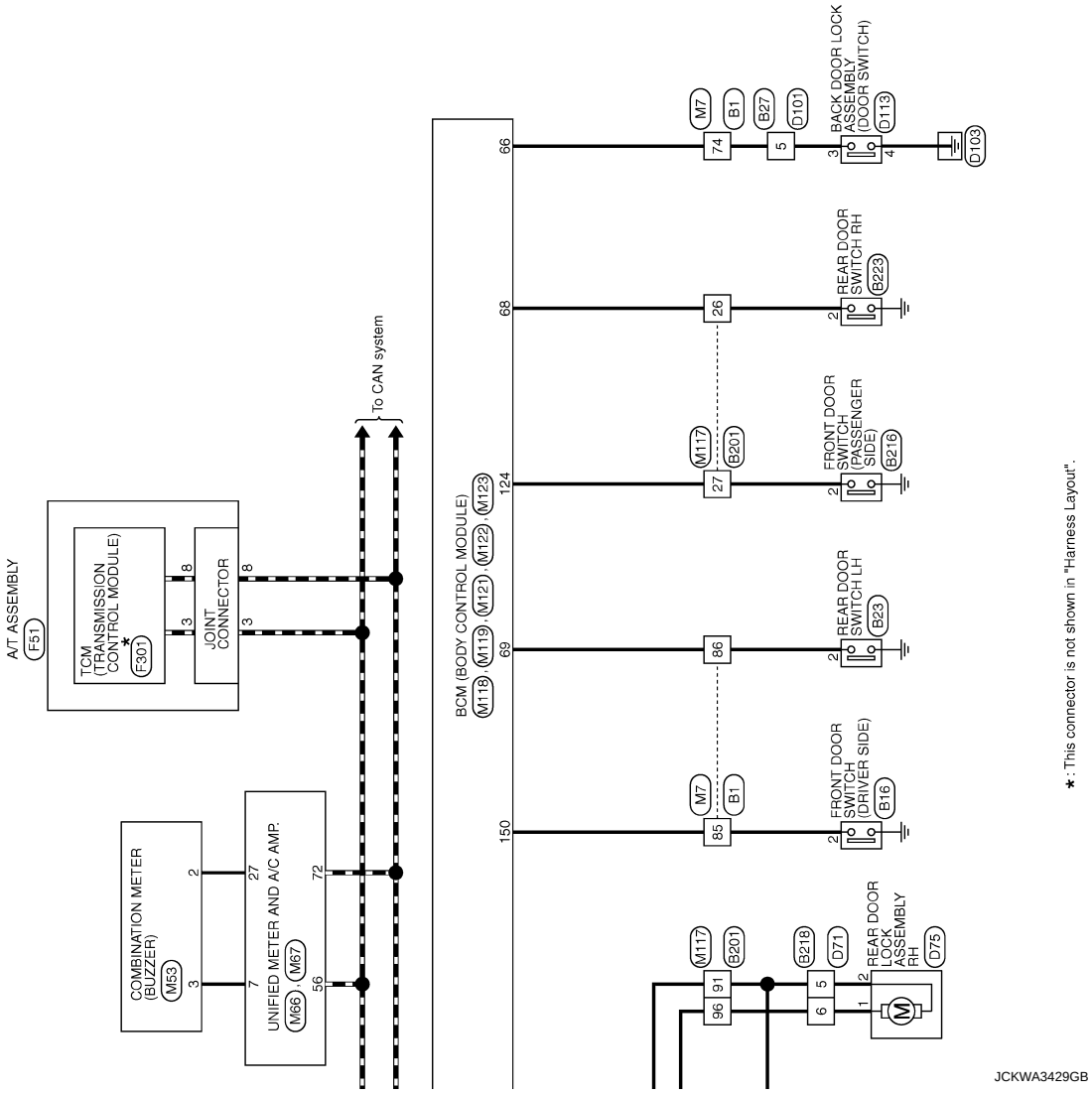
A/T ASSEMBLY
F51
TCM (TRANSMISSION CONTROL MODULE)
F301
JOINT CONNECTOR
To CAN system
COMBINATION METER (BUZZER)
M53
UNIFIED METER AND A/C AMP.
M66, M67
BCM (BODY CONTROL MODULE)
M118, M119, M121, M122, M123
BACK DOOR LOCK ASSEMBLY (DOOR SWITCH)
D113
D103
REAR DOOR SWITCH RH
B223
FRONT DOOR SWITCH (PASSENGER SIDE)
B216
REAR DOOR SWITCH LH
B23
FRONT DOOR SWITCH (DRIVER SIDE)
B16
REAR DOOR LOCK ASSEMBLY RH
D75
★: This connector is not shown in "Harness Layout".
JCKWA3429GB

POWER DOOR LOCK SYSTEM

Connector No.	B1
Connector Name	WIRE TO WIRE
Connector Type	TH80FW-CS16-TM4

H.S.

Terminal No.	Color Of Wire	Signal Name [Specification]
3	R	-
5	G	-
6	SB	-
7	V	-
8	L	-
12	SB	-
13	LG	-
14	GR	-
15	LG	-
17	W	-
18	SB	-
19	LG	-
20	BR	-
21	SHIELD	-
22	Y	-
24	P	-
27	B	-
28	R	-
29	W	-
30	SHIELD	-
31	SHIELD	-
32	W	-
33	SB	-
34	L	-
35	P	-
36	L	-
37	P	-
38	BR	-
39	Y	-
44	Y	-
45	GR	-
46	LG	-
47	SB	-
49	G	-
50	V	-
60	P	-
61	L	-
62	SHIELD	-
63	R	-
64	G	-
65	SHIELD	-
66	W	-
67	V	-
68	SB	-
69	SHIELD	-
70	W	-
73	SB	-
74	L	-
75	W	-
76	BR	-
77	R	-
78	P	-
79	GR	-
83	BG	-
85	V	-
86	LG	-
87	Y	-
88	R	-
89	B	-
90	BG	-
91	G	-
92	BR	-
93	G	-
94	SB	-
95	G	-
96	Y	-
98	W	-
99	GR	-

Connector No.	B16
Connector Name	FRONT DOOR SWITCH (DRIVER SIDE)
Connector Type	A03FW

H.S.

Terminal No.	Color Of Wire	Signal Name [Specification]
2	V	-

Connector No.	B18
Connector Name	WIRE TO WIRE
Connector Type	NH10FW-CS10

H.S.

Terminal No.	Color Of Wire	Signal Name [Specification]
2	LG	- [Without BOSE audio]
2	Y	- [With BOSE audio]
4	Y	-
5	BR	-
6	G	-
7	B	-
8	G	- [With BOSE audio]
8	Y	- [Without BOSE audio]
19	GR	-
20	W	-

Connector No.	B23
Connector Name	REAR DOOR SWITCH LH
Connector Type	A03FW

H.S.

Terminal No.	Color Of Wire	Signal Name [Specification]
2	LG	-

Connector No.	B27
Connector Name	WIRE TO WIRE
Connector Type	M06MW-LC

H.S.

Terminal No.	Color Of Wire	Signal Name [Specification]
1	R	-
2	G	-
3	B	-
4	SB	-
5	L	-

JRKWE4499GB

POWER DOOR LOCK SYSTEM

Connector No.	B201
Connector Name	WIRE TO WIRE
Connector Type	TH80FW-CS16-TM4

H.S.

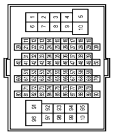

Terminal No.	Color Of Wire	Signal Name [Specification]
1	W	-
2	R	-
3	GR	-
4	BG	-
7	LG	-
10	W	-
15	SB	-
16	V	-
17	BR	-
26	BR	-
27	L	-
28	Y	-
29	V	-
30	GR	-
31	R	-
32	BR	-
33	G	-
51	R	-
52	V	-
55	G	-
56	R	-
57	W	-
58	B	-
59	SHIELD	-
60	LG	-
61	W	-
62	BR	-
63	P	-
64	L	-
65	G	-
66	P	-
67	L	-
68	SHIELD	-
69	V	-
70	Y	-
71	SB	-
72	W	-
73	BR	-
75	Y	-
80	V	-
81	SB	-
82	LG	-
83	P	-
84	R	-
85	L	-
86	BG	-
87	L	-
88	P	-
91	V	-
92	R	-
94	R	-
95	SB	-
96	G	-
97	G	-
98	R	-
99	P	-
100	L	-

Connector No.	B216
Connector Name	FRONT DOOR SWITCH (PASSENGER SIDE)
Connector Type	A03FW

H.S.

Terminal No.	Color Of Wire	Signal Name [Specification]
2	L	-

Connector No.	B218
Connector Name	WIRE TO WIRE
Connector Type	NH10FW-CS10

H.S.

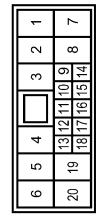

Terminal No.	Color Of Wire	Signal Name [Specification]
2	L	-
4	LG	-
5	V	-
6	G	-
7	B	-
8	P	-
19	R	-
20	W	-

Connector No.	B223
Connector Name	REAR DOOR SWITCH RH
Connector Type	A03FW

H.S.

Terminal No.	Color Of Wire	Signal Name [Specification]
2	BR	-

Connector No.	B242
Connector Name	FUEL LID LOCK ACTUATOR
Connector Type	M04FW-LC

H.S.

Terminal No.	Color Of Wire	Signal Name [Specification]
1	R	-
2	V	-

Connector No.	D1
Connector Name	WIRE TO WIRE
Connector Type	TH40FW-CS15

H.S.

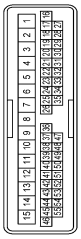

Terminal No.	Color Of Wire	Signal Name [Specification]
1	R	-
2	B	-
3	V	-
4	W	-
5	L	-
6	O	-
7	GR	-
8	W	-
9	O	-
10	BR	-
11	P	-
12	LG	-
13	B	-
14	Y	-
15	W	-
16	R	-
17	W	-
18	G	-

JRKWE4500GB

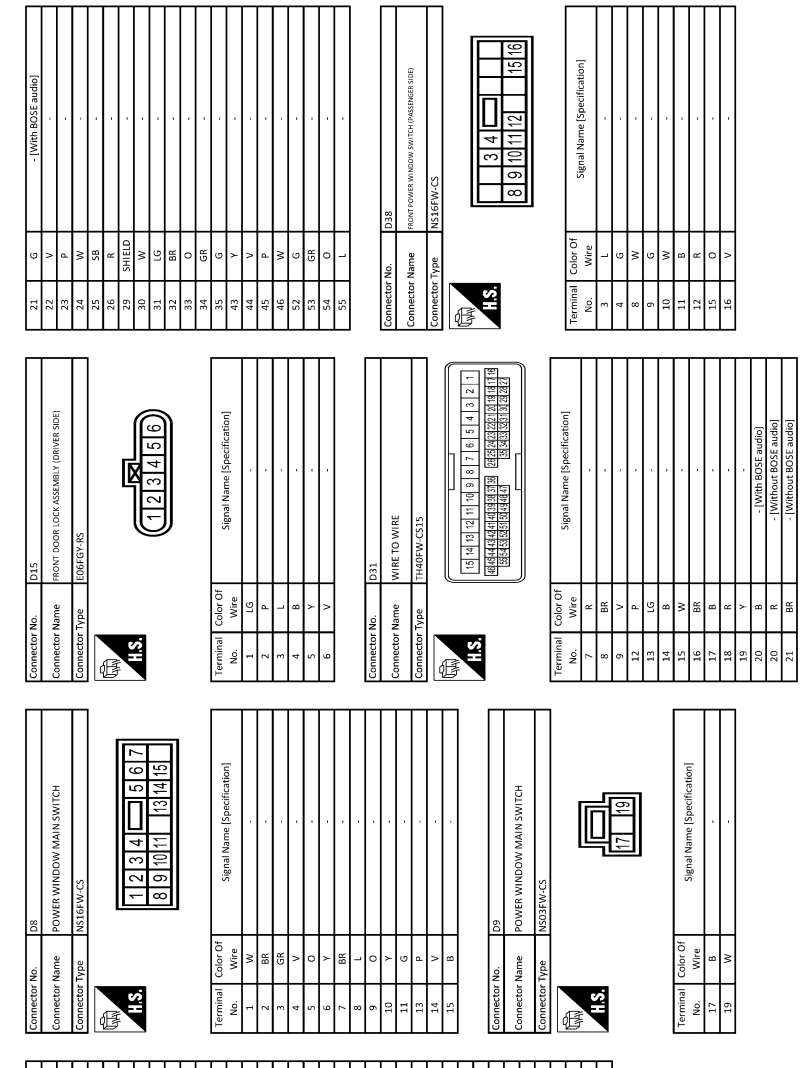

JRKWE4501GB

POWER DOOR LOCK SYSTEM

Connector No.	D45
Connector Name	FRONT DOOR LOCK ASSEMBLY (PASSENGER SIDE)
Connector Type	E06FGY-RS

H.S.

Terminal No.	Color Of Wire	Signal Name [Specification]
1	P	-
2	LG	-

Connector No.	D51
Connector Name	WIRE TO WIRE
Connector Type	NH10MW-CS10

H.S.

Terminal No.	Color Of Wire	Signal Name [Specification]
2	LG	- [Without BOSE audio]
2	Y	- [With BOSE audio]
4	Y	-
5	V	-
6	G	-
7	B	-
8	G	- [With BOSE audio]
8	Y	- [Without BOSE audio]
19	G	-
20	V	-

Connector No.	D55
Connector Name	REAR DOOR LOCK ASSEMBLY LH
Connector Type	E06FGY-RS

H.S.

Terminal No.	Color Of Wire	Signal Name [Specification]
1	V	-
2	G	-

Connector No.	D71
Connector Name	WIRE TO WIRE
Connector Type	NH10MW-CS10

H.S.

Terminal No.	Color Of Wire	Signal Name [Specification]
2	L	-
4	W	-
5	V	-
6	G	-
7	B	-
8	P	- [With BOSE audio]
8	Y	- [Without BOSE audio]
19	G	-
20	V	-

Connector No.	D75
Connector Name	REAR DOOR LOCK ASSEMBLY RH
Connector Type	E06FGY-RS

H.S.

Terminal No.	Color Of Wire	Signal Name [Specification]
1	G	-
2	V	-

Connector No.	D101
Connector Name	WIRE TO WIRE
Connector Type	M06FW-LC

H.S.

Terminal No.	Color Of Wire	Signal Name [Specification]
1	R	-
2	G	-
3	B	-
4	Y	-
5	V	-

Connector No.	D113
Connector Name	BACK DOOR LOCK ASSEMBLY
Connector Type	N5044W-CS

H.S.

Terminal No.	Color Of Wire	Signal Name [Specification]
1	Y	-
2	B	-
3	V	-
4	B	-

Connector No.	E106
Connector Name	WIRE TO WIRE
Connector Type	TH80FW-CS16-TM4

H.S.

Terminal No.	Color Of Wire	Signal Name [Specification]
1	R	-
2	W	-
3	B	-
4	GR	-
5	GR	-
8	Y	-
9	BR	-
10	BG	-
11	SB	-
12	BG	-
13	L	-
14	R	-
15	P	-
16	V	-
17	SB	-
18	V	-

JRKWE4502GB

POWER DOOR LOCK SYSTEM

20	BG	-
21	L	-
22	V	-
23	G	-
24	P	-
25	Y	-
26	V	-
27	W	-
28	G	-
31	BG	-
32	W	-
33	B	-
34	R	-
35	G	-
36	SHIELD	-
37	V	-
38	BR	-
39	BG	-
41	W	-
42	G	-
43	BR	-
45	W	-
49	L	-
50	P	-
51	L	-
54	BG	-
57	BR	-
59	W	-
60	LG	-
61	G	-
62	SB	-
63	W	-
64	B	-
65	G	-
66	R	-
67	SHIELD	-
68	Y	-
69	LG	-
70	W	-
71	R	-
72	Y	-
73	B	-
74	BR	- : [With ICC] - : [Without ICC]
74	L	- : [With ICC]
75	G	- : [Without ICC]
75	W	- : [With ICC]
76	W	- : [Without ICC]
76	Y	- : [Without ICC]
77	P	- : [Without ICC]
77	R	- : [With ICC]
78	BR	- : [Without ICC]
78	L	- : [With ICC]
79	L	- : [Without ICC]
79	Y	- : [With ICC]
80	SB	-
81	R	-
82	SB	-
83	BG	-
84	G	-
85	L	-
86	P	-
87	V	-
89	GR	-
90	SHIELD	-
91	W	-
92	Y	-
93	V	-
94	LG	-
95	BG	-
96	P	-
97	R	-
98	SHIELD	-
99	L	-
100	P	-

Connector No. F51
Connector Name A/T ASSEMBLY
Connector Type RK10FG-DGY

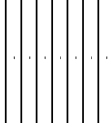

Terminal No.	Color Of Wire	Signal Name [Specification]
1	Y	-
2	BR	-
3	L	-
4	V	-
5	B	-
6	Y	-
7	R	-
8	P	-
9	GR	-
10	B	-

Connector No. F301
Connector Name TCM (TRANSMISSION CONTROL MODULE)
Connector Type SP10FG

Terminal No.	Color Of Wire	Signal Name [Specification]
1	-	VIGN
2	-	BATT
3	-	CAN-H
4	-	K LINE
5	-	GROUND
6	-	VIGN
7	-	REV LAMP RLY
8	-	CAN-L
9	-	START RLY
10	-	GROUND

Connector No. M1
Connector Name FUSE BLOCK (J/B)
Connector Type NS06FW-M2

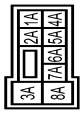

Terminal No.	Color Of Wire	Signal Name [Specification]
1A	GR	-
2A	G	-
3A	L	-
4A	P	-
5A	V	-
6A	Y	-
7A	R	-
8A	L	-

Connector No. M2
Connector Name FUSE BLOCK (J/B)
Connector Type NS10FW-CS

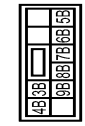

Terminal No.	Color Of Wire	Signal Name [Specification]
3B	P	-
4B	G	-
5B	BG	-
6B	Y	-
7B	P	-
8B	R	-
9B	SB	-

Connector No. M5
Connector Name WIRE TO WIRE
Connector Type TH40MW-CS15

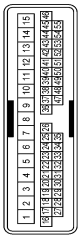

Terminal No.	Color Of Wire	Signal Name [Specification]
1	R	-
2	B	-
3	BR	-
4	P	-
5	L	-
6	R	-
7	R	-
8	W	-
9	G	-
10	L	-
11	G	-
12	V	-
13	B	-

JRKWE4503GB

POWER DOOR LOCK SYSTEM

14	Y	-
15	W	-
16	R	-
17	B	-
18	G	-
19	Y	-
20	L	-
21	LG	-
22	L	-
23	G	-
24	Y	-
25	GR	-
26	R	-
27	W	-
28	SHIELD	-
29	Y	-
30	Y	-
31	R	-
32	BR	-
33	SB	-
34	Y	-
35	P	-
36	LG	-
37	BR	-
38	P	-
39	BG	-
40	SB	-
41	L	-
42	R	-
43	BR	-
44	V	-
45	G	-
46	SB	- [With automatic drive positioner]
46	V	- [Without automatic drive positioner]
49	P	-
50	B	-
52	R	-
53	V	-
54	LG	-
55	SB	-

H.S.

Connector No. M6
Connector Name WIRE TO WIRE
Connector Type TH80MW-CS16-TM4

Terminal No.	Color Of Wire	Signal Name [Specification]
1	W	-
2	R	-
3	B	-
4	SHIELD	-
5	G	-
8	Y	-
9	BR	-
10	R	-
11	BR	-
12	BG	-
13	L	-
14	R	-
15	P	-
16	V	-
17	SB	-
18	V	-
20	BG	-
21	L	-
22	W	-
23	P	-
24	BR	-
25	Y	-
26	V	-
27	G	-
28	G	-
31	L	-
32	G	-
33	B	-
34	W	-
35	R	-
36	SHIELD	-
37	V	-
38	BG	-
39	BR	-
41	W	-
42	BG	-
43	BG	-
45	W	-
49	L	-
50	P	-
51	BR	-
54	Y	-
57	G	-
59	W	-
60	L	-
61	G	-
62	SB	-
63	G	-
64	B	-
65	W	-
66	R	-
67	SHIELD	-
68	Y	-
69	GR	-
70	LG	-
71	LG	-
72	Y	-
73	SB	-
74	BR	- [With ICC]
74	L	- [Without ICC]
75	G	-
76	GR	- [Without ICC]
76	W	- [With ICC]
77	P	- [Without ICC]
77	R	- [With ICC]
78	L	- [With ICC]
78	R	- [Without ICC]
79	W	- [Without ICC]
79	Y	- [With ICC]
80	SB	-
81	SB	-
82	SB	-
83	V	-
84	G	-
85	L	-
86	P	-
87	W	-
89	GR	-
90	SHIELD	-
91	W	-
92	Y	-
93	BR	-
94	P	-
95	GR	-
96	W	-
97	L	-
98	SHIELD	-
99	V	-
100	SB	-

H.S.

Connector No. M7
Connector Name WIRE TO WIRE
Connector Type TH80MW-CS16-TM4

Terminal No.	Color Of Wire	Signal Name [Specification]
3	SB	- [With automatic drive positioner]
3	W	- [Without automatic drive positioner]
5	G	-
6	BG	-
7	W	-
8	B	-
12	SB	-
13	LG	-
14	Y	-
15	G	-
17	W	-
18	SB	-
19	LG	-
20	BR	-
21	SHIELD	-
22	Y	-
24	V	-
27	B	-
28	W	-
29	R	-
30	SHIELD	-
31	L	-
32	P	-
33	SB	-
34	L	-
35	P	-
36	L	-
37	P	-
38	BR	-
39	Y	-
44	L	-

JRKWE4504GB

POWER DOOR LOCK SYSTEM

45	GR	-
46	LG	-
47	SB	-
49	V	-
50	R	-
60	P	-
61	L	-
62	SHIELD	-
63	R	-
64	G	-
65	SHIELD	-
66	SB	-
67	V	-
68	LG	-
69	SHIELD	-
70	W	-
73	G	-
74	R	-
75	W	-
76	W	-
77	B	-
78	P	-
79	GR	-
83	BG	-
85	LG	-
86	R	-
87	Y	-
88	W	-
89	BR	-
90	BG	-
91	G	-
92	V	-
93	BR	-
94	V	-
95	G	-
96	Y	-
98	W	-
99	R	-

Connector No.	M22
Connector Name	KEY SLOT
Connector Type	TH12FW-NH

Terminal No.	Color Of Wire	Signal Name [Specification]
1	R	BAT
2	GR	CLOCK
3	W	DATA
5	Y	ILL BAT
6	LG	ILL
7	B	GROUND
11	BR	KEY SWITCH SIGNAL

Connector No.	M24
Connector Name	DATA LINK CONNECTOR
Connector Type	BD16FW

Terminal No.	Color Of Wire	Signal Name [Specification]
3	LG	-
4	B	-
5	B	-
6	L	-
7	V	-
8	G	-
11	SB	-
14	P	-
16	Y	-

Connector No.	M53
Connector Name	COMBINATION METER
Connector Type	TH40FW-NH

Terminal No.	Color Of Wire	Signal Name [Specification]
1	GR	BATTERY POWER SUPPLY
2	LG	COMMUNICATION SIGNAL (METER->AMP.)
3	GR	COMMUNICATION SIGNAL (AMP.->METER)
5	B	GROUND
6	P	ALTERNATOR SIGNAL
7	BR	AIR BAG SIGNAL
10	G	SECURITY SIGNAL
15	B	GROUND
16	B	METER CONTROL SWITCH GROUND
19	B	ILL GND
20	R	ILL
21	BG	IGNITION SIGNAL
22	B	GROUND
24	BR	COMMUNICATION SIGNAL (LCD->AMP.)
25	Y	COMMUNICATION SIGNAL (AMP.->LCD)
26	R	VEHICLE SPEED SIGNAL (8-PULSE)
27	V	PARKING BRAKE SWITCH SIGNAL
28	W	BRAKE FLUID LEVEL SWITCH SIGNAL
29	SB	SEAT BELT BUCKLE SWITCH SIGNAL (DRIVER SIDE)
30	G	SEAT BELT BUCKLE SWITCH SIGNAL (PASSENGER SIDE)
31	L	WASHER LEVEL SWITCH SIGNAL
33	B	ILLUMINATION CONTROL SIGNAL
36	LG	SELECT SWITCH SIGNAL
37	SB	ENTER SWITCH SIGNAL
38	L	TRIP A/B RESET SWITCH SIGNAL
39	P	ILLUMINATION CONTROL SWITCH SIGNAL (-)
40	BG	ILLUMINATION CONTROL SWITCH SIGNAL (+)

Connector No.	M66
Connector Name	UNIFIED METER AND A/C AMP.
Connector Type	TH40FW-NH

Terminal No.	Color Of Wire	Signal Name [Specification]
5	L	MANUAL MODE SHIFT UP SIGNAL
7	GR	COMMUNICATION SIGNAL (AMP.->METER)
8	L	VEHICLE SPEED SIGNAL (2-PULSE)
9	SB	SEAT BELT BUCKLE SWITCH SIGNAL (DRIVER SIDE)
10	W	MANUAL MODE SIGNAL
11	G	NON-MANUAL MODE SIGNAL
14	BR	COMMUNICATION SIGNAL (LCD->AMP.)
20	L	ION ON/OFF SIGNAL
23	Y	AT SNOW SWITCH SIGNAL
25	V	MANUAL MODE SHIFT DOWN SIGNAL
27	LG	COMMUNICATION SIGNAL (METER->AMP.)
28	R	VEHICLE SPEED SIGNAL (8-PULSE)
30	V	PARKING BRAKE SWITCH SIGNAL
34	Y	COMMUNICATION SIGNAL (AMP.->LCD)
38	P	BLOWER MOTOR CONTROL SIGNAL

Connector No.	M67
Connector Name	UNIFIED METER AND A/C AMP.
Connector Type	TH32FW-NH

Terminal No.	Color Of Wire	Signal Name [Specification]
41	V	ACC POWER SUPPLY
42	Y	FUEL LEVEL SENSOR SIGNAL
43	R	INTAKE SENSOR SIGNAL
44	LG	IN-VEHICLE SENSOR SIGNAL
45	P	AMBIENT SENSOR SIGNAL

JRKWE4505GB

POWER DOOR LOCK SYSTEM

46	BG	SUNLOAD SENSOR SIGNAL
47	G	EXHAUST GAS / OUTSIDE ODOR DETECTING SENSOR SIGNAL
53	G	IGNITION POWER SUPPLY
54	Y	BATTERY POWER SUPPLY
55	B	GROUND
56	L	CAN-H
57	W	BRAKE FLUID LEVEL SWITCH SIGNAL
58	BR	FUEL LEVEL SENSOR GROUND
59	GR	INTAKE SENSOR GROUND
60	L	IN-VEHICLE SENSOR GROUND
61	BR	AMBIENT SENSOR GROUND
62	SB	SUNLOAD SENSOR GROUND
63	R	-
65	BG	ECV SIGNAL
69	L	A/C LAN SIGNAL
70	R	EACH DOOR MOTOR POWER SUPPLY
71	B	GROUND
72	P	CAN-L

Connector No.	M117
Connector Name	WIRE TO WIRE
Connector Type	TH80MW-CS16-TM4

H.S.

Terminal No.	Color Of Wire	Signal Name [Specification]
1	L	-
2	G	-
3	GR	-
4	SB	-
7	W	-
10	W	-
15	SB	-
16	V	-
17	BR	-
26	BR	-
27	LG	-
28	Y	-
29	Y	-
30	V	-
31	R	-
32	BR	-
33	G	-
51	R	-
52	L	-
55	W	-
56	B	-
57	R	-
58	G	-
59	SHIELD	-
60	V	-
61	LG	-
62	BR	-
63	L	-
64	LG	-
65	B	-
66	R	-
67	W	-
68	SHIELD	-
69	V	-
70	Y	-
71	SB	-
72	W	-
73	G	-
75	W	-
80	V	-
81	SB	-
82	V	-
83	P	-
84	R	-
85	L	-
86	BG	-
87	L	-
88	P	-
91	V	-
92	G	-
94	G	-
95	W	-
96	G	-
97	Y	-
98	BR	-
99	P	- [Without BOSE audio]
99	V	- [With BOSE audio]
100	L	- [Without BOSE audio]
100	SB	- [With BOSE audio]

Connector No.	M118
Connector Name	BCM (BODY CONTROL MODULE)
Connector Type	M03HFB-LC

H.S.

Terminal No.	Color Of Wire	Signal Name [Specification]
1	W	BAT (F/L)
2	W	POWER WINDOW POWER SUPPLY (BAT)
3	Y	POWER WINDOW POWER SUPPLY (RAP)

Connector No.	M119
Connector Name	BCM (BODY CONTROL MODULE)
Connector Type	NS16FW-CS

H.S.

Terminal No.	Color Of Wire	Signal Name [Specification]
4	LG	INTERIOR ROOM LAMP POWER SUPPLY
5	L	PASSENGER DOOR UNLOCK OUTPUT
7	Y	STEP LAMP CONT
8	V	ALL DOOR, FUEL LID LOCK OUTPUT
9	G	DRIVER DOOR, FUEL LID UNLOCK OUTPUT
10	BR	REAR DOOR UNLOCK OUTPUT
11	R	BAT (FUSE)
13	B	GROUND
14	W	PUSH-BUTTON IGNITION SW ILL GND
15	Y	ACC IND
17	W	TURN SIGNAL RH (FRONT)
18	BG	TURN SIGNAL LH (FRONT)
19	V	INT ROOM LAMP CONT

Connector No.	M121
Connector Name	BCM (BODY CONTROL MODULE)
Connector Type	TH40FGY-NH

H.S.

Terminal No.	Color Of Wire	Signal Name [Specification]
34	SB	LUGGAGE ROOM ANT-
35	V	LUGGAGE ROOM ANT+
38	B	BACK DOOR ANT-
39	W	BACK DOOR ANT+
47	Y	IGN RELAY (IPDM E/R) CONT
52	SB	STARTER RELAY CONT
60	BR	PUSH SW
61	W	BACK DOOR OPENER REQUEST SW
64	V	I-KEY WARN BUZZER (ENG ROOM)
65	BG	REAR WIPER STOP POSITION
66	R	BACK DOOR SW
67	GR	BACK DOOR OPENER SW
68	BR	REAR RH DOOR SW
69	R	REAR LH DOOR SW

Connector No.	M122
Connector Name	BCM (BODY CONTROL MODULE)
Connector Type	TH40FB-NH

H.S.

Terminal No.	Color Of Wire	Signal Name [Specification]
72	R	ROOM ANT2-
73	G	ROOM ANT2+
74	SB	PASSENGER DOOR ANT-
75	GR	PASSENGER DOOR ANT+
76	V	DRIVER DOOR ANT-
77	LG	DRIVER DOOR ANT+

JRKWE4506GB

POWER DOOR LOCK SYSTEM

78	Y	ROOM ANT1-
79	BR	ROOM ANT1+
80	GR	NATS ANT AMP.
81	W	NATS ANT AMP.
82	R	IGN RELAY (F/B) CONT
83	Y	KEYLESS ENTRY RECEIVER COMM
87	BR	COMBI SW INPUT 5
88	V	COMBI SW INPUT 3
90	P	CAN-L
91	L	CAN-H
92	LG	KEY SLOT ILL CONT
93	V	ON IND
94	Y	PUDDLE LAMP CONT
95	BG	ACC RELAY CONT
96	GR	A/T SHIFT SELECTOR POWER SUPPLY
99	R	SHIFT P
100	G	PASSENGER DOOR REQUEST SW
101	SB	DRIVER DOOR REQUEST SW
102	BG	BLOWER FAN MOTOR RELAY CONT
103	LG	KEYLESS ENTRY RECEIVER POWER SUPPLY
107	LG	COMBI SW INPUT 1
108	R	COMBI SW INPUT 4
109	Y	COMBI SW INPUT 2
110	G	HAZARD SW

Connector No.	M123
Connector Name	BCM (BODY CONTROL MODULE)
Connector Type	TH40FG-NH

Terminal No.	Color Of Wire	Signal Name [Specification]
113	P	OPLICAL SENSOR
116	SB	STOP LAMP SW 1
118	P	STOP LAMP SW 2
119	SB	DR DOOR UNLOCK SENSOR
121	BR	KEY SLOT SW
123	W	IGN F/B
124	LG	PASSENGER DOOR SW
132	BR	POWER WINDOW SW COMM
133	W	PUSH-BUTTON IGNITION SW ILL POWER
134	GR	LOCK IND

137	BG	RECEIVER/SENSOR GND
138	Y	RECEIVER/SENSOR POWER SUPPLY
139	L	TIRE PRESSURE RECEIVER COMM
140	GR	SHIFT N/P
141	G	SECURITY IND LAMP CONT
142	BG	COMBI SW OUTPUT 5
143	P	COMBI SW OUTPUT 1
144	G	COMBI SW OUTPUT 2
145	L	COMBI SW OUTPUT 3
146	SB	COMBI SW OUTPUT 4
150	LG	DRIVER DOOR SW
151	G	REAR WINDOW DEFOGGER RELAY CONT

Connector No.	M124
Connector Name	WIRE TO WIRE
Connector Type	TH40MW-CS15

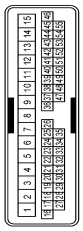

Terminal No.	Color Of Wire	Signal Name [Specification]
7	Y	-
8	LG	-
9	Y	-
12	L	-
13	V	-
14	B	-
15	W	-
16	BR	-
17	B	-
18	R	-
19	B	-
20	W	- [Without BOSE audio]
20	Y	- [With BOSE audio]
21	G	- [With BOSE audio]
21	L	- [Without BOSE audio]
22	SB	-
23	GR	-
24	G	-
25	Y	-
26	R	-
29	SHIELD	-
30	W	-

31	LG	-
32	G	-
33	BR	-
34	V	-
35	G	-
43	L	-
44	Y	-
45	R	-
46	W	-
52	R	-
53	G	-
54	W	-
55	BG	-

JRKWE4507GB

INTELLIGENT KEY SYSTEM

Wiring Diagram - INTELLIGENT KEY SYSTEM -

INFOID:0000000007456778

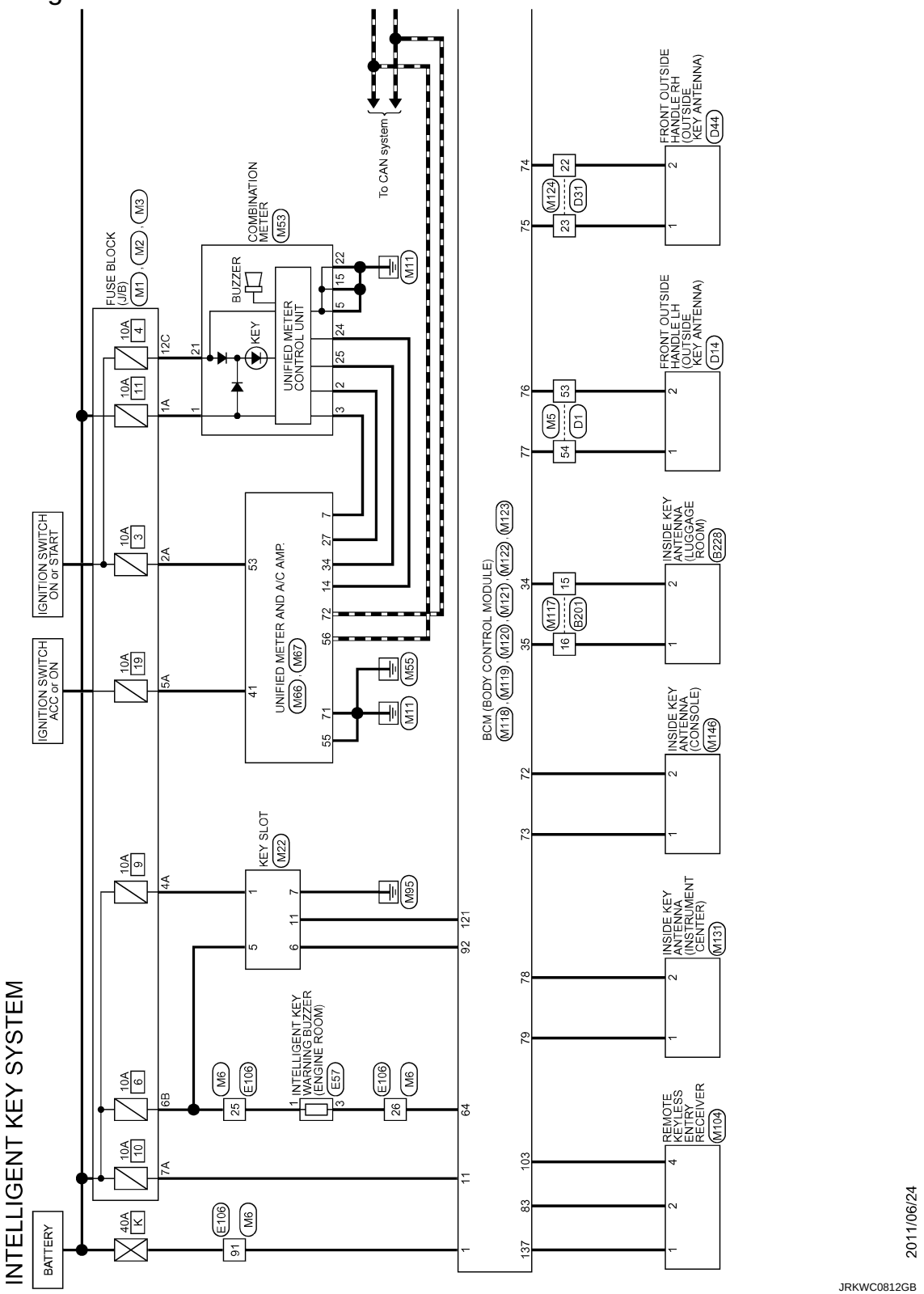

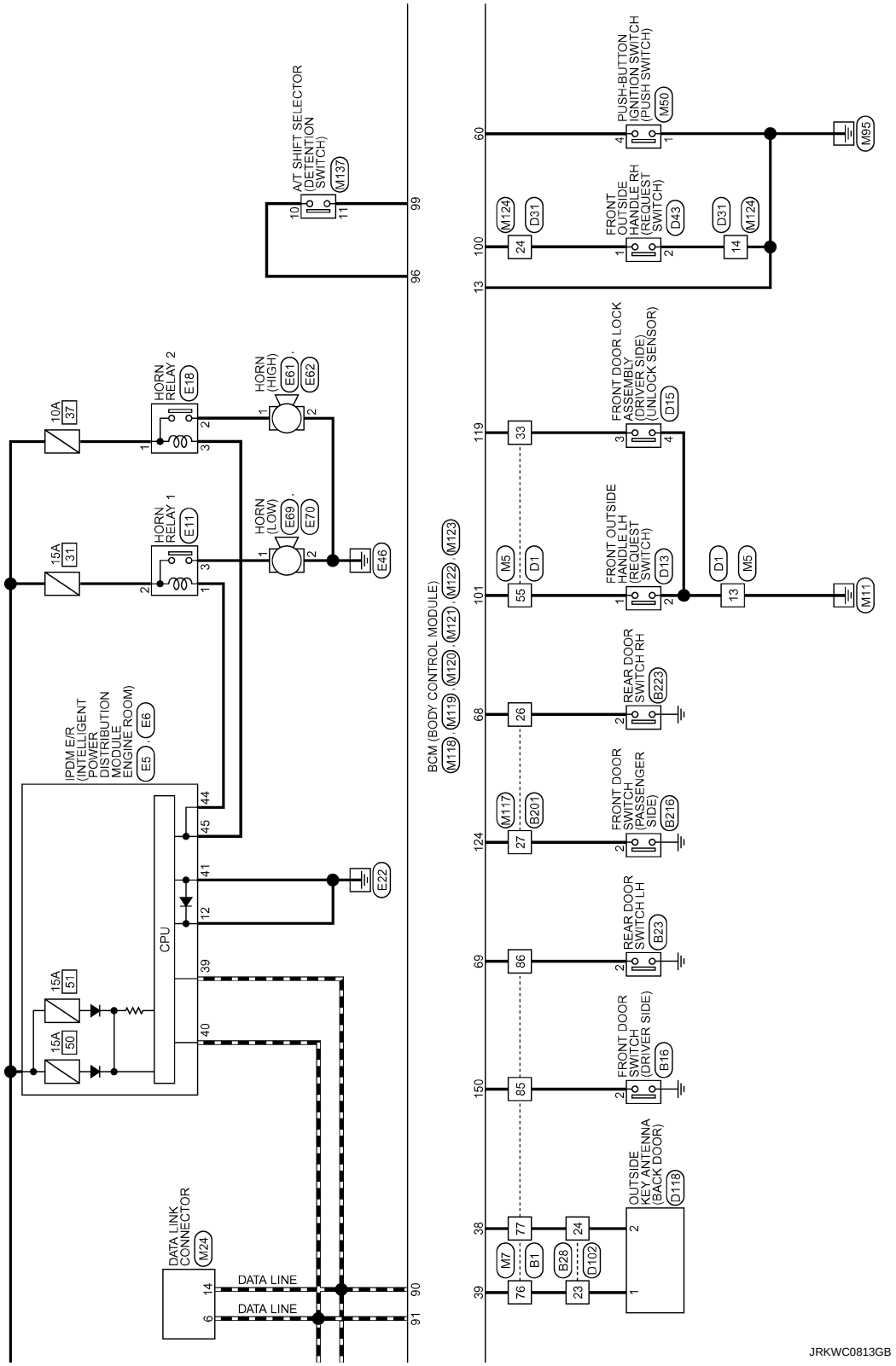
A/T SHIFT SELECTOR (DETENTION SWITCH)
M137
10
11
99
96
HORN RELAY 2
E18
HORN (HIGH)
E61
E62
10A
37
HORN RELAY 1
E11
HORN (LOW)
E69
E70
15A
31
E46
IPDM E/R (INTELLIGENT POWER DISTRIBUTION MODULE ENGINE ROOM)
E5
E6
CPU
44
45
41
12
39
40
15A
51
15A
50
E22
DATA LINK CONNECTOR
M24
14
6
DATA LINE
DATA LINE
90
91
BCM (BODY CONTROL MODULE)
M118
M119
M120
M121
M122
M123
PUSH-BUTTON IGNITION SWITCH (PUSH SWITCH)
M50
M95
FRONT OUTSIDE HANDLE RH (REQUEST SWITCH)
D43
M124
D31
24
14
60
100
13
FRONT DOOR LOCK ASSEMBLY (DRIVER SIDE) (UNLOCK SENSOR)
D15
33
119
FRONT OUTSIDE HANDLE LH (REQUEST SWITCH)
D13
M5
D1
55
101
13
M11
REAR DOOR SWITCH RH
B223
26
68
FRONT DOOR SWITCH (PASSENGER SIDE)
B216
M117
B201
27
124
REAR DOOR SWITCH LH
B23
86
69
FRONT DOOR SWITCH (DRIVER SIDE)
B16
85
150
OUTSIDE KEY ANTENNA (BACK DOOR)
D118
77
24
76
23
M7
B1
B28
D102
38
39
JRKWC0813GB

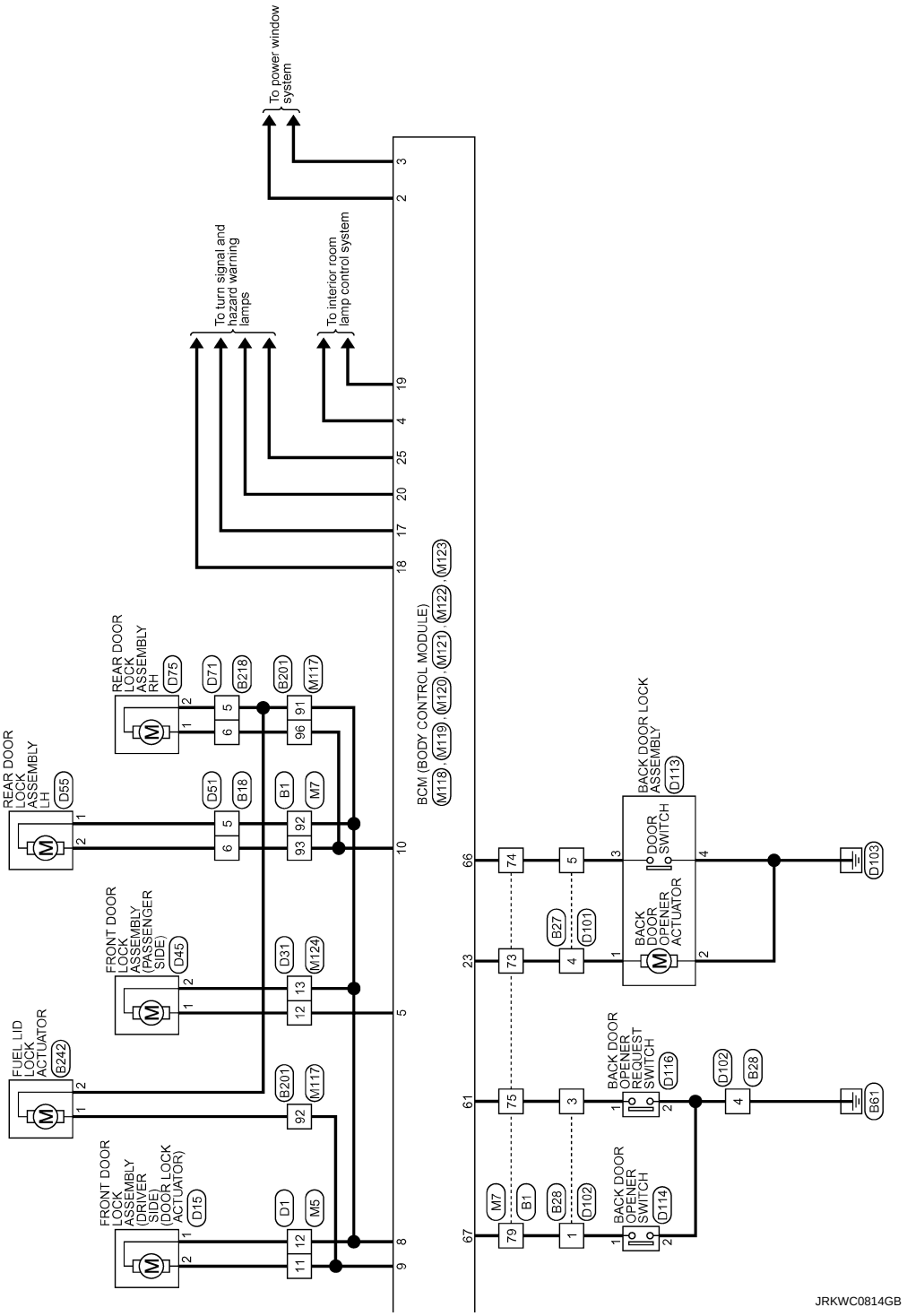
To power window system
To turn signal and hazard warning lamps
To interior room lamp control system
BCM (BODY CONTROL MODULE)
M118, M119, M120, M121, M122, M123
REAR DOOR LOCK ASSEMBLY LH
D55
REAR DOOR LOCK ASSEMBLY RH
D75
FRONT DOOR LOCK ASSEMBLY (PASSENGER SIDE)
D45
FUEL LID LOCK ACTUATOR
B242
FRONT DOOR LOCK ASSEMBLY (DRIVER SIDE) (DOOR LOCK ACTUATOR)
D15
BACK DOOR LOCK ASSEMBLY
D113
BACK DOOR OPENER ACTUATOR
DOOR SWITCH
BACK DOOR OPENER REQUEST SWITCH
D116
BACK DOOR OPENER SWITCH
D114
JRKWC0814GB

INTELLIGENT KEY SYSTEM

Connector No.	B1
Connector Name	WIRE TO WIRE
Connector Type	TH80FW-CS16-TM4

Terminal No.	Color Of Wire	Signal Name [Specification]
3	R	-
5	G	-
6	SB	-
7	V	-
8	L	-
12	SB	-
13	LG	-
14	GR	-
15	LG	-
17	W	-
18	SB	-
19	LG	-
20	BR	-
21	SHIELD	-
22	Y	-
24	P	-
27	B	-
28	R	-
29	W	-
30	SHIELD	-
31	SHIELD	-
32	W	-
33	SB	-
34	L	-
35	P	-
36	L	-
37	P	-
38	BR	-
39	Y	-
44	Y	-
45	GR	-
46	LG	-
47	SB	-
49	G	-
50	V	-
60	P	-
61	L	-
62	SHIELD	-
63	R	-
64	G	-
65	SHIELD	-
66	W	-
67	V	-
68	SB	-
69	SHIELD	-
70	W	-
73	SB	-
74	L	-
75	W	-
76	BR	-
77	R	-
78	P	-
79	GR	-
83	BG	-
85	V	-
86	LG	-
87	Y	-
88	R	-
89	B	-
90	BG	-
91	G	-
92	BR	-
93	G	-
94	SB	-
95	G	-
96	Y	-
98	W	-
99	GR	-

Connector No.	B16
Connector Name	FRONT DOOR SWITCH (DRIVER SIDE)
Connector Type	A03FW

Terminal No.	Color Of Wire	Signal Name [Specification]
2	V	-

Connector No.	B18
Connector Name	WIRE TO WIRE
Connector Type	NH10FW-CS10

Terminal No.	Color Of Wire	Signal Name [Specification]
2	LG	- [Without BOSE audio]
2	Y	- [With BOSE audio]
4	Y	-
5	BR	-
6	G	-
7	B	-
8	G	- [With BOSE audio]
8	Y	- [Without BOSE audio]
19	GR	-
20	W	-

Connector No.	B23
Connector Name	REAR DOOR SWITCH LH
Connector Type	A03FW

Terminal No.	Color Of Wire	Signal Name [Specification]
2	LG	-

Connector No.	B27
Connector Name	WIRE TO WIRE
Connector Type	M06MW-LC

Terminal No.	Color Of Wire	Signal Name [Specification]
1	R	-
2	G	-
3	B	-
4	SB	-
5	L	-

JRKWE4508GB

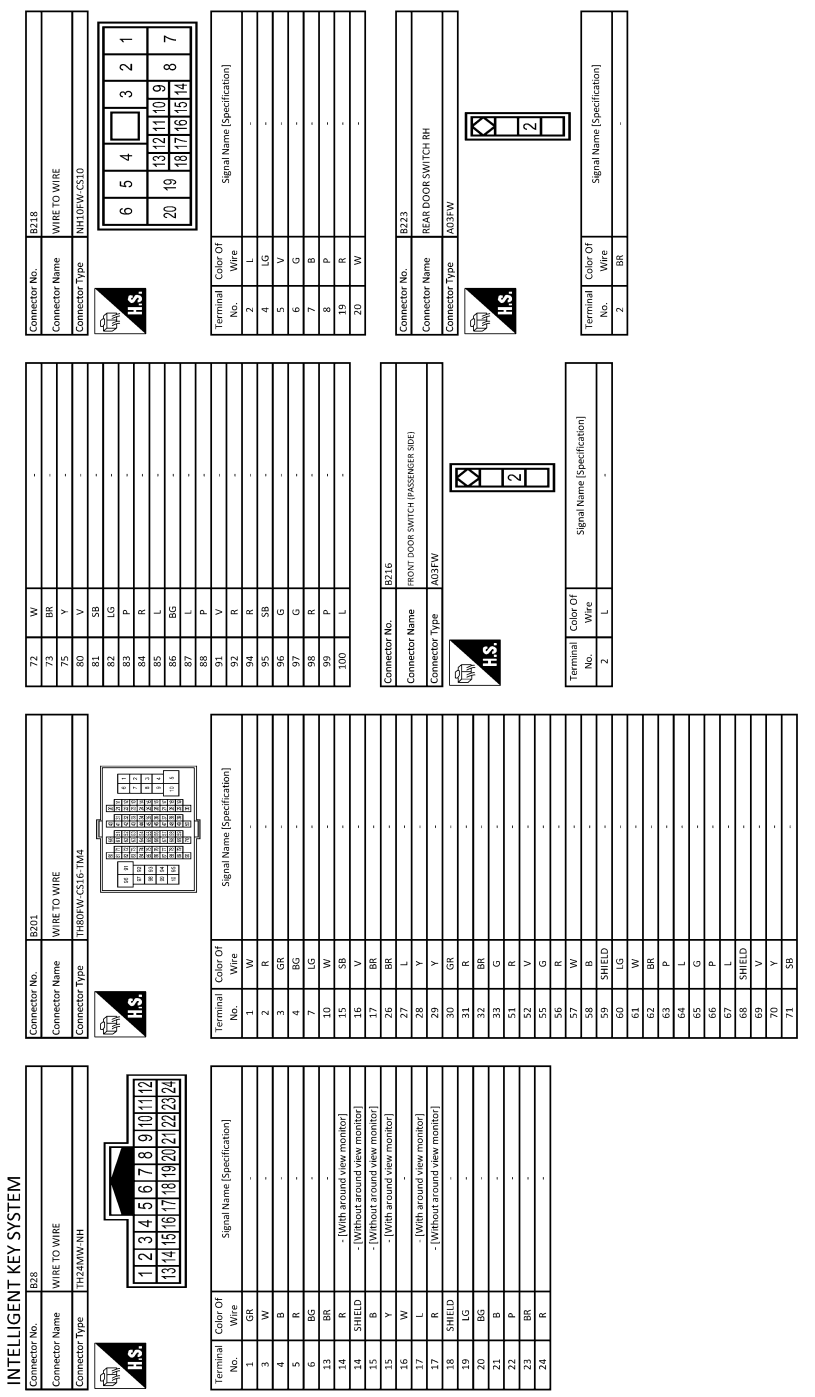

JRKWE4509GB

INTELLIGENT KEY SYSTEM

Connector No.	B228
Connector Name	INSIDE KEY ANTENNA (LUGGAGE ROOM)
Connector Type	RK02FGY

H.S.

Terminal No.	Color Of Wire	Signal Name [Specification]
1	V	-
2	SB	-

Connector No.	B242
Connector Name	FUEL LID LOCK ACTUATOR
Connector Type	M04FW-LC

H.S.

Terminal No.	Color Of Wire	Signal Name [Specification]
1	R	-
2	V	-

Connector No.	D1
Connector Name	WIRE TO WIRE
Connector Type	TH40FW-CS1S

H.S.

Terminal No.	Color Of Wire	Signal Name [Specification]
1	R	-
2	B	-
3	V	-
4	W	-
5	L	-
6	O	-
7	GR	-
8	W	-
9	O	-
10	BR	-
11	P	-
12	LG	-
13	B	-
14	Y	-
15	W	-
16	R	-
17	W	-
18	G	-
19	Y	-
20	W	-
21	O	-
22	P	-
23	BR	-
24	V	-
25	GR	-
26	Y	-
27	B	-
28	SHIELD	-
29	LG	-
30	G	-
31	W	-
32	G	-
33	L	-
34	SB	-
35	R	-
36	LG	-
37	R	-
38	P	-
39	O	-
40	BR	-
41	L	-
42	GR	-
43	BR	- [With automatic drive positioner]
43	O	- [Without automatic drive positioner]
44	GR	- [Without automatic drive positioner]
44	W	- [With automatic drive positioner]
45	G	- [Without automatic drive positioner]
45	Y	- [With automatic drive positioner]
46	G	- [With automatic drive positioner]
46	V	- [Without automatic drive positioner]
49	GR	-
50	B	-
52	R	-
53	SB	-
54	O	-
55	Y	-

Connector No.	D13
Connector Name	FRONT OUTSIDE HANDLE LH (REQUEST SWITCH)
Connector Type	RK02FL

H.S.

Terminal No.	Color Of Wire	Signal Name [Specification]
1	Y	-
2	B	-

Connector No.	D14
Connector Name	FRONT OUTSIDE HANDLE LH (OUTSIDE KEY ANTENNA)
Connector Type	RK02MGY

H.S.

Terminal No.	Color Of Wire	Signal Name [Specification]
1	O	-
2	SB	-

Connector No.	D15
Connector Name	FRONT DOOR LOCK ASSEMBLY (DRIVER SIDE)
Connector Type	E06FGY-RS

H.S.

Terminal No.	Color Of Wire	Signal Name [Specification]
1	LG	-
2	P	-
3	L	-
4	B	-
5	Y	-
6	V	-

JRKWE4510GB

INTELLIGENT KEY SYSTEM

Connector No.	D31
Connector Name	WIRE TO WIRE
Connector Type	TH40FW-CS15

Terminal No.	Color Of Wire	Signal Name [Specification]
7	R	-
8	BR	-
9	V	-
12	P	-
13	LG	-
14	B	-
15	W	-
16	BR	-
17	B	-
18	R	-
19	Y	-
20	B	- [With BOSE audio]
20	R	- [Without BOSE audio]
21	BR	- [Without BOSE audio]
21	G	- [With BOSE audio]
22	V	-
23	P	-
24	W	-
25	SB	-
26	R	-
29	SHIELD	-
30	W	-
31	LG	-
32	BR	-
33	O	-
34	GR	-
35	G	-
43	Y	-
44	V	-
45	P	-
46	W	-
52	G	-
53	GR	-
54	O	-
55	L	-

Connector No.	D43
Connector Name	FRONT OUTSIDE HANDLE RH (REQUEST SWITCH)
Connector Type	RK02FL

Terminal No.	Color Of Wire	Signal Name [Specification]
1	W	-
2	B	-

Connector No.	D44
Connector Name	FRONT OUTSIDE HANDLE RH (OUTSIDE KEY ANTENNA)
Connector Type	RK02MGY

Terminal No.	Color Of Wire	Signal Name [Specification]
1	P	-
2	V	-

Connector No.	D45
Connector Name	FRONT DOOR LOCK ASSEMBLY (PASSENGER SIDE)
Connector Type	E06FGY-RS

Terminal No.	Color Of Wire	Signal Name [Specification]
1	P	-
2	LG	-

Connector No.	D51
Connector Name	WIRE TO WIRE
Connector Type	NH10MW-CS10

Terminal No.	Color Of Wire	Signal Name [Specification]
2	LG	- [Without BOSE audio]
2	Y	- [With BOSE audio]
4	Y	-
5	V	-
6	G	-
7	B	-
8	G	- [With BOSE audio]
8	Y	- [Without BOSE audio]
19	G	-
20	V	-

Connector No.	D55
Connector Name	REAR DOOR LOCK ASSEMBLY LH
Connector Type	E06FGY-RS

Terminal No.	Color Of Wire	Signal Name [Specification]
1	V	-
2	G	-

Connector No.	D71
Connector Name	WIRE TO WIRE
Connector Type	NH10MW-CS10

Terminal No.	Color Of Wire	Signal Name [Specification]
2	L	-
4	W	-
5	V	-
6	G	-
7	B	-
8	P	- [With BOSE audio]
8	Y	- [Without BOSE audio]
19	G	-
20	V	-

JRKWE4511GB

INTELLIGENT KEY SYSTEM

Connector No.	D75
Connector Name	REAR DOOR LOCK ASSEMBLY RH
Connector Type	E06FGY-RS

H.S.

Terminal No.	Color Of Wire	Signal Name [Specification]
1	G	-
2	V	-

Connector No.	D101
Connector Name	WIRE TO WIRE
Connector Type	M06FW-LC

H.S.

Terminal No.	Color Of Wire	Signal Name [Specification]
1	R	-
2	G	-
3	B	-
4	Y	-
5	V	-

Connector No.	D102
Connector Name	WIRE TO WIRE
Connector Type	TH24FW-NH

H.S.

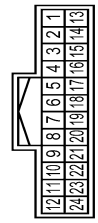

Terminal No.	Color Of Wire	Signal Name [Specification]
1	GR	-
3	W	-
4	B	-
5	R	-
6	O	-
13	R	-
14	L	- [With around view monitor]
14	SHIELD	- [Without around view monitor]
15	Y	-
16	G	- [With around view monitor]
16	L	- [Without around view monitor]
17	G	- [Without around view monitor]
17	W	- [With around view monitor]
18	SHIELD	-
19	LG	-
20	O	-
21	V	-
22	P	-
23	BR	-
24	R	-

Connector No.	D113
Connector Name	BACK DOOR LOCK ASSEMBLY
Connector Type	NS04FW-CS

H.S.

Terminal No.	Color Of Wire	Signal Name [Specification]
1	Y	-
2	B	-
3	V	-
4	B	-

Connector No.	D114
Connector Name	BACK DOOR OPENER SWITCH
Connector Type	TK02MBR-P

H.S.

Terminal No.	Color Of Wire	Signal Name [Specification]
1	GR	-
2	B	-

Connector No.	D116
Connector Name	BACK DOOR OPENER REQUEST SWITCH
Connector Type	TK02MBR-P

H.S.

Terminal No.	Color Of Wire	Signal Name [Specification]
1	W	-
2	B	-

Connector No.	D118
Connector Name	OUTSIDE KEY ANTENNA (BACK DOOR)
Connector Type	RK02FGY

H.S.

Terminal No.	Color Of Wire	Signal Name [Specification]
1	BR	-
2	R	-

JRKWE4512GB

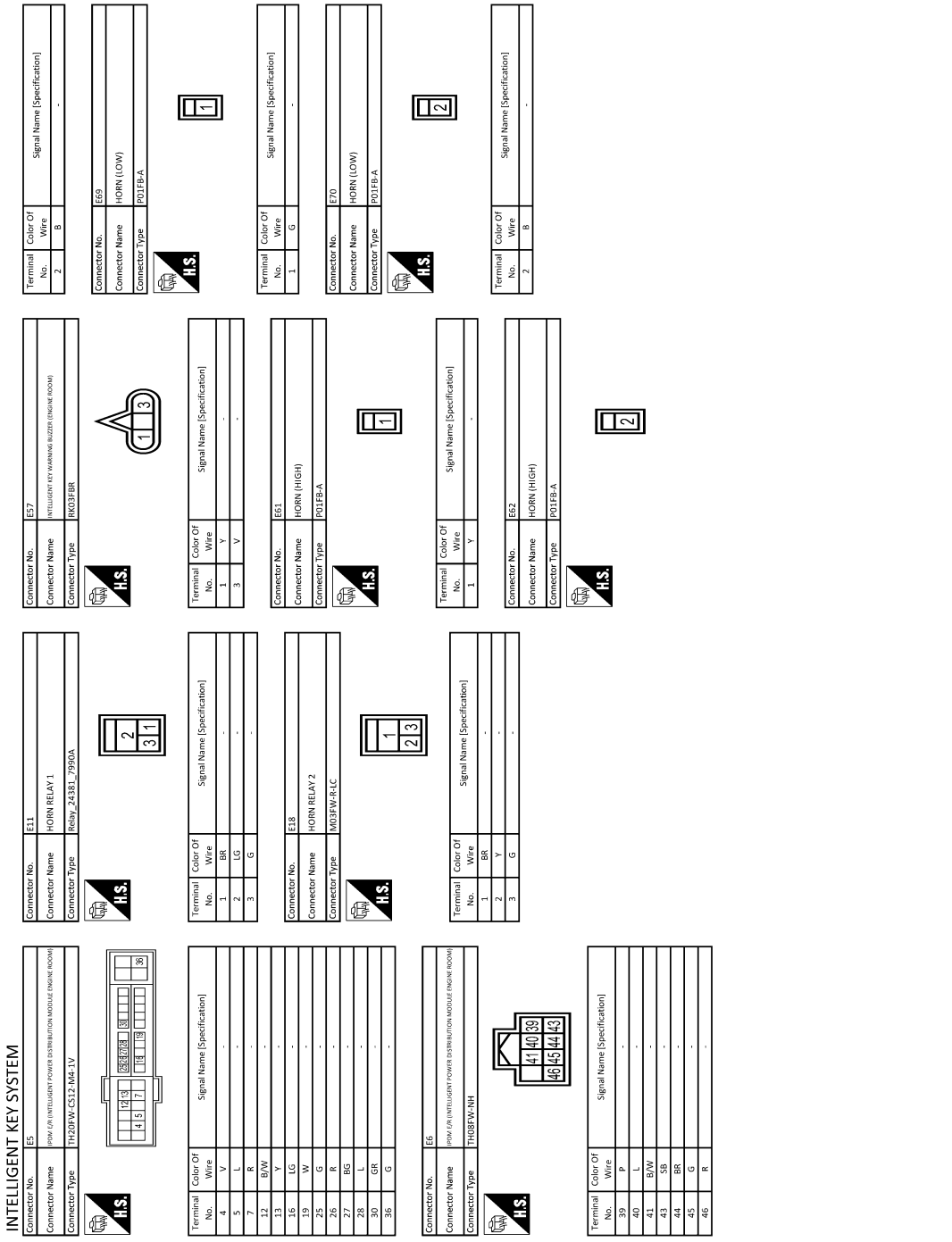

JRKWE4513GB

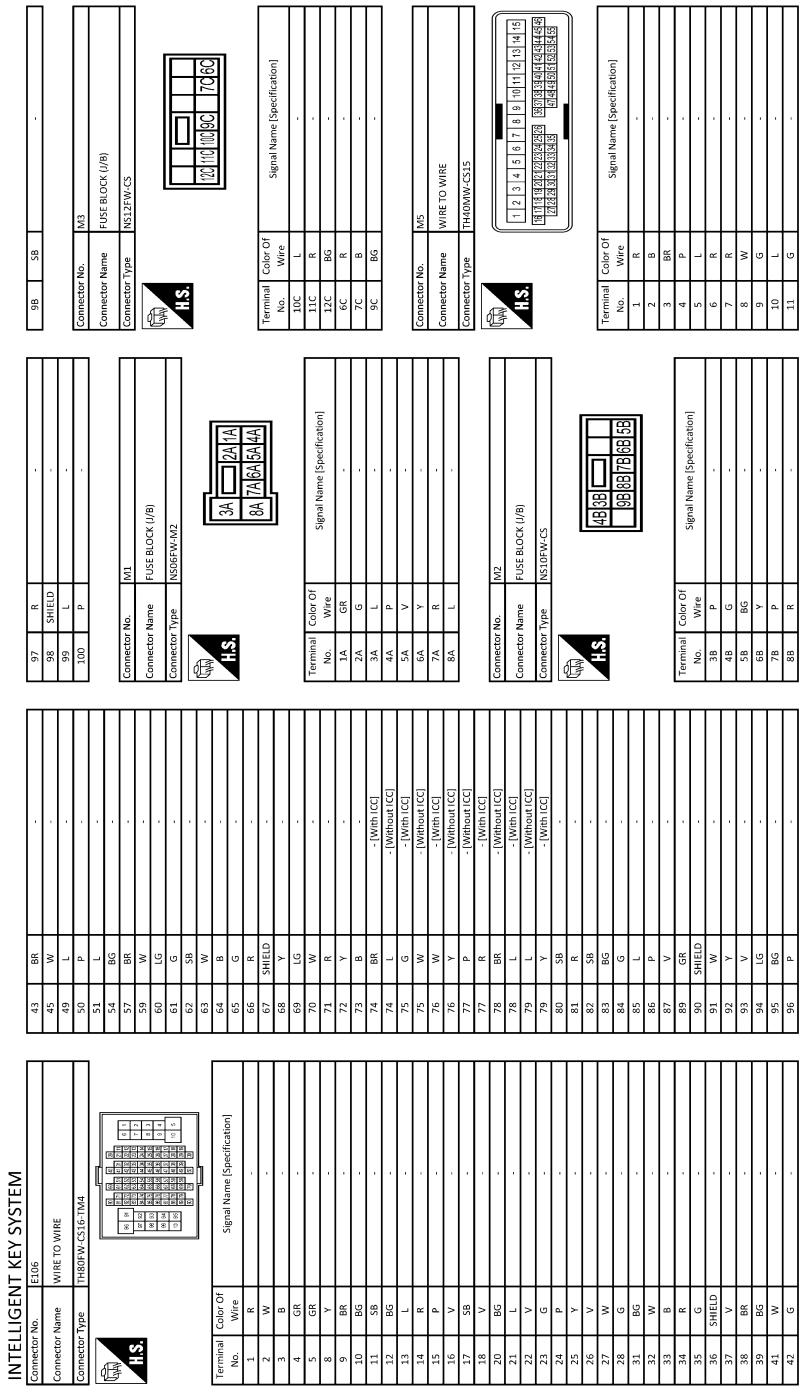

JRKWE4514GB

INTELLIGENT KEY SYSTEM

12	V	-
13	B	-
14	Y	-
15	W	-
16	R	-
17	B	-
18	G	-
19	Y	-
20	L	-
21	LG	-
22	L	-
23	G	-
24	Y	-
25	GR	-
26	R	-
27	W	-
28	SHIELD	-
29	Y	-
30	Y	-
31	R	-
32	BR	-
33	SB	-
34	Y	-
35	P	-
36	LG	-
37	BR	-
38	P	-
39	BG	-
40	SB	-
41	L	-
42	R	-
43	BR	-
44	V	-
45	G	-
46	SB	- [With automatic drive positioner] - [Without automatic drive positioner]
46	V	
49	P	-
50	B	-
52	R	-
53	V	-
54	LG	-
55	SB	-

H.S.

Connector No.	M6
Connector Name	WIRE TO WIRE
Connector Type	TH80MW-CS16-TM4

Terminal No.	Color Of Wire	Signal Name [Specification]
1	W	-
2	R	-
3	B	-
4	SHIELD	-
5	G	-
8	Y	-
9	BR	-
10	R	-
11	BR	-
12	BG	-
13	L	-
14	R	-
15	P	-
16	V	-
17	SB	-
18	V	-
20	BG	-
21	L	-
22	W	-
23	P	-
24	BR	-
25	Y	-
26	V	-
27	G	-
28	G	-
31	L	-
32	G	-
33	B	-
34	W	-
35	R	-
36	SHIELD	-
37	V	-
38	BG	-
39	BR	-
41	W	-
42	BG	-
43	BG	-
45	W	-
49	L	-
50	P	-
51	BR	-
54	Y	-
57	G	-
59	W	-
60	L	-
61	G	-
62	SB	-
63	G	-
64	B	-
65	W	-
66	R	-
67	SHIELD	-
68	Y	-
69	GR	-
70	LG	-
71	LG	-
72	Y	-
73	SB	-
74	BR	- [With ICC] - [Without ICC]
74	L	
75	G	-
76	GR	- [Without ICC] - [With ICC]
76	W	
77	P	- [Without ICC] - [With ICC]
77	R	
78	L	- [With ICC] - [Without ICC]
78	R	
79	W	- [Without ICC] - [With ICC]
79	Y	
80	SB	-
81	SB	-
82	SB	-
83	V	-
84	G	-
85	L	-
86	P	-
87	W	-
89	GR	-
90	SHIELD	-
91	W	-
92	Y	-
93	BR	-
94	P	-
95	GR	-
96	W	-
97	L	-
98	SHIELD	-
99	V	-
100	SB	-

H.S.

Connector No.	M7
Connector Name	WIRE TO WIRE
Connector Type	TH80MW-CS16-TM4

Terminal No.	Color Of Wire	Signal Name [Specification]
3	SB	- [With automatic drive positioner]
3	W	- [Without automatic drive positioner]
5	G	-
6	BG	-
7	W	-
8	B	-
12	SB	-
13	LG	-
14	Y	-
15	G	-
17	W	-
18	SB	-
19	LG	-
20	BR	-
21	SHIELD	-
22	Y	-
24	V	-
27	B	-
28	W	-
29	R	-
30	SHIELD	-
31	L	-
32	P	-
33	SB	-
34	L	-
35	P	-
36	L	-
37	P	-
38	BR	-
39	Y	-
44	L	-

JRKWE4515GB

INTELLIGENT KEY SYSTEM

45	GR	-
46	LG	-
47	SB	-
49	V	-
50	R	-
60	P	-
61	L	-
62	SHIELD	-
63	R	-
64	G	-
65	SHIELD	-
66	SB	-
67	V	-
68	LG	-
69	SHIELD	-
70	W	-
73	G	-
74	R	-
75	W	-
76	W	-
77	B	-
78	P	-
79	GR	-
83	BG	-
85	LG	-
86	R	-
87	Y	-
88	W	-
89	BR	-
90	BG	-
91	G	-
92	V	-
93	BR	-
94	V	-
95	G	-
96	Y	-
98	W	-
99	R	-

Connector No.	M22
Connector Name	KEY SLOT
Connector Type	TH12FW-NH

H.S.

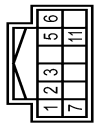

Terminal No.	Color Of Wire	Signal Name [Specification]
1	R	BAT
2	GR	CLOCK
3	W	DATA
5	Y	ILL BAT
6	LG	ILL
7	B	GROUND
11	BR	KEY SWITCH SIGNAL

Connector No.	M24
Connector Name	DATA LINK CONNECTOR
Connector Type	BD16FW

H.S.

Terminal No.	Color Of Wire	Signal Name [Specification]
3	LG	-
4	B	-
5	B	-
6	L	-
7	V	-
8	G	-
11	SB	-
14	P	-
16	Y	-

Connector No.	M50
Connector Name	PUSH-BUTTON IGNITION SWITCH
Connector Type	TK08FBR

H.S.

Terminal No.	Color Of Wire	Signal Name [Specification]
1	B	-
2	W	-
3	W	-
4	BR	-
5	GR	-
6	Y	-
7	V	-
8	P	-

Connector No.	M53
Connector Name	COMBINATION METER
Connector Type	TH40FW-NH

H.S.

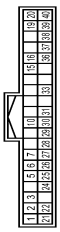

Terminal No.	Color Of Wire	Signal Name [Specification]
1	GR	BATTERY POWER SUPPLY
2	LG	COMMUNICATION SIGNAL (METER->AMP.)
3	GR	COMMUNICATION SIGNAL (AMP.->METER)
5	B	GROUND
6	P	ALTERNATOR SIGNAL
7	BR	AIR BAG SIGNAL
10	G	SECURITY SIGNAL
15	B	GROUND
16	B	METER CONTROL SWITCH GROUND
19	B	ILL GND
20	R	ILL
21	BG	IGNITION SIGNAL

22	B	GROUND
24	BR	COMMUNICATION SIGNAL (LCD->AMP.)
25	Y	COMMUNICATION SIGNAL (AMP.->LCD)
26	R	VEHICLE SPEED SIGNAL (8-PULSE)
27	V	PARKING BRAKE SWITCH SIGNAL
28	W	BRAKE FLUID LEVEL SWITCH SIGNAL
29	SB	SEAT BELT BUCKLE SWITCH SIGNAL (DRIVER SIDE)
30	G	SEAT BELT BUCKLE SWITCH SIGNAL (PASSENGER SIDE)
31	L	WASHER LEVEL SWITCH SIGNAL
33	B	ILLUMINATION CONTROL SIGNAL
36	LG	SELECT SWITCH SIGNAL
37	SB	ENTER SWITCH SIGNAL
38	L	TRIP A/B RESET SWITCH SIGNAL
39	P	ILLUMINATION CONTROL SWITCH SIGNAL (-)
40	BG	ILLUMINATION CONTROL SWITCH SIGNAL (+)

Connector No.	M66
Connector Name	UNIFIED METER AND A/C AMP.
Connector Type	TH40FW-NH

H.S.

Terminal No.	Color Of Wire	Signal Name [Specification]
5	L	MANUAL MODE SHIFT UP SIGNAL
7	GR	COMMUNICATION SIGNAL (AMP.->METER)
8	L	VEHICLE SPEED SIGNAL (2-PULSE)
9	SB	SEAT BELT BUCKLE SWITCH SIGNAL (DRIVER SIDE)
10	W	MANUAL MODE SIGNAL
11	G	NON-MANUAL MODE SIGNAL
14	BR	COMMUNICATION SIGNAL (LCD->AMP.)
20	L	ION ON/OFF SIGNAL
23	Y	AT SNOW SWITCH SIGNAL
25	V	MANUAL MODE SHIFT DOWN SIGNAL
27	LG	COMMUNICATION SIGNAL (METER->AMP.)
28	R	VEHICLE SPEED SIGNAL (8-PULSE)
30	V	PARKING BRAKE SWITCH SIGNAL
34	Y	COMMUNICATION SIGNAL (AMP.->LCD)
38	P	BLOWER MOTOR CONTROL SIGNAL

JRKWE4516GB

INTELLIGENT KEY SYSTEM

Connector No.	M67
Connector Name	UNIFIED METER AND A/C AMP.
Connector Type	TH32FW-NH

H.S.

Terminal No.	Color Of Wire	Signal Name [Specification]
41	V	ACC POWER SUPPLY
42	Y	FUEL LEVEL SENSOR SIGNAL
43	R	INTAKE SENSOR SIGNAL
44	LG	IN-VEHICLE SENSOR SIGNAL
45	P	AMBIENT SENSOR SIGNAL
46	BG	SUNLOAD SENSOR SIGNAL
47	G	EXHAUST GAS / OUTSIDE ODOR DETECTING SENSOR SIGNAL
53	G	IGNITION POWER SUPPLY
54	Y	BATTERY POWER SUPPLY
55	B	GROUND
56	L	CAN-H
57	W	BRAKE FLUID LEVEL SWITCH SIGNAL
58	BR	FUEL LEVEL SENSOR GROUND
59	GR	INTAKE SENSOR GROUND
60	L	IN-VEHICLE SENSOR GROUND
61	BR	AMBIENT SENSOR GROUND
62	SB	SUNLOAD SENSOR GROUND
63	R	-
65	BG	ECV SIGNAL
69	L	A/C LAN SIGNAL
70	R	EACH DOOR MOTOR POWER SUPPLY
71	B	GROUND
72	P	CAN-L

Connector No.	M104
Connector Name	REMOTE KEYLESS ENTRY RECEIVER
Connector Type	JA804FB

H.S.

Terminal No.	Color Of Wire	Signal Name [Specification]
1	BG	GROUND
2	Y	SIGNAL OUTPUT
4	LG	BATTERY

Connector No.	M117
Connector Name	WIRE TO WIRE
Connector Type	TH80MW-CS16-TM4

H.S.

Terminal No.	Color Of Wire	Signal Name [Specification]
1	L	-
2	G	-
3	GR	-
4	SB	-
7	W	-
10	W	-
15	SB	-
16	V	-
17	BR	-
26	BR	-
27	LG	-
28	Y	-
29	Y	-
30	V	-
31	R	-
32	BR	-
33	G	-

51	R	-
52	L	-
55	W	-
56	B	-
57	R	-
58	G	-
59	SHIELD	-
60	V	-
61	LG	-
62	BR	-
63	L	-
64	LG	-
65	B	-
66	R	-
67	W	-
68	SHIELD	-
69	V	-
70	Y	-
71	SB	-
72	W	-
73	G	-
75	W	-
80	V	-
81	SB	-
82	V	-
83	P	-
84	R	-
85	L	-
86	BG	-
87	L	-
88	P	-
91	V	-
92	G	-
94	G	-
95	W	-
96	G	-
97	Y	-
98	BR	-
99	P	- [Without BOSE audio]
99	V	- [With BOSE audio]
100	L	- [Without BOSE audio]
100	SB	- [With BOSE audio]

Connector No.	M118
Connector Name	BCM (BODY CONTROL MODULE)
Connector Type	M03FB-LC

H.S.

Terminal No.	Color Of Wire	Signal Name [Specification]
1	W	BAT (F/L)
2	W	POWER WINDOW POWER SUPPLY(BAT)
3	Y	POWER WINDOW POWER SUPPLY(RAP)

Connector No.	M119
Connector Name	BCM (BODY CONTROL MODULE)
Connector Type	NS16FW-CS

H.S.

Terminal No.	Color Of Wire	Signal Name [Specification]
4	LG	INTERIOR ROOM LAMP POWER SUPPLY
5	L	PASSENGER DOOR UNLOCK OUTPUT
7	Y	STEP LAMP CONT
8	V	ALL DOOR, FUEL LID LOCK OUTPUT
9	G	DRIVER DOOR, FUEL LID UNLOCK OUTPUT
10	BR	REAR DOOR UNLOCK OUTPUT
11	R	BAT (FUSE)
13	B	GROUND
14	W	PUSH-BUTTON IGNITION SW ILL GND
15	Y	ACC IND
17	W	TURN SIGNAL RH (FRONT)
18	BG	TURN SIGNAL LH (FRONT)
19	V	INT ROOM LAMP CONT

JRKWE4517GB

INTELLIGENT KEY SYSTEM

Connector No.	M120
Connector Name	BCM (BODY CONTROL MODULE)
Connector Type	NS12FW-CS

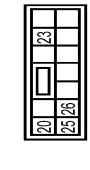

Terminal No.	Color Of Wire	Signal Name [Specification]
20	V	TURN SIGNAL RH (REAR)
23	G	BACK DOOR OPEN OUTPUT
25	G	TURN SIGNAL LH (REAR)
26	G	REAR WIPER OUTPUT

Connector No.	M121
Connector Name	BCM (BODY CONTROL MODULE)
Connector Type	TH40FGY-NH

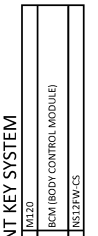

Terminal No.	Color Of Wire	Signal Name [Specification]
34	SB	LUGGAGE ROOM ANT-
35	V	LUGGAGE ROOM ANT+
38	B	BACK DOOR ANT-
39	W	BACK DOOR ANT+
47	Y	IGN RELAY (IPDM E/R) CONT
52	SB	STARTER RELAY CONT
60	BR	PUSH SW
61	W	BACK DOOR OPENER REQUEST SW
64	V	I-KEY WARN BUZZER (ENG ROOM)
65	BG	REAR WIPER STOP POSITION
66	R	BACK DOOR SW
67	GR	BACK DOOR OPENER SW
68	BR	REAR RH DOOR SW
69	R	REAR LH DOOR SW

Connector No.	M122
Connector Name	BCM (BODY CONTROL MODULE)
Connector Type	TH40FB-NH

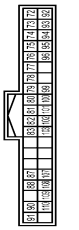

Terminal No.	Color Of Wire	Signal Name [Specification]
72	R	ROOM ANT2-
73	G	ROOM ANT2+
74	SB	PASSENGER DOOR ANT-
75	GR	PASSENGER DOOR ANT+
76	V	DRIVER DOOR ANT-
77	LG	DRIVER DOOR ANT+
78	Y	ROOM ANT1-
79	BR	ROOM ANT1+
80	GR	NATS ANT AMP.
81	W	NATS ANT AMP.
82	R	IGN RELAY (F/B) CONT
83	Y	KEYLESS ENTRY RECEIVER COMM
87	BR	COMBI SW INPUT 5
88	V	COMBI SW INPUT 3
90	P	CAN-L
91	L	CAN-H
92	LG	KEY SLOT LLL CONT
93	V	ON IND
94	Y	PUDDLE LAMP CONT
95	BG	ACC RELAY CONT
96	GR	A/T SHIFT SELECTOR POWER SUPPLY
99	R	SHIFT P
100	G	PASSENGER DOOR REQUEST SW
101	SB	DRIVER DOOR REQUEST SW
102	BG	BLOWER FAN MOTOR RELAY CONT
103	LG	KEYLESS ENTRY RECEIVER POWER SUPPLY
107	LG	COMBI SW INPUT 1
108	R	COMBI SW INPUT 4
109	Y	COMBI SW INPUT 2
110	G	HAZARD SW

Connector No.	M123
Connector Name	BCM (BODY CONTROL MODULE)
Connector Type	TH40FG-NH

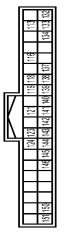

Terminal No.	Color Of Wire	Signal Name [Specification]
113	P	OPLICAL SENSOR
116	SB	STOP LAMP SW 1
118	P	STOP LAMP SW 2
119	SB	DR DOOR UNLOCK SENSOR
121	BR	KEY SLOT SW
123	W	IGN F/B
124	LG	PASSENGER DOOR SW
132	BR	POWER WINDOW SW COMM.
133	W	PUSH-BUTTON IGNITION SW ILL POWER
134	GR	LOCK IND.
137	BG	RECEIVER/SENSOR GND
138	Y	RECEIVER/SENSOR POWER SUPPLY
139	L	TIRE PRESSURE RECEIVER COMM
140	GR	SHIFT N/P
141	G	SECURITY IND LAMP CONT
142	BG	COMBI SW OUTPUT 5
143	P	COMBI SW OUTPUT 1
144	G	COMBI SW OUTPUT 2
145	L	COMBI SW OUTPUT 3
146	SB	COMBI SW OUTPUT 4
150	LG	DRIVER DOOR SW
151	G	REAR WINDOW DEFOGGER RELAY CONT

Connector No.	M124
Connector Name	WIRE TO WIRE
Connector Type	TH40MW-CS15

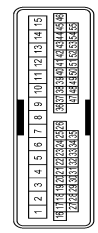

Terminal No.	Color Of Wire	Signal Name [Specification]
7	Y	-
8	LG	-
9	Y	-
12	L	-
13	V	-
14	B	-
15	W	-
16	BR	-
17	B	-
18	R	-
19	B	-
20	W	- [Without BOSE audio]
20	Y	- [With BOSE audio]
21	G	- [With BOSE audio]
21	L	- [Without BOSE audio]
22	SB	-
23	GR	-
24	G	-
25	Y	-
26	R	-
29	SHIELD	-
30	W	-
31	LG	-
32	G	-
33	BR	-
34	V	-
35	G	-
43	L	-
44	Y	-
45	R	-
46	W	-
52	R	-
53	G	-
54	W	-
55	BG	-

JRKWE4518GB

INTELLIGENT KEY SYSTEM

Connector No.	M131
Connector Name	INSIDE KEY ANTENNA (INSTRUMENT CENTER)
Connector Type	RK02FGY

H.S.

Terminal No.	Color Of Wire	Signal Name [Specification]
1	BR	-
2	Y	-

Connector No.	M137
Connector Name	A/T SHIFT SELECTOR
Connector Type	TH12FW-NH

H.S.

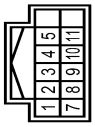

Terminal No.	Color Of Wire	Signal Name [Specification]
1	W	-
2	V	-
3	L	-
4	B	-
5	G	-
7	R	-
8	SB	-
9	B	-
10	GR	-
11	R	-

Connector No.	M146
Connector Name	INSIDE KEY ANTENNA (CONSOLE)
Connector Type	RK02FGY

H.S.

Terminal No.	Color Of Wire	Signal Name [Specification]
1	G	-
2	R	-

JRKWE4519GB

INTEGRATED HOMELINK TRANSMITTER SYSTEM

Wiring Diagram - INTEGRATED HOMELINK TRANSMITTER SYSTEM -

INFOID:0000000007456779

INTEGRATED HOMELINK TRANSMITTER

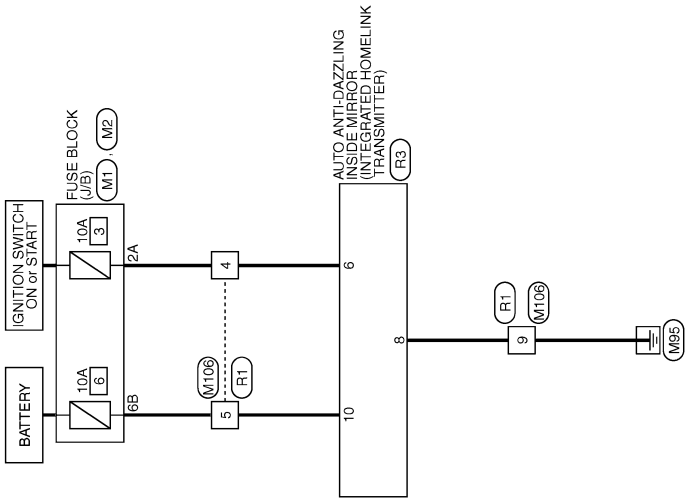

2009/07/16

JCKWA2926GB

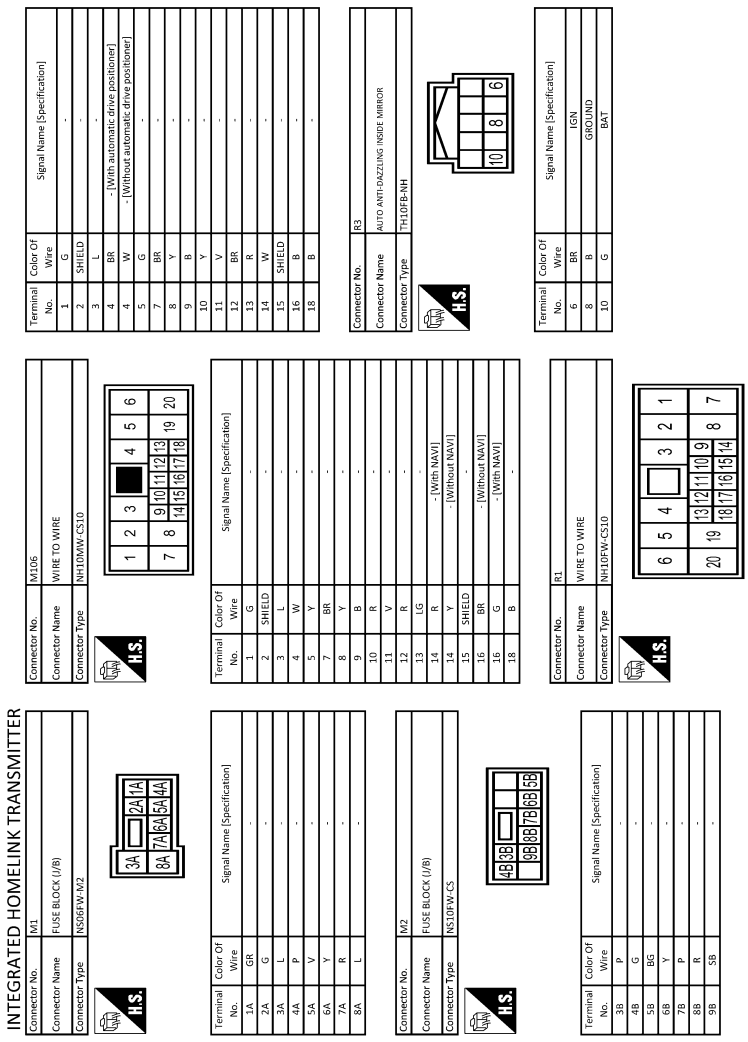

JRKWE4556GB

ECU DIAGNOSIS INFORMATION

BCM (BODY CONTROL MODULE)

Reference Value

INFOID:0000000007630756

VALUES ON THE DIAGNOSIS TOOL

CONSULT MONITOR ITEM

Monitor Item	Condition	Value/Status
FR WIPER HI	Other than front wiper switch HI	Off
	Front wiper switch HI	On
FR WIPER LOW	Other than front wiper switch LO	Off
	Front wiper switch LO	On
FR WASHER SW	Front washer switch OFF	Off
	Front washer switch ON	On
FR WIPER INT	Other than front wiper switch INT	Off
	Front wiper switch INT	On
FR WIPER STOP	Front wiper is not in STOP position	Off
	Front wiper is in STOP position	On
INT VOLUME	Wiper intermittent dial is in a dial position 1 - 7	Wiper intermittent dial position
RR WIPER ON	Other than rear wiper switch ON	Off
	Rear wiper switch ON	On
RR WIPER INT	Other than rear wiper switch INT	Off
	Rear wiper switch INT	On
RR WASHER SW	Rear washer switch OFF	Off
	Rear washer switch ON	On
RR WIPER STOP	Rear wiper is in STOP position	Off
	Rear wiper is not in STOP position	On
TURN SIGNAL R	Other than turn signal switch RH	Off
	Turn signal switch RH	On
TURN SIGNAL L	Other than turn signal switch LH	Off
	Turn signal switch LH	On
TAIL LAMP SW	Other than lighting switch 1ST and 2ND	Off
	Lighting switch 1ST or 2ND	On
HI BEAM SW	Other than lighting switch HI	Off
	Lighting switch HI	On
HEAD LAMP SW 1	Other than lighting switch 2ND	Off
	Lighting switch 2ND	On
HEAD LAMP SW 2	Other than lighting switch 2ND	Off
	Lighting switch 2ND	On
PASSING SW	Other than lighting switch PASS	Off
	Lighting switch PASS	On
AUTO LIGHT SW	Other than lighting switch AUTO	Off
	Lighting switch AUTO	On
FR FOG SW	Front fog lamp switch OFF	Off
	Front fog lamp switch ON	On

Monitor Item	Condition	Value/Status
RR FOG SW	**NOTE:** The item is indicated, but not monitored.	Off
DOOR SW-DR	Driver door closed	Off
	Driver door opened	On
DOOR SW-AS	Passenger door closed	Off
	Passenger door opened	On
DOOR SW-RR	Rear RH door closed	Off
	Rear RH door opened	On
DOOR SW-RL	Rear LH door closed	Off
	Rear LH door opened	On
DOOR SW-BK	Back door closed	Off
	Back door opened	On
CDL LOCK SW	Other than power door lock switch LOCK	Off
	Power door lock switch LOCK	On
CDL UNLOCK SW	Other than power door lock switch UNLOCK	Off
	Power door lock switch UNLOCK	On
KEY CYL LK-SW	Other than driver door key cylinder LOCK position	Off
	Driver door key cylinder LOCK position	On
KEY CYL UN-SW	Other than driver door key cylinder UNLOCK position	Off
	Driver door key cylinder UNLOCK position	On
KEY CYL SW-TR	**NOTE:** The item is indicated, but not monitored.	Off
HAZARD SW	Hazard switch is OFF	Off
	Hazard switch is ON	On
REAR DEF SW	**NOTE:** The item is indicated, but not monitored.	Off
TR CANCEL SW	**NOTE:** The item is indicated, but not monitored.	Off
TR/BD OPEN SW	Back door opener switch OFF	Off
	While the back door opener switch is turned ON	On
TRNK/HAT MNTR	**NOTE:** The item is indicated, but not monitored.	Off
REVERSE SW	**NOTE:** The item is indicated, but not monitored.	Off
RKE-LOCK	LOCK button of the key is not pressed	Off
	LOCK button of the key is pressed	On
RKE-UNLOCK	UNLOCK button of the key is not pressed	Off
	UNLOCK button of the key is pressed	On
RKE-TR/BD	**NOTE:** The item is indicated, but not monitored.	Off
RKE-PANIC	PANIC button of the key is not pressed	Off
	PANIC button of the key is pressed	On
RKE-P/W OPEN	UNLOCK button of the key is not pressed	Off
	UNLOCK button of the key is pressed and held	On
RKE-MODE CHG	LOCK/UNLOCK button of the key is not pressed and held simultaneously	Off
	LOCK/UNLOCK button of the key is pressed and held simultaneously	On

Monitor Item	Condition	Value/Status
OPTICAL SENSOR	Bright outside of the vehicle	Close to 5 V
	Dark outside of the vehicle	Close to 0 V
REQ SW -DR	Driver door request switch is not pressed	Off
	Driver door request switch is pressed	On
REQ SW -AS	Passenger door request switch is not pressed	Off
	Passenger door request switch is pressed	On
REQ SW -RR	**NOTE:** The item is indicated, but not monitored.	Off
REQ SW -RL	**NOTE:** The item is indicated, but not monitored.	Off
REQ SW -BD/TR	Back door request switch is not pressed	Off
	Back door request switch is pressed	On
PUSH SW	Push-button ignition switch (push switch) is not pressed	Off
	Push-button ignition switch (push switch) is pressed	On
IGN RLY2 -F/B	**NOTE:** The item is indicated, but not monitored.	Off
ACC RLY -F/B	**NOTE:** The item is indicated, but not monitored.	Off
CLUCH SW	**NOTE:** The item is indicated, but not monitored.	Off
BRAKE SW 1	The brake pedal is depressed when No. 7 fuse is blown	Off
	The brake pedal is not depressed when No. 7 fuse is blown, or No. 7 fuse is normal	On
BRAKE SW 2	The brake pedal is not depressed	Off
	The brake pedal is depressed	On
DETE/CANCL SW	Selector lever in P position	Off
	Selector lever in any position other than P	On
SFT PN/N SW	Selector lever in any position other than P and N	Off
	Selector lever in P or N position	On
S/L -LOCK	**NOTE:** The item is indicated, but not monitored.	Off
S/L -UNLOCK	**NOTE:** The item is indicated, but not monitored.	Off
S/L RELAY-F/B	**NOTE:** The item is indicated, but not monitored.	Off
UNLK SEN -DR	Driver door is unlocked	Off
	Driver door is locked	On
PUSH SW -IPDM	Push-button ignition switch (push-switch) is not pressed	Off
	Push-button ignition switch (push-switch) is pressed	On
IGN RLY1 -F/B	Ignition switch in OFF or ACC position	Off
	Ignition switch in ON position	On
DETE SW -IPDM	Selector lever in any position other than P	Off
	Selector lever in P position	On
SFT PN -IPDM	Selector lever in any position other than P and N	Off
	Selector lever in P or N position	On
SFT P -MET	Selector lever in any position other than P	Off
	Selector lever in P position	On

Monitor Item	Condition	Value/Status
SFT N -MET	Selector lever in any position other than N	Off
	Selector lever in N position	On
ENGINE STATE	Engine stopped	Stop
	While the engine stalls	Stall
	At engine cranking	Crank
	Engine running	Run
S/L LOCK-IPDM	**NOTE:** The item is indicated, but not monitored.	Off
S/L UNLK-IPDM	**NOTE:** The item is indicated, but not monitored.	Off
S/L RELAY-REQ	**NOTE:** The item is indicated, but not monitored.	Off
VEH SPEED 1	While driving	Equivalent to speed-ometer reading
VEH SPEED 2	While driving	Equivalent to speed-ometer reading
DOOR STAT-DR	Driver door is locked	LOCK
	Wait with selective UNLOCK operation (5 seconds)	READY
	Driver door is unlocked	UNLOCK
DOOR STAT-AS	Passenger door is locked	LOCK
	Wait with selective UNLOCK operation (5 seconds)	READY
	Passenger door is unlocked	UNLOCK
ID OK FLAG	Driver side door is open after ignition switch is turned OFF (Shift position is in the P position)	Reset
	Ignition switch ON	Set
PRMT ENG STRT	The engine start is prohibited	Reset
	The engine start is permitted	Set
PRMT RKE STRT	**NOTE:** The item is indicated, but not monitored.	Reset
KEY SW -SLOT	The key is not inserted into key slot	Off
	The key is inserted into key slot	On
RKE OPE COUN1	During the operation of the key	Operation frequency of the key
RKE OPE COUN2	**NOTE:** The item is indicated, but not monitored.	—
CONFRM ID ALL	The key ID that the key slot receives does not accord with any key ID registered to BCM.	Yet
	The key ID that the key slot receives accords with any key ID registered to BCM.	Done
CONFIRM ID4	The key ID that the key slot receives does not accord with the fourth key ID registered to BCM.	Yet
	The key ID that the key slot receives accords with the fourth key ID registered to BCM.	Done
CONFIRM ID3	The key ID that the key slot receives does not accord with the third key ID registered to BCM.	Yet
	The key ID that the key slot receives accords with the third key ID registered to BCM.	Done

Monitor Item	Condition	Value/Status
CONFIRM ID2	The key ID that the key slot receives does not accord with the second key ID registered to BCM.	Yet
	The key ID that the key slot receives accords with the second key ID registered to BCM.	Done
CONFIRM ID1	The key ID that the key slot receives does not accord with the first key ID registered to BCM.	Yet
	The key ID that the key slot receives accords with the first key ID registered to BCM.	Done
TP 4	The ID of fourth key is not registered to BCM	Yet
	The ID of fourth key is registered to BCM	Done
TP 3	The ID of third key is not registered to BCM	Yet
	The ID of third key is registered to BCM	Done
TP 2	The ID of second key is not registered to BCM	Yet
	The ID of second key is registered to BCM	Done
TP 1	The ID of first key is not registered to BCM	Yet
	The ID of first key is registered to BCM	Done
AIR PRESS FL	Ignition switch ON (Only when the signal from the transmitter is received)	Air pressure of front LH tire
AIR PRESS FR	Ignition switch ON (Only when the signal from the transmitter is received)	Air pressure of front RH tire
AIR PRESS RR	Ignition switch ON (Only when the signal from the transmitter is received)	Air pressure of rear RH tire
AIR PRESS RL	Ignition switch ON (Only when the signal from the transmitter is received)	Air pressure of rear LH tire
ID REGST FL1	ID of front LH tire transmitter is registered	Done
	ID of front LH tire transmitter is not registered	Yet
ID REGST FR1	ID of front RH tire transmitter is registered	Done
	ID of front RH tire transmitter is not registered	Yet
ID REGST RR1	ID of rear RH tire transmitter is registered	Done
	ID of rear RH tire transmitter is not registered	Yet
ID REGST RL1	ID of rear LH tire transmitter is registered	Done
	ID of rear LH tire transmitter is not registered	Yet
WARNING LAMP	Tire pressure indicator OFF	Off
	Tire pressure indicator ON	On
BUZZER	Tire pressure warning alarm is not sounding	Off
	Tire pressure warning alarm is sounding	On

TERMINAL LAYOUT

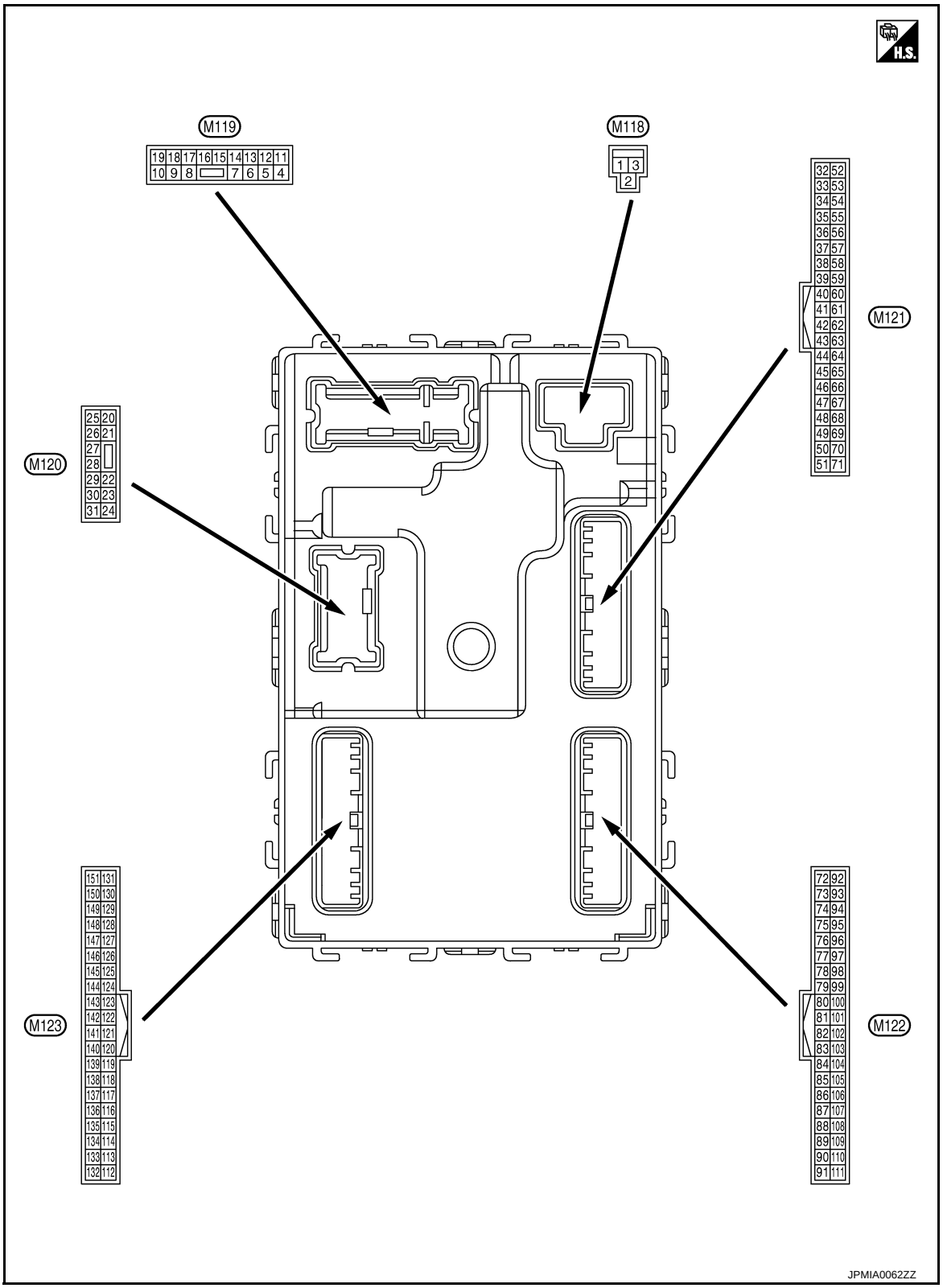

PHYSICAL VALUES

Terminal No. (Wire color)		Description		Condition		Value (Approx.)
+	–	Signal name	Input/ Output			
1 (W)	Ground	Battery power supply	Input	Ignition switch OFF		Battery voltage
2 (W)	Ground	P/W power supply (BAT)	Output	Ignition switch OFF		Battery voltage
3 (Y)	Ground	P/W power supply (RAP)	Output	Ignition switch ON		Battery voltage
4 (LG)	Ground	Interior room lamp power supply	Output	Interior room lamp battery saver is activated. (Cuts the interior room lamp power supply)		0 V
				Interior room lamp battery saver is not activated. (Outputs the interior room lamp power supply)		Battery voltage
5 (L)	Ground	Passenger door UNLOCK	Output	Passenger door	UNLOCK (Actuator is activated)	Battery voltage
					Other than UNLOCK (Actuator is not activated)	0 V
7 (Y)	Ground	Step lamp	Output	Step lamp	ON	0 V
					OFF	Battery voltage
8 (V)	Ground	All doors, fuel lid LOCK	Output	All doors	LOCK (Actuator is activated)	Battery voltage
					Other than LOCK (Actuator is not activated)	0 V
9 (G)	Ground	Driver door, fuel lid UNLOCK	Output	Driver door	UNLOCK (Actuator is activated)	Battery voltage
					Other than UNLOCK (Actuator is not activated)	0 V
10 (BR)	Ground	Rear RH door and rear LH door UNLOCK	Output	Rear RH door and rear LH door	UNLOCK (Actuator is activated)	Battery voltage
					Other than UNLOCK (Actuator is not activated)	0 V
11 (R)	Ground	Battery power supply	Input	Ignition switch OFF		Battery voltage
13 (B)	Ground	Ground	—	Ignition switch ON		0 V
14 (W)	Ground	Push-button ignition switch illumination ground	Output	Tail lamp	OFF	0 V
					ON	**NOTE:** When the illumination brightening/dimming level is in the neutral position 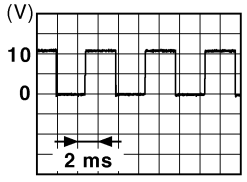 JSNIA0010GB
15 (Y)	Ground	ACC indicator lamp	Output	Ignition switch	OFF or ON	Battery voltage
					ACC	0 V

Terminal No. (Wire color)		Description		Condition		Value (Approx.)
		Signal name	Input/ Output			
+	–					
17 (W)	Ground	Turn signal RH (Front)	Output	Ignition switch ON	Turn signal switch OFF	0 V
					Turn signal switch RH	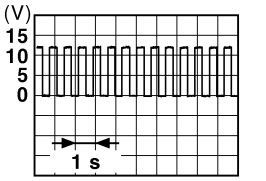 PKID0926E 6.5 V
18 (BG)	Ground	Turn signal LH (Front)	Output	Ignition switch ON	Turn signal switch OFF	0 V
					Turn signal switch LH	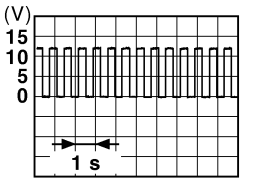 PKID0926E 6.5 V
19 (V)	Ground	Room lamp timer control	Output	Interior room lamp	OFF	Battery voltage
					ON	0 V
20 (V)	Ground	Turn signal RH (Rear)	Output	Ignition switch ON	Turn signal switch OFF	0 V
					Turn signal switch RH	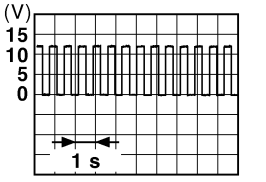 PKID0926E 6.5 V
23 (G)	Ground	Back door open	Output	Back door	OPEN (Back door opener actuator is activated)	Battery voltage
					Other than OPEN (Back door opener actuator is not activated)	0 V
25 (G)	Ground	Turn signal LH (Rear)	Output	Ignition switch ON	Turn signal switch OFF	0 V
					Turn signal switch LH	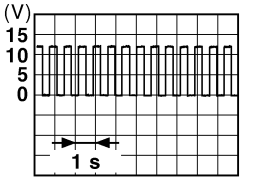 PKID0926E 6.5 V
26 (G)	Ground	Rear wiper	Output	Rear wiper	OFF (Stopped)	0 V
					ON (Operated)	Battery voltage

Terminal No. (Wire color)		Description		Condition		Value (Approx.)
+	–	Signal name	Input/ Output			
34 (SB)	Ground	Luggage room antenna (–)	Output	Ignition switch OFF	When Intelligent Key is in the passenger compartment	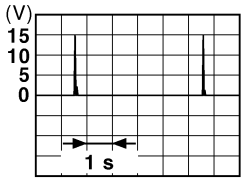 JMKIA0062GB
					When Intelligent Key is not in the passenger compartment	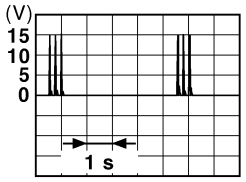 JMKIA0063GB
35 (V)	Ground	Luggage room antenna (+)	Output	Ignition switch OFF	When Intelligent Key is in the passenger compartment	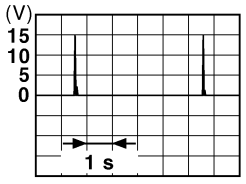 JMKIA0062GB
					When Intelligent Key is not in the passenger compartment	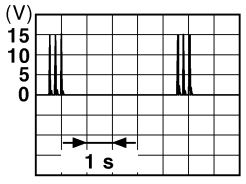 JMKIA0063GB
38 (B)	Ground	Back door antenna (–)	Output	When the back door opener request switch is operated with ignition switch OFF	When Intelligent Key is in the antenna detection area	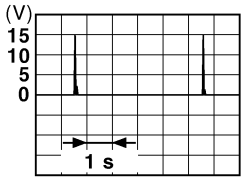 JMKIA0062GB
					When Intelligent Key is not in the antenna detection area	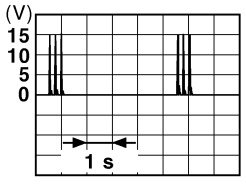 JMKIA0063GB

Terminal No. (Wire color)		Description		Condition		Value (Approx.)
+	–	Signal name	Input/ Output			
39 (W)	Ground	Back door antenna (+)	Output	When the back door opener request switch is operated with ignition switch OFF	When Intelligent Key is in the antenna detection area	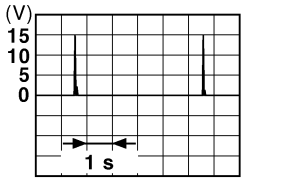 JMKIA0062GB
					When Intelligent Key is not in the antenna detection area	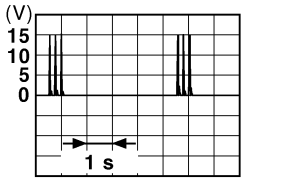 JMKIA0063GB
47 (Y)	Ground	Ignition relay (IPDM E/R) control	Output	Ignition switch	OFF or ACC	Battery voltage
					ON	0 V
52 (SB)	Ground	Starter relay control	Output	Ignition switch ON	When selector lever is in P or N position	Battery voltage
					When selector lever is not in P or N position	0 V
60 (BR)	Ground	Push-button ignition switch (Push switch)	Input	Push-button ignition switch (push switch)	Pressed	0 V
					Not pressed	Battery voltage
61 (W)	Ground	Back door opener request switch	Input	Back door opener request switch	ON (Pressed)	0 V
					OFF (Not pressed)	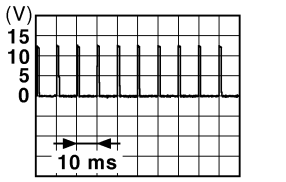 JPMIA0016GB 1.0 V
64 (V)	Ground	Intelligent Key warning buzzer (Engine room)	Output	Intelligent Key warning buzzer (Engine room)	Sounding	0 V
					Not sounding	Battery voltage
65 (BG)	Ground	Rear wiper stop position	Input	Rear wiper	In stop position	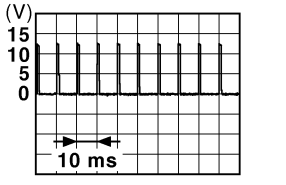 JPMIA0016GB 1.0 V
					Not in stop position	0 V

Terminal No. (Wire color)		Description		Condition		Value (Approx.)
+	–	Signal name	Input/ Output			
66 (R)	Ground	Back door switch	Input	Back door switch	OFF (Door close)	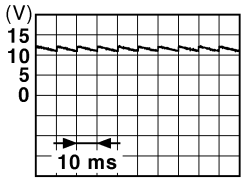 JPMIA0011GB 11.8 V
					ON (Door open)	0 V
67 (GR)	Ground	Back door opener switch	Input	Back door opener switch	Pressed	0 V
					Not pressed	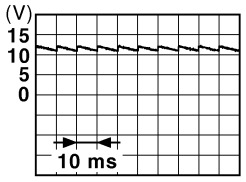 JPMIA0011GB 11.8 V
68 (BR)	Ground	Rear RH door switch	Input	Rear RH door switch	OFF (Door close)	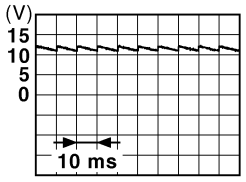 JPMIA0011GB 11.8 V
					ON (Door open)	0 V
69 (R)	Ground	Rear LH door switch	Input	Rear LH door switch	OFF (Door close)	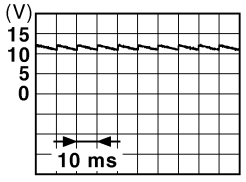 JPMIA0011GB 11.8 V
					ON (Door open)	0 V

Terminal No. (Wire color)		Description		Condition		Value (Approx.)
+	–	Signal name	Input/ Output			
72 (R)	Ground	Room antenna 2 (–) (Center console)	Output	Ignition switch OFF	When Intelligent Key is in the passenger compartment	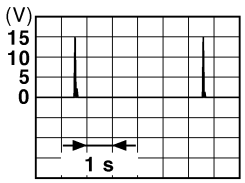 JMKIA0062GB
					When Intelligent Key is not in the passenger compartment	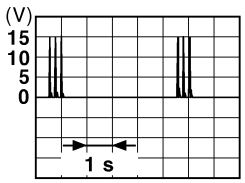 JMKIA0063GB
73 (G)	Ground	Room antenna 2 (+) (Center console)	Output	Ignition switch OFF	When Intelligent Key is in the passenger compartment	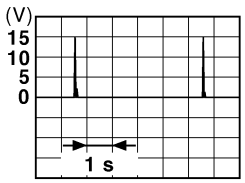 JMKIA0062GB
					When Intelligent Key is not in the passenger compartment	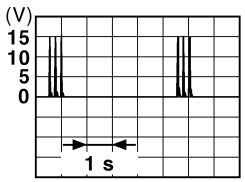 JMKIA0063GB
74 (SB)	Ground	Passenger door antenna (–)	Output	When the passenger door request switch is operated with ignition switch OFF	When Intelligent Key is in the antenna detection area	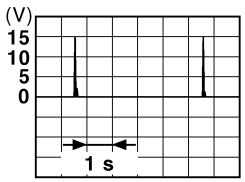 JMKIA0062GB
					When Intelligent Key is not in the antenna detection area	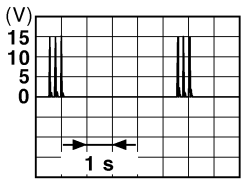 JMKIA0063GB

Terminal No. (Wire color)		Description		Condition		Value (Approx.)
+	–	Signal name	Input/ Output			
75 (GR)	Ground	Passenger door antenna (+)	Output	When the passenger door request switch is operated with ignition switch OFF	When Intelligent Key is in the antenna detection area	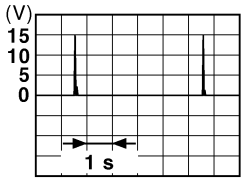 JMKIA0062GB
					When Intelligent Key is not in the antenna detection area	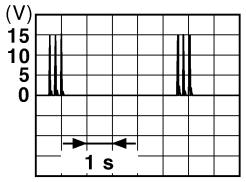 JMKIA0063GB
76 (V)	Ground	Driver door antenna (–)	Output	When the driver door request switch is operated with ignition switch OFF	When Intelligent Key is in the antenna detection area	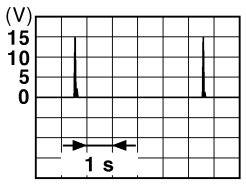 JMKIA0062GB
					When Intelligent Key is not in the antenna detection area	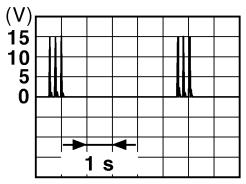 JMKIA0063GB
77 (LG)	Ground	Driver door antenna (+)	Output	When the driver door request switch is operated with ignition switch OFF	When Intelligent Key is in the antenna detection area	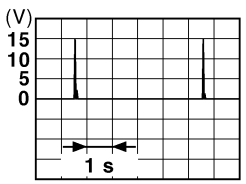 JMKIA0062GB
					When Intelligent Key is not in the antenna detection area	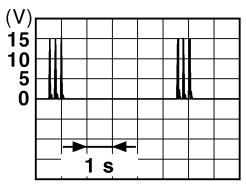 JMKIA0063GB

Terminal No. (Wire color)		Description		Condition		Value (Approx.)
+	–	Signal name	Input/ Output			
78 (Y)	Ground	Room antenna 1 (–) (Instrument panel)	Output	Ignition switch OFF	When Intelligent Key is in the passenger compartment	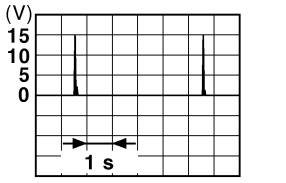 JMKIA0062GB
					When Intelligent Key is not in the passenger compartment	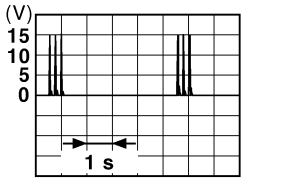 JMKIA0063GB
79 (BR)	Ground	Room antenna 1 (+) (Instrument panel)	Output	Ignition switch OFF	When Intelligent Key is in the passenger compartment	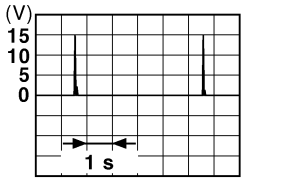 JMKIA0062GB
					When Intelligent Key is not in the passenger compartment	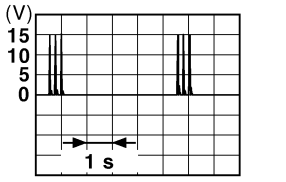 JMKIA0063GB
80 (GR)	Ground	NATS antenna amp.	Input/ Output	During waiting	Ignition switch is pressed while inserting the key into the key slot.	Just after pressing ignition switch. Pointer of tester should move.
81 (W)	Ground	NATS antenna amp.	Input/ Output	During waiting	Ignition switch is pressed while inserting the key into the key slot.	Just after pressing ignition switch. Pointer of tester should move.
82 (R)	Ground	Ignition relay [Fuse block (J/B)] control	Output	Ignition switch	OFF or ACC	0 V
					ON	Battery voltage

Terminal No. (Wire color)		Description		Condition		Value (Approx.)
+	–	Signal name	Input/ Output			
83 (Y)	Ground	Remote keyless entry receiver communication	Input/ Output	During waiting		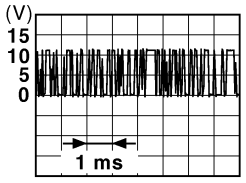 JMKIA0064GB
				When operating either button on the key		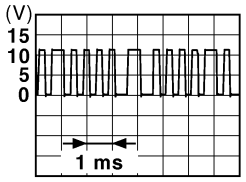 JMKIA0065GB
87 (BR)	Ground	Combination switch INPUT 5	Input	Combination switch	All switches OFF (Wiper intermittent dial 4)	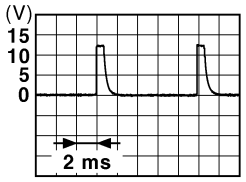 JPMIA0041GB 1.4 V
					Front fog lamp switch ON (Wiper intermittent dial 4)	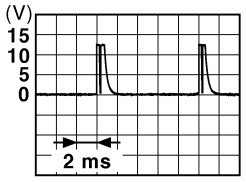 JPMIA0037GB 1.3 V
					Rear wiper switch ON (Wiper intermittent dial 4)	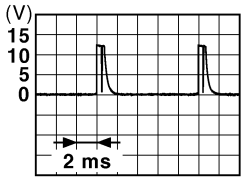 JPMIA0039GB 1.3 V
					Any of the conditions below with all switches OFF • Wiper intermittent dial 1 • Wiper intermittent dial 2 • Wiper intermittent dial 6 • Wiper intermittent dial 7	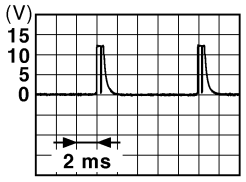 JPMIA0040GB 1.3 V

Terminal No. (Wire color)		Description		Condition		Value (Approx.)
+	–	Signal name	Input/ Output			
88 (V)	Ground	Combination switch INPUT 3	Input	Combination switch	All switches OFF (Wiper intermittent dial 4)	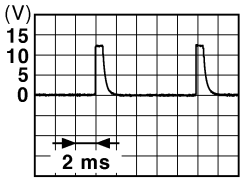 JPMIA0041GB 1.4 V
					Lighting switch HI (Wiper intermittent dial 4)	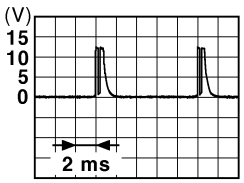 JPMIA0036GB 1.3 V
					Lighting switch 2ND (Wiper intermittent dial 4)	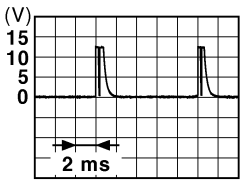 JPMIA0037GB 1.3 V
					Rear washer switch ON (Wiper intermittent dial 4)	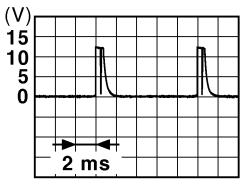 JPMIA0039GB 1.3 V
					Any of the conditions below with all switches OFF • Wiper intermittent dial 1 • Wiper intermittent dial 2 • Wiper intermittent dial 3	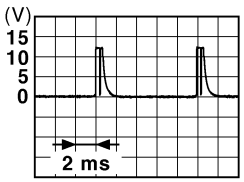 JPMIA0040GB 1.3 V
90 (P)	Ground	CAN-L	Input/ Output	—		—
91 (L)	Ground	CAN-H	Input/ Output	—		—

Terminal No. (Wire color)		Description		Condition		Value (Approx.)
+	–	Signal name	Input/ Output			
92 (LG)	Ground	Key slot illumination	Output	Key slot illumination	OFF	Battery voltage
					Blinking	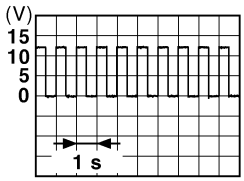 JPMIA0015GB 6.5 V
					ON	0 V
93 (V)	Ground	ON indicator lamp	Output	Ignition switch	OFF or ACC	Battery voltage
					ON	0 V
94 (Y)	Ground	Puddle lamp control	Output	Puddle lamp	OFF	Battery voltage
					ON	0 V
95 (BG)	Ground	ACC relay control	Output	Ignition switch	OFF	0 V
					ACC or ON	Battery voltage
96 (GR)	Ground	A/T shift selector (Detention switch) power supply	Output	—		Battery voltage
99 (R)	Ground	Selector lever P position switch	Input	Selector lever	P position	0 V
					Any position other than P	Battery voltage
100 (G)	Ground	Passenger door request switch	Input	Passenger door request switch	ON (Pressed)	0 V
					OFF (Not pressed)	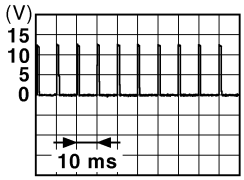 JPMIA0016GB 1.0 V
101 (SB)	Ground	Driver door request switch	Input	Driver door request switch	ON (Pressed)	0 V
					OFF (Not pressed)	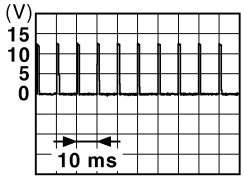 JPMIA0016GB 1.0 V
102 (BG)	Ground	Blower fan motor relay control	Output	Ignition switch	OFF or ACC	0 V
					ON	Battery voltage
103 (LG)	Ground	Remote keyless entry receiver power supply	Output	Ignition switch OFF		Battery voltage

Terminal No. (Wire color)		Description		Condition		Value (Approx.)
+	–	Signal name	Input/ Output			
107 (LG)	Ground	Combination switch INPUT 1	Input	Combination switch (Wiper intermittent dial 4)	All switches OFF	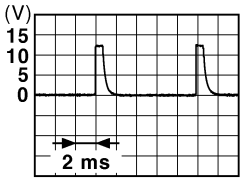 JPMIA0041GB 1.4 V
					Turn signal switch LH	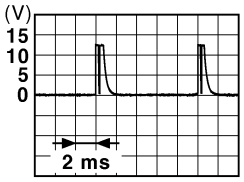 JPMIA0037GB 1.3 V
					Turn signal switch RH	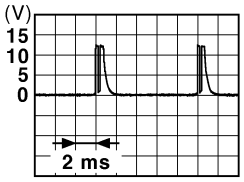 JPMIA0036GB 1.3 V
					Front wiper switch LO	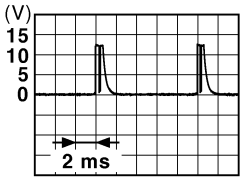 JPMIA0038GB 1.3 V
					Front washer switch ON	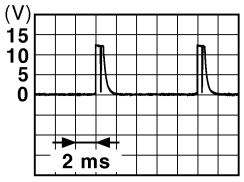 JPMIA0039GB 1.3 V

Terminal No. (Wire color)		Description		Condition		Value (Approx.)
+	–	Signal name	Input/ Output			
108 (R)	Ground	Combination switch INPUT 4	Input	Combination switch	All switches OFF (Wiper intermittent dial 4)	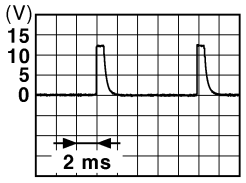 JPMIA0041GB 1.4 V
					Lighting switch AUTO (Wiper intermittent dial 4)	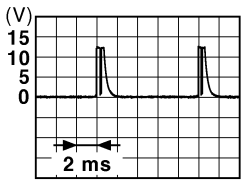 JPMIA0038GB 1.3 V
					Lighting switch 1ST (Wiper intermittent dial 4)	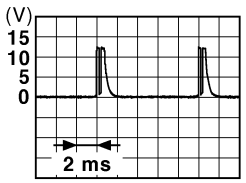 JPMIA0036GB 1.3 V
					Rear wiper switch INT (Wiper intermittent dial 4)	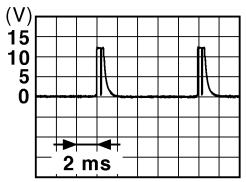 JPMIA0040GB 1.3 V
					Any of the conditions below with all switches OFF • Wiper intermittent dial 1 • Wiper intermittent dial 5 • Wiper intermittent dial 6	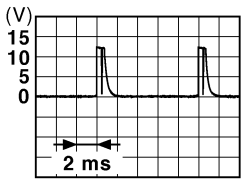 JPMIA0039GB 1.3 V

Terminal No. (Wire color)		Description		Condition		Value (Approx.)
		Signal name	Input/ Output			
+	–					
109 (Y)	Ground	Combination switch INPUT 2	Input	Combination switch (Wiper intermittent dial 4)	All switches OFF	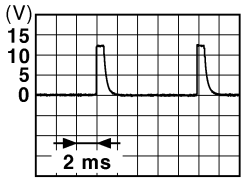 JPMIA0041GB 1.4 V
					Lighting switch PASS	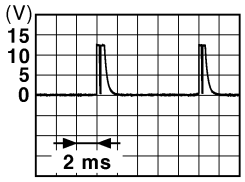 JPMIA0037GB 1.3 V
					Lighting switch 2ND	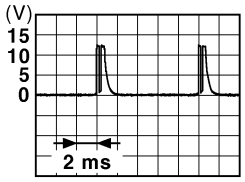 JPMIA0036GB 1.3 V
					Front wiper switch INT	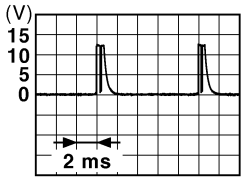 JPMIA0038GB 1.3 V
					Front wiper switch HI	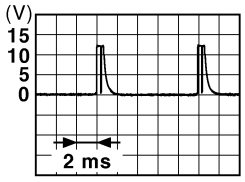 JPMIA0040GB 1.3 V
110 (G)	Ground	Hazard switch	Input	Hazard switch	ON	0 V
					OFF	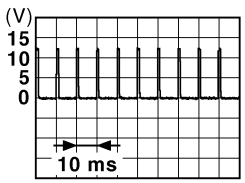 JPMIA0012GB 1.1 V

Terminal No. (Wire color)		Description		Condition		Value (Approx.)
+	–	Signal name	Input/ Output			
113 (P)	Ground	Optical sensor	Input	Ignition switch ON	When bright outside of the vehicle	Close to 5 V
					When dark outside of the vehicle	Close to 0 V
116 (SB)	Ground	Stop lamp switch 1	Input	—		Battery voltage
118 (P)	Ground	Stop lamp switch 2 (Without ICC)	Input	Stop lamp switch	OFF (Brake pedal is not depressed)	0 V
					ON (Brake pedal is depressed)	Battery voltage
		Stop lamp switch 2 (With ICC)		Stop lamp switch OFF (Brake pedal is not depressed) and ICC brake hold relay OFF		0 V
				Stop lamp switch ON (Brake pedal is depressed) or ICC brake hold relay ON		Battery voltage
119 (SB)	Ground	Front door lock assembly driver side (Unlock sensor)	Input	Driver door	LOCK status (Unlock sensor switch OFF)	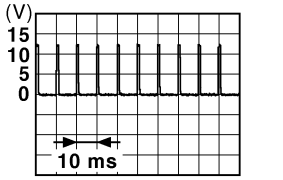 JPMIA0012GB 1.1 V
					UNLOCK status (Unlock switch sensor ON)	0 V
121 (BR)	Ground	Key slot switch	Input	When the key is inserted into key slot		Battery voltage
				When the key is not inserted into key slot		0 V
123 (W)	Ground	IGN feedback	Input	Ignition switch	OFF or ACC	0 V
					ON	Battery voltage
124 (LG)	Ground	Passenger door switch	Input	Passenger door switch	OFF (Door close)	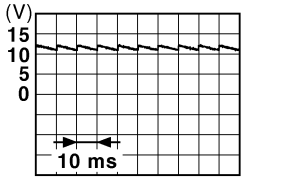 JPMIA0011GB 11.8 V
					ON (Door open)	0 V
132 (BR)	Ground	Power window switch communication	Input/ Output	Ignition switch ON		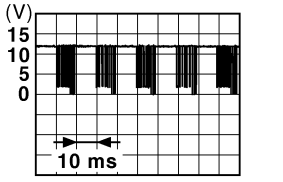 JPMIA0013GB 10.2 V
				Ignition switch OFF or ACC		Battery voltage

Terminal No. (Wire color)		Description		Condition		Value (Approx.)
		Signal name	Input/ Output			
+	–					
133 (W)	Ground	Push-button ignition switch illumination	Output	Push-button ignition switch illumination	ON (Tail lamps OFF)	9.5 V
					ON (Tail lamps ON)	**NOTE:** The pulse width of this wave is varied by the illumination brightening/dimming level. 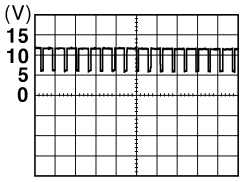 JPMIA0159GB
					OFF	0 V
134 (GR)	Ground	LOCK indicator lamp	Output	LOCK indicator lamp	OFF	Battery voltage
					ON	0 V
137 (BG)	Ground	Receiver and sensor ground	Input	Ignition switch ON		0 V
138 (Y)	Ground	Receiver and sensor power supply	Output	Ignition switch	OFF	0 V
					ACC or ON	5.0 V
139 (L)	Ground	Tire pressure receiver communication	Input/ Output	Ignition switch ON	Standby state	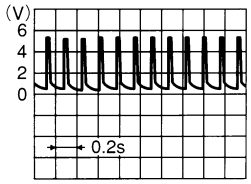 OCC3881D
					When receiving the signal from the transmitter	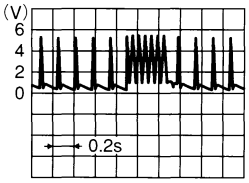 OCC3880D
140 (GR)	Ground	Selector lever P/N position	Input	Selector lever	P or N position	Battery voltage
					Except P and N positions	0 V
141 (G)	Ground	Security indicator	Output	Security indicator	ON	0 V
					Blinking	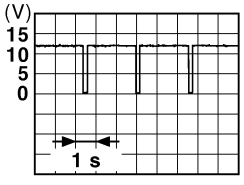 JPMIA0014GB 11.3 V
					OFF	Battery voltage

Terminal No. (Wire color)		Description		Condition		Value (Approx.)
+	–	Signal name	Input/ Output			
142 (BG)	Ground	Combination switch OUTPUT 5	Output	Combination switch (Wiper intermittent dial 4)	All switches OFF	0 V
					Lighting switch 1ST	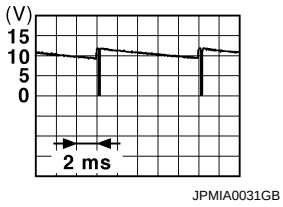 JPMIA0031GB 10.7 V
					Lighting switch HI	
					Lighting switch 2ND	
					Turn signal switch RH	
143 (P)	Ground	Combination switch OUTPUT 1	Output	Combination switch	All switches OFF (Wiper intermittent dial 4)	0 V
					Front wiper switch HI (Wiper intermittent dial 4)	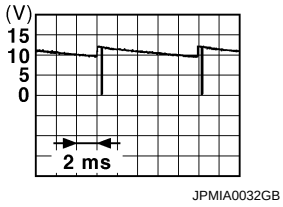 JPMIA0032GB 10.7 V
					Rear wiper switch INT (Wiper intermittent dial 4)	
					Any of the conditions below with all switches OFF • Wiper intermittent dial 1 • Wiper intermittent dial 2 • Wiper intermittent dial 3 • Wiper intermittent dial 6 • Wiper intermittent dial 7	
144 (G)	Ground	Combination switch OUTPUT 2	Output	Combination switch	All switches OFF (Wiper intermittent dial 4)	0 V
					Front washer switch ON (Wiper intermittent dial 4)	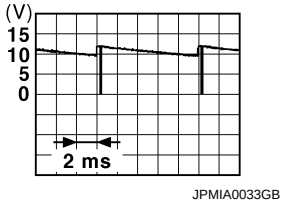 JPMIA0033GB 10.7 V
					Rear wiper switch ON (Wiper intermittent dial 4)	
					Rear washer switch ON (Wiper intermittent dial 4)	
					Any of the conditions below with all switches OFF • Wiper intermittent dial 1 • Wiper intermittent dial 5 • Wiper intermittent dial 6	
145 (L)	Ground	Combination switch OUTPUT 3	Output	Combination switch (Wiper intermittent dial 4)	All switches OFF	0 V
					Front wiper switch INT	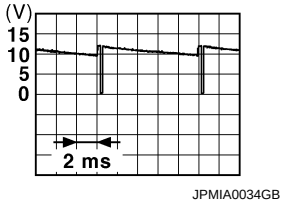 JPMIA0034GB 10.7 V
					Front wiper switch LO	
					Lighting switch AUTO	

Terminal No. (Wire color)		Description		Condition		Value (Approx.)
		Signal name	Input/ Output			
+	–					
146 (SB)	Ground	Combination switch OUTPUT 4	Output	Combination switch (Wiper intermittent dial 4)	All switches OFF	0 V
					Front fog lamp switch ON	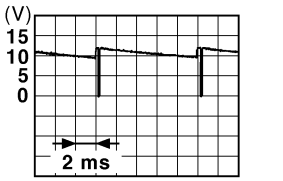 JPMIA0035GB 10.7 V
					Lighting switch 2ND	
					Lighting switch PASS	
					Turn signal switch LH	
150 (LG)	Ground	Driver door switch	Input	Driver door switch	OFF (Door close)	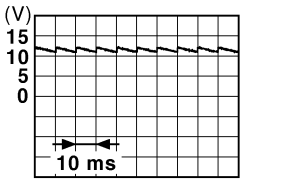 JPMIA0011GB 11.8 V
					ON (Door open)	0 V
151 (G)	Ground	Rear window defogger relay control	Output	Rear window defogger	Active	0 V
					Not activated	Battery voltage

Wiring Diagram - BCM -

INFOID:0000000007630757

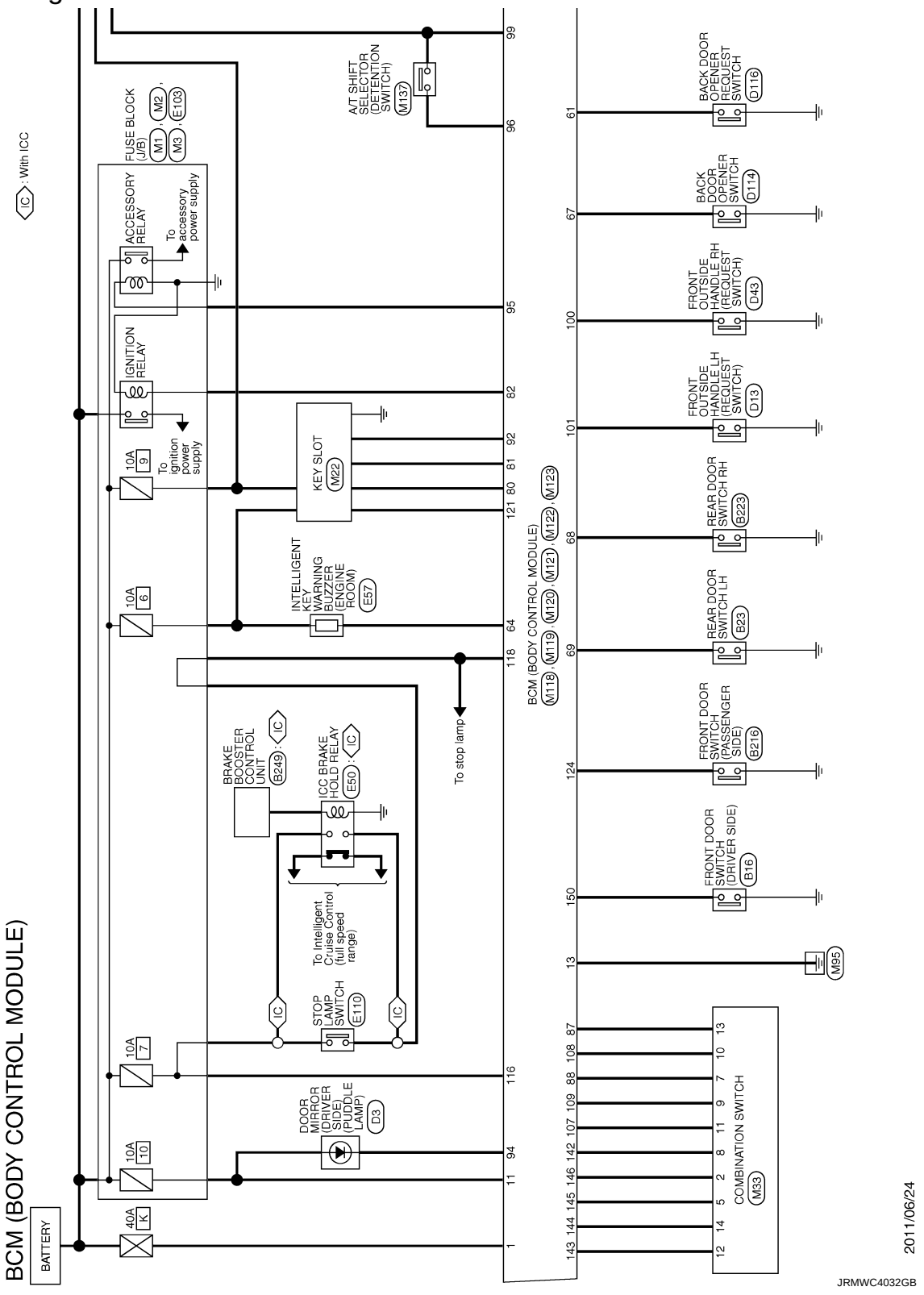

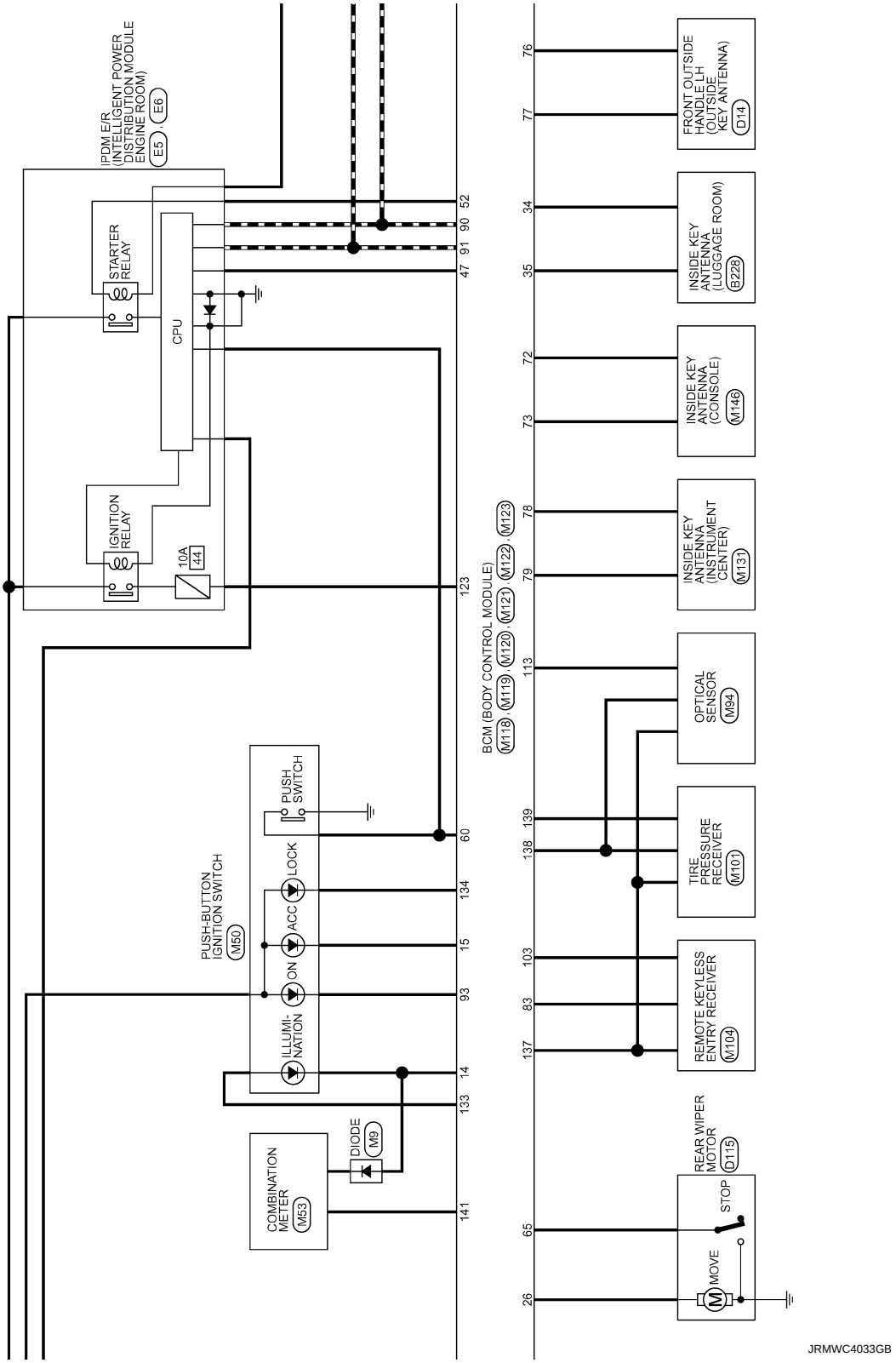
IPDM E/R (INTELLIGENT POWER DISTRIBUTION MODULE ENGINE ROOM) E5, E6
STARTER RELAY
CPU
IGNITION RELAY
10A 44
PUSH-BUTTON IGNITION SWITCH M50
PUSH SWITCH
LOCK
ACC
ON
ILLUMI-NATION
COMBINATION METER M53
DIODE M9
BCM (BODY CONTROL MODULE) M118, M119, M120, M121, M122, M123
FRONT OUTSIDE HANDLE LH (OUTSIDE KEY ANTENNA) D14
INSIDE KEY ANTENNA (LUGGAGE ROOM) B228
INSIDE KEY ANTENNA (CONSOLE) M146
INSIDE KEY ANTENNA (INSTRUMENT CENTER) M131
OPTICAL SENSOR M94
TIRE PRESSURE RECEIVER M101
REMOTE KEYLESS ENTRY RECEIVER M104
REAR WIPER MOTOR D115
STOP
MOVE
JRMWC4033GB

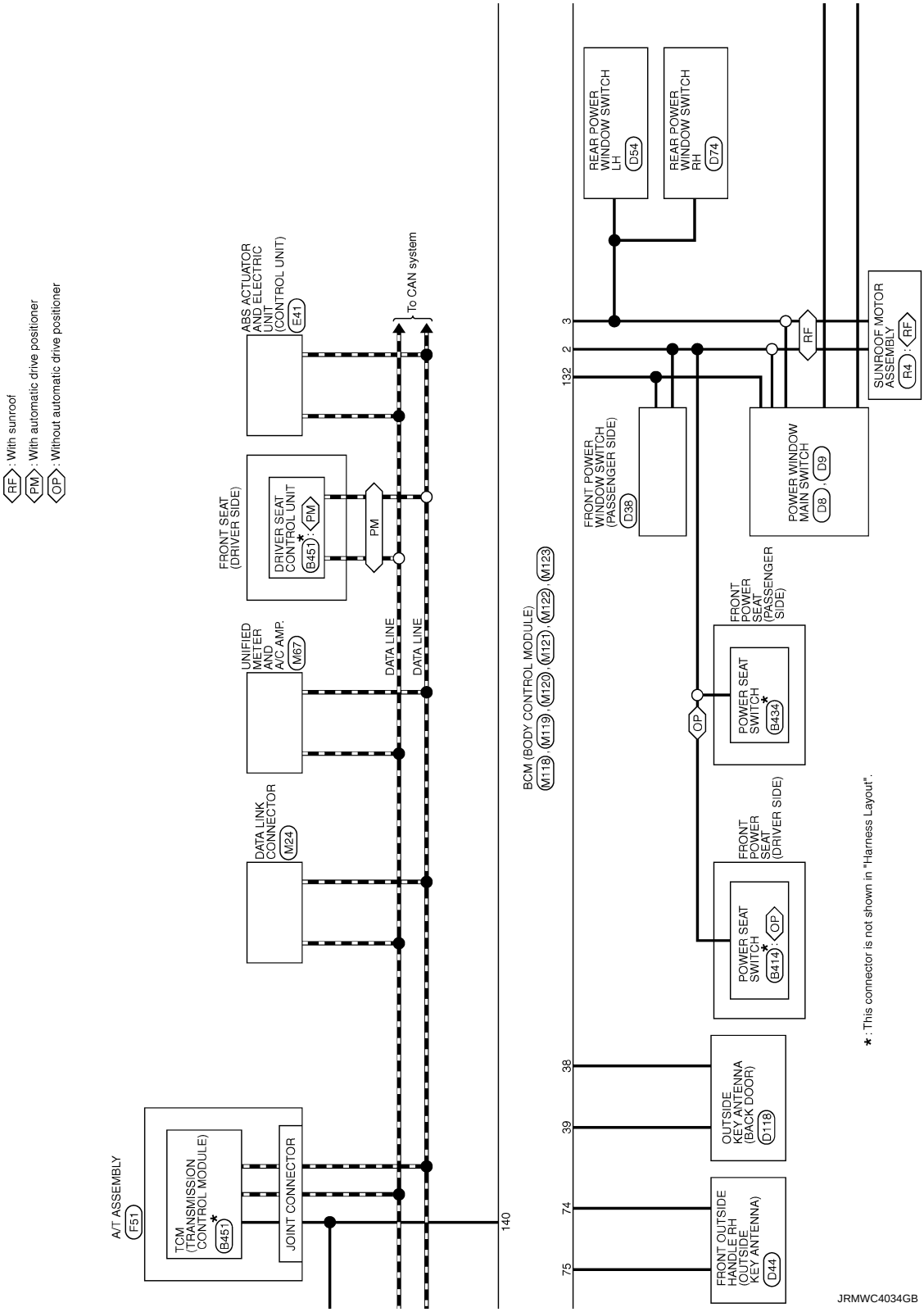
RF : With sunroof
PM : With automatic drive positioner
OP : Without automatic drive positioner
ABS ACTUATOR AND ELECTRIC UNIT (CONTROL UNIT) E41
To CAN system
FRONT SEAT (DRIVER SIDE)
DRIVER SEAT CONTROL UNIT B451 : PM
PM
UNIFIED METER AND A/C AMP. M67
DATA LINE
DATA LINE
DATA LINK CONNECTOR M24
A/T ASSEMBLY F51
TCM (TRANSMISSION CONTROL MODULE) B451*
JOINT CONNECTOR
140
BCM (BODY CONTROL MODULE) M118, M119, M120, M121, M122, M123
3
2
132
REAR POWER WINDOW SWITCH LH D54
REAR POWER WINDOW SWITCH RH D74
FRONT POWER WINDOW SWITCH (PASSENGER SIDE) D38
POWER WINDOW MAIN SWITCH D8, D9
RF
SUNROOF MOTOR ASSEMBLY R4 : RF
OP
FRONT POWER SEAT (PASSENGER SIDE)
POWER SEAT SWITCH* B434
FRONT POWER SEAT (DRIVER SIDE)
POWER SEAT SWITCH* B414 : OP
38
39
74
75
OUTSIDE KEY ANTENNA (BACK DOOR) D118
FRONT OUTSIDE HANDLE RH (OUTSIDE KEY ANTENNA) D44
* : This connector is not shown in "Harness Layout".
JRMWC4034GB

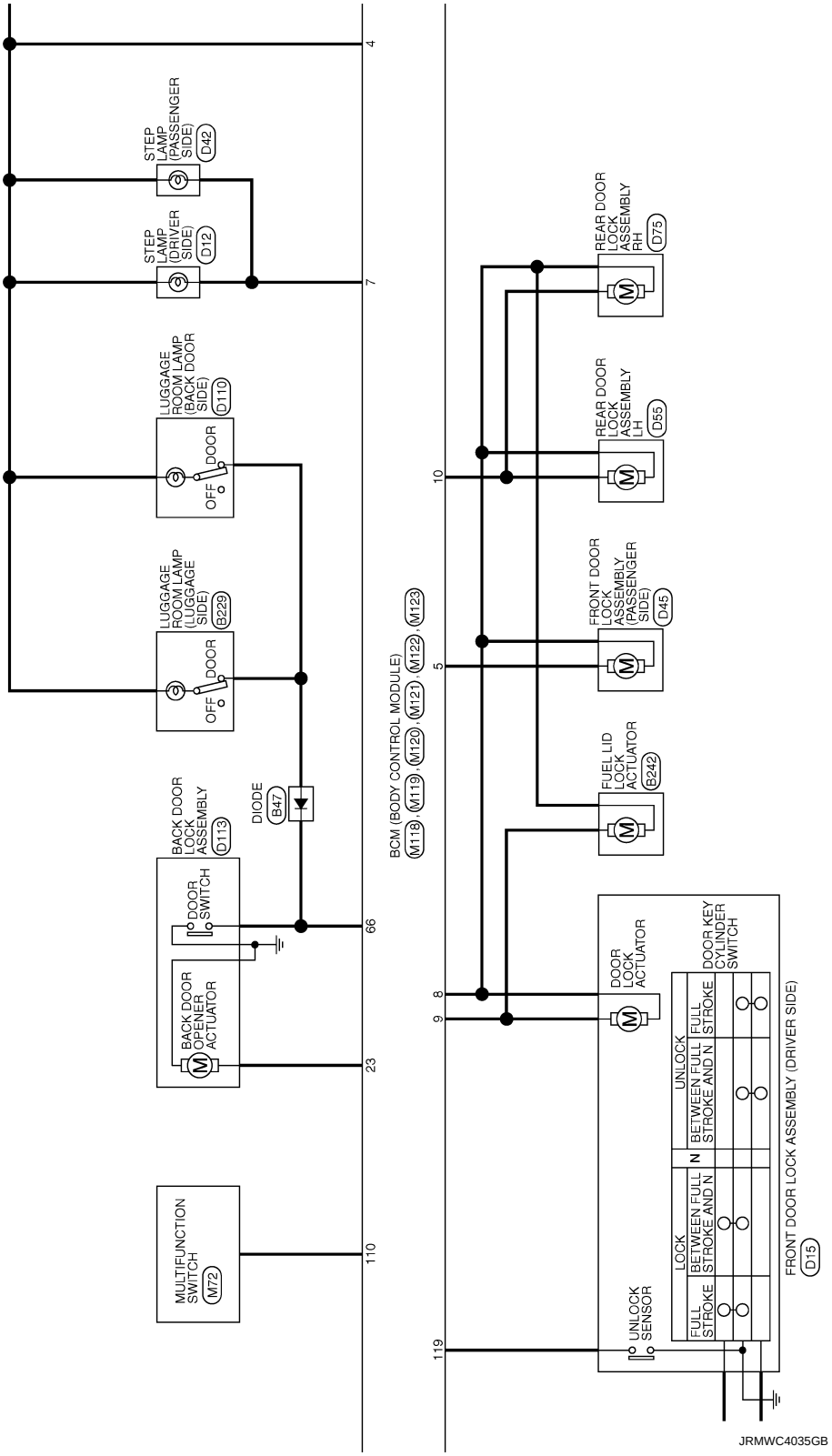
STEP LAMP (PASSENGER SIDE) D42
STEP LAMP (DRIVER SIDE) D12
LUGGAGE ROOM LAMP (BACK DOOR SIDE) D110
LUGGAGE ROOM LAMP (LUGGAGE SIDE) B229
DOOR
OFF
DIODE B47
BACK DOOR LOCK ASSEMBLY D113
DOOR SWITCH
BACK DOOR OPENER ACTUATOR
MULTIFUNCTION SWITCH M72
4
7
66
23
110
BCM (BODY CONTROL MODULE) M118, M119, M120, M121, M122, M123
10
5
9
8
119
REAR DOOR LOCK ASSEMBLY RH D75
REAR DOOR LOCK ASSEMBLY LH D55
FRONT DOOR LOCK ASSEMBLY (PASSENGER SIDE) D45
FUEL LID LOCK ACTUATOR B242
DOOR LOCK ACTUATOR
DOOR KEY CYLINDER SWITCH
UNLOCK SENSOR
LOCK
UNLOCK
N
FULL STROKE
BETWEEN FULL STROKE AND N
FRONT DOOR LOCK ASSEMBLY (DRIVER SIDE) D15
JRMWC4035GB

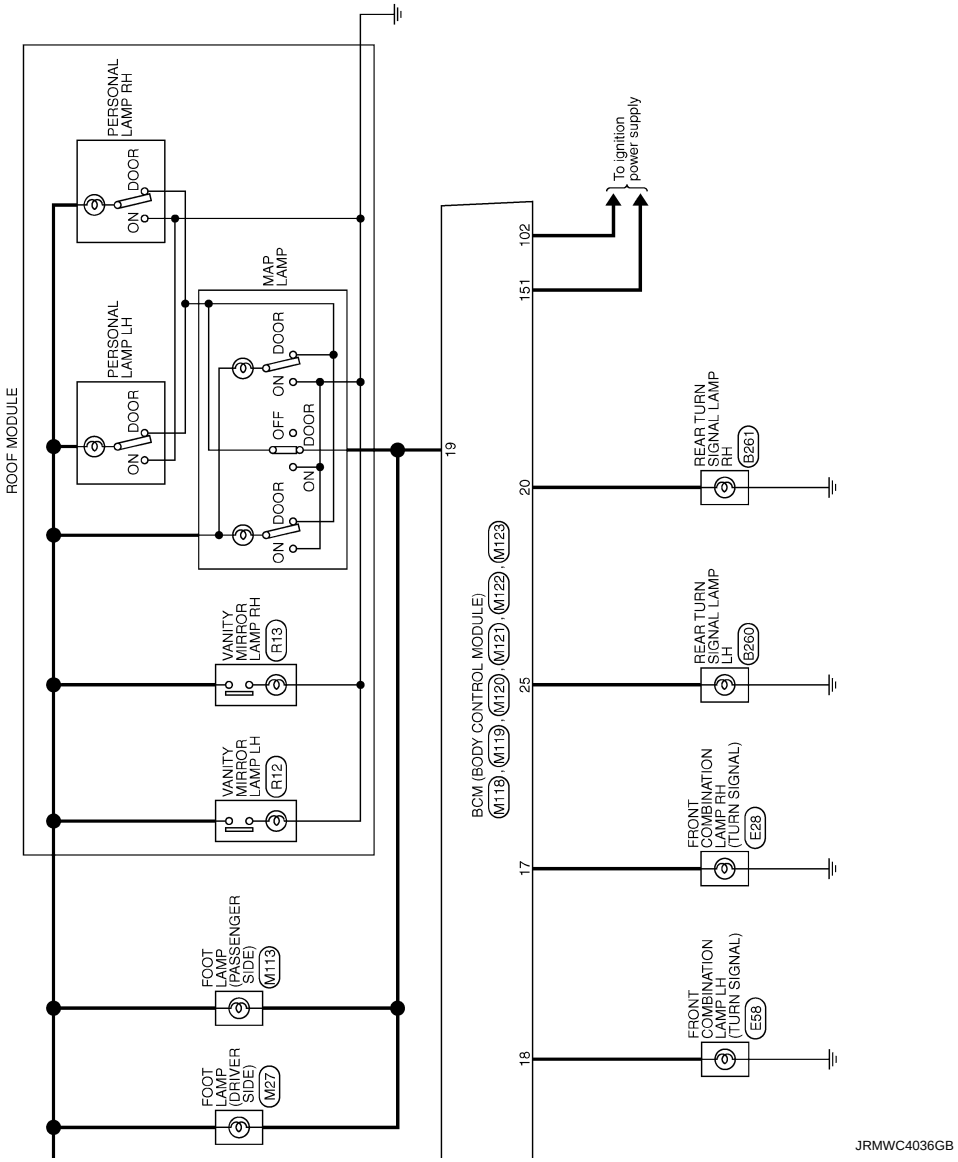
ROOF MODULE
PERSONAL LAMP RH
PERSONAL LAMP LH
MAP LAMP
DOOR
ON
OFF
VANITY MIRROR LAMP RH
R13
VANITY MIRROR LAMP LH
R12
FOOT LAMP (PASSENGER SIDE)
M113
FOOT LAMP (DRIVER SIDE)
M27
19
To ignition power supply
102
151
BCM (BODY CONTROL MODULE)
M118, M119, M120, M121, M122, M123
20
25
17
18
REAR TURN SIGNAL LAMP RH
B261
REAR TURN SIGNAL LAMP LH
B260
FRONT COMBINATION LAMP RH (TURN SIGNAL)
E28
FRONT COMBINATION LAMP LH (TURN SIGNAL)
E58
JRMWC4036GB

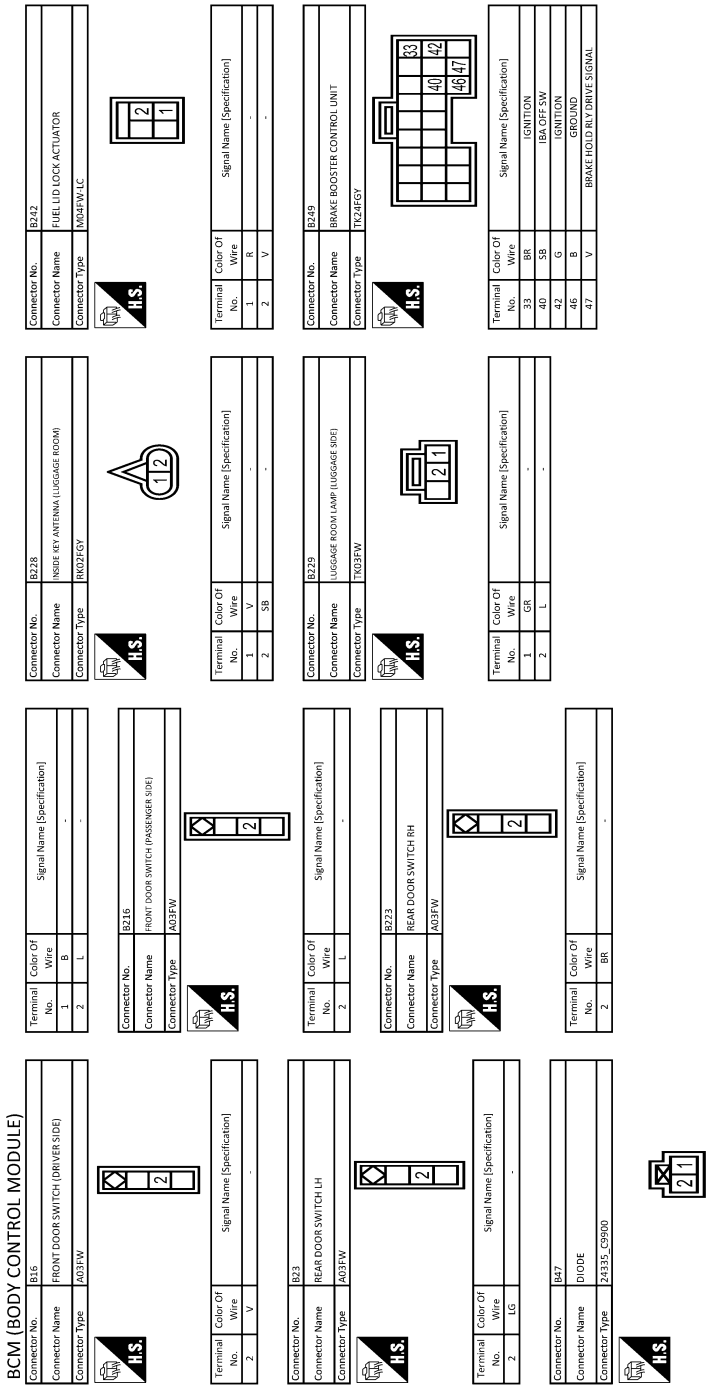

JRMWG8098GB

BCM (BODY CONTROL MODULE)

Connector No.	B260
Connector Name	REAR TURN SIGNAL LAMP LH
Connector Type	HS02FG-W

Terminal No.	Color Of Wire	Signal Name [Specification]
1	G	-
2	B	-

Connector No.	B261
Connector Name	REAR TURN SIGNAL LAMP RH
Connector Type	HS02FG-W

Terminal No.	Color Of Wire	Signal Name [Specification]
1	V	-
2	B	-

Connector No.	B414
Connector Name	POWER SEAT SWITCH
Connector Type	NS10FW-CS

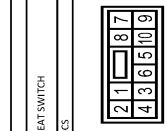

Terminal No.	Color Of Wire	Signal Name [Specification]
1	R	-
2	B	-
3	G/Y	-
4	P	-
5	W	-
6	V	-
7	L/Y	-
8	L	-
9	L/R	-
10	G/W	-

Connector No.	B434
Connector Name	POWER SEAT SWITCH
Connector Type	NS10FW-CS

Terminal No.	Color Of Wire	Signal Name [Specification]
1	R	-
2	B	-
3	G/Y	-
4	P	-
5	W	-
6	V	-
7	L/Y	-
8	L	-
9	L/R	-
10	G/W	-

Connector No.	B451
Connector Name	DRIVER SEAT CONTROL UNIT
Connector Type	TH32FW

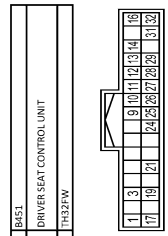

Terminal No.	Color Of Wire	Signal Name [Specification]
1	L/W	RX
3	R/Y	CAN-H
9	W/G	PULSE (RECLINING)
10	P/B	PULSE (RR LIFTING)
11	BR	SLIDING SW (BACKWARD)
12	SB	RECLINING SW (BACKWARD)
13	LG/R	FRONT LIFTING SW (DOWNWARD)
14	G/B	REAR LIFTING SW (DOWNWARD)
16	O	VCC
17	Y/R	TX
19	V	CAN-L
21	L/Y	P RANGE SW
24	R	PULSE (SLIDING)
25	Y/B	PULSE (FR LIFTING)
26	Y	SLIDING SW (FORWARD)
27	R/G	RECLINING SW (FORWARD)
28	W/B	FRONT LIFTING SW (UPWARD)
29	P/L	REAR LIFTING SW (UPWARD)
31	GR	SENSOR GND
32	B/W	GND (SIGNAL)

Connector No.	D3
Connector Name	DOOR MIRROR (DRIVER SIDE)
Connector Type	TH24MW-NH

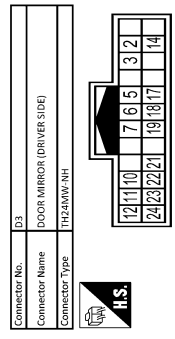

Terminal No.	Color Of Wire	Signal Name [Specification]
2	O	-
3	B	SIDE CAMERA LH COMM
5	Y	SIDE CAMERA LH IMAGE SIGNAL
6	R	SIDE CAMERA LH POWER SUPPLY
7	W	-
10	G	-
11	P	-
12	O	-
14	LG	-
17	G	SIDE CAMERA LH IMAGE GND
18	W	SIDE CAMERA LH GND
19	B	-
21	GR	-
22	BR	-
23	Y	-
24	V	-

Connector No.	D8
Connector Name	POWER WINDOW MAIN SWITCH
Connector Type	NS16FW-CS

Terminal No.	Color Of Wire	Signal Name [Specification]
1	W	-
2	BR	-
3	GR	-
4	V	-

JRMWG8099GB

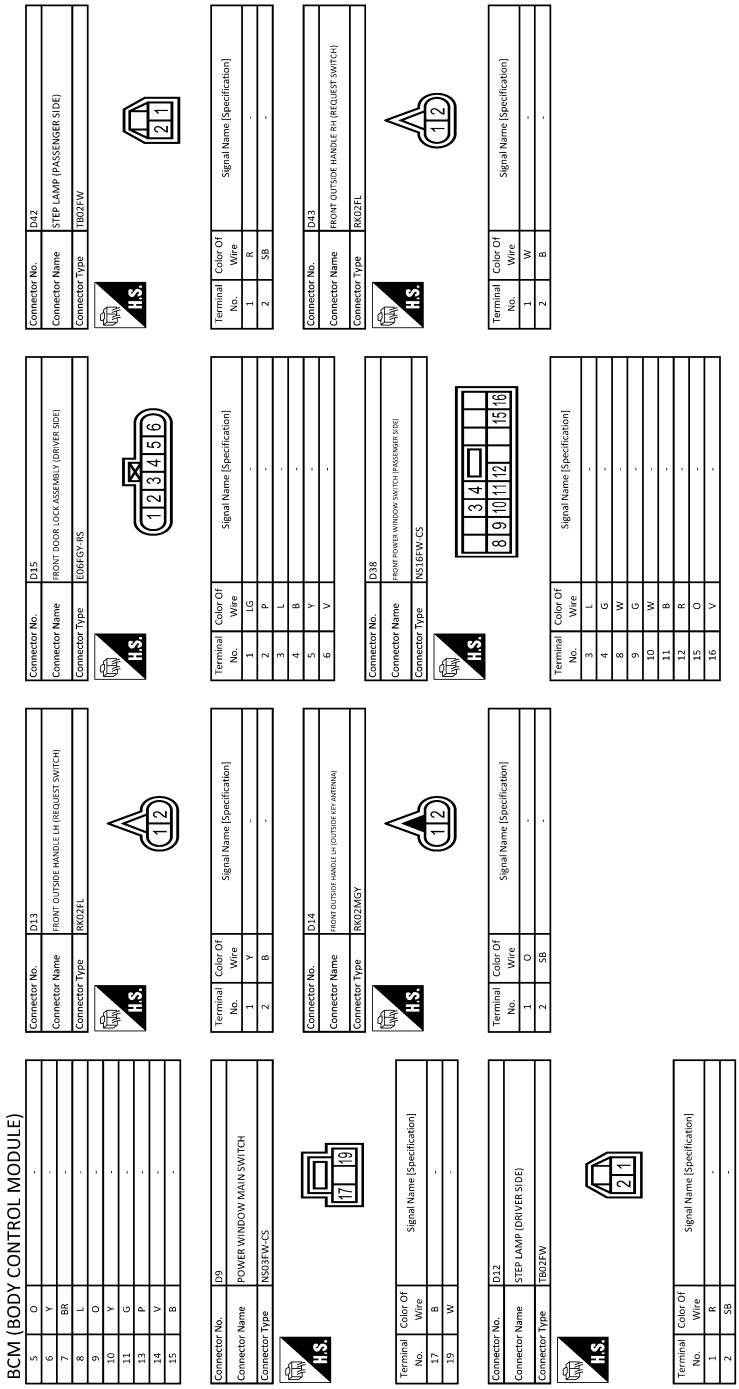

JRMWG8100GB

BCM (BODY CONTROL MODULE)

Connector No.	D44
Connector Name	FRONT OUTSIDE HANDLE RH (OUTSIDE KEY ANTENNA)
Connector Type	RK02MGY

H.S.

Terminal No.	Color Of Wire	Signal Name [Specification]
1	P	-
2	V	-

Connector No.	D45
Connector Name	FRONT DOOR LOCK ASSEMBLY (PASSENGER SIDE)
Connector Type	E06FGY-RS

H.S.

Terminal No.	Color Of Wire	Signal Name [Specification]
1	P	-
2	LG	-

Connector No.	D54
Connector Name	REAR POWER WINDOW SWITCH LH
Connector Type	NS08FW-CS

H.S.

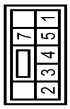

Terminal No.	Color Of Wire	Signal Name [Specification]
1	Y	-
2	V	-
3	G	-
4	L	-
5	W	-
7	B	-

Connector No.	D55
Connector Name	REAR DOOR LOCK ASSEMBLY LH
Connector Type	E06FGY-RS

H.S.

Terminal No.	Color Of Wire	Signal Name [Specification]
1	V	-
2	G	-

Connector No.	D74
Connector Name	REAR POWER WINDOW SWITCH RH
Connector Type	NS08FW-CS

H.S.

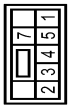

Terminal No.	Color Of Wire	Signal Name [Specification]
1	W	-
2	V	-
3	G	-
4	P	-
5	O	-
7	B	-

Connector No.	D75
Connector Name	REAR DOOR LOCK ASSEMBLY RH
Connector Type	E06FGY-RS

H.S.

Terminal No.	Color Of Wire	Signal Name [Specification]
1	G	-
2	V	-

Connector No.	D110
Connector Name	LUGGAGE ROOM LAMP (BACK DOOR SIDE)
Connector Type	TK03FW

H.S.

Terminal No.	Color Of Wire	Signal Name [Specification]
1	V	-
2	P	-

Connector No.	D113
Connector Name	BACK DOOR LOCK ASSEMBLY
Connector Type	NS04FW-CS

H.S.

Terminal No.	Color Of Wire	Signal Name [Specification]
1	Y	-
2	B	-
3	V	-
4	B	-

JRMWG8101GB

BCM (BODY CONTROL MODULE)

Connector No.	D114
Connector Name	BACK DOOR OPENER SWITCH
Connector Type	TK02MBR-P

Terminal No.	Color Of Wire	Signal Name [Specification]
1	GR	-
2	B	-

Connector No.	D115
Connector Name	REAR WIPER MOTOR
Connector Type	CL04FW-LV

Terminal No.	Color Of Wire	Signal Name [Specification]
2	G	-
3	O	-
4	B	-

Connector No.	D116
Connector Name	BACK DOOR OPENER REQUEST SWITCH
Connector Type	TK02MBR-P

Terminal No.	Color Of Wire	Signal Name [Specification]
1	W	-
2	B	-

Connector No.	D118
Connector Name	OUTSIDE KEY ANTENNA (BACK DOOR)
Connector Type	RK02-FGY

Terminal No.	Color Of Wire	Signal Name [Specification]
1	BR	-
2	R	-

Connector No.	E5
Connector Name	IPDM E/R (INTELLIGENT POWER DISTRIBUTION MODULE ENGINE ROOM)
Connector Type	TH20FW-CS12-M4-1V

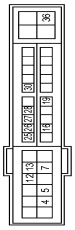

Terminal No.	Color Of Wire	Signal Name [Specification]
4	V	-
5	L	-
7	R	-
12	B/W	-
13	Y	-
16	LG	-
19	W	-
25	G	-
26	R	-
27	BG	-
28	L	-
30	GR	-
36	G	-

Connector No.	E6
Connector Name	IPDM E/R (INTELLIGENT POWER DISTRIBUTION MODULE ENGINE ROOM)
Connector Type	TH08FW-NH

Terminal No.	Color Of Wire	Signal Name [Specification]
39	P	-
40	L	-
41	B/W	-
43	SB	-
44	BR	-
45	G	-
46	R	-

Connector No.	E28
Connector Name	FRONT COMBINATION LAMP RH
Connector Type	RS08FB-PR

Terminal No.	Color Of Wire	Signal Name [Specification]
2	B	-
3	B/Y	-
4	B/W	-
5	BG	-
6	V	-
7	BR	-
8	P	-

Connector No.	E41
Connector Name	ABS ACTUATOR AND ELECTRIC UNIT (CONTROL UNIT)
Connector Type	BAA42FB-AH24-LH

Terminal No.	Color Of Wire	Signal Name [Specification]
1	B	GROUND
2	G	UBMR
3	R	UBVR
4	B	GROUND
5	Y	DS FL
6	BG	DP RL
7	BR	DP RR
9	B	DP FR
10	W	DS FR
14	P	CAN-L
25	Y	BUS-L
26	LG	DP FL
27	GR	DS RL

JRMWG8102GB

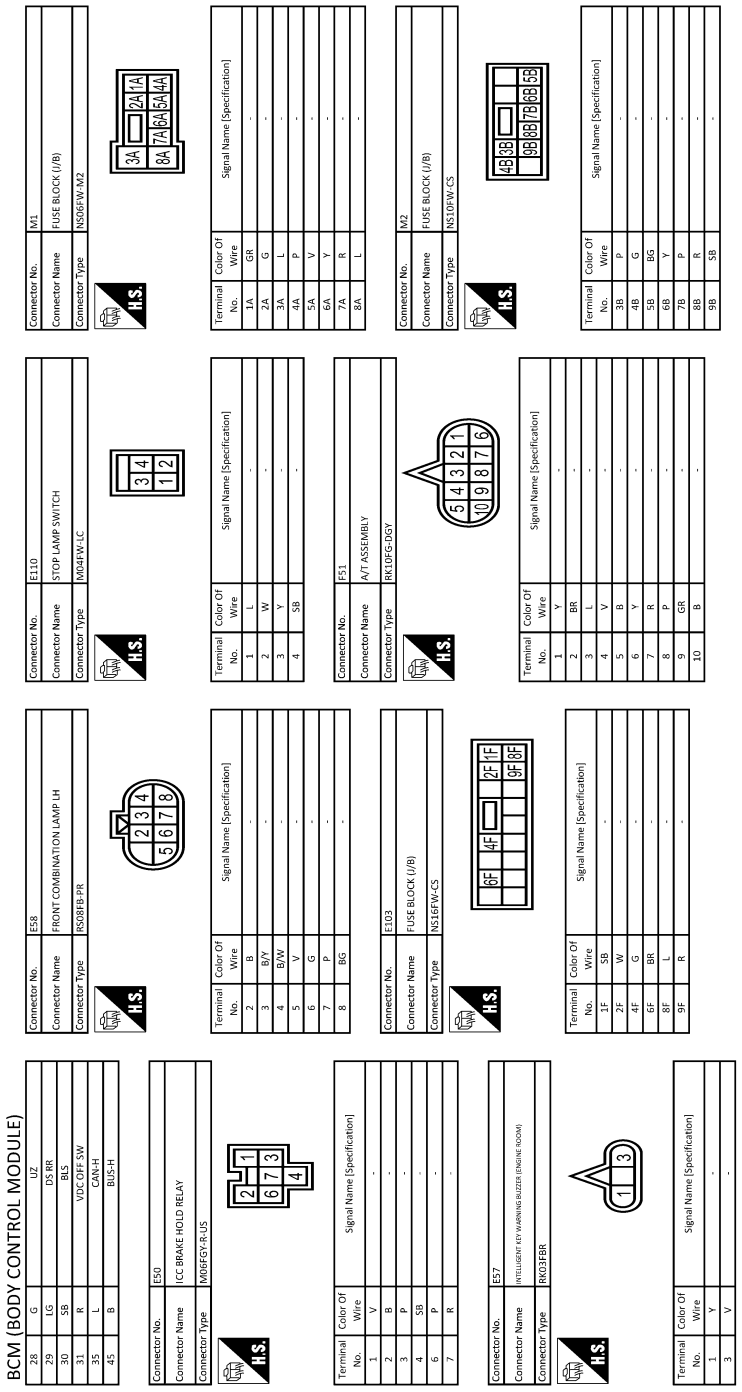

JRMWG8103GB

BCM (BODY CONTROL MODULE)

Connector No.	M3
Connector Name	FUSE BLOCK (J/B)
Connector Type	NS12FW-CS

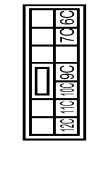

Terminal No.	Color Of Wire	Signal Name [Specification]
10C	L	-
11C	R	-
12C	BG	-
6C	R	-
7C	B	-
9C	BG	-

Connector No.	M9
Connector Name	DIODE
Connector Type	24335_C9900

Terminal No.	Color Of Wire	Signal Name [Specification]
1	R	-
2	W	-

Connector No.	M22
Connector Name	KEY SLOT
Connector Type	TH12FW-NH

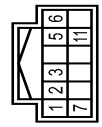

Terminal No.	Color Of Wire	Signal Name [Specification]
1	R	BAT
2	GR	CLOCK
3	W	DATA
5	Y	ILL BAT
6	LG	ILL
7	B	GROUND
11	BR	KEY SWITCH SIGNAL

Connector No.	M24
Connector Name	DATA LINK CONNECTOR
Connector Type	BD16FW

Terminal No.	Color Of Wire	Signal Name [Specification]
3	LG	-
4	B	-
5	B	-
6	L	-
7	V	-
8	G	-
11	SB	-
14	P	-
16	Y	-

Connector No.	M27
Connector Name	FOOT LAMP (DRIVER SIDE)
Connector Type	A02FW

Terminal No.	Color Of Wire	Signal Name [Specification]
1	R	-
2	BR	-

Connector No.	M33
Connector Name	COMBINATION SWITCH
Connector Type	TH16FW-NH

Terminal No.	Color Of Wire	Signal Name [Specification]
1	P	FR WASHER(-)
2	SB	OUTPUT 4
3	GR	FR WASHER(+)
4	G	IGN
5	L	OUTPUT 3
6	B	GROUND
7	V	INPUT 3
8	BG	OUTPUT 5
9	Y	INPUT 2
10	R	INPUT 4
11	LG	INPUT 1
12	P	OUTPUT 1
13	BR	INPUT 5
14	G	OUTPUT 2

Connector No.	M50
Connector Name	PUSH-BUTTON IGNITION SWITCH
Connector Type	TK08FBR

Terminal No.	Color Of Wire	Signal Name [Specification]
1	B	-
2	W	-
3	W	-
4	BR	-
5	GR	-
6	Y	-
7	V	-
8	P	-

Connector No.	M53
Connector Name	COMBINATION METER
Connector Type	TH40FW-NH

Terminal No.	Color Of Wire	Signal Name [Specification]
1	GR	-
2	LG	COMMUNICATION SIGNAL (METER->AMP.)
3	GR	COMMUNICATION SIGNAL (AMP.->METER)
5	B	GROUND
6	P	ALTERNATOR SIGNAL
7	BR	AIR BAG SIGNAL
10	G	SECURITY SIGNAL
15	B	GROUND
16	B	METER CONTROL SWITCH GROUND
19	B	ILL GND
20	R	ILL
21	BG	IGNITION SIGNAL

JRMWG8104GB

BCM (BODY CONTROL MODULE)

22	B	GROUND
24	BR	COMMUNICATION SIGNAL (LCD->AMP.)
25	Y	COMMUNICATION SIGNAL (AMP.->LCD)
26	R	VEHICLE SPEED SIGNAL (8-PULSE)
27	V	PARKING BRAKE SWITCH SIGNAL
28	W	BRAKE FLUID LEVEL SWITCH SIGNAL
29	SB	SEAT BELT BUCKLE SWITCH SIGNAL (DRIVER SIDE)
30	G	SEAT BELT BUCKLE SWITCH SIGNAL (PASSENGER SIDE)
31	L	WASHER LEVEL SWITCH SIGNAL
33	B	ILLUMINATION CONTROL SIGNAL
36	LG	SELECT SWITCH SIGNAL
37	SB	ENTER SWITCH SIGNAL
38	L	TRIP A/B RESET SWITCH SIGNAL
39	P	ILLUMINATION CONTROL SWITCH SIGNAL (-)
40	BG	ILLUMINATION CONTROL SWITCH SIGNAL (+)

Connector No.	M67
Connector Name	UNIFIED METER AND A/C AMP.
Connector Type	TH32FW-NH

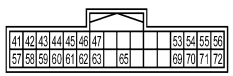

Terminal No.	Color Of Wire	Signal Name [Specification]
41	V	ACC POWER SUPPLY
42	Y	FUEL LEVEL SENSOR SIGNAL
43	R	INTAKE SENSOR SIGNAL
44	LG	IN-VEHICLE SENSOR SIGNAL
45	P	AMBIENT SENSOR SIGNAL
46	BG	SUNLOAD SENSOR SIGNAL
47	G	EXHAUST GAS / OUTSIDE ODOR DETECTING SENSOR SIGNAL
53	G	IGNITION POWER SUPPLY
54	Y	BATTERY POWER SUPPLY
55	B	GROUND
56	L	CAN-H
57	W	BRAKE FLUID LEVEL SWITCH SIGNAL
58	BR	FUEL LEVEL SENSOR GROUND
59	GR	INTAKE SENSOR GROUND
60	L	IN-VEHICLE SENSOR GROUND
61	BR	AMBIENT SENSOR GROUND
62	SB	SUNLOAD SENSOR GROUND
63	R	-
65	BG	ECV SIGNAL
69	L	A/C LAN SIGNAL
70	R	EACH DOOR MOTOR POWER SUPPLY
71	B	GROUND
72	P	CAN-L

Connector No.	M72
Connector Name	MULTIFUNCTION SWITCH
Connector Type	TH16FW-NH

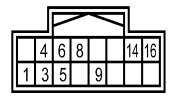

Terminal No.	Color Of Wire	Signal Name [Specification]
1	B	GROUND
3	V	ACC
4	R	ILL
5	Y	ILL CONT
6	SB	AV COMM (H)
8	LG	AV COMM (L)
9	B	SW GND
14	Y	DISK EJECT SIGNAL
16	G	HAZARD ON

Connector No.	M94
Connector Name	OPTICAL SENSOR
Connector Type	TK03FW

Terminal No.	Color Of Wire	Signal Name [Specification]
1	Y	POWER
2	P	OUTPUT
3	B	GROUND

Connector No.	M101
Connector Name	TIRE PRESSURE RECEIVER
Connector Type	TK04FW

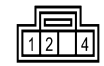

Terminal No.	Color Of Wire	Signal Name [Specification]
1	BG	GROUND
2	L	SIGNAL
4	Y	BATTERY

Connector No.	M104
Connector Name	REMOTE KEYLESS ENTRY RECEIVER
Connector Type	JAB04FB

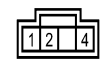

Terminal No.	Color Of Wire	Signal Name [Specification]
1	BG	GROUND
2	Y	SIGNAL OUTPUT
4	LG	BATTERY

Connector No.	M113
Connector Name	FOOT LAMP (PASSENGER SIDE)
Connector Type	A02FW

Terminal No.	Color Of Wire	Signal Name [Specification]
1	R	-
2	BR	-

Connector No.	M118
Connector Name	BCM (BODY CONTROL MODULE)
Connector Type	M03FB-LC

Terminal No.	Color Of Wire	Signal Name [Specification]
1	W	BAT (F/L)
2	W	POWER WINDOW POWER SUPPLY(BAT)
3	Y	POWER WINDOW POWER SUPPLY(RAP)

JRMWG8105GB

BCM (BODY CONTROL MODULE)

Connector No.	M119
Connector Name	BCM (BODY CONTROL MODULE)
Connector Type	NS16FW-CS

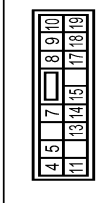

Terminal No.	Color Of Wire	Signal Name [Specification]
4	LG	INTERIOR ROOM LAMP POWER SUPPLY
5	L	PASSENGER DOOR UNLOCK OUTPUT
7	Y	STEP LAMP CONT
8	V	ALL DOOR, FUEL LID LOCK OUTPUT
9	G	DRIVER DOOR, FUEL LID UNLOCK OUTPUT
10	BR	REAR DOOR UNLOCK OUTPUT
11	R	BAT (FUSE)
13	B	GROUND
14	W	PUSH-BUTTON IGNITION SW ILL GND
15	Y	ACC IND
17	W	TURN SIGNAL RH (FRONT)
18	BG	TURN SIGNAL LH (FRONT)
19	V	INT ROOM LAMP CONT

Connector No.	M120
Connector Name	BCM (BODY CONTROL MODULE)
Connector Type	NS12FW-CS

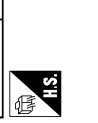

Terminal No.	Color Of Wire	Signal Name [Specification]
20	V	TURN SIGNAL RH (REAR)
23	G	BACK DOOR OPEN OUTPUT
25	G	TURN SIGNAL LH (REAR)
26	G	REAR WIPER OUTPUT

Connector No.	M121
Connector Name	BCM (BODY CONTROL MODULE)
Connector Type	TH40FGY-NH

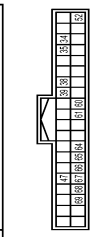

Terminal No.	Color Of Wire	Signal Name [Specification]
34	SB	LUGGAGE ROOM ANT-
35	V	LUGGAGE ROOM ANT+
38	B	BACK DOOR ANT-
39	W	BACK DOOR ANT+
47	Y	IGN RELAY (IPDM E/R) CONT
52	SB	STARTER RELAY CONT
60	BR	PUSH SW
61	W	BACK DOOR OPENER REQUEST SW
64	V	I-KEY WARN BUZZER (ENG ROOM)
65	BG	REAR WIPER STOP POSITION
66	R	BACK DOOR SW
67	GR	BACK DOOR OPENER SW
68	BR	REAR RH DOOR SW
69	R	REAR LH DOOR SW

Connector No.	M122
Connector Name	BCM (BODY CONTROL MODULE)
Connector Type	TH40FB-NH

Terminal No.	Color Of Wire	Signal Name [Specification]
72	R	ROOM ANT2-
73	G	ROOM ANT2+
74	SB	PASSENGER DOOR ANT-
75	GR	PASSENGER DOOR ANT+
76	V	DRIVER DOOR ANT-
77	LG	DRIVER DOOR ANT+

78	Y	ROOM ANT1-
79	BR	ROOM ANT1+
80	GR	NATS ANT AMP.
81	W	NATS ANT AMP.
82	R	IGN RELAY (F/B) CONT
83	Y	KEYLESS ENTRY RECEIVER COMM
87	BR	COMBI SW INPUT 5
88	V	COMBI SW INPUT 3
90	P	CAN-L
91	L	CAN-H
92	LG	KEY SLOT ILL CONT
93	V	ON IND
94	Y	PUDDLE LAMP CONT
95	BG	ACC RELAY CONT
96	GR	A/T SHIFT SELECTOR POWER SUPPLY
99	R	SHIFT P
100	G	PASSENGER DOOR REQUEST SW
101	SB	DRIVER DOOR REQUEST SW
102	BG	BLOWER FAN MOTOR RELAY CONT
103	LG	KEYLESS ENTRY RECEIVER POWER SUPPLY
107	LG	COMBI SW INPUT 1
108	R	COMBI SW INPUT 4
109	Y	COMBI SW INPUT 2
110	G	HAZARD SW

Connector No.	M123
Connector Name	BCM (BODY CONTROL MODULE)
Connector Type	TH40FG-NH

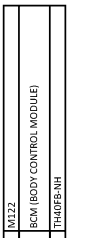

Terminal No.	Color Of Wire	Signal Name [Specification]
113	P	OPLICAL SENSOR
116	SB	STOP LAMP SW 1
118	P	STOP LAMP SW 2
119	SB	DR DOOR UNLOCK SENSOR
121	BR	KEY SLOT SW
123	W	IGN F/B
124	LG	PASSENGER DOOR SW
132	BR	POWER WINDOW SW COMM
133	W	PUSH-BUTTON IGNITION SW ILL POWER
134	GR	LOCK IND

137	BG	RECEIVER/SENSOR GND
138	Y	RECEIVER/SENSOR POWER SUPPLY
139	L	TIRE PRESSURE RECEIVER COMM
140	GR	SHIFT N/P
141	G	SECURITY IND. LAMP CONT
142	BG	COMBI SW OUTPUT 5
143	P	COMBI SW OUTPUT 1
144	G	COMBI SW OUTPUT 2
145	L	COMBI SW OUTPUT 3
146	SB	COMBI SW OUTPUT 4
150	LG	DRIVER DOOR SW
151	G	REAR WINDOW DEFOGGER RELAY CONT

Connector No.	M131
Connector Name	INSIDE KEY ANTENNA (INSTRUMENT CENTER)
Connector Type	RK02FGY

Terminal No.	Color Of Wire	Signal Name [Specification]
1	BR	-
2	Y	-

Connector No.	M137
Connector Name	A/T SHIFT SELECTOR
Connector Type	TH12FW-NH

Terminal No.	Color Of Wire	Signal Name [Specification]
1	W	-
2	V	-
3	L	-
4	B	-

JRMWG8106GB

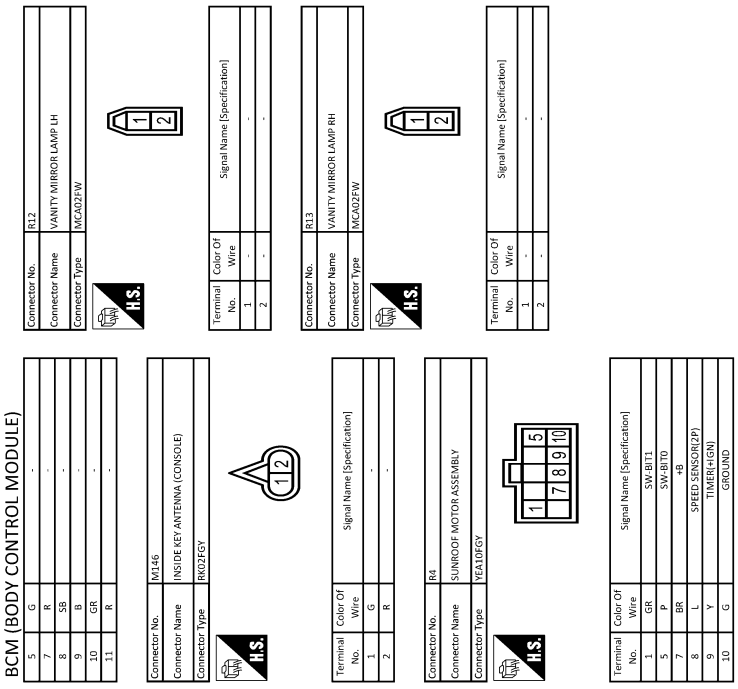

JRMWG8107GB

Fail-safe

INFOID:0000000007630758

FAIL-SAFE CONTROL BY DTC

BCM performs fail-safe control when any DTC are detected.

Display contents of CONSULT	Fail-safe	Cancellation
B2190: NATS ANTENNA AMP	Inhibit engine cranking	Erase DTC
B2191: DIFFERENCE OF KEY	Inhibit engine cranking	Erase DTC
B2192: ID DISCORD BCM-ECM	Inhibit engine cranking	Erase DTC
B2193: CHAIN OF BCM-ECM	Inhibit engine cranking	Erase DTC
B2195: ANTI SCANNING	Inhibit engine cranking	Ignition switch ON → OFF
B2560: STARTER CONT RELAY	Inhibit engine cranking	500 ms after the following CAN signal communication status becomes consistent • Starter control relay signal • Starter relay status signal
B2608: STARTER RELAY	Inhibit engine cranking	500 ms after the following signal communication status becomes consistent • Starter motor relay control signal • Starter relay status signal (CAN)
B260A: IGNITION RELAY	Inhibit engine cranking	500 ms after the following conditions are fulfilled • IGN relay (IPDM E/R) control signal: OFF (Battery voltage) • Ignition ON signal (CAN to IPDM E/R): OFF (Request signal) • Ignition ON signal (CAN from IPDM E/R): OFF (Condition signal)
B260F: ENG STATE SIG LOST	Maintains the power supply position attained at the time of DTC detection	When any of the following conditions are fulfilled • Power position changes to ACC • Receives engine status signal (CAN)
B2617: STARTER RELAY CIRC	Inhibit engine cranking	1 second after the starter motor relay control inside BCM becomes normal
B2618: BCM	Inhibit engine cranking	1 second after the ignition relay (IPDM E/R) control inside BCM becomes normal
B261E: VEHICLE TYPE	Inhibit engine cranking	BCM initialization

REAR WIPER MOTOR PROTECTION

BCM detects the rear wiper stopping position according to the rear wiper stop position signal.
When the rear wiper stop position signal does not change for more than 5 seconds while driving the rear wiper, BCM stops power supply to protect the rear wiper motor.

Condition of cancellation
1. More than 1 minute is passed after the rear wiper stops.
2. Turn rear wiper switch OFF.
3. Operate the rear wiper switch or rear washer switch.

DTC Inspection Priority Chart

INFOID:0000000007630759

If some DTCs are displayed at the same time, perform inspections one by one based on the following priority chart.

Priority	DTC
1	B2562: LOW VOLTAGE
2	• U1000: CAN COMM CIRCUIT • U1010: CONTROL UNIT (CAN)
3	• B2190: NATS ANTENNA AMP • B2191: DIFFERENCE OF KEY • B2192: ID DISCORD BCM-ECM • B2193: CHAIN OF BCM-ECM • B2195: ANTI SCANNING

Priority	DTC
4	• B2553: IGNITION RELAY • B2555: STOP LAMP • B2556: PUSH-BTN IGN SW • B2557: VEHICLE SPEED • B2560: STARTER CONT RELAY • B2601: SHIFT POSITION • B2602: SHIFT POSITION • B2603: SHIFT POSI STATUS • B2604: PNP SW • B2605: PNP SW • B2608: STARTER RELAY • B260A: IGNITION RELAY • B260F: ENG STATE SIG LOST • B2614: ACC RELAY CIRC • B2615: BLOWER RELAY CIRC • B2616: IGN RELAY CIRC • B2617: STARTER RELAY CIRC • B2618: BCM • B261A: PUSH-BTN IGN SW • B261E: VEHICLE TYPE • B26EA: KEY REGISTRATION • C1729: VHCL SPEED SIG ERR • U0415: VEHICLE SPEED SIG
5	• C1704: LOW PRESSURE FL • C1705: LOW PRESSURE FR • C1706: LOW PRESSURE RR • C1707: LOW PRESSURE RL • C1708: [NO DATA] FL • C1709: [NO DATA] FR • C1710: [NO DATA] RR • C1711: [NO DATA] RL • C1716: [PRESSDATA ERR] FL • C1717: [PRESSDATA ERR] FR • C1718: [PRESSDATA ERR] RR • C1719: [PRESSDATA ERR] RL • C1734: CONTROL UNIT
6	• B2621: INSIDE ANTENNA • B2622: INSIDE ANTENNA • B2623: INSIDE ANTENNA

DTC Index

INFOID:0000000007630760

NOTE:
The details of time display are as follows.
- CRNT: A malfunction is detected now.
- PAST: A malfunction was detected in the past.

IGN counter is displayed on Freeze Frame Data. For details of Freeze Frame Data, refer to BCS-18, "COMMON ITEM : CONSULT Function (BCM - COMMON ITEM)".

CONSULT display	Fail-safe	Freeze Frame Data •Vehicle Speed •Odo/Trip Meter •Vehicle Condition	Intelligent Key warning lamp ON	Tire pressure monitor warning lamp ON	Reference page
No DTC is detected. further testing may be required.	—	—	—	—	—
U1000: CAN COMM CIRCUIT	—	—	—	—	BCS-37
U1010: CONTROL UNIT (CAN)	—	—	—	—	BCS-38
U0415: VEHICLE SPEED SIG	—	—	—	—	BCS-39

CONSULT display	Fail-safe	Freeze Frame Data •Vehicle Speed •Odo/Trip Meter •Vehicle Condition	Intelligent Key warning lamp ON	Tire pressure monitor warning lamp ON	Reference page
B2190: NATS ANTENNA AMP	×	—	—	—	SEC-40
B2191: DIFFERENCE OF KEY	×	—	—	—	SEC-43
B2192: ID DISCORD BCM-ECM	×	—	—	—	SEC-44
B2193: CHAIN OF BCM-ECM	×	—	—	—	SEC-45
B2195: ANTI SCANNING	×	—	—	—	SEC-46
B2553: IGNITION RELAY	—	×	—	—	PCS-48
B2555: STOP LAMP	—	×	—	—	SEC-47
B2556: PUSH-BTN IGN SW	—	×	×	—	SEC-49
B2557: VEHICLE SPEED	×	×	×	—	SEC-51
B2560: STARTER CONT RELAY	×	×	×	—	SEC-52
B2562: LOW VOLTAGE	—	×	—	—	BCS-40
B2601: SHIFT POSITION	×	×	×	—	SEC-53
B2602: SHIFT POSITION	×	×	×	—	SEC-56
B2603: SHIFT POSI STATUS	×	×	×	—	SEC-59
B2604: PNP SW	×	×	×	—	SEC-62
B2605: PNP SW	×	×	×	—	SEC-64
B2608: STARTER RELAY	×	×	×	—	SEC-66
B260A: IGNITION RELAY	×	×	×	—	PCS-50
B260F: ENG STATE SIG LOST	×	×	×	—	SEC-68
B2614: ACC RELAY CIRC	—	×	×	—	PCS-52
B2615: BLOWER RELAY CIRC	—	×	×	—	PCS-55
B2616: IGN RELAY CIRC	—	×	×	—	PCS-58
B2617: STARTER RELAY CIRC	×	×	×	—	SEC-71
B2618: BCM	×	×	×	—	PCS-61
B261A: PUSH-BTN IGN SW	—	×	×	—	SEC-73
B261E: VEHICLE TYPE	×	×	× (Turn ON for 15 seconds)	—	SEC-76
B2621: INSIDE ANTENNA	—	×	—	—	DLK-60
B2622: INSIDE ANTENNA	—	×	—	—	DLK-62
B2623: INSIDE ANTENNA	—	×	—	—	DLK-64
B26E1: ENG STATE NO RES	×	×	×	—	SEC-69
B26EA: KEY REGISTRATION	—	×	× (Turn ON for 15 seconds)	—	SEC-70
C1704: LOW PRESSURE FL	—	—	—	×	WT-23
C1705: LOW PRESSURE FR	—	—	—	×	
C1706: LOW PRESSURE RR	—	—	—	×	
C1707: LOW PRESSURE RL	—	—	—	×	
C1708: [NO DATA] FL	—	—	—	×	WT-25
C1709: [NO DATA] FR	—	—	—	×	
C1710: [NO DATA] RR	—	—	—	×	
C1711: [NO DATA] RL	—	—	—	×	

CONSULT display	Fail-safe	Freeze Frame Data •Vehicle Speed •Odo/Trip Meter •Vehicle Condition	Intelligent Key warning lamp ON	Tire pressure monitor warning lamp ON	Reference page
C1716: [PRESSDATA ERR] FL	—	—	—	×	WT-28
C1717: [PRESSDATA ERR] FR	—	—	—	×	
C1718: [PRESSDATA ERR] RR	—	—	—	×	
C1719: [PRESSDATA ERR] RL	—	—	—	×	
C1729: VHCL SPEED SIG ERR	—	—	—	×	WT-30
C1734: CONTROL UNIT	—	—	—	×	WT-32

SYMPTOM DIAGNOSIS

DOOR DOES NOT LOCK/UNLOCK WITH DOOR LOCK AND UNLOCK SWITCH

ALL DOOR

ALL DOOR : Description

INFOID:0000000007456785

All doors do not lock/unlock using door lock and unlock switch.

ALL DOOR : Diagnosis Procedure

INFOID:0000000007456786

1.CHECK POWER SUPPLY AND GROUND CIRCUIT

Check power supply and ground circuit.
Refer to DLK-66, "BCM (BODY CONTROL MODULE) : Diagnosis Procedure".

Is the inspection result normal?

YES >> GO TO 2.
NO >> Repair or replace the malfunctioning parts.

2.CHECK DOOR LOCK AND UNLOCK SWITCH

Check door lock and unlock switch.
- Driver side: Refer to DLK-71, "DRIVER SIDE : Component Function Check".
- Passenger side: Refer to DLK-71, "PASSENGER SIDE : Component Function Check".

Is the inspection result normal?

YES >> GO TO 3.
NO >> Repair or replace the malfunctioning parts.

3.CHECK DOOR LOCK ACTUATOR

Check door lock actuator (driver side).
Refer to DLK-73, "DRIVER SIDE : Component Function Check".

Is the inspection result normal?

YES >> GO TO 4.
NO >> Repair or replace the malfunctioning parts.

4.CONFIRM THE OPERATION

Confirm the operation again.

Is the result normal?

YES >> Check intermittent incident. Refer to GI-42, "Intermittent Incident".
NO >> GO TO 1.

DRIVER SIDE

DRIVER SIDE : Description

INFOID:0000000007456787

Driver side door does not lock/unlock using door lock and unlock switch.

DRIVER SIDE : Diagnosis Procedure

INFOID:0000000007456788

1.CHECK DOOR LOCK ACTUATOR

Check door lock actuator (driver side).
Refer to DLK-73, "DRIVER SIDE : Component Function Check".

Is the inspection result normal?

YES >> GO TO 2.
NO >> Repair or replace the malfunctioning parts.

2.CONFIRM THE OPERATION

Confirm the operation again.

Is the result normal?

YES >> Check intermittent incident. Refer to GI-42, "Intermittent Incident".
NO >> GO TO 1.

PASSENGER SIDE

PASSENGER SIDE : Description

INFOID:0000000007456789

Passenger side door does not lock/unlock using door lock and unlock switch.

PASSENGER SIDE : Diagnosis Procedure

INFOID:0000000007456790

1.CHECK DOOR LOCK ACTUATOR

Check door lock actuator (passenger side).
Refer to DLK-74, "PASSENGER SIDE : Component_Function_Check".

Is the inspection result normal?

YES >> GO TO 2.
NO >> Repair or replace the malfunctioning parts.

2.CONFIRM THE OPERATION

Confirm the operation again.

Is the result normal?

YES >> Check intermittent incident. Refer to GI-42, "Intermittent Incident".
NO >> GO TO 1.

REAR LH

REAR LH : Description

INFOID:0000000007456791

Rear LH side door does not lock/unlock using door lock and unlock switch.

REAR LH : Diagnosis Procedure

INFOID:0000000007456792

1.CHECK DOOR LOCK ACTUATOR

Check door lock actuator (rear LH).
Refer to DLK-75, "REAR LH : Component_Function_Check".

Is the inspection result normal?

YES >> GO TO 2.
NO >> Repair or replace the malfunctioning parts.

2.CONFIRM THE OPERATION

Confirm the operation again.

Is the result normal?

YES >> Check intermittent incident. Refer to GI-42, "Intermittent Incident".
NO >> GO TO 1.

REAR RH

REAR RH : Description

INFOID:0000000007456793

Rear RH side door does not lock/unlock using door lock and unlock switch.

REAR RH : Diagnosis Procedure

INFOID:0000000007456794

1.CHECK DOOR LOCK ACTUATOR

Check door lock actuator (rear RH).
Refer to DLK-75, "REAR RH : Component_Function_Check".

Is the inspection result normal?

YES >> GO TO 2.
NO >> Repair or replace the malfunctioning parts.

2.CONFIRM THE OPERATION

Confirm the operation again.

Is the result normal?

YES >> Check intermittent incident. Refer to GI-42, "Intermittent Incident".
NO >> GO TO 1.

DOOR DOES NOT LOCK/UNLOCK WITH DOOR KEY CYLINDER OPERATION

Description

INFOID:0000000007456795

All doors do not lock/unlock using driver side door key cylinder.

Diagnosis Procedure

INFOID:0000000007456796

1.CHECK POWER DOOR LOCK OPERATION

Check power door lock operation.

Does door lock/unlock with door lock and unlock switch?

YES >> GO TO 2.
NO >> Refer to DLK-182, "ALL DOOR : Diagnosis Procedure".

2.CHECK DOOR KEY CYLINDER SWITCH

Check door key cylinder switch.
Refer to DLK-80, "Component Function Check".

Is the inspection result normal?

YES >> GO TO 3.
NO >> Repair or replace the malfunctioning parts.

3.CONFIRM THE OPERATION

Confirm the operation again.

Is the result normal?

YES >> Check intermittent incident. Refer to GI-42, "Intermittent Incident".
NO >> GO TO 1.

DOOR DOES NOT LOCK/UNLOCK WITH DOOR REQUEST SWITCH

ALL DOOR

ALL DOOR : Description

INFOID:0000000007456797

All doors do not lock/unlock using all door request switches.

NOTE:

Check door request switch operation in the door lock condition. Refer to DLK-19, "DOOR LOCK FUNCTION : System Description".

ALL DOOR : Diagnosis Procedure

INFOID:0000000007456798

1.CHECK REMOTE KEYLESS ENTRY FUNCTION

Check remote keyless entry function.

Does door lock/unlock with Intelligent Key button?

YES >> GO TO 2.
NO >> Refer to DLK-189, "Description".

2.CHECK “LOCK/UNLOCK BY I-KEY” SETTING IN “WORK SUPPORT”

Check “LOCK/UNLOCK BY I-KEY” in “WORK SUPPORT”.
Refer to DLK-53, "INTELLIGENT KEY : CONSULT Function (BCM - INTELLIGENT KEY)".

Is the inspection result normal?

YES >> GO TO 3.
NO >> Set “LOCK/UNLOCK BY I-KEY” in “WORK SUPPORT”.

3.CONFIRM THE OPERATION

Confirm the operation again.

Is the result normal?

YES >> Check intermittent incident. Refer to GI-42, "Intermittent Incident".
NO >> GO TO 1.

DRIVER SIDE

DRIVER SIDE : Description

INFOID:0000000007456799

All doors do not lock/unlock using driver side door request switch.

NOTE:

Check door request switch operation in the door lock condition. Refer to DLK-19, "DOOR LOCK FUNCTION : System Description".

DRIVER SIDE : Diagnosis Procedure

INFOID:0000000007456800

1.CHECK DRIVER SIDE DOOR REQUEST SWITCH

Check driver side door request switch.
Refer to DLK-87, "Component Function Check".

Is the inspection result normal?

YES >> GO TO 2.
NO >> Repair or replace the malfunctioning parts.

2.CHECK OUTSIDE KEY ANTENNA (LH)

Check outside key antenna (LH).
Refer to DLK-93, "Component Function Check".

Is the inspection result normal?

YES >> GO TO 3.
NO >> Repair or replace the malfunctioning parts.

3.CONFIRM THE OPERATION

Confirm the operation again.

Is the result normal?

YES >> Check Intermittent Incident. Refer to GI-42, "Intermittent Incident".
NO >> GO TO 1.

PASSENGER SIDE

PASSENGER SIDE : Description

INFOID:0000000007456801

All doors do not lock/unlock using passenger side door request switch.

NOTE:

Check door request switch operation in the door lock condition. Refer to DLK-19, "DOOR LOCK FUNCTION : System Description".

PASSENGER SIDE : Diagnosis Procedure

INFOID:0000000007456802

1.CHECK PASSENGER SIDE DOOR REQUEST SWITCH

Check passenger side door request switch.
Refer to DLK-87, "Component Function Check".

Is the inspection result normal?

YES >> GO TO 2.
NO >> Repair or replace the malfunctioning parts.

2.CHECK OUTSIDE KEY ANTENNA (RH)

Check outside key antenna (RH).
Refer to DLK-93, "Component Function Check".

Is the inspection result normal?

YES >> GO TO 3.
NO >> Repair or replace the malfunctioning parts.

3.CONFIRM THE OPERATION

Confirm the operation again.

Is the result normal?

YES >> Check Intermittent Incident. Refer to GI-42, "Intermittent Incident".
NO >> GO TO 1.

BACK DOOR

BACK DOOR : Description

INFOID:0000000007456803

All doors do not lock/unlock using back door request switch.

NOTE:

Check door request switch operation in the door lock condition. Refer to DLK-19, "DOOR LOCK FUNCTION : System Description".

BACK DOOR : Diagnosis Procedure

INFOID:0000000007456804

1.CHECK BACK DOOR REQUEST SWITCH

Check back door request switch.
Refer to DLK-89, "Component Function Check".

Is the inspection result normal?

YES >> GO TO 2.
NO >> Repair or replace the malfunctioning parts.

2.CHECK OUTSIDE KEY ANTENNA (REAR BUMPER)

Check outside key antenna (rear bumper).
Refer to DLK-93, "Component Function Check".

Is the inspection result normal?

YES >> GO TO 3.
NO >> Repair or replace the malfunctioning parts.

3.CONFIRM THE OPERATION

Confirm the operation again.

Is the result normal?

YES >> Check Intermittent Incident. Refer to GI-42, "Intermittent Incident".
NO >> GO TO 1.

DOOR DOES NOT LOCK/UNLOCK WITH INTELLIGENT KEY

Description

INFOID:0000000007456805

All doors do not lock/unlock using Intelligent Key.

NOTE:

Check Intelligent Key remote operation in the door lock condition. Refer to DLK-28, "REMOTE KEYLESS ENTRY FUNCTION : System Description".

Diagnosis Procedure

INFOID:0000000007456806

1.CHECK INTELLIGENT KEY

For Intelligent Key that cannot be used for door lock and unlock, check that the Intelligent Key belongs to the vehicle to be checked.

Does the Intelligent Key belong to the vehicle to checked?

YES >> GO TO 2.
NO >> Check Intelligent Key button operation with registered Intelligent Key belonging to the vehicle.

2.CHECK INTELLIGENT KEY LOW BATTERY WARNING

Check that the Intelligent Key low battery warning is operated.

Is the Intelligent Key low battery warning operated?

YES >> GO TO 6.
NO-1 >> With another registered Intelligent Key: GO TO 3.
NO-2 >> Without another registered Intelligent Key: GO TO 4.

3.CHECK INTELLIGENT KEY BUTTON OPERATION

Check that door lock and unlock can be performed by operating the buttons of another registered Intelligent Key.

Can door lock and unlock be performed with another registered Intelligent Key?

YES >> GO TO 4.
NO >> GO TO 7.

4.CHECK ENGINE START

Insert Intelligent Key into the key slot. Operate the push-button ignition switch, and check that the vehicle is in START status.

Is the vehicle in START status?

YES >> GO TO 6.
NO >> GO TO 5.

5.CHECK INTELLIGENT KEY

Check the inside of the Intelligent Key for rust or corrosion by water. Simultaneously check the internal circuits for damage.

Is the vehicle in START status?

YES >> GO TO 6.
NO >> Replace Intelligent Key.

6.CHECK INTELLIGENT KEY BATTERY

Check the Intelligent Key battery.
Refer to DLK-98, "Component Inspection".

Is the inspection result normal?

YES >> GO TO 7.
NO >> Replace Intelligent Key battery.

7.CHECK POWER DOOR LOCK OPERATION

Check door lock/unlock using door lock and unlock switch.

Does door lock/unlock using door lock and unlock switch?

YES >> GO TO 8.

NO >> Refer to DLK-182, "ALL DOOR : Diagnosis Procedure".

8. CHECK REMOTE KEYLESS ENTRY RECEIVER

Check remote keyless entry receiver.
Refer to DLK-82, "Component Function Check".

Is the inspection result normal?

YES >> GO TO 9.
NO >> Repair or replace the malfunctioning parts.

9. CHECK DOOR SWITCH

Check door switch.
Refer to DLK-67, "Component Function Check".

Is the inspection result normal?

YES >> GO TO 10.
NO >> Repair or replace the malfunctioning parts.

10. REPLACE INTELLIGENT KEY

1. Replace Intelligent Key.
2. Confirm the operation after replacement.

Is the result normal?

YES >> INSPECTION END
NO >> Replace BCM. Refer to BCS-92, "Removal and Installation".

BACK DOOR DOES NOT OPENED

Description

INFOID:0000000007456807

NOTE:
Before performing the diagnosis in the following procedure, check the operation condition. Refer to DLK-24, "BACK DOOR OPEN FUNCTION : System Description".

Diagnosis Procedure

INFOID:0000000007456808

1.CHECK BACK DOOR OPENER SWITCH

Check back door opener switch.
Refer to DLK-85, "Component Function Check".

Is the inspection result normal?

YES >> GO TO 2.
NO >> Repair or replace the malfunctioning parts.

2.CHECK BACK DOOR OPENER ACTUATOR

Check back door opener actuator.
Refer to DLK-78, "Component Function Check".

Is the inspection result normal?

YES >> GO TO 3.
NO >> Repair or replace the malfunctioning parts.

3.CHECK VEHICLE SPEED SIGNAL

Check combination meter.
Refer to MWI-52, "Diagnosis Procedure".

Is the inspection result normal?

YES >> GO TO 4.
NO >> Repair or replace the malfunctioning parts.

4.CONFIRM THE OPERATION

Confirm the operation again.

Is the result normal?

YES >> Check intermittent incident. Refer to GI-42, "Intermittent Incident".
NO >> GO TO 1.

SELECTIVE UNLOCK FUNCTION DOES NOT OPERATE WITH DOOR REQUEST SWITCH

Description

INFOID:0000000007456809

NOTE:
- Before performing the diagnosis in the following procedure, check “Work Flow”. Refer to DLK-7, "Work Flow".
- Check that vehicle is under the condition shown in “Conditions of vehicle” before starting diagnosis, and check each symptom.

CONDITIONS OF VEHICLE (OPERATING CONDITIONS)
- Intelligent Key is removed from key slot.
- Ignition switch is in OFF position.
- No Intelligent Keys are inside the vehicle.

Diagnosis Procedure

INFOID:0000000007456810

1.CHECK DOOR LOCK FUNCTION

Check door lock function by door request switch.

Does door lock/unlock with door request switch?

YES >> GO TO 2.
NO-1 >> Go to DLK-186, "DRIVER SIDE : Description" (driver side).
NO-2 >> Go to DLK-187, "PASSENGER SIDE : Description" (passenger side).
NO-3 >> Go to DLK-187, "BACK DOOR : Description" (back door).

2.CHECK “DOOR LOCK–UNLOCK SET” SETTING IN “WORK SUPPORT”

Check “DOOR LOCK-UNLOCK SET” setting in “WORK SUPPORT”.
Refer to DLK-53, "INTELLIGENT KEY : CONSULT Function (BCM - INTELLIGENT KEY)".

Is the inspection result normal?

YES >> GO TO 3.
NO >> Set “DOOR LOCK-UNLOCK SET” in “WORK SUPPORT”.

3.CONFIRM THE OPERATION

Confirm the operation again.

Is the result normal?

YES >> Check intermittent incident. Refer to GI-42, "Intermittent Incident".
NO >> GO TO 1.

SELECTIVE UNLOCK FUNCTION DOES NOT OPERATE WITH INTELLIGENT KEY

Description

INFOID:0000000007456811

NOTE:
- Before performing the diagnosis in the following procedure, check “Work Flow”. Refer to DLK-7, "Work Flow".
- Check that vehicle is under the condition shown in “Conditions of vehicle” before starting diagnosis, and check each symptom.

CONDITIONS OF VEHICLE (OPERATING CONDITIONS)
- Intelligent key is removed from key slot.
- All doors are closed.

Diagnosis Procedure

INFOID:0000000007456812

1.CHECK POWER DOOR LOCK OPERATION

Check power door lock operation.

Does door lock/unlock with door lock and unlock switch?

YES >> GO TO 2.
NO >> Go to DLK-182, "ALL DOOR : Description".

2.CHECK “DOOR LOCK–UNLOCK SET” SETTING IN “WORK SUPPORT”

Check “DOOR LOCK-UNLOCK SET” setting in “WORK SUPPORT”.
Refer to DLK-51, "DOOR LOCK : CONSULT Function (BCM - DOOR LOCK)".

Is the inspection result normal?

YES >> GO TO 3.
NO >> Set “DOOR LOCK-UNLOCK SET” of “WORK SUPPORT”.

3.CONFIRM THE OPERATION

Confirm the operation again.

Is the result normal?

YES >> Check intermittent incident. Refer to GI-42, "Intermittent Incident".
NO >> GO TO 1.

VEHICLE SPEED SENSING AUTO LOCK OPERATION DOES NOT OPERATE

Diagnosis Procedure

INFOID:0000000007456813

1.CHECK POWER DOOR LOCK OPERATION

Check power door lock operation.

Does door lock/unlock with door lock and unlock switch?

YES >> GO TO 2.
NO >> Go to DLK-182, "ALL DOOR : Description".

2.CHECK VEHICLE SPEED SIGNAL

Check combination meter.
Refer to SEC-51, "DTC Logic".

Is the inspection result normal?

YES >> GO TO 3.
NO >> Repair or replace the malfunctioning parts.

3.CONFIRM THE OPERATION

Confirm the operation again.

Is the result normal?

YES >> Check intermittent incident. Refer to GI-42, "Intermittent Incident".
NO >> GO TO 1.

IGN OFF INTERLOCK DOOR UNLOCK FUNCTION DOES NOT OPERATE

Diagnosis Procedure

INFOID:0000000007456814

1.CHECK POWER DOOR LOCK OPERATION

Check power door lock operation.

Does door lock/unlock with door lock and unlock switch?

YES >> GO TO 2.
NO >> Go to DLK-182, "ALL DOOR : Description".

2.CHECK BCM

Check DTC for BCM.
Refer to BCS-86, "DTC Index".

Is the inspection result normal?

YES >> GO TO 3.
NO >> Repair or replace the malfunctioning parts.

3.CONFIRM THE OPERATION

Confirm the operation again.

Is the result normal?

YES >> Check intermittent incident. Refer to GI-42, "Intermittent Incident".
NO >> GO TO 1.

P RANGE INTERLOCK DOOR LOCK/UNLOCK FUNCTION DOES NOT OPERATE

Diagnosis Procedure

INFOID:0000000007456815

1.CHECK POWER DOOR LOCK OPERATION

Check power door lock operation.

Does door lock/unlock with door lock and unlock switch?

YES >> GO TO 2.
NO >> Go to DLK-182, "ALL DOOR : Description".

2.CHECK TCM

Check DTC for TCM.
Refer to TM-154, "DTC Index".

Is the inspection result normal?

YES >> GO TO 3.
NO >> Repair or replace the malfunctioning parts.

3.CONFIRM THE OPERATION

Confirm the operation again.

Is the result normal?

YES >> Check intermittent incident. Refer to GI-42, "Intermittent Incident".
NO >> GO TO 1.

AUTO DOOR LOCK OPERATION DOES NOT OPERATE

Description

INFOID:0000000007456816

NOTE:
Before performing the diagnosis in the following procedure, check “Work Flow”. Refer to DLK-7, "Work Flow".

Diagnosis Procedure

INFOID:0000000007456817

1.CHECK “AUTO LOCK SET” SETTING IN “WORK SUPPORT”

Check “AUTO LOCK SET” setting in “WORK SUPPORT”.
Refer to DLK-53, "INTELLIGENT KEY : CONSULT Function (BCM - INTELLIGENT KEY)".

Is the inspection result normal?

YES >> GO TO 2.
NO >> Set “AUTO LOCK SET” setting in “WORK SUPPORT”.

2.CONFIRM THE OPERATION

Confirm the operation again.

Is the result normal?

YES >> Check intermittent incident. Refer to GI-42, "Intermittent Incident".
NO >> GO TO 1.

POWER WINDOW DOWN FUNCTION DOES NOT OPERATE WITH KEY CYLINDER OPERATION

Diagnosis Procedure

INFOID:0000000007456818

1.CHECK DOOR KEY CYLINDER OPERATION

Check door key cylinder operation.

Does door lock/unlock with door key cylinder switch operation?

YES >> GO TO 2.
NO >> Go to DLK-185, "Description".

2.CHECK POWER WINDOW OPERATION

Check power window operation.

Does power window up/down with power window main switch?

YES >> GO TO 3.
NO >> Go to PWC-101, "Diagnosis Procedure".

3.CONFIRM THE OPERATION

Confirm the operation again.

Is the result normal?

YES >> Check intermittent incident. Refer to GI-42, "Intermittent Incident".
NO >> GO TO 1.

POWER WINDOW DOWN FUNCTION DOES NOT WORK WHEN OPERATING WITH INTELLIGENT KEY

Description

INFOID:0000000007456819

NOTE:
• Before performing the diagnosis in the following procedure, check “ Work Flow”. Refer to DLK-7, "Work Flow".

Diagnosis Procedure

INFOID:0000000007456820

1.CHECK REMOTE KEYLESS ENTRY FUNCTION

Check remote keyless entry function.

Does door lock/unlock with Intelligent key button?

YES >> GO TO 2.
NO >> Go to DLK-189, "Description".

2.CHECK POWER WINDOW OPERATION

Check power window operation.

Does power window up/down with power window main switch?

YES >> GO TO 3.
NO >> Go to PWC-101, "Diagnosis Procedure".

3.CHECK “PW DOWN SET” SETTING IN “WORK SUPPORT”

Check “PW DOWN SET” setting in “WORK SUPPORT”.
Refer to DLK-53, "INTELLIGENT KEY : CONSULT Function (BCM - INTELLIGENT KEY)".

Is the inspection result normal?

YES >> GO TO 4.
NO >> Set “PW DOWN SET” setting in “WORK SUPPORT”.

4.CONFIRM THE OPERATION

Confirm the operation again.

Is the result normal?

YES >> Check intermittent incident. Refer to GI-42, "Intermittent Incident".
NO >> GO TO 1.

WELCOME LIGHT FUNCTION DOES NOT OPERATE

Description

INFOID:0000000007456821

NOTE:
- Before performing the diagnosis following procedure, check “Work Flow”. Refer to DLK-7, "Work Flow".
- Check that vehicle is under the condition shown in “Conditions of vehicle” before starting diagnosis, and check each symptom.

CONDITIONS OF VEHICLE (OPERATION CONDITIONS)
- Intelligent Key system (door lock function) is normal.
- All operation conditions are satisfied. Refer to DLK-33, "WELCOME LIGHT FUNCTION : System Description".

Diagnosis Procedure

INFOID:0000000007456822

1.CHECK WELCOME LIGHT FUNCTION SETTING

Check “WELCOME LIGHT OP SET” and “WELCOME LIGHT SELECT” setting in “WORK SUPPORT”. Refer to DLK-53, "INTELLIGENT KEY : CONSULT Function (BCM - INTELLIGENT KEY)".

Is the function active?

YES >> GO TO 2.
NO >> Set “WELCOME LIGHT OP SET” and “WELCOME LIGHT SELECT” setting in “WORK SUPPORT”.

2.CHECK DOOR LOCK FUNCTION

Check Intelligent Key system (door lock function).

Does the door lock/unlock with door request switch (driver side)?

YES >> GO TO 3.
NO >> Go to DLK-186, "DRIVER SIDE : Description".

3.CHECK INTERIOR ROOM LAMP CONTROL SYSTEM

Check interior room lamp control system. Refer to INL-6, "System Description".

Does the room lamp and puddle lamp turn ON?

YES >> GO TO 4.
NO >> Go to INL-115, "Symptom Table".

4.REPLACE BCM

Replace BCM. Refer to BCS-92, "Removal and Installation".

>> GO TO 5.

5.CONFIRM THE OPERATION

Confirm the operation again.

Is the result normal?

YES >> INSPECTION END
NO >> GO TO 1.

PANIC ALARM FUNCTION DOES NOT OPERATE

Description

INFOID:0000000007456823

NOTE:
- Before performing the diagnosis following procedure, check “Work Flow”. Refer to DLK-7, "Work Flow".
- Check that vehicle is under the condition shown in “Conditions of vehicle” before starting diagnosis, and check each symptom.

CONDITIONS OF VEHICLE (OPERATION CONDITIONS)
- Ignition switch is in OFF or LOCK position.
- Intelligent Key is removed from key slot.

Diagnosis Procedure

INFOID:0000000007456824

1.CHECK REMOTE KEYLESS ENTRY FUNCTION

Check remote keyless entry function.

Does door lock/unlock with Intelligent key button?

YES >> GO TO 2.
NO >> Go to DLK-189, "Description".

2.CHECK VEHICLE SECURITY ALARM OPERATION

Check vehicle security alarm operation.

Does alarm (headlamp and horn) active?

YES >> GO TO 3.
NO >> Go to SEC-184, "Description".

3.CHECK “PANIC ALARM SET” SETTING IN “WORK SUPPORT”

Check “PANIC ALARM SET” setting in “WORK SUPPORT”.
Refer to DLK-53, "INTELLIGENT KEY : CONSULT Function (BCM - INTELLIGENT KEY)".

Is the inspection result normal?

YES >> GO TO 4.
NO >> Set “PANIC ALARM SET” setting in “WORK SUPPORT”.

4.CONFIRM THE OPERATION

Confirm the operation again.

Is the result normal?

YES >> Check intermittent incident. Refer to GI-42, "Intermittent Incident".
NO >> GO TO 1.

HAZARD AND HORN REMINDER DOES NOT OPERATE

Description

INFOID:0000000007456825

NOTE:
- Before performing the diagnosis following procedure, check “Work Flow”. Refer to DLK-7, "Work Flow".
- Check that vehicle is under the condition shown in “Conditions of vehicle” before starting diagnosis, and check each symptom.

CONDITIONS OF VEHICLE (OPERATION CONDITIONS)
- Ignition switch is in OFF or LOCK position.
- Intelligent Key is removed from key slot.

Diagnosis Procedure

INFOID:0000000007456826

1. CHECK “HAZARD ANSWER BACK” SETTING IN “WORK SUPPORT”

Check “HAZARD ANSWER BACK” setting in “WORK SUPPORT”.
Refer to DLK-53, "INTELLIGENT KEY : CONSULT Function (BCM - INTELLIGENT KEY)".

Is the inspection result normal?

YES >> GO TO 2.
NO >> Set “HAZARD ANSWER BACK” setting in “WORK SUPPORT”.

2. CHECK “HORN WITH KEYLESS LOCK” SETTING IN “WORK SUPPORT”.

Check “HORN WITH KEYLESS LOCK” setting in “WORK SUPPORT”.
Refer to DLK-53, "INTELLIGENT KEY : CONSULT Function (BCM - INTELLIGENT KEY)".

Is the inspection result normal?

YES >> GO TO 3.
NO >> Set “HORN WITH KEYLESS LOCK” setting in “WORK SUPPORT”.

3. CHECK HAZARD WARNING LAMP

Check hazard warning lamp.
Refer to DLK-108, "Component Function Check".

Is the inspection result normal?

YES >> GO TO 4.
NO >> Repair or replace the malfunctioning parts.

4. CHECK HORN

Check horn.
Refer to DLK-103, "Component Function Check".

Is the inspection result normal?

YES >> GO TO 5.
NO >> Repair or replace the malfunctioning parts.

5. CONFIRM THE OPERATION

Confirm the operation again.

Is the result normal?

YES >> Check intermittent incident. Refer to GI-42, "Intermittent Incident".
NO >> GO TO 1.

HAZARD AND BUZZER REMINDER DOES NOT OPERATE

Description

INFOID:0000000007456827

NOTE:
- Before performing the diagnosis in the following procedure, check “Work Flow”. Refer to DLK-7, "Work Flow".
- Check that vehicle is under the condition shown in “Conditions of vehicle” before starting diagnosis, and check each symptom.

CONDITIONS OF VEHICLE (OPERATING CONDITIONS)
- Intelligent Key is removed from key slot.
- Ignition switch is in OFF position.
- No Intelligent Keys are inside the vehicle.

Diagnosis Procedure

INFOID:0000000007456828

1. CHECK “HAZARD ANSWER BACK” SETTING IN “WORK SUPPORT”

Check “HAZARD ANSWER BACK” setting in “WORK SUPPORT”.
Refer to DLK-51, "DOOR LOCK : CONSULT Function (BCM - DOOR LOCK)".

Is the inspection result normal?

YES >> GO TO 2.
NO >> Set “HAZARD ANSWER BACK” in “WORK SUPPORT”.

2. CHECK “ANS BACK I-KEY LOCK” SETTING IN “WORK SUPPORT”

Check “ANS BACK I-KEY LOCK” setting in “WORK SUPPORT”.
Refer to DLK-51, "DOOR LOCK : CONSULT Function (BCM - DOOR LOCK)".

Is the inspection result normal?

YES >> GO TO 3.
NO >> Set “ANS BACK I-KEY LOCK” in “WORK SUPPORT”.

3. CHECK “ANS BACK I-KEY UNLOCK” SETTING IN “WORK SUPPORT”

Check “ANS BACK I-KEY UNLOCK” setting in “WORK SUPPORT”.
Refer to DLK-51, "DOOR LOCK : CONSULT Function (BCM - DOOR LOCK)".

Is the inspection result normal?

YES >> GO TO 4.
NO >> Set “ANS BACK I-KEY UNLOCK” in “WORK SUPPORT”.

4. CHECK HAZARD WARNING LAMP

Check hazard warning lamp.
Refer to DLK-108, "Component Function Check".

Is the inspection result normal?

YES >> GO TO 5.
NO >> Repair or replace the malfunctioning parts.

5. CHECK INTELLIGENT KEY WARNING BUZZER

Check Intelligent Key warning buzzer.
Refer to DLK-96, "Component Function Check".

Is the inspection result normal?

YES >> GO TO 6.
NO >> Repair or replace the malfunctioning parts.

6. CONFIRM THE OPERATION

Confirm the operation again.

Is the result normal?

YES >> Check intermittent incident. Refer to GI-42, "Intermittent Incident".
NO >> GO TO 1.

KEY REMINDER FUNCTION DOES NOT OPERATE

Description

INFOID:0000000007456829

NOTE:

- Before performing the diagnosis in the following procedure, check “Work Flow”. Refer to DLK-7, "Work Flow".
- Understand the operation when does it work, refer to DLK-36, "KEY REMINDER FUNCTION : System Description".

Diagnosis Procedure

INFOID:0000000007456830

1.CHECK “ANTI KEY LOCK IN FUNCTI” SETTING IN “WORK SUPPORT”

Check “ANTI KEY LOCK IN FUNCTI” setting in “WORK SUPPORT”.
Refer to DLK-53, "INTELLIGENT KEY : CONSULT Function (BCM - INTELLIGENT KEY)".

Is the inspection result normal?

YES >> GO TO 2.
NO >> Set “ANTI KEY LOCK IN FUNCTI” setting in “WORK SUPPORT”.

2.CHECK DOOR SWITCH

Check door switch.
Refer to DLK-67, "Component Function Check".

Is the inspection result normal?

YES >> GO TO 3.
NO >> Repair or replace the malfunctioning parts.

3.CHECK INSIDE KEY ANTENNA

Check inside key antenna.
Refer to DLK-60, "DTC Logic" (instrument center).
Refer to DLK-62, "DTC Logic" (console).
Refer to DLK-64, "DTC Logic" (luggage room).

Is the inspection result normal?

YES >> GO TO 4.
NO >> Repair or replace the malfunctioning parts.

4.CHECK UNLOCK SENSOR

Check unlock sensor.
Refer to DLK-91, "Component Function Check".

Is the inspection result normal?

YES >> GO TO 5.
NO >> Repair or replace the malfunctioning parts.

5.CONFIRM THE OPERATION

Confirm the operation again.

Is the result normal?

YES >> Check intermittent incident. Refer to GI-42, "Intermittent Incident".
NO >> GO TO 1.

KEY WARNING DOES NOT OPERATE

Description

INFOID:0000000007456831

NOTE:
- Before performing the diagnosis in the following procedure, check “Work Flow”. Refer to DLK-7, "Work Flow".
- Warning functions operating condition is extremely complicated, during operating confirmations, reconfirm the list above twice in order to ensure proper operation. Refer to DLK-39, "WARNING FUNCTION : System Description".
- Door lock function is normal.

Diagnosis Procedure

INFOID:0000000007456832

1.CHECK BUZZER (COMBINATION METER)

Check buzzer (combination meter).
Refer to DLK-106, "Component Function Check".

Is the inspection result normal?

YES >> GO TO 2.
NO >> Repair or replace the malfunctioning parts.

2.CHECK DOOR SWITCH

Check door switch (driver side).
Refer to DLK-67, "Component Function Check".

Is the inspection result normal?

YES >> GO TO 3.
NO >> Repair or replace the malfunctioning parts.

3.CHECK KEY SLOT

Check key slot.
Refer to DLK-99, "Component Function Check".

Is the inspection result normal?

YES >> GO TO 4.
NO >> Repair or replace the malfunctioning parts.

4.CHECK COMBINATION METER DISPLAY

Check combination meter display.
Refer to DLK-105, "Component Function Check".

Is the inspection result normal?

YES >> GO TO 5.
NO >> Repair or replace the malfunctioning parts.

5.CHECK KEY SLOT ILLUMINATION

Check key slot illumination.
Refer to DLK-101, "Component Function Check".

Is the inspection result normal?

YES >> GO TO 6.
NO >> Repair or replace the malfunctioning parts.

6.CONFIRM THE OPERATION

Confirm the operation again.

Is the result normal?

YES >> Check intermittent incident. Refer to GI-42, "Intermittent Incident".
NO >> GO TO 1.

OFF POSITION WARNING DOES NOT OPERATE

Description

INFOID:0000000007456833

NOTE:

- Before performing the diagnosis in the following procedure, check “Work Flow”. Refer to DLK-7, "Work Flow".
- Warning functions operating condition is extremely complicated, during operating confirmations, reconfirm the list above twice in order to ensure proper operation. Refer to DLK-39, "WARNING FUNCTION : System Description".
- Door lock function is normal.

Diagnosis Procedure

INFOID:0000000007456834

1.CHECK POWER POSITION

Check if ignition switch position is changing or not.

Does ignition switch position change?

YES >> GO TO 2.
NO >> Check DTC for BCM. Refer to BCS-86, "DTC Index".

2.CHECK BUZZER (COMBINATION METER)

Check buzzer (combination meter).
Refer to DLK-106, "Component Function Check".

Is the inspection result normal?

YES >> GO TO 3.
NO >> Repair or replace the malfunctioning parts.

3.CHECK INTELLIGENT KEY WARNING BUZZER

Check Intelligent Key warning buzzer.
Refer to DLK-96, "Component Function Check".

Is the inspection result normal?

YES >> GO TO 4.
NO >> Repair or replace the malfunctioning parts.

4.CHECK DOOR SWITCH

Check door switch (driver side).
Refer to DLK-67, "Component Function Check".

Is the inspection result normal?

YES >> GO TO 5.
NO >> Repair or replace the malfunctioning parts.

5.CONFIRM THE OPERATION

Confirm the operation again.

Is the result normal?

YES >> Check intermittent incident. Refer to GI-42, "Intermittent Incident".
NO >> GO TO 1.

P POSITION WARNING DOES NOT OPERATE

Description

INFOID:0000000007456835

NOTE:
- Before performing the diagnosis in the following procedure, check “Work Flow”. Refer to DLK-7, "Work Flow".
- Warning functions operating condition is extremely complicated, during operating confirmations, reconfirm the list above twice in order to ensure proper operation. Refer to DLK-39, "WARNING FUNCTION : System Description".
- Door lock function is normal.

Diagnosis Procedure

INFOID:0000000007456836

1.CHECK TRANSMISSION RANGE SWITCH

Check DTC for BCM.
Refer to BCS-86, "DTC Index".

Is the inspection result normal?

YES >> GO TO 2.
NO >> Repair or replace the malfunctioning parts.

2.CHECK INTELLIGENT KEY WARNING BUZZER

Check Intelligent Key warning buzzer.
Refer to DLK-96, "Component Function Check".

Is the inspection result normal?

YES >> GO TO 3.
NO >> Repair or replace the malfunctioning parts.

3.CHECK BUZZER (COMBINATION METER)

Check buzzer (combination meter).
Refer to DLK-106, "Component Function Check".

Is the inspection result normal?

YES >> GO TO 4.
NO >> Repair or replace the malfunctioning parts.

4.CHECK DOOR SWITCH

Check door switch (driver side).
Refer to DLK-67, "Component Function Check".

Is the inspection result normal?

YES >> GO TO 5.
NO >> Repair or replace the malfunctioning parts.

5.CHECK INSIDE KEY ANTENNA

Check inside key antenna.
Refer to DLK-60, "DTC Logic" (instrument center).
Refer to DLK-62, "DTC Logic" (console).
Refer to DLK-64, "DTC Logic" (luggage room).

Is the inspection result normal?

YES >> GO TO 6.
NO >> Repair or replace the malfunctioning parts.

6.CHECK COMBINATION METER DISPLAY

Check combination meter display.
Refer to DLK-105, "Component Function Check".

Is the inspection result normal?

YES >> GO TO 7.
NO >> Repair or replace the malfunctioning parts.

7.CONFIRM THE OPERATION

Confirm the operation again.

Is the result normal?

YES >> Check intermittent incident. Refer to GI-42, "Intermittent Incident".
NO >> GO TO 1.

ACC WARNING DOES NOT OPERATE

Description

INFOID:0000000007456837

NOTE:

- Before performing the diagnosis in the following procedure, check “Work Flow”. Refer to DLK-7, "Work Flow".
- Warning functions operating condition is extremely complicated, during operating confirmations, reconfirm the list above twice in order to ensure proper operation. Refer to DLK-39, "WARNING FUNCTION : System Description".
- Door lock function is normal.

Diagnosis Procedure

INFOID:0000000007456838

1.CHECK POWER POSITION

Check if ignition switch position is changing or not.

Does ignition switch position change?

YES >> GO TO 2.
NO >> Check DTC for BCM. Refer to BCS-86, "DTC Index".

2.CHECK BUZZER (COMBINATION METER)

Check buzzer (combination meter).
Refer to DLK-106, "Component Function Check".

Is the inspection result normal?

YES >> GO TO 3.
NO >> Repair or replace the malfunctioning parts.

3.CHECK COMBINATION METER DISPLAY FUNCTION

Check combination meter display function.
Refer to DLK-105, "Component Function Check".

Is the inspection result normal?

YES >> GO TO 4.
NO >> Repair or replace the malfunctioning parts.

4.CONFIRM THE OPERATION

Confirm the operation again.

Is the result normal?

YES >> Check intermittent incident. Refer to GI-42, "Intermittent Incident".
NO >> GO TO 1.

TAKE AWAY WARNING DOES NOT OPERATE
DOOR IS OPEN

DOOR IS OPEN : Description

INFOID:0000000007456839

NOTE:
- Before performing the diagnosis in the following procedure, check “Work Flow”. Refer to DLK-7, "Work Flow".
- Warning functions operating condition is extremely complicated, during operating confirmations, reconfirm the list above twice in order to ensure proper operation. Refer to DLK-39, "WARNING FUNCTION : System Description".
- Door lock function is normal.

DOOR IS OPEN : Diagnosis Procedure

INFOID:0000000007456840

1.CHECK POWER POSITION

Check if ignition switch position is changing or not.

Does ignition switch position change?

YES >> GO TO 2.
NO >> Check DTC for BCM. Refer to BCS-86, "DTC Index".

2.CHECK BUZZER (COMBINATION METER)

Check buzzer (combination meter).
Refer to DLK-106, "Component Function Check".

Is the inspection result normal?

YES >> GO TO 3.
NO >> Repair or replace the malfunctioning parts.

3.CHECK COMBINATION METER DISPLAY

Check combination meter display.
Refer to DLK-105, "Component Function Check".

Is the inspection result normal?

YES >> GO TO 4.
NO >> Repair or replace the malfunctioning parts.

4.CHECK DOOR SWITCH

Check door switch (driver side).
Refer to DLK-67, "Component Function Check".

Is the inspection result normal?

YES >> GO TO 5.
NO >> Repair or replace the malfunctioning parts.

5.CHECK INTELLIGENT KEY WARNING BUZZER

Check Intelligent Key warning buzzer.
Refer to DLK-96, "Component Function Check".

Is the inspection result normal?

YES >> GO TO 6.
NO >> Repair or replace the malfunctioning parts.

6.CHECK INSIDE KEY ANTENNA

Check inside key antenna.
Refer to DLK-60, "DTC Logic" (instrument center).
Refer to DLK-62, "DTC Logic" (console).
Refer to DLK-64, "DTC Logic" (luggage room).

Is the inspection result normal?

YES >> GO TO 7.
NO >> Repair or replace the malfunctioning parts.

7.CHECK KEY SLOT ILLUMINATION

Check key slot illumination.
Refer to DLK-101, "Component Function Check".

Is the inspection result normal?

YES >> GO TO 8.
NO >> Repair or replace the malfunctioning parts.

8.CONFIRM THE OPERATION

Confirm the operation again.

Is the result normal?

YES >> Check intermittent incident. Refer to GI-42, "Intermittent Incident".
NO >> GO TO 1.

ANY DOOR OPEN TO ALL DOORS CLOSED

ANY DOOR OPEN TO ALL DOORS CLOSED : Description

INFOID:0000000007456841

NOTE:

- Before performing the diagnosis in the following procedure, check “Work Flow”. Refer to DLK-7, "Work Flow".
- Warning functions operating condition is extremely complicated, during operating confirmations, reconfirm the list above twice in order to ensure proper operation. Refer to DLK-39, "WARNING FUNCTION : System Description".
- Door lock function is normal.

ANY DOOR OPEN TO ALL DOORS CLOSED : Diagnosis Procedure

INFOID:0000000007456842

1.CHECK DOOR SWITCH

Check door switch (driver side).
Refer to DLK-67, "Component Function Check".

Is the inspection result normal?

YES >> GO TO 2.
NO >> Repair or replace the malfunctioning parts.

2.CHECK COMBINATION METER DISPLAY

Check combination meter display.
Refer to DLK-105, "Component Function Check".

Is the inspection result normal?

YES >> GO TO 3.
NO >> Repair or replace the malfunctioning parts.

3.CHECK INSIDE KEY ANTENNA

Check inside key antenna.
Refer to DLK-60, "DTC Logic" (instrument center).
Refer to DLK-62, "DTC Logic" (console).
Refer to DLK-64, "DTC Logic" (luggage room).

Is the inspection result normal?

YES >> GO TO 4.
NO >> Repair or replace the malfunctioning parts.

4.CONFIRM THE OPERATION

Confirm the operation again.

Is the result normal?

YES >> Check intermittent incident. Refer to GI-42, "Intermittent Incident".
NO >> GO TO 1.

PUSH-BUTTON IGNITION SWITCH OPERATION

PUSH-BUTTON IGNITION SWITCH OPERATION : Description

INFOID:0000000007456843

NOTE:

- Before performing the diagnosis in the following procedure, check “Work Flow”. Refer to DLK-7, "Work Flow".
- Warning functions operating condition is extremely complicated, during operating confirmations, reconfirm the list above twice in order to ensure proper operation. Refer to DLK-39, "WARNING FUNCTION : System Description".
- Door lock function is normal.

PUSH-BUTTON IGNITION SWITCH OPERATION : Diagnosis Procedure

INFOID:0000000007456844

1.CHECK POWER POSITION

Check if ignition switch position is changing or not.

Does ignition switch position change?

YES >> GO TO 2.
NO >> Check DTC for BCM. Refer to BCS-86, "DTC Index".

2.CHECK PUSH-BUTTON IGNITION SWITCH

Check push-button ignition switch.
Refer to PCS-65, "Component Function Check".

Is the inspection result normal?

YES >> GO TO 3.
NO >> Repair or replace the malfunctioning parts.

3.CHECK BUZZER (COMBINATION METER)

Check buzzer (combination meter).
Refer to DLK-106, "Component Function Check".

Is the inspection result normal?

YES >> GO TO 4.
NO >> Repair or replace the malfunctioning parts.

4.CHECK COMBINATION METER DISPLAY

Check combination meter display.
Refer to DLK-105, "Component Function Check".

Is the inspection result normal?

YES >> GO TO 5.
NO >> Repair or replace the malfunctioning parts.

5.CHECK INSIDE KEY ANTENNA

Check inside key antenna.
Refer to DLK-60, "DTC Logic" (instrument center).
Refer to DLK-62, "DTC Logic" (console).
Refer to DLK-64, "DTC Logic" (luggage room).

Is the inspection result normal?

YES >> GO TO 6.
NO >> Repair or replace the malfunctioning parts.

6.CONFIRM THE OPERATION

Confirm the operation again.

Is the result normal?

YES >> Check intermittent incident. Refer to GI-42, "Intermittent Incident".
NO >> GO TO 1.

INTELLIGENT KEY IS REMOVED FROM KEY SLOT

INTELLIGENT KEY IS REMOVED FROM KEY SLOT : Description

INFOID:0000000007456845

NOTE:

- Before performing the diagnosis in the following procedure, check “Work Flow”. Refer to DLK-7, "Work Flow".
- Warning functions operating condition is extremely complicated, during operating confirmations, reconfirm the list above twice in order to ensure proper operation. Refer to DLK-39, "WARNING FUNCTION : System Description".
- Door lock function is normal.

INTELLIGENT KEY IS REMOVED FROM KEY SLOT : Diagnosis Procedure

INFOID:0000000007456846

1.CHECK KEY SLOT

Check key slot.
Refer to DLK-99, "Component Function Check".

Is the inspection result normal?

YES >> GO TO 2.
NO >> Repair or replace the malfunctioning parts.

2.CHECK COMBINATION METER DISPLAY

Check combination meter display.
Refer to DLK-105, "Component Function Check".

Is the inspection result normal?

YES >> GO TO 3.
NO >> Repair or replace the malfunctioning parts.

3.CHECK INSIDE KEY ANTENNA

Check inside key antenna.
Refer to DLK-60, "DTC Logic" (instrument center).
Refer to DLK-62, "DTC Logic" (console).
Refer to DLK-64, "DTC Logic" (luggage room).

Is the inspection result normal?

YES >> GO TO 4.
NO >> Repair or replace the malfunctioning parts.

4.CHECK KEY SLOT ILLUMINATION

Check key slot illumination.
Refer to DLK-101, "Component Function Check".

Is the inspection result normal?

YES >> GO TO 5.
NO >> Repair or replace the malfunctioning parts.

5.CONFIRM THE OPERATION

Confirm the operation again.

Is the result normal?

YES >> Check intermittent incident. Refer to GI-42, "Intermittent Incident".
NO >> GO TO 1.

INTELLIGENT KEY LOW BATTERY WARNING DOES NOT OPERATE

Description

INFOID:0000000007456847

NOTE:

- Before performing the diagnosis in the following procedure, check “Work Flow”. Refer to DLK-7, "Work Flow".
- Warning functions operating condition is extremely complicated, during operating confirmations, reconfirm the list above twice in order to ensure proper operation. Refer to DLK-39, "WARNING FUNCTION : System Description".

Diagnosis Procedure

INFOID:0000000007456848

1. CHECK “LO- BATT OF KEY FOB WARN” SETTING IN “WORK SUPPORT”

Check “LO- BATT OF KEY FOB WARN” setting in “WORK SUPPORT”.
Refer to DLK-53, "INTELLIGENT KEY : CONSULT Function (BCM - INTELLIGENT KEY)".

Is the inspection result normal?

YES >> GO TO 2.
NO >> Set “LO- BATT OF KEY FOB WARN” setting in “WORK SUPPORT”.

2. CHECK INTELLIGENT KEY BATTERY

Check Intelligent Key battery.
Refer to DLK-98, "Component Inspection".

Is the inspection result normal?

YES >> GO TO 3.
NO >> Repair or replace the malfunctioning parts.

3. CHECK COMBINATION METER DISPLAY

Check combination meter display.
Refer to DLK-105, "Component Function Check".

Is the inspection result normal?

YES >> GO TO 4.
NO >> Repair or replace the malfunctioning parts.

4. CHECK INSIDE KEY ANTENNA

Check inside key antenna.
Refer to DLK-60, "DTC Logic" (instrument center).
Refer to DLK-62, "DTC Logic" (console).
Refer to DLK-64, "DTC Logic" (luggage room).

Is the inspection result normal?

YES >> GO TO 5.
NO >> Repair or replace the malfunctioning parts.

5. CHECK KEY SLOT ILLUMINATION

Check key slot illumination.
Refer to DLK-101, "Component Function Check".

Is the inspection result normal?

YES >> GO TO 6.
NO >> Repair or replace the malfunctioning parts.

6. CONFIRM THE OPERATION

Confirm the operation again.

Is the result normal?

YES >> Check intermittent incident. Refer to GI-42, "Intermittent Incident".
NO >> GO TO 1.

DOOR LOCK OPERATION WARNING DOES NOT OPERATE WITH DOOR REQUEST SWITCH

Description

INFOID:0000000007456849

NOTE:

- Before performing the diagnosis in the following procedure, check “Work Flow”. Refer to DLK-7, "Work Flow".
- Warning functions operating condition is extremely complicated, during operating confirmations, reconfirm the list above twice in order to ensure proper operation. Refer to DLK-39, "WARNING FUNCTION : System Description".

Diagnosis Procedure

INFOID:0000000007456850

1. CHECK DOOR LOCK FUNCTION

Check door lock function by door request switch.

Does door lock/unlock with door request switch?

YES >> GO TO 2.
NO-1 >> Go to DLK-186, "DRIVER SIDE : Description" (driver side).
NO-2 >> Go to DLK-187, "PASSENGER SIDE : Description" (passenger side).
NO-3 >> Go to DLK-187, "BACK DOOR : Description" (back door).

2. CHECK DOOR SWITCH

Check door switch (driver side).
Refer to DLK-67, "Component Function Check".

Is the inspection result normal?

YES >> GO TO 3.
NO >> Repair or replace the malfunctioning parts.

3. CHECK INTELLIGENT KEY WARNING BUZZER

Check Intelligent Key warning buzzer.
Refer to DLK-96, "Component Function Check".

Is the inspection result normal?

YES >> GO TO 4.
NO >> Repair or replace the malfunctioning parts.

4. CHECK INSIDE KEY ANTENNA

Check inside key antenna.
Refer to DLK-60, "DTC Logic" (instrument center).
Refer to DLK-62, "DTC Logic" (console).
Refer to DLK-64, "DTC Logic" (luggage room).

Is the inspection result normal?

YES >> GO TO 5.
NO >> Repair or replace the malfunctioning parts.

5. CONFIRM THE OPERATION

Confirm the operation again.

Is the result normal?

YES >> Check intermittent incident. Refer to GI-42, "Intermittent Incident".
NO >> GO TO 1.

KEY ID WARNING DOES NOT OPERATE

Description

INFOID:0000000007456851

NOTE:

- Before performing the diagnosis in the following procedure, check “Work Flow”. Refer to DLK-7, "Work Flow".
- Warning functions operating condition is extremely complicated, during operating confirmations, reconfirm the list above twice in order to ensure proper operation. Refer to DLK-39, "WARNING FUNCTION : System Description".

Diagnosis Procedure

INFOID:0000000007456852

1.CHECK INTELLIGENT KEY

Check Intelligent Key.
Refer to DLK-98, "Component Inspection".

Is the inspection result normal?

YES >> GO TO 2.
NO >> Repair or replace the malfunctioning parts.

2.CHECK COMBINATION METER DISPLAY FUNCTION

Check combination meter display function.
Refer to DLK-105, "Component Function Check".

Is the inspection result normal?

YES >> GO TO 3.
NO >> Repair or replace the malfunctioning parts.

3.CONFIRM THE OPERATION

Confirm the operation again.

Is the result normal?

YES >> Check intermittent incident. Refer to GI-42, "Intermittent Incident".
NO >> GO TO 1.

INTELLIGENT KEY LOW BATTERY WARNING DOES NOT OPERATE

Description

INFOID:0000000007456853

NOTE:

- Before performing the diagnosis in the following procedure, check “Work Flow”. Refer to DLK-7, "Work Flow".
- Warning functions operating condition is extremely complicated, during operating confirmations, reconfirm the list above twice in order to ensure proper operation. Refer to DLK-39, "WARNING FUNCTION : System Description".

Diagnosis Procedure

INFOID:0000000007456854

1.CHECK INTELLIGENT KEY

Check Intelligent Key.
Refer to DLK-98, "Component Inspection".

Is the inspection result normal?

YES >> GO TO 2.
NO >> Repair or replace the malfunctioning parts.

2.CHECK COMBINATION METER DISPLAY FUNCTION

Check combination meter display function.
Refer to DLK-105, "Component Function Check".

Is the inspection result normal?

YES >> GO TO 3.
NO >> Repair or replace the malfunctioning parts.

3.CONFIRM THE OPERATION

Confirm the operation again.

Is the result normal?

YES >> Check intermittent incident. Refer to GI-42, "Intermittent Incident".
NO >> GO TO 1.

INTEGRATED HOMELINK TRANSMITTER DOES NOT OPERATE

Description

INFOID:0000000007456855

NOTE:
Before performing the diagnosis in the following procedure, check “Work Flow”. Refer to DLK-7, "Work Flow".

Diagnosis Procedure

INFOID:0000000007456856

1.CHECK INTEGRATED HOMELINK TRANSMITTER

Check integrated homelink transmitter.
Refer to DLK-109, "Component Function Check".

Is the inspection result normal?

YES >> GO TO 2.
NO >> Repair or replace the malfunctioning parts.

2.CONFIRM THE OPERATION

Confirm the operation again.

Is the result normal?

YES >> Check intermittent incident. Refer to GI-42, "Intermittent Incident".
NO >> GO TO 1.

SQUEAK AND RATTLE TROUBLE DIAGNOSES

Work Flow

INFOID:0000000007456857

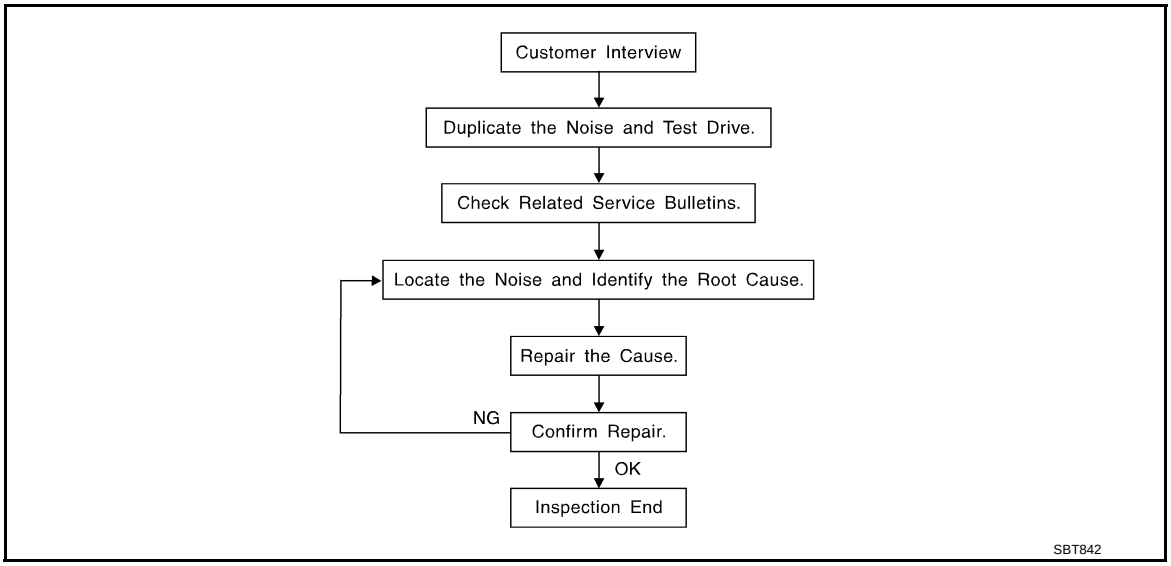

CUSTOMER INTERVIEW

Interview the customer if possible, to determine the conditions that exist when the noise occurs. Use the Diagnostic Worksheet during the interview to document the facts and conditions when the noise occurs and any of customer's comments; refer to DLK-223, "Diagnostic Worksheet". This information is necessary to duplicate the conditions that exist when the noise occurs.

- The customer may not be able to provide a detailed description or the location of the noise. Attempt to obtain all the facts and conditions that exist when the noise occurs (or does not occur).
- If there is more than one noise in the vehicle, perform a diagnosis and repair the noise that the customer is concerned about. This can be accomplished by performing a cruise test on the vehicle with the customer.
- After identifying the type of noise, isolate the noise in terms of its characteristics. The noise characteristics are provided so the customer, service adviser and technician are all speaking the same language when defining the noise.
- Squeak – (Like tennis shoes on a clean floor)
  Squeak characteristics include the light contact/fast movement/brought on by road conditions/hard surfaces = higher pitch noise/softer surfaces = lower pitch noises/edge to surface = chirping
- Creak – (Like walking on an old wooden floor)
  Creak characteristics include firm contact/slow movement/twisting with a rotational movement/pitch dependent on materials/often brought on by activity.
- Rattle – (Like shaking a baby rattle)
  Rattle characteristics include the fast repeated contact/vibration or similar movement/loose parts/missing clip or fastener/incorrect clearance.
- Knock – (Like a knock on a door)
  Knock characteristics include hollow sounding/sometimes repeating/often brought on by driver action.
- Tick – (Like a clock second hand)
  Tick characteristics include gentle contacting of light materials/loose components/can be caused by driver action or road conditions.
- Thump – (Heavy, muffled knock noise)
  Thump characteristics include softer knock/dead sound often brought on by activity.
- Buzz – (Like a bumblebee)
  Buzz characteristics include high frequency rattle/firm contact.
- Often the degree of acceptable noise level will vary depending up on the person. A noise that a technician may judge as acceptable may be very irritating to the customer.
- Weather conditions, especially humidity and temperature, may have a great effect on noise level.

DUPLICATE THE NOISE AND TEST DRIVE

If possible, drive the vehicle with the customer until the noise is duplicated. Note any additional information on the Diagnostic Worksheet regarding the conditions or location of the noise. This information can be used to duplicate the same conditions when the repair is reconfirmed.

If the noise can be duplicated easily during the test drive, to help identify the source of the noise, try to duplicate the noise with the vehicle stopped by doing one or all of the following:

1) Close a door.
2) Tap or push/pull around the area where the noise appears to be coming from.
3) Rev the engine.
4) Use a floor jack to recreate vehicle “twist”.
5) At idle, apply engine load (electrical load, half-clutch on M/T models, drive position on A/T models).
6) Raise the vehicle on a hoist and hit a tire with a rubber hammer.

- Drive the vehicle and attempt to duplicate the conditions the customer states exist when the noise occurs.
- If it is difficult to duplicate the noise, drive the vehicle slowly on an undulating or rough road to stress the vehicle body.

CHECK RELATED SERVICE BULLETINS

After verifying the customer concern or symptom, check ASIST for Technical Service Bulletins (TSBs) related to that concern or symptom.
If a TSB relates to the symptom, follow the procedure to repair the noise.

LOCATE THE NOISE AND IDENTIFY THE ROOT CAUSE

1. Narrow down the noise to a general area. To help pinpoint the source of the noise, use a listening tool (Chassis ear: J-39570, Engine ear and mechanics stethoscope).
2. Narrow down the noise to a more specific area and identify the cause of the noise by:

- Removing the components in the area that is are suspected to be the cause of the noise.
  Do not use too much force when removing clips and fasteners, otherwise clips and fastener can be broken or lost during the repair, resulting in the creation of new noise.
- Tapping or pushing/pulling the component that is are suspected to be the cause of the noise.
  Do not tap or push/pull the component with excessive force, otherwise the noise will be eliminated only temporarily.
- Feeling for a vibration by hand by touching the component(s) that is are suspected to be the cause of the noise.
- Placing a piece of paper between components that are suspected to be the cause of the noise.
- Looking for loose components and contact marks.
  Refer to DLK-221, "Inspection Procedure".

REPAIR THE CAUSE

- If the cause is a loose component, tighten the component securely.
- If the cause is insufficient clearance between components:

- Separate components by repositioning or loosening and retightening the component, if possible.
- Insulate components with a suitable insulator such as urethane pads, foam blocks, felt cloth tape or urethane tape. A Nissan Squeak and Rattle Kit (J-43980) is available through the authorized Nissan Parts Department.

CAUTION:
Never use excessive force as many components are constructed of plastic and may be damaged.
NOTE:
Always check with the Parts Department for the latest parts information.
The following materials are contained in the Nissan Squeak and Rattle Kit (J-43980). Each item can be ordered separately as needed.
URETHANE PADS [1.5 mm (0.059 in) thick]
Insulates connectors, harness, etc.
76268-9E005: 100 × 135 mm (3.94 × 5.31 in)/76884-71L01: 60 × 85 mm (2.36 × 3.35 in)/76884-71L02:15 × 25 mm (0.59 × 0.98 in)
INSULATOR (Foam blocks)
Insulates components from contact. Can be used to fill space behind a panel.
73982-9E000: 45 mm (1.77 in) thick, 50 × 50 mm (1.97 × 1.97 in)/73982-50Y00: 10 mm (0.39 in) thick, 50 × 50 mm (1.97 × 1.97 in)
INSULATOR (Light foam block)
80845-71L00: 30 mm (1.18 in) thick, 30 × 50 mm (1.18 × 1.97in)
FELT CLOTHTAPE
Used to insulate where movement does not occur. Ideal for instrument panel applications.
68370-4B000: 15 × 25 mm (0.59 × 0.98 in) pad/68239-13E00: 5 mm (0.20 in) wide tape roll
The following materials, not found in the kit, can also be used to repair squeaks and rattles.
UHMW (TEFLON) TAPE

Insulates where slight movement is present. Ideal for instrument panel applications.
SILICONE GREASE
Used in place of UHMW tape that is be visible or does not fit. Will only last a few months.
SILICONE SPRAY
Used when grease cannot be applied.
DUCT TAPE
Used to eliminate movement.

CONFIRM THE REPAIR

Confirm that the cause of a noise is repaired by test driving the vehicle. Operate the vehicle under the same conditions as when the noise originally occurred. Refer to the notes on the Diagnostic Worksheet.

Inspection Procedure

INFOID:0000000007456858

Refer to Table of Contents for specific component removal and installation information.

INSTRUMENT PANEL

Most incidents are caused by contact and movement between:

1. The cluster lid A and instrument panel
2. Acrylic lens and combination meter housing
3. Instrument panel to front pillar garnish
4. Instrument panel to windshield
5. Instrument panel mounting pins
6. Wiring harnesses behind the combination meter
7. A/C defroster duct and duct joint
   These incidents can usually be located by tapping or moving the components to duplicate the noise or by pressing on the components while driving to stop the noise. Most of these incidents can be repaired by applying felt cloth tape or silicon spray (in hard to reach areas). Urethane pads can be used to insulate wiring harness.
   CAUTION:
   Never use silicone spray to isolate a squeak or rattle. If the area is saturated with silicone, the recheck of repair becomes impossible.

CENTER CONSOLE

Components to pay attention to include:

1. Shifter assembly cover to finisher
2. A/C control unit and cluster lid C
3. Wiring harnesses behind audio and A/C control unit

The instrument panel repair and isolation procedures also apply to the center console.

DOORS

Pay attention to the following:

1. Finisher and inner panel making a slapping noise
2. Inside handle escutcheon to door finisher
3. Wiring harnesses tapping
4. Door striker out of alignment causing a popping noise on starts and stops

Tapping or moving the components or pressing on them while driving to duplicate the conditions can isolate many of these incidents. The areas can usually be insulated with felt cloth tape or insulator foam blocks from the Nissan Squeak and Rattle Kit (J-43980) to repair the noise.

TRUNK

Trunk noises are often caused by a loose jack or loose items put into the trunk by the customer.
In addition look for the following:

1. Trunk lid dumpers out of adjustment
2. Trunk lid striker out of adjustment
3. The trunk lid torsion bars knocking together
4. A loose license plate or bracket

Most of these incidents can be repaired by adjusting, securing or insulating the item(s) or component(s) causing the noise.

SUNROOF/HEADLINING

Noises in the sunroof/headlining area can often be traced to one of the following:

1. Sunroof lid, rail, linkage or seals making a rattle or light knocking noise
2. Sunvisor shaft shaking in the holder
3. Front or rear windshield touching headlining and squeaking

Again, pressing on the components to stop the noise while duplicating the conditions can isolate most of these incidents. Repairs usually consist of insulating with felt cloth tape.

SEATS

When isolating seat noise it's important to note the position the seats in and the load placed on the seat when the noise occurs. These conditions should be duplicated when verifying and isolating the cause of the noise.
Cause of seat noise include:

1. Headrest rods and holder
2. A squeak between the seat pad cushion and frame
3. The rear seatback lock and bracket

These noises can be isolated by moving or pressing on the suspected components while duplicating the conditions under which the noise occurs.Most of these incidents can be repaired by repositioning the component or applying urethane tape to the contact area.

UNDERHOOD

Some interior noise may be caused by components under the hood or on the engine wall. The noise is then transmitted into the passenger compartment.
Causes of transmitted underhood noise include:

1. Any component mounted to the engine wall
2. Components that pass through the engine wall
3. Engine wall mounts and connectors
4. Loose radiator mounting pins
5. Hood bumpers out of adjustment
6. Hood striker out of adjustment

These noises can be difficult to isolate since they cannot be reached from the interior of the vehicle. The best method is to secure, move or insulate one component at a time and test drive the vehicle. Also, engine RPM or load can be changed to isolate the noise. Repairs can usually be made by moving, adjusting, securing, or insulating the component causing the noise.

Diagnostic Worksheet

INFOID:0000000007456859

INFINITI

SQUEAK & RATTLE DIAGNOSTIC WORKSHEET

Dear Infiniti Customer:
We are concerned about your satisfaction with your Infiniti vehicle. Repairing a squeak or rattle sometimes can be very difficult. To help us fix your Infiniti right the first time, please take a moment to note the area of the vehicle where the squeak or rattle occurs and under what conditions. You may be asked to take a test drive with a service consultant or technician to ensure we confirm the noise you are hearing.

I. WHERE DOES THE NOISE COME FROM? (circle the area of the vehicle)
The illustrations are for reference only, and may not reflect the actual configuration of your vehicle.

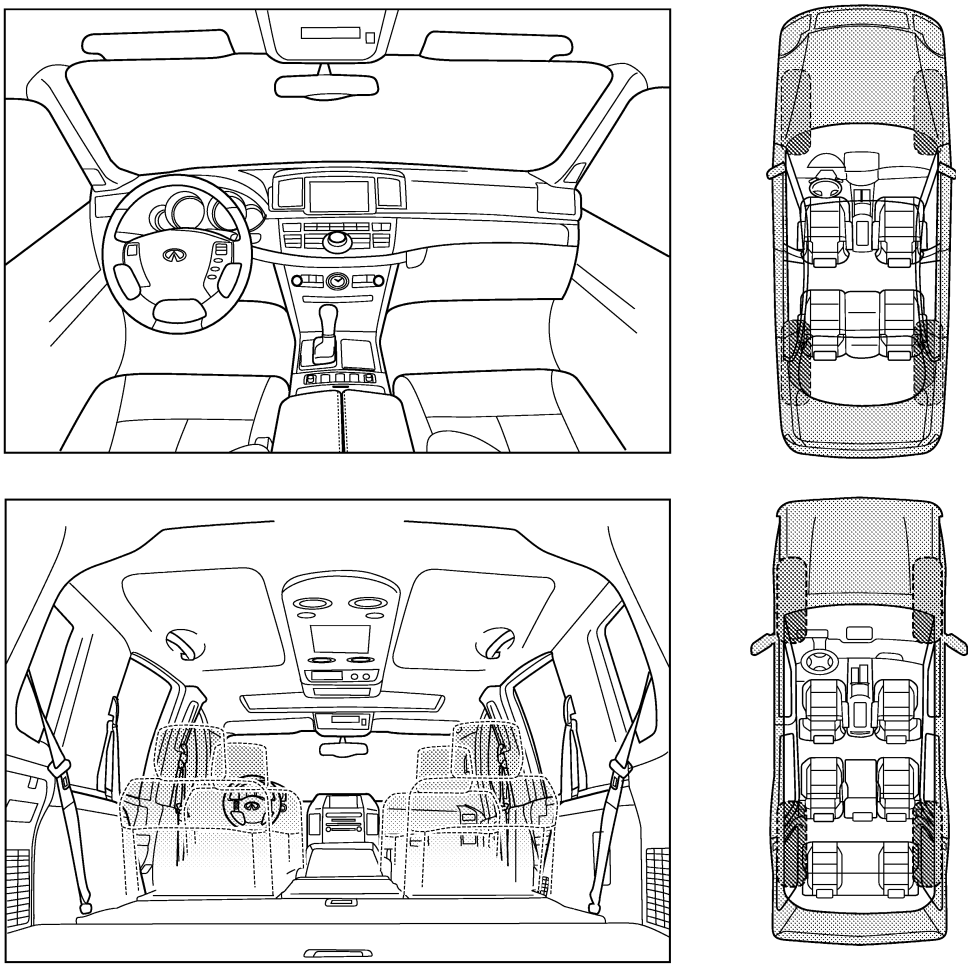

Continue to page 2 of the worksheet and briefly describe the location of the noise or rattle. In addition, please indicate the conditions which are present when the noise occurs.

PIIB8741E

SQUEAK & RATTLE DIAGNOSTIC WORKSHEET - page 2

Briefly describe the location where the noise occurs:

_____

_____

II. WHEN DOES IT OCCUR? (please check the boxes that apply)

- ☐ anytime
- ☐ 1st time in the morning
- ☐ only when it is cold outside
- ☐ only when it is hot outside
- ☐ after sitting out in the rain
- ☐ when it is raining or wet
- ☐ dry or dusty conditions
- ☐ other:

III. WHEN DRIVING:

- ☐ through driveways
- ☐ over rough roads
- ☐ over speed bumps
- ☐ only about ____ mph
- ☐ on acceleration
- ☐ coming to a stop
- ☐ on turns: left, right or either (circle)
- ☐ with passengers or cargo
- ☐ other: _____
- ☐ after driving _____ miles or _____ minutes

IV. WHAT TYPE OF NOISE

- ☐ squeak (like tennis shoes on a clean floor)
- ☐ creak (like walking on an old wooden floor)
- ☐ rattle (like shaking a baby rattle)
- ☐ knock (like a knock at the door)
- ☐ tick (like a clock second hand)
- ☐ thump (heavy, muffled knock noise)
- ☐ buzz (like a bumble bee)

TO BE COMPLETED BY DEALERSHIP PERSONNEL

Test Drive Notes:

_____

_____

_____

	YES	NO	Initials of person performing
Vehicle test driven with customer	☐	☐	_____
- Noise verified on test drive	☐	☐	_____
- Noise source located and repaired	☐	☐	_____
- Follow up test drive performed to confirm repair	☐	☐	_____

VIN: _____ Customer Name: _____

W.O.# _____ Date: _____

This form must be attached to Work Order

PIIB8742E

PRECAUTION

PRECAUTIONS

Precaution for Supplemental Restraint System (SRS) "AIR BAG" and "SEAT BELT PRE-TENSIONER"

INFOID:0000000007456860

The Supplemental Restraint System such as “AIR BAG” and “SEAT BELT PRE-TENSIONER”, used along with a front seat belt, helps to reduce the risk or severity of injury to the driver and front passenger for certain types of collision. This system includes seat belt switch inputs and dual stage front air bag modules. The SRS system uses the seat belt switches to determine the front air bag deployment, and may only deploy one front air bag, depending on the severity of a collision and whether the front occupants are belted or unbelted. Information necessary to service the system safely is included in the “SRS AIR BAG” and “SEAT BELT” of this Service Manual.

WARNING:

Always observe the following items for preventing accidental activation.

- **To avoid rendering the SRS inoperative, which could increase the risk of personal injury or death in the event of a collision that would result in air bag inflation, all maintenance must be performed by an authorized NISSAN/INFINITI dealer.**
- **Improper maintenance, including incorrect removal and installation of the SRS, can lead to personal injury caused by unintentional activation of the system. For removal of Spiral Cable and Air Bag Module, see “SRS AIR BAG”.**
- **Never use electrical test equipment on any circuit related to the SRS unless instructed to in this Service Manual. SRS wiring harnesses can be identified by yellow and/or orange harnesses or harness connectors.**

PRECAUTIONS WHEN USING POWER TOOLS (AIR OR ELECTRIC) AND HAMMERS

WARNING:

Always observe the following items for preventing accidental activation.

- **When working near the Air Bag Diagnosis Sensor Unit or other Air Bag System sensors with the ignition ON or engine running, never use air or electric power tools or strike near the sensor(s) with a hammer. Heavy vibration could activate the sensor(s) and deploy the air bag(s), possibly causing serious injury.**
- **When using air or electric power tools or hammers, always switch the ignition OFF, disconnect the battery, and wait at least 3 minutes before performing any service.**

Precaution for Procedure without Cowl Top Cover

INFOID:0000000007456862

When performing the procedure after removing cowl top cover, cover the lower end of windshield with urethane, etc to prevent damage to windshield.

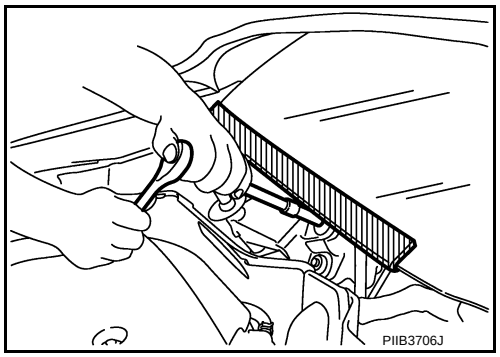

Precautions For Xenon Headlamp Service

INFOID:0000000007758599

WARNING:

Comply with the following warnings to prevent any serious accident.

- **Disconnect the battery cable (negative terminal) or the power supply fuse before installing, removing, or touching the xenon headlamp (bulb included). The xenon headlamp contains high-voltage generated parts.**
- **Never work with wet hands.**
- **Check the xenon headlamp ON-OFF status after assembling it to the vehicle. Never turn the xenon headlamp ON in other conditions. Connect the power supply to the vehicle-side connector.**

(Turning it ON outside the lamp case may cause fire or visual impairments.)
- **Never touch the bulb glass immediately after turning it OFF. It is extremely hot.**

CAUTION:

Comply with the following cautions to prevent any error and malfunction.
- **Install the xenon bulb securely. (Insufficient bulb socket installation may melt the bulb, the connector, the housing, etc. by high-voltage leakage or corona discharge.)**
- **Never perform HID circuit inspection with a tester.**
- **Never touch the xenon bulb glass with hands. Never put oil and grease on it.**
- **Dispose of the used xenon bulb after packing it in thick vinyl without breaking it.**
- **Never wipe out dirt and contamination with organic solvent (thinner, gasoline, etc.).**

Work

INFOID:0000000007456863

- After removing and installing the opening/closing parts, be sure to carry out fitting adjustments to check their operational.
- Check the lubrication level, damage, and wear of each part. If necessary, grease or replace it.

PREPARATION

PREPARATION

Special Service Tools

INFOID:0000000007456864

The actual shapes of Kent-Moore tools may differ from those of special service tools illustrated here.

Tool number (Kent-Moore No.) Tool name		Description
(J-39570) Chassis ear	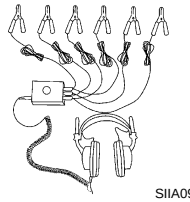 SIIA0993E	Locates the noise
(J-43980) NISSAN Squeak and Rattle Kit	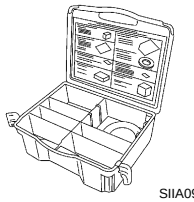 SIIA0994E	Repairs the cause of noise

Commercial Service Tools

INFOID:0000000007456865

Tool name		Description
Engine ear	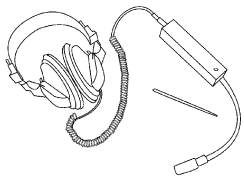 SIIA0995E	Locates the noise
Remover tool	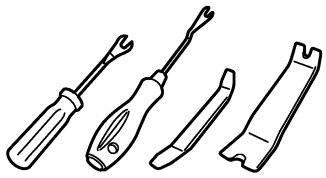 JMKIA3050ZZ	Removes the clips, pawls and metal clips
Power tool	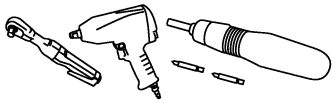 PIIB1407E	

REMOVAL AND INSTALLATION

HOOD

HOOD ASSEMBLY

HOOD ASSEMBLY : Exploded View

INFOID:0000000007456866

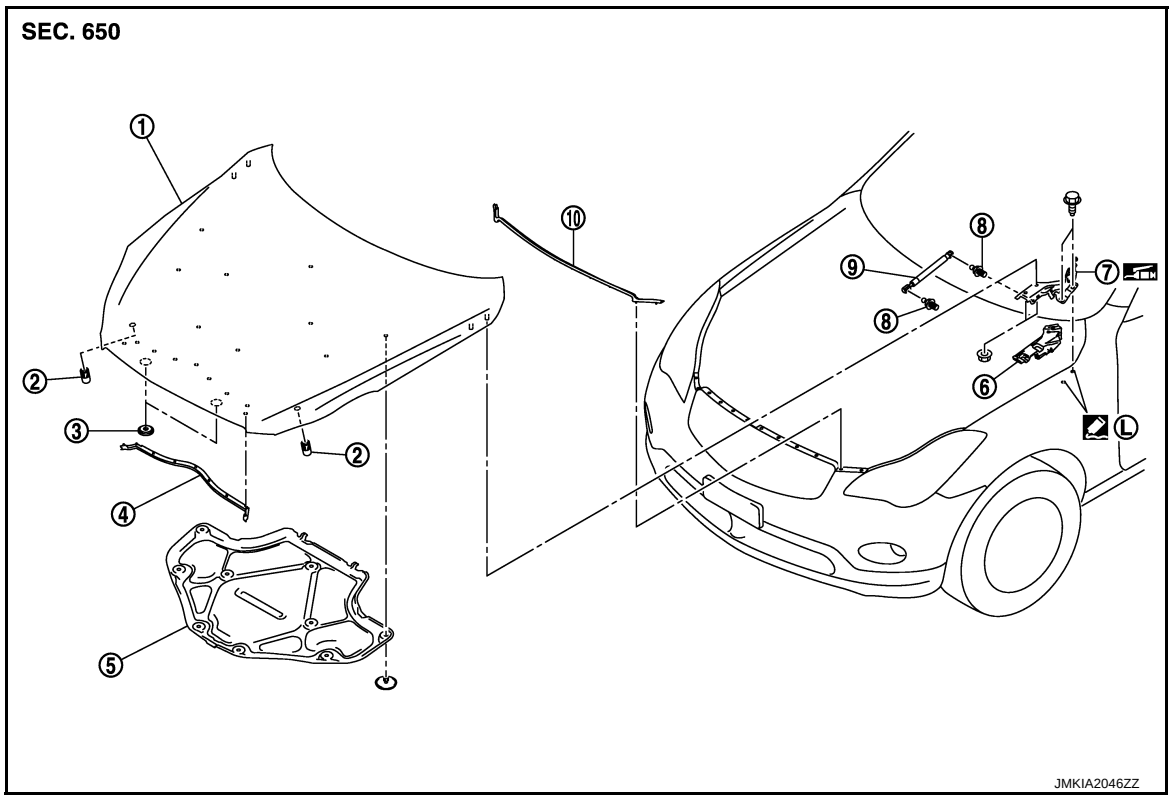

1.	Hood assembly	2.	Bumper rubber	3.	Seal
4.	Radiator core seal	5.	Hood insulator	6.	Hood hinge cover
7.	Hood hinge	8.	Stud ball	9.	Hood stay
10.	Hood seal (front)				

Ⓛ : Apply Genuine High Strength Locking Sealant or equivalent.

Refer to GI-4, "Components" for symbols in the figure.

HOOD ASSEMBLY : Removal and Installation

INFOID:0000000007456867

CAUTION:
Operate with 2 workers, because of its heavy weight.

REMOVAL

1. Remove hood hinge cover (LH/RH) (1).
   NOTE:
   While pushing the pawls, pull hood hinge cover in the direction of the arrow.

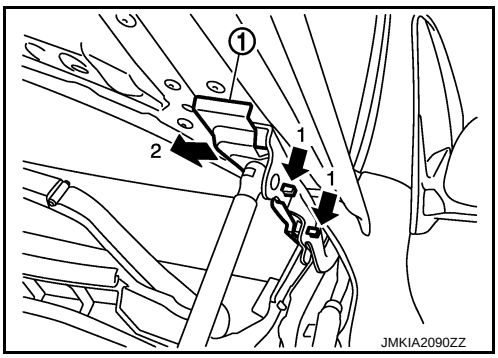

2. Remove washer nozzle, washer tube. Refer to WW-114, "Removal and Installation".
3. Support hood lock assembly with a proper material to prevent it from falling.

WARNING:
Body injury may occur if no supporting rod is holding the hood open when removing the hood stay.

4. Remove the metal clip (3) located on the connection between the hood stay (1) and the stud ball (2) (hood side), by using a flatted-blade screwdriver (A).
5. Disengage the stud ball from the hood stay (hood side).

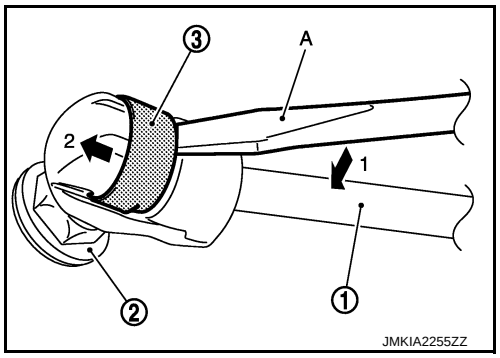

6. Remove hinge mounting nuts on the hood to remove the hood assembly.
7. Remove following parts after removing the hood assembly.
   - Radiator core seal
   - Hood insulator
   - Hood bumper rubber
   - Hood seal (front)
   - Hood striker

INSTALLATION

Install in the reverse order of removal.

CAUTION:

- **Before installing hood seal (front)(1), apply double-faced adhesive tape (2).**
- **Check that both ends of hood seal (front) is below than front combination lamp (3).**

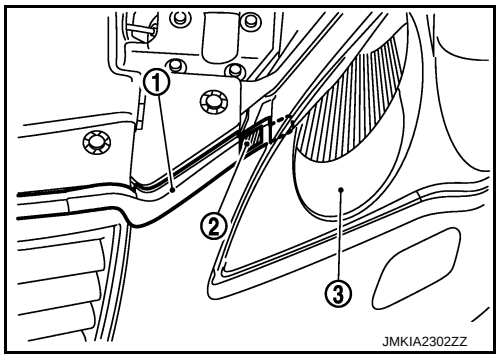

- **Before installing hood hinge, apply anticorrosive agent onto the mounting surface of the vehicle body.**
- **After installing, perform hood fitting adjustment. Refer to DLK-230, "HOOD ASSEMBLY : Adjustment".**
- **After installing, perform front washer nozzle and tube inspection and adjustment. Refer to WW-114, "Inspection and Adjustment".**

HOOD ASSEMBLY : Adjustment

INFOID:0000000007456868

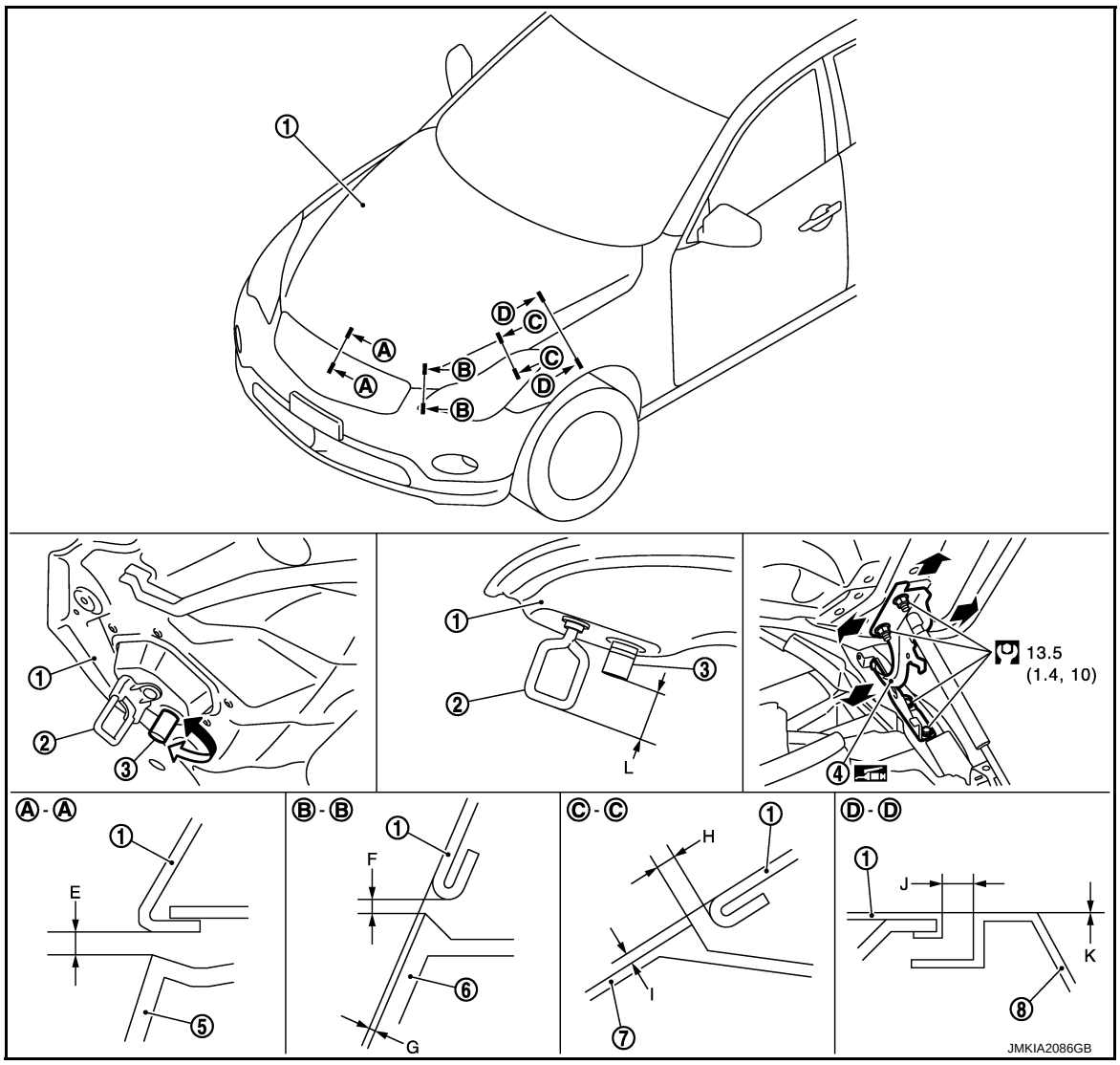

1. Hood assembly
2. Hood striker
3. Hood bumper rubber
4. Hood hinge
5. Front grill
6. Front bumper fascia
7. Front combination lamp
8. Front fender

Refer to GI-4, "Components" for symbols in the figure.

Check the clearance and the surface height between hood and each part visually and by touching. (Fitting standard dimension in the table below should be satisfied.
If the clearance and the surface height are out of specification, adjust them according to the procedures shown below.

Unit: mm (in)

Portion				Standard	Difference (LH/RH, MAX)
Hood – Front grille	A – A	E	Clearance	2.6 – 7.4 (0.102 – 0.291)	—
Hood – Front bumper fascia	B – B	F	Clearance	1.5 – 5.5 (0.059 – 0.217)	2.5 (0.098)
		G	Surface height	–1.0 – 3.0 (–0.039 – 0.118)	2.0 (0.079)

Portion				Standard	Difference (LH/RH, MAX)
Hood – Front combination lamp	C – C	H	Clearance	1.5 – 5.5 (0.059 – 0.217)	2.0 (0.079)
		I	Surface height	–2.0 – 2.0 (–0.079 – 0.079)	2.1 (0.083)
Hood – Front fender	D – D	J	Clearance	2.5 – 4.5 (0.098 – 0.177)	2.0 (0.079)
		K	Surface height	–1.0 – 1.0 (–0.039 – 0.039)	—
Hood striker – Bumper rubber	—	L	Clearance	32.5 – 33.5 (1.280 – 1.319)	—

1. Remove striker and adjust the surface height of hood, front bumper fascia and front fender according to the fitting standard dimension, by rotating hood bumper rubbers.
2. Adjust the height difference of striker, hood bumper rubber according to the fitting standard dimension.
3. Loosen hood hinge mounting nuts on the hood.
4. Adjust the clearance of hood, front bumper fascia, front grill and front fender according to the fitting standard dimension, for the hood.
5. Check that hood lock primary latch is securely engaged with striker by dropping hood from approximately 200 mm (7.874 in) height or pressing lightly on the hood.
   CAUTION:
   Never drop hood from a height of 300 mm (11.811 in) or more.
6. Install as static closing face of hood is 94 – 490 N·m (9.6 – 50.0 kg-m).
   NOTE:
   • Exercise vertical force on right side and left side of hood lock.
   • Never press simultaneously both sides.
7. After adjustment tighten hood hinge mounting nuts to the specified torque.

HOOD HINGE

HOOD HINGE : Exploded View

INFOID:0000000007456869

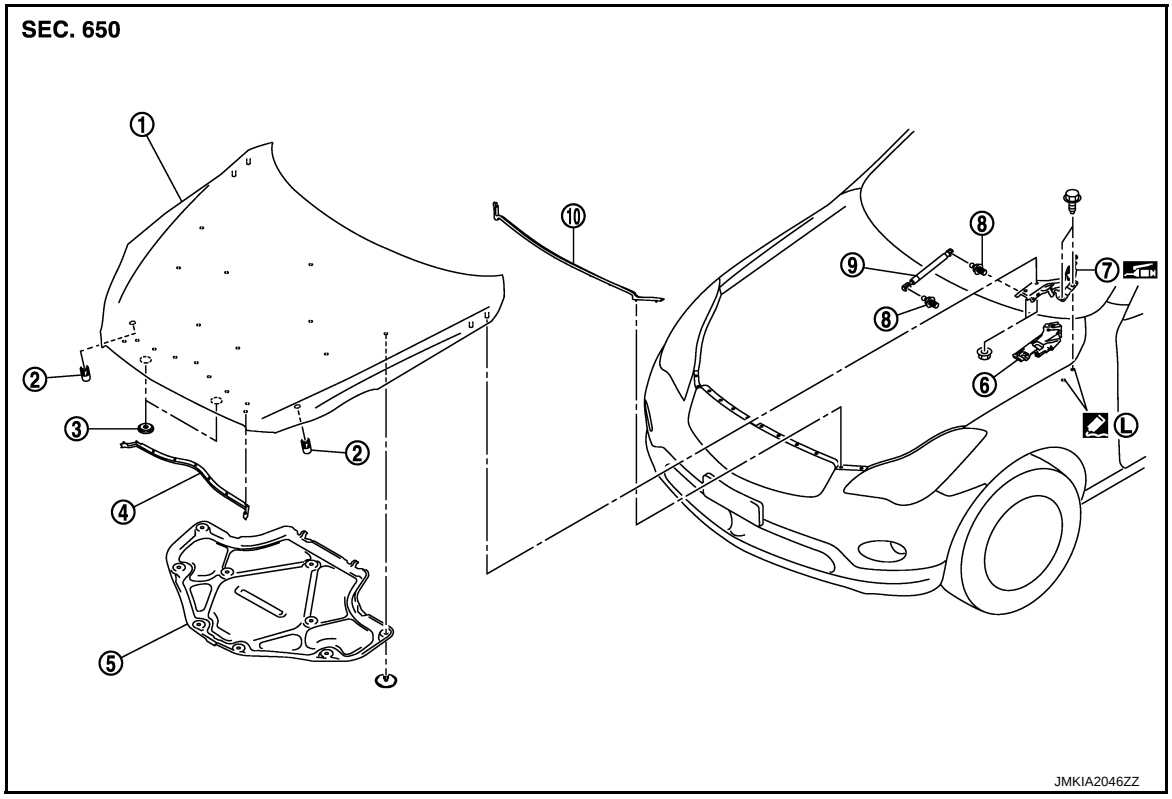

1.	Hood assembly	2.	Bumper rubber	3.	Seal
4.	Radiator core seal	5.	Hood insulator	6.	Hood hinge cover
7.	Hood hinge	8.	Stud ball	9.	Hood stay
10.	Hood seal (front)				

Ⓛ : Apply Genuine High Strength Locking Sealant or equivalent.

Refer to GI-4, "Components" for symbols in the figure.

HOOD HINGE : Removal and Installation

INFOID:0000000007456870

REMOVAL

1. Remove hood hinge cover (LH/RH) (1).
   NOTE:
   While pushing the pawls, pull hood hinge cover in the direction of the arrow.

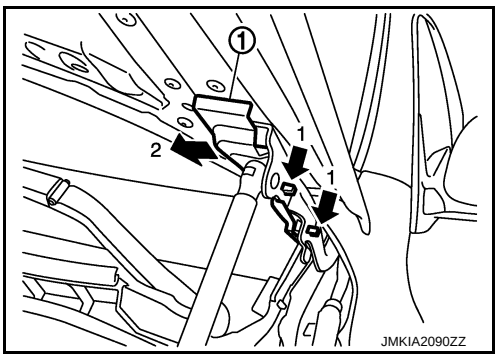

2. Remove hood assembly. Refer to DLK-228, "HOOD ASSEMBLY : Removal and Installation".
3. Remove front fender. Refer to DLK-238, "Removal and Installation".
4. Remove hood hinge mounting bolts, and then remove hood hinge.

INSTALLATION

Install in the reverse order of removal.

CAUTION:

- **Before installation of hood hinge, apply anticorrosive agent onto the surface of the vehicle body.**
- **Before installation of hood hinge, drop genuine high strength locking sealant or equivalent into bolt hole of hood hinge (body side).**
- **After installation, apply touch-up paint (the body color) onto the head of the hinge mounting bolts and nuts.**
- **After installation, perform hood fitting adjustment. Refer to DLK-230, "HOOD ASSEMBLY : Adjustment".**

HOOD STAY

HOOD STAY : Exploded View

INFOID:0000000007456871

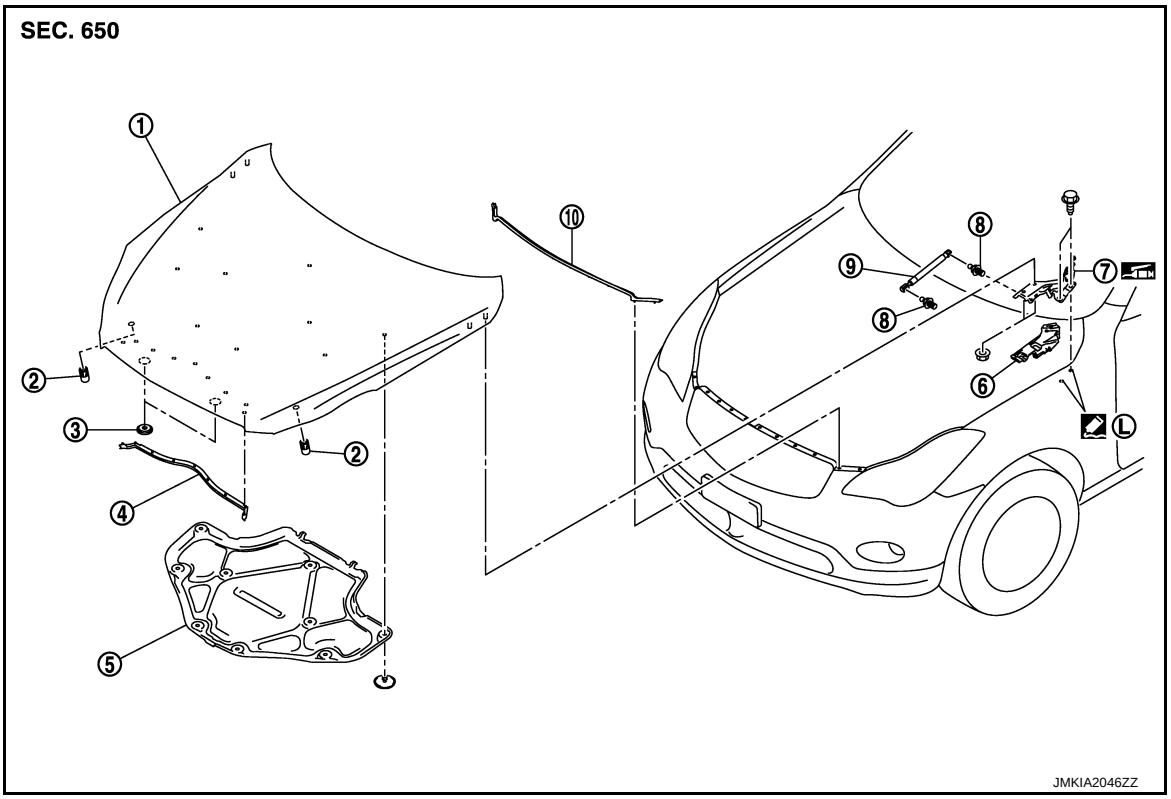

1.	Hood assembly	2.	Bumper rubber	3.	Seal
4.	Radiator core seal	5.	Hood insulator	6.	Hood hinge cover
7.	Hood hinge	8.	Stud ball	9.	Hood stay
10.	Hood seal (front)				

Ⓛ : Apply Genuine High Strength Locking Sealant or equivalent.

Refer to GI-4, "Components" for symbols in the figure.

HOOD STAY : Removal and Installation

INFOID:0000000007456872

REMOVAL

1. Support hood lock assembly with a proper material to prevent it from falling.

   WARNING:
   Body injury may occur if no supporting rod is holding the hood open when removing the hood stay.

2. Remove the metal clip (3) located on the connection between the hood stay (1) and the stud ball (2) (hood side), by using a flat-bladed screwdriver (A).
3. Disengage the stud ball from the hood stay (hood side).
4. Repeat the same operation to disengage the stud ball from the hood stay (body side), then remove the hood stay.

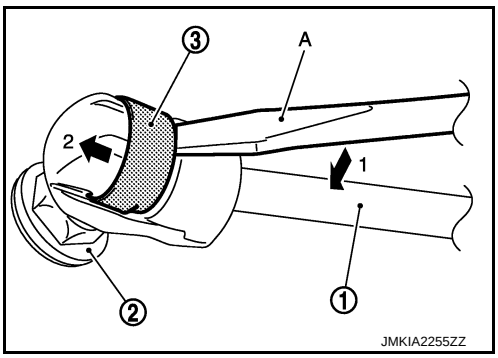

INSTALLATION

Install in the reverse order of removal.

HOOD STAY : Disposal

INFOID:0000000007456873

1. Fix hood stay (1) using a vise (C).
2. Using hacksaw (A) slowly make 2 holes in the hood stay, in numerical order as shown in the figure.

CAUTION:

- **When cutting a hole on hood stay, always cover a hacksaw using a shop cloth (B) to avoid scattering metal fragments or oil.**
- **Wear eye protection (safety glasses).**
- **Wear gloves.**

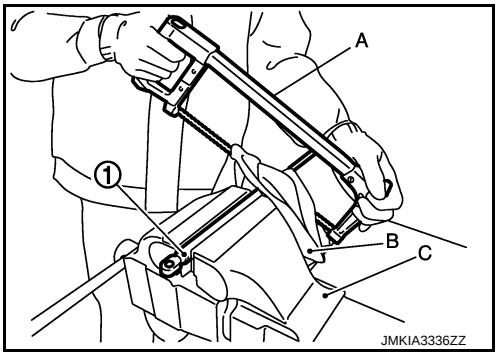

A: 20 mm (0.787 in)

B: Cut at the groove.

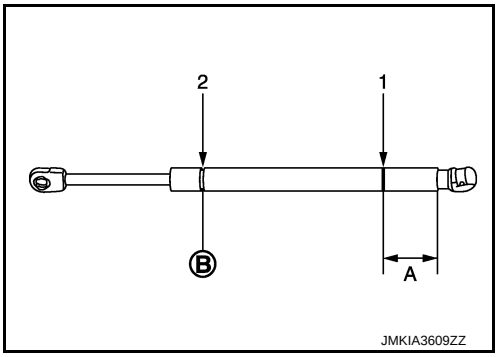

RADIATOR CORE SUPPORT

Exploded View

INFOID:0000000007456874

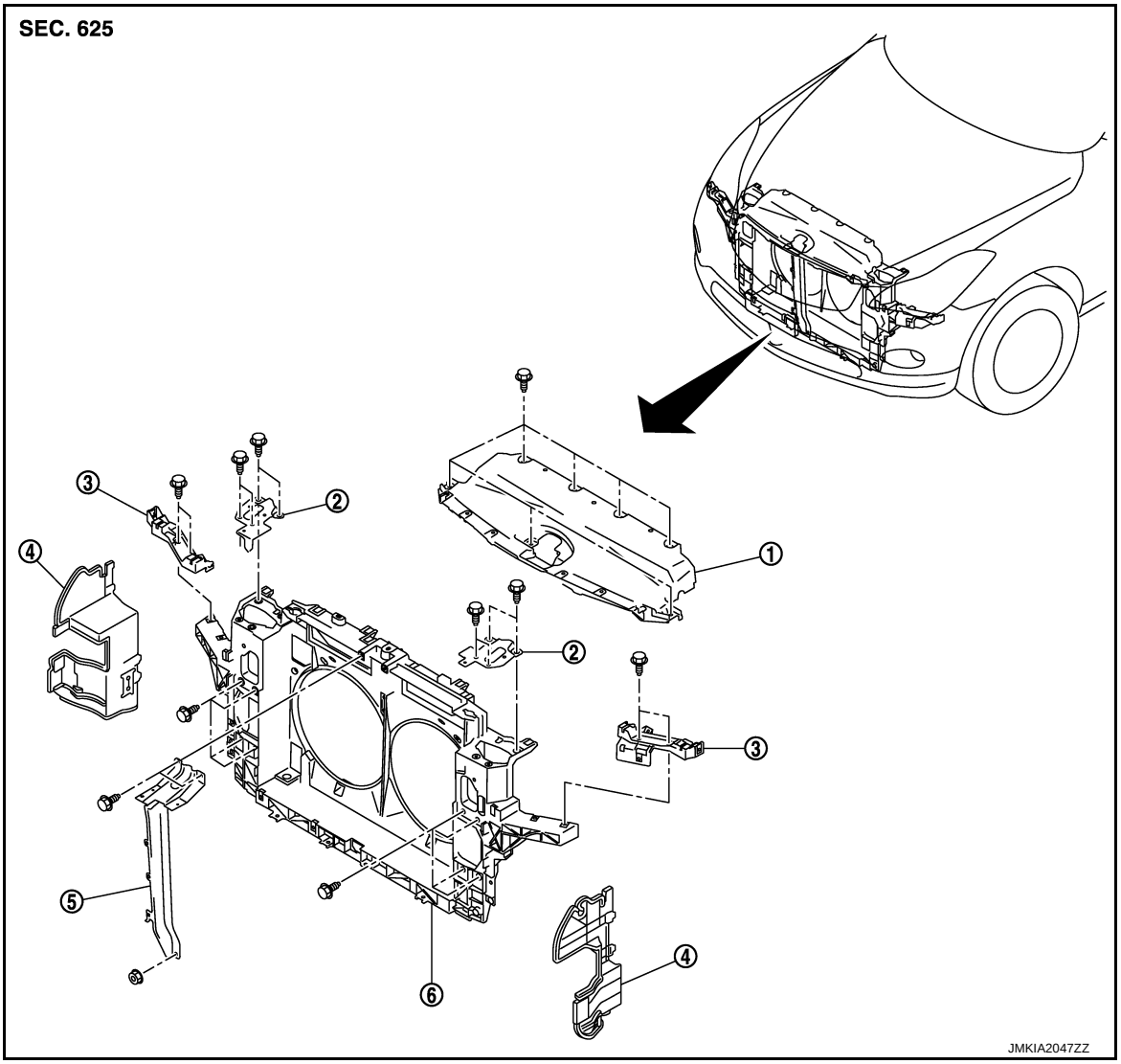

1. Hood lock cover
2. Hood lock bracket (LH/RH)
3. Head lamp bracket (LH/RH)
4. Air guide (LH/RH)
5. Hood lock stay assembly
6. Radiator core support

Removal and Installation

INFOID:0000000007456875

REMOVAL

1. Use a refrigerant collecting equipment to discharge the refrigerant. Refer to HA-24, "Collection and Charge".
2. Drain engine coolant from radiator. Refer to CO-7, "Draining".
3. Remove engine under cover. Refer to EXT-31, "Removal and Installation".
4. Remove front grille. Refer to EXT-20, "Removal and Installation".
5. Remove front bumper fascia, energy absorber, reinforcement. Refer to EXT-13, "Removal and Installation".
6. Remove mounting bolts of hood lock cover.
7. Disconnect harness clip and hood lock cable from hood lock cover.
8. Remove hood lock cover.

9. Remove front combination lamp (LH/RH). Refer to EXL-210, "Removal and Installation" (XENON TYPE) or EXL-385, "Removal and Installation" (HALOGEN TYPE).
10. Disconnect hood lock switch connector (A) from head lamp bracket (RH) (1).
11. Remove mounting bolts and remove hood lock bracket (2) (LH/RH).

⬅ : Bolt

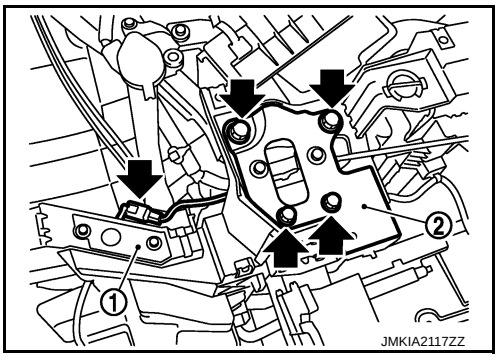

12. Disconnect hood lock cable from hood lock (LH/RH).
13. Disassembly hood lock from hood lock bracket (LH/RH).
14. Disconnect all clamp of hood cable from radiator core support assembly.
15. Disconnect harness connector of refrigerant pressure sensor. Refer to HAC-131, "Removal and Installation".
16. Disconnect harness connector of ambient sensor. Refer to HAC-124, "Removal and Installation".
17. Remove air guide (LH).
18. Remove ICC sensor integrated unit (with intelligent cruse control model). Refer to CCS-174, "Removal and Installation".
19. Remove horn (Hi/Lo). Refer to HRN-7, "Removal and Installation".
20. Remove intelligent key warning buzzer. Refer to DLK-278, "Removal and Installation".
21. Disconnect harness clamp from hood lock stay.
22. Remove mounting bolt and nut, and remove hood lock stay.
23. Remove washer tank. Refer to WW-111, "Removal and Installation".
24. Remove power steering oil cooler. Refer to ST-51, "2WD : Exploded View" (2WD) or ST-52, "AWD : Exploded View" (AWD).
25. Remove air guide (RH).
26. Remove mounting bolt of power steering oil cooler pipe bracket. Refer to ST-51, "2WD : Exploded View" (2WD) or ST-52, "AWD : Exploded View" (AWD).
27. Remove air cleaner box (LH/RH). Refer to EM-27, "Removal and Installation".
28. Remove front under side cover (LH). Refer to EXT-31, "Removal and Installation".
29. Remove radiator upper hose and lower hose at radiator side. Refer to CO-13, "Removal and Installation".
30. Remove mounting bolts of condenser assembly from radiator core support assembly. Refer to HA-48, "CONDENSER : Removal and Installation".
31. Disconnect AT fluid cooler hose (upper/lower) from fan shroud and remove AT fluid cooler hose (upper/lower) from radiator. Refer to TM-202, "2WD : Removal and Installation" (2WD) or TM-204, "AWD : Removal and Installation" (AWD).
32. Remove condenser assembly. Refer to HA-48, "CONDENSER : Removal and Installation".
33. Remove radiator. Refer to CO-13, "Removal and Installation".
34. Disconnect harness connector of crash zone sensor. Refer to SR-21, "Removal and Installation".
35. Disconnect harness connector of cooling fan control module. Refer to CO-17, "Removal and Installation".
36. Disconnect all harness clip from radiator core support assembly.
37. Remove mounting bolts, and then remove radiator core support assembly.
    CAUTION:
    Operate with two workers, because of its heavy weight.
38. Remove the following parts after removing radiator core support assembly.
    - Head lamp bracket
    - Cooling fan (LH/RH): Refer to CO-17, "Removal and Installation".
    - Crash zone sensor: Refer to SR-21, "Removal and Installation".
    - Ambient sensor: Refer to HAC-124, "Removal and Installation".

INSTALLATION

Install in the reverse order of removal.

CAUTION:

- **Replenish the following parts.**
- **Refrigerant: Refer to HA-24, "Collection and Charge".**
- **Engine coolant: Refer to CO-8, "Refilling".**
- **AT fluid: Refer to TM-170, "Changing".**
- **Power steering oil: Refer to ST-10, "Inspection".**
- **Adjust the following parts.**
- **ICC sensor integrated unit (with intelligent cruse control model): Refer to CCS-7, "ADDITIONAL SERVICE WHEN REPLACING CONTROL UNIT (ICC SENSOR INTEGRATED UNIT) : Description".**
- **Front combination lamp: Refer to EXL-206, "Aiming Adjustment Procedure" (XENON TYPE) or EXL-382, "Aiming Adjustment Procedure" (HALOGEN TYPE).**
- **Around view monitor (BOSE AUDIO WITH NAVIGATION): Refer to AV-235, "CALIBRATING CAMERA IMAGE (AROUND VIEW MONITOR) : Special Repair Requirement"**

FRONT FENDER

Exploded View

INFOID:0000000007456876

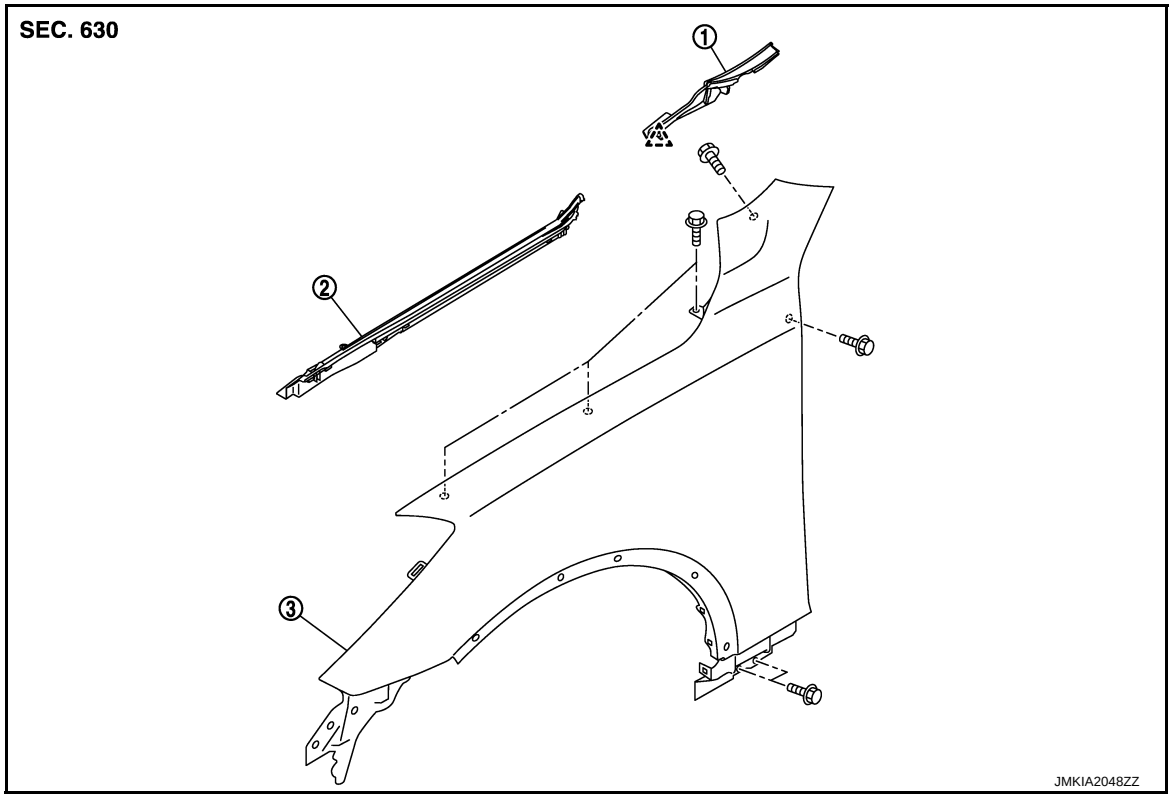

1. Front fender cover
2. Hood seal assembly (side)
3. Front fender

: Pawl

Removal and Installation

INFOID:0000000007456877

CAUTION:
Use a shop cloth to protect the body from being damaged during removal and installation.

REMOVAL

1. Remove the following parts.
   - LH side
     Brake master cylinder cover and hood ledge cover (LH): Refer to EXT-23, "Removal and Installation".
   - RH side
     Battery cover and hood ledge cover (RH): Refer to EXT-23, "Removal and Installation".
2. Remove clips as shown in the figure by arrows, and remove hood seal assembly (side).

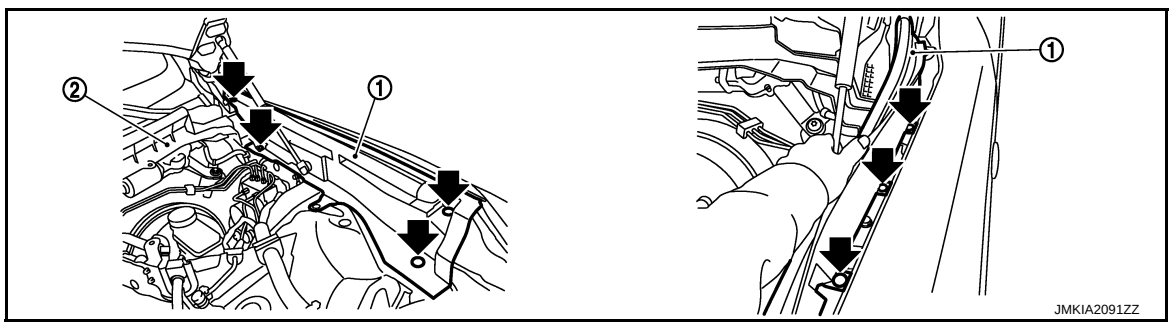

1. Hood seal assembly (side)
2. Cowl top cover

3. Remove fender protector. Refer to EXT-25, "FENDER PROTECTOR : Removal and Installation".
4. Remove front bumper fascia. Refer to EXT-13, "Removal and Installation".
5. Remove front combination lamp. Refer to EXL-210, "Removal and Installation" (XENON TYPE) or EXL-385, "Removal and Installation" (HALOGEN TYPE).
6. Remove front fender cover.
7. Remove fillet molding. Refer to EXT-32, "Removal and Installation"
8. Remove center mod guard. Refer to EXT-29, "Removal and Installation".
9. Remove mounting bolts except bolt of windshield side.
10. Loosen the mounting bolt (windshield glass side), then pull the front fender upward to remove it.

CAUTION:
- **The mounting bolt (windshield glass side) can not be removed because there is not enough space, between the front fender and the windshield glass.**
- **A viscous urethane foam is installed on the back surface of front fender. When removing the front fender, peel of the urethane foam bit at a time, and carefully to remove it.**

INSTALLATION

Install in the reverse order of removal.

CAUTION:
- **After installation, check front fender adjustment. Refer to DLK-230, "HOOD ASSEMBLY : Adjustment" and DLK-241, "DOOR ASSEMBLY : Adjustment".**
- **After installation, apply the touch-up paint (the body color) onto the head of front fender mounting bolts.**
- **Adjust the following part.**
- **Front combination lamp: Refer to EXL-206, "Aiming Adjustment Procedure" (XENON TYPE) or EXL-382, "Aiming Adjustment Procedure" (HALOGEN TYPE).**
- **Around view monitor (BOSE AUDIO WITH NAVIGATION): Refer to AV-235, "CALIBRATING CAMERA IMAGE (AROUND VIEW MONITOR) : Special Repair Requirement"**

FRONT DOOR

DOOR ASSEMBLY

DOOR ASSEMBLY : Exploded View

INFOID:0000000007456878

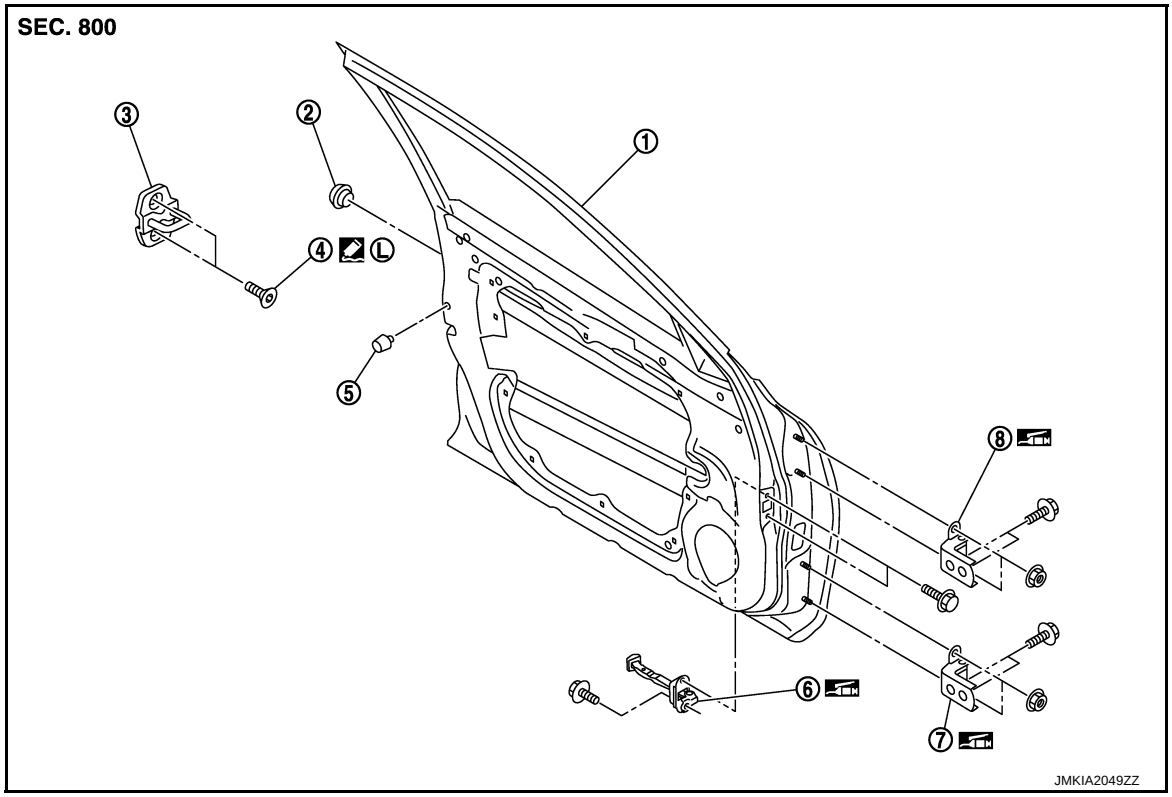

1. Front door panel
2. Grommet
3. Door striker
4. TORX bolt
5. Bumper rubber
6. Door check link
7. Door hinge (lower)
8. Door hinge (upper)

Refer to GI-4, "Components" for symbols in the figure.

DOOR ASSEMBLY : Removal and Installation

INFOID:0000000007456879

CAUTION:
- **Perform work with 2 workers, because of its heavy weight.**
- **When removing and installing front door assembly, support door with a jack and cloth to protect door and body.**

REMOVAL

1. Remove mounting bolts of door check link on the vehicle.
2. Remove front door harness grommet, and then pull out the harness from the vehicle.
3. Disconnect front door harness connector.
4. Remove door hinge mounting nuts (door side), and then remove door assembly.

INSTALLATION

Install in the reverse order of removal.

CAUTION:
- **Check front door open/close, lock/unlock operation after installation.**
- **Check door hinge rotating part for poor lubrication. If necessary, apply body grease.**
- **After installation, perform the fitting adjustment. Refer to DLK-241, "DOOR ASSEMBLY : Adjustment".**
- **After installation, apply touch-up paint (the body color) onto the head of door hinge mounting nuts.**

DOOR ASSEMBLY : Adjustment

INFOID:0000000007456880

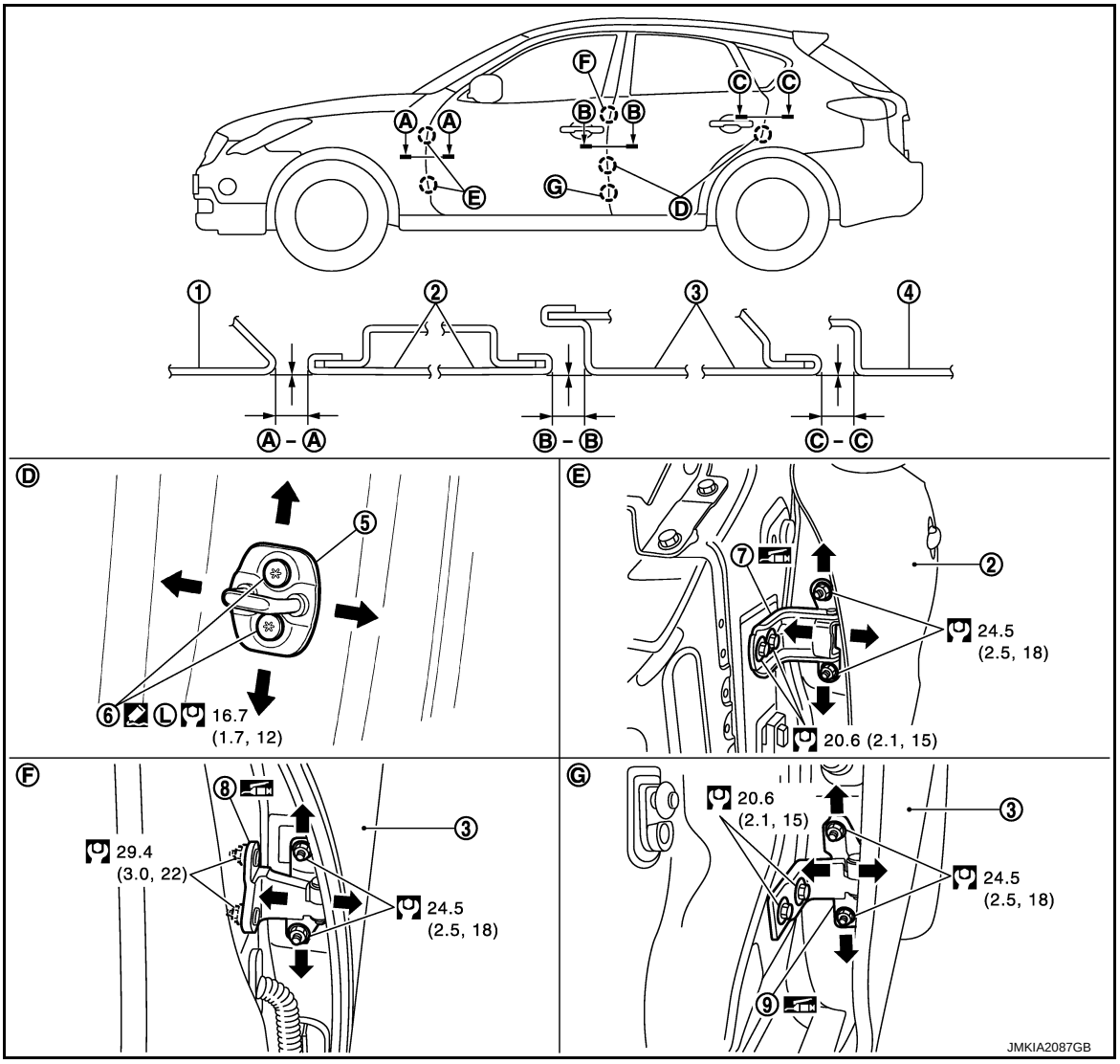

1. Front fender
2. Front door
3. Rear door
4. Body side outer
5. Door striker
6. TORX bolt
7. Front door hinge
8. Rear door hinge (upper)
9. Rear door hinge (lower)

Refer to GI-4, "Components" for symbols in the figure.

Check the clearance and surface height between front door and each part by visually and touching.
If the clearance and the surface height are out of specification, adjust them according to the procedures shown below.

Unit: mm (in)

Portion		Clearance	Surface height
Front fender – Front door	A – A	2.6 – 4.6 (0.102 – 0.181)	- 1.0 – 1.0 (- 0.039 – 0.039)
Front door – Rear door	B – B	2.6 – 4.6 (0.102 – 0.181)	- 1.0 – 1.0 (- 0.039 – 0.039)

1. Remove front fender. Refer to DLK-238, "Removal and Installation".
2. Loosen door hinge mounting nuts on door side.
3. Adjust the surface height of front door according to the fitting standard dimension.
4. Temporarily tighten door hinge mounting nuts on door side.
5. Loosen door hinge mounting bolts on body side.

6. Raise front door at rear end to adjust clearance of the front door according to the fitting standard dimension.
7. After adjustment tighten bolts and nuts to the specified torque.
8. Install front fender. Refer to DLK-238, "Removal and Installation".

DOOR STRIKER ADJUSTMENT

Adjust door striker so that it becomes parallel with door lock insertion direction.

DOOR STRIKER

DOOR STRIKER : Exploded View

INFOID:0000000007456881

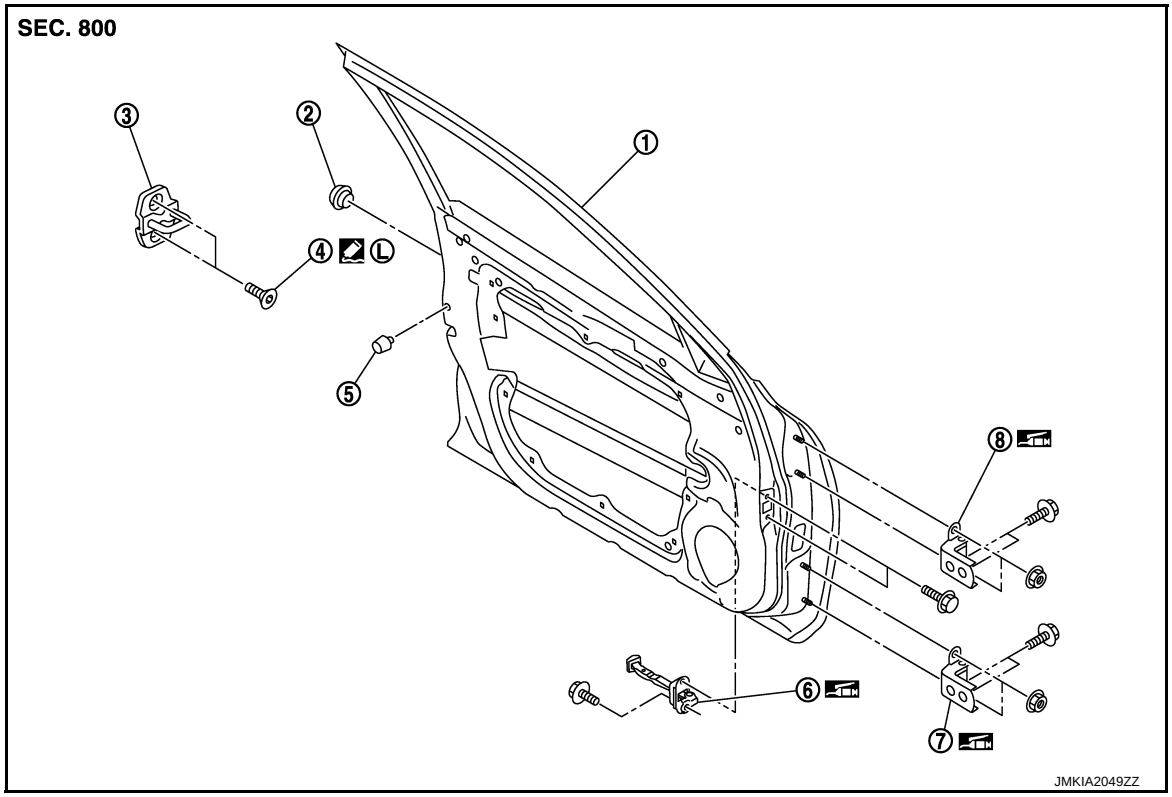

1. Front door panel
2. Grommet
3. Door striker
4. TORX bolt
5. Bumper rubber
6. Door check link
7. Door hinge (lower)
8. Door hinge (upper)

Refer to GI-4, "Components" for symbols in the figure.

DOOR STRIKER : Removal and Installation

INFOID:0000000007456882

REMOVAL

Remove TORX bolts, and then remove door striker.

INSTALLATION

Install in the reverse order of removal.

CAUTION:

- **Check front door open/close, lock/unlock operation after installation.**
- **After installation, check to perform the fitting adjustment. Refer to DLK-241, "DOOR ASSEMBLY : Adjustment".**

DOOR HINGE

DOOR HINGE : Exploded View

INFOID:0000000007456883

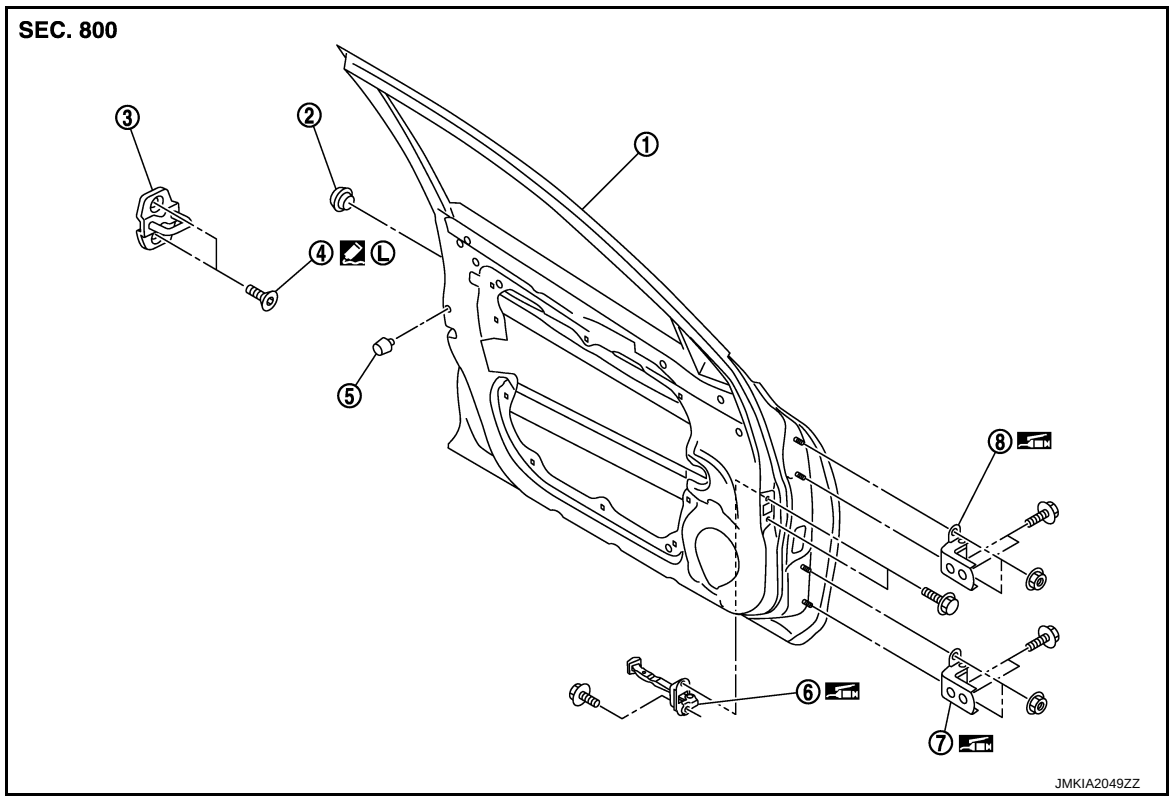

1. Front door panel
2. Grommet
3. Door striker
4. TORX bolt
5. Bumper rubber
6. Door check link
7. Door hinge (lower)
8. Door hinge (upper)

Refer to GI-4, "Components" for symbols in the figure.

DOOR HINGE : Removal and Installation

INFOID:0000000007456884

REMOVAL

1. Remove front fender. Refer to DLK-238, "Removal and Installation"
2. Remove front door assembly. Refer to DLK-240, "DOOR ASSEMBLY : Removal and Installation".
3. Remove front door hinge mounting bolts, and then remove front door hinge.

INSTALLATION

Install in the reverse order of removal.

CAUTION:

- **Check front door open/close, lock/unlock operation after installation.**
- **Check door hinge rotating part for poor lubrication. If necessary, apply body grease.**
- **After installation, perform the fitting adjustment. Refer to DLK-241, "DOOR ASSEMBLY : Adjustment".**
- **After installation, apply touch-up paint (the body color) onto the head of door hinge mounting nuts.**

DOOR CHECK LINK

DOOR CHECK LINK : Exploded View

INFOID:0000000007456885

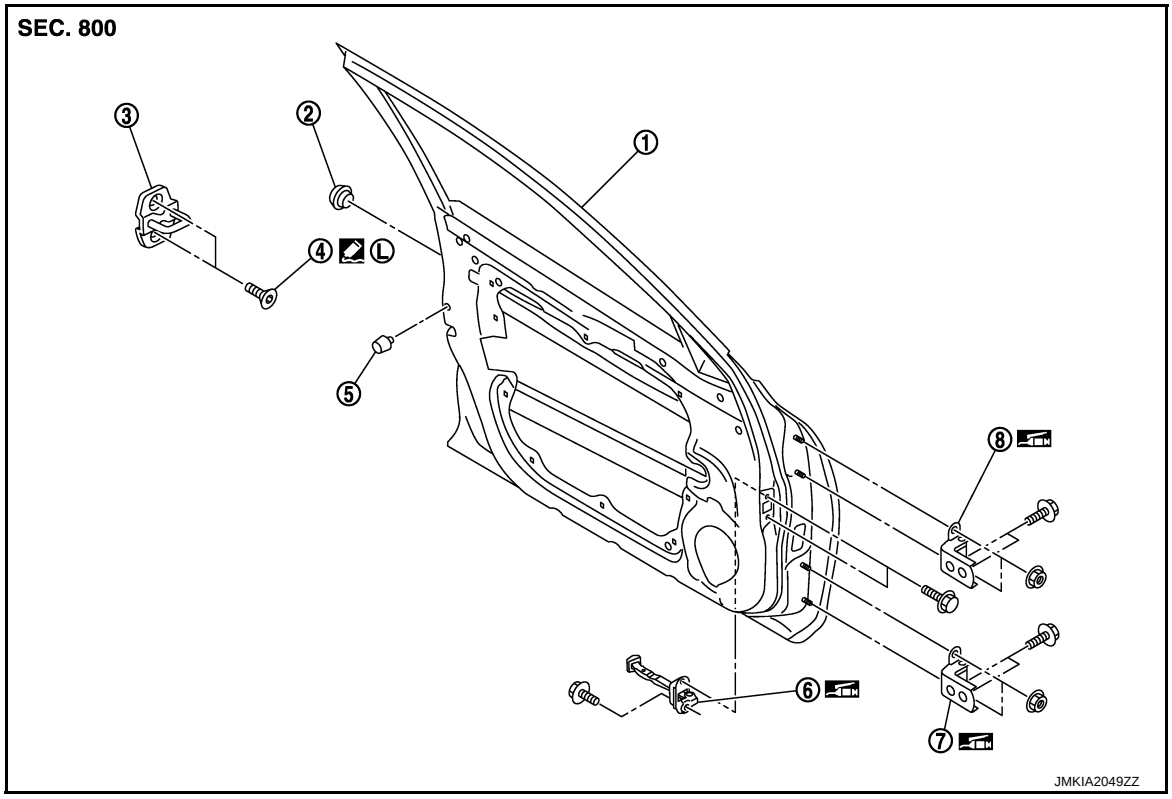

1. Front door panel
2. Grommet
3. Door striker
4. TORX bolt
5. Bumper rubber
6. Door check link
7. Door hinge (lower)
8. Door hinge (upper)

Refer to GI-4, "Components" for symbols in the figure.

DOOR CHECK LINK : Removal and Installation

INFOID:0000000007456886

REMOVAL

1. Remove front door finisher. Refer to INT-11, "DRIVER SIDE : Removal and Installation" (driver side) or INT-14, "PASSENGER SIDE : Removal and Installation" (passenger side).
2. Fully close the front door window.
3. Remove front door speaker. Refer to AV-130, "Removal and Installation" (base audio without navigation), AV-318, "Removal and Installation" (BOSE audio without navigation) or AV-521, "Removal and Installation" (BOSE audio with navigation).
4. Remove mounting bolts of door check link on the vehicle.
5. Remove mounting bolts of door check link on door panel.
6. Take door check link out from the hole of door panel.

INSTALLATION

Install in the reverse order of removal.

CAUTION:

Check front door open/close operation after installation.

REAR DOOR

DOOR ASSEMBLY

DOOR ASSEMBLY : Exploded View

INFOID:0000000007456887

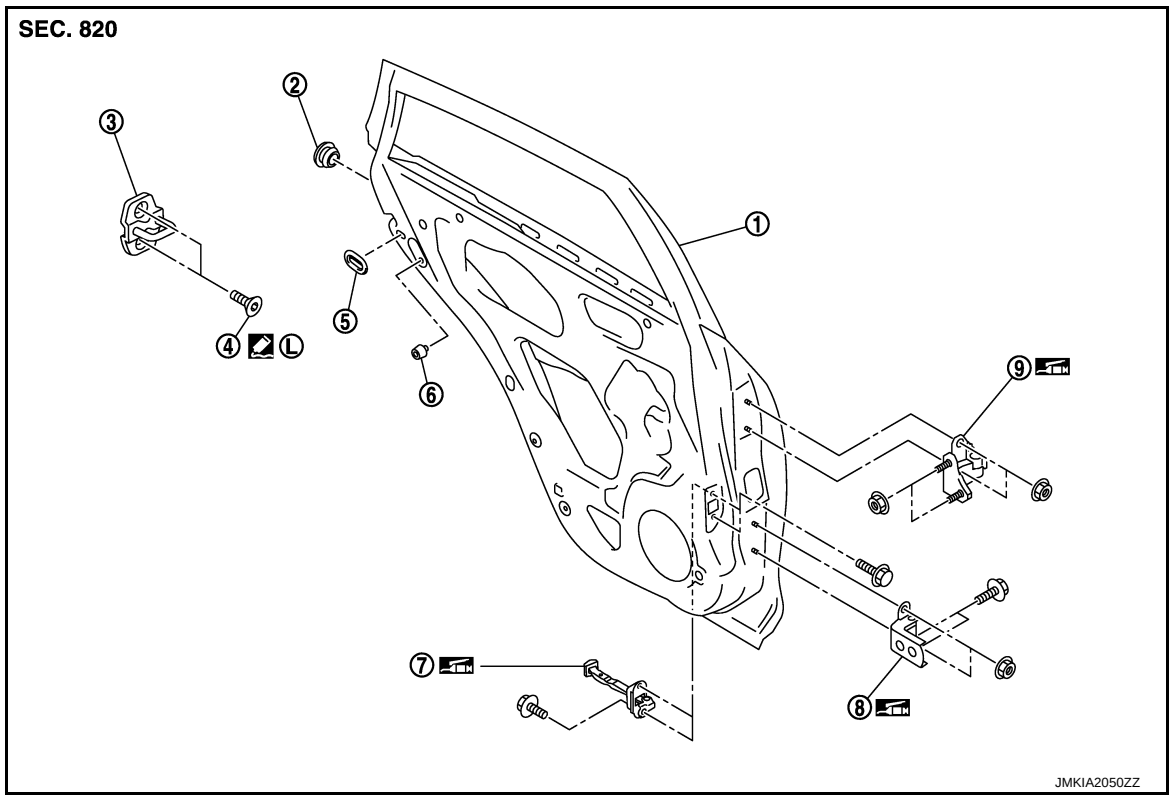

1. Rear door panel
2. Grommet
3. Door striker
4. TORX bolt
5. Seal rubber
6. Bumper rubber
7. Door check link
8. Door hinge (lower)
9. Door hinge (upper)

Refer to GI-4, "Components" for symbols in the figure.

DOOR ASSEMBLY : Removal and Installation

INFOID:0000000007456888

CAUTION:
- **Perform work with 2 workers, because of it's heavy weight.**
- **When removing and installing rear door assembly, support door with a jack and cloth to protect door and body.**

REMOVAL

1. Remove mounting bolts of door check link on the vehicle.
2. Remove rear door harness grommet, and then pull out door harness from the vehicle.
3. Disconnect rear door harness connector.
4. Remove door hinge mounting nuts (door side), and then remove rear door assembly.

INSTALLATION

Install in the reverse order of removal.

CAUTION:
- **Check rear door open/close, lock/unlock operation after installation.**
- **Check door hinge rotating part for poor lubrication. If necessary, apply body grease.**
- **After installation, perform the fitting adjustment. Refer to DLK-246, "DOOR ASSEMBLY : Adjustment".**
- **After installation, apply touch-up paint (the body color) onto the head of door hinge mounting nuts.**

DOOR ASSEMBLY : Adjustment

INFOID:0000000007456889

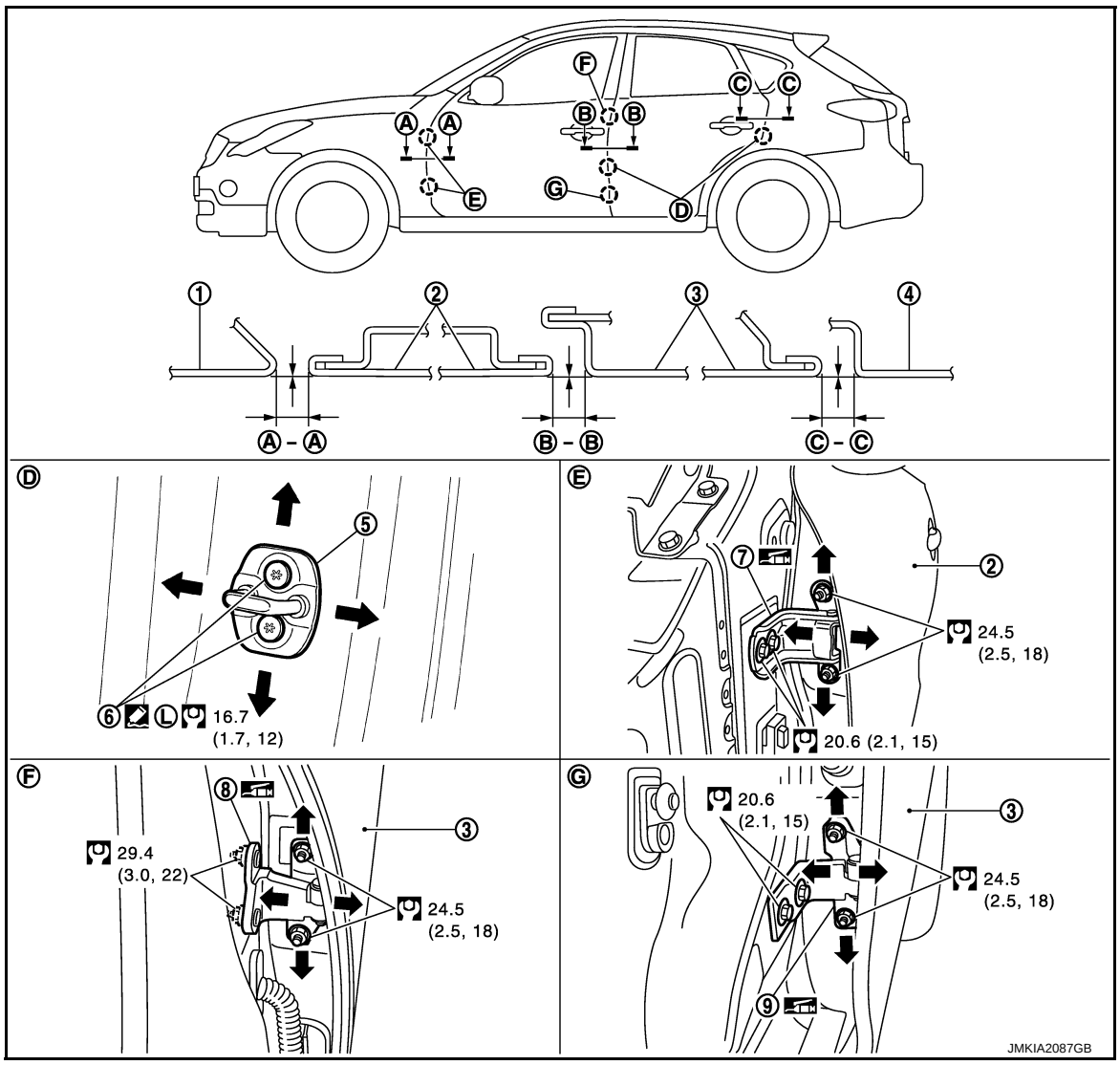

1. Front fender
2. Front door
3. Rear door
4. Body side outer
5. Door striker
6. TORX bolt
7. Front door hinge
8. Rear door hinge (upper)
9. Rear door hinge (lower)

Refer to GI-4, "Components" for symbols in the figure.

Check the clearance and surface height between rear door and each part by visually and touching.
If the clearance and the surface height are out of specification, adjust them according to the procedures shown below.

Unit: mm (in)

Portion		Clearance	Surface height
Front door – Rear door	B – B	2.6 – 4.6 (0.102 – 0.181)	-1.0 – 1.0 (-0.039 – 0.039)
Rear door – Body side outer	C – C	2.6 – 4.6 (0.102 – 0.181)	-1.0 – 1.0 (-0.039 – 0.039)

1. Remove center pillar lower garnish. Refer to INT-20, "Removal and Installation".
2. Loosen door hinge mounting nuts on door side.
3. Adjust the surface height of rear door according to the fitting standard dimension.
4. Temporarily tighten door hinge mounting nuts on door side.
5. Loosen door hinge mounting nuts and bolts on body side.
6. Raise rear door at rear end to adjust clearance of rear door according to the fitting standard dimension.

7. After adjustment tighten bolts and nuts to the specified torque.
8. Install center pillar lower garnish. Refer to .INT-20, "Removal and Installation"

DOOR STRIKER ADJUSTMENT

Adjust door striker so that it becomes parallel with door lock insertion direction.

DOOR STRIKER

DOOR STRIKER : Exploded View

INFOID:0000000007456890

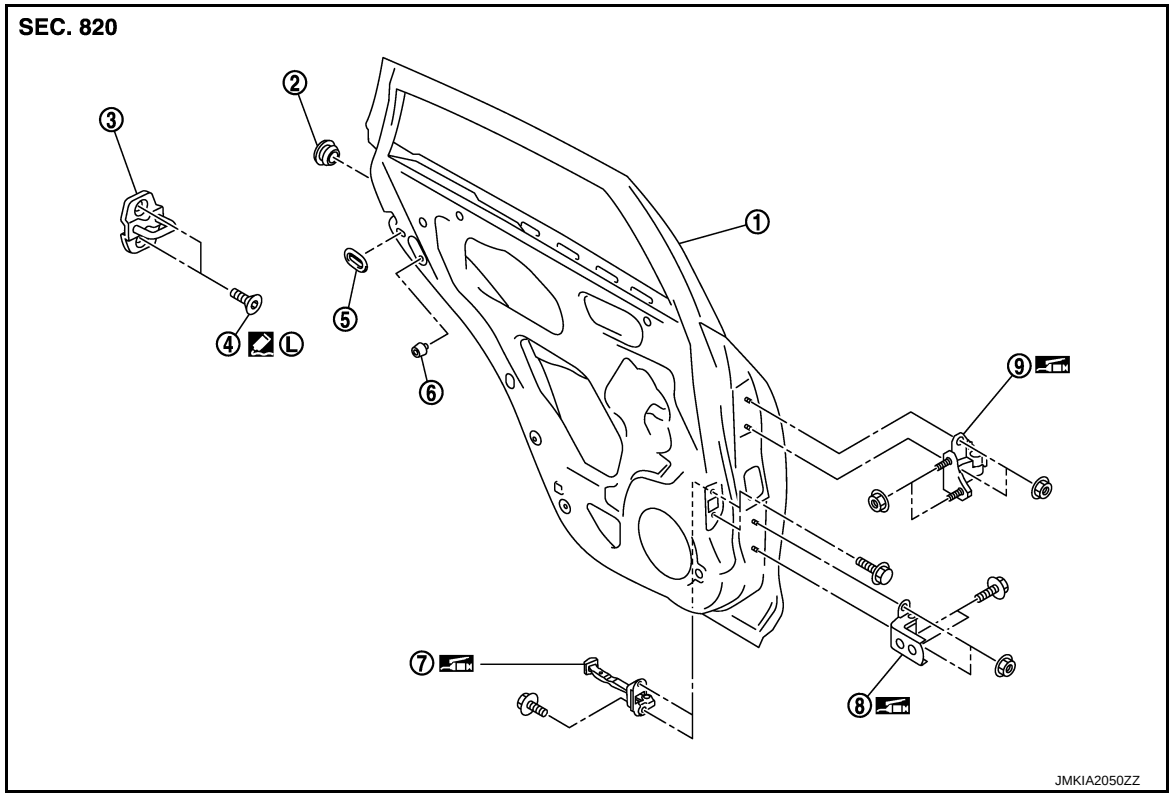

1. Rear door panel	2. Grommet	3. Door striker
4. TORX bolt	5. Seal rubber	6. Bumper rubber
7. Door check link	8. Door hinge (lower)	9. Door hinge (upper)

Refer to GI-4, "Components" for symbols in the figure.

DOOR STRIKER : Removal and Installation

INFOID:0000000007456891

REMOVAL

Remove TORX bolts, and then remove door striker.

INSTALLATION

Install in the reverse order of removal.

CAUTION:

- **Check rear door open/close, lock/unlock operation after installation.**
- **After installation, check to perform the fitting adjustment. Refer to DLK-246, "DOOR ASSEMBLY : Adjustment".**

DOOR HINGE

DOOR HINGE : Exploded View

INFOID:0000000007456892

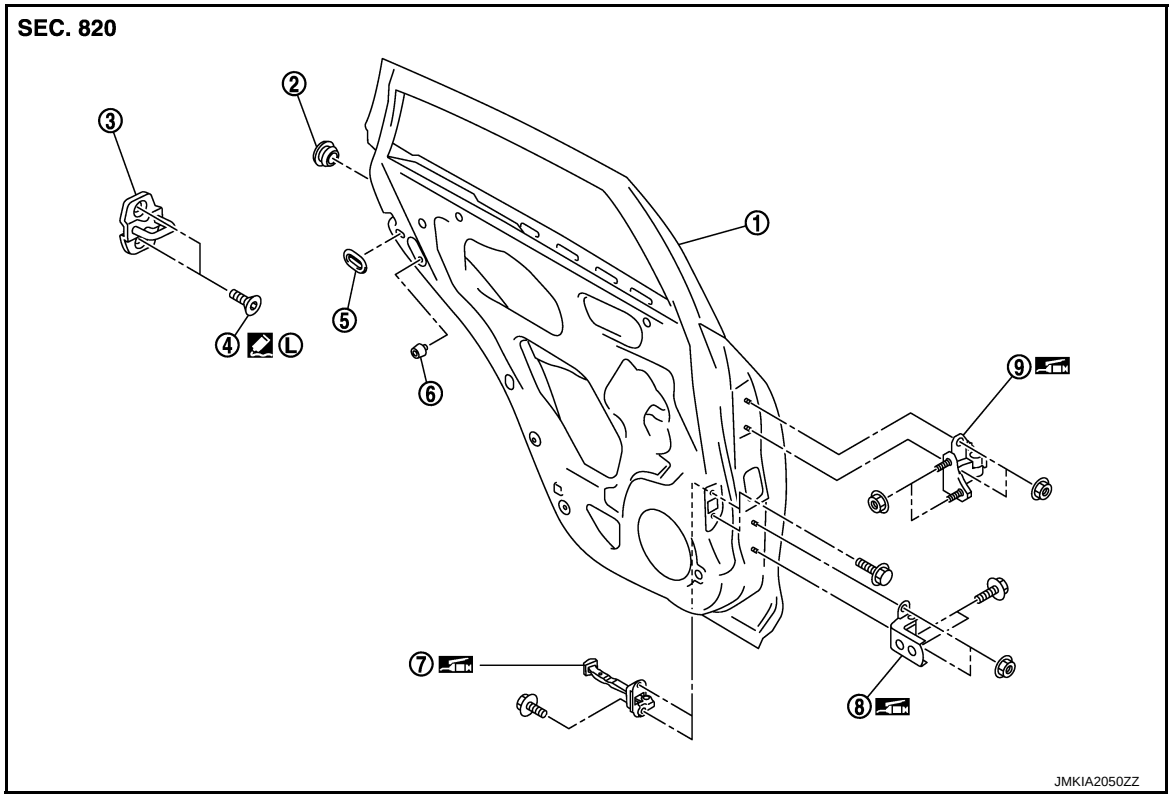

1. Rear door panel
2. Grommet
3. Door striker
4. TORX bolt
5. Seal rubber
6. Bumper rubber
7. Door check link
8. Door hinge (lower)
9. Door hinge (upper)

Refer to GI-4, "Components" for symbols in the figure.

DOOR HINGE : Removal and Installation

INFOID:0000000007456893

REMOVAL

1. Remove center pillar lower garnish. Refer to INT-20, "Removal and Installation".
2. Remove rear door assembly. Refer to DLK-245, "DOOR ASSEMBLY : Removal and Installation".
3. Remove rear door hinge mounting bolts and nuts (body side), and then remove door hinge.

INSTALLATION

Install in the reverse order of removal.

CAUTION:

- **Check rear door open/close operation after installation.**
- **Check door hinge rotating part for poor lubrication. If necessary, apply body grease.**
- **When removing and installing rear door assembly, perform the fitting adjustment. Refer to DLK-246, "DOOR ASSEMBLY : Adjustment".**
- **After installing, apply the touch-up paint (the body color) onto the head of door hinge mounting nuts.**

DOOR CHECK LINK

DOOR CHECK LINK : Exploded View

INFOID:0000000007456894

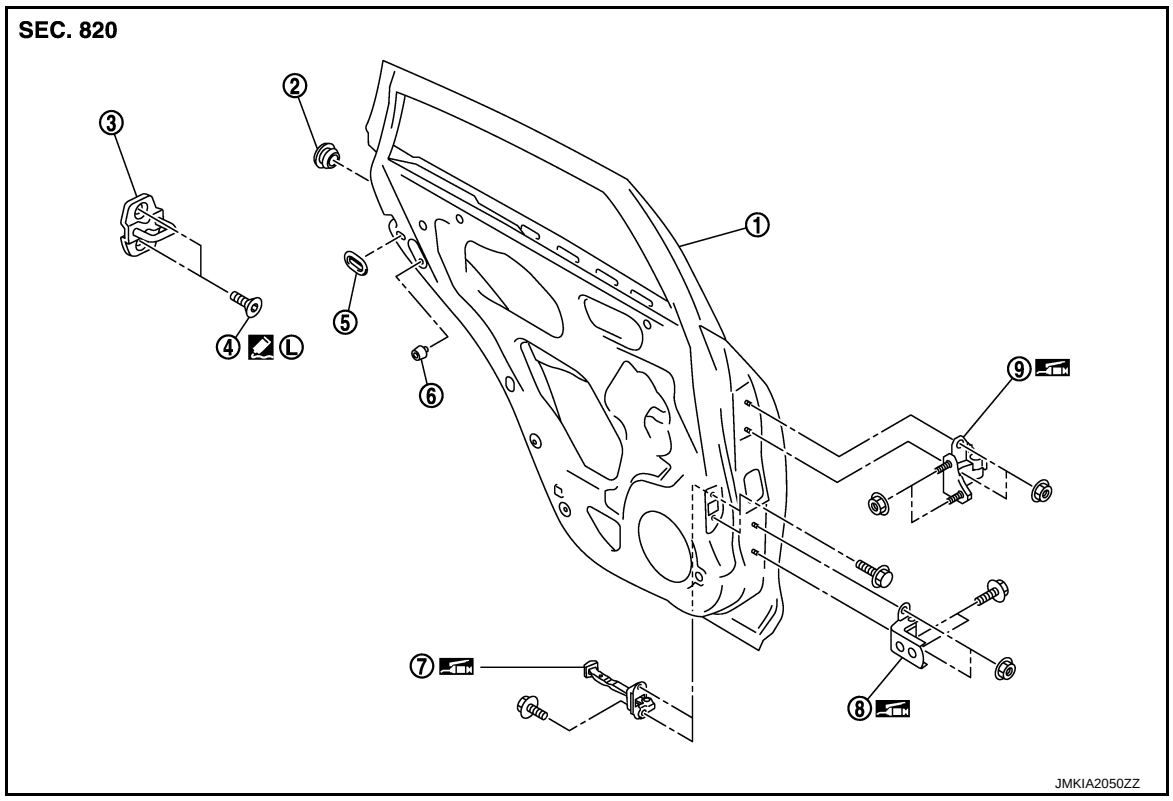

1. Rear door panel
2. Grommet
3. Door striker
4. TORX bolt
5. Seal rubber
6. Bumper rubber
7. Door check link
8. Door hinge (lower)
9. Door hinge (upper)

Refer to GI-4, "Components" for symbols in the figure.

DOOR CHECK LINK : Removal and Installation

INFOID:0000000007456895

REMOVAL

1. Remove rear door finisher. Refer to INT-17, "Removal and Installation".
2. Fully close the rear door window.
3. Remove rear door speaker. Refer to AV-131, "Removal and Installation" (base audio without navigation), AV-319, "Removal and Installation" (BOSE audio without navigation) or AV-522, "Removal and Installation" (BOSE audio with navigation).
4. Remove mounting bolts of the check link on the vehicle.
5. Remove mounting bolts of the check link on door panel.
6. Take door check link out from the hole of door panel.

INSTALLATION

Install in the reverse order of removal.

CAUTION:

Check rear door open/close operation after installation.

BACK DOOR

BACK DOOR ASSEMBLY

BACK DOOR ASSEMBLY : Exploded View

INFOID:0000000007456896

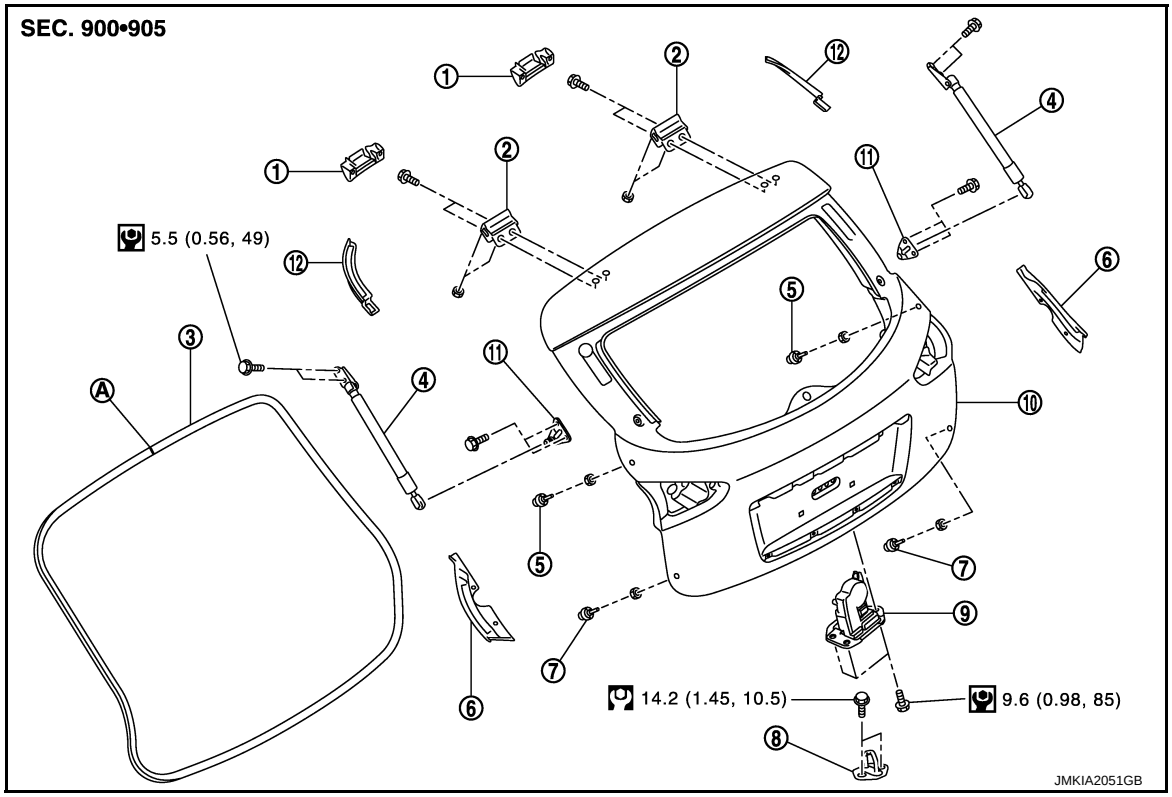

1. Back door hinge cover (LH/RH)
2. Back door hinge (LH/RH)
3. Back door weather-strip
4. Back door stay (LH/RH)
5. Bumper rubber (side) (LH/RH)
6. Back door seal (side) (LH/RH)
7. Bumper rubber (lower) (LH/RH)
8. Back door striker
9. Back door lock assembly
10. Back door assembly
11. Stud ball assembly (LH/RH)
12. Back door seal (upper) (LH/RH)

A : Center mark

Refer to GI-4, "Components" for symbols in the figure.

BACK DOOR ASSEMBLY : Removal and Installation

INFOID:0000000007456897

CAUTION:
Operate with two workers, because of its heavy weight.
NOTE:
The back door harness constitute the back door assembly.

REMOVAL

1. Remove back door finisher inner, back door plate, back door hinge cover. Refer to INT-40, "Removal and Installation".
2. Remove clips of head lining at rear end. Refer to INT-29, "NORMAL ROOF : Removal and Installation" (NORMAL ROOF) or INT-32, "SUNROOF : Removal and Installation" (SUNROOF).

3. Disconnect harness connectors and bolts as shown in the figure by arrows.
4. Remove grommet (LH) (1), and then pull harness out of vehicle at roof panel (2) hole.

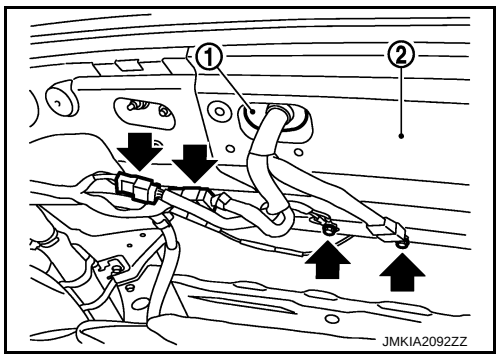

5. Remove grommet (RH), and then disconnect washer tube (1).

⬅ : Detaching points

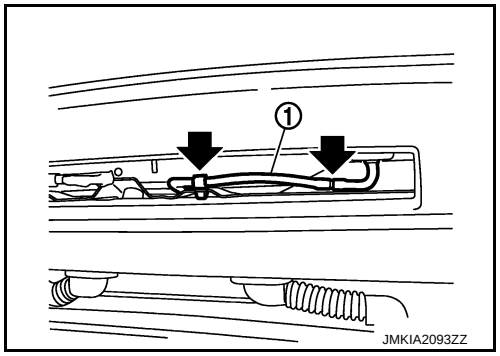

6. Pull washer tube out of back door.
7. Support back door lock with the proper material to prevent it from falling.

WARNING:
Body injury may occur if no supporting rod is holding the back door open when removing the back door stay.

8. Remove back door stay. Refer to DLK-255, "BACK DOOR STAY : Removal and Installation".
9. Remove back door hinge mounting bolts on back door and remove back door assembly.

INSTALLATION

Install in the reverse order of removal.

CAUTION:
- **Check back door open/close, lock/unlock operation after installation.**
- **After installation, perform fitting adjustment. Refer to DLK-252, "BACK DOOR ASSEMBLY : Adjustment".**

BACK DOOR ASSEMBLY : Adjustment

INFOID:0000000007456898

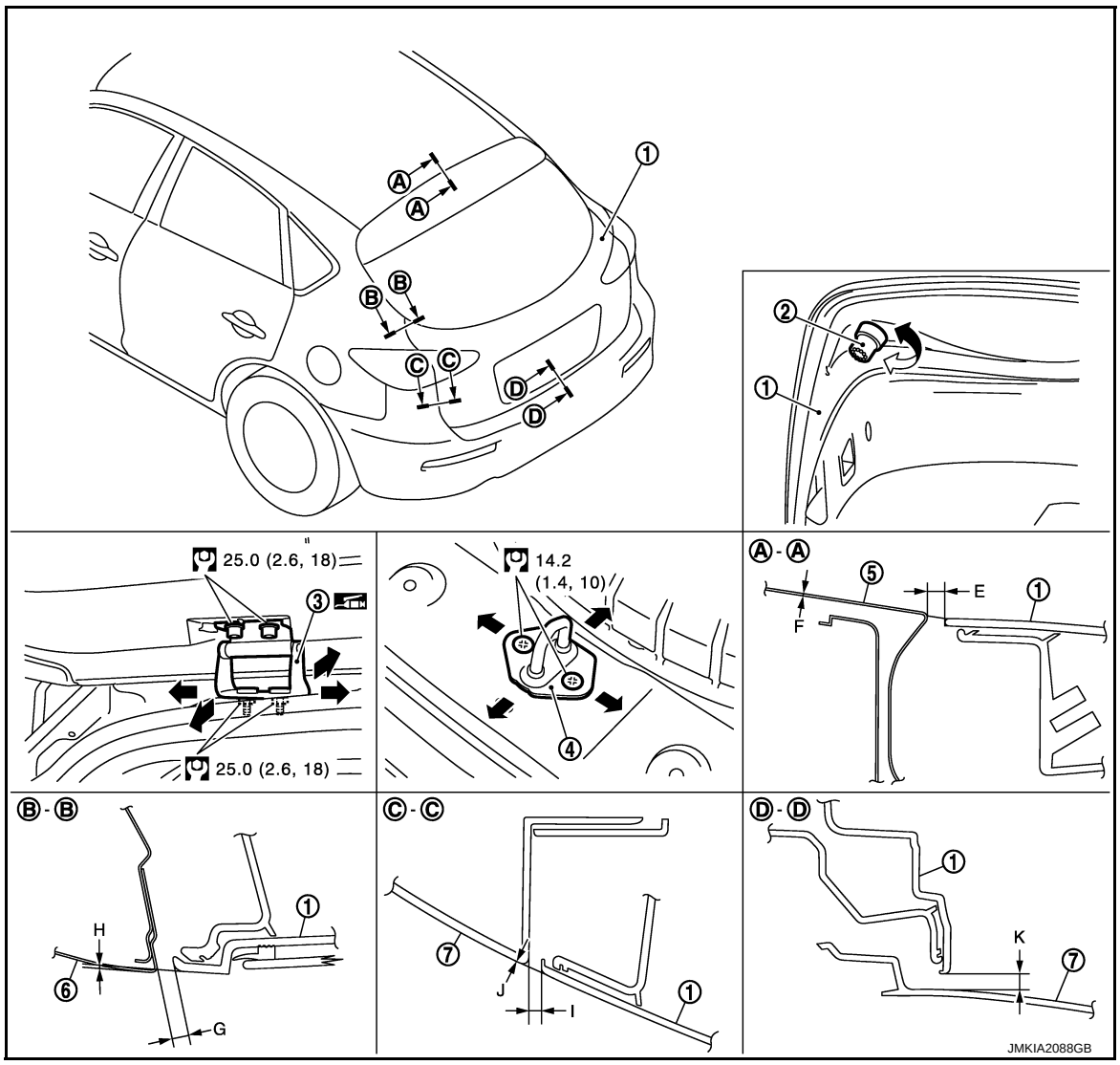

1. Back door assembly
2. Bumper rubber
3. Back door hinge
4. Back door striker
5. Roof
6. Body side outer
7. Rear bumper fascia

Refer to GI-4, "Components" for symbols in the figure.

Check the clearance and the surface height between back door and each part by visually and touching.
If the clearance and the surface height are out of specification, adjust them according to the procedures shown below.

Unit: mm (in)

Portion				Standard
Back door – Roof	A – A	E	Clearance	5.0 – 9.0 (0.197 – 0.354)
		F	Surface height	–1.0 – 3.0 (–0.039 – 0.118)
Back door – Body side outer	B – B	G	Clearance	3.0 – 7.0 (0.118 – 0.276)
		H	Surface height	–1.0 – 3.0 (–0.039 – 0.118)
Back door – Rear bumper fascia	C – C	I	Clearance	3.0 – 7.2 (0.118 – 0.283)
		J	Surface height	–1.7 – 2.5 (–0.067 – 0.098)
Back door – Rear bumper fascia	D – D	K	Clearance	5.1 – 9.1 (0.197 – 0.358)

1. Remove back door hinge cover. Refer to INT-40, "Removal and Installation".
2. Loosen back door hinge mounting bolts (back door side).
3. Loosen bumper rubber (side/lower).
4. Remove luggage rear plate mask. Refer to INT-37, "Removal and Installation".
5. Loosen back door striker mounting bolts.
6. Lift up back door approximately 100 – 150 mm (3.937 – 5.906 in) height then close it lightly and check that it is engaged firmly with back door closed.
7. Check the clearance and surface height.
8. Finally tighten back door hinge, bumper rubber, and back door striker.
9. Install back door hinge cover and luggage rear plate mask. Refer to INT-40, "Removal and Installation" and INT-37, "Removal and Installation"

BACK DOOR STRIKER ADJUSTMENT

Adjust back door striker so that i becomes parallel with back door lock insertion direction.

BACK DOOR STRIKER

BACK DOOR STRIKER : Exploded View

INFOID:0000000007456899

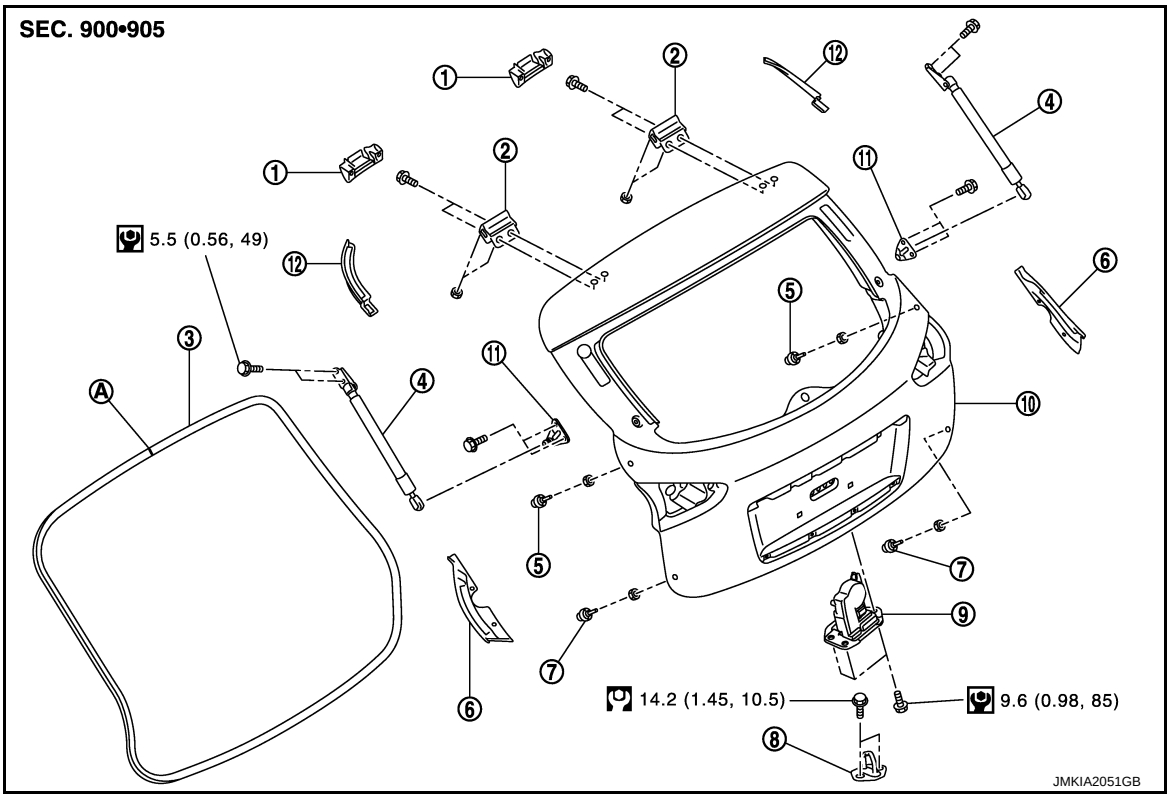

1. Back door hinge cover (LH/RH)
2. Back door hinge (LH/RH)
3. Back door weather-strip
4. Back door stay (LH/RH)
5. Bumper rubber (side) (LH/RH)
6. Back door seal (side) (LH/RH)
7. Bumper rubber (lower) (LH/RH)
8. Back door striker
9. Back door lock assembly
10. Back door assembly
11. Stud ball assembly (LH/RH)
12. Back door seal (upper) (LH/RH)

A : Center mark

Refer to GI-4, "Components" for symbols in the figure.

BACK DOOR STRIKER : Removal and Installation

INFOID:0000000007456900

REMOVAL

1. Remove luggage rear plate mask. Refer to INT-37, "Removal and Installation".
2. Remove mounting bolts, and then remove back door striker.

INSTALLATION

Install in the reverse order of removal.

CAUTION:

- **Check back door open/close operation after installation.**
- **When removing and installing back door striker, check to perform the fitting adjustment. Refer to DLK-252, "BACK DOOR ASSEMBLY : Adjustment".**

BACK DOOR HINGE

BACK DOOR HINGE : Exploded View

INFOID:0000000007456901

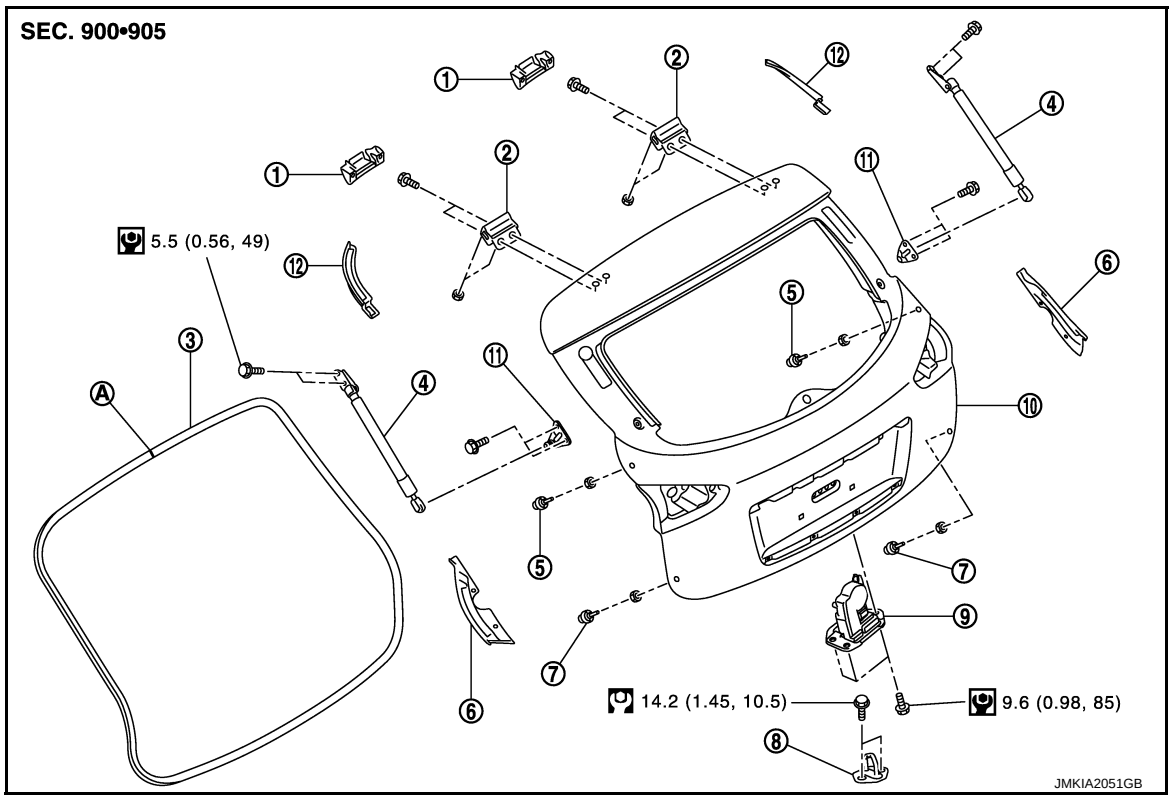

1. Back door hinge cover (LH/RH)	2. Back door hinge (LH/RH)	3. Back door weather-strip
4. Back door stay (LH/RH)	5. Bumper rubber (side) (LH/RH)	6. Back door seal (side) (LH/RH)
7. Bumper rubber (lower) (LH/RH)	8. Back door striker	9. Back door lock assembly
10. Back door assembly	11. Stud ball assembly (LH/RH)	12. Back door seal (upper) (LH/RH)

A : Center mark

Refer to GI-4, "Components" for symbols in the figure.

BACK DOOR HINGE : Removal and Installation

INFOID:0000000007456902

REMOVAL

1. Remove luggage side lower finisher and luggage side upper finisher. Refer to INT-37, "Removal and Installation".
2. Using a remover tool, remove headlining clip at the rear side of headlining, and then remove rear side of headlining. Refer to INT-29, "NORMAL ROOF : Removal and Installation" (NORMAL ROOF), INT-32, "SUNROOF : Removal and Installation" (SUNROOF).
3. Remove back door assembly. Refer to DLK-250, "BACK DOOR ASSEMBLY : Removal and Installation".
4. Remove back door hinge mounting nuts (body side), and then remove back door hinge.

INSTALLATION

Install in the reverse order of removal.

CAUTION:

- **Check back door open/close operation after installation.**
- **Check back door hinge rotating part for poor lubrication. If necessary, apply body grease.**
- **When removing and installing back door assembly, perform the fitting adjustment. Refer to DLK-252, "BACK DOOR ASSEMBLY : Adjustment".**
- **After installation, apply touch-up paint (the body color) onto the head of back door hinge mounting nuts.**

BACK DOOR STAY

BACK DOOR STAY : Exploded View

INFOID:0000000007456903

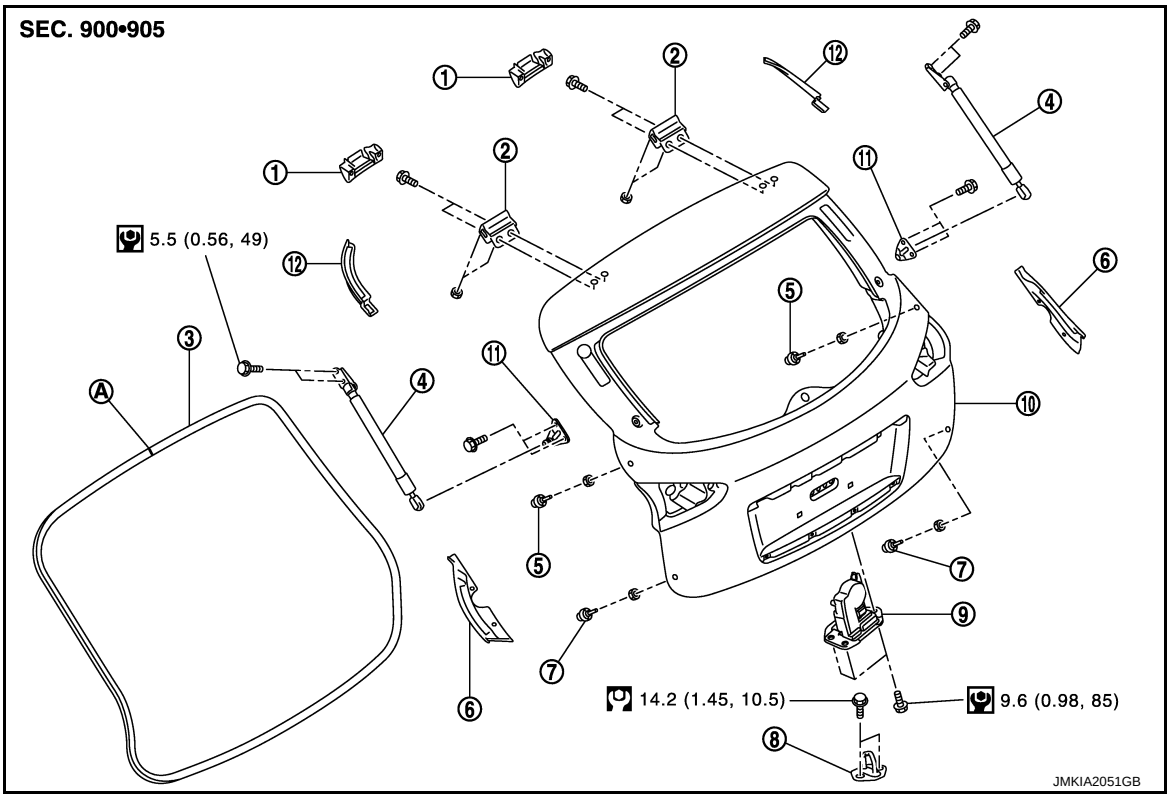

1. Back door hinge cover (LH/RH)
2. Back door hinge (LH/RH)
3. Back door weather-strip
4. Back door stay (LH/RH)
5. Bumper rubber (side) (LH/RH)
6. Back door seal (side) (LH/RH)
7. Bumper rubber (lower) (LH/RH)
8. Back door striker
9. Back door lock assembly
10. Back door assembly
11. Stud ball assembly (LH/RH)
12. Back door seal (upper) (LH/RH)

A : Center mark

Refer to GI-4, "Components" for symbols in the figure.

BACK DOOR STAY : Removal and Installation

INFOID:0000000007456904

REMOVAL

1. Support back door lock with the proper material to prevent it from falling.

   WARNING:
   Body injury may occur if no supporting rod is holding the back door open when removing the back door stay.
2. Remove mounting bolts of back door stay (body side).

3. Remove the metal clip (3) located on the connection between the back door stay (1) and the stud ball (2) (back door side) by using a flatted-blade screwdriver (A).
4. Remove back door stay (back door side).

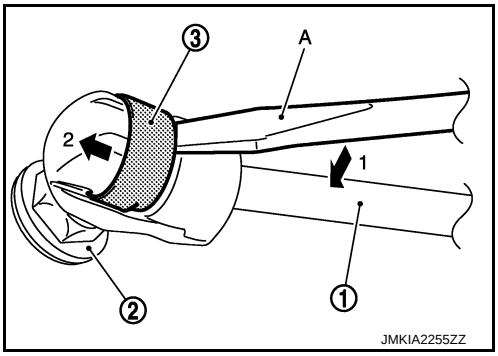

5. Remove mounting bolts of stud ball assembly, and then remove stud ball assembly.

INSTALLATION

Install in the reverse order of removal.

CAUTION:

Check back door open/close operation after installation.

BACK DOOR STAY : Disposal

INFOID:0000000007456905

1. Fix back door stay (1) using a vise (C).
2. Using hacksaw (A) slowly make 2 holes in the back door stay, in numerical order as shown in the figure.

   CAUTION:
   - **When cutting a hole on back door stay, always cover a hacksaw using a shop cloth (B) to avoid scattering metal fragments or oil.**
   - **Wear eye protection (safety glasses).**
   - **Wear gloves.**

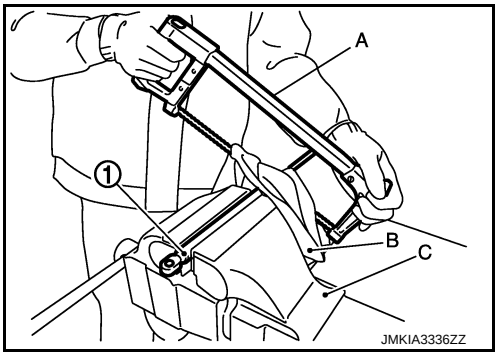

A: 20 mm (0.787 in)

B: Cut at the groove.

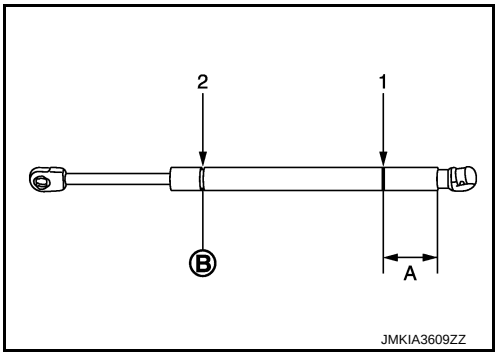

BACK DOOR WEATHER-STRIP

BACK DOOR WEATHER-STRIP : Exploded View

INFOID:0000000007456906

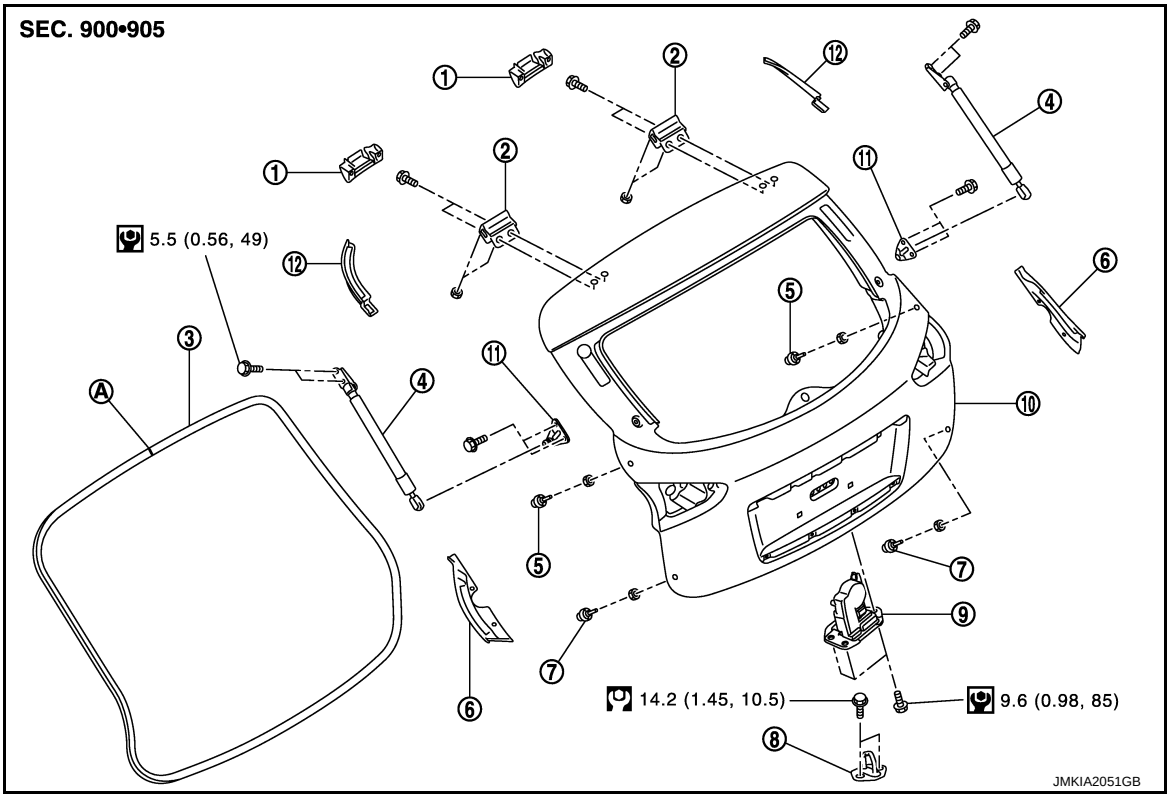

1. Back door hinge cover (LH/RH)
2. Back door hinge (LH/RH)
3. Back door weather-strip
4. Back door stay (LH/RH)
5. Bumper rubber (side) (LH/RH)
6. Back door seal (side) (LH/RH)
7. Bumper rubber (lower) (LH/RH)
8. Back door striker
9. Back door lock assembly
10. Back door assembly
11. Stud ball assembly (LH/RH)
12. Back door seal (upper) (LH/RH)

A : Center mark

Refer to GI-4, "Components" for symbols in the figure.

BACK DOOR WEATHER-STRIP : Removal and Installation

INFOID:0000000007456907

REMOVAL

Pull up and remove engagement with body from weather-strip joint.

CAUTION:

Never pull strongly on weather-strip.

INSTALLATION

1. Working from the upper section, align weather-strip mark with vehicle center position mark and install weather-strip onto the vehicle.
2. For the lower section, align weather-strip seam with center of back door striker.
3. Pull weather-strip gently to ensure that there is no loose section.
   NOTE:
   Check that weather-strip is fit tightly at each corner and luggage rear plate.
4. Install mounting bolts of power back door drive assembly (Back door side).

HOOD LOCK

Exploded View

INFOID:0000000007456908

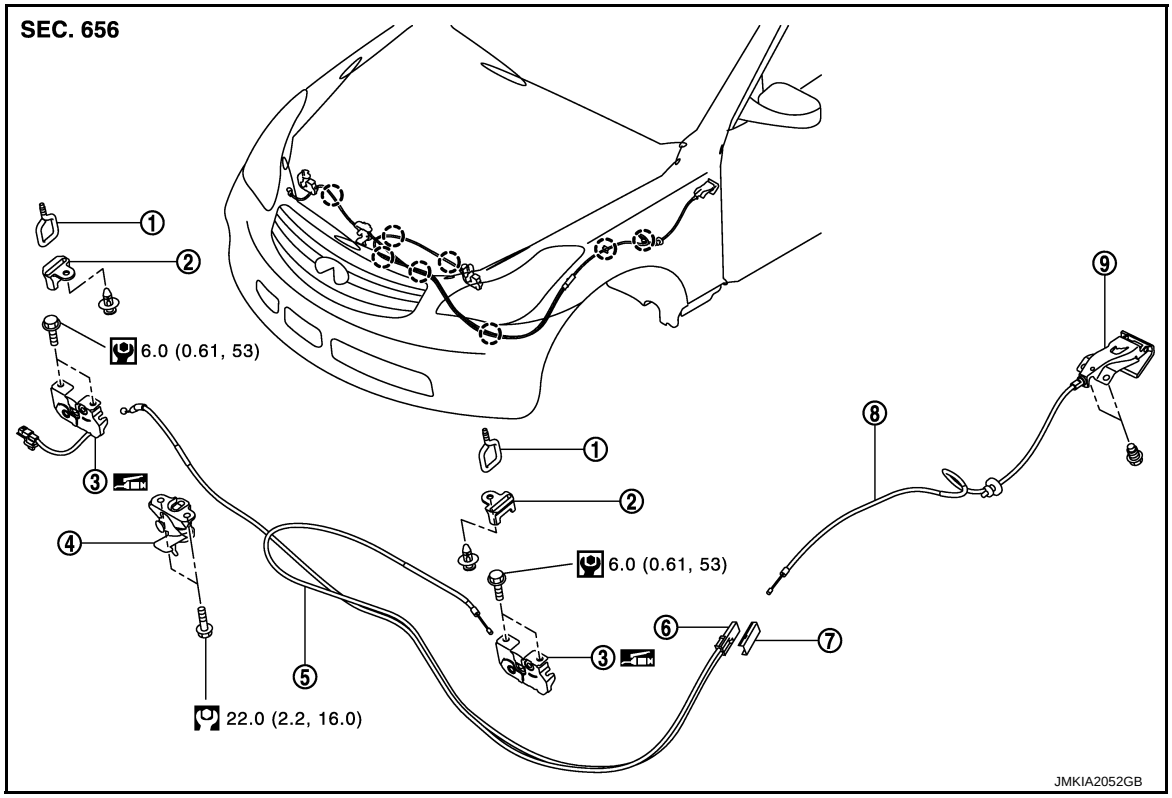

1. Hood striker (LH/RH)
2. Hood lock cover (LH/RH)
3. Hood lock (LH/RH)
4. Secondary latch
5. Hood lock control cable (front)
6. Hood lock control cable protector
7. Hood lock control cable protector cover
8. Hood lock control cable (rear)
9. Hood lock opener

: Clip

Refer to GI-4, "Components" for symbols in the figure.

Removal and Installation

INFOID:0000000007456909

REMOVAL

CAUTION:

Check wiring of hood lock control before removal.

1. Remove mounting clips, of front grille upper side and front bumper fascia. Refer to EXT-20, "Removal and Installation" and EXT-13, "Removal and Installation".

: Clip

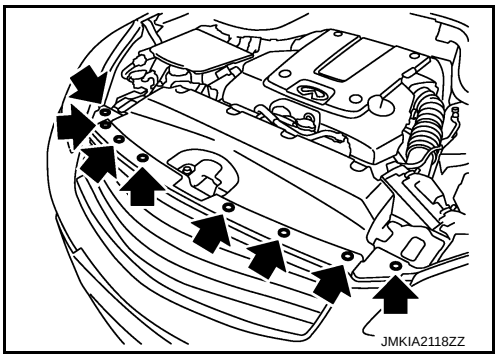

2. Remove mounting bolts of hood lock cover.
3. Disconnect harness clip and hood lock cable from hood lock cover.
4. Remove hood lock cover.

5. Remove air cleaner case assembly (LH). Refer to EM-27, "Removal and Installation".
6. Disconnect hood lock switch connector from head lamp bracket (RH).

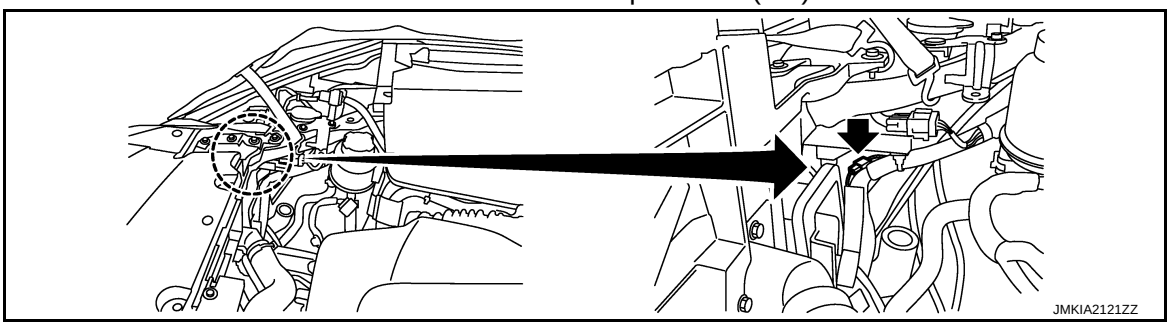

⬅ : hood lock switch connector

7. Remove mounting bolts and remove hood lock bracket (LH/RH).
8. Disconnect hood lock cable from hood lock (LH/RH).
9. Disassembly hood lock from hood lock bracket (LH/RH).
10. Remove fender protector (LH). Refer to EXT-25, "FENDER PROTECTOR : Removal and Installation".
11. Remove clips of hood seal assembly (side) (LH) (1).

⬅ : Clip

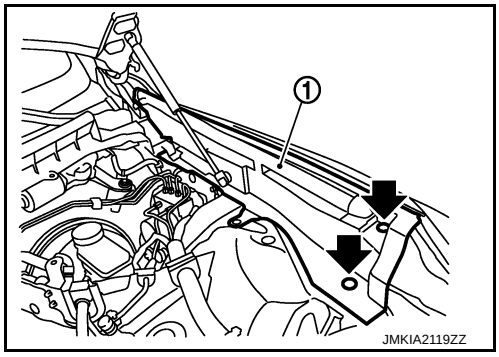

12. Rotate hood lock control cable protector (1) toward the arrow direction, then remove it from front combination lamp assembly (2).

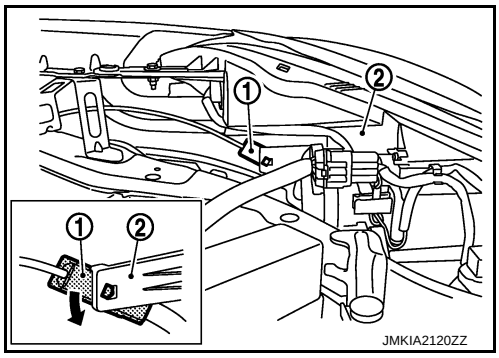

13. Remove hood lock control cable cover from hood lock control cable protector.
14. Disconnect hood lock control cable from hood lock control cable protector.
15. Remove mounting bolts and remove hood lock opener.
16. Remove grommet on the lower dash, pull hood lock control cable toward the passenger compartment.
    CAUTION:
    While pulling, never to damage (peeling) the outside of the hood lock control cable.

INSTALLATION

Install in the reverse order of removal.

CAUTION:

- **Never to bend cable too much, keeping the radius 100 mm (3.937 in) or more.**

- **Check that cable is not offset from the positioning grommet, and apply the sealant to the grommet (at * mark) properly.**

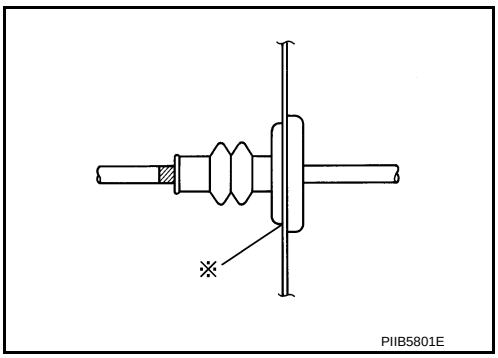

- **Check that hood lock control cable is properly engaged with hood lock.**
- **After installation, perform hood fitting adjustment. Refer to DLK-230, "HOOD ASSEMBLY : Adjustment".**
- **After installation, perform hood lock control inspection. Refer to DLK-260, "Inspection".**

Inspection

INFOID:0000000007456910

NOTE:
If the hood lock cable is bent or deformed, replace it.

1. Check that secondary latch is properly engaged with secondary striker [6.8 mm (0.268 in)] by hood weight.
2. While operating hood opener, carefully check that the front end of hood is raised by approximately 20.0 mm (0.787 in). Also check that hood opener returns to the original position.
3. Check that hood opener operating is condition 49 N (5.0 kg, 11.0 lb) or below.
4. Install so that static closing force of hood is 94 – 490 N·m (9.6 – 50.0 kg-m, 69 – 361 ft – lb).
   NOTE:
   - Exert vertical force on right side and left side of hood lock.
   - Never press simultaneously both sides.
5. Check the hood lock lubrication condition. If necessary, apply body grease to hood lock.

FRONT DOOR LOCK

DOOR LOCK

DOOR LOCK : Exploded View

INFOID:0000000007456911

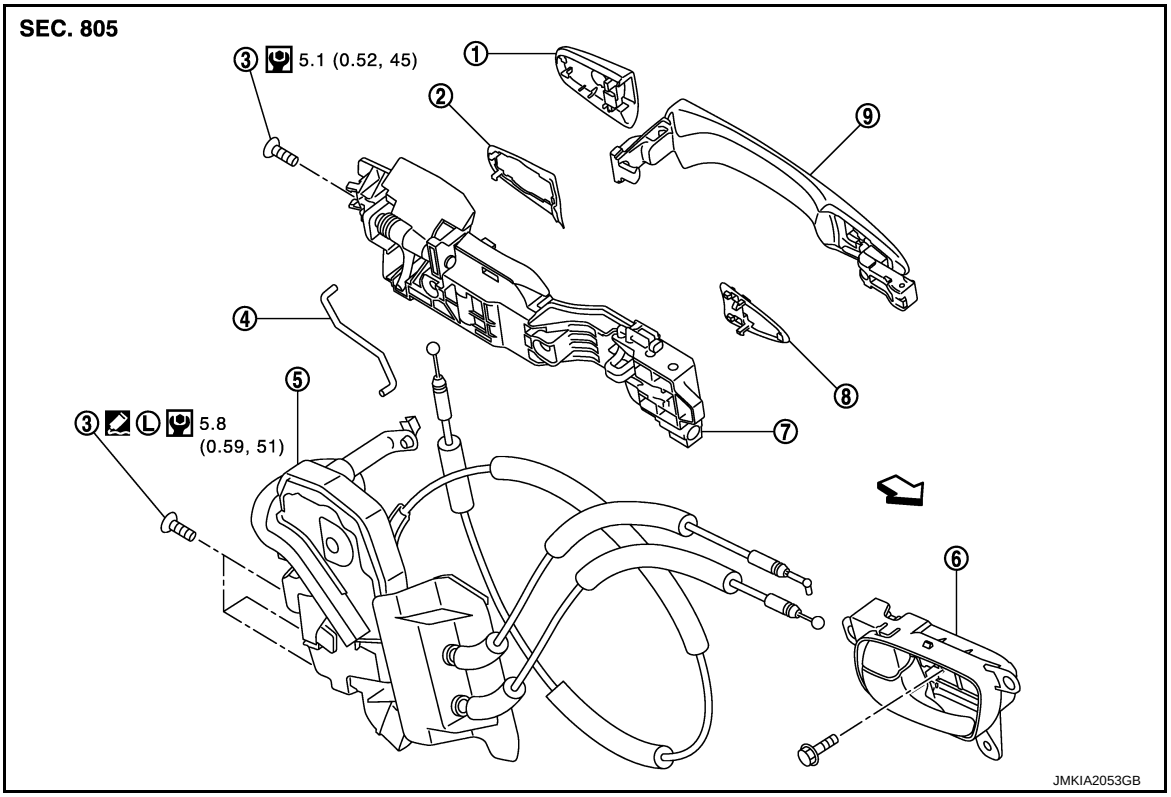

1.	Door key cylinder assembly (driver side) Outside handle escutcheon (passenger side)	2.	Rear gasket	3.	TORX bolt
4.	Key rod (driver side)	5.	Door lock assembly	6.	Inside handle
7.	Outside handle bracket	8.	Front gasket	9.	Outside handle

⇦ : Vehicle front

Refer to GI-4, "Components" for symbols in the figure.

DOOR LOCK : Removal and Installation

INFOID:0000000007456912

REMOVAL

1. Remove front door finisher. Refer to INT-11, "DRIVER SIDE : Removal and Installation" (driver side) or INT-14, "PASSENGER SIDE : Removal and Installation" (passenger side).
2. Remove front door glass. Refer to GW-16, "Removal and Installation".
3. Remove front door module assembly. Refer to GW-19, "Removal and Installation".
4. Disconnect door antenna and door request switch connector and remove harness clamp (with Intelligent Key system model) on outside handle bracket.

5. Remove door side grommet, and loosen TORX bolt from grommet hole.
CAUTION:
Never remove TORX bolt forcibly.

⬅ : TORX bolt

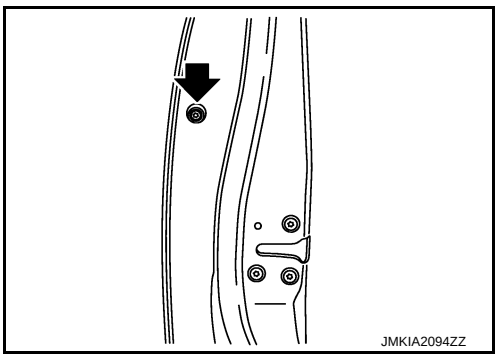

6. Reach in to separate key rod (2) connection [on the door key cylinder assembly (1)] (driver side).

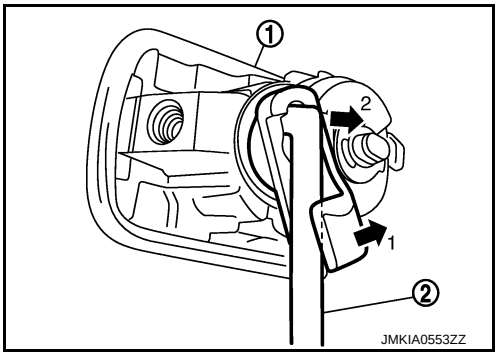

7. While pulling outside handle, remove door key cylinder assembly (driver side) or outside handle escutcheon (passenger side).

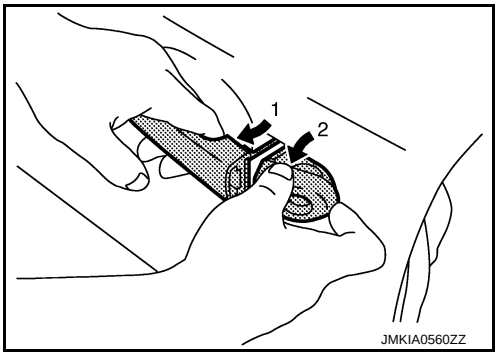

8. While pulling outside handle (1), slide toward rear of vehicle to remove outside handle.

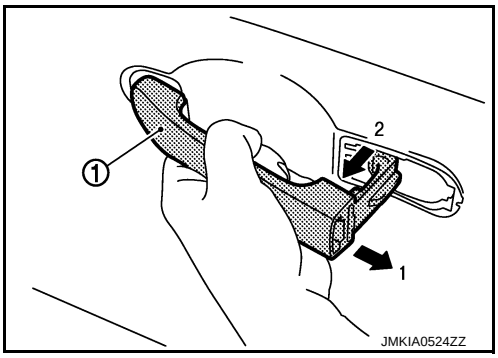

9. Remove front gasket and rear gasket.

10. While pulling outside handle bracket, slide toward rear of vehicle to remove outside handle bracket.

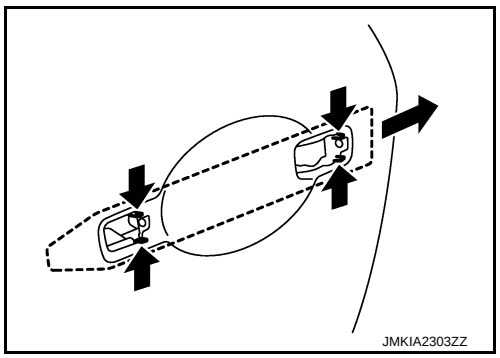

11. Reach in to separate outside handle cable connection on outside handle bracket.
12. Remove door lock assembly TORX bolts.
13. Disconnect door lock actuator connector, and then remove door lock assembly.
14. Remove key rod from door lock assembly.

INSTALLATION

Install in the reverse order of removal.

CAUTION:

- **When installing each rod, rotate rod holder until a click is felt.**
- **Check door open/close, lock/unlock operation after installation.**

INSIDE HANDLE

INSIDE HANDLE : Exploded View

INFOID:0000000007456913

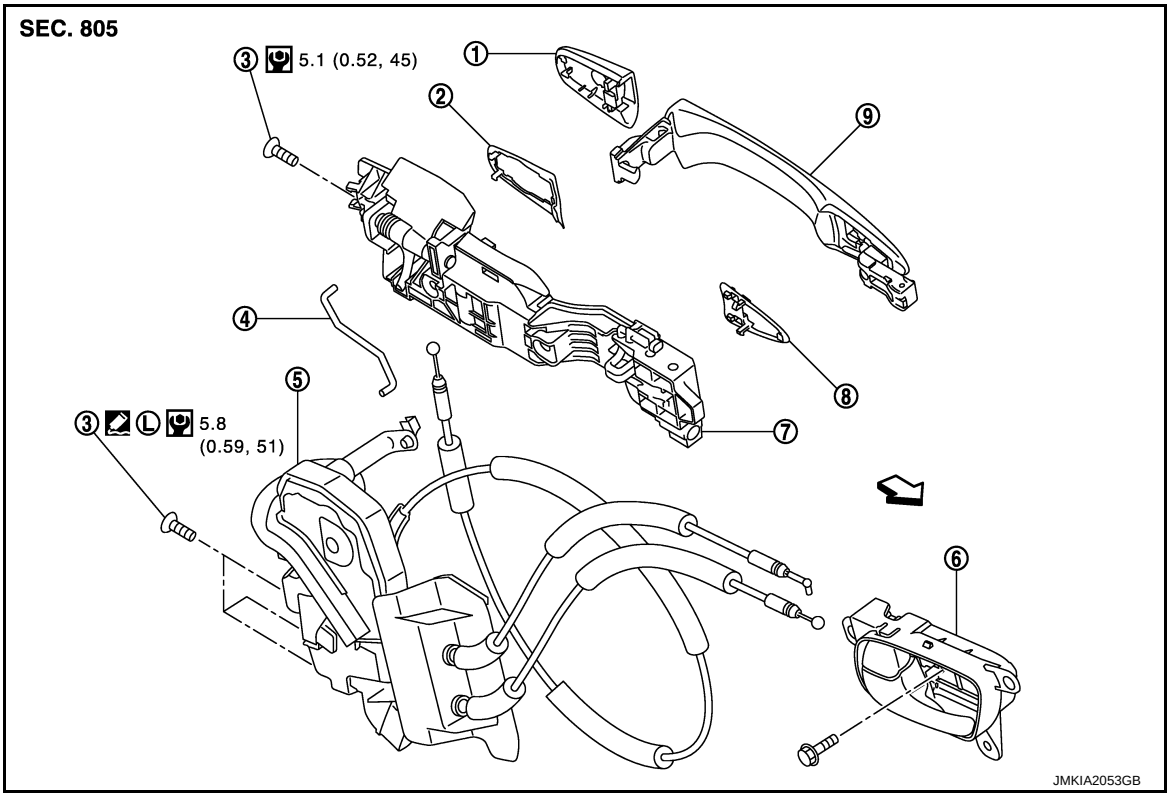

1. Door key cylinder assembly (driver side)
   Outside handle escutcheon (passenger side)
2. Rear gasket
3. TORX bolt
4. Key rod (driver side)
5. Door lock assembly
6. Inside handle
7. Outside handle bracket
8. Front gasket
9. Outside handle

⇦ : Vehicle front

Refer to GI-4, "Components" for symbols in the figure.

INSIDE HANDLE : Removal and Installation

INFOID:0000000007456914

REMOVAL

1. Remove front door finisher. Refer to INT-11, "DRIVER SIDE : Removal and Installation" (driver side) or INT-14, "PASSENGER SIDE : Removal and Installation" (passenger side).
2. Disconnect inside handle cable, and then remove the inside handle.
3. Remove inside handle mounting screws.

INSTALLATION

Install in the reverse order of removal.

CAUTION:

Check door open/close, lock/unlock operation after installation.

OUTSIDE HANDLE

OUTSIDE HANDLE : Exploded View

INFOID:0000000007456915

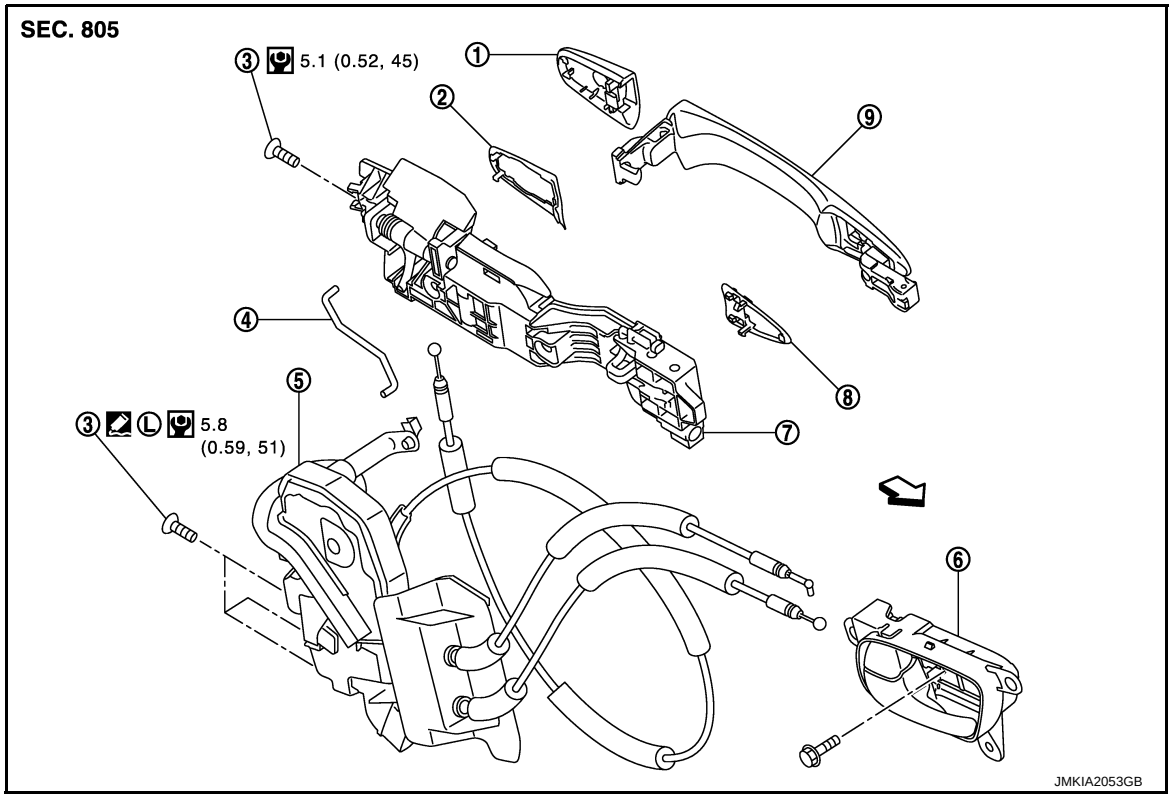

1. Door key cylinder assembly (driver side) Outside handle escutcheon (passenger side)
2. Rear gasket
3. TORX bolt
4. Key rod (driver side)
5. Door lock assembly
6. Inside handle
7. Outside handle bracket
8. Front gasket
9. Outside handle

⇦ : Vehicle front

Refer to GI-4, "Components" for symbols in the figure.

OUTSIDE HANDLE : Removal and Installation

INFOID:0000000007456916

REMOVAL

1. Remove front door finisher. Refer to INT-11, "DRIVER SIDE : Removal and Installation" (driver side) or INT-14, "PASSENGER SIDE : Removal and Installation" (passenger side).
2. Remove front door glass. Refer to GW-16, "Removal and Installation".
3. Remove front door module assembly. Refer to GW-19, "Removal and Installation".
4. Disconnect door antenna and door request switch connector and remove harness clamp (models with Intelligent Key system) on outside handle bracket.
5. Remove door side grommet, and loosen TORX bolt from grommet hole.
   CAUTION:
   Never remove TORX bolt forcibly.

   ⬅ : TORX bolt

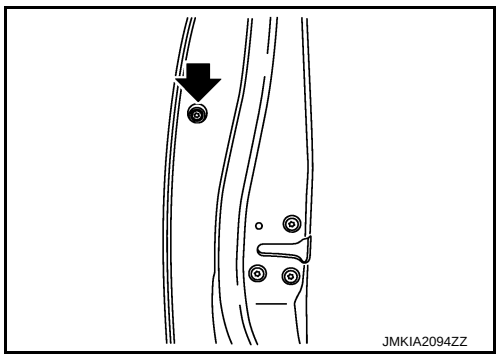

6. Reach in to separate key rod (2) connection [on the door key cylinder assembly (1)] (driver side).

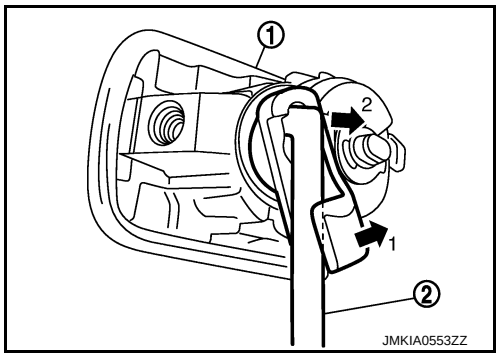

7. While pulling outside handle, remove door key cylinder assembly (driver side) or outside handle escutcheon (passenger side).

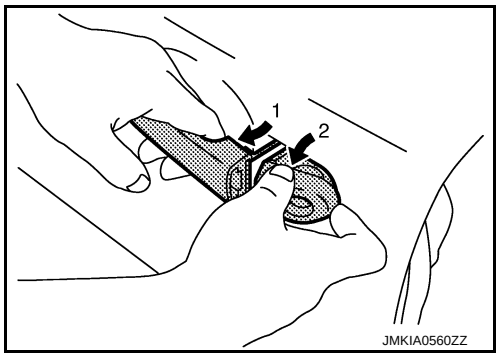

8. While pulling outside handle (1), slide toward rear of vehicle to remove outside handle.

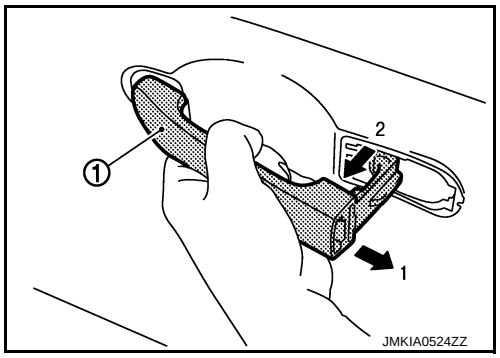

9. Remove front gasket and rear gasket.

10. While pulling outside handle bracket, slide toward rear of vehicle to remove outside handle bracket.

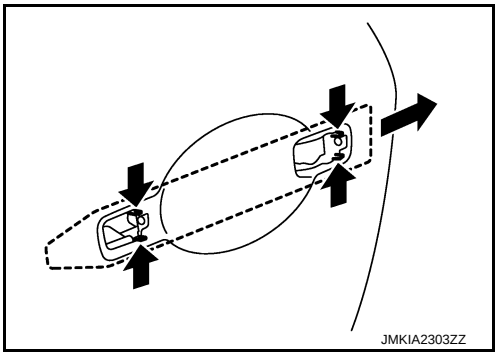

11. Reach in to separate outside handle cable connection on outside handle bracket.

INSTALLATION

Install in the reverse order of removal.

CAUTION:

- **When installing each rod, rotate rod holder until a click is felt.**
- **Check door open/close, lock/unlock operation after installation.**

REAR DOOR LOCK
DOOR LOCK
DOOR LOCK : Exploded View

INFOID:0000000007456917

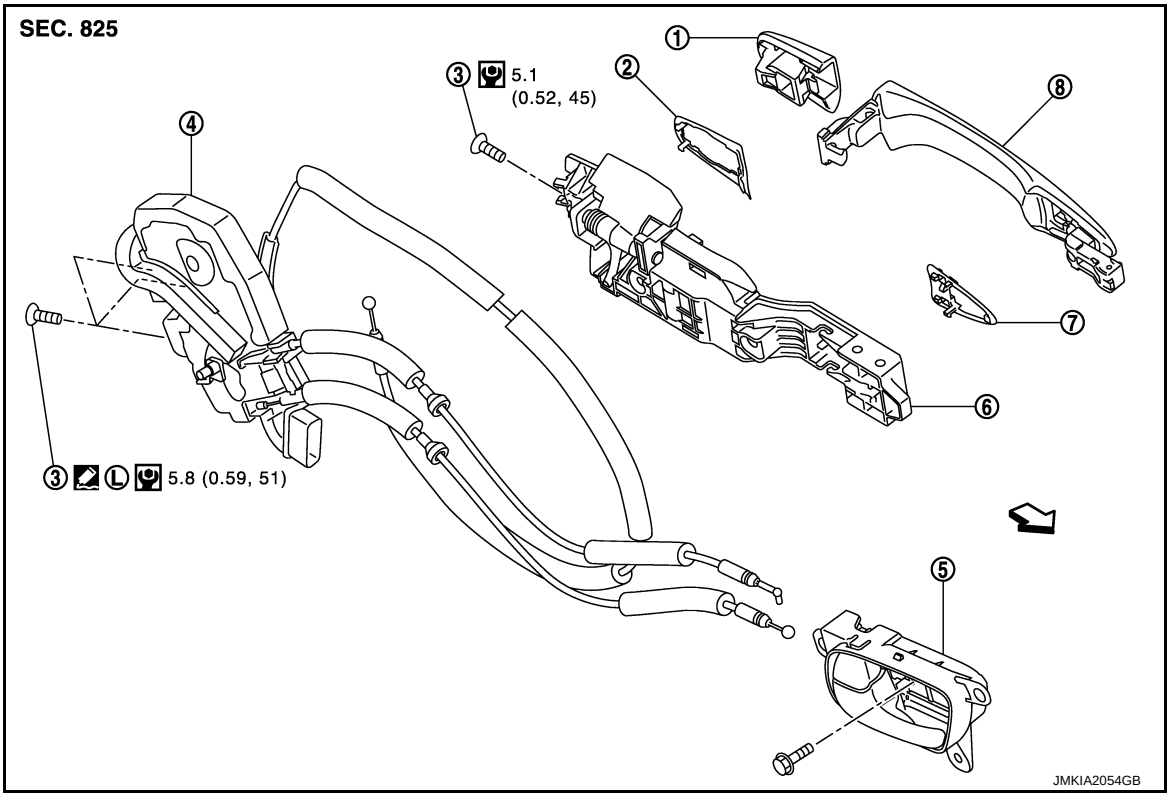

1. Outside handle escutcheon
2. Rear gasket
3. TORX bolt
4. Door lock assembly
5. Inside handle
6. Outside handle bracket
7. Front gasket
8. Outside handle

⇦ : Vehicle front

Refer to GI-4, "Components" for symbols in the figure.

DOOR LOCK : Removal and Installation

INFOID:0000000007456918

REMOVAL

1. Remove rear door finisher. Refer to INT-17, "Removal and Installation".
2. Remove sealing screen. Refer to GW-22, "Removal and Installation".
3. Fully close the rear door glass.
4. Remove door side grommet, and loosen TORX bolt from grommet hole.
   CAUTION:
   Never remove TORX bolt forcibly.

⇦ : TORX bolt

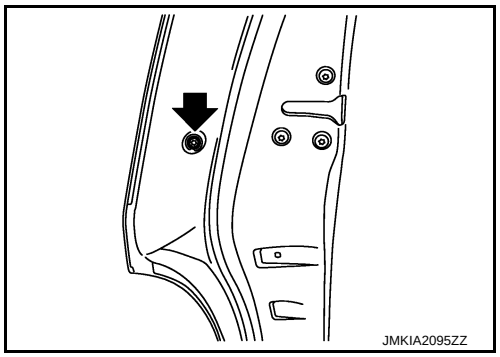

5. While pulling outside handle, remove outside handle escutcheon.

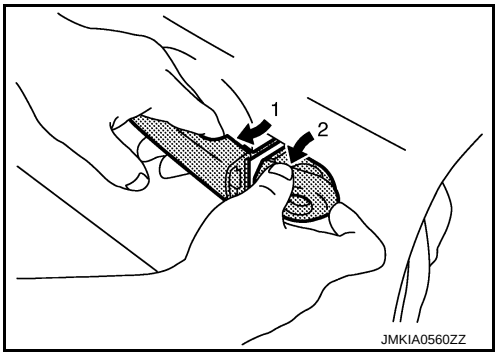

6. While pulling outside handle (1), slide toward rear of vehicle to remove outside handle.

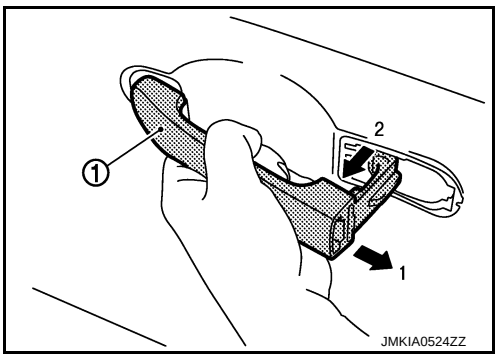

7. Remove front gasket and rear gasket.
8. While pulling outside handle bracket, slide toward rear of vehicle to remove outside handle bracket.

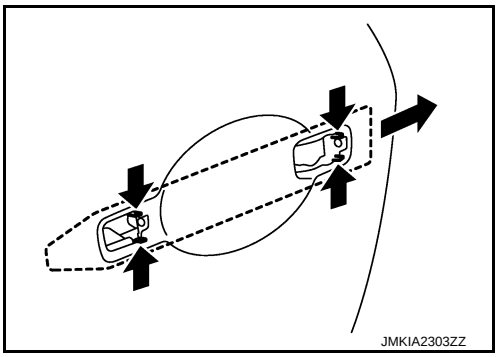

9. Reach in to separate outside handle cable connection on outside handle bracket.
10. Remove door lock mounting bolts.
11. Remove door lock assembly.

INSTALLATION

Install in the reverse order of removal.

CAUTION:

Check door open/close, lock/unlock operation after installation.

INSIDE HANDLE

INSIDE HANDLE : Exploded View

INFOID:0000000007456919

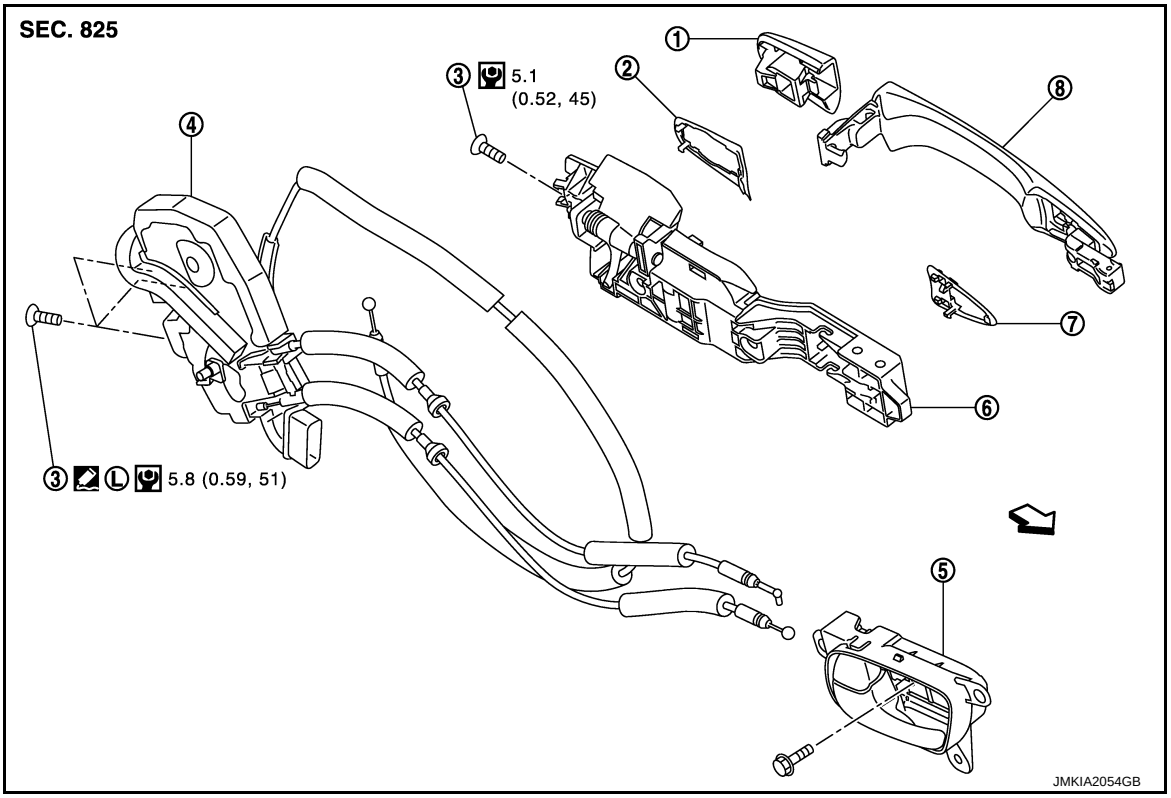

1. Outside handle escutcheon
2. Rear gasket
3. TORX bolt
4. Door lock assembly
5. Inside handle
6. Outside handle bracket
7. Front gasket
8. Outside handle

⇦ : Vehicle front

Refer to GI-4, "Components" for symbols in the figure.

INSIDE HANDLE : Removal and Installation

INFOID:0000000007456920

REMOVAL

1. Remove rear door finisher. Refer to INT-17, "Removal and Installation".
2. Disconnect inside handle cable, and then remove inside handle.
3. Remove inside handle mounting screws.

INSTALLATION

Install in the reverse order of removal.

CAUTION:

Check door open/close, lock/unlock operation after installation.

OUTSIDE HANDLE

OUTSIDE HANDLE : Exploded View

INFOID:0000000007456921

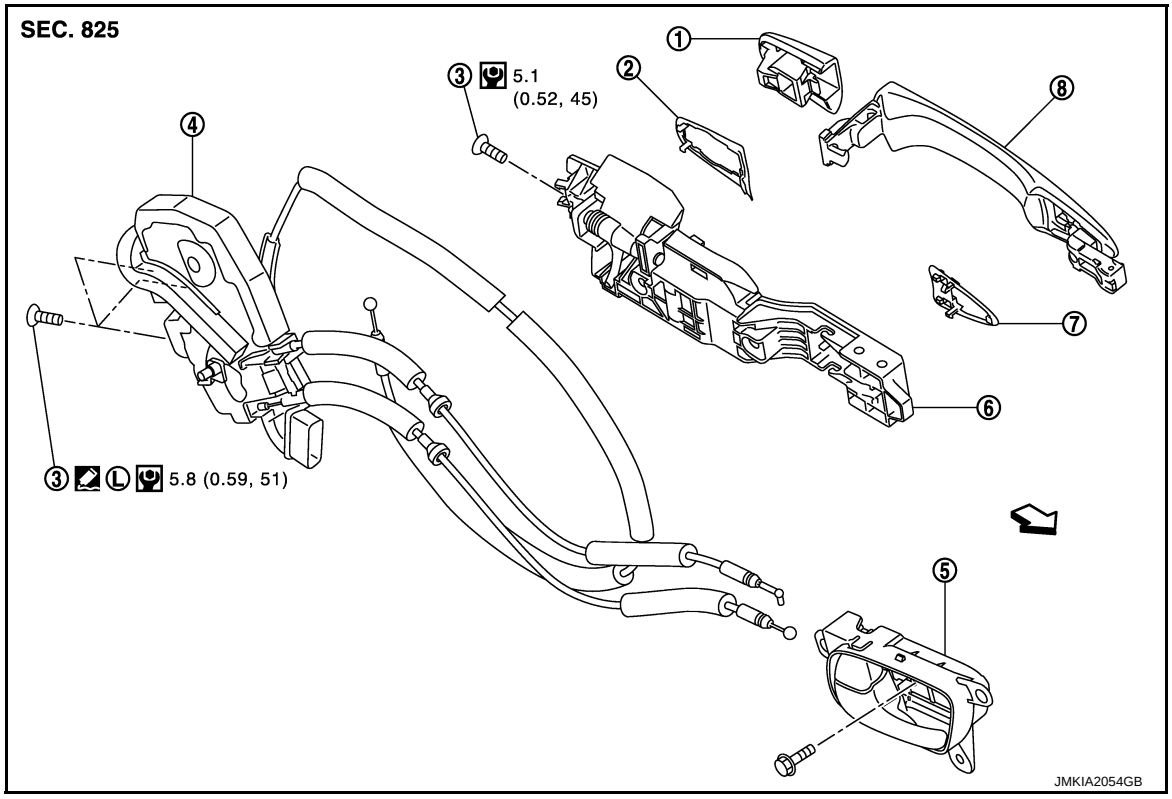

1. Outside handle escutcheon
2. Rear gasket
3. TORX bolt
4. Door lock assembly
5. Inside handle
6. Outside handle bracket
7. Front gasket
8. Outside handle

⇦ : Vehicle front

Refer to GI-4, "Components" for symbols in the figure.

OUTSIDE HANDLE : Removal and Installation

INFOID:0000000007456922

REMOVAL

1. Remove door side grommet, and loosen TORX bolt from grommet hole.
   CAUTION:
   Never remove TORX bolt forcibly.

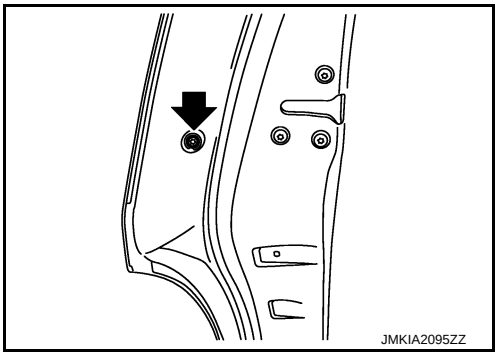

⇦ : TORX bolt

2. While pulling outside handle, remove outside handle escutcheon.

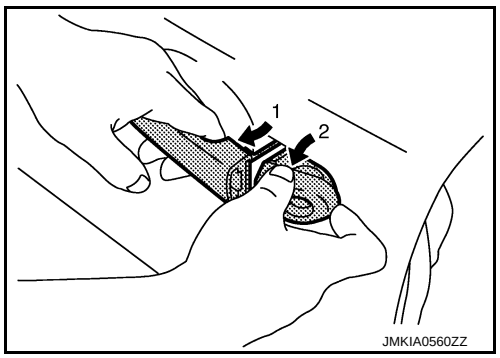

3. While pulling outside handle (1), slide toward rear of vehicle to remove outside handle.

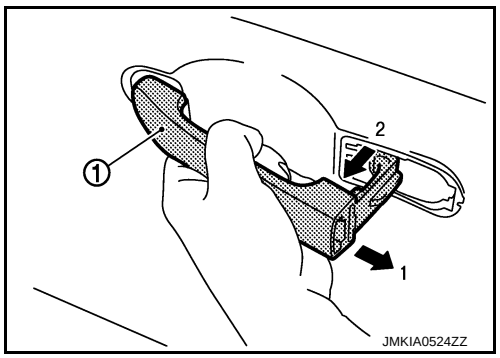

4. Remove rear door finisher. Refer to INT-17, "Removal and Installation".
5. Remove sealing screen. Refer to GW-22, "Removal and Installation".
6. Fully close rear door glass.
7. Remove front gasket and rear gasket.
8. While pulling outside handle bracket, slide toward rear of vehicle to remove outside handle bracket.

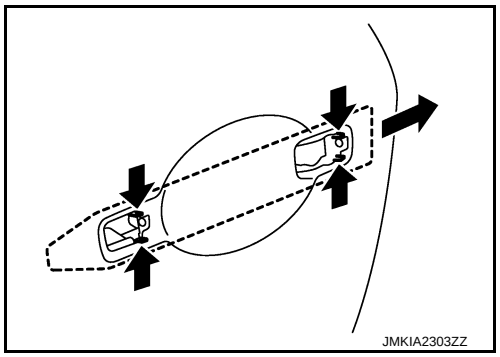

9. Reach in to separate outside handle cable connection on outside handle bracket.

INSTALLATION

Install in the reverse order of removal.

CAUTION:

Check door open/close, lock/unlock operation after installation.

BACK DOOR LOCK

Exploded View

INFOID:0000000007456923

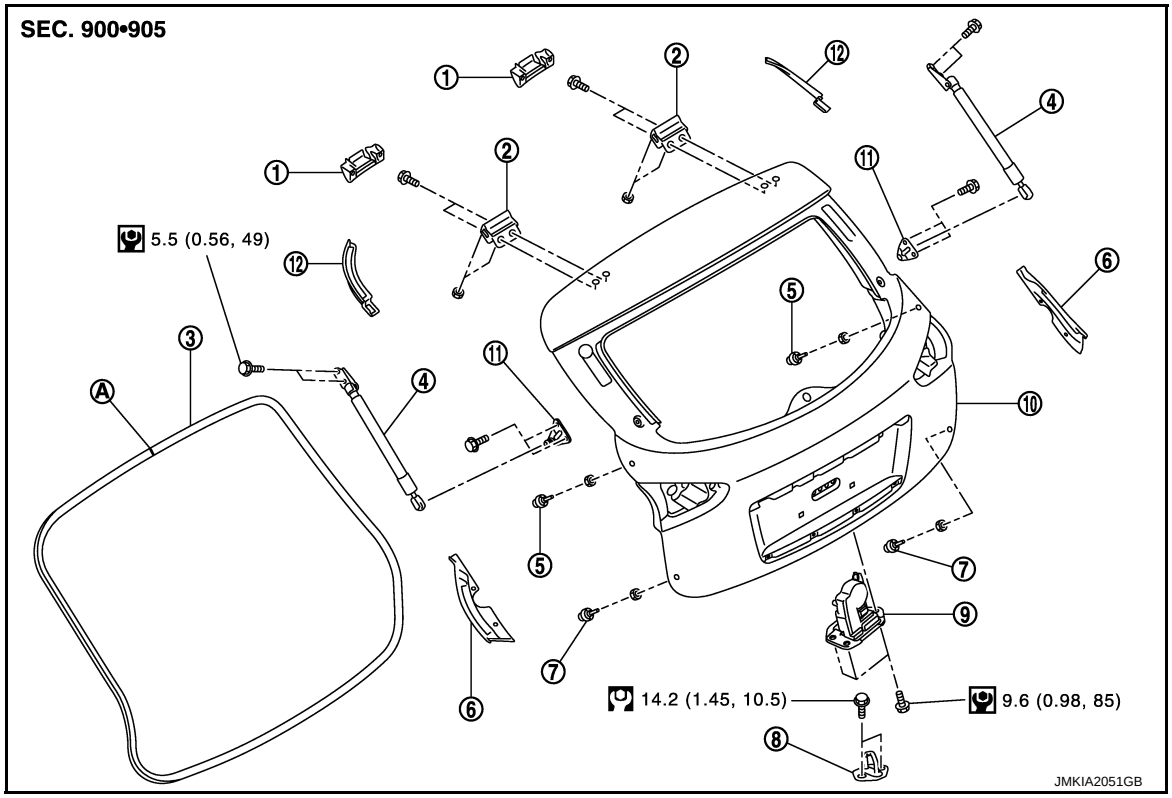

1. Back door hinge cover (LH/RH)
2. Back door hinge (LH/RH)
3. Back door weather-strip
4. Back door stay (LH/RH)
5. Bumper rubber (side) (LH/RH)
6. Back door seal (side) (LH/RH)
7. Bumper rubber (lower) (LH/RH)
8. Back door striker
9. Back door lock assembly
10. Back door assembly
11. Stud ball assembly (LH/RH)
12. Back door seal (upper) (LH/RH)

A : Center mark

Refer to GI-4, "Components" for symbols in the figure.

Removal and Installation

INFOID:0000000007456924

REMOVAL

1. Remove back door finisher inner. Refer to INT-40, "Removal and Installation".
2. Disconnect back door lock assembly and back door opener switch connectors.
3. Remove back door lock mounting bolts, and then remove back door lock assembly.

INSTALLATION

Install in the reverse order of removal.

CAUTION:

Check back door open/close, lock/unlock operation after installation.

FUEL FILLER LID OPENER

Exploded View

INFOID:0000000007456925

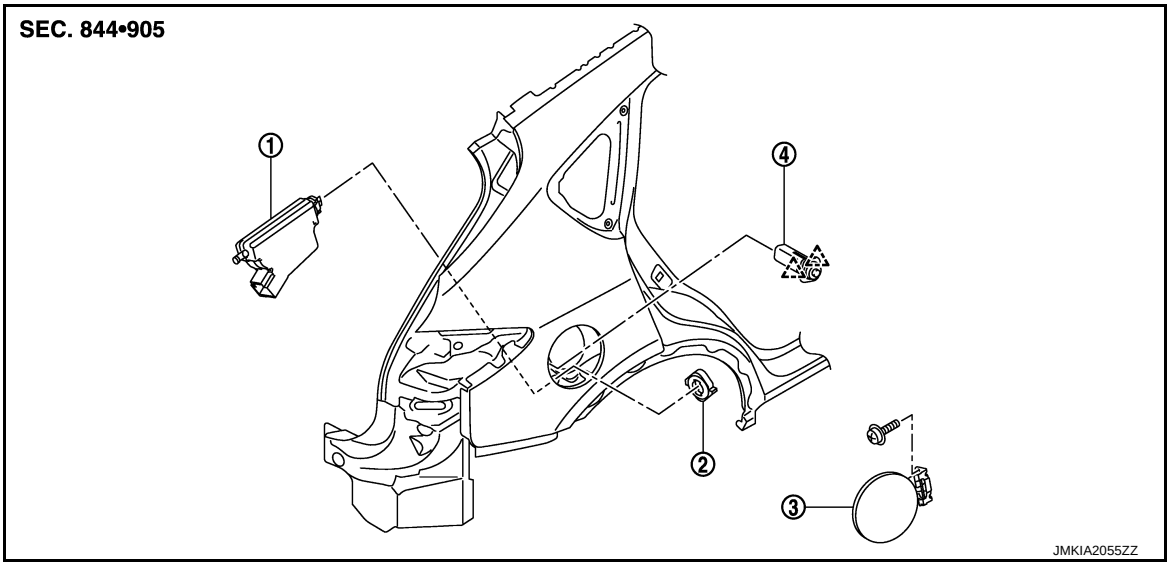

1. Fuel filler lid opener actuator
2. Lock nut
3. Fuel filler lid assembly
4. Lock and cable assembly

△ : Pawl

Removal and Installation

INFOID:0000000007456926

NOTE:
When fuel filler lid opener actuator (1) is a defective operation, pull the rod to open fuel filler lid.

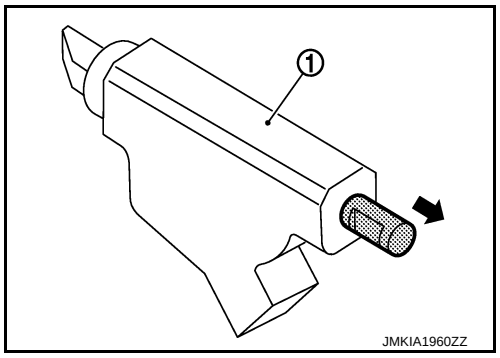

REMOVAL

1. Remove mounting screws, and then remove fuel filler lid.
2. Pull and remove lock & cable assembly forward, while pushing the pawls.
3. Rotate lock nut counterclockwise, and then remove lock nut.
4. Push fuel filler lid opener actuator behind the vehicle, while pushing the pawl.
5. Remove luggage side finisher lower (RH). Refer to INT-37, "Removal and Installation".
6. Disconnect harness connector and remove fuel filler lid opener actuator.

INSTALLATION

Install in the reverse order of removal.

CAUTION:
After installation, apply the touch-up paint (the body color) onto the head of the mounting screws.

DOOR SWITCH

Exploded View

INFOID:0000000007456927

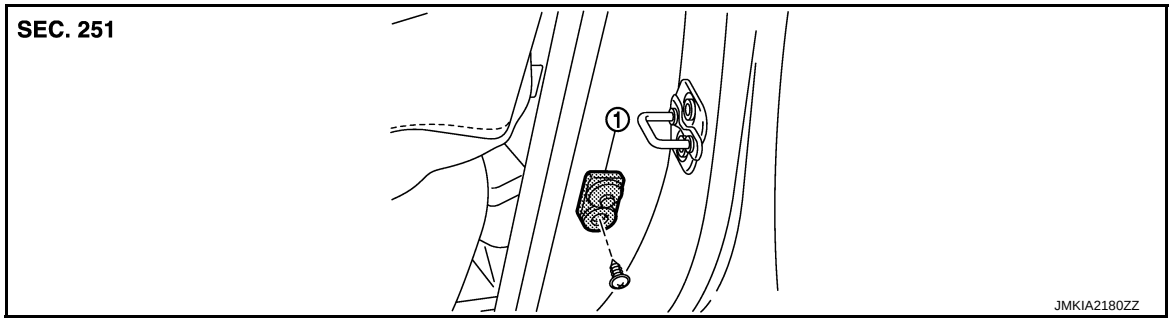

1. Door switch

Removal and Installation

INFOID:0000000007456928

REMOVAL

1. Remove the door switch mounting screw (A), and then remove door switch (1).

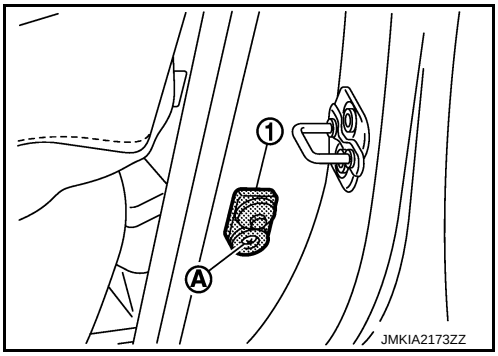

INSTALLATION

Install in the reverse order of removal.

INSIDE KEY ANTENNA

INSTRUMENT CENTER

INSTRUMENT CENTER : Exploded View

INFOID:0000000007456929

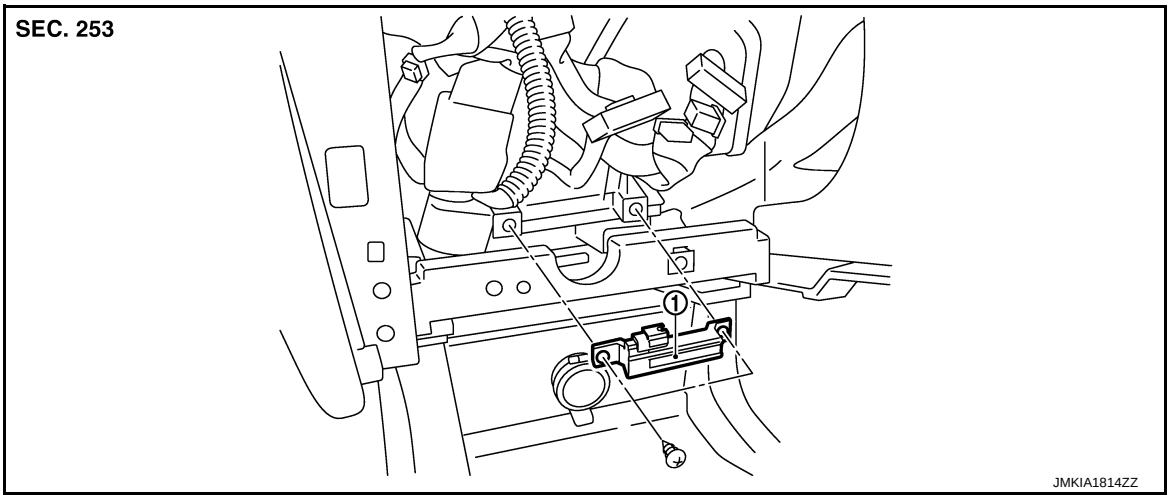

1. Inside key antenna (instrument center)

INSTRUMENT CENTER : Removal and Installation

INFOID:0000000007456930

REMOVAL

1. Remove the console finisher assembly. Refer to IP-23, "Removal and Installation".
2. Remove the key antenna mounting screw (instrument center) (A), and then remove inside key antenna (instrument center) (1).

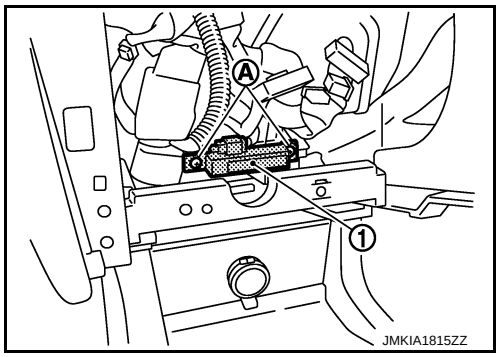

INSTALLATION

Install in the reverse order of removal.

CONSOLE

CONSOLE : Exploded View

INFOID:0000000007456931

Refer to IP-22, "Exploded View".

CONSOLE : Removal and Installation

INFOID:0000000007456932

REMOVAL

1. Remove the console pocket and rear finisher. Refer to IP-23, "Removal and Installation".

2. Remove the inside key antenna mounting screw (A), and then remove inside key antenna (console) (1).

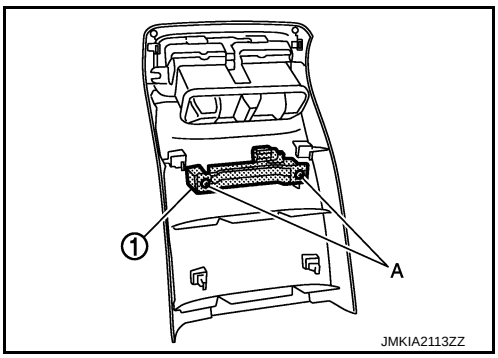

INSTALLATION
Install in the reverse order of removal.

LUGGAGE ROOM

LUGGAGE ROOM : Exploded View

INFOID:0000000007456933

Refer to INT-36, "Exploded View".

LUGGAGE ROOM : Removal and Installation

INFOID:0000000007456934

REMOVAL

1. Remove the luggage floor finisher front. Refer to INT-37, "Removal and Installation".
2. Remove the inside key antenna (luggage room) mounting clip (A), and then remove inside key antenna (luggage room) (1).

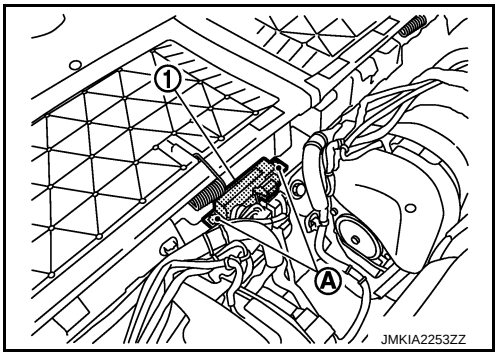

INSTALLATION
Install in the reverse order of removal.

OUTSIDE KEY ANTENNA

DRIVER SIDE

DRIVER SIDE : Exploded View

INFOID:0000000007456935

Refer to DLK-264, "OUTSIDE HANDLE : Exploded View".

DRIVER SIDE : Removal and Installation

INFOID:0000000007456936

REMOVAL

Remove the front outside handle LH. Refer to DLK-264, "OUTSIDE HANDLE : Removal and Installation".

INSTALLATION

Install in the reverse order of removal.

PASSENGER SIDE

PASSENGER SIDE : Exploded View

INFOID:0000000007456937

Refer to DLK-264, "OUTSIDE HANDLE : Exploded View".

PASSENGER SIDE : Removal and Installation

INFOID:0000000007456938

REMOVAL

Remove the front outside handle RH. Refer to DLK-264, "OUTSIDE HANDLE : Removal and Installation".

INSTALLATION

Install in the reverse order of removal.

BACK DOOR

BACK DOOR : Exploded View

INFOID:0000000007456939

Refer to INT-40, "Exploded View".

BACK DOOR : Removal and Installation

INFOID:0000000007456940

REMOVAL

1. Remove the back door finisher inner. Refer to EXT-48, "Removal and Installation".
2. Remove the outside key antenna (back door) mounting bolts (A), and then remove outside key antenna (back door) (1).

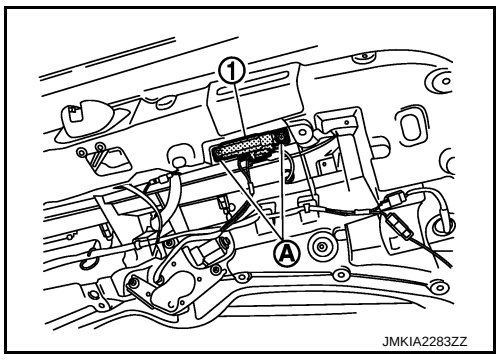

INSTALLATION

Install in the reverse order of removal.

INTELLIGENT KEY WARNING BUZZER

Exploded View

INFOID:0000000007456941

Refer to EXT-12, "Exploded View".

Removal and Installation

INFOID:0000000007456942

REMOVAL

1. Remove the fender protector. Refer to EXT-25, "FENDER PROTECTOR : Removal and Installation".
2. Remove the Intelligent Key warning buzzer mounting bolt (A), and then remove the Intelligent Key warning buzzer (1).

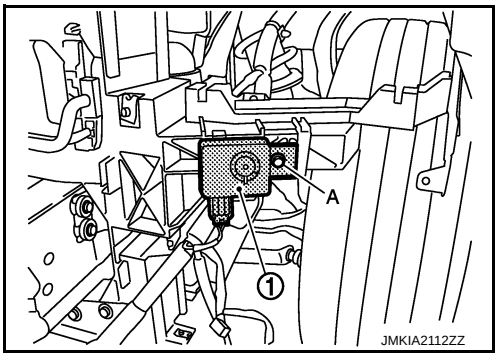

INSTALLATION

Install in the reverse order of removal.

KEY SLOT

Exploded View

INFOID:0000000007456943

Refer to IP-12, "Exploded View".

Removal and Installation

INFOID:0000000007456944

REMOVAL

1. Remove the instrument lower panel LH (2). Refer to IP-13, "Removal and Installation".
2. Disconnect key slot connector.
3. Remove the key slot mounting screw (A), and then remove key slot (1).

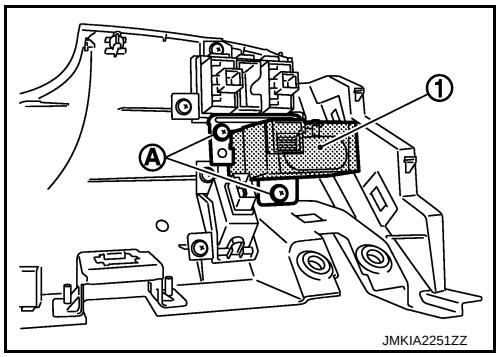

INSTALLATION

Install in the reverse order of removal.

REMOTE KEYLESS ENTRY RECEIVER

Exploded View

INFOID:0000000007456945

Refer to IP-12, "Exploded View".

Removal and Installation

INFOID:0000000007456946

REMOVAL

1. Remove the instrument lower panel RH. Refer to IP-13, "Removal and Installation".
2. Remove the remote keyless entry receiver mounting screw (A), and then remove remote keyless entry receiver (1).

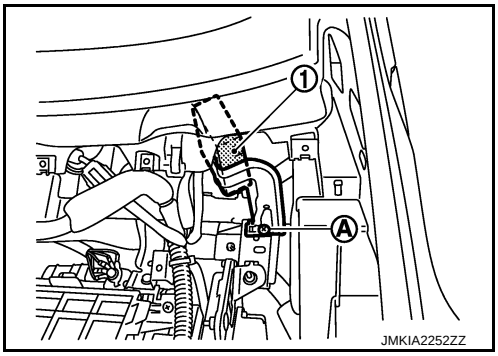

INSTALLATION

Install in the reverse order of removal.

INTELLIGENT KEY BATTERY

Removal and Installation

INFOID:0000000007456947

1. Release the lock knob at the back of the Intelligent Key and remove the mechanical key.

2. Insert a remover tool (A) wrapped with a cloth into the slit of the corner and twist it to separate the upper part from the lower part.
CAUTION:
- **Do not touch the circuit board or battery terminal.**
- **The key fob is water-resistant. However, if it does get wet, immediately wipe it dry.**

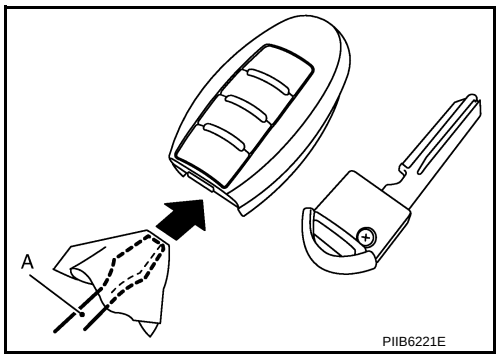

3. Replace the battery with new one.

Battery replacement	**:Coin-type lithium battery (CR2025)**
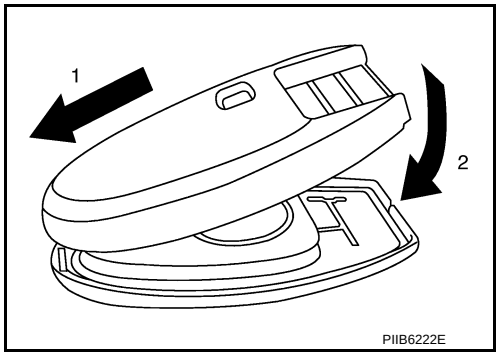
4. Align the tips of the upper and lower parts, and then push them together until it is securely closed.
CAUTION:
- **When replacing battery, keep dirt, grease, and other foreign materials off the electrode contact area.**
- **After replacing the battery, check that all Intelligent Key functions work normally.**